ISEKI

Parts Catalogue

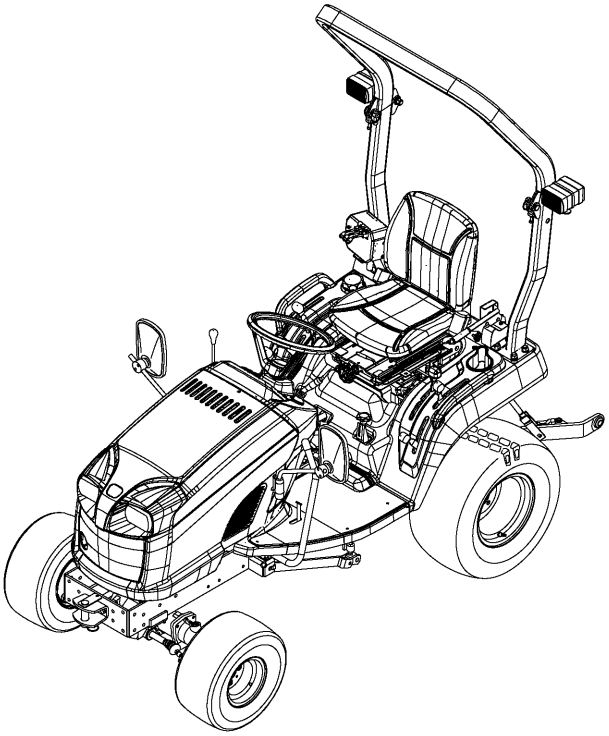

TRACTOR TXG237F3

TXG237F3-E4,GVRE4,GZVRE4,GVRE4G,GZVRE4G

1739-097-210-00

Printed in Japan December,2017

Directions for use of Parts Catalogue

1. Applicable model of machines

All component and option parts used for TXG237F3 tractors are listed in this parts catalogue.

1) MODEL TYPE

F·····FOUR WHEEL DRIVE

G·····FRONT HITCH,TRAILER HITCH

R·····REAR ROPS

V·····VALVE (REMOTE/2ND)

Z·····WITH SEAT TYPE OF ISEKI (W10)

. . .G·····HEADLIGHT INSTALLED FOR LEFT-HAND TRAFFIC

2) AREA CODE

E4·····EUROPE

2. Details of the Structure Table of Model

***** Structure Table of Model *****

MODEL	SF3FFF3FFF 1HHH7HHH 0UUU0UUU XXX XXX WWW WWW EEG EEG 46E 46E 4 4	
FIG.		
1	***	***
2	*	*
3		***
4	***	
5		***
6	***	
7	***	***
8	***	

①

③

②

① FIG. : Parts structure of the machine is classified by its functions. FIG. number corresponds to the number written at the top of the parts illustration.

② Model : Shows the name of the model.

③ Structure Table : Shows which functions are originally equipped or can be equip ped afterwards for each machines

`*´ Standard Parts

`T´ Optional Parts

`R´ Repair Parts (parts which can only be used for repairs)

3. Explanation for head paragraph

KEY	PART CODE	DESCRIPTION	SPC	TYPE OF MODEL						ITC	COL	GRP	REMARKS
				SSM48M	SSM48F	SSM48G	SRM48M	SRM48F	SRM48G				
1	8595-211-001-20	CASE/UPPER	*	1 -229									
1A	8657-201-081-00	CASE/UPPER	*	1 230-			1						
2	8595-211-002-10	CASE/LOWER	*	1			1						
3	V523-100-801-80	PIN	*	2			2						
4	V211-260-803-00	BOLT, SEMS	*	6			6						
			*	2 -229									
			*	2 230-			2						
				2			2						
				1			1						

① KEY shows the location of parts diagramed in the illustration.

② Parts numbers begin with `V´ and `W´ are standard parts of the market.

③ `LH´ and `RH´ on the parts name are described against the moving direction of the machine or are described on the condition how to install parts on the machines.

④ SPC: The following symbol classifies parts to be used for machines.

`*´ means standard parts.

`T´ shows that the parts can be installed as optional parts.

`R´ shows that the parts can be used as applicable parts to replace originally equipped parts.

⑤ Upper column: QTY shows the number of parts to be used for one unit of machine.

`M´ is indicated for parts supplied by a meter long.

`l´ is indicated for parts supplied by liter.

`AR´ is indicated for parts need to be adjusted or regulated.

Lower column: serial number

—229 means serial number up to 229.

230— means serial number 230 and after.

⑥ ITC : Interchangeability

`1´…OLD ← NEW

New parts can be used in place of the old parts.

`2´…OLD → NEW

Old parts can be used in place of the new parts.

`3´…OLD →← NEW

Old parts and new parts can not be replaced each other.

⑦ COL : Color code

Color is signified with color code number for colored parts.

Please see the color list shown in the next page.

⑧ GRP: Parts shown in this column can be replaced by SET parts.

Example: Parts marked Ⓐ can be replaced by parts marked Ⓑ, and Ⓓ for Ⓒ, so the rest follow in the same alphabetical order.

⑨ Remarks

＊Other maker's part code number is shown in this column.

＊When Fig. No. is shown in the Remark column of SET parts or ASSY parts, each of their component parts are listed in said Fig. No.

4. Color :

The following colors are used color parts.

COLOR CODE	COLOR	SPRAY TYPE PARTS CODE	PAINTS 4K DRUM PARTS CODE	PAINTS 16K DRUM PARTS CODE
4 L	NEO BLUE	1300-985-001-20	1300-985-003-00	1300-985-004-00
6 G	SUMMER WHITE	1300-958-001-20	1300-958-003-00	1300-958-004-00
7 F	MIRROR BLACK	1300-954-001-20	1300-954-003-00	1300-954-004-00

NOTE: Color code is signified only for the parts assigned by the maker as color parts.

5. Serial Numbers :

1) For engines serial number is stamped on CYLINDER BLOCK ASSY.
   Please see Fig. No. 6－1.
2) For chassies serial number is shown on the LABEL.
   Please see

6. Parts Order

1) When you order parts, please make sure of correct numbers.
2) When substitute parts is available, the part number ordered will be automatically turned to a new part number.
3) Please be sure to use “ISEKI GENUINE PARTS”.
   Any other similar parts other than ISEKI parts when used may cause a trouble that makes us unable to repair or guarantee the warrant.

*** Structure Table of Model ***

MODEL / FIG.	TXG237F3	E4	GVRE44G	GVRE44G	GZVRE4G								
1	*	*	*	*	*								
2	*	*	*	*	*								
3	*	*	*	*	*								
4	*	*	*	*	*								
5	*	*	*	*	*								
6	*	*	*	*	*								
7	*	*	*	*	*								
8	*	*	*	*	*								
9	*	*	*	*	*								
10	*												
11			*	*	*								
12	*	*	*	*	*								
13	*	*	*	*	*								
14	*	*	*	*	*								
15	*	*	*	*	*								
16	*	*	*	*	*								
17	*	*	*	*	*								
18	*	*	*	*	*								
19	*	*	*	*	*								
20	*	*	*	*	*								
21	*	*	*	*	*								
22	*	*	*	*	*								
23	*	*	*	*	*								
24	*	*	*	*	*								
25	*	*	*	*	*								
26	*	*	*	*	*								
27	*	*	*	*	*								
28	*	*	*	*	*								
29	*	*	*	*	*								
30	*	*	*	*	*								
31	*	*	*	*	*								
32	*	*	*	*	*								
33	*	*	*	*	*								
34	*	*	*	*	*								
35	*	*	*	*	*								
36	*	*	*	*	*								
37	*	*	*	*	*								
38	*	*	*	*	*								
39	*	*	*	*	*								
40	*	*	*	*	*								
41	*	*	*	*	*								
42			*	*	*								
43	*	*	*	*	*								
44	*	*	*	*	*								
45	*	*	*	*	*								

*** Structure Table of Model ***

MODEL / FIG.	TXGE2437F3	GGGGVVRREE44G	GZVREE4G									
46	*	*	*	*	*							
47	*	*	*	*	*							
48	*	*	*	*	*							
49	*	*	*	*	*							
50	*	*	*	*	*							
51	*											
52		*	*	*	*							
53	*	*	*	*	*							
54	*	*	*	*	*							
55		*	*	*	*							
56	*	*	*	*	*							
57	*	*	*	*	*							
58	*											
59		*	*	*	*							
60	*	*	*	*	*							
61	*	*	*	*	*							
62	*	*	*	*	*							
63	*	*	*	*	*							
64	*	*	*	*	*							
65		*	*	*	*							
66	*	*	*	*	*							
67	*	*	*									
68				*	*							
69		*	*	*	*							
70	*	*	*	*	*							
71		*	*	*	*							
72	*	*		*								
73			*		*							
74	*	*	*	*	*							
75	*	*	*	*	*							
76	*	*	*	*	*							
77		*	*	*	*							
78	*											
79	*											
80		*	*	*	*							
81	*	*	*	*	*							
82	*	*	*	*	*							
83	*	*	*	*	*							
84	*											
85		*	*	*	*							
86	T	T	T	T	T							
87	T	T	T	T	T							
88	T											
89	T	T	T	T	T							
90	T	T	T	T	T							

*** Structure Table of Model ***

MODEL / FIG.	TXG237F3	EG4VRE44G	GGVRE4G	GZVRE4G								
91	T											
92	T	T	T	T	T							
93	T	T	T	T	T							
94	T	T	T	T	T							
95	T	T	T	T	T							
96	R	R	R	R	R							
97	T	T	T	T	T							
98	T	T	T	T	T							
99	*	*	*	*	*							
100	*	*	*	*	*							
101	*	*	*	*	*							
102	*	*	*	*	*							

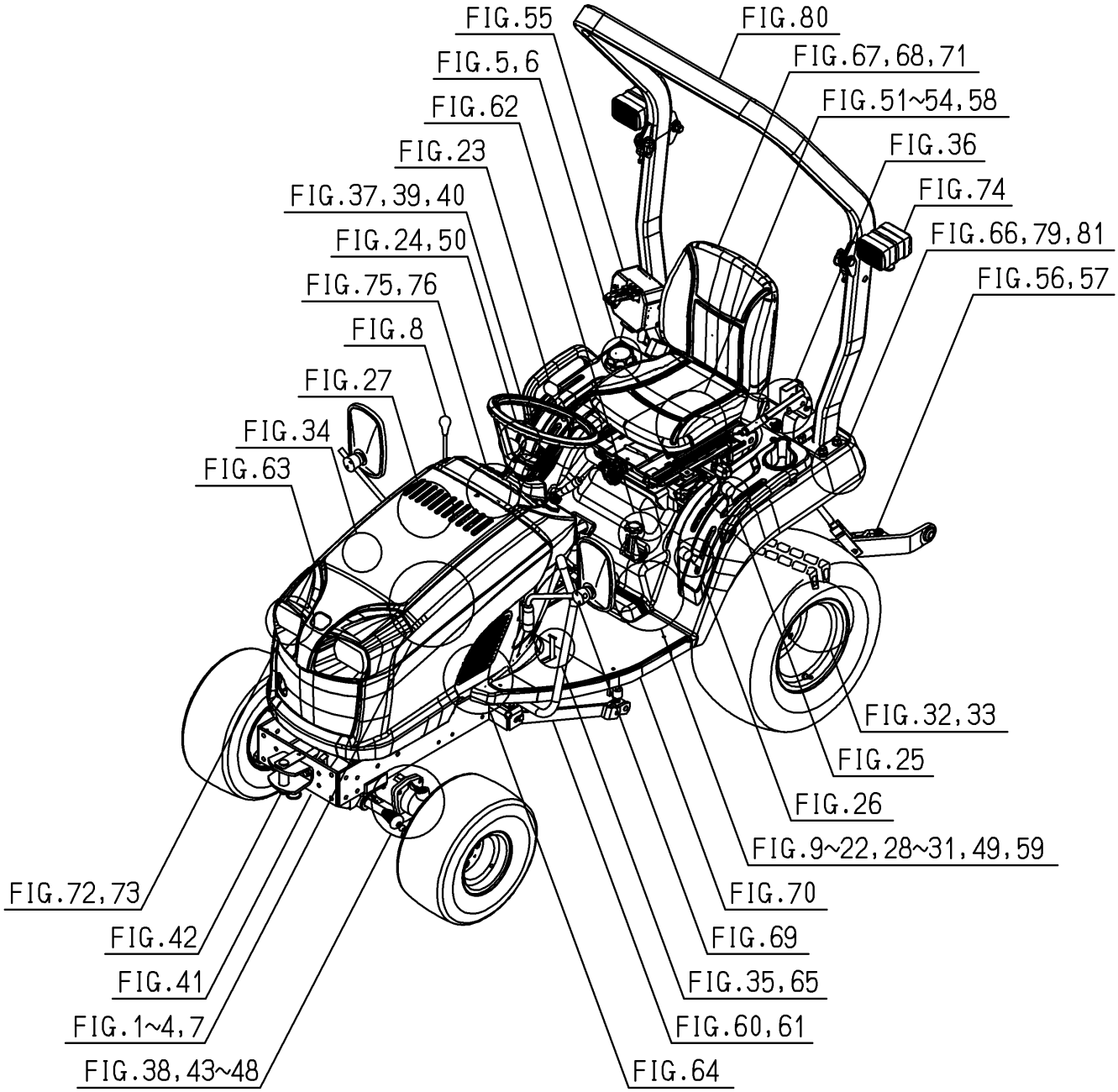
FIG.55
FIG.80
FIG.5,6
FIG.67,68,71
FIG.62
FIG.51~54,58
FIG.23
FIG.36
FIG.37,39,40
FIG.74
FIG.24,50
FIG.66,79,81
FIG.75,76
FIG.56,57
FIG.8
FIG.27
FIG.34
FIG.63
FIG.32,33
FIG.25
FIG.26
FIG.9~22,28~31,49,59
FIG.72,73
FIG.70
FIG.42
FIG.69
FIG.41
FIG.35,65
FIG.1~4,7
FIG.60,61
FIG.38,43~48
FIG.64

Contents

TXG237F3

ENGINE(E3112-B59)

SHORT BLOCK ENGIASSY····· Fig. 1
CYLINDER HEAD····· Fig. 2
CYLINDER HEAD COVER····· Fig. 3
INLET MANIFOLD····· Fig. 4
EXHAUST MANIFOLD····· Fig. 5
CYLINDER BLOCK····· Fig. 6
BEARING/UNDER SIZE (OPTION)····· Fig. 7
OIL PAN····· Fig. 8
REAR PLATE····· Fig. 9
TIMING GEAR CASE····· Fig. 10
HANGER····· Fig. 11
VALVE····· Fig. 12
CAM SHAFT····· Fig. 13
PISTON····· Fig. 14
PISTON/OVER SIZE (OPTION)····· Fig. 15
CRANK SHAFT····· Fig. 16
OIL PUMP····· Fig. 17
WATER PUMP····· Fig. 18
COOLING FAN····· Fig. 19
INJECTION NOZZLE····· Fig. 20
INJECTION PUMP····· Fig. 21
FUEL PIPE····· Fig. 22
ADAPTER····· Fig. 23
ELECTRIC (1)····· Fig. 24

ELECTRIC (2)····· Fig. 25
REPAIR PARTS(OPTION)·····Fig. 26
REPAIR PARTS(OPTION)·····Fig. 27
COMPONENT PARTS
FOR 6215-300-036-10 ON Fig.020·····Fig. 28
COMPONENT PARTS
FOR 6215-600-103-30 ON Fig.021·····Fig. 29

Contents

CHASSIS

MOUNT(ENGINE)SYSTEM ····· Fig. 1
RADIATOR SYSTEM ····· Fig. 2
MUFFLER SYSTEM ····· Fig. 3
CLEANER(AIR)SYSTEM ····· Fig. 4
PUMP(FUEL)SYSTEM ····· Fig. 5
TANK(FUEL)SYSTEM ····· Fig. 6
BATTERY SYSTEM ····· Fig. 7
LEVER(ACCELERATOR)SYSTEM ····· Fig. 8
SHAFT(INPUT)SYSTEM ····· Fig. 9
CASE(TRANSMISSION)SYSTEM
(EXCEPT G TYPE) ····· Fig. 10
CASE(TRANSMISSION)SYSTEM(G TYPE) ····· Fig. 11
COVER(MID)SYSTEM ····· Fig. 12
METAL(HST)SYSTEM ····· Fig. 13
HST SYSTEM ····· Fig. 14
GEAR(PUMP)SYSTEM ····· Fig. 15
GEAR(SUB)SYSTEM ····· Fig. 16
GEAR(4WD)SYSTEM ····· Fig. 17
GEAR(PTO)SYSTEM ····· Fig. 18
METAL(PTO)SYSTEM ····· Fig. 19
CHANGE(SUB)SYSTEM ····· Fig. 20
CHANGE(4WD)SYSTEM ····· Fig. 21
CHANGE(PTO)SYSTEM ····· Fig. 22
LEVER(SUB)SYSTEM ····· Fig. 23
LEVER(4WD)SYSTEM ····· Fig. 24
LEVER(PTO/REAR)SYSTEM ····· Fig. 25
LEVER(PTO/MID)SYSTEM ····· Fig. 26

PEDAL(HST)SYSTEM(1/2)(2/2)····· Fig. 27
PINION(DRIVE)SYSTEM····· Fig. 28
GEAR(DIFERENTIAL)SYSTEM····· Fig. 29
LOCK(DIFERENTIAL)SYSTEM····· Fig. 30
HOUSING(AXLE)SYSTEM····· Fig. 31
SHAFT(WHEEL)SYSTEM····· Fig. 32
BRAKE SYSTEM····· Fig. 33
PEDAL(BRAKE)SYSTEM····· Fig. 34
PEDAL(DIFF-LOCK)SYSTEM····· Fig. 35
BRAKE(PARKING)SYSTEM(1/2)(2/2)····· Fig. 36
WHEEL(STEERING)SYSTEM····· Fig. 37
CYLINDER(STEERING)SYSTEM····· Fig. 38
STEERING(POWER)SYSTEM····· Fig. 39
PIPING(STEERING)SYSTEM····· Fig. 40
FRAME(MAIN)SYSTEM····· Fig. 41
HITCH(FRONT)SYSTEM(G TYPE)····· Fig. 42
SHAFT(DRIVE/4WD)SYSTEM····· Fig. 43
PINION(DRIVE)SYSTEM····· Fig. 44
HOUSING(AXLE)SYSTEM····· Fig. 45
CASE(GEAR/FRONT)SYSTEM····· Fig. 46
SHAFT(DRIVE/FINAL)SYSTEM····· Fig. 47
ROD(TIE)SYSTEM····· Fig. 48
CASE(CYLINDER)SYSTEM····· Fig. 49
CONTROL SYSTEM····· Fig. 50
PIPING(MAIN)SYSTEM(EXCEPT G TYPE)····· Fig. 51
PIPING(MAIN)SYSTEM(G TYPE)····· Fig. 52
PIPING(SUB)SYSTEM····· Fig. 53
CONTROL SYSTEM····· Fig. 54
VALVE SYSTEM····· Fig. 55
LINK(3P)SYSTEM····· Fig. 56
ROD(LIFT)SYSTEM····· Fig. 57
PLATE(TRAILER)SYSTEM
(EXCEPT G TYPE)····· Fig. 58

HITCH(TRAILER)SYSTEM(G TYPE)····· Fig. 59
LINK(MOWER)SYSTEM·····Fig. 60
LINK(MOWER)SYSTEM·····Fig. 61
KNOB(ADJUST/HEIGHT)SYSTEM····· Fig. 62
HOOD SYSTEM····· Fig. 63
COVER(LOWER)SYSTEM····· Fig. 64
HANDRAIL SYSTEM(G TYPE)····· Fig. 65
FENDER SYSTEM·····Fig. 66
SEAT SYSTEM(EXCEPT Z TYPE)····· Fig. 67
SEAT SYSTEM(Z TYPE)····· Fig. 68
MIRROR SYSTEM(G TYPE)····· Fig. 69
FLOOR SYSTEM·····Fig. 70
PLATE(NUMBER)SYSTEM
(EXCEPT G TYPE)·····Fig. 71
LAMP(HEAD)SYSTEM
(EXCEPT E4G TYPE)····· Fig. 72
LAMP(HEAD)SYSTEM(E4G TYPE)·····Fig. 73
LAMP SYSTEM·····Fig. 74
PANEL SYSTEM·····Fig. 75
SWITCH SYSTEM(1/2)(2/2)·····Fig. 76
HARNESS SYSTEM(G TYPE)····· Fig. 77
HARNESS SYSTEM(EXCEPT G TYPE)····· Fig. 78
BRACKET(LAMP)SYSTEM
(EXCEPT G TYPE)·····Fig. 79
ROPS SYSTEM(G TYPE)····· Fig. 80
FRAME(REAR)SYSTEM····· Fig. 81
ORNAMENT·····Fig. 82
LABEL(CONTROL)·····Fig. 83
LABEL(CAUTION)SYSYTEM
(EXCEPT G TYPE)·····Fig. 84
LABEL(CAUTION)SYSYTEM(G TYPE)·····Fig. 85

□

OPTIONAL.REPAIR PARTS

WHEEL(REAR/AGR/26X12)SYSTEM
(OPTION)……Fig. 86
WHEEL(REAR/TURF/26X12)SYSTEM
(OPTION)……Fig. 87
HITCH(FRONT)SET
(EXCEPT G TYPE)(OPTION)……Fig. 88
WHEEL(FRONT/AGR/18X8.5)SET
(OPTION)……Fig. 89
WHEEL(FRONT/TURF/18X835)SYSTEM
(OPTION)……Fig. 90
HITCH(TRAILER)SET
(EXCEPT G TYPE)(OPTION)……Fig. 91
KIT(OUTLET)SET(G TYPE)(OPTION)……Fig. 92
LEVER(VALVE)SET(G TYPE)(OPTION)……Fig. 93
LINK(MOWER/CYLINDER/237)SET
(OPTION)……Fig. 94
KIT SET(G TYPE)(OPTION)……Fig. 95
HARNESS(BATTERY/CIRCUIT)SET
(REPAIR)……Fig. 96
BUMPER(FRONT)SET(E4 TYPE)(OPTION)……Fig. 97
WEIGHT(15)SET(E4 TYPE)(OPTION)……Fig. 98

COMPONENT PARTS

COMPONENT PARTS
FOR K211-101-000-10 ON Fig.51,52……Fig. 99
COMPONENT PARTS
FOR K510-017-000-10 ON Fig.14……Fig.100
COMPONENT PARTS
FOR 1725-105-220-10 ON Fig.5……Fig.101

COMPONENT PARTS

FOR 1725-219-210-20 ON Fig.18……Fig.102

E N G I N E

E3112B59···TXG237F3

6004-097-710-00

FIG. 1 SHORT BLOCK ENGIASSY

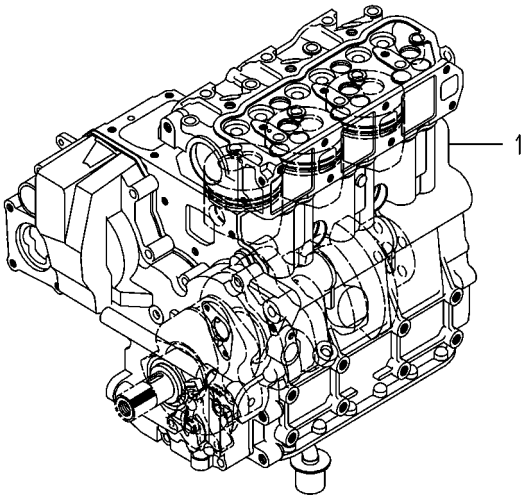

6004-013O-0100

KEY	PART CODE	DESCRIPTION	SPC	TYPE OF MODEL E3112 B59		ITC	COL	GRP	REMARKS
1	6004-010-099-00	SHORTBLOCKENGIN ASSY	T	1					

FIG. 2 CYLINDER HEAD

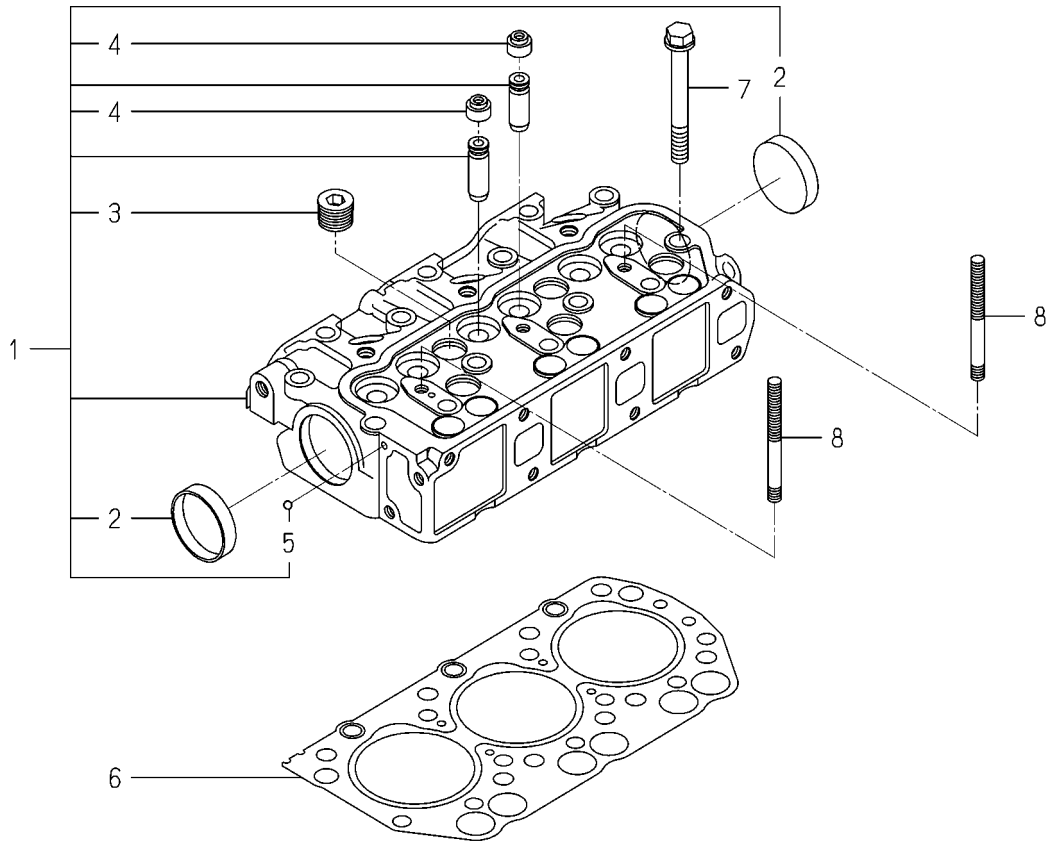

6004-101I-0100,6004-101I-0200

KEY	PART CODE	DESCRIPTION	SPC	TYPE OF MODEL E3112 B59		ITC	COL	GRP	REMARKS
1	6211-110-057-50	CYLINDERHEAD ASSY	*	1					
2	6911-129-006-00	CAP,SEALING	*	2					
3	6209-605-004-10	PLUG/PT1/2	*	5					
4	6212-569-002-00	SEAL,OIL	*	6					
5	V682-200-000-60	BALL,STEEL	*	1					
6	6211-141-029-20	GASKET/CYLINDERHEAD	*	1					
7	6209-000-044-00	BOLT	*	14					
8	6209-300-014-00	STUD	*	2					

FIG. 3 CYLINDER HEAD COVER

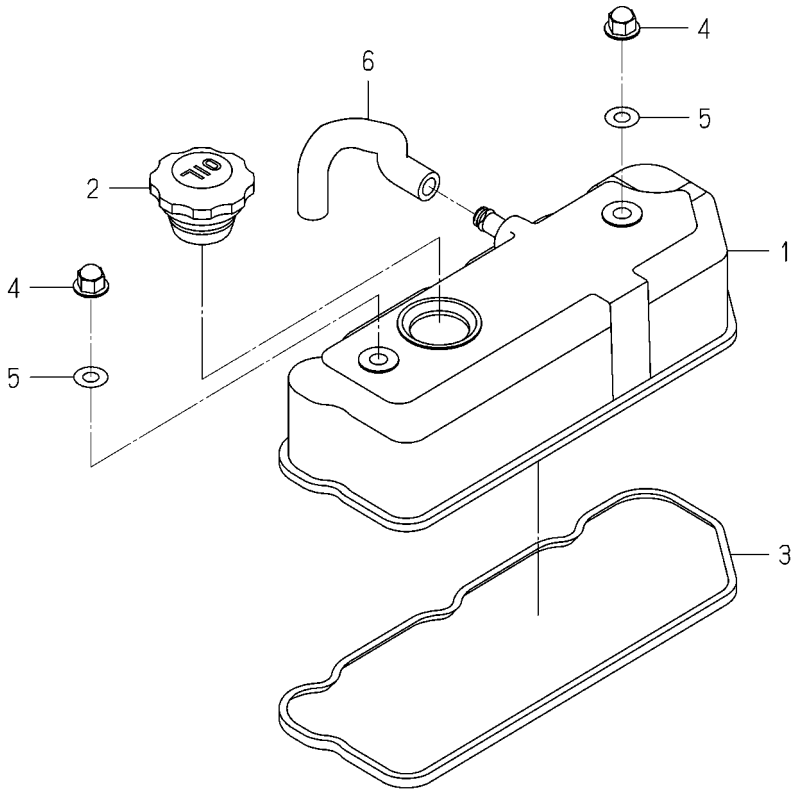

6003-110 -0100

KEY	PART CODE	DESCRIPTION	SPC	TYPE OF MODEL E3112 B59		ITC	COL	GRP	REMARKS
1	6211-170-004-20	COVER/CYLINDER HEAD	*	1					
2	6211-751-001-10	CAP,OIL FILLER	*	1					
3	6211-173-003-00	SEAL,CYL.HEAD COVER	*	1					
4	6209-490-002-10	NUT/CAP	*	2					
5	6209-572-003-00	GASKET	*	2					
6	6209-360-028-20	HOSE/RUBBER	*	1					

FIG. 4 INLET MANIFOLD

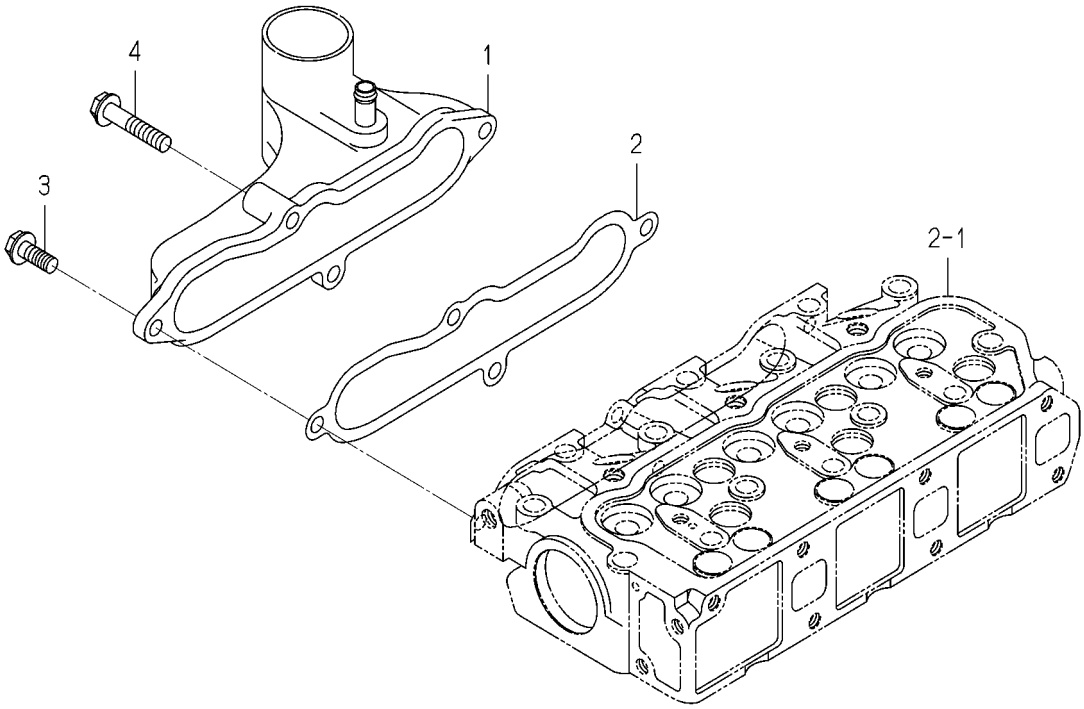

6003-120B-0100

KEY	PART CODE	DESCRIPTION	SPC	TYPE OF MODEL E3112 B59		ITC	COL	GRP	REMARKS
1	6214-111-011-20	MANIFOLD(INLET) ASSY	*	1					
2	6214-115-001-20	GASKET,INLET MANIFOL	*	1					
3	V231-360-802-00	FLANGEBOLT/M8X20	*	3					
4	V231-360-804-00	FLANGEBOLT/M8X40	*	1					

FIG. 5 EXHAUST MANIFOLD

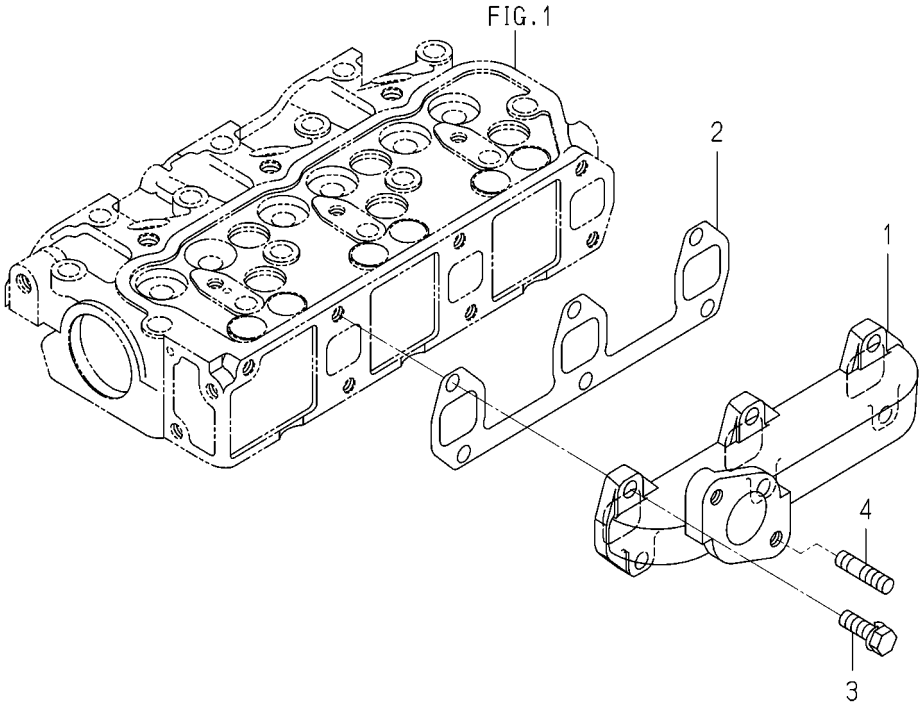

6003-140 -0100

KEY	PART CODE	DESCRIPTION	SPC	TYPE OF MODEL E3112 B59		ITC	COL	GRP	REMARKS
1	6214-141-008-20	MANIFOLD/EXHAUST	*	1					
2	6214-145-001-30	GASKET,EXH.MANIFOLD	*	1					
3	V211-560-802-50	BOLT,S/M8X25/7T	*	6					
4	6904-110-822-00	STUD	*	2					

FIG. 6 CYLINDER BLOCK

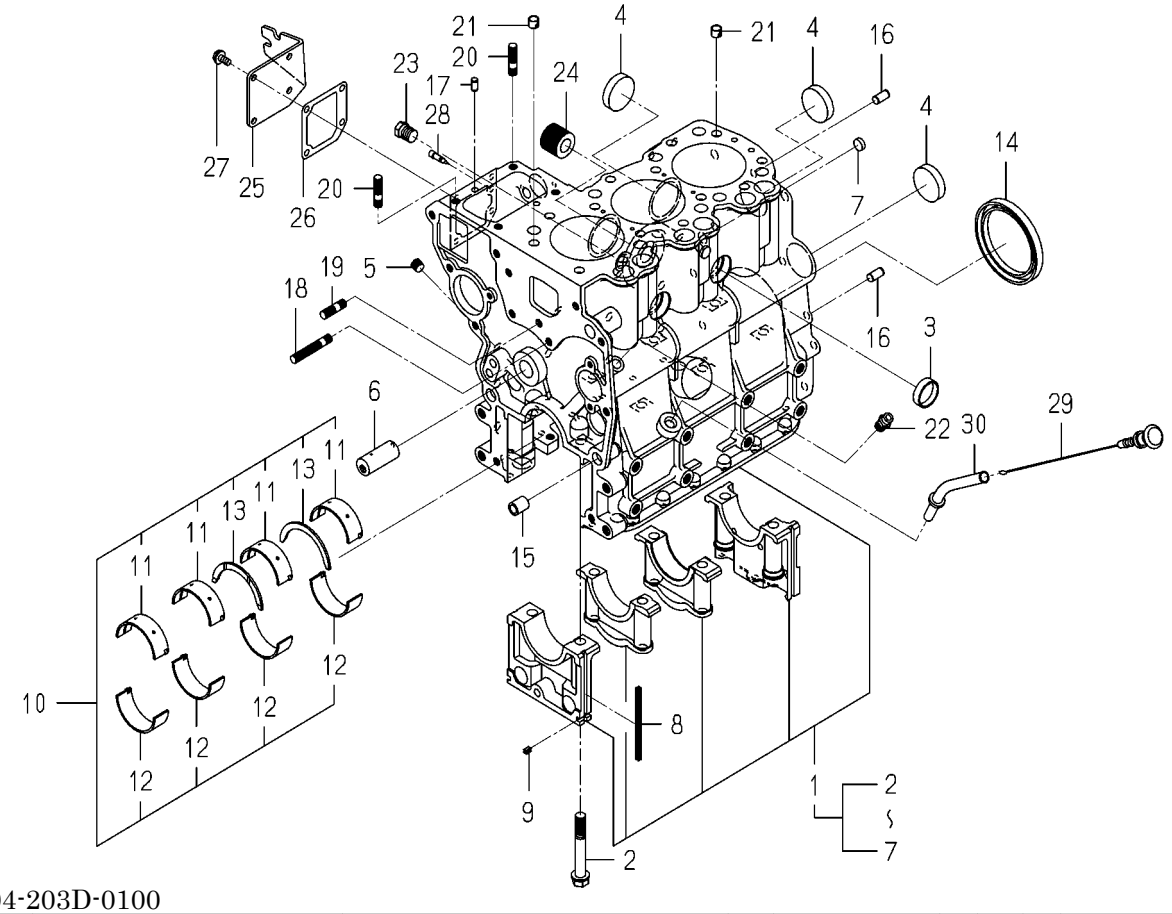

6004-203D-0100

KEY	PART CODE	DESCRIPTION	SPC	TYPE OF MODEL E3112	B59	ITC	COL	GRP	REMARKS
1	6211-210-113-10	CYLINDERBLOCK ASSY	*	1					
2	6209-000-004-10	BOLT	*	8					
3	6209-610-001-10	CUP/SEALING/28	*	2					
4	6209-610-009-00	CUP/SEALING/36	*	4					
5	6209-605-007-10	PLUG/PT1/8	*	3					
6	6212-531-014-00	PIN/IDLEGEAR	*	1					
7	6209-610-008-00	CUP/SEALING/12	*	2					
8	6211-258-001-00	SEAL,BEARING CAP	*	4					
9	6211-258-002-00	SEAL,BEARING CAP/7	*	2					
10	6211-510-021-00	BEARING/CRANKSET	*	1					
11	6211-511-023-00	BEARING/CRANK/UPPER	*	4					
12	6211-511-024-00	BEARING/CRANK/LOWER	*	4					
13	6211-599-012-00	BEARING/THRUST/CRANK	*	2					
14	6209-625-001-00	SEAL,OIL	*	1					
15	6209-749-001-20	PIN/TUBE	*	2					
16	6213-129-006-00	PIN/STRAIGHT	*	2					
17	6209-740-005-00	PIN	*	2					
18	6904-110-840-00	STUD/M8X40	*	1					
19	6904-110-818-00	STUD	*	1					
20	6904-110-822-00	STUD	*	2					
21	6294-453-002-00	DOWEL	*	2					
22	6909-902-299-00	NIPPLE	*	1					
23	V782-160-000-4T	PLUG/SCREW/SEAL	*	1					
24	6213-319-001-00	CONNECTOR,OIL FILTER	*	1					
25	6211-291-013-10	COVER/INJECTIONPUMP	*	1					
26	6211-292-001-20	GASKET/COVER	*	1					
27	V230-360-601-20	FLANGEBOLT/M6X12	*	4					
28	6215-549-013-00	PIN	*	1					
29	6211-760-054-20	LEVELGAGE	*	1					
30	6211-766-015-00	GUIDE/LEVELGAGE COMP	*	1					

FIG. 7 BEARING/UNDER SIZE (OPTION)

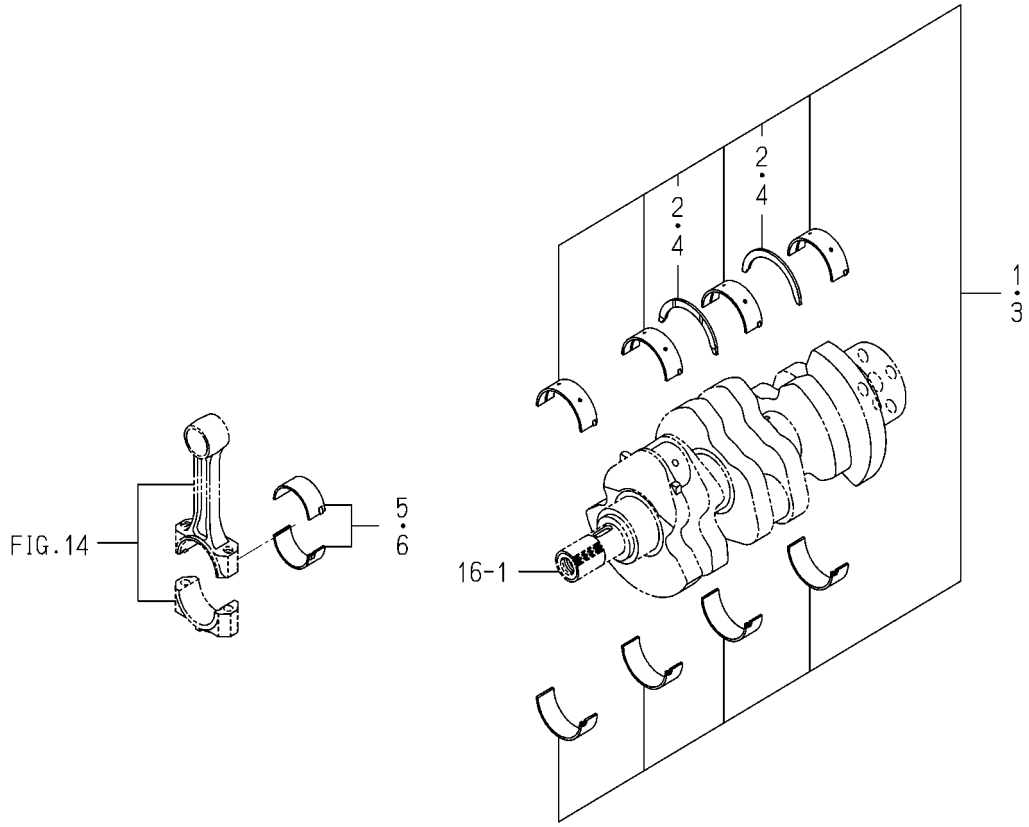

6003-209 -0100

KEY	PART CODE	DESCRIPTION	SPC	TYPE OF MODEL E3112 B59		ITC	COL	GRP	REMARKS
1	6211-540-018-00	BRG/CRANK/UN050 SET	T	1					
2	6211-599-012-00	BEARING/THRUST/CRANK	T	2					
3	6211-560-007-00	BRG/CRANK/UN100 SET	T	1					
4	6211-599-012-00	BEARING/THRUST/CRANK	T	2					
5	6212-274-016-00	BRG/CONROD/UN050 SET	T	3					
6	6212-276-016-00	BRG/CONROD/UN100 SET	T	3					

FIG. 8 OIL PAN

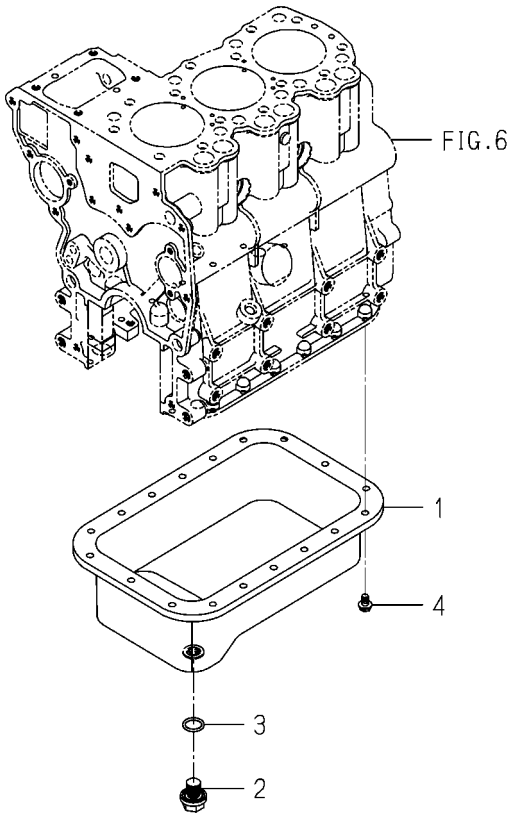

6004-210F-0100

KEY	PART CODE	DESCRIPTION	SPC	TYPE OF MODEL E3112 B59		ITC	COL	GRP	REMARKS
1	6211-361-069-00	OILPAN COMP	*	1					
2	3805-355-002-20	PLUG/M14X1.5	*	1					
3	V720-102-401-80	O-RING/1A,P18	*	1					
4	V230-360-601-00	FLANGEBOLT/M6X10	*	18					

FIG. 9 REAR PLATE

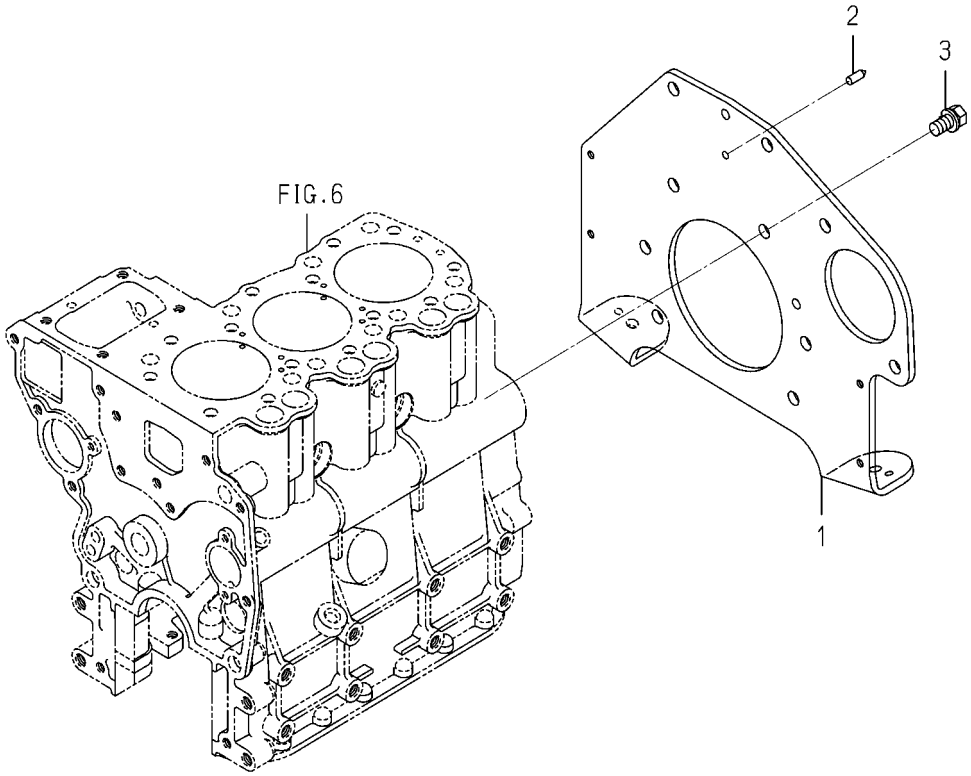

6004-220K-0100

KEY	PART CODE	DESCRIPTION	SPC	TYPE OF MODEL E3112 B59		ITC	COL	GRP	REMARKS
1	6211-341-064-00	PLATE/REAR	*	1					
2	6211-342-002-10	POINTER	*	1					
3	6901-911-020-00	BOLT,SEMS/M10X20,7T	*	8					

FIG. 10 TIMING GEAR CASE

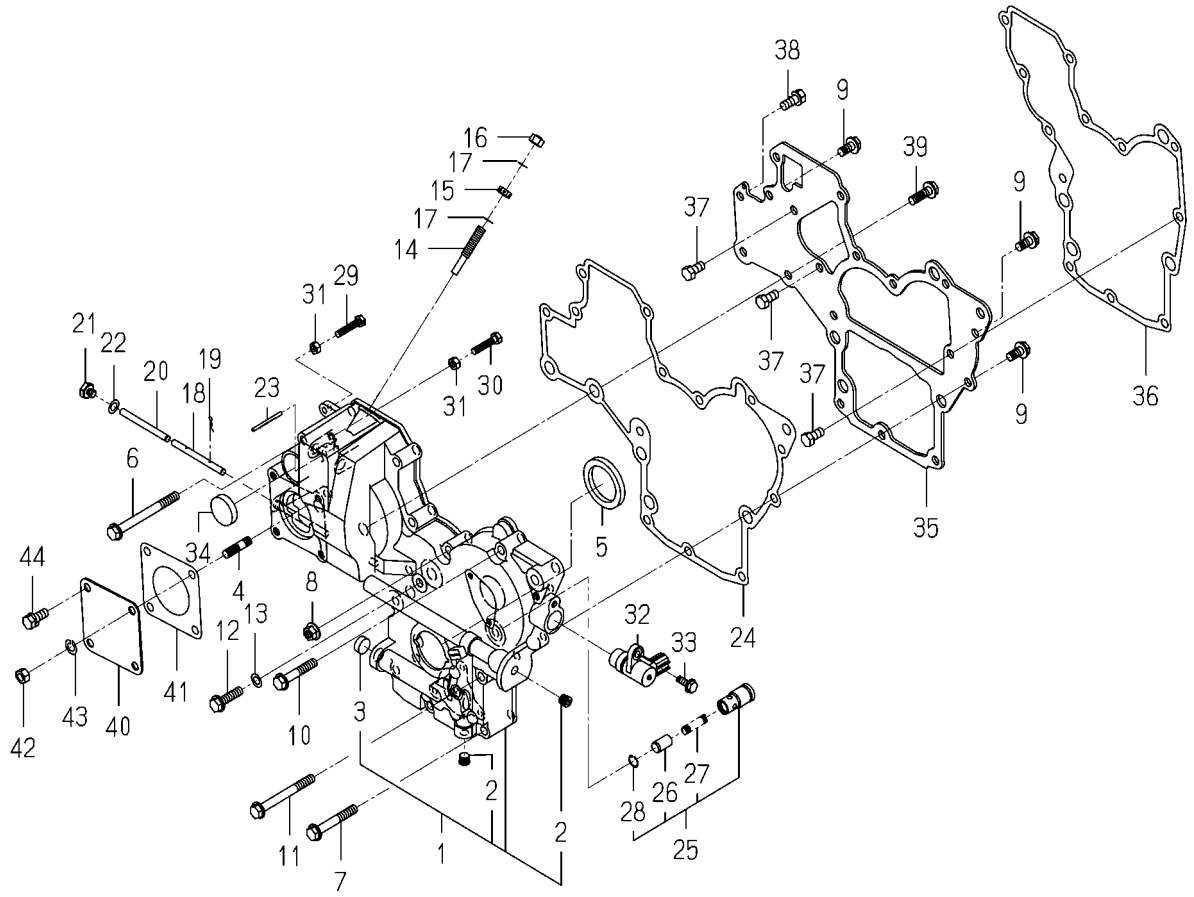

6004-241 -0100,6004-241 -0200

KEY	PART CODE	DESCRIPTION	SPC	TYPE OF MODEL E3112 B59		ITC	COL	GRP	REMARKS
1	6211-310-060-20	GEARCASE ASSY	*	1					
2	6209-605-007-10	PLUG/PT1/8	*	2					
3	6209-610-007-00	CUP/SEALING/16	*	1					
4	6904-110-822-00	STUD	*	1					
5	6209-625-002-00	SEAL,OIL	*	1					
6	V231-360-808-50	FLANGEBOLT/M8X85	*	1					
7	V231-360-805-50	FLANGEBOLT/M8X55	*	2					
8	3817-401-001-00	NUT/M08	*	1					
9	V231-360-801-60	FLANGEBOLT/M8X16	*	3					
10	V231-360-804-50	FLANGEBOLT/M8X45	*	5					
11	V231-360-807-50	FLANGEBOLT/M8X75	*	1					
12	V231-360-803-00	FLANGEBOLT/M8X30	*	1					
13	6209-500-003-00	WASHER/08X14X01	*	1					
14	6215-546-003-30	STOPPER/FULLLOAD	*	1					
15	6209-409-001-00	NUT/M8	*	1					
16	V341-120-008-00	NUT,CAP/M8	*	1					
17	6209-920-002-00	PACKING	*	2					
18	6215-542-004-20	PIN/ARM	*	1					
19	P117-303-003-00	PIN/SNAP	*	2					
20	6215-542-005-20	PIN	*	1					
21	6209-600-004-00	PLUG/SCREW	*	1					
22	6209-500-003-00	WASHER/08X14X01	*	1					
23	6209-740-001-00	PIN,GROOVE	*	1					
24	6211-312-003-20	GASKET/GEARCASE	*	1					
25	6213-160-002-20	VALVE/RELIEF ASSY	*	1					
26	6213-161-001-20	PISTON/VALVE/RELIEF	*	1					
27	6213-164-001-00	SPRING/RELIEF VALVE	*	1					
28	V705-140-012-00	RING,SNAP/12 C	*	1					
29	6209-050-001-00	BOLT/M6	*	1					
30	6209-050-002-00	BOLT/M6	*	1					

FIG. 10 TIMING GEAR CASE

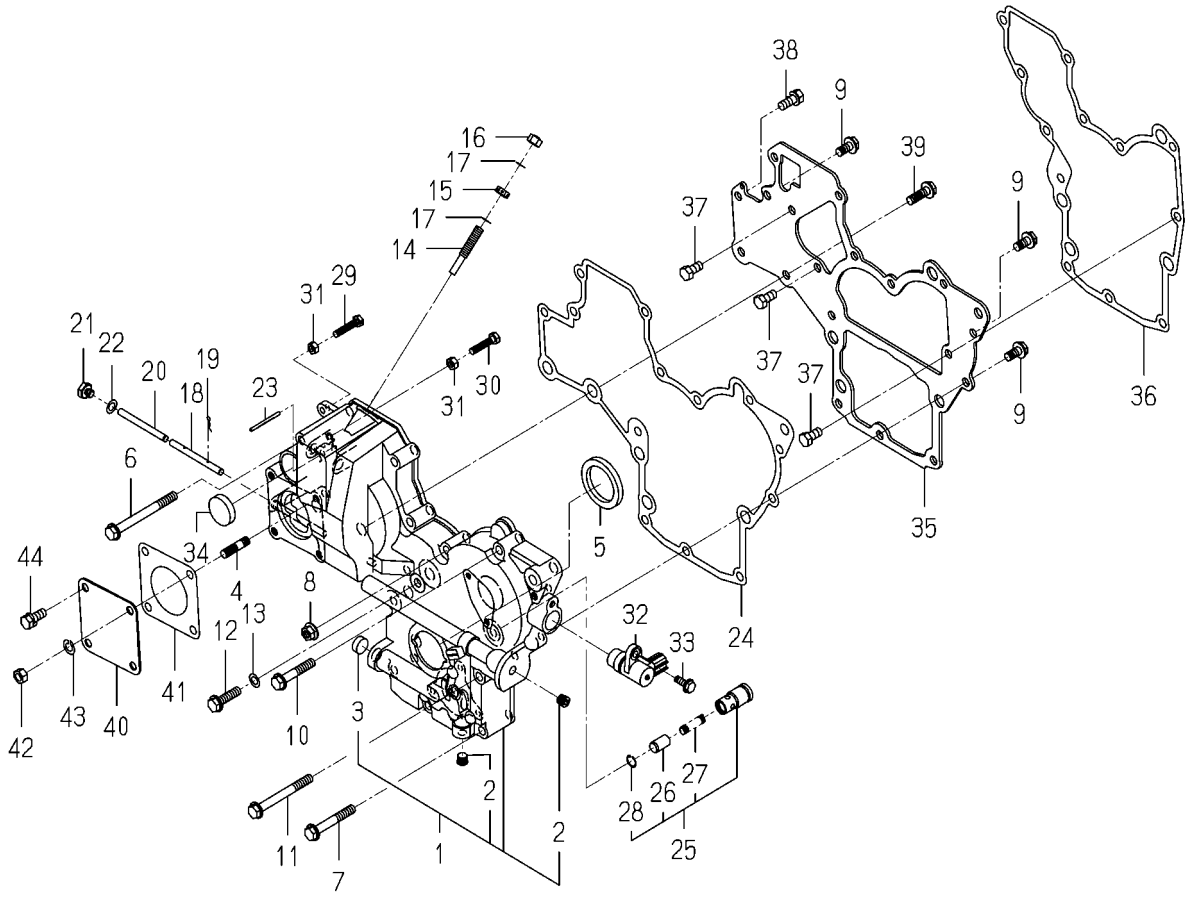

6004-241 -0100,6004-241 -0200

KEY	PART CODE	DESCRIPTION	SPC	TYPE OF MODEL E3112 B59		ITC	COL	GRP	REMARKS
31	V301-260-006-00	NUT/M6	*	2					
32	1690-654-350-00	SENSOR/REVOLUTION/L	*	1					
33	V230-360-601-60	FLANGEBOLT/M6X16	*	1					
34	3625-540-004-00	CAP,BLANK/30	*	1					
35	6211-311-048-10	PLATE/FRONT	*	1					
36	6211-312-004-20	GASKET/PLATE	*	1					
37	6902-050-816-00	BOLT	*	3					
38	V211-560-802-00	BOLT,S/M8X20/7T	*	1					
39	V231-360-802-50	FLANGEBOLT/M8X25	*	2					
40	6211-321-022-00	COVER/HYDRAULIC	*	1					
41	6211-322-002-00	GASKET/COVER	*	1					
42	V304-260-008-00	NUT/M8	*	1					
43	V401-160-008-00	WASHER,SP/M8	*	1					
44	V211-560-802-00	BOLT,S/M8X20/7T	*	3					

FIG. 11 HANGER

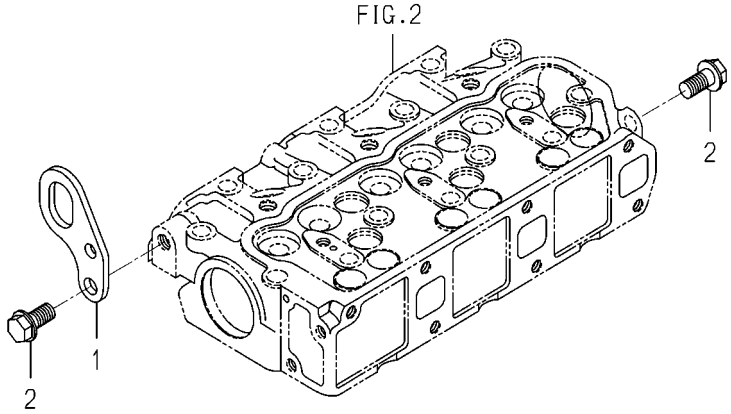

6004-290A-0100

KEY	PART CODE	DESCRIPTION	SPC	TYPE OF MODEL E3112 B59		ITC	COL	GRP	REMARKS
1	6211-777-007-30	HANGER	*	1					
2	V233-361-002-00	FLANGEBOLT/M10X20	*	2					

FIG. 12 VALVE

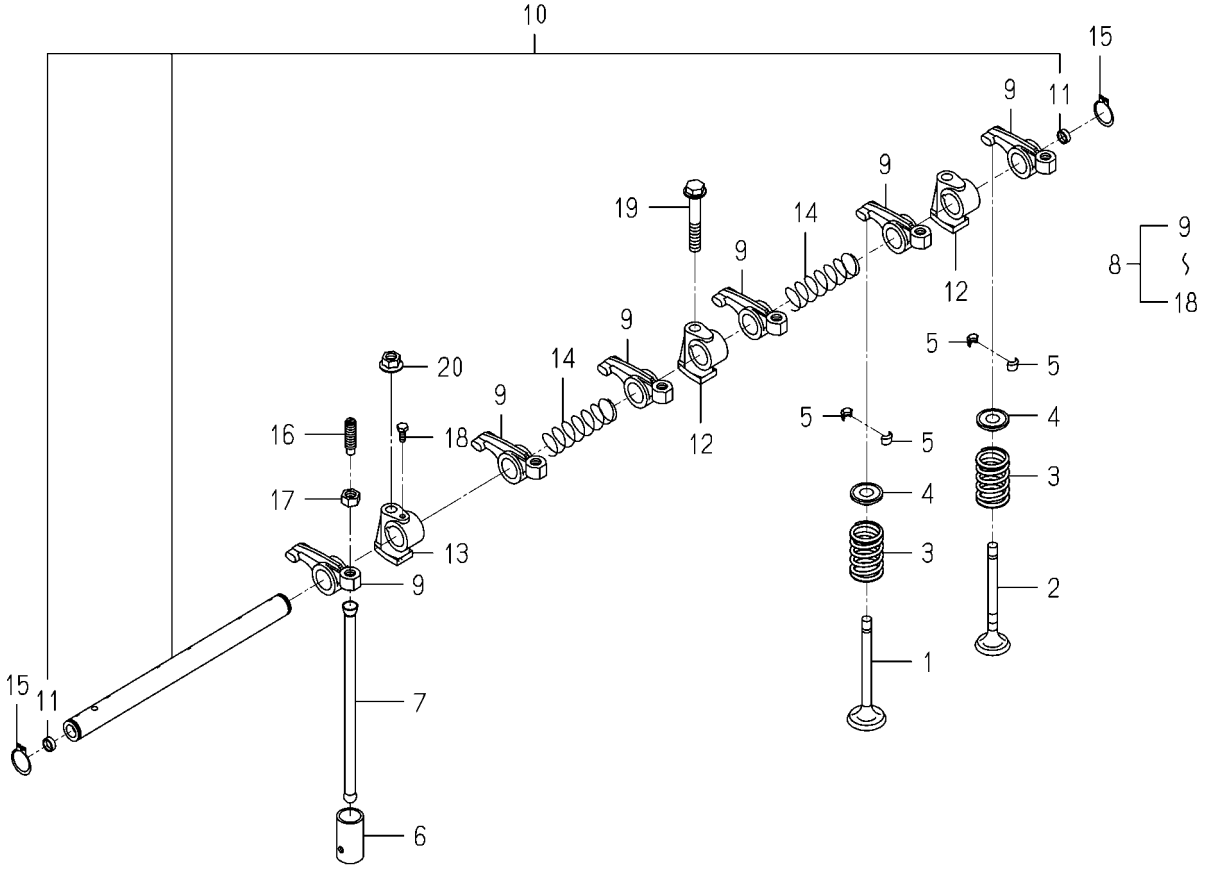

6004-301 -0100

KEY	PART CODE	DESCRIPTION	SPC	TYPE OF MODEL E3112 B59		ITC	COL	GRP	REMARKS
1	6212-551-028-00	VALVE/INTAKE	*	3					
2	6212-552-014-00	VALVE/EXHAUST	*	3					
3	6212-561-001-10	SPRING/VALVE	*	6					
4	6212-563-005-00	SEAT/VALVESPRING	*	6					
5	6212-565-001-00	CUTTER,VALVE	*	12					
6	6212-571-006-00	TAPPET	*	6					
7	6212-575-002-00	ROD,PUSH	*	6					
8	6212-600-002-30	ROCKERSHAFT ASSY	*	1					
9	6212-611-004-10	ROCKERARM	*	6					
10	6212-620-001-20	SHAFT/ROCKERARM ASSY	*	1					
11	6212-626-002-10	PLUG	*	2					
12	6212-628-004-00	BRACKET ROCKER SHAFT	*	2					
13	6212-628-005-00	BRACKET,ROCKER SHAFT	*	1					
14	6209-940-004-00	SPRING	*	2					
15	V704-140-016-00	RING,SNAP/16 C	*	2					
16	6212-616-002-00	SCREW ADJUST	*	6					
17	6209-409-003-00	NUT	*	6					
18	6209-000-002-00	BOLT	*	1					
19	V231-360-805-00	FLANGEBOLT/M8X50	*	1					
20	3817-401-001-00	NUT/M08	*	2					

FIG. 13 CAM SHAFT

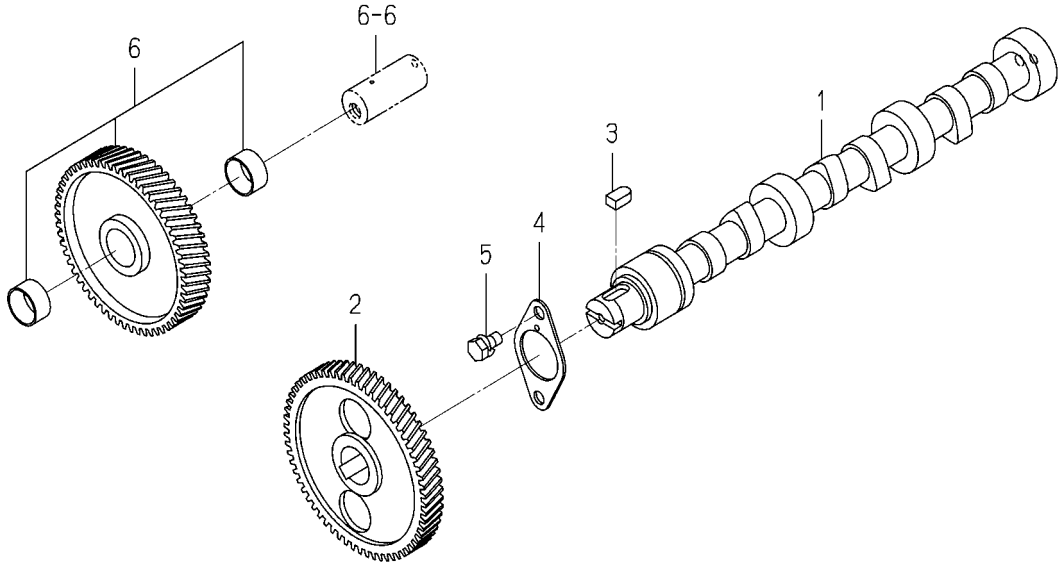

6003-310 -0100

KEY	PART CODE	DESCRIPTION	SPC	TYPE OF MODEL E3112 B59		ITC	COL	GRP	REMARKS
1	6212-511-002-00	SHAFT,CAM	*	1					
2	6212-522-010-00	GEAR/CAMSHAFT	*	1					
3	6209-730-005-00	KEY/07X05X09	*	1					
4	6212-535-014-00	PLATE/THRUST	*	1					
5	V210-560-601-20	BOLT,S/M6X12/7T	*	2					
6	6212-523-023-00	GEAR/IDLE ASSY	*	1					

FIG. 14 PISTON

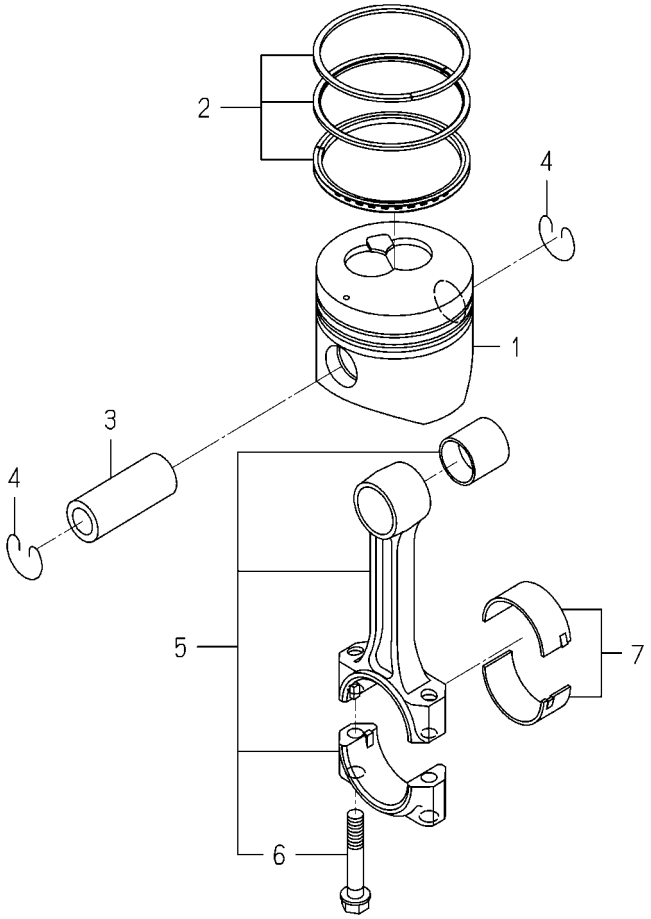

6004-340I-0100

KEY	PART CODE	DESCRIPTION	SPC	TYPE OF MODEL E3112 B59		ITC	COL	GRP	REMARKS
1	6212-111-094-20	PISTON	*	3					
2	6212-121-014-20	RING/PISTON SET	*	3					
3	6212-211-001-10	PIN,PISTON	*	3					
4	6209-587-001-00	RING,SNAP	*	6					
5	6212-230-004-10	CONNECTINGROD ASSY	*	3					
6	6212-235-005-00	BOLT/CONNECTINGROD	*	6					
7	6212-271-016-00	BEARING/CONNECTING R	*	3					

FIG. 15 PISTON/OVER SIZE (OPTION)

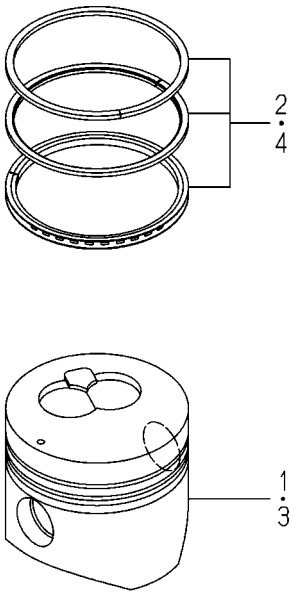

6004-349I-0100

KEY	PART CODE	DESCRIPTION	SPC	TYPE OF MODEL E3112 B59		ITC	COL	GRP	REMARKS
1	6212-114-094-20	PISTON(OV/050)	T	3					
2	6212-124-014-10	RINGPISTON/OV050 SET	T	3					
3	6212-116-094-20	PISTON(OV/100)	T	3					
4	6212-126-014-10	RINGPISTON/OV100 SET	T	3					

FIG. 16 CRANK SHAFT

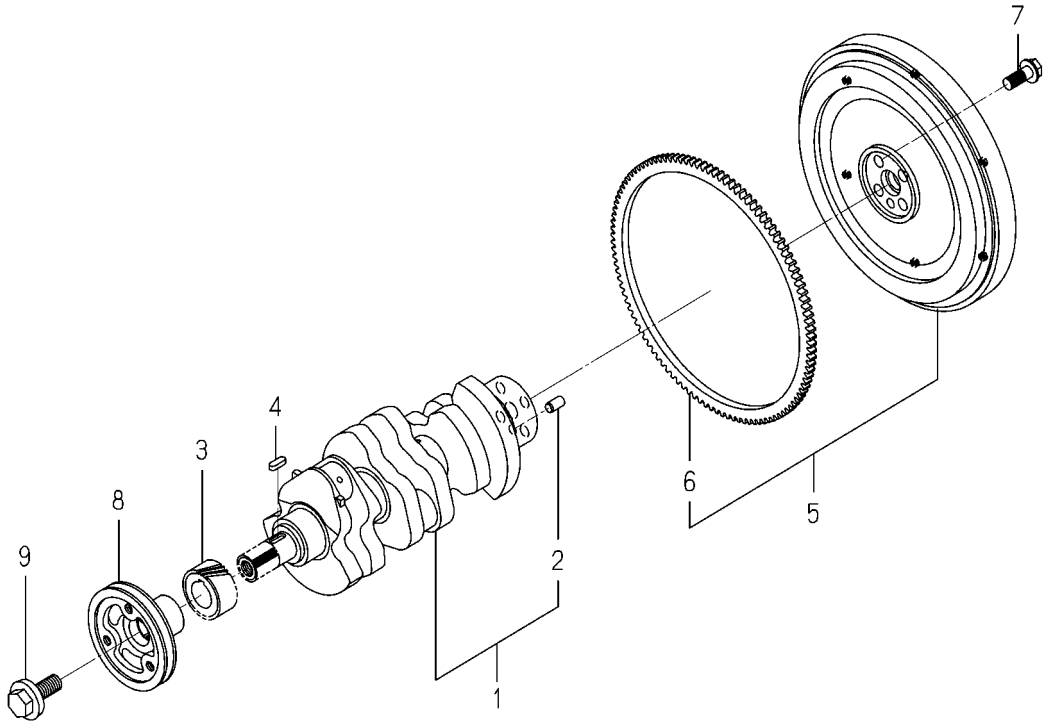

6004-351G-0100

KEY	PART CODE	DESCRIPTION	SPC	TYPE OF MODEL E3112 B59		ITC	COL	GRP	REMARKS
1	6212-310-019-70	CRANKSHAFT ASSY	*	1					
2	V523-101-001-80	PIN,ST,B/10X18	*	1					
3	6212-521-008-00	GEAR/CRANK	*	1					
4	6209-730-002-00	KEY/07X05X20	*	1					
5	6212-330-105-10	FLYWHEEL ASSY	*	1					
6	6212-333-009-00	RINGGEAR	*	1					
7	6209-046-015-00	BOLT/FLANGE	*	4					
8	6212-371-052-00	PULLEY/CRANK	*	1					
9	6209-000-043-00	BOLT/CRANK	*	1					

FIG. 17 OIL PUMP

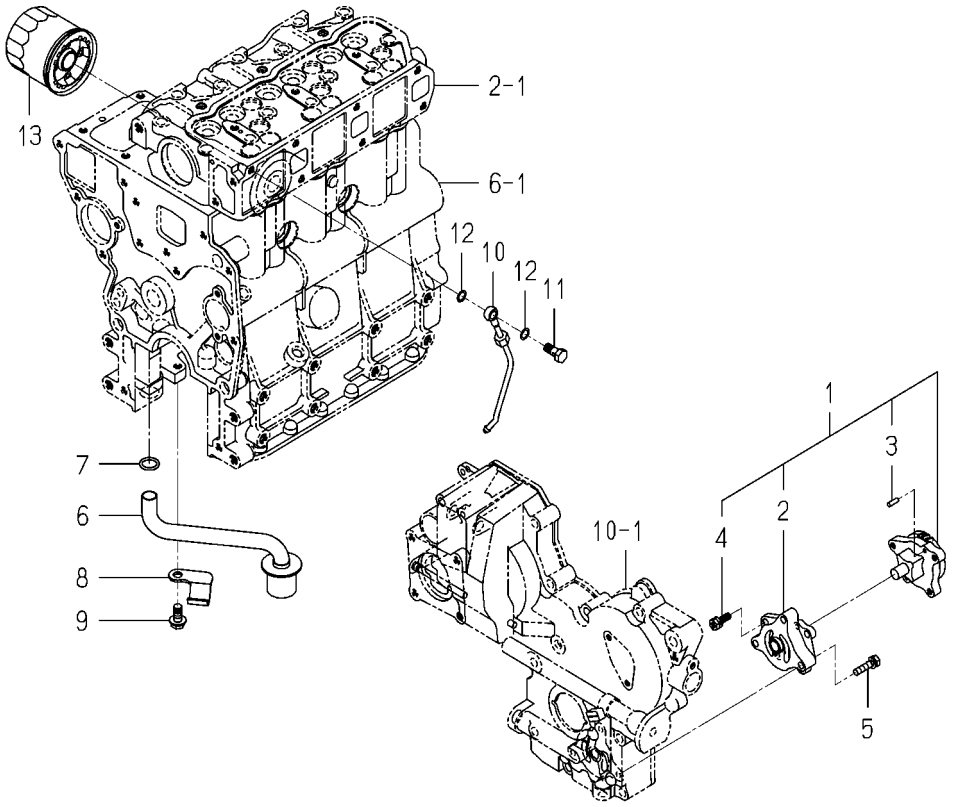

6004-401C-0100

KEY	PART CODE	DESCRIPTION	SPC	TYPE OF MODEL E3112 B59		ITC	COL	GRP	REMARKS
1	6213-100-003-30	OILPUMP ASSY	*	1					
2	6213-111-001-30	BODY/OILPUMP	*	1					
3	6213-129-003-00	PIN/STRAIGHT	*	2					
4	6213-119-001-00	BOLT/WS	*	3					
5	V210-560-602-50	BOLT,S/M6X25/7T	*	3					
6	6213-140-035-10	STRAINER	*	1					
7	V720-102-401-50	O-RING/1A,P15	*	1					
8	6213-149-002-00	CLAMP,STRAINER	*	1					
9	V231-360-801-60	FLANGEBOLT/M8X16	*	1					
10	6213-311-006-00	PIPE,OIL	*	1					
11	6909-906-105-10	BOLT,JOINT	*	1					
12	6209-920-002-00	PACKING	*	2					
13	6213-240-002-20	CARTRIDGE/OILFILTER	*	1					

FIG. 18 WATER PUMP

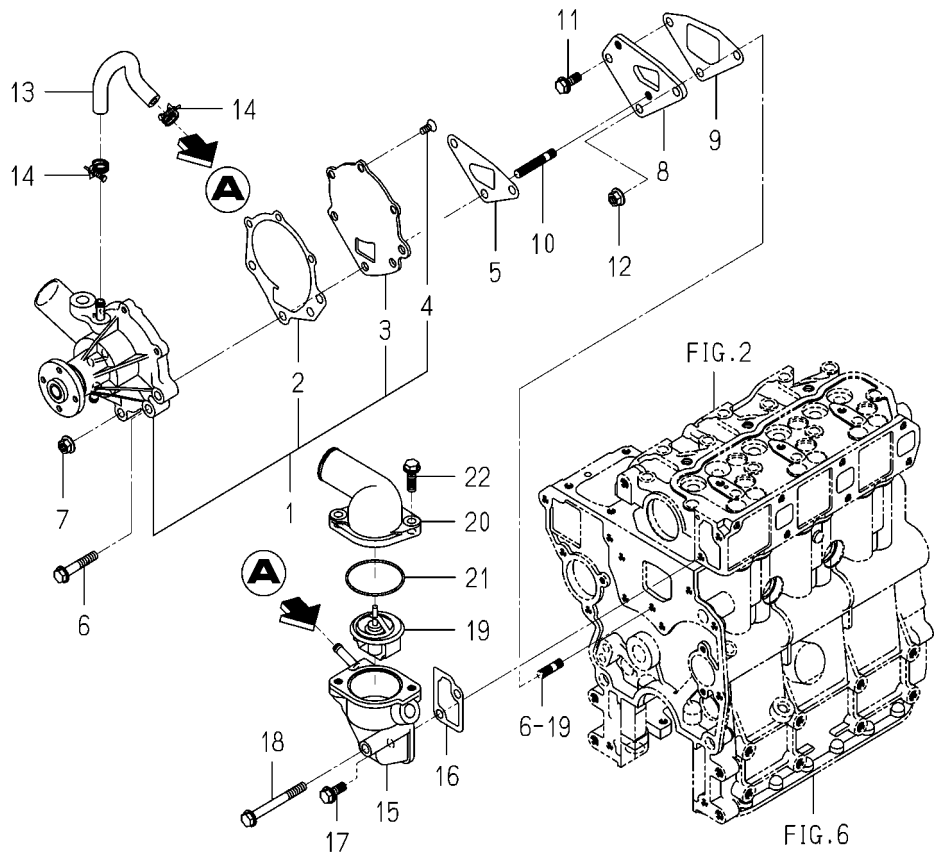

6004-420D-0100

KEY	PART CODE	DESCRIPTION	SPC	TYPE OF MODEL E3112 B59		ITC	COL	GRP	REMARKS
1	6213-610-005-50	WATERPUMP ASSY	*	1					
2	6213-613-002-10	GASKET	*	1					
3	6213-612-004-00	PLATE/WATER PUMP	*	1					
4	6213-619-003-00	SCREW/WATER PUMP	*	3					
5	6213-614-018-00	GASKET/WATERPUMP	*	1					
6	V231-360-804-50	FLANGEBOLT/M8X45	*	1					
7	3817-401-001-00	NUT/M08	*	2					
8	6213-619-001-00	SPACER,PUMP.WATER	*	1					
9	6213-614-019-00	GASKET/SPACER	*	1					
10	6904-110-840-00	STUD/M8X40	*	2					
11	V231-360-802-00	FLANGEBOLT/M8X20	*	1					
12	3817-401-001-00	NUT/M08	*	1					
13	6213-729-016-00	HOSE/RUBBER	*	1					
14	J061-210-015-00	CLAMP/WIRE/10-15	*	2					
15	6213-716-001-60	HOUSING/THERMOSTAT	*	1					
16	6213-743-002-10	GASKET/HOUSING	*	1					
17	V231-360-802-00	FLANGEBOLT/M8X20	*	1					
18	V231-360-807-50	FLANGEBOLT/M8X75	*	1					
19	6513-770-022-10	THERMOSTAT	*	1					
20	6213-711-004-00	PIPE/WATEROUTLET	*	1					
21	V723-102-005-50	O-RING/1A,S55	*	1					
22	V231-360-802-50	FLANGEBOLT/M8X25	*	2					

FIG. 19 COOLING FAN

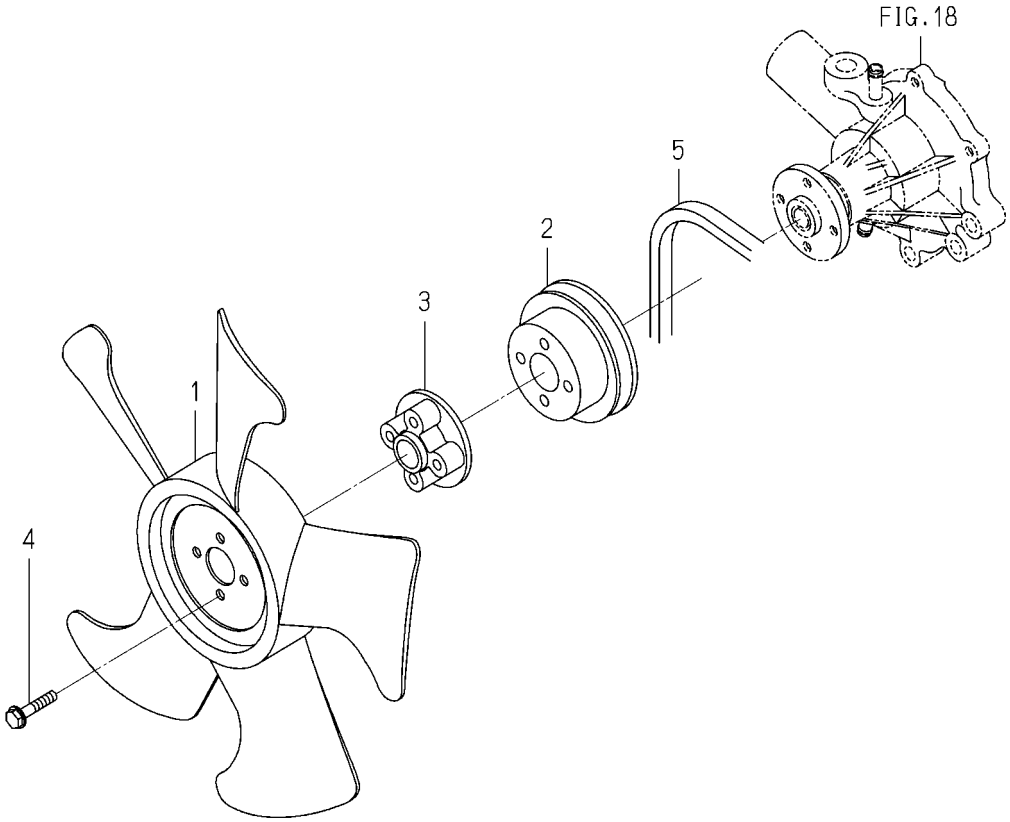

6004-480P-0100

KEY	PART CODE	DESCRIPTION	SPC	TYPE OF MODEL E3112 B59		ITC	COL	GRP	REMARKS
1	6213-660-023-00	FAN/COOLING	*	1					
2	6213-641-002-10	PULLEY,WATER PUMP	*	1					
3	6213-669-003-00	SPACER/FUN/19	*	1					
4	V230-360-603-00	FLANGEBOLT/M6X30	*	4					
5	6213-671-027-00	BELT/VCOGHM34.0	*	1					

FIG. 20 INJECTION NOZZLE

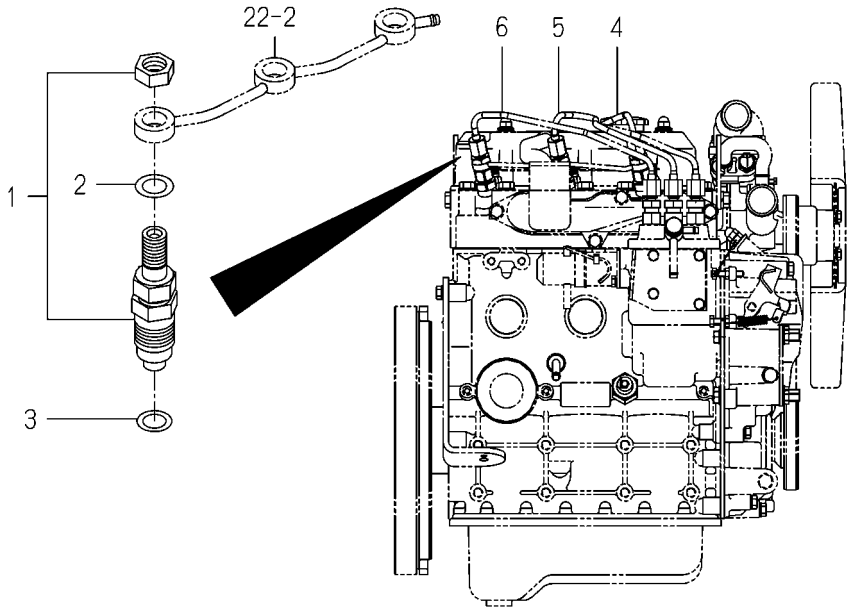

6004-501C-0100

KEY	PART CODE	DESCRIPTION	SPC	TYPE OF MODEL E3112 B59		ITC	COL	GRP	REMARKS
1	6215-300-036-10	INJECTIONNOZZLE ASSY	*	3					FIG 028
2	6215-359-001-00	WASHER	*	3					
3	6215-315-002-00	GASKET,NOZZLE	*	3					
4	6215-411-126-10	PIPE/INJECTION ASSY	*	1					
5	6215-411-127-00	PIPE/INJECTION ASSY	*	1					
6	6215-411-128-00	PIPE/INJECTION ASSY	*	1					

FIG. 21 INJECTION PUMP

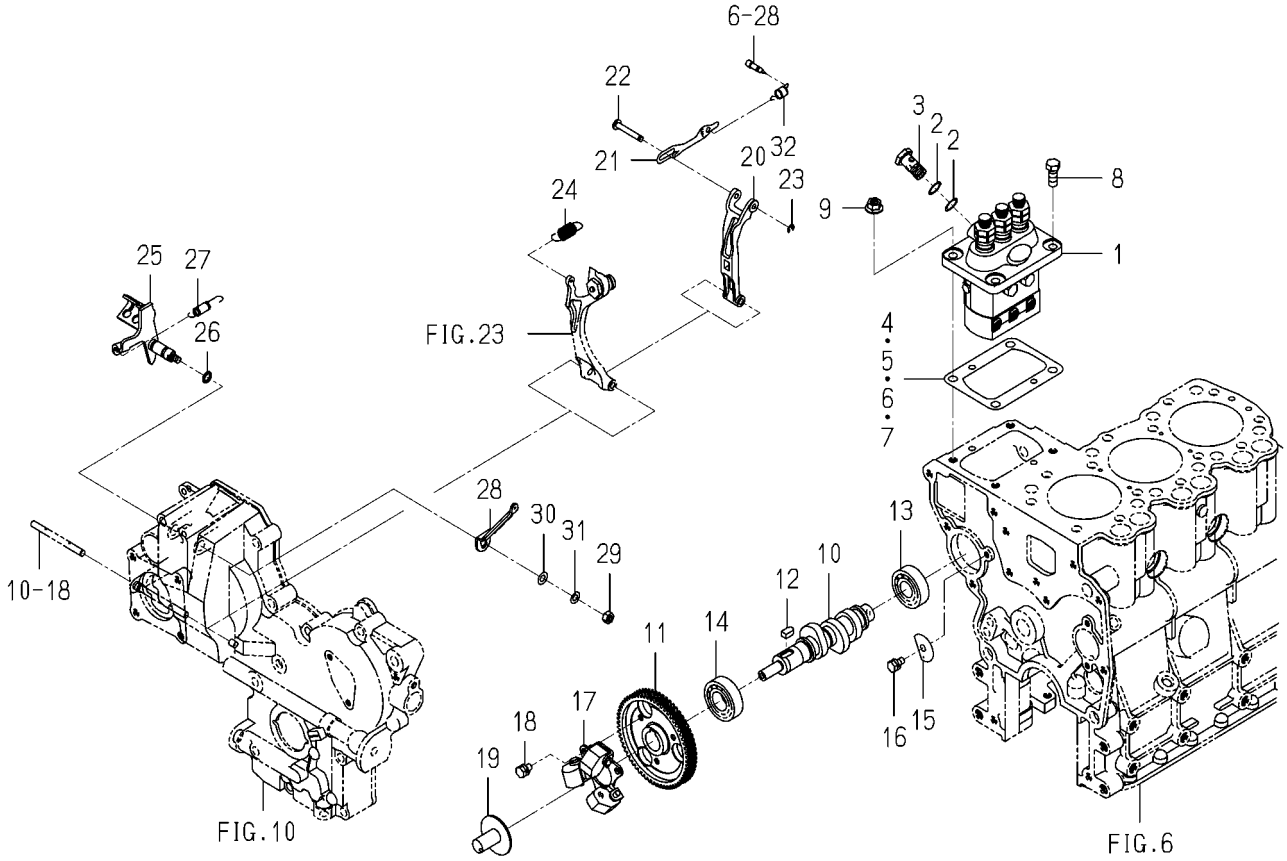

6004-511H-0100

KEY	PART CODE	DESCRIPTION	SPC	TYPE OF MODEL E3112 B59		ITC	COL	GRP	REMARKS
1	6215-600-103-30	INJECTIONPUMP ASSY	*	1					FIG 029
2	6215-619-010-00	WASHER/AIR BLEEDER	*	2					
3	6215-619-009-00	SCREW/HOLLOW	*	1					
4	6219-752-045-00	SHIM/INJECTIONPUMP	*	1					
5	6219-752-044-00	SHIM/INJECTIONPUMP	*	1					
6	6219-752-046-00	SHIM/INJECTIONPUMP	*	1					
7	6219-752-047-00	SHIM/INJECTIONPUMP	*	1					
8	V201-360-802-00	BOLT/M8X20/7T	*	2					
9	3817-401-001-00	NUT/M08	*	2					
10	6215-621-016-30	CAMSHAFT/INJECTION P	*	1					
11	6212-524-002-40	GEAR/INJECTIONPUMP	*	1					
12	6209-730-005-00	KEY/07X05X09	*	1					
13	V600-110-620-30	BEARING,RB/6203	*	1					
14	1729-202-001-00	BEARING/BALL	*	1					
15	6212-535-010-10	PLATE/THRUST/INJECTI	*	1					
16	V210-560-601-20	BOLT,S/M6X12/7T	*	1					
17	6215-520-001-00	FLYWEIGHT	*	1					
18	6209-030-043-00	BOLT/M6X10	*	3					
19	6215-526-004-00	THRUSTPIECE	*	1					
20	6215-541-001-10	ARM/FLOATING COMP	*	1					
21	6215-543-002-10	RINK/CONTROL	*	1					
22	6215-542-006-00	PIN,CONTROL	*	1					
23	V710-140-004-00	RING,SNAP/4 E	*	1					
24	6215-531-023-00	SPRINNG/GOVERNOR	*	1					
25	6215-541-040-00	LEVER/CONTROL COMP	*	1					
26	V720-101-900-80	O-RING/1A,P8	*	1					
27	6209-580-002-10	SPRING,RETURN	*	1					
28	6215-549-007-10	ARM/CONTROL	*	1					
29	V301-260-006-00	NUT/M6	*	1					
30	V411-260-006-00	WASHER,PL/M6	*	1					

FIG. 21 INJECTION PUMP

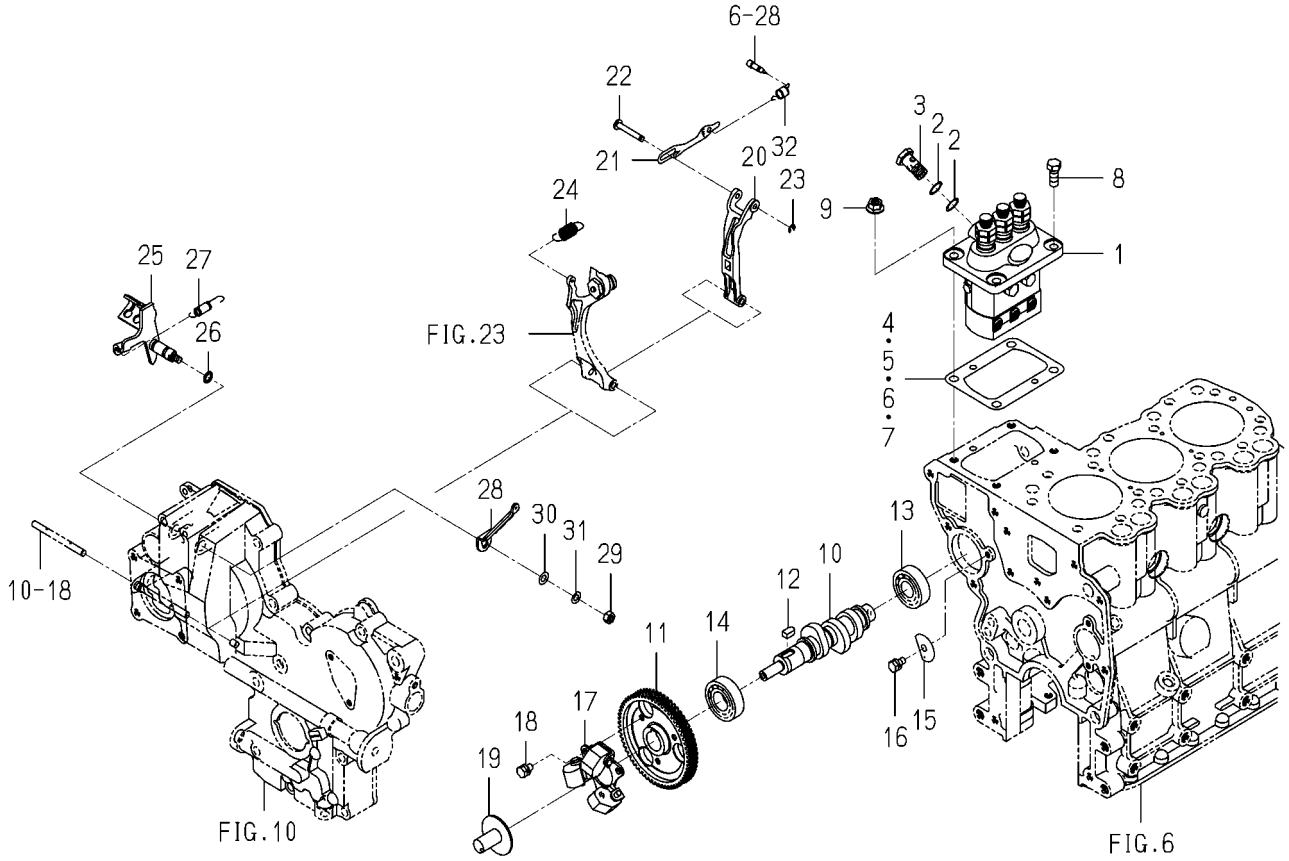

6004-511H-0100

KEY	PART CODE	DESCRIPTION	SPC	TYPE OF MODEL E3112 B59		ITC	COL	GRP	REMARKS
31	V401-160-006-00	WASHER,SP/M6	*	1					
32	6215-549-012-00	SPRING,STARTING	*	1					

FIG. 22 FUEL PIPE

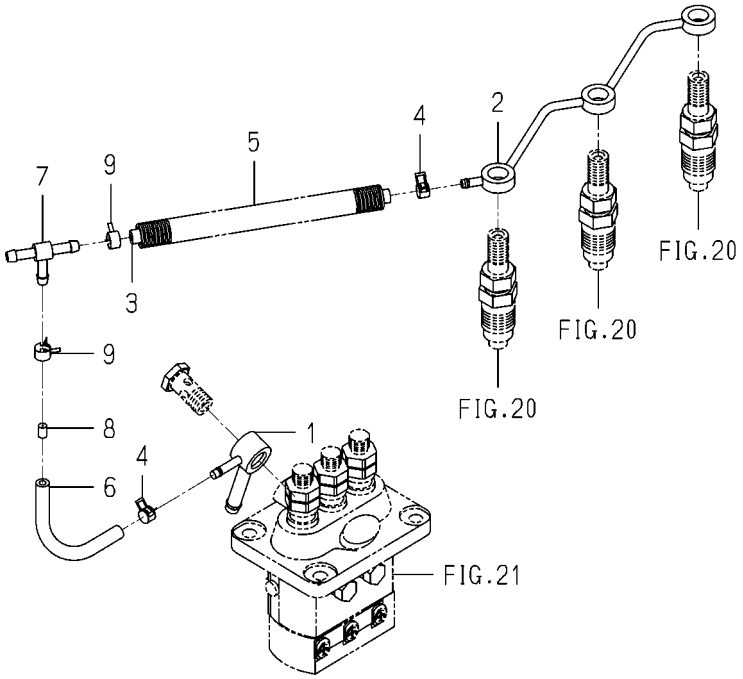

6004-550M-0100

KEY	PART CODE	DESCRIPTION	SPC	TYPE OF MODEL E3112 B59		ITC	COL	GRP	REMARKS
1	6215-412-004-00	CONNECTOR/FUEL	*	1					
2	6215-411-125-00	PIPE/FUEL	*	1					
3	6209-360-018-00	HOSE/RUBBER/160	*	1					
4	J062-076-082-00	CLIP/HOSE/7.6-8.2	*	2					
5	6209-360-143-00	CORRUGATEDTUBE	*	1					
6	6209-360-120-00	HOSE/RUBBER/70	*	1					
7	3632-360-036-00	JOINTT-TYPE 2	*	1					
8	3640-586-004-00	RESISTANCE/1.0	*	1					
9	J062-087-093-00	CLIP/HOSE/8.7-9.3	*	2					

FIG. 23 ADAPTER

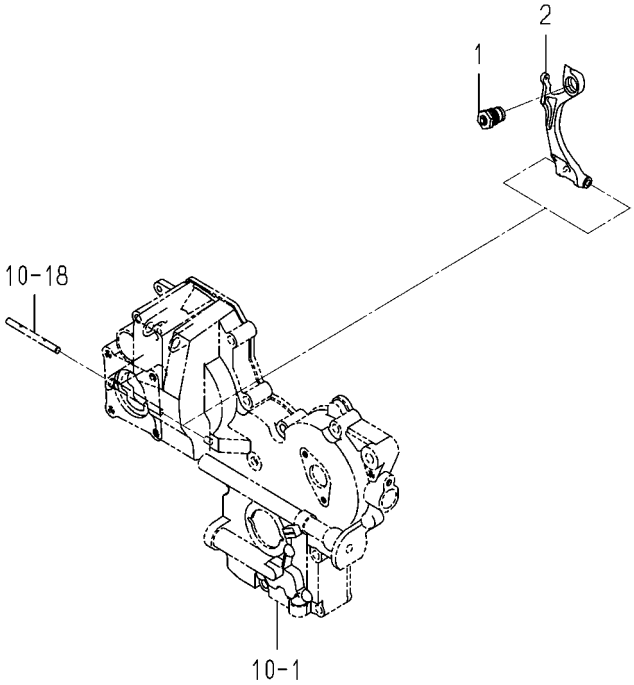

6005-560 -0100

KEY	PART CODE	DESCRIPTION	SPC	TYPE OF MODEL E3112 B59		ITC	COL	GRP	REMARKS
1	6215-548-029-20	ADAPTER/255X065 ASSY	*	1					
2	6215-541-016-40	ARM/TENSION	*	1					

FIG. 24 ELECTRIC (1)

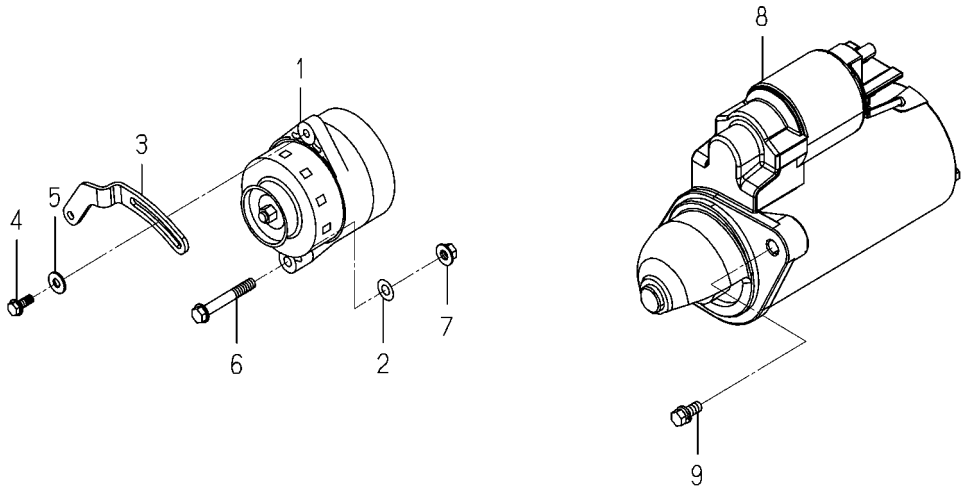

6004-801W-0100,6004-801W-0200

KEY	PART CODE	DESCRIPTION	SPC	TYPE OF MODEL E3112 B59		ITC	COL	GRP	REMARKS
1	6281-200-032-10	GENERATOR ASSY	*	1					
2	V411-260-010-00	WASHER,PL/M10	*	1					
3	6213-674-048-00	PLATE/ADJUST	*	1					
4	V231-360-802-00	FLANGEBOLT/M8X20	*	1					
5	1373-121-001-00	WASHER/9X22X2	*	1					
6	V233-361-007-00	FLANGEBOLT/M10X70	*	1					
7	6209-440-007-00	NUT/FLANGE/M10	*	1					
8	6281-100-023-00	STARTER ASSY	*	1					
9	6901-911-025-00	BOLT,SEMS/M10X25,7T	*	2					

FIG. 25 ELECTRIC (2)

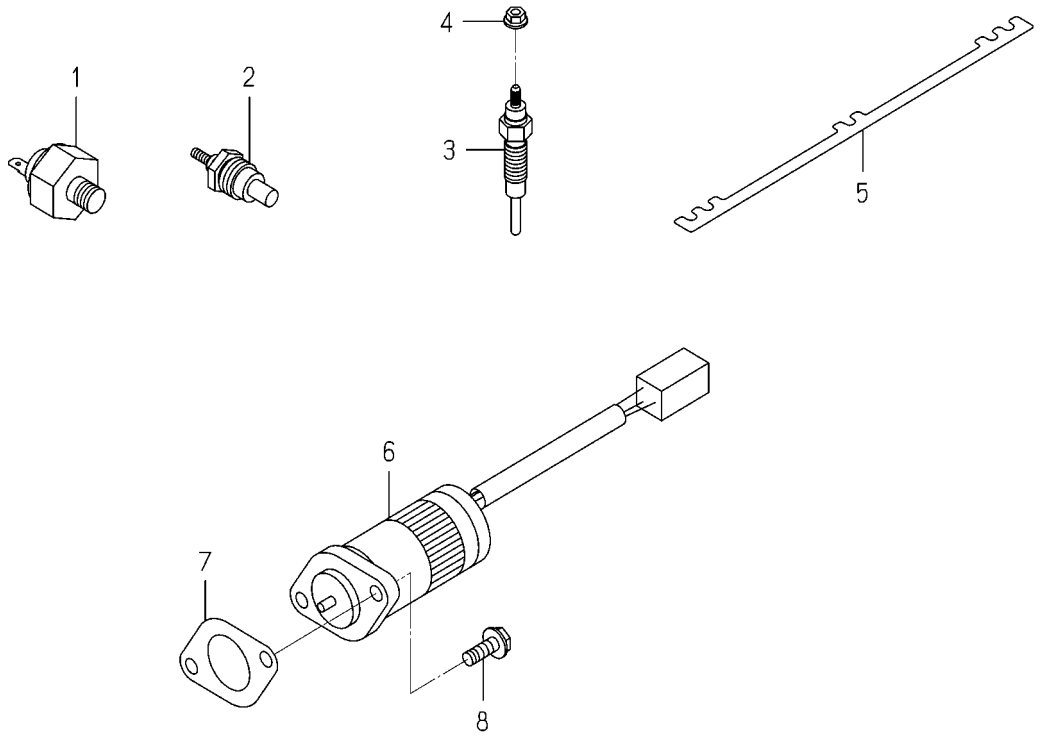

6004-821H-0100,6004-821H-0200

KEY	PART CODE	DESCRIPTION	SPC	TYPE OF MODEL E3112 B59		ITC	COL	GRP	REMARKS
1	6281-971-001-10	SWITCH/OILPRESSURE	*	1					
2	6282-450-006-00	THERMOMETER	*	1					
3	6281-410-023-10	GLOWPLUG	*	3					
4	6209-440-005-00	NUT/FLANGE	*	3					
5	6219-732-017-00	CONNECTOR/GLOWPLUG	*	1					
6	6281-910-013-00	SOLENOID	*	1					
7	6209-630-002-10	GASKET	*	1					
8	V230-360-601-60	FLANGEBOLT/M6X16	*	2					

FIG. 26 REPAIR PARTS(OPTION)

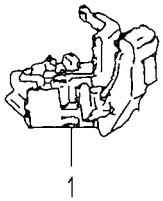

6005-998D-0100

KEY	PART CODE	DESCRIPTION	SPC	TYPE OF MODEL E3112 B59		ITC	COL	GRP	REMARKS
1	6281-271-003-00	REGULATOR ASSY	T	1					

FIG. 27 REPAIR PARTS(OPTION)

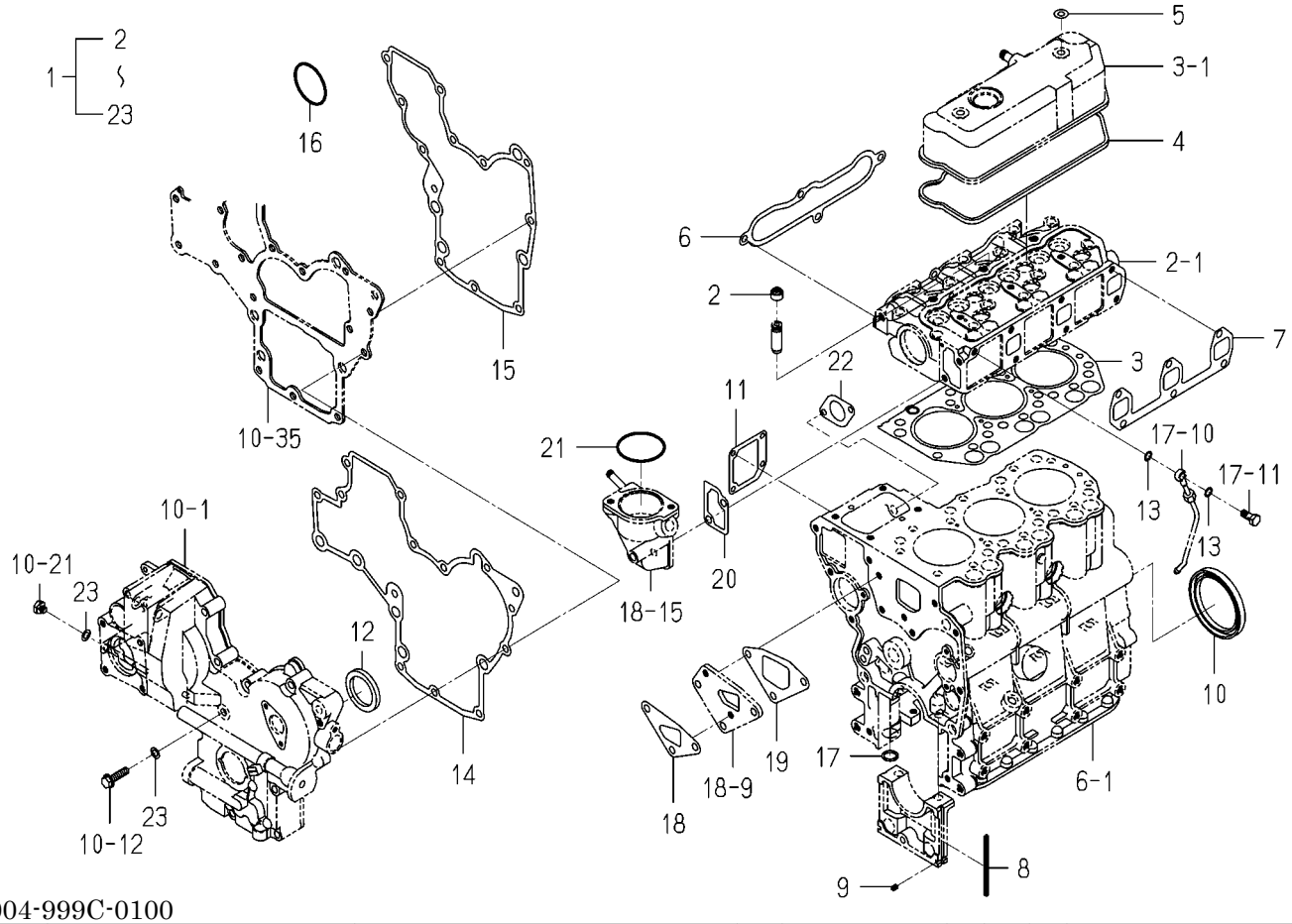

6004-999C-0100

KEY	PART CODE	DESCRIPTION	SPC	TYPE OF MODEL E3112 B59		ITC	COL	GRP	REMARKS
1	6287-810-015-30	REPAIR/ENGINE SET	T	1					
2	6212-569-002-00	SEAL,OIL	T	6					
3	6211-141-029-20	GASKET/CYLINDERHEAD	T	1					
4	6211-173-003-00	SEAL,CYL.HEAD COVER	T	1					
5	6209-572-003-00	GASKET	T	2					
6	6214-115-001-20	GASKET,INLET MANIFOL	T	1					
7	6214-145-001-30	GASKET,EXH.MANIFOLD	T	1					
8	6211-258-001-00	SEAL,BEARING CAP	T	4					
9	6211-258-002-00	SEAL,BEARING CAP/7	T	2					
10	6209-625-001-00	SEAL,OIL	T	1					
11	6211-292-001-20	GASKET/COVER	T	1					
12	6209-625-002-00	SEAL,OIL	T	1					
13	6209-920-002-00	PACKING	T	2					
14	6211-312-003-20	GASKET/GEARCASE	T	1					
15	6211-312-004-20	GASKET/PLATE	T	1					
16	V723-102-005-00	O-RING/1A,S50	T	1					
17	V720-102-401-50	O-RING/1A,P15	T	1					
18	6213-614-018-00	GASKET/WATERPUMP	T	1					
19	6213-614-019-00	GASKET/SPACER	T	1					
20	6213-743-002-10	GASKET/HOUSING	T	1					
21	V723-102-005-50	O-RING/1A,S55	T	1					
22	6209-630-002-10	GASKET	T	1					
23	6209-500-003-00	WASHER/08X14X01	T	2					

FIG. 28 COMPONENT PARTS FOR 6215-300-036-10 ON Fig.020

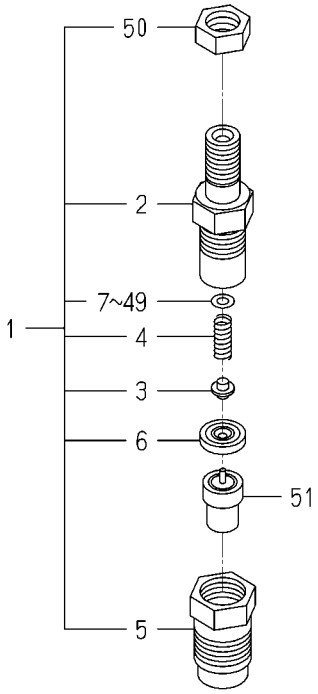

6215-300-036-1B

KEY	PART CODE	DESCRIPTION	SPC	TYPE OF MODEL E3112 B59		ITC	COL	GRP	REMARKS
1	6215-330-024-10	HOLDER/NOZZLE ASSY	*	3					
2	6215-331-008-00	BODY/NOZZLE HOLDER	*	3					
3	6215-342-001-00	PIN,NOZZLE HOLDER	*	3					
4	6215-343-001-00	SPRING/NOZZLEHOLDER	*	3					
5	6215-332-013-00	NUT/NOZZLERETAINING	*	3					
6	6215-339-001-00	PIECE,DISTANCE	*	3					
7	6215-345-001-00	WASHER/0.9	*	3					
8	6215-345-002-00	WASHER/0.925	*	3					
9	6215-345-003-00	WASHER/0.95	*	3					
10	6215-345-004-00	WASHER/0.975	*	3					
11	6215-345-005-00	WASHER/1.0	*	3					
12	6215-345-006-00	WASHER/1.025	*	3					
13	6215-345-007-00	WASHER/1.05	*	3					
14	6215-345-008-00	WASHER/1.075	*	3					
15	6215-345-009-00	WASHER/1.1	*	3					
16	6215-345-010-00	WASHER/1.125	*	3					
17	6215-345-011-00	WASHER/1.15	*	3					
18	6215-345-012-00	WASHER/1.175	*	3					
19	6215-345-013-00	WASHER/1.2	*	3					
20	6215-345-014-00	WASHER/1.225	*	3					
21	6215-345-015-00	WASHER/1.25	*	3					
22	6215-345-016-00	WASHER/1.275	*	3					
23	6215-345-017-00	WASHER/1.3	*	3					
24	6215-345-018-00	WASHER/1.325	*	3					
25	6215-345-019-00	WASHER/1.35	*	3					
26	6215-345-020-00	WASHER/1.375	*	3					
27	6215-345-021-00	WASHER/1.4	*	3					
28	6215-345-022-00	WASHER/1.425	*	3					
29	6215-345-023-00	WASHER/1.45	*	3					
30	6215-345-024-00	WASHER/1.475	*	3					

FIG. 28 COMPONENT PARTS FOR 6215-300-036-10 ON Fig.020

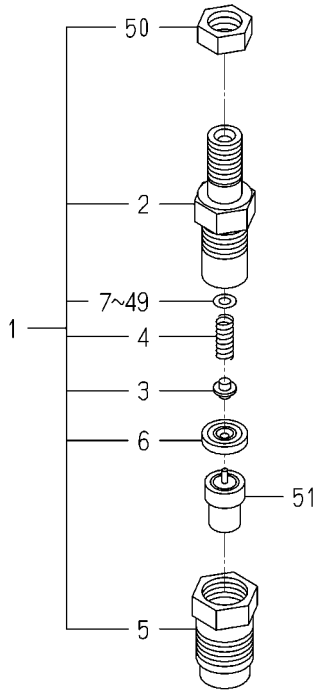

6215-300-036-1B

KEY	PART CODE	DESCRIPTION	SPC	TYPE OF MODEL E3112 B59		ITC	COL	GRP	REMARKS
31	6215-345-025-00	WASHER/1.5	*	3					
32	6215-345-026-00	WASHER/1.525	*	3					
33	6215-345-027-00	WASHER/1.55	*	3					
34	6215-345-028-00	WASHER/1.575	*	3					
35	6215-345-029-00	WASHER/1.6	*	3					
36	6215-345-030-00	WASHER/1.625	*	3					
37	6215-345-031-00	WASHER/1.65	*	3					
38	6215-345-032-00	WASHER/1.675	*	3					
39	6215-345-033-00	WASHER/1.7	*	3					
40	6215-345-034-00	WASHER/1.725	*	3					
41	6215-345-035-00	WASHER/1.75	*	3					
42	6215-345-036-00	WASHER/1.775	*	3					
43	6215-345-037-00	WASHER/1.8	*	3					
44	6215-345-038-00	WASHER/1.825	*	3					
45	6215-345-039-00	WASHER/1.85	*	3					
46	6215-345-040-00	WASHER/1.875	*	3					
47	6215-345-041-00	WASHER/1.9	*	3					
48	6215-345-042-00	WASHER/1.925	*	3					
49	6215-345-043-00	WASHER/1.95	*	3					
50	6215-359-002-00	NUT	*	3					
51	6215-311-027-00	NOZZLE ASSY	*	3					

FIG. 29 COMPONENT PARTS FOR 6215-600-103-30 ON Fig.021

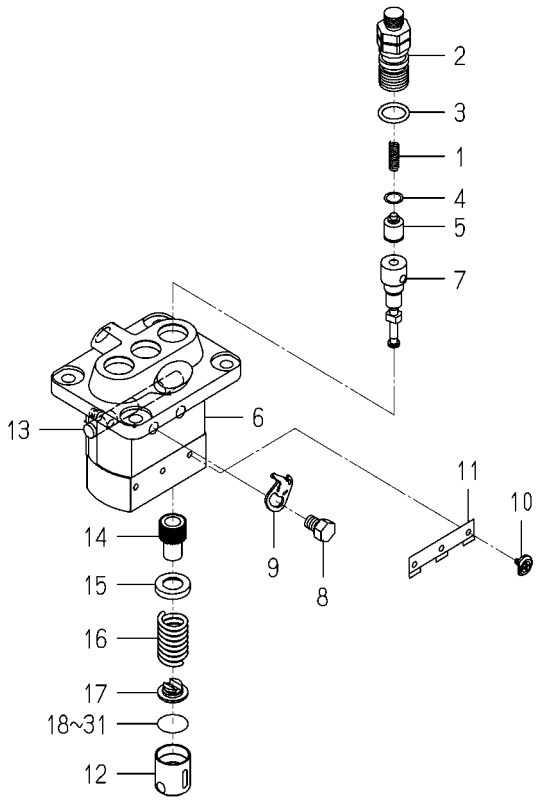

6215-600-103-3J

KEY	PART CODE	DESCRIPTION	SPC	TYPE OF MODEL E3112 B59		ITC	COL	GRP	REMARKS
1	6215-643-006-00	SPRING/DELIVERYVALVE	*	3					
2	6215-644-007-00	HOLDER/DELIVERYVALVE	*	3					
3	6215-649-019-00	ORING	*	3					
4	6215-649-002-00	GASKET/DELIVERYVALVE	*	3					
5	6215-641-006-00	VALVE ASSY	*	3					
6	6215-611-001-00	HOUSING ASSY	*	1					
7	6215-631-019-00	ELEMENT ASSY	*	3					
8	6215-619-022-00	BOLT/WASHERHEAD	*	2					
9	6215-612-001-00	PLATE/ADJUSTING	*	2					
10	6215-629-001-00	PIN/INJECTIONPUMP	*	3					
11	6215-629-002-00	PLATE	*	1					
12	6215-622-001-00	TAPPET/INJECTIO ASSY	*	3					
13	6215-637-001-00	RACK/CONTROL ASSY	*	1					
14	6215-635-001-00	SLEEVE/PLUNGER	*	3					
15	6215-639-004-00	SEAT/SPRING/UPPER	*	3					
16	6215-634-001-00	SPRING/PUMPPLUNGER	*	3					
17	6215-639-005-00	SEAT/SPRING/LOWER	*	3					
18	6215-629-003-00	PLATE/TAPPET/AD 0.6	*	1					
19	6215-629-004-00	PLATE/TAPPET/AD 0.7	*	1					
20	6215-629-005-00	PLATE/TAPPET/AD 0.8	*	1					
21	6215-629-006-00	PLATE/TAPPET/AD 0.9	*	1					
22	6215-629-007-00	PLATE/TAPPET/AD 1.0	*	1					
23	6215-629-008-00	PLATE/TAPPET/AD 0.2	*	1					
24	6215-629-009-00	PLATE/TAPPET/AD 0.3	*	1					
25	6215-629-010-00	PLATE/TAPPET/AD 0.4	*	1					
26	6215-629-011-00	PLATE/TAPPET/AD 0.5	*	3					
27	6215-629-012-00	PLATE/TAPPET/AD 0.25	*	1					
28	6215-629-013-00	PLATE/TAPPET/AD 0.35	*	1					
29	6215-629-014-00	PLATE/TAPPET/AD 0.45	*	1					
30	6215-629-015-00	PLATE/TAPPET/AD 0.55	*	1					

FIG. 29 COMPONENT PARTS FOR 6215-600-103-30 ON Fig.021

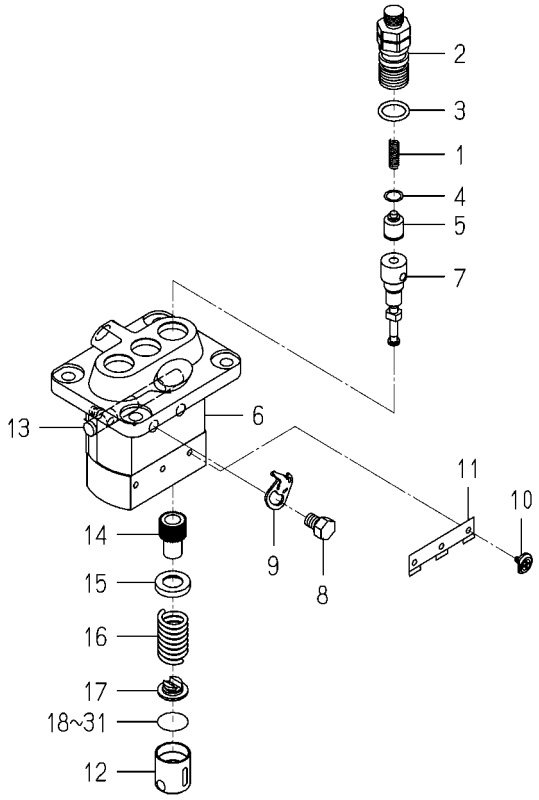

6215-600-103-3J

KEY	PART CODE	DESCRIPTION	SPC	TYPE OF MODEL E3112 B59		ITC	COL	GRP	REMARKS
31	6215-629-016-00	PLATE/TAPPET/AD 0.65	*	1					

C H A S S I S

FIG. 1 MOUNT(ENGINE)SYSTEM

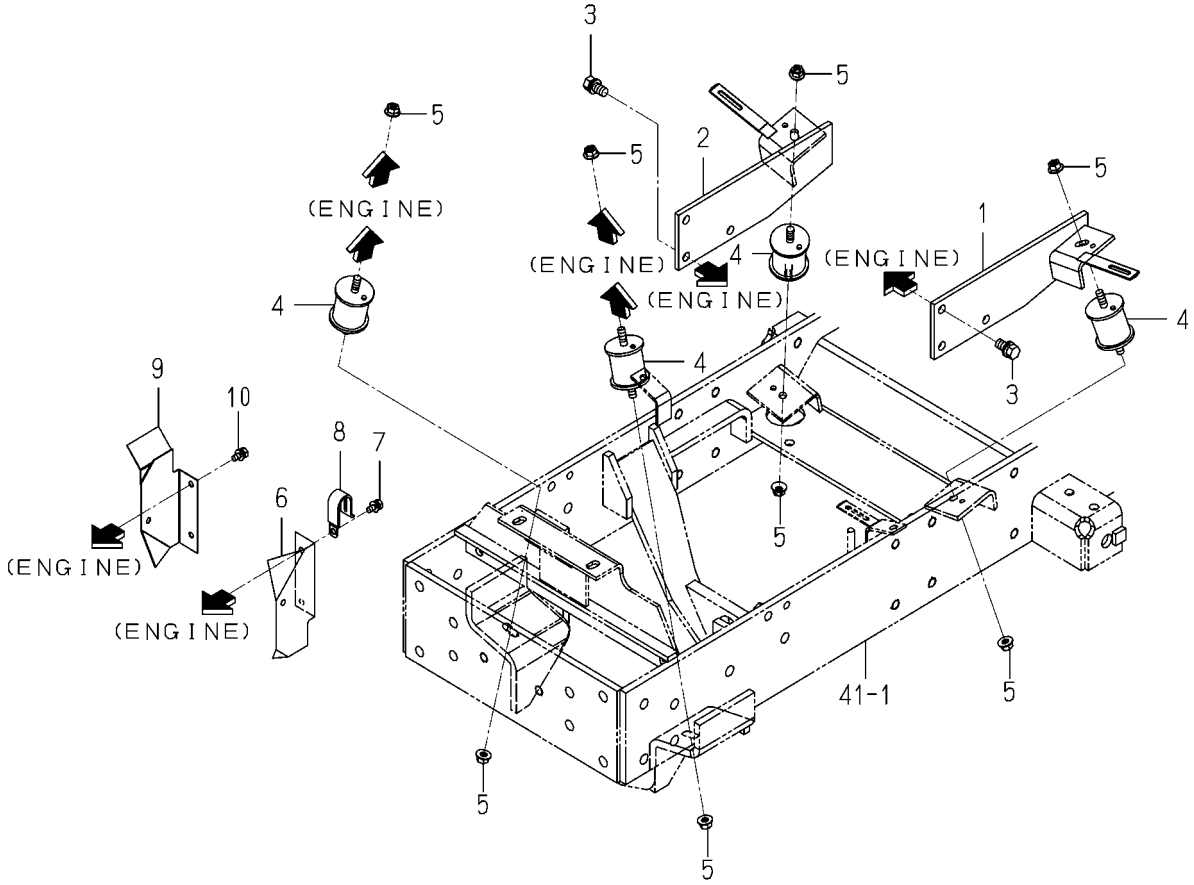

1739-101A-0100

KEY	PART CODE	DESCRIPTION	SPC	TYPE OF MODEL TXG237 F3		ITC	COL	GRP	REMARKS
1	1725-101-310-10	BRACKET/ENG/REAR/LH	*	1					
2	1725-101-320-10	BRACKET/ENG/REAR/RH	*	1					
3	6901-911-020-00	BOLT,SEMS/M10X20,7T	*	6					
4	1593-101-003-20	INSULATOR	*	4					
5	3817-401-001-00	NUT/M08	*	8					
6	1739-101-071-10	PLATE/L/66X133	*	1					
7	V230-360-601-20	FLANGEBOLT/M6X12	*	2					
8	3737-172-009-00	CLAMP,MAIN HARNESS	*	1					
9	1739-101-810-10	COVER/RH COMP	*	1					
10	V230-360-601-20	FLANGEBOLT/M6X12	*	2					

FIG. 2 RADIATOR SYSTEM

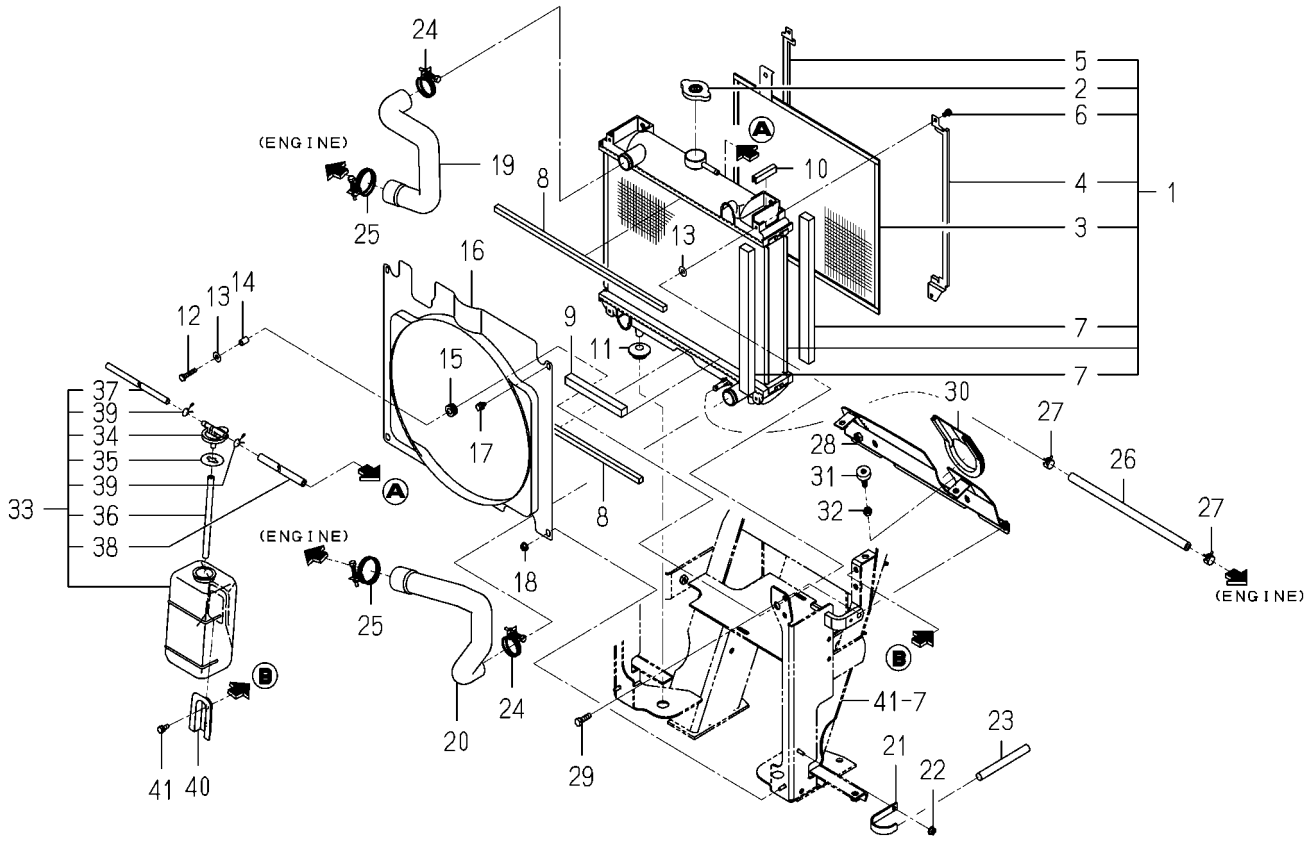

1739-102A-0100

KEY	PART CODE	DESCRIPTION	SPC	TYPE OF MODEL TXG237 F3		ITC	COL	GRP	REMARKS
1	1705-102-500-00	RADIATOR ASSY	*	1					
2	1650-102-202-10	CAP	*	1					
3	1705-102-203-00	PROTECTOR	*	1					
4	1703-102-205-00	GUIDE	*	1					
5	1703-102-206-00	GUIDE	*	1					
6	1703-102-203-00	SCREW/P	*	4					
7	1705-102-202-00	PACKING	*	4					
8	1705-601-013-00	SEAL/10X10X420	*	2					
9	1752-102-006-00	INSULATOR/15X15X140	*	1					
10	3666-202-005-10	PAD/50	*	1					
11	1421-603-004-00	BUSH,LEVER	*	2					
12	V230-360-603-00	FLANGEBOLT/M6X30	*	2					
13	3740-162-005-00	WASHER	*	4					
14	2150-661-002-00	COLLAR	*	2					
15	1427-621-012-00	GROMMET	*	2					
16	1728-102-211-10	SHROUD	*	1					
17	V210-360-601-20	BOLT,SP/M6X12	*	2					
18	V360-260-006-00	NUT/WASHER/M6	*	2					
19	1725-102-001-00	HOSE/RADIATOR/UPPER	*	1					
20	1725-102-002-00	HOSE/RADIATOR/LOWER	*	1					
21	1725-102-072-00	PLATE/U/40X13	*	1					
22	V360-260-006-00	NUT/WASHER/M6	*	1					
23	1650-650-017-00	TUBE/120	*	1					
24	J061-230-038-00	CLAMP/WIRE/30-38	*	2					
25	J061-236-044-00	CLAMP/WIRE/36-44	*	2					
26	1560-104-006-60	HOSE/290	*	1					
27	J062-147-159-00	CLIP/HOSE/14.7-15.9	*	2					
28	1739-102-710-10	PANEL/RADIATOR COMP	*	1					
29	V231-360-802-00	FLANGEBOLT/M8X20	*	2					
30	1725-102-071-00	INSULATOR	*	1					

FIG. 2 RADIATOR SYSTEM

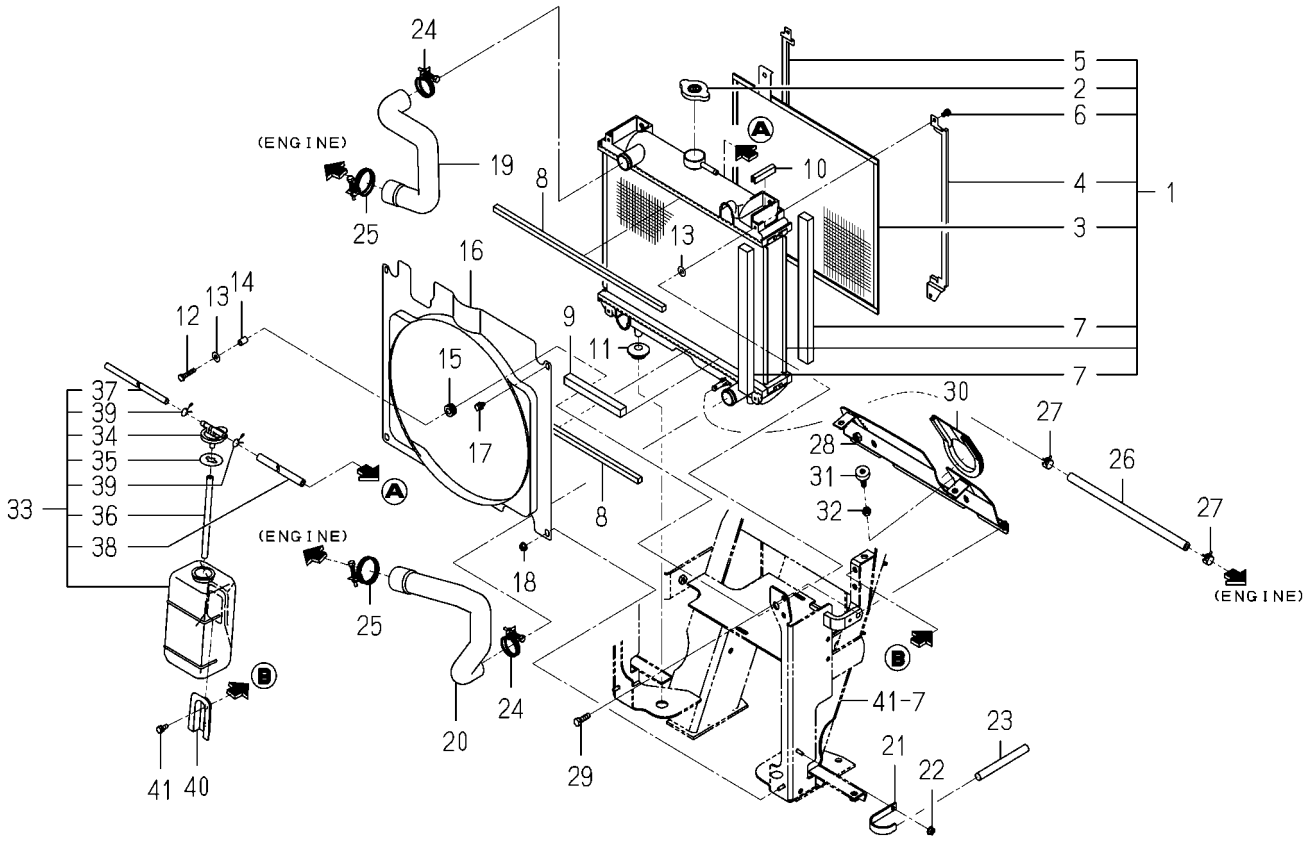

1739-102A-0100

KEY	PART CODE	DESCRIPTION	SPC	TYPE OF MODEL TXG237 F3		ITC	COL	GRP	REMARKS
31	1421-602-005-10	CUSHION,B/ RUBBER	*	2					
32	V304-260-008-00	NUT/M8	*	2					
33	1705-102-240-20	RESERVETANK ASSY	*	1					
34	6221-408-008-00	CAP	*	1					
35	6221-408-009-00	PACKING	*	1					
36	6221-408-010-00	HOSE/RUBBER	*	1					
37	1705-102-251-10	PIPE	*	1					
38	1705-102-252-20	HOSE/RUBBER	*	1					
39	6221-408-013-00	CLAMP	*	2					
40	6221-408-003-00	BRACKET/RESERVE TANK	*	1					
41	V230-360-601-20	FLANGEBOLT/M6X12	*	2					

FIG. 3 MUFFLER SYSTEM

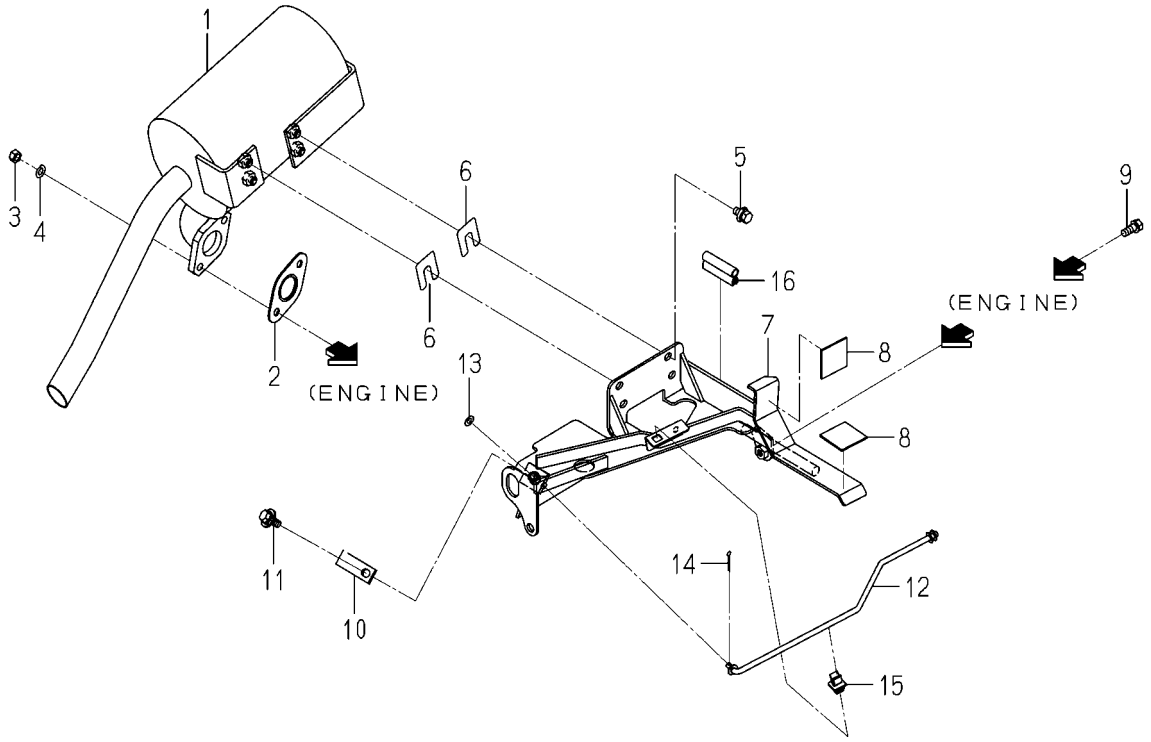

1739-103A-0100

KEY	PART CODE	DESCRIPTION	SPC	TYPE OF MODEL TXG237 F3		ITC	COL	GRP	REMARKS
1	1739-103-700-00	MUFFLER COMP	*	1					
2	3659-301-001-00	GASKET	*	1					
3	V304-700-008-00	NUT,SUS/M8	*	2					
4	V401-700-008-00	WASHER,SP/M8	*	2					
5	V211-360-801-60	BOLT,SP/M8X16	*	4					
6	1725-103-002-00	SHIM/0.6/B	*	2					
7	1725-103-710-20	BRACKET/MUFFLER/CLEA	*	1					
8	1427-111-229-00	CUSHION,RUBBER	*	2					
9	V231-360-801-60	FLANGEBOLT/M8X16	*	1					
10	2515-103-002-10	CLAMP/32	*	1					
11	2144-415-003-00	BOLT/M8X20(22)	*	1					
12	1739-103-720-00	ROD/HOOD COMP	*	1					
13	V411-260-006-00	WASHER,PL/M6	*	1					
14	V500-162-002-00	PIN,SPLIT/2X20	*	1					
15	P103-601-005-00	HOLDER/ROD	*	1					
16	1673-780-011-00	TRIM/50	*	1					

FIG. 4 CLEANER(AIR)SYSTEM

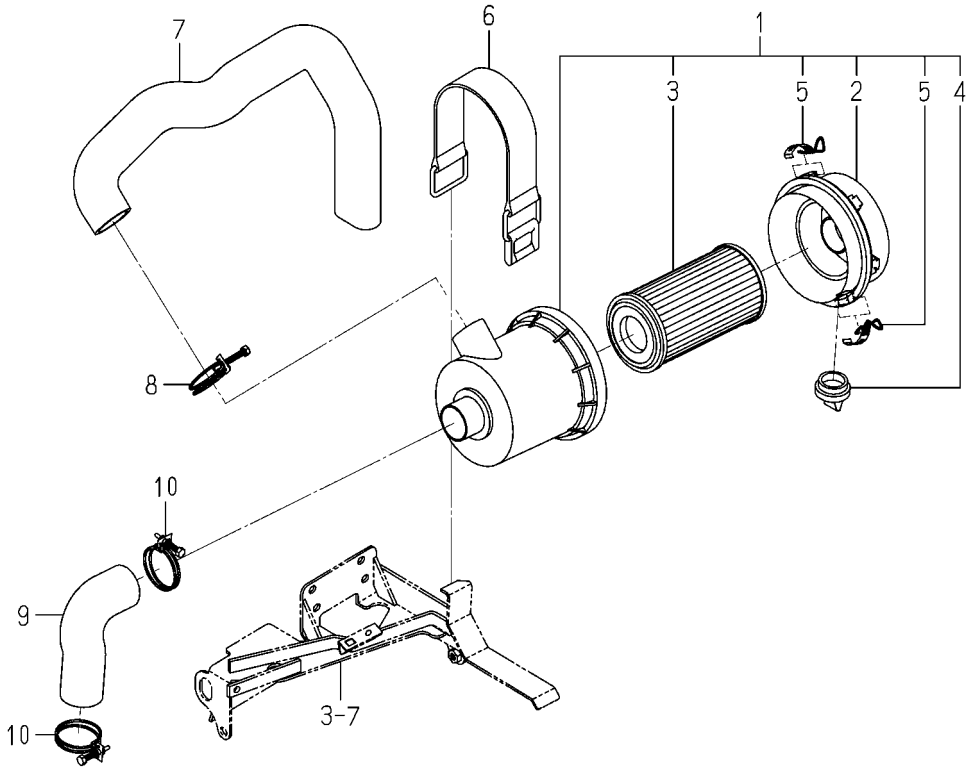

1725-104 -0100

KEY	PART CODE	DESCRIPTION	SPC	TYPE OF MODEL TXG237 F3		ITC	COL	GRP	REMARKS
1	1728-104-210-00	CLEANER/AIR ASSY	*	1					
2	1675-104-211-00	COVER ASSY	*	1					
3	1675-104-213-00	ELEMENT ASSY	*	1					
4	1544-104-205-00	VALVE	*	1					
5	1650-104-201-00	CLIP	*	2					
6	1614-104-001-10	BAND/CLEANER	*	1					
7	1725-104-001-10	HOSE/CLEANER/INLET	*	1					
8	J061-247-055-00	CLAMP/WIRE/47-55	*	1					
9	1705-104-002-00	HOSE/CLEANER/OUTLET	*	1					
10	J061-247-055-00	CLAMP/WIRE/47-55	*	2					

FIG. 5 PUMP(FUEL)SYSTEM

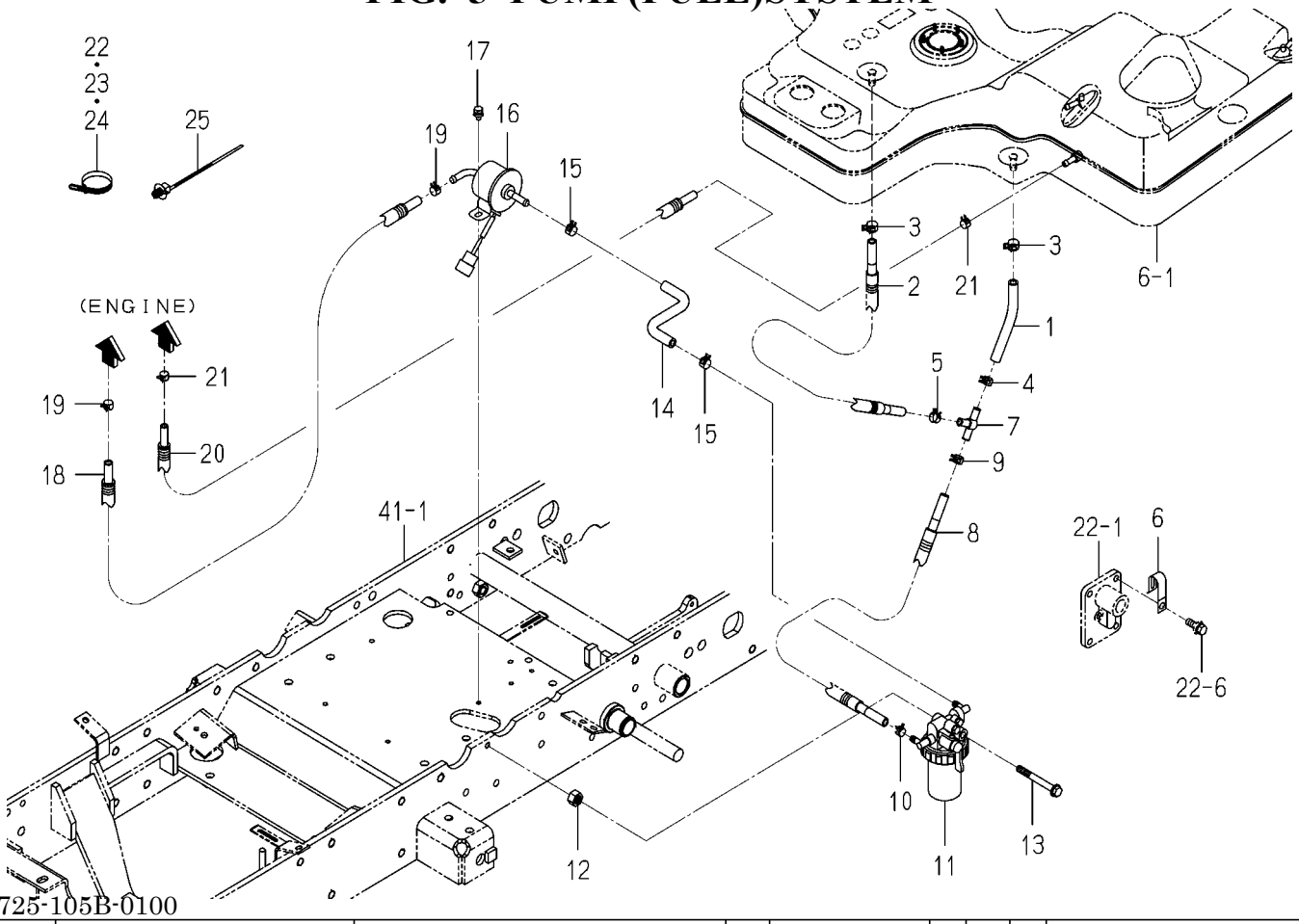

1725-105B-0100

KEY	PART CODE	DESCRIPTION	SPC	TYPE OF MODEL TXG237 F3		ITC	COL	GRP	REMARKS
1	1725-105-072-00	HOSE/08X13X70	*	1					
2	1725-105-320-00	HOSE/07X12X570 ASSY	*	1					
3	J062-138-148-00	CLIP/HOSE/13.8-14.8	*	2					
4	1650-111-034-00	CLIP/HOSE/11-13	*	1					
5	J062-119-126-00	CLIP/HOSE/11.9-12.6	*	1					
6	1425-621-004-00	HOLDER/JE/9-9	*	1					
7	1725-105-001-00	JOINT/T	*	1					
8	1725-105-330-10	HOSE/07X12X1250 ASSY	*	1					
9	J062-119-126-00	CLIP/HOSE/11.9-12.6	*	1					
10	J062-104-111-00	CLIP/HOSE/10.4-11.1	*	1					
11	1725-105-220-10	FILTER/FUEL ASSY	*	1					FIG 101
12	V304-260-012-00	NUT/M12	*	1					
13	V231-360-807-00	FLANGEBOLT/M8X70	*	1					
14	1725-105-071-00	HOSE/FUEL/84	*	1					
15	J062-126-134-00	CLIP/HOSE/12.6-13.4	*	2					
16	1703-105-210-10	PUMP/FUEL ASSY	*	1					
17	V230-360-601-20	FLANGEBOLT/M6X12	*	2					
18	1725-105-200-00	HOSE/07X12X800 ASSY	*	1					
19	J062-111-120-00	CLIP/HOSE/11.1-12.0	*	2					
20	1725-105-210-10	HOSE/06X10X1900 ASSY	*	1					
21	J062-104-111-00	CLIP/HOSE/10.4-11.1	*	2					
22	1342-402-006-00	BAND,WIRE/250	*	1					
23	1376-402-003-00	BAND,WIRE/140	*	1					
24	1376-402-003-00	BAND,WIRE/140	*	1					
25	1725-690-071-00	BAND	*	1					

FIG. 6 TANK(FUEL)SYSTEM

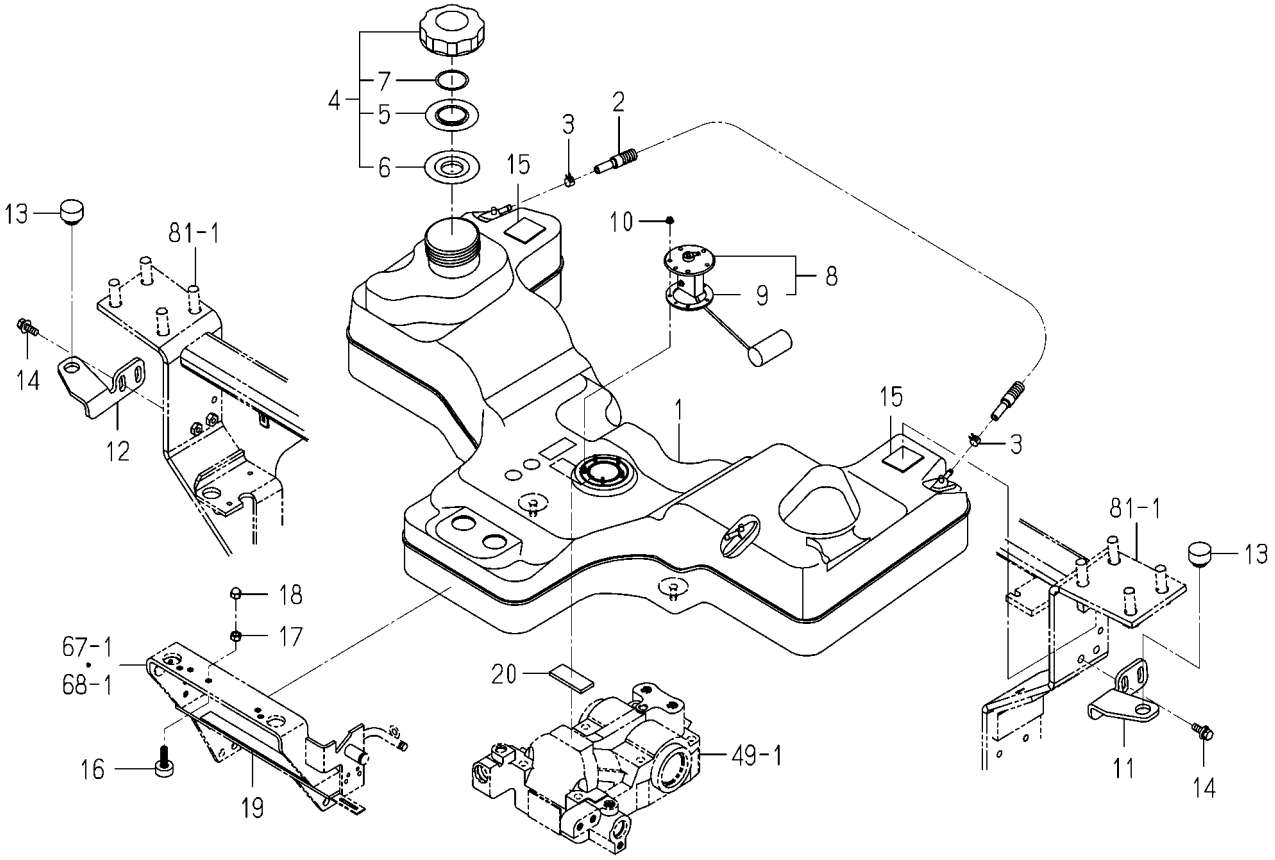

1725-111B-0100

KEY	PART CODE	DESCRIPTION	SPC	TYPE OF MODEL TXG237 F3		ITC	COL	GRP	REMARKS
1	1725-111-071-10	TANK/FUEL	*	1					
2	1705-105-320-00	HOSE/06X10X960 ASSY	*	1					
3	J062-104-111-00	CLIP/HOSE/10.4-11.1	*	2					
4	1774-111-310-10	CAP/NONLEAK ASSY	*	1					
5	1729-111-283-00	PLATE	*	1					
6	1729-111-284-00	PACKING	*	1					
7	1774-111-311-00	PACKINGA	*	1					
8	1725-111-200-00	GAUGE/FUEL ASSY	*	1					
9	1416-621-037-00	PACKING/RUBBER	*	1					
10	V360-260-004-00	NUT/WASHER/M4	*	5					
11	1725-111-072-00	BRACKET/TANK/LH	*	1					
12	1725-111-073-00	BRACKET/TANK/RH	*	1					
13	1414-632-005-00	RUBBER,BUFFER.A	*	2					
14	V211-360-802-50	BOLT,SP/M8X25	*	4					
15	1427-111-229-00	CUSHION,RUBBER	*	2					
16	1421-602-005-10	CUSHION,B/ RUBBER	*	1					
17	V304-260-008-00	NUT/M8	*	1					
18	V341-120-008-00	NUT,CAP/M8	*	1					
19	1432-616-004-00	PLATE,RUBBER	*	1					
20	1725-111-003-00	INSULATOR/25X60	*	1					

FIG. 7 BATTERY SYSTEM

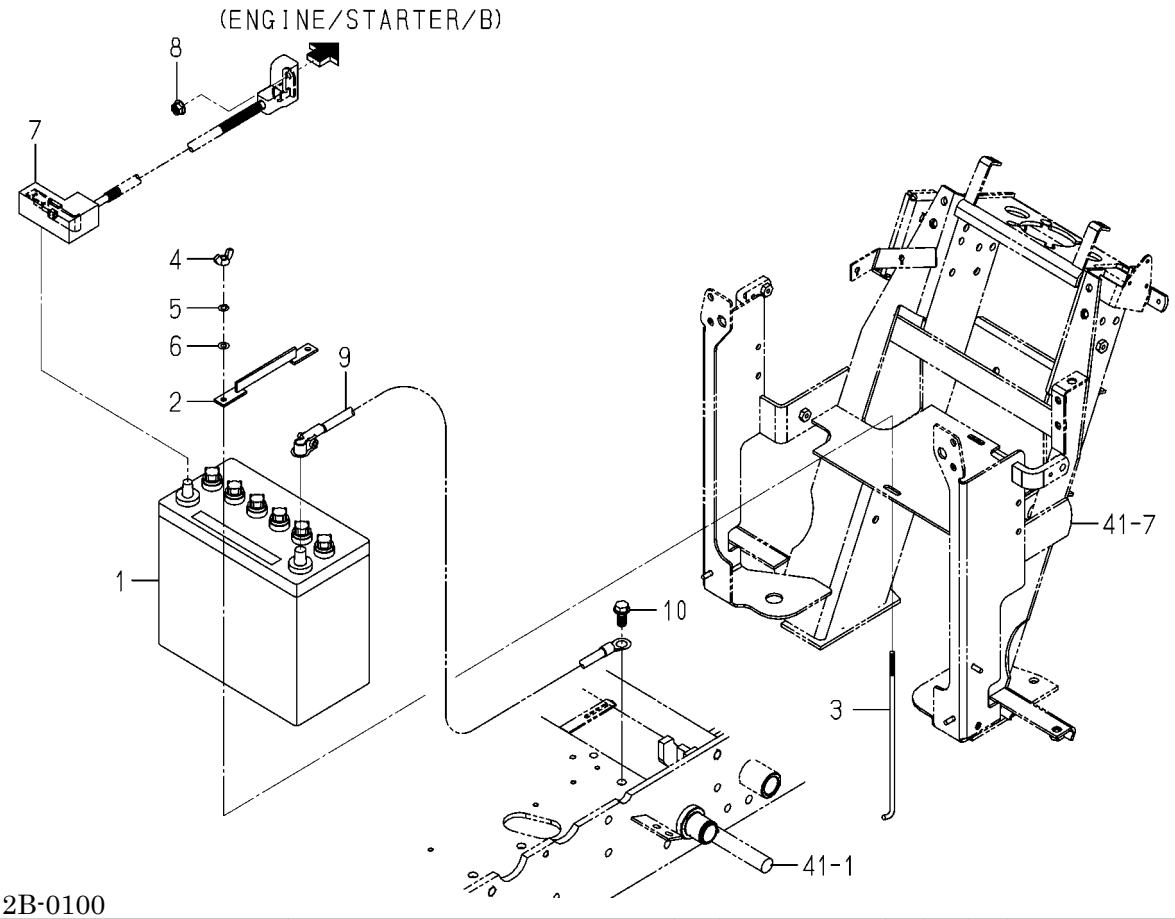

1739-112B-0100

KEY	PART CODE	DESCRIPTION	SPC	TYPE OF MODEL TXG237 F3		ITC	COL	GRP	REMARKS
1	1684-112-230-00	BATTERY/55B24R ASSY	*	1					
2	1705-112-220-00	HOLDER/BATTERY COMP	*	1					
3	1593-112-002-50	BOLT,BATTERY	*	2					
4	V371-160-006-00	NUT,WING/M6	*	2					
5	V401-160-006-00	WASHER,SP/M6	*	2					
6	V411-260-006-00	WASHER,PL/M6	*	2					
7	1739-112-710-20	CABLE/BATTERY ASSY	*	1					
8	3817-401-001-00	NUT/M08	*	1					
9	1739-112-720-00	CABLE/EARTH ASSY	*	1					
10	V231-361-002-00	FLANGEBOLT/M10X20	*	1					

FIG. 8 LEVER(ACCELERATOR)SYSTEM

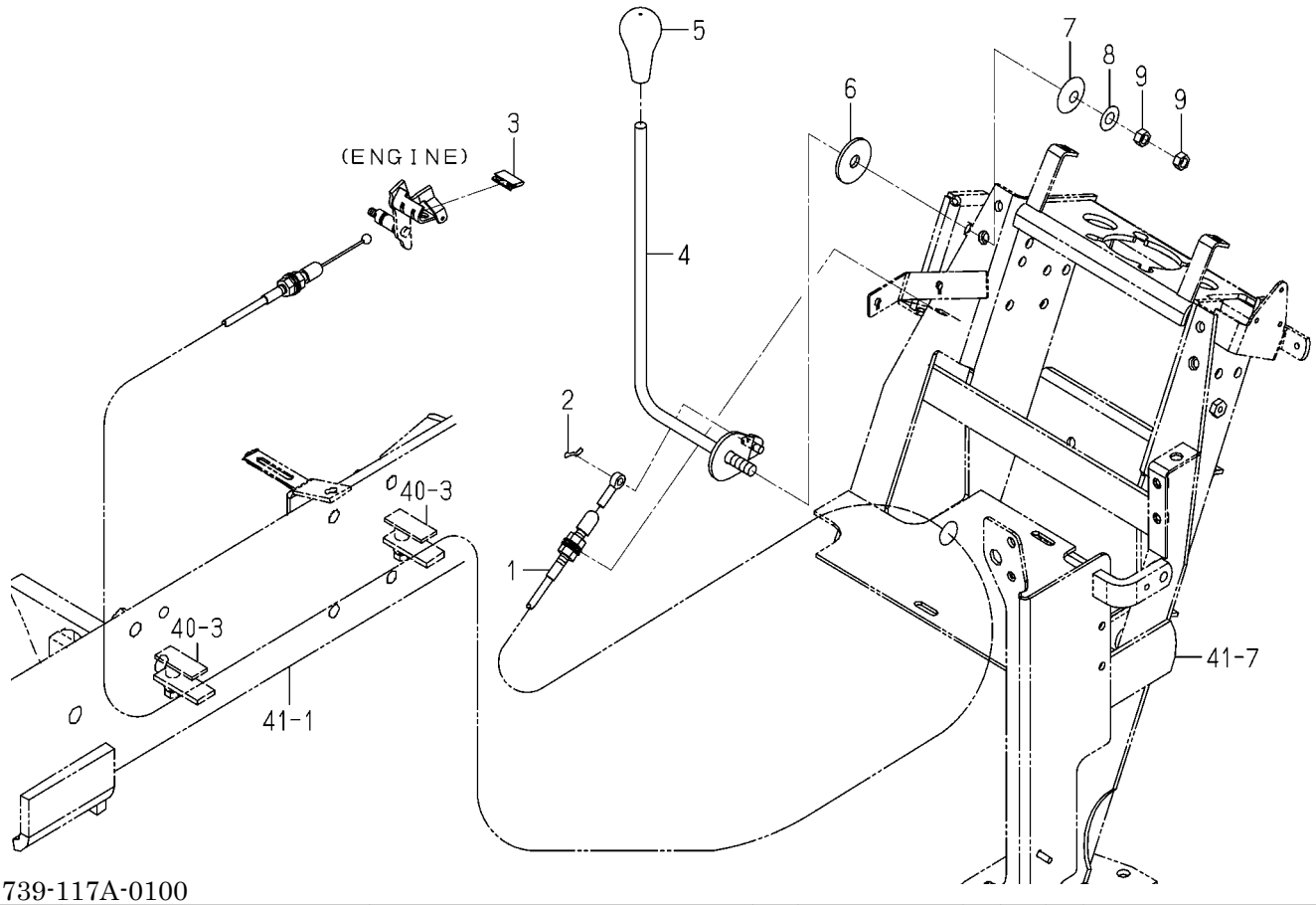

1739-117A-0100

KEY	PART CODE	DESCRIPTION	SPC	TYPE OF MODEL TXG237 F3		ITC	COL	GRP	REMARKS
1	1725-117-720-10	CABLE/ACCELERATOR	*	1					
2	1725-210-032-00	PIN/SNAP/B	*	1					
3	1703-117-004-00	HOLDER	*	1					
4	1739-117-710-00	LEVER/ACCELERATOR	*	1					
5	1725-117-001-00	GRIP/09X65/OR	*	1					
6	1600-117-002-10	LINING/11X40X03	*	1					
7	1593-117-003-10	SPRING,DISK	*	1					
8	V411-260-010-00	WASHER,PL/M10	*	1					
9	V304-260-010-00	NUT/M10	*	2					

FIG. 9 SHAFT(INPUT)SYSTEM

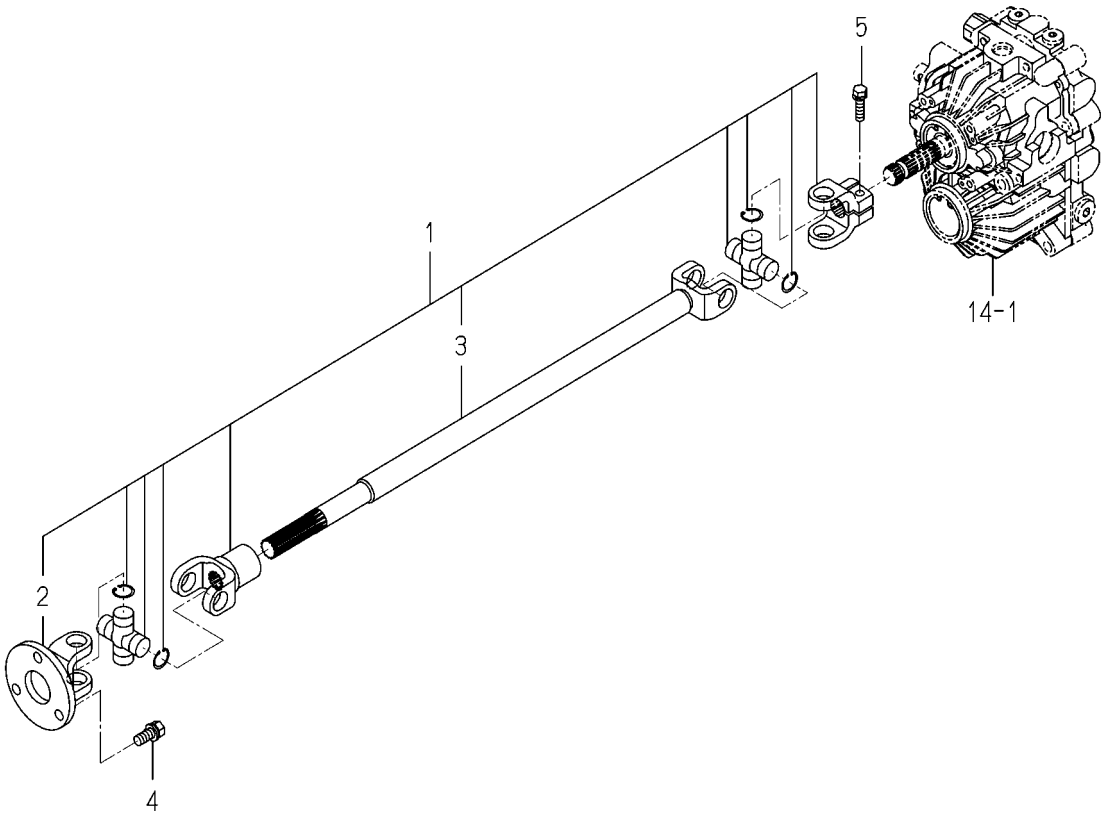

1725-120A-0100

KEY	PART CODE	DESCRIPTION	SPC	TYPE OF MODEL TXG237 F3		ITC	COL	GRP	REMARKS
1	1725-120-310-00	SHAFT/IMPUT ASSY	*	1					
2	1725-120-320-00	YOKE/FLANGE COMP	*	1					
3	1725-120-330-00	YOKE/SHAFT COMP	*	1					
4	6901-911-025-00	BOLT,SEMS/M10X25,7T	*	3					
5	V211-560-803-00	BOLT,S/M8X30/7T	*	1					

FIG. 10 CASE(TRANSMISSION)SYSTEM (EXCEPT G TYPE)

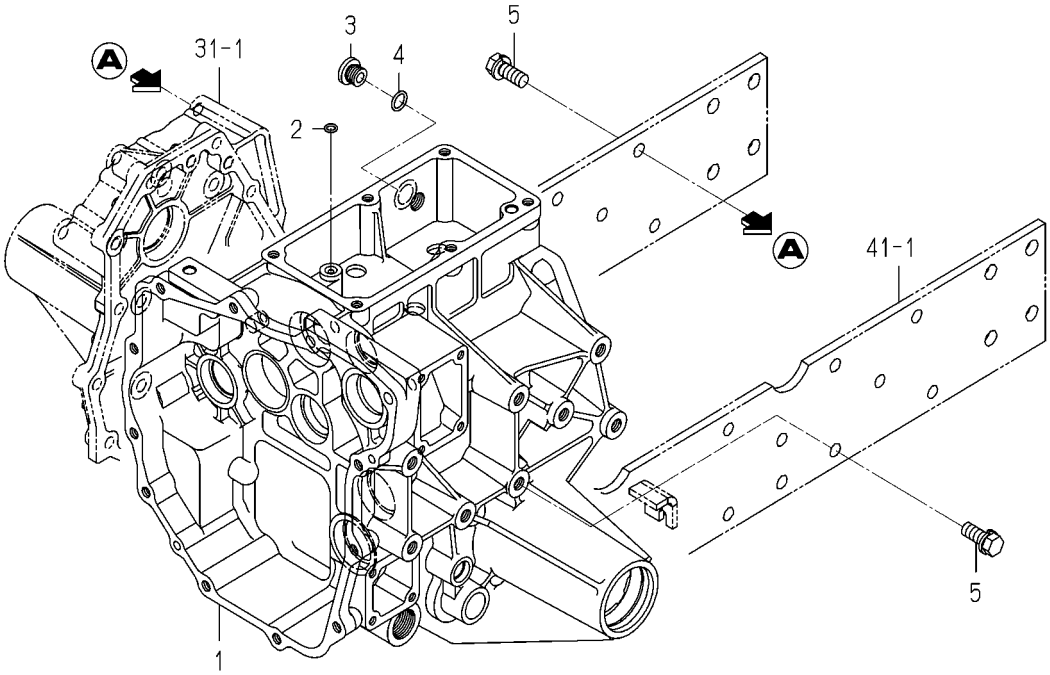

1725-201 -0100

KEY	PART CODE	DESCRIPTION	SPC	TYPE OF MODEL TXG237 F3		ITC	COL	GRP	REMARKS
1	1725-201-001-20	CASE/TRANSMISSION	*	1					
2	V720-111-900-80	O-RING/1B,P8	*	1					
3	K510-001-029-00	PLUG(G3/8)	*	1					
4	V720-112-401-40	O-RING/1B,P14	*	1					
5	1725-201-002-00	BOLT/S	*	16					

FIG. 11 CASE(TRANSMISSION)SYSTEM(G TYPE)

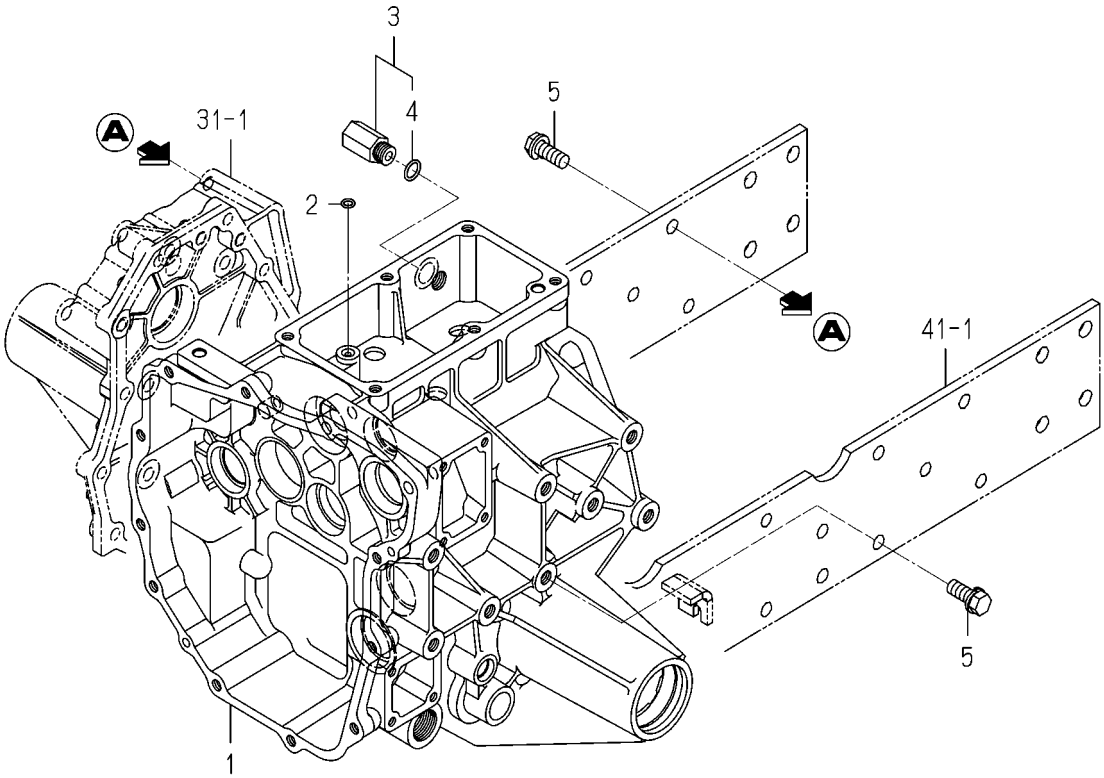

1739-201 -0100

KEY	PART CODE	DESCRIPTION	SPC	TYPE OF MODEL TXG237 F3		ITC	COL	GRP	REMARKS
1	1725-201-001-20	CASE/TRANSMISSION	*	1					
2	V720-111-900-80	O-RING/1B,P8	*	1					
3	1739-201-200-10	ADAPTER/G3/8-PF1/4	*	1					
4	V720-112-401-40	O-RING/1B,P14	*	1					
5	1725-201-002-00	BOLT/S	*	16					

FIG. 12 COVER(MID)SYSTEM

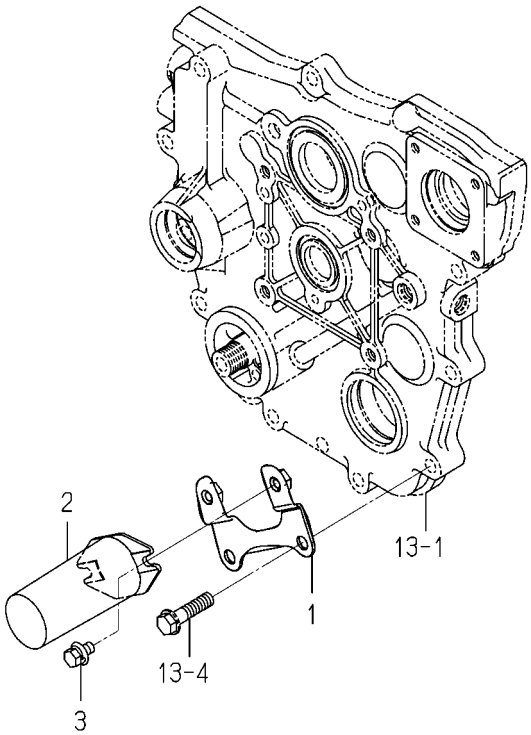

1739-203 -0100

KEY	PART CODE	DESCRIPTION	SPC	TYPE OF MODEL TXG237 F3		ITC	COL	GRP	REMARKS
1	1739-203-710-10	PLATE/COVER COMP	*	1					
2	1444-314-009-10	CAP,PTO SHAFT	*	1					
3	V211-360-801-60	BOLT,SP/M8X16	*	2					

FIG. 13 METAL(HST)SYSTEM

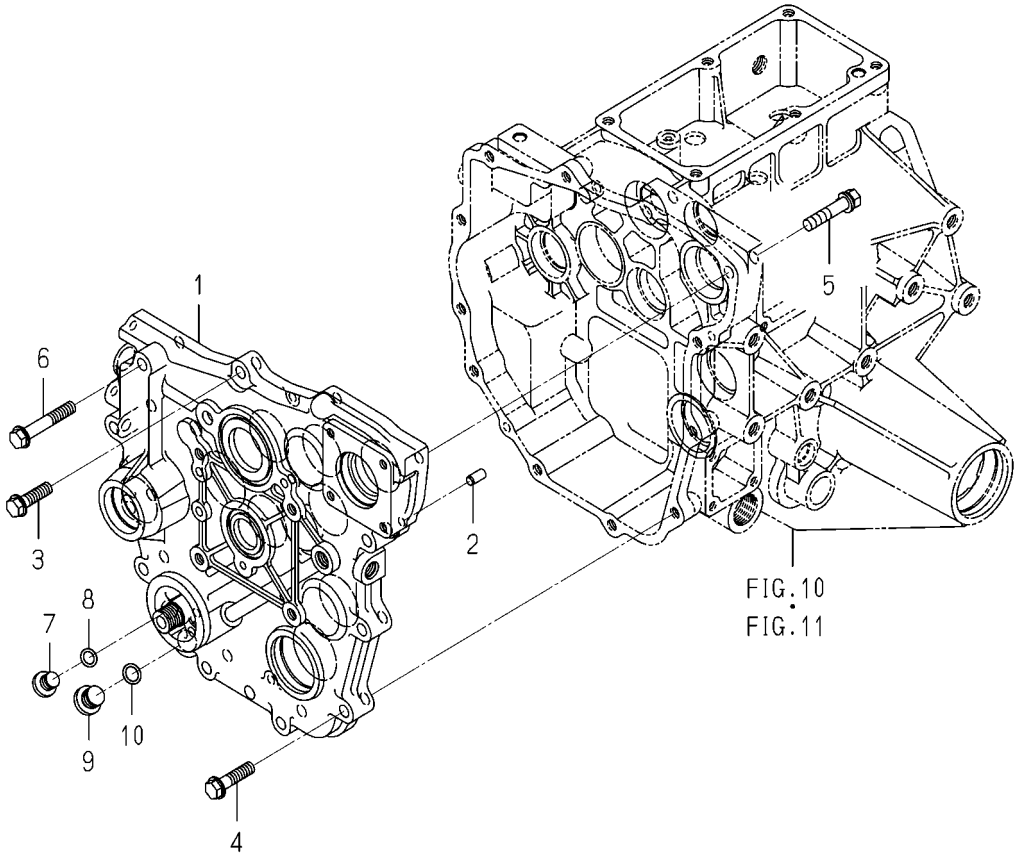

1725-203A-0100

KEY	PART CODE	DESCRIPTION	SPC	TYPE OF MODEL TXG237 F3		ITC	COL	GRP	REMARKS
1	1725-203-001-00	METAL/HST	*	1					
2	V523-100-801-60	PIN,ST,B/8X16	*	2					
3	V231-361-003-50	FLANGEBOLT/M10X35	*	1					
4	V231-361-004-00	FLANGEBOLT/M10X40	*	7					
5	V211-661-005-00	BOLT,SP/M10X50/7T	*	2					
6	V231-361-006-00	FLANGEBOLT/M10X60	*	2					
7	K275-001-003-00	PLUG(PF1/4)	*	1					
8	V720-112-401-10	O-RING/1B,P11	*	1					
9	K510-001-029-00	PLUG(G3/8)	*	1					
10	V720-112-401-40	O-RING/1B,P14	*	1					

FIG. 14 HST SYSTEM

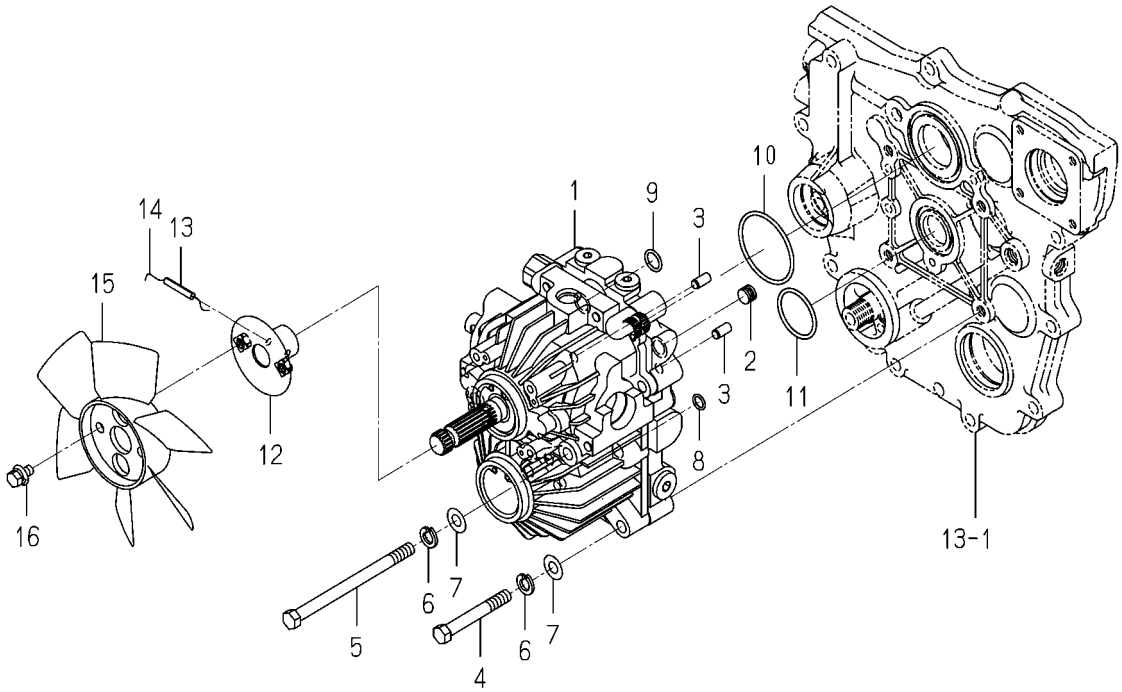

1739-210B-0100

KEY	PART CODE	DESCRIPTION	SPC	TYPE OF MODEL TXG237 F3		ITC	COL	GRP	REMARKS
1	K510-017-000-10	HST/GC/21 ASSY	*	1					FIG 100
2	V780-140-000-4T	PLUG/SCREW/SEAL	*	1					
3	V523-100-801-60	PIN,ST,B/8X16	*	2					
4	V201-361-007-50	BOLT/M10X75/7T	*	2					
5	V201-361-014-00	BOLT/M10X140/7T	*	2					
6	V401-160-010-00	WASHER,SP/M10	*	4					
7	V411-260-010-00	WASHER,PL/M10	*	4					
8	V720-111-901-00	O-RING/1B,P10	*	1					
9	V720-112-401-50	O-RING/1B,P15	*	1					
10	V721-103-106-00	O-RING/1A,G60	*	1					
11	V721-103-104-00	O-RING/1A,G40	*	1					
12	1725-210-310-20	FLANGE/FAN COMP	*	1					
13	V580-140-602-80	PIN,SPRING/6X28 W	*	1					
14		WIRE	*	1					
15	1725-210-002-00	FAN/HST	*	1					
16	V211-360-802-00	BOLT,SP/M8X20	*	2					

FIG. 15 GEAR(PUMP)SYSTEM

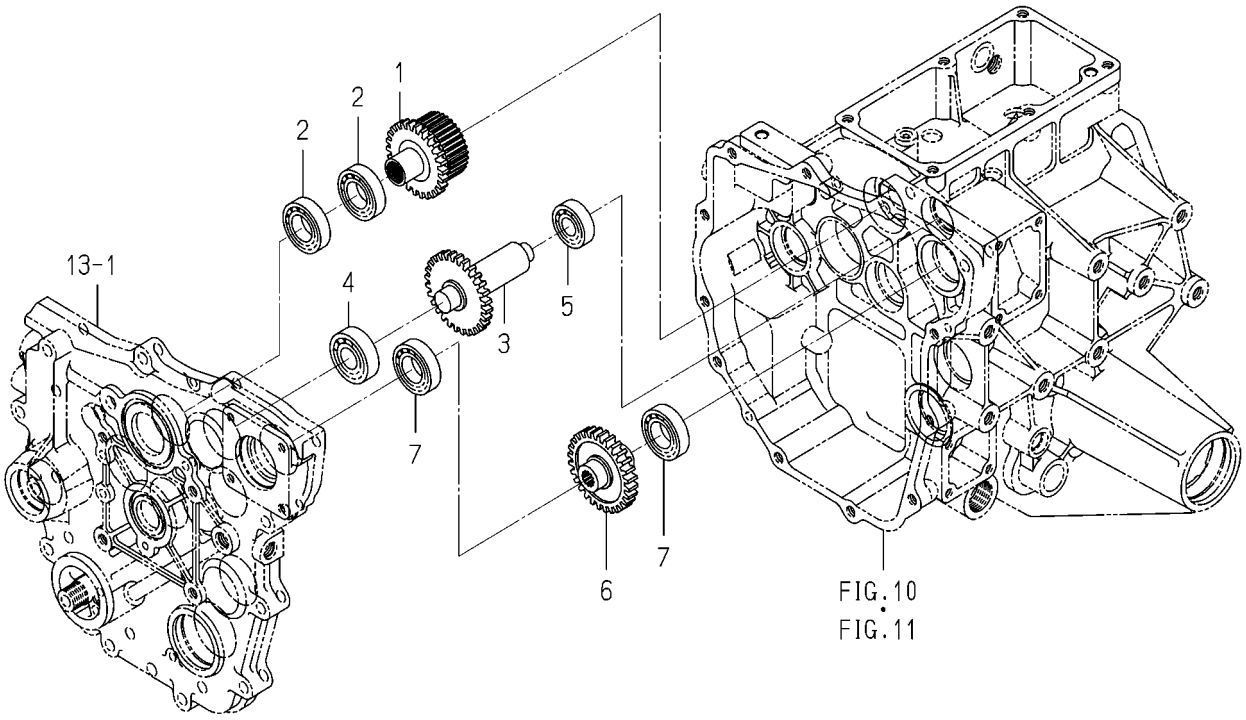

1725-212 -0100

KEY	PART CODE	DESCRIPTION	SPC	TYPE OF MODEL TXG237 F3		ITC	COL	GRP	REMARKS
1	1725-212-001-00	GEAR/SPUR/26	*	1					
2	1729-202-002-00	BEARING/BALL	*	2					
3	1725-212-002-00	GEAR/SPUR/28	*	1					
4	V600-110-620-40	BEARING,RB/6204	*	1					
5	V600-110-620-30	BEARING,RB/6203	*	1					
6	1725-212-003-10	GEAR/SPUR/28	*	1					
7	1729-202-002-00	BEARING/BALL	*	2					

FIG. 16 GEAR(SUB)SYSTEM

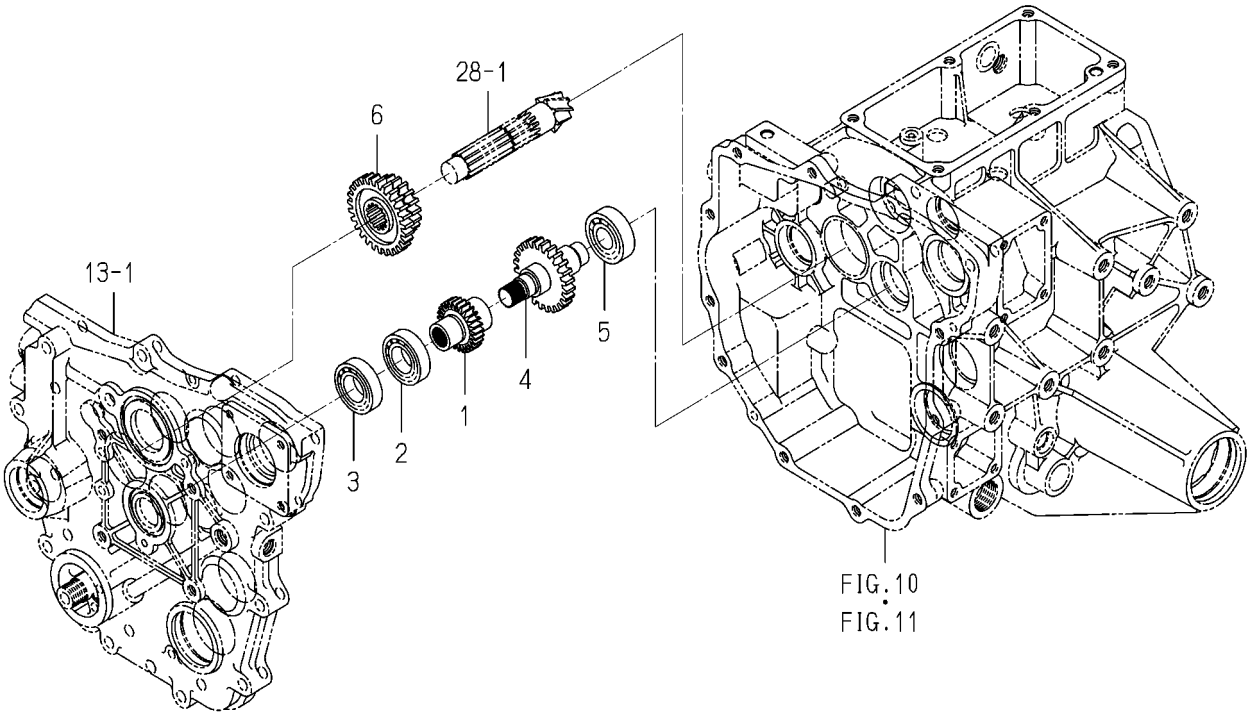

1725-216 -0100

KEY	PART CODE	DESCRIPTION	SPC	TYPE OF MODEL TXG237 F3		ITC	COL	GRP	REMARKS
1	1725-216-001-20	GEAR/SPUR/16	*	1					
2	1729-202-002-00	BEARING/BALL	*	1					
3	V600-111-600-50	BEARING,RB/16005	*	1					
4	1725-216-002-10	GEAR/SPUR/24	*	1					
5	V600-110-620-40	BEARING,RB/6204	*	1					
6	1725-216-003-20	GEAR/SPUR/19-27	*	1					

FIG. 17 GEAR(4WD)SYSTEM

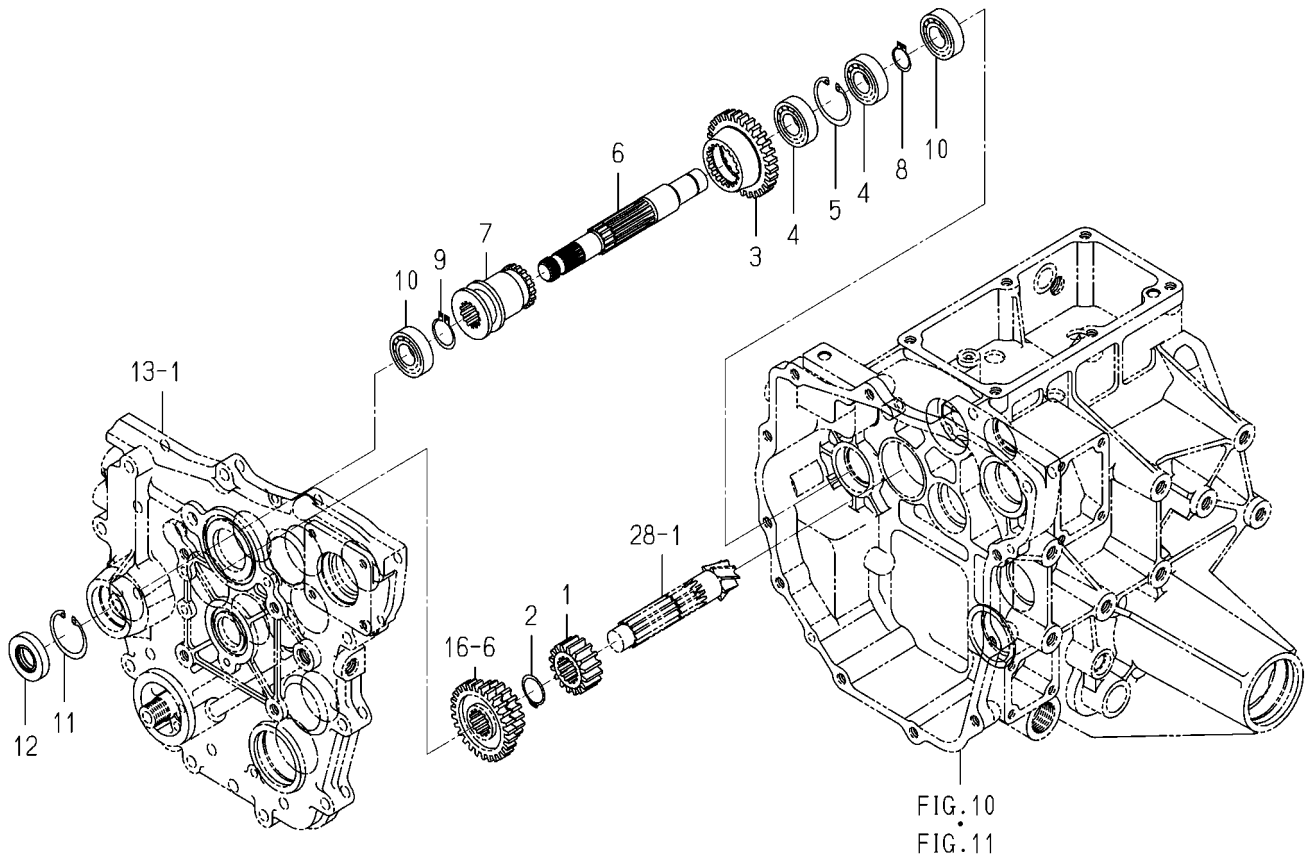

1739-218 -0100

KEY	PART CODE	DESCRIPTION	SPC	TYPE OF MODEL TXG237 F3		ITC	COL	GRP	REMARKS
1	1725-218-001-10	GEAR/SPUR/16	*	1					
2	1725-218-006-00	RING/SNAP/CS25	*	1					
3	1725-218-002-10	GEAR/SPUR/29	*	1					
4	1825-202-017-00	BEARING/BALL/6004	*	2					
5	V705-140-042-00	RING,SNAP/42 C	*	1					
6	1725-218-003-10	SHAFT/4WD	*	1					
7	1725-218-004-10	SLEEVE/4WD	*	1					
8	V704-140-020-00	RING,SNAP/20 C	*	1					
9	V704-140-025-00	RING,SNAP/25 C	*	1					
10	1825-202-017-00	BEARING/BALL/6004	*	2					
11	V705-140-042-00	RING,SNAP/42 C	*	1					
12	V744-120-420-80	SEAL,OIL/TC20428	*	1					

FIG. 18 GEAR(PTO)SYSTEM

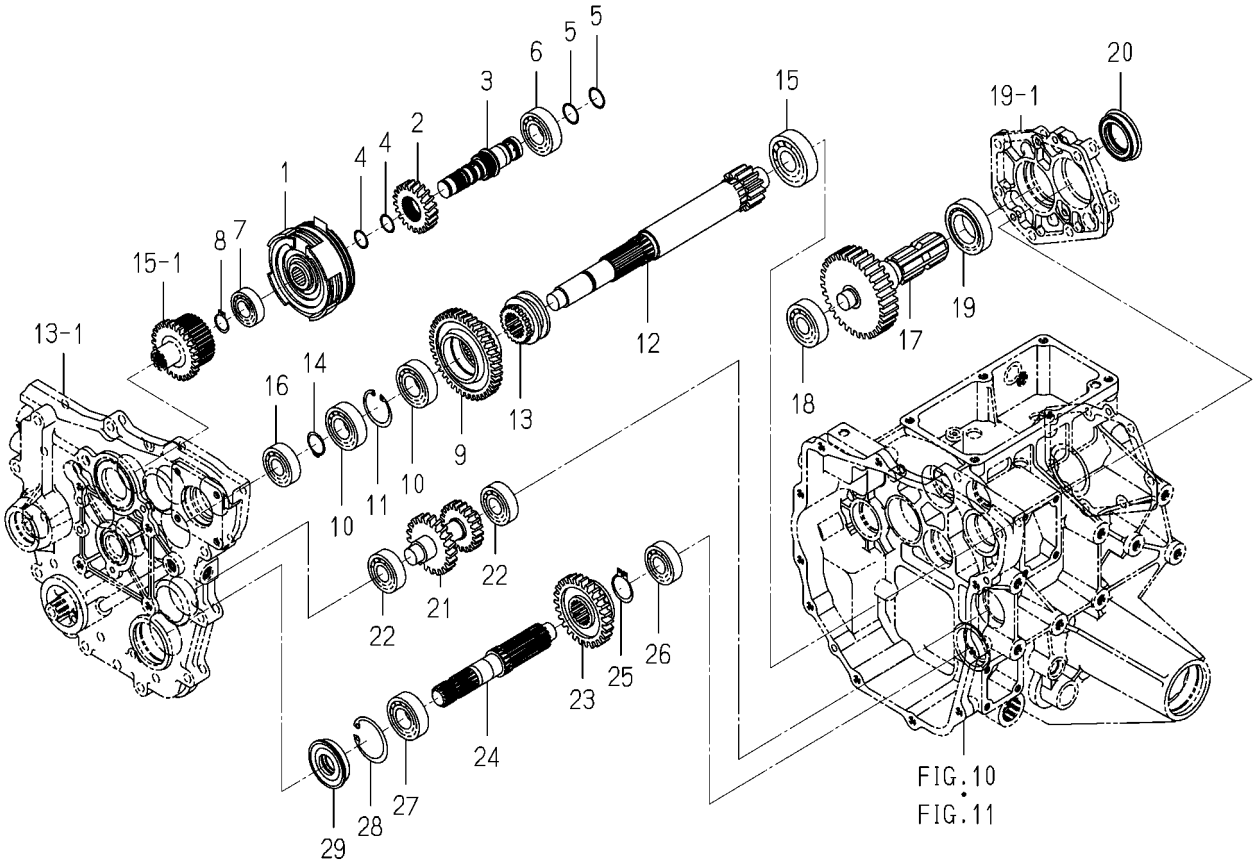

1739-219 -0100

KEY	PART CODE	DESCRIPTION	SPC	TYPE OF MODEL TXG237 F3		ITC	COL	GRP	REMARKS
1	1725-219-210-20	CLUTCH/PTO ASSY	*	1					FIG 102
2	1725-219-001-00	GEAR/HELICAL/21	*	1					
3	1725-219-220-10	SHAFT/PTO COMP	*	1					
4	1688-211-057-00	RING/22	*	2					
5	1575-261-018-00	RING/25	*	2					
6	V600-110-620-50	BEARING,RB/6205	*	1					
7	1725-219-013-00	BEARING/BALL	*	1					
8	V704-140-020-00	RING,SNAP/20 C	*	1					
9	1725-219-003-00	GEAR/HELICAL/40	*	1					
10	3673-701-005-00	BEARING/BALL	*	2					
11	V705-140-052-00	RING,SNAP/52 C	*	1					
12	1725-219-004-00	GEAR/SPUR/13	*	1					
13	1725-219-005-00	SLEEVE/PTO	*	1					
14	1725-218-006-00	RING/SNAP/CS25	*	1					
15	1594-218-001-00	BEARING/BALL 6305SH2	*	1					
16	V600-110-620-40	BEARING,RB/6204	*	1					
17	1739-219-081-00	GEAR/SPUR/32	*	1					
18	1729-202-011-00	BEARING/BALL	*	1					
19	1729-202-004-00	BEARING/BALL	*	1					
20	1725-219-007-00	SEAL/OIL	*	1					
21	1725-219-008-00	GEAR/21-21	*	1					
22	V600-110-620-40	BEARING,RB/6204	*	2					
23	1725-219-009-00	GEAR/SPUR/26	*	1					
24	1725-219-011-00	SHAFT/PTO/MID	*	1					
25	V704-140-030-00	RING,SNAP/30 C	*	1					
26	V600-110-620-40	BEARING,RB/6204	*	1					
27	V600-110-620-50	BEARING,RB/6205	*	1					
28	V705-140-052-00	RING,SNAP/52 C	*	1					
29	1725-219-012-00	SEAL/OIL	*	1					

FIG. 19 METAL(PTO)SYSTEM

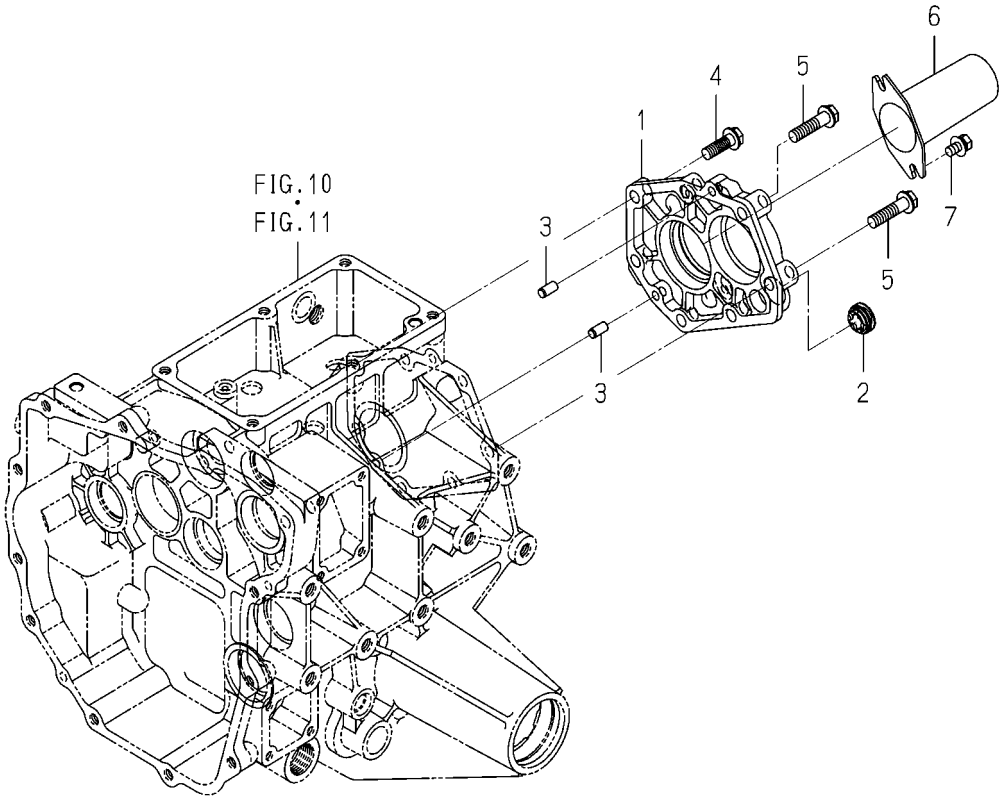

1725-222A-0100

KEY	PART CODE	DESCRIPTION	SPC	TYPE OF MODEL TXG237 F3		ITC	COL	GRP	REMARKS
1	1725-222-011-00	METAL/PTO	*	1					
2	1690-241-003-00	GAUGE/LEBEL	*	1					
3	V523-100-801-60	PIN,ST,B/8X16	*	2					
4	V231-361-003-00	FLANGEBOLT/M10X30	*	5					
5	V231-361-004-00	FLANGEBOLT/M10X40	*	2					
6	1444-314-009-10	CAP,PTO SHAFT	*	1					
7	V211-360-801-60	BOLT,SP/M8X16	*	2					

FIG. 20 CHANGE(SUB)SYSTEM

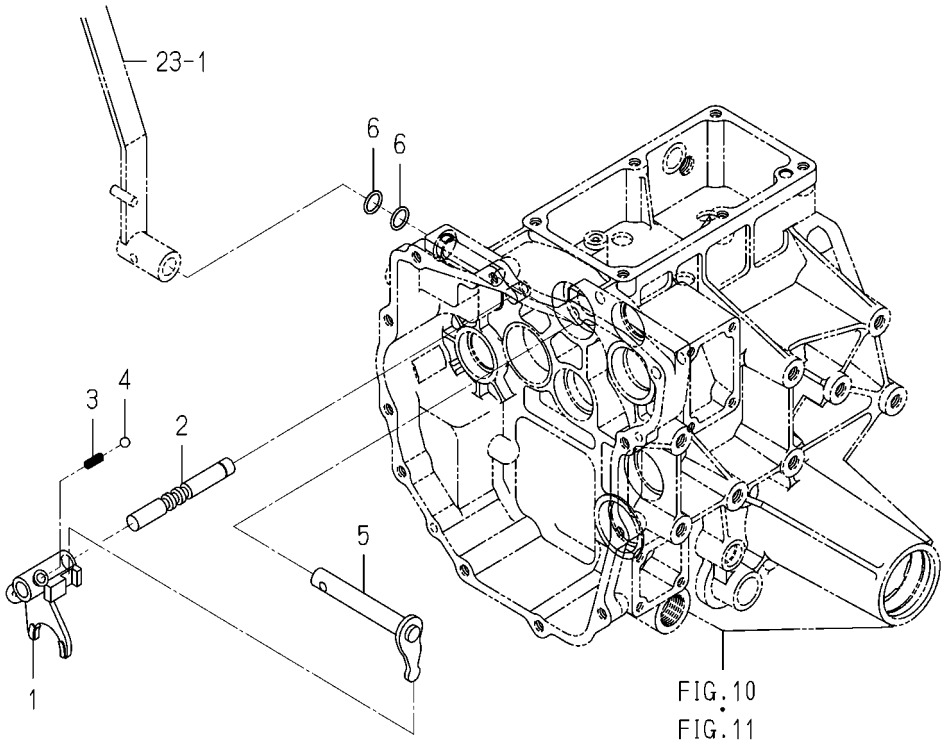

1725-256 -0100

KEY	PART CODE	DESCRIPTION	SPC	TYPE OF MODEL TXG237 F3		ITC	COL	GRP	REMARKS
1	1725-256-001-10	FORK/SHIFT/SUB	*	1					
2	1725-256-002-00	STAY/SHIFT/SUB	*	1					
3	1650-259-010-00	SPRING/HC023	*	1					
4	V682-200-001-00	BALL,STEEL	*	1					
5	1725-256-210-10	ARM/SHIFT/SUB COMP	*	1					
6	V720-102-401-60	O-RING/1A,P16	*	2					

FIG. 21 CHANGE(4WD)SYSTEM

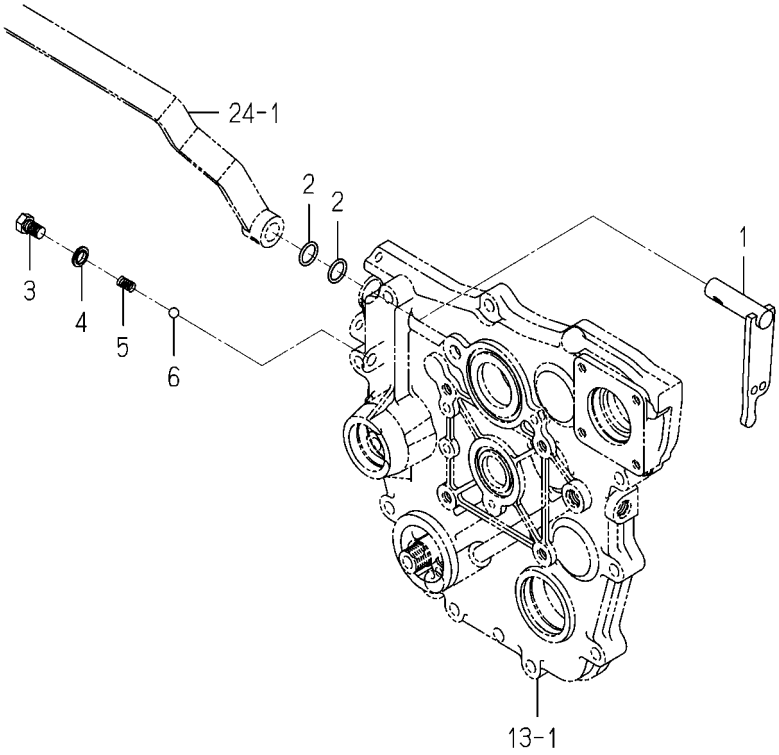

1725-258 -0100

KEY	PART CODE	DESCRIPTION	SPC	TYPE OF MODEL TXG237 F3		ITC	COL	GRP	REMARKS
1	1725-258-210-10	ARM/SHIFT/4WD COMP	*	1					
2	V720-102-401-60	O-RING/1A,P16	*	2					
3	1725-258-001-00	BOLT/SM/M10X16	*	1					
4	1646-233-033-00	SEAL/WASHER/10	*	1					
5	1302-225-003-00	SPRING,SHIFTER	*	1					
6	V682-200-001-00	BALL,STEEL	*	1					

FIG. 22 CHANGE(PTO)SYSTEM

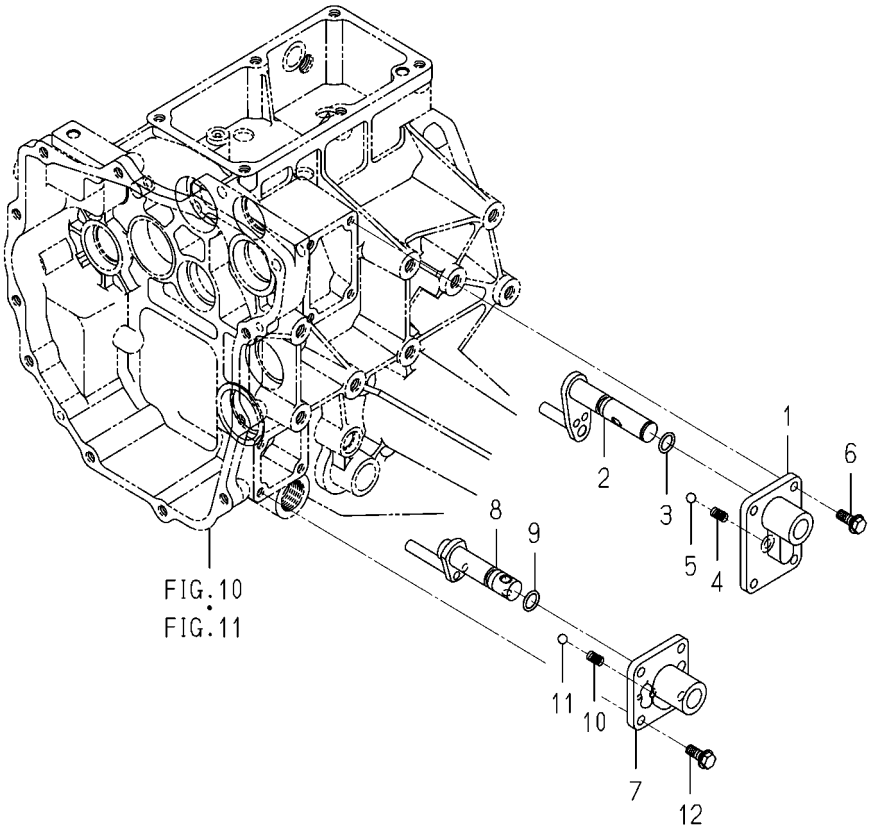

1725-259 -0100

KEY	PART CODE	DESCRIPTION	SPC	TYPE OF MODEL TXG237 F3		ITC	COL	GRP	REMARKS
1	1725-259-001-10	METAL/SHIFT/PTO	*	1					
2	1725-259-210-10	ARM/SHIFT/PTO/R COMP	*	1					
3	V720-112-401-40	O-RING/1B,P14	*	1					
4	1302-225-003-00	SPRING,SHIFTER	*	1					
5	V682-200-001-00	BALL,STEEL	*	1					
6	V231-360-802-00	FLANGEBOLT/M8X20	*	4					
7	1789-216-001-00	METAL/SHIFT	*	1					
8	1725-259-220-00	ARM/SHIFT/PTO/M COMP	*	1					
9	V720-112-401-40	O-RING/1B,P14	*	1					
10	1302-225-003-00	SPRING,SHIFTER	*	1					
11	V682-200-001-00	BALL,STEEL	*	1					
12	V231-360-802-00	FLANGEBOLT/M8X20	*	4					

FIG. 23 LEVER(SUB)SYSTEM

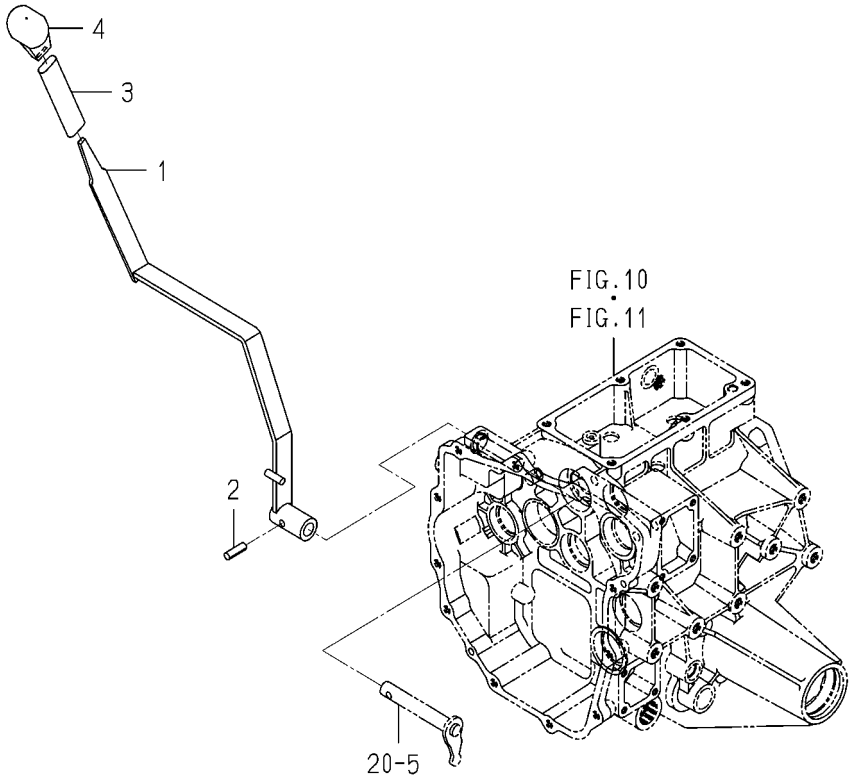

1739-266A-0100

KEY	PART CODE	DESCRIPTION	SPC	TYPE OF MODEL TXG237 F3		ITC	COL	GRP	REMARKS
1	1725-266-320-10	LEVER/SUB COMP	*	1					
2	V580-140-802-80	PIN,SPRING/8X28 W	*	1					
3	1725-266-001-00	INSULATOR/120	*	1					
4	1703-261-002-00	GRIP/MAIN	*	1					

FIG. 24 LEVER(4WD)SYSTEM

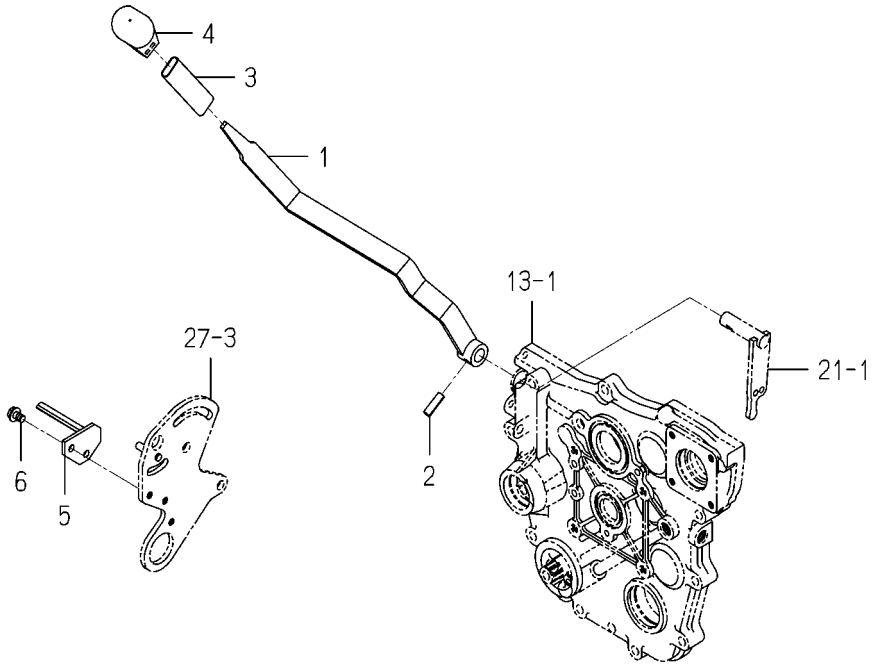

1739-268A-0100

KEY	PART CODE	DESCRIPTION	SPC	TYPE OF MODEL TXG237 F3		ITC	COL	GRP	REMARKS
1	1725-268-320-00	LEVER/4WD COMP	*	1					
2	V580-140-802-80	PIN,SPRING/8X28 W	*	1					
3	1758-505-002-00	INSULATOR/LEVER/SUB	*	1					
4	1703-261-002-00	GRIP/MAIN	*	1					
5	1739-268-220-00	STOPPER/LEVER COMP	*	1					
6	V231-360-801-20	FLANGEBOLT/M8X12	*	2					

FIG. 25 LEVER(PTO/REAR)SYSTEM

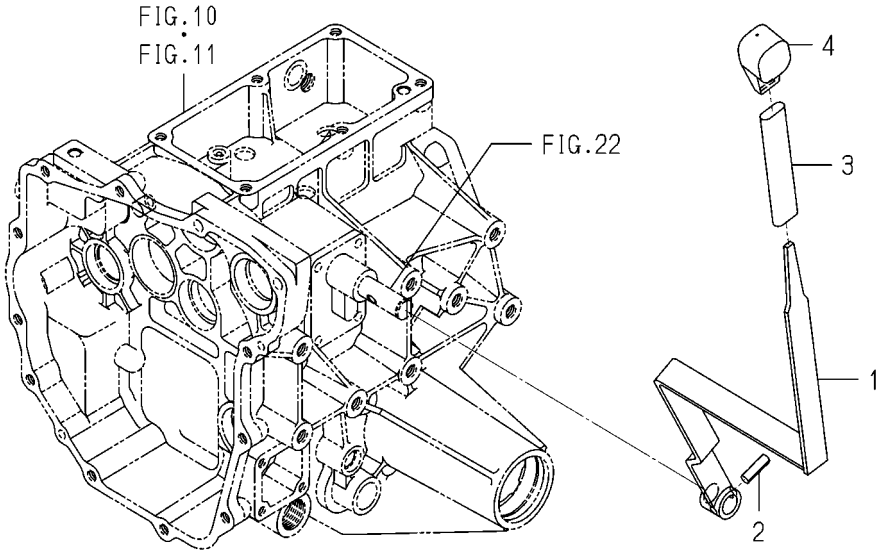

1739-270 -0100

KEY	PART CODE	DESCRIPTION	SPC	TYPE OF MODEL TXG237 F3		ITC	COL	GRP	REMARKS
1	1725-270-710-10	LEVER/PTO/REAR COMP	*	1					
2	V580-140-802-80	PIN,SPRING/8X28 W	*	1					
3	1725-266-001-00	INSULATOR/120	*	1					
4	1688-265-001-00	GRIP/MID/PTO	*	1					

FIG. 26 LEVER(PTO/MID)SYSTEM

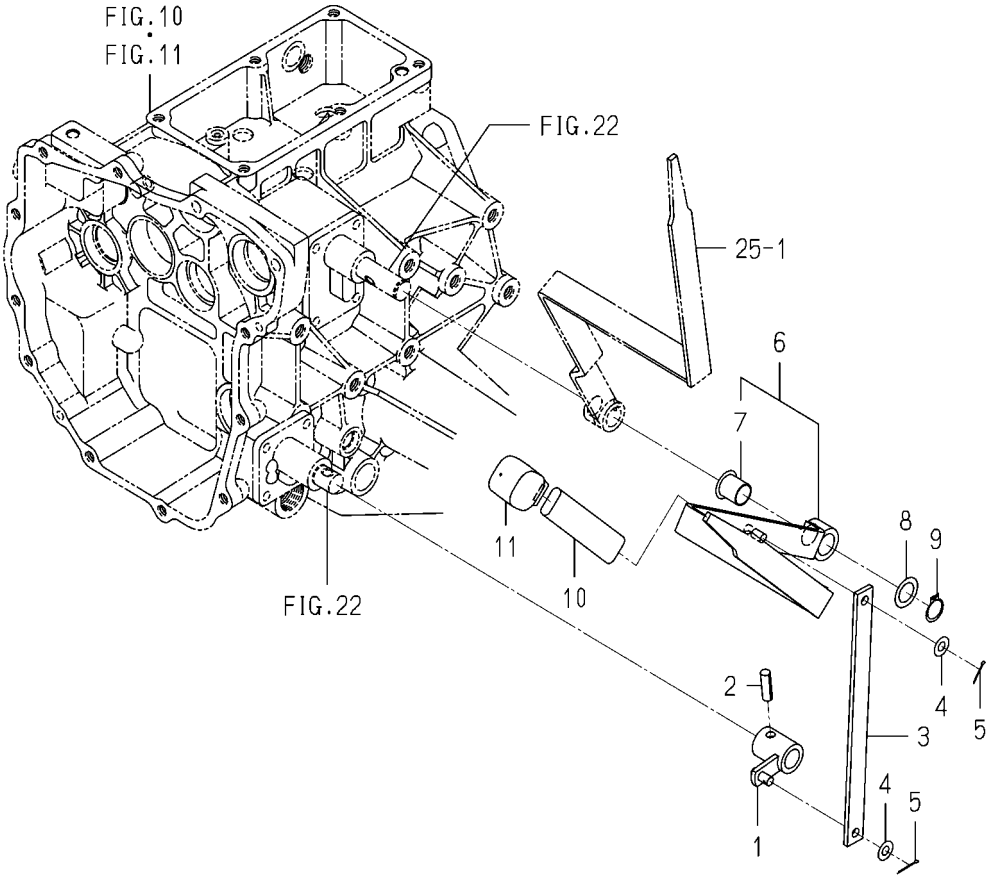

1739-271 -0100

KEY	PART CODE	DESCRIPTION	SPC	TYPE OF MODEL TXG237 F3		ITC	COL	GRP	REMARKS
1	1725-271-730-00	ARM/PTO/MID COMP	*	1					
2	V580-140-802-80	PIN,SPRING/8X28 W	*	1					
3	1725-271-071-10	PLATE/I/19X256	*	1					
4	V411-260-008-00	WASHER,PL/M8	*	2					
5	V500-162-002-00	PIN,SPLIT/2X20	*	2					
6	1725-271-720-20	LEVER/PTO/MID ASSY	*	1					
7	1725-271-221-00	BUSH/18X26X20	*	1					
8	1725-271-001-00	WASHER/18X28X02	*	1					
9	V704-140-018-00	RING,SNAP/18 C	*	1					
10	1725-266-001-00	INSULATOR/120	*	1					
11	1688-265-001-00	GRIP/MID/PTO	*	1					

FIG. 27 PEDAL(HST)SYSTEM(1/2)

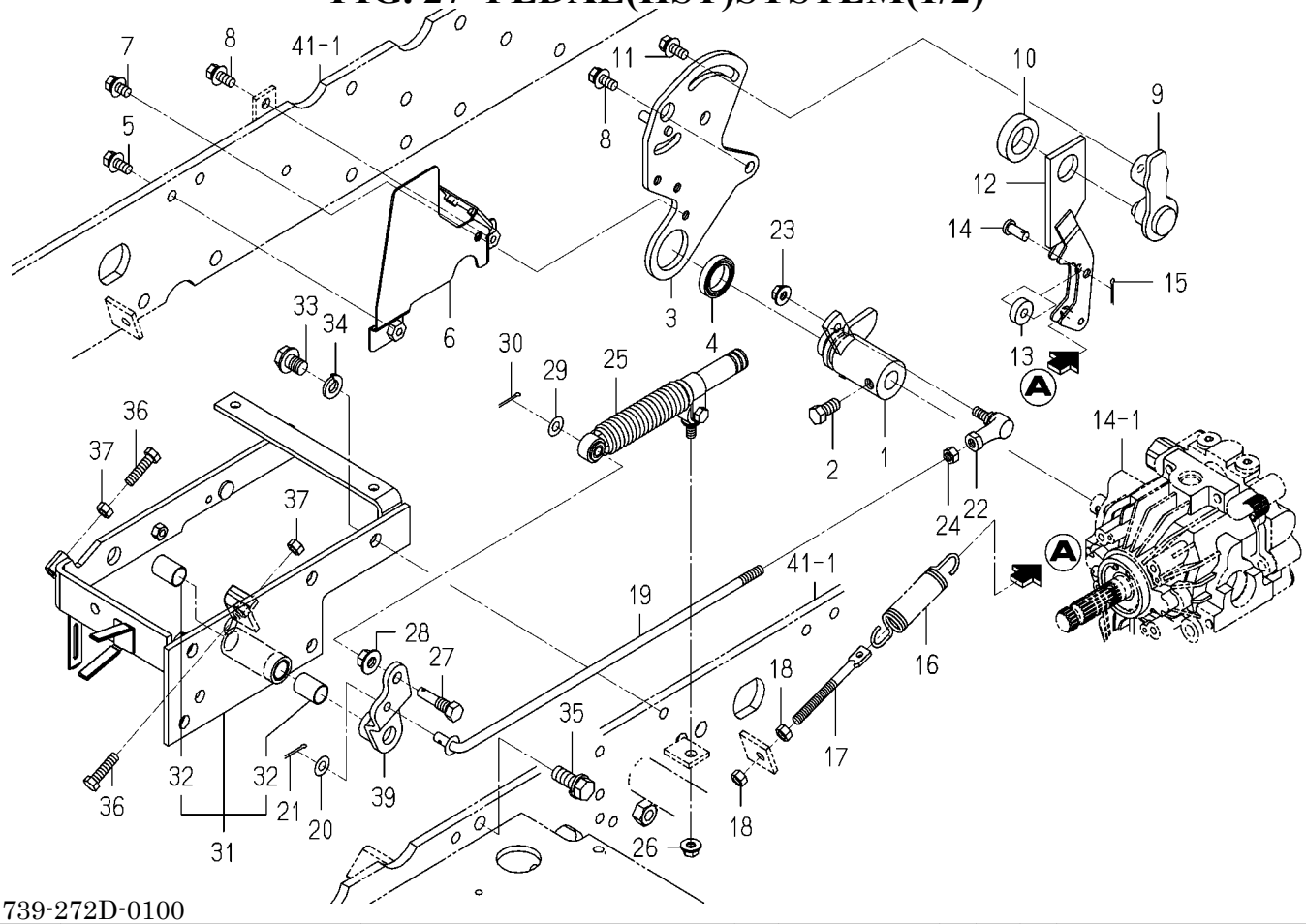

1739-272D-0100

KEY	PART CODE	DESCRIPTION	SPC	TYPE OF MODEL TXG237	TYPE OF MODEL F3	ITC	COL	GRP	REMARKS
1	1725-273-440-00	ARM/TRUNNION COMP	*	1					
2	1646-226-053-00	BOLT/SM/M10X23	*	1					
3	1725-273-370-10	PLATE/NEUTRAL/1 COMP	*	1					
4	1725-273-024-00	BEARING/BALL	*	1					
5	V211-660-802-00	BOLT,SP/M8X20/7T	*	1					
6	1739-272-860-00	PLATE/TRUNNION COMP	*	1					
7	V211-360-801-60	BOLT,SP/M8X16	*	1					
8	V211-360-802-00	BOLT,SP/M8X20	*	2					
9	1725-272-210-00	LEVER/ADJUST COMP	*	1					
10	1725-272-002-00	COLLAR/25X40X11	*	1					
11	1725-103-004-00	BOLT/SP/7	*	1					
12	1725-272-220-10	ARM/NEUTRAL COMP	*	1					
13	1725-273-025-00	BEARING/BALL	*	1					
14	2504-135-006-00	PIN/08X19	*	1					
15	V500-162-502-00	PIN,SPLIT/2.5X20	*	1					
16	2500-210-016-00	SPRING/HE108	*	1					
17	1725-272-005-00	ROD/M08X85	*	1					
18	V304-260-008-00	NUT/M8	*	2					
19	1725-273-450-00	ROD/HST/376 COMP	*	1					
20	V411-260-008-00	WASHER,PL/M8	*	1					
21	V500-162-502-00	PIN,SPLIT/2.5X20	*	1					
22	1560-695-021-00	JOINT BALL M08RH	*	1					
23	V362-260-008-00	NUT/WASHER/M8	*	1					
24	V304-260-008-00	NUT/M8	*	1					
25	1646-640-580-00	DAMPER/OIL ASSY	*	1					
26	V362-260-008-00	NUT/WASHER/M8	*	1					
27	1725-272-041-00	PIN/08X46	*	1					
28	V363-260-010-00	NUT/WASHER/M10	*	1					
29	V411-260-008-00	WASHER,PL/M8	*	1					
30	V500-162-502-00	PIN,SPLIT/2.5X20	*	1					

FIG. 27 PEDAL(HST)SYSTEM(2/2)

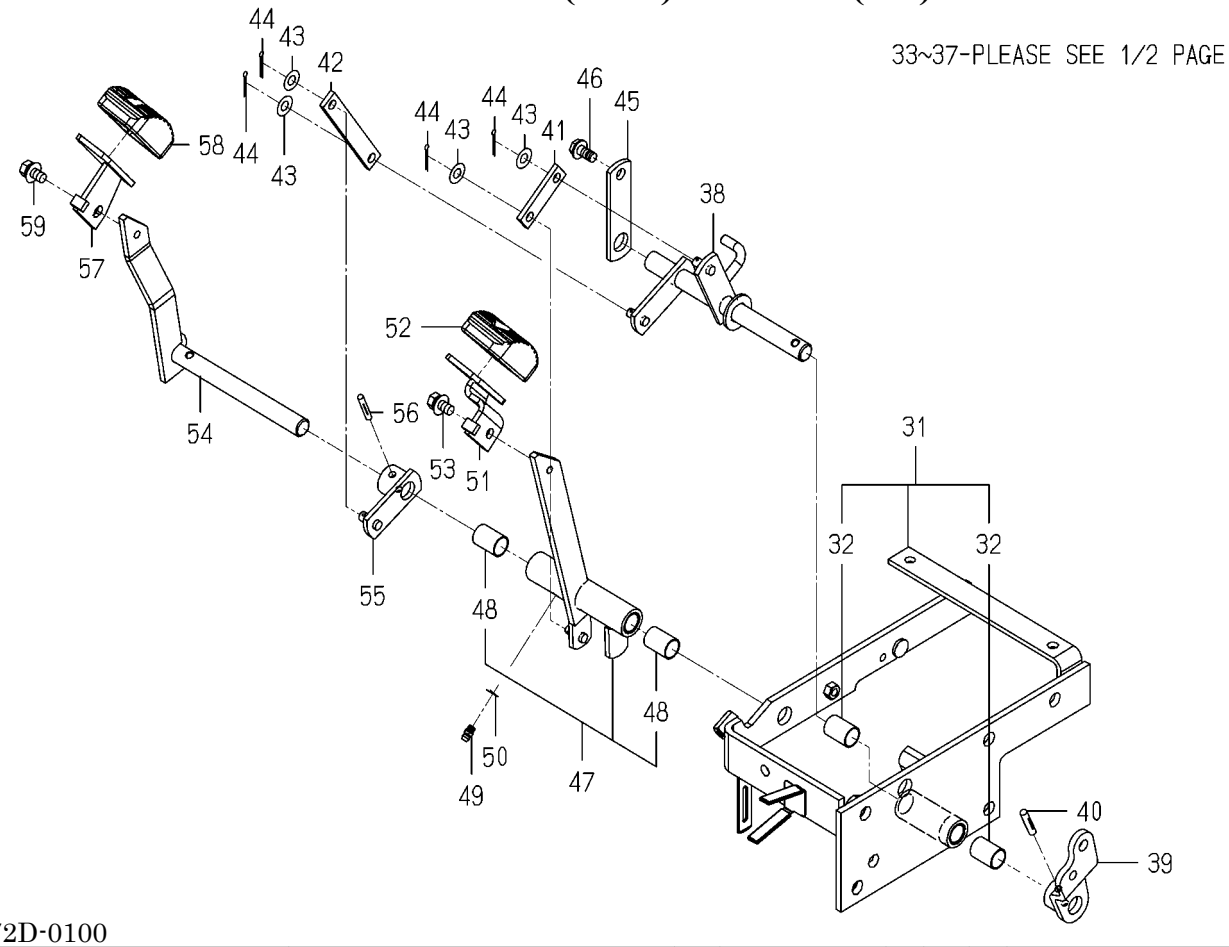

1739-272D-0100

KEY	PART CODE	DESCRIPTION	SPC	TYPE OF MODEL TXG237 F3		ITC	COL	GRP	REMARKS
31	1739-272-800-00	BASE/LINK/F3 ASSY	*	1					
32	1656-664-221-10	BUSH/16X18X25	*	2					
33	V201-361-202-00	BOLT/M12X20/7T	*	3					
34	V401-160-012-00	WASHER,SP/M12	*	3					
35	1725-201-002-00	BOLT/S	*	2					
36	V201-360-803-00	BOLT/M8X30/7T	*	2					
37	V304-260-008-00	NUT/M8	*	2					
38	1739-272-850-10	ARM/HST COMP	*	1					
39	1725-272-320-00	ARM COMP	*	1					
40	V530-160-602-80	PIN/GROOVE	*	1					
41	1725-272-084-00	PLATE/I/16X56	*	1					
42	1725-272-085-00	PLATE/I/16X107	*	1					
43	V411-260-008-00	WASHER,PL/M8	*	4					
44	V500-162-502-00	PIN,SPLIT/2.5X20	*	4					
45	1725-273-026-00	PLATE/IR/25X95	*	1					
46	V231-360-802-00	FLANGEBOLT/M8X20	*	1					
47	1725-273-420-10	ARM/PEDAL/F ASSY	*	1					
48	1656-664-221-10	BUSH/16X18X25	*	2					
49	V760-150-000-00	NIPPLE,GREASE	*	1					
50	V401-160-006-00	WASHER,SP/M6	*	1					
51	1739-272-730-00	PEDAL/HST/F COMP	*	1					
52	1774-272-071-00	PAD/HST/R	*	1					
53	V211-660-801-60	BOLT,SP/M8X16/7T	*	1					
54	1739-272-820-00	ARM/PEDAL/R COMP	*	1					
55	1725-272-740-20	HUB/PEDAL/R COMP	*	1					
56	V530-160-602-80	PIN/GROOVE	*	1					
57	1739-272-740-00	PEDAL/HST/R COMP	*	1					
58	1774-272-071-00	PAD/HST/R	*	1					
59	V211-660-801-60	BOLT,SP/M8X16/7T	*	1					

FIG. 28 PINION(DRIVE)SYSTEM

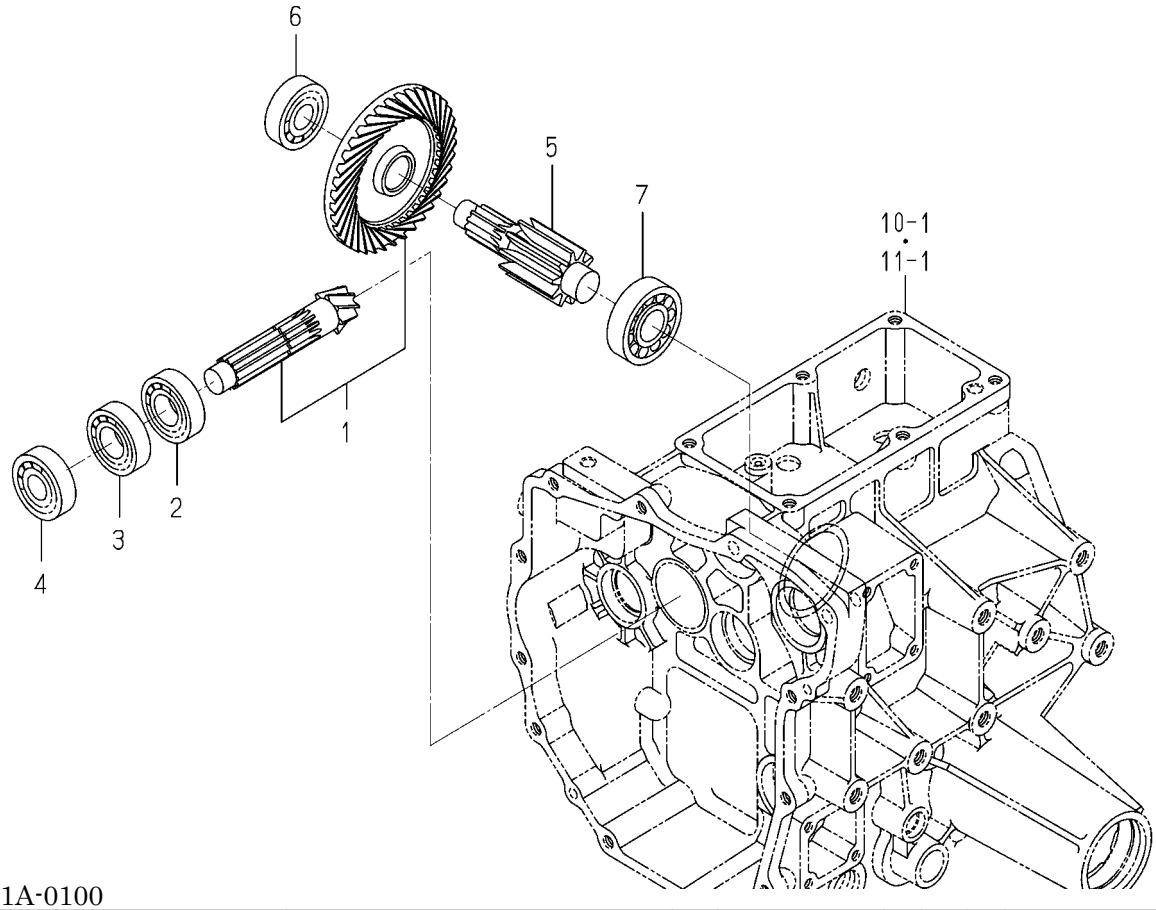

1725-301A-0100

KEY	PART CODE	DESCRIPTION	SPC	TYPE OF MODEL TXG237 F3		ITC	COL	GRP	REMARKS
1	1725-301-710-10	GEAR/07-33 SET	*	1					
2	3673-701-005-00	BEARING/BALL	*	1					
3	1617-206-003-00	RING/SNAP	*	1					
4	3673-701-006-00	BEARING/BALL	*	1					
5	1725-301-001-10	GEAR/SPUR/10	*	1					
6	1560-214-003-00	BEARING/BALL/6304SH2	*	1					
7	1725-301-002-00	BEARING/ROLLER	*	1					

FIG. 29 GEAR(DIFERENTIAL)SYSTEM

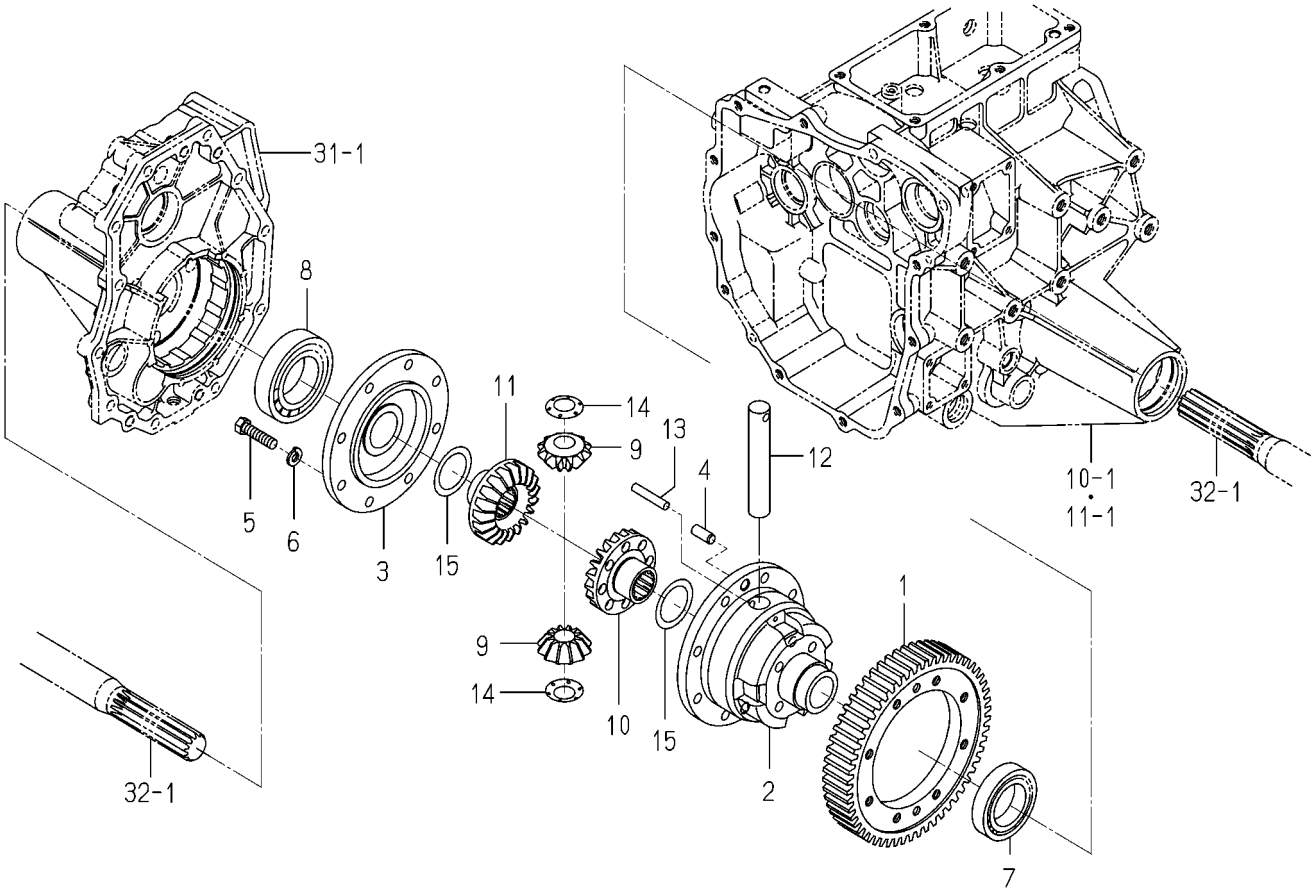

1739-304 -0100

KEY	PART CODE	DESCRIPTION	SPC	TYPE OF MODEL TXG237 F3		ITC	COL	GRP	REMARKS
1	1725-304-001-10	GEAR/SPUR/56	*	1					
2	1725-304-002-10	CASE/DIFF	*	1					
3	1725-304-003-10	CASE/DIFF	*	1					
4	V523-101-002-40	PIN,ST,B/10X24	*	2					
5	V203-361-004-00	BOLT/M10X40/7T,P1.25	*	8					
6	V401-160-010-00	WASHER,SP/M10	*	8					
7	V600-110-600-90	BEARING,RB/6009	*	1					
8	1805-202-026-00	BEARING/BALL/6210C	*	1					
9	1725-304-004-10	PINION/BEVEL/12	*	2					
10	1725-304-005-10	GEAR/BEVEL/20	*	1					
11	1725-304-006-10	GEAR/BEVEL/20	*	1					
12	1725-304-007-10	SHAFT/PINION	*	1					
13	1725-304-008-00	PIN/08X45	*	1					
14	1725-304-011-00	WASHER/PINION	*	2					
15	1725-304-009-00	WASHER/38X52X01	*	2					

FIG. 30 LOCK(DIFERENTIAL)SYSTEM

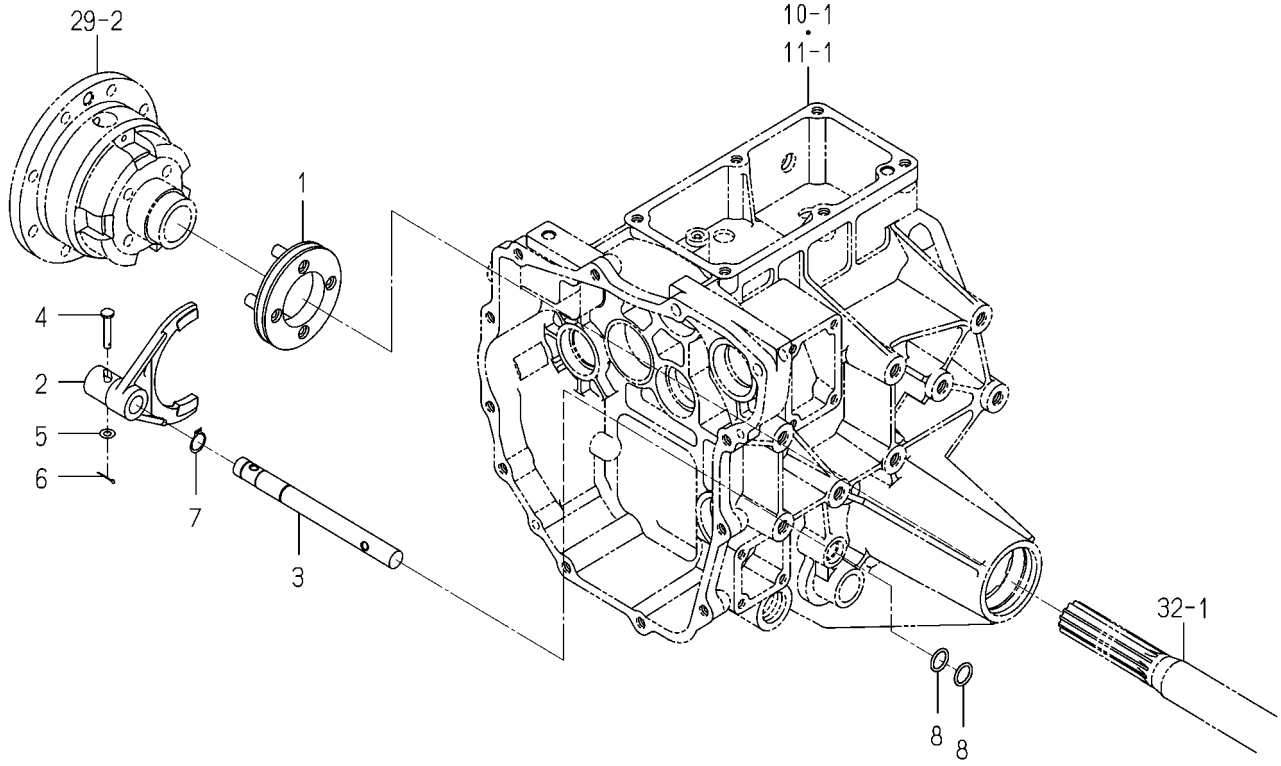

1725-305 -0100

KEY	PART CODE	DESCRIPTION	SPC	TYPE OF MODEL TXG237 F3		ITC	COL	GRP	REMARKS
1	1725-305-210-00	SLEEVE/DIFFLOCK COMP	*	1					
2	1725-305-001-10	FORK/SHIFT/DIFFLOCK	*	1					
3	1725-305-002-10	SHAFT/DIFFLOCK	*	1					
4	1725-305-003-00	PIN/06X32	*	1					
5	V411-260-006-00	WASHER,PL/M6	*	1					
6	V500-162-001-50	PIN,SPLIT/2X15	*	1					
7	V704-140-016-00	RING,SNAP/16 C	*	1					
8	V720-102-401-60	O-RING/1A,P16	*	2					

FIG. 31 HOUSING(AXLE)SYSTEM

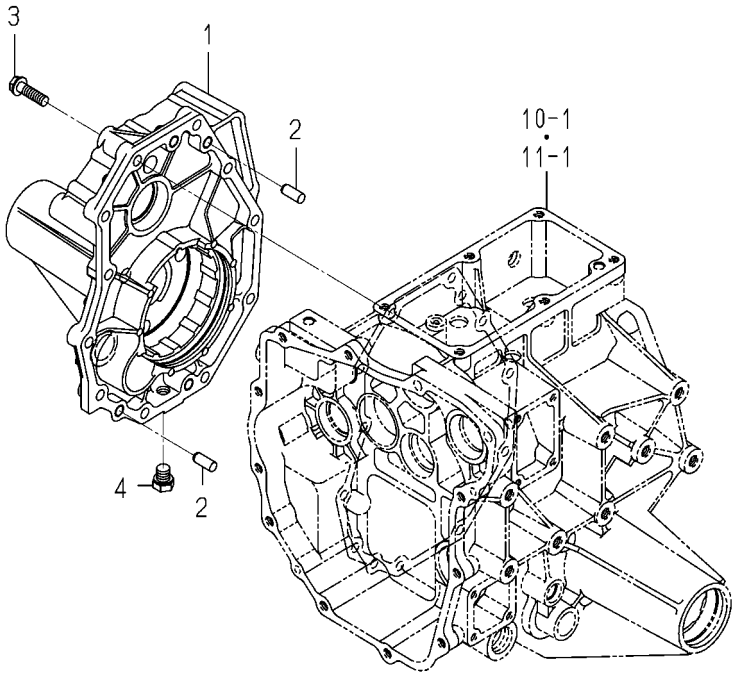

1725-306A-0100

KEY	PART CODE	DESCRIPTION	SPC	TYPE OF MODEL TXG237 F3		ITC	COL	GRP	REMARKS
1	1725-306-001-10	HOUSING/AXLE	*	1					
2	V523-101-002-40	PIN,ST,B/10X24	*	2					
3	V231-361-003-50	FLANGEBOLT/M10X35	*	11					
4	P118-702-033-00	PLUG	*	1					

FIG. 32 SHAFT(WHEEL)SYSTEM

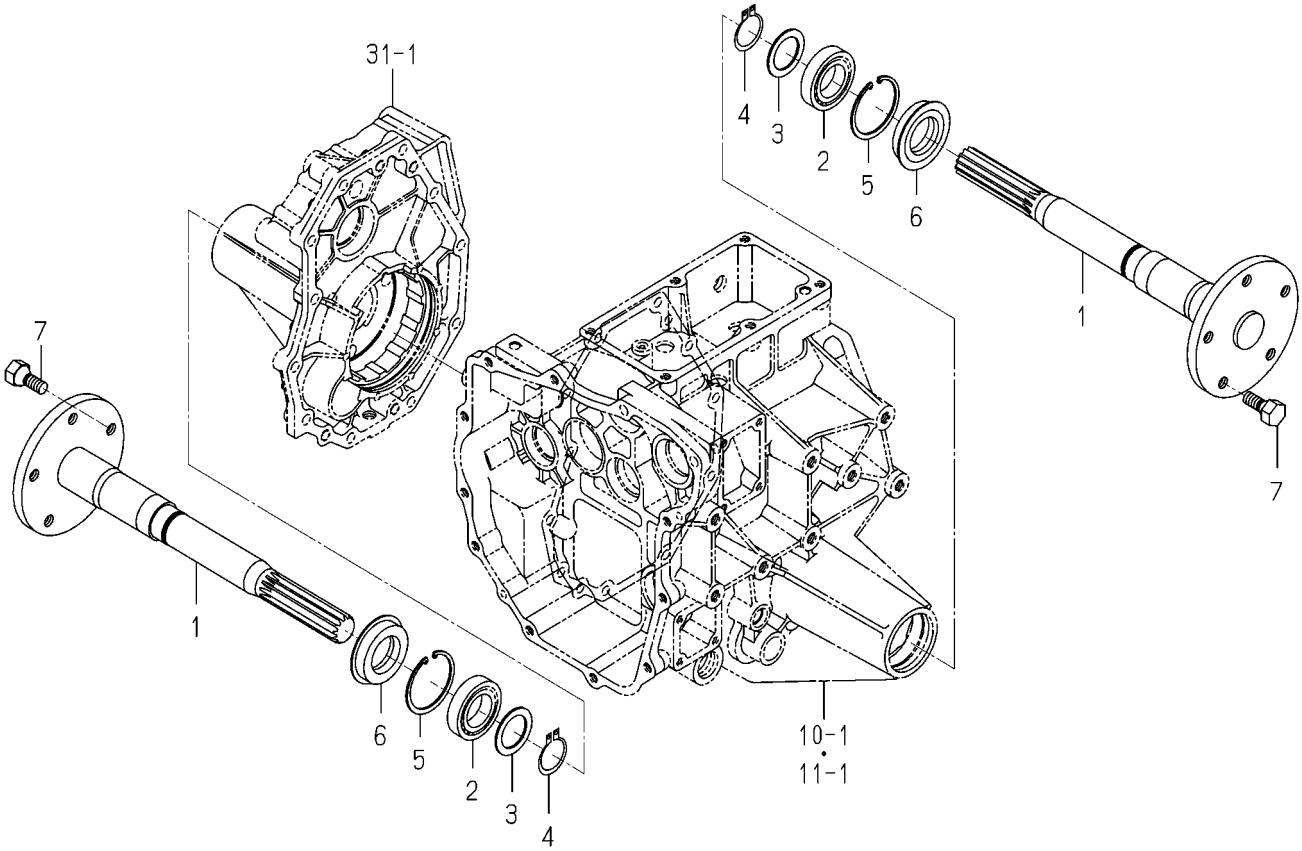

1725-308 -0100

KEY	PART CODE	DESCRIPTION	SPC	TYPE OF MODEL TXG237 F3		ITC	COL	GRP	REMARKS
1	1725-308-210-00	SHAFT/WHEEL COMP	*	2					
2	1729-202-004-00	BEARING/BALL	*	2					
3	1444-314-004-10	COLLAR(35X50X2)	*	2					
4	V704-140-035-00	RING,SNAP/35 C	*	2					
5	1710-241-053-00	RING/SNAP/R62	*	2					
6	1725-308-002-00	SEAL/OIL	*	2					
7	1725-308-003-20	BOLT/M12X1.5	*	10					

FIG. 33 BRAKE SYSTEM

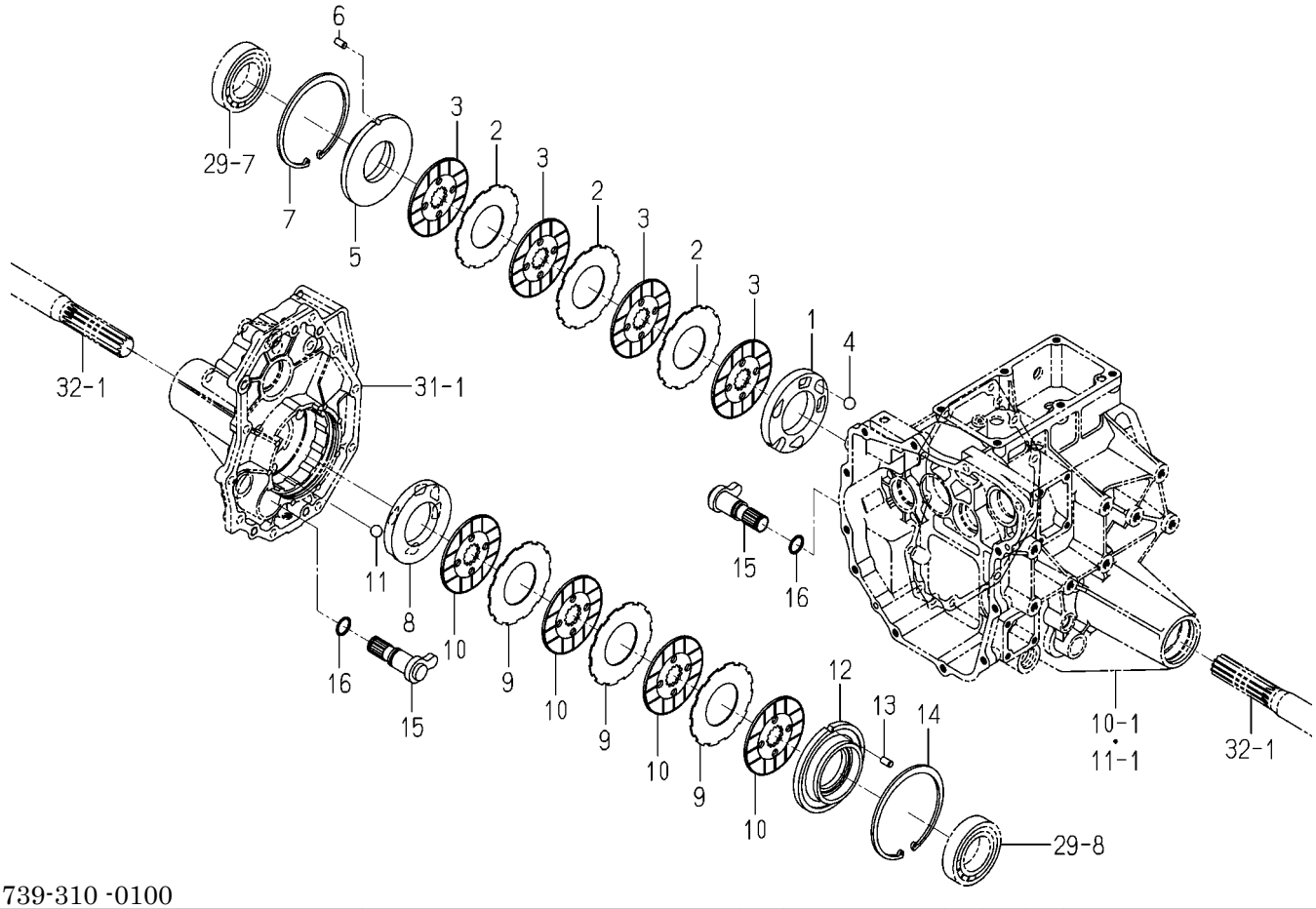

1739-310 -0100

KEY	PART CODE	DESCRIPTION	SPC	TYPE OF MODEL TXG237 F3		ITC	COL	GRP	REMARKS
1	1774-310-001-00	PLATE/PRESSURE/LH	*	1					
2	1774-310-003-00	PLATE/SEPARATER	*	3					
3	1774-310-004-00	PLATE/FRICTION	*	4					
4	V682-200-001-90	BALL,STEEL	*	3					
5	1725-310-001-00	METAL/BRAKE/LH	*	1					
6	V523-100-801-60	PIN,ST,B/8X16	*	1					
7	1725-310-003-00	RING/SNAP/CH125	*	1					
8	1774-310-002-00	PLATE/PRESSURE/RH	*	1					
9	1774-310-003-00	PLATE/SEPARATER	*	3					
10	1774-310-004-00	PLATE/FRICTION	*	4					
11	V682-200-001-90	BALL,STEEL	*	3					
12	1725-310-004-00	METAL/BRAKE/RH	*	1					
13	V523-100-801-60	PIN,ST,B/8X16	*	1					
14	1725-310-003-00	RING/SNAP/CH125	*	1					
15	1725-310-210-00	CAM/BRAKE COMP	*	2					
16	V720-102-402-10	O-RING/1A,P21	*	2					

FIG. 34 PEDAL(BRAKE)SYSTEM

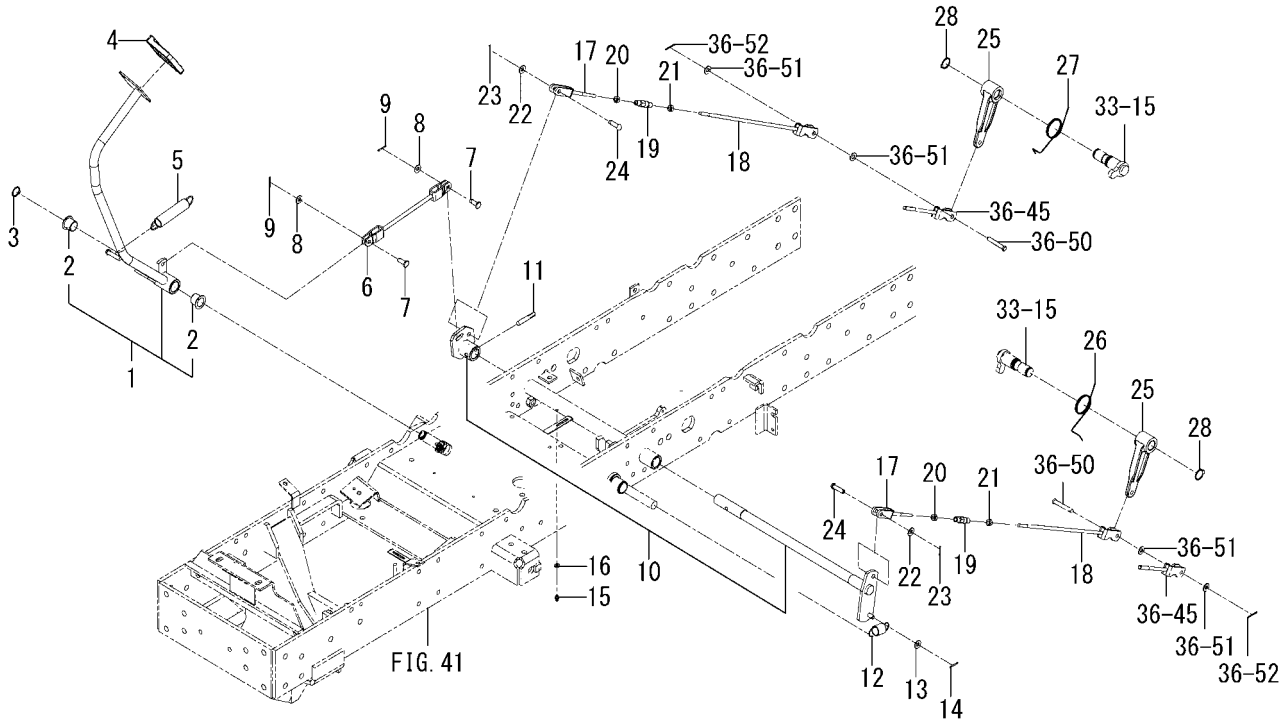

1739-312C-0100

KEY	PART CODE	DESCRIPTION	SPC	TYPE OF MODEL TXG237 F3		ITC	COL	GRP	REMARKS
1	1739-312-740-00	PEDAL/BRAKE ASSY	*	1					
2	A101-251-008-00	BUSH/20X23X20	*	2					
3	V704-140-020-00	RING,SNAP/20 C	*	1					
4	1836-312-002-00	PAD	*	1					
5	1725-312-003-00	SPRING/HE126	*	1					
6	1739-312-760-10	FORK COMP	*	1					
7	1432-242-001-00	PIN	*	2					
8	V411-260-008-00	WASHER,PL/M8	*	2					
9	V500-162-502-00	PIN,SPLIT/2.5X20	*	2					
10	1739-312-710-20	SHAFT/BRAKE SET	*	1					
11	V511-100-805-00	PIN,TAPER/8X50	*	1					
12	1560-511-006-50	SPRING	*	1					
13	V411-260-008-00	WASHER,PL/M8	*	1					
14	V500-162-502-00	PIN,SPLIT/2.5X20	*	1					
15	V760-150-000-00	NIPPLE,GREASE	*	1					
16	V401-160-006-00	WASHER,SP/M6	*	1					
17	1739-312-850-00	ROD/132 COMP	*	2					
18	1739-312-860-00	ROD/380/LH COMP	*	2					
19	1444-122-002-00	TURNBUCKLE/M8	*	2					
20	V304-260-008-00	NUT/M8	*	2					
21	1560-132-007-30	NUT/LH/M08	*	2					
22	V411-260-008-00	WASHER,PL/M8	*	2					
23	V500-162-502-00	PIN,SPLIT/2.5X20	*	2					
24	1608-554-002-00	PIN/08X26	*	2					
25	1739-312-073-00	ARM/BRAKE	*	2					
26	1739-312-071-00	SPRING/HT042/LH	*	1					
27	1739-312-072-00	SPRING/HT042/RH	*	1					
28	V704-140-022-00	RING,SNAP/22 C	*	2					

FIG. 35 PEDAL(DIFF-LOCK)SYSTEM

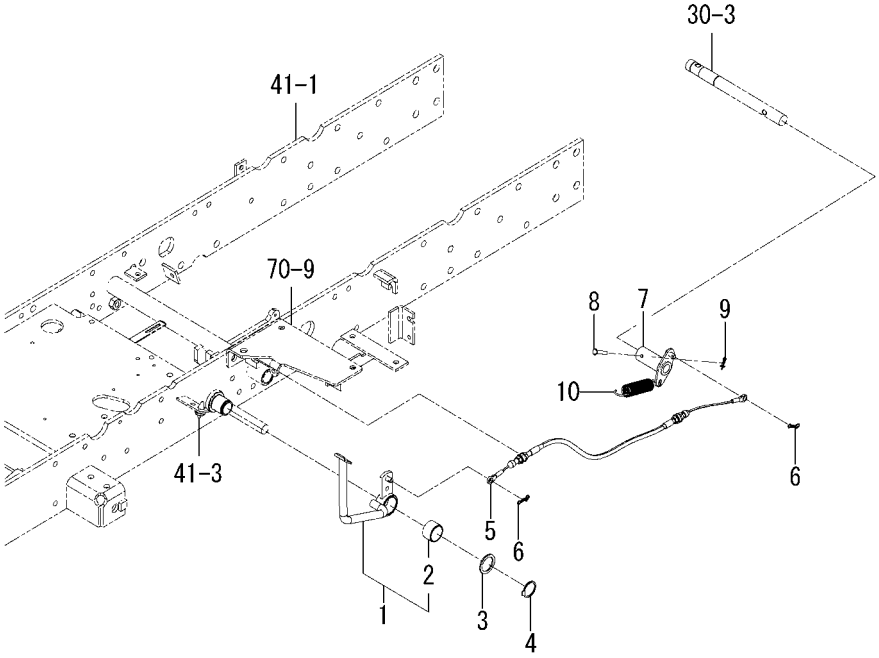

1739-313A-0100

KEY	PART CODE	DESCRIPTION	SPC	TYPE OF MODEL TXG237 F3		ITC	COL	GRP	REMARKS
1	1739-313-810-10	PEDAL/DIFF ASSY	*	1					
2	1581-312-001-00	BUSH/28X32X20	*	1					
3	1560-275-013-00	WASHER/28X37X2	*	1					
4	V704-140-028-00	RING,SNAP/28 C	*	1					
5	1725-313-730-40	CABLE/DIFF ASSY	*	1		1			
6	1725-271-003-00	PIN/SNAP/B	*	2					
7	1725-313-220-30	ARM/DIFF COMP	*	1					
8	1725-305-003-00	PIN/06X32	*	1					
9	1725-210-032-00	PIN/SNAP/B	*	1					
10	2500-210-016-00	SPRING/HE108	*	1					

FIG. 36 BRAKE(PARKING)SYSTEM(1/2)

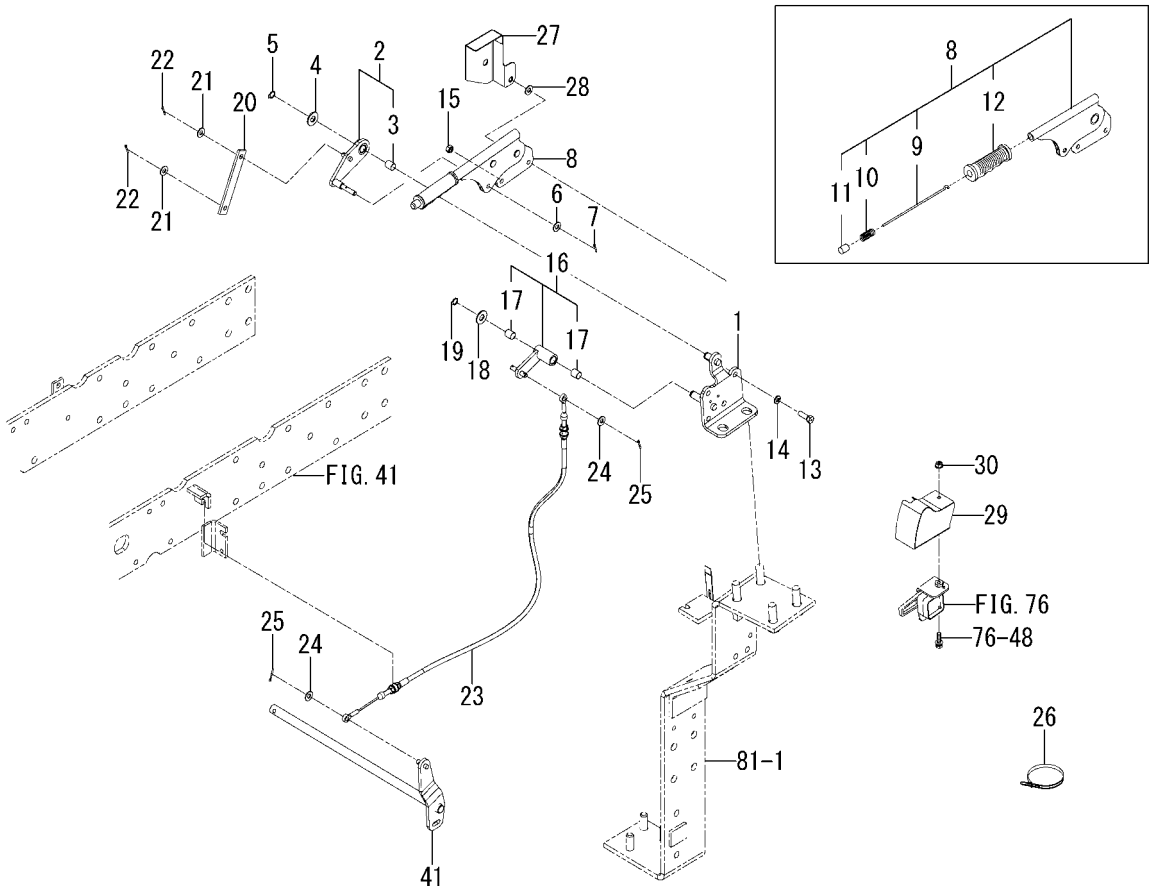

1739-314C-0100

KEY	PART CODE	DESCRIPTION	SPC	TYPE OF MODEL TXG237 F3		ITC	COL	GRP	REMARKS
1	1739-314-720-20	STAY/LEVER COMP	*	1					
2	1739-314-220-30	ARM/PARKING/A ASSY	*	1					
3	1689-271-311-00	BUSH/12X14X15	*	1					
4	V411-260-012-00	WASHER,PL/M12	*	1					
5	V704-140-012-00	RING,SNAP/12 C	*	1					
6	V411-260-008-00	WASHER,PL/M8	*	1					
7	V500-162-501-50	PIN,SPLIT/2.5X15	*	1					
8	1740-313-300-10	LEVER/PARKING ASSY	*	1					
9	1442-313-202-00	ROD	*	1					
10	1444-328-273-00	SPRING	*	1					
11	1444-328-272-00	BUTTON	*	1					
12	1740-313-301-00	GRIP/ORANGE	*	1					
13	V201-260-802-50	BOLT/M8X25	*	2					
14	V401-160-008-00	WASHER,SP/M8	*	2					
15	V362-260-008-00	NUT/WASHER/M8	*	1					
16	1739-314-920-10	ARM/BRAKE ASSY	*	1					
17	1689-271-311-00	BUSH/12X14X15	*	2					
18	V411-260-012-00	WASHER,PL/M12	*	1					
19	V704-140-012-00	RING,SNAP/12 C	*	1					
20	1739-314-082-00	PLATE/I/19X124	*	1					
21	V411-260-008-00	WASHER,PL/M8	*	2					
22	V500-162-501-50	PIN,SPLIT/2.5X15	*	2					
23	1739-314-880-00	CABLE/PARKING ASSY	*	1					
24	V411-260-008-00	WASHER,PL/M8	*	2					
25	V500-162-502-00	PIN,SPLIT/2.5X20	*	2					
26	1342-402-006-00	BAND,WIRE/250	*	2					
27	1739-314-740-10	COVER/LINK COMP	*	1					
28	V411-260-008-00	WASHER,PL/M8	*	1					
29	1739-314-750-20	COVER/SWITCH COMP	*	1					
30	V360-260-006-00	NUT/WASHER/M6	*	1					

FIG. 36 BRAKE(PARKING)SYSTEM(2/2)

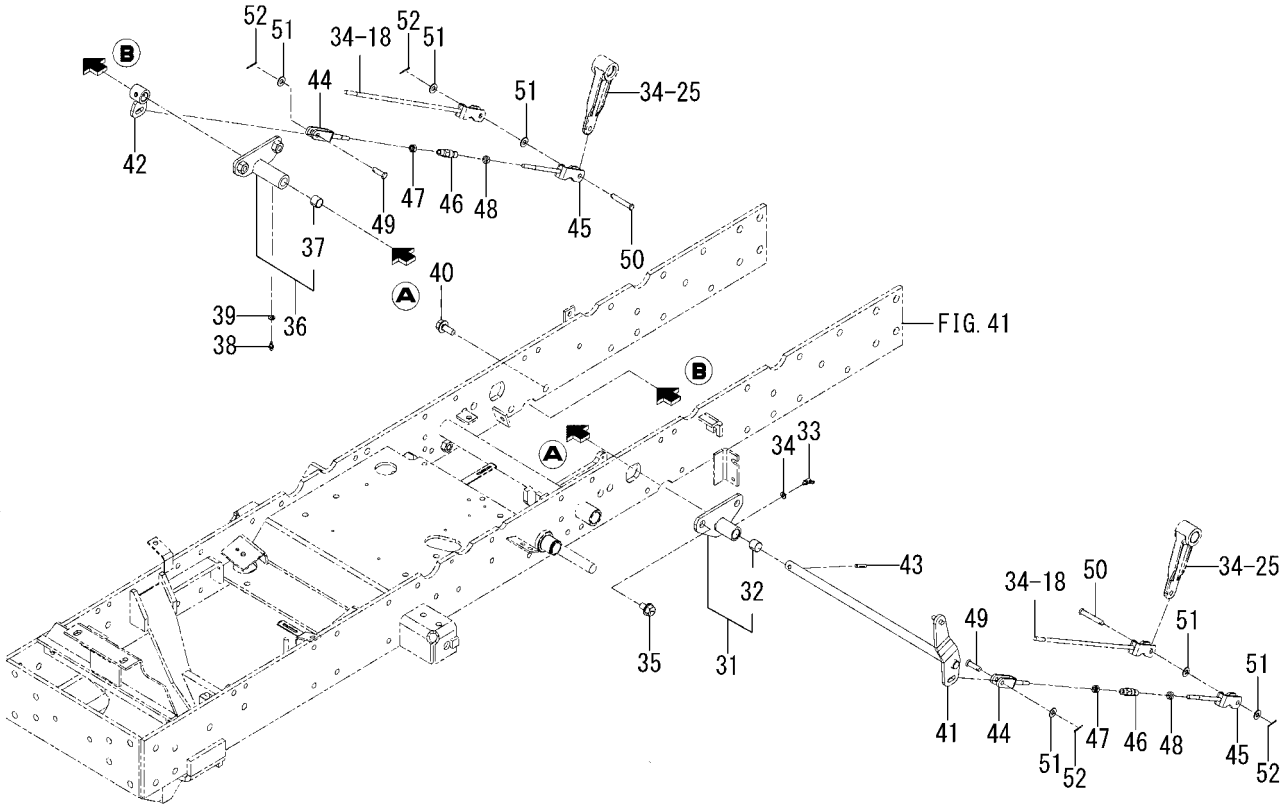

1739-314C-0100

KEY	PART CODE	DESCRIPTION	SPC	TYPE OF MODEL TXG237 F3		ITC	COL	GRP	REMARKS
31	1739-314-810-00	HUB/PARKING/LH ASSY	*	1					
32	3640-111-001-10	BUSH/16X18X15	*	1					
33	V762-150-000-00	NIPPLE,GREASE/B-M6F	*	1					
34	V401-160-006-00	WASHER,SP/M6	*	1					
35	V231-361-201-60	FLANGEBOLT/M12X16	*	2					
36	1739-314-840-00	PIPE/PARKING/RH ASSY	*	1					
37	3640-111-001-10	BUSH/16X18X15	*	1					
38	V760-150-000-00	NIPPLE,GREASE	*	1					
39	V401-160-006-00	WASHER,SP/M6	*	1					
40	V231-361-201-60	FLANGEBOLT/M12X16	*	2					
41	1739-314-830-00	ARM/PARKING/LH COMP	*	1					
42	1739-314-860-00	ARM/PARKING/RH COMP	*	1					
43	V530-160-602-80	PIN/GROOVE	*	1					
44	1739-314-910-00	ROD/104 COMP	*	2					
45	1739-314-870-00	ROD/160/LH COMP	*	2					
46	1444-122-002-00	TURNBUCKLE/M8	*	2					
47	V304-260-008-00	NUT/M8	*	2					
48	1560-132-007-30	NUT/LH/M08	*	2					
49	1608-554-002-00	PIN/08X26	*	2					
50	1110-241-001-10	PIN/08X52	*	2					
51	V411-260-008-00	WASHER,PL/M8	*	6					
52	V500-162-502-00	PIN,SPLIT/2.5X20	*	4					

FIG. 37 WHEEL(STEERING)SYSTEM

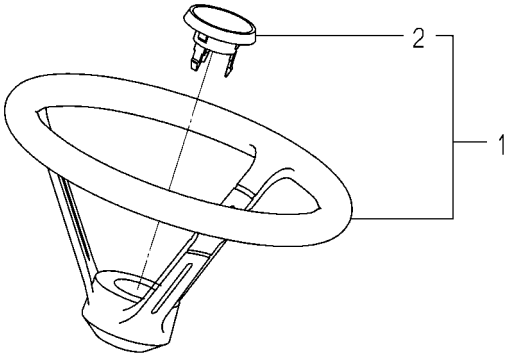

1739-401A-0100

KEY	PART CODE	DESCRIPTION	SPC	TYPE OF MODEL TXG237 F3		ITC	COL	GRP	REMARKS
1	1739-401-700-00	WHEEL/STEERING ASSY	*	1					
2	1773-401-202-10	CAP/WHEEL	*	1					

FIG. 38 CYLINDER(STEERING)SYSTEM

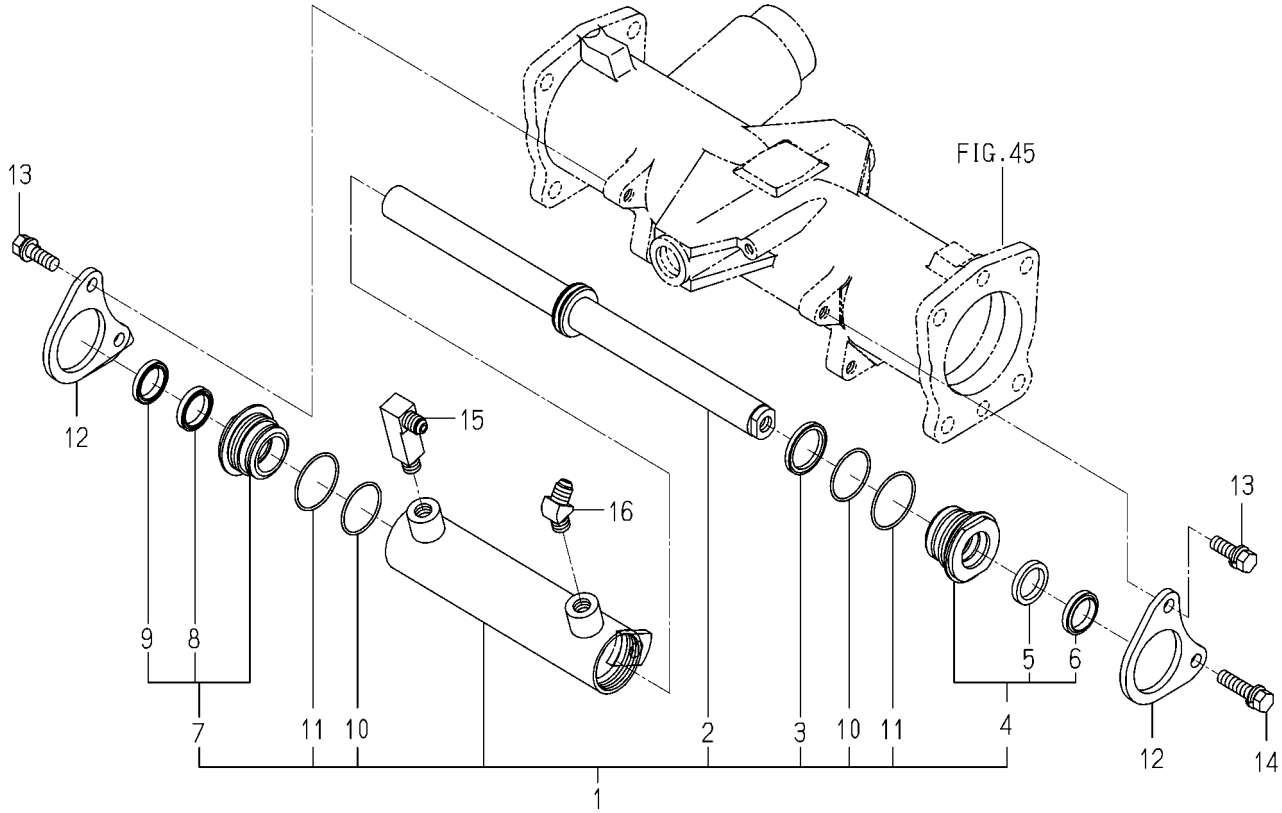

1739-403 -0100

KEY	PART CODE	DESCRIPTION	SPC	TYPE OF MODEL TXG237 F3		ITC	COL	GRP	REMARKS
1	K167-005-000-20	CYLINDER ASSY	*	1					
2	K167-005-200-10	ROD/PISTON	*	1					
3	K167-005-001-10	PACKING/PISTON	*	1					
4	K167-005-300-10	COVER/ROD/A SET	*	1					
5	K182-034-002-00	ROD PACKING	*	1					
6	K182-034-003-00	DUST SEAL	*	1					
7	K167-005-310-10	COVER/ROD/B SET	*	1					
8	K182-034-002-00	ROD PACKING	*	1					
9	K182-034-003-00	DUST SEAL	*	1					
10	V723-112-003-80	O-RING/1B,S38	*	2					
11	V723-102-004-20	O-RING/1A,S42	*	2					
12	1725-403-311-10	STAY/CYLINDER/17	*	2					
13	V211-561-003-00	BOLT,S/M10X30/7T	*	3					
14	V211-561-004-00	BOLT,S/M10X40/7T	*	1					
15	1725-403-002-00	ADAPTER/L/R1/4	*	1					
16	1725-403-003-00	ADAPTER/45DEG	*	1					

FIG. 39 STEERING(POWER)SYSTEM

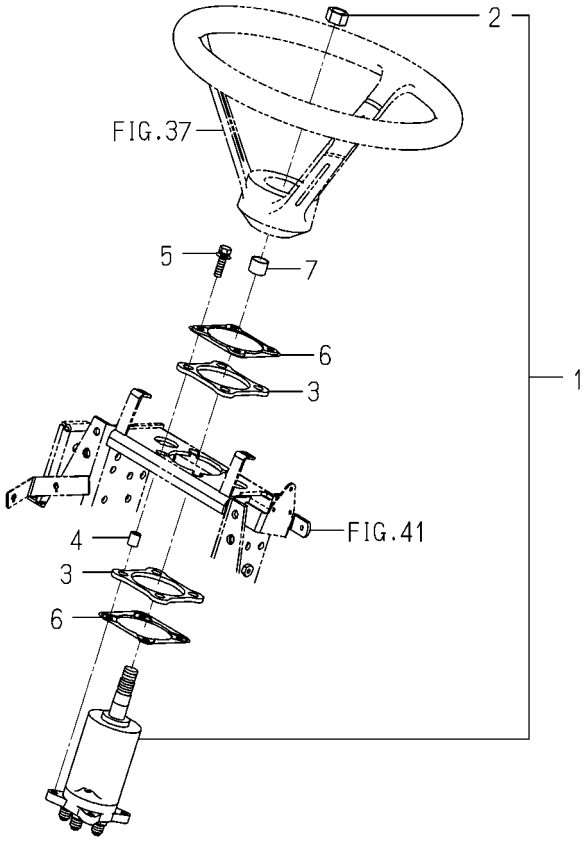

1739-407 -0100

KEY	PART CODE	DESCRIPTION	SPC	TYPE OF MODEL TXG237 F3		ITC	COL	GRP	REMARKS
1	1725-407-200-10	CONTROLLER/STEERING	*	1					
2	1725-407-201-00	NUT/5/8-18UNF	*	1					
3	1771-407-001-10	PAD/PS	*	2					
4	1739-407-074-00	COLLAR/08X12X15	*	4					
5	V211-660-803-50	BOLT,SP/M8X35/7T	*	4					
6	1728-407-076-10	PLATE/CONTROLLER	*	2					
7	1739-401-001-00	INSULATOR/15	*	1					

FIG. 40 PIPING(STEERING)SYSTEM

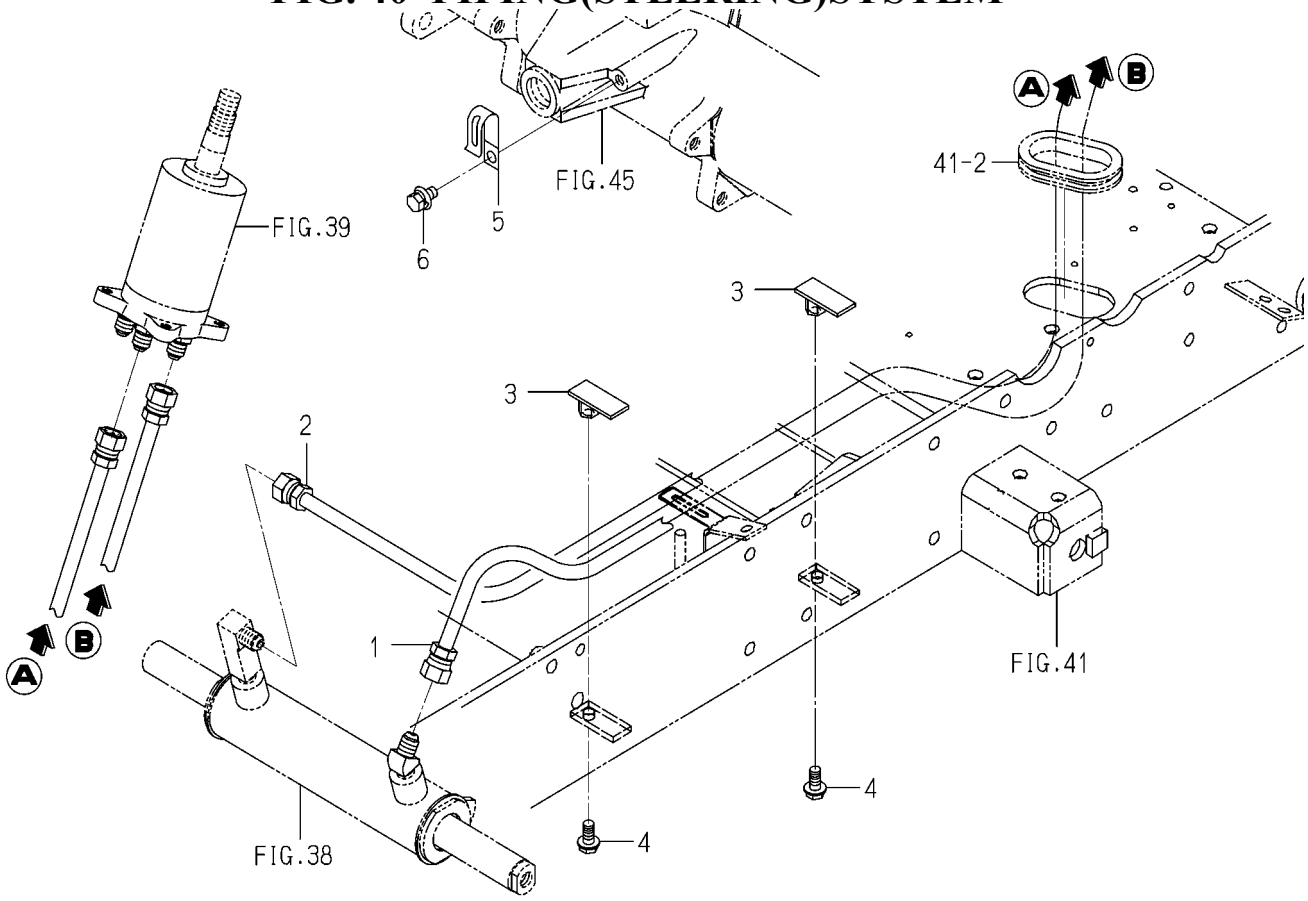

1739-408 -0100

KEY	PART CODE	DESCRIPTION	SPC	TYPE OF MODEL TXG237 F3		ITC	COL	GRP	REMARKS
1	1739-408-810-00	HOSE/1250/E4 ASSY	*	1					
2	1739-408-820-00	HOSE/1385/E4 ASSY	*	1					
3	1725-408-230-30	PLATE/CLAMP COMP	*	3					
4	V231-360-801-60	FLANGEBOLT/M8X16	*	3					
5	1425-621-004-00	HOLDER/JE/9-9	*	1					
6	V211-360-801-60	BOLT,SP/M8X16	*	1					

FIG. 41 FRAME(MAIN)SYSTEM

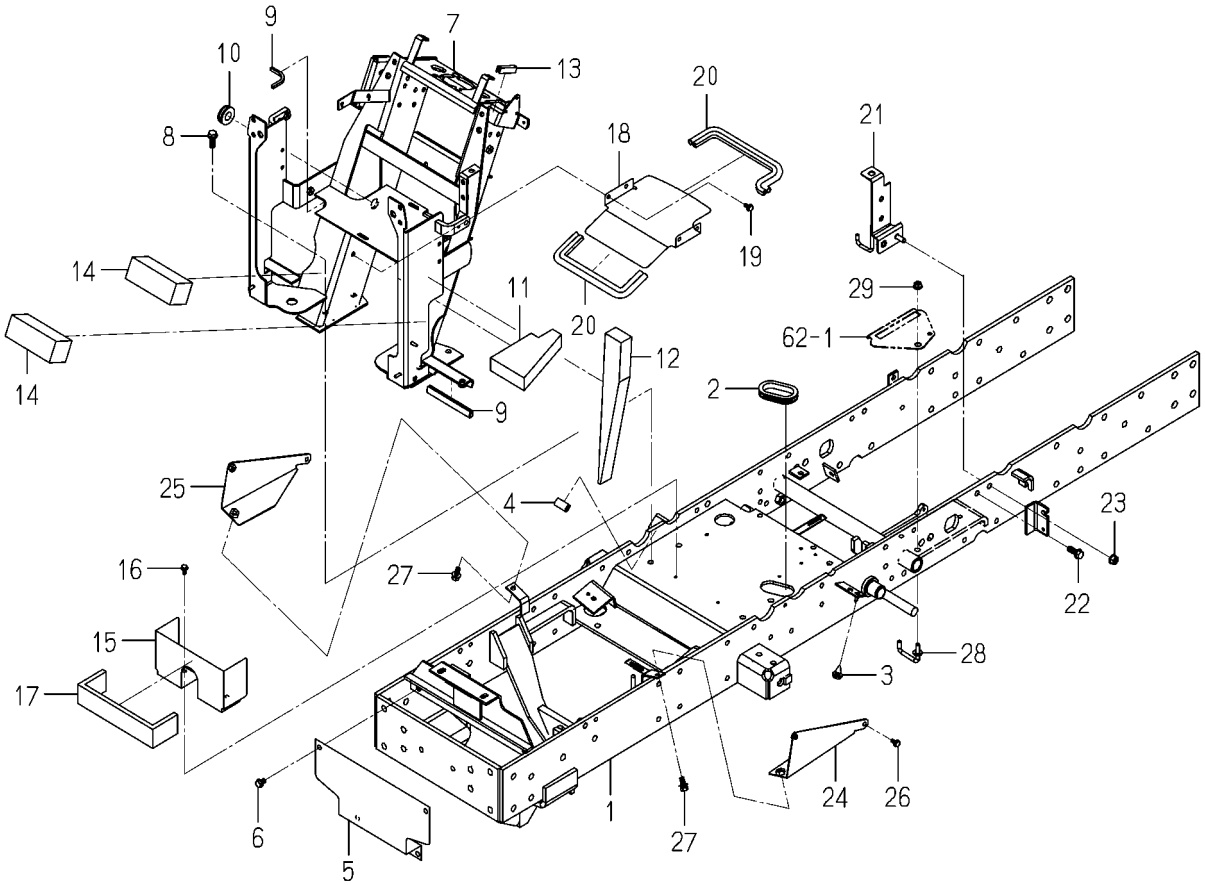

1739-410C-0100

KEY	PART CODE	DESCRIPTION	SPC	TYPE OF MODEL TXG237 F3		ITC	COL	GRP	REMARKS
1	1739-410-810-00	FRAME/MAIN/F3 COMP	*	1					
2	1725-410-078-00	GROMMET/53X59X06	*	1					
3	1432-616-002-00	RUBBER,CUSHION	*	1					
4	1560-314-001-10	TRIM/30	*	1					
5	1725-410-071-00	COVER/FRONT	*	1					
6	V231-360-801-20	FLANGEBOLT/M8X12	*	4					
7	1739-410-720-50	POST/STEERING COMP	*	1					
8	V231-361-002-00	FLANGEBOLT/M10X20	*	4					
9	P113-201-007-00	TRIM/70	*	3					
10	1729-741-007-00	GROMMET/17X21X05	*	1					
11	1725-410-073-00	INSULATOR/LOWER	*	2					
12	1739-410-072-10	INSULATOR	*	2					
13	3666-202-005-10	PAD/50	*	1					
14	1725-410-005-00	SEAL/45X50X125	*	2					
15	1725-410-002-00	COVER/UNDER	*	1					
16	V230-360-601-20	FLANGEBOLT/M6X12	*	2					
17	1725-410-003-00	SEAL/45X10X315	*	1					
18	1725-410-072-00	NET	*	1					
19	V230-360-601-20	FLANGEBOLT/M6X12	*	4					
20	1771-102-007-00	INSULATOR/305	*	2					
21	1739-410-830-00	COVER/FAN/LH COMP	*	1					
22	V231-361-002-50	FLANGEBOLT/M10X25	*	1					
23	1776-201-011-00	NUT/FLANGE/M10	*	1					
24	1739-410-740-20	PLATE/COVER/LH COMP	*	1					
25	1739-410-750-10	PLATE/COVER/RH COMP	*	1					
26	V230-360-601-20	FLANGEBOLT/M6X12	*	2					
27	V211-360-802-00	BOLT,SP/M8X20	*	2					
28	1725-410-870-10	GUIDE/HOSE COMP	*	1					
29	3817-401-001-00	NUT/M08	*	1					

FIG. 42 HITCH(FRONT)SYSTEM(G TYPE)

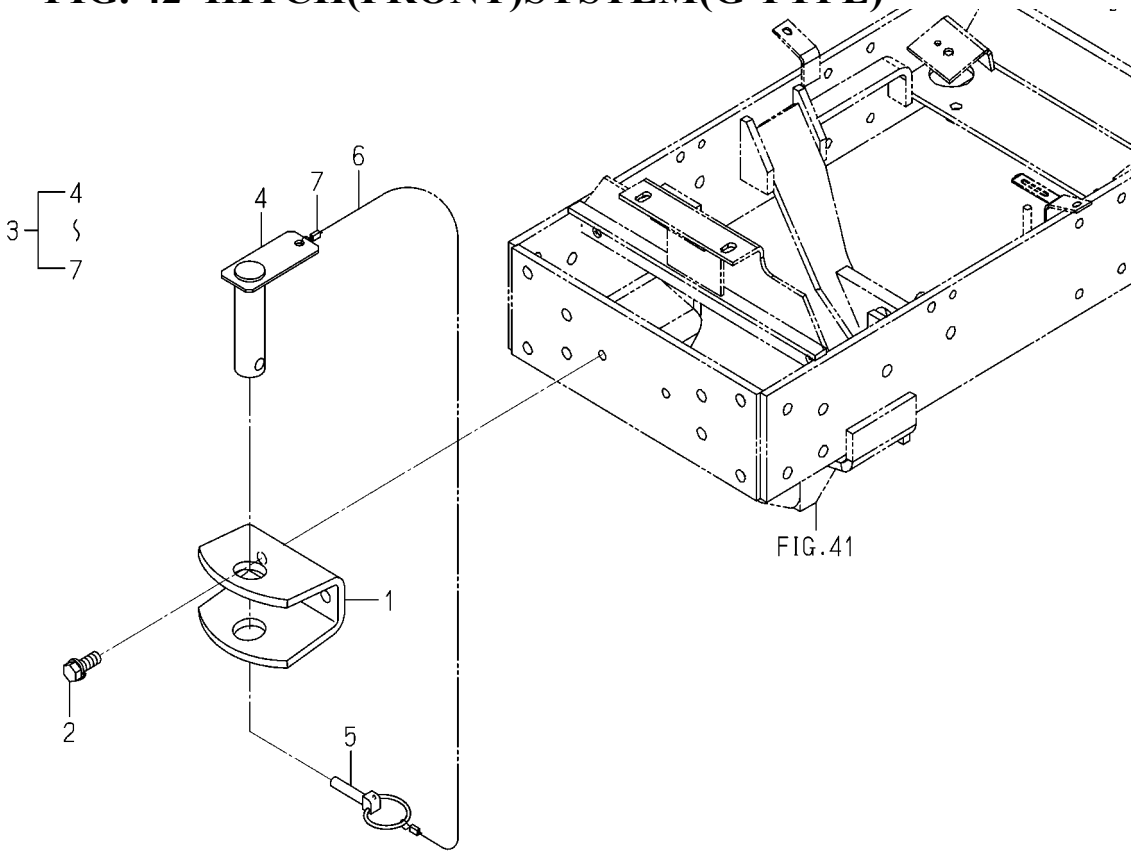

1776-411A-0100

KEY	PART CODE	DESCRIPTION	SPC	TYPE OF MODEL TXG237 F3		ITC	COL	GRP	REMARKS
1	1776-411-002-00	PLATE/HITCH	*	1					
2	1725-201-002-00	BOLT/S	*	2					
3	1776-411-200-10	PIN ASSY	*	1					
4	1776-411-210-10	PIN/30X116 COMP	*	1					
5	1673-525-002-30	LINKPIN	*	1					
6	1772-521-221-20	WIRE/02X300	*	1					
7	1614-702-552-00	RING	*	2					

FIG. 43 SHAFT(DRIVE/4WD)SYSTEM

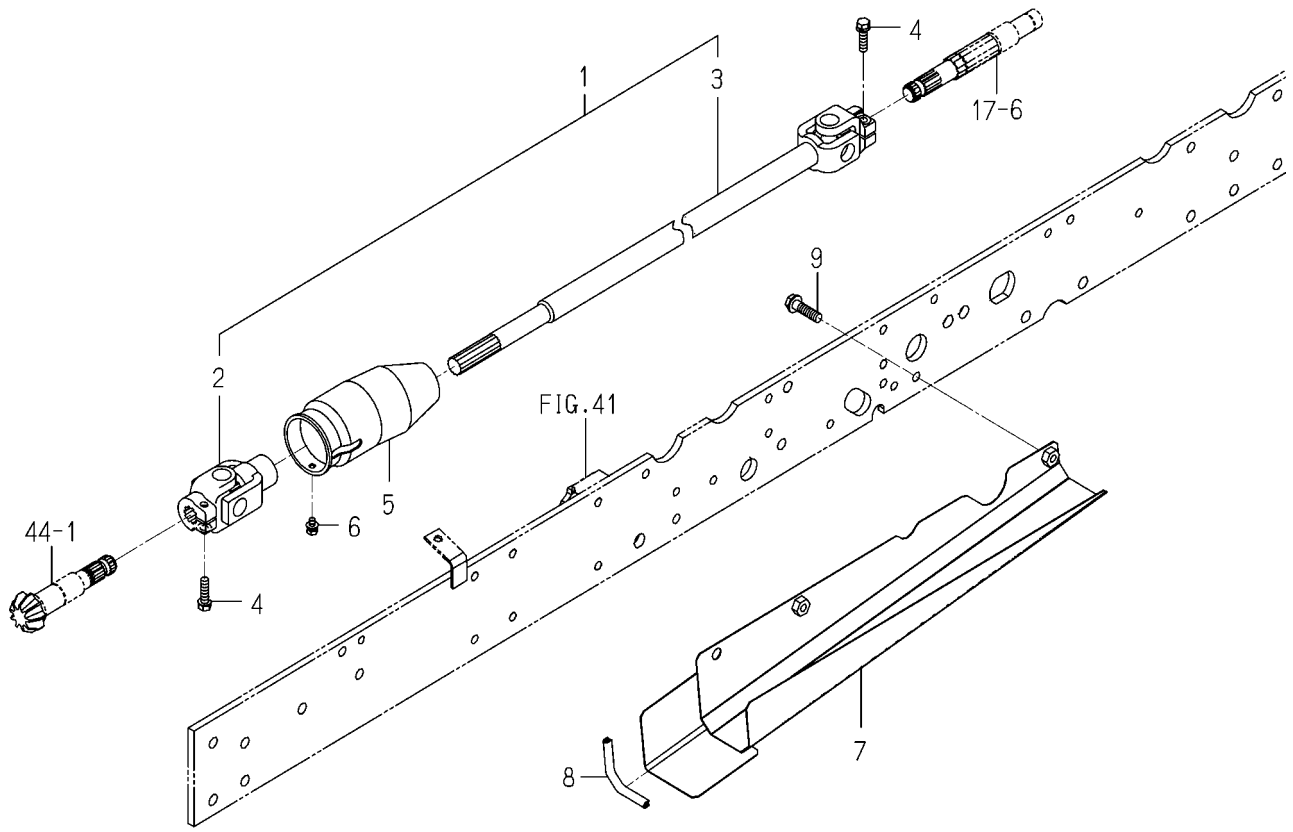

1739-431A-0100

KEY	PART CODE	DESCRIPTION	SPC	TYPE OF MODEL TXG237 F3		ITC	COL	GRP	REMARKS
1	1836-431-210-00	SHAFT/4WD/1032 ASSY	*	1					
2	1836-431-220-00	YOKE COMP	*	1					
3	1836-431-230-00	YOKE/SHAFT COMP	*	1					
4	V211-560-803-00	BOLT,S/M8X30/7T	*	2					
5	1725-431-001-10	COVER/JOINT	*	1					
6	V210-360-601-20	BOLT,SP/M6X12	*	1					
7	1739-431-810-00	COVER COMP	*	1					
8	3805-210-021-10	INSULATOR	*	1					
9	V231-361-003-00	FLANGEBOLT/M10X30	*	2					

FIG. 44 PINION(DRIVE)SYSTEM

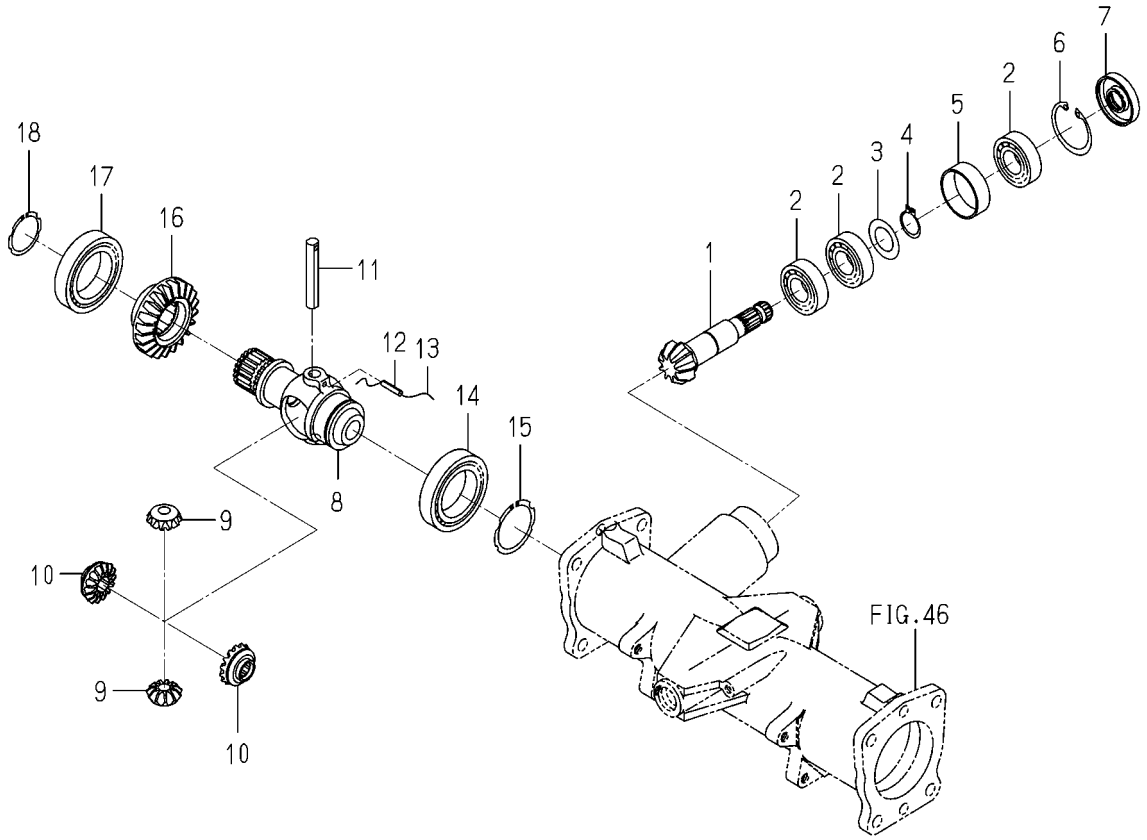

1739-432 -0100

KEY	PART CODE	DESCRIPTION	SPC	TYPE OF MODEL TXG237 F3		ITC	COL	GRP	REMARKS
1	1725-432-101-00	PINION/BEVEL/09	*	1					
2	1773-434-012-00	BEARING/BALL	*	3					
3	1593-303-051-20	SHIM/2	*	1					
4	V704-140-025-00	RING,SNAP/25 C	*	1					
5	1650-432-001-00	COLLAR/48X52X17	*	1					
6	V705-140-052-00	RING,SNAP/52 C	*	1					
7	1427-432-016-00	SEAL,OIL/21	*	1					
8	1725-432-711-00	CASE/DIFFERENTIAL/FR	*	1					
9	1725-432-712-10	PINION/BEVEL/11	*	2					
10	1725-432-713-00	GEAR/BEVEL/15	*	2					
11	1725-432-714-00	PIN/12X75	*	1					
12	1725-432-715-00	PIN/SPRING	*	1					
13		WIRE	*	1					
14	1773-432-012-00	BEARING/BALL	*	1					
15	V706-140-050-00	RING,SNAP/S50	*	1					
16	1725-432-108-00	GEAR/BEVEL/21	*	1					
17	1773-432-012-00	BEARING/BALL	*	1					
18	V706-140-040-00	RING,SNAP/S40	*	1					

FIG. 45 HOUSING(AXLE)SYSTEM

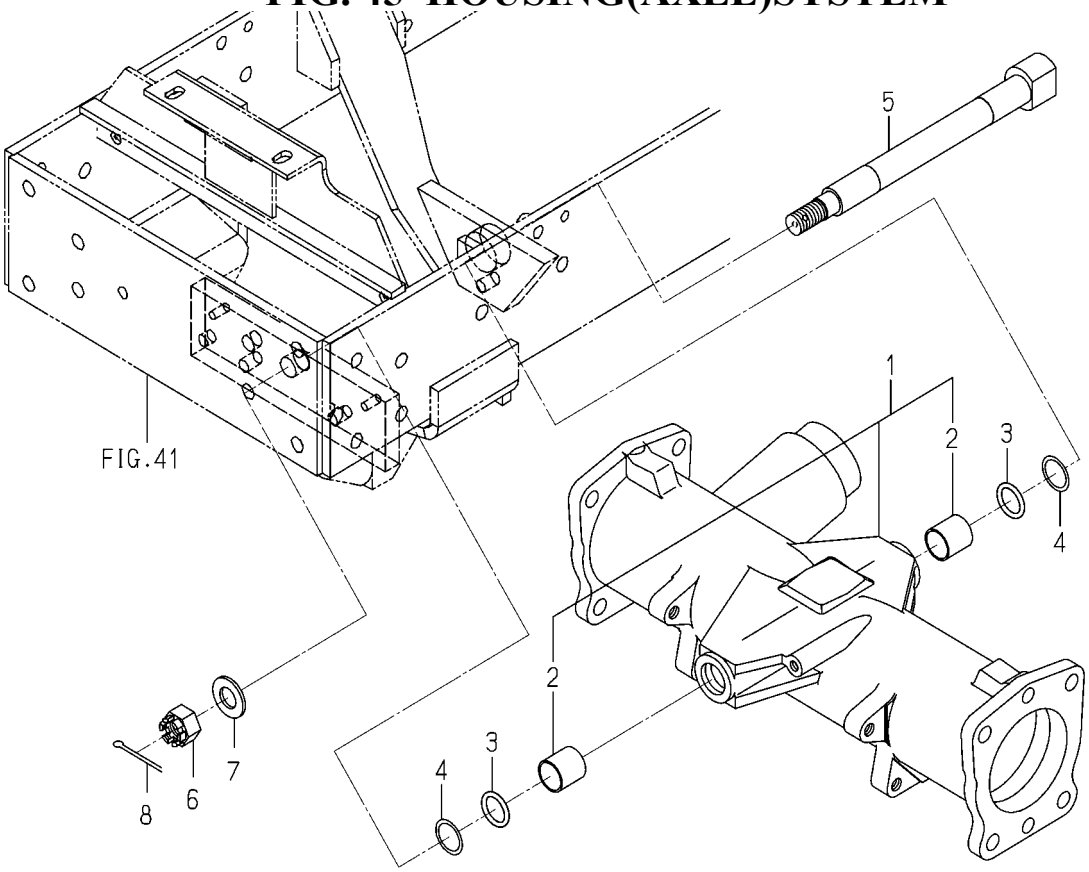

1739-433B-0100

KEY	PART CODE	DESCRIPTION	SPC	TYPE OF MODEL TXG237 F3		ITC	COL	GRP	REMARKS
1	1739-433-810-00	HOUSING/AXLE ASSY	*	1					
2	1725-433-202-10	BUSH/22X25X25	*	2					
3	V720-113-502-20	O-RING/1B,P22A	*	2					
4	V730-102-802-20	RING/BACK UP	*	2					
5	1725-433-001-10	PIN/PIVOT	*	1					
6	V327-261-216-00	NUT,CASTLE/M16 P=1.5	*	1					
7	V411-260-016-00	WASHER,PL/M16	*	1					
8	V500-164-003-00	PIN,SPLIT/4X30	*	1					

FIG. 46 CASE(GEAR/FRONT)SYSTEM

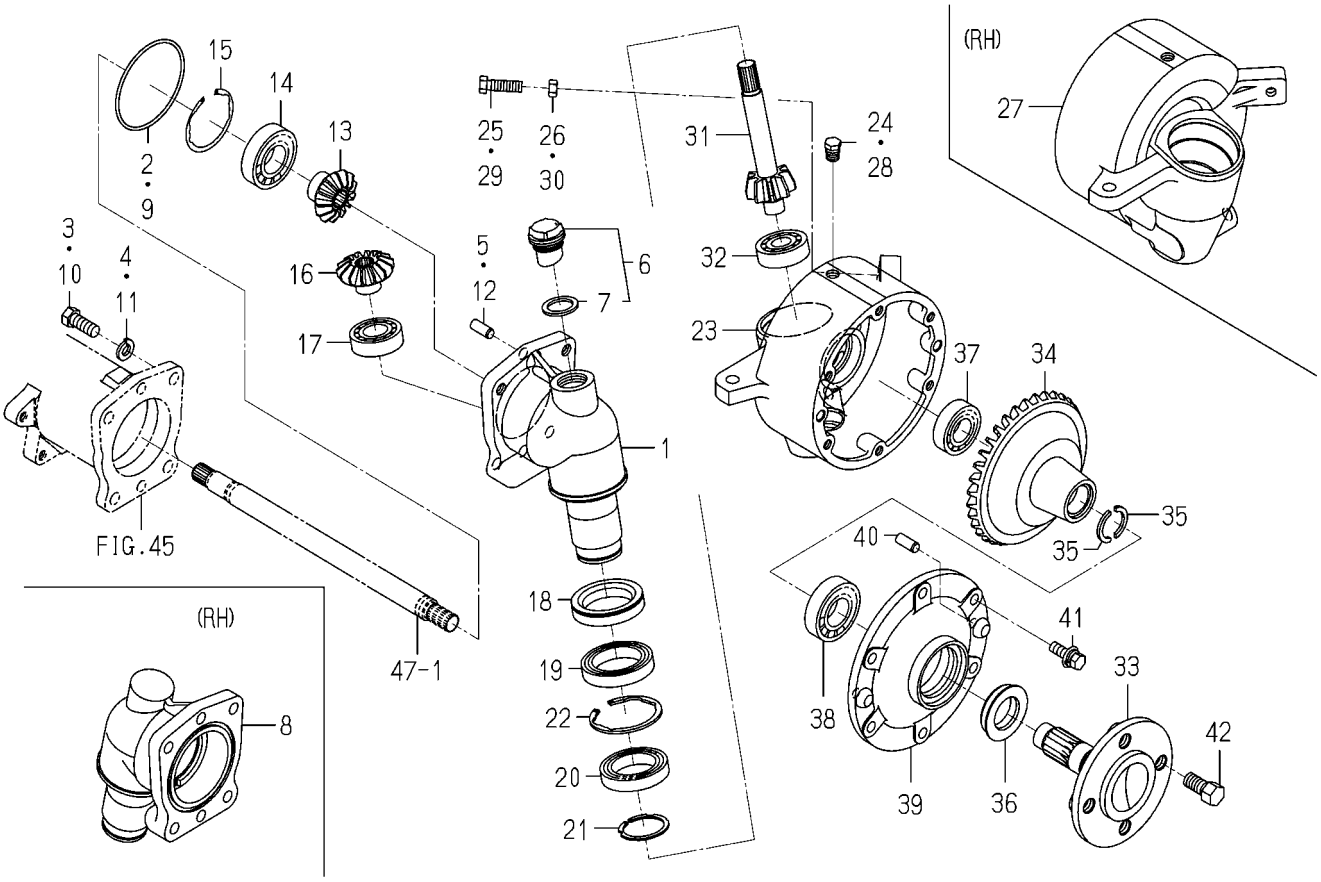

1739-434 -0100

KEY	PART CODE	DESCRIPTION	SPC	TYPE OF MODEL TXG237 F3		ITC	COL	GRP	REMARKS
1	1725-434-001-10	CASE/FINAL/LH	*	1					
2	V721-103-109-00	O-RING/1A,G90	*	1					
3	V201-361-203-00	BOLT/M12X30/7T	*	4					
4	V401-160-012-00	WASHER,SP/M12	*	4					
5	V523-101-002-40	PIN,ST,B/10X24	*	2					
6	1518-432-250-10	CAP,OIL	*	1					
7	1518-306-203-10	PACKING	*	1					
8	1725-434-002-10	CASE/FINAL/RH	*	1					
9	V721-103-109-00	O-RING/1A,G90	*	1					
10	V201-361-203-00	BOLT/M12X30/7T	*	4					
11	V401-160-012-00	WASHER,SP/M12	*	4					
12	V523-101-002-40	PIN,ST,B/10X24	*	2					
13	1725-434-003-10	GEAR/BEVEL/13	*	2					
14	1773-434-017-00	BEARING/BALL	*	2					
15	V707-140-062-00	RING,SNAP/R62	*	2					
16	1725-434-004-10	GEAR/BEVEL/14	*	2					
17	V600-110-620-50	BEARING,RB/6205	*	2					
18	1725-434-005-00	SEAL/OIL ASSY	*	2					
19	V600-110-691-00	BEARING,RB/6910	*	2					
20	1725-434-047-00	BEARING/BALL/6909	*	2					
21	V706-140-045-00	RING,SNAP/S45	*	2					
22	V707-140-068-00	RING,SNAP/R68	*	2					
23	1725-434-006-10	CASE/FINAL/LH	*	1					
24	V782-160-000-4B	PLUG/SCREW/SEAL	*	2					
25	V201-361-003-50	BOLT/M10X35/7T	*	1					
26	V304-460-010-00	NUT/M10/7T	*	1					
27	1725-434-007-10	CASE/FINAL/RH	*	1					
28	V782-160-000-4B	PLUG/SCREW/SEAL	*	2					
29	V201-361-003-50	BOLT/M10X35/7T	*	1					
30	V304-460-010-00	NUT/M10/7T	*	1					

FIG. 46 CASE(GEAR/FRONT)SYSTEM

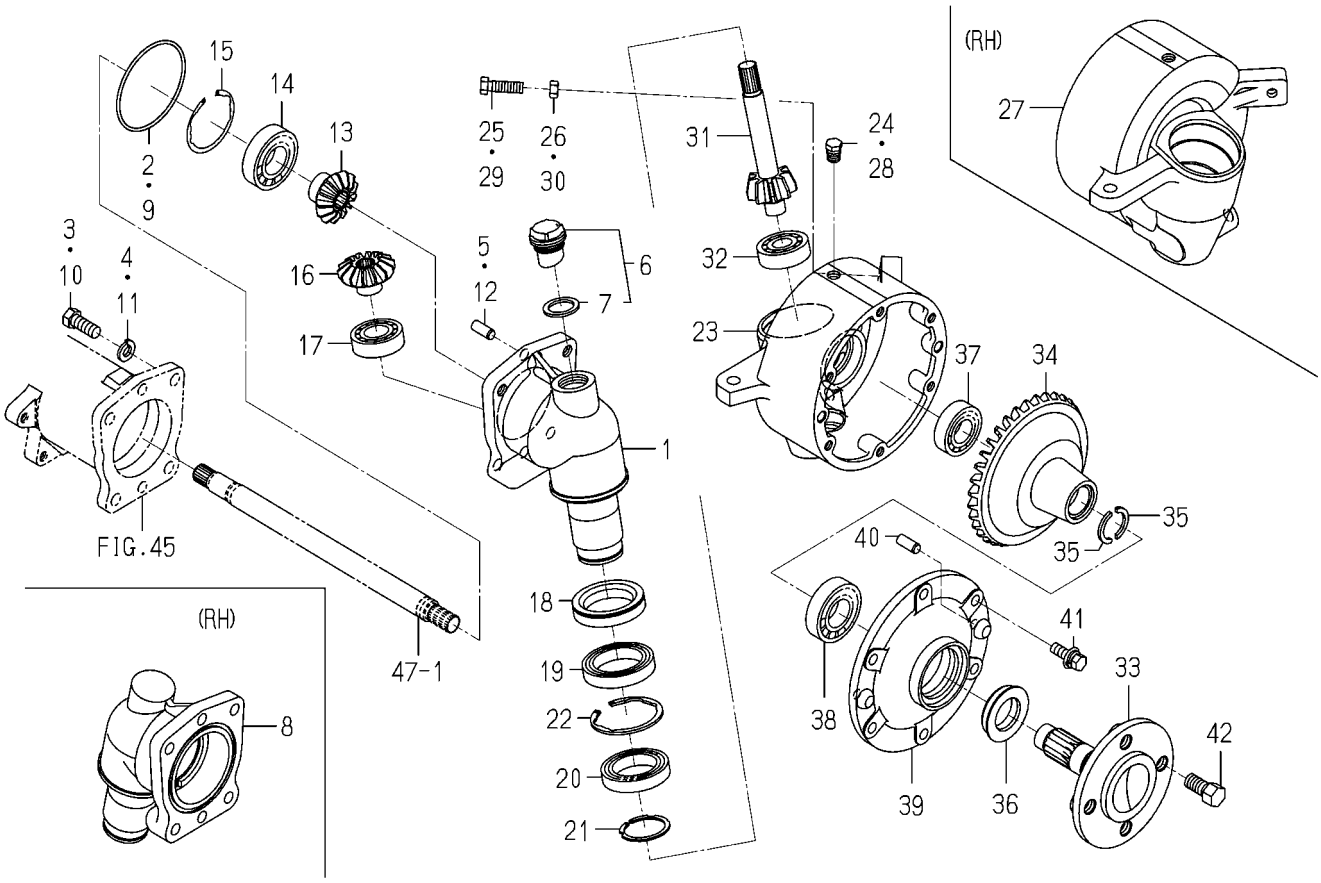

1739-434 -0100

KEY	PART CODE	DESCRIPTION	SPC	TYPE OF MODEL TXG237 F3		ITC	COL	GRP	REMARKS
31	1725-434-008-10	GEAR/BEVEL/09	*	2					
32	1729-202-011-00	BEARING/BALL	*	2					
33	1725-434-009-10	SHAFT/WHEEL	*	2					
34	1725-434-011-10	GEAR/BEVEL/35	*	2					
35	1725-434-012-00	WASHER/27X36X03	*	4					
36	1725-434-013-00	SEAL/OIL ASSY	*	2					
37	V600-110-620-50	BEARING,RB/6205	*	2					
38	1773-434-017-00	BEARING/BALL	*	2					
39	1725-434-054-10	COVER/WHEEL	*	2					
40	V523-101-002-40	PIN,ST,B/10X24	*	4					
41	V211-661-003-00	BOLT,SP/M10X30/7T	*	12					
42	1725-434-015-30	BOLT/M14X1.5	*	8					

FIG. 47 SHAFT(DRIVE/FINAL)SYSTEM

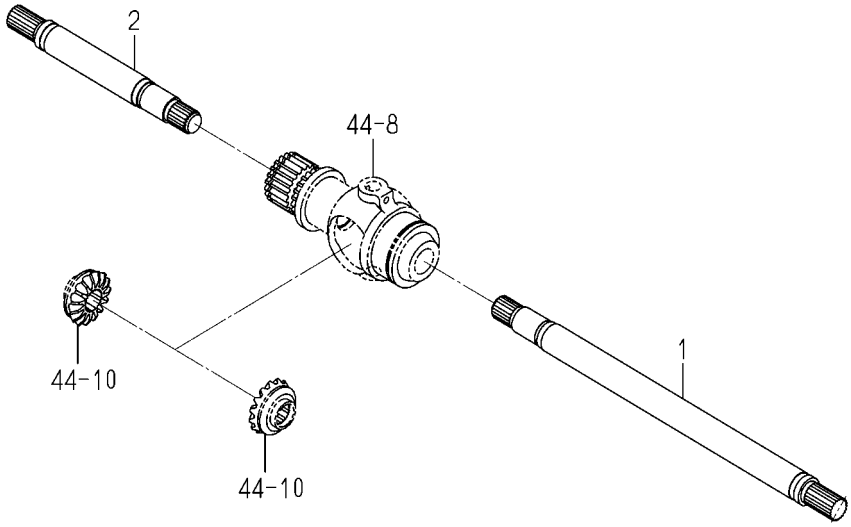

1725-435 -0100

KEY	PART CODE	DESCRIPTION	SPC	TYPE OF MODEL TXG237 F3		ITC	COL	GRP	REMARKS
1	1725-435-001-10	SHAFT/360	*	1					
2	1725-435-002-10	SHAFT/190	*	1					

FIG. 48 ROD(TIE)SYSTEM

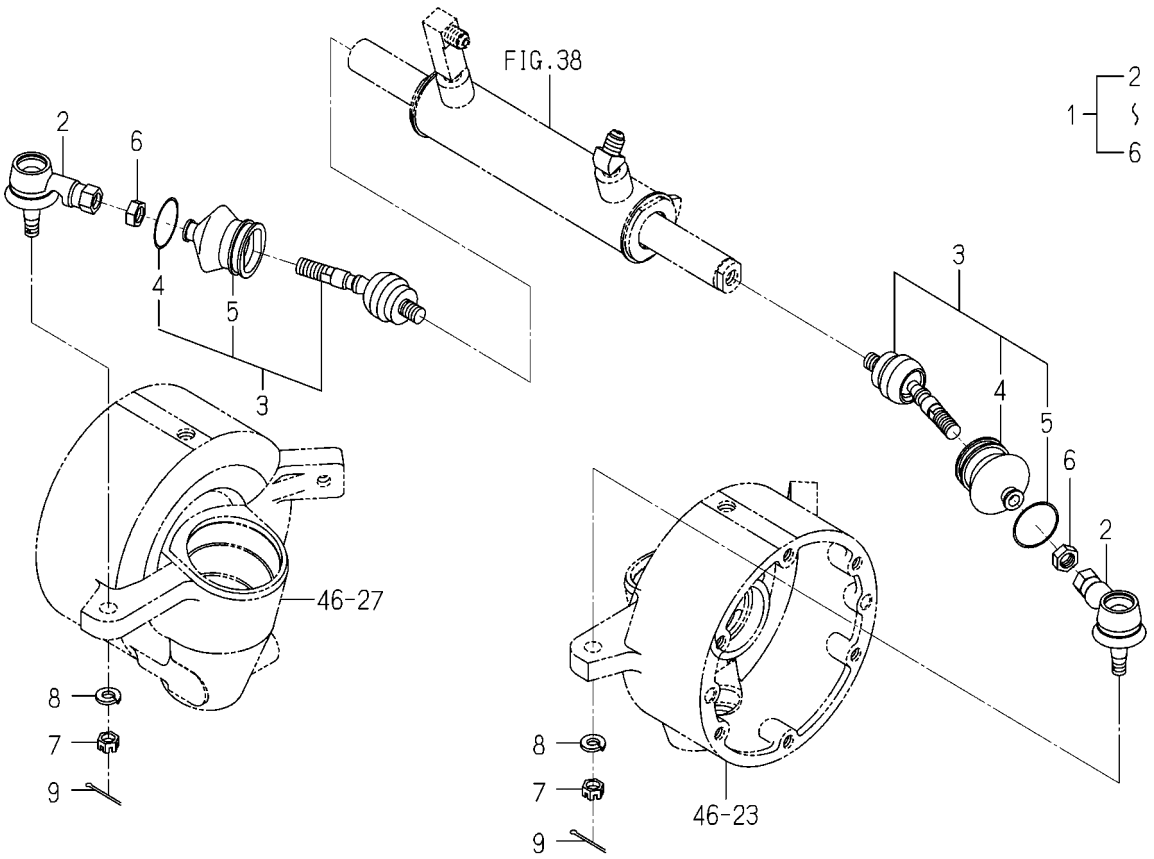

1725-436A-0100

KEY	PART CODE	DESCRIPTION	SPC	TYPE OF MODEL TXG237 F3		ITC	COL	GRP	REMARKS
1	1725-436-600-00	RODEND/137 ASSY	*	2					
2	1725-436-320-00	RODEND/B ASSY	*	2					
3	1725-436-610-00	RACKEND ASSY	*	2					
4	1725-436-611-00	COVER/DUST	*	2					
5	1725-436-612-00	RING/36	*	2					
6	1725-436-601-00	NUT/M12X1.25	*	2					
7	V327-262-110-00	NUT,CASTLE/M10 P1.25	*	2					
8	V401-160-010-00	WASHER,SP/M10	*	2					
9	V500-162-502-00	PIN,SPLIT/2.5X20	*	2					

FIG. 49 CASE(CYLINDER)SYSTEM

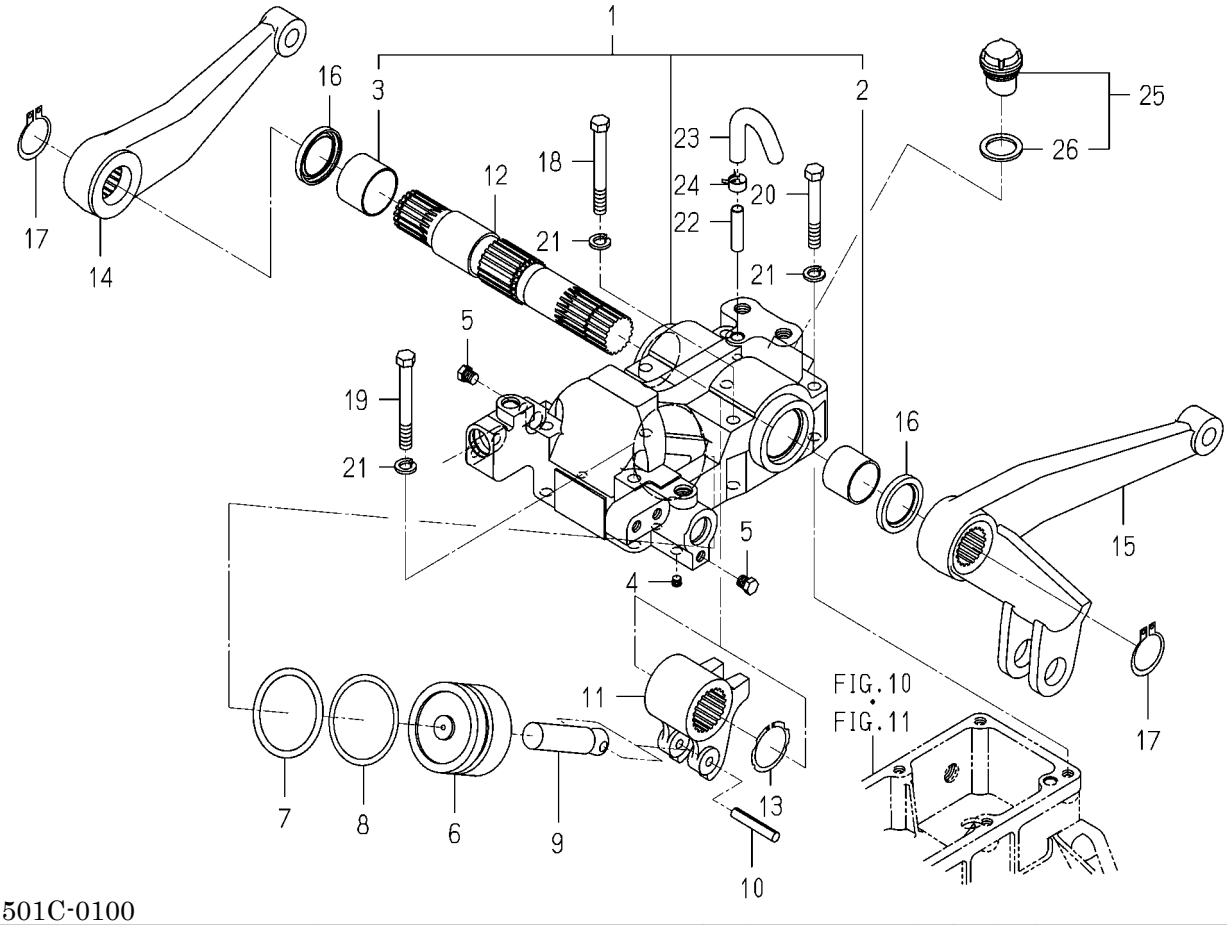

1739-501C-0100

KEY	PART CODE	DESCRIPTION	SPC	TYPE OF MODEL TXG237 F3		ITC	COL	GRP	REMARKS
1	1725-501-200-50	CASE/CYLINDER ASSY	*	1					
2	1427-501-003-00	BUSH/35X39X30	*	1					
3	1480-501-003-00	BUSH/40X43X30	*	1					
4	V780-140-000-10	PLUG/SCREW	*	1					
5	V782-160-000-2T	PLUG/SCREW/SEAL	*	2					
6	1725-501-001-00	PISTON	*	1					
7	V720-115-706-50	O-RING/1B,P65	*	1					
8	1415-505-006-00	RING,BACK UP	*	1					
9	1725-501-002-00	ROD	*	1					
10	V580-140-805-00	PIN,SPRING/8X50 W	*	1					
11	1725-501-003-00	CRANK/LIFT	*	1					
12	1725-501-071-00	BAR	*	1					
13	V706-140-040-00	RING,SNAP/S40	*	1					
14	1725-501-005-00	ARM/LIFT/LH	*	1					
15	1725-501-107-00	ARM/LIFT/LH	*	1					
16	V742-135-500-60	SEAL,OIL/VC35506	*	2					
17	V704-140-035-00	RING,SNAP/35 C	*	2					
18	V201-361-008-50	BOLT/M10X85/7T	*	3					
19	V201-361-008-5B	BOLT/M10X85/7T,SEAL	*	1					
20	V201-361-007-00	BOLT/M10X70/7T	*	2					
21	V401-160-010-00	WASHER,SP/M10	*	6					
22	1544-120-008-10	PIPE,BREATHER	*	1					
23	1716-501-006-10	HOSE/BREATHER	*	1					
24	J062-138-148-00	CLIP/HOSE/13.8-14.8	*	1					
25	1518-432-250-10	CAP,OIL	*	1					
26	1518-306-203-10	PACKING	*	1					

FIG. 50 CONTROL SYSTEM

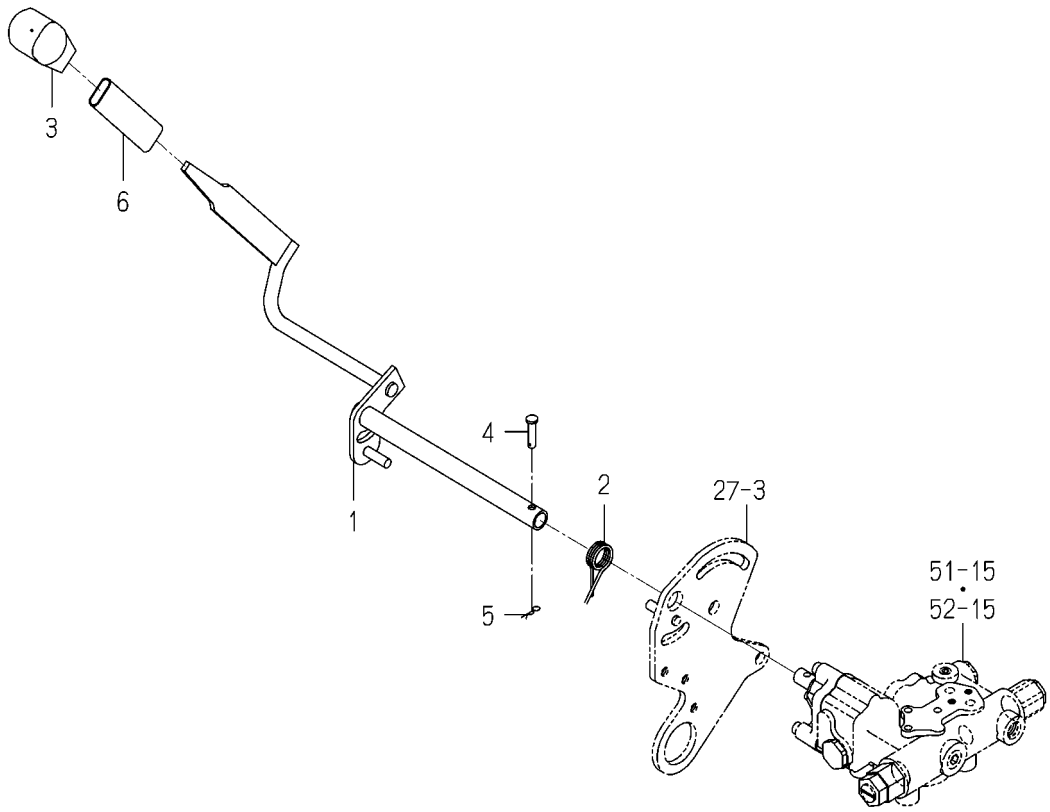

1739-505D-0100

KEY	PART CODE	DESCRIPTION	SPC	TYPE OF MODEL TXG237 F3		ITC	COL	GRP	REMARKS
1	1725-505-330-20	LEVER/POS/17 COMP	*	1					
2	1725-505-021-00	SPRING/HT021	*	1					
3	1614-262-003-00	GRIP/SUB	*	1					
4	1359-403-003-00	PIN/6X26	*	1					
5	V560-160-006-00	PIN/SNAP	*	1					
6	1758-505-002-00	INSULATOR/LEVER/SUB	*	1					

FIG. 51 PIPING(MAIN)SYSTEM(EXCEPT G TYPE)

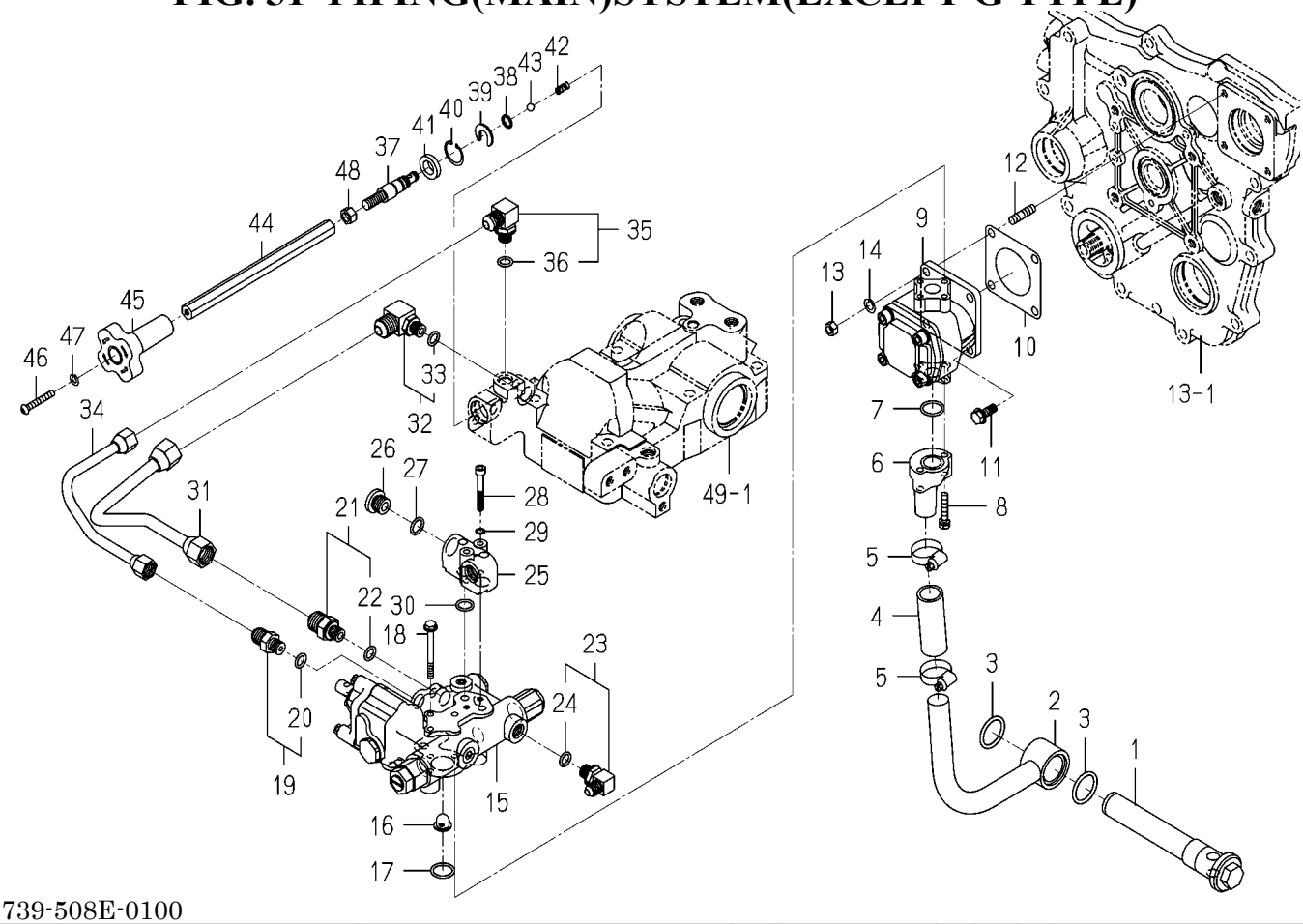

1739-508E-0100

KEY	PART CODE	DESCRIPTION	SPC	TYPE OF MODEL TXG237 F3		ITC	COL	GRP	REMARKS
1	1738-508-210-10	FILTER/SUCTION COMP	*	1					
2	1725-508-760-10	PIPE/SUCTION/REAR	*	1					
3	V720-113-502-80	O-RING/1B,P28	*	2					
4	1739-508-081-00	HOSE/21X29X70/E4	*	1					
5	J061-120-032-00	CLAMP/WORM/20-32	*	2					
6	1725-508-012-00	PIPE/SUC/FRONT	*	1					
7	V720-112-402-00	O-RING/1B,P20	*	1					
8	V230-360-603-50	FLANGEBOLT/M6X35	*	2					
9	1725-508-320-10	PUMP/GEAR/R10 ASSY	*	1					
10	1404-503-006-00	PACKING,OIL PUMP	*	1					
11	V231-360-802-00	FLANGEBOLT/M8X20	*	2					
12	V251-260-802-00	STUD/M8X20	*	2					
13	V304-260-008-00	NUT/M8	*	2					
14	V401-160-008-00	WASHER,SP/M8	*	2					
15	K211-101-000-10	VALVE/CONTROL/101	*	1					FIG 099
16	1650-508-002-00	FILTER/LINE/12X18X15	*	1					
17	V720-112-402-00	O-RING/1B,P20	*	1					
18	V230-360-606-00	FLANGEBOLT/M6X60	*	3					
19	1650-509-280-00	ADAPTER/PF1/4 ASSY	*	1					
20	V720-112-401-10	O-RING/1B,P11	*	1					
21	1725-508-330-00	ADAPTER/G1/4 ASSY	*	1					
22	V720-112-401-10	O-RING/1B,P11	*	1					
23	1725-508-310-00	ADAPTER/L/G1/4 ASSY	*	1					
24	V720-112-401-10	O-RING/1B,P11	*	1					
25	1725-508-016-00	FLANGE/COVER	*	1					
26	K510-001-029-00	PLUG(G3/8)	*	2					
27	V720-112-401-40	O-RING/1B,P14	*	2					
28	K200-184-002-00	SCREW/SOCKET	*	2					
29	1725-508-019-00	WASHER/07X10X01	*	2					
30	V720-112-401-20	O-RING/1B,P12	*	2					

FIG. 51 PIPING(MAIN)SYSTEM(EXCEPT G TYPE)

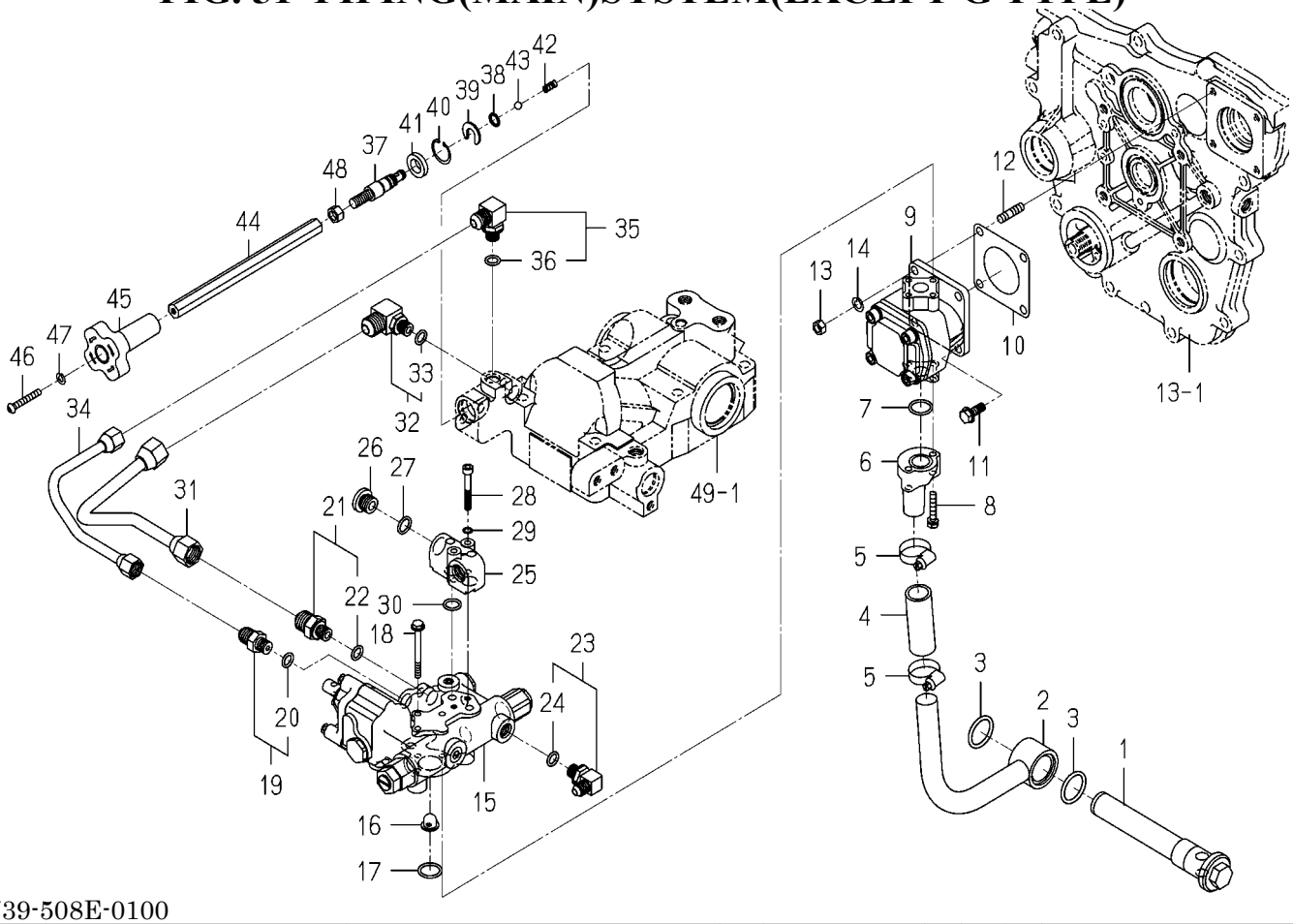

1739-508E-0100

KEY	PART CODE	DESCRIPTION	SPC	TYPE OF MODEL TXG237 F3		ITC	COL	GRP	REMARKS
31	1725-508-230-00	PIPE/RETURN COMP	*	1					
32	1690-509-340-10	ADAPTER/L/G1/4 ASSY	*	1					
33	V720-112-401-80	O-RING/1B,P18	*	1					
34	1725-508-240-00	PIPE/MAIN COMP	*	1					
35	1656-509-310-10	ADAPTER/L/PF1/4 ASSY	*	1					
36	V720-112-401-10	O-RING/1B,P11	*	1					
37	1725-508-251-00	SHAFT/SLOWRETURN	*	1					
38	V720-111-901-00	O-RING/1B,P10	*	1					
39	1725-508-252-10	PLATE/STOPPER	*	1					
40	V705-140-025-00	RING,SNAP/25 C	*	1					
41	1725-508-253-00	SEAL/DUST	*	1					
42	1725-508-254-00	SPRING/HC015	*	1					
43	V682-200-000-90	BALL,STEEL	*	1					
44	1599-507-003-10	SHAFT/SLOWRETURN	*	1					
45	1560-507-007-00	KNOB	*	1					
46	V111-166-004-00	SCREW/M6X40	*	1					
47	V401-160-006-00	WASHER,SP/M6	*	1					
48	V304-260-010-00	NUT/M10	*	1					

FIG. 52 PIPING(MAIN)SYSTEM(G TYPE)

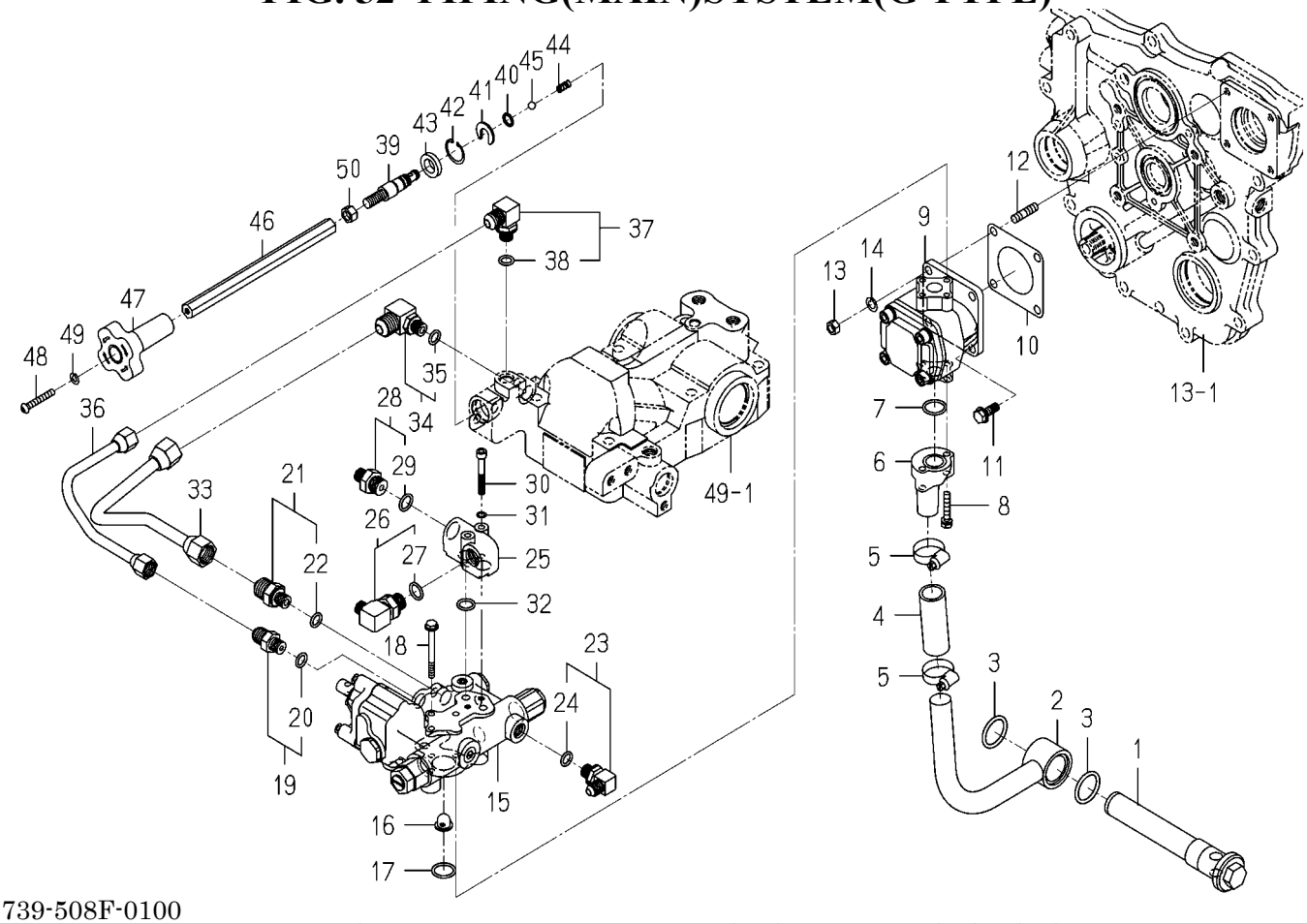

1739-508F-0100

KEY	PART CODE	DESCRIPTION	SPC	TYPE OF MODEL TXG237 F3		ITC	COL	GRP	REMARKS
1	1738-508-210-10	FILTER/SUCTION COMP	*	1					
2	1725-508-760-10	PIPE/SUCTION/REAR	*	1					
3	V720-113-502-80	O-RING/1B,P28	*	2					
4	1739-508-081-00	HOSE/21X29X70/E4	*	1					
5	J061-120-032-00	CLAMP/WORM/20-32	*	2					
6	1725-508-012-00	PIPE/SUC/FRONT	*	1					
7	V720-112-402-00	O-RING/1B,P20	*	1					
8	V230-360-603-50	FLANGEBOLT/M6X35	*	2					
9	1725-508-320-10	PUMP/GEAR/R10 ASSY	*	1					
10	1404-503-006-00	PACKING,OIL PUMP	*	1					
11	V231-360-802-00	FLANGEBOLT/M8X20	*	2					
12	V251-260-802-00	STUD/M8X20	*	2					
13	V304-260-008-00	NUT/M8	*	2					
14	V401-160-008-00	WASHER,SP/M8	*	2					
15	K211-101-000-10	VALVE/CONTROL/101	*	1					FIG 099
16	1650-508-002-00	FILTER/LINE/12X18X15	*	1					
17	V720-112-402-00	O-RING/1B,P20	*	1					
18	V230-360-606-00	FLANGEBOLT/M6X60	*	3					
19	1650-509-280-00	ADAPTER/PF1/4 ASSY	*	1					
20	V720-112-401-10	O-RING/1B,P11	*	1					
21	1725-508-330-00	ADAPTER/G1/4 ASSY	*	1					
22	V720-112-401-10	O-RING/1B,P11	*	1					
23	1725-508-310-00	ADAPTER/L/G1/4 ASSY	*	1					
24	V720-112-401-10	O-RING/1B,P11	*	1					
25	1725-508-015-00	FLANGE/JOY	*	1					
26	P103-521-006-10	ELBOW/90DEG ASSY	*	1					
27	V720-112-401-40	O-RING/1B,P14	*	1					
28	1656-509-290-00	ADAPTER/PF3/8 ASSY	*	1					
29	V720-112-401-40	O-RING/1B,P14	*	1					
30	K200-184-002-00	SCREW/SOCKET	*	2					

FIG. 52 PIPING(MAIN)SYSTEM(G TYPE)

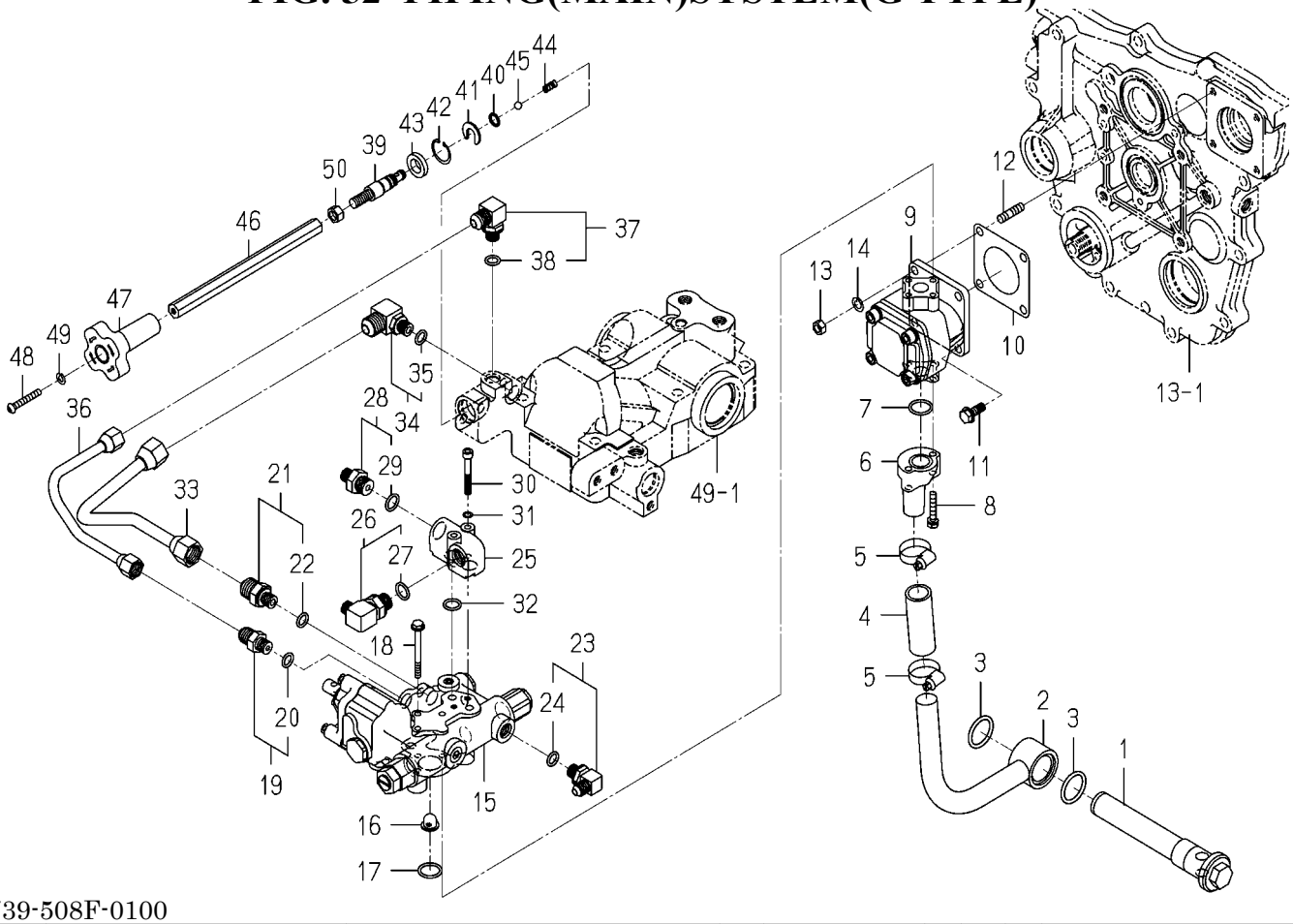

1739-508F-0100

KEY	PART CODE	DESCRIPTION	SPC	TYPE OF MODEL TXG237 F3		ITC	COL	GRP	REMARKS
31	1725-508-019-00	WASHER/07X10X01	*	2					
32	V720-112-401-20	O-RING/1B,P12	*	2					
33	1725-508-230-00	PIPE/RETURN COMP	*	1					
34	1690-509-340-10	ADAPTER/L/G1/4 ASSY	*	1					
35	V720-112-401-80	O-RING/1B,P18	*	1					
36	1725-508-240-00	PIPE/MAIN COMP	*	1					
37	1656-509-310-10	ADAPTER/L/PF1/4 ASSY	*	1					
38	V720-112-401-10	O-RING/1B,P11	*	1					
39	1725-508-251-00	SHAFT/SLOWRETURN	*	1					
40	V720-111-901-00	O-RING/1B,P10	*	1					
41	1725-508-252-10	PLATE/STOPPER	*	1					
42	V705-140-025-00	RING,SNAP/25 C	*	1					
43	1725-508-253-00	SEAL/DUST	*	1					
44	1725-508-254-00	SPRING/HC015	*	1					
45	V682-200-000-90	BALL,STEEL	*	1					
46	1599-507-003-10	SHAFT/SLOWRETURN	*	1					
47	1560-507-007-00	KNOB	*	1					
48	V111-166-004-00	SCREW/M6X40	*	1					
49	V401-160-006-00	WASHER,SP/M6	*	1					
50	V304-260-010-00	NUT/M10	*	1					

FIG. 53 PIPING(SUB)SYSTEM

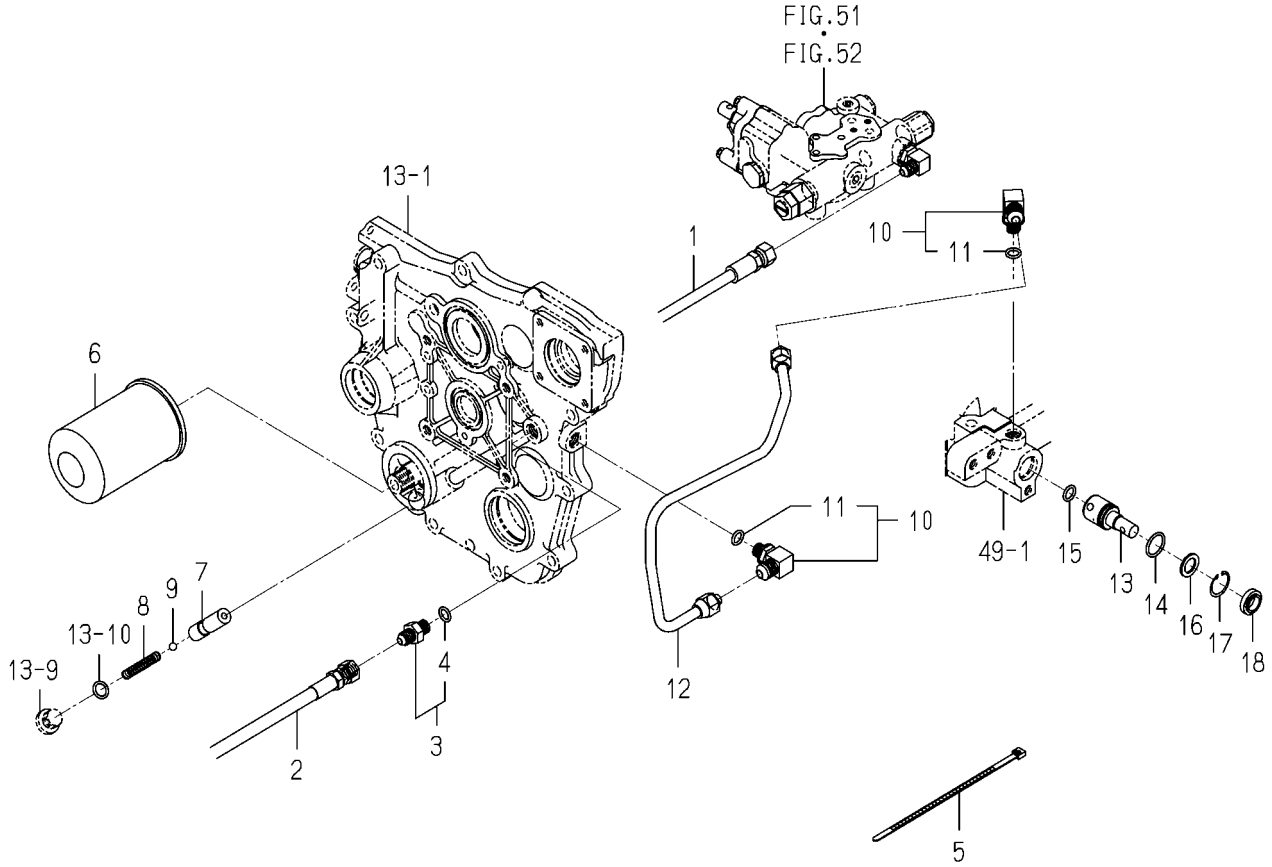

1739-509 -0100

KEY	PART CODE	DESCRIPTION	SPC	TYPE OF MODEL TXG237 F3		ITC	COL	GRP	REMARKS
1	1739-408-810-00	HOSE/1250/E4 ASSY	*	1					
2	1739-509-820-10	HOSE/1155/E4 ASSY	*	1		1			
3	1725-509-260-00	ADAPTER/G1/4 ASSY	*	1					
4	V720-112-401-10	O-RING/1B,P11	*	1					
5	1376-402-003-00	BAND,WIRE/140	*	1					
6	1725-509-220-00	FILTER/CHARGE ASSY	*	1					
7	1725-509-231-10	BODY	*	1					
8	1725-509-232-00	SPRING/HC062	*	1					
9	V682-200-001-20	BALL,STEEL	*	1					
10	1656-509-310-10	ADAPTER/L/PF1/4 ASSY	*	2					
11	V720-112-401-10	O-RING/1B,P11	*	2					
12	1739-509-830-00	PIPE/PTO COMP	*	1					
13	1739-510-091-00	VALVE/PTO	*	1					
14	V720-112-402-10	O-RING/1B,P21	*	1					
15	V720-112-401-20	O-RING/1B,P12	*	1					
16	1725-509-252-00	PLATE/STOPPER	*	1					
17	V705-140-025-00	RING,SNAP/25 C	*	1					
18	1725-508-253-00	SEAL/DUST	*	1					

FIG. 54 CONTROL SYSTEM

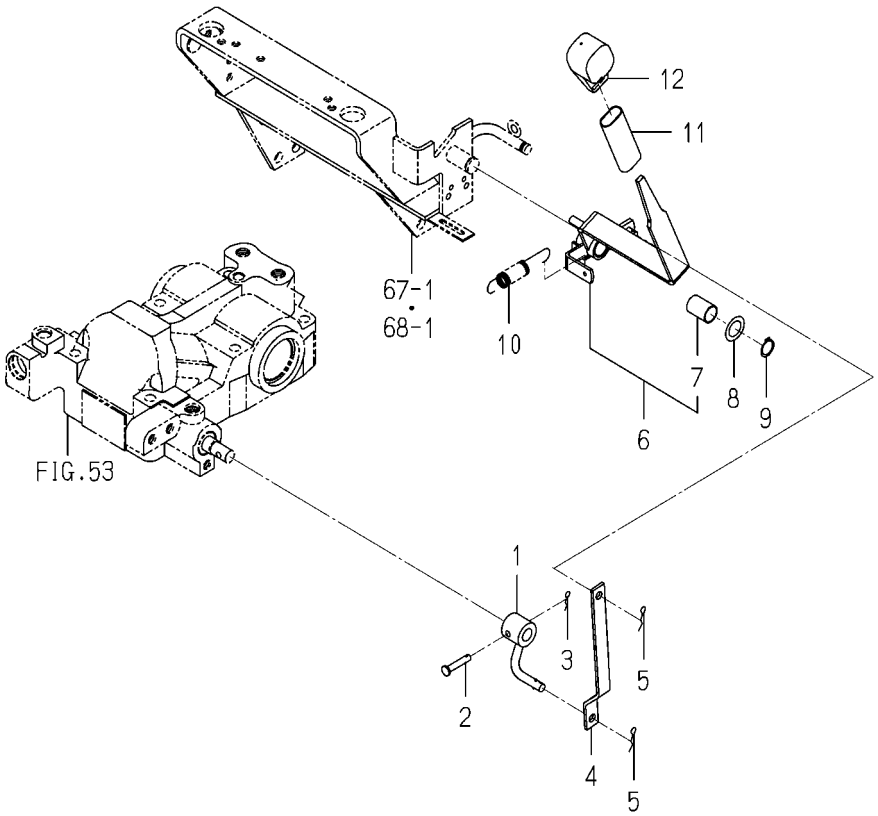

1739-510 -0100

KEY	PART CODE	DESCRIPTION	SPC	TYPE OF MODEL TXG237 F3		ITC	COL	GRP	REMARKS
1	1725-510-210-00	ARM/LINK/17 COMP	*	1					
2	2144-519-007-00	PIN/06X31	*	1					
3	V560-160-006-00	PIN/SNAP	*	1					
4	1725-505-072-00	PLATE/Z/16X180	*	1					
5	V560-160-008-00	PIN/SNAP	*	2					
6	1725-510-220-10	LEVER/PTO/17 ASSY	*	1					
7	3662-223-005-00	BUSH(16X18X25)	*	1					
8	3621-211-003-00	WASHER/17X26X02	*	1					
9	V704-140-016-00	RING,SNAP/16 C	*	1					
10	1593-332-053-00	SPRING/HE086	*	1					
11	1614-262-006-00	INSULATOR/LEVER/SUB	*	1					
12	1688-265-001-00	GRIP/MID/PTO	*	1					

FIG. 55 VALVE SYSTEM

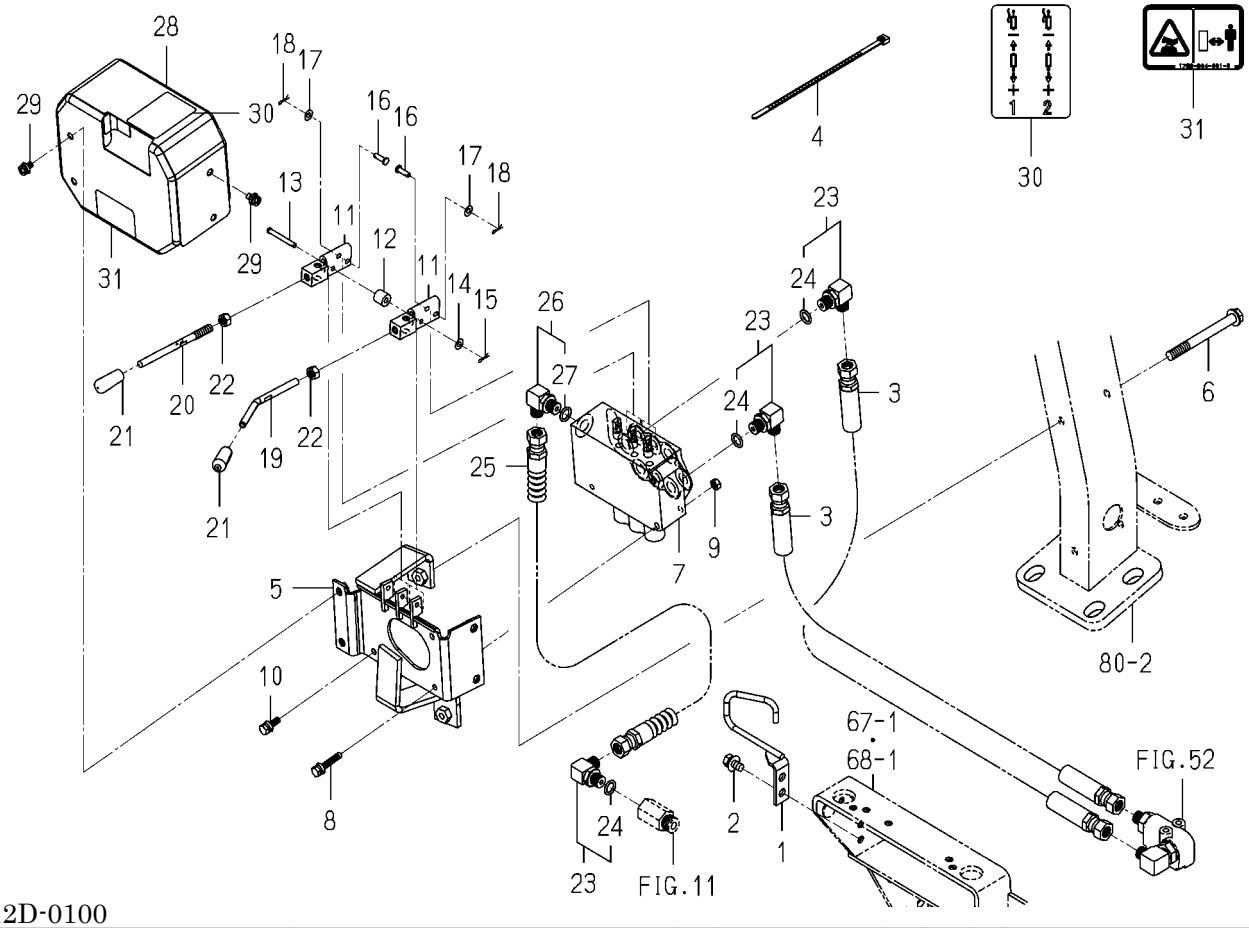

1739-512D-0100

KEY	PART CODE	DESCRIPTION	SPC	TYPE OF MODEL TXG237 F3		ITC	COL	GRP	REMARKS
1	1739-512-220-10	GUIDE/HOSE COMP	*	1					
2	V211-360-801-60	BOLT,SP/M8X16	*	2					
3	1739-512-820-00	HOSE/900/E4 ASSY	*	2					
4	1376-402-003-00	BAND,WIRE/140	*	4					
5	1739-512-230-00	BRACKET/VALVE COMP	*	1					
6	V231-360-809-00	FLANGEBOLT/M8X90	*	2					
7	1739-512-210-20	VALVE/1S-2D ASSY	*	1					
8	V230-360-603-00	FLANGEBOLT/M6X30	*	2					
9	V301-260-006-00	NUT/M6	*	2					
10	V230-360-601-20	FLANGEBOLT/M6X12	*	1					
11	1739-530-520-00	ARM/LEVER COMP	*	2					
12	1739-530-002-10	COLLAR/06X14X13	*	1					
13	1739-530-003-10	PIN/05X39	*	1					
14	V411-260-005-00	WASHER,PL/M5	*	1					
15	V560-160-005-00	PIN/SNAP	*	1					
16	1739-530-004-00	PIN/05X17	*	2					
17	V411-260-005-00	WASHER,PL/M5	*	2					
18	V560-160-005-00	PIN/SNAP	*	2					
19	1739-512-001-00	LEVER/M08	*	1					
20	1739-530-051-00	LEVER/M08X110	*	1					
21	1444-507-003-00	GRIP,LEVER	*	2					
22	V304-260-008-00	NUT/M8	*	2					
23	1705-408-230-00	ADAPTER/L/G1/4 ASSY	*	3					
24	V720-112-401-10	O-RING/1B,P11	*	3					
25	1739-512-810-00	HOSE/900/E4 ASSY	*	1					
26	1705-408-230-00	ADAPTER/L/G1/4 ASSY	*	1					
27	V720-112-401-10	O-RING/1B,P11	*	1					
28	1739-512-240-00	COVER/VALVE COMP	*	1					
29	V120-376-001-20	SCREW,SP/M6X12	*	4					
30	1739-512-082-00	LABEL/CONTROL/SUBCON	*	1					

FIG. 55 VALVE SYSTEM

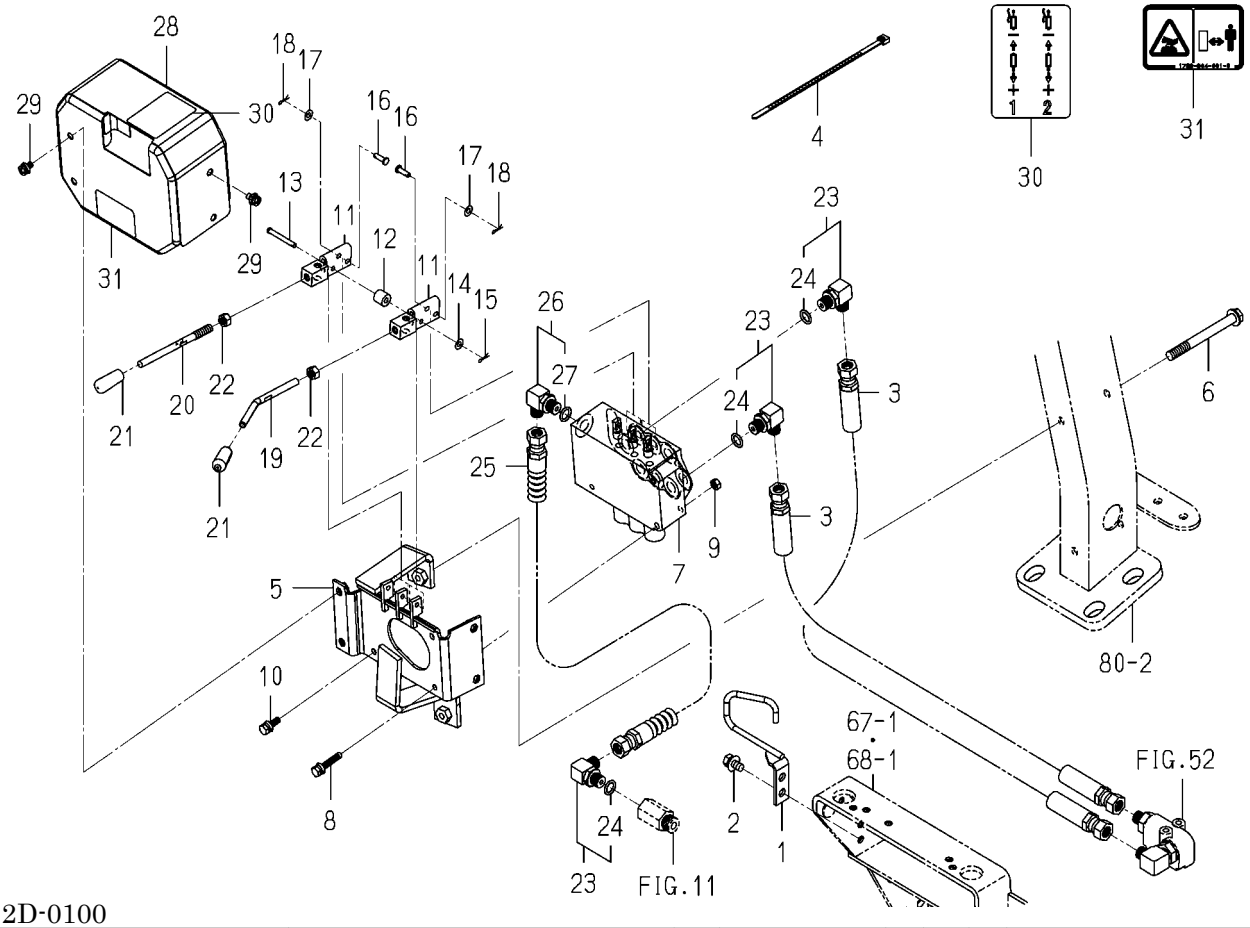

1739-512D-0100

KEY	PART CODE	DESCRIPTION	SPC	TYPE OF MODEL TXG237 F3		ITC	COL	GRP	REMARKS
31	1739-904-001-00	LABEL/WARNING/HOT	*	1					

FIG. 56 LINK(3P)SYSTEM

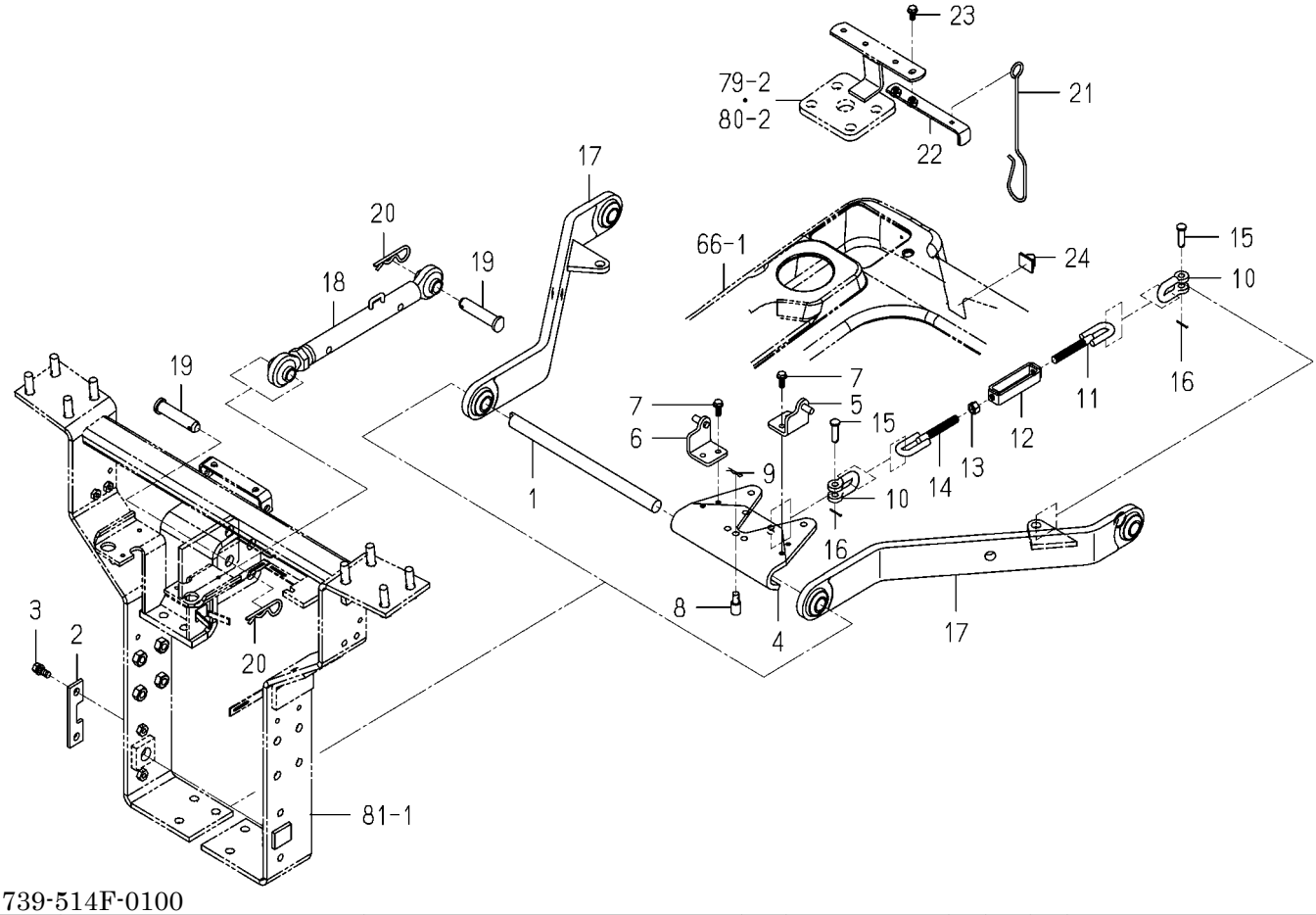

1739-514F-0100

KEY	PART CODE	DESCRIPTION	SPC	TYPE OF MODEL TXG237 F3		ITC	COL	GRP	REMARKS
1	1725-514-001-00	ROD/22X353	*	1					
2	1725-514-002-00	PLATE/STOPPER	*	1					
3	V211-561-002-50	BOLT,S/M10X25/7T	*	2					
4	1739-514-001-00	PLATE/CHECKCHAIN	*	1					
5	1739-514-850-10	PLATE/LH COMP	*	1					
6	1739-514-860-10	PLATE/RH COMP	*	1					
7	V231-360-801-60	FLANGEBOLT/M8X16	*	4					
8	1725-514-004-00	PIN/STOPPER	*	1					
9	V560-160-010-00	PIN/SNAP	*	1					
10	1725-514-008-00	SHACKLE	*	4					
11	1739-514-830-00	CHAIN/CHECK/LH COMP	*	2					
12	1725-514-680-00	BACKLE/TURN/M12 COMP	*	2					
13	1725-514-009-00	NUT	*	2					
14	1739-514-820-00	CHAIN/CHECK/RH COMP	*	2					
15	1427-511-001-00	PIN/10X32	*	4					
16	V500-162-502-00	PIN,SPLIT/2.5X20	*	4					
17	1725-514-650-00	LINK/LOWER COMP	*	2					
18	1725-514-600-00	LINK/TOP ASSY	*	1					
19	7930-601-002-00	PIN/19X86	*	2					
20	1444-514-005-10	PIN,HAIR (19)	*	2					
21	1725-514-006-00	HOOK/TOP-LINK	*	1					
22	1739-514-710-00	PLATE COMP	*	1					
23	V231-360-801-60	FLANGEBOLT/M8X16	*	2					
24	1650-652-014-00	CLAMP	*	1					

FIG. 57 ROD(LIFT)SYSTEM

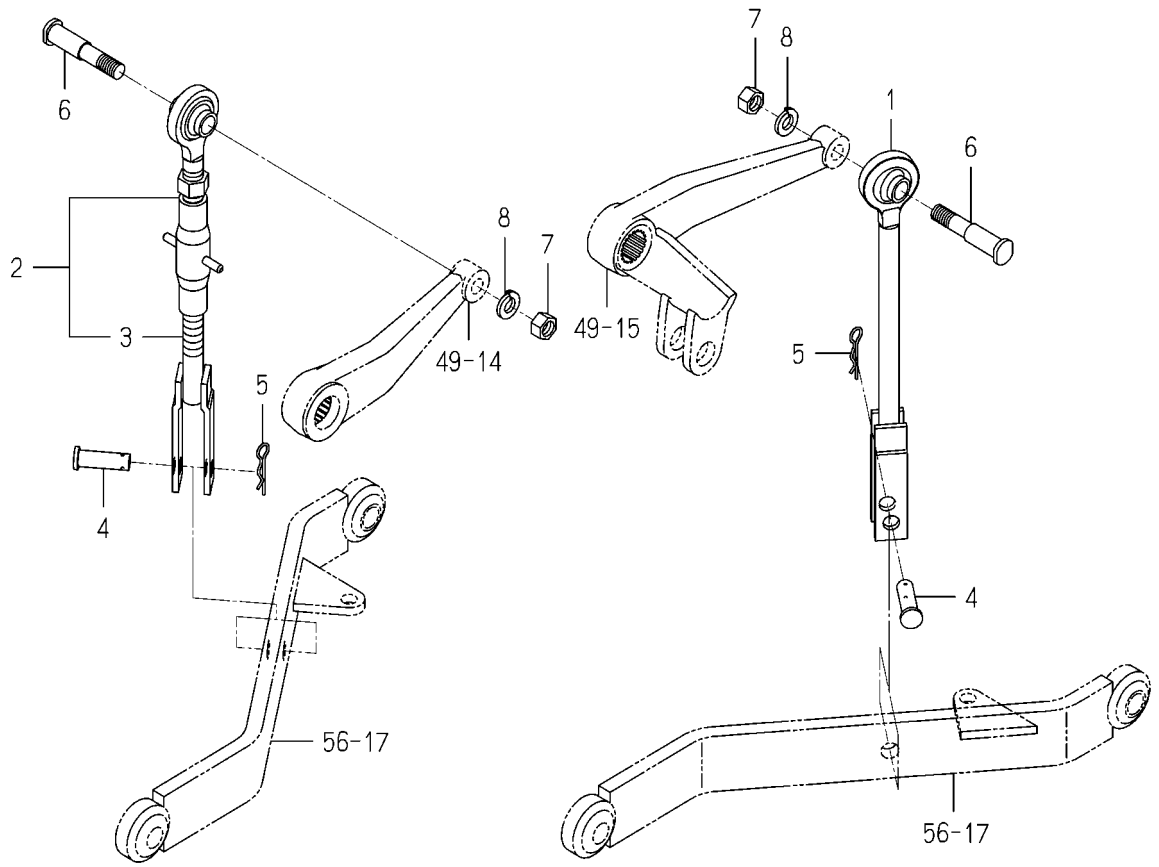

1725-515B-0100

KEY	PART CODE	DESCRIPTION	SPC	TYPE OF MODEL TXG237 F3		ITC	COL	GRP	REMARKS
1	1725-515-500-00	ROD/LIFT/LH COMP	*	1					
2	1725-515-550-10	ROD/LIFT/RH ASSY	*	1					
3	1725-515-560-00	SCREW/RH COMP	*	1					
4	1560-526-001-40	PIN/16X51	*	2					
5	1305-931-003-00	PIN,HAIR	*	2					
6	1716-502-004-10	PIN/19X92	*	2					
7	V304-260-016-00	NUT/M16	*	2					
8	V402-160-016-00	WASHER,SP/M16	*	2					

FIG. 58 PLATE(TRAILER)SYSTEM (EXCEPT G TYPE)

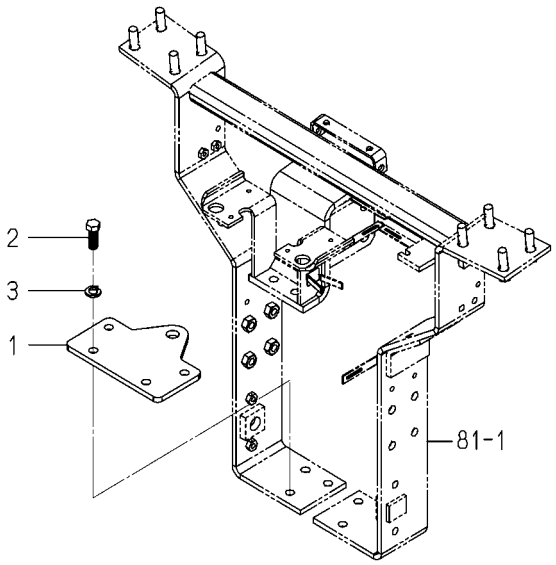

1725-521 -0100

KEY	PART CODE	DESCRIPTION	SPC	TYPE OF MODEL TXG237 F3		ITC	COL	GRP	REMARKS
1	1725-521-001-00	PLATE/HITCH	*	1					
2	1725-521-003-00	BOLT	*	4					
3	V401-160-014-00	WASHER,SP/M14	*	4					

FIG. 59 HITCH(TRAILER)SYSTEM(G TYPE)

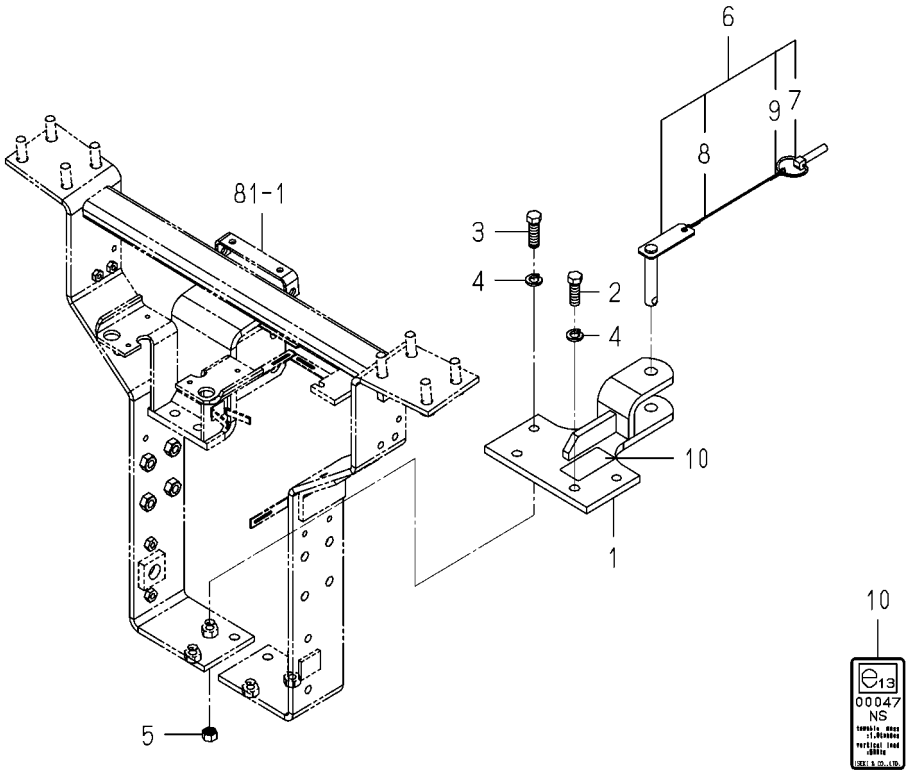

1739-521 -0100

KEY	PART CODE	DESCRIPTION	SPC	TYPE OF MODEL TXG237 F3		ITC	COL	GRP	REMARKS
1	1739-521-210-00	HITCH/TRAILER COMP	*	1					
2	V201-361-404-00	BOLT/M14X40/7T	*	2					
3	V201-361-405-00	BOLT/M14X50/7T	*	2					
4	V401-160-014-00	WASHER,SP/M14	*	4					
5	V304-260-014-00	NUT/M14	*	2					
6	1739-521-220-00	PIN/18X98 ASSY	*	1					
7	1673-525-002-30	LINKPIN	*	1					
8	1772-521-221-20	WIRE/02X300	*	1					
9	1614-702-552-00	RING	*	1					
10	1739-521-001-00	LABEL/TRH1739	*	1					

FIG. 60 LINK(MOWER)SYSTEM

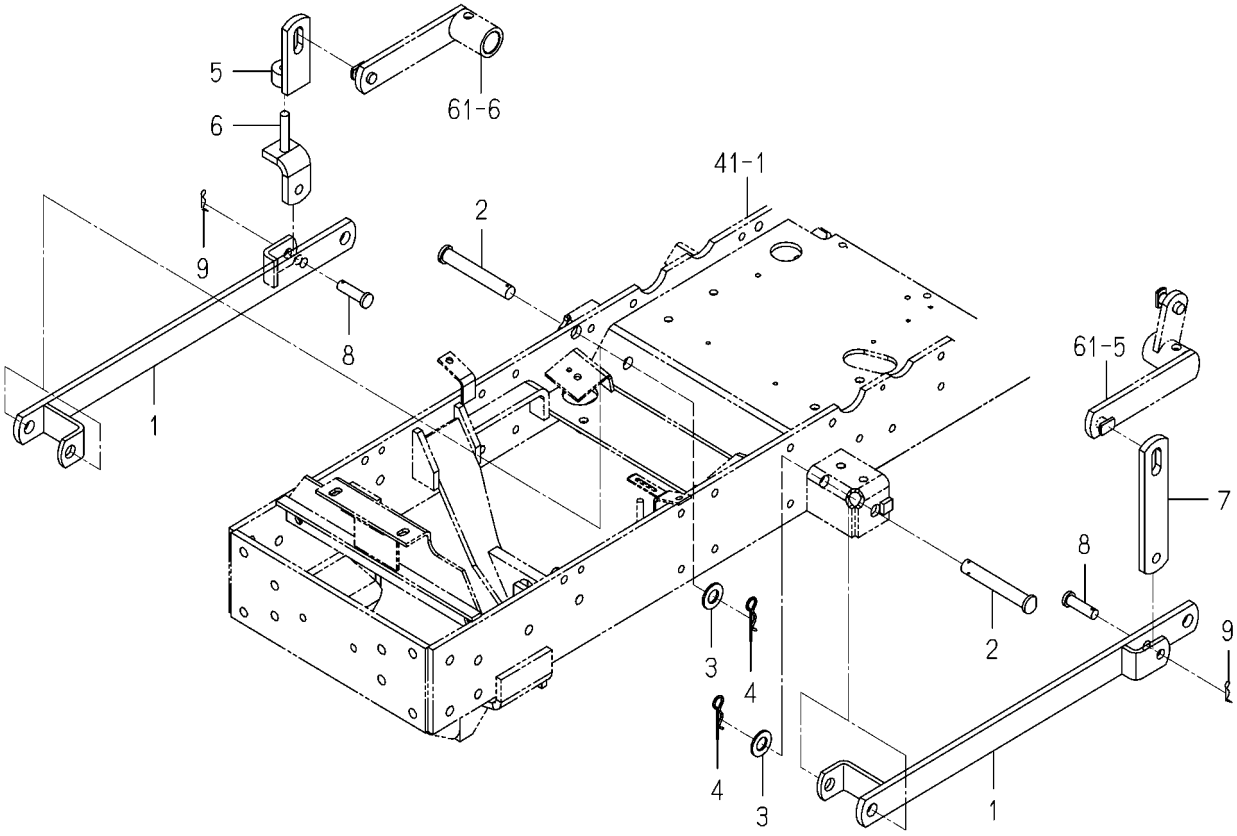

1725-553C-0100

KEY	PART CODE	DESCRIPTION	SPC	TYPE OF MODEL TXG237 F3		ITC	COL	GRP	REMARKS
1	1725-553-260-00	ARM/MID COMP	*	2					
2	1725-553-004-00	PIN/16X107	*	2					
3	V411-260-016-00	WASHER,PL/M16	*	2					
4	1305-931-003-00	PIN,HAIR	*	2					
5	1725-553-510-10	LINK/UPPER COMP	*	1					
6	1725-553-520-00	LINK/LIFT/LOWER COMP	*	1					
7	1725-553-012-00	PLATE/LIFT	*	1					
8	8657-608-053-10	PIN/12X42	*	2					
9	1725-553-008-00	PIN/SNAP/B	*	2					

FIG. 61 LINK(MOWER)SYSTEM

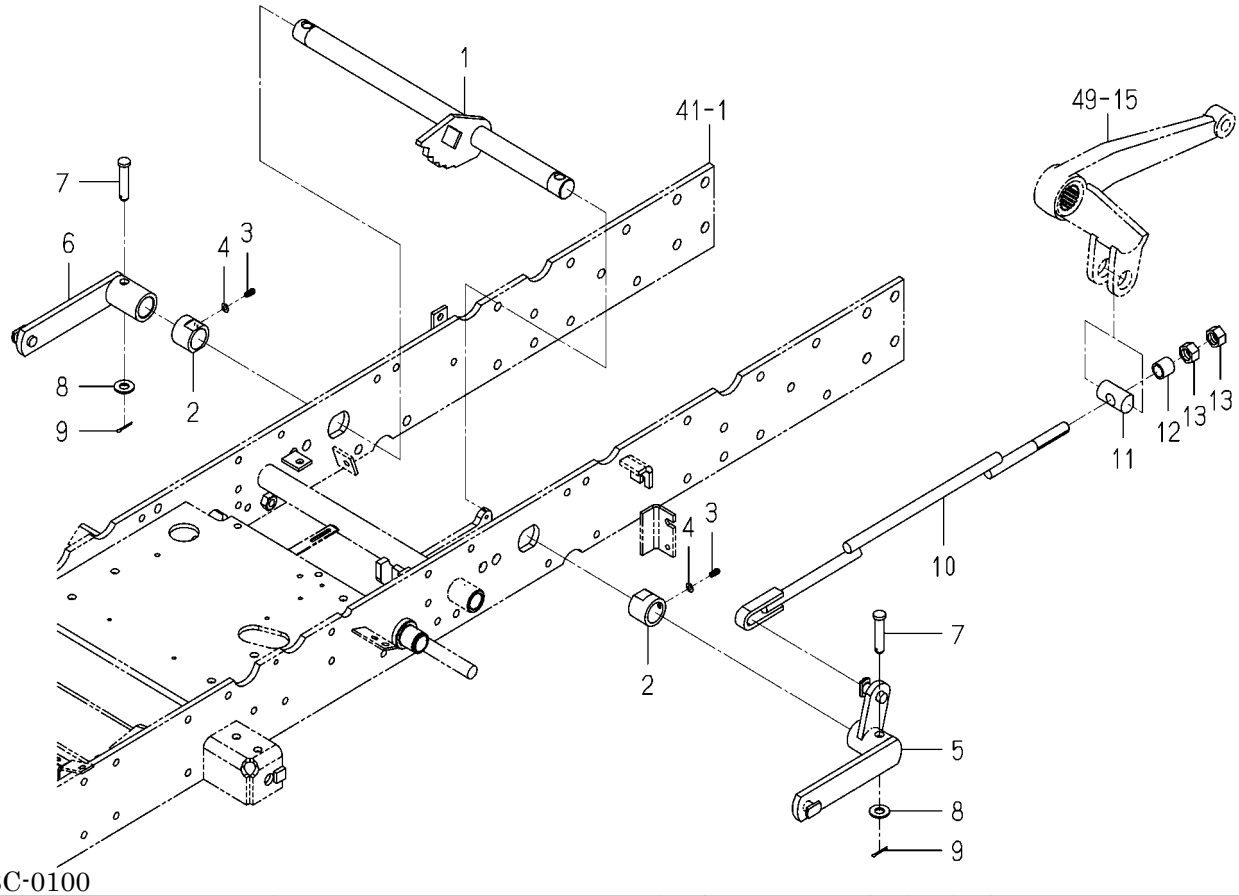

1739-553C-0100

KEY	PART CODE	DESCRIPTION	SPC	TYPE OF MODEL TXG237 F3		ITC	COL	GRP	REMARKS
1	1725-553-410-20	SHAFT/LIFT/17 COMP	*	1					
2	1728-553-012-10	HUB/28X38X30	*	2					
3	V760-150-000-00	NIPPLE,GREASE	*	2					
4	V401-160-006-00	WASHER,SP/M6	*	2					
5	1725-553-420-00	ARM/LIFT/LH COMP	*	1					
6	1725-553-430-00	ARM/LIFT/RH COMP	*	1					
7	7963-611-003-00	PIN/12X48	*	2					
8	V411-260-012-00	WASHER,PL/M12	*	2					
9	V500-163-002-00	PIN,SPLIT/3X20	*	2					
10	1739-553-810-00	ROD/LINK/598 COMP	*	1					
11	1752-553-004-10	PIN/25X45	*	1					
12	1725-553-011-00	COLLAR/16X22X20	*	1					
13	V334-460-016-00	NUT/M16 P=1.5	*	2					

FIG. 62 KNOB(ADJUST/HEIGHT)SYSTEM

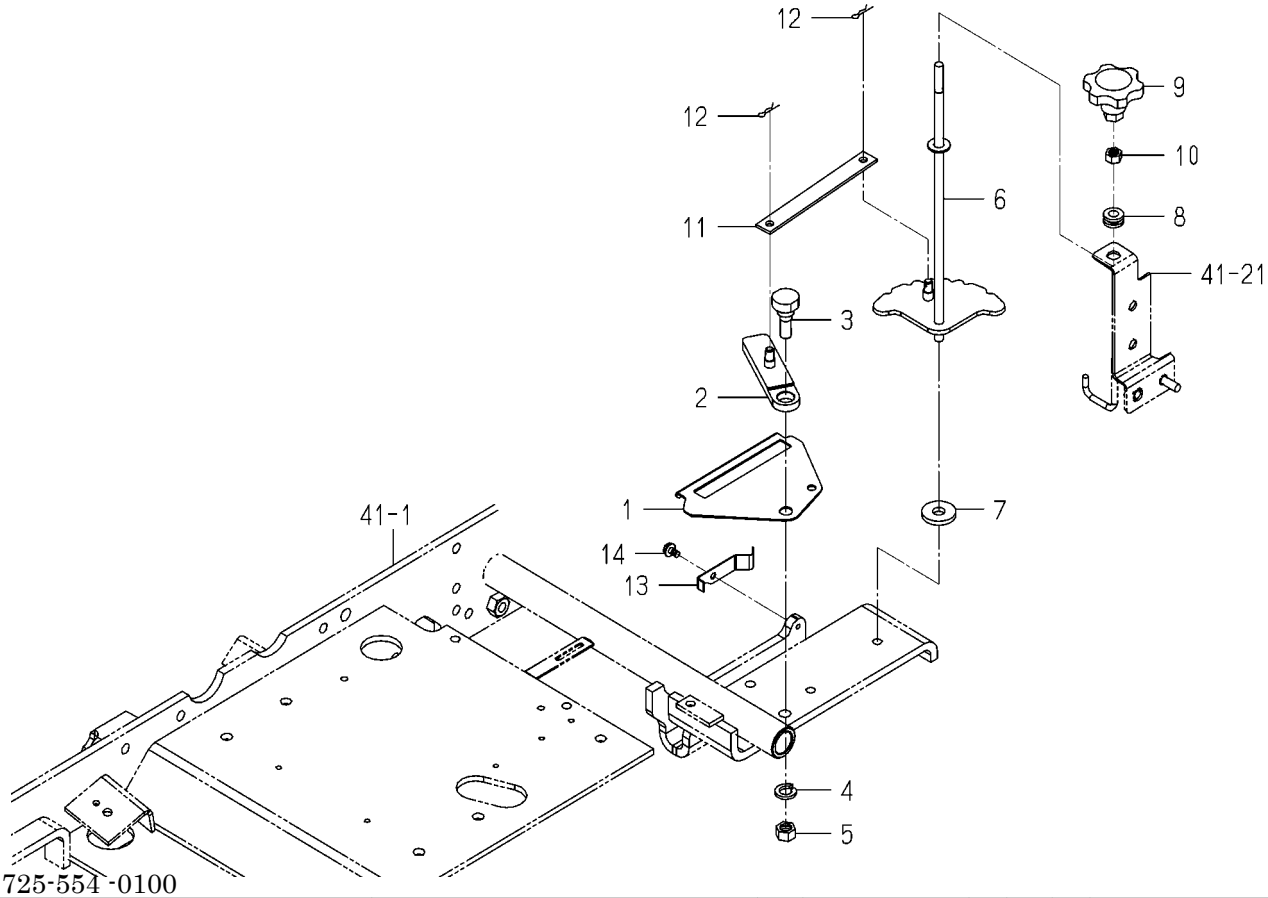

1725-554-0100

KEY	PART CODE	DESCRIPTION	SPC	TYPE OF MODEL TXG237 F3		ITC	COL	GRP	REMARKS
1	1836-554-001-00	PLATE/GUIDE	*	1					
2	1725-554-220-40	LINK/STOPPER COMP	*	1					
3	1725-554-037-20	BOLT/M12X35	*	1					
4	V401-160-012-00	WASHER,SP/M12	*	1					
5	V304-460-012-00	NUT/M12/7T	*	1					
6	1725-554-210-20	SHAFT/ADJUST COMP	*	1					
7	3621-702-003-00	WASHER,PULLEY	*	1					
8	1427-621-012-00	GROMMET	*	1					
9	1725-553-007-10	KNOB/ADJUST	*	1					
10	V304-260-010-00	NUT/M10	*	1					
11	1725-554-032-00	PLATE/I/19X162	*	1					
12	V560-160-008-00	PIN/SNAP	*	2					
13	1725-554-033-20	STOPPER/ADJUST	*	1					
14	V230-360-601-00	FLANGEBOLT/M6X10	*	1					

FIG. 63 HOOD SYSTEM

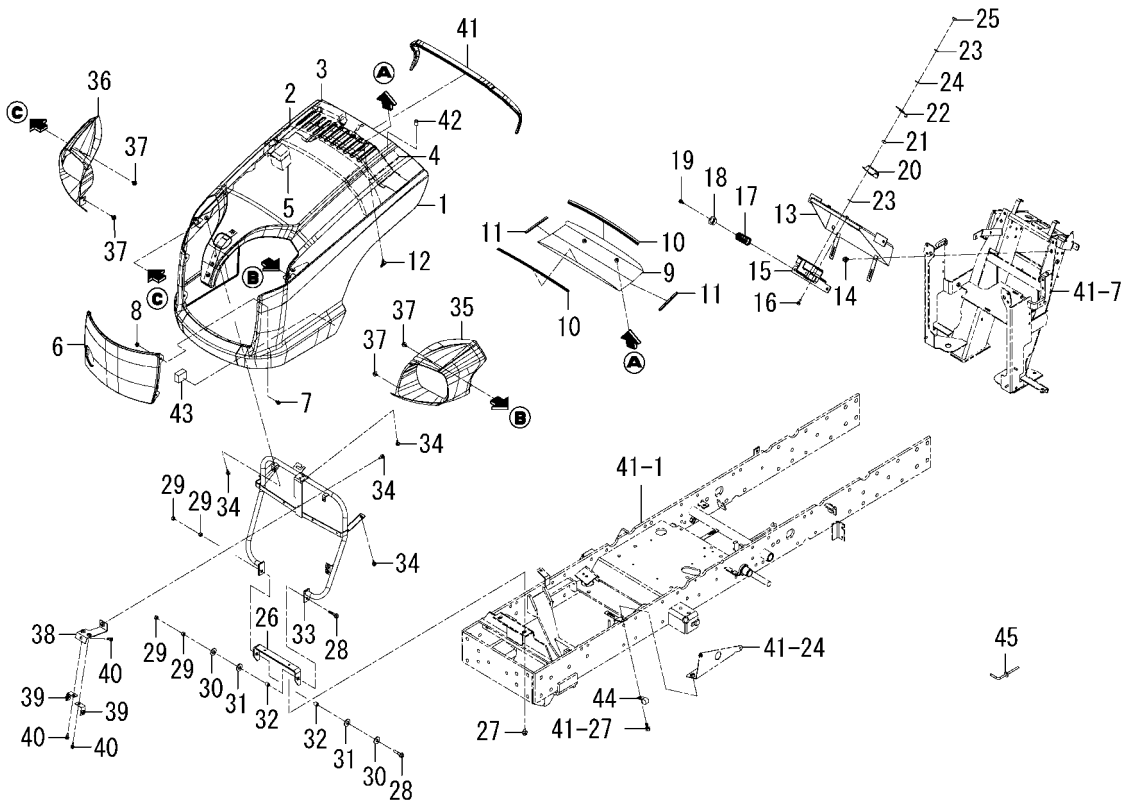

1739-601B-0100

KEY	PART CODE	DESCRIPTION	SPC	TYPE OF MODEL TXG237 F3		ITC	COL	GRP	REMARKS
1	1739-601-810-00	HOOD/F3 COMP	*	1					
2	1725-601-076-10	SEAL/70X20X640	*	1					
3	1725-631-004-00	SEAL/30X20X150	*	2					
4	1725-631-004-00	SEAL/30X20X150	*	2					
5	1725-410-006-00	SEAL/45X50X80	*	2					
6	1739-601-071-10	NET/FRONT	*	1			7F		
7	V210-360-601-20	BOLT,SP/M6X12	*	4					
8	V360-260-006-00	NUT/WASHER/M6	*	4					
9	1725-601-720-20	NET/HOOD/REAR COMP	*	1					
10	1593-601-072-00	TRIM/1X6X360	*	2					
11	1519-604-005-00	RUBBER,HOOK	*	2					
12	V273-360-601-50	BOLT,WING/M6X15	*	2					
13	1739-601-880-00	BRACKET COMP	*	1					
14	V211-660-802-00	BOLT,SP/M8X20/7T	*	2					
15	1739-601-860-10	BRACKET/STOPPER COMP	*	1		1			
16	V210-360-601-60	BOLT,SP/M6X16	*	2					
17	1789-601-007-20	SPRING/HC053	*	1					
18	7821-501-005-00	BUSH/19X30X14	*	1					
19	V120-366-001-60	SCREW,SP/M6X16	*	1					
20	1739-601-850-30	HOOK COMP	*	1		1			
21	7825-601-004-00	COLLAR/09X14X07	*	1					
22	3673-641-004-00	SPRING, HT020	*	1					
23	V411-260-008-00	WASHER,PL/M8	*	2					
24	V411-260-010-00	WASHER,PL/M10	*	1					
25	1719-312-001-00	U-NUT	*	1					
26	1739-601-072-00	HINGE/HOOD	*	1					
27	V211-660-802-00	BOLT,SP/M8X20/7T	*	2					
28	V231-360-803-50	FLANGEBOLT/M8X35	*	2					
29	V304-260-008-00	NUT/M8	*	4					
30	V411-260-012-00	WASHER,PL/M12	*	2					

FIG. 63 HOOD SYSTEM

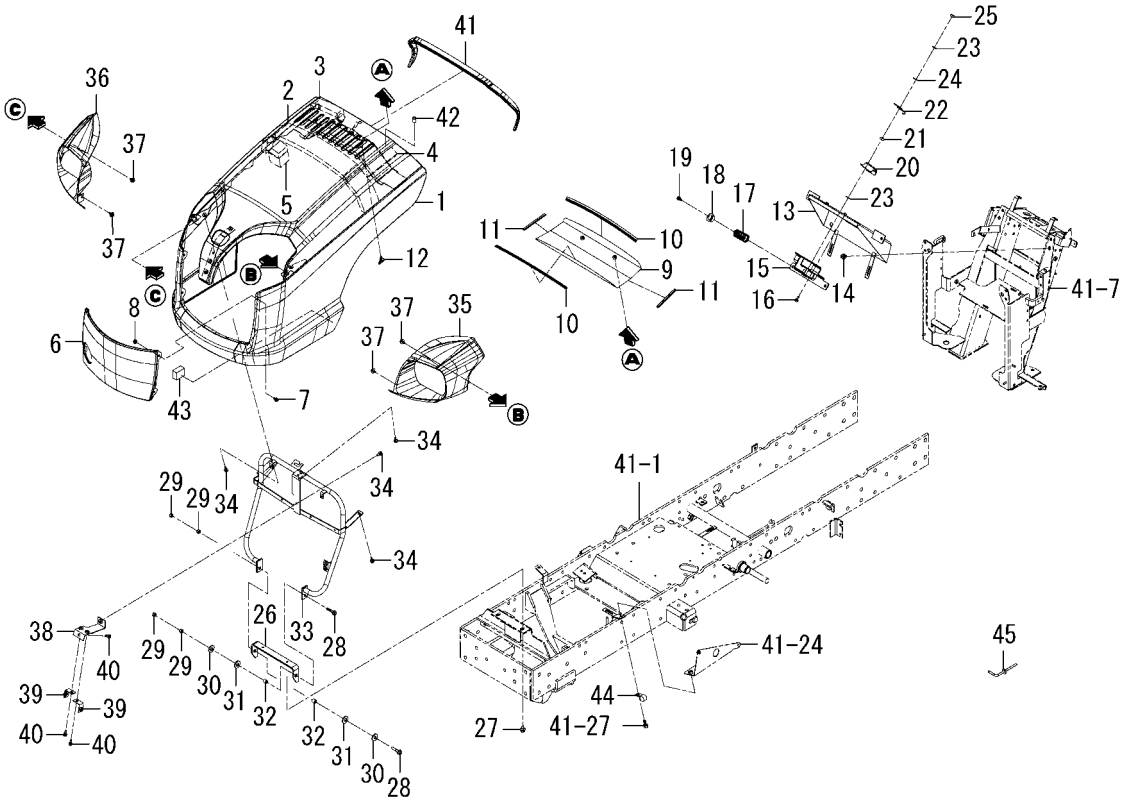

1739-601B-0100

KEY	PART CODE	DESCRIPTION	SPC	TYPE OF MODEL TXG237 F3		ITC	COL	GRP	REMARKS
31	1689-621-007-00	WASHER/12X26X04	*	2					
32	1703-505-005-00	COLLAR/08X12X10	*	2					
33	1739-601-730-10	STAY/LAMP COMP	*	1					
34	V210-360-601-60	BOLT,SP/M6X16	*	4					
35	1739-601-073-20	COVER/LAMP/LH	*	1					
36	1739-601-074-20	COVER/LAMP/RH	*	1					
37	2144-610-001-00	BOLT/M6X14/16	*	4					
38	1739-601-750-10	STAY/COVER COMP	*	1					
39	1739-601-770-00	PLATE COMP	*	2					
40	V210-360-601-60	BOLT,SP/M6X16	*	3					
41	1739-601-084-10	INSULATOR	*	1					
42	1738-626-208-00	NUT/SPH/M08	*	1					
43	1739-601-077-00	INSULATOR/30	*	2					
44	1675-508-003-00	HOLDER/15	*	2					
45	1739-601-870-00	TOOL/HOOD COMP	*	1					

FIG. 64 COVER(LOWER)SYSTEM

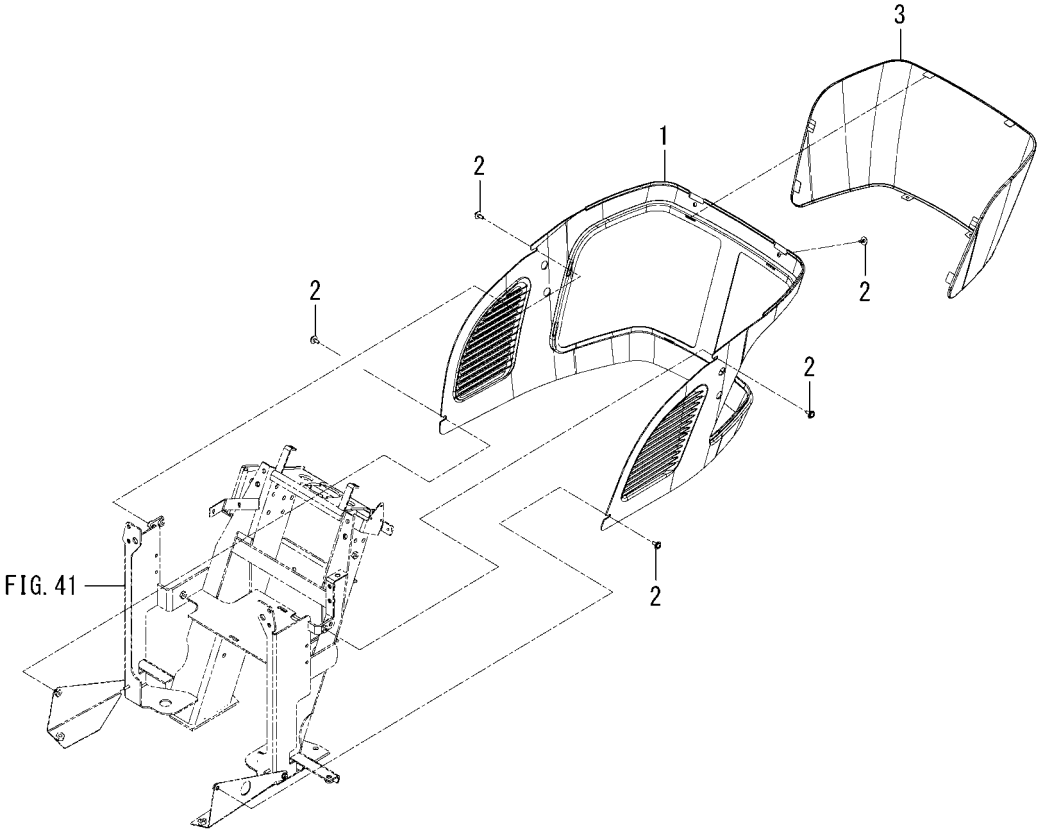

1739-603 -0100

KEY	PART CODE	DESCRIPTION	SPC	TYPE OF MODEL TXG237 F3		ITC	COL	GRP	REMARKS
1	1739-603-071-30	COVER/LOWER	*	1					
2	1725-604-051-00	SCREW/SP/M06X16	*	6					
3	1739-603-072-00	NET/LOWER	*	1			7F		

FIG. 65 HANDRAIL SYSTEM(G TYPE)

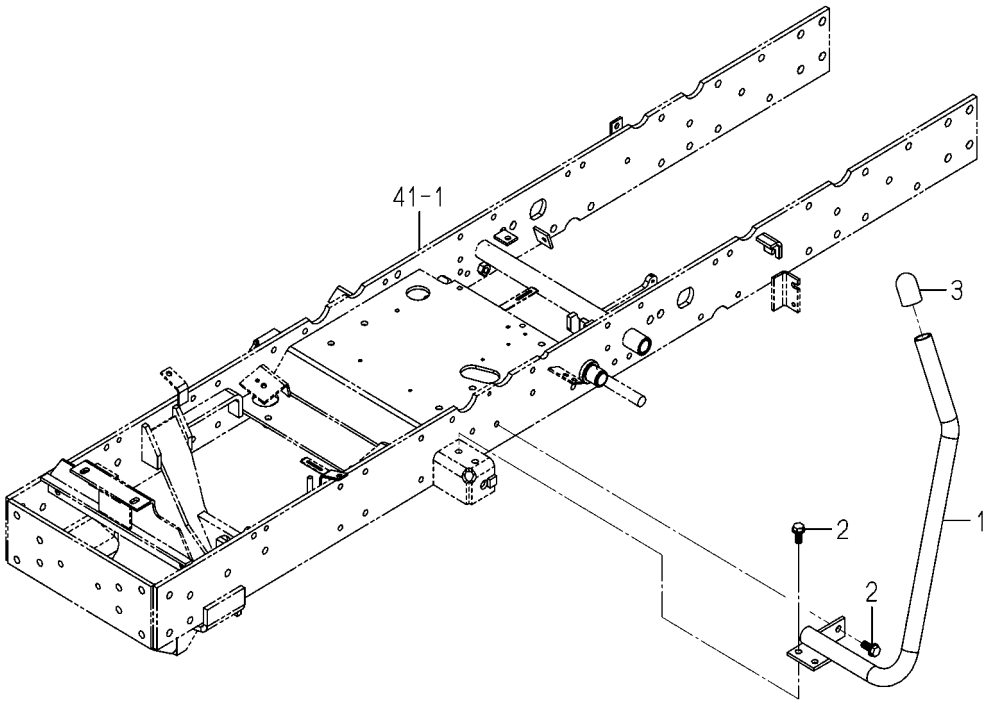

1739-605 -0100

KEY	PART CODE	DESCRIPTION	SPC	TYPE OF MODEL TXG237 F3		ITC	COL	GRP	REMARKS
1	1739-605-200-00	TUBE/LH COMP	*	1					
2	V231-361-002-00	FLANGEBOLT/M10X20	*	3					
3	1792-590-004-00	CAP/28	*	1					

FIG. 66 FENDER SYSTEM

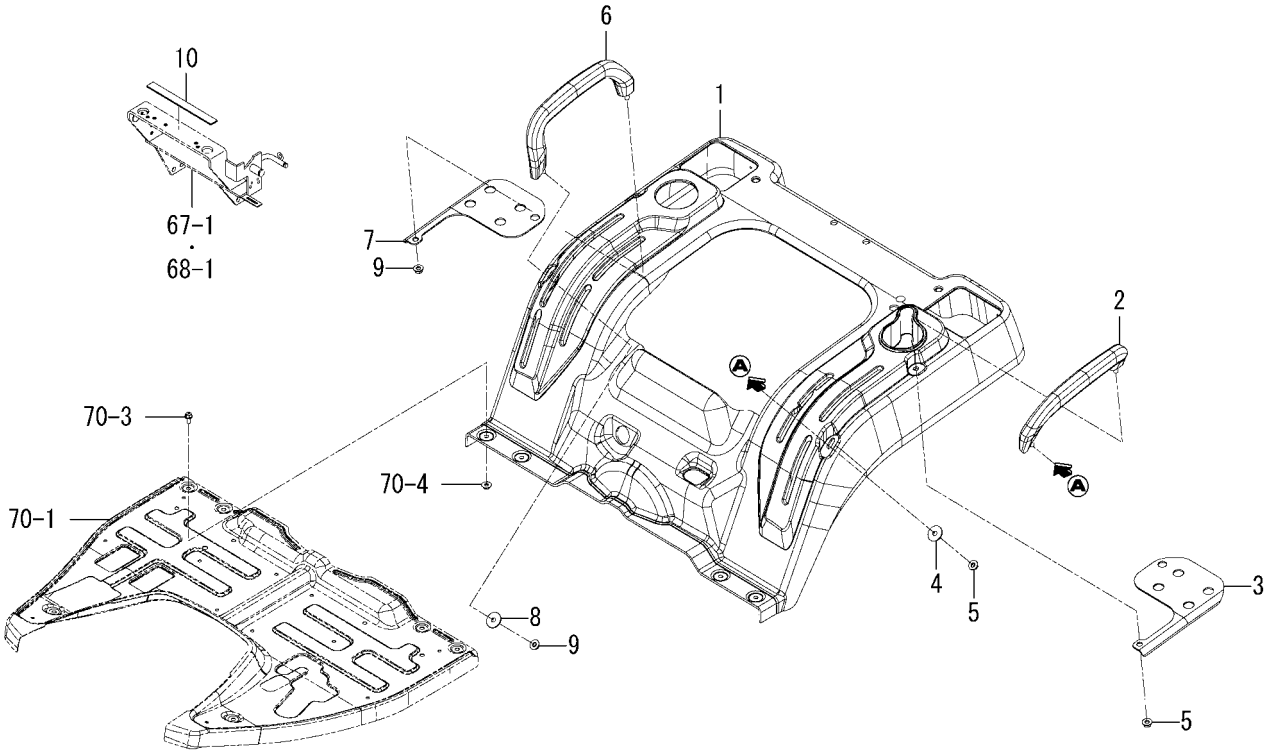

1739-606B-0100

KEY	PART CODE	DESCRIPTION	SPC	TYPE OF MODEL TXG237 F3		ITC	COL	GRP	REMARKS
1	1739-606-071-20	FENDER	*	1					
2	1725-606-073-10	GRIP/ASSIST/LH	*	1					
3	1725-606-741-10	PLATE/LH	*	1					
4	1593-611-001-00	WASHER/11X35X02	*	1					
5	V363-260-010-00	NUT/WASHER/M10	*	2					
6	1725-606-074-10	GRIP/ASSIST/RH	*	1					
7	1725-606-751-10	PLATE/RH	*	1					
8	1593-611-001-00	WASHER/11X35X02	*	1					
9	V363-260-010-00	NUT/WASHER/M10	*	2					
10	1432-616-004-00	PLATE,RUBBER	*	1					

FIG. 67 SEAT SYSTEM(EXCEPT Z TYPE)

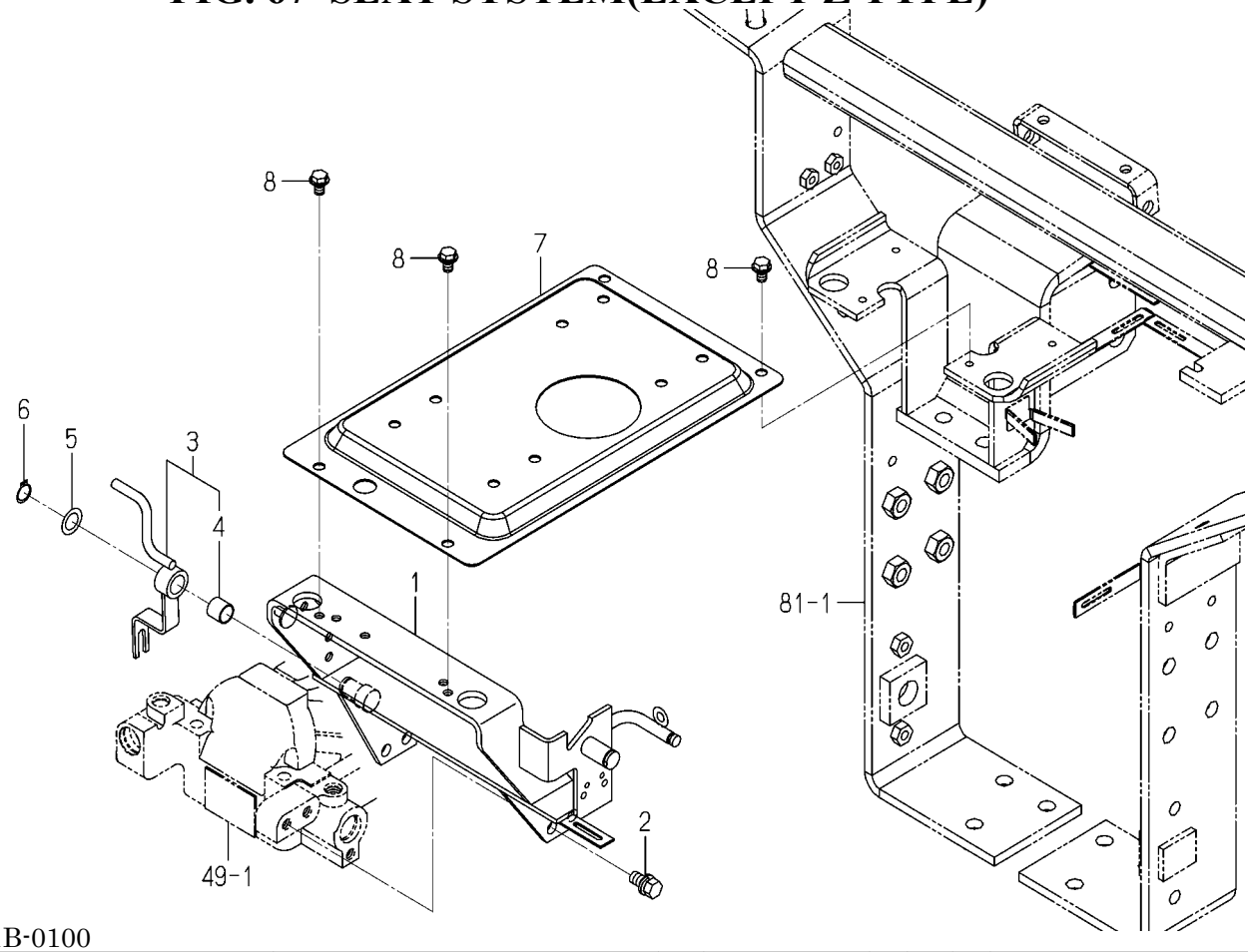

1739-611B-0100

KEY	PART CODE	DESCRIPTION	SPC	TYPE OF MODEL TXG237 F3		ITC	COL	GRP	REMARKS
1	1725-611-750-20	STAY/SEAT/FRONT COMP	*	1					
2	V211-261-002-00	BOLT,S/M10X20	*	4					
3	1725-611-220-30	ARM/COUNTER ASSY	*	1					
4	3650-106-006-00	BUSH/15X17X15	*	1					
5	3517-205-007-00	WASHER	*	1					
6	V704-140-015-00	RING,SNAP/15 C	*	1					
7	1739-611-071-00	PANEL/SEAT/E4	*	1					
8	V231-360-801-20	FLANGEBOLT/M8X12	*	4					

FIG. 68 SEAT SYSTEM(Z TYPE)

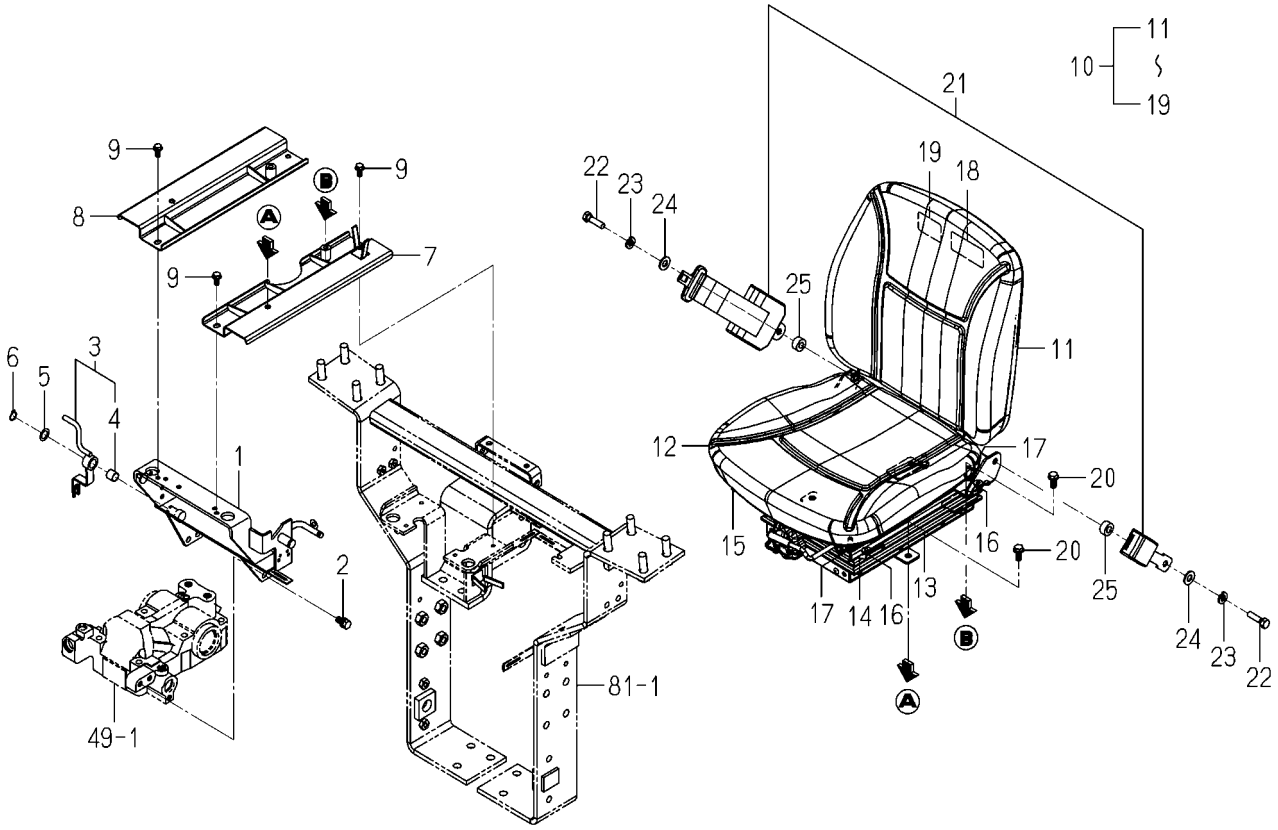

1739-611E-0100

KEY	PART CODE	DESCRIPTION	SPC	TYPE OF MODEL TXG237 F3		ITC	COL	GRP	REMARKS
1	1725-611-750-20	STAY/SEAT/FRONT COMP	*	1					
2	V211-261-002-00	BOLT,S/M10X20	*	4					
3	1725-611-220-30	ARM/COUNTER ASSY	*	1					
4	3650-106-006-00	BUSH/15X17X15	*	1					
5	3517-205-007-00	WASHER	*	1					
6	V704-140-015-00	RING,SNAP/15 C	*	1					
7	1739-611-810-00	PLATE/SEAT/LH COMP	*	1					
8	1739-611-820-00	PLATE/SEAT/RH COMP	*	1					
9	V231-360-801-60	FLANGEBOLT/M8X16	*	4					
10	1776-612-210-30	SEAT/W10 SET	*	1					
11	1776-612-211-10	SEAT/BACK ASSY	*	1					
12	1776-612-212-00	SEAT/CUSHION ASSY	*	1					
13	1776-612-213-00	SEAT/SUSPENSION ASSY	*	1					
14	1776-612-214-00	SEAT/SLIDE/LEVE ASSY	*	1					
15	1776-612-215-00	SEAT/SLIDE ASSY	*	1					
16	1776-612-216-00	NUT/FLANGE/M08	*	4					
17	1776-612-217-00	FLANGEBOLT	*	6					
18	1776-612-218-00	LABEL/78/764	*	1					
19	1776-612-219-00	LABEL/1322/2014	*	1					
20	V231-361-002-00	FLANGEBOLT/M10X20	*	4					
21	1739-611-830-00	BELT/SEAT SET	*	1					
22	1739-611-081-00	BOLT/UNF7/16X38	*	2					
23	V401-160-012-00	WASHER,SP/M12	*	2					
24	V411-260-012-00	WASHER,PL/M12	*	2					
25	1776-612-255-00	COLLAR/12X24X12	*	2					

FIG. 69 MIRROR SYSTEM(G TYPE)

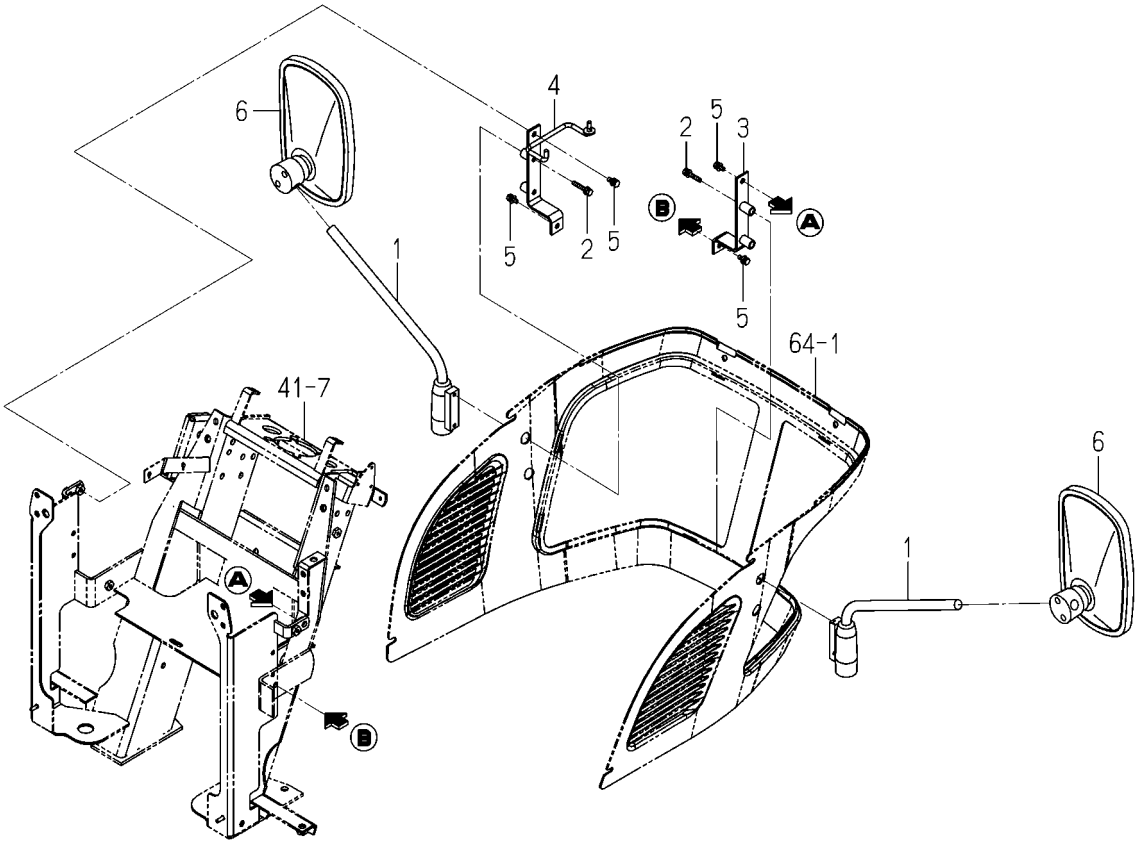

1739-619B-0100

KEY	PART CODE	DESCRIPTION	SPC	TYPE OF MODEL TXG237 F3		ITC	COL	GRP	REMARKS
1	1674-619-310-00	ARM/MIRROR ASSY	*	2					
2	V210-660-603-50	BOLT,SP/M6X35/7T	*	4					
3	1739-619-710-00	STAY/MIRROR COMP	*	1					
4	1739-619-810-00	STAY/MIRROR/RH COMP	*	1					
5	V210-660-601-60	BOLT,SP/M6X16/7T	*	4					
6	1674-619-300-10	MIRROR ASSY	*	2					

FIG. 70 FLOOR SYSTEM

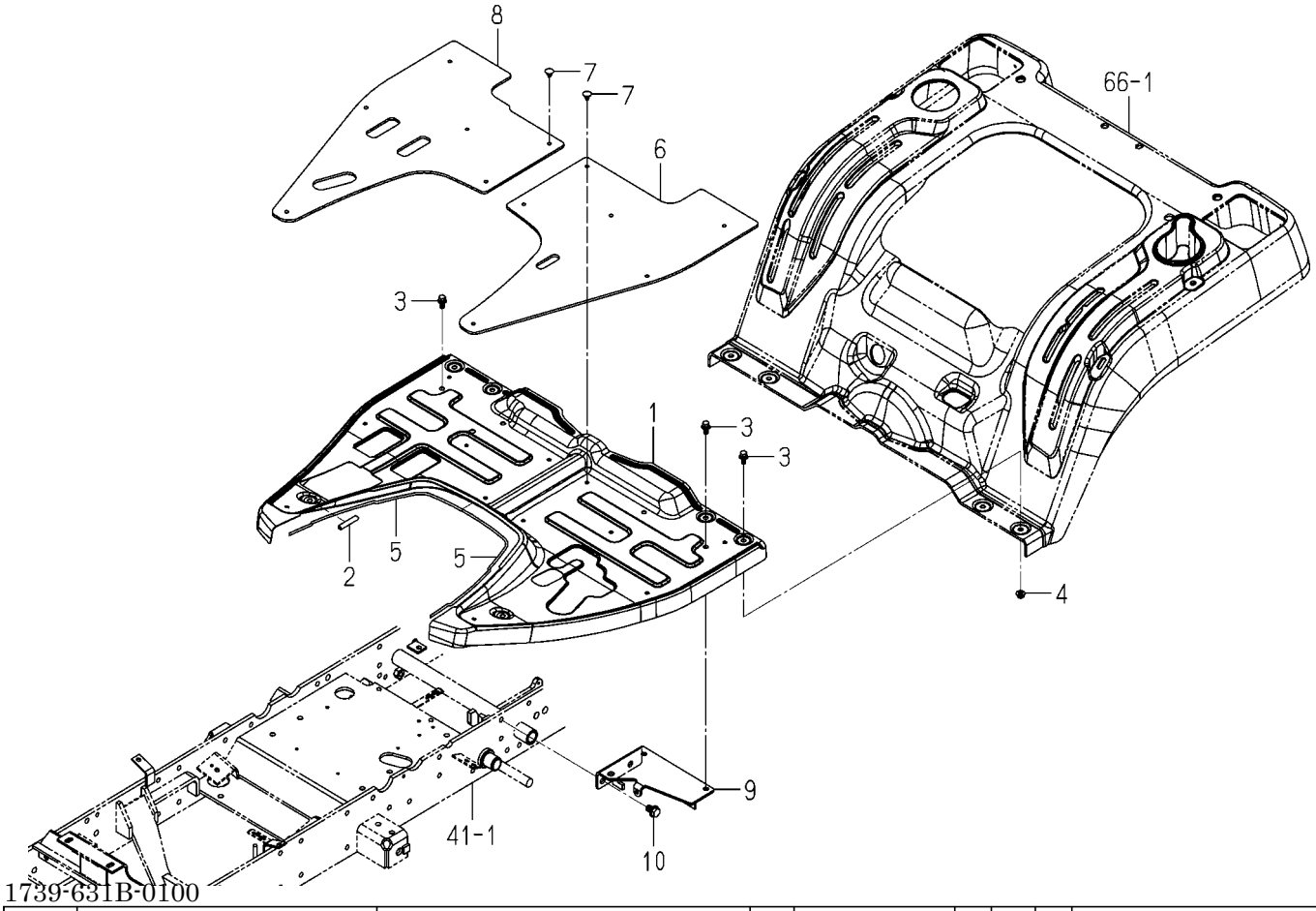

KEY	PART CODE	DESCRIPTION	SPC	TYPE OF MODEL TXG237 F3		ITC	COL	GRP	REMARKS
1	1739-631-073-30	FLOOR	*	1			4L		
2	3661-212-001-00	LINING/50	*	1					
3	V211-660-802-00	BOLT,SP/M8X20/7T	*	10					
4	V363-260-008-00	NUT/WASHER/M8	*	4					
5	1705-601-019-00	SEAL/10X10X500	*	2					
6	1739-631-071-00	MAT/LH	*	1					
7	1527-604-002-00	CLIP(B)	*	12					
8	1739-631-072-20	MAT/RH	*	1					
9	1725-631-320-10	BRACKET/STEP/LH COMP	*	1					
10	V231-361-201-60	FLANGEBOLT/M12X16	*	2					

FIG. 71 PLATE(NUMBER)SYSTEM (EXCEPT G TYPE)

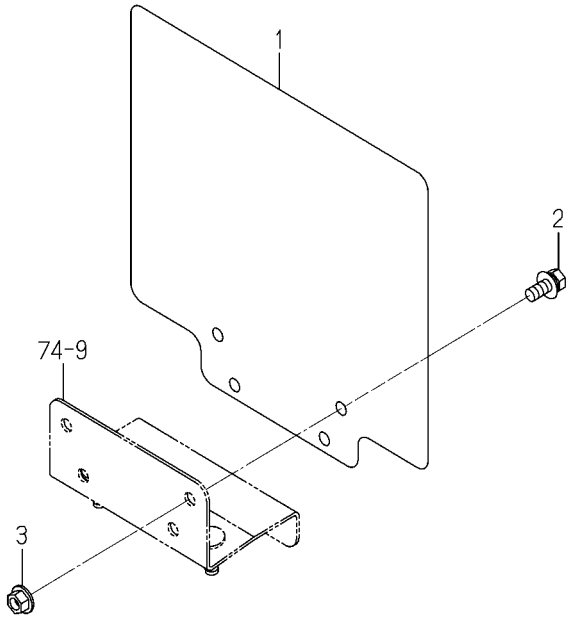

1772-635 -0100

KEY	PART CODE	DESCRIPTION	SPC	TYPE OF MODEL TXG237 F3		ITC	COL	GRP	REMARKS
1	1772-635-001-10	PLATE/NUMBER/E4	*	1					
2	V211-360-802-00	BOLT,SP/M8X20	*	2					
3	V362-260-008-00	NUT/WASHER/M8	*	2					

FIG. 72 LAMP(HEAD)SYSTEM (EXCEPT E4G TYPE)

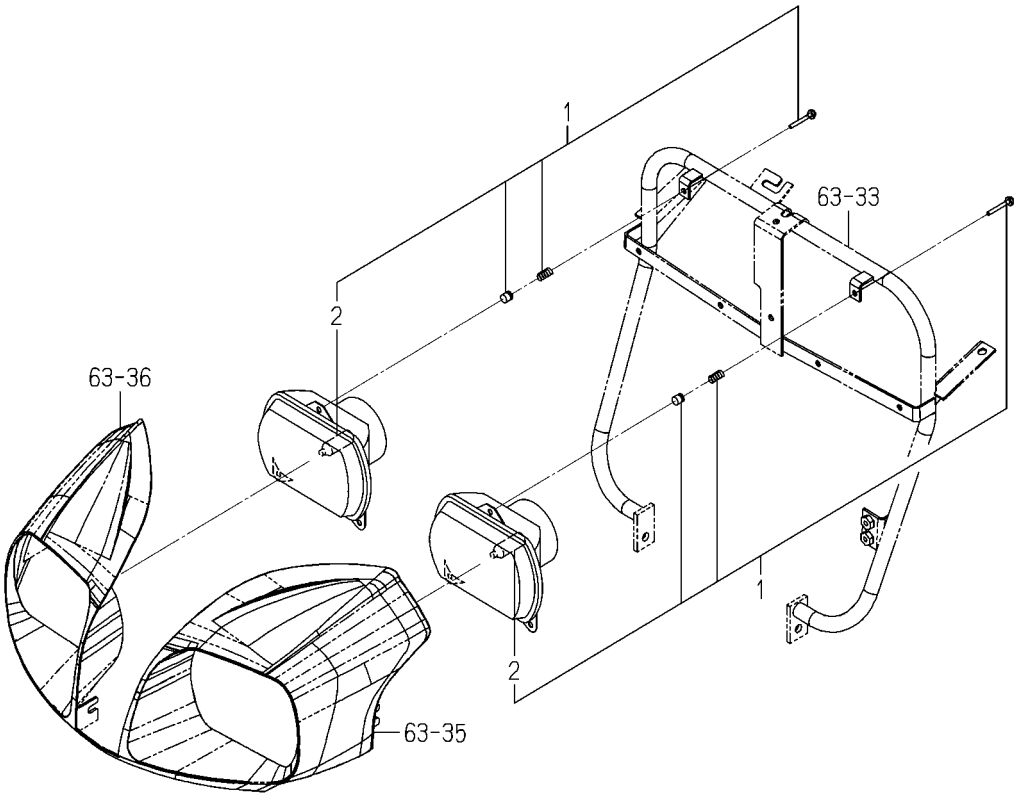

1774-650 -0100

KEY	PART CODE	DESCRIPTION	SPC	TYPE OF MODEL TXG237 F3		ITC	COL	GRP	REMARKS
1	1774-650-210-00	LAMP/HEAD/H4 ASSY	*	2					
2	1774-650-212-00	BULB/H4/60/55W	*	2					

FIG. 73 LAMP(HEAD)SYSTEM(E4G TYPE)

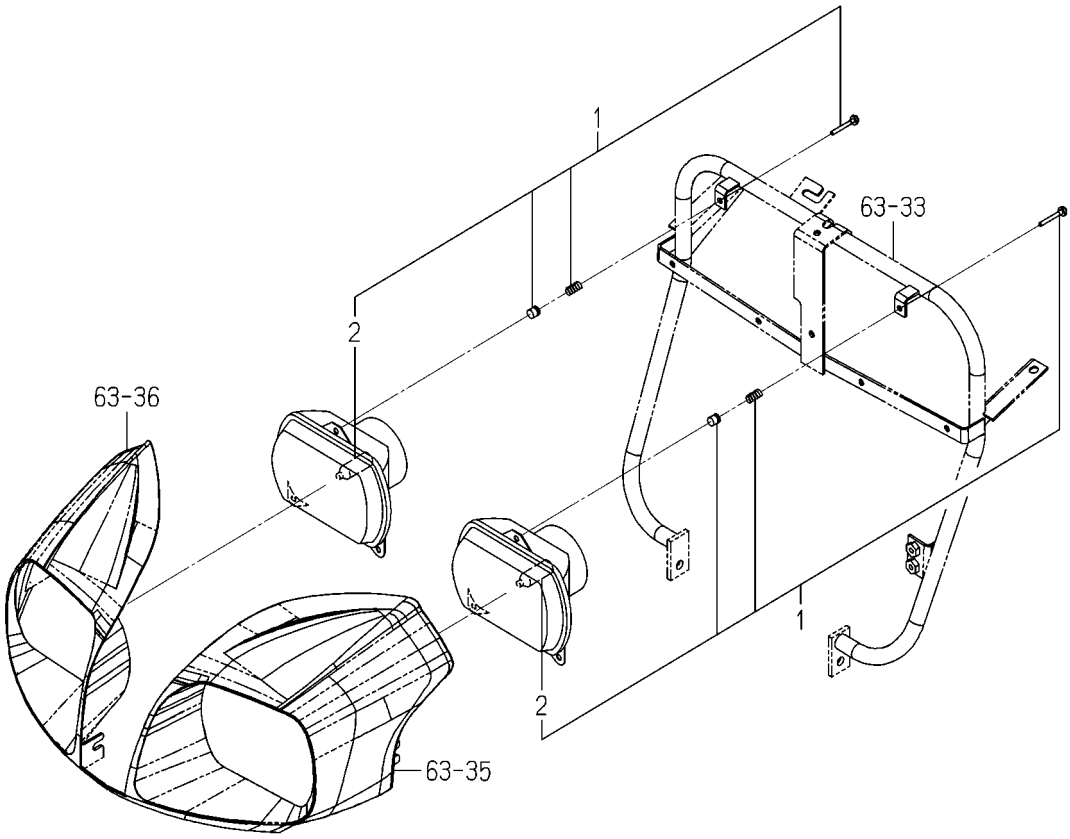

1774-650A-0100

KEY	PART CODE	DESCRIPTION	SPC	TYPE OF MODEL TXG237 F3		ITC	COL	GRP	REMARKS
1	1774-650-220-00	LAMP/HEAD/G ASSY	*	2					
2	1774-650-222-00	BULB/H4/60/55W	*	2					

FIG. 74 LAMP SYSTEM

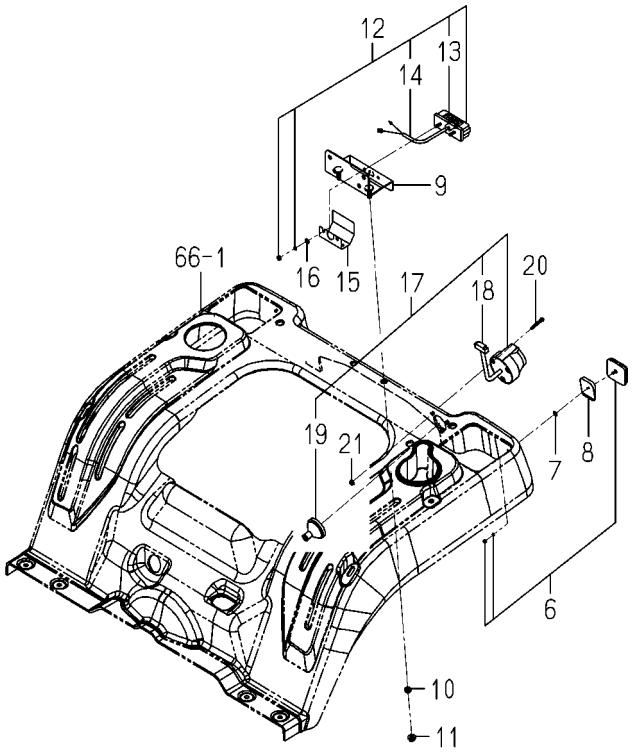

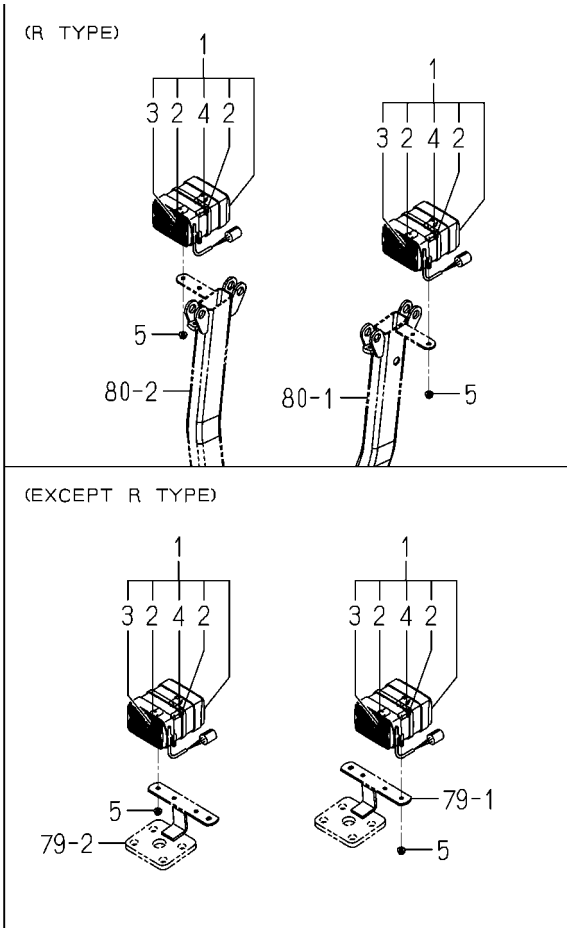

1739-660C-0100

KEY	PART CODE	DESCRIPTION	SPC	TYPE OF MODEL TXG237 F3		ITC	COL	GRP	REMARKS
1	1739-660-210-30	LAMP/COMBINATIO ASSY	*	2					
2	1674-654-211-00	BULB/12V21W	*	4					
3	1674-654-212-00	BULB/12V5W	*	2					
4	1739-660-212-00	BLUB/12V-21/5W	*	2					
5	V362-260-008-00	NUT/WASHER/M8	*	4					
6	1674-654-400-20	REFLECTOR ASSY	*	2					
7	V411-260-005-00	WASHER,PL/M5	*	2					
8	1739-660-081-00	SPACER	*	2					
9	1739-660-720-00	BRACKET/LAMP/NUMBER	*	1					
10	3693-407-013-00	COLLAR/9X14X5	*	2					
11	V362-260-008-00	NUT/WASHER/M8	*	2					
12	1674-654-270-00	LAMP/NUMBERPLAT SET	*	1					
13	1674-654-271-00	BULB/12V/5W	*	1					
14	1674-654-272-00	HARNESS/LAMP	*	1					
15	1739-660-001-10	GUARD/LIGHT	*	1					
16	V411-260-005-00	WASHER,PL/M5	*	2					
17	1807-652-500-00	HARNESS/TRAILER/E4	*	1					
18	1807-652-510-00	HARNESS/SOCKET/E4	*	1					
19	1650-654-036-00	GROMMET/10X40X03	*	1					
20	V111-165-003-50	SCREW/M5X35	*	3					
21	V360-260-005-00	NUT/WASHER/M5	*	3					

FIG. 75 PANEL SYSTEM

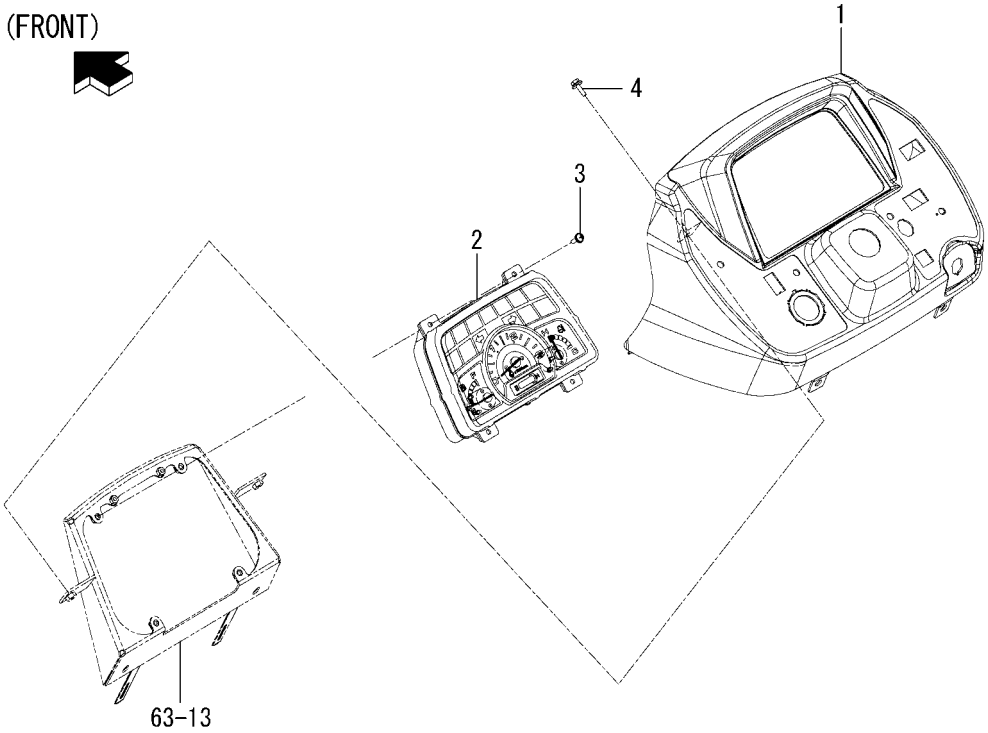

1739-670D-0100

KEY	PART CODE	DESCRIPTION	SPC	TYPE OF MODEL TXG237 F3		ITC	COL	GRP	REMARKS
1	1739-670-081-00	COVER/PANEL/F3	*	1					
2	1739-670-810-00	PANEL/INSTRUMEN ASSY	*	1					
3	V120-366-002-00	SCREW,SP/M6X20	*	4					
4	2144-610-001-00	BOLT/M6X14/16	*	2					

FIG. 76 SWITCH SYSTEM(1/2)

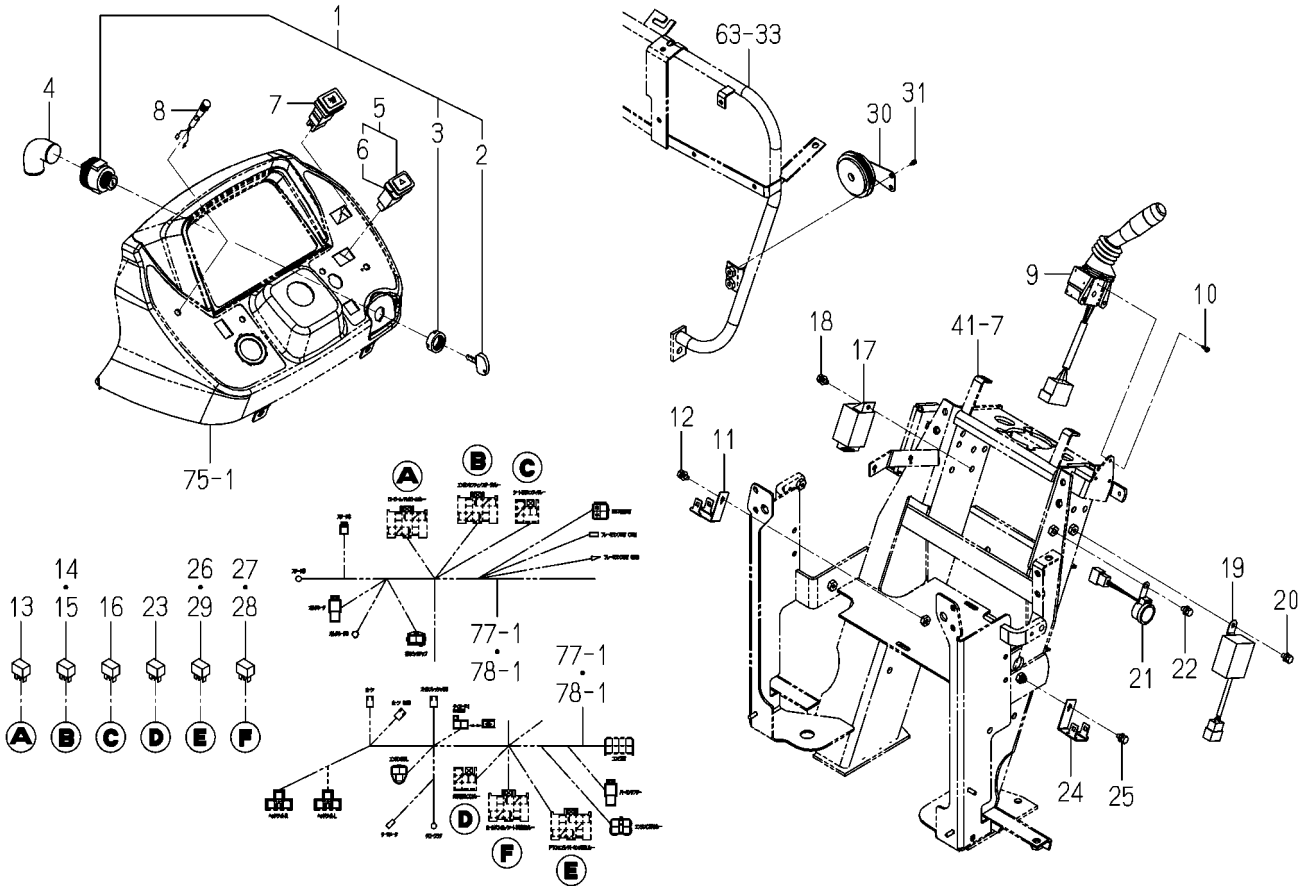

1739-681C-0100

KEY	PART CODE	DESCRIPTION	SPC	TYPE OF MODEL TXG237 F3		ITC	COL	GRP	REMARKS
1	1716-680-200-20	SWITCH/MAIN ASSY	*	1					
2	2186-536-211-00	KEY	*	2					
3	2186-536-212-00	NUT/RING	*	1					
4	1716-680-006-00	COVER/SWITCH	*	1					
5	1740-680-550-00	SWITCH/HAZARD ASSY	*	1					
6	1740-680-551-00	BULB/LAMP/14V60MA	*	1					
7	1809-670-290-00	SWITCH/BEACON ASSY	*	1					
8	1837-652-610-00	LAMP/LED ASSY	*	1					
9	1774-680-260-00	SWITCH/COMBINATION	*	1					
10	1772-652-001-00	SCREW/TAPPING/3.5X13	*	3					
11	1725-405-233-10	BRACKET/HOLDER	*	1					
12	V210-360-601-20	BOLT,SP/M6X12	*	1					
13	1800-652-400-00	RELAY/5P ASSY	*	2					
14	1800-652-400-00	RELAY/5P ASSY	*	1					
15	1800-652-400-00	RELAY/5P ASSY	*	1					
16	1800-652-400-00	RELAY/5P ASSY	*	1					
17	1739-681-220-20	RELAY/FLASHER/EEC	*	1					
18	V210-360-601-20	BOLT,SP/M6X12	*	1					
19	1774-680-250-00	UNIT/TIMER ASSY	*	1					
20	V210-360-601-20	BOLT,SP/M6X12	*	1					
21	1650-654-590-00	BUZZER ASSY	*	1					
22	V210-360-601-20	BOLT,SP/M6X12	*	1					
23	1800-652-400-00	RELAY/5P ASSY	*	1					
24	1725-405-233-10	BRACKET/HOLDER	*	1					
25	V210-360-601-20	BOLT,SP/M6X12	*	1					
26	1800-652-400-00	RELAY/5P ASSY	*	1					
27	1800-652-400-00	RELAY/5P ASSY	*	1					
28	1800-652-400-00	RELAY/5P ASSY	*	1					
29	1800-652-400-00	RELAY/5P ASSY	*	1					
30	1740-680-530-20	HORN ASSY	*	1					

FIG. 76 SWITCH SYSTEM(2/2)

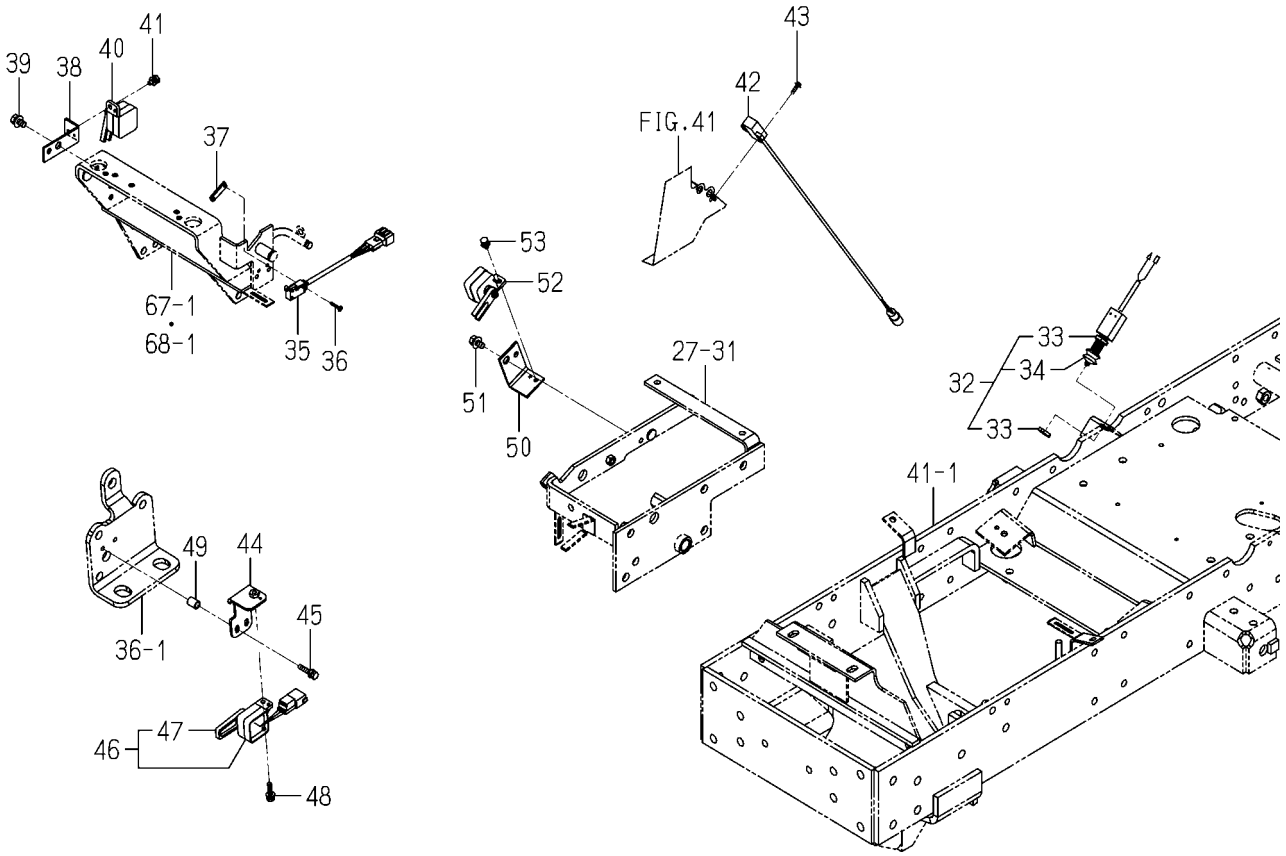

1739-681C-0100

KEY	PART CODE	DESCRIPTION	SPC	TYPE OF MODEL TXG237 F3		ITC	COL	GRP	REMARKS
31	V210-360-601-60	BOLT,SP/M6X16	*	2					
32	1772-654-280-10	SWITCH/PUSH ASSY	*	1					
33	1772-654-281-00	NUT	*	2					
34	1772-654-282-00	BOOT	*	1					
35	1725-680-220-10	SWITCH/LIMIT ASSY	*	1					
36	1614-129-003-00	SCREW/M03X20	*	2					
37	3642-496-007-10	PLATE,SWITCH	*	1					
38	1725-681-071-00	BRACKET/SWITCH/SUB	*	1					
39	V211-360-801-60	BOLT,SP/M8X16	*	1					
40	1740-680-520-10	SWITCH/SENSOR ASSY	*	1					
41	V210-360-601-20	BOLT,SP/M6X12	*	1					
42	1729-652-220-00	SWITCH ASSY	*	1					
43	V120-364-001-60	SCREW,SP/M4X16	*	2					
44	1739-681-720-00	BRACKET/SWITCH COMP	*	1					
45	V210-360-603-00	BOLT,SP/M6X30	*	2					
46	1716-680-330-10	SWITCH/LEVER ASSY	*	1					
47	1716-680-222-00	ARM	*	1					
48	V210-360-602-50	BOLT,SP/M6X25	*	1					
49	1739-681-071-00	COLLAR/08X12X15	*	2					
50	1739-681-081-00	BRACKET/SWITCH/HST	*	1					
51	V211-360-801-60	BOLT,SP/M8X16	*	1					
52	1740-680-520-10	SWITCH/SENSOR ASSY	*	1					
53	V210-360-601-20	BOLT,SP/M6X12	*	1					

FIG. 77 HARNESS SYSTEM(G TYPE)

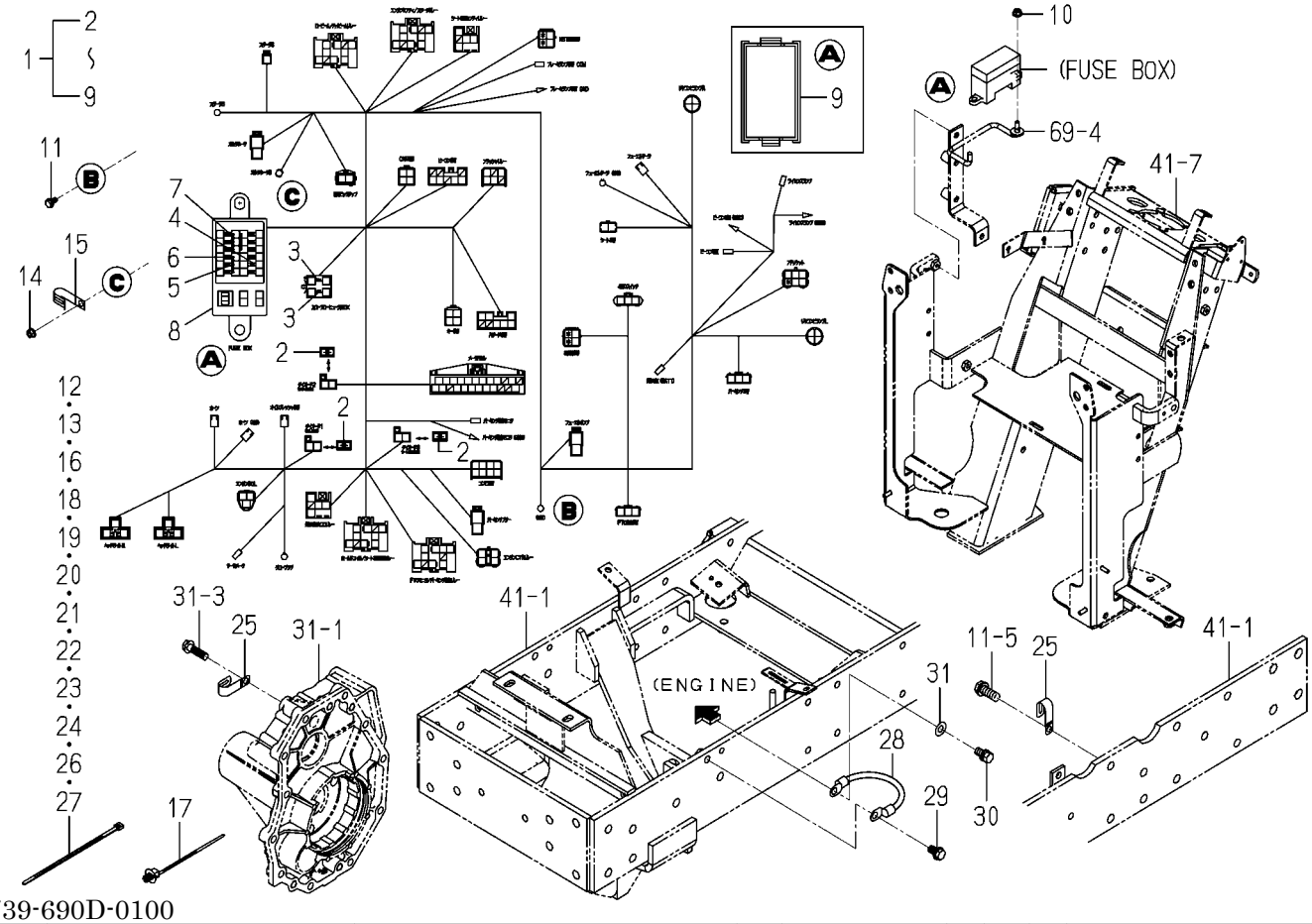

1739-690D-0100

KEY	PART CODE	DESCRIPTION	SPC	TYPE OF MODEL TXG237 F3		ITC	COL	GRP	REMARKS
1	1739-690-810-00	HARNESS/MAIN/F3 ASSY	*	1					
2	1560-666-212-00	DIODE	*	3					
3	1650-650-222-00	FUSE/SLOW BLOW/40A	*	2					
4	3824-247-202-00	FUSE/BLADE/32V05A	*	1					
5	3821-262-202-00	FUSE/BLADE/32V10A	*	4					
6	3821-262-203-00	FUSE(BLADE/32V15A)	*	5					
7	3821-262-204-00	FUSE/BLADE/32V20A	*	1					
8	3827-270-002-00	TOOL/FUSE	*	1					
9	1725-690-812-00	COVER/FUSEBOX	*	1					
10	V360-260-006-00	NUT/WASHER/M6	*	1					
11	V230-360-601-20	FLANGEBOLT/M6X12	*	1					
12	1376-402-003-00	BAND,WIRE/140	*	1					
13	1376-402-003-00	BAND,WIRE/140	*	1					
14	2500-326-017-00	NUT/FLANGE/M6	*	1					
15	1425-621-004-00	HOLDER/JE/9-9	*	1					
16	1342-402-006-00	BAND,WIRE/250	*	1					
17	1725-690-071-00	BAND	*	2					
18	1376-402-003-00	BAND,WIRE/140	*	1					
19	1376-402-003-00	BAND,WIRE/140	*	1					
20	1376-402-003-00	BAND,WIRE/140	*	1					
21	1376-402-003-00	BAND,WIRE/140	*	1					
22	1376-402-003-00	BAND,WIRE/140	*	1					
23	1376-402-003-00	BAND,WIRE/140	*	1					
24	1342-402-006-00	BAND,WIRE/250	*	2					
25	3737-172-011-00	CLAMP,HARNESS	*	2					
26	1376-402-003-00	BAND,WIRE/140	*	1					
27	1376-402-003-00	BAND,WIRE/140	*	2					
28	3623-263-001-00	WIRE,LEAD	*	1					
29	V231-361-002-00	FLANGEBOLT/M10X20	*	1					
30	6901-911-020-00	BOLT,SEMS/M10X20,7T	*	1					

FIG. 77 HARNESS SYSTEM(G TYPE)

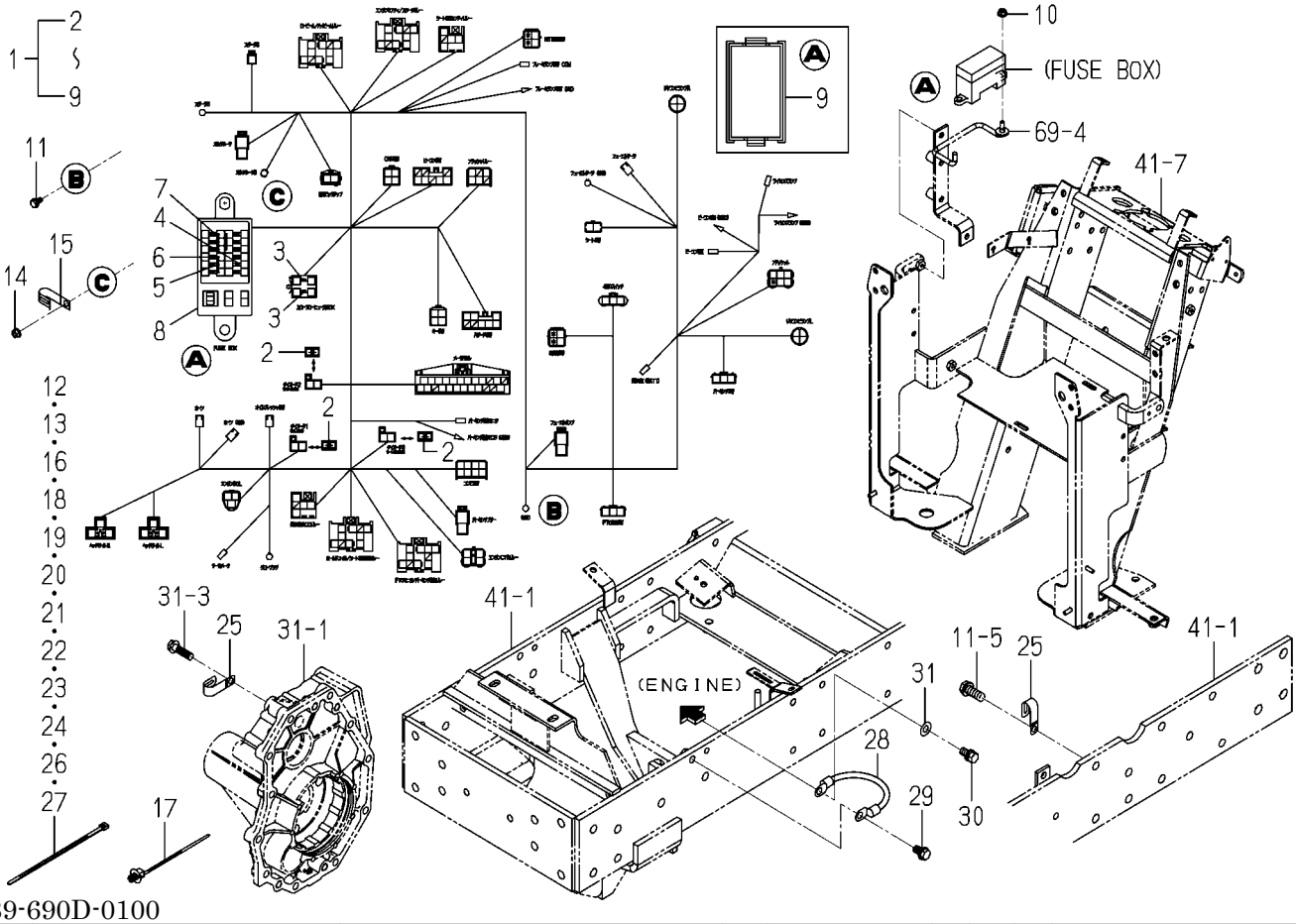

1739-690D-0100

KEY	PART CODE	DESCRIPTION	SPC	TYPE OF MODEL TXG237 F3		ITC	COL	GRP	REMARKS
31	V411-260-010-00	WASHER,PL/M10	*	1					

FIG. 78 HARNESS SYSTEM(EXCEPT G TYPE)

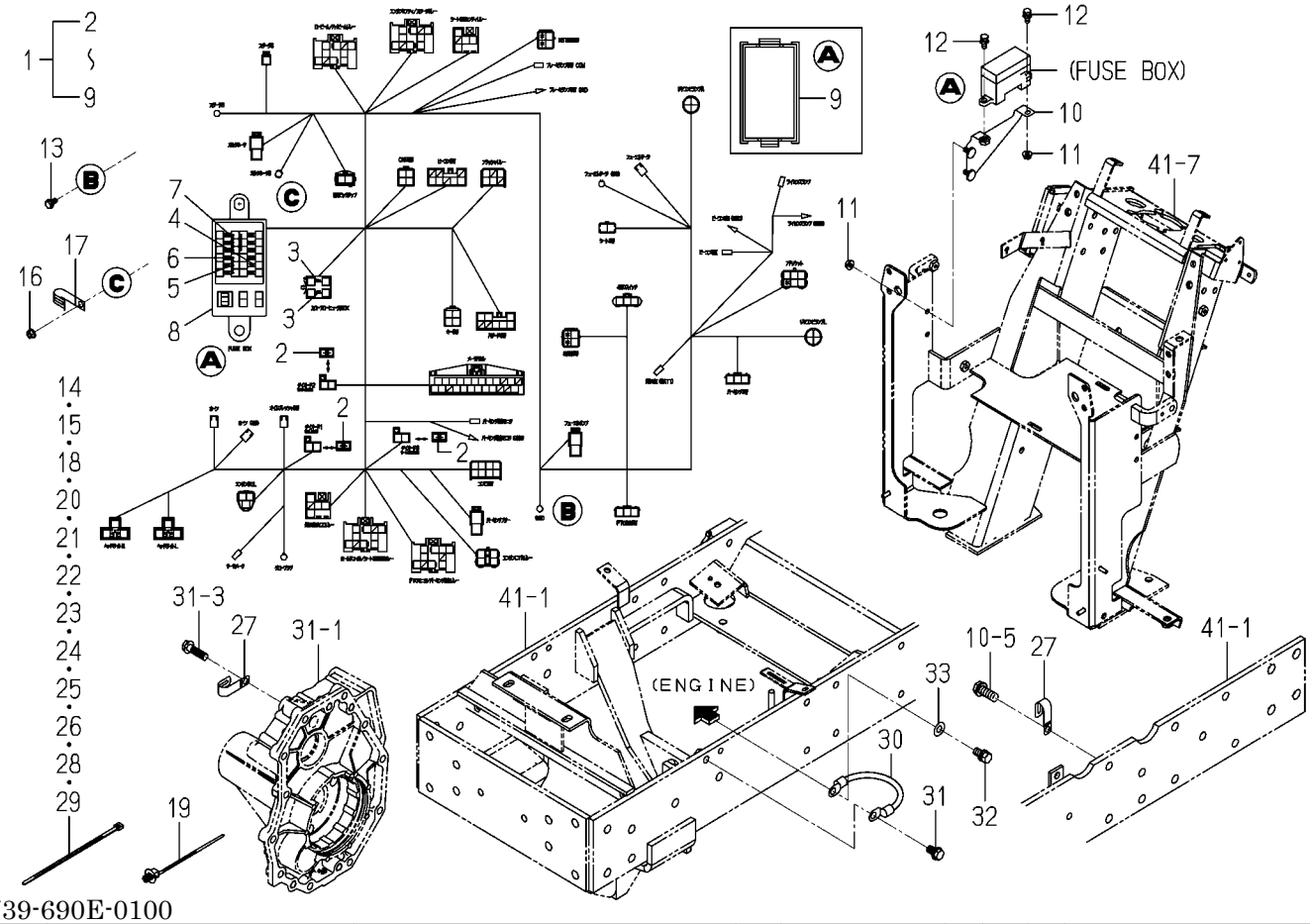

1739-690E-0100

KEY	PART CODE	DESCRIPTION	SPC	TYPE OF MODEL TXG237 F3		ITC	COL	GRP	REMARKS
1	1739-690-810-00	HARNESS/MAIN/F3 ASSY	*	1					
2	1560-666-212-00	DIODE	*	3					
3	1650-650-222-00	FUSE/SLOW BLOW/40A	*	2					
4	3824-247-202-00	FUSE/BLADE/32V05A	*	1					
5	3821-262-202-00	FUSE/BLADE/32V10A	*	4					
6	3821-262-203-00	FUSE(BLADE/32V15A)	*	5					
7	3821-262-204-00	FUSE/BLADE/32V20A	*	1					
8	3827-270-002-00	TOOL/FUSE	*	1					
9	1725-690-812-00	COVER/FUSEBOX	*	1					
10	1725-690-730-10	BRACKET/FUSE COMP	*	1					
11	V360-260-006-00	NUT/WASHER/M6	*	3					
12	V210-360-601-60	BOLT,SP/M6X16	*	2					
13	V230-360-601-20	FLANGEBOLT/M6X12	*	1					
14	1376-402-003-00	BAND,WIRE/140	*	1					
15	1376-402-003-00	BAND,WIRE/140	*	1					
16	2500-326-017-00	NUT/FLANGE/M6	*	1					
17	1425-621-004-00	HOLDER/JE/9-9	*	1					
18	1342-402-006-00	BAND,WIRE/250	*	1					
19	1725-690-071-00	BAND	*	2					
20	1376-402-003-00	BAND,WIRE/140	*	1					
21	1376-402-003-00	BAND,WIRE/140	*	1					
22	1376-402-003-00	BAND,WIRE/140	*	1					
23	1376-402-003-00	BAND,WIRE/140	*	1					
24	1376-402-003-00	BAND,WIRE/140	*	1					
25	1376-402-003-00	BAND,WIRE/140	*	1					
26	1342-402-006-00	BAND,WIRE/250	*	2					
27	3737-172-011-00	CLAMP,HARNESS	*	2					
28	1376-402-003-00	BAND,WIRE/140	*	1					
29	1376-402-003-00	BAND,WIRE/140	*	2					
30	3623-263-001-00	WIRE,LEAD	*	1					

FIG. 78 HARNESS SYSTEM(EXCEPT G TYPE)

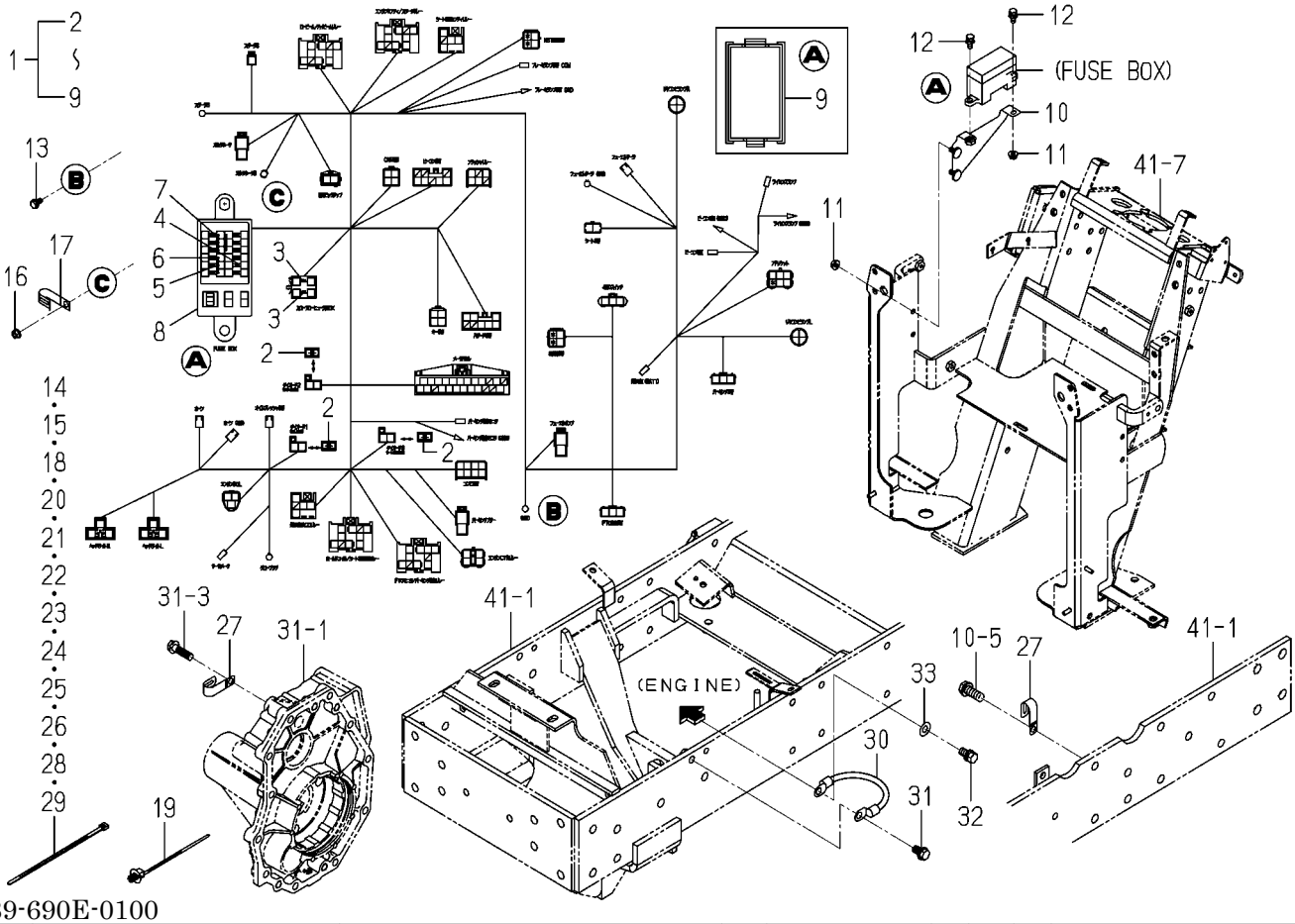

1739-690E-0100

KEY	PART CODE	DESCRIPTION	SPC	TYPE OF MODEL TXG237 F3		ITC	COL	GRP	REMARKS
31	V231-361-002-00	FLANGEBOLT/M10X20	*	1					
32	6901-911-020-00	BOLT,SEMS/M10X20,7T	*	1					
33	V411-260-010-00	WASHER,PL/M10	*	1					

FIG. 79 BRACKET(LAMP)SYSTEM (EXCEPT G TYPE)

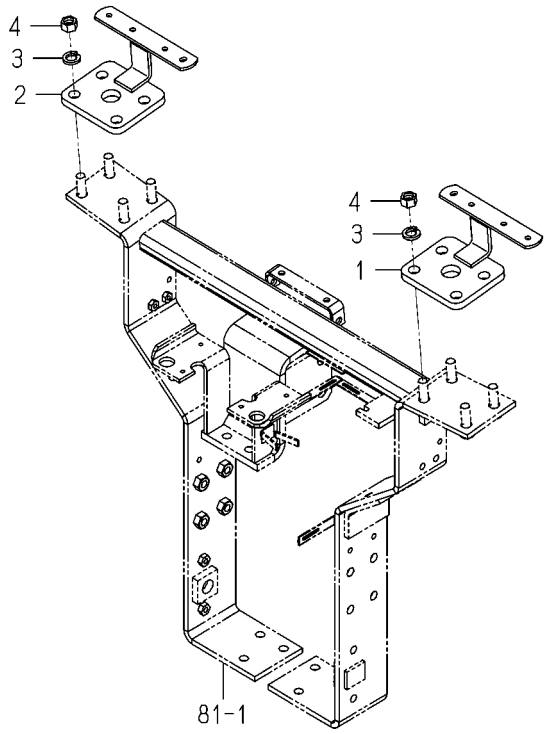

1739-702M-0100

KEY	PART CODE	DESCRIPTION	SPC	TYPE OF MODEL TXG237 F3		ITC	COL	GRP	REMARKS
1	1739-702-770-00	BRACKET/LAMP/LH COMP	*	1					
2	1739-702-780-00	BRACKET/LAMP/RH COMP	*	1					
3	V401-160-016-00	WASHER,SP/M16	*	8					
4	V304-460-016-00	NUT/M16/7T	*	8					

FIG. 80 ROPS SYSTEM(G TYPE)

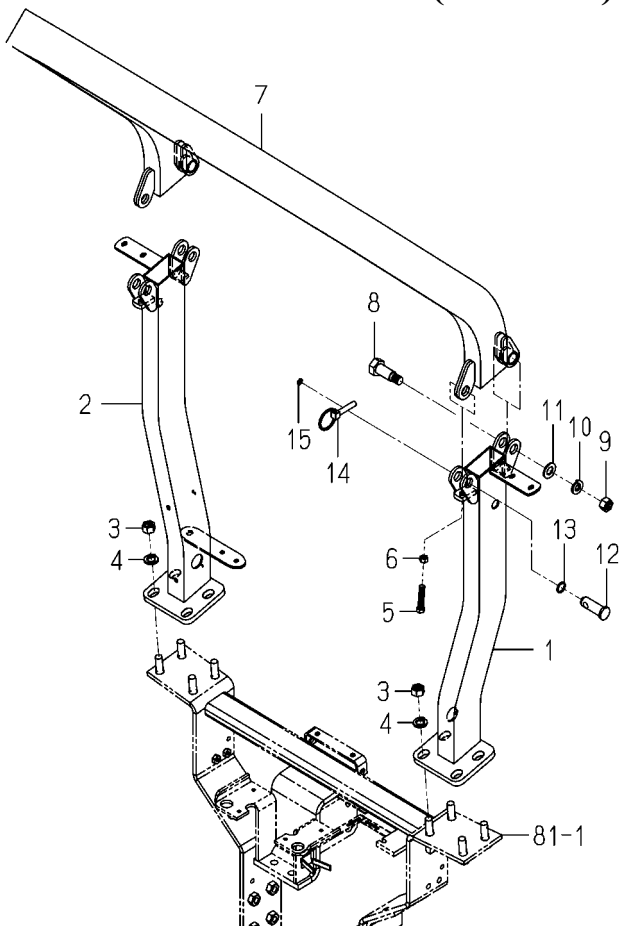

1739-702P-0100

KEY	PART CODE	DESCRIPTION	SPC	TYPE OF MODEL TXG237 F3		ITC	COL	GRP	REMARKS
1	1739-702-730-10	FRAME/MID/LH COMP	*	1			7F		
2	1739-702-740-10	FRAME/MID/RH COMP	*	1			7F		
3	V304-460-016-00	NUT/M16/7T	*	8					
4	V401-160-016-00	WASHER,SP/M16	*	8					
5	V201-261-005-00	BOLT/M10X50	*	2					
6	V304-260-010-00	NUT/M10	*	2					
7	1739-702-750-00	FRAME/UPPER COMP	*	1			7F		
8	1640-702-003-10	BOLT/SET/M16X60	*	2					
9	V304-260-016-00	NUT/M16	*	2					
10	V401-160-016-00	WASHER,SP/M16	*	2					
11	V411-260-016-00	WASHER,PL/M16	*	2					
12	1640-702-004-00	PIN/20X58	*	2					
13	V720-112-401-80	O-RING/1B,P18	*	2					
14	1673-525-002-30	LINKPIN	*	2					
15	V720-101-900-90	O-RING/1A,P9	*	2					

FIG. 81 FRAME(REAR)SYSTEM

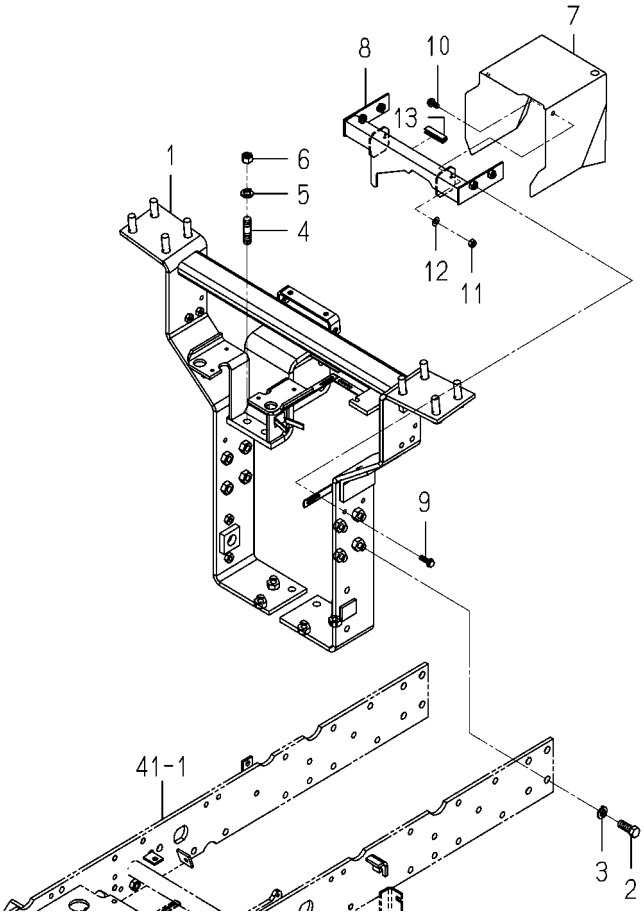

1739-702Q-0100

KEY	PART CODE	DESCRIPTION	SPC	TYPE OF MODEL TXG237 F3		ITC	COL	GRP	REMARKS
1	1739-702-860-00	FRAME/REAR COMP	*	1					
2	V201-361-403-50	BOLT/M14X35/7T	*	8					
3	V401-160-014-00	WASHER,SP/M14	*	8					
4	V251-441-403-50	STUD/M14X35/9T	*	2					
5	V401-160-014-00	WASHER,SP/M14	*	2					
6	V304-460-014-00	NUT/M14/7T	*	2					
7	1739-514-003-10	COVER/SHIELD	*	1					
8	1739-514-840-20	STAY/PTO/UPPER COMP	*	1					
9	V231-360-802-50	FLANGEBOLT/M8X25	*	4					
10	V231-360-801-60	FLANGEBOLT/M8X16	*	2					
11	1719-312-001-00	U-NUT	*	2					
12	V411-260-008-00	WASHER,PL/M8	*	2					
13	3666-202-005-10	PAD/50	*	1					

FIG. 82 ORNAMENT

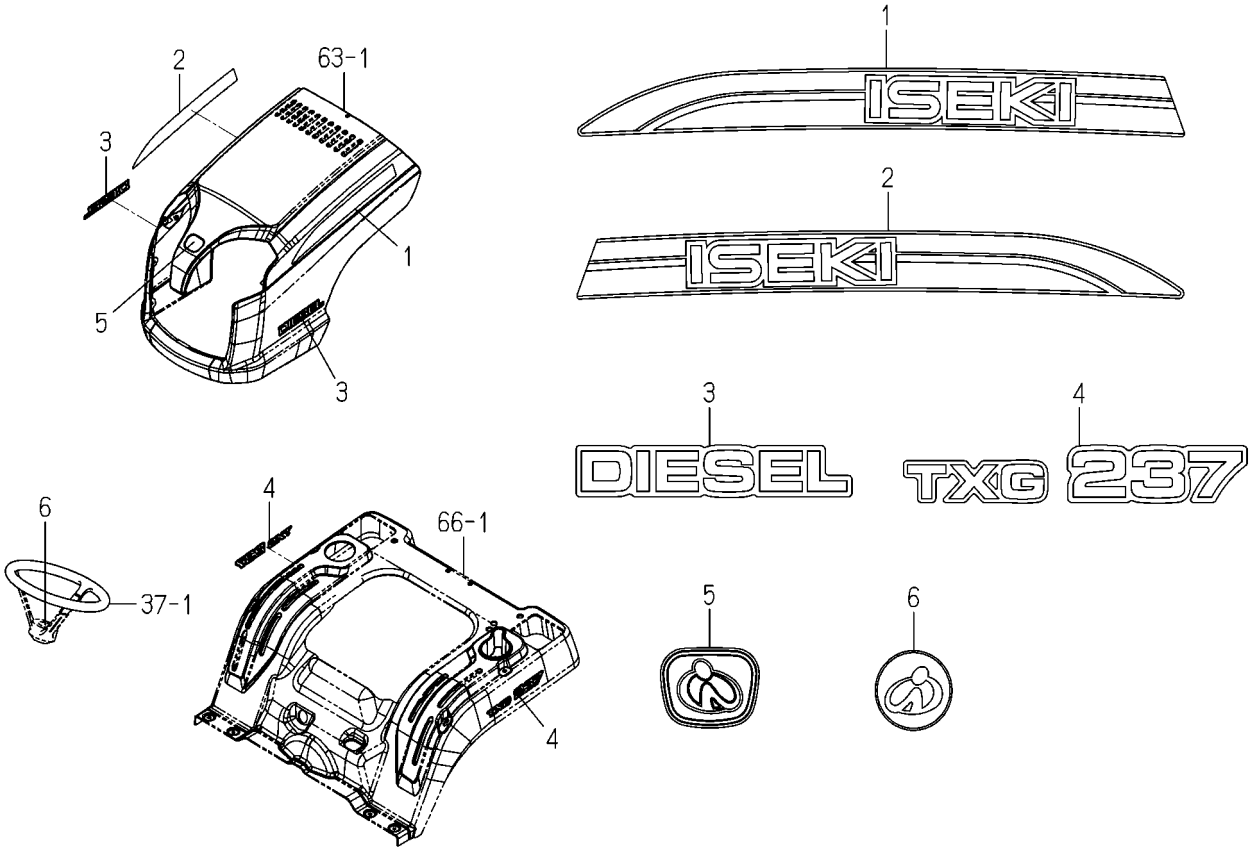

1739-901B-0100

KEY	PART CODE	DESCRIPTION	SPC	TYPE OF MODEL TXG237 F3		ITC	COL	GRP	REMARKS
1	1739-901-071-00	ORNAMENT/LH	*	1					
2	1739-901-072-00	ORNAMENT/RH	*	1					
3	1739-901-073-00	ORNAMENT/DIESEL	*	2					
4	1739-901-074-00	ORNAMENT/TXG237	*	2					
5	1118-901-002-00	ORNAMENT/I	*	1					
6	1696-901-006-00	ORNAMENT/STEERING	*	1					

FIG. 83 LABEL(CONTROL)

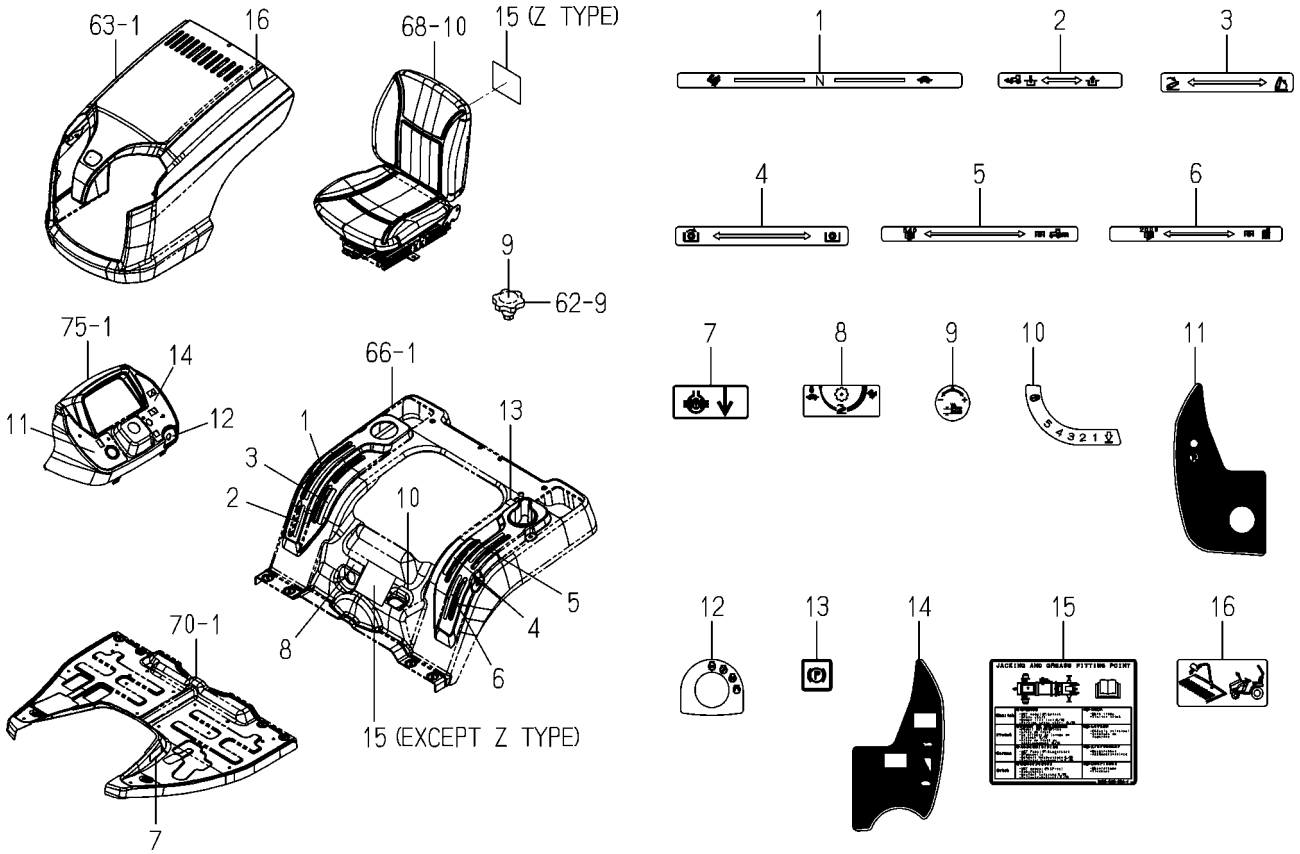

1739-902E-0100

KEY	PART CODE	DESCRIPTION	SPC	TYPE OF MODEL TXG237 F3		ITC	COL	GRP	REMARKS
1	1739-902-083-00	LABEL/CONTROL/SUB	*	1					
2	1739-902-084-00	LABEL/CONTROL/4WD	*	1					
3	1739-902-085-00	LABEL/CONTROL/POSITI	*	1					
4	1739-902-086-00	LABEL/CLUTCH/PTO	*	1					
5	1739-902-087-00	LABEL/CONTROL/PTO/R	*	1					
6	1739-902-088-00	LABEL/CONTROL/PTO/M	*	1					
7	1739-902-092-00	LABEL/DIFF/E4	*	1					
8	1739-902-090-00	LABEL/CONTROL/SLOW R	*	1					
9	1725-554-034-00	LABEL/ADJUST	*	1					
10	1725-554-035-10	LABEL/GAUGE	*	1					
11	1739-902-093-00	LABEL/CONTROL/LH	*	1					
12	1739-902-091-00	LABEL/SWITCH/MAIN	*	1					
13	1774-902-005-00	LABEL/PARKING	*	1					
14	1739-902-094-00	LABEL/CONTROL/RH	*	1					
15	1739-902-081-00	LABEL/MAINTENANCE	*	1					
16	1739-902-082-00	LABEL/CONTROL/HOOD	*	1					

FIG. 84 LABEL(CAUTION)SYSYTEM (EXCEPT G TYPE)

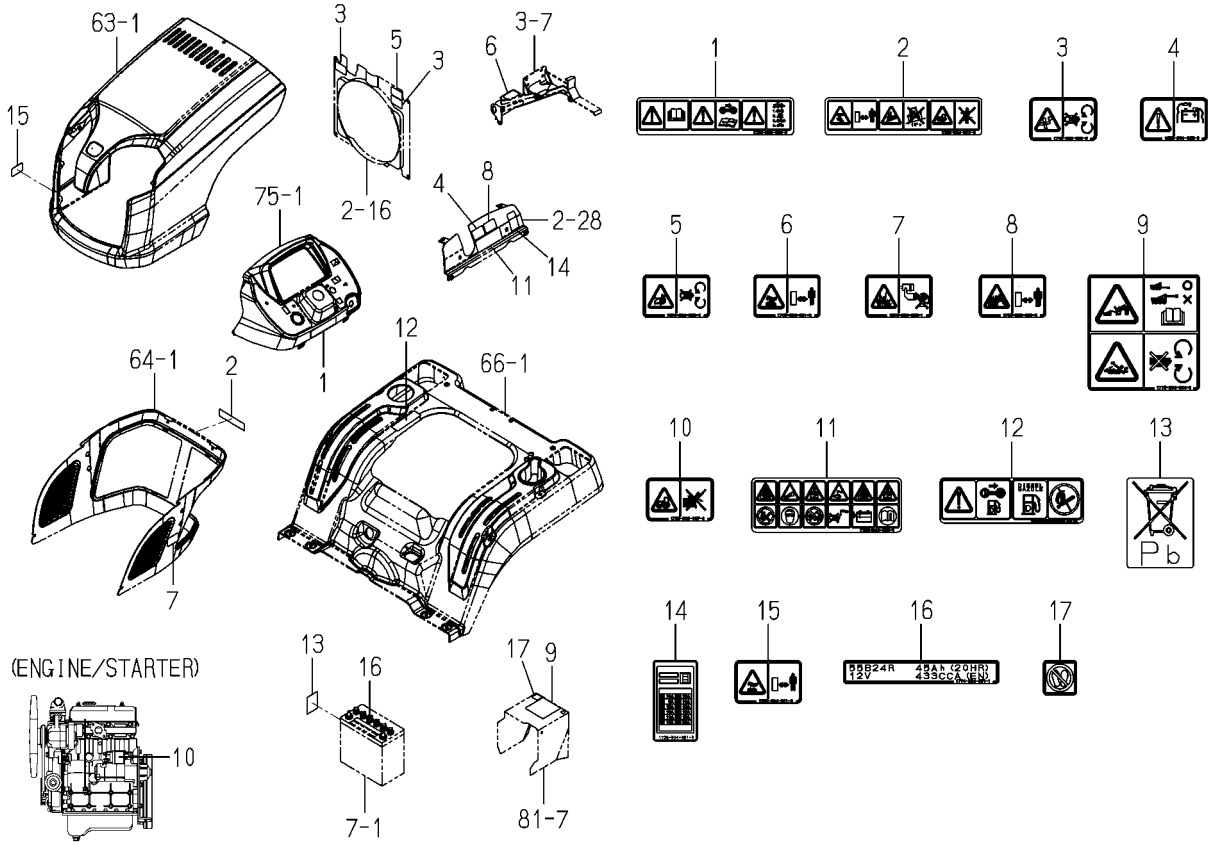

1739-904E-0100

KEY	PART CODE	DESCRIPTION	SPC	TYPE OF MODEL TXG237	TYPE OF MODEL F3	ITC	COL	GRP	REMARKS
1	1739-904-082-00	LABEL/DRIVE/A	*	1					
2	1739-904-072-00	LABEL/DRIVE/B	*	1					
3	1705-902-006-00	LABEL/W/FAN	*	2					
4	1636-901-022-00	LABEL/CAUTION/BATTER	*	1					
5	1674-904-008-00	LABEL/WARNING/BELT	*	1					
6	1739-904-001-00	LABEL/WARNING/HOT	*	1					
7	1674-904-002-10	LABEL/ETHER	*	1					
8	1705-902-008-00	LABEL/W/RADIATOR	*	1					
9	1776-904-004-00	LABEL/PTO/TRAILER	*	1					
10	1705-902-007-00	LABEL/W/STARTER	*	1					
11	1705-904-002-10	LABEL/BATTERY	*	1					
12	1739-904-004-00	LABEL/FUEL	*	1					
13	1817-904-004-00	LABEL/BATTERY	*	1					
14	1739-904-081-00	LABEL/FUSE	*	1					
15	1739-904-001-00	LABEL/WARNING/HOT	*	1					
16	1774-904-031-10	LABEL/BATTERY/55B24R	*	1					
17	1817-904-001-00	LABEL/CAUTION/STEP	*	1					

FIG. 85 LABEL(CAUTION)SYSYTEM(G TYPE)

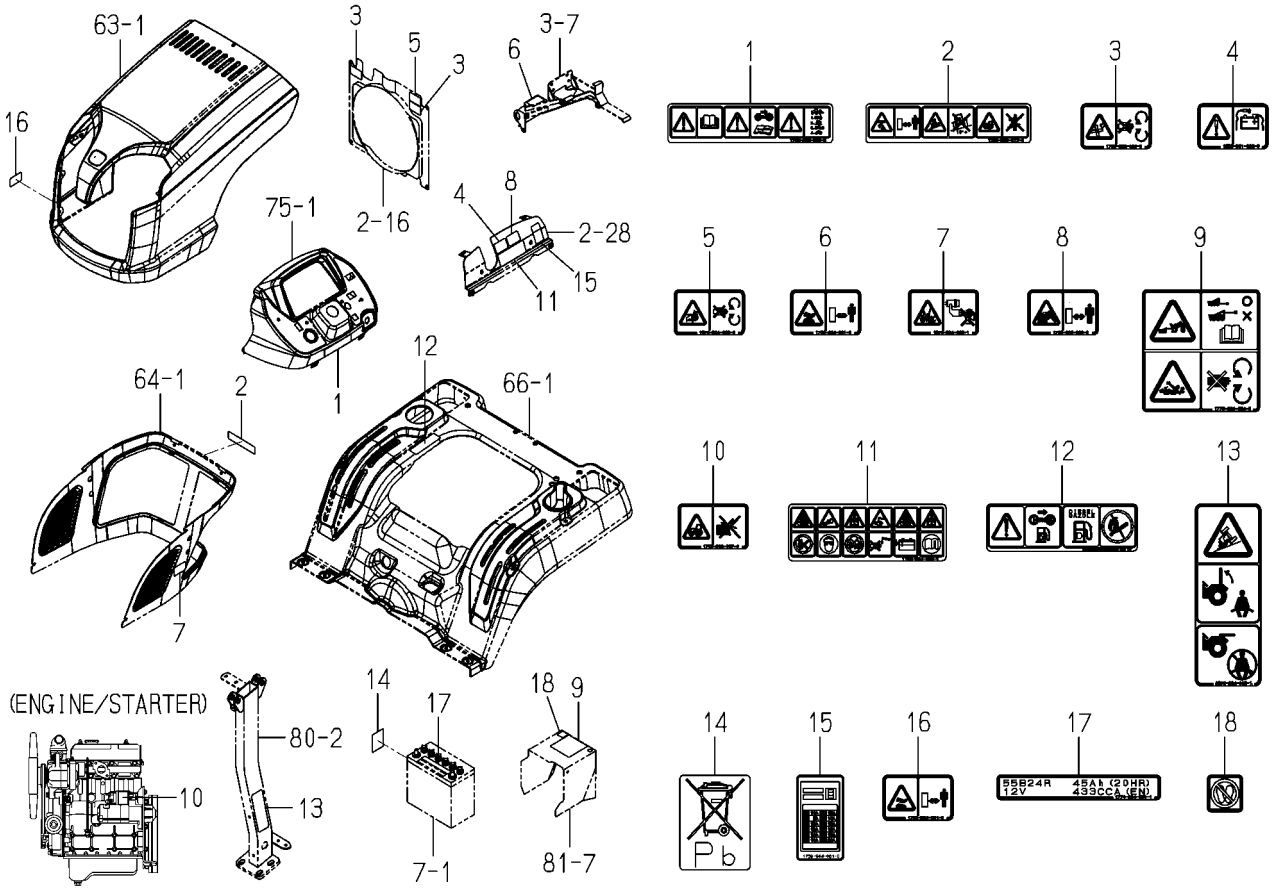

1739-904F-0100

KEY	PART CODE	DESCRIPTION	SPC	TYPE OF MODEL TXG237 F3		ITC	COL	GRP	REMARKS
1	1739-904-082-00	LABEL/DRIVE/A	*	1					
2	1739-904-072-00	LABEL/DRIVE/B	*	1					
3	1705-902-006-00	LABEL/W/FAN	*	2					
4	1636-901-022-00	LABEL/CAUTION/BATTER	*	1					
5	1674-904-008-00	LABEL/WARNING/BELT	*	1					
6	1739-904-001-00	LABEL/WARNING/HOT	*	1					
7	1674-904-002-10	LABEL/ETHER	*	1					
8	1705-902-008-00	LABEL/W/RADIATOR	*	1					
9	1776-904-004-00	LABEL/PTO/TRAILER	*	1					
10	1705-902-007-00	LABEL/W/STARTER	*	1					
11	1705-904-002-10	LABEL/BATTERY	*	1					
12	1739-904-004-00	LABEL/FUEL	*	1					
13	1674-904-005-10	LABEL/ROPS	*	1					
14	1817-904-004-00	LABEL/BATTERY	*	1					
15	1739-904-081-00	LABEL/FUSE	*	1					
16	1739-904-001-00	LABEL/WARNING/HOT	*	1					
17	1774-904-031-10	LABEL/BATTERY/55B24R	*	1					
18	1817-904-001-00	LABEL/CAUTION/STEP	*	1					

FIG. 86 WHEEL(REAR/AGR/26X12)SYSTEM (OPTION)

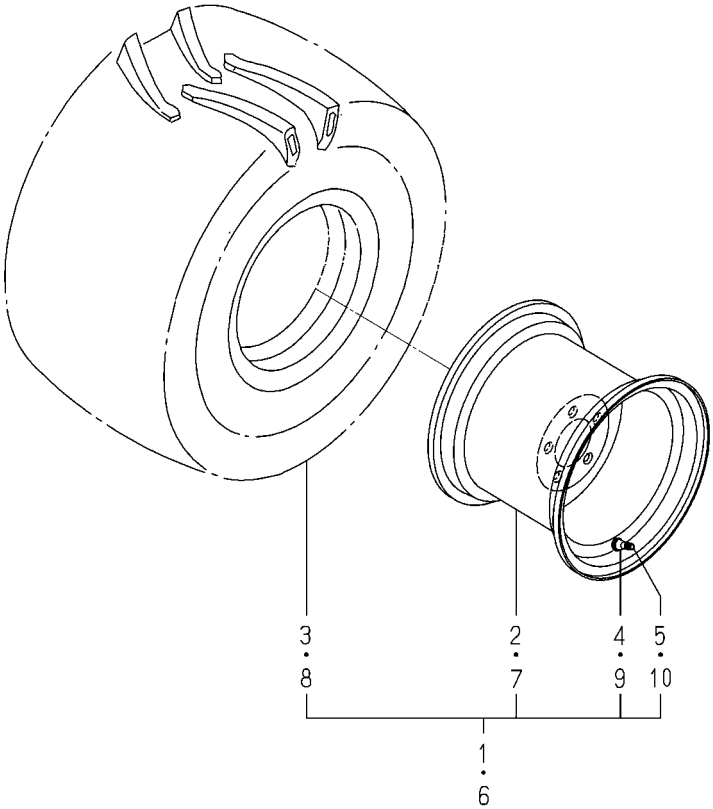

1739-317 -0100

KEY	PART CODE	DESCRIPTION	SPC	TYPE OF MODEL TXG237 F3		ITC	COL	GRP	REMARKS
1	1739-317-320-10	TIRE/26X12.00/L ASSY	T	1					
2	1739-317-270-00	WHEEL/12X10.5 COMP	T	1			6G		
3	1739-317-321-10	TIRE/26X12.00-12	T	1					
4	1728-441-220-00	RIMVALVE ASSY	T	1					
5	V999-200-003-00	CAP,TIRE VALVE	T	1					
6	1739-317-330-10	TIRE/26X12.00/R ASSY	T	1					
7	1739-317-270-00	WHEEL/12X10.5 COMP	T	1			6G		
8	1739-317-321-10	TIRE/26X12.00-12	T	1					
9	1728-441-220-00	RIMVALVE ASSY	T	1					
10	V999-200-003-00	CAP,TIRE VALVE	T	1					

FIG. 87 WHEEL(REAR/TURF/26X12)SYSTEM (OPTION)

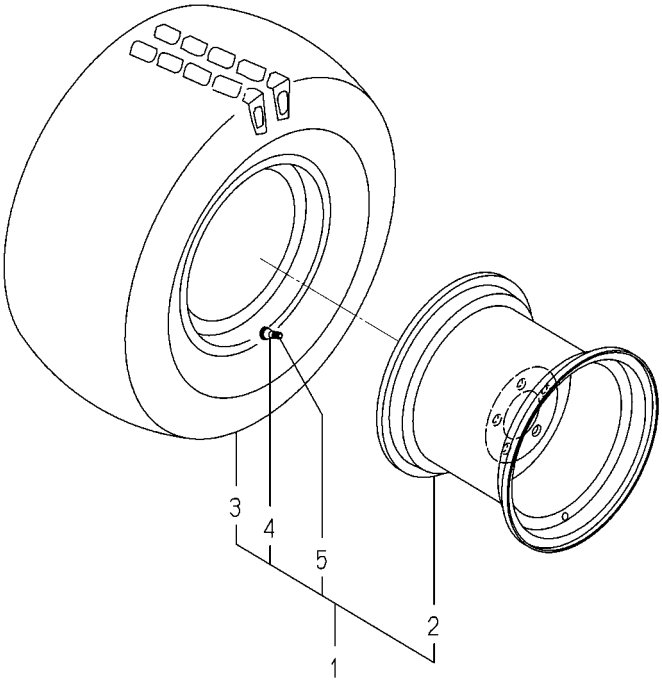

1739-317A-0100

KEY	PART CODE	DESCRIPTION	SPC	TYPE OF MODEL TXG237 F3		ITC	COL	GRP	REMARKS
1	1739-317-360-10	TIRE/TURF/26X12.00	T	2					
2	1739-317-270-00	WHEEL/12X10.5 COMP	T	2			6G		
3	1739-317-361-10	TIRE/TURF/26X12.00-1	T	2					
4	1728-441-220-00	RIMVALVE ASSY	T	2					
5	V999-200-003-00	CAP,TIRE VALVE	T	2					

FIG. 88 HITCH(FRONT)SET (EXCEPT G TYPE)(OPTION)

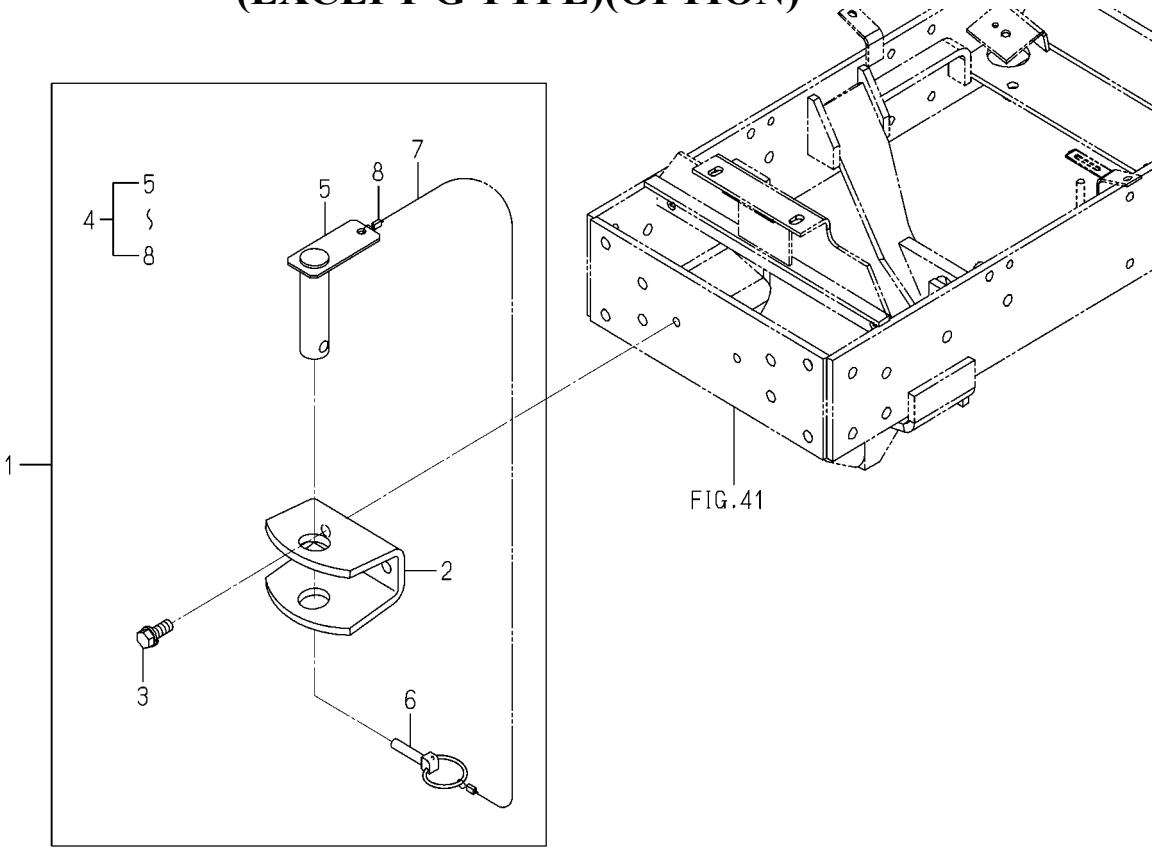

1776-411Y-0100

KEY	PART CODE	DESCRIPTION	SPC	TYPE OF MODEL TXG237 F3		ITC	COL	GRP	REMARKS
1	1776-411-300-00	HITCH/FRONT SET	T	1					
2	1776-411-002-00	PLATE/HITCH	T	1					
3	1725-201-002-00	BOLT/S	T	2					
4	1776-411-200-10	PIN ASSY	T	1					
5	1776-411-210-10	PIN/30X116 COMP	T	1					
6	1673-525-002-30	LINKPIN	T	1					
7	1772-521-221-20	WIRE/02X300	T	1					
8	1614-702-552-00	RING	T	2					

FIG. 89 WHEEL(FRONT/AGR/18X8.5)SET (OPTION)

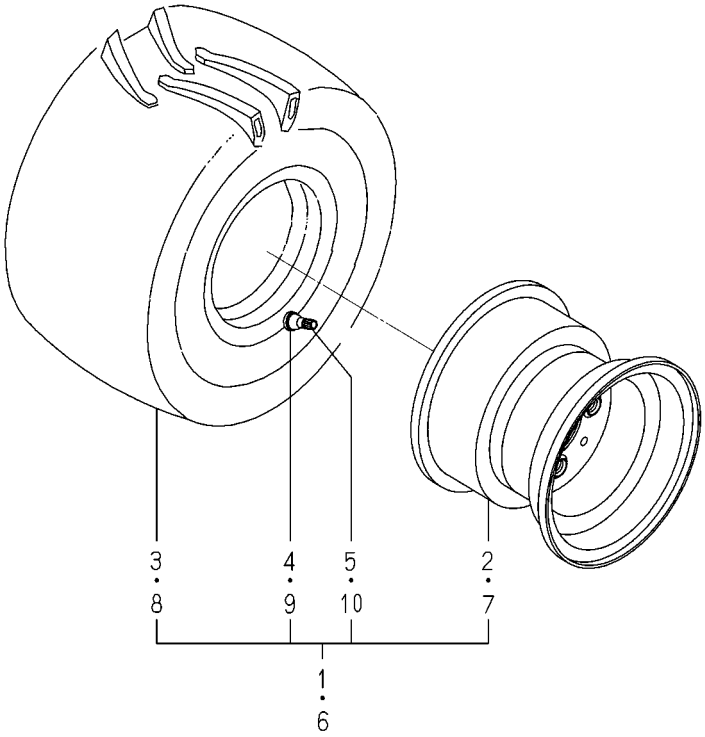

1739-437 -0100

KEY	PART CODE	DESCRIPTION	SPC	TYPE OF MODEL TXG237 F3		ITC	COL	GRP	REMARKS
1	1739-437-420-10	TIRE/18X8.50/LH ASSY	T	1					
2	1739-437-440-01	WHEEL/8.0X7.0 COMP	T	1			6G		
3	1739-437-421-10	TIRE/18X8.50-8	T	1					
4	1728-441-220-00	RIMVALVE ASSY	T	1					
5	V999-200-003-00	CAP,TIRE VALVE	T	1					
6	1739-437-430-10	TIRE/18X8.50/RH ASSY	T	1					
7	1739-437-440-01	WHEEL/8.0X7.0 COMP	T	1			6G		
8	1739-437-421-10	TIRE/18X8.50-8	T	1					
9	1728-441-220-00	RIMVALVE ASSY	T	1					
10	V999-200-003-00	CAP,TIRE VALVE	T	1					

FIG. 90 WHEEL(FRONT/TURF/18X835)SYSTEM (OPTION)

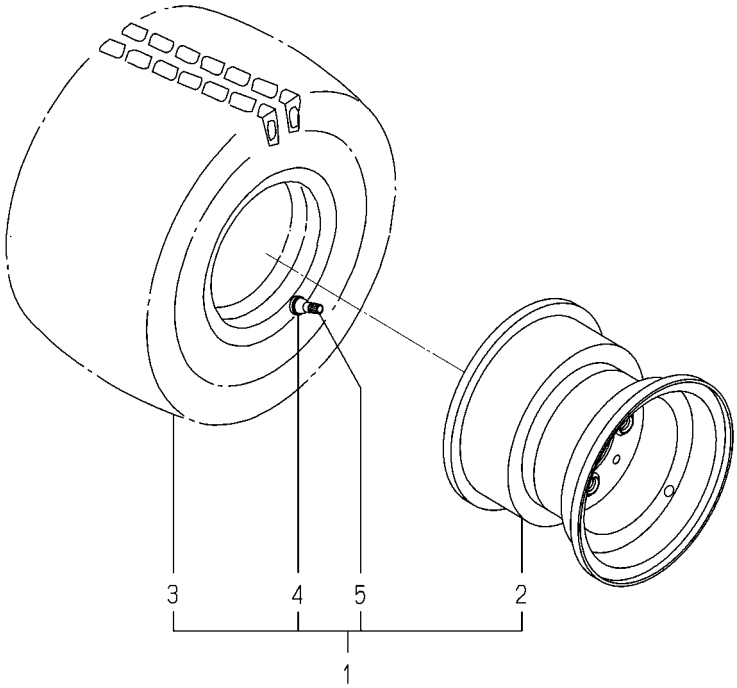

1739-437A-0100

KEY	PART CODE	DESCRIPTION	SPC	TYPE OF MODEL TXG237 F3		ITC	COL	GRP	REMARKS
1	1739-437-460-10	TIRE/TURF/18X8.50	T	2					
2	1739-437-440-01	WHEEL/8.0X7.0 COMP	T	2			6G		
3	1728-441-701-10	TIRE/TURF/18X8.50-8	T	2					
4	1728-441-220-00	RIMVALVE ASSY	T	2					
5	V999-200-003-00	CAP,TIRE VALVE	T	2					

FIG. 91 HITCH(TRAILER)SET (EXCEPT G TYPE)(OPTION)

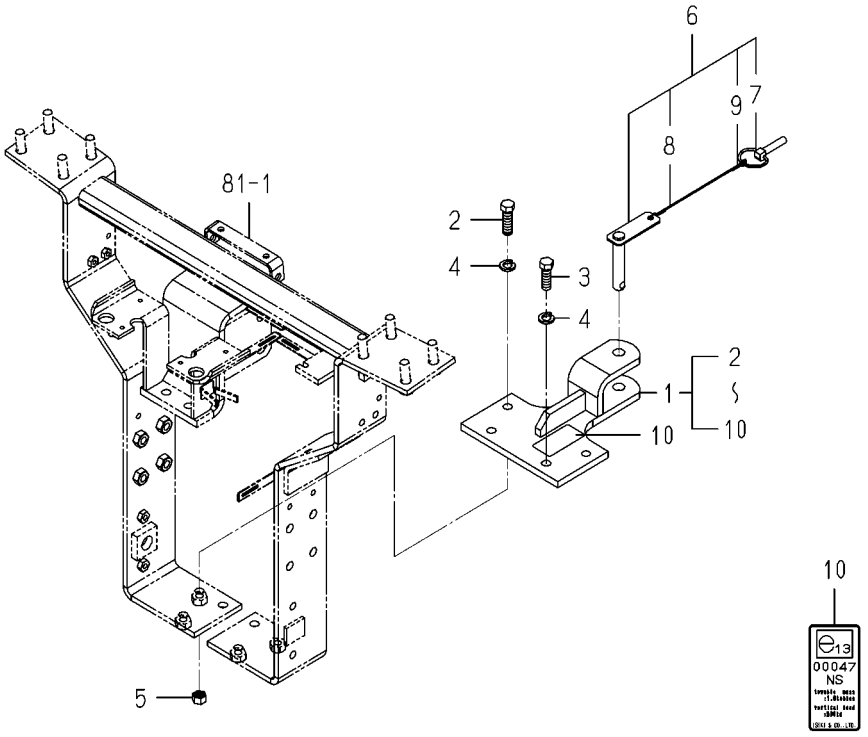

1739-521A-0100

KEY	PART CODE	DESCRIPTION	SPC	TYPE OF MODEL TXG237 F3		ITC	COL	GRP	REMARKS
1	1739-521-200-00	HITCH/TRAILER SET	T	1					
2	V201-361-405-50	BOLT/M14X55/7T	T	2					
3	V201-361-404-00	BOLT/M14X40/7T	T	2					
4	V401-160-014-00	WASHER,SP/M14	T	4					
5	V304-260-014-00	NUT/M14	T	2					
6	1739-521-220-00	PIN/18X98 ASSY	T	1					
7	1673-525-002-30	LINKPIN	T	1					
8	1772-521-221-20	WIRE/02X300	T	1					
9	1614-702-552-00	RING	T	1					
10	1739-521-001-00	LABEL/TRH1739	T	1					

FIG. 92 KIT(OUTLET)SET(G TYPE)(OPTION)

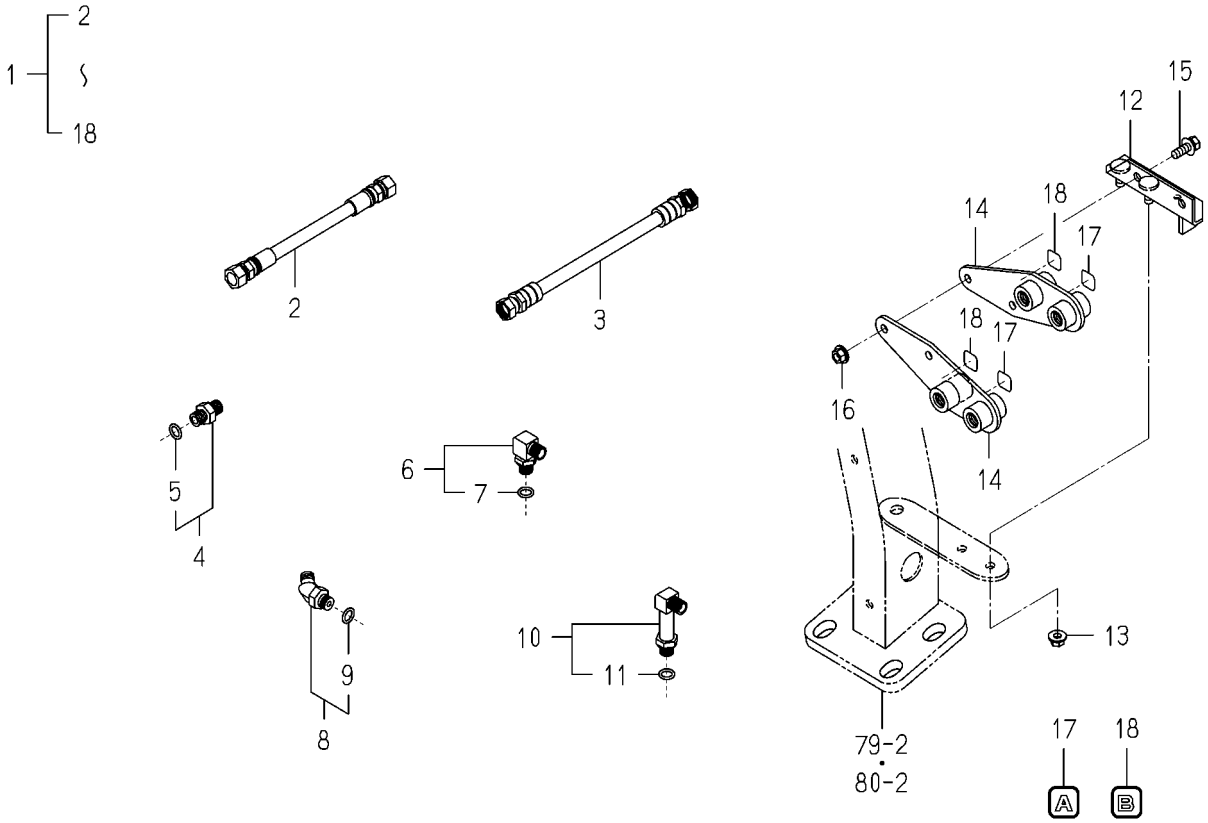

1739-530H-0100

KEY	PART CODE	DESCRIPTION	SPC	TYPE OF MODEL TXG237 F3		ITC	COL	GRP	REMARKS
1	1739-530-650-00	KIT/OUTLET/VALV SET	T	1					
2	1703-509-003-00	HOSE/DERIVERY	T	2					
3	1669-407-200-20	HOSE/265 ASSY	T	2					
4	3829-387-410-00	ADPTER/G1/4.1/4	T	2					
5	V720-112-401-10	O-RING/1B,P11	T	2					
6	1705-408-230-00	ADAPTER/L/G1/4 ASSY	T	3					
7	V720-112-401-10	O-RING/1B,P11	T	3					
8	P113-211-300-00	ELBOW/45DEG ASSY	T	1					
9	V720-112-401-10	O-RING/1B,P11	T	1					
10	P113-211-330-00	ELBOW/90DEG/L ASSY	T	2					
11	V720-112-401-10	O-RING/1B,P11	T	2					
12	1739-530-350-00	BRACKET/OUTLET COMP	T	1					
13	V362-260-008-00	NUT/WASHER/M8	T	2					
14	1739-530-310-00	STAY/PIPE COMP	T	2					
15	V231-360-802-00	FLANGEBOLT/M8X20	T	2					
16	V362-260-008-00	NUT/WASHER/M8	T	2					
17	1518-903-006-00	MARK/PORT/A	T	2					
18	1518-903-007-00	MARK/PORT/B	T	2					

FIG. 93 LEVER(VALVE)SET(G TYPE)(OPTION)

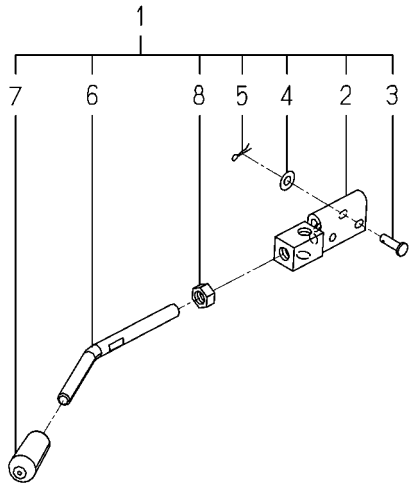

1739-530J-0100

KEY	PART CODE	DESCRIPTION	SPC	TYPE OF MODEL TXG237 F3		ITC	COL	GRP	REMARKS
1	1739-530-760-00	LEVER/VALVE/1SSET	T	1					
2	1739-530-520-00	ARM/LEVER COMP	T	1					
3	1739-530-004-00	PIN/05X17	T	2					
4	V411-260-005-00	WASHER,PL/M5	T	2					
5	V560-160-005-00	PIN/SNAP	T	2					
6	1739-512-001-00	LEVER/M08	T	1					
7	1444-507-003-00	GRIP,LEVER	T	1					
8	V304-260-008-00	NUT/M8	T	1					

FIG. 94 LINK(MOWER/CYLINDER/237)SET (OPTION)

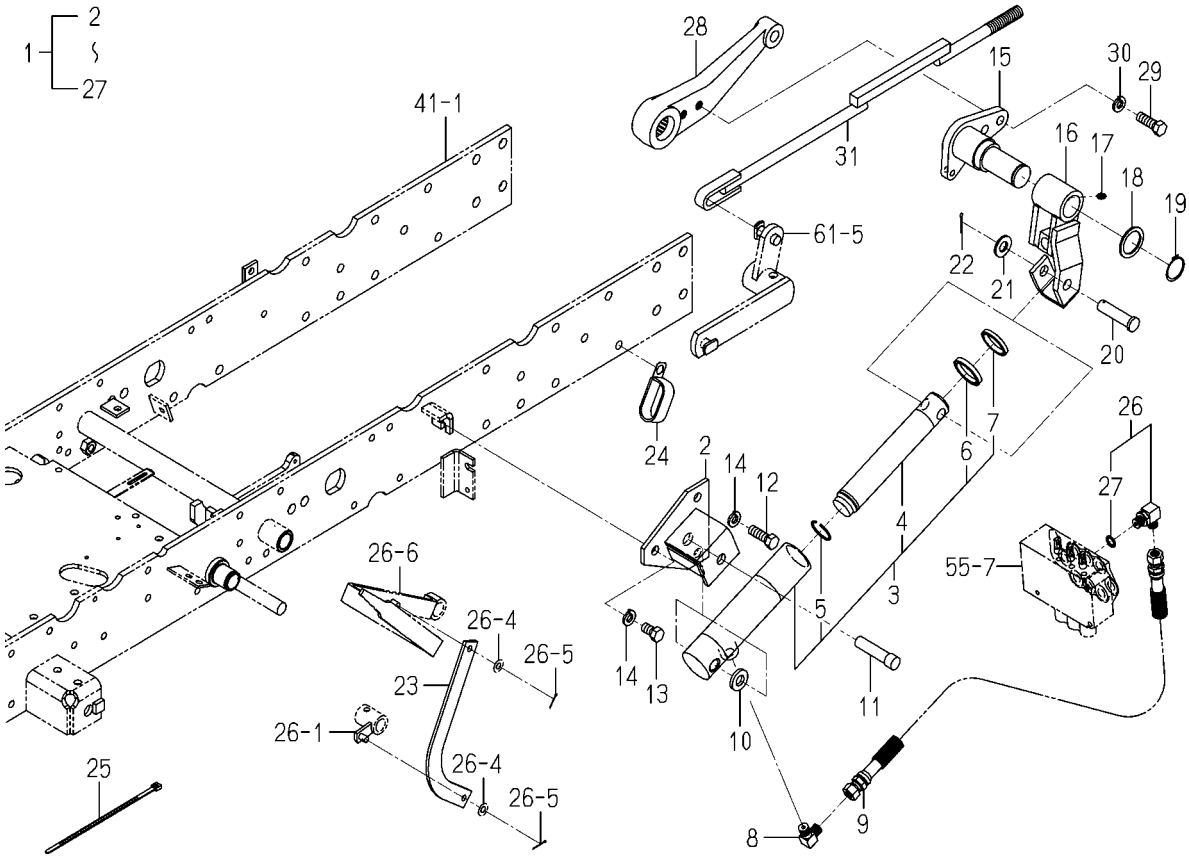

1739-555 -0100

KEY	PART CODE	DESCRIPTION	SPC	TYPE OF MODEL TXG237 F3		ITC	COL	GRP	REMARKS
1	1739-554-520-00	LINK/MOWER/CYLINDER/	T	1					
2	1739-554-370-00	BRACKET/CYLINDE COMP	T	1					
3	1739-554-220-00	CYLINDER/TXG ASSY	T	1					
4	K182-032-001-00	PISTON	T	1					
5	K182-002-002-00	STOPPER,PISTON	T	1					
6	K182-032-002-00	PACKING,ROD	T	1					
7	K182-032-003-00	DUST/SEAL	T	1					
8	3768-185-022-10	ADAPTER/90DEG/PUMP	T	1					
9	1740-517-580-10	HOSE/1500 ASSY	T	1					
10	1739-554-003-00	WASHER/15X30X05	T	1					
11	1739-554-001-10	PIN/15X72	T	1					
12	V201-361-203-50	BOLT/M12X35/7T	T	2					
13	V201-361-202-00	BOLT/M12X20/7T	T	1					
14	V401-160-012-00	WASHER,SP/M12	T	3					
15	1739-554-350-00	BRACKET/ARM COMP	T	1					
16	1739-554-360-00	ARM COMP	T	1					
17	V760-150-000-00	NIPPLE,GREASE	T	1					
18	8655-501-051-00	WASHER/33X44X02	T	1					
19	V704-140-032-00	RING,SNAP/32 C	T	1					
20	1705-508-002-00	PIN/15X60	T	1					
21	V411-260-014-00	WASHER,PL/M14	T	1					
22	V500-163-002-50	PIN,SPLIT/3X25	T	1					
23	1739-554-005-00	PLATE	T	1					
24	3650-261-001-00	CLAMP/28X55	T	3					
25	1342-402-006-00	BAND,WIRE/250	T	2					
26	1705-408-230-00	ADAPTER/L/G1/4 ASSY	T	1					
27	V720-112-401-10	O-RING/1B,P11	T	1					
28	1725-501-006-00	ARM/LIFT/RH	T	1					
29	V203-361-203-50	BOLT/M12X35/7T,P1.25	T	2					
30	V401-160-012-00	WASHER,SP/M12	T	2					

FIG. 94 LINK(MOWER/CYLINDER/237)SET (OPTION)

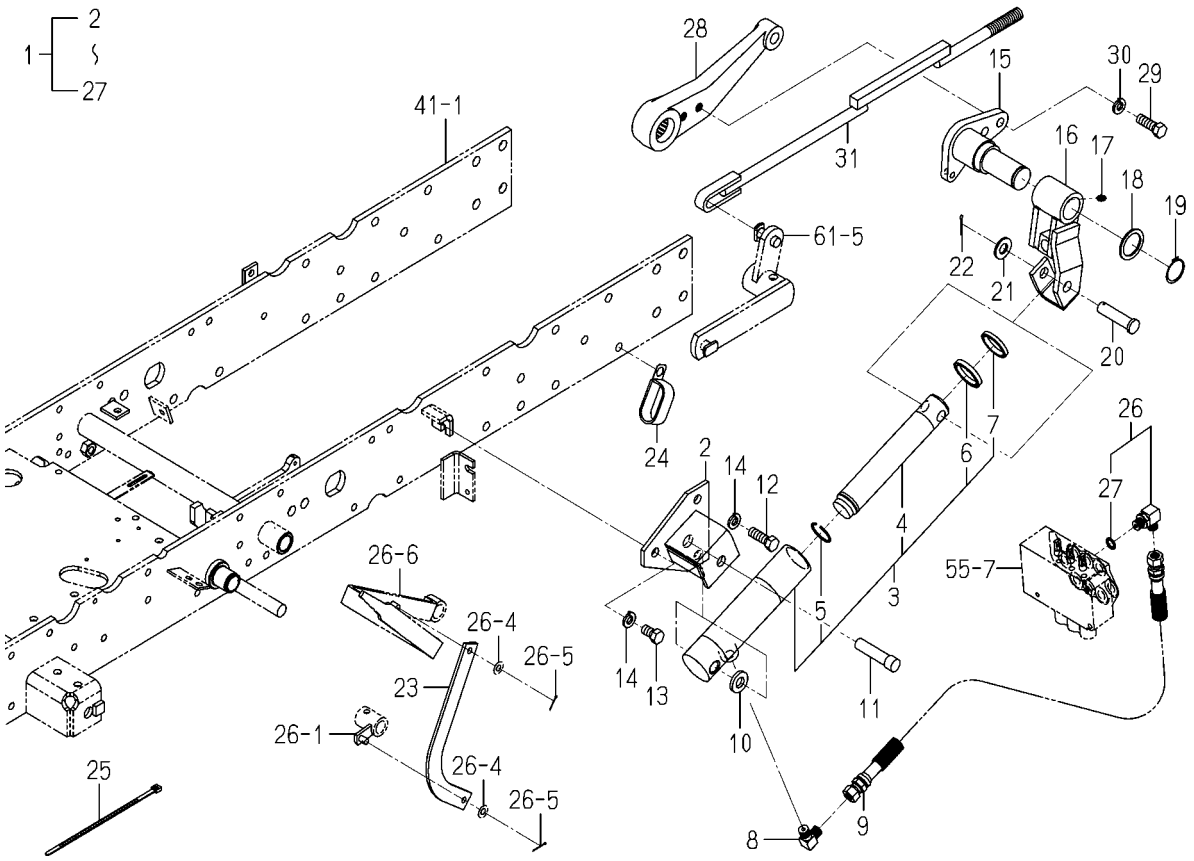

1739-555 -0100

KEY	PART CODE	DESCRIPTION	SPC	TYPE OF MODEL TXG237 F3		ITC	COL	GRP	REMARKS
31	1725-553-720-10	ROD/LINK COMP	T	1					

FIG. 95 KIT SET(G TYPE)(OPTION)

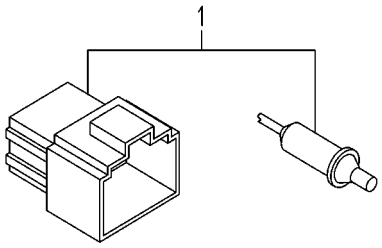

1739-690C-0100

KEY	PART CODE	DESCRIPTION	SPC	TYPE OF MODEL TXG237 F3		ITC	COL	GRP	REMARKS
1	1739-690-730-00	KIT/CN-4P-M SET	T	1					

FIG. 96 HARNESS(BATTERY/CIRCUIT)SET (REPAIR)

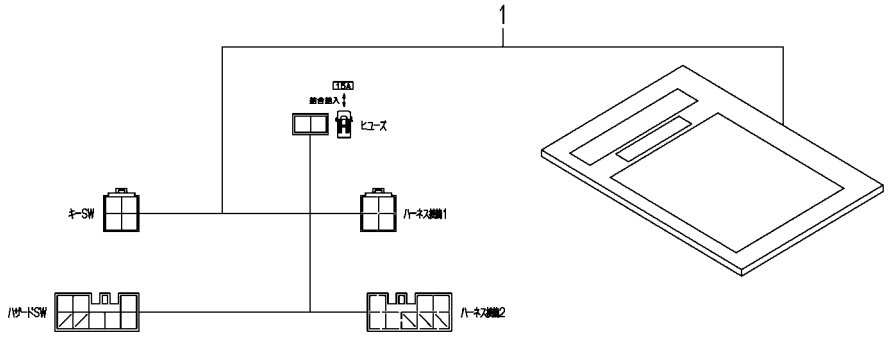

1739-690Y-0100

KEY	PART CODE	DESCRIPTION	SPC	TYPE OF MODEL TXG237 F3		ITC	COL	GRP	REMARKS
1	1739-690-770-10	HARNESS/BATTERY/CIRC	R	1					

FIG. 97 BUMPER(FRONT)SET(E4 TYPE)(OPTION)

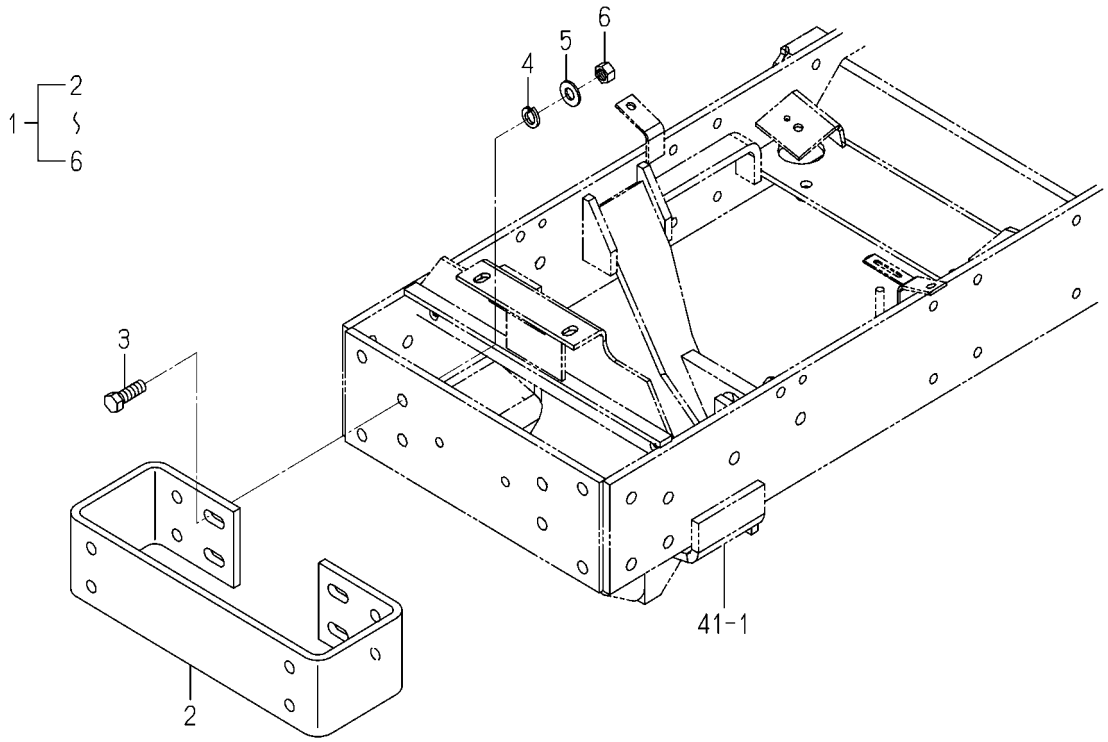

1739-922 -0100

KEY	PART CODE	DESCRIPTION	SPC	TYPE OF MODEL TXG237 F3		ITC	COL	GRP	REMARKS
1	1739-922-700-00	BUMPER/FRONT SET	T	1					
2	1710-410-001-00	PLATE/BUMPER	T	1					
3	V201-361-203-50	BOLT/M12X35/7T	T	4					
4	V401-160-012-00	WASHER,SP/M12	T	4					
5	V411-260-012-00	WASHER,PL/M12	T	4					
6	V304-260-012-00	NUT/M12	T	4					

FIG. 98 WEIGHT(15)SET(E4 TYPE)(OPTION)

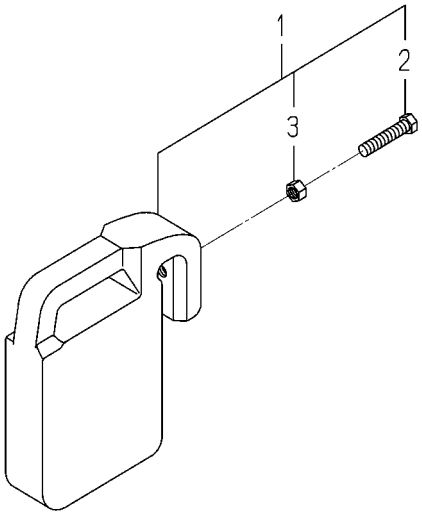

1774-922A-0100

KEY	PART CODE	DESCRIPTION	SPC	TYPE OF MODEL TXG237 F3		ITC	COL	GRP	REMARKS
1	1774-922-200-10	WEIGHT/15 SET	T	1					
2	W201-261-206-00	BOLT/M12X60	T	1					
3	V305-260-012-00	NUT/M12	T	1					

FIG. 99 COMPONENT PARTS FOR K211-101-000-10 ON Fig.51,52

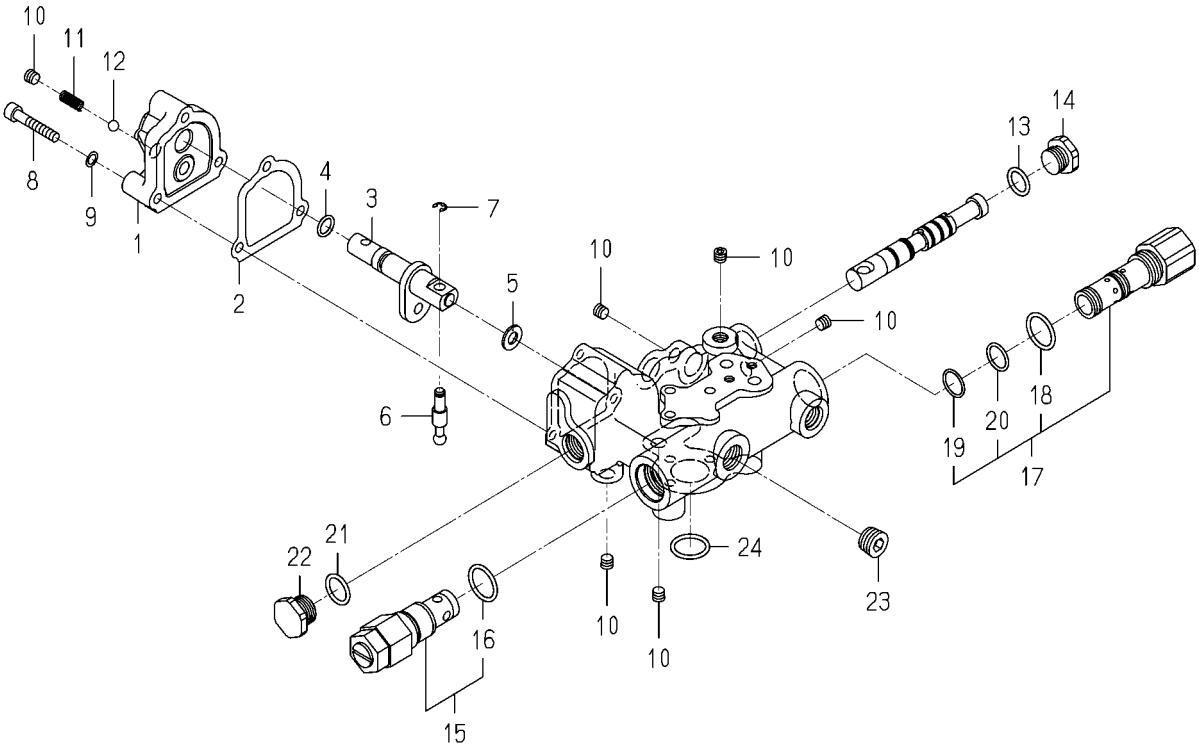

K211-101-000-1D

KEY	PART CODE	DESCRIPTION	SPC	TYPE OF MODEL TXG237 F3		ITC	COL	GRP	REMARKS
1	K211-101-101-00	COVER/DVS2/101	*	1					
2	K211-066-005-10	GASKET/DVS2/066	*	1					
3	K211-066-300-00	SPOOL/ROTARY/066	*	1					
4	V720-112-401-00	O-RING/1B,P10A	*	1					
5	K211-066-007-00	WASHER/THRUST/8X16	*	1					
6	K211-101-102-00	PIN/SPOOL	*	1					
7	V710-140-004-00	RING,SNAP/4 E	*	1					
8	K211-101-103-00	SCREW/SOCKET	*	3					
9	1725-508-019-00	WASHER/07X10X01	*	3					
10	V780-140-000-2T	PLUG/SCREW/SEAL	*	6					
11	K211-066-004-00	SPRING/HC017	*	1					
12	V682-200-001-00	BALL,STEEL	*	1					
13	V720-112-401-40	O-RING/1B,P14	*	1					
14	K211-008-011-00	PLUG	*	1					
15	K250-054-000-00	VALVE/RELIEF	*	1					
16	V720-112-402-00	O-RING/1B,P20	*	1					
17	K211-066-100-10	VALVE/FLOW PRIORITY/	*	1					
18	V720-112-402-00	O-RING/1B,P20	*	1					
19	V723-111-501-60	O-RING/1B,S16	*	1					
20	K211-066-103-00	RING/O/F404/1015	*	1					
21	V720-112-401-60	O-RING/1B,P16	*	1					
22	K234-001-005-00	PLUG/M18	*	1					
23	V780-140-000-6T	PLUG/SCREW/SEAL	*	1					
24	V720-112-402-00	O-RING/1B,P20	*	1					

FIG.100 COMPONENT PARTS FOR K510-017-000-10 ON Fig.14

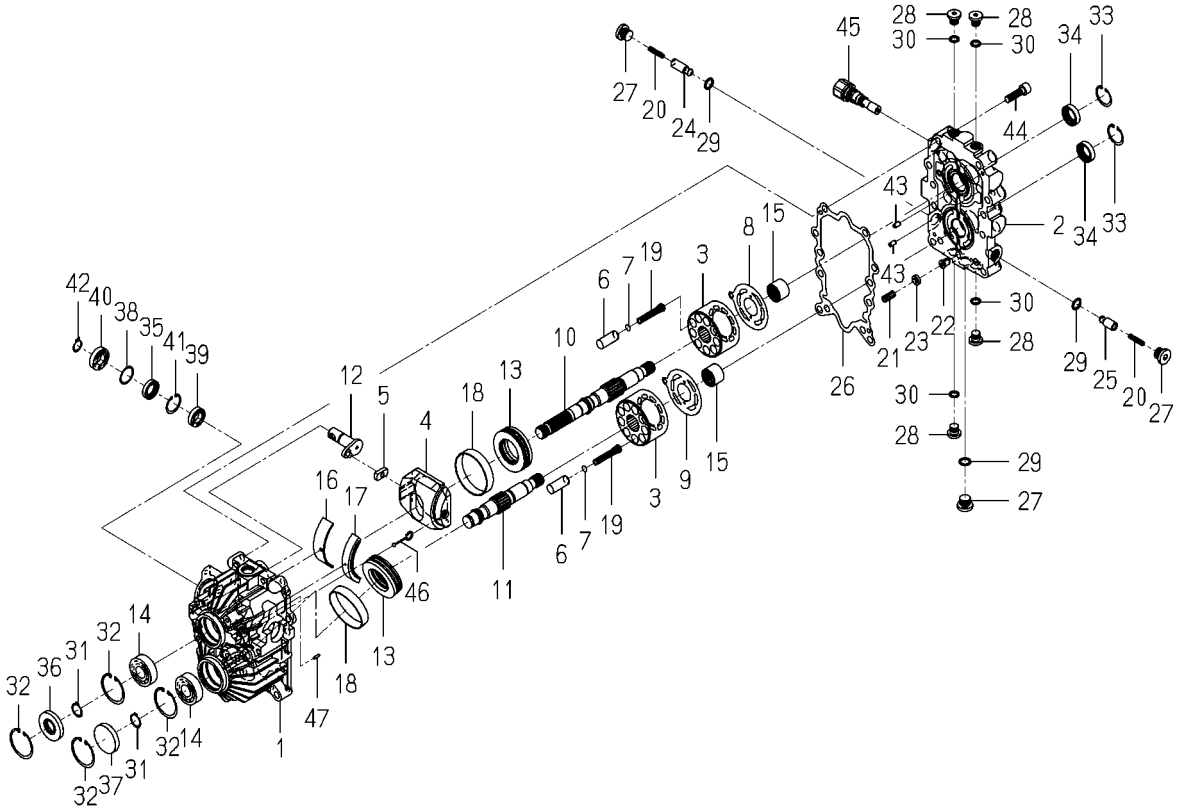

K510-017-000-1G

KEY	PART CODE	DESCRIPTION	SPC	TYPE OF MODEL TXG237 F3		ITC	COL	GRP	REMARKS
1	K510-017-001-00	CASE/HMS1/017	*	1					
2	K510-017-004-10	BLOCK/PORT/HMS1/017	*	1					
3	K510-005-005-00	BLOCK/CYLINDER	*	2					
4	K510-017-006-00	PLATE/SWASH/HMS1/017	*	1					
5	K510-001-007-00	METAL/SLIDE	*	1					
6	K510-006-008-00	PISTON	*	18					
7	K510-001-009-00	SHIM/T=0.9	*	18					
8	K510-001-010-00	PLATE/VALVE/PUMP	*	1					
9	K510-001-011-00	PLATE/VALVE/MOTOR	*	1					
10	K510-017-012-00	SHAFT/PUMP/HMS1/017	*	1					
11	K510-001-013-20	SHAFT/MOTOR	*	1					
12	K510-017-014-00	ARM/TRUNNION/HMS1/01	*	1					
13	K510-006-015-00	BEARING/THRUST	*	2					
14	V600-110-620-40	BEARING,RB/6204	*	2					
15	K510-001-016-00	NEEDLE	*	2					
16	K510-001-017-00	BUSH/95X100X22	*	1					
17	K510-003-017-00	BEARING/NEEDLE	*	1					
18	K510-001-018-00	BUSH/68X71X14	*	1					
19	K510-001-019-00	SPRING/HC053	*	18					
20	K510-001-020-00	SPRING/HC030	*	2					
21	K510-003-021-00	SPRING/HC021	*	1					
22	K510-003-022-00	POPPET/RELIEF	*	1					
23	K510-003-037-00	PLATE/SPRING	*	1					
24	K510-005-023-00	POPPET/CHECK/0.5	*	1					
25	K510-001-024-00	POPPET(CHECK/1.6)	*	1					
26	K510-001-026-00	GASKET	*	1					
27	K510-001-029-00	PLUG(G3/8)	*	3					
28	K275-001-003-00	PLUG(PF1/4)	*	4					
29	V720-112-401-40	O-RING/1B,P14	*	3					
30	V720-112-401-10	O-RING/1B,P11	*	4					

FIG.100 COMPONENT PARTS FOR K510-017-000-10 ON Fig.14

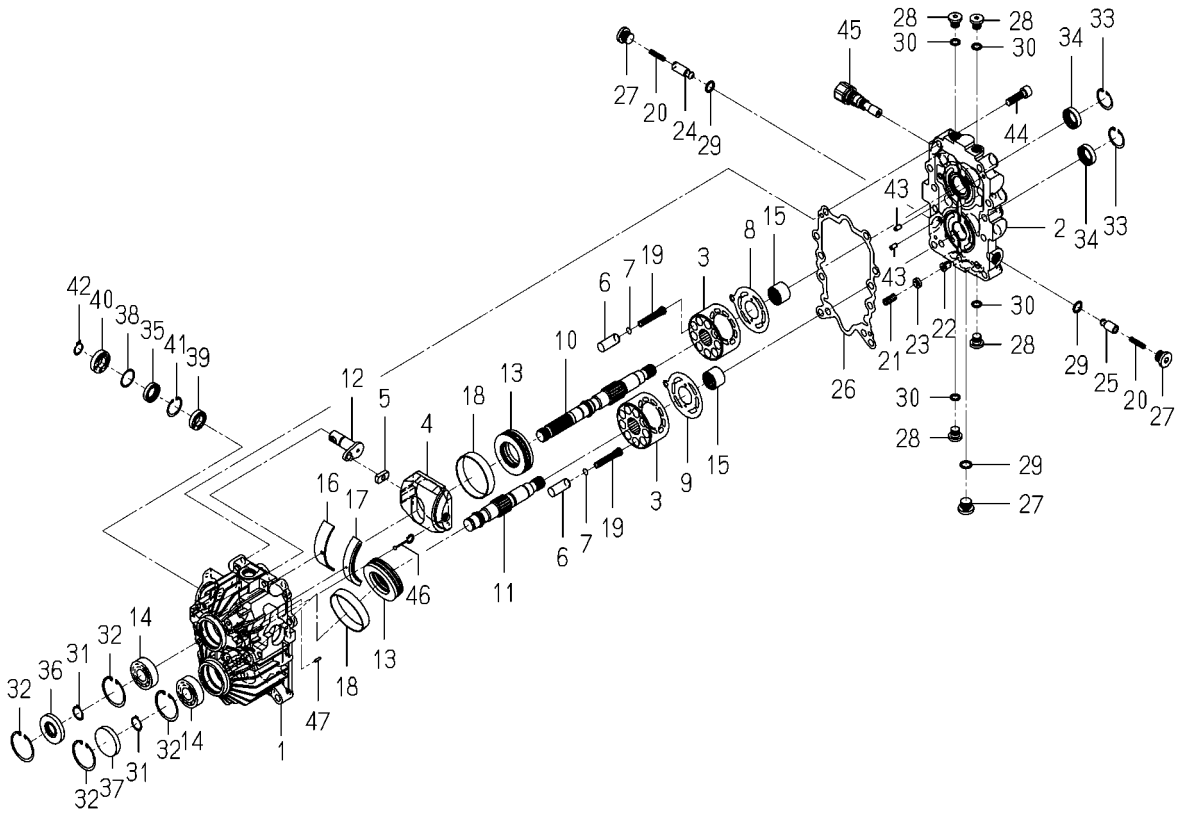

K510-017-000-1G

KEY	PART CODE	DESCRIPTION	SPC	TYPE OF MODEL TXG237 F3		ITC	COL	GRP	REMARKS
31	V704-140-020-00	RING,SNAP/20 C	*	2					
32	V705-140-047-00	RING,SNAP/47 C	*	4					
33	V705-140-032-00	RING,SNAP/32 C	*	2					
34	K510-001-039-00	OIL SEAL	*	2					
35	K510-001-031-00	SEAL/OIL	*	1					
36	V744-120-470-70	SEAL,OIL/TC20477	*	1					
37	1421-201-002-00	SEAL/47	*	1					
38	K510-001-034-00	WASHER/25X30X1	*	1					
39	K510-017-047-00	BEARING,RB/6903	*	1					
40	K510-017-048-00	BEARING,RB/6003SS	*	1					
41	V705-140-030-00	RING,SNAP/30 C	*	1					
42	V704-140-017-00	RING,SNAP/17 C	*	1					
43	K510-001-036-00	PIN,ST	*	4					
44	V220-541-003-50	SCREW,SOCKET/M10X35	*	8					
45	K510-001-100-00	VALVE/RELIEF SET	*	1					
46	K510-003-500-00	PIN	*	1					
47	V523-100-301-00	PIN,ST,B/3X10	*	1					

FIG.101 COMPONENT PARTS FOR 1725-105-220-10 ON Fig.5

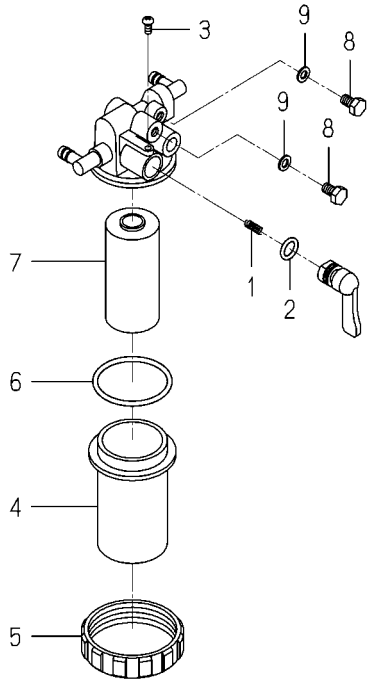

1725-105-220-1A

KEY	PART CODE	DESCRIPTION	SPC	TYPE OF MODEL TXG237 F3		ITC	COL	GRP	REMARKS
1	1415-102-007-00	SPRING,VALVE	*	1					
2	V720-102-401-00	O-RING/1A,P10A	*	1					
3	1415-102-008-00	VIS	*	1					
4	1440-103-201-00	CAP	*	1					
5	1444-102-204-00	NUT,RING	*	1					
6	V720-103-504-40	O-RING/1A,P44	*	1					
7	1672-105-211-00	ELEMENT	*	1					
8	1572-102-003-00	BOLT/M06X08/APSET	*	2					
9	1415-102-013-00	PACKING	*	2					

FIG.102 COMPONENT PARTS FOR 1725-219-210-20 ON Fig.18

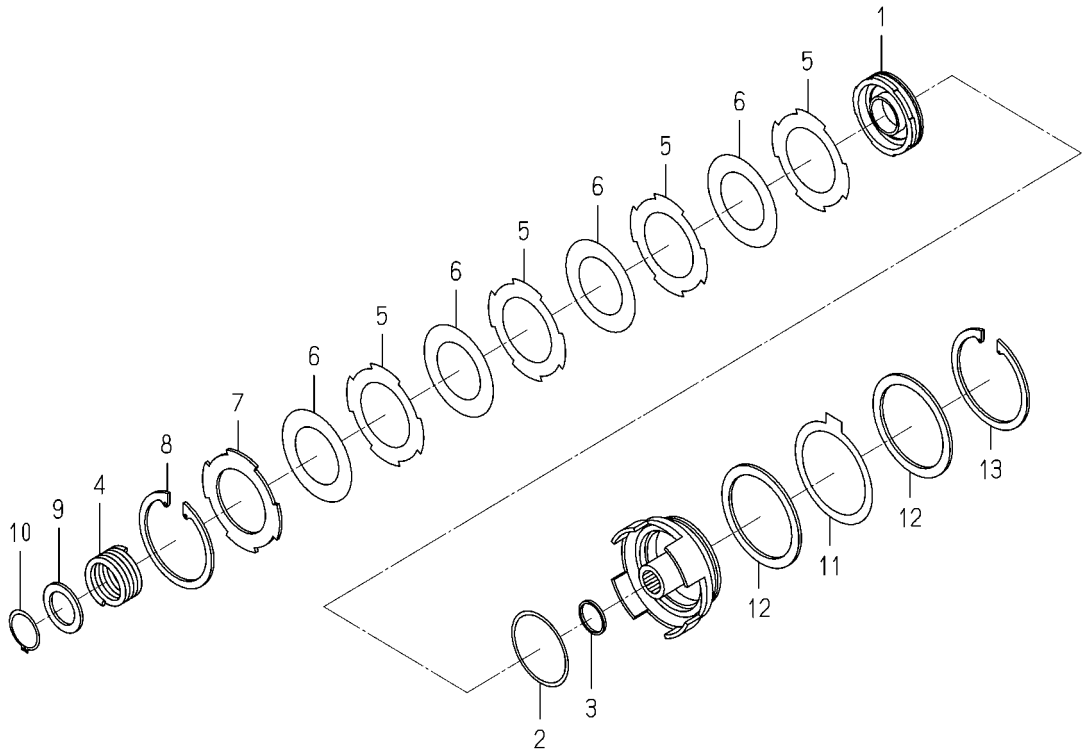

1725-219-210-2F

KEY	PART CODE	DESCRIPTION	SPC	TYPE OF MODEL TXG237 F3		ITC	COL	GRP	REMARKS
1	1725-219-218-00	PISTON	*	1					
2	1725-219-219-00	RING/O	*	1					
3	1725-219-231-00	RING/O	*	1					
4	1688-211-505-00	SPRING	*	1					
5	1725-219-232-00	PLATE/SEPARATER	*	4					
6	1725-219-215-00	PLATE/DISK	*	4					
7	1725-219-216-00	PLATE/BACK	*	1					
8	1688-211-506-00	SNAPRING	*	1					
9	1688-211-507-00	WASHER	*	1					
10	1688-211-508-00	SNAPRING/32	*	1					
11	1688-211-509-00	DISK/BRAKE	*	1					
12	1725-219-233-00	PRESSURE/BRAKE	*	2					
13	1725-219-234-00	RING/SNAP	*	1					

Numerical Index

Part Code	Fig.	Key	Part Code	Fig.	Key	Part Code	Fig.	Key
1373-121-001-00	24	5	6209-610-009-00	6	4	6211-540-018-00	7	1
1690-654-350-00	10	32	6209-625-001-00	6	14	6211-560-007-00	7	3
1729-202-001-00	21	14		27	10	6211-599-012-00	6	13
3625-540-004-00	10	34	6209-625-002-00	10	5		7	2
3632-360-036-00	22	7		27	12		7	4
3640-586-004-00	22	8	6209-630-002-10	25	7	6211-751-001-10	3	2
3805-355-002-20	8	2		27	22	6211-760-054-20	6	29
3817-401-001-00	10	8	6209-730-002-00	16	4	6211-766-015-00	6	30
	12	20	6209-730-005-00	13	3	6211-777-007-30	11	1
	18	7		21	12	6212-111-094-20	14	1
	18	12	6209-740-001-00	10	23	6212-114-094-20	15	1
	21	9	6209-740-005-00	6	17	6212-116-094-20	15	3
6004-010-099-00	1	1	6209-749-001-20	6	15	6212-121-014-20	14	2
6209-000-002-00	12	18	6209-920-002-00	10	17	6212-124-014-10	15	2
6209-000-004-10	6	2		17	12	6212-126-014-10	15	4
6209-000-043-00	16	9		27	13	6212-211-001-10	14	3
6209-000-044-00	2	7	6209-940-004-00	12	14	6212-230-004-10	14	5
6209-030-043-00	21	18	6211-110-057-50	2	1	6212-235-005-00	14	6
6209-046-015-00	16	7	6211-141-029-20	2	6	6212-271-016-00	14	7
6209-050-001-00	10	29		27	3	6212-274-016-00	7	5
6209-050-002-00	10	30	6211-170-004-20	3	1	6212-276-016-00	7	6
6209-300-014-00	2	8	6211-173-003-00	3	3	6212-310-019-70	16	1
6209-360-018-00	22	3		27	4	6212-330-105-10	16	5
6209-360-028-20	3	6	6211-210-113-10	6	1	6212-333-009-00	16	6
6209-360-120-00	22	6	6211-258-001-00	6	8	6212-371-052-00	16	8
6209-360-143-00	22	5		27	8	6212-511-002-00	13	1
6209-409-001-00	10	15	6211-258-002-00	6	9	6212-521-008-00	16	3
6209-409-003-00	12	17		27	9	6212-522-010-00	13	2
6209-440-005-00	25	4	6211-291-013-10	6	25	6212-523-023-00	13	6
6209-440-007-00	24	7	6211-292-001-20	6	26	6212-524-002-40	21	11
6209-490-002-10	3	4		27	11	6212-531-014-00	6	6
6209-500-003-00	10	13	6211-310-060-20	10	1	6212-535-010-10	21	15
	10	22	6211-311-048-10	10	35	6212-535-014-00	13	4
	27	23	6211-312-003-20	10	24	6212-551-028-00	12	1
6209-572-003-00	3	5		27	14	6212-552-014-00	12	2
	27	5	6211-312-004-20	10	36	6212-561-001-10	12	3
6209-580-002-10	21	27		27	15	6212-563-005-00	12	4
6209-587-001-00	14	4	6211-321-022-00	10	40	6212-565-001-00	12	5
6209-600-004-00	10	21	6211-322-002-00	10	41	6212-569-002-00	2	4
6209-605-004-10	2	3	6211-341-064-00	9	1		27	2
6209-605-007-10	6	5	6211-342-002-10	9	2	6212-571-006-00	12	6
	10	2	6211-361-069-00	8	1	6212-575-002-00	12	7
6209-610-001-10	6	3	6211-510-021-00	6	10	6212-600-002-30	12	8
6209-610-007-00	10	3	6211-511-023-00	6	11	6212-611-004-10	12	9
6209-610-008-00	6	7	6211-511-024-00	6	12	6212-616-002-00	12	16

Numerical Index

Part Code	Fig.	Key	Part Code	Fig.	Key	Part Code	Fig.	Key
6212-620-001-20	12	10	6215-330-024-10	28	1	6215-345-040-00	28	46
6212-626-002-10	12	11	6215-331-008-00	28	2	6215-345-041-00	28	47
6212-628-004-00	12	12	6215-332-013-00	28	5	6215-345-042-00	28	48
6212-628-005-00	12	13	6215-339-001-00	28	6	6215-345-043-00	28	49
6213-100-003-30	17	1	6215-342-001-00	28	3	6215-359-001-00	20	2
6213-111-001-30	17	2	6215-343-001-00	28	4	6215-359-002-00	28	50
6213-119-001-00	17	4	6215-345-001-00	28	7	6215-411-125-00	22	2
6213-129-003-00	17	3	6215-345-002-00	28	8	6215-411-126-10	20	4
6213-129-006-00	6	16	6215-345-003-00	28	9	6215-411-127-00	20	5
6213-140-035-10	17	6	6215-345-004-00	28	10	6215-411-128-00	20	6
6213-149-002-00	17	8	6215-345-005-00	28	11	6215-412-004-00	22	1
6213-160-002-20	10	25	6215-345-006-00	28	12	6215-520-001-00	21	17
6213-161-001-20	10	26	6215-345-007-00	28	13	6215-526-004-00	21	19
6213-164-001-00	10	27	6215-345-008-00	28	14	6215-531-023-00	21	24
6213-240-002-20	17	13	6215-345-009-00	28	15	6215-541-001-10	21	20
6213-311-006-00	17	10	6215-345-010-00	28	16	6215-541-016-40	23	2
6213-319-001-00	6	24	6215-345-011-00	28	17	6215-541-040-00	21	25
6213-610-005-50	18	1	6215-345-012-00	28	18	6215-542-004-20	10	18
6213-612-004-00	18	3	6215-345-013-00	28	19	6215-542-005-20	10	20
6213-613-002-10	18	2	6215-345-014-00	28	20	6215-542-006-00	21	22
6213-614-018-00	18	5	6215-345-015-00	28	21	6215-543-002-10	21	21
	27	18	6215-345-016-00	28	22	6215-546-003-30	10	14
6213-614-019-00	18	9	6215-345-017-00	28	23	6215-548-029-20	23	1
	27	19	6215-345-018-00	28	24	6215-549-007-10	21	28
6213-619-001-00	18	8	6215-345-019-00	28	25	6215-549-012-00	21	32
6213-619-003-00	18	4	6215-345-020-00	28	26	6215-549-013-00	6	28
6213-641-002-10	19	2	6215-345-021-00	28	27	6215-600-103-30	21	1
6213-660-023-00	19	1	6215-345-022-00	28	28	6215-611-001-00	29	6
6213-669-003-00	19	3	6215-345-023-00	28	29	6215-612-001-00	29	9
6213-671-027-00	19	5	6215-345-024-00	28	30	6215-619-009-00	21	3
6213-674-048-00	24	3	6215-345-025-00	28	31	6215-619-010-00	21	2
6213-711-004-00	18	20	6215-345-026-00	28	32	6215-619-022-00	29	8
6213-716-001-60	18	15	6215-345-027-00	28	33	6215-621-016-30	21	10
6213-729-016-00	18	13	6215-345-028-00	28	34	6215-622-001-00	29	12
6213-743-002-10	18	16	6215-345-029-00	28	35	6215-629-001-00	29	10
	27	20	6215-345-030-00	28	36	6215-629-002-00	29	11
6214-111-011-20	4	1	6215-345-031-00	28	37	6215-629-003-00	29	18
6214-115-001-20	4	2	6215-345-032-00	28	38	6215-629-004-00	29	19
	27	6	6215-345-033-00	28	39	6215-629-005-00	29	20
6214-141-008-20	5	1	6215-345-034-00	28	40	6215-629-006-00	29	21
6214-145-001-30	5	2	6215-345-035-00	28	41	6215-629-007-00	29	22
	27	7	6215-345-036-00	28	42	6215-629-008-00	29	23
6215-300-036-10	20	1	6215-345-037-00	28	43	6215-629-009-00	29	24
6215-311-027-00	28	51	6215-345-038-00	28	44	6215-629-010-00	29	25
6215-315-002-00	20	3	6215-345-039-00	28	45	6215-629-011-00	29	26

Numerical Index

Part Code	Fig.	Key
6215-629-012-00	29	27
6215-629-013-00	29	28
6215-629-014-00	29	29
6215-629-015-00	29	30
6215-629-016-00	29	31
6215-631-019-00	29	7
6215-634-001-00	29	16
6215-635-001-00	29	14
6215-637-001-00	29	13
6215-639-004-00	29	15
6215-639-005-00	29	17
6215-641-006-00	29	5
6215-643-006-00	29	1
6215-644-007-00	29	2
6215-649-002-00	29	4
6215-649-019-00	29	3
6219-732-017-00	25	5
6219-752-044-00	21	5
6219-752-045-00	21	4
6219-752-046-00	21	6
6219-752-047-00	21	7
6281-100-023-00	24	8
6281-200-032-10	24	1
6281-271-003-00	26	1
6281-410-023-10	25	3
6281-910-013-00	25	6
6281-971-001-10	25	1
6282-450-006-00	25	2
6287-810-015-30	27	1
6294-453-002-00	6	21
6513-770-022-10	18	19
6901-911-020-00	9	3
6901-911-025-00	24	9
6902-050-816-00	10	37
6904-110-818-00	6	19
6904-110-822-00	5	4
	6	20
	10	4
6904-110-840-00	6	18
	18	10
6909-902-299-00	6	22
6909-906-105-10	17	11
6911-129-006-00	2	2
J061-210-015-00	18	14
J062-076-082-00	22	4
J062-087-093-00	22	9
P117-303-003-00	10	19
V201-360-802-00	21	8
V210-560-601-20	13	5
	21	16
V210-560-602-50	17	5
V211-560-802-00	10	38
	10	44
V211-560-802-50	5	3
V230-360-601-00	8	4
V230-360-601-20	6	27
V230-360-601-60	10	33
	25	8
V230-360-603-00	19	4
V231-360-801-60	10	9
	17	9
V231-360-802-00	4	3
	18	11
	18	17
	24	4
V231-360-802-50	10	39
	18	22
V231-360-803-00	10	12
V231-360-804-00	4	4
V231-360-804-50	10	10
	18	6
V231-360-805-00	12	19
V231-360-805-50	10	7
V231-360-807-50	10	11
	18	18
V231-360-808-50	10	6
V233-361-002-00	11	2
V233-361-007-00	24	6
V301-260-006-00	10	31
	21	29
V304-260-008-00	10	42
V341-120-008-00	10	16
V401-160-006-00	21	31
V401-160-008-00	10	43
V411-260-006-00	21	30
V411-260-010-00	24	2
V523-101-001-80	16	2
V600-110-620-30	21	13
V682-200-000-60	2	5
V704-140-016-00	12	15
V705-140-012-00	10	28
V710-140-004-00	21	23
V720-101-900-80	21	26
V720-102-401-50	17	7
	27	17
V720-102-401-80	8	3
V723-102-005-00	27	16
V723-102-005-50	18	21
	27	21
V782-160-000-4T	6	23

Numerical Index

Part Code	Fig.	Key	Part Code	Fig.	Key	Part Code	Fig.	Key
1110-241-001-10	36	50	1415-505-006-00	49	8	1560-104-006-60	2	26
1118-901-002-00	82	5	1416-621-037-00	6	9	1560-132-007-30	34	21
1302-225-003-00	21	5	1421-201-002-00	100	37		36	48
	22	4	1421-602-005-10	2	31	1560-214-003-00	28	6
	22	10		6	16	1560-275-013-00	35	3
1305-931-003-00	57	5	1421-603-004-00	2	11	1560-314-001-10	41	4
	60	4	1425-621-004-00	5	6	1560-507-007-00	51	45
1342-402-006-00	5	22		40	5		52	47
	36	26		77	15	1560-511-006-50	34	12
	77	16		78	17	1560-526-001-40	57	4
	77	24	1427-111-229-00	3	8	1560-666-212-00	77	2
	78	18		6	15		78	2
	78	26	1427-432-016-00	44	7	1560-695-021-00	27	22
	94	25	1427-501-003-00	49	2	1572-102-003-00	101	8
1359-403-003-00	50	4	1427-511-001-00	56	15	1575-261-018-00	18	5
1376-402-003-00	5	23	1427-621-012-00	2	15	1581-312-001-00	35	2
	5	24		62	8	1593-101-003-20	1	4
	53	5	1432-242-001-00	34	7	1593-112-002-50	7	3
	55	4	1432-616-002-00	41	3	1593-117-003-10	8	7
	77	12	1432-616-004-00	6	19	1593-303-051-20	44	3
	77	13		66	10	1593-332-053-00	54	10
	77	18	1440-103-201-00	101	4	1593-601-072-00	63	10
	77	19	1442-313-202-00	36	9	1593-611-001-00	66	4
	77	20	1444-102-204-00	101	5		66	8
	77	21	1444-122-002-00	34	19	1594-218-001-00	18	15
	77	22		36	46	1599-507-003-10	51	44
	77	23	1444-314-004-10	32	3		52	46
	77	26	1444-314-009-10	12	2	1600-117-002-10	8	6
	77	27		19	6	1608-554-002-00	34	24
	78	14	1444-328-272-00	36	11		36	49
	78	15	1444-328-273-00	36	10	1614-104-001-10	4	6
	78	20	1444-507-003-00	55	21	1614-129-003-00	76	36
	78	21		93	7	1614-262-003-00	50	3
	78	22	1444-514-005-10	56	20	1614-262-006-00	54	11
	78	23	1480-501-003-00	49	3	1614-702-552-00	42	7
	78	24	1518-306-203-10	46	7		59	9
	78	25		49	26		88	8
	78	28	1518-432-250-10	46	6		91	9
	78	29		49	25	1617-206-003-00	28	3
1404-503-006-00	51	10	1518-903-006-00	92	17	1636-901-022-00	84	4
	52	10	1518-903-007-00	92	18		85	4
1414-632-005-00	6	13	1519-604-005-00	63	11	1640-702-003-10	80	8
1415-102-007-00	101	1	1527-604-002-00	70	7	1640-702-004-00	80	12
1415-102-008-00	101	3	1544-104-205-00	4	4	1646-226-053-00	27	2
1415-102-013-00	101	9	1544-120-008-10	49	22	1646-233-033-00	21	4

Numerical Index

Part Code	Fig.	Key	Part Code	Fig.	Key	Part Code	Fig.	Key
1646-640-580-00	27	25	1675-508-003-00	63	44	1705-902-007-00	84	10
1650-102-202-10	2	2	1684-112-230-00	7	1		85	10
1650-104-201-00	4	5	1688-211-057-00	18	4	1705-902-008-00	84	8
1650-111-034-00	5	4	1688-211-505-00	102	4		85	8
1650-259-010-00	20	3	1688-211-506-00	102	8	1705-904-002-10	84	11
1650-432-001-00	44	5	1688-211-507-00	102	9		85	11
1650-508-002-00	51	16	1688-211-508-00	102	10	1710-241-053-00	32	5
	52	16	1688-211-509-00	102	11	1710-410-001-00	97	2
1650-509-280-00	51	19	1688-265-001-00	25	4	1716-501-006-10	49	23
	52	19		26	11	1716-502-004-10	57	6
1650-650-017-00	2	23		54	12	1716-680-006-00	76	4
1650-650-222-00	77	3	1689-271-311-00	36	3	1716-680-200-20	76	1
	78	3		36	17	1716-680-222-00	76	47
1650-652-014-00	56	24	1689-621-007-00	63	31	1716-680-330-10	76	46
1650-654-036-00	74	19	1690-241-003-00	19	2	1719-312-001-00	63	25
1650-654-590-00	76	21	1690-509-340-10	51	32		81	11
1656-509-290-00	52	28		52	34	1725-101-310-10	1	1
1656-509-310-10	51	35	1696-901-006-00	82	6	1725-101-320-10	1	2
	52	37	1703-102-203-00	2	6	1725-102-001-00	2	19
	53	10	1703-102-205-00	2	4	1725-102-002-00	2	20
1656-664-221-10	27	32	1703-102-206-00	2	5	1725-102-071-00	2	30
	27	48	1703-105-210-10	5	16	1725-102-072-00	2	21
1669-407-200-20	92	3	1703-117-004-00	8	3	1725-103-002-00	3	6
1672-105-211-00	101	7	1703-261-002-00	23	4	1725-103-004-00	27	11
1673-525-002-30	42	5		24	4	1725-103-710-20	3	7
	59	7	1703-505-005-00	63	32	1725-104-001-10	4	7
	80	14	1703-509-003-00	92	2	1725-105-001-00	5	7
	88	6	1705-102-202-00	2	7	1725-105-071-00	5	14
	91	7	1705-102-203-00	2	3	1725-105-072-00	5	1
1673-780-011-00	3	16	1705-102-240-20	2	33	1725-105-200-00	5	18
1674-619-300-10	69	6	1705-102-251-10	2	37	1725-105-210-10	5	20
1674-619-310-00	69	1	1705-102-252-20	2	38	1725-105-220-10	5	11
1674-654-211-00	74	2	1705-102-500-00	2	1	1725-105-320-00	5	2
1674-654-212-00	74	3	1705-104-002-00	4	9	1725-105-330-10	5	8
1674-654-270-00	74	12	1705-105-320-00	6	2	1725-111-003-00	6	20
1674-654-271-00	74	13	1705-112-220-00	7	2	1725-111-071-10	6	1
1674-654-272-00	74	14	1705-408-230-00	55	23	1725-111-072-00	6	11
1674-654-400-20	74	6		55	26	1725-111-073-00	6	12
1674-904-002-10	84	7		92	6	1725-111-200-00	6	8
	85	7		94	26	1725-117-001-00	8	5
1674-904-005-10	85	13	1705-508-002-00	94	20	1725-117-720-10	8	1
1674-904-008-00	84	5	1705-601-013-00	2	8	1725-120-310-00	9	1
	85	5	1705-601-019-00	70	5	1725-120-320-00	9	2
1675-104-211-00	4	2	1705-902-006-00	84	3	1725-120-330-00	9	3
1675-104-213-00	4	3		85	3	1725-201-001-20	10	1

Numerical Index

Part Code	Fig.	Key	Part Code	Fig.	Key	Part Code	Fig.	Key
1725-201-001-20	11	1	1725-256-002-00	20	2	1725-304-008-00	29	13
1725-201-002-00	10	5	1725-256-210-10	20	5	1725-304-009-00	29	15
	11	5	1725-258-001-00	21	3	1725-304-011-00	29	14
	27	35	1725-258-210-10	21	1	1725-305-001-10	30	2
	42	2	1725-259-001-10	22	1	1725-305-002-10	30	3
	88	3	1725-259-210-10	22	2	1725-305-003-00	30	4
1725-203-001-00	13	1	1725-259-220-00	22	8		35	8
1725-210-002-00	14	15	1725-266-001-00	23	3	1725-305-210-00	30	1
1725-210-032-00	8	2		25	3	1725-306-001-10	31	1
	35	9		26	10	1725-308-002-00	32	6
1725-210-310-20	14	12	1725-266-320-10	23	1	1725-308-003-20	32	7
1725-212-001-00	15	1	1725-268-320-00	24	1	1725-308-210-00	32	1
1725-212-002-00	15	3	1725-270-710-10	25	1	1725-310-001-00	33	5
1725-212-003-10	15	6	1725-271-001-00	26	8	1725-310-003-00	33	7
1725-216-001-20	16	1	1725-271-003-00	35	6		33	14
1725-216-002-10	16	4	1725-271-071-10	26	3	1725-310-004-00	33	12
1725-216-003-20	16	6	1725-271-221-00	26	7	1725-310-210-00	33	15
1725-218-001-10	17	1	1725-271-720-20	26	6	1725-312-003-00	34	5
1725-218-002-10	17	3	1725-271-730-00	26	1	1725-313-220-30	35	7
1725-218-003-10	17	6	1725-272-002-00	27	10	1725-313-730-40	35	5
1725-218-004-10	17	7	1725-272-005-00	27	17	1725-403-002-00	38	15
1725-218-006-00	17	2	1725-272-041-00	27	27	1725-403-003-00	38	16
	18	14	1725-272-084-00	27	41	1725-403-311-10	38	12
1725-219-001-00	18	2	1725-272-085-00	27	42	1725-405-233-10	76	11
1725-219-003-00	18	9	1725-272-210-00	27	9		76	24
1725-219-004-00	18	12	1725-272-220-10	27	12	1725-407-200-10	39	1
1725-219-005-00	18	13	1725-272-320-00	27	39	1725-407-201-00	39	2
1725-219-007-00	18	20	1725-272-740-20	27	55	1725-408-230-30	40	3
1725-219-008-00	18	21	1725-273-024-00	27	4	1725-410-002-00	41	15
1725-219-009-00	18	23	1725-273-025-00	27	13	1725-410-003-00	41	17
1725-219-011-00	18	24	1725-273-026-00	27	45	1725-410-005-00	41	14
1725-219-012-00	18	29	1725-273-370-10	27	3	1725-410-006-00	63	5
1725-219-013-00	18	7	1725-273-420-10	27	47	1725-410-071-00	41	5
1725-219-210-20	18	1	1725-273-440-00	27	1	1725-410-072-00	41	18
1725-219-215-00	102	6	1725-273-450-00	27	19	1725-410-073-00	41	11
1725-219-216-00	102	7	1725-301-001-10	28	5	1725-410-078-00	41	2
1725-219-218-00	102	1	1725-301-002-00	28	7	1725-410-870-10	41	28
1725-219-219-00	102	2	1725-301-710-10	28	1	1725-431-001-10	43	5
1725-219-220-10	18	3	1725-304-001-10	29	1	1725-432-101-00	44	1
1725-219-231-00	102	3	1725-304-002-10	29	2	1725-432-108-00	44	16
1725-219-232-00	102	5	1725-304-003-10	29	3	1725-432-711-00	44	8
1725-219-233-00	102	12	1725-304-004-10	29	9	1725-432-712-10	44	9
1725-219-234-00	102	13	1725-304-005-10	29	10	1725-432-713-00	44	10
1725-222-011-00	19	1	1725-304-006-10	29	11	1725-432-714-00	44	11
1725-256-001-10	20	1	1725-304-007-10	29	12	1725-432-715-00	44	12

Numerical Index

Part Code	Fig.	Key	Part Code	Fig.	Key	Part Code	Fig.	Key
1725-433-001-10	45	5	1725-508-240-00	51	34	1725-553-260-00	60	1
1725-433-202-10	45	2		52	36	1725-553-410-20	61	1
1725-434-001-10	46	1	1725-508-251-00	51	37	1725-553-420-00	61	5
1725-434-002-10	46	8		52	39	1725-553-430-00	61	6
1725-434-003-10	46	13	1725-508-252-10	51	39	1725-553-510-10	60	5
1725-434-004-10	46	16		52	41	1725-553-520-00	60	6
1725-434-005-00	46	18	1725-508-253-00	51	41	1725-553-720-10	94	31
1725-434-006-10	46	23		52	43	1725-554-032-00	62	11
1725-434-007-10	46	27		53	18	1725-554-033-20	62	13
1725-434-008-10	46	31	1725-508-254-00	51	42	1725-554-034-00	83	9
1725-434-009-10	46	33		52	44	1725-554-035-10	83	10
1725-434-011-10	46	34	1725-508-310-00	51	23	1725-554-037-20	62	3
1725-434-012-00	46	35		52	23	1725-554-210-20	62	6
1725-434-013-00	46	36	1725-508-320-10	51	9	1725-554-220-40	62	2
1725-434-015-30	46	42		52	9	1725-601-076-10	63	2
1725-434-047-00	46	20	1725-508-330-00	51	21	1725-601-720-20	63	9
1725-434-054-10	46	39		52	21	1725-604-051-00	64	2
1725-435-001-10	47	1	1725-508-760-10	51	2	1725-606-073-10	66	2
1725-435-002-10	47	2		52	2	1725-606-074-10	66	6
1725-436-320-00	48	2	1725-509-220-00	53	6	1725-606-741-10	66	3
1725-436-600-00	48	1	1725-509-231-10	53	7	1725-606-751-10	66	7
1725-436-601-00	48	6	1725-509-232-00	53	8	1725-611-220-30	67	3
1725-436-610-00	48	3	1725-509-252-00	53	16		68	3
1725-436-611-00	48	4	1725-509-260-00	53	3	1725-611-750-20	67	1
1725-436-612-00	48	5	1725-510-210-00	54	1		68	1
1725-501-001-00	49	6	1725-510-220-10	54	6	1725-631-004-00	63	3
1725-501-002-00	49	9	1725-514-001-00	56	1		63	4
1725-501-003-00	49	11	1725-514-002-00	56	2	1725-631-320-10	70	9
1725-501-005-00	49	14	1725-514-004-00	56	8	1725-680-220-10	76	35
1725-501-006-00	94	28	1725-514-006-00	56	21	1725-681-071-00	76	38
1725-501-071-00	49	12	1725-514-008-00	56	10	1725-690-071-00	5	25
1725-501-107-00	49	15	1725-514-009-00	56	13		77	17
1725-501-200-50	49	1	1725-514-600-00	56	18		78	19
1725-505-021-00	50	2	1725-514-650-00	56	17	1725-690-730-10	78	10
1725-505-072-00	54	4	1725-514-680-00	56	12	1725-690-812-00	77	9
1725-505-330-20	50	1	1725-515-500-00	57	1		78	9
1725-508-012-00	51	6	1725-515-550-10	57	2	1728-102-211-10	2	16
	52	6	1725-515-560-00	57	3	1728-104-210-00	4	1
1725-508-015-00	52	25	1725-521-001-00	58	1	1728-407-076-10	39	6
1725-508-016-00	51	25	1725-521-003-00	58	2	1728-441-220-00	86	4
1725-508-019-00	51	29	1725-553-004-00	60	2		86	9
	52	31	1725-553-007-10	62	9		87	4
	99	9	1725-553-008-00	60	9		89	4
1725-508-230-00	51	31	1725-553-011-00	61	12		89	9
	52	33	1725-553-012-00	60	7		90	4

Numerical Index

Part Code	Fig.	Key	Part Code	Fig.	Key	Part Code	Fig.	Key
1728-441-701-10	90	3	1739-314-720-20	36	1	1739-509-830-00	53	12
1728-553-012-10	61	2	1739-314-740-10	36	27	1739-510-091-00	53	13
1729-111-283-00	6	5	1739-314-750-20	36	29	1739-512-001-00	55	19
1729-111-284-00	6	6	1739-314-810-00	36	31		93	6
1729-202-002-00	15	2	1739-314-830-00	36	41	1739-512-082-00	55	30
	15	7	1739-314-840-00	36	36	1739-512-210-20	55	7
	16	2	1739-314-860-00	36	42	1739-512-220-10	55	1
1729-202-004-00	18	19	1739-314-870-00	36	45	1739-512-230-00	55	5
	32	2	1739-314-880-00	36	23	1739-512-240-00	55	28
1729-202-011-00	18	18	1739-314-910-00	36	44	1739-512-810-00	55	25
	46	32	1739-314-920-10	36	16	1739-512-820-00	55	3
1729-652-220-00	76	42	1739-317-270-00	86	2	1739-514-001-00	56	4
1729-741-007-00	41	10		86	7	1739-514-003-10	81	7
1738-508-210-10	51	1		87	2	1739-514-710-00	56	22
	52	1	1739-317-320-10	86	1	1739-514-820-00	56	14
1738-626-208-00	63	42	1739-317-321-10	86	3	1739-514-830-00	56	11
1739-101-071-10	1	6		86	8	1739-514-840-20	81	8
1739-101-810-10	1	9	1739-317-330-10	86	6	1739-514-850-10	56	5
1739-102-710-10	2	28	1739-317-360-10	87	1	1739-514-860-10	56	6
1739-103-700-00	3	1	1739-317-361-10	87	3	1739-521-001-00	59	10
1739-103-720-00	3	12	1739-401-001-00	39	7		91	10
1739-112-710-20	7	7	1739-401-700-00	37	1	1739-521-200-00	91	1
1739-112-720-00	7	9	1739-407-074-00	39	4	1739-521-210-00	59	1
1739-117-710-00	8	4	1739-408-810-00	40	1	1739-521-220-00	59	6
1739-201-200-10	11	3		53	1		91	6
1739-203-710-10	12	1	1739-408-820-00	40	2	1739-530-002-10	55	12
1739-219-081-00	18	17	1739-410-072-10	41	12	1739-530-003-10	55	13
1739-268-220-00	24	5	1739-410-720-50	41	7	1739-530-004-00	55	16
1739-272-730-00	27	51	1739-410-740-20	41	24		93	3
1739-272-740-00	27	57	1739-410-750-10	41	25	1739-530-051-00	55	20
1739-272-800-00	27	31	1739-410-810-00	41	1	1739-530-310-00	92	14
1739-272-820-00	27	54	1739-410-830-00	41	21	1739-530-350-00	92	12
1739-272-850-10	27	38	1739-431-810-00	43	7	1739-530-520-00	55	11
1739-272-860-00	27	6	1739-433-810-00	45	1		93	2
1739-312-071-00	34	26	1739-437-420-10	89	1	1739-530-650-00	92	1
1739-312-072-00	34	27	1739-437-421-10	89	3	1739-530-760-00	93	1
1739-312-073-00	34	25		89	8	1739-553-810-00	61	10
1739-312-710-20	34	10	1739-437-430-10	89	6	1739-554-001-10	94	11
1739-312-740-00	34	1	1739-437-440-01	89	2	1739-554-003-00	94	10
1739-312-760-10	34	6		89	7	1739-554-005-00	94	23
1739-312-850-00	34	17		90	2	1739-554-220-00	94	3
1739-312-860-00	34	18	1739-437-460-10	90	1	1739-554-350-00	94	15
1739-313-810-10	35	1	1739-508-081-00	51	4	1739-554-360-00	94	16
1739-314-082-00	36	20		52	4	1739-554-370-00	94	2
1739-314-220-30	36	2	1739-509-820-10	53	2	1739-554-520-00	94	1

Part Code	Fig.	Key	Part Code	Fig.	Key	Part Code	Fig.	Key
1739-601-071-10	63	6	1739-702-750-00	80	7	1758-505-002-00	24	3
1739-601-072-00	63	26	1739-702-770-00	79	1		50	6
1739-601-073-20	63	35	1739-702-780-00	79	2	1771-102-007-00	41	20
1739-601-074-20	63	36	1739-702-860-00	81	1	1771-407-001-10	39	3
1739-601-077-00	63	43	1739-901-071-00	82	1	1772-521-221-20	42	6
1739-601-084-10	63	41	1739-901-072-00	82	2		59	8
1739-601-730-10	63	33	1739-901-073-00	82	3		88	7
1739-601-750-10	63	38	1739-901-074-00	82	4		91	8
1739-601-770-00	63	39	1739-902-081-00	83	15	1772-635-001-10	71	1
1739-601-810-00	63	1	1739-902-082-00	83	16	1772-652-001-00	76	10
1739-601-850-30	63	20	1739-902-083-00	83	1	1772-654-280-10	76	32
1739-601-860-10	63	15	1739-902-084-00	83	2	1772-654-281-00	76	33
1739-601-870-00	63	45	1739-902-085-00	83	3	1772-654-282-00	76	34
1739-601-880-00	63	13	1739-902-086-00	83	4	1773-401-202-10	37	2
1739-603-071-30	64	1	1739-902-087-00	83	5	1773-432-012-00	44	14
1739-603-072-00	64	3	1739-902-088-00	83	6		44	17
1739-605-200-00	65	1	1739-902-090-00	83	8	1773-434-012-00	44	2
1739-606-071-20	66	1	1739-902-091-00	83	12	1773-434-017-00	46	14
1739-611-071-00	67	7	1739-902-092-00	83	7		46	38
1739-611-081-00	68	22	1739-902-093-00	83	11	1774-111-310-10	6	4
1739-611-810-00	68	7	1739-902-094-00	83	14	1774-111-311-00	6	7
1739-611-820-00	68	8	1739-904-001-00	55	31	1774-272-071-00	27	52
1739-611-830-00	68	21		84	6		27	58
1739-619-710-00	69	3		84	15	1774-310-001-00	33	1
1739-619-810-00	69	4		85	6	1774-310-002-00	33	8
1739-631-071-00	70	6		85	16	1774-310-003-00	33	2
1739-631-072-20	70	8	1739-904-004-00	84	12		33	9
1739-631-073-30	70	1		85	12	1774-310-004-00	33	3
1739-660-001-10	74	15	1739-904-072-00	84	2		33	10
1739-660-081-00	74	8		85	2	1774-650-210-00	72	1
1739-660-210-30	74	1	1739-904-081-00	84	14	1774-650-212-00	72	2
1739-660-212-00	74	4		85	15	1774-650-220-00	73	1
1739-660-720-00	74	9	1739-904-082-00	84	1	1774-650-222-00	73	2
1739-670-081-00	75	1		85	1	1774-680-250-00	76	19
1739-670-810-00	75	2	1739-922-700-00	97	1	1774-680-260-00	76	9
1739-681-071-00	76	49	1740-313-300-10	36	8	1774-902-005-00	83	13
1739-681-081-00	76	50	1740-313-301-00	36	12	1774-904-031-10	84	16
1739-681-220-20	76	17	1740-517-580-10	94	9		85	17
1739-681-720-00	76	44	1740-680-520-10	76	40	1774-922-200-10	98	1
1739-690-730-00	95	1		76	52	1776-201-011-00	41	23
1739-690-770-10	96	1	1740-680-530-20	76	30	1776-411-002-00	42	1
1739-690-810-00	77	1	1740-680-550-00	76	5		88	2
	78	1	1740-680-551-00	76	6	1776-411-200-10	42	3
1739-702-730-10	80	1	1752-102-006-00	2	9		88	4
1739-702-740-10	80	2	1752-553-004-10	61	11	1776-411-210-10	42	4

Numerical Index

Part Code	Fig.	Key	Part Code	Fig.	Key	Part Code	Fig.	Key
1776-411-210-10	88	5	2144-610-001-00	63	37	3821-262-203-00	77	6
1776-411-300-00	88	1		75	4		78	6
1776-612-210-30	68	10	2150-661-002-00	2	14	3821-262-204-00	77	7
1776-612-211-10	68	11	2186-536-211-00	76	2		78	7
1776-612-212-00	68	12	2186-536-212-00	76	3	3824-247-202-00	77	4
1776-612-213-00	68	13	2500-210-016-00	27	16		78	4
1776-612-214-00	68	14		35	10	3827-270-002-00	77	8
1776-612-215-00	68	15	2500-326-017-00	77	14		78	8
1776-612-216-00	68	16		78	16	3829-387-410-00	92	4
1776-612-217-00	68	17	2504-135-006-00	27	14	6221-408-003-00	2	40
1776-612-218-00	68	18	2515-103-002-10	3	10	6221-408-008-00	2	34
1776-612-219-00	68	19	3517-205-007-00	67	5	6221-408-009-00	2	35
1776-612-255-00	68	25		68	5	6221-408-010-00	2	36
1776-904-004-00	84	9	3621-211-003-00	54	8	6221-408-013-00	2	39
	85	9	3621-702-003-00	62	7	6901-911-020-00	1	3
1789-216-001-00	22	7	3623-263-001-00	77	28		77	30
1789-601-007-20	63	17		78	30		78	32
1792-590-004-00	65	3	3640-111-001-10	36	32	6901-911-025-00	9	4
1800-652-400-00	76	13		36	37	7821-501-005-00	63	18
	76	14	3642-496-007-10	76	37	7825-601-004-00	63	21
	76	15	3650-106-006-00	67	4	7930-601-002-00	56	19
	76	16		68	4	7963-611-003-00	61	7
	76	23	3650-261-001-00	94	24	8655-501-051-00	94	18
	76	26	3659-301-001-00	3	2	8657-608-053-10	60	8
	76	27	3661-212-001-00	70	2	A101-251-008-00	34	2
	76	28	3662-223-005-00	54	7	J061-120-032-00	51	5
	76	29	3666-202-005-10	2	10		52	5
1805-202-026-00	29	8		41	13	J061-230-038-00	2	24
1807-652-500-00	74	17		81	13	J061-236-044-00	2	25
1807-652-510-00	74	18	3673-641-004-00	63	22	J061-247-055-00	4	8
1809-670-290-00	76	7	3673-701-005-00	18	10		4	10
1817-904-001-00	84	17		28	2	J062-104-111-00	5	10
	85	18	3673-701-006-00	28	4		5	21
1817-904-004-00	84	13	3693-407-013-00	74	10		6	3
	85	14	3737-172-009-00	1	8	J062-111-120-00	5	19
1825-202-017-00	17	4	3737-172-011-00	77	25	J062-119-126-00	5	5
	17	10		78	27		5	9
1836-312-002-00	34	4	3740-162-005-00	2	13	J062-126-134-00	5	15
1836-431-210-00	43	1	3768-185-022-10	94	8	J062-138-148-00	5	3
1836-431-220-00	43	2	3805-210-021-10	43	8		49	24
1836-431-230-00	43	3	3817-401-001-00	1	5	J062-147-159-00	2	27
1836-554-001-00	62	1		7	8	K167-005-000-20	38	1
1837-652-610-00	76	8		41	29	K167-005-001-10	38	3
2144-415-003-00	3	11	3821-262-202-00	77	5	K167-005-200-10	38	2
2144-519-007-00	54	2		78	5	K167-005-300-10	38	4

Numerical Index

Part Code	Fig.	Key
K167-005-310-10	38	7
K182-002-002-00	94	5
K182-032-001-00	94	4
K182-032-002-00	94	6
K182-032-003-00	94	7
K182-034-002-00	38	5
	38	8
K182-034-003-00	38	6
	38	9
K200-184-002-00	51	28
	52	30
K211-008-011-00	99	14
K211-066-004-00	99	11
K211-066-005-10	99	2
K211-066-007-00	99	5
K211-066-100-10	99	17
K211-066-103-00	99	20
K211-066-300-00	99	3
K211-101-000-10	51	15
	52	15
K211-101-101-00	99	1
K211-101-102-00	99	6
K211-101-103-00	99	8
K234-001-005-00	99	22
K250-054-000-00	99	15
K275-001-003-00	13	7
	100	28
K510-001-007-00	100	5
K510-001-009-00	100	7
K510-001-010-00	100	8
K510-001-011-00	100	9
K510-001-013-20	100	11
K510-001-016-00	100	15
K510-001-017-00	100	16
K510-001-018-00	100	18
K510-001-019-00	100	19
K510-001-020-00	100	20
K510-001-024-00	100	25
K510-001-026-00	100	26
K510-001-029-00	10	3
	13	9
	51	26
	100	27
K510-001-031-00	100	35
K510-001-034-00	100	38

Part Code	Fig.	Key
K510-001-036-00	100	43
K510-001-039-00	100	34
K510-001-100-00	100	45
K510-003-017-00	100	17
K510-003-021-00	100	21
K510-003-022-00	100	22
K510-003-037-00	100	23
K510-003-500-00	100	46
K510-005-005-00	100	3
K510-005-023-00	100	24
K510-006-008-00	100	6
K510-006-015-00	100	13
K510-017-000-10	14	1
K510-017-001-00	100	1
K510-017-004-10	100	2
K510-017-006-00	100	4
K510-017-012-00	100	10
K510-017-014-00	100	12
K510-017-047-00	100	39
K510-017-048-00	100	40
P103-521-006-10	52	26
P103-601-005-00	3	15
P113-201-007-00	41	9
P113-211-300-00	92	8
P113-211-330-00	92	10
P118-702-033-00	31	4
V111-165-003-50	74	20
V111-166-004-00	51	46
	52	48
V120-364-001-60	76	43
V120-366-001-60	63	19
V120-366-002-00	75	3
V120-376-001-20	55	29
V201-260-802-50	36	13
V201-261-005-00	80	5
V201-360-803-00	27	36
V201-361-003-50	46	25
	46	29
V201-361-007-00	49	20
V201-361-007-50	14	4
V201-361-008-50	49	18
V201-361-008-5B	49	19
V201-361-014-00	14	5
V201-361-202-00	27	33
	94	13

Part Code	Fig.	Key
V201-361-203-00	46	3
	46	10
V201-361-203-50	94	12
	97	3
V201-361-403-50	81	2
V201-361-404-00	59	2
	91	3
V201-361-405-00	59	3
V201-361-405-50	91	2
V203-361-004-00	29	5
V203-361-203-50	94	29
V210-360-601-20	2	17
	43	6
	63	7
	76	12
	76	18
	76	20
	76	22
	76	25
	76	41
	76	53
V210-360-601-60	63	16
	63	34
	63	40
	76	31
	78	12
V210-360-602-50	76	48
V210-360-603-00	76	45
V210-660-601-60	69	5
V210-660-603-50	69	2
V211-261-002-00	67	2
	68	2
V211-360-801-60	3	5
	12	3
	19	7
	27	7
	40	6
	55	2
	76	39
	76	51
V211-360-802-00	14	16
	27	8
	41	27
	71	2
V211-360-802-50	6	14

Numerical Index

Part Code	Fig.	Key
V211-560-803-00	9	5
	43	4
V211-561-002-50	56	3
V211-561-003-00	38	13
V211-561-004-00	38	14
V211-660-801-60	27	53
	27	59
V211-660-802-00	27	5
	63	14
	63	27
	70	3
V211-660-803-50	39	5
V211-661-003-00	46	41
V211-661-005-00	13	5
V220-541-003-50	100	44
V230-360-601-00	62	14
V230-360-601-20	1	7
	1	10
	2	41
	5	17
	41	16
	41	19
	41	26
	55	10
	77	11
	78	13
V230-360-603-00	2	12
	55	8
V230-360-603-50	51	8
	52	8
V230-360-606-00	51	18
	52	18
V231-360-801-20	24	6
	41	6
	67	8
V231-360-801-60	3	9
	40	4
	56	7
	56	23
	68	9
	81	10
V231-360-802-00	2	29
	22	6
	22	12
	27	46
V231-360-802-00	51	11
	52	11
	92	15
V231-360-802-50	81	9
V231-360-803-50	63	28
V231-360-807-00	5	13
V231-360-809-00	55	6
V231-361-002-00	7	10
	41	8
	65	2
	68	20
	77	29
	78	31
V231-361-002-50	41	22
V231-361-003-00	19	4
	43	9
V231-361-003-50	13	3
	31	3
V231-361-004-00	13	4
	19	5
V231-361-006-00	13	6
V231-361-201-60	36	35
	36	40
	70	10
V251-260-802-00	51	12
	52	12
V251-441-403-50	81	4
V273-360-601-50	63	12
V301-260-006-00	55	9
V304-260-008-00	2	32
	6	17
	27	18
	27	24
	27	37
	34	20
	36	47
	51	13
	52	13
	55	22
	63	29
	93	8
V304-260-010-00	8	9
	51	48
	52	50
	62	10
V304-260-010-00	80	6
V304-260-012-00	5	12
	97	6
V304-260-014-00	59	5
	91	5
V304-260-016-00	57	7
	80	9
V304-460-010-00	46	26
	46	30
V304-460-012-00	62	5
V304-460-014-00	81	6
V304-460-016-00	79	4
	80	3
V304-700-008-00	3	3
V305-260-012-00	98	3
V327-261-216-00	45	6
V327-262-110-00	48	7
V334-460-016-00	61	13
V341-120-008-00	6	18
V360-260-004-00	6	10
V360-260-005-00	74	21
V360-260-006-00	2	18
	2	22
	36	30
	63	8
	77	10
	78	11
V362-260-008-00	27	23
	27	26
	36	15
	71	3
	74	5
	74	11
	92	13
	92	16
V363-260-008-00	70	4
V363-260-010-00	27	28
	66	5
	66	9
V371-160-006-00	7	4
V401-160-006-00	7	5
	27	50
	34	16
	36	34
	36	39

Numerical Index

Part Code	Fig.	Key
V401-160-006-00	51	47
	52	49
	61	4
V401-160-008-00	36	14
	51	14
	52	14
V401-160-010-00	14	6
	29	6
	48	8
	49	21
V401-160-012-00	27	34
	46	4
	46	11
	62	4
	68	23
	94	14
	94	30
	97	4
V401-160-014-00	58	3
	59	4
	81	3
	81	5
	91	4
V401-160-016-00	79	3
	80	4
	80	10
V401-700-008-00	3	4
V402-160-016-00	57	8
V411-260-005-00	55	14
	55	17
	74	7
	74	16
	93	4
V411-260-006-00	3	13
	7	6
	30	5
V411-260-008-00	26	4
	27	20
	27	29
	27	43
	34	8
	34	13
	34	22
	36	6
	36	21

Part Code	Fig.	Key
V411-260-008-00	36	24
	36	28
	36	51
	63	23
	81	12
V411-260-010-00	8	8
	14	7
	63	24
	77	31
	78	33
V411-260-012-00	36	4
	36	18
	61	8
	63	30
	68	24
	97	5
V411-260-014-00	94	21
V411-260-016-00	45	7
	60	3
	80	11
V500-162-001-50	30	6
V500-162-002-00	3	14
	26	5
V500-162-501-50	36	7
	36	22
V500-162-502-00	27	15
	27	21
	27	30
	27	44
	34	9
	34	14
	34	23
	36	25
	36	52
	48	9
	56	16
V500-163-002-00	61	9
V500-163-002-50	94	22
V500-164-003-00	45	8
V511-100-805-00	34	11
V523-100-301-00	100	47
V523-100-801-60	13	2
	14	3
	19	3
	33	6

Part Code	Fig.	Key
V523-100-801-60	33	13
V523-101-002-40	29	4
	31	2
	46	5
	46	12
	46	40
V530-160-602-80	27	40
	27	56
	36	43
V560-160-005-00	55	15
	55	18
	93	5
V560-160-006-00	50	5
	54	3
V560-160-008-00	54	5
	62	12
V560-160-010-00	56	9
V580-140-602-80	14	13
V580-140-802-80	23	2
	24	2
	25	2
	26	2
V580-140-805-00	49	10
V600-110-600-90	29	7
V600-110-620-30	15	5
V600-110-620-40	15	4
	16	5
	18	16
	18	22
	18	26
	100	14
V600-110-620-50	18	6
	18	27
	46	17
	46	37
V600-110-691-00	46	19
V600-111-600-50	16	3
V682-200-000-90	51	43
	52	45
V682-200-001-00	20	4
	21	6
	22	5
	22	11
	99	12
V682-200-001-20	53	9

Numerical Index

Part Code	Fig.	Key
V682-200-001-90	33	4
	33	11
V704-140-012-00	36	5
	36	19
V704-140-015-00	67	6
	68	6
V704-140-016-00	30	7
	54	9
V704-140-017-00	100	42
V704-140-018-00	26	9
V704-140-020-00	17	8
	18	8
	34	3
	100	31
V704-140-022-00	34	28
V704-140-025-00	17	9
	44	4
V704-140-028-00	35	4
V704-140-030-00	18	25
V704-140-032-00	94	19
V704-140-035-00	32	4
	49	17
V705-140-025-00	51	40
	52	42
	53	17
V705-140-030-00	100	41
V705-140-032-00	100	33
V705-140-042-00	17	5
	17	11
V705-140-047-00	100	32
V705-140-052-00	18	11
	18	28
	44	6
V706-140-040-00	44	18
	49	13
V706-140-045-00	46	21
V706-140-050-00	44	15
V707-140-062-00	46	15
V707-140-068-00	46	22
V710-140-004-00	99	7
V720-101-900-90	80	15
V720-102-401-00	101	2
V720-102-401-60	20	6
	21	2
	30	8

Part Code	Fig.	Key
V720-102-402-10	33	16
V720-103-504-40	101	6
V720-111-900-80	10	2
	11	2
V720-111-901-00	14	8
	51	38
	52	40
V720-112-401-00	99	4
V720-112-401-10	13	8
	51	20
	51	22
	51	24
	51	36
	52	20
	52	22
	52	24
	52	38
	53	4
	53	11
	55	24
	55	27
	92	5
	92	7
	92	9
	92	11
	94	27
	100	30
V720-112-401-20	51	30
	52	32
	53	15
V720-112-401-40	10	4
	11	4
	13	10
	22	3
	22	9
	51	27
	52	27
	52	29
	99	13
	100	29
V720-112-401-50	14	9
V720-112-401-60	99	21
V720-112-401-80	51	33
	52	35
	80	13

Part Code	Fig.	Key
V720-112-402-00	51	7
	51	17
	52	7
	52	17
	99	16
	99	18
	99	24
V720-112-402-10	53	14
V720-113-502-20	45	3
V720-113-502-80	51	3
	52	3
V720-115-706-50	49	7
V721-103-104-00	14	11
V721-103-106-00	14	10
V721-103-109-00	46	2
	46	9
V723-102-004-20	38	11
V723-111-501-60	99	19
V723-112-003-80	38	10
V730-102-802-20	45	4
V742-135-500-60	49	16
V744-120-420-80	17	12
V744-120-470-70	100	36
V760-150-000-00	27	49
	34	15
	36	38
	61	3
	94	17
V762-150-000-00	36	33
V780-140-000-10	49	4
V780-140-000-2T	99	10
V780-140-000-4T	14	2
V780-140-000-6T	99	23
V782-160-000-2T	49	5
V782-160-000-4B	46	24
	46	28
V999-200-003-00	86	5
	86	10
	87	5
	89	5
	89	10
	90	5
W201-261-206-00	98	2

Alpabetical Index

6004-097-710-00

Description	Fig.	Key
ADAPTER/255X065 ASSY	23	1
ARM/CONTROL	21	28
ARM/FLOATING COMP	21	20
ARM/TENSION	23	2
BALL,STEEL	2	5
BEARING,RB/6203	21	13
BEARING/BALL	21	14
BEARING/CONNECTING R	14	7
BEARING/CRANK/LOWER	6	12
BEARING/CRANK/UPPER	6	11
BEARING/CRANKSET	6	10
BEARING/THRUST/CRANK	6	13
	7	2
	7	4
BELT/VCOGHM34.0	19	5
BODY/NOZZLE HOLDER	28	2
BODY/OILPUMP	17	2
BOLT	2	7
	6	2
	10	37
	12	18
BOLT,JOINT	17	11
BOLT,S/M6X12/7T	13	5
	21	16
BOLT,S/M6X25/7T	17	5
BOLT,S/M8X20/7T	10	38
	10	44
BOLT,S/M8X25/7T	5	3
BOLT,SEMS/M10X20,7T	9	3
BOLT,SEMS/M10X25,7T	24	9
BOLT/CONNECTINGROD	14	6
BOLT/CRANK	16	9
BOLT/FLANGE	16	7
BOLT/M6	10	29
	10	30
BOLT/M6X10	21	18
BOLT/M8X20/7T	21	8
BOLT/WASHERHEAD	29	8
BOLT/WS	17	4
BRACKET ROCKER SHAFT	12	12
BRACKET,ROCKER SHAFT	12	13
BRG/CONROD/UN050 SET	7	5
BRG/CONROD/UN100 SET	7	6
BRG/CRANK/UN050 SET	7	1
BRG/CRANK/UN100 SET	7	3

Description	Fig.	Key
CAMSHAFT/INJECTION P	21	10
CAP,BLANK/30	10	34
CAP,OIL FILLER	3	2
CAP,SEALING	2	2
CARTRIDGE/OILFILTER	17	13
CLAMP,STRAINER	17	8
CLAMP/WIRE/10-15	18	14
CLIP/HOSE/7.6-8.2	22	4
CLIP/HOSE/8.7-9.3	22	9
CONNECTINGROD ASSY	14	5
CONNECTOR,OIL FILTER	6	24
CONNECTOR/FUEL	22	1
CONNECTOR/GLOWPLUG	25	5
CORRUGATEDTUBE	22	5
COVER/CYLINDER HEAD	3	1
COVER/HYDRAULIC	10	40
COVER/INJECTIONPUMP	6	25
CRANKSHAFT ASSY	16	1
CUP/SEALING/12	6	7
CUP/SEALING/16	10	3
CUP/SEALING/28	6	3
CUP/SEALING/36	6	4
CUTTER,VALVE	12	5
CYLINDERBLOCK ASSY	6	1
CYLINDERHEAD ASSY	2	1
DOWEL	6	21
ELEMENT ASSY	29	7
FAN/COOLING	19	1
FLANGEBOLT/M10X20	11	2
FLANGEBOLT/M10X70	24	6
FLANGEBOLT/M6X10	8	4
FLANGEBOLT/M6X12	6	27
FLANGEBOLT/M6X16	10	33
	25	8
FLANGEBOLT/M6X30	19	4
FLANGEBOLT/M8X16	10	9
	17	9
FLANGEBOLT/M8X20	4	3
	18	11
	18	17
	24	4
FLANGEBOLT/M8X25	10	39
	18	22
FLANGEBOLT/M8X30	10	12
FLANGEBOLT/M8X40	4	4

Description	Fig.	Key
FLANGEBOLT/M8X45	10	10
	18	6
FLANGEBOLT/M8X50	12	19
FLANGEBOLT/M8X55	10	7
FLANGEBOLT/M8X75	10	11
	18	18
FLANGEBOLT/M8X85	10	6
FLYWEIGHT	21	17
FLYWHEEL ASSY	16	5
GASKET	3	5
	18	2
	25	7
	27	5
	27	22
GASKET,EXH.MANIFOLD	5	2
	27	7
GASKET,INLET MANIFOL	4	2
	27	6
GASKET,NOZZLE	20	3
GASKET/COVER	6	26
	10	41
	27	11
GASKET/CYLINDERHEAD	2	6
	27	3
GASKET/DELIVERYVALVE	29	4
GASKET/GEARCASE	10	24
	27	14
GASKET/HOUSING	18	16
	27	20
GASKET/PLATE	10	36
	27	15
GASKET/SPACER	18	9
	27	19
GASKET/WATERPUMP	18	5
	27	18
GEAR/CAMSHAFT	13	2
GEAR/CRANK	16	3
GEAR/IDLE ASSY	13	6
GEAR/INJECTIONPUMP	21	11
GEARCASE ASSY	10	1
GENERATOR ASSY	24	1
GLOWPLUG	25	3
GUIDE/LEVELGAGE COMP	6	30
HANGER	11	1
HOLDER/DELIVERYVALVE	29	2

Alpabetical Index

6004-097-710-00

Description	Fig.	Key
HOLDER/NOZZLE ASSY	28	1
HOSE/RUBBER	3	6
	18	13
HOSE/RUBBER/160	22	3
HOSE/RUBBER/70	22	6
HOUSING ASSY	29	6
HOUSING/THERMOSTAT	18	15
INJECTIONNOZZLE ASSY	20	1
INJECTIONPUMP ASSY	21	1
JOINTT-TYPE 2	22	7
KEY/07X05X09	13	3
	21	12
KEY/07X05X20	16	4
LEVELGAGE	6	29
LEVER/CONTROL COMP	21	25
MANIFOLD(INLET) ASSY	4	1
MANIFOLD/EXHAUST	5	1
NIPPLE	6	22
NOZZLE ASSY	28	51
NUT	12	17
	28	50
NUT,CAP/M8	10	16
NUT/CAP	3	4
NUT/FLANGE	25	4
NUT/FLANGE/M10	24	7
NUT/M08	10	8
	12	20
	18	7
	18	12
	21	9
NUT/M6	10	31
	21	29
NUT/M8	10	15
	10	42
NUT/NOZZLERETAINING	28	5
OILPAN COMP	8	1
OILPUMP ASSY	17	1
ORING	29	3
O-RING/1A,P15	17	7
	27	17
O-RING/1A,P18	8	3
O-RING/1A,P8	21	26
O-RING/1A,S50	27	16
O-RING/1A,S55	18	21
	27	21

Description	Fig.	Key
PACKING	10	17
	17	12
	27	13
PIECE,DISTANCE	28	6
PIN	6	17
	6	28
	10	20
PIN,CONTROL	21	22
PIN,GROOVE	10	23
PIN,NOZZLE HOLDER	28	3
PIN,PISTON	14	3
PIN,ST,B/10X18	16	2
PIN/ARM	10	18
PIN/IDLEGEAR	6	6
PIN/INJECTIONPUMP	29	10
PIN/SNAP	10	19
PIN/STRAIGHT	6	16
	17	3
PIN/TUBE	6	15
PIPE,OIL	17	10
PIPE/FUEL	22	2
PIPE/INJECTION ASSY	20	4
	20	5
	20	6
PIPE/WATEROUTLET	18	20
PISTON	14	1
PISTON(OV/050)	15	1
PISTON(OV/100)	15	3
PISTON/VALVE/RELIEF	10	26
PLATE	29	11
PLATE/ADJUST	24	3
PLATE/ADJUSTING	29	9
PLATE/FRONT	10	35
PLATE/REAR	9	1
PLATE/TAPPET/AD 0.2	29	23
PLATE/TAPPET/AD 0.25	29	27
PLATE/TAPPET/AD 0.3	29	24
PLATE/TAPPET/AD 0.35	29	28
PLATE/TAPPET/AD 0.4	29	25
PLATE/TAPPET/AD 0.45	29	29
PLATE/TAPPET/AD 0.5	29	26
PLATE/TAPPET/AD 0.55	29	30
PLATE/TAPPET/AD 0.6	29	18
PLATE/TAPPET/AD 0.65	29	31
PLATE/TAPPET/AD 0.7	29	19

Description	Fig.	Key
PLATE/TAPPET/AD 0.8	29	20
PLATE/TAPPET/AD 0.9	29	21
PLATE/TAPPET/AD 1.0	29	22
PLATE/THRUST	13	4
PLATE/THRUST/INJECTI	21	15
PLATE/WATER PUMP	18	3
PLUG	12	11
PLUG/M14X1.5	8	2
PLUG/PT1/2	2	3
PLUG/PT1/8	6	5
	10	2
PLUG/SCREW	10	21
PLUG/SCREW/SEAL	6	23
POINTER	9	2
PULLEY,WATER PUMP	19	2
PULLEY/CRANK	16	8
RACK/CONTROL ASSY	29	13
REGULATOR ASSY	26	1
REPAIR/ENGINE SET	27	1
RESISTANCE/1.0	22	8
RING,SNAP	14	4
RING,SNAP/12 C	10	28
RING,SNAP/16 C	12	15
RING,SNAP/4 E	21	23
RING/PISTON SET	14	2
RINGGEAR	16	6
RINGPISTON/OV050 SET	15	2
RINGPISTON/OV100 SET	15	4
RINK/CONTROL	21	21
ROCKERARM	12	9
ROCKERSHAFT ASSY	12	8
ROD,PUSH	12	7
SCREW ADJUST	12	16
SCREW/HOLLOW	21	3
SCREW/WATER PUMP	18	4
SEAL,BEARING CAP	6	8
	27	8
SEAL,BEARING CAP/7	6	9
	27	9
SEAL,CYL.HEAD COVER	3	3
	27	4
SEAL,OIL	2	4
	6	14
	10	5
	27	2

Alpabetical Index

Description	Fig.	Key
SEAL, OIL	27	10
	27	12
SEAT/SPRING/LOWER	29	17
SEAT/SPRING/UPPER	29	15
SEAT/VALVESPRING	12	4
SENSOR/REVOLUTION/L	10	32
SHAFT, CAM	13	1
SHAFT/ROCKERARM ASSY	12	10
SHIM/INJECTIONPUMP	21	4
	21	5
	21	6
	21	7
SHORTBLOCKENGIN ASSY	1	1
SLEEVE/PLUNGER	29	14
SOLENOID	25	6
SPACER, PUMP. WATER	18	8
SPACER/FUN/19	19	3
SPRING	12	14
SPRING, RETURN	21	27
SPRING, STARTING	21	32
SPRING/DELIVERYVALVE	29	1
SPRING/NOZZLEHOLDER	28	4
SPRING/PUMPPLUNGER	29	16
SPRING/RELIEF VALVE	10	27
SPRING/VALVE	12	3
SPRINNG/GOVERNOR	21	24
STARTER ASSY	24	8
STOPPER/FULLLOAD	10	14
STRAINER	17	6
STUD	2	8
	5	4
	6	19
	6	20
	10	4
STUD/M8X40	6	18
	18	10
SWITCH/OILPRESSURE	25	1
TAPPET	12	6
TAPPET/INJECTIO ASSY	29	12
THERMOMETER	25	2
THERMOSTAT	18	19
THRUSTPIECE	21	19
VALVE ASSY	29	5
VALVE/EXHAUST	12	2
VALVE/INTAKE	12	1
VALVE/RELIEF ASSY	10	25
WASHER	20	2
WASHER, PL/M10	24	2
WASHER, PL/M6	21	30
WASHER, SP/M6	21	31
WASHER, SP/M8	10	43
WASHER/0.9	28	7
WASHER/0.925	28	8
WASHER/0.95	28	9
WASHER/0.975	28	10
WASHER/08X14X01	10	13
	10	22
	27	23
WASHER/1.0	28	11
WASHER/1.025	28	12
WASHER/1.05	28	13
WASHER/1.075	28	14
WASHER/1.1	28	15
WASHER/1.125	28	16
WASHER/1.15	28	17
WASHER/1.175	28	18
WASHER/1.2	28	19
WASHER/1.225	28	20
WASHER/1.25	28	21
WASHER/1.275	28	22
WASHER/1.3	28	23
WASHER/1.325	28	24
WASHER/1.35	28	25
WASHER/1.375	28	26
WASHER/1.4	28	27
WASHER/1.425	28	28
WASHER/1.45	28	29
WASHER/1.475	28	30
WASHER/1.5	28	31
WASHER/1.525	28	32
WASHER/1.55	28	33
WASHER/1.575	28	34
WASHER/1.6	28	35
WASHER/1.625	28	36
WASHER/1.65	28	37
WASHER/1.675	28	38
WASHER/1.7	28	39
WASHER/1.725	28	40
WASHER/1.75	28	41
WASHER/1.775	28	42
WASHER/1.8	28	43
WASHER/1.825	28	44
WASHER/1.85	28	45
WASHER/1.875	28	46
WASHER/1.9	28	47
WASHER/1.925	28	48
WASHER/1.95	28	49
WASHER/9X22X2	24	5
WASHER/AIR BLEEDER	21	2
WATERPUMP ASSY	18	1

Alpabetical Index

Description	Fig.	Key
ADAPTER/45DEG	38	16
ADAPTER/90DEG/PUMP	94	8
ADAPTER/G1/4 ASSY	51	21
	52	21
	53	3
ADAPTER/G3/8-PF1/4	11	3
ADAPTER/L/G1/4 ASSY	51	23
	51	32
	52	23
	52	34
	55	23
	55	26
	92	6
	94	26
ADAPTER/L/PF1/4 ASSY	51	35
	52	37
	53	10
ADAPTER/L/R1/4	38	15
ADAPTER/PF1/4 ASSY	51	19
	52	19
ADAPTER/PF3/8 ASSY	52	28
ADPTER/G1/4.1/4	92	4
ARM	76	47
ARM COMP	27	39
	94	16
ARM/BRAKE	34	25
ARM/BRAKE ASSY	36	16
ARM/COUNTER ASSY	67	3
	68	3
ARM/DIFF COMP	35	7
ARM/HST COMP	27	38
ARM/LEVER COMP	55	11
	93	2
ARM/LIFT/LH	49	14
	49	15
ARM/LIFT/LH COMP	61	5
ARM/LIFT/RH	94	28
ARM/LIFT/RH COMP	61	6
ARM/LINK/17 COMP	54	1
ARM/MID COMP	60	1
ARM/MIRROR ASSY	69	1
ARM/NEUTRAL COMP	27	12
ARM/PARKING/A ASSY	36	2
ARM/PARKING/LH COMP	36	41
ARM/PARKING/RH COMP	36	42
ARM/PEDAL/F ASSY	27	47
ARM/PEDAL/R COMP	27	54
ARM/PTO/MID COMP	26	1
ARM/SHIFT/4WD COMP	21	1
ARM/SHIFT/PTO/M COMP	22	8
ARM/SHIFT/PTO/R COMP	22	2
ARM/SHIFT/SUB COMP	20	5
ARM/TRUNNION COMP	27	1
ARM/TRUNNION/HMS1/01	100	12
BACKLE/TURN/M12 COMP	56	12
BALL, STEEL	20	4
	21	6
	22	5
	22	11
	33	4
	33	11
	51	43
	52	45
	53	9
	99	12
BAND	5	25
	77	17
	78	19
BAND, WIRE/140	5	23
	5	24
	53	5
	55	4
	77	12
	77	13
	77	18
	77	19
	77	20
	77	21
	77	22
	77	23
	77	26
	77	27
	78	14
	78	15
	78	20
	78	21
	78	22
	78	23
	78	24
	78	25
BAND, WIRE/140	78	28
	78	29
BAND, WIRE/250	5	22
	36	26
	77	16
	77	24
	78	18
	78	26
	94	25
BAND/CLEANER	4	6
BAR	49	12
BASE/LINK/F3 ASSY	27	31
BATTERY/55B24R ASSY	7	1
BEARING, RB/16005	16	3
BEARING, RB/6003SS	100	40
BEARING, RB/6009	29	7
BEARING, RB/6203	15	5
BEARING, RB/6204	15	4
	16	5
	18	16
	18	22
	18	26
	100	14
BEARING, RB/6205	18	6
	18	27
	46	17
	46	37
BEARING, RB/6903	100	39
BEARING, RB/6910	46	19
BEARING/BALL	15	2
	15	7
	16	2
	18	7
	18	10
	18	18
	18	19
	27	4
	27	13
	28	2
	28	4
	32	2
	44	2
	44	14
	44	17
	46	14

Alpabetical Index

Description	Fig.	Key
BEARING/BALL	46	32
	46	38
BEARING/BALL 6305SH2	18	15
BEARING/BALL/6004	17	4
	17	10
BEARING/BALL/6210C	29	8
BEARING/BALL/6304SH2	28	6
BEARING/BALL/6909	46	20
BEARING/NEEDLE	100	17
BEARING/ROLLER	28	7
BEARING/THRUST	100	13
BELT/SEAT SET	68	21
BLOCK/CYLINDER	100	3
BLOCK/PORT/HMS1/017	100	2
BLUB/12V-21/5W	74	4
BODY	53	7
BOLT	58	2
BOLT,BATTERY	7	3
BOLT,S/M10X20	67	2
	68	2
BOLT,S/M10X25/7T	56	3
BOLT,S/M10X30/7T	38	13
BOLT,S/M10X40/7T	38	14
BOLT,S/M8X30/7T	9	5
	43	4
BOLT,SEMS/M10X20,7T	1	3
	77	30
	78	32
BOLT,SEMS/M10X25,7T	9	4
BOLT,SP/M10X30/7T	46	41
BOLT,SP/M10X50/7T	13	5
BOLT,SP/M6X12	2	17
	43	6
	63	7
	76	12
	76	18
	76	20
	76	22
	76	25
	76	41
	76	53
BOLT,SP/M6X16	63	16
	63	34
	63	40
	76	31
BOLT,SP/M6X16	78	12
BOLT,SP/M6X16/7T	69	5
BOLT,SP/M6X25	76	48
BOLT,SP/M6X30	76	45
BOLT,SP/M6X35/7T	69	2
BOLT,SP/M8X16	3	5
	12	3
	19	7
	27	7
	40	6
	55	2
	76	39
	76	51
BOLT,SP/M8X16/7T	27	53
	27	59
BOLT,SP/M8X20	14	16
	27	8
	41	27
	71	2
BOLT,SP/M8X20/7T	27	5
	63	14
	63	27
	70	3
BOLT,SP/M8X25	6	14
BOLT,SP/M8X35/7T	39	5
BOLT,WING/M6X15	63	12
BOLT/M06X08/APSET	101	8
BOLT/M10X140/7T	14	5
BOLT/M10X35/7T	46	25
	46	29
BOLT/M10X40/7T,P1.25	29	5
BOLT/M10X50	80	5
BOLT/M10X70/7T	49	20
BOLT/M10X75/7T	14	4
BOLT/M10X85/7T	49	18
BOLT/M10X85/7T,SEAL	49	19
BOLT/M12X1.5	32	7
BOLT/M12X20/7T	27	33
	94	13
BOLT/M12X30/7T	46	3
	46	10
BOLT/M12X35	62	3
BOLT/M12X35/7T	94	12
	97	3
BOLT/M12X35/7T,P1.25	94	29
BOLT/M12X60	98	2
BOLT/M14X1.5	46	42
BOLT/M14X35/7T	81	2
BOLT/M14X40/7T	59	2
	91	3
BOLT/M14X50/7T	59	3
BOLT/M14X55/7T	91	2
BOLT/M6X14/16	63	37
	75	4
BOLT/M8X20(22)	3	11
BOLT/M8X25	36	13
BOLT/M8X30/7T	27	36
BOLT/S	10	5
	11	5
	27	35
	42	2
	88	3
BOLT/SET/M16X60	80	8
BOLT/SM/M10X16	21	3
BOLT/SM/M10X23	27	2
BOLT/SP/7	27	11
BOLT/UNF7/16X38	68	22
BOOT	76	34
BRACKET COMP	63	13
BRACKET/ARM COMP	94	15
BRACKET/CYLINDE COMP	94	2
BRACKET/ENG/REAR/LH	1	1
BRACKET/ENG/REAR/RH	1	2
BRACKET/FUSE COMP	78	10
BRACKET/HOLDER	76	11
	76	24
BRACKET/LAMP/LH COMP	79	1
BRACKET/LAMP/NUMBER	74	9
BRACKET/LAMP/RH COMP	79	2
BRACKET/MUFFLER/CLEA	3	7
BRACKET/OUTLET COMP	92	12
BRACKET/RESERVE TANK	2	40
BRACKET/STEP/LH COMP	70	9
BRACKET/STOPPER COMP	63	15
BRACKET/SWITCH COMP	76	44
BRACKET/SWITCH/HST	76	50
BRACKET/SWITCH/SUB	76	38
BRACKET/TANK/LH	6	11
BRACKET/TANK/RH	6	12
BRACKET/VALVE COMP	55	5

Alpabetical Index

Description	Fig.	Key
BULB/12V/5W	74	13
BULB/12V21W	74	2
BULB/12V5W	74	3
BULB/H4/60/55W	72	2
	73	2
BULB/LAMP/14V60MA	76	6
BUMPER/FRONT SET	97	1
BUSH(16X18X25)	54	7
BUSH,LEVER	2	11
BUSH/12X14X15	36	3
	36	17
BUSH/15X17X15	67	4
	68	4
BUSH/16X18X15	36	32
	36	37
BUSH/16X18X25	27	32
	27	48
BUSH/18X26X20	26	7
BUSH/19X30X14	63	18
BUSH/20X23X20	34	2
BUSH/22X25X25	45	2
BUSH/28X32X20	35	2
BUSH/35X39X30	49	2
BUSH/40X43X30	49	3
BUSH/68X71X14	100	18
BUSH/95X100X22	100	16
BUTTON	36	11
BUZZER ASSY	76	21
CABLE/ACCELERATOR	8	1
CABLE/BATTERY ASSY	7	7
CABLE/DIFF ASSY	35	5
CABLE/EARTH ASSY	7	9
CABLE/PARKING ASSY	36	23
CAM/BRAKE COMP	33	15
CAP	2	2
	2	34
	101	4
CAP,OIL	46	6
	49	25
CAP,PTO SHAFT	12	2
	19	6
CAP,TIRE VALVE	86	5
	86	10
	87	5
	89	5

Description	Fig.	Key
CAP,TIRE VALVE	89	10
	90	5
CAP/28	65	3
CAP/NONLEAK ASSY	6	4
CAP/WHEEL	37	2
CASE/CYLINDER ASSY	49	1
CASE/DIFF	29	2
	29	3
CASE/DIFFERENTIAL/FR	44	8
CASE/FINAL/LH	46	1
	46	23
CASE/FINAL/RH	46	8
	46	27
CASE/HMS1/017	100	1
CASE/TRANSMISSION	10	1
	11	1
CHAIN/CHECK/LH COMP	56	11
CHAIN/CHECK/RH COMP	56	14
CLAMP	2	39
	56	24
CLAMP,HARNESS	77	25
	78	27
CLAMP,MAIN HARNESS	1	8
CLAMP/28X55	94	24
CLAMP/32	3	10
CLAMP/WIRE/30-38	2	24
CLAMP/WIRE/36-44	2	25
CLAMP/WIRE/47-55	4	8
	4	10
CLAMP/WORM/20-32	51	5
	52	5
CLEANER/AIR ASSY	4	1
CLIP	4	5
CLIP(B)	70	7
CLIP/HOSE/10.4-11.1	5	10
	5	21
	6	3
CLIP/HOSE/11.1-12.0	5	19
CLIP/HOSE/11.9-12.6	5	5
	5	9
CLIP/HOSE/11-13	5	4
CLIP/HOSE/12.6-13.4	5	15
CLIP/HOSE/13.8-14.8	5	3
	49	24
CLIP/HOSE/14.7-15.9	2	27

Description	Fig.	Key
CLUTCH/PTO ASSY	18	1
COLLAR	2	14
COLLAR(35X50X2)	32	3
COLLAR/06X14X13	55	12
COLLAR/08X12X10	63	32
COLLAR/08X12X15	39	4
	76	49
COLLAR/09X14X07	63	21
COLLAR/12X24X12	68	25
COLLAR/16X22X20	61	12
COLLAR/25X40X11	27	10
COLLAR/48X52X17	44	5
COLLAR/9X14X5	74	10
CONTROLLER/STEERING	39	1
COVER ASSY	4	2
COVER COMP	43	7
COVER/DUST	48	4
COVER/DVS2/101	99	1
COVER/FAN/LH COMP	41	21
COVER/FRONT	41	5
COVER/FUSEBOX	77	9
	78	9
COVER/JOINT	43	5
COVER/LAMP/LH	63	35
COVER/LAMP/RH	63	36
COVER/LINK COMP	36	27
COVER/LOWER	64	1
COVER/PANEL/F3	75	1
COVER/RH COMP	1	9
COVER/ROD/A SET	38	4
COVER/ROD/B SET	38	7
COVER/SHIELD	81	7
COVER/SWITCH	76	4
COVER/SWITCH COMP	36	29
COVER/UNDER	41	15
COVER/VALVE COMP	55	28
COVER/WHEEL	46	39
CRANK/LIFT	49	11
CUSHION,B/ RUBBER	2	31
	6	16
CUSHION,RUBBER	3	8
	6	15
CYLINDER ASSY	38	1
CYLINDER/TXG ASSY	94	3
DAMPER/OIL ASSY	27	25

Alpabetical Index

Description	Fig.	Key
DIODE	77	2
	78	2
DISK/BRAKE	102	11
DUST SEAL	38	6
	38	9
DUST/SEAL	94	7
ELBOW/45DEG ASSY	92	8
ELBOW/90DEG ASSY	52	26
ELBOW/90DEG/L ASSY	92	10
ELEMENT	101	7
ELEMENT ASSY	4	3
FAN/HST	14	15
FENDER	66	1
FILTER/CHARGE ASSY	53	6
FILTER/FUEL ASSY	5	11
FILTER/LINE/12X18X15	51	16
	52	16
FILTER/SUCTION COMP	51	1
	52	1
FLANGE/COVER	51	25
FLANGE/FAN COMP	14	12
FLANGE/JOY	52	25
FLANGEBOLT	68	17
FLANGEBOLT/M10X20	7	10
	41	8
	65	2
	68	20
	77	29
	78	31
FLANGEBOLT/M10X25	41	22
FLANGEBOLT/M10X30	19	4
	43	9
FLANGEBOLT/M10X35	13	3
	31	3
FLANGEBOLT/M10X40	13	4
	19	5
FLANGEBOLT/M10X60	13	6
FLANGEBOLT/M12X16	36	35
	36	40
	70	10
FLANGEBOLT/M6X10	62	14
FLANGEBOLT/M6X12	1	7
	1	10
	2	41
	5	17
FLANGEBOLT/M6X12	41	16
	41	19
	41	26
	55	10
	77	11
	78	13
FLANGEBOLT/M6X30	2	12
	55	8
FLANGEBOLT/M6X35	51	8
	52	8
FLANGEBOLT/M6X60	51	18
	52	18
FLANGEBOLT/M8X12	24	6
	41	6
	67	8
FLANGEBOLT/M8X16	3	9
	40	4
	56	7
	56	23
	68	9
	81	10
FLANGEBOLT/M8X20	2	29
	22	6
	22	12
	27	46
	51	11
	52	11
	92	15
FLANGEBOLT/M8X25	81	9
FLANGEBOLT/M8X35	63	28
FLANGEBOLT/M8X70	5	13
FLANGEBOLT/M8X90	55	6
FLOOR	70	1
FORK COMP	34	6
FORK/SHIFT/DIFFLOCK	30	2
FORK/SHIFT/SUB	20	1
FRAME/MAIN/F3 COMP	41	1
FRAME/MID/LH COMP	80	1
FRAME/MID/RH COMP	80	2
FRAME/REAR COMP	81	1
FRAME/UPPER COMP	80	7
FUSE(BLADE/32V15A)	77	6
	78	6
FUSE/BLADE/32V05A	77	4
	78	4
FUSE/BLADE/32V10A	77	5
	78	5
FUSE/BLADE/32V20A	77	7
	78	7
FUSE/SLOW BLOW/40A	77	3
	78	3
GASKET	3	2
	100	26
GASKET/DVS2/066	99	2
GAUGE/FUEL ASSY	6	8
GAUGE/LEBEL	19	2
GEAR/07-33 SET	28	1
GEAR/21-21	18	21
GEAR/BEVEL/09	46	31
GEAR/BEVEL/13	46	13
GEAR/BEVEL/14	46	16
GEAR/BEVEL/15	44	10
GEAR/BEVEL/20	29	10
	29	11
GEAR/BEVEL/21	44	16
GEAR/BEVEL/35	46	34
GEAR/HELICAL/21	18	2
GEAR/HELICAL/40	18	9
GEAR/SPUR/10	28	5
GEAR/SPUR/13	18	12
GEAR/SPUR/16	16	1
	17	1
GEAR/SPUR/19-27	16	6
GEAR/SPUR/24	16	4
GEAR/SPUR/26	15	1
	18	23
GEAR/SPUR/28	15	3
	15	6
GEAR/SPUR/29	17	3
GEAR/SPUR/32	18	17
GEAR/SPUR/56	29	1
GRIP,LEVER	55	21
	93	7
GRIP/09X65/OR	8	5
GRIP/ASSIST/LH	66	2
GRIP/ASSIST/RH	66	6
GRIP/MAIN	23	4
	24	4
GRIP/MID/PTO	25	4
	26	11

Alpabetical Index

1739-097-210-00

Description	Fig.	Key
GRIP/MID/PTO	54	12
GRIP/ORANGE	36	12
GRIP/SUB	50	3
GROMMET	2	15
	62	8
GROMMET/10X40X03	74	19
GROMMET/17X21X05	41	10
GROMMET/53X59X06	41	2
GUARD/LIGHT	74	15
GUIDE	2	4
	2	5
GUIDE/HOSE COMP	41	28
	55	1
HARNESS/BATTERY/CIRC	96	1
HARNESS/LAMP	74	14
HARNESS/MAIN/F3 ASSY	77	1
	78	1
HARNESS/SOCKET/E4	74	18
HARNESS/TRAILER/E4	74	17
HINGE/HOOD	63	26
HITCH/FRONT SET	88	1
HITCH/TRAILER COMP	59	1
HITCH/TRAILER SET	91	1
HOLDER	8	3
HOLDER/15	63	44
HOLDER/BATTERY COMP	7	2
HOLDER/JE/9-9	5	6
	40	5
	77	15
	78	17
HOLDER/ROD	3	15
HOOD/F3 COMP	63	1
HOOK COMP	63	20
HOOK/TOP-LINK	56	21
HORN ASSY	76	30
HOSE/06X10X1900 ASSY	5	20
HOSE/06X10X960 ASSY	6	2
HOSE/07X12X1250 ASSY	5	8
HOSE/07X12X570 ASSY	5	2
HOSE/07X12X800 ASSY	5	18
HOSE/08X13X70	5	1
HOSE/1155/E4 ASSY	53	2
HOSE/1250/E4 ASSY	40	1
	53	1
HOSE/1385/E4 ASSY	40	2

Description	Fig.	Key
HOSE/1500 ASSY	94	9
HOSE/21X29X70/E4	51	4
	52	4
HOSE/265 ASSY	92	3
HOSE/290	2	26
HOSE/900/E4 ASSY	55	3
	55	25
HOSE/BREATHER	49	23
HOSE/CLEANER/INLET	4	7
HOSE/CLEANER/OUTLET	4	9
HOSE/DERIVERY	92	2
HOSE/FUEL/84	5	14
HOSE/RADIATOR/LOWER	2	20
HOSE/RADIATOR/UPPER	2	19
HOSE/RUBBER	2	36
	2	38
HOUSING/AXLE	31	1
HOUSING/AXLE ASSY	45	1
HST/GC/21 ASSY	14	1
HUB/28X38X30	61	2
HUB/PARKING/LH ASSY	36	31
HUB/PEDAL/R COMP	27	55
INSULATOR	1	4
	2	30
	41	12
	43	8
	63	41
INSULATOR/120	23	3
	25	3
	26	10
INSULATOR/15	39	7
INSULATOR/15X15X140	2	9
INSULATOR/25X60	6	20
INSULATOR/30	63	43
INSULATOR/305	41	20
INSULATOR/LEVER/SUB	24	3
	50	6
	54	11
INSULATOR/LOWER	41	11
JOINT BALL M08RH	27	22
JOINT/T	5	7
KEY	76	2
KIT/CN-4P-M SET	95	1
KIT/OUTLET/VALV SET	92	1
KNOB	51	45

Description	Fig.	Key
KNOB	52	47
KNOB/ADJUST	62	9
LABEL/1322/2014	68	19
LABEL/78/764	68	18
LABEL/ADJUST	83	9
LABEL/BATTERY	84	11
	84	13
	85	11
	85	14
LABEL/BATTERY/55B24R	84	16
	85	17
LABEL/CAUTION/BATTER	84	4
	85	4
LABEL/CAUTION/STEP	84	17
	85	18
LABEL/CLUTCH/PTO	83	4
LABEL/CONTROL/4WD	83	2
LABEL/CONTROL/HOOD	83	16
LABEL/CONTROL/LH	83	11
LABEL/CONTROL/POSITI	83	3
LABEL/CONTROL/PTO/M	83	6
LABEL/CONTROL/PTO/R	83	5
LABEL/CONTROL/RH	83	14
LABEL/CONTROL/SLOW R	83	8
LABEL/CONTROL/SUB	83	1
LABEL/CONTROL/SUBCON	55	30
LABEL/DIFF/E4	83	7
LABEL/DRIVE/A	84	1
	85	1
LABEL/DRIVE/B	84	2
	85	2
LABEL/ETHER	84	7
	85	7
LABEL/FUEL	84	12
	85	12
LABEL/FUSE	84	14
	85	15
LABEL/GAUGE	83	10
LABEL/MAINTENANCE	83	15
LABEL/PARKING	83	13
LABEL/PTO/TRAILER	84	9
	85	9
LABEL/ROPS	85	13
LABEL/SWITCH/MAIN	83	12
LABEL/TRH1739	59	10

Alpabetical Index

Description	Fig.	Key
LABEL/TRH1739	91	10
LABEL/W/FAN	84	3
	85	3
LABEL/W/RADIATOR	84	8
	85	8
LABEL/W/STARTER	84	10
	85	10
LABEL/WARNING/BELT	84	5
	85	5
LABEL/WARNING/HOT	55	31
	84	6
	84	15
	85	6
	85	16
LAMP/COMBINATIO ASSY	74	1
LAMP/HEAD/G ASSY	73	1
LAMP/HEAD/H4 ASSY	72	1
LAMP/LED ASSY	76	8
LAMP/NUMBERPLAT SET	74	12
LEVER/4WD COMP	24	1
LEVER/ACCELERATOR	8	4
LEVER/ADJUST COMP	27	9
LEVER/M08	55	19
	93	6
LEVER/M08X110	55	20
LEVER/PARKING ASSY	36	8
LEVER/POS/17 COMP	50	1
LEVER/PTO/17 ASSY	54	6
LEVER/PTO/MID ASSY	26	6
LEVER/PTO/REAR COMP	25	1
LEVER/SUB COMP	23	1
LEVER/VALVE/1SSET	93	1
LINING/11X40X03	8	6
LINING/50	70	2
LINK/LIFT/LOWER COMP	60	6
LINK/LOWER COMP	56	17
LINK/MOWER/CYLINDER/	94	1
LINK/STOPPER COMP	62	2
LINK/TOP ASSY	56	18
LINK/UPPER COMP	60	5
LINKPIN	42	5
	59	7
	80	14
	88	6
	91	7

Description	Fig.	Key
MARK/PORT/A	92	17
MARK/PORT/B	92	18
MAT/LH	70	6
MAT/RH	70	8
METAL/BRAKE/LH	33	5
METAL/BRAKE/RH	33	12
METAL/HST	13	1
METAL/PTO	19	1
METAL/SHIFT	22	7
METAL/SHIFT/PTO	22	1
METAL/SLIDE	100	5
MIRROR ASSY	69	6
MUFFLER COMP	3	1
NEEDLE	100	15
NET	41	18
NET/FRONT	63	6
NET/HOOD/REAR COMP	63	9
NET/LOWER	64	3
NIPPLE,GREASE	27	49
	34	15
	36	38
	61	3
	94	17
NIPPLE,GREASE/B-M6F	36	33
NUT	56	13
	76	33
NUT,CAP/M8	6	18
NUT,CASTLE/M10 P1.25	48	7
NUT,CASTLE/M16 P=1.5	45	6
NUT,RING	101	5
NUT,SUS/M8	3	3
NUT,WING/M6	7	4
NUT/5/8-18UNF	39	2
NUT/FLANGE/M08	68	16
NUT/FLANGE/M10	41	23
NUT/FLANGE/M6	77	14
	78	16
NUT/LH/M08	34	21
	36	48
NUT/M08	1	5
	7	8
	41	29
NUT/M10	8	9
	51	48
	52	50

Description	Fig.	Key
NUT/M10	62	10
	80	6
NUT/M10/7T	46	26
	46	30
NUT/M12	5	12
	97	6
	98	3
NUT/M12/7T	62	5
NUT/M12X1.25	48	6
NUT/M14	59	5
	91	5
NUT/M14/7T	81	6
NUT/M16	57	7
	80	9
NUT/M16 P=1.5	61	13
NUT/M16/7T	79	4
	80	3
NUT/M6	55	9
NUT/M8	2	32
	6	17
	27	18
	27	24
	27	37
	34	20
	36	47
	51	13
	52	13
	55	22
	63	29
	93	8
NUT/RING	76	3
NUT/SPH/M08	63	42
NUT/WASHER/M10	27	28
	66	5
	66	9
NUT/WASHER/M4	6	10
NUT/WASHER/M5	74	21
NUT/WASHER/M6	2	18
	2	22
	36	30
	63	8
	77	10
	78	11
NUT/WASHER/M8	27	23
	27	26

Alpabetical Index

1739-097-210-00

Description	Fig.	Key
NUT/WASHER/M8	36	15
	70	4
	71	3
	74	5
	74	11
	92	13
	92	16
OIL SEAL	100	34
O-RING/1A,G40	14	11
O-RING/1A,G60	14	10
O-RING/1A,G90	46	2
	46	9
O-RING/1A,P10A	101	2
O-RING/1A,P16	20	6
	21	2
	30	8
O-RING/1A,P21	33	16
O-RING/1A,P44	101	6
O-RING/1A,P9	80	15
O-RING/1A,S42	38	11
O-RING/1B,P10	14	8
	51	38
	52	40
O-RING/1B,P10A	99	4
O-RING/1B,P11	13	8
	51	20
	51	22
	51	24
	51	36
	52	20
	52	22
	52	24
	52	38
	53	4
	53	11
	55	24
	55	27
	92	5
	92	7
	92	9
	92	11
	94	27
	100	30
O-RING/1B,P12	51	30
	52	32

Description	Fig.	Key
O-RING/1B,P12	53	15
O-RING/1B,P14	10	4
	11	4
	13	10
	22	3
	22	9
	51	27
	52	27
	52	29
	99	13
	100	29
O-RING/1B,P15	14	9
O-RING/1B,P16	99	21
O-RING/1B,P18	51	33
	52	35
	80	13
O-RING/1B,P20	51	7
	51	17
	52	7
	52	17
	99	16
	99	18
	99	24
O-RING/1B,P21	53	14
O-RING/1B,P22A	45	3
O-RING/1B,P28	51	3
	52	3
O-RING/1B,P65	49	7
O-RING/1B,P8	10	2
	11	2
O-RING/1B,S16	99	19
O-RING/1B,S38	38	10
ORNAMENT/DIESEL	82	3
ORNAMENT/I	82	5
ORNAMENT/LH	82	1
ORNAMENT/RH	82	2
ORNAMENT/STEERING	82	6
ORNAMENT/TXG237	82	4
PACKING	2	7
	2	35
	6	6
	46	7
	49	26
	101	9
PACKING,OIL PUMP	51	10

Description	Fig.	Key
PACKING,OIL PUMP	52	10
PACKING,ROD	94	6
PACKING/PISTON	38	3
PACKING/RUBBER	6	9
PACKINGA	6	7
PAD	34	4
PAD/50	2	10
	41	13
	81	13
PAD/HST/R	27	52
	27	58
PAD/PS	39	3
PANEL/INSTRUMEN ASSY	75	2
PANEL/RADIATOR COMP	2	28
PANEL/SEAT/E4	67	7
PEDAL/BRAKE ASSY	34	1
PEDAL/DIFF ASSY	35	1
PEDAL/HST/F COMP	27	51
PEDAL/HST/R COMP	27	57
PIN	34	7
	100	46
PIN ASSY	42	3
	88	4
PIN,HAIR	57	5
	60	4
PIN,HAIR (19)	56	20
PIN,SPLIT/2.5X15	36	7
	36	22
PIN,SPLIT/2.5X20	27	15
	27	21
	27	30
	27	44
	34	9
	34	14
	34	23
	36	25
	36	52
	48	9
	56	16
PIN,SPLIT/2X15	30	6
PIN,SPLIT/2X20	3	14
	26	5
PIN,SPLIT/3X20	61	9
PIN,SPLIT/3X25	94	22
PIN,SPLIT/4X30	45	8

Alpabetical Index

Description	Fig.	Key
PIN, SPRING/6X28 W	14	13
PIN, SPRING/8X28 W	23	2
	24	2
	25	2
	26	2
PIN, SPRING/8X50 W	49	10
PIN, ST	100	43
PIN, ST, B/10X24	29	4
	31	2
	46	5
	46	12
	46	40
PIN, ST, B/3X10	100	47
PIN, ST, B/8X16	13	2
	14	3
	19	3
	33	6
	33	13
PIN, TAPER/8X50	34	11
PIN/05X17	55	16
	93	3
PIN/05X39	55	13
PIN/06X31	54	2
PIN/06X32	30	4
	35	8
PIN/08X19	27	14
PIN/08X26	34	24
	36	49
PIN/08X45	29	13
PIN/08X46	27	27
PIN/08X52	36	50
PIN/10X32	56	15
PIN/12X42	60	8
PIN/12X48	61	7
PIN/12X75	44	11
PIN/15X60	94	20
PIN/15X72	94	11
PIN/16X107	60	2
PIN/16X51	57	4
PIN/18X98 ASSY	59	6
	91	6
PIN/19X86	56	19
PIN/19X92	57	6
PIN/20X58	80	12
PIN/25X45	61	11

Description	Fig.	Key
PIN/30X116 COMP	42	4
	88	5
PIN/6X26	50	4
PIN/GROOVE	27	40
	27	56
	36	43
PIN/PIVOT	45	5
PIN/SNAP	50	5
	54	3
	54	5
	55	15
	55	18
	56	9
	62	12
	93	5
PIN/SNAP/B	8	2
	35	6
	35	9
	60	9
PIN/SPOOL	99	6
PIN/SPRING	44	12
PIN/STOPPER	56	8
PINION/BEVEL/09	44	1
PINION/BEVEL/11	44	9
PINION/BEVEL/12	29	9
PIPE	2	37
PIPE, BREATHER	49	22
PIPE/MAIN COMP	51	34
	52	36
PIPE/PARKING/RH ASSY	36	36
PIPE/PTO COMP	53	12
PIPE/RETURN COMP	51	31
	52	33
PIPE/SUC/FRONT	51	6
	52	6
PIPE/SUCTION/REAR	51	2
	52	2
PISTON	49	6
	94	4
	100	6
	102	1
PLATE	6	5
	94	23
PLATE COMP	56	22
	63	39

Description	Fig.	Key
PLATE, RUBBER	6	19
	66	10
PLATE, SWITCH	76	37
PLATE/BACK	102	7
PLATE/BUMPER	97	2
PLATE/CHECKCHAIN	56	4
PLATE/CLAMP COMP	40	3
PLATE/CONTROLLER	39	6
PLATE/COVER COMP	12	1
PLATE/COVER/LH COMP	41	24
PLATE/COVER/RH COMP	41	25
PLATE/DISK	102	6
PLATE/FRICTION	33	3
	33	10
PLATE/GUIDE	62	1
PLATE/HITCH	42	1
	58	1
	88	2
PLATE/I/16X107	27	42
PLATE/I/16X56	27	41
PLATE/I/19X124	36	20
PLATE/I/19X162	62	11
PLATE/I/19X256	26	3
PLATE/IR/25X95	27	45
PLATE/L/66X133	1	6
PLATE/LH	66	3
PLATE/LH COMP	56	5
PLATE/LIFT	60	7
PLATE/NEUTRAL/1 COMP	27	3
PLATE/NUMBER/E4	71	1
PLATE/PRESSURE/LH	33	1
PLATE/PRESSURE/RH	33	8
PLATE/RH	66	7
PLATE/RH COMP	56	6
PLATE/SEAT/LH COMP	68	7
PLATE/SEAT/RH COMP	68	8
PLATE/SEPARATER	33	2
	33	9
	102	5
PLATE/SPRING	100	23
PLATE/STOPPER	51	39
	52	41
	53	16
	56	2
PLATE/SWASH/HMS1/017	100	4

Alpabetical Index

Description	Fig.	Key
PLATE/TRUNNION COMP	27	6
PLATE/U/40X13	2	21
PLATE/VALVE/MOTOR	100	9
PLATE/VALVE/PUMP	100	8
PLATE/Z/16X180	54	4
PLUG	31	4
	99	14
PLUG(G3/8)	10	3
	13	9
	51	26
	100	27
PLUG(PF1/4)	13	7
	100	28
PLUG/M18	99	22
PLUG/SCREW	49	4
PLUG/SCREW/SEAL	14	2
	46	24
	46	28
	49	5
	99	10
	99	23
POPPET(CHECK/1.6)	100	25
POPPET/CHECK/0.5	100	24
POPPET/RELIEF	100	22
POST/STEERING COMP	41	7
PRESSURE/BRAKE	102	12
PROTECTOR	2	3
PUMP/FUEL ASSY	5	16
PUMP/GEAR/R10 ASSY	51	9
	52	9
RACKEND ASSY	48	3
RADIATOR ASSY	2	1
REFLECTOR ASSY	74	6
RELAY/5P ASSY	76	13
	76	14
	76	15
	76	16
	76	23
	76	26
	76	27
	76	28
	76	29
RELAY/FLASHER/EEC	76	17
RESERVETANK ASSY	2	33
RIMVALVE ASSY	86	4

Description	Fig.	Key
RIMVALVE ASSY	86	9
	87	4
	89	4
	89	9
	90	4
RING	42	7
	59	9
	88	8
	91	9
RING,BACK UP	49	8
RING,SNAP/12 C	36	5
	36	19
RING,SNAP/15 C	67	6
	68	6
RING,SNAP/16 C	30	7
	54	9
RING,SNAP/17 C	100	42
RING,SNAP/18 C	26	9
RING,SNAP/20 C	17	8
	18	8
	34	3
	100	31
RING,SNAP/22 C	34	28
RING,SNAP/25 C	17	9
	44	4
	51	40
	52	42
	53	17
RING,SNAP/28 C	35	4
RING,SNAP/30 C	18	25
	100	41
RING,SNAP/32 C	94	19
	100	33
RING,SNAP/35 C	32	4
	49	17
RING,SNAP/4 E	99	7
RING,SNAP/42 C	17	5
	17	11
RING,SNAP/47 C	100	32
RING,SNAP/52 C	18	11
	18	28
	44	6
RING,SNAP/R62	46	15
RING,SNAP/R68	46	22
RING,SNAP/S40	44	18

Description	Fig.	Key
RING,SNAP/S40	49	13
RING,SNAP/S45	46	21
RING,SNAP/S50	44	15
RING/22	18	4
RING/25	18	5
RING/36	48	5
RING/BACK UP	45	4
RING/O	102	2
	102	3
RING/O/F404/1015	99	20
RING/SNAP	28	3
	102	13
RING/SNAP/CH125	33	7
	33	14
RING/SNAP/CS25	17	2
	18	14
RING/SNAP/R62	32	5
ROD	36	9
	49	9
ROD PACKING	38	5
	38	8
ROD/104 COMP	36	44
ROD/132 COMP	34	17
ROD/160/LH COMP	36	45
ROD/22X353	56	1
ROD/380/LH COMP	34	18
ROD/HOOD COMP	3	12
ROD/HST/376 COMP	27	19
ROD/LIFT/LH COMP	57	1
ROD/LIFT/RH ASSY	57	2
ROD/LINK COMP	94	31
ROD/LINK/598 COMP	61	10
ROD/M08X85	27	17
ROD/PISTON	38	2
RODEND/137 ASSY	48	1
RODEND/B ASSY	48	2
RUBBER,BUFFER.A	6	13
RUBBER,CUSHION	41	3
RUBBER,HOOK	63	11
SCREW,SOCKET/M10X35	100	44
SCREW,SP/M4X16	76	43
SCREW,SP/M6X12	55	29
SCREW,SP/M6X16	63	19
SCREW,SP/M6X20	75	3
SCREW/M03X20	76	36

Description	Fig.	Key
SCREW/M5X35	74	20
SCREW/M6X40	51	46
	52	48
SCREW/P	2	6
SCREW/RH COMP	57	3
SCREW/SOCKET	51	28
	52	30
	99	8
SCREW/SP/M06X16	64	2
SCREW/TAPPING/3.5X13	76	10
SEAL,OIL/21	44	7
SEAL,OIL/TC20428	17	12
SEAL,OIL/TC20477	100	36
SEAL,OIL/VC35506	49	16
SEAL/10X10X420	2	8
SEAL/10X10X500	70	5
SEAL/30X20X150	63	3
	63	4
SEAL/45X10X315	41	17
SEAL/45X50X125	41	14
SEAL/45X50X80	63	5
SEAL/47	100	37
SEAL/70X20X640	63	2
SEAL/DUST	51	41
	52	43
	53	18
SEAL/OIL	18	20
	18	29
	32	6
	100	35
SEAL/OIL ASSY	46	18
	46	36
SEAL/WASHER/10	21	4
SEAT/BACK ASSY	68	11
SEAT/CUSHION ASSY	68	12
SEAT/SLIDE ASSY	68	15
SEAT/SLIDE/LEVE ASSY	68	14
SEAT/SUSPENSION ASSY	68	13
SEAT/W10 SET	68	10
SHACKLE	56	10
SHAFT/190	47	2
SHAFT/360	47	1
SHAFT/4WD	17	6
SHAFT/4WD/1032 ASSY	43	1
SHAFT/ADJUST COMP	62	6
SHAFT/BRAKE SET	34	10
SHAFT/DIFFLOCK	30	3
SHAFT/IMPUT ASSY	9	1
SHAFT/LIFT/17 COMP	61	1
SHAFT/MOTOR	100	11
SHAFT/PINION	29	12
SHAFT/PTO COMP	18	3
SHAFT/PTO/MID	18	24
SHAFT/PUMP/HMS1/017	100	10
SHAFT/SLOWRETURN	51	37
	51	44
	52	39
	52	46
SHAFT/WHEEL	46	33
SHAFT/WHEEL COMP	32	1
SHIM/0.6/B	3	6
SHIM/2	44	3
SHIM/T=0.9	100	7
SHROUD	2	16
SLEEVE/4WD	17	7
SLEEVE/DIFFLOCK COMP	30	1
SLEEVE/PTO	18	13
SNAPRING	102	8
SNAPRING/32	102	10
SPACER	74	8
SPOOL/ROTARY/066	99	3
SPRING	34	12
	36	10
	102	4
SPRING, HT020	63	22
SPRING,DISK	8	7
SPRING,SHIFTER	21	5
	22	4
	22	10
SPRING,VALVE	101	1
SPRING/HC015	51	42
	52	44
SPRING/HC017	99	11
SPRING/HC021	100	21
SPRING/HC023	20	3
SPRING/HC030	100	20
SPRING/HC053	63	17
	100	19
SPRING/HC062	53	8
SPRING/HE086	54	10
SPRING/HE108	27	16
	35	10
SPRING/HE126	34	5
SPRING/HT021	50	2
SPRING/HT042/LH	34	26
SPRING/HT042/RH	34	27
STAY/COVER COMP	63	38
STAY/CYLINDER/17	38	12
STAY/LAMP COMP	63	33
STAY/LEVER COMP	36	1
STAY/MIRROR COMP	69	3
STAY/MIRROR/RH COMP	69	4
STAY/PIPE COMP	92	14
STAY/PTO/UPPER COMP	81	8
STAY/SEAT/FRONT COMP	67	1
	68	1
STAY/SHIFT/SUB	20	2
STOPPER,PISTON	94	5
STOPPER/ADJUST	62	13
STOPPER/LEVER COMP	24	5
STUD/M14X35/9T	81	4
STUD/M8X20	51	12
	52	12
SWITCH ASSY	76	42
SWITCH/BEACON ASSY	76	7
SWITCH/COMBINATION	76	9
SWITCH/HAZARD ASSY	76	5
SWITCH/LEVER ASSY	76	46
SWITCH/LIMIT ASSY	76	35
SWITCH/MAIN ASSY	76	1
SWITCH/PUSH ASSY	76	32
SWITCH/SENSOR ASSY	76	40
	76	52
TANK/FUEL	6	1
TIRE/18X8.50/LH ASSY	89	1
TIRE/18X8.50/RH ASSY	89	6
TIRE/18X8.50-8	89	3
	89	8
TIRE/26X12.00/L ASSY	86	1
TIRE/26X12.00/R ASSY	86	6
TIRE/26X12.00-12	86	3
	86	8
TIRE/TURF/18X8.50	90	1
TIRE/TURF/18X8.50-8	90	3
TIRE/TURF/26X12.00	87	1

Alpabetical Index

1739-097-210-00

Description	Fig.	Key
TIRE/TURF/26X12.00-1	87	3
TOOL/FUSE	77	8
	78	8
TOOL/HOOD COMP	63	45
TRIM/1X6X360	63	10
TRIM/30	41	4
TRIM/50	3	16
TRIM/70	41	9
TUBE/120	2	23
TUBE/LH COMP	65	1
TURNBUCKLE/M8	34	19
	36	46
UNIT/TIMER ASSY	76	19
U-NUT	63	25
	81	11
VALVE	4	4
VALVE/1S-2D ASSY	55	7
VALVE/CONTROL/101	51	15
	52	15
VALVE/FLOW PRIORITY/	99	17
VALVE/PTO	53	13
VALVE/RELIEF	99	15
VALVE/RELIEF SET	100	45
VIS	101	3
WASHER	2	13
	67	5
	68	5
	102	9
WASHER,PL/M10	8	8
	14	7
	63	24
	77	31
	78	33
WASHER,PL/M12	36	4
	36	18
	61	8
	63	30
	68	24
	97	5
WASHER,PL/M14	94	21
WASHER,PL/M16	45	7
	60	3
	80	11
WASHER,PL/M5	55	14
	55	17
WASHER,PL/M5	74	7
	74	16
	93	4
WASHER,PL/M6	3	13
	7	6
	30	5
WASHER,PL/M8	26	4
	27	20
	27	29
	27	43
	34	8
	34	13
	34	22
	36	6
	36	21
	36	24
	36	28
	36	51
	63	23
	81	12
WASHER,PULLEY	62	7
WASHER,SP/M10	14	6
	29	6
	48	8
	49	21
WASHER,SP/M12	27	34
	46	4
	46	11
	62	4
	68	23
	94	14
	94	30
	97	4
WASHER,SP/M14	58	3
	59	4
	81	3
	81	5
	91	4
WASHER,SP/M16	57	8
	79	3
	80	4
	80	10
WASHER,SP/M6	7	5
	27	50
	34	16
WASHER,SP/M6	36	34
	36	39
	51	47
	52	49
	61	4
WASHER,SP/M8	3	4
	36	14
	51	14
	52	14
WASHER/07X10X01	51	29
	52	31
	99	9
WASHER/11X35X02	66	4
	66	8
WASHER/12X26X04	63	31
WASHER/15X30X05	94	10
WASHER/17X26X02	54	8
WASHER/18X28X02	26	8
WASHER/25X30X1	100	38
WASHER/27X36X03	46	35
WASHER/28X37X2	35	3
WASHER/33X44X02	94	18
WASHER/38X52X01	29	15
WASHER/PINION	29	14
WASHER/THRUST/8X16	99	5
WEIGHT/15 SET	98	1
WHEEL/12X10.5 COMP	86	2
	86	7
	87	2
WHEEL/8.0X7.0 COMP	89	2
	89	7
	90	2
WHEEL/STEERING ASSY	37	1
WIRE,LEAD	77	28
	78	30
WIRE/02X300	42	6
	59	8
	88	7
	91	8
YOKE COMP	43	2
YOKE/FLANGE COMP	9	2
YOKE/SHAFT COMP	9	3
	43	3