ISEKI

Parts Catalogue

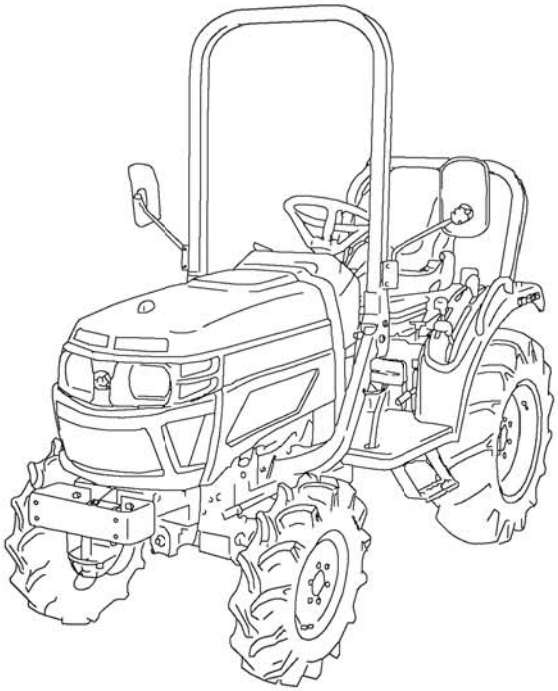

TM3217
TM3247
TM3267

TRACTOR

TM3217F-MVRE4,MVRE4G,MZVRE4,MVZRE4G,VRE4A,ZVRE4A
TM3217H-ME4D,MWRE4,MWRE4G,MZWRE4,MZWRE4G
TM3247F-MVRE4,MVRE4G,MZVRE4,MZVRE4G,VRE4A,ZVRE4A
TM3247H-ME4D,MWRE4,MWRE4G,MZWRE4,MZWRE4G,SMWRE6
TM3267F-MWRE4,MWRE4G,MZWRE4,MZWRE4G,WRE4A,ZWRE4A
TM3267H-ME4D,MWRE4,MWRE4G,MZWRE4,MZWRE4G,SMWRE6

1774-097-110-00

Printed in Japan October,2017

Directions for use of Parts Catalogue

1. Applicable model of machines

All component and option parts used for TM3217, TM3247, TM3267 tractors are listed in this parts catalogue.

1) MODEL TYPE

F····· FOUR WHEEL DRIVE
H····· HST, INDEPENDENT PTO
S····· INDEPENDENT PTO
M····· MID PTO
V····· VALVE (REMOTE/1ST)
W····· VALVE (REMOTE/1ST&2ND)
R····· REAR ROPS
A····· CENTER ROPS
D····· MATCHING FOR HIGH-HITCH/WITHOUT ROPS
Z····· WITH EU CERTIFIED SEAT ASSY
G····· HEADLIGHT INSTALLED FOR LEFT-HAND TRAFFIC

2) AREA CODE

E4····· EUROPE
E6····· OCEANIA

2. Details of the Structure Table of Model

***** Structure Table of Model *****

MODEL / FIG.	SF 3 10	FFF HUX WE 46	SF 3 70	FFF HUX WE 4								
1	*	*	*	*								
2		*		*								
3				*								
4	*	*	*									
5				*								
6	*	*	*									
7	*	*	*	*								
8	*											

① ③ ②

① FIG. : Parts structure of the machine is classified by its functions. FIG. number corresponds to the number written at the top of the parts illustration.

② Model : Shows the name of the model.

③ Structure Table : Shows which functions are originally equipped or can be equipped afterwards for each machines

`*´ Standard Parts

`T´ Optional Parts

`R´ Repair Parts (parts which can only be used for repairs)

3. Explanation for head paragraph

KEY	PART CODE	DESCRIPTION	SPC	TYPE OF MODEL						ITC	COL	GRP	REMARKS
				SSM48M	SSM48F	SSM48G	SRM48M	SRM48F	SRM48G				
1	8595-211-001-20	CASE/UPPER	*	1 -229									
1A	8657-201-081-00	CASE/UPPER	*	1 230-			1						
2	8595-211-002-10	CASE/LOWER	*	1			1						
3	V523-100-801-80	PIN	*	2			2						
4	V211-260-803-00	BOLT, SEMS	*	6			6						
			*	2 -229									
			*	2 230-			3						
				2			2						
				1			1						
										3			

① ② ③ ④ ⑤ ⑥ ⑦ ⑧ ⑨

① KEY shows the location of parts diagramed in the illustration.

② Parts numbers begin with `V´ and `W´ are standard parts of the market.

③ `LH´ and `RH´ on the parts name are described against the moving direction of the machine or are described on the condition how to install parts on the machines.

④ SPC: The following symbol classifies parts to be used for machines.

`*´ means standard parts.

`T´ shows that the parts can be installed as optional parts.

`R´ shows that the parts can be used as applicable parts to replace originally equipped parts.

⑤ Upper column: QTY shows the number of parts to be used for one unit of machine.

`M´ is indicated for parts supplied by a meter long.

`l´ is indicated for parts supplied by liter.

`AR´ is indicated for parts need to be adjusted or regulated.

Lower column: serial number

—229 means serial number up to 229.

230— means serial number 230 and after.

⑥ ITC : Interchangeability

`1´…OLD ← NEW

New parts can be used in place of the old parts.

`2´…OLD → NEW

Old parts can be used in place of the new parts.

`3´…OLD →← NEW

Old parts and new parts can not be replaced each other

⑦ COL : Color code

Color is signified with color code number for colored parts.

Please see the color list shown in the next page.

⑧ GRP: Parts shown in this column can be replaced by SET parts.

Example: Parts marked Ⓐ can be replaced by parts marked Ⓑ, and Ⓓ for Ⓒ, so the rest follow in the same alphabetical order. Remarks

＊ Other maker's part code number is shown in this column.

＊ When Fig. No. is shown in the Remark column of SET parts or ASSY parts, each of their component parts are listed in said Fig. No.

4. Color :

The following colors are used color parts.

COLOR CODE	COLOR	SPRAY TYPE PARTS CODE	PAINTS 4K DRUM PARTS CODE	PAINTS 16K DRUM PARTS CODE
4 L	NEO BLUE	1300-985-001-20	1300-985-003-00	1300-985-004-00
5 I	SUNSET GRAY	1300-959-001-20	1300-959-003-00	1300-959-004-00
6 G	SUMMER WHITE	1300-958-001-20	1300-958-003-00	1300-958-004-00
7 F	MIRROR BLACK	1300-954-001-20	1300-954-003-00	1300-954-004-00

NOTE: Color code is signified only for the parts assigned by the maker as color parts.

5. Serial Numbers :

1) For engines serial number is stamped on CYLINDER BLOCK ASSY.

Please see Fig. No. 6－1.

2) For chassies serial number is shown on the LABEL.

Please see

6. Parts Order

1) When you order parts, please make sure of correct numbers.
2) When substitute parts is available, the part number ordered will be automatically turned to a new part number.
3) Please be sure to use "ISEKI GENUINE PARTS".
   Any other similar parts other than ISEKI parts when used may cause a trouble that makes us unable to repair or guarantee the warrant.

*** Structure Table of Model ***

MODEL / FIG.	TM3217	FMVRE4	FMVRE4G	FMZVRE4	FMZVRE4G	FVRE4A	FZVRE4A	HME4D	HMWRE4	HMWRE4G	HMZWRE4	HMZWRE4G	TM3247	FMVRE4	FMVRE4G	FMZVRE4	FMZVRE4G	FVRE4A	FZVRE4A	HME4D	HMWRE4	HMWRE4G	HMZWRE4	HMZWRE4G	HSMWRE6	TM3267	FMWRE4	FMWRE4G	FMZWRE4	FMZWRE4G	FWRE4A	FZWRE4A	HME4D	HMWRE4	HMWRE4G	HMZWRE4	HMZWRE4G	HSMWRE6
1		*	*	*	*	*	*							*	*	*	*	*	*																			
2								*	*	*	*	*								*	*	*	*	*	*													
3																											*	*	*	*	*	*						
4																																	*	*	*	*	*	*
5		*	*	*	*	*	*	*	*	*	*	*		*	*	*	*	*	*	*	*	*	*	*	*													
6																											*	*	*	*	*	*	*	*	*	*	*	*
7		*	*	*	*	*	*	*	*	*	*	*		*	*	*	*	*	*	*	*	*	*	*	*													
8																											*	*	*	*	*	*	*	*	*	*	*	*
9		*	*	*	*	*	*	*	*	*	*	*		*	*	*	*	*	*	*	*	*	*	*	*													
10																											*	*	*	*	*	*	*	*	*	*	*	*
11		*	*	*	*	*	*	*	*	*	*	*		*	*	*	*	*	*	*	*	*	*	*	*													
12																											*	*	*	*	*	*	*	*	*	*	*	*
13		*	*	*	*	*	*	*	*	*	*	*		*	*	*	*	*	*	*	*	*	*	*	*													
14																											*	*	*	*	*	*	*	*	*	*	*	*
15		*	*	*	*	*	*							*	*	*	*	*	*								*	*	*	*	*	*						
16		*	*	*	*	*	*	*	*	*	*	*		*	*	*	*	*	*	*	*	*	*	*	*		*	*	*	*	*	*	*	*	*	*	*	*
17		*	*	*	*	*	*							*	*	*	*	*	*																			
18									*	*	*	*									*	*	*	*	*													
19								*												*																		
20																																		*	*	*	*	*
21																																	*					
22																											*	*	*	*	*	*						
23		*	*	*	*	*	*							*	*	*	*	*	*								*	*	*	*	*	*						
24		*	*	*	*	*	*							*	*	*	*	*	*								*	*	*	*	*	*						
25								*	*	*	*	*								*	*	*	*	*	*								*	*	*	*	*	*
26		*	*	*	*	*	*							*	*	*	*	*	*								*	*	*	*	*	*						
27		*	*	*	*	*	*							*	*	*	*	*	*								*	*	*	*	*	*						
28								*	*	*	*	*								*	*	*	*	*	*								*	*	*	*	*	*
29		*	*	*	*	*	*							*	*	*	*	*	*								*	*	*	*	*	*						
30		*	*	*	*	*	*							*	*	*	*	*	*								*	*	*	*	*	*						
31		*	*	*	*	*	*							*	*	*	*	*	*								*	*	*	*	*	*						
32								*	*	*	*	*								*	*	*	*	*	*								*	*	*	*	*	*
33								*	*	*	*	*								*	*	*	*	*	*								*	*	*	*	*	*
34								*	*	*	*	*								*	*	*	*	*	*								*	*	*	*	*	*
35		*	*	*	*	*	*							*	*	*	*	*	*								*	*	*	*	*	*						
36		*	*	*	*	*	*							*	*	*	*	*	*								*	*	*	*	*	*						
37		*	*	*	*	*	*							*	*	*	*	*	*								*	*	*	*	*	*						
38		*	*	*	*	*	*							*	*	*	*	*	*								*	*	*	*	*	*						
39								*	*	*	*	*								*	*	*	*	*	*								*	*	*	*	*	*
40		*	*	*	*	*	*							*	*	*	*	*	*								*	*	*	*	*	*						
41								*	*	*	*	*								*	*	*	*	*	*								*	*	*	*	*	*
42		*	*	*	*	*	*							*	*	*	*	*	*								*	*	*	*	*	*						
43		*	*	*	*	*	*							*	*	*	*	*	*								*	*	*	*	*	*						
44								*	*	*	*	*								*	*	*	*	*	*								*	*	*	*	*	*
45		*	*	*	*	*	*		*	*	*	*		*	*	*	*	*	*		*	*	*	*	*		*	*	*	*	*	*		*	*	*	*	*

*** Structure Table of Model ***

MODEL / FIG.	TM3217	FMVRE44G	FMVRE44	FZVRE4A	HMERE4D4A	HMWRE44	HMZWRE44G	HM3247	FMVRE44	FMZWRE44G	FMZVRE44	FRE4A	HZMVE4D4A	HMWRE44G	HMZWZRWE44	HSZWWRE46G	TM3267	FMWRE44G	FMWRE44	FZMWZRE44G	HMERE44	HMWRE44G	FWRE4A	FZWE4D4A	HMERE44	HMWRE44G	HMZWRE44G	HSZWWRE46G			
46	*	*	*	*	*	*	*	*	*	*	*	*	*	*	*	*	*	*	*	*	*	*	*	*	*	*	*	*			
47	*	*	*	*	*	*	*	*	*	*	*	*	*	*	*	*	*	*	*	*	*	*	*	*	*	*	*	*			
48	*	*	*	*	*	*	*	*	*	*	*	*	*	*	*	*	*	*	*	*	*	*	*	*	*	*	*	*			
49	*	*	*	*	*	*	*	*	*	*	*	*	*	*	*	*	*	*	*	*	*	*	*	*	*	*	*	*			
50	*	*	*	*	*	*	*	*	*	*	*	*	*	*	*	*	*	*	*	*	*	*	*	*	*	*	*	*			
51	*	*	*	*	*	*	*	*	*	*	*	*	*	*	*	*	*	*	*	*	*	*	*	*	*	*	*	*			
52	*	*	*	*		*	*	*	*	*	*	*	*		*	*	*	*	*	*	*	*			*	*	*	*	*			
53					*	*								*	*								*	*							
54	*	*	*	*	*	*				*	*	*	*	*				*	*	*	*	*	*	*							
55						*	*	*	*	*					*	*	*	*	*	*	*	*				*	*	*	*	*	*	
56	*	*	*	*	*	*				*	*	*	*	*				*	*	*	*	*	*	*							
57	*	*	*	*	*	*	*	*	*	*	*	*	*	*	*	*	*	*	*	*	*	*	*	*	*	*	*	*			
58						*	*	*	*	*					*	*	*	*	*	*	*	*				*	*	*	*	*	*	
59	*	*	*	*	*	*				*	*	*	*	*				*	*	*	*	*	*	*							
60	*	*	*	*		*	*	*	*	*	*	*	*		*	*	*	*	*	*	*	*			*	*	*	*	*	*	*	
61						*	*	*	*	*					*	*	*	*	*	*	*	*				*	*	*	*	*	*	
62						*	*	*	*	*					*	*	*	*	*	*	*	*				*	*	*	*	*	*	
63						*	*	*	*	*					*	*	*	*	*	*	*	*				*	*	*	*	*	*	
64						*	*	*	*	*					*	*	*	*	*	*	*	*										
65																										*	*	*	*	*	*	
66	*	*	*	*	*	*				*	*	*	*	*				*	*	*	*	*	*	*							
67						*	*	*	*	*					*	*	*	*	*	*	*	*				*	*	*	*	*	*	
68	*	*	*	*	*	*				*	*	*	*	*				*	*	*	*	*	*	*							
69						*	*	*	*	*					*	*	*	*	*	*	*	*				*	*	*	*	*	*	
70	*	*	*	*	*	*	*	*	*	*	*	*	*	*	*	*	*	*	*	*	*	*	*	*	*	*	*	*	*	*	*	
71	*	*	*	*	*	*	*	*	*	*	*	*	*	*	*	*	*	*	*	*	*	*	*	*	*	*	*	*	*	*	*	
72						*											*									*						
73	*	*	*	*	*	*				*	*	*	*	*				*	*	*	*	*	*	*							
74							*	*	*	*																	*	*	*	*	*	
75	*	*	*	*	*	*	*	*	*	*	*	*	*	*	*	*	*	*	*	*	*	*	*	*	*	*	*	*	*	*	*	
76	*	*	*	*	*	*				*	*	*	*	*				*	*	*	*	*	*	*							
77						*	*	*	*	*					*	*	*	*	*	*	*	*				*	*	*	*	*	*	
78	*	*	*	*	*	*	*	*	*	*	*	*	*	*	*	*	*	*	*	*	*	*	*	*	*	*	*	*	*	*	*	
79	*	*	*	*	*	*	*	*	*	*	*	*	*	*	*	*	*	*	*	*	*	*	*	*	*	*	*	*	*	*	*	
80	*	*	*	*	*	*	*	*	*	*	*	*	*	*	*	*	*	*	*	*	*	*	*	*	*	*	*	*	*	*	*	
81	*	*	*	*	*	*	*	*	*	*	*	*	*	*	*	*	*	*	*	*	*	*	*	*	*	*	*	*	*	*	*	
82	*	*	*	*	*	*				*	*	*	*	*				*	*	*	*	*	*	*							
83						*	*	*	*	*					*	*	*	*	*	*	*	*				*	*	*	*	*	*	
84	*	*	*	*		*	*	*	*	*	*	*	*		*	*	*	*	*	*	*	*										
85																							*	*	*	*	*	*	*	*	*	
86					*	*								*	*																	
87																									*	*						
88	*	*	*	*	*	*	T	*	*	*	*	*	*	*	*	T	*	*	*	*	*	*	*	*	*	T	*	*	*	*	*	
89	*	*	*	*	*	*	*	*	*	*	*	*	*	*	*	*	*	*	*	*	*	*	*	*	*	*	*	*	*	*	*	
90	*	*	*	*	*	*	*	*	*	*	*	*	*	*	*	*	*	*	*	*	*	*	*	*	*	*	*	*	*	*	*	

*** Structure Table of Model ***

MODEL / FIG.	TM3217	FMVRE4	FMVRE4G	FMZVRE4	FMZVRE4G	FVRE4A	FZVRE4A	HME4D	HMWRE4	HMWRE4G	HMZWRE4	HMZWRE4G	TM3247	FMVRE4	FMVRE4G	FMZVRE4	FMZVRE4G	FVRE4A	FZVRE4A	HME4D	HMWRE4	HMWRE4G	HMZWRE4	HMZWRE4G	HSMWRE6	TM3267	FMWRE4	FMWRE4G	FMZWRE4	FMZWRE4G	FWRE4A	FZWRE4A	HME4D	HMWRE4	HMWRE4G	HMZWRE4	HMZWRE4G	HSMWRE6
91		*	*	*	*	*	*	*	*	*	*	*		*	*	*	*	*	*	*	*	*	*	*	*		*	*	*	*	*	*	*	*	*	*	*	*
92		*	*	*	*	*	*	*	*	*	*	*		*	*	*	*	*	*	*	*	*	*	*	*		*	*	*	*	*	*	*	*	*	*	*	*
93		*	*	*	*	*	*	*	*	*	*	*		*	*	*	*	*	*	*	*	*	*	*	*		*	*	*	*	*	*	*	*	*	*	*	*
94		*	*	*	*	*	*	*	*	*	*	*		*	*	*	*	*	*	*	*	*	*	*	*		*	*	*	*	*	*	*	*	*	*	*	*
95		*	*	*	*	*	*	*	*	*	*	*		*	*	*	*	*	*	*	*	*	*	*	*		*	*	*	*	*	*	*	*	*	*	*	*
96		*	*	*	*	*	*	*	*	*	*	*		*	*	*	*	*	*	*	*	*	*	*	*		*	*	*	*	*	*	*	*	*	*	*	*
97		*	*	*	*	*	*	*	*	*	*	*		*	*	*	*	*	*	*	*	*	*	*	*		*	*	*	*	*	*	*	*	*	*	*	*
98		*	*	*	*	*	*		*	*	*	*		*	*	*	*	*	*		*	*	*	*	*		*	*	*	*	*	*		*	*	*	*	*
99								*												*													*					
100								*												*													*					
101		*	*	*	*	*	*							*	*	*	*	*	*																			
102									*	*	*	*									*	*	*	*	*		*	*	*	*	*	*		*	*	*	*	*
103																											*	*	*	*	*	*						
104																																	*	*	*	*	*	*
105		*	*	*	*	*	*							*	*	*	*	*	*																			
106								*	*	*	*	*								*	*	*	*	*	*													
107		*	*	*	*	*	*	*	*	*	*	*		*	*	*	*	*	*	*	*	*	*	*	*		*	*	*	*	*	*	*	*	*	*	*	*
108		*	*	*	*	*	*		*	*	*	*		*	*	*	*	*	*		*	*	*	*	*		*	*	*	*	*	*		*	*	*	*	*
109		*	*	*	*	*	*	*	*	*	*	*		*	*	*	*	*	*	*	*	*	*	*	*													
110																											*	*	*	*	*	*	*	*	*	*	*	*
111		*	*	*	*	*	*	*	*	*	*	*		*	*	*	*	*	*	*	*	*	*	*	*		*	*	*	*	*	*	*	*	*	*	*	*
112		*	*	*	*	*	*							*	*	*	*	*	*								*	*	*	*	*	*						
113								*	*	*	*	*								*	*	*	*	*	*								*	*	*	*	*	*
114		*	*	*	*	*	*		*	*	*	*		*	*	*	*	*	*		*	*	*	*	*		*	*	*	*	*	*		*	*	*	*	*
115		*	*	*	*	*	*		*	*	*	*		*	*	*	*	*	*		*	*	*	*	*		*	*	*	*	*	*		*	*	*	*	*
116																									*													*
117		T	T	*	*	T	*		T	T	*	*		T	T	*	*	T	*		T	T	*	*			T	T	*	*	T	*		T	T	*	*	
118		*	*	*	*				*	*	*	*		*	*	*	*				*	*	*	*	*		*	*	*	*				*	*	*	*	*
119						*	*											*	*												*	*						
120		*	*	*	*	*	*		*	*	*	*		*	*	*	*	*	*		*	*	*	*	*		*	*	*	*	*	*		*	*	*	*	*
121								*												*													*					
122		*	*	*	*	*	*		*	*	*	*		*	*	*	*	*	*		*	*	*	*	*		*	*	*	*	*	*		*	*	*	*	*
123								*												*													*					
124		*	*	*	*	*	*							*	*	*	*	*	*																			
125								*	*	*	*	*								*	*	*	*	*	*													
126																											*	*	*	*	*	*						
127																																	*	*	*	*	*	*
128		*	*	*	*	*	*							*	*	*	*	*	*								*	*	*	*	*	*						
129									*	*	*	*									*	*	*	*	*									*	*	*	*	*
130		*	*	*	*	*	*		*	*	*	*		*	*	*	*	*	*		*	*	*	*			*	*	*	*	*	*		*	*	*	*	
131		*		*		*	*	*	*		*			*		*		*	*	*	*		*				*		*		*	*	*	*		*		
132		T	*	T	*	T	T		T	*	T	*		T	*	T	*	T	T		T	*	T	*	*		T	*	T	*	T	T		T	*	T	*	*
133		*	*	*	*				*	*	*	*		*	*	*	*				*	*	*	*	*		*	*	*	*				*	*	*	*	*
134						*	*											*	*												*	*						
135								*												*													*					

*** Structure Table of Model ***

MODEL / FIG.	TM32MVER17 EE44 G44G	FFFFVRER4A FZVE4EDA4 HHMMRR4 MWRE4 WRE4 G	HHMMZWRE4 MZWR4 3FMVRE4 2MVRE4 7RRE4 EE4 G	FFMMZVRE4 FMVRE4 HZVEA4 MRE4 HVEA4 E4 G	HHMMWRE4 MMWRE4 MMZRE4 SZRE4 MWRE4 MWRE4 G	TM32MVER67 EE44 G	FFMMWRE4 FMWRE4 FZWEA4 MZRE4 HWEA4 E4 G	HHMMZWRE4 MMZWR4 HMSZR4 HSMWR4 HSMWR4 E6G
136	* * * *	* * * * *	* * * *	* * * * * *	* * * * *	* * * *	* * * * *	* * *
137							* *	
138							* * *	* *
139		* *		* *				
140		* * *	* *	*	* * * *			
141						* * * *		
142	* * * *		* *	* *				
143								*
144					*			
145		* *		* *			* *	
146		* * *	* *	*	* * * *		* * *	* *
147					*			*
148	* * * *		* *	* *		* * * *		
149		* * *	* *	*	* * * * *		* * *	* * *
150	* * * *	* *	* *	* * * *	* * * * *	* * * *	* *	* * *
151		* *		* *				
152							* *	
153		* * *	* *	*	* * * * *		* * *	* * *
154						* * * *	* * * *	* * *
155			* *	* * * *	* * * * *			
156	* * * *	* * * *	* *					
157							*	
158		*		*				
159		*		*			*	
160	* * * *	* *	* *	* * * *		* * * *	* *	
161		* *	* *		* * * * *		* *	* * *
162		*		*			*	
163		*		*			*	
164	* * * *	* *	* *	* * * *				
165		* *	* *		* * * * *			
166						* * * *	* *	
167							* *	* * *
168	* * * *	* * * * *	* *	* * * * * *	* * * * *	* * * *	* * * * *	* * *
169		T T		T T			T T	
170	T T T T	T T T T T	T T	T T			T T	
171			T T	T T	T T T T T	T T T T	T T T	T T T
172			T T	T T	T T T T T	T T T T	T T T	T T T
173	T T T T	T T T T T	T T	T T			T T	
174	T T T T	T T T T T	T T	T T			T T	
175	T T T T	T T T T T	T T	T T			T T	
176			T T	T T	T T T T T	T T T T	T T T	T T T
177			T T	T T	T T T T T	T T T T	T T T	T T T
178		T		T			T	
179	T T T T	T T T	T T	T T T T T			T	
180	T T T T	T T T T T	T T	T T T T T	T T T T	T T T T	T T T T T	T T

*** Structure Table of Model ***

MODEL										
	T M 3 F F F F 2 M M M M 1 V V Z Z 7 R R V V E E R R 4 4 E E G 4 4 G	F F H H H V Z M M M R V E W W E R 4 R R 4 E D E E A 4 4 4 A G	H H 3 F F M M 2 M M Z Z 4 V V W W 7 R R R E E E 4 4 G G	F F F F H M M V Z M Z Z R V E V V E R 4 R R 4 E D E E A 4 4 4 A G	H H H H H M M M M S W W Z Z M R R W W W E E R R R 4 4 E E E G 4 4 6 G	T M 3 F F F F 2 M M M M 6 W W Z Z 7 R R W W E E R R 4 4 E E G 4 4 G	F F H H H W Z M M M R W E W W E R 4 R R 4 E D E E A 4 4 4 A G	H H H M M S Z Z M W W W R R R E E E 4 4 6 G
FIG.										
181	T T T T	T T T T T	T T T T	T T T T T T	T T T T T	T T T T	T T T T T	T T T
182		* * *	* *	*	* * * * *		* * *	* * *
183	* * * *	* * * * *	* * *	* * * * * *	* * * * *	* * * *	* * * * *	* * *
184		* * *	* *	*	* * * * *		* * *	* * *
185	T T T T	T T T * *	* * T T	T T T T T T	* * * * *	* * * *	* * T * *	* * *
186	* * * *	* * * * *	* * * *	* * * * * *	* * * * *	* * * *	* * * * *	* * *
187		* * *	* *	*	* * * * *		* * *	* * *

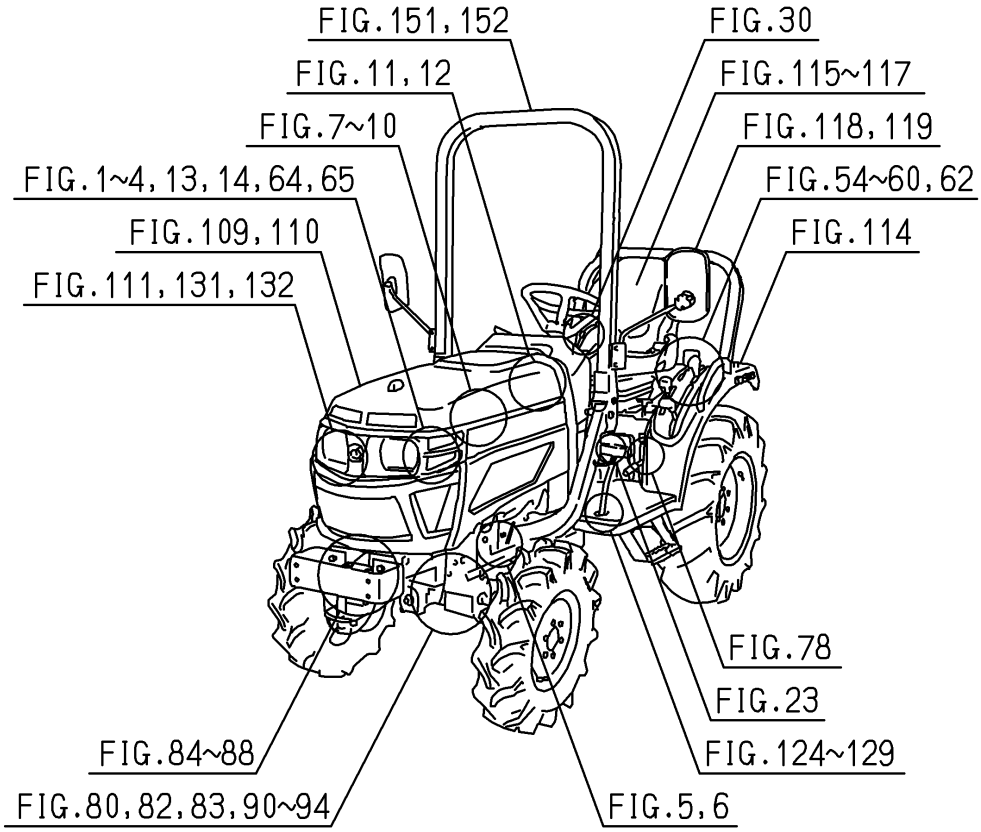
FIG.151,152
FIG.30
FIG.11,12
FIG.115~117
FIG.7~10
FIG.118,119
FIG.1~4,13,14,64,65
FIG.54~60,62
FIG.109,110
FIG.114
FIG.111,131,132
FIG.78
FIG.23
FIG.84~88
FIG.124~129
FIG.80,82,83,90~94
FIG.5,6

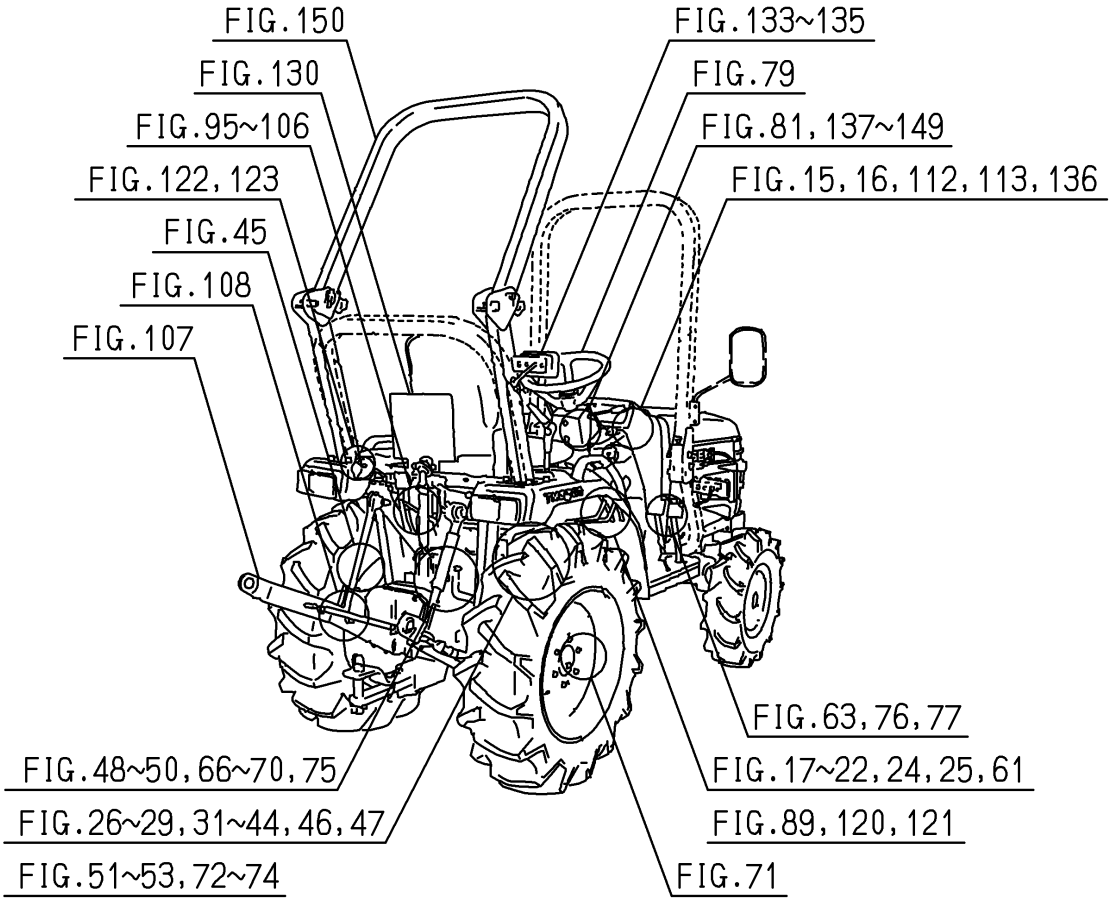
FIG.150
FIG.133~135
FIG.130
FIG.79
FIG.95~106
FIG.81,137~149
FIG.122,123
FIG.15,16,112,113,136
FIG.45
FIG.108
FIG.107
FIG.63,76,77
FIG.48~50,66~70,75
FIG.17~22,24,25,61
FIG.26~29,31~44,46,47
FIG.89,120,121
FIG.51~53,72~74
FIG.71

Contents

TM3247H,3247F,3217H,3217F

ENGINE(E3112-B54,B55,B56,B57)

SHORT BLOCK ENGIASSY····· Fig. 1
CYLINDER HEAD····· Fig. 2
CYLINDER HEAD COVER····· Fig. 3
INLET MANIFOLD····· Fig. 4
EXHAUST MANIFOLD····· Fig. 5
CYLINDER BLOCK····· Fig. 6
BEARING/UNDER SIZE (OPTION)····· Fig. 7
OIL PAN····· Fig. 8
REAR PLATE····· Fig. 9
TIMING GEAR CASE····· Fig. 10
HANGER····· Fig. 11
VALVE····· Fig. 12
CAM SHAFT····· Fig. 13
PISTON····· Fig. 14
PISTON/OVER SIZE (OPTION)····· Fig. 15
CRANK SHAFT····· Fig. 16
CRANK SHAFT····· Fig. 17
OIL PUMP····· Fig. 18
WATER PUMP····· Fig. 19
COOLING FAN····· Fig. 20
INJECTION NOZZLE····· Fig. 21
INJECTION PUMP····· Fig. 22
INJECTION PUMP····· Fig. 23
FUEL PIPE····· Fig. 24

ADAPTER····· Fig. 25
ADAPTER····· Fig. 26
ELECTRIC (1)····· Fig. 27
ELECTRIC (2)····· Fig. 28
REPAIR PARTS(OPTION)····· Fig. 29
REPAIR PARTS(OPTION)····· Fig. 30
COMPONENT PARTS
FOR 6215-300-036-10 ON Fig.21····· Fig. 31
COMPONENT PARTS
FOR 6215-600-103-30 ON Fig.22····· Fig. 32
COMPONENT PARTS
FOR 6281-100-014-00 ON Fig.27····· Fig. 33
COMPONENT PARTS
FOR 6281-200-005-00 ON Fig.27····· Fig. 34

Contents

TM3267H,3267F

ENGINE(E3CD-B85,B86)

SHORT BLOCK ENGIASSY ..... Fig. 1
CYLINDER HEAD ..... Fig. 2
CYLINDER HEAD COVER ..... Fig. 3
INLET MANIFOLD ..... Fig. 4
EXHAUST MANIFOLD ..... Fig. 5
CYLINDER BLOCK ..... Fig. 6
BEARING/UNDER SIZE (OPTION) ..... Fig. 7
OIL PAN ..... Fig. 8
REAR PLATE ..... Fig. 9
TIMING GEAR CASE ..... Fig. 10
HANGER ..... Fig. 11
VALVE ..... Fig. 12
CAM SHAFT ..... Fig. 13
PISTON ..... Fig. 14
PISTON/OVER SIZE (OPTION) ..... Fig. 15
CRANK SHAFT ..... Fig. 16
CRANK SHAFT ..... Fig. 17
OIL PUMP ..... Fig. 18
WATER PUMP ..... Fig. 19
COOLING FAN ..... Fig. 20
INJECTION NOZZLE ..... Fig. 21
INJECTION PUMP ..... Fig. 22
FUEL PIPE ..... Fig. 23
ADAPTER ..... Fig. 24

ELECTRIC (1)····· Fig. 25
ELECTRIC (2)····· Fig. 26
REPAIR PARTS(OPTION)·····Fig. 27
REPAIR PARTS(OPTION)·····Fig. 28
COMPONENT PARTS
FOR 6215-300-037-00 ON Fig.21·····Fig. 29
COMPONENT PARTS
FOR 6215-600-155-00 ON Fig.22·····Fig. 30
COMPONENT PARTS
FOR 6281-100-002-50 ON Fig.25·····Fig. 31
COMPONENT PARTS
FOR 6281-200-021-00 ON Fig.25·····Fig. 32

Contents

CHASSIS

RADIATOR SYSTEM
(TM3217F,3247F TYPE)····· Fig. 1
RADIATOR SYSTEM
(TM3217H,3247H TYPE)····· Fig. 2
RADIATOR SYSTEM(TM3267F TYPE)····· Fig. 3
RADIATOR SYSTEM(TM3267H TYPE)····· Fig. 4
MUFFLER SYSTEM(TM3217,3247 TYPE)····· Fig. 5
MUFFLER SYSTEM(TM3267 TYPE)····· Fig. 6
CLEANER(AIR)SYSTEM
(TM3217,3247 TYPE)····· Fig. 7
CLEANER(AIR)SYSTEM(TM3267 TYPE)····· Fig. 8
FILTER SYSTEM(TM3217,3247 TYPE)····· Fig. 9
FILTER SYSTEM(TM3267 TYPE)····· Fig. 10
TANK(FUEL)SYSTEM(TM3217,3247 TYPE)····· Fig. 11
TANK(FUEL)SYSTEM(TM3267 TYPE)····· Fig. 12
BATTERY SYSTEM(TM3217,3247 TYPE)····· Fig. 13
BATTERY SYSTEM(TM3267 TYPE)····· Fig. 14
PEDAL(ACCELERATOR)SYSTEMX
(F TYPE)····· Fig. 15
LEVER(ACCELERATOR)SYSTEM····· Fig. 16
HOUSING(CLUTCH)SYSTEM
(TM3217F,3247F TYPE) (1/2)(2/2)····· Fig. 17
HOUSING(CLUTCH/HST)SYSTEM
(TM3217H,3247H TYPE EXCEPT D)(1/2)(2/2)····· Fig. 18
HOUSING(CLUTCH/HST)SYSTEM
(TM3217D,3247D TYPE)(1/2)(2/2)····· Fig. 19
HOUSING(CLUTCH/HST)SYSTEM
(TM3267H TYPE EXCEPT D)(1/2)(2/2)····· Fig. 20

HOUSING(CLUTCH/HST)SYSTEM
(TM326D TYPE)(1/2)(2/2)····· Fig. 21
HOUSING(CLUTCH)SYSTEM
(TM3267F TYPE)(1/2)(2/2)····· Fig. 22
PEDAL(CLUTCH)SYSTEM(F TYPE)····· Fig. 23
SHAFT(INPUT)SYSTEM(F TYPE)····· Fig. 24
SHAFT(INPUT)SYSTEM(H TYPE)····· Fig. 25
GEAR(DRIVE)SYSTEM(F TYPE)····· Fig. 26
GEAR(DRIVE/PTO)SYSTEM(F TYPE)····· Fig. 27
GEAR(DRIVE/PTO/HST)SYSTEM
(H TYPE)····· Fig. 28
LEVER(REVERSE)SYSTEM(F TYPE)····· Fig. 29
LEVER(REVERSE)SYSTEM(F TYPE)····· Fig. 30
CASE(MISSION/FRONT)SYSTEM(F TYPE)····· Fig. 31
CASE(MISSION/FRONT/HST)SYSTEM
(H TYPE)····· Fig. 32
HST SYSTEM(H TYPE)····· Fig. 33
GEAR(INPUT/HST)SYSTEM(H TYPE)····· Fig. 34
GEAR(INPUT)SYSTEM(F TYPE)····· Fig. 35
GEAR(CHANGE/MAIN)SYSTEM(F TYPE)····· Fig. 36
GEAR(COUNTER/MAIN)SYSTEM
(F TYPE)····· Fig. 37
GEAR(CHANGE/SUB)SYSTEM(F TYPE)····· Fig. 38
GEAR(CHANGE/SUB)SYSTEM(H TYPE)····· Fig. 39
GEAR(COUNTER/SUB)SYSTEM(F TYPE)····· Fig. 40
GEAR(COUNTER/SUB)SYSTEM(H TYPE)····· Fig. 41
SHIFT(CHANGE/MAIN)SYSTEM(F TYPE)····· Fig. 42
SHIFT(CHANGE/SUB)SYSTEM(H TYPE)····· Fig. 43
SHIFT(CHANGE/SUB/HST)SYSTEM
(EXCEPT D TYPE)····· Fig. 44
COVER(SHIELD)SYSTEM····· Fig. 45
GEAR(4WD)SYSTEM····· Fig. 46
SHIFT(CHANGE/4WD)SYSTEM····· Fig. 47

CASE(MISSION/REAR)SYSTEM ..... Fig. 48
GEAR(COUNTER/PTO)SYSTEM ..... Fig. 49
SHAFT(PTO)SYSTEM ..... Fig. 50
CHANGE(PTO)SYSTEM ..... Fig. 51
PTO(MID)SYSTEM(EXCEPT A TYPE) ..... Fig. 52
COVER(PTO/MID)SYSTEM(A TYPE) ..... Fig. 53
LEVER(MAIN)SYSTEM(F TYPE) ..... Fig. 54
LEVER(SUB/HST)SYSTEM(H TYPE) ..... Fig. 55
LEVER(SUB)SYSTEM(F TYPE) ..... Fig. 56
LEVER(4WD)SYSTEM ..... Fig. 57
LEVER(PTO/REAR)SYSTEM(H TYPE) ..... Fig. 58
LEVER(PTO/REAR)SYSTEM(F TYPE) ..... Fig. 59
LEVER(PTO/MID)SYSTEM
(EXCEPT A TYPE) ..... Fig. 60
LINK(HST)SYSTEM(H TYPE) ..... Fig. 61
LEVER(HST)SYSTEM(H TYPE) ..... Fig. 62
PEDAL(HST)SYSTEM(H TYPE) ..... Fig. 63
PIPING(HST)SYSTEM
(TM3217H,3247H TYPE) ..... Fig. 64
PIPING(HST)SYSTEM(TM3267H TYPE) ..... Fig. 65
PINION(DRIVE)SYSTEM(F TYPE) ..... Fig. 66
PINION(DRIVE/HST)SYSTEM(H TYPE) ..... Fig. 67
CASE(DIFF)SYSTEM(F TYPE) ..... Fig. 68
CASE(DIFF/HST)SYSTEM(H TYPE) ..... Fig. 69
HOUSING(AXLE/REAR)SYSTEM ..... Fig. 70
SHAFT(WHEEL)SYSTEM ..... Fig. 71
PEDAL(DIFF-LOCK)SYSTEM(D TYPE) ..... Fig. 72
PEDAL(DIFF-LOCK)SYSTEM(F TYPE) ..... Fig. 73
PEDAL(DIFF-LOCK)SYSTEM
(H TYPE EXCEPT D) ..... Fig. 74
BRAKE SYSTEM ..... Fig. 75
PEDAL(BRAKE)SYSTEM(F TYPE)(1/2)(2/2) ..... Fig. 76
PEDAL(BRAKE)SYSTEM(H TYPE)(1/2)(2/2) ..... Fig. 77

LEVER(PARKING)SYSTEM····· Fig. 78
WHEEL(STEERING)SYSTEM····· Fig. 79
CYLINDER SYSTEM····· Fig. 80
STEERING SYSTEM····· Fig. 81
PIPING(SUB)SYSTEM(F TYPE)····· Fig. 82
PIPING(SUB)SYSTEM(H TYPE)····· Fig. 83
BRACKET(AXLE)SYSTEM
(TM3217,3247 TYPE EXCEPT A)····· Fig. 84
BRACKET(AXLE)SYSTEM
(TM3267 TYPE EXCEPT A)····· Fig. 85
BRACKET(AXLE)SYSTEM
(TM3217A,3247A TYPE)····· Fig. 86
BRACKET(AXLE)SYSTEM
(TM3267A TYPE)····· Fig. 87
HITCH(BUMPER)SYSTEM
(EXCEPT D TYPE-STANDARD/
D TYPE-OPTION)····· Fig. 88
SHAFT(4WD)SYSTEM····· Fig. 89
PINION(DRIVE)SYSTEM····· Fig. 90
HOUSING(AXLE)SYSTEM····· Fig. 91
GEAR(FINAL)SYSTEM····· Fig. 92
SHAFT(FINAL/DRIVE)SYSTEM····· Fig. 93
ROD(TIE)SYSTEM····· Fig. 94
CASE(CYLINDER)SYSTEM····· Fig. 95
ARM(LIFT)SYSTEM····· Fig. 96
CYLINDER SYSTEM····· Fig. 97
LEVER(POSITION)SYSTEM
(EXCEPT D TYPE)····· Fig. 98
LEVER(POSITION)SYSTEM(D TYPE)····· Fig. 99
COVER(VALVE)SYSTEM(D TYPE)····· Fig.100
VALVE(REMOTE/1R)SYSTEM
(TM3217F,3247F TYPE)····· Fig.101
VALVE(REMOTE/2R)SYSTEM
(TM3217H,3247H,3267 TYPE EXCEPT D)(1/2)(2/2)····· Fig.102

PIPING(MAIN)SYSTEM(TM3267F TYPE)····· Fig.103
PIPING(MAIN)SYSTEM(TM3267H TYPE)····· Fig.104
PIPING(MAIN)SYSTEM
(TM3217F,3247F TYPE)····· Fig.105
PIPING(MAIN)SYSTEM
(TM3217H,3247H TYPE)····· Fig.106
LINK(TM3P)SYSTEM····· Fig.107
HITCH(CREVICE)SYSTEM
(EXCEPT D TYPE)····· Fig.108
HOOD SYSTEM(TM3217,3247 TYPE)(1/2)(2/2)····· Fig.109
HOOD SYSTEM(TM3267 TYPE)(1/2)(2/2)····· Fig.110
GRILLE SYSTEM····· Fig.111
COVER(STEERING)SYSTEM(F TYPE)····· Fig.112
COVER(STEERING)SYSTEM(H TYPE)····· Fig.113
FENDER SYSTEM(EXCEPT D TYPE)····· Fig.114
SEAT(BASE)SYSTEM(EXCEPT D TYPE)····· Fig.115
SEAT(NUMBER)SYSTEM(S TYPE)····· Fig.116
SEAT(W10)SYSTEM
(Z TYPE-STANDARD/
EXCEPT Z,S,D TYPE-OPTION)····· Fig.117
MIRROR SYSTEM(EXCEPT A,D TYPE)····· Fig.118
MIRROR SYSTEM(A,D TYPE)····· Fig.119
MOUNT(FRONT)SYSTEM
(EXCEPT D TYPE)····· Fig.120
MOUNT(FRONT)SYSTEM(D TYPE)····· Fig.121
MOUNT(REAR)SYSTEM
(EXCEPT D TYPE)····· Fig.122
MOUNT(REAR)SYSTEM(D TYPE)····· Fig.123
FLOOR SYSTEM(TM3217F,3247F TYPE)····· Fig.124
FLOOR SYSTEM(TM3217H,3247H TYPE)····· Fig.125
FLOOR SYSTEM(TM3267F TYPE)····· Fig.126
FLOOR SYSTEM(TM3267H TYPE)····· Fig.127
STEP SYSTEM(F TYPE)····· Fig.128

STEP SYSTEM(H TYPE EXCEPT D)····· Fig.129
PLATE(NUMBER)SYSTEM
(EXCEPT D,S TYPE)·····Fig.130
LAMP(HEAD)SYSTEM
(EXCEPT G,E6 TYPE)····· Fig.131
LAMP(HEAD)SYSTEM
(G,E6 TYPE-STANDARD/
EXCEPT D,G,E6 TYPE-OPTION)·····Fig.132
LAMP SYSTEM(EXCEPT A,D TYPE)····· Fig.133
LAMP SYSTEM(A TYPE)····· Fig.134
LAMP SYSTEM(D TYPE)·····Fig.135
METER PANEL SYSTEM····· Fig.136
SWITCH SYSTEM(TM3267A TYPE)(1/2)(2/2)····· Fig.137
SWITCH SYSTEM(TM3267H TYPE)(1/2)(2/2)·····Fig.138
SWITCH SYSTEM
(TM3217A,3247A TYPE)(1/2)(2/2)····· Fig.139
SWITCH SYSTEM
(TM3217H,3247H TYPE)(1/2)(2/2)····· Fig.140
SWITCH SYSTEM
(TM3267F TYPE EXCEPT A)(1/2)(2/2)····· Fig.141
SWITCH SYSTEM
(TM3217F,3247F TYPE EXCEPT A)(1/2)(2/2)····· Fig.142
SWITCH SYSTEM(TM3267S TYPE)(1/2)(2/2)·····Fig.143
SWITCH SYSTEM(TM3247S TYPE)(1/2)(2/2)·····Fig.144
HARNESS SYSTEM(A TYPE)·····Fig.145
HARNESS SYSTEM(H TYPE)····· Fig.146
HARNESS SYSTEM(E6 TYPE)·····Fig.147
HARNESS SYSTEM(F TYPE EXCEPT A)····· Fig.148
CONTROL(PTO)SYSTEM(H TYPE)····· Fig.149
ROPS SYSTEM(EXCEPT A,D TYPE)····· Fig.150
ROPS(CENTER)SYSTEM
(TM3217A,3247A TYPE)····· Fig.151
ROPS(CENTER)SYSTEM(TM3267A TYPE)····· Fig.152

ORNAMENT(HYDRO)(H TYPE)····· Fig.153
ORNAMENT(TM3267 TYPE EXCEPT D)····· Fig.154
ORNAMENT(TM3247 TYPE EXCEPT D)····· Fig.155
ORNAMENT(TM3217 TYPE EXCEPT D)····· Fig.156
ORNAMENT(TM3267D TYPE)····· Fig.157
ORNAMENT(TM3217D,3247D TYPE)····· Fig.158
LABEL(PROTECTION LEVEL)(D TYPE)····· Fig.159
LABEL(CONTROL)(F TYPE)····· Fig.160
LABEL(CONTROL)(H TYPE EXCEPT D)····· Fig.161
LABEL(CONTROL)(D TYPE)····· Fig.162
LABEL(CAUTION)(D TYPE)····· Fig.163
LABEL(CAUTION)(TM3217F,3247F TYPE)····· Fig.164
LABEL(CAUTION)
(TM3217H,3247H TYPE EXCEPT D)····· Fig.165
LABEL(CAUTION)(TM3267F TYPE)····· Fig.166
LABEL(CAUTION)
(TM3267H TYPE EXCEPT D)····· Fig.167
TOOLS····· Fig.168

OPTIONAL PARTS

PTO(MID)SET(A TYPE)(OPTION)(1/2)(2/2)····· Fig.169
TIRE(31X13.5-15)SYSTEM
(3217,3247A,3267A TYPE)
(OPTION)····· Fig.170
TIRE(9.5-18)SYSTEM
(EXCEPT S TYPE)(OPTION)····· Fig.171
TIRE(315/75D-15)SYSTEM
(3247,3267 TYPE EXCEPT A)
(OPTION)····· Fig.172
TIRE(9.5-16)SYSTEM
(3247,3267 TYPE EXCEPT A)
(OPTION)····· Fig.173

TIRE(22X8.50-12)SYSTEM
(3217,3267 TYPE EXCEPT A)
(OPTION)·····Fig.174
WHEEL(FRONT/4WD)SYSTEM
(3217,3247A,3267A TYPE)(OPTION)·····Fig.175
WHEEL(FRONT/4WD)SYSTEM
(3217,3247A,3267A TYPE)(OPTION)·····Fig.176
WHEEL(FRONT/TURF)SYSTEM
(3247,3267 TYPE EXCEPT A)(OPTION)·····Fig.177
VALVE(AUX/1ST)SET
(3247,3267 TYPE EXCEPT A)(OPTION)·····Fig.178
VALVE(AUX/2ND)SET(D TYPE)(OPTION)·····Fig.179
KIT(CN-4P-M)SET
(3217F,3247F,3267D TYPE)(OPTION)·····Fig.180
WEIGHT(15)SET(OPTION)·····Fig.181

COMPONENT PARTS

COMPONENT PARTS
FOR K200-208-000-10 ON Fig.83·····Fig.182
COMPONENT PARTS
FOR K211-092-000-10 ON Fig.97·····Fig.183
COMPONENT PARTS
FOR K510-027-000-00 ON Fig.33·····Fig.184
COMPONENT PARTS
FOR 1719-511-350-00 ON Fig.101,102,178,179·····Fig.185
COMPONENT PARTS
FOR 1772-654-210-00 ON Fig.133,134·····Fig.186
COMPONENT PARTS
FOR 1774-127-510-10 ON Fig.28·····Fig.187

WIRING DIAGRAM

WIRING DIAGRAM(F TYPE)(1/2)

WIRING DIAGRAM(F TYPE)(2/2)

WIRING DIAGRAM(H TYPE)(1/2)

WIRING DIAGRAM(H TYPE)(2/2)

E N G I N E

E3112B54...TM3247H

E3112B55...TM3247F

E3112B56...TM3217H

E3112B57···TM3217F

6004-097-680-00

FIG. 1 SHORT BLOCK ENGIASSY

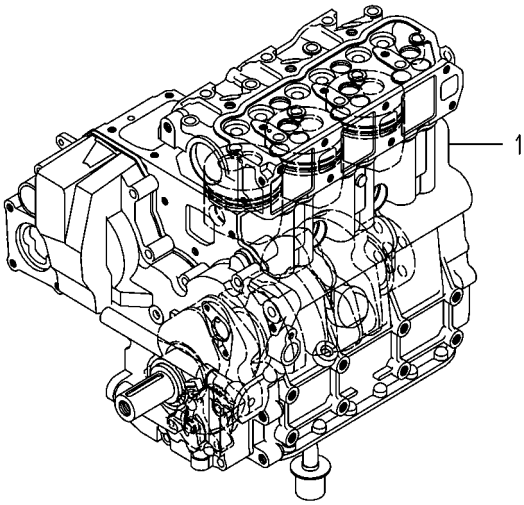

6004-014H-0100

KEY	PART CODE	DESCRIPTION	SPC	TYPE OF MODEL				ITC	COL	GRP	REMARKS
				E3112 B54	E3112 B55	E3112 B56	E3112 B57				
1	6004-010-119-00	SHORTBLOCKENGIN ASSY	T	1	1	1	1				

FIG. 2 CYLINDER HEAD

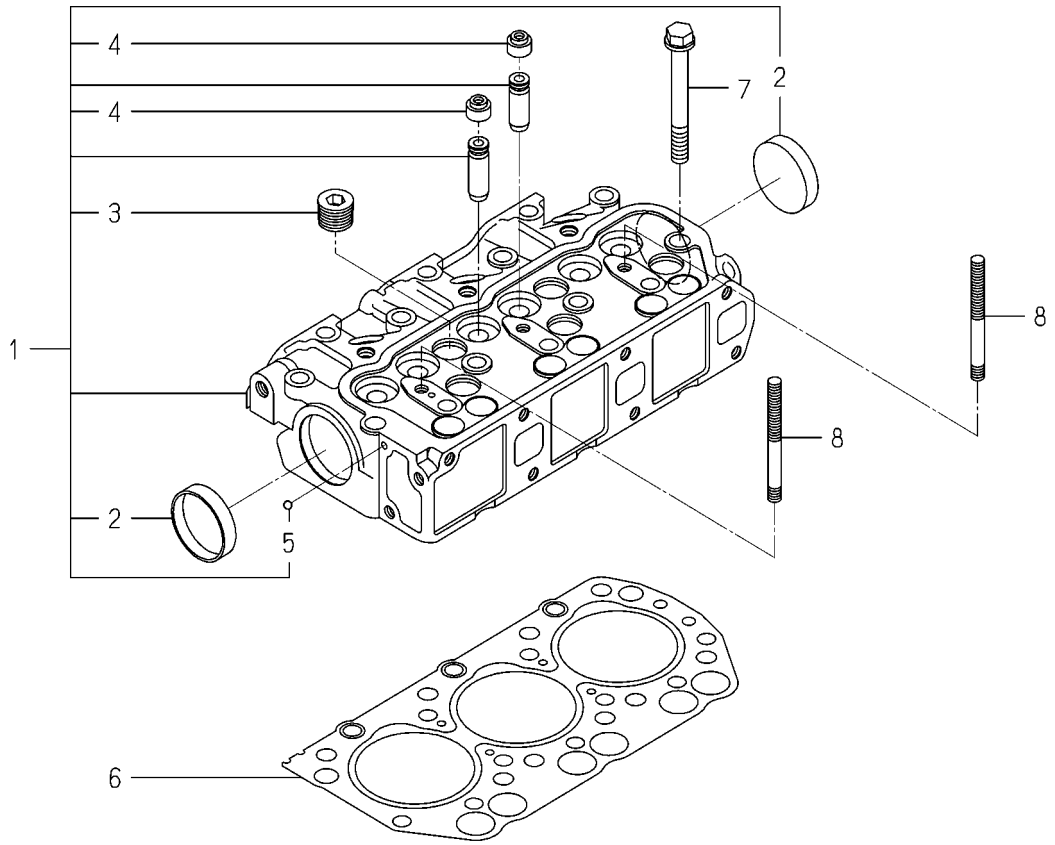

6004-101I-0100,6004-101I-0200

KEY	PART CODE	DESCRIPTION	SPC	TYPE OF MODEL				ITC	COL	GRP	REMARKS
				E3112 B54	E3112 B55	E3112 B56	E3112 B57				
1	6211-110-057-50	CYLINDERHEAD ASSY	*	1	1	1	1				
2	6911-129-006-00	CAP,SEALING	*	2	2	2	2				
3	6209-605-004-10	PLUG/PT1/2	*	5	5	5	5				
4	6212-569-002-00	SEAL,OIL	*	6	6	6	6				
5	V682-200-000-60	BALL,STEEL	*	1	1	1	1				
6	6211-141-029-20	GASKET/CYLINDERHEAD	*	1	1	1	1				
7	6209-000-044-00	BOLT	*	14	14	14	14				
8	6209-300-014-00	STUD	*	2	2	2	2				

FIG. 3 CYLINDER HEAD COVER

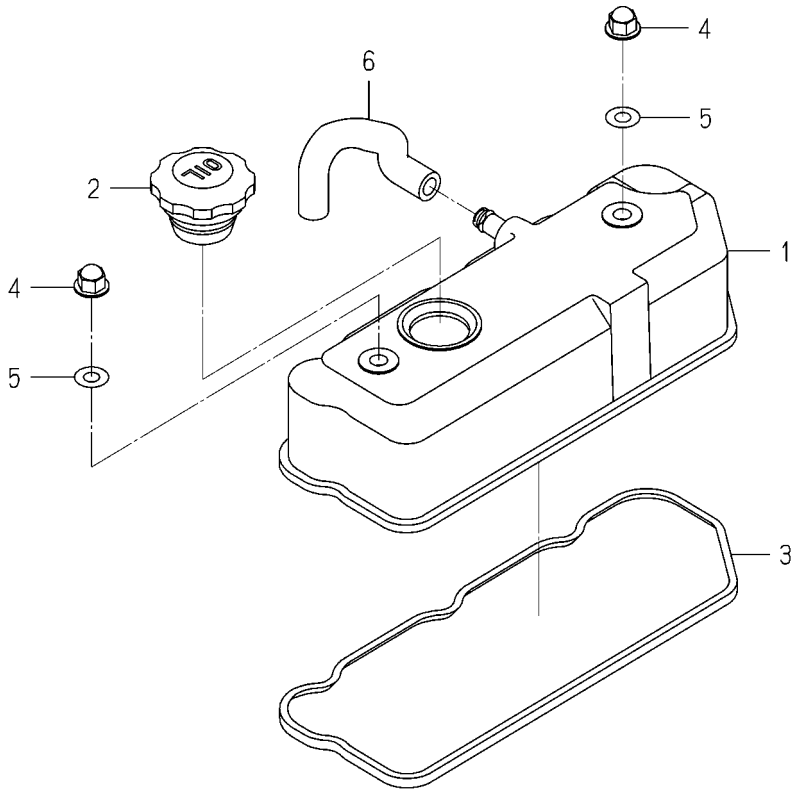

6003-110 -0100

KEY	PART CODE	DESCRIPTION	SPC	TYPE OF MODEL				ITC	COL	GRP	REMARKS
				E3112 B54	E3112 B55	E3112 B56	E3112 B57				
1	6211-170-004-20	COVER/CYLINDER HEAD	*	1	1	1	1				
2	6211-751-001-10	CAP,OIL FILLER	*	1	1	1	1				
3	6211-173-003-00	SEAL,CYL.HEAD COVER	*	1	1	1	1				
4	6209-490-002-10	NUT/CAP	*	2	2	2	2				
5	6209-572-003-00	GASKET	*	2	2	2	2				
6	6209-360-028-20	HOSE/RUBBER	*	1	1	1	1				

FIG. 4 INLET MANIFOLD

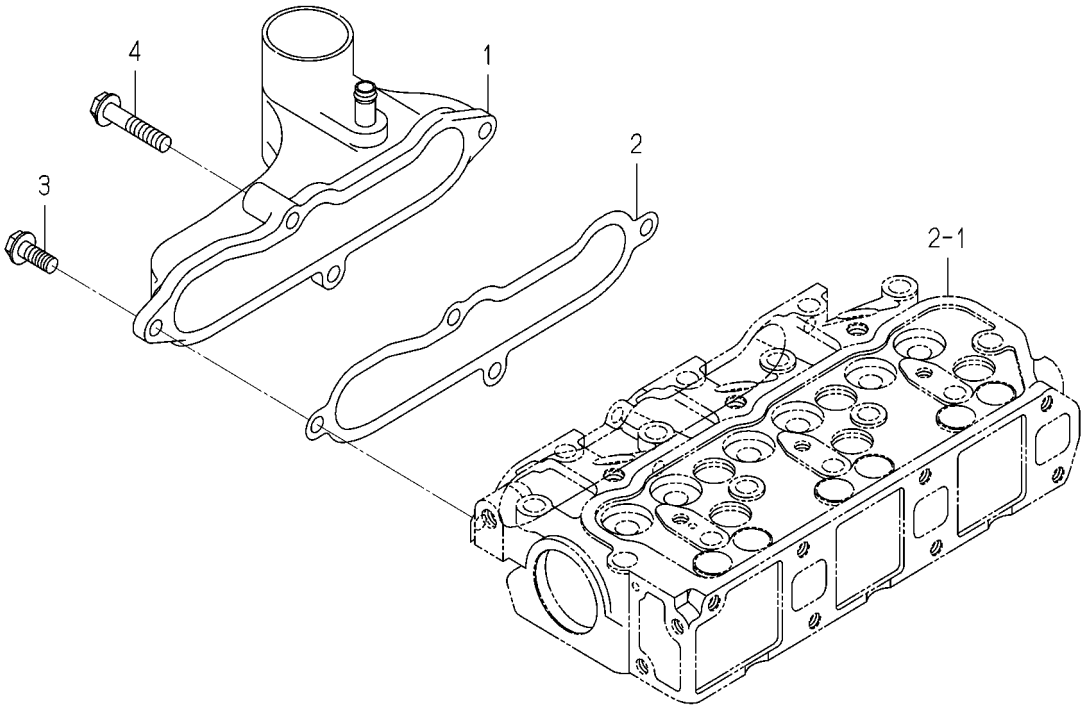

6003-120B-0100

KEY	PART CODE	DESCRIPTION	SPC	TYPE OF MODEL				ITC	COL	GRP	REMARKS
				E3112 B54	E3112 B55	E3112 B56	E3112 B57				
1	6214-111-011-20	MANIFOLD(INLET) ASSY	*	1	1	1	1				
2	6214-115-001-20	GASKET,INLET MANIFOL	*	1	1	1	1				
3	V231-360-802-00	FLANGEBOLT/M8X20	*	3	3	3	3				
4	V231-360-804-00	FLANGEBOLT/M8X40	*	1	1	1	1				

FIG. 5 EXHAUST MANIFOLD

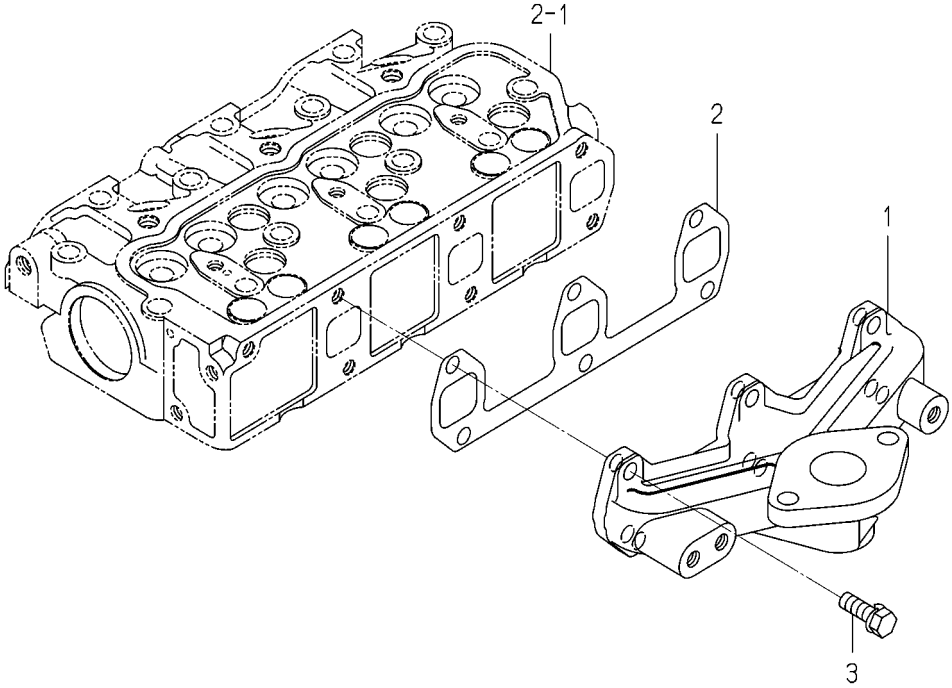

6004-140 -0100

KEY	PART CODE	DESCRIPTION	SPC	TYPE OF MODEL				ITC	COL	GRP	REMARKS
				E3112 B54	E3112 B55	E3112 B56	E3112 B57				
1	6214-141-010-10	MANIFOLD,EXH	*	1	1	1	1				
2	6214-145-001-30	GASKET,EXH.MANIFOLD	*	1	1	1	1				
3	V211-560-802-50	BOLT,S/M8X25/7T	*	6	6	6	6				

FIG. 6 CYLINDER BLOCK

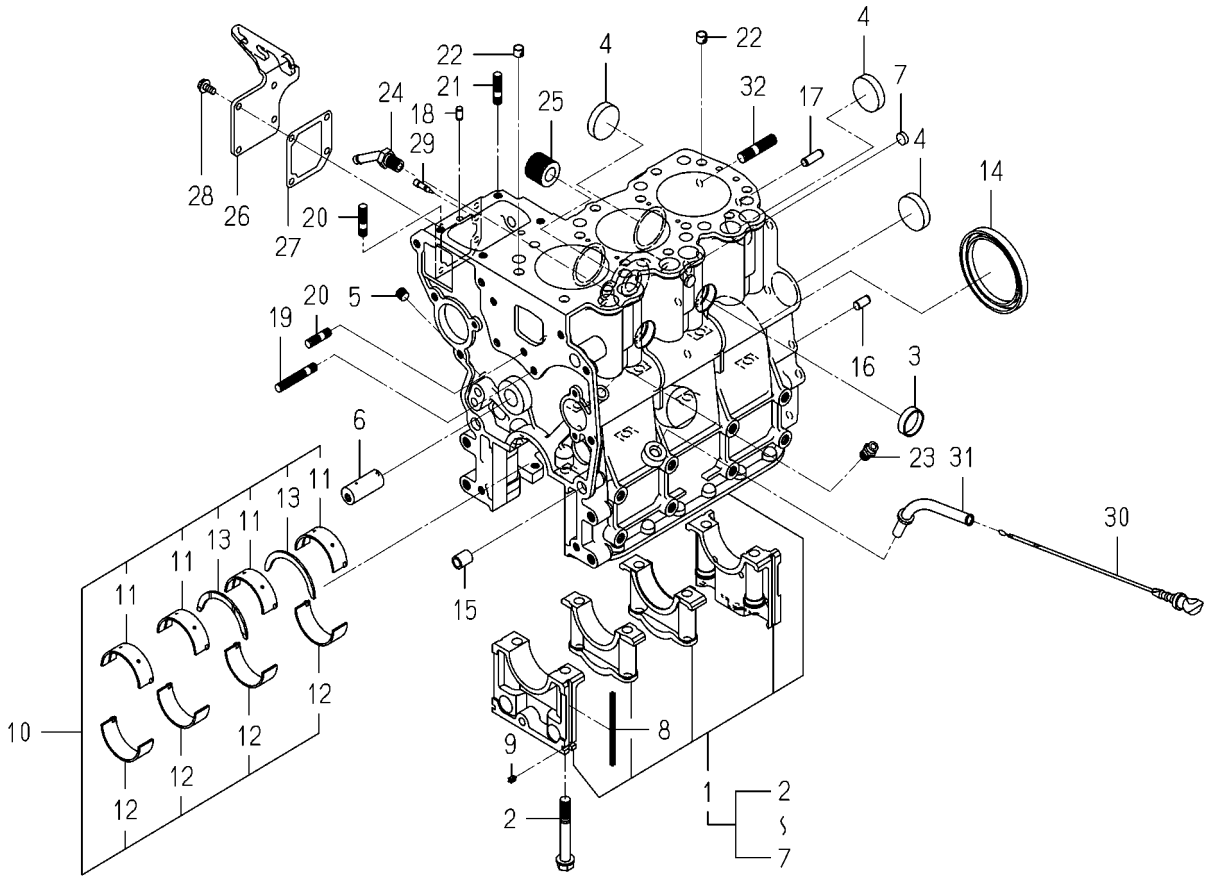

6004-202V-0100

KEY	PART CODE	DESCRIPTION	SPC	TYPE OF MODEL				ITC	COL	GRP	REMARKS
				E3112 B54	E3112 B55	E3112 B56	E3112 B57				
1	6211-210-113-10	CYLINDERBLOCK ASSY	*	1	1	1	1				
2	6209-000-004-10	BOLT	*	8	8	8	8				
3	6209-610-001-10	CUP/SEALING/28	*	2	2	2	2				
4	6209-610-009-00	CUP/SEALING/36	*	4	4	4	4				
5	6209-605-007-10	PLUG/PT1/8	*	3	3	3	3				
6	6212-531-014-00	PIN/IDLEGEAR	*	1	1	1	1				
7	6209-610-008-00	CUP/SEALING/12	*	2	2	2	2				
8	6211-258-001-00	SEAL,BEARING CAP	*	4	4	4	4				
9	6211-258-002-00	SEAL,BEARING CAP/7	*	2	2	2	2				
10	6211-510-021-00	BEARING/CRANKSET	*	1	1	1	1				
11	6211-511-023-00	BEARING/CRANK/UPPER	*	4	4	4	4				
12	6211-511-024-00	BEARING/CRANK/LOWER	*	4	4	4	4				
13	6211-599-012-00	BEARING/THRUST/CRANK	*	2	2	2	2				
14	6209-625-001-00	SEAL,OIL	*	1	1	1	1				
15	6209-749-001-20	PIN/TUBE	*	2	2	2	2				
16	6213-129-006-00	PIN/STRAIGHT	*	1	1	1	1				
17	V523-100-802-40	PIN,ST,B/8X24	*	1	1	1	1				
18	6209-740-005-00	PIN	*	2	2	2	2				
19	6904-110-840-00	STUD/M8X40	*	1	1	1	1				
20	6904-110-818-00	STUD	*	1	1	1	1				
21	6904-110-822-00	STUD	*	2	2	2	2				
22	6294-453-002-00	DOWEL	*	2	2	2	2				
23	6909-902-299-00	NIPPLE	*	1	1	1	1				
24	6213-721-007-00	PIPE/WATERDRAIN	*	1	1	1	1				
25	6213-319-001-00	CONNECTOR,OIL FILTER	*	1	1	1	1				
26	6211-291-016-00	COVER/INJECTIONPUMP	*	1	1	1	1				
27	6211-292-001-20	GASKET/COVER	*	1	1	1	1				
28	V230-360-601-20	FLANGEBOLT/M6X12	*	4	4	4	4				
29	6215-549-013-00	PIN	*	1	1	1	1				
30	6211-760-026-40	LEVEL/GAGE	*	1	1	1	1				

FIG. 6 CYLINDER BLOCK

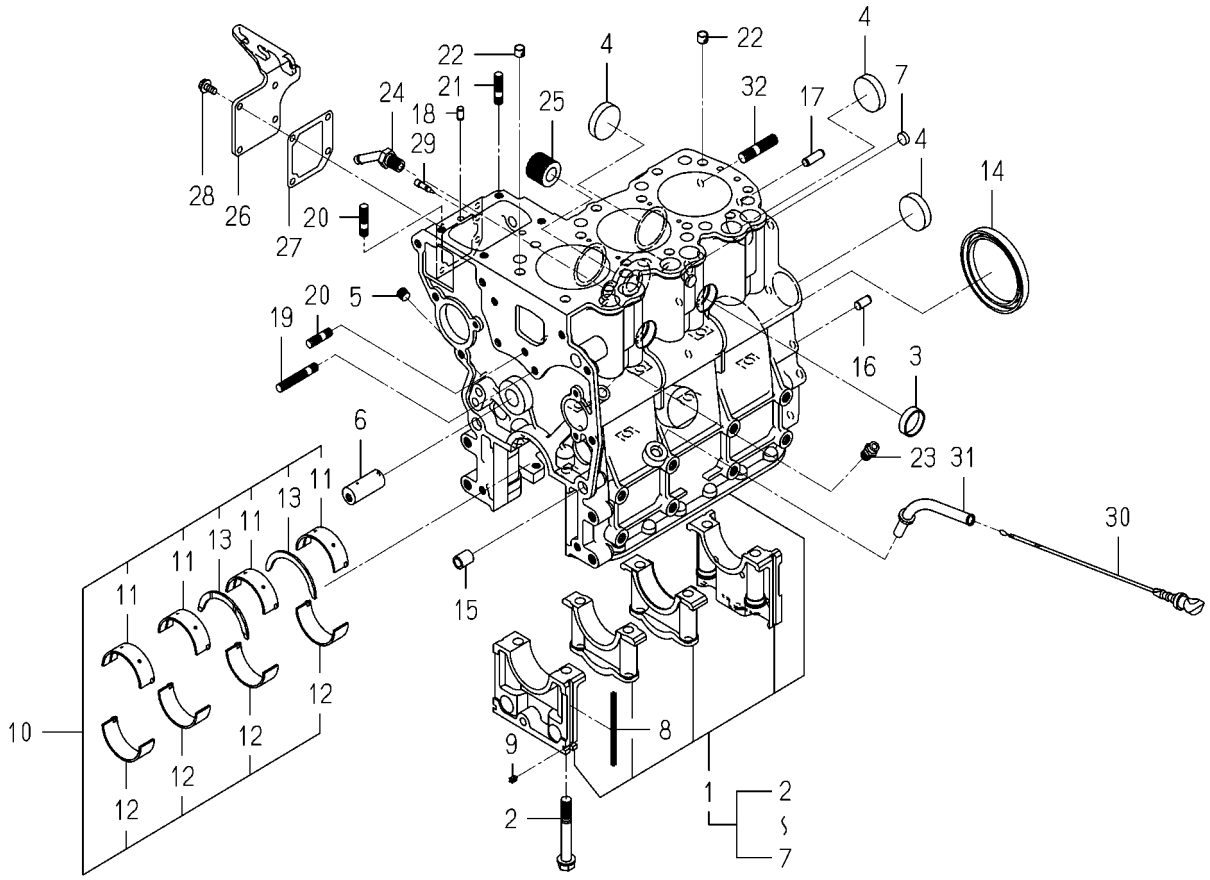

6004-202V-0100

KEY	PART CODE	DESCRIPTION	SPC	TYPE OF MODEL				ITC	COL	GRP	REMARKS
				E3112 B54	E3112 B55	E3112 B56	E3112 B57				
31	6211-766-012-10	GUIDE/LEVELGAGE COMP	*	1	1	1	1				
32	6209-300-013-00	STUD	*	2	2	2	2				

FIG. 7 BEARING/UNDER SIZE (OPTION)

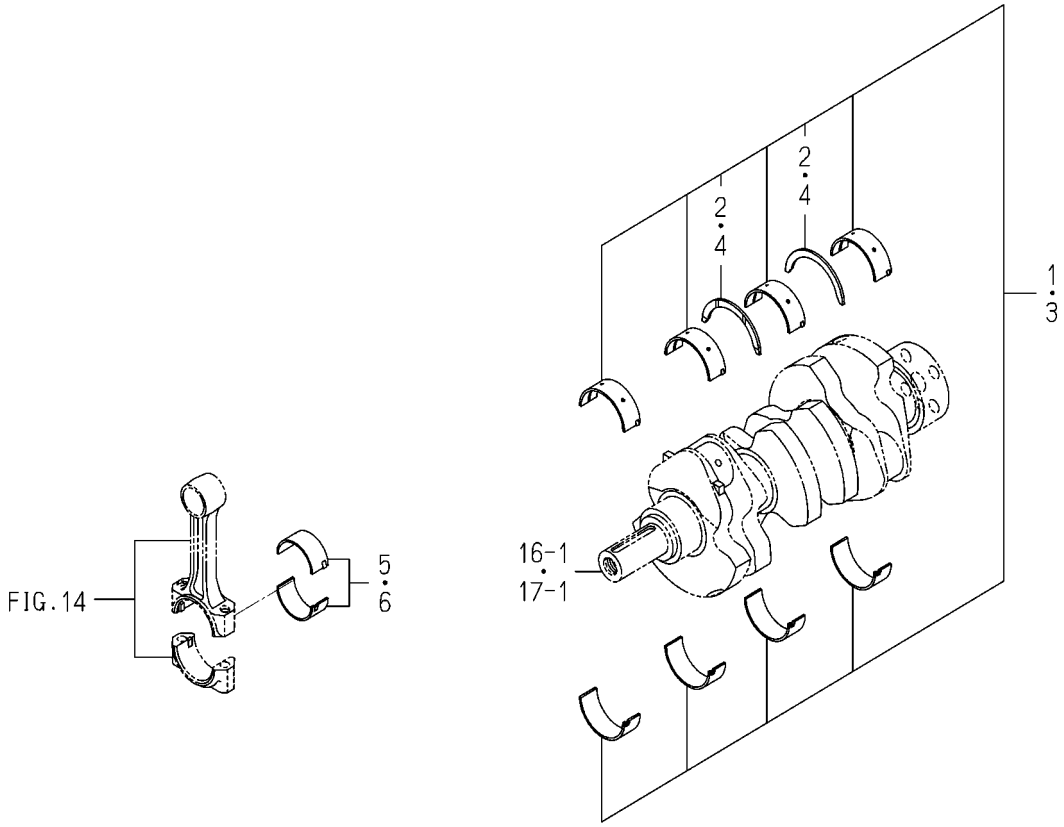

6003-209 -0100

KEY	PART CODE	DESCRIPTION	SPC	TYPE OF MODEL				ITC	COL	GRP	REMARKS
				E3112 B54	E3112 B55	E3112 B56	E3112 B57				
1	6211-540-018-00	BRG/CRANK/UN050 SET	T	1	1	1	1				
2	6211-599-012-00	BEARING/THRUST/CRANK	T	2	2	2	2				
3	6211-560-007-00	BRG/CRANK/UN100 SET	T	1	1	1	1				
4	6211-599-012-00	BEARING/THRUST/CRANK	T	2	2	2	2				
5	6212-274-016-00	BRG/CONROD/UN050 SET	T	3	3	3	3				
6	6212-276-016-00	BRG/CONROD/UN100 SET	T	3	3	3	3				

FIG. 8 OIL PAN

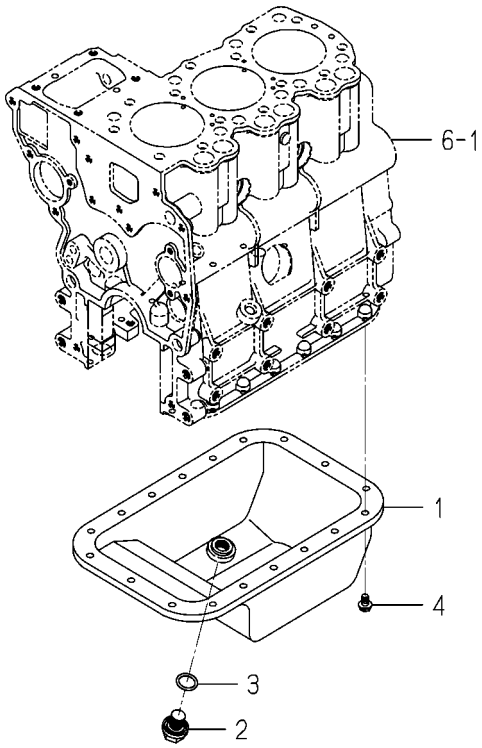

6004-210 -0100

KEY	PART CODE	DESCRIPTION	SPC	TYPE OF MODEL				ITC	COL	GRP	REMARKS
				E3112 B54	E3112 B55	E3112 B56	E3112 B57				
1	6211-361-010-10	PAN,OIL COMP	*	1	1	1	1				
2	3805-355-002-20	PLUG/M14X1.5	*	1	1	1	1				
3	V720-102-401-80	O-RING/1A,P18	*	1	1	1	1				
4	V230-360-601-00	FLANGEBOLT/M6X10	*	18	18	18	18				

FIG. 9 REAR PLATE

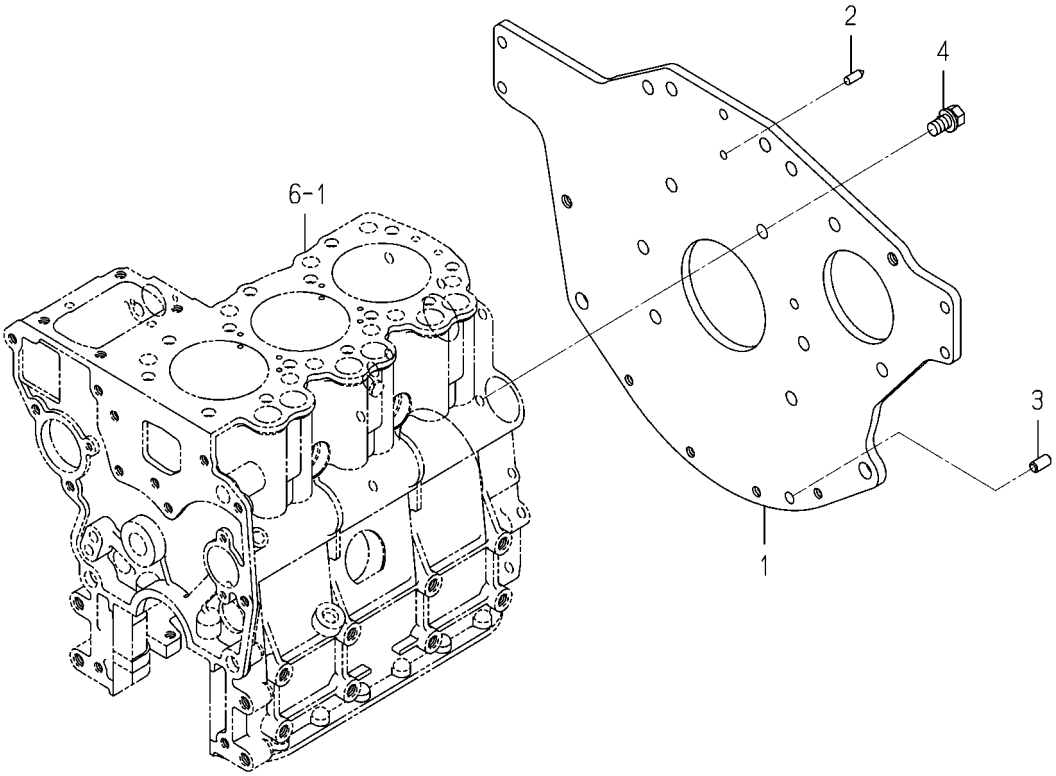

6004-220R-0100

KEY	PART CODE	DESCRIPTION	SPC	TYPE OF MODEL				ITC	COL	GRP	REMARKS
				E3112 B54	E3112 B55	E3112 B56	E3112 B57				
1	6211-341-087-00	PLATE/REAR	*	1	1	1	1				
2	6211-342-002-10	POINTER	*	1	1	1	1				
3	6213-129-006-00	PIN/STRAIGHT	*	1	1	1	1				
4	6901-911-025-00	BOLT,SEMS/M10X25,7T	*	6	6	6	6				

FIG. 10 TIMING GEAR CASE

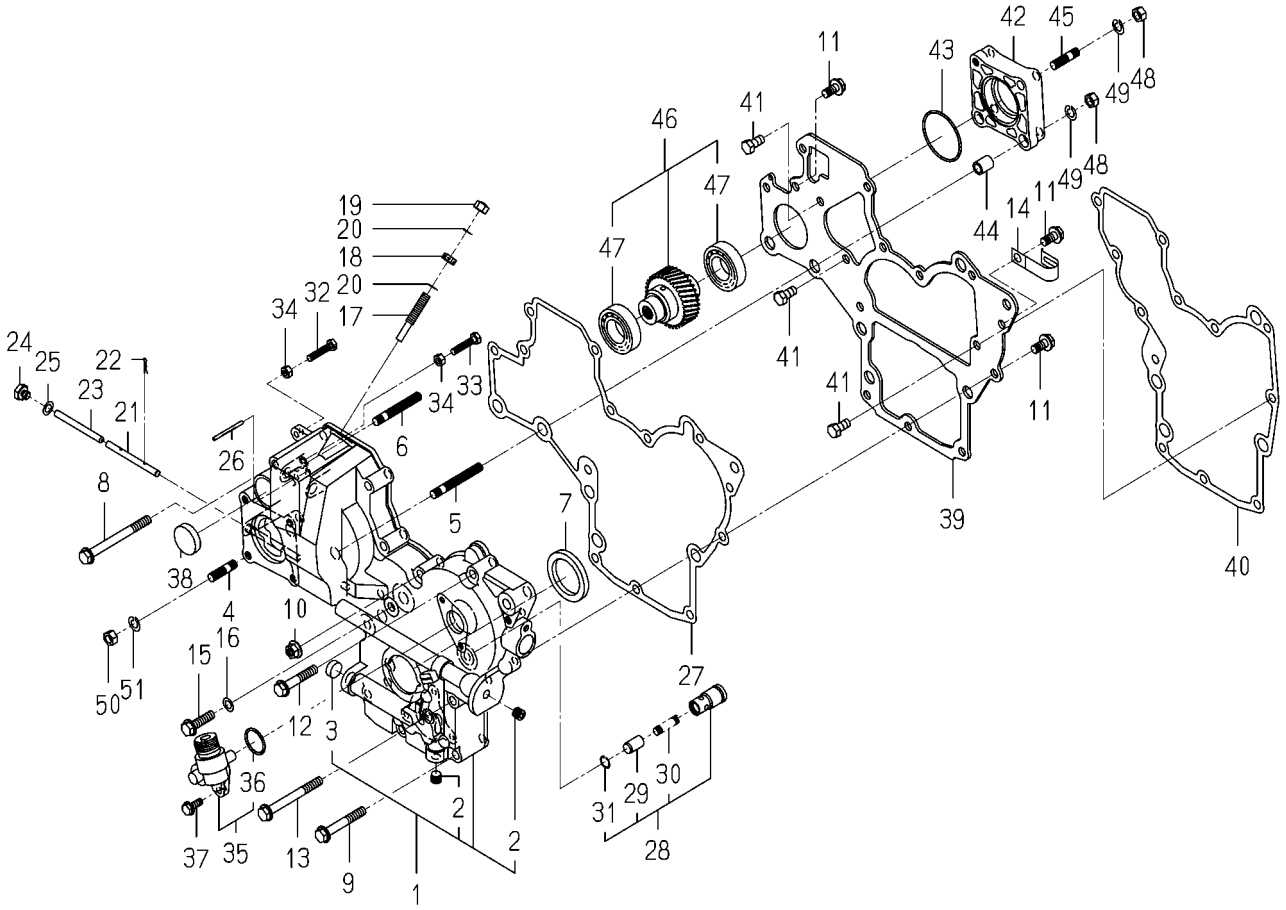

6004-240N-0100,6004-240N-0200

KEY	PART CODE	DESCRIPTION	SPC	TYPE OF MODEL				ITC	COL	GRP	REMARKS
				E3112 B54	E3112 B55	E3112 B56	E3112 B57				
1	6211-310-012-50	GEARCASE ASSY	*	1	1	1	1				
2	6209-605-007-10	PLUG/PT1/8	*	2	2	2	2				
3	6209-610-007-00	CUP/SEALING/16	*	1	1	1	1				
4	6904-110-822-00	STUD	*	4	4	4	4				
5	6904-110-855-00	STUD	*	2	2	2	2				
6	6904-110-850-00	STUD	*	1	1	1	1				
7	6209-625-002-00	SEAL,OIL	*	1	1	1	1				
8	V231-360-808-50	FLANGEBOLT/M8X85	*	1	1	1	1				
9	V231-360-805-50	FLANGEBOLT/M8X55	*	2	2	2	2				
10	3817-401-001-00	NUT/M08	*	1	1	1	1				
11	V231-360-801-60	FLANGEBOLT/M8X16	*	3	3	3	3				
12	V231-360-804-50	FLANGEBOLT/M8X45	*	5	5	5	5				
13	V231-360-807-50	FLANGEBOLT/M8X75	*	1	1	1	1				
14	1425-621-004-00	HOLDER/JE/9-9	*	2	2	2	2				
15	V231-360-803-00	FLANGEBOLT/M8X30	*	1	1	1	1				
16	6209-500-003-00	WASHER/08X14X01	*	1	1	1	1				
17	6215-546-003-30	STOPPER/FULLLOAD	*	1	1	1	1				
18	6209-409-001-00	NUT/M8	*	1	1	1	1				
19	V341-120-008-00	NUT,CAP/M8	*	1	1	1	1				
20	6209-920-002-00	PACKING	*	2	2	2	2				
21	6215-542-004-20	PIN/ARM	*	1	1	1	1				
22	P117-303-003-00	PIN/SNAP	*	2	2	2	2				
23	6215-542-005-20	PIN	*	1	1	1	1				
24	6209-600-004-00	PLUG/SCREW	*	1	1	1	1				
25	6209-500-003-00	WASHER/08X14X01	*	1	1	1	1				
26	6209-740-001-00	PIN,GROOVE	*	1	1	1	1				
27	6211-312-003-20	GASKET/GEARCASE	*	1	1	1	1				
28	6213-160-002-20	VALVE/RELIEF ASSY	*	1	1	1	1				
29	6213-161-001-20	PISTON/VALVE/RELIEF	*	1	1	1	1				
30	6213-164-001-00	SPRING/RELIEF VALVE	*	1	1	1	1				

FIG. 10 TIMING GEAR CASE

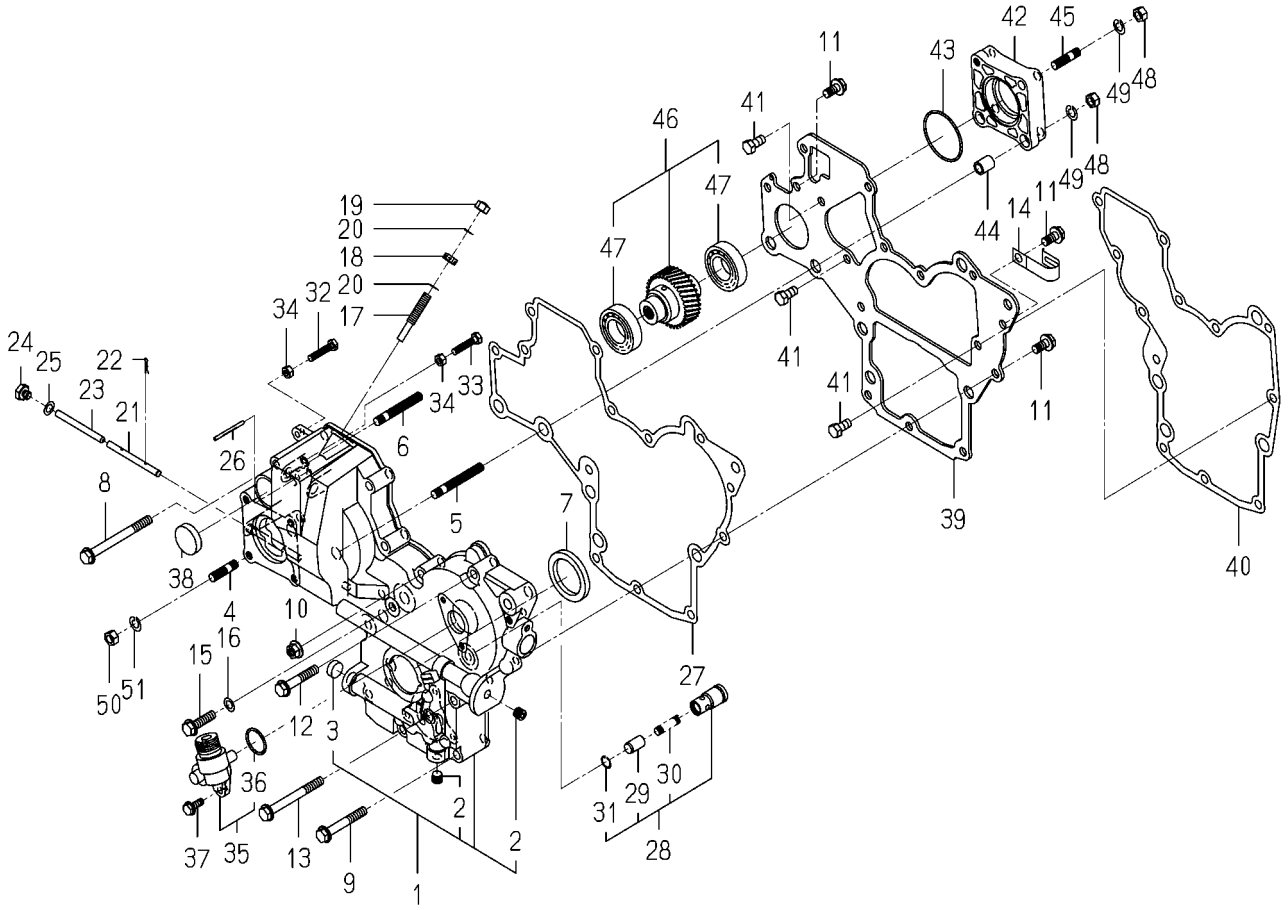

6004-240N-0100,6004-240N-0200

KEY	PART CODE	DESCRIPTION	SPC	TYPE OF MODEL				ITC	COL	GRP	REMARKS
				E3112 B54	E3112 B55	E3112 B56	E3112 B57				
31	V705-140-012-00	RING,SNAP/12 C	*	1	1	1	1				
32	6209-050-001-00	BOLT/M6	*	1	1	1	1				
33	6209-050-002-00	BOLT/M6	*	1	1	1	1				
34	V301-260-006-00	NUT/M6	*	2	2	2	2				
35	6219-310-003-20	DRIVE/TACHOMETE ASSY	*	1	1	1	1				
36	V723-102-002-40	O-RING/1A,S24	*	1	1	1	1				
37	V230-360-601-60	FLANGEBOLT/M6X16	*	2	2	2	2				
38	3625-540-004-00	CAP,BLANK/30	*	1	1	1	1				
39	6211-311-007-40	PLATE/FRONT	*	1	1	1	1				
40	6211-312-004-20	GASKET/PLATE	*	1	1	1	1				
41	6902-050-816-00	BOLT	*	3	3	3	3				
42	6211-319-003-00	SPACER	*	1	1	1	1				
43	V723-102-005-00	O-RING/1A,S50	*	1	1	1	1				
44	6209-749-001-20	PIN/TUBE	*	2	2	2	2				
45	6904-110-822-00	STUD	*	1	1	1	1				
46	6212-530-022-00	SHAFT/HYDRAULIC ASSY	*	1	1	1	1				
47	1729-202-002-00	BEARING/BALL	*	2	2	2	2				
48	V304-260-008-00	NUT/M8	*	4	4	4	4				
49	V401-160-008-00	WASHER,SP/M8	*	4	4	4	4				
50	V304-260-008-00	NUT/M8	*	4	4	4	4				
51	V401-160-008-00	WASHER,SP/M8	*	4	4	4	4				

FIG. 11 HANGER

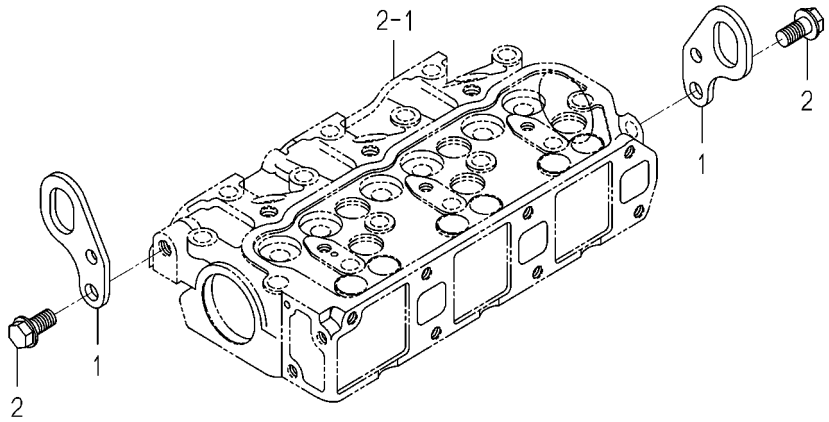

6003-290 -0100

KEY	PART CODE	DESCRIPTION	SPC	TYPE OF MODEL				ITC	COL	GRP	REMARKS
				E3112 B54	E3112 B55	E3112 B56	E3112 B57				
1	6211-777-007-30	HANGER	*	2	2	2	2				
2	V233-361-002-00	FLANGEBOLT/M10X20	*	2	2	2	2				

FIG. 12 VALVE

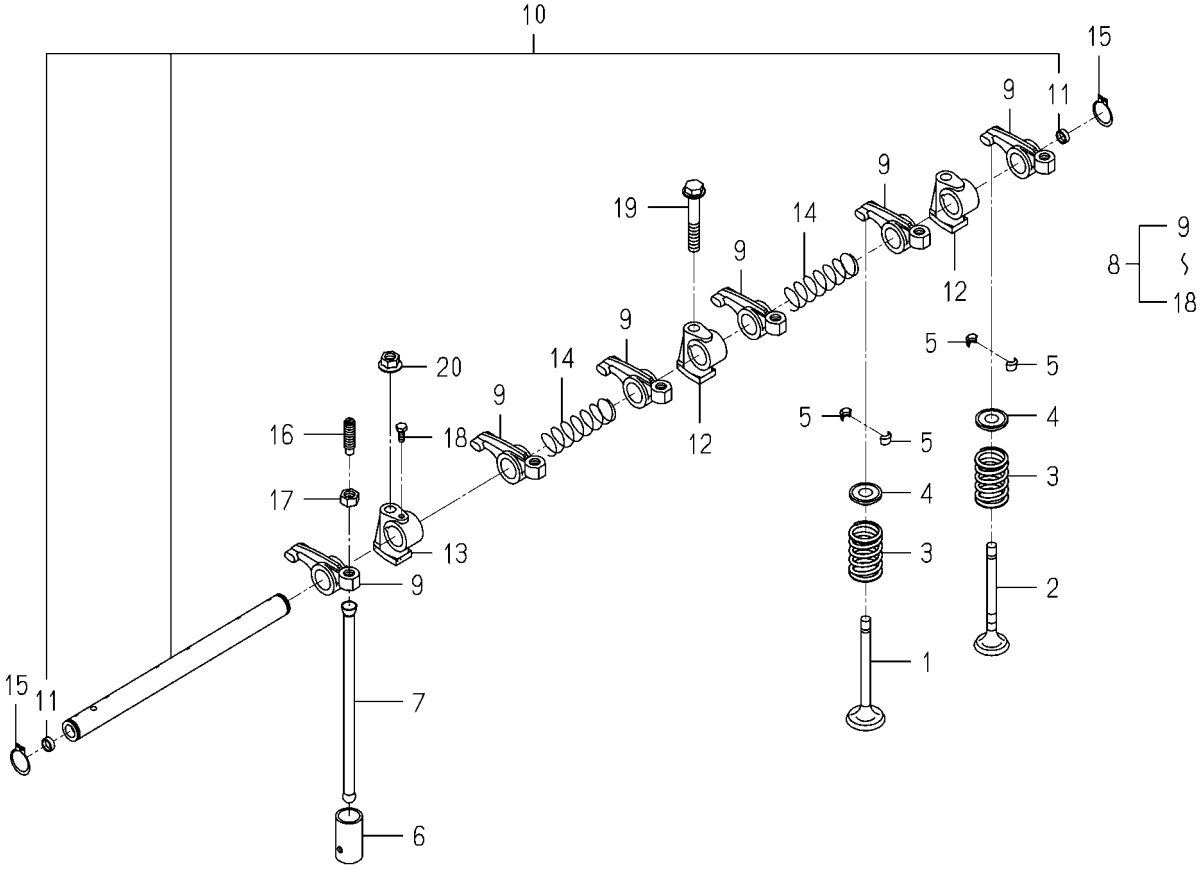

6004-301 -0100

KEY	PART CODE	DESCRIPTION	SPC	TYPE OF MODEL				ITC	COL	GRP	REMARKS
				E3112 B54	E3112 B55	E3112 B56	E3112 B57				
1	6212-551-028-00	VALVE/INTAKE	*	3	3	3	3				
2	6212-552-014-00	VALVE/EXHAUST	*	3	3	3	3				
3	6212-561-001-10	SPRING/VALVE	*	6	6	6	6				
4	6212-563-005-00	SEAT/VALVESPRING	*	6	6	6	6				
5	6212-565-001-00	CUTTER,VALVE	*	12	12	12	12				
6	6212-571-006-00	TAPPET	*	6	6	6	6				
7	6212-575-002-00	ROD,PUSH	*	6	6	6	6				
8	6212-600-002-30	ROCKERSHAFT ASSY	*	1	1	1	1				
9	6212-611-004-10	ROCKERARM	*	6	6	6	6				
10	6212-620-001-20	SHAFT/ROCKERARM ASSY	*	1	1	1	1				
11	6212-626-002-10	PLUG	*	2	2	2	2				
12	6212-628-004-00	BRACKET ROCKER SHAFT	*	2	2	2	2				
13	6212-628-005-00	BRACKET,ROCKER SHAFT	*	1	1	1	1				
14	6209-940-004-00	SPRING	*	2	2	2	2				
15	V704-140-016-00	RING,SNAP/16 C	*	2	2	2	2				
16	6212-616-002-00	SCREW ADJUST	*	6	6	6	6				
17	6209-409-003-00	NUT	*	6	6	6	6				
18	6209-000-002-00	BOLT	*	1	1	1	1				
19	V231-360-805-00	FLANGEBOLT/M8X50	*	1	1	1	1				
20	3817-401-001-00	NUT/M08	*	2	2	2	2				

FIG. 13 CAM SHAFT

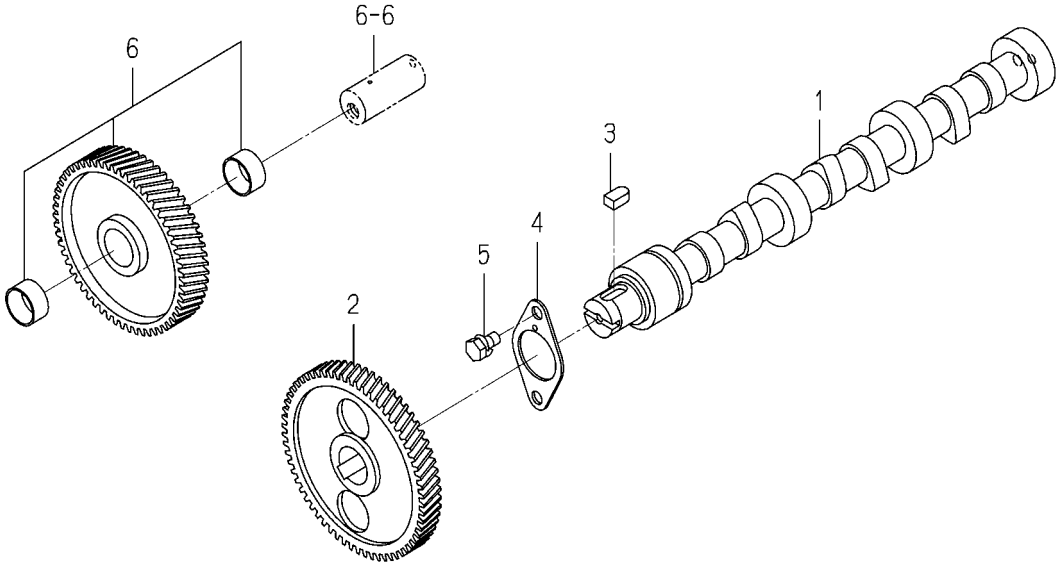

6003-310 -0100

KEY	PART CODE	DESCRIPTION	SPC	TYPE OF MODEL				ITC	COL	GRP	REMARKS
				E3112 B54	E3112 B55	E3112 B56	E3112 B57				
1	6212-511-002-00	SHAFT,CAM	*	1	1	1	1				
2	6212-522-010-00	GEAR/CAMSHAFT	*	1	1	1	1				
3	6209-730-005-00	KEY/07X05X09	*	1	1	1	1				
4	6212-535-014-00	PLATE/THRUST	*	1	1	1	1				
5	V210-560-601-20	BOLT,S/M6X12/7T	*	2	2	2	2				
6	6212-523-023-00	GEAR/IDLE ASSY	*	1	1	1	1				

FIG. 14 PISTON

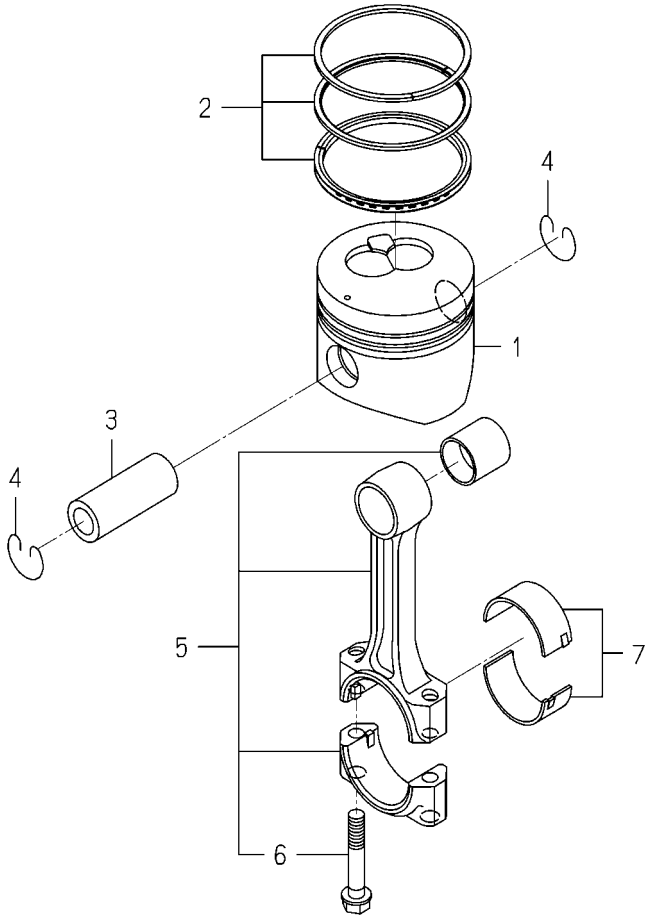

6004-340I-0100

KEY	PART CODE	DESCRIPTION	SPC	TYPE OF MODEL				ITC	COL	GRP	REMARKS
				E3112 B54	E3112 B55	E3112 B56	E3112 B57				
1	6212-111-094-20	PISTON	*	3	3	3	3				
2	6212-121-014-20	RING/PISTON SET	*	3	3	3	3				
3	6212-211-001-10	PIN,PISTON	*	3	3	3	3				
4	6209-587-001-00	RING,SNAP	*	6	6	6	6				
5	6212-230-004-10	CONNECTINGROD ASSY	*	3	3	3	3				
6	6212-235-005-00	BOLT/CONNECTINGROD	*	6	6	6	6				
7	6212-271-016-00	BEARING/CONNECTING R	*	3	3	3	3				

FIG. 15 PISTON/OVER SIZE (OPTION)

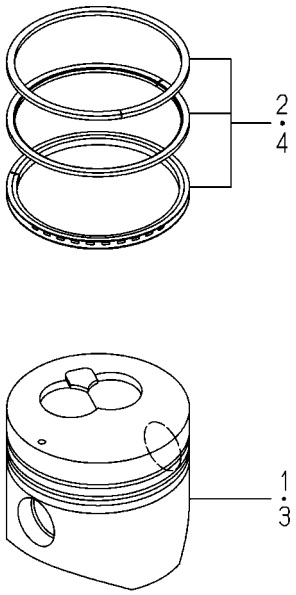

6004-349I-0100

KEY	PART CODE	DESCRIPTION	SPC	TYPE OF MODEL				ITC	COL	GRP	REMARKS
				E3112 B54	E3112 B55	E3112 B56	E3112 B57				
1	6212-114-094-20	PISTON(OV/050)	T	3	3	3	3				
2	6212-124-014-10	RINGPISTON/OV050 SET	T	3	3	3	3				
3	6212-116-094-20	PISTON(OV/100)	T	3	3	3	3				
4	6212-126-014-10	RINGPISTON/OV100 SET	T	3	3	3	3				

FIG. 16 CRANK SHAFT

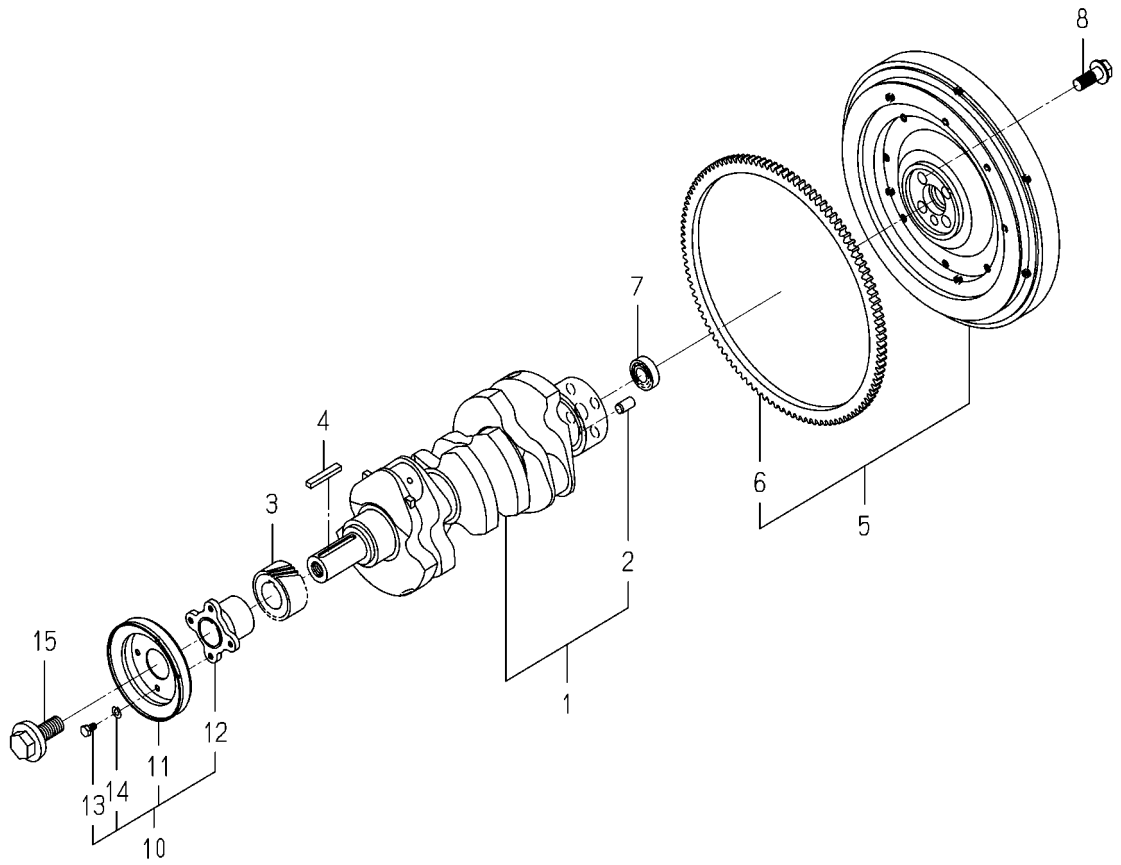

6004-350N-0100

KEY	PART CODE	DESCRIPTION	SPC	TYPE OF MODEL				ITC	COL	GRP	REMARKS
				E3112 B54	E3112 B55	E3112 B56	E3112 B57				
1	6212-310-009-60	CRANKSHAFT ASSY	*	1		1					
2	V523-101-001-80	PIN,ST,B/10X18	*	1		1					
3	6212-521-008-00	GEAR/CRANK	*	1		1					
4	6209-730-006-00	KEY/07X05X43	*	1		1					
5	6212-330-051-10	FLYWHEEL ASSY	*	1		1					
6	6212-333-009-00	RINGGEAR	*	1		1					
7	V600-150-600-20	BEARING,RB/6002SS	*	1		1					
8	6209-046-015-00	BOLT/FLANGE	*	4		4					
9	6212-370-011-00	PULLEY ASSY	*	1		1					
10	6212-371-009-00	PULLEY	*	1		1					
11	6212-372-002-10	CENTER CRANK PULLEY	*	1		1					
12	6902-050-610-00	BOLT	*	4		4					
13	6909-150-506-00	WASHER,SP/M6	*	4		4					
14	6209-000-043-00	BOLT/CRANK	*	1		1					

FIG. 17 CRANK SHAFT

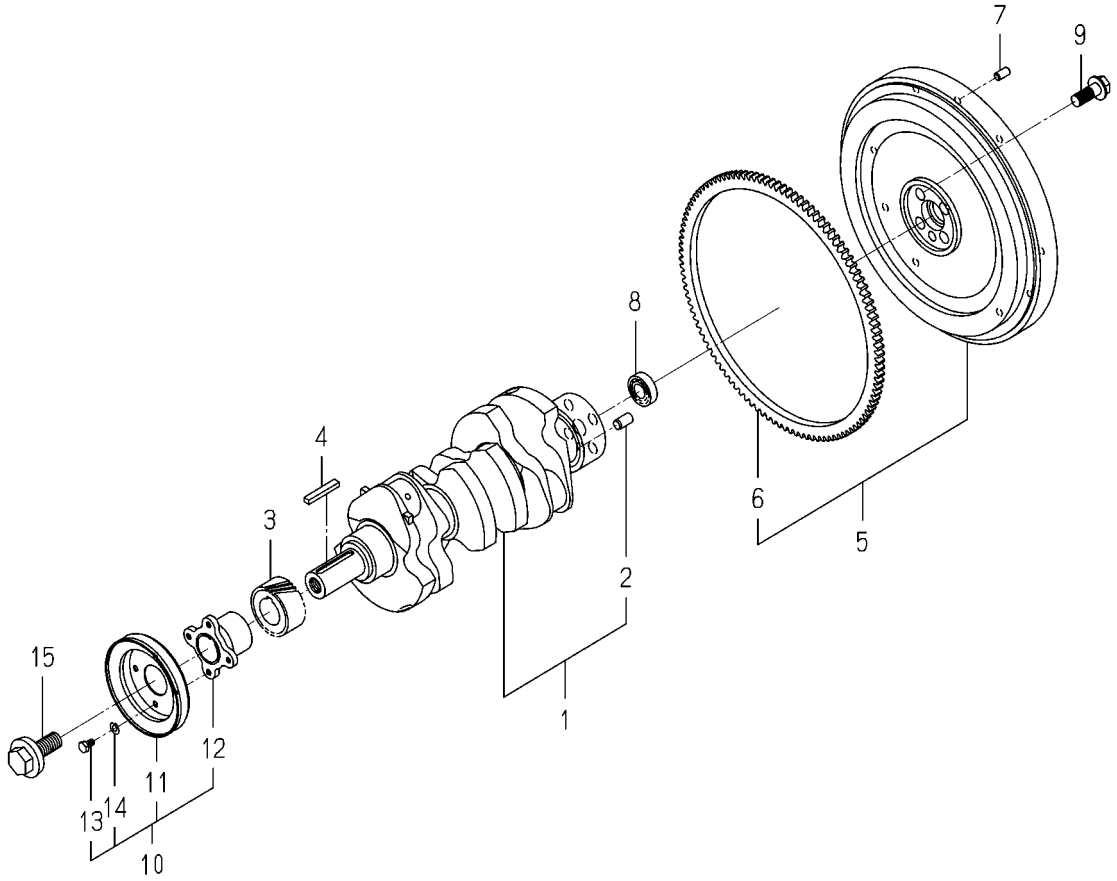

6004-351C-0100

KEY	PART CODE	DESCRIPTION	SPC	TYPE OF MODEL				ITC	COL	GRP	REMARKS
				E3112 B54	E3112 B55	E3112 B56	E3112 B57				
1	6212-310-009-60	CRANKSHAFT ASSY	*		1		1				
2	V523-101-001-80	PIN,ST,B/10X18	*		1		1				
3	6212-521-008-00	GEAR/CRANK	*		1		1				
4	6209-730-006-00	KEY/07X05X43	*		1		1				
5	6212-330-090-10	FLYWHEEL ASSY	*		1		1				
6	6212-333-009-00	RINGGEAR	*		1		1				
7	6213-129-006-00	PIN/STRAIGHT	*		3		3				
8	V600-150-600-20	BEARING,RB/6002SS	*		1		1				
9	6209-046-015-00	BOLT/FLANGE	*		4		4				
10	6212-370-011-00	PULLEY ASSY	*		1		1				
11	6212-371-009-00	PULLEY	*		1		1				
12	6212-372-002-10	CENTER CRANK PULLEY	*		1		1				
13	6902-050-610-00	BOLT	*		4		4				
14	6909-150-506-00	WASHER,SP/M6	*		4		4				
15	6209-000-043-00	BOLT/CRANK	*		1		1				

FIG. 18 OIL PUMP

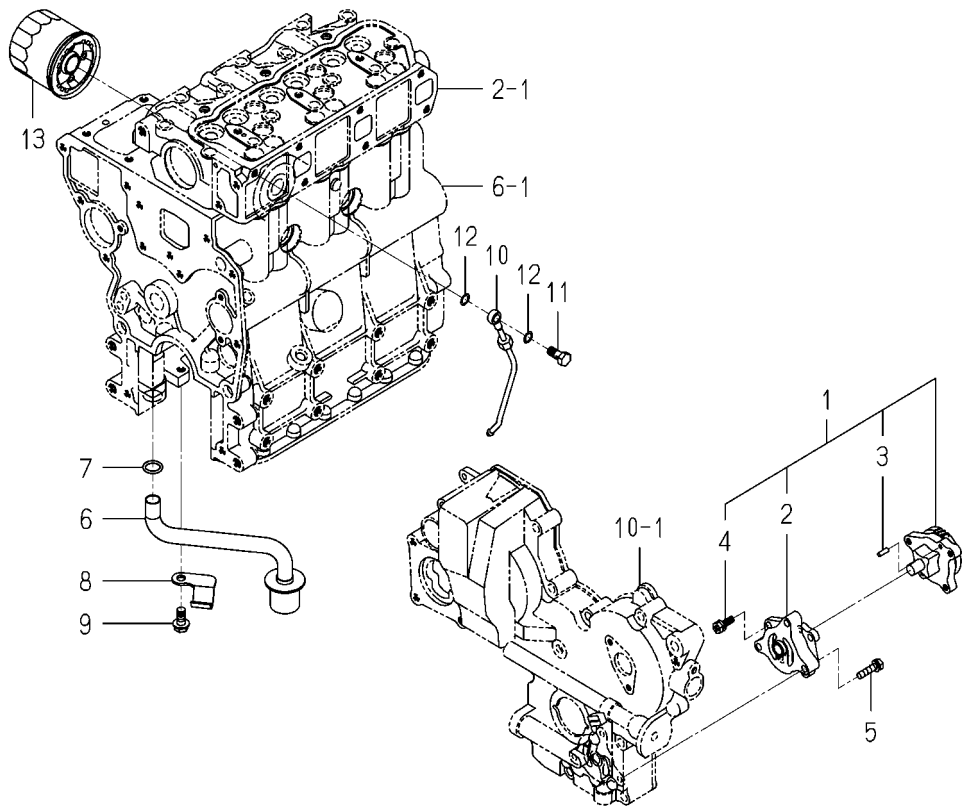

6004-401B-0100

KEY	PART CODE	DESCRIPTION	SPC	TYPE OF MODEL				ITC	COL	GRP	REMARKS
				E3112 B54	E3112 B55	E3112 B56	E3112 B57				
1	6213-100-003-30	OILPUMP ASSY	*	1	1	1	1				
2	6213-111-001-30	BODY/OILPUMP	*	1	1	1	1				
3	6213-129-003-00	PIN/STRAIGHT	*	2	2	2	2				
4	6213-119-001-00	BOLT/WS	*	3	3	3	3				
5	V210-560-602-50	BOLT,S/M6X25/7T	*	3	3	3	3				
6	6213-140-034-10	STRAINER	*	1	1	1	1				
7	V720-102-401-50	O-RING/1A,P15	*	1	1	1	1				
8	6213-149-002-00	CLAMP,STRAINER	*	1	1	1	1				
9	V231-360-801-60	FLANGEBOLT/M8X16	*	1	1	1	1				
10	6213-311-006-00	PIPE,OIL	*	1	1	1	1				
11	6909-906-105-10	BOLT,JOINT	*	1	1	1	1				
12	6209-920-002-00	PACKING	*	2	2	2	2				
13	6213-240-002-20	CARTRIDGE/OILFILTER	*	1	1	1	1				

FIG. 19 WATER PUMP

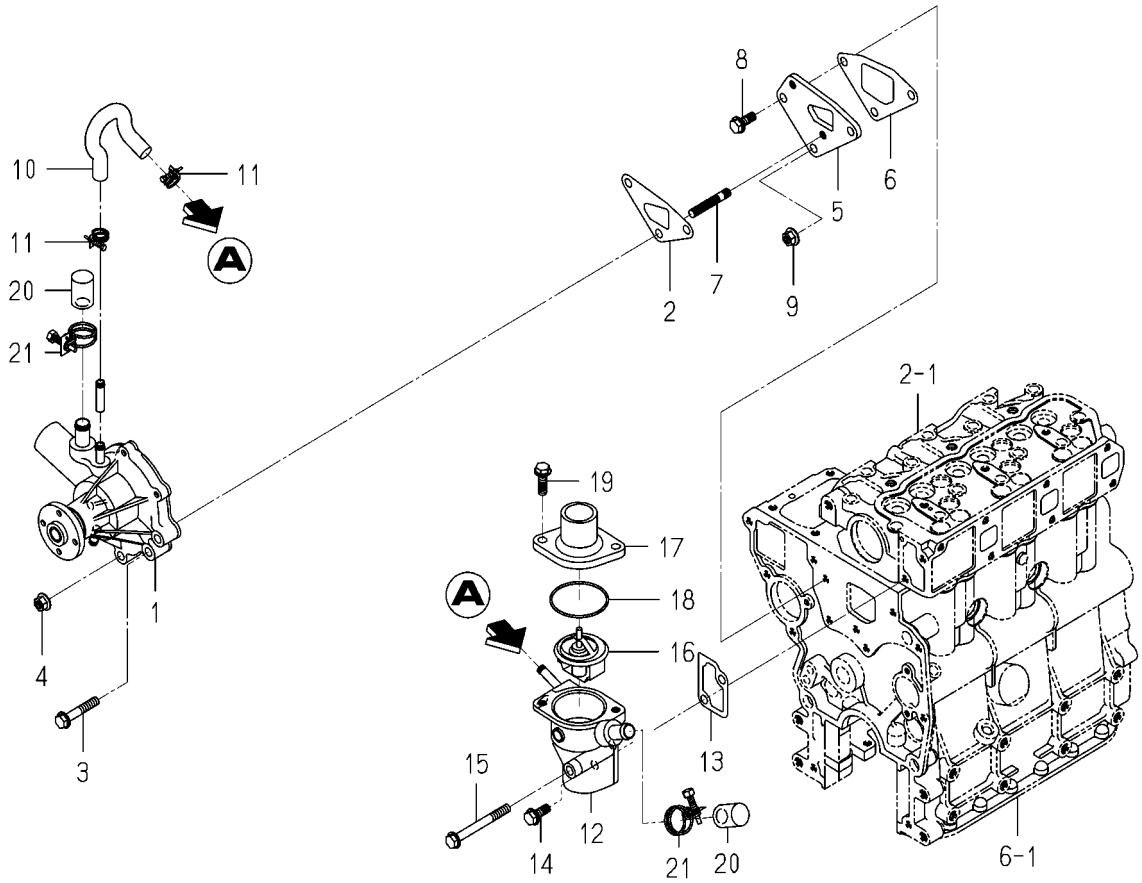

6004-420H-0100

KEY	PART CODE	DESCRIPTION	SPC	TYPE OF MODEL				ITC	COL	GRP	REMARKS
				E3112 B54	E3112 B55	E3112 B56	E3112 B57				
1	6213-610-011-20	WATERPUMP ASSY	*	1	1	1	1				
2	6213-614-018-00	GASKET/WATERPUMP	*	1	1	1	1				
3	V231-360-804-50	FLANGEBOLT/M8X45	*	1	1	1	1				
4	3817-401-001-00	NUT/M08	*	2	2	2	2				
5	6213-619-001-00	SPACER,PUMP.WATER	*	1	1	1	1				
6	6213-614-019-00	GASKET/SPACER	*	1	1	1	1				
7	6904-110-840-00	STUD/M8X40	*	2	2	2	2				
8	V231-360-802-00	FLANGEBOLT/M8X20	*	1	1	1	1				
9	3817-401-001-00	NUT/M08	*	1	1	1	1				
10	6213-729-013-10	HOSE/RUBBER	*	1	1	1	1				
11	J061-210-015-00	CLAMP/WIRE/10-15	*	2	2	2	2				
12	6213-716-004-20	HOUSING/THERMOSTAT	*	1	1	1	1				
13	6213-743-002-10	GASKET/HOUSING	*	1	1	1	1				
14	V231-360-802-00	FLANGEBOLT/M8X20	*	1	1	1	1				
15	V231-360-807-50	FLANGEBOLT/M8X75	*	1	1	1	1				
16	6513-770-022-10	THERMOSTAT	*	1	1	1	1				
17	6213-711-003-20	PIPE,WATER OUTLET	*	1	1	1	1				
18	V723-102-005-50	O-RING/1A,S55	*	1	1	1	1				
19	V231-360-802-50	FLANGEBOLT/M8X25	*	2	2	2	2				
20	6213-729-011-00	CAP	*	2	2	2	2				
21	J061-220-024-00	CLAMP/WIRE/20-24	*	2	2	2	2				

FIG. 20 COOLING FAN

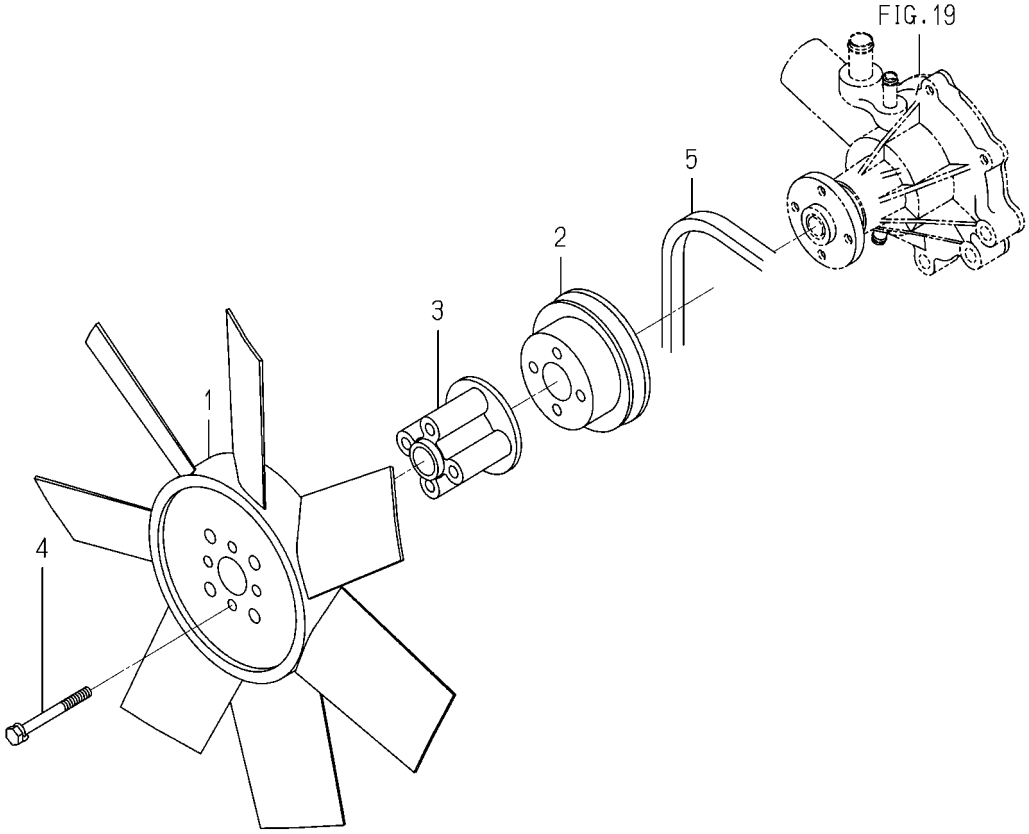

6003-480I-0100

KEY	PART CODE	DESCRIPTION	SPC	TYPE OF MODEL				ITC	COL	GRP	REMARKS
				E3112 B54	E3112 B55	E3112 B56	E3112 B57				
1	6213-660-007-00	FAN/COOLING	*	1	1	1	1				
2	6213-641-002-10	PULLEY,WATER PUMP	*	1	1	1	1				
3	6213-669-008-00	SPACER/FAN/48	*	1	1	1	1				
4	6209-030-044-00	BOLT/WS	*	4	4	4	4				
5	6213-671-003-00	BELT VHM034	*	1	1	1	1				

FIG. 21 INJECTION NOZZLE

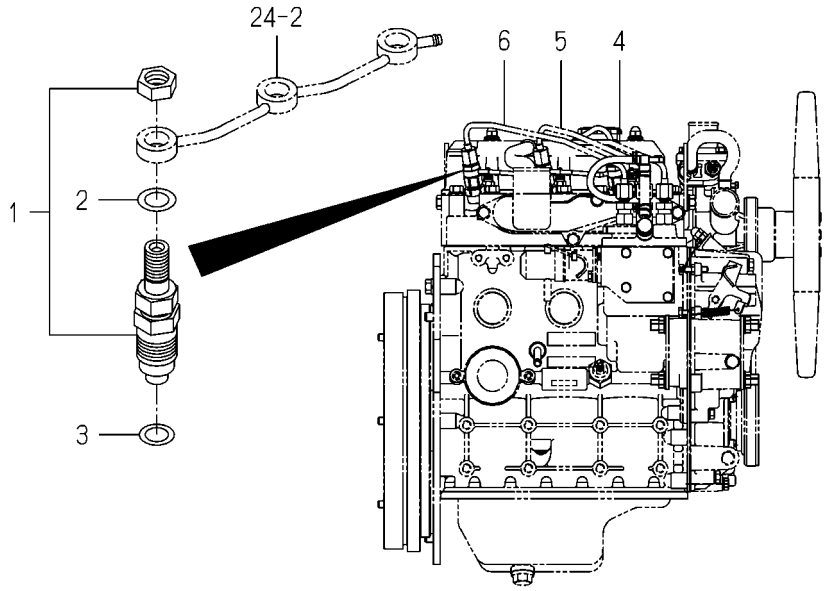

6004-501C-0100

KEY	PART CODE	DESCRIPTION	SPC	TYPE OF MODEL				ITC	COL	GRP	REMARKS
				E3112 B54	E3112 B55	E3112 B56	E3112 B57				
1	6215-300-036-10	INJECTIONNOZZLE ASSY	*	3	3	3	3				FIG 031
2	6215-359-001-00	WASHER	*	3	3	3	3				
3	6215-315-002-00	GASKET,NOZZLE	*	3	3	3	3				
4	6215-411-126-10	PIPE/INJECTION ASSY	*	1	1	1	1				
5	6215-411-127-00	PIPE/INJECTION ASSY	*	1	1	1	1				
6	6215-411-128-00	PIPE/INJECTION ASSY	*	1	1	1	1				

FIG. 22 INJECTION PUMP

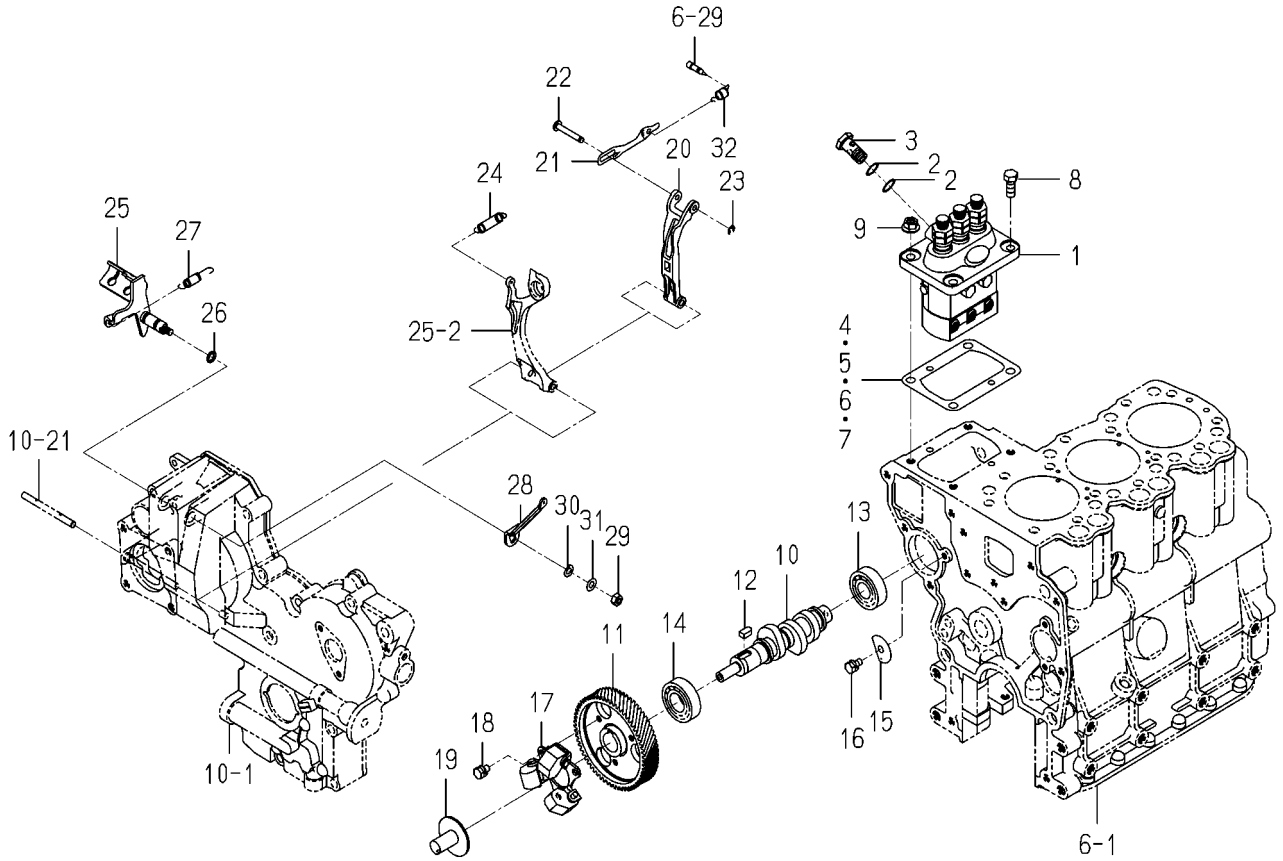

6004-510S-0100

KEY	PART CODE	DESCRIPTION	SPC	TYPE OF MODEL				ITC	COL	GRP	REMARKS
				E3112 B54	E3112 B55	E3112 B56	E3112 B57				
1	6215-600-103-30	INJECTIONPUMP ASSY	*	1	1						FIG 032
2	6215-619-010-00	WASHER/AIR BLEEDER	*	2	2						
3	6215-619-009-00	SCREW/HOLLOW	*	1	1						
4	6219-752-045-00	SHIM/INJECTIONPUMP	*	1	1						
5	6219-752-044-00	SHIM/INJECTIONPUMP	*	1	1						
6	6219-752-046-00	SHIM/INJECTIONPUMP	*	1	1						
7	6219-752-047-00	SHIM/INJECTIONPUMP	*	1	1						
8	V201-360-802-00	BOLT/M8X20/7T	*	2	2						
9	3817-401-001-00	NUT/M08	*	2	2						
10	6215-621-016-30	CAMSHAFT/INJECTION P	*	1	1						
11	6212-524-002-40	GEAR/INJECTIONPUMP	*	1	1						
12	6209-730-005-00	KEY/07X05X09	*	1	1						
13	V600-110-620-30	BEARING,RB/6203	*	1	1						
14	1729-202-001-00	BEARING/BALL	*	1	1						
15	6212-535-010-10	PLATE/THRUST/INJECTI	*	1	1						
16	V210-560-601-20	BOLT,S/M6X12/7T	*	1	1						
17	6215-520-001-00	FLYWEIGHT	*	1	1						
18	6209-030-043-00	BOLT/M6X10	*	3	3						
19	6215-526-004-00	THRUSTPIECE	*	1	1						
20	6215-541-001-10	ARM/FLOATING COMP	*	1	1						
21	6215-543-002-10	RINK/CONTROL	*	1	1						
22	6215-542-006-00	PIN,CONTROL	*	1	1						
23	V710-140-004-00	RING,SNAP/4 E	*	1	1						
24	6215-531-008-00	SPRING/GOVERNOR	*	1	1						
25	6215-541-024-50	LEVER/CONTROL COMP	*	1	1						
26	V720-101-900-80	O-RING/1A,P8	*	1	1						
27	6209-580-002-10	SPRING,RETURN	*	1	1						
28	6215-549-007-10	ARM/CONTROL	*	1	1						
29	V301-260-006-00	NUT/M6	*	1	1						
30	V411-260-006-00	WASHER,PL/M6	*	1	1						

FIG. 22 INJECTION PUMP

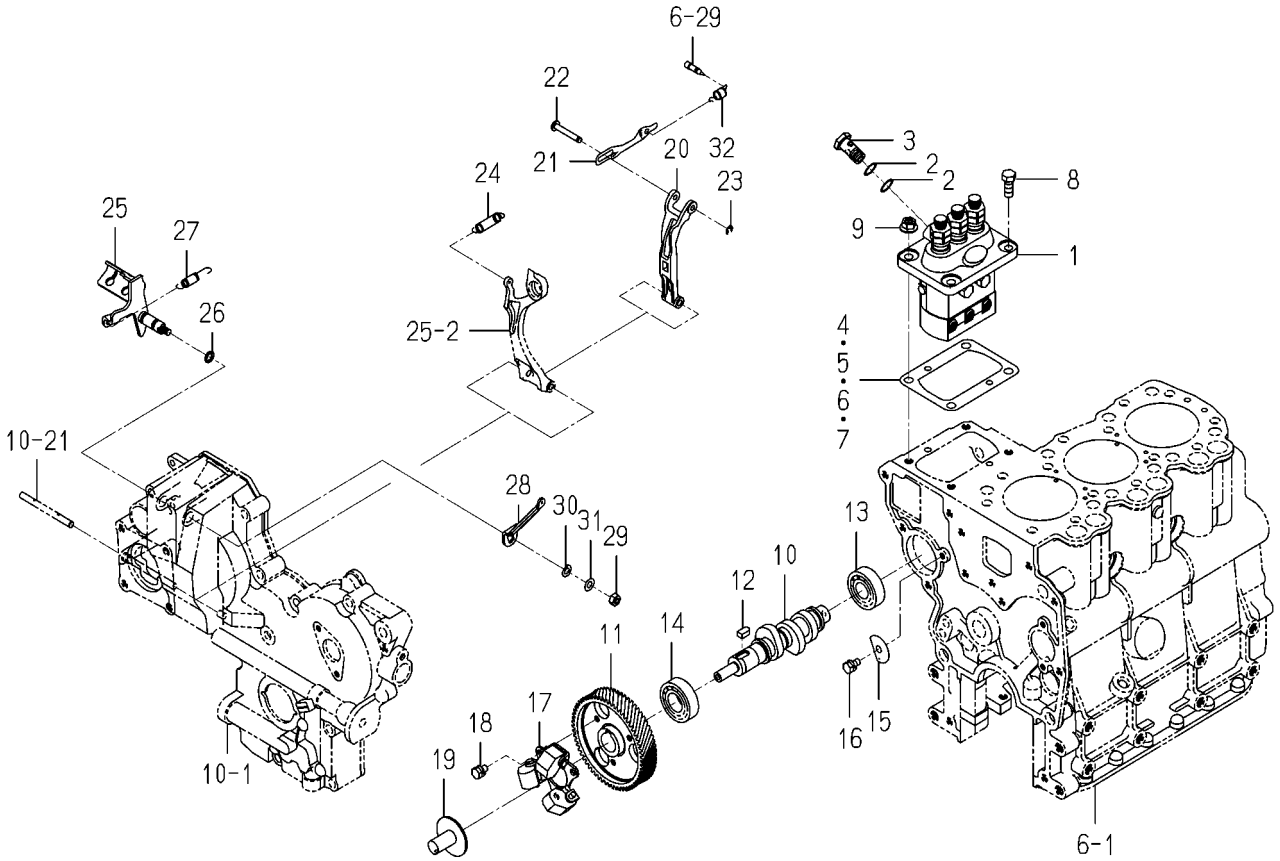

6004-510S-0100

KEY	PART CODE	DESCRIPTION	SPC	TYPE OF MODEL				ITC	COL	GRP	REMARKS
				E3112 B54	E3112 B55	E3112 B56	E3112 B57				
31	V401-160-006-00	WASHER,SP/M6	*	1	1						
32	6215-549-012-00	SPRING,STARTING	*	1	1						

FIG. 23 INJECTION PUMP

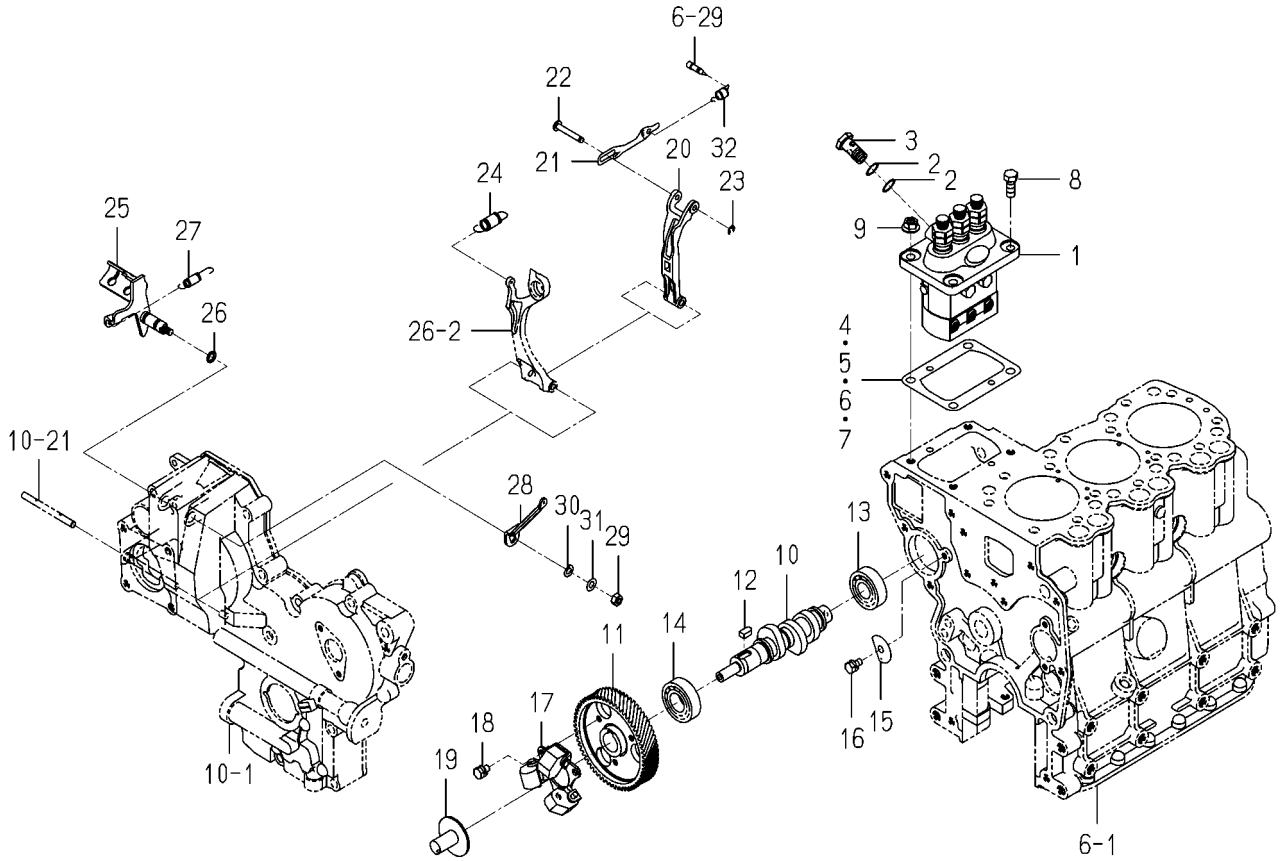

6004-511A-0100

KEY	PART CODE	DESCRIPTION	SPC	TYPE OF MODEL				ITC	COL	GRP	REMARKS
				E3112 B54	E3112 B55	E3112 B56	E3112 B57				
1	6215-600-103-30	INJECTIONPUMP ASSY	*			1	1				FIG 032
2	6215-619-010-00	WASHER/AIR BLEEDER	*			2	2				
3	6215-619-009-00	SCREW/HOLLOW	*			1	1				
4	6219-752-045-00	SHIM/INJECTIONPUMP	*			1	1				
5	6219-752-044-00	SHIM/INJECTIONPUMP	*			1	1				
6	6219-752-046-00	SHIM/INJECTIONPUMP	*			1	1				
7	6219-752-047-00	SHIM/INJECTIONPUMP	*			1	1				
8	V201-360-802-00	BOLT/M8X20/7T	*			2	2				
9	3817-401-001-00	NUT/M08	*			2	2				
10	6215-621-016-30	CAMSHAFT/INJECTION P	*			1	1				
11	6212-524-002-40	GEAR/INJECTIONPUMP	*			1	1				
12	6209-730-005-00	KEY/07X05X09	*			1	1				
13	V600-110-620-30	BEARING,RB/6203	*			1	1				
14	1729-202-001-00	BEARING/BALL	*			1	1				
15	6212-535-010-10	PLATE/THRUST/INJECTI	*			1	1				
16	V210-560-601-20	BOLT,S/M6X12/7T	*			1	1				
17	6215-520-001-00	FLYWEIGHT	*			1	1				
18	6209-030-043-00	BOLT/M6X10	*			3	3				
19	6215-526-004-00	THRUSTPIECE	*			1	1				
20	6215-541-001-10	ARM/FLOATING COMP	*			1	1				
21	6215-543-002-10	RINK/CONTROL	*			1	1				
22	6215-542-006-00	PIN,CONTROL	*			1	1				
23	V710-140-004-00	RING,SNAP/4 E	*			1	1				
24	6215-531-019-00	SPRING/GOVERNOR	*			1	1				
25	6215-541-024-50	LEVER/CONTROL COMP	*			1	1				
26	V720-101-900-80	O-RING/1A,P8	*			1	1				
27	6209-580-002-10	SPRING,RETURN	*			1	1				
28	6215-549-007-10	ARM/CONTROL	*			1	1				
29	V301-260-006-00	NUT/M6	*			1	1				
30	V411-260-006-00	WASHER,PL/M6	*			1	1				

FIG. 23 INJECTION PUMP

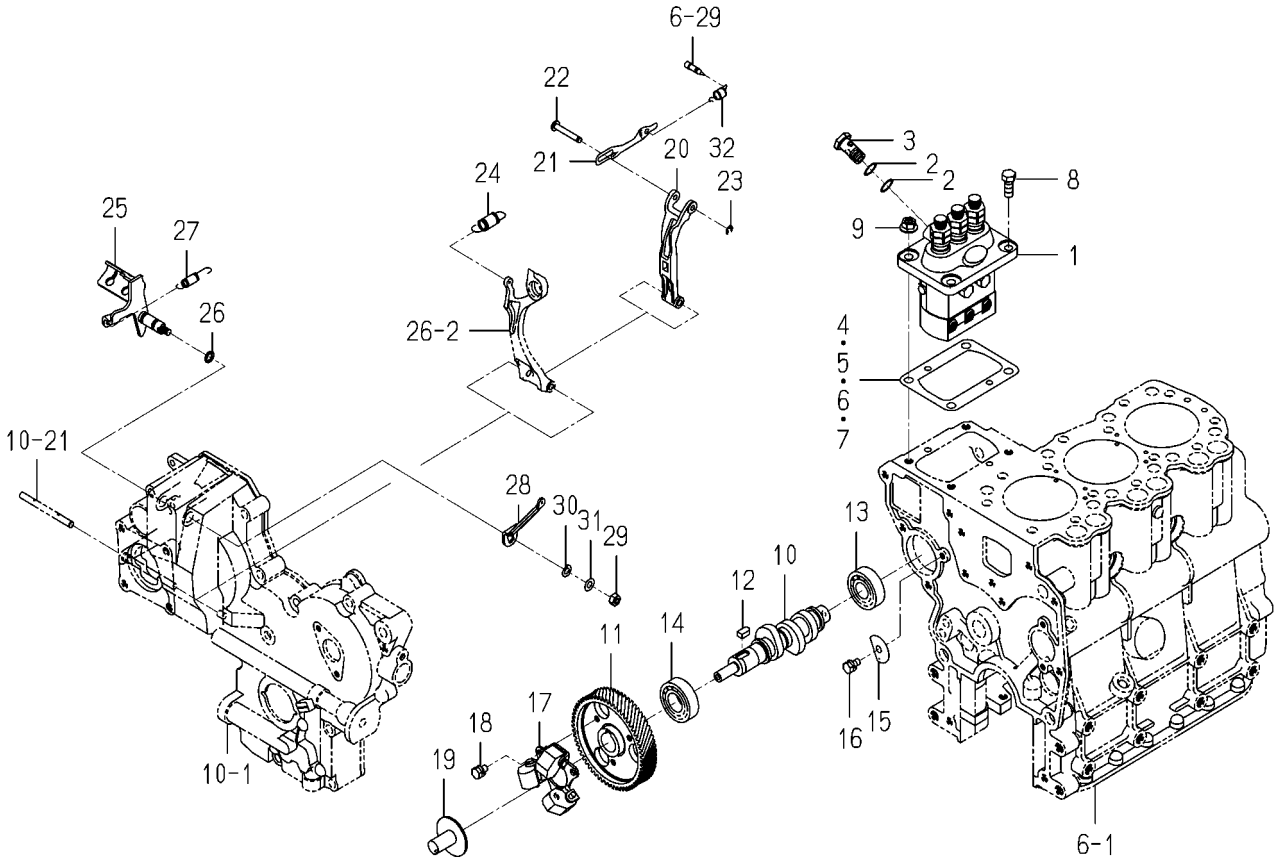

6004-511A-0100

KEY	PART CODE	DESCRIPTION	SPC	TYPE OF MODEL				ITC	COL	GRP	REMARKS
				E3112 B54	E3112 B55	E3112 B56	E3112 B57				
31	V401-160-006-00	WASHER,SP/M6	*			1	1				
32	6215-549-012-00	SPRING,STARTING	*			1	1				

FIG. 24 FUEL PIPE

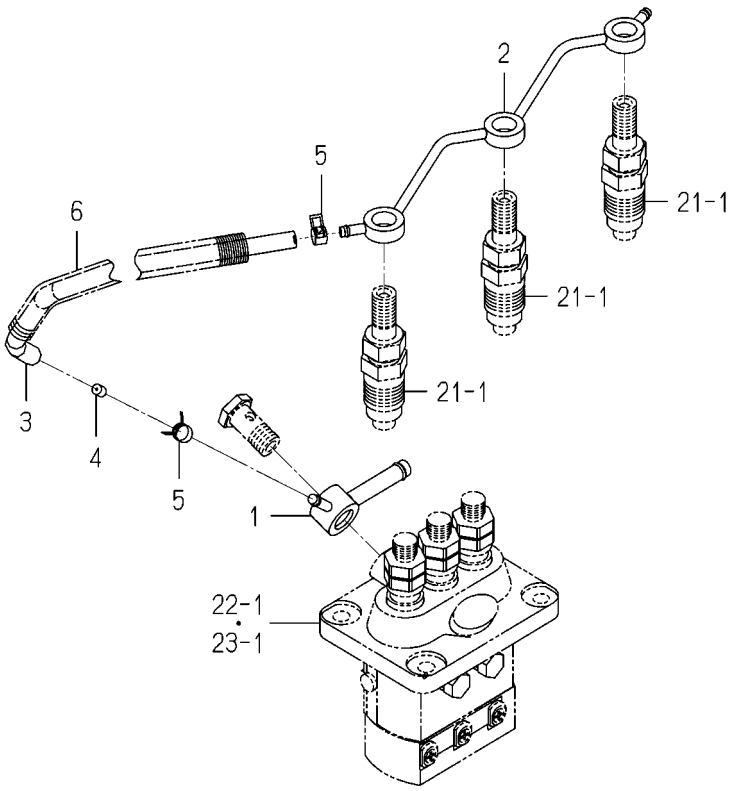

6004-550S-0100

KEY	PART CODE	DESCRIPTION	SPC	TYPE OF MODEL				ITC	COL	GRP	REMARKS
				E3112 B54	E3112 B55	E3112 B56	E3112 B57				
1	6215-412-018-10	CONNECTOR/FUEL	*	1	1	1	1				
2	6215-411-198-00	PIPE/FUEL	*	1	1	1	1				
3	6209-360-011-00	HOSE/RUBBER	*	1	1	1	1				
4	3640-586-004-00	RESISTANCE/1.0	*	1	1	1	1				
5	J062-076-082-00	CLIP/HOSE/7.6-8.2	*	2	2	2	2				
6	6209-360-143-00	CORRUGATEDTUBE	*	1	1	1	1				

FIG. 25 ADAPTER

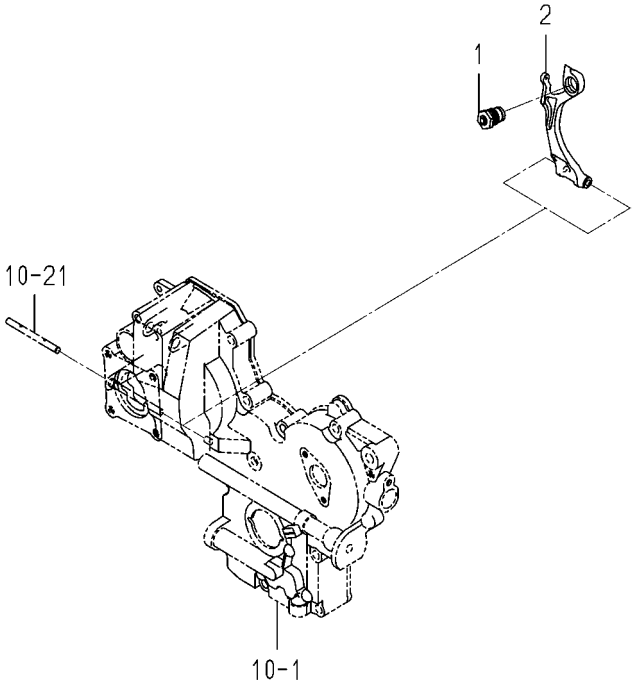

6005-560 -0100

KEY	PART CODE	DESCRIPTION	SPC	TYPE OF MODEL				ITC	COL	GRP	REMARKS
				E3112 B54	E3112 B55	E3112 B56	E3112 B57				
1	6215-548-029-20	ADAPTER/255X065 ASSY	*	1	1						
2	6215-541-016-40	ARM/TENSION	*	1	1						

FIG. 26 ADAPTER

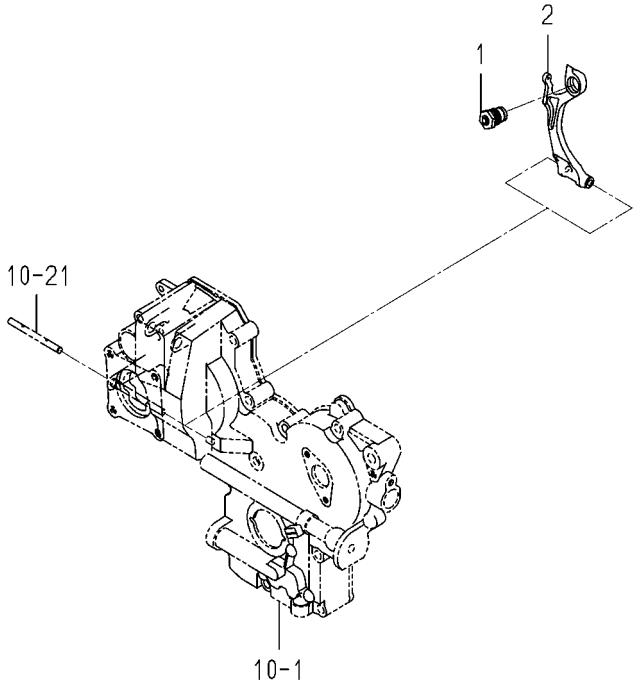

6004-560K-0100

KEY	PART CODE	DESCRIPTION	SPC	TYPE OF MODEL				ITC	COL	GRP	REMARKS
				E3112 B54	E3112 B55	E3112 B56	E3112 B57				
1	6215-548-026-30	ADAPTER/220X100 ASSY	*			1	1				
2	6215-541-016-40	ARM/TENSION	*			1	1				

FIG. 27 ELECTRIC (1)

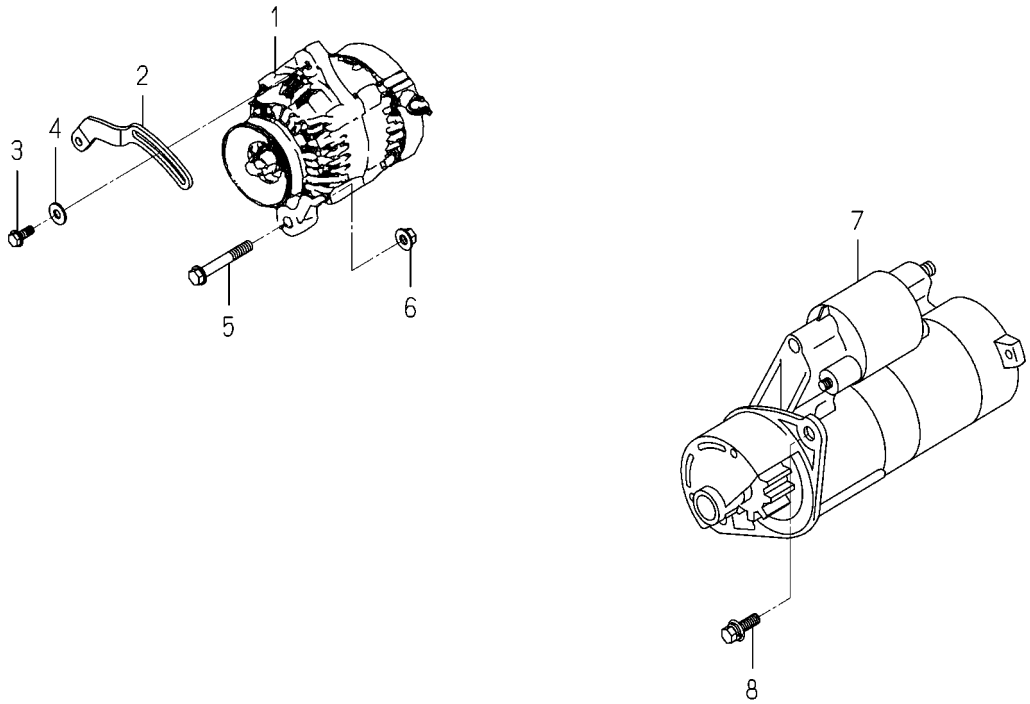

6004-801K-0100,6004-801K-0200

KEY	PART CODE	DESCRIPTION	SPC	TYPE OF MODEL				ITC	COL	GRP	REMARKS
				E3112 B54	E3112 B55	E3112 B56	E3112 B57				
1	6281-200-005-00	GENERATOR ASSY	*	1	1	1	1				FIG 034
2	6213-674-006-20	PLATE/ADJUST	*	1	1	1	1				
3	V231-360-802-00	FLANGEBOLT/M8X20	*	1	1	1	1				
4	1373-121-001-00	WASHER/9X22X2	*	1	1	1	1				
5	V233-361-007-00	FLANGEBOLT/M10X70	*	1	1	1	1				
6	6209-440-007-00	NUT/FLANGE/M10	*	1	1	1	1				
7	6281-100-014-00	STARTER ASSY	*	1	1	1	1				FIG 033
8	6209-030-085-00	BOLT/WS	*	2	2	2	2				

FIG. 28 ELECTRIC (2)

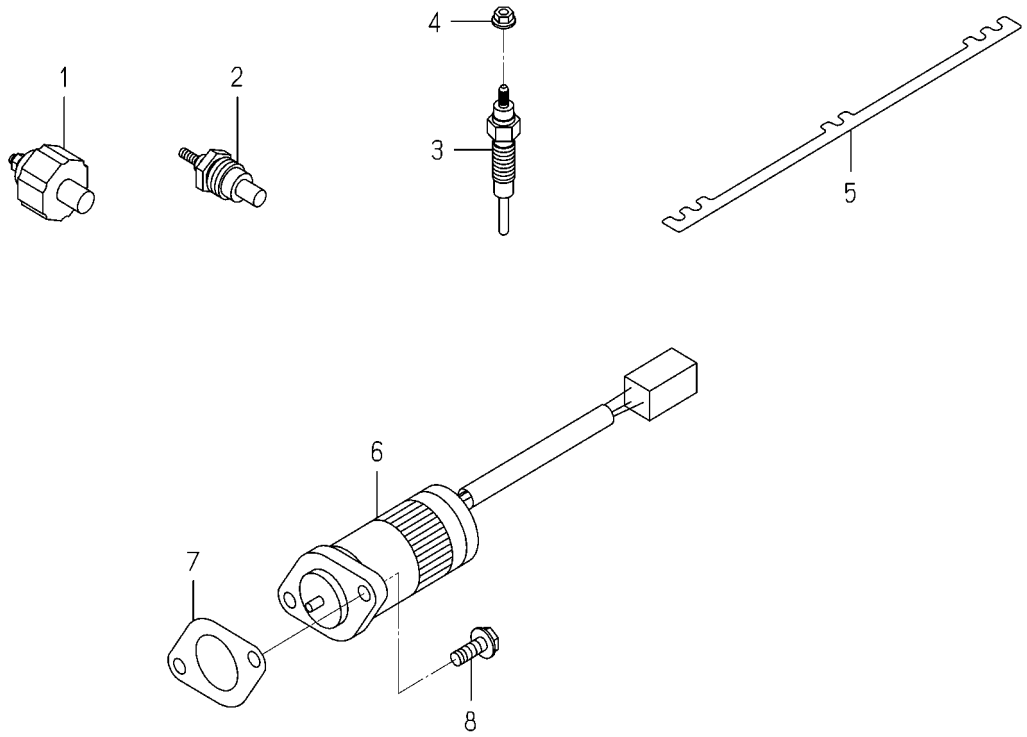

6004-821G-0100,6004-821G-0200

KEY	PART CODE	DESCRIPTION	SPC	TYPE OF MODEL				ITC	COL	GRP	REMARKS
				E3112 B54	E3112 B55	E3112 B56	E3112 B57				
1	6281-971-003-00	SWITCH/OILPRESSURE	*	1	1	1	1				
2	6282-450-006-00	THERMOMETER	*	1	1	1	1				
3	6281-410-023-10	GLOWPLUG	*	3	3	3	3				
4	6209-440-005-00	NUT/FLANGE	*	3	3	3	3				
5	6219-732-017-00	CONNECTOR/GLOWPLUG	*	1	1	1	1				
6	6281-910-013-00	SOLENOID	*	1	1	1	1				
7	6209-630-002-10	GASKET	*	1	1	1	1				
8	V230-360-601-60	FLANGEBOLT/M6X16	*	2	2	2	2				

FIG. 29 REPAIR PARTS(OPTION)

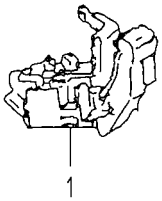

6005-998D-0100

KEY	PART CODE	DESCRIPTION	SPCT	TYPE OF MODEL				ITC	COL	GRP	REMARKS
				E3112 B54	E3112 B55	E3112 B56	E3112 B57				
1	6281-271-003-00	REGULATOR ASSY	T	1	1	1	1				

FIG. 30 REPAIR PARTS(OPTION)

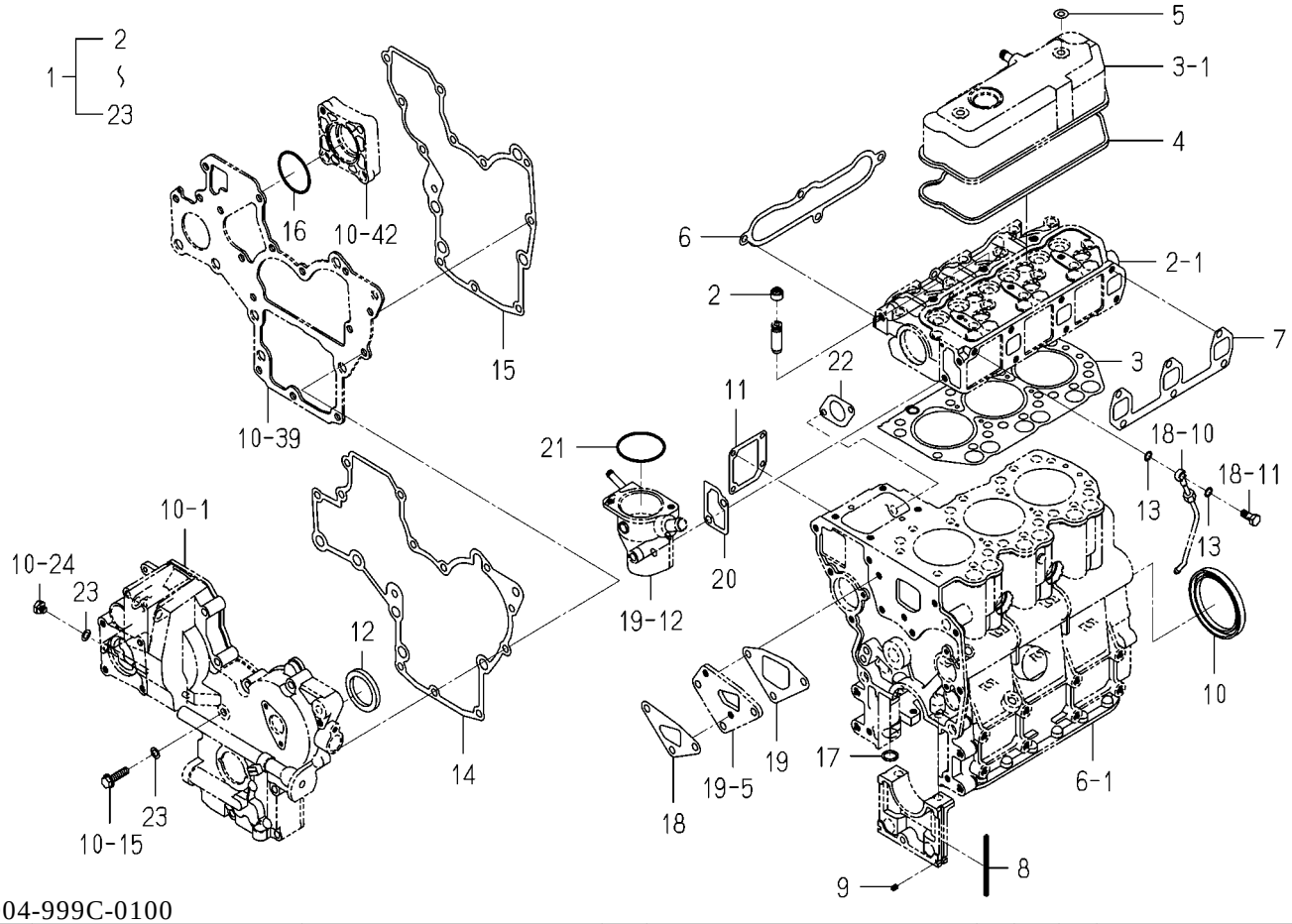

6004-999C-0100

KEY	PART CODE	DESCRIPTION	SPC	TYPE OF MODEL				ITC	COL	GRP	REMARKS
				E3112 B54	E3112 B55	E3112 B56	E3112 B57				
1	6287-810-015-30	REPAIR/ENGINE SET	T	1	1	1	1				
2	6212-569-002-00	SEAL,OIL	T	6	6	6	6				
3	6211-141-029-20	GASKET/CYLINDERHEAD	T	1	1	1	1				
4	6211-173-003-00	SEAL,CYL.HEAD COVER	T	1	1	1	1				
5	6209-572-003-00	GASKET	T	2	2	2	2				
6	6214-115-001-20	GASKET,INLET MANIFOL	T	1	1	1	1				
7	6214-145-001-30	GASKET,EXH.MANIFOLD	T	1	1	1	1				
8	6211-258-001-00	SEAL,BEARING CAP	T	4	4	4	4				
9	6211-258-002-00	SEAL,BEARING CAP/7	T	2	2	2	2				
10	6209-625-001-00	SEAL,OIL	T	1	1	1	1				
11	6211-292-001-20	GASKET/COVER	T	1	1	1	1				
12	6209-625-002-00	SEAL,OIL	T	1	1	1	1				
13	6209-920-002-00	PACKING	T	2	2	2	2				
14	6211-312-003-20	GASKET/GEARCASE	T	1	1	1	1				
15	6211-312-004-20	GASKET/PLATE	T	1	1	1	1				
16	V723-102-005-00	O-RING/1A,S50	T	1	1	1	1				
17	V720-102-401-50	O-RING/1A,P15	T	1	1	1	1				
18	6213-614-018-00	GASKET/WATERPUMP	T	1	1	1	1				
19	6213-614-019-00	GASKET/SPACER	T	1	1	1	1				
20	6213-743-002-10	GASKET/HOUSING	T	1	1	1	1				
21	V723-102-005-50	O-RING/1A,S55	T	1	1	1	1				
22	6209-630-002-10	GASKET	T	1	1	1	1				
23	6209-500-003-00	WASHER/08X14X01	T	2	2	2	2				

FIG. 31 COMPONENT PARTS FOR 6215-300-036-10 ON Fig.21

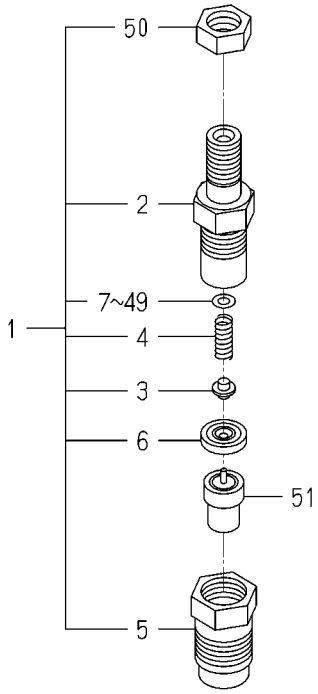

6215-300-036-1B

KEY	PART CODE	DESCRIPTION	SPC	TYPE OF MODEL				ITC	COL	GRP	REMARKS
				E3112 B54	E3112 B55	E3112 B56	E3112 B57				
1	6215-330-024-10	HOLDER/NOZZLE ASSY	*	3	3	3	3				
2	6215-331-008-00	BODY/NOZZLE HOLDER	*	3	3	3	3				
3	6215-342-001-00	PIN,NOZZLE HOLDER	*	3	3	3	3				
4	6215-343-001-00	SPRING/NOZZLEHOLDER	*	3	3	3	3				
5	6215-332-013-00	NUT/NOZZLERETAINING	*	3	3	3	3				
6	6215-339-001-00	PIECE,DISTANCE	*	3	3	3	3				
7	6215-345-001-00	WASHER/0.9	*	3	3	3	3				
8	6215-345-002-00	WASHER/0.925	*	3	3	3	3				
9	6215-345-003-00	WASHER/0.95	*	3	3	3	3				
10	6215-345-004-00	WASHER/0.975	*	3	3	3	3				
11	6215-345-005-00	WASHER/1.0	*	3	3	3	3				
12	6215-345-006-00	WASHER/1.025	*	3	3	3	3				
13	6215-345-007-00	WASHER/1.05	*	3	3	3	3				
14	6215-345-008-00	WASHER/1.075	*	3	3	3	3				
15	6215-345-009-00	WASHER/1.1	*	3	3	3	3				
16	6215-345-010-00	WASHER/1.125	*	3	3	3	3				
17	6215-345-011-00	WASHER/1.15	*	3	3	3	3				
18	6215-345-012-00	WASHER/1.175	*	3	3	3	3				
19	6215-345-013-00	WASHER/1.2	*	3	3	3	3				
20	6215-345-014-00	WASHER/1.225	*	3	3	3	3				
21	6215-345-015-00	WASHER/1.25	*	3	3	3	3				
22	6215-345-016-00	WASHER/1.275	*	3	3	3	3				
23	6215-345-017-00	WASHER/1.3	*	3	3	3	3				
24	6215-345-018-00	WASHER/1.325	*	3	3	3	3				
25	6215-345-019-00	WASHER/1.35	*	3	3	3	3				
26	6215-345-020-00	WASHER/1.375	*	3	3	3	3				
27	6215-345-021-00	WASHER/1.4	*	3	3	3	3				
28	6215-345-022-00	WASHER/1.425	*	3	3	3	3				
29	6215-345-023-00	WASHER/1.45	*	3	3	3	3				
30	6215-345-024-00	WASHER/1.475	*	3	3	3	3				

FIG. 31 COMPONENT PARTS FOR 6215-300-036-10 ON Fig.21

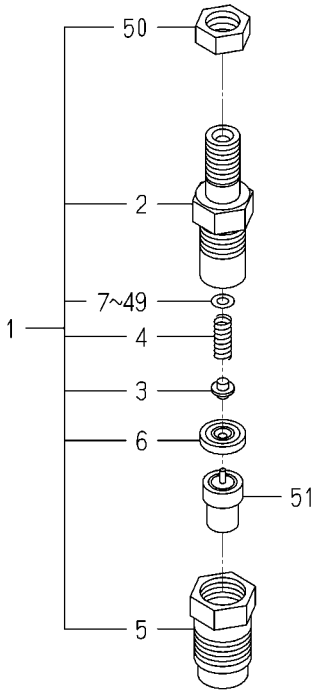

6215-300-036-1B

KEY	PART CODE	DESCRIPTION	SPC	TYPE OF MODEL				ITC	COL	GRP	REMARKS
				E3112 B54	E3112 B55	E3112 B56	E3112 B57				
31	6215-345-025-00	WASHER/1.5	*	3	3	3	3				
32	6215-345-026-00	WASHER/1.525	*	3	3	3	3				
33	6215-345-027-00	WASHER/1.55	*	3	3	3	3				
34	6215-345-028-00	WASHER/1.575	*	3	3	3	3				
35	6215-345-029-00	WASHER/1.6	*	3	3	3	3				
36	6215-345-030-00	WASHER/1.625	*	3	3	3	3				
37	6215-345-031-00	WASHER/1.65	*	3	3	3	3				
38	6215-345-032-00	WASHER/1.675	*	3	3	3	3				
39	6215-345-033-00	WASHER/1.7	*	3	3	3	3				
40	6215-345-034-00	WASHER/1.725	*	3	3	3	3				
41	6215-345-035-00	WASHER/1.75	*	3	3	3	3				
42	6215-345-036-00	WASHER/1.775	*	3	3	3	3				
43	6215-345-037-00	WASHER/1.8	*	3	3	3	3				
44	6215-345-038-00	WASHER/1.825	*	3	3	3	3				
45	6215-345-039-00	WASHER/1.85	*	3	3	3	3				
46	6215-345-040-00	WASHER/1.875	*	3	3	3	3				
47	6215-345-041-00	WASHER/1.9	*	3	3	3	3				
48	6215-345-042-00	WASHER/1.925	*	3	3	3	3				
49	6215-345-043-00	WASHER/1.95	*	3	3	3	3				
50	6215-359-002-00	NUT	*	3	3	3	3				
51	6215-311-027-00	NOZZLE ASSY	*	3	3	3	3				

FIG. 32 COMPONENT PARTS FOR 6215-600-103-30 ON Fig.22

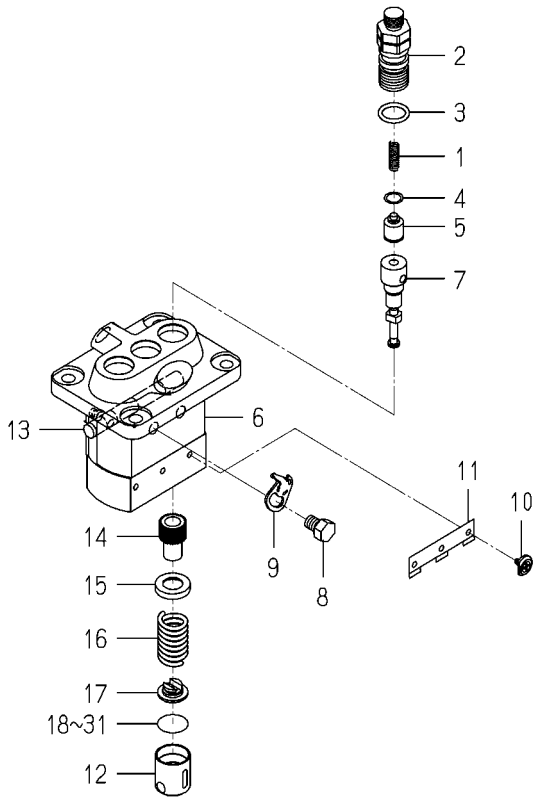

6215-600-103-3J

KEY	PART CODE	DESCRIPTION	SPC	TYPE OF MODEL				ITC	COL	GRP	REMARKS
				E3112 B54	E3112 B55	E3112 B56	E3112 B57				
1	6215-643-006-00	SPRING/DELIVERYVALVE	*	3	3	3	3				
2	6215-644-007-00	HOLDER/DELIVERYVALVE	*	3	3	3	3				
3	6215-649-019-00	ORING	*	3	3	3	3				
4	6215-649-002-00	GASKET/DELIVERYVALVE	*	3	3	3	3				
5	6215-641-006-00	VALVE ASSY	*	3	3	3	3				
6	6215-611-001-00	HOUSING ASSY	*	1	1	1	1				
7	6215-631-019-00	ELEMENT ASSY	*	3	3	3	3				
8	6215-619-022-00	BOLT/WASHERHEAD	*	2	2	2	2				
9	6215-612-001-00	PLATE/ADJUSTING	*	2	2	2	2				
10	6215-629-001-00	PIN/INJECTIONPUMP	*	3	3	3	3				
11	6215-629-002-00	PLATE	*	1	1	1	1				
12	6215-622-001-00	TAPPET/INJECTIO ASSY	*	3	3	3	3				
13	6215-637-001-00	RACK/CONTROL ASSY	*	1	1	1	1				
14	6215-635-001-00	SLEEVE/PLUNGER	*	3	3	3	3				
15	6215-639-004-00	SEAT/SPRING/UPPER	*	3	3	3	3				
16	6215-634-001-00	SPRING/PUMPPLUNGER	*	3	3	3	3				
17	6215-639-005-00	SEAT/SPRING/LOWER	*	3	3	3	3				
18	6215-629-003-00	PLATE/TAPPET/AD 0.6	*	1	1	1	1				
19	6215-629-004-00	PLATE/TAPPET/AD 0.7	*	1	1	1	1				
20	6215-629-005-00	PLATE/TAPPET/AD 0.8	*	1	1	1	1				
21	6215-629-006-00	PLATE/TAPPET/AD 0.9	*	1	1	1	1				
22	6215-629-007-00	PLATE/TAPPET/AD 1.0	*	1	1	1	1				
23	6215-629-008-00	PLATE/TAPPET/AD 0.2	*	1	1	1	1				
24	6215-629-009-00	PLATE/TAPPET/AD 0.3	*	1	1	1	1				
25	6215-629-010-00	PLATE/TAPPET/AD 0.4	*	1	1	1	1				
26	6215-629-011-00	PLATE/TAPPET/AD 0.5	*	3	3	3	3				
27	6215-629-012-00	PLATE/TAPPET/AD 0.25	*	1	1	1	1				
28	6215-629-013-00	PLATE/TAPPET/AD 0.35	*	1	1	1	1				
29	6215-629-014-00	PLATE/TAPPET/AD 0.45	*	1	1	1	1				
30	6215-629-015-00	PLATE/TAPPET/AD 0.55	*	1	1	1	1				

FIG. 32 COMPONENT PARTS FOR 6215-600-103-30 ON Fig.22

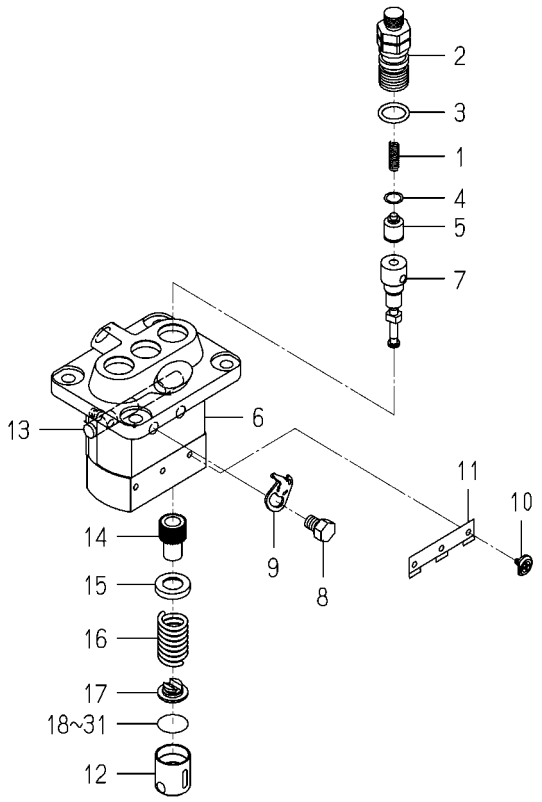

6215-600-103-3J

KEY	PART CODE	DESCRIPTION	SPC	TYPE OF MODEL E3112 B54	E3112 B55	E3112 B56	E3112 B57	ITC	COL	GRP	REMARKS
31	6215-629-016-00	PLATE/TAPPET/AD 0.65	*	1	1	1	1				

FIG. 33 COMPONENT PARTS FOR 6281-100-014-00 ON Fig.27

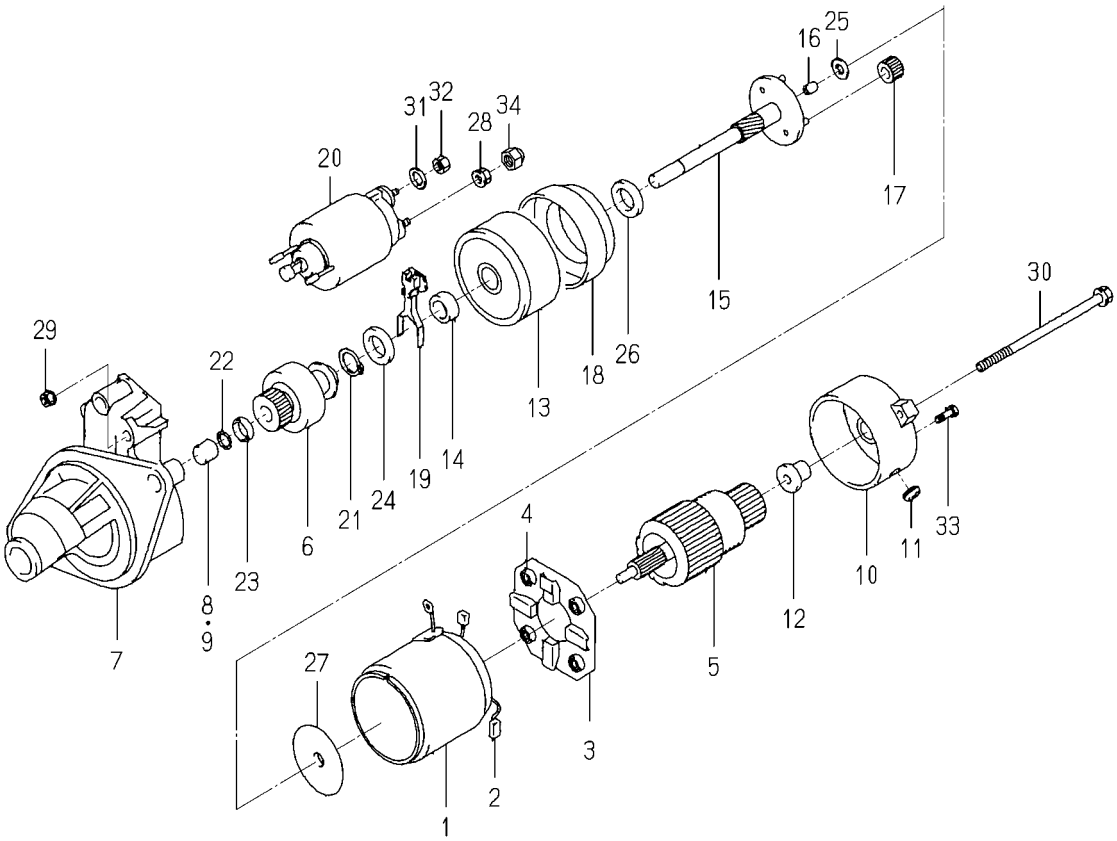

6281-100-014-0A

KEY	PART CODE	DESCRIPTION	SPC	TYPE OF MODEL				ITC	COL	GRP	REMARKS
				E3112 B54	E3112 B55	E3112 B56	E3112 B57				
1	6281-111-009-00	YOKE/STARTER ASSY	*	1	1	1	1				
2	6281-119-009-00	BRUSH/STARTER	*	2	2	2	2				
3	6281-118-007-00	HOLDER/STARTER ASSY	*	1	1	1	1				
4	6281-117-003-00	SPRING/STARTERBRUSH	*	4	4	4	4				
5	6281-121-010-00	ARMATURE/STARTE ASSY	*	1	1	1	1				
6	6281-124-011-00	CLUTCH/STARTER ASSY	*	1	1	1	1				
7	6281-129-064-00	HOUSING/STARTER ASSY	*	1	1	1	1				
8	6281-129-080-00	BEARING/NEEDLE	*	1	1	1	1				
9	6281-129-058-00	BEARING/NEEDLE	*	1	1	1	1				
10	6281-115-017-00	FRAME/COMMUTATOR END	*	1	1	1	1				
11	6281-115-018-00	COVER	*	1	1	1	1				
12	6281-129-065-00	BEARING/OILLESS	*	1	1	1	1				
13	6281-129-066-00	BEARING/WITH SHOCKAB	*	1	1	1	1				
14	6281-129-067-00	BEARING/OILLESS	*	1	1	1	1				
15	6281-129-068-00	SHAFT/STARTER PLANET	*	1	1	1	1				
16	6281-129-069-00	BEARING/OILLESS	*	1	1	1	1				
17	6281-129-070-00	GEAR/STARTER PLANETA	*	3	3	3	3				
18	6281-129-071-00	GEAR/STARTERINTERNAL	*	1	1	1	1				
19	6281-127-003-00	LEVER/PINIONDRIVE	*	1	1	1	1				
20	6281-151-014-00	SWITCH/MAGNETIC ASSY	*	1	1	1	1				
21	6281-129-072-00	RING/SNAP	*	1	1	1	1				
22	6281-129-073-00	RING/SNAP	*	1	1	1	1				
23	6281-129-074-00	NUT/PINIONSTOP	*	1	1	1	1				
24	6281-129-075-00	WASHER/SK	*	1	1	1	1				
25	6281-129-076-00	WASHER/SK	*	1	1	1	1				
26	6281-129-077-00	WASHER/SK	*	1	1	1	1				
27	6281-129-078-00	PLATE	*	1	1	1	1				
28	6281-129-030-00	NUT	*	1	1	1	1				
29	6281-129-029-00	NUT	*	2	2	2	2				
30	6281-129-043-00	BOLT/THROUGH	*	2	2	2	2				

FIG. 33 COMPONENT PARTS FOR 6281-100-014-00 ON Fig.27

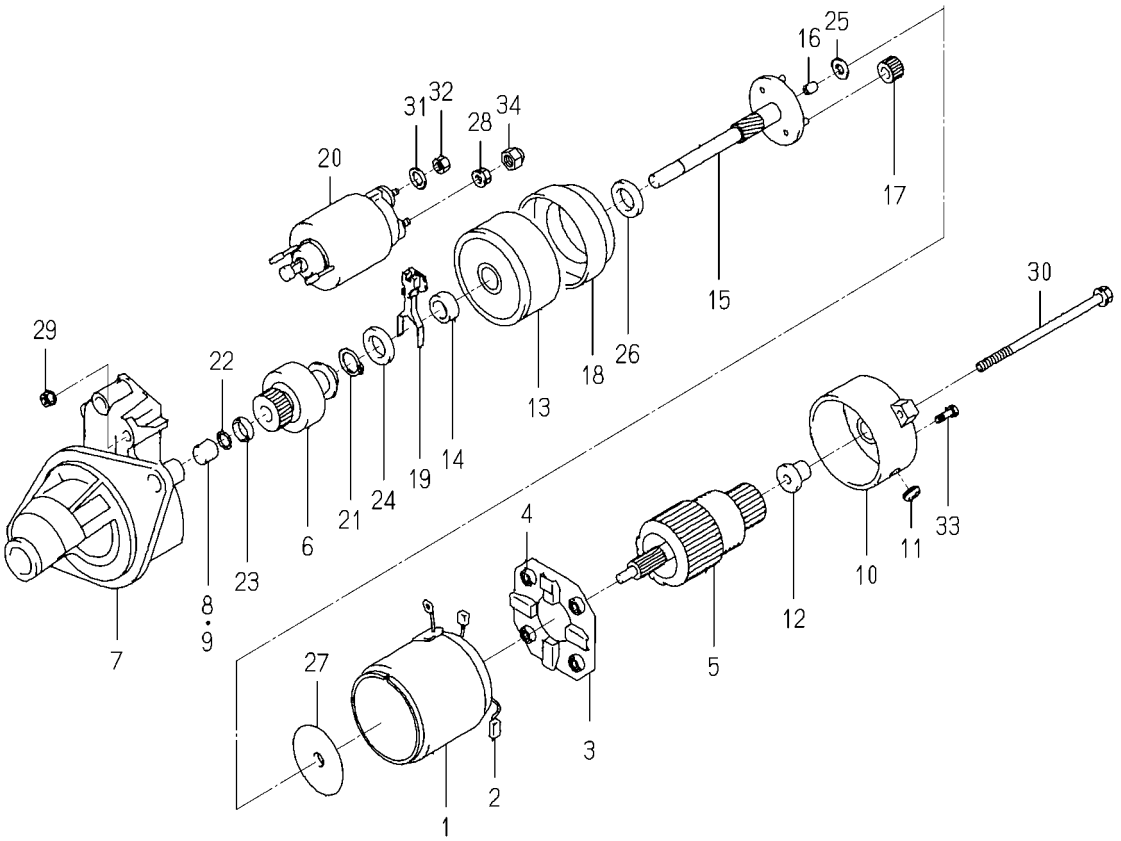

6281-100-014-0A

KEY	PART CODE	DESCRIPTION	SPC	TYPE OF MODEL				ITC	COL	GRP	REMARKS
				E3112 B54	E3112 B55	E3112 B56	E3112 B57				
31	6909-150-508-00	WASHER	*	1	1	1	1				
32	6909-110-408-00	NUT/M8	*	1	1	1	1				
33	6281-129-062-00	SCREW	*	2	2	2	2				
34	6281-129-079-00	NUT	*	1	1	1	1				

FIG. 34 COMPONENT PARTS FOR 6281-200-005-00 ON Fig.27

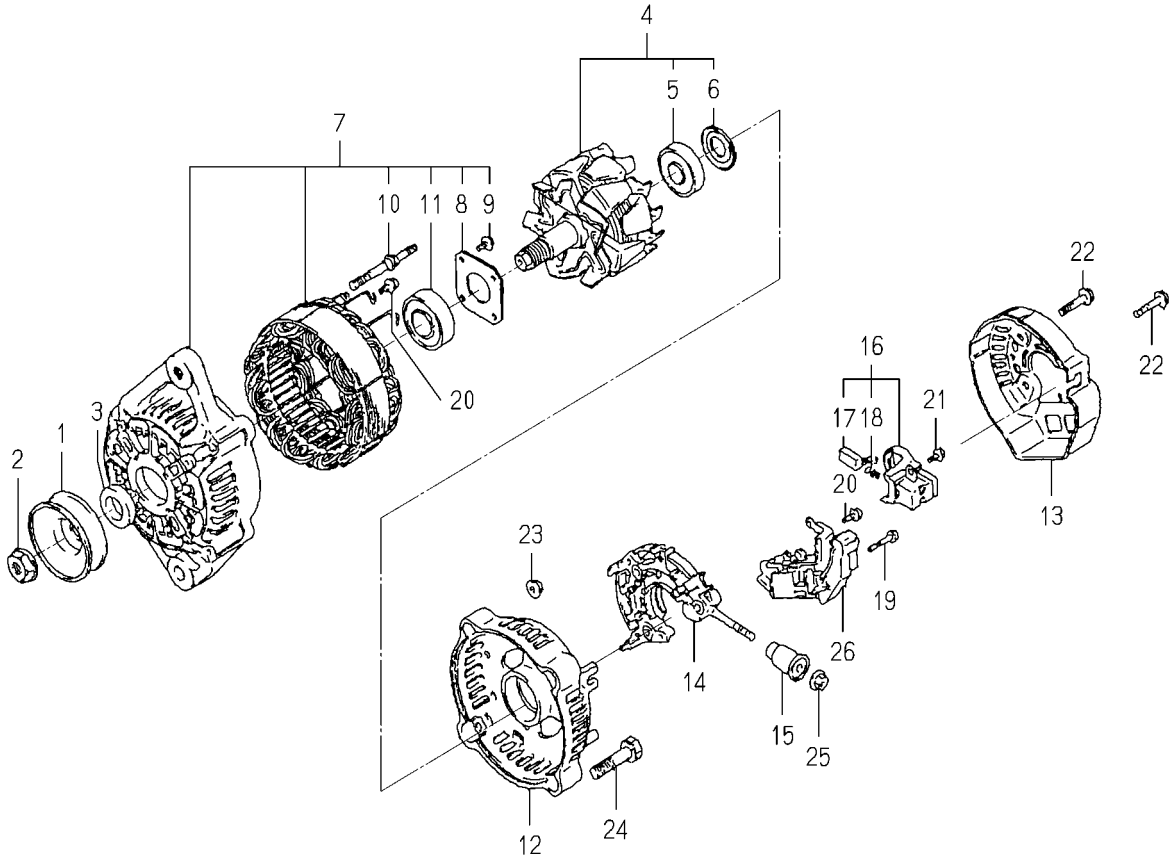

6281-200-005-0C

KEY	PART CODE	DESCRIPTION	SPC	TYPE OF MODEL				ITC	COL	GRP	REMARKS
				E3112 B54	E3112 B55	E3112 B56	E3112 B57				
1	6281-222-004-00	PULLEY	*	1	1	1	1				
2	6281-229-002-00	NUT	*	1	1	1	1				
3	6281-229-003-00	COLLOR	*	1	1	1	1				
4	6281-221-007-00	ROTOR ASSY	*	1	1	1	1				
5	6281-229-004-00	COVER,BEARING	*	1	1	1	1				
6	6281-229-032-00	BEARING/BALL	*	1	1	1	1				
7	6281-213-018-00	FRAME/DRIVEEND ASSY	*	1	1	1	1				
8	6281-229-006-00	PLATE	*	1	1	1	1				
9	6281-229-007-00	BOLT	*	4	4	4	4				
10	6281-229-008-00	BOLT	*	2	2	2	2				
11	6281-229-033-00	BEARING/BALL	*	1	1	1	1				
12	6281-214-003-00	FRAME	*	1	1	1	1				
13	6281-214-004-00	COVER	*	1	1	1	1				
14	6281-229-029-00	HOLDER ASSY	*	1	1	1	1				
15	6281-229-011-00	BUSH	*	1	1	1	1				
16	6281-217-002-00	HOLDER/BRUSH ASSY	*	1	1	1	1				
17	6281-215-001-00	BRUSH	*	2	2	2	2				
18	6281-216-001-00	SPRING	*	2	2	2	2				
19	6281-229-012-00	BOLT	*	2	2	2	2				
20	6281-229-013-00	BOLT	*	6	6	6	6				
21	6281-229-014-00	BOLT	*	1	1	1	1				
22	6281-229-015-00	BOLT	*	3	3	3	3				
23	6281-229-016-00	NUT	*	2	2	2	2				
24	6281-229-017-00	BOLT	*	2	2	2	2				
25	6281-229-018-00	NUT	*	1	1	1	1				
26	6281-271-008-00	REGULATOR ASSY	*	1	1	1	1				

E N G I N E

E3CDB85...TM3267H

E3CDB86···TM3267F

6005-097-235-00

FIG. 1 SHORT BLOCK ENGIASSY

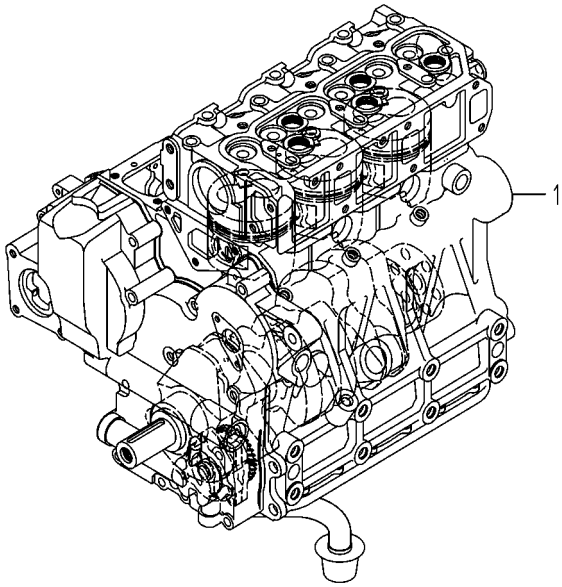

6005-018F-0100

KEY	PART CODE	DESCRIPTION	SPC	TYPE OF MODEL E3CD B85	TYPE OF MODEL E3CD B86	ITC	COL	GRP	REMARKS
1	6005-010-233-00	SHORTBLOCKENGIN ASSY	T	1	1				

FIG. 2 CYLINDER HEAD

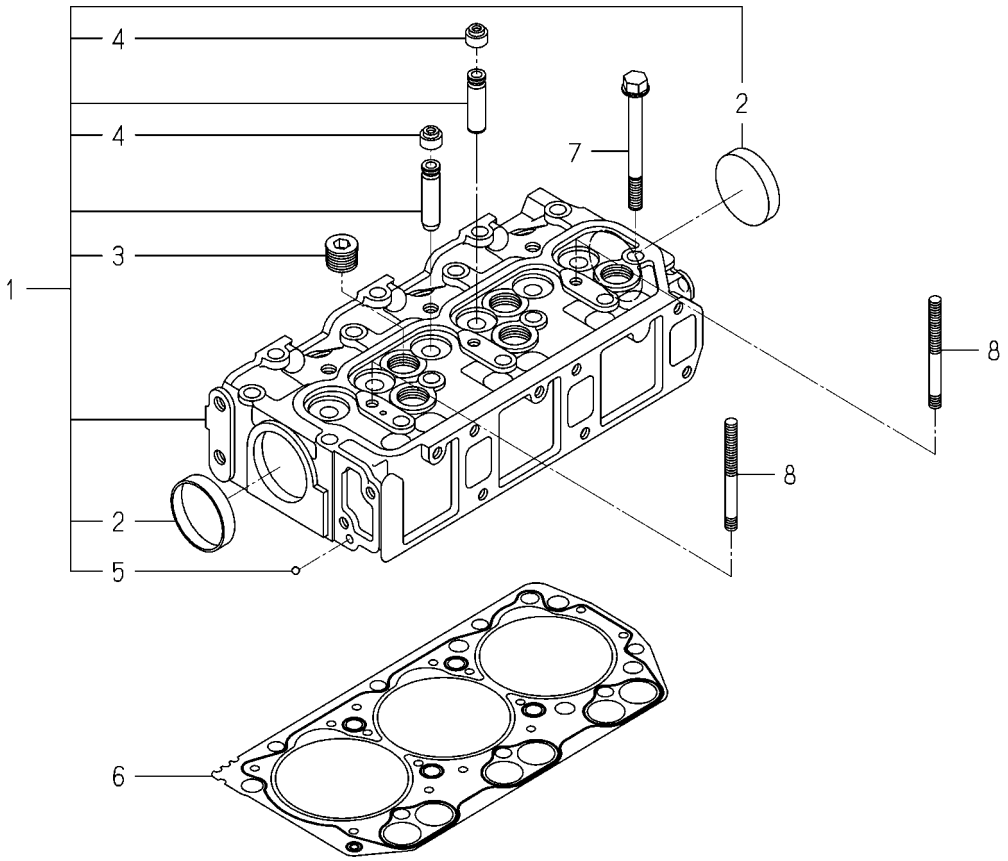

6005-101S-0100,6005-101S-0200

KEY	PART CODE	DESCRIPTION	SPC	TYPE OF MODEL E3CD B85	TYPE OF MODEL E3CD B86	ITC	COL	GRP	REMARKS
1	6211-110-084-40	CYLINDERHEAD ASSY	*	1	1				
2	6209-610-003-00	CUP/SEALING/50	*	2	2				
3	6209-605-004-10	PLUG/PT1/2	*	5	5				
4	6212-569-002-00	SEAL,OIL	*	6	6				
5	V682-200-000-60	BALL,STEEL	*	1	1				
6	6211-141-057-10	GASKET/CYLINDERHEAD	*	1	1				
7	6209-000-005-00	BOLT	*	14	14				
8	6209-300-014-00	STUD	*	2	2				

FIG. 3 CYLINDER HEAD COVER

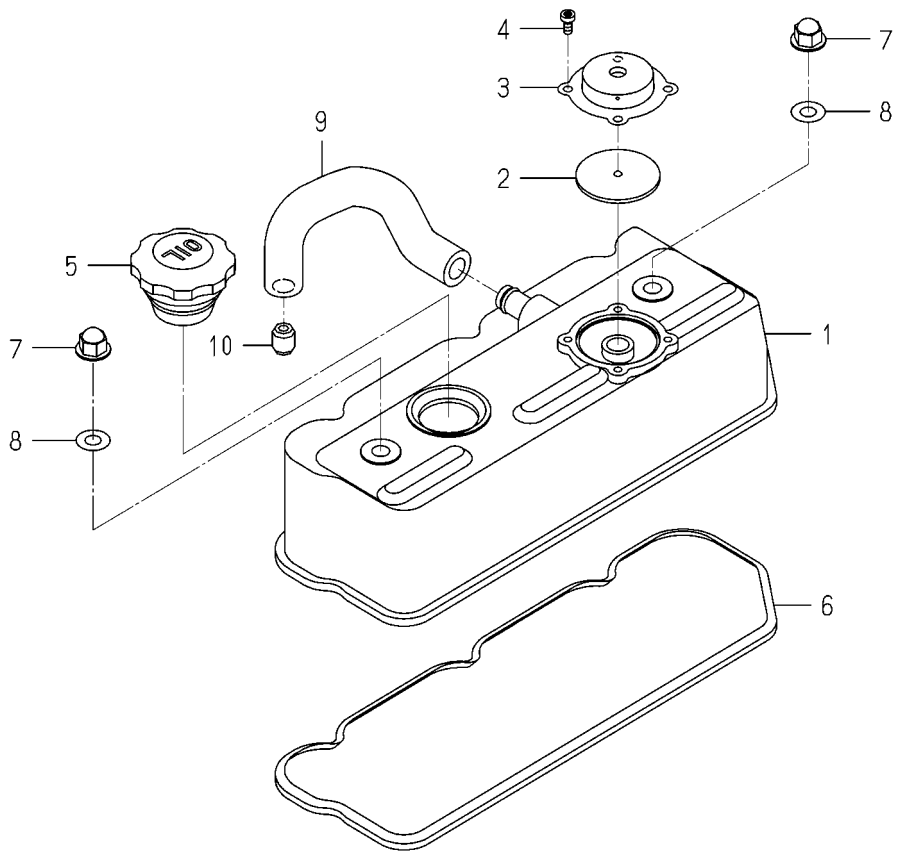

6008-110H-0100

KEY	PART CODE	DESCRIPTION	SPC	TYPE OF MODEL E3CD B85	TYPE OF MODEL E3CD B86	ITC	COL	GRP	REMARKS
1	6211-170-007-30	COVER/CYLINDER HEAD	*	1	1				
2	6211-179-011-20	RUBBERFLANGE	*	1	1				
3	6211-291-010-00	COVER/BLOWBY	*	1	1				
4	V195-164-008-30	SCREW/TAPPING	*	4	4				
5	6211-751-001-10	CAP,OIL FILLER	*	1	1				
6	6211-173-005-00	SEAL/CYL HEAD/UNDER	*	1	1				
7	6209-490-002-10	NUT/CAP	*	2	2				
8	6209-572-003-00	GASKET	*	2	2				
9	6209-360-109-10	HOSE/RUBBER	*	1	1				
10	6213-721-023-00	ORIFICE	*	1	1				

FIG. 4 INLET MANIFOLD

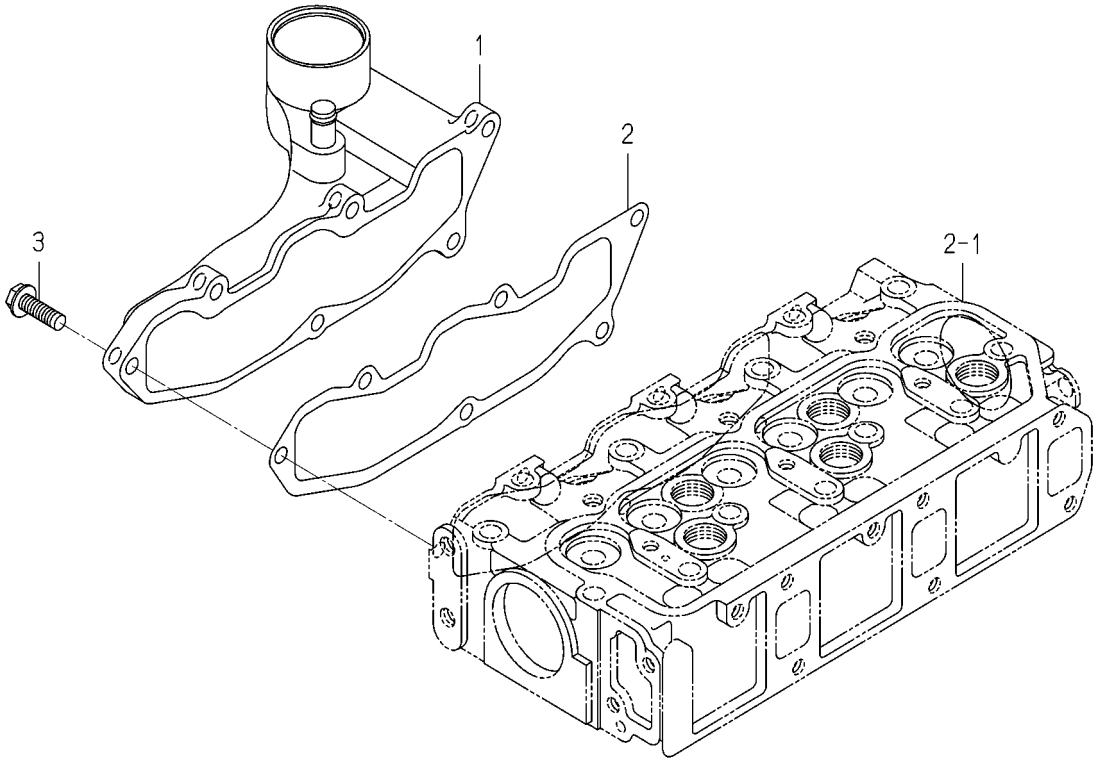

6005-120 -0100

KEY	PART CODE	DESCRIPTION	SPC	TYPE OF MODEL E3CD B85	TYPE OF MODEL E3CD B86	ITC	COL	GRP	REMARKS
1	6214-110-003-00	MANIFOLD/INLET ASSY	*	1	1				
2	6214-115-003-10	GASKET/INLETMANIFOLD	*	1	1				
3	V231-360-802-50	FLANGEBOLT/M8X25	*	6	6				

FIG. 5 EXHAUST MANIFOLD

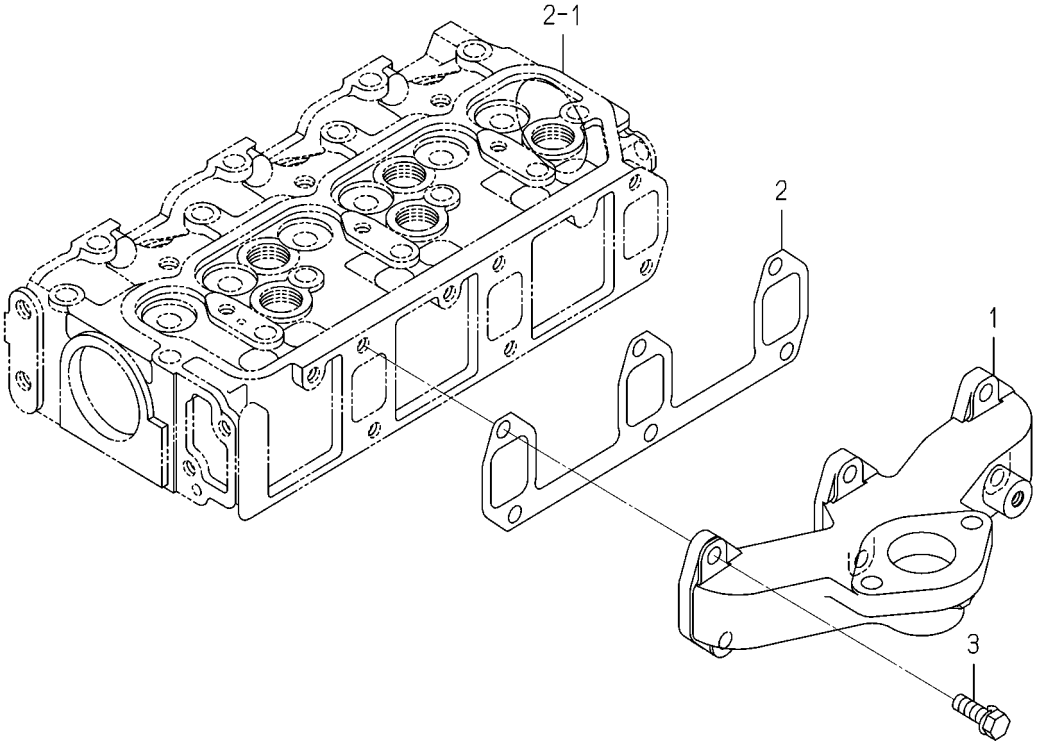

6005-140 -0100

KEY	PART CODE	DESCRIPTION	SPC	TYPE OF MODEL E3CD B85	TYPE OF MODEL E3CD B86	ITC	COL	GRP	REMARKS
1	6214-141-023-00	MANIFOLD/EXHAUST	*	1	1				
2	6214-145-004-20	GASKET/EXH MANIFOLD	*	1	1				
3	V211-560-802-50	BOLT,S/M8X25/7T	*	6	6				

FIG. 6 CYLINDER BLOCK

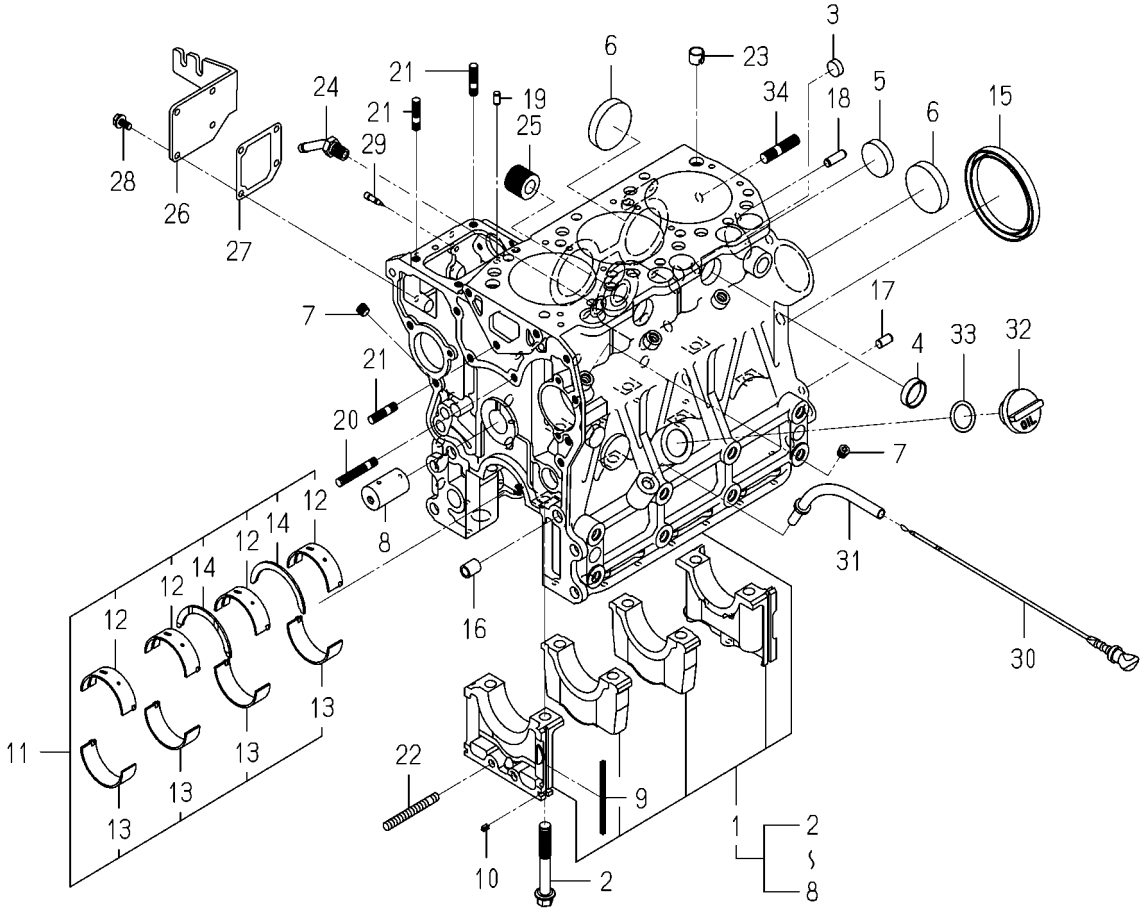

6005-203X-0100

KEY	PART CODE	DESCRIPTION	SPC	TYPE OF MODEL E3CD B85	E3CD B86	ITC	COL	GRP	REMARKS
1	6211-210-081-30	CYLINDERBLOCK ASSY	*	1	1				
2	6209-000-006-00	BOLT	*	8	8				
3	6209-610-007-00	CUP/SEALING/16	*	2	2				
4	6209-610-001-10	CUP/SEALING/28	*	2	2				
5	6209-610-009-00	CUP/SEALING/36	*	1	1				
6	6209-610-003-00	CUP/SEALING/50	*	3	3				
7	6209-605-007-10	PLUG/PT1/8	*	8	8				
8	6212-531-008-30	PIN/IDLEGEAR	*	1	1				
9	6211-258-001-00	SEAL,BEARING CAP	*	4	4				
10	6211-258-002-00	SEAL,BEARING CAP/7	*	2	2				
11	6211-510-008-00	BEARING/CRANK SET	*	1	1				
12	6211-511-007-00	BEARING/CRANK/UPPER	*	4	4				
13	6211-511-008-00	BEARING/CRANK/LOWER	*	4	4				
14	6211-599-004-00	BEARING/THRUST/CRANK	*	2	2				
15	6209-625-003-20	OILSEAL	*	1	1				
16	6209-749-001-20	PIN/TUBE	*	2	2				
17	6213-129-006-00	PIN/STRAIGHT	*	1	1				
18	V523-100-802-40	PIN,ST,B/8X24	*	1	1				
19	6209-740-005-00	PIN	*	2	2				
20	6904-110-840-00	STUD/M8X40	*	1	1				
21	6904-110-822-00	STUD	*	3	3				
22	V251-340-806-00	STUD/M8X60/7T	*	1	1				
23	6294-453-002-00	DOWEL	*	2	2				
24	6213-721-007-00	PIPE/WATERDRAIN	*	1	1				
25	6213-319-001-00	CONNECTOR,OIL FILTER	*	1	1				
26	6211-291-015-20	COVER/INJECTIONPUMP	*	1	1				
27	6211-292-001-20	GASKET/COVER	*	1	1				
28	V230-360-601-20	FLANGEBOLT/M6X12	*	4	4				
29	6215-549-013-00	PIN	*	1	1				
30	6211-760-032-20	LEVELGAGE	*	1	1				

FIG. 6 CYLINDER BLOCK

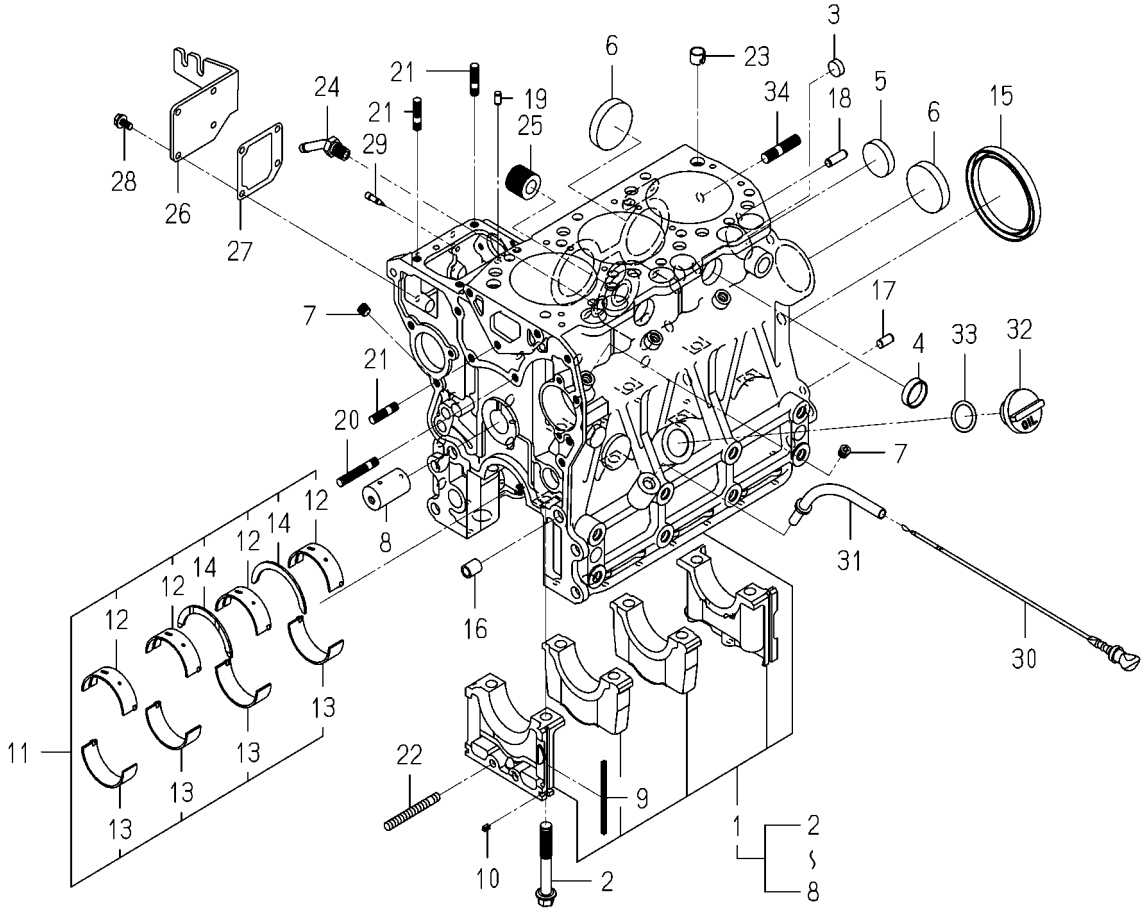

6005-203X-0100

KEY	PART CODE	DESCRIPTION	SPC	TYPE OF MODEL E3CD B85	TYPE OF MODEL E3CD B86	ITC	COL	GRP	REMARKS
31	6211-766-025-00	GUIDE/LEVELGAGE COMP	*	1	1				
32	6211-751-002-00	CAP/OILFILLER	*	1	1				
33	V720-103-502-50	O-RING/1A,P25	*	1	1				
34	6209-300-030-00	STUD	*	2	2				

FIG. 7 BEARING/UNDER SIZE (OPTION)

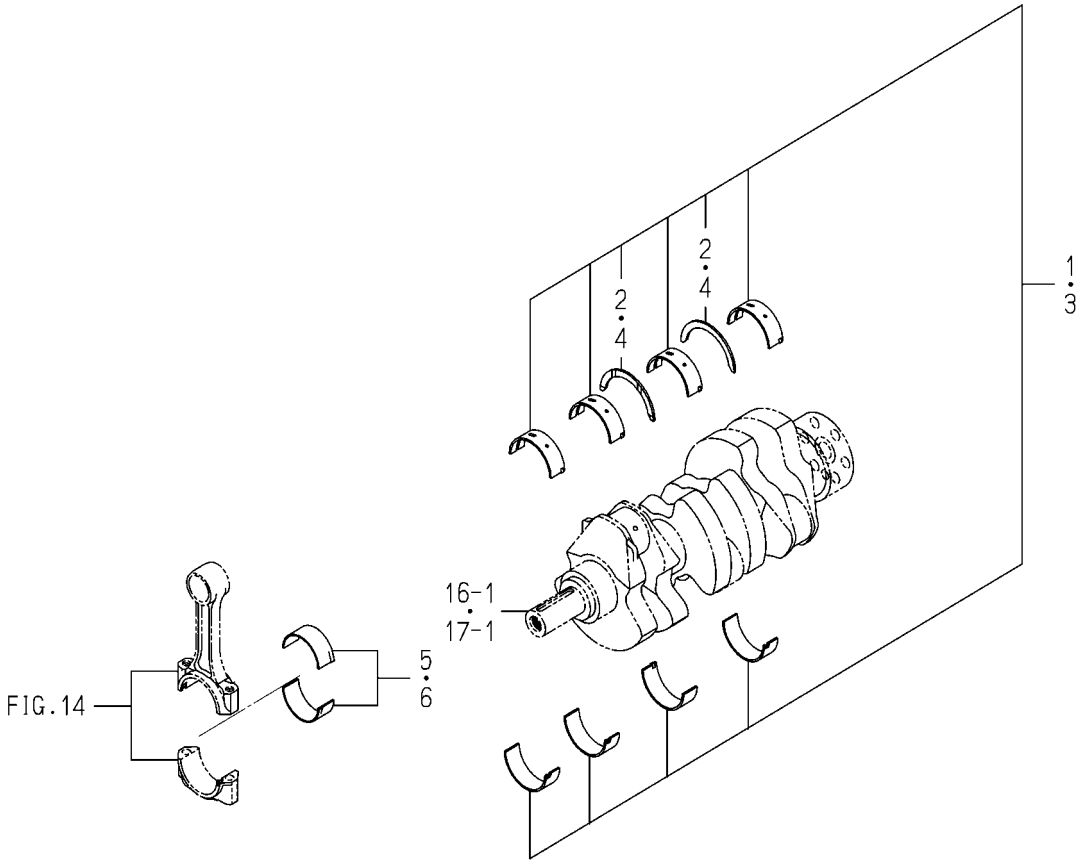

6005-209 -0100

KEY	PART CODE	DESCRIPTION	SPC	TYPE OF MODEL E3CD B85	TYPE OF MODEL E3CD B86	ITC	COL	GRP	REMARKS
1	6211-530-008-00	BRG/CRANK/UN025 SET	T	1	1				
2	6211-599-004-00	BEARING/THRUST/CRANK	T	2	2				
3	6211-540-008-00	BRG/CRANK/UN050 SET	T	1	1				
4	6211-599-004-00	BEARING/THRUST/CRANK	T	2	2				
5	6212-273-009-00	BRG/CONROD/UN025 SET	T	3	3				
6	6212-274-009-00	BRG/CONROD/UN050 SET	T	3	3				

FIG. 8 OIL PAN

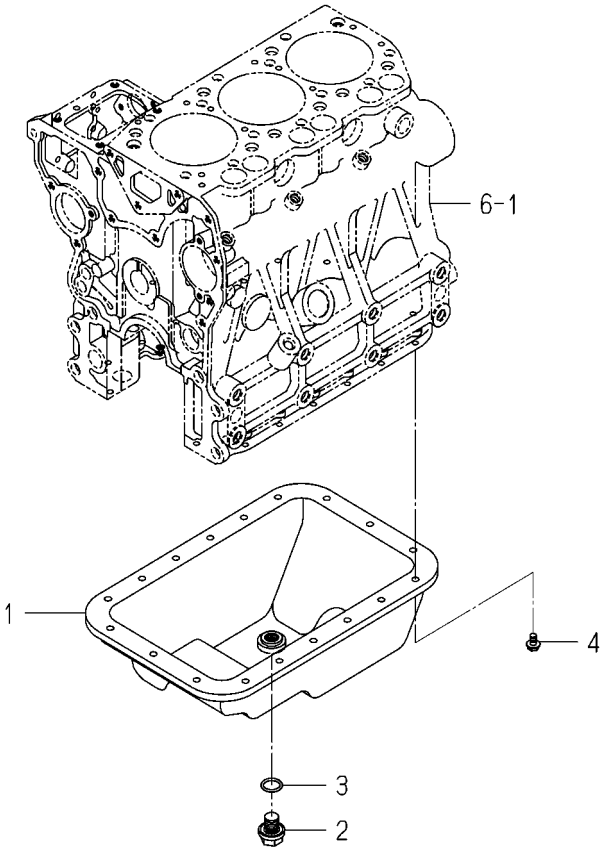

6005-210 -0100

KEY	PART CODE	DESCRIPTION	SPC	TYPE OF MODEL E3CD B85	TYPE OF MODEL E3CD B86	ITC	COL	GRP	REMARKS
1	6211-361-022-20	OILPAN COMP	*	1	1				
2	3805-355-002-20	PLUG/M14X1.5	*	1	1				
3	V720-102-401-80	O-RING/1A,P18	*	1	1				
4	V230-360-601-00	FLANGEBOLT/M6X10	*	18	18				

FIG. 9 REAR PLATE

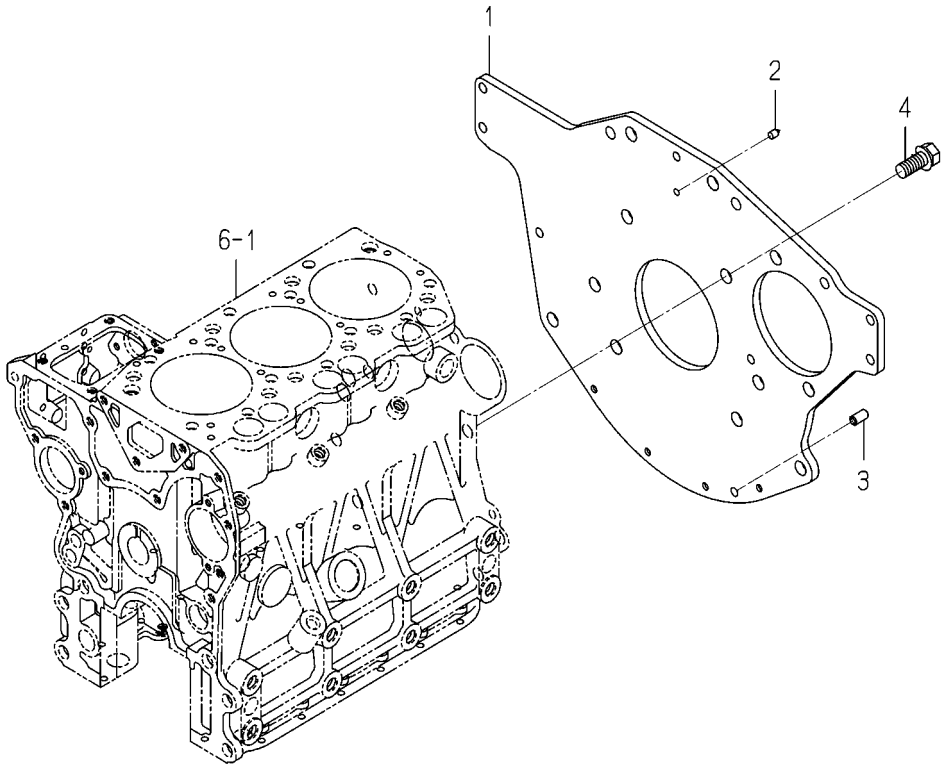

6005-220R-0100

KEY	PART CODE	DESCRIPTION	SPC	TYPE OF MODEL E3CD B85	TYPE OF MODEL E3CD B86	ITC	COL	GRP	REMARKS
1	6211-341-088-00	PLATE/REAR	*	1	1				
2	6211-342-002-10	POINTER	*	1	1				
3	6213-129-006-00	PIN/STRAIGHT	*	1	1				
4	6209-030-091-00	BOLT/WS	*	6	6				

FIG. 10 TIMING GEAR CASE

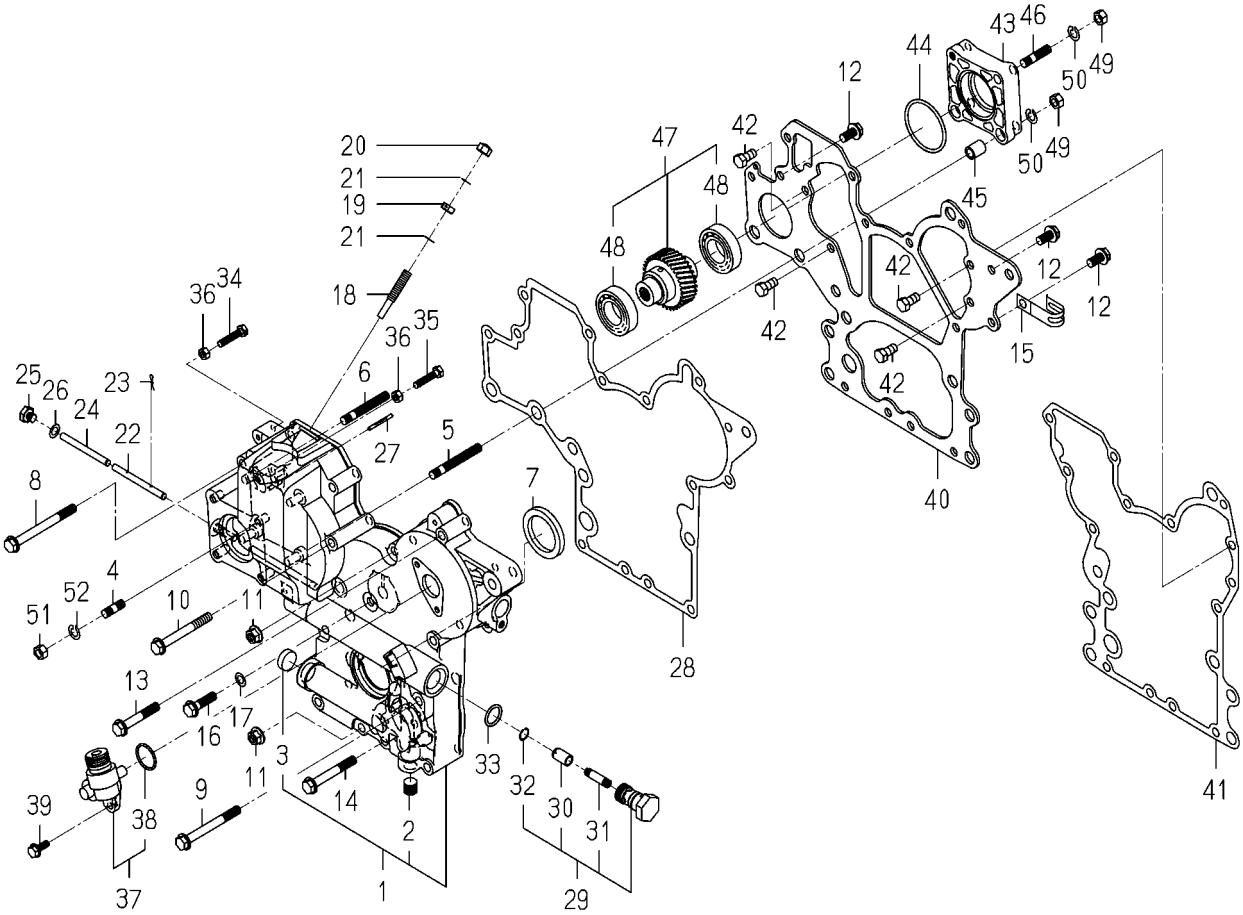

6005-240R-0100,6005-240R-0200

KEY	PART CODE	DESCRIPTION	SPC	TYPE OF MODEL E3CD B85	TYPE OF MODEL E3CD B86	ITC	COL	GRP	REMARKS
1	6211-310-063-10	GEARCASE ASSY	*	1	1				
2	6209-605-003-20	PLUG/PT1/4	*	1	1				
3	6209-610-004-00	CUP/SEALING/20	*	1	1				
4	6904-110-822-00	STUD	*	4	4				
5	6904-110-855-00	STUD	*	2	2				
6	6904-110-850-00	STUD	*	1	1				
7	6209-625-002-00	SEAL,OIL	*	1	1				
8	V231-360-808-50	FLANGEBOLT/M8X85	*	1	1				
9	V231-360-807-50	FLANGEBOLT/M8X75	*	1	1				
10	V231-360-807-00	FLANGEBOLT/M8X70	*	1	1				
11	3817-401-001-00	NUT/M08	*	2	2				
12	V231-360-801-60	FLANGEBOLT/M8X16	*	3	3				
13	V231-360-805-00	FLANGEBOLT/M8X50	*	3	3				
14	V231-360-806-00	FLANGEBOLT/M8X60	*	4	4				
15	1425-621-004-00	HOLDER/JE/9-9	*	1	1				
16	V231-360-803-00	FLANGEBOLT/M8X30	*	1	1				
17	6209-500-003-00	WASHER/08X14X01	*	1	1				
18	6215-546-003-30	STOPPER/FULLLOAD	*	1	1				
19	6209-409-001-00	NUT/M8	*	1	1				
20	V341-120-008-00	NUT,CAP/M8	*	1	1				
21	6209-920-002-00	PACKING	*	2	2				
22	6215-542-004-20	PIN/ARM	*	1	1				
23	P117-303-003-00	PIN/SNAP	*	2	2				
24	6215-542-005-20	PIN	*	1	1				
25	6209-600-004-00	PLUG/SCREW	*	1	1				
26	6209-500-003-00	WASHER/08X14X01	*	1	1				
27	6209-740-006-00	PIN/GROOVE	*	1	1				
28	6211-312-005-10	GASKET/GEARCASE	*	1	1				
29	6213-160-005-00	VALVE/RELIEF ASSY	*	1	1				
30	6213-161-003-10	PISTON/VALVE/RELIEF	*	1	1				

FIG. 10 TIMING GEAR CASE

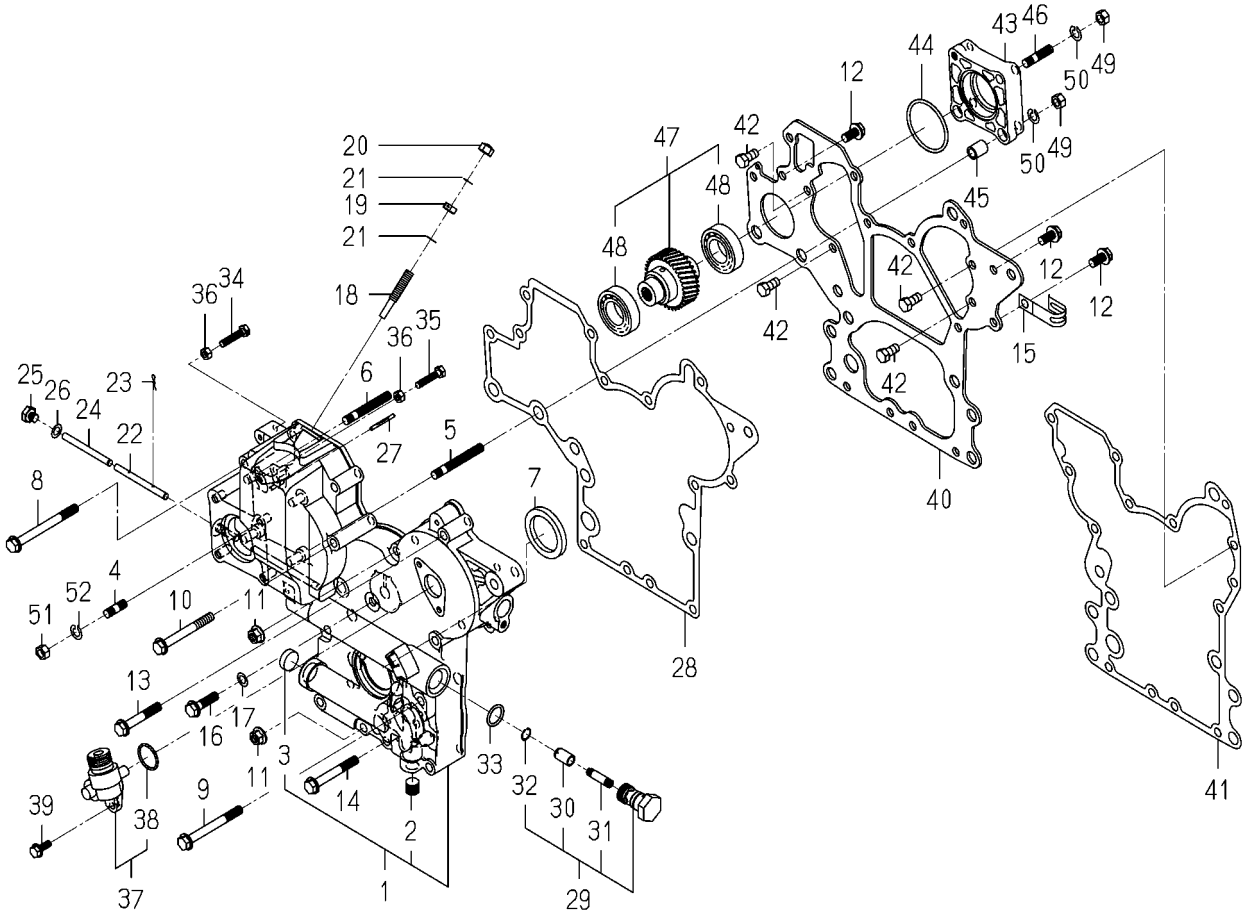

6005-240R-0100,6005-240R-0200

KEY	PART CODE	DESCRIPTION	SPC	TYPE OF MODEL E3CD B85	E3CD B86	ITC	COL	GRP	REMARKS
31	6213-164-001-00	SPRING/RELIEF VALVE	*	1	1				
32	V705-140-012-00	RING,SNAP/12 C	*	1	1				
33	V720-102-401-80	O-RING/1A,P18	*	1	1				
34	6209-050-001-00	BOLT/M6	*	1	1				
35	6209-050-002-00	BOLT/M6	*	1	1				
36	V301-260-006-00	NUT/M6	*	2	2				
37	6219-310-003-20	DRIVE/TACHOMETE ASSY	*	1	1				
38	V723-102-002-40	O-RING/1A,S24	*	1	1				
39	V230-360-601-60	FLANGEBOLT/M6X16	*	2	2				
40	6211-311-013-20	PLATE/FRONT	*	1	1				
41	6211-312-006-10	GASKET/PLATE	*	1	1				
42	6902-050-816-00	BOLT	*	4	4				
43	6211-319-003-00	SPACER	*	1	1				
44	V723-102-005-00	O-RING/1A,S50	*	1	1				
45	6209-749-001-20	PIN/TUBE	*	2	2				
46	6904-110-822-00	STUD	*	1	1				
47	6212-530-022-00	SHAFT/HYDRAULIC ASSY	*	1	1				
48	1729-202-002-00	BEARING/BALL	*	2	2				
49	V304-260-008-00	NUT/M8	*	4	4				
50	V401-160-008-00	WASHER,SP/M8	*	4	4				
51	V304-260-008-00	NUT/M8	*	4	4				
52	V401-160-008-00	WASHER,SP/M8	*	4	4				

FIG. 11 HANGER

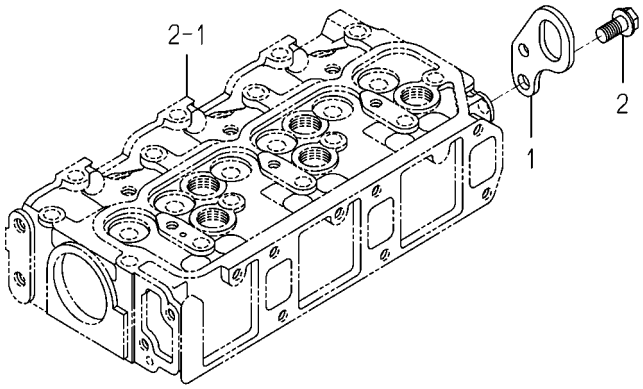

6005-290B-0100

KEY	PART CODE	DESCRIPTION	SPC	TYPE OF MODEL E3CD B85	TYPE OF MODEL E3CD B86	ITC	COL	GRP	REMARKS
1	6211-777-007-30	HANGER	*	1	1				
2	V233-361-002-00	FLANGEBOLT/M10X20	*	1	1				

FIG. 12 VALVE

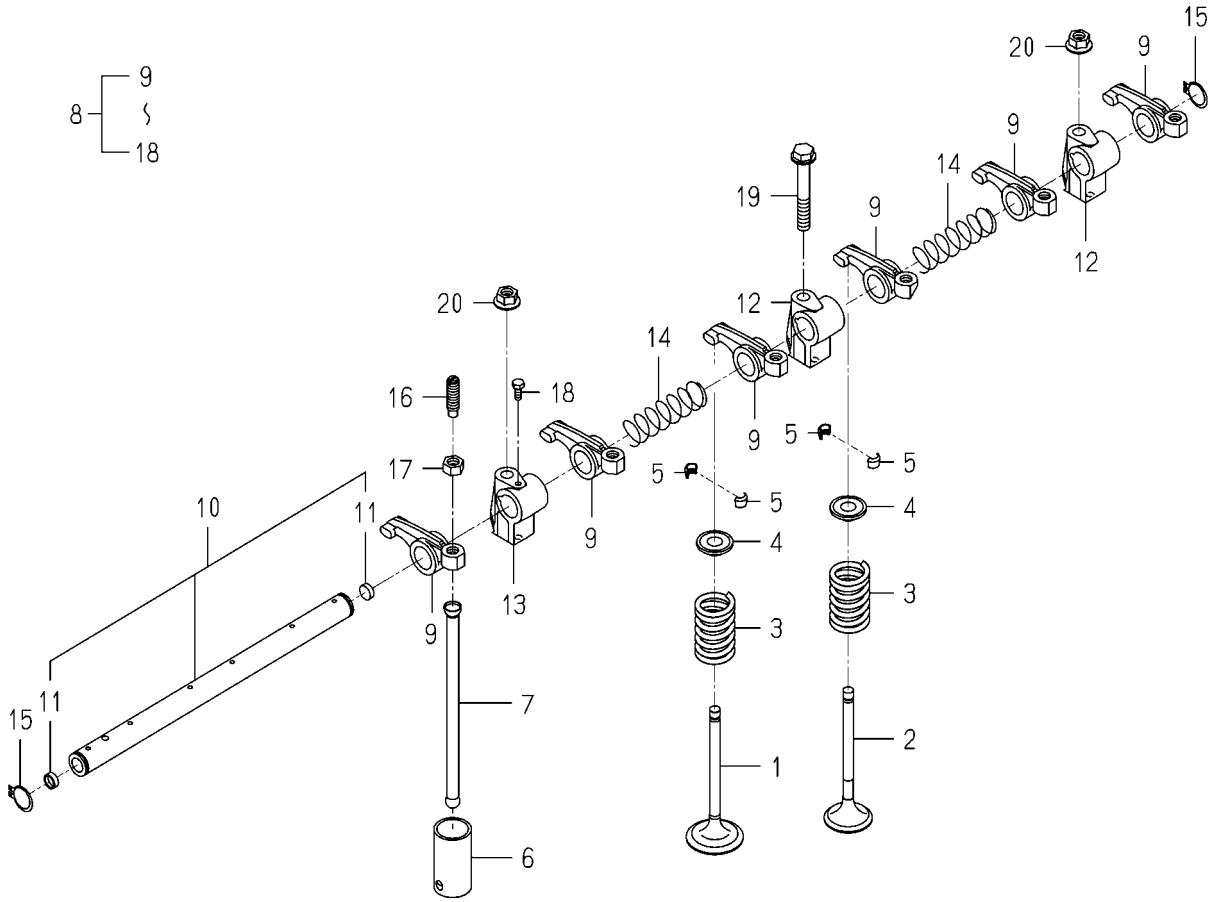

6005-301F-0100

KEY	PART CODE	DESCRIPTION	SPC	TYPE OF MODEL E3CD B85	E3CD B86	ITC	COL	GRP	REMARKS
1	6212-551-020-10	VALVE/INTAKE	*	3	3				
2	6212-552-008-00	VALVE/EXHAUST	*	3	3				
3	6212-561-003-00	SPRING/VALVE	*	6	6				
4	6212-563-005-00	SEAT/VALVESPRING	*	6	6				
5	6212-565-001-00	CUTTER,VALVE	*	12	12				
6	6212-571-002-30	TAPPET	*	6	6				
7	6212-575-003-00	PUSHROD	*	6	6				
8	6212-600-019-00	ROCKERSHAFT ASSY	*	1	1				
9	6212-611-014-00	ROCKERARM	*	6	6				
10	6212-620-017-00	SHAFT/ROCKERARM ASSY	*	1	1				
11	6212-626-003-00	PLUG	*	2	2				
12	6212-628-022-00	BRACKET/ROCKERSHAFT	*	2	2				
13	6212-628-023-00	BRACKET/ROCKERSHAFT	*	1	1				
14	6212-629-006-00	SPRING	*	2	2				
15	6212-629-007-00	RING/SNAP	*	2	2				
16	6212-629-008-00	SCREW/ADJUST	*	6	6				
17	6212-629-009-00	NUT	*	6	6				
18	6212-629-010-00	BOLT	*	1	1				
19	V231-360-805-50	FLANGEBOLT/M8X55	*	1	1				
20	3817-401-001-00	NUT/M08	*	2	2				

FIG. 13 CAM SHAFT

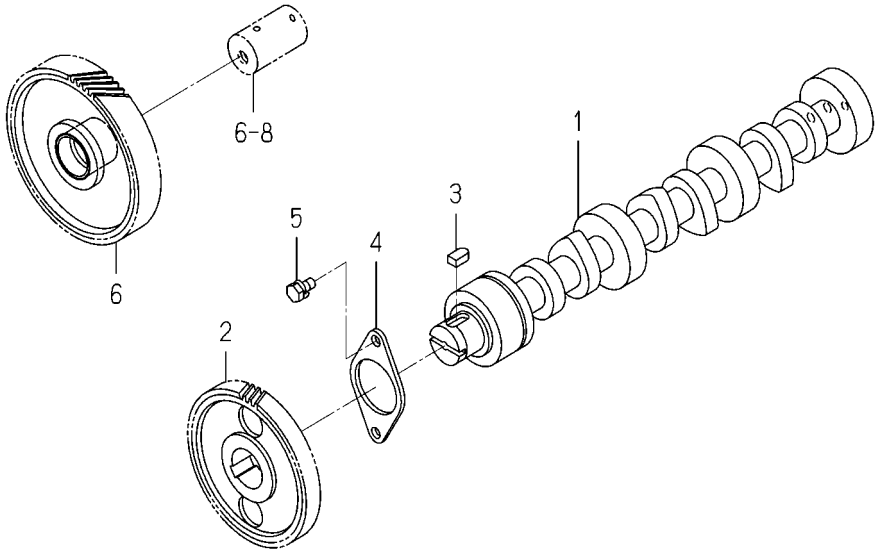

6005-310 -0100

KEY	PART CODE	DESCRIPTION	SPC	TYPE OF MODEL E3CD B85	TYPE OF MODEL E3CD B86	ITC	COL	GRP	REMARKS
1	6212-511-005-10	CAMSHAFT	*	1	1				
2	6212-522-004-20	GEAR/CAMSHAFT	*	1	1				
3	6209-730-005-00	KEY/07X05X09	*	1	1				
4	6212-535-007-00	PLATE/THRUST	*	1	1				
5	V210-560-601-20	BOLT,S/M6X12/7T	*	2	2				
6	6212-523-006-50	GEAR/IDLE ASSY	*	1	1				

FIG. 14 PISTON

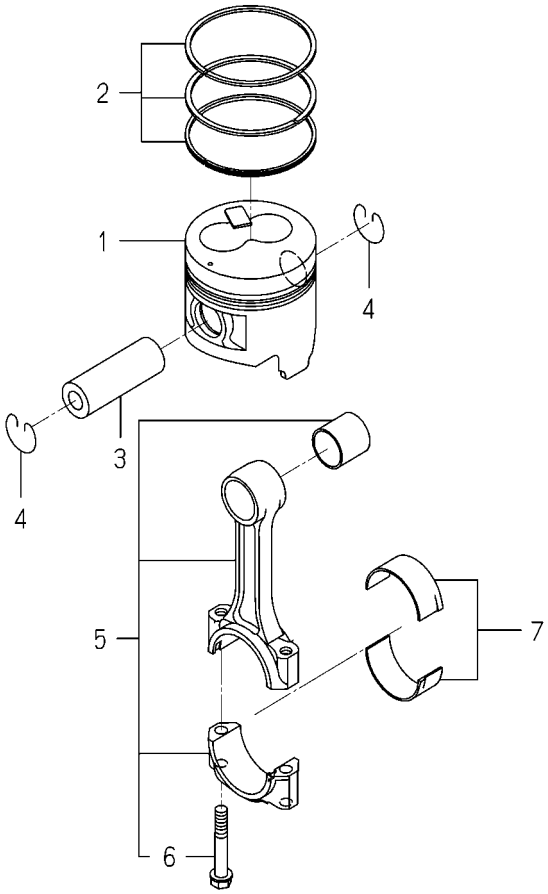

6005-340P-0100

KEY	PART CODE	DESCRIPTION	SPC	TYPE OF MODEL E3CD B85	E3CD B86	ITC	COL	GRP	REMARKS
1	6212-111-095-40	PISTON	*	3	3				
2	6212-121-028-30	RING/PISTONSET	*	3	3				
3	6212-211-002-00	PIN/PISTON	*	3	3				
4	6909-950-115-00	RING SNAP	*	6	6				
5	6212-230-011-30	CONNECTINGROD ASSY	*	3	3				
6	6212-235-004-10	BOLT/CONNECTINGROD	*	6	6				
7	6212-271-009-00	BEARING/CONNECTING R	*	3	3				

FIG. 15 PISTON/OVER SIZE (OPTION)

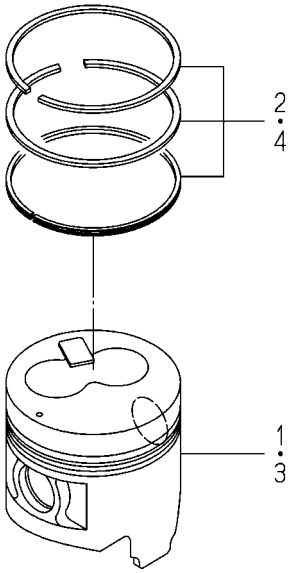

6005-349P-0100

KEY	PART CODE	DESCRIPTION	SPC	TYPE OF MODEL E3CD B85	TYPE OF MODEL E3CD B86	ITC	COL	GRP	REMARKS
1	6212-114-095-40	PISTON(OV/050)	T	3	3				
2	6212-124-028-30	RINGPISTON/OV050 SET	T	3	3				
3	6212-116-095-40	PISTON(OV/100)	T	3	3				
4	6212-126-028-30	RINGPISTON/OV100 SET	T	3	3				

FIG. 16 CRANK SHAFT

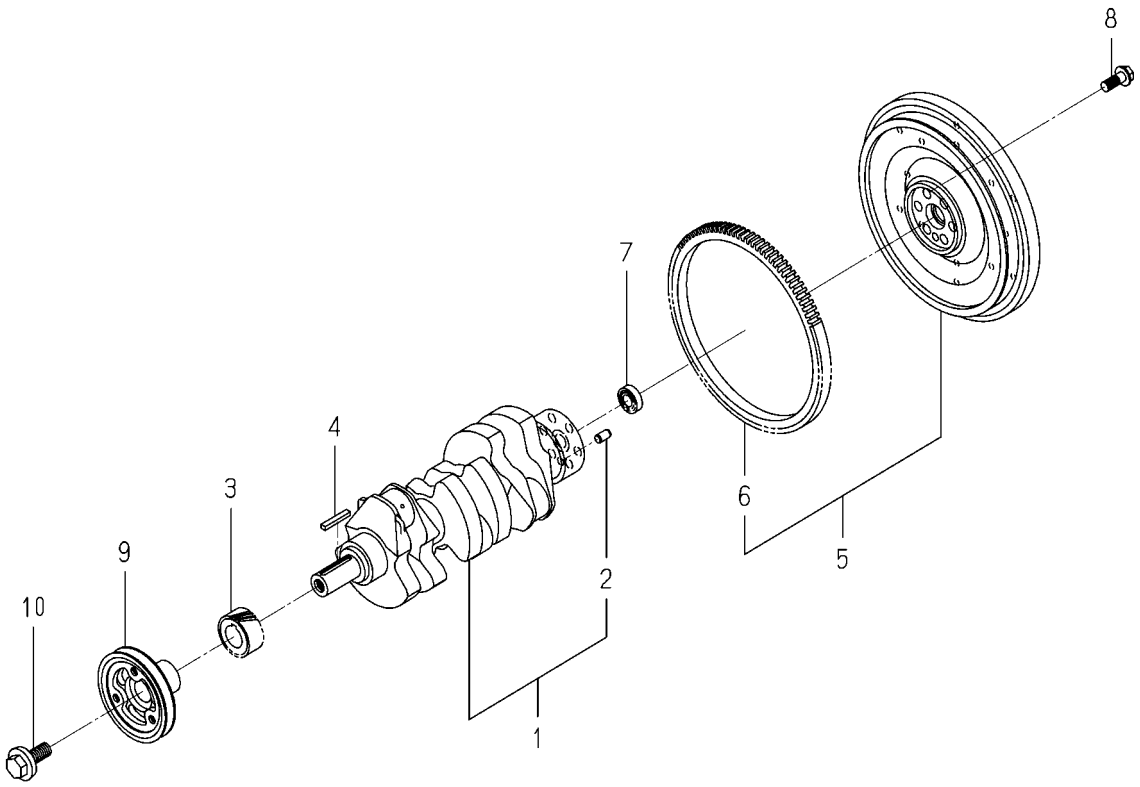

6005-351R-0100

KEY	PART CODE	DESCRIPTION	SPC	TYPE OF MODEL E3CD B85	TYPE OF MODEL E3CD B86	ITC	COL	GRP	REMARKS
1	6212-310-011-50	CRANKSHAFT ASSY	*	1					
2	V523-101-001-80	PIN,ST,B/10X18	*	1					
3	6212-521-008-00	GEAR/CRANK	*	1					
4	6209-730-006-00	KEY/07X05X43	*	1					
5	6212-330-096-20	FLYWHEEL ASSY	*	1					
6	6212-333-007-10	RINGGEAR	*	1					
7	V600-150-600-20	BEARING,RB/6002SS	*	1					
8	6209-046-015-00	BOLT/FLANGE	*	6					
9	6212-371-070-00	PULLEY/CRANK	*	1					
10	6209-000-043-00	BOLT/CRANK	*	1					

FIG. 17 CRANK SHAFT

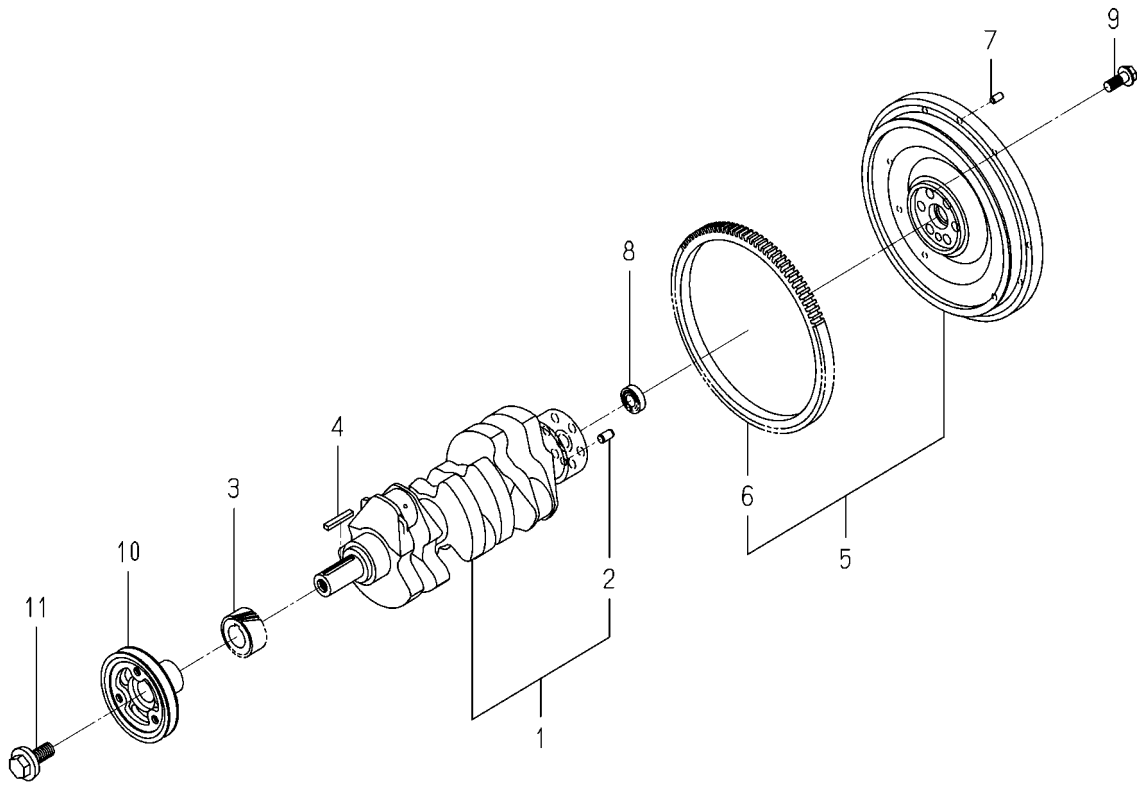

6005-351S-0100

KEY	PART CODE	DESCRIPTION	SPC	TYPE OF MODEL E3CD B85	TYPE OF MODEL E3CD B86	ITC	COL	GRP	REMARKS
1	6212-310-011-50	CRANKSHAFT ASSY	*		1				
2	V523-101-001-80	PIN,ST,B/10X18	*		1				
3	6212-521-008-00	GEAR/CRANK	*		1				
4	6209-730-006-00	KEY/07X05X43	*		1				
5	6212-330-091-20	FLYWHEEL ASSY	*		1				
6	6212-333-007-10	RINGGEAR	*		1				
7	6213-129-006-00	PIN/STRAIGHT	*		3				
8	V600-150-600-20	BEARING,RB/6002SS	*		1				
9	6209-046-015-00	BOLT/FLANGE	*		6				
10	6212-371-070-00	PULLEY/CRANK	*		1				
11	6209-000-043-00	BOLT/CRANK	*		1				

FIG. 18 OIL PUMP

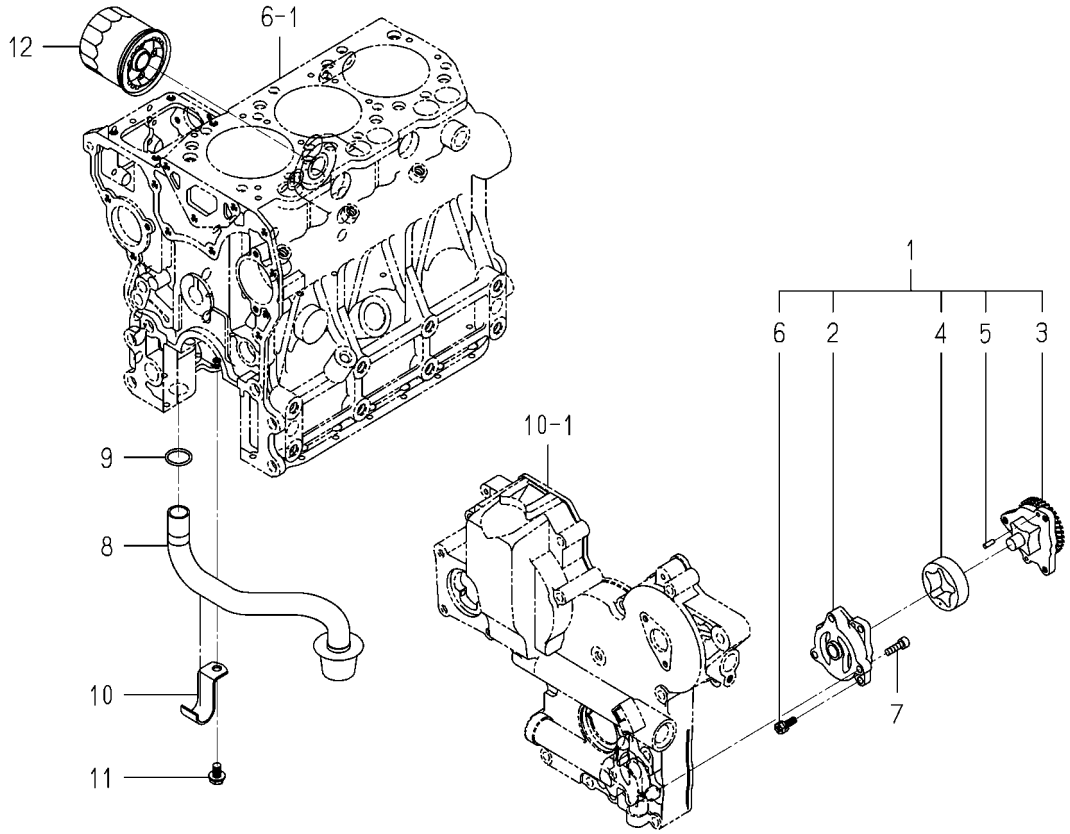

6005-401 -0100

KEY	PART CODE	DESCRIPTION	SPC	TYPE OF MODEL E3CD B85	E3CD B86	ITC	COL	GRP	REMARKS
1	6213-100-004-30	OILPUMP ASSY	*	1	1				
2	6213-111-002-20	BODY/OILPUMP	*	1	1				
3	6213-120-002-30	GEAR/OILPUMP ASSY	*	1	1				
4	6213-125-002-10	ROTOR/OUTER	*	1	1				
5	6213-129-003-00	PIN/STRAIGHT	*	2	2				
6	6213-119-001-00	BOLT/WS	*	3	3				
7	V220-540-602-00	SCREW,SOCKET/M6X20	*	3	3				
8	6213-140-012-10	STRAINER	*	1	1				
9	V720-103-502-20	O-RING/1A,P22A	*	1	1				
10	6213-149-003-20	CLAMP/STRAINER	*	1	1				
11	V231-360-801-60	FLANGEBOLT/M8X16	*	1	1				
12	6213-240-002-20	CARTRIDGE/OILFILTER	*	1	1				

FIG. 19 WATER PUMP

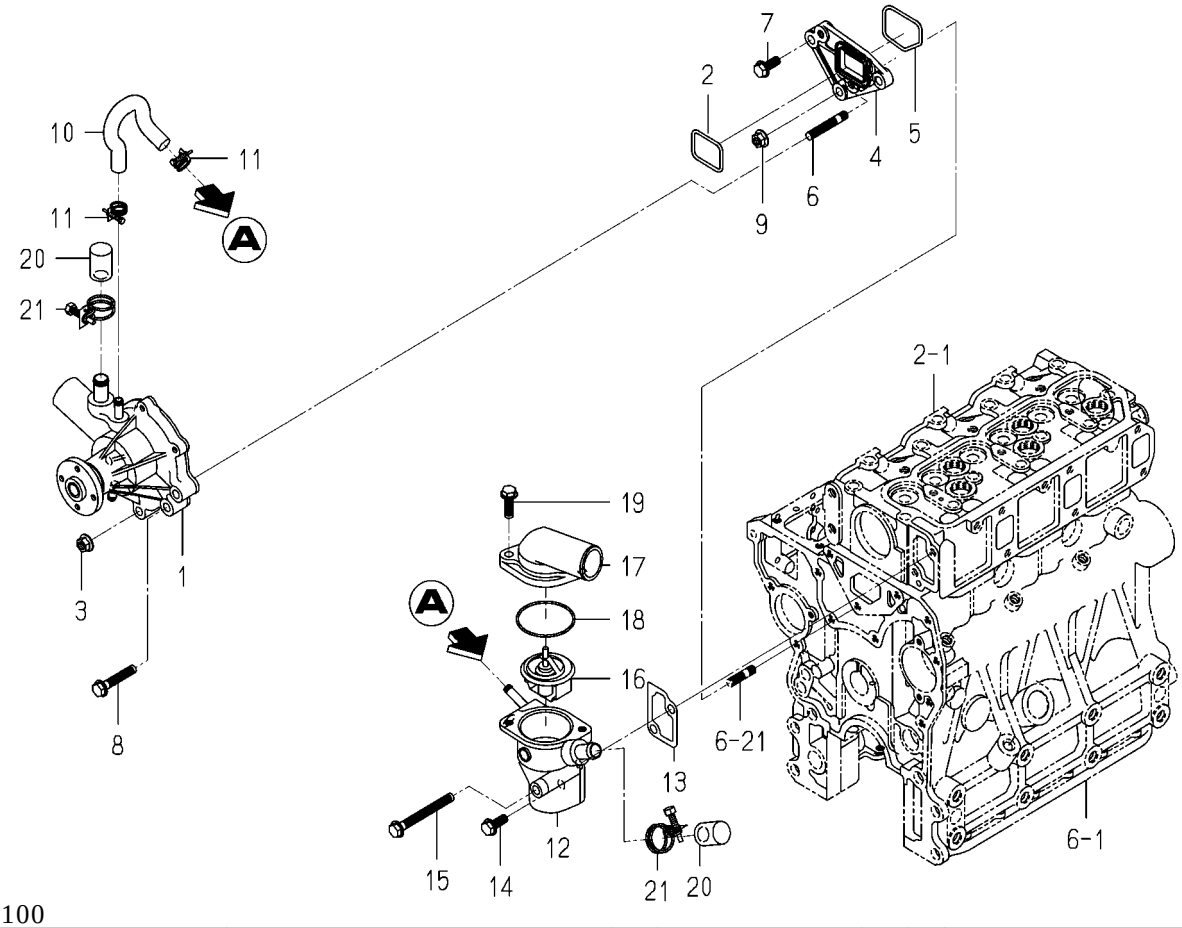

6005-420K-0100

KEY	PART CODE	DESCRIPTION	SPC	TYPE OF MODEL E3CD B85	TYPE OF MODEL E3CD B86	ITC	COL	GRP	REMARKS
1	6213-610-011-20	WATERPUMP ASSY	*	1	1				
2	6213-614-013-00	GASKET/WATERPUMP	*	1	1				
3	3817-401-001-00	NUT/M08	*	2	2				
4	6213-619-006-00	SPACER/WATERPUMP	*	1	1				
5	6213-614-014-00	GASKET/SPACER	*	1	1				
6	6904-110-840-00	STUD/M8X40	*	2	2				
7	V231-360-804-50	FLANGEBOLT/M8X45	*	1	1				
8	V231-360-802-00	FLANGEBOLT/M8X20	*	1	1				
9	3817-401-001-00	NUT/M08	*	1	1				
10	6213-729-013-10	HOSE/RUBBER	*	1	1				
11	J061-210-015-00	CLAMP/WIRE/10-15	*	2	2				
12	6213-716-004-20	HOUSING/THERMOSTAT	*	1	1				
13	6213-743-002-10	GASKET/HOUSING	*	1	1				
14	V231-360-802-00	FLANGEBOLT/M8X20	*	1	1				
15	V231-360-807-50	FLANGEBOLT/M8X75	*	1	1				
16	6513-770-022-10	THERMOSTAT	*	1	1				
17	6213-711-004-00	PIPE/WATEROUTLET	*	1	1				
18	V723-102-005-50	O-RING/1A,S55	*	1	1				
19	V231-360-802-50	FLANGEBOLT/M8X25	*	2	2				
20	6213-729-011-00	CAP	*	2	2				
21	J061-220-024-00	CLAMP/WIRE/20-24	*	2	2				

FIG. 20 COOLING FAN

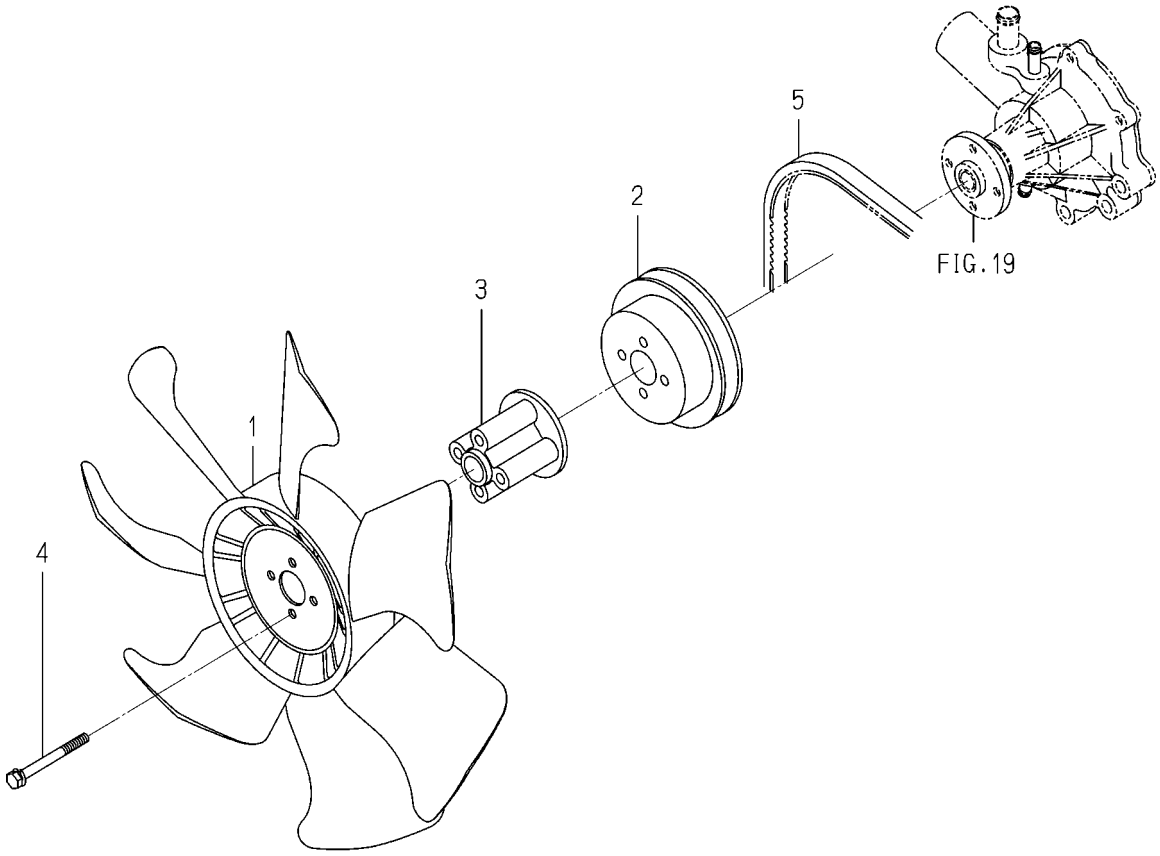

6005-480Q-0100

KEY	PART CODE	DESCRIPTION	SPC	TYPE OF MODEL E3CD B85	TYPE OF MODEL E3CD B86	ITC	COL	GRP	REMARKS
1	6213-660-016-00	FAN/COOLING	*	1	1				
2	6213-641-022-20	PULLEY/WATERPUMP	*	1	1				
3	6213-669-008-00	SPACER/FAN/48	*	1	1				
4	6209-030-044-00	BOLT/WS	*	4	4				
5	6213-671-055-00	BELT/VNR5A38.5	*	1	1				

FIG. 21 INJECTION NOZZLE

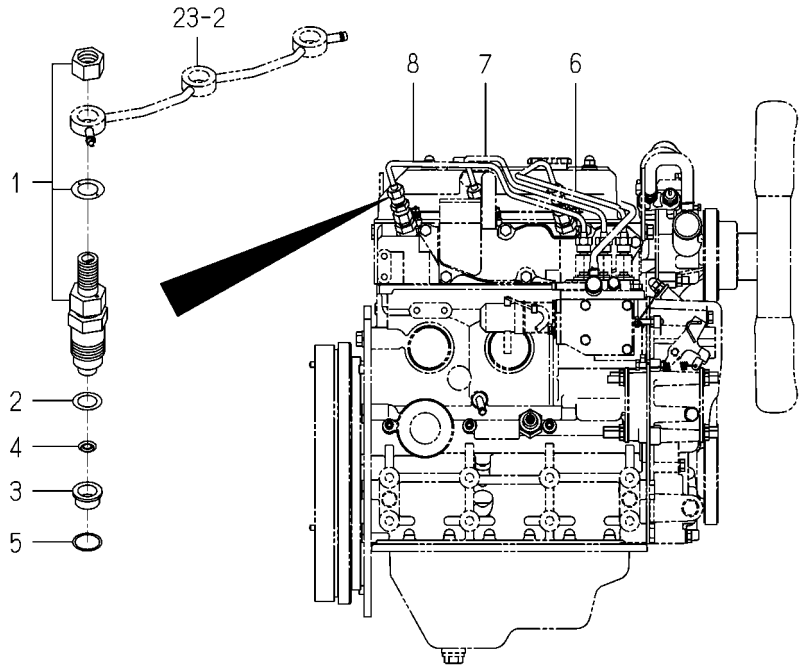

6005-501I-0100

KEY	PART CODE	DESCRIPTION	SPC	TYPE OF MODEL E3CD B85	TYPE OF MODEL E3CD B86	ITC	COL	GRP	REMARKS
1	6215-300-037-00	INJECTIONNOZZLE ASSY	*	3	3				FIG 029
2	6215-315-002-00	GASKET,NOZZLE	*	3	3				
3	6215-315-006-00	HEATSHILD/NOZZLE	*	3	3				
4	6215-315-005-00	WASHER/CORRUGATE	*	3	3				
5	6215-315-007-00	GASKET	*	3	3				
6	6215-411-133-00	PIPE/INJECTION ASSY	*	1	1				
7	6215-411-134-00	PIPE/INJECTION ASSY	*	1	1				
8	6215-411-135-00	PIPE/INJECTION ASSY	*	1	1				

FIG. 22 INJECTION PUMP

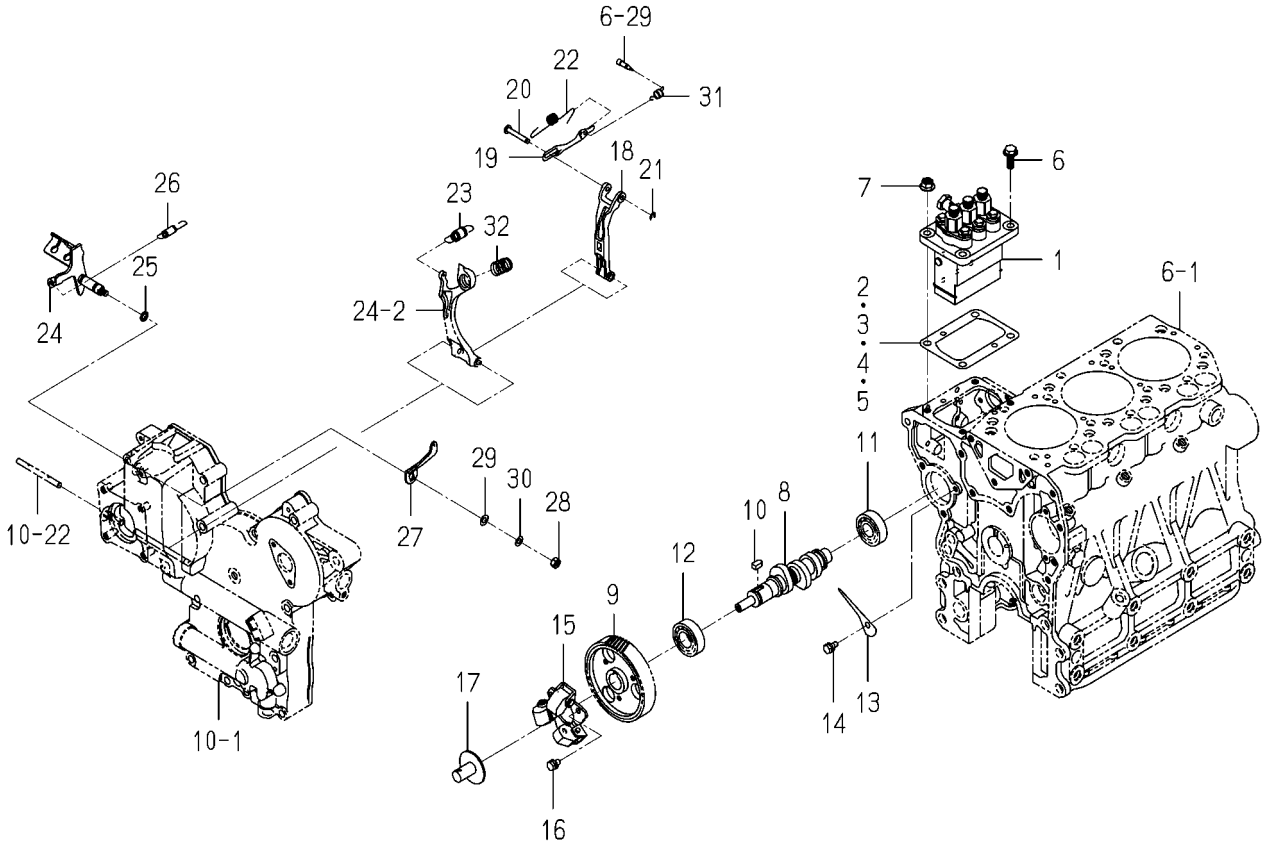

6005-511N-0100

KEY	PART CODE	DESCRIPTION	SPC	TYPE OF MODEL E3CD B85	E3CD B86	ITC	COL	GRP	REMARKS
1	6215-600-155-00	INJECTIONPUMP ASSY	*	1	1				FIG 030
2	6219-752-045-00	SHIM/INJECTIONPUMP	*	1	1				
3	6219-752-044-00	SHIM/INJECTIONPUMP	*	1	1				
4	6219-752-046-00	SHIM/INJECTIONPUMP	*	1	1				
5	6219-752-047-00	SHIM/INJECTIONPUMP	*	1	1				
6	V231-360-802-00	FLANGEBOLT/M8X20	*	2	2				
7	3817-401-001-00	NUT/M08	*	2	2				
8	6215-621-045-00	CAMSHAFT/INJECTION P	*	1	1				
9	6212-524-006-30	GEAR/INJECTIONPUMP	*	1	1				
10	6209-730-005-00	KEY/07X05X09	*	1	1				
11	V600-110-620-30	BEARING,RB/6203	*	1	1				
12	1729-202-001-00	BEARING/BALL	*	1	1				
13	6212-535-009-00	PLATE/THRUST/INJPUMP	*	1	1				
14	V210-560-601-20	BOLT,S/M6X12/7T	*	1	1				
15	6215-520-007-10	FLYWEIGHT ASSY	*	1	1				
16	6209-030-043-00	BOLT/M6X10	*	3	3				
17	6215-526-004-00	THRUSTPIECE	*	1	1				
18	6215-541-001-10	ARM/FLOATING COMP	*	1	1				
19	6215-543-002-10	RINK/CONTROL	*	1	1				
20	6215-542-006-00	PIN,CONTROL	*	1	1				
21	V710-140-004-00	RING,SNAP/4 E	*	1	1				
22	6215-549-031-10	SPRING/SETTING	*	1	1				
23	6215-531-010-00	SPRING/GOVERNOR	*	1	1				
24	6215-541-045-10	LEVER/CONTROL COMP	*	1	1				
25	V720-101-900-80	O-RING/1A,P8	*	1	1				
26	6209-580-002-10	SPRING,RETURN	*	1	1				
27	6215-549-076-10	ARM/CONTROL	*	1	1				
28	V301-260-006-00	NUT/M6	*	1	1				
29	V411-260-006-00	WASHER,PL/M6	*	1	1				
30	V401-160-006-00	WASHER,SP/M6	*	1	1				

FIG. 22 INJECTION PUMP

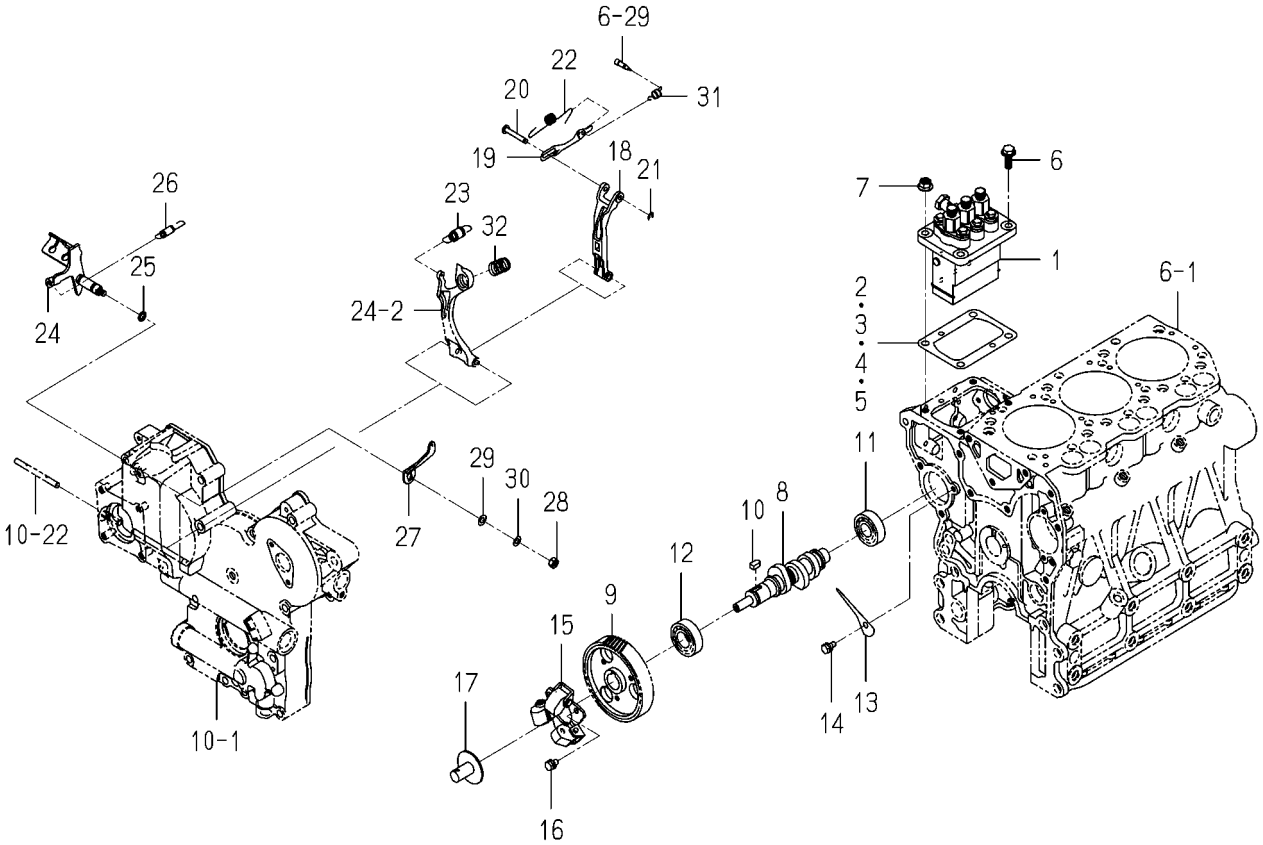

6005-511N-0100

KEY	PART CODE	DESCRIPTION	SPC	TYPE OF MODEL E3CD B85	TYPE OF MODEL E3CD B86	ITC	COL	GRP	REMARKS
31	6215-549-039-00	SPRING/STARTING	*	1	1				
32	6215-537-002-10	SPRING/IDLE	*	1	1				

FIG. 23 FUEL PIPE

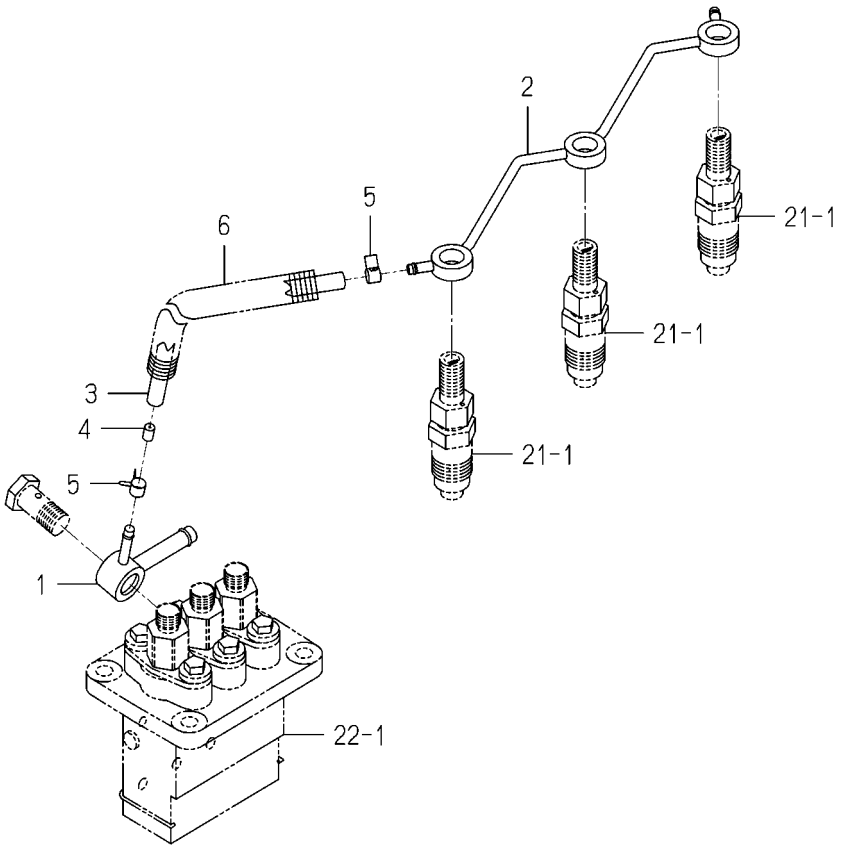

6005-550J-0100

KEY	PART CODE	DESCRIPTION	SPC	TYPE OF MODEL E3CD B85	TYPE OF MODEL E3CD B86	ITC	COL	GRP	REMARKS
1	6215-412-004-00	CONNECTOR/FUEL	*	1	1				
2	6215-411-136-00	PIPE/FUEL	*	1	1				
3	6209-360-011-00	HOSE/RUBBER	*	1	1				
4	3640-586-004-00	RESISTANCE/1.0	*	1	1				
5	J062-076-082-00	CLIP/HOSE/7.6-8.2	*	2	2				
6	6209-360-143-00	CORRUGATEDTUBE	*	1	1				

FIG. 24 ADAPTER

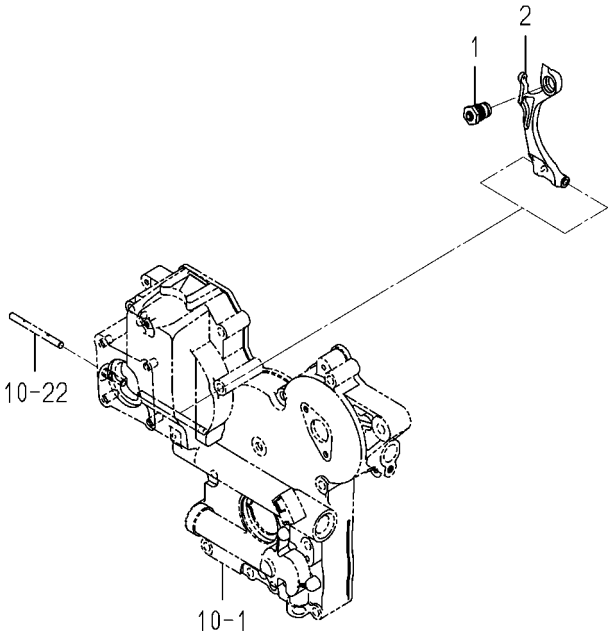

6005-561D-0100

KEY	PART CODE	DESCRIPTION	SPC	TYPE OF MODEL E3CD B85	TYPE OF MODEL E3CD B86	ITC	COL	GRP	REMARKS
1	6215-548-088-20	ADAPTER/225X060 ASSY	*	1	1				
2	6215-541-016-40	ARM/TENSION	*	1	1				

FIG. 25 ELECTRIC (1)

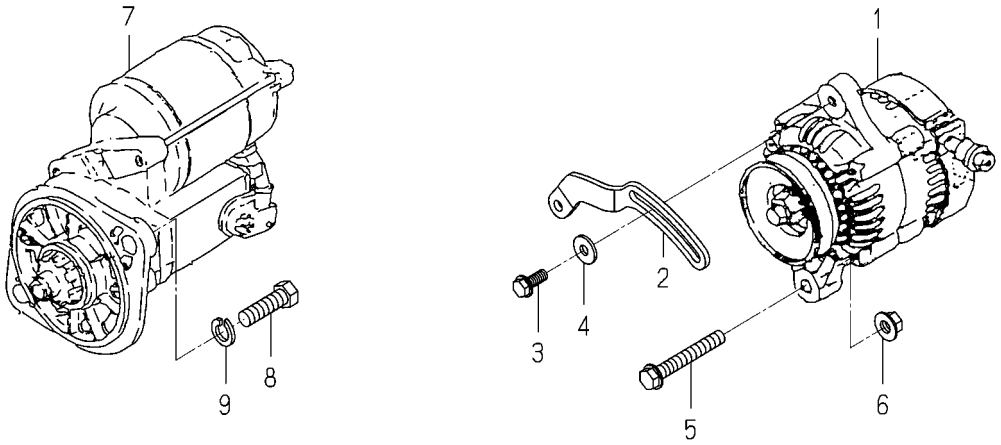

6005-802C-0100,6005-802C-0200

KEY	PART CODE	DESCRIPTION	SPC	TYPE OF MODEL E3CD B85	TYPE OF MODEL E3CD B86	ITC	COL	GRP	REMARKS
1	6281-200-021-00	GENERATOR ASSY	*	1	1				FIG 032
2	6213-674-006-20	PLATE/ADJUST	*	1	1				
3	V231-360-802-00	FLANGEBOLT/M8X20	*	1	1				
4	1373-121-001-00	WASHER/9X22X2	*	1	1				
5	V233-361-007-00	FLANGEBOLT/M10X70	*	1	1				
6	6209-440-007-00	NUT/FLANGE/M10	*	1	1				
7	6281-100-002-50	STARTER ASSY	*	1	1				FIG 031
8	V201-361-204-50	BOLT/M12X45/7T	*	2	2				
9	V401-160-012-00	WASHER,SP/M12	*	2	2				

FIG. 26 ELECTRIC (2)

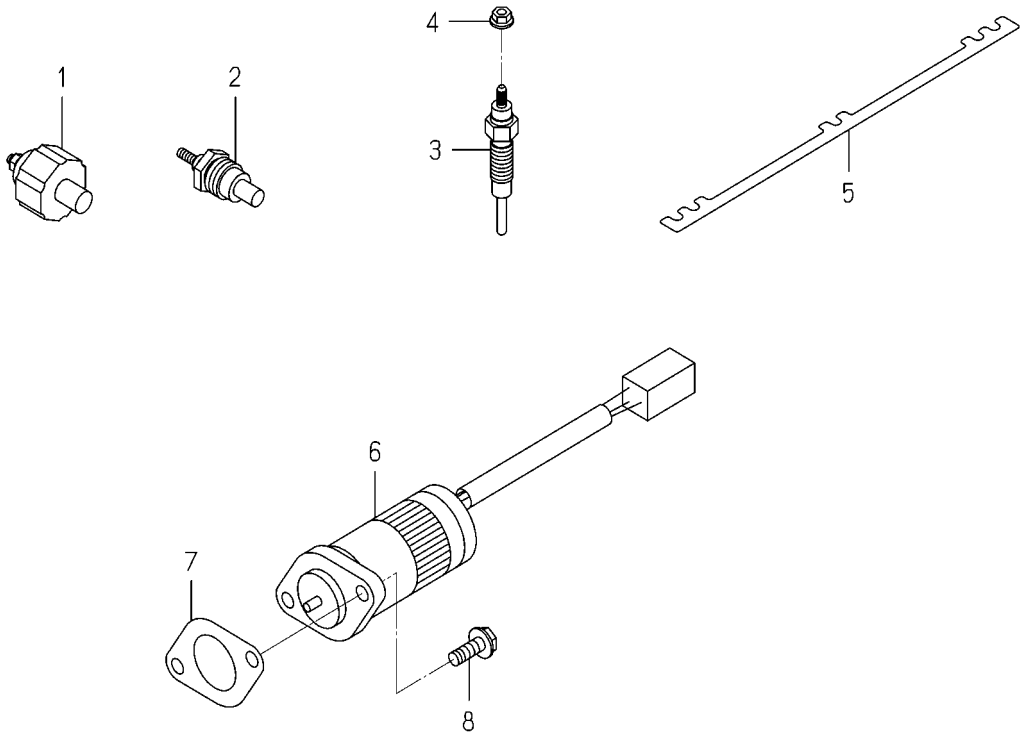

6004-821G-0100,6004-821G-0200

KEY	PART CODE	DESCRIPTION	SPC	TYPE OF MODEL E3CD B85	TYPE OF MODEL E3CD B86	ITC	COL	GRP	REMARKS
1	6281-971-003-00	SWITCH/OILPRESSURE	*	1	1				
2	6282-450-006-00	THERMOMETER	*	1	1				
3	6281-410-023-10	GLOWPLUG	*	3	3				
4	6209-440-005-00	NUT/FLANGE	*	3	3				
5	6219-732-017-00	CONNECTOR/GLOWPLUG	*	1	1				
6	6281-910-013-00	SOLENOID	*	1	1				
7	6209-630-002-10	GASKET	*	1	1				
8	V230-360-601-60	FLANGEBOLT/M6X16	*	2	2				

FIG. 27 REPAIR PARTS(OPTION)

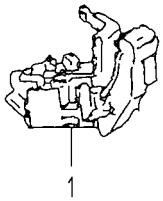

6005-998D-0100

KEY	PART CODE	DESCRIPTION	SPC	TYPE OF MODEL E3CD B85	TYPE OF MODEL E3CD B86	ITC	COL	GRP	REMARKS
1	6281-271-003-00	REGULATOR ASSY	T	1	1				

FIG. 28 REPAIR PARTS(OPTION)

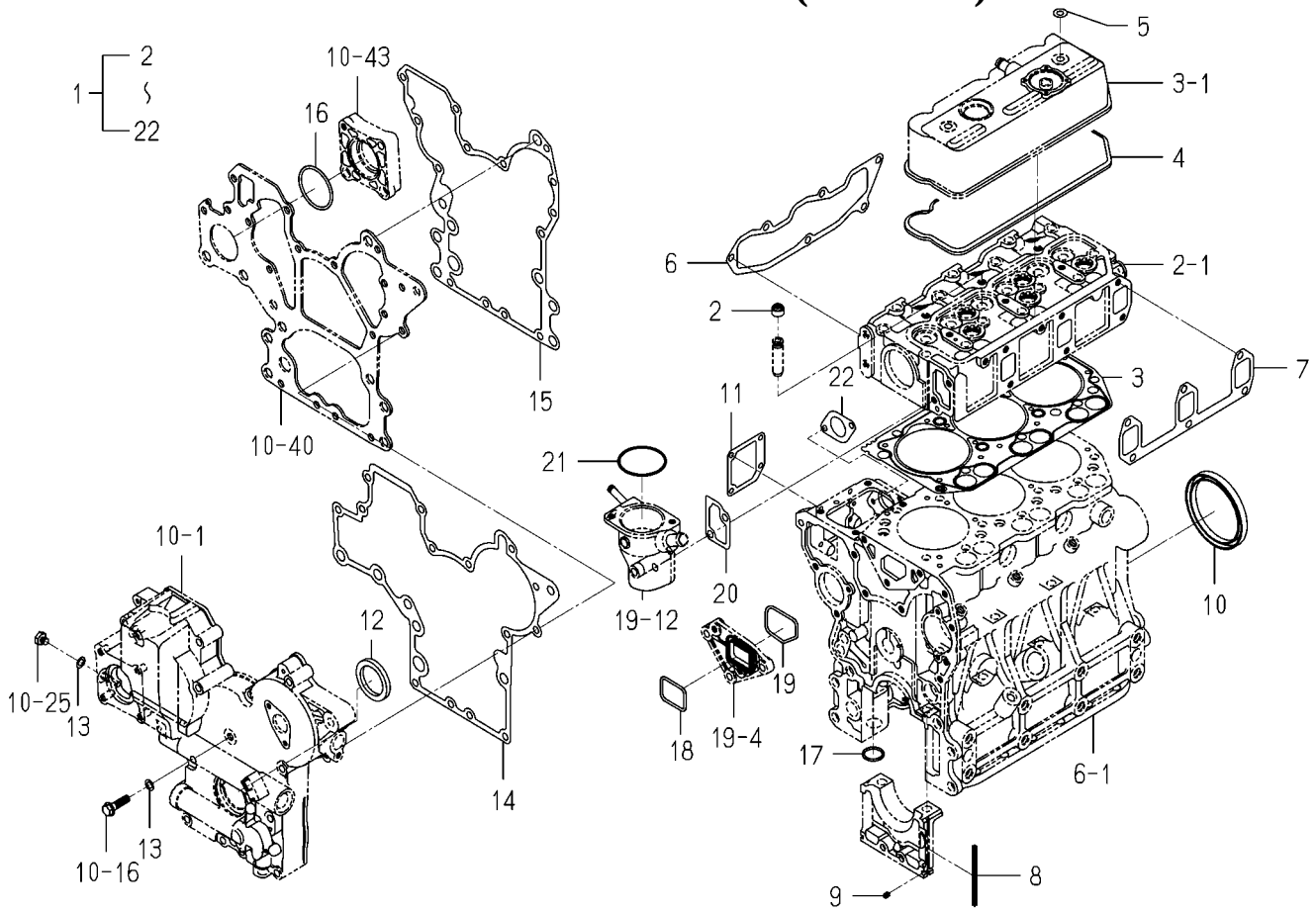

6005-999J-0100

KEY	PART CODE	DESCRIPTION	SPC	TYPE OF MODEL E3CD B85	TYPE OF MODEL E3CD B86	ITC	COL	GRP	REMARKS
1	6287-810-040-00	REPAIR/ENGINESET	T	1	1				
2	6212-569-002-00	SEAL,OIL	T	6	6				
3	6211-141-057-10	GASKET/CYLINDERHEAD	T	1	1				
4	6211-173-005-00	SEAL/CYL HEAD/UNDER	T	1	1				
5	6209-572-003-00	GASKET	T	2	2				
6	6214-115-003-10	GASKET/INLETMANIFOLD	T	1	1				
7	6214-145-004-20	GASKET/EXH MANIFOLD	T	1	1				
8	6211-258-001-00	SEAL,BEARING CAP	T	4	4				
9	6211-258-002-00	SEAL,BEARING CAP/7	T	2	2				
10	6209-625-003-20	OILSEAL	T	1	1				
11	6211-292-001-20	GASKET/COVER	T	1	1				
12	6209-625-002-00	SEAL,OIL	T	1	1				
13	6209-500-003-00	WASHER/08X14X01	T	2	2				
14	6211-312-005-10	GASKET/GEARCASE	T	1	1				
15	6211-312-006-10	GASKET/PLATE	T	1	1				
16	V723-102-005-00	O-RING/1A,S50	T	1	1				
17	V720-103-502-20	O-RING/1A,P22A	T	1	1				
18	6213-614-013-00	GASKET/WATERPUMP	T	1	1				
19	6213-614-014-00	GASKET/SPACER	T	1	1				
20	6213-743-002-10	GASKET/HOUSING	T	1	1				
21	V723-102-005-50	O-RING/1A,S55	T	1	1				
22	6209-630-002-10	GASKET	T	1	1				

FIG. 29 COMPONENT PARTS FOR 6215-300-037-00 ON Fig.21

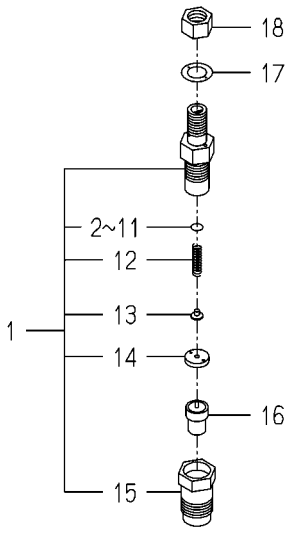

6215-300-037-0E

KEY	PART CODE	DESCRIPTION	SPC	TYPE OF MODEL E3CD B85	TYPE OF MODEL E3CD B86	ITC	COL	GRP	REMARKS
1	6215-330-022-00	HOLDER/NOZZLE ASSY	*	3	3				
2	6215-345-044-00	SHIM/0.10	*	3	3				
3	6215-345-045-00	SHIM/0.20	*	3	3				
4	6215-345-046-00	SHIM/0.30	*	3	3				
5	6215-345-047-00	SHIM/0.40	*	3	3				
6	6215-345-048-00	SHIM/0.50	*	3	3				
7	6215-345-049-00	SHIM/0.52	*	3	3				
8	6215-345-050-00	SHIM/0.54	*	3	3				
9	6215-345-051-00	SHIM/0.56	*	3	3				
10	6215-345-052-00	SHIM/0.58	*	3	3				
11	6215-345-053-00	SHIM/0.80	*	3	3				
12	6215-343-002-00	SPRING,NOZZLE	*	3	3				
13	6215-342-002-00	SPRINGSEAT	*	3	3				
14	6215-339-004-00	SPACER	*	3	3				
15	6215-332-006-00	NUT/NOZZLERETAINING	*	3	3				
16	6215-311-005-00	NOZZLE	*	3	3				
17	6215-359-003-00	GASKET	*	3	3				
18	6215-359-004-00	NUT	*	3	3				

FIG. 30 COMPONENT PARTS FOR 6215-600-155-00 ON Fig.22

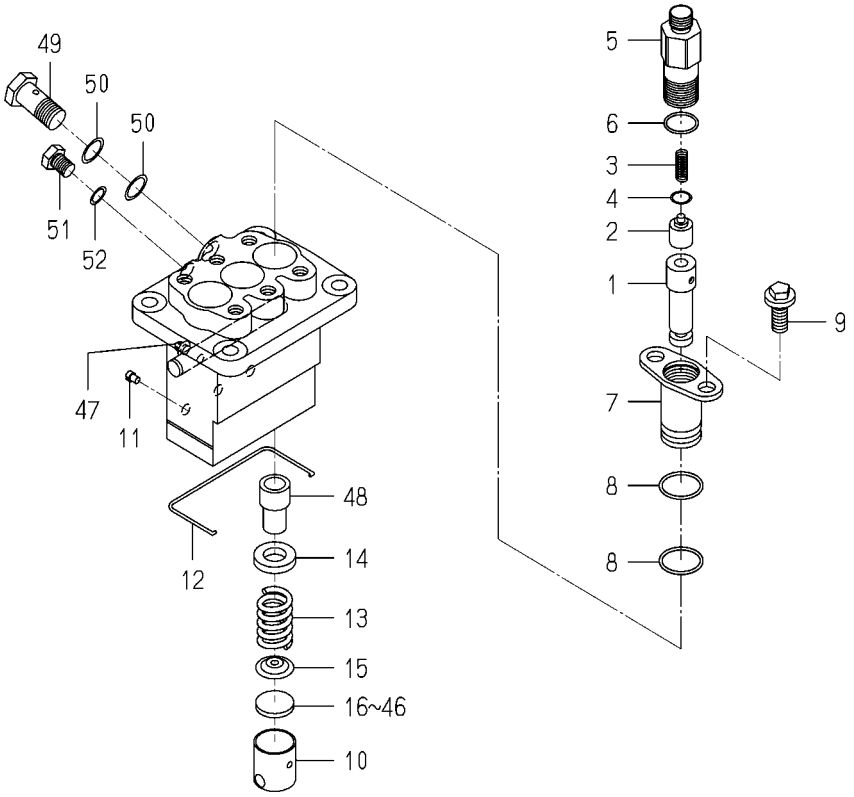

6215-600-155-0A

KEY	PART CODE	DESCRIPTION	SPC	TYPE OF MODEL E3CD B85	TYPE OF MODEL E3CD B86	ITC	COL	GRP	REMARKS
1	6215-631-033-00	PLUNGER ASSY	*	3	3				
2	6215-641-002-00	VALVE,DELIVERY	*	3	3				
3	6215-643-005-00	SPRING/DELIVERYVALVE	*	3	3				
4	6215-649-008-00	GASKET	*	3	3				
5	6215-644-009-00	HOLDER/DELIVERYVALVE	*	3	3				
6	6215-649-014-00	ORING	*	3	3				
7	6215-635-004-00	SLEEVEFLANGE	*	3	3				
8	6215-649-013-00	ORING	*	6	6				
9	6215-649-011-00	BOLT	*	6	6				
10	6215-622-003-00	TAPPET	*	3	3				
11	6215-629-017-00	PIN	*	3	3				
12	6215-629-035-00	SNAPRING	*	1	1				
13	6215-634-003-00	SPRING/PLUNGER	*	3	3				
14	6215-639-008-00	SPRINGSEAT	*	3	3				
15	6215-639-009-00	SPRINGSEAT	*	3	3				
16	6215-629-060-00	PLATE/T=2.60	*	1	1				
17	6215-629-061-00	PLATE/T=2.65	*	1	1				
18	6215-629-062-00	PLATE/T=2.70	*	1	1				
19	6215-629-063-00	PLATE/T=2.75	*	1	1				
20	6215-629-064-00	PLATE/T=2.80	*	1	1				
21	6215-629-065-00	PLATE/T=2.85	*	1	1				
22	6215-629-066-00	PLATE/T=2.90	*	1	1				
23	6215-629-067-00	PLATE/T=2.95	*	1	1				
24	6215-629-036-00	PLATE/T=3.00	*	1	1				
25	6215-629-037-00	PLATE/T=3.05	*	1	1				
26	6215-629-038-00	PLATE/T=3.10	*	1	1				
27	6215-629-039-00	PLATE/T=3.15	*	1	1				
28	6215-629-040-00	PLATE/T=3.20	*	1	1				
29	6215-629-041-00	PLATE/T=3.25	*	1	1				
30	6215-629-042-00	PLATE/T=3.30	*	1	1				

FIG. 30 COMPONENT PARTS FOR 6215-600-155-00 ON Fig.22

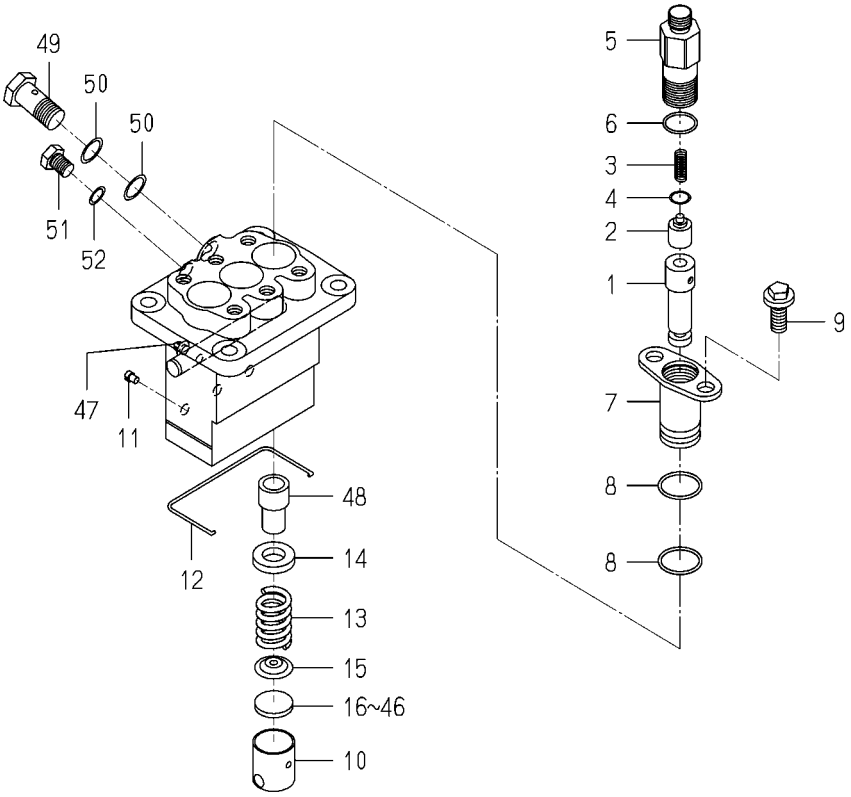

6215-600-155-0A

KEY	PART CODE	DESCRIPTION	SPC	TYPE OF MODEL E3CD B85	TYPE OF MODEL E3CD B86	ITC	COL	GRP	REMARKS
31	6215-629-043-00	PLATE/T=3.35	*	1	1				
32	6215-629-044-00	PLATE/T=3.40	*	1	1				
33	6215-629-045-00	PLATE/T=3.45	*	1	1				
34	6215-629-046-00	PLATE/T=3.50	*	1	1				
35	6215-629-047-00	PLATE/T=3.55	*	1	1				
36	6215-629-048-00	PLATE/T=3.60	*	1	1				
37	6215-629-049-00	PLATE/T=3.65	*	1	1				
38	6215-629-050-00	PLATE/T=3.70	*	1	1				
39	6215-629-051-00	PLATE/T=3.75	*	1	1				
40	6215-629-052-00	PLATE/T=3.80	*	1	1				
41	6215-629-053-00	PLATE/T=3.85	*	1	1				
42	6215-629-054-00	PLATE/T=3.90	*	1	1				
43	6215-629-055-00	PLATE/T=3.95	*	1	1				
44	6215-629-056-00	PLATE/T=4.00	*	1	1				
45	6215-629-058-00	PLATE/T=4.05	*	1	1				
46	6215-629-059-00	PLATE/T=4.10	*	1	1				
47	6215-637-004-00	CONTROLRACK	*	1	1				
48	6215-635-005-00	CONTROLSLEEVE	*	3	3				
49	6215-619-023-00	EYEBOLT	*	1	1				
50	6115-639-008-00	GASKET	*	2	2				
51	6215-619-024-00	BOLT	*	1	1				
52	6215-359-006-00	GASKET	*	1	1				

FIG. 31 COMPONENT PARTS FOR 6281-100-002-50 ON Fig.25

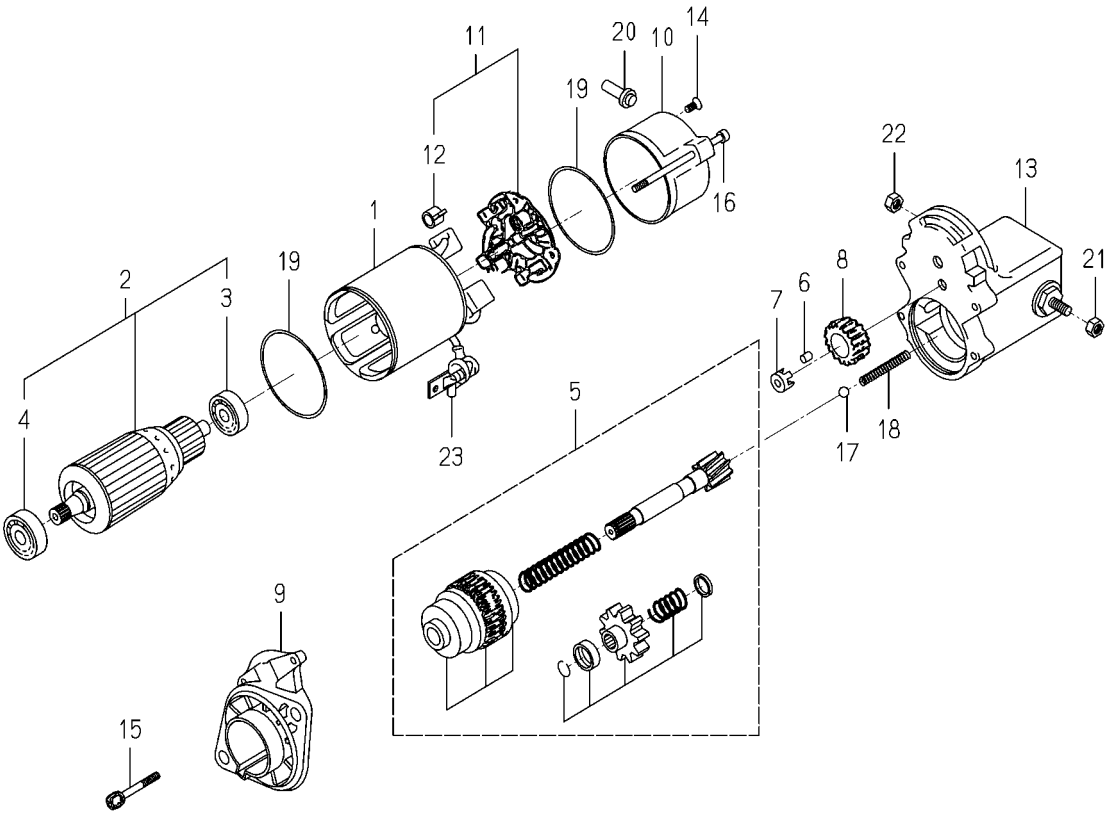

6281-100-002-5M

KEY	PART CODE	DESCRIPTION	SPC	TYPE OF MODEL E3CD B85	TYPE OF MODEL E3CD B86	ITC	COL	GRP	REMARKS
1	6281-111-005-00	YOKE/STARTER ASSY	*	1	1				
2	6281-121-006-00	ARMATURE/STARTE ASSY	*	1	1				
3	6281-129-038-00	BEARING	*	1	1				
4	6281-129-039-00	BEARING	*	1	1				
5	6281-124-007-10	CLUTCH/STARTER ASSY	*	1	1				
6	6581-129-099-00	RORA	*	5	5				
7	6281-129-040-00	RETAINER	*	1	1				
8	6281-123-005-00	PINION/STARTER	*	1	1				
9	6281-129-041-10	HOUSING/STARTER ASSY	*	1	1				
10	6281-115-008-00	FRAME/STARTEREND	*	1	1				
11	6281-116-004-00	HOLDER/STARTER ASSY	*	1	1				
12	6581-117-007-00	SPRING,BRUSH	*	4	4				
13	6281-151-025-10	SWITCH/MAGNETIC ASSY	*	1	1				
14	6281-129-062-00	SCREW	*	2	2				
15	6281-129-042-00	BOLT/WS	*	2	2				
16	6281-129-043-00	BOLT/THROUGH	*	2	2				
17	6581-129-092-00	BALL	*	1	1				
18	6281-129-044-00	SPRING/RETURN	*	1	1				
19	6281-129-003-00	O-RING	*	2	2				
20	6281-115-016-00	BUSHING/DRAIN	*	1	1				
21	6909-111-508-00	NUT	*	1	1				
22	6281-229-041-00	NUT	*	1	1				
23	6281-115-010-00	COVER	*	1	1				

FIG. 32 COMPONENT PARTS FOR 6281-200-021-00 ON Fig.25

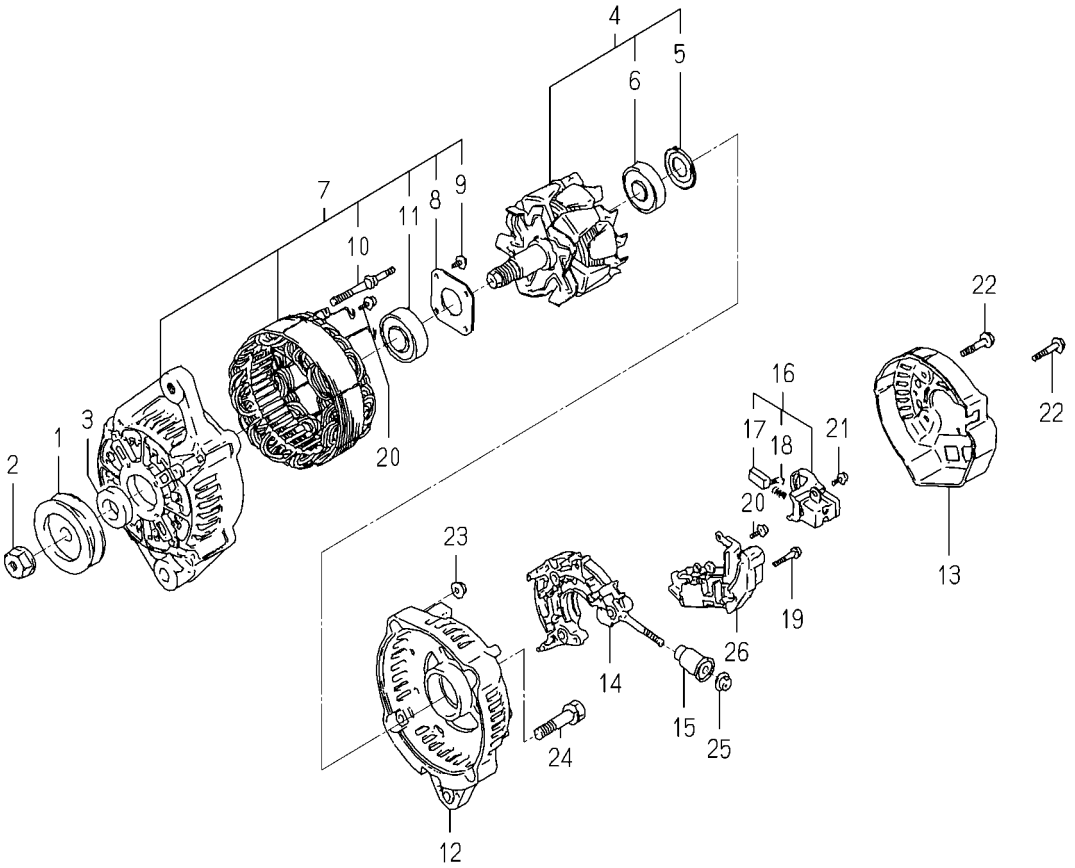

6281-200-021-0B

KEY	PART CODE	DESCRIPTION	SPC	TYPE OF MODEL E3CD B85	E3CD B86	ITC	COL	GRP	REMARKS
1	6281-222-012-00	PULLEY	*	1	1				
2	6281-229-002-00	NUT	*	1	1				
3	6281-229-003-00	COLLOR	*	1	1				
4	6281-221-007-00	ROTOR ASSY	*	1	1				
5	6281-229-004-00	COVER,BEARING	*	1	1				
6	6281-229-032-00	BEARING/BALL	*	1	1				
7	6281-213-018-00	FRAME/DRIVEEND ASSY	*	1	1				
8	6281-229-006-00	PLATE	*	1	1				
9	6281-229-007-00	BOLT	*	4	4				
10	6281-229-008-00	BOLT	*	2	2				
11	6281-229-033-00	BEARING/BALL	*	1	1				
12	6281-214-003-00	FRAME	*	1	1				
13	6281-214-004-00	COVER	*	1	1				
14	6281-229-029-00	HOLDER ASSY	*	1	1				
15	6281-229-011-00	BUSH	*	1	1				
16	6281-217-002-00	HOLDER/BRUSH ASSY	*	1	1				
17	6281-215-001-00	BRUSH	*	2	2				
18	6281-216-001-00	SPRING	*	2	2				
19	6281-229-012-00	BOLT	*	2	2				
20	6281-229-013-00	BOLT	*	6	6				
21	6281-229-014-00	BOLT	*	1	1				
22	6281-229-015-00	BOLT	*	3	3				
23	6281-229-016-00	NUT	*	2	2				
24	6281-229-017-00	BOLT	*	2	2				
25	6281-229-018-00	NUT	*	1	1				
26	6281-271-008-00	REGULATOR ASSY	*	1	1				

C H A S S I S

FIG. 1 RADIATOR SYSTEM (TM3217F,3247F TYPE)

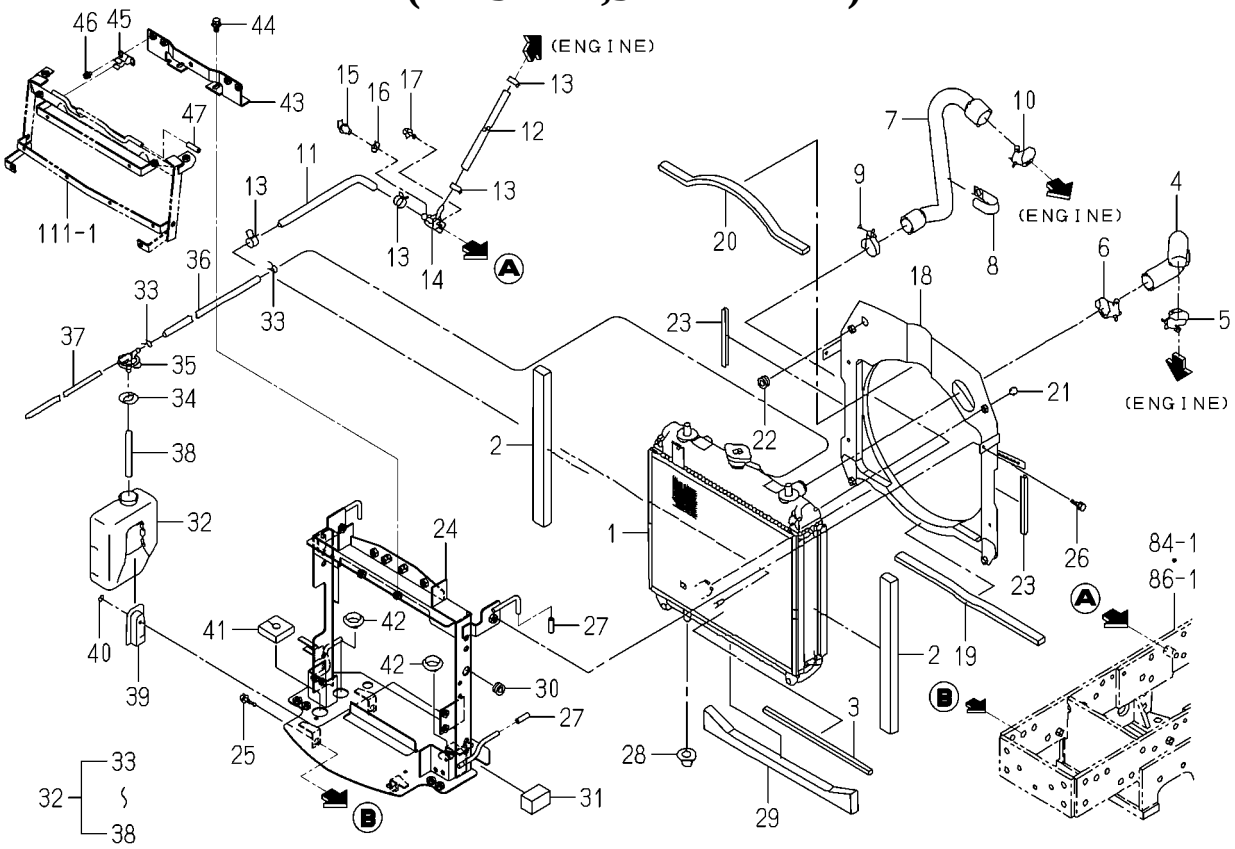

1774-102D-0100

KEY	PART CODE	DESCRIPTION	SPC	TYPE OF MODEL TM3217	TM3247	TM3267		ITC	COL	GRP	REMARKS
1	1774-102-270-00	RADIATOR/390X30 ASSY	*	1	1						
2	3834-336-051-00	INSULATOR/20X350	*	2	2						
3	1770-102-005-00	INSULATOR/10X10X290	*	1	1						
4	1675-102-004-00	HOSE/RADIATOR/INLET	*	1	1						
5	J061-236-044-00	CLAMP/WIRE/36-44	*	1	1						
6	J061-230-038-00	CLAMP/WIRE/30-38	*	1	1						
7	1738-102-001-10	HOSE/RADIATOR/OUTLET	*	1	1						
8	1425-621-004-00	HOLDER/JE/9-9	*	1	1						
9	J061-230-038-00	CLAMP/WIRE/30-38	*	1	1						
10	J061-236-044-00	CLAMP/WIRE/36-44	*	1	1						
11	1614-102-003-00	HOSE/205	*	1	1						
12	1698-102-003-00	HOSE/230	*	1	1						
13	J062-147-159-00	CLIP/HOSE/14.7-15.9	*	4	4						
14	1560-104-010-40	CONNECTOR	*	1	1						
15	1424-101-203-00	PLUG	*	1	1						
16	1424-101-204-00	PACKING	*	1	1						
17	V211-360-802-00	BOLT,SP/M8X20	*	1	1						
18	1750-102-820-00	SHROUD COMP	*	1	1						
19	1675-102-002-00	INSULATOR	*	1	1						
20	1650-102-006-10	INSULATOR	*	1	1						
21	V230-360-602-00	FLANGEBOLT/M6X20	*	4	4						
22	2142-581-002-00	GROMMET/15	*	1	1						
23	1705-102-014-00	TRIM/130	*	2	2						
24	1774-102-250-00	BRACKET/RADIATO COMP	*	1	1						
25	V231-361-201-60	FLANGEBOLT/M12X16	*	4	4						
26	V231-360-801-20	FLANGEBOLT/M8X12	*	2	2						
27	1716-601-009-00	TUBE/07X09X30	*	4	4						
28	3817-330-202-00	INSULATOR	*	2	2						
29	1716-410-004-10	INSULATOR	*	1	1						
30	2139-505-002-00	GROMMET	*	1	1						

FIG. 1 RADIATOR SYSTEM (TM3217F,3247F TYPE)

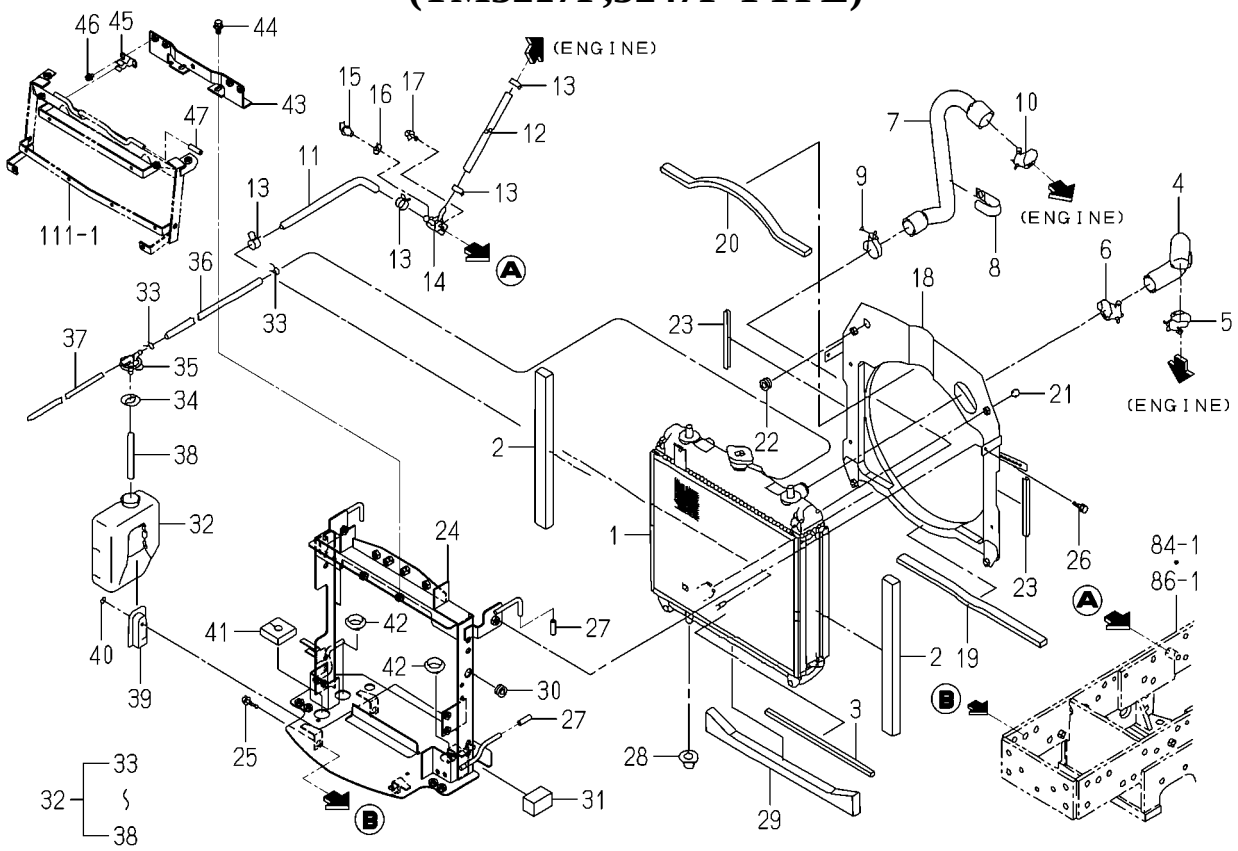

1774-102D-0100

KEY	PART CODE	DESCRIPTION	SPC	TYPE OF MODEL				ITC	COL	GRP	REMARKS
				TM3217	TM3247	TM3267					
31	1593-406-008-00	SEAL/30X30X50	*	1	1						
32	1716-102-270-00	RESERVETANK ASSY	*	1	1						
33	6221-408-013-00	CLAMP	*	2	2						
34	6221-408-009-00	PACKING	*	1	1						
35	6221-408-008-00	CAP	*	1	1						
36	1716-102-281-00	HOSE/RUBBER	*	1	1						
37	1716-102-282-00	HOSE/RUBBER	*	1	1						
38	6221-408-011-00	PIPE	*	1	1						
39	6221-408-003-00	BRACKET/RESERVE TANK	*	1	1						
40	V230-360-601-20	FLANGEBOLT/M6X12	*	2	2						
41	1741-112-053-10	INSULATOR/50X50X15	*	1	1						
42	1560-630-029-00	CAP/30	*	2	2						
43	1763-602-210-20	BRACKET COMP	*	1	1						
44	V211-360-801-60	BOLT,SP/M8X16	*	2	2						
45	1729-604-003-00	SPRING	*	2	2						
46	V120-366-001-20	SCREW,SP/M6X12	*	4	4						
47	1716-601-009-00	TUBE/07X09X30	*	2	2						

FIG. 2 RADIATOR SYSTEM (TM3217H,3247H TYPE)

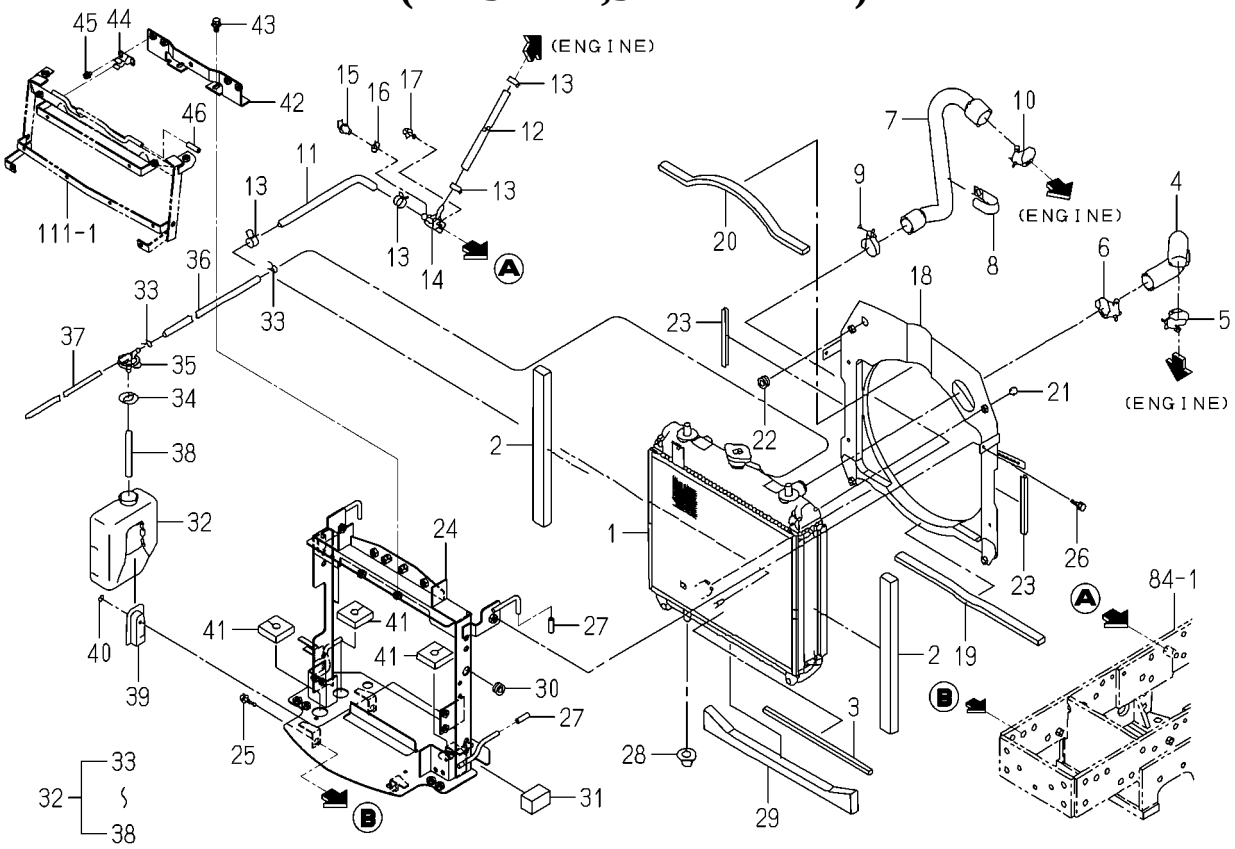

1774-102E-0100

KEY	PART CODE	DESCRIPTION	SPC	TYPE OF MODEL TM3217	TM3247	TM3267		ITC	COL	GRP	REMARKS
1	1774-102-270-00	RADIATOR/390X30 ASSY	*	1	1						
2	3834-336-051-00	INSULATOR/20X350	*	2	2						
3	1770-102-005-00	INSULATOR/10X10X290	*	1	1						
4	1675-102-004-00	HOSE/RADIATOR/INLET	*	1	1						
5	J061-236-044-00	CLAMP/WIRE/36-44	*	1	1						
6	J061-230-038-00	CLAMP/WIRE/30-38	*	1	1						
7	1738-102-001-10	HOSE/RADIATOR/OUTLET	*	1	1						
8	1425-621-004-00	HOLDER/JE/9-9	*	1	1						
9	J061-230-038-00	CLAMP/WIRE/30-38	*	1	1						
10	J061-236-044-00	CLAMP/WIRE/36-44	*	1	1						
11	1614-102-003-00	HOSE/205	*	1	1						
12	1698-102-003-00	HOSE/230	*	1	1						
13	J062-147-159-00	CLIP/HOSE/14.7-15.9	*	4	4						
14	1560-104-010-40	CONNECTOR	*	1	1						
15	1424-101-203-00	PLUG	*	1	1						
16	1424-101-204-00	PACKING	*	1	1						
17	V211-360-802-00	BOLT,SP/M8X20	*	1	1						
18	1750-102-820-00	SHROUD COMP	*	1	1						
19	1675-102-002-00	INSULATOR	*	1	1						
20	1650-102-006-10	INSULATOR	*	1	1						
21	V230-360-602-00	FLANGEBOLT/M6X20	*	4	4						
22	2142-581-002-00	GROMMET/15	*	1	1						
23	1705-102-014-00	TRIM/130	*	2	2						
24	1774-102-250-00	BRACKET/RADIATO COMP	*	1	1						
25	V231-361-201-60	FLANGEBOLT/M12X16	*	4	4						
26	V231-360-801-20	FLANGEBOLT/M8X12	*	2	2						
27	1716-601-009-00	TUBE/07X09X30	*	4	4						
28	3817-330-202-00	INSULATOR	*	2	2						
29	1716-410-004-10	INSULATOR	*	1	1						
30	2139-505-002-00	GROMMET	*	1	1						

FIG. 2 RADIATOR SYSTEM (TM3217H,3247H TYPE)

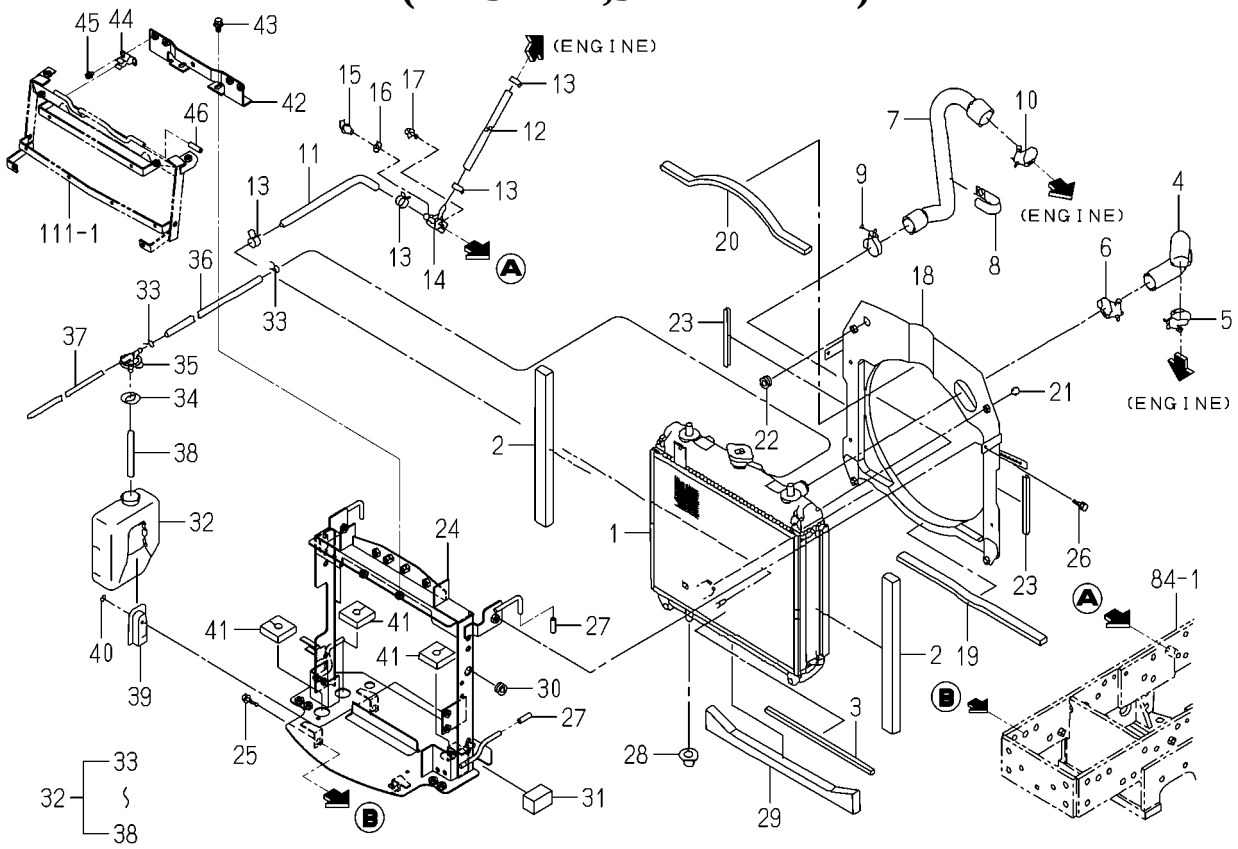

1774-102E-0100

KEY	PART CODE	DESCRIPTION	SPC	TYPE OF MODEL TM3217	TM3247	TM3267		ITC	COL	GRP	REMARKS
31	1593-406-008-00	SEAL/30X30X50	*	1	1						
32	1716-102-270-00	RESERVETANK ASSY	*	1	1						
33	6221-408-013-00	CLAMP	*	2	2						
34	6221-408-009-00	PACKING	*	1	1						
35	6221-408-008-00	CAP	*	1	1						
36	1716-102-281-00	HOSE/RUBBER	*	1	1						
37	1716-102-282-00	HOSE/RUBBER	*	1	1						
38	6221-408-011-00	PIPE	*	1	1						
39	6221-408-003-00	BRACKET/RESERVE TANK	*	1	1						
40	V230-360-601-20	FLANGEBOLT/M6X12	*	2	2						
41	1741-112-053-10	INSULATOR/50X50X15	*	3	3						
42	1763-602-210-20	BRACKET COMP	*	1	1						
43	V211-360-801-60	BOLT,SP/M8X16	*	2	2						
44	1729-604-003-00	SPRING	*	2	2						
45	V120-366-001-20	SCREW,SP/M6X12	*	4	4						
46	1716-601-009-00	TUBE/07X09X30	*	2	2						

FIG. 3 RADIATOR SYSTEM(TM3267F TYPE)

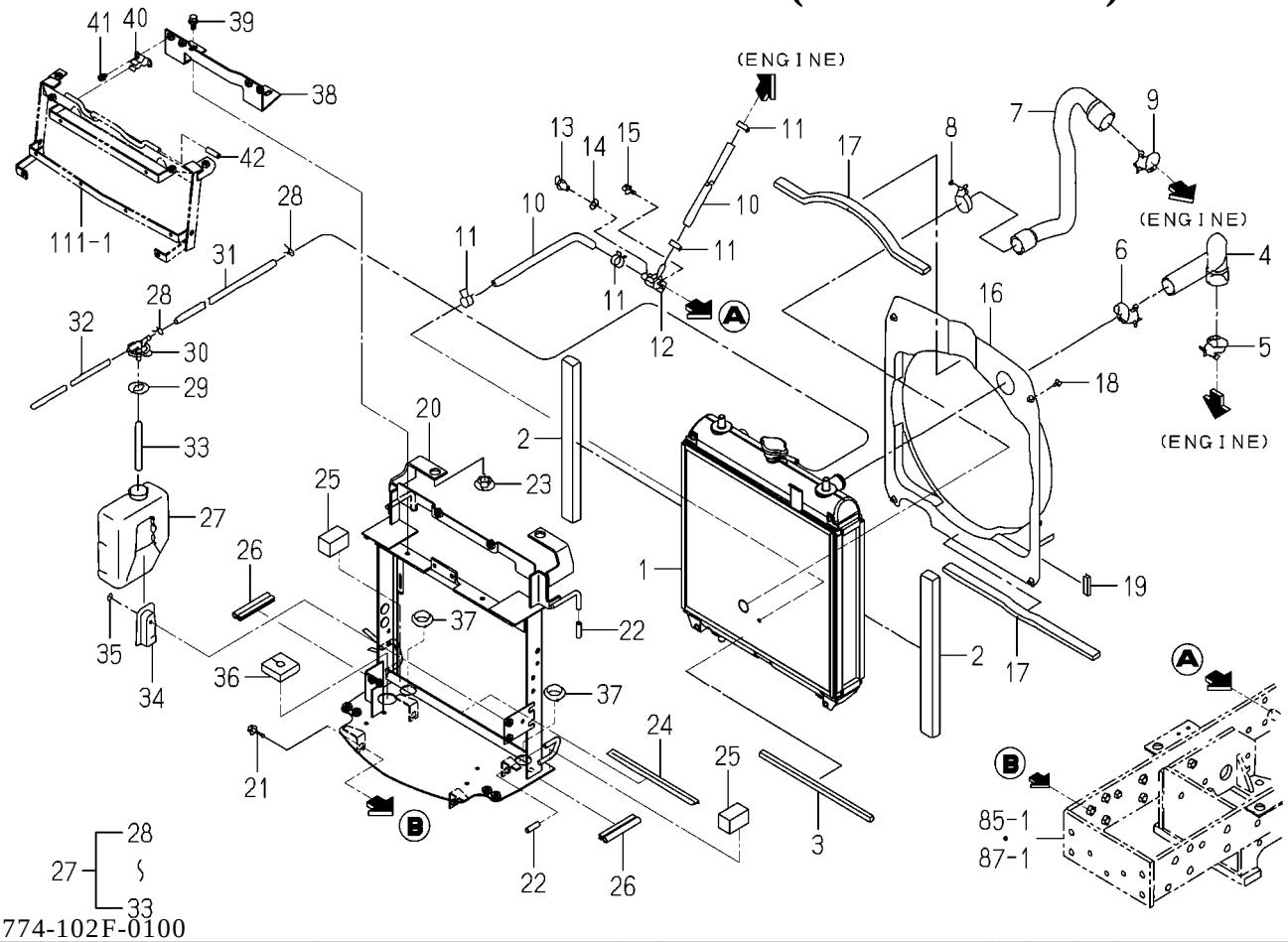

1774-102F-0100

KEY	PART CODE	DESCRIPTION	SPC	TYPE OF MODEL TM3217	TM3247	TM3267		ITC	COL	GRP	REMARKS
1	1827-102-230-00	RADIATOR/390X35 ASSY	*			1					
2	3834-336-051-00	INSULATOR/20X350	*			2					
3	1770-102-005-00	INSULATOR/10X10X290	*			1					
4	1678-102-002-00	HOSE/RADIATOR/INLET	*			1					
5	J061-236-044-00	CLAMP/WIRE/36-44	*			1					
6	J061-230-038-00	CLAMP/WIRE/30-38	*			1					
7	1716-102-081-00	HOSE/RADIATOR/OUTLET	*			1					
8	J061-230-038-00	CLAMP/WIRE/30-38	*			1					
9	J061-236-044-00	CLAMP/WIRE/36-44	*			1					
10	1593-102-003-20	HOSE/270	*			2					
11	J062-147-159-00	CLIP/HOSE/14.7-15.9	*			4					
12	1560-104-010-40	CONNECTOR	*			1					
13	1424-101-203-00	PLUG	*			1					
14	1424-101-204-00	PACKING	*			1					
15	V211-360-802-00	BOLT,SP/M8X20	*			1					
16	1716-102-810-00	SHROUD COMP	*			1					
17	1675-102-002-00	INSULATOR	*			2					
18	V230-360-602-00	FLANGEBOLT/M6X20	*			4					
19	3680-155-005-00	PROTECTOR/040	*			1					
20	1774-102-260-00	BRACKET/RADIATOR/67	*			1					
21	V231-361-202-50	FLANGEBOLT/M12X25	*			4					
22	1716-601-009-00	TUBE/07X09X30	*			4					
23	3817-330-202-00	INSULATOR	*			2					
24	1689-603-012-00	INSULATOR/220	*			1					
25	1593-406-008-00	SEAL/30X30X50	*			2					
26	1650-601-009-00	TRIM/90	*			2					
27	1716-102-270-00	RESERVETANK ASSY	*			1					
28	6221-408-013-00	CLAMP	*			2					
29	6221-408-009-00	PACKING	*			1					
30	6221-408-008-00	CAP	*			1					

FIG. 3 RADIATOR SYSTEM(TM3267F TYPE)

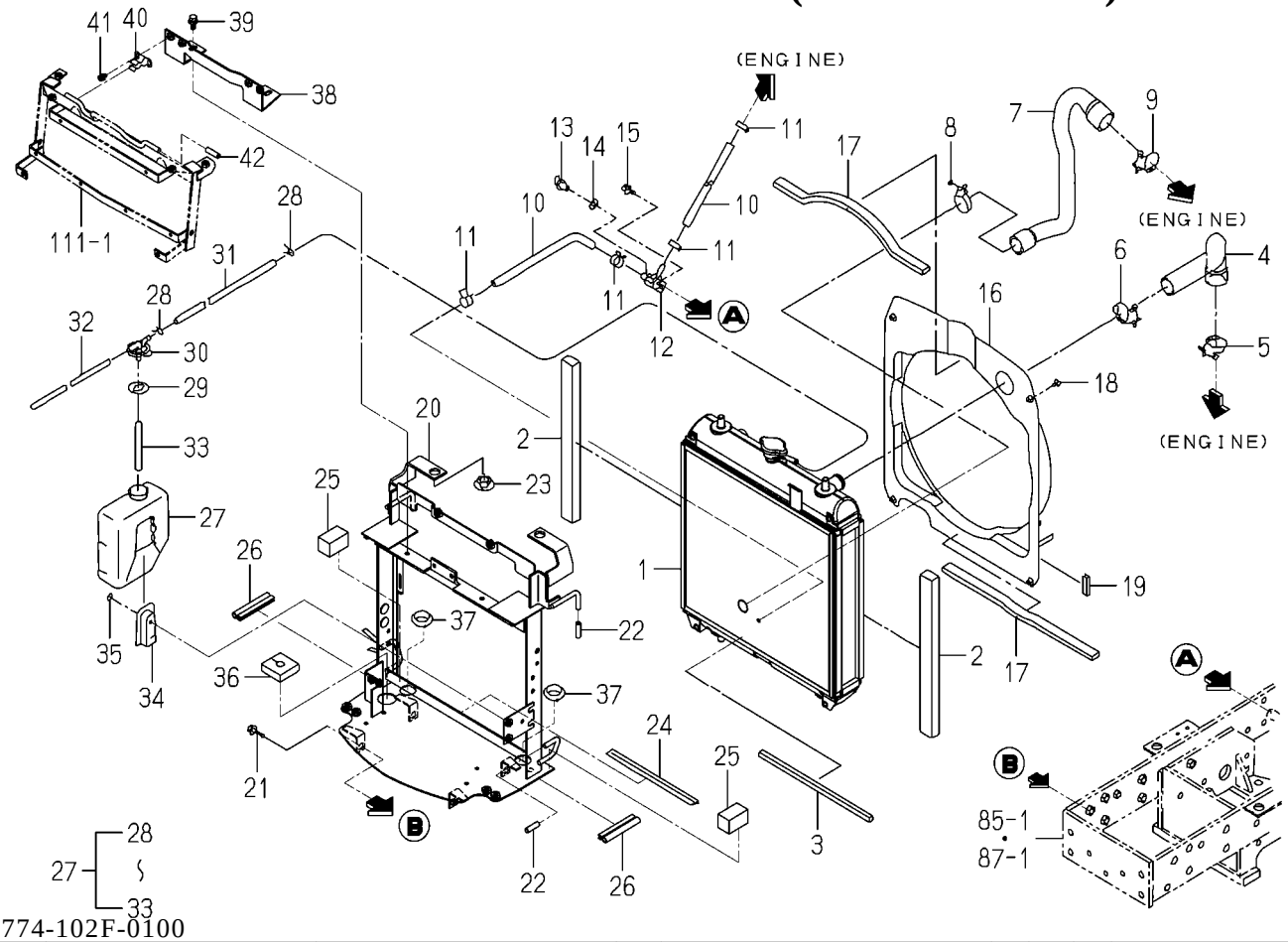

1774-102F-0100

KEY	PART CODE	DESCRIPTION	SPC	TYPE OF MODEL TM3217	TM3247	TM3267		ITC	COL	GRP	REMARKS
31	1716-102-281-00	HOSE/RUBBER	*			1					
32	1716-102-282-00	HOSE/RUBBER	*			1					
33	6221-408-011-00	PIPE	*			1					
34	6221-408-003-00	BRACKET/RESERVE TANK	*			1					
35	V230-360-601-20	FLANGEBOLT/M6X12	*			2					
36	1741-112-053-10	INSULATOR/50X50X15	*			1					
37	1560-630-029-00	CAP/30	*			2					
38	1766-602-200-20	BRACKET COMP	*			1					
39	V211-360-801-60	BOLT,SP/M8X16	*			2					
40	1729-604-003-00	SPRING	*			2					
41	V120-366-001-20	SCREW,SP/M6X12	*			4					
42	1716-601-009-00	TUBE/07X09X30	*			2					

FIG. 4 RADIATOR SYSTEM(TM3267H TYPE)

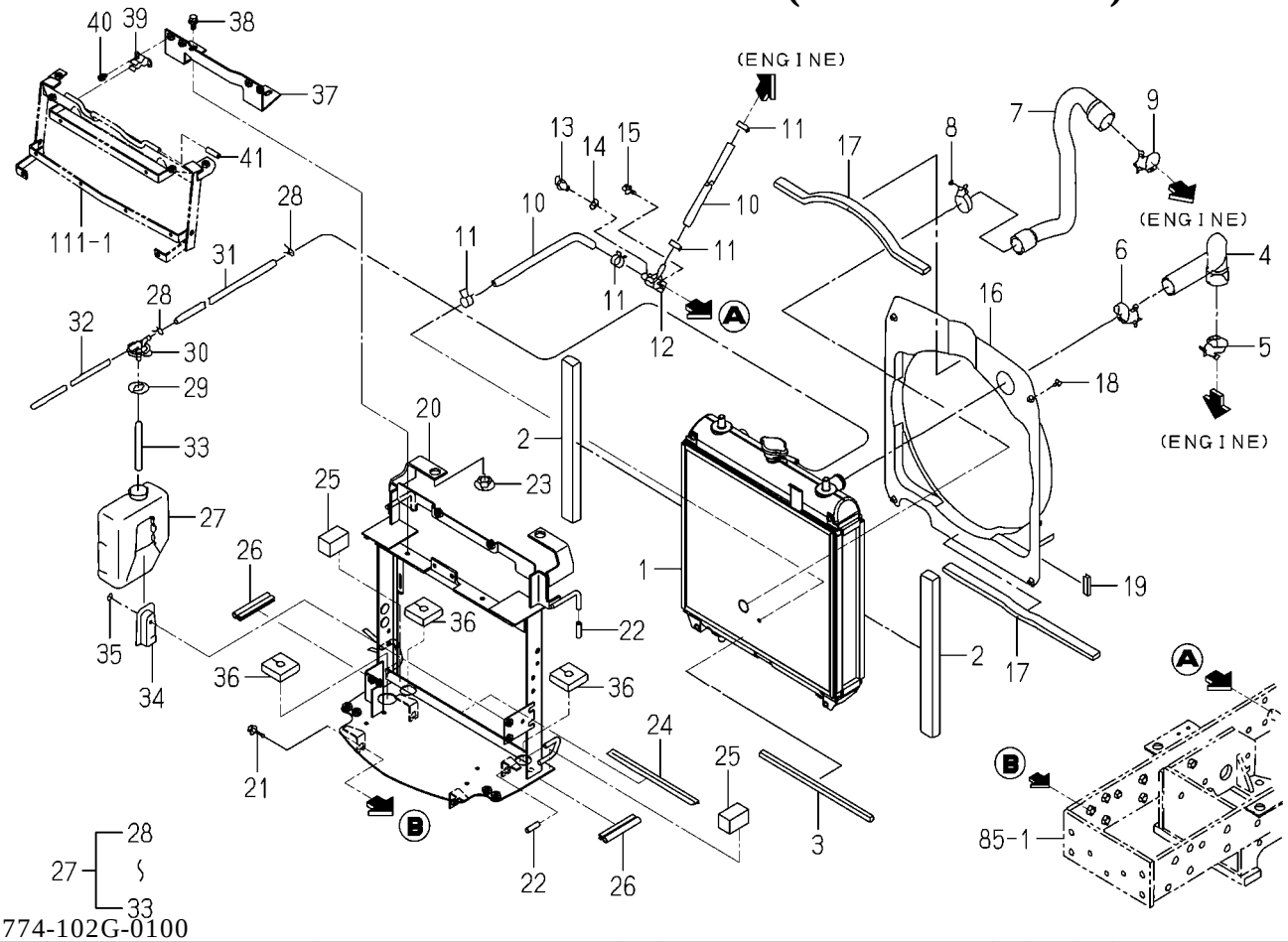

1774-102G-0100

KEY	PART CODE	DESCRIPTION	SPC	TYPE OF MODEL TM3217	TM3247	TM3267		ITC	COL	GRP	REMARKS
1	1827-102-230-00	RADIATOR/390X35 ASSY	*			1					
2	3834-336-051-00	INSULATOR/20X350	*			2					
3	1770-102-005-00	INSULATOR/10X10X290	*			1					
4	1678-102-002-00	HOSE/RADIATOR/INLET	*			1					
5	J061-236-044-00	CLAMP/WIRE/36-44	*			1					
6	J061-230-038-00	CLAMP/WIRE/30-38	*			1					
7	1716-102-081-00	HOSE/RADIATOR/OUTLET	*			1					
8	J061-230-038-00	CLAMP/WIRE/30-38	*			1					
9	J061-236-044-00	CLAMP/WIRE/36-44	*			1					
10	1593-102-003-20	HOSE/270	*			2					
11	J062-147-159-00	CLIP/HOSE/14.7-15.9	*			4					
12	1560-104-010-40	CONNECTOR	*			1					
13	1424-101-203-00	PLUG	*			1					
14	1424-101-204-00	PACKING	*			1					
15	V211-360-802-00	BOLT,SP/M8X20	*			1					
16	1716-102-810-00	SHROUD COMP	*			1					
17	1675-102-002-00	INSULATOR	*			2					
18	V230-360-602-00	FLANGEBOLT/M6X20	*			4					
19	3680-155-005-00	PROTECTOR/040	*			1					
20	1774-102-260-00	BRACKET/RADIATOR/67	*			1					
21	V231-361-202-50	FLANGEBOLT/M12X25	*			4					
22	1716-601-009-00	TUBE/07X09X30	*			4					
23	3817-330-202-00	INSULATOR	*			2					
24	1689-603-012-00	INSULATOR/220	*			1					
25	1593-406-008-00	SEAL/30X30X50	*			2					
26	1650-601-009-00	TRIM/90	*			2					
27	1716-102-270-00	RESERVETANK ASSY	*			1					
28	6221-408-013-00	CLAMP	*			2					
29	6221-408-009-00	PACKING	*			1					
30	6221-408-008-00	CAP	*			1					

FIG. 4 RADIATOR SYSTEM(TM3267H TYPE)

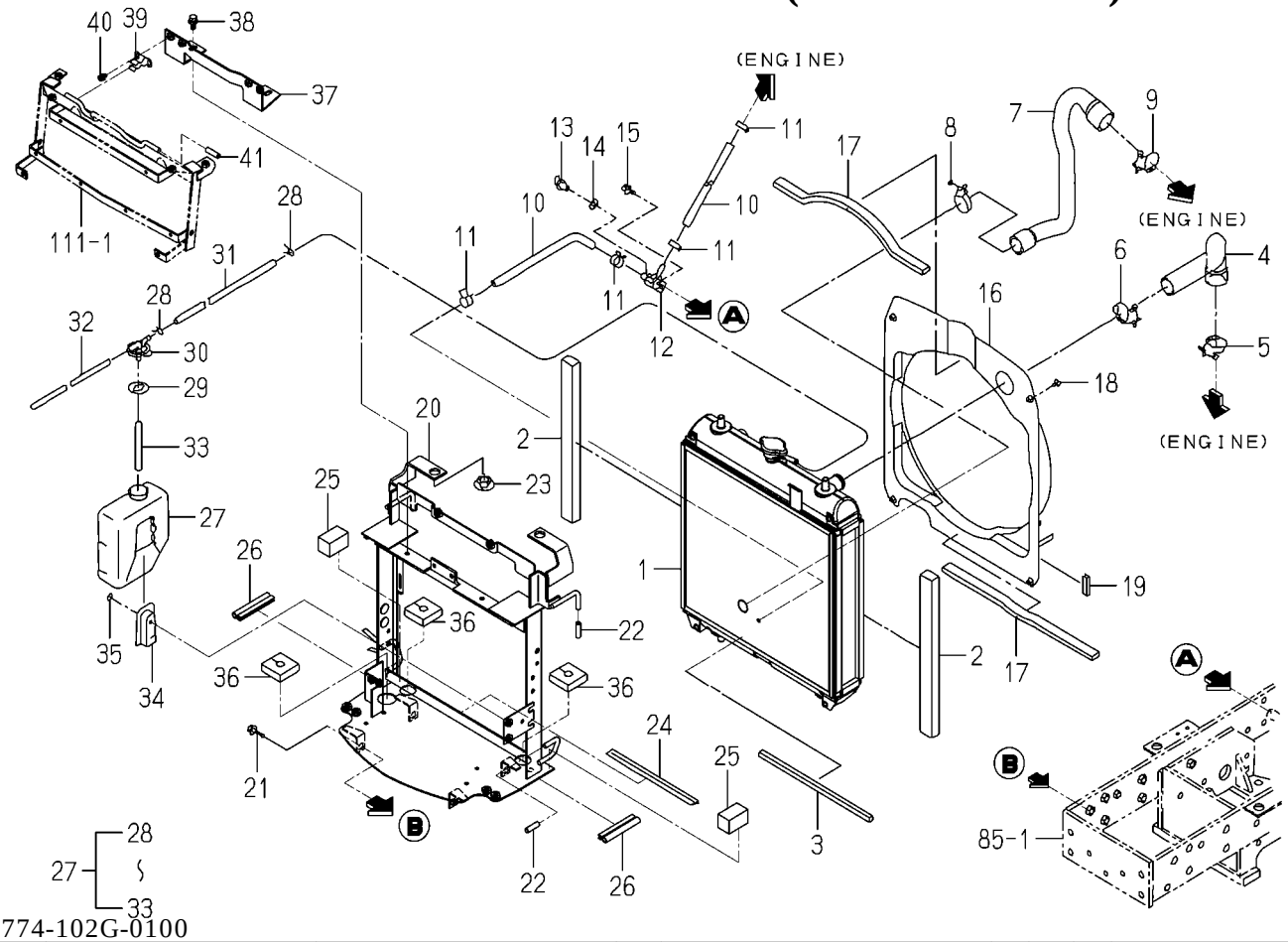

1774-102G-0100

KEY	PART CODE	DESCRIPTION	SPC	TYPE OF MODEL				ITC	COL	GRP	REMARKS
				TM3217	TM3247	TM3267					
31	1716-102-281-00	HOSE/RUBBER	*			1					
32	1716-102-282-00	HOSE/RUBBER	*			1					
33	6221-408-011-00	PIPE	*			1					
34	6221-408-003-00	BRACKET/RESERVE TANK	*			1					
35	V230-360-601-20	FLANGEBOLT/M6X12	*			2					
36	1741-112-053-10	INSULATOR/50X50X15	*			3					
37	1766-602-200-20	BRACKET COMP	*			1					
38	V211-360-801-60	BOLT,SP/M8X16	*			2					
39	1729-604-003-00	SPRING	*			2					
40	V120-366-001-20	SCREW,SP/M6X12	*			4					
41	1716-601-009-00	TUBE/07X09X30	*			2					

FIG. 5 MUFFLER SYSTEM(TM3217,3247 TYPE)

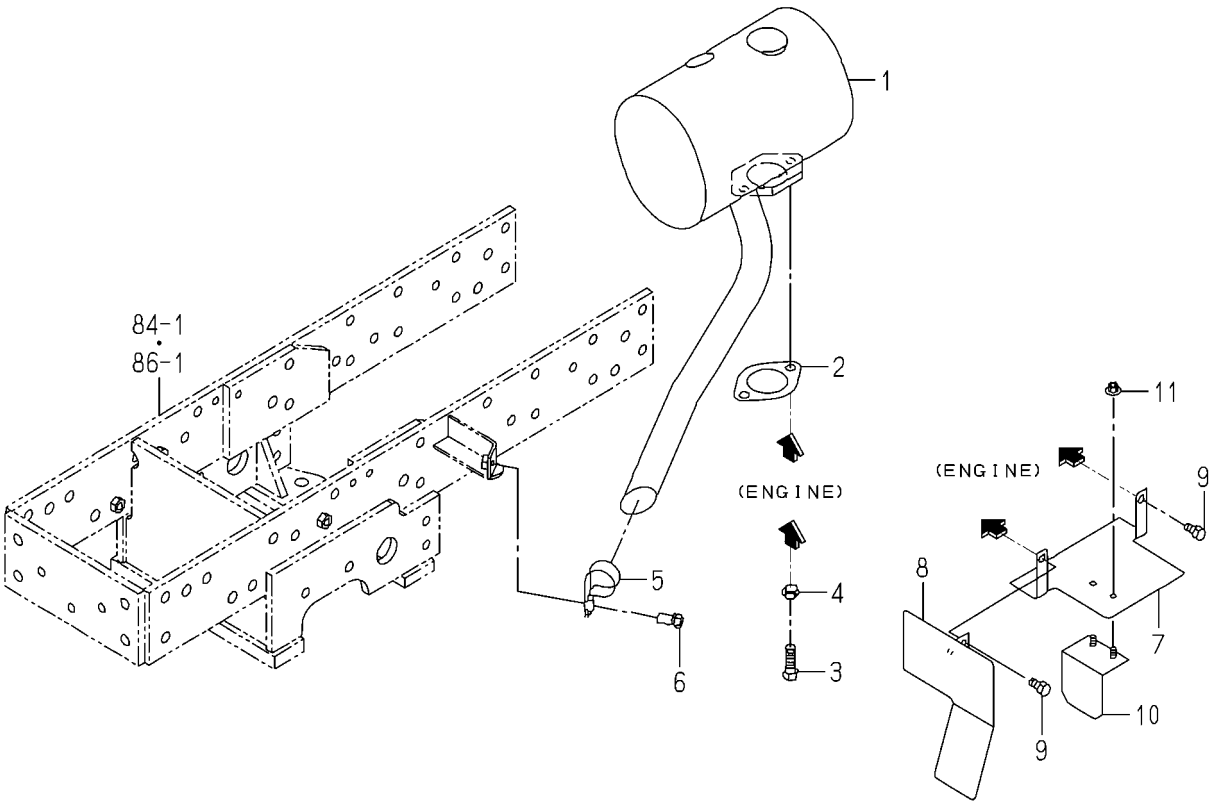

1774-103 -0100

KEY	PART CODE	DESCRIPTION	SPC	TYPE OF MODEL				ITC	COL	GRP	REMARKS
				TM3217	TM3247	TM3267					
1	1716-103-200-30	MUFFLER COMP	*	1	1						
2	1594-105-001-00	GASKET	*	1	1						
3	V203-361-003-00	BOLT/M10X30/7T,P1.25	*	2	2						
4	V401-160-010-00	WASHER,SP/M10	*	2	2						
5	1672-103-001-00	CLAMP/32	*	1	1						
6	2144-415-003-00	BOLT/M8X20(22)	*	1	1						
7	1717-103-001-10	COVER	*	1	1						
8	1774-103-220-00	COVER/ALTERNATO COMP	*	1	1						
9	3805-208-016-00	BOLT(SP/M8X16)	*	3	3						
10	1774-103-230-00	COVER/STARTOR/1.1	*	1	1						
11	V360-260-006-00	NUT/WASHER/M6	*	1	1						

FIG. 6 MUFFLER SYSTEM(TM3267 TYPE)

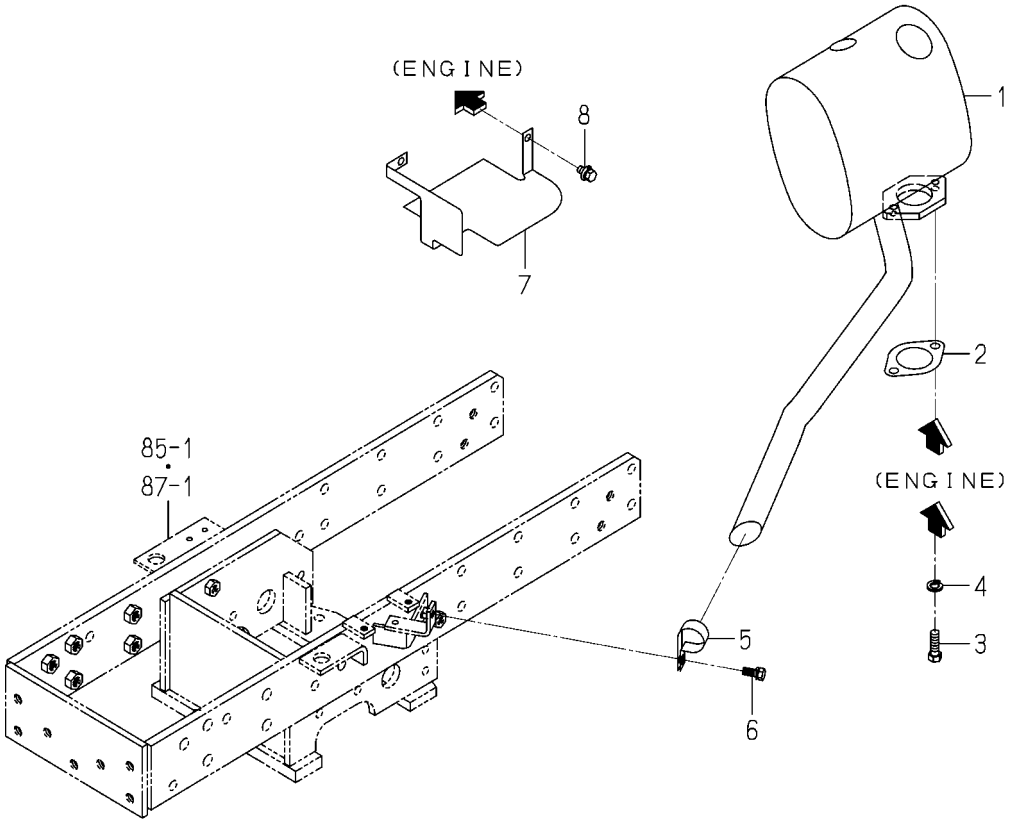

1774-103B-0100

KEY	PART CODE	DESCRIPTION	SPC	TYPE OF MODEL				ITC	COL	GRP	REMARKS
				TM3217	TM3247	TM3267					
1	1716-103-210-30	MUFFLER COMP	*			1					
2	1594-105-001-00	GASKET	*			1					
3	V203-361-003-00	BOLT/M10X30/7T,P1.25	*			2					
4	V401-160-010-00	WASHER,SP/M10	*			2					
5	1672-103-001-00	CLAMP/32	*			1					
6	2144-415-003-00	BOLT/M8X20(22)	*			1					
7	1766-103-001-10	COVER	*			1					
8	3805-208-016-00	BOLT(SP/M8X16)	*			1					

FIG. 7 CLEANER(AIR)SYSTEM (TM3217,3247 TYPE)

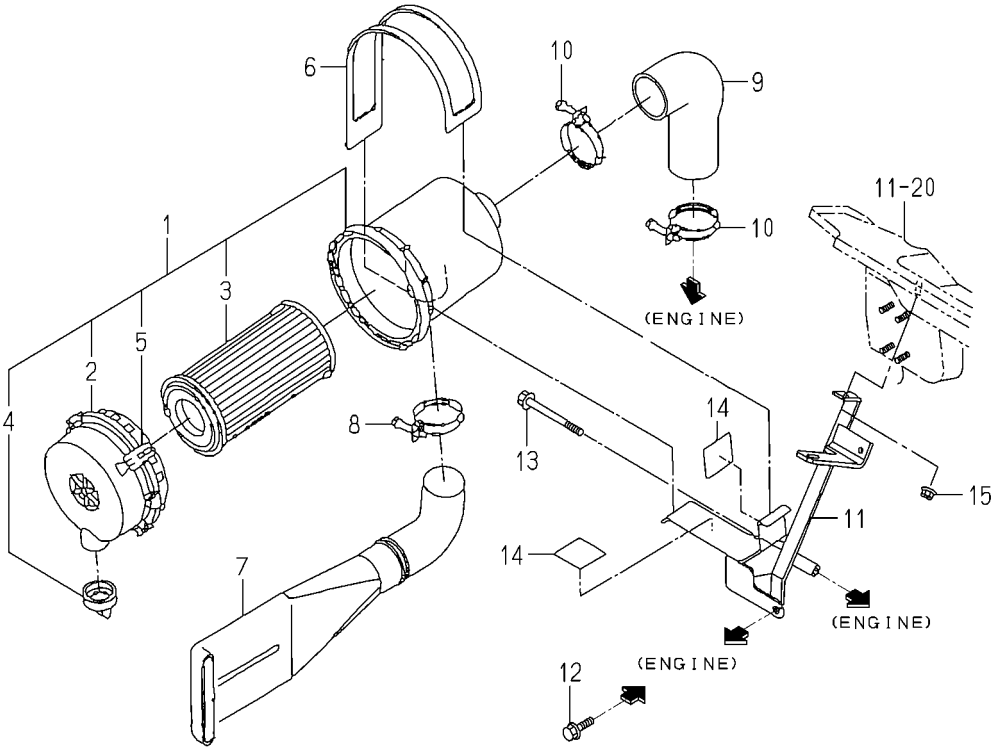

1774-104 -0100

KEY	PART CODE	DESCRIPTION	SPC	TYPE OF MODEL				ITC	COL	GRP	REMARKS
				TM3217	TM3247	TM3267					
1	1675-104-210-10	CLEANER/AIR ASSY	*	1	1						
2	1675-104-211-00	COVER ASSY	*	1	1						
3	1675-104-213-00	ELEMENT ASSY	*	1	1						
4	1544-104-205-00	VALVE	*	1	1						
5	1650-104-201-00	CLIP	*	2	2						
6	1703-104-003-10	BAND/CLEANER	*	1	1						
7	1675-104-001-00	PIPE/CLEANER/INLET	*	1	1						
8	J061-242-050-00	CLAMP/WIRE/42-50	*	1	1						
9	1705-104-002-00	HOSE/CLEANER/OUTLET	*	1	1						
10	J061-247-055-00	CLAMP/WIRE/47-55	*	2	2						
11	1774-104-210-00	BRACKET/CLEANER COMP	*	1	1						
12	V231-360-801-60	FLANGEBOLT/M8X16	*	1	1						
13	V231-360-808-00	FLANGEBOLT/M8X80	*	1	1						
14	1427-111-229-00	CUSHION,RUBBER	*	2	2						
15	V362-260-008-00	NUT/WASHER/M8	*	1	1						

FIG. 8 CLEANER(AIR)SYSTEM(TM3267 TYPE)

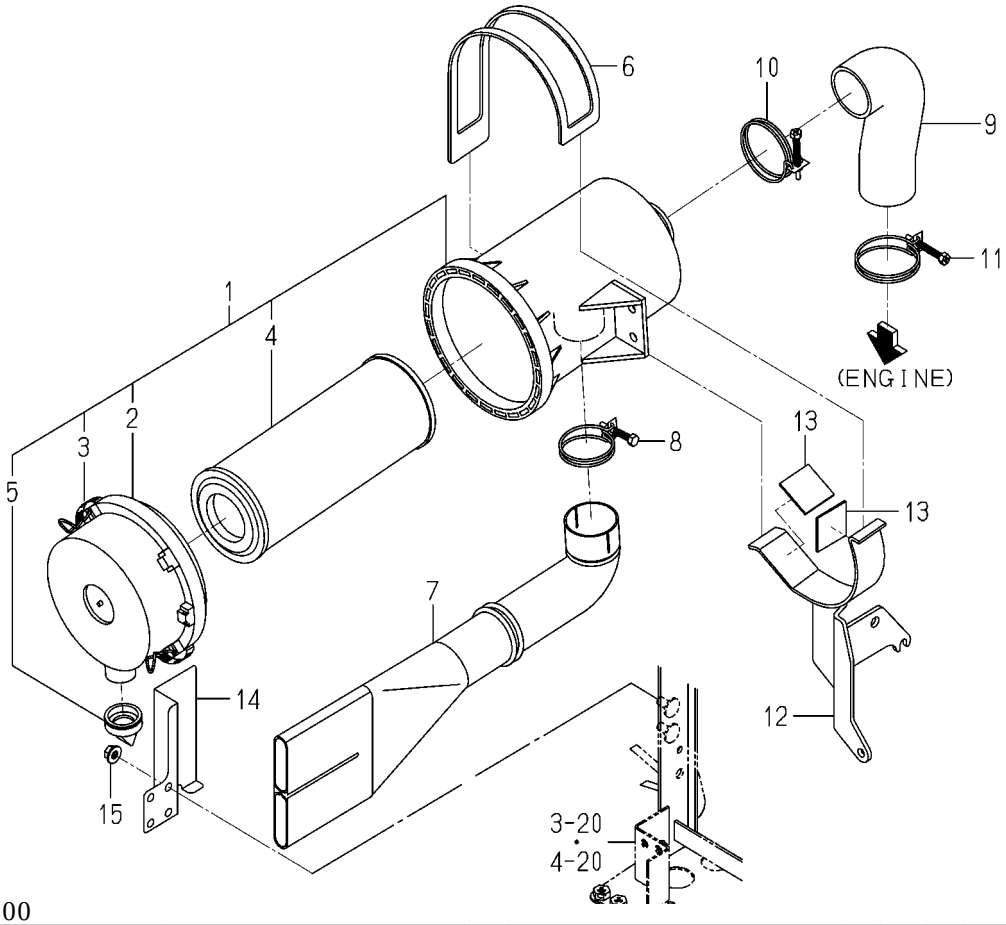

1774-104A-0100

KEY	PART CODE	DESCRIPTION	SPC	TYPE OF MODEL				ITC	COL	GRP	REMARKS
				TM3217	TM3247	TM3267					
1	1650-104-200-10	CLEANER/AIR ASSY	*			1					
2	1650-104-210-00	COVER ASSY	*			1					
3	1650-104-201-00	CLIP	*			2					
4	1650-104-203-10	ELEMENT ASSY	*			1					
5	1544-104-205-00	VALVE	*			1					
6	1703-104-003-10	BAND/CLEANER	*			1					
7	1677-104-001-00	PIPE/CLEANER/INLET	*			1					
8	J061-247-055-00	CLAMP/WIRE/47-55	*			1					
9	1678-104-002-00	HOSE/CLEANER/OUTLET	*			1					
10	J061-252-063-00	CLAMP/WIRE/52-63	*			1					
11	J061-249-060-00	CLAMP/WIRE/49-60	*			1					
12	1716-104-210-40	BRACKET/CLEANER COMP	*			1					
13	1427-111-229-00	CUSHION,RUBBER	*			2					
14	1774-104-001-30	GUARD/INLET	*			1					
15	V362-260-008-00	NUT/WASHER/M8	*			2					

FIG. 9 FILTER SYSTEM(TM3217,3247 TYPE)

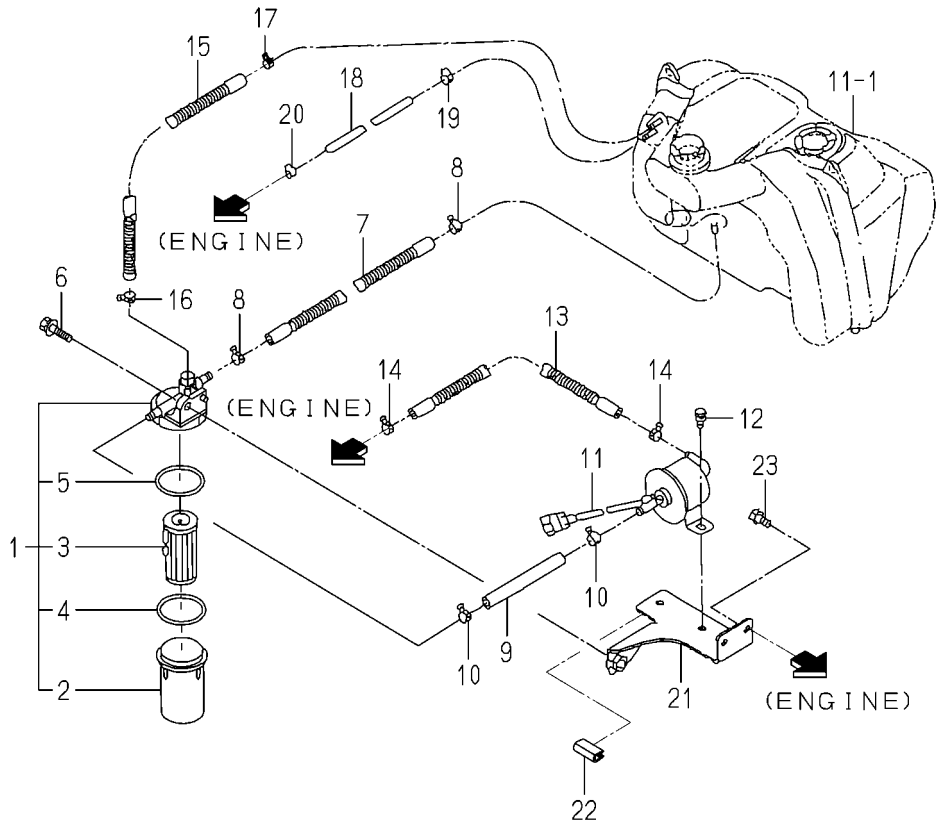

1774-105 -0100

KEY	PART CODE	DESCRIPTION	SPC	TYPE OF MODEL				ITC	COL	GRP	REMARKS
				TM3217	TM3247	TM3267					
1	1774-105-200-00	FILTER/FUEL	*	1	1						
2	1774-105-202-00	CUP	*	1	1						
3	1774-105-203-00	ELEMENT	*	1	1						
4	1774-105-204-00	RING/O	*	1	1						
5	1774-105-205-00	RING/O	*	1	1						
6	V211-360-802-50	BOLT,SP/M8X25	*	1	1						
7	1716-105-001-00	HOSE/08X13X300	*	1	1						
8	1650-111-034-00	CLIP/HOSE/11-13	*	2	2						
9	1575-105-001-00	HOSE	*	1	1						
10	J062-111-120-00	CLIP/HOSE/11.1-12.0	*	2	2						
11	1703-105-210-10	PUMP/FUEL ASSY	*	1	1						
12	V230-360-601-60	FLANGEBOLT/M6X16	*	2	2						
13	1716-105-001-00	HOSE/08X13X300	*	1	1						
14	1650-111-034-00	CLIP/HOSE/11-13	*	2	2						
15	1614-105-004-10	HOSE/04X08X400	*	1	1						
16	J062-104-111-00	CLIP/HOSE/10.4-11.1	*	1	1						
17	J062-087-093-00	CLIP/HOSE/8.7-9.3	*	1	1						
18	1770-105-002-10	HOSE/04X08X300	*	1	1						
19	J062-104-111-00	CLIP/HOSE/10.4-11.1	*	1	1						
20	J062-087-093-00	CLIP/HOSE/8.7-9.3	*	1	1						
21	1716-105-210-10	BRACKET/FILTER COMP	*	1	1						
22	1560-314-001-10	TRIM/30	*	1	1						
23	V231-360-801-60	FLANGEBOLT/M8X16	*	2	2						

FIG. 10 FILTER SYSTEM(TM3267 TYPE)

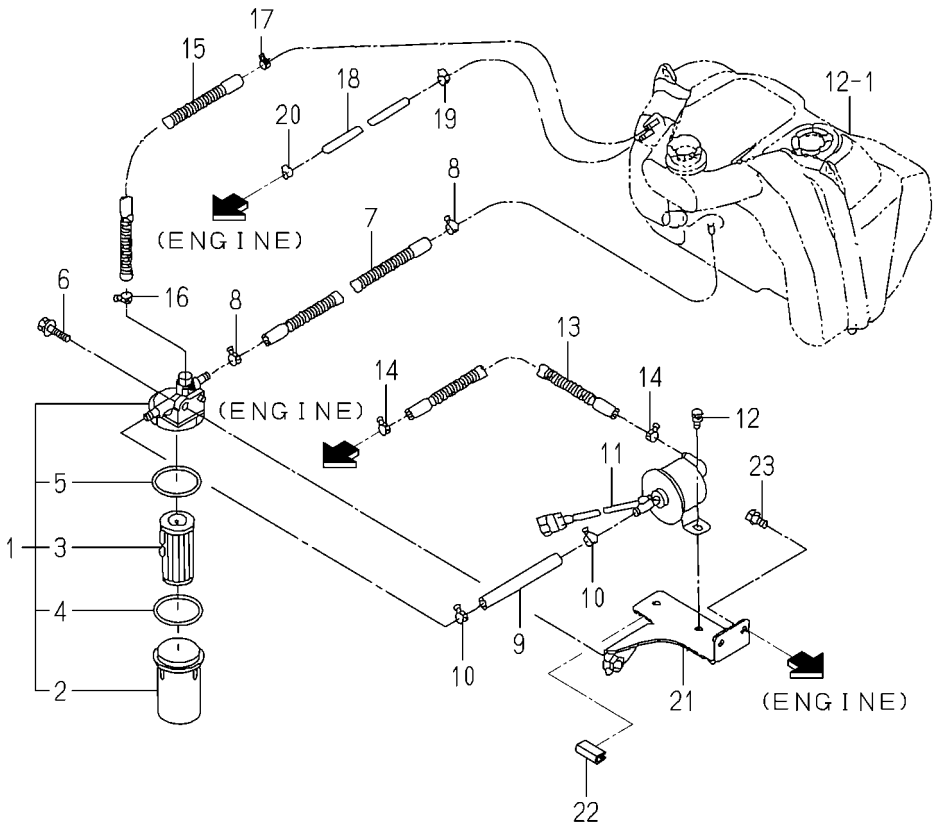

1774-105A-0100

KEY	PART CODE	DESCRIPTION	SPC	TYPE OF MODEL				ITC	COL	GRP	REMARKS
				TM3217	TM3247	TM3267					
1	1774-105-200-00	FILTER/FUEL	*			1					
2	1774-105-202-00	CUP	*			1					
3	1774-105-203-00	ELEMENT	*			1					
4	1774-105-204-00	RING/O	*			1					
5	1774-105-205-00	RING/O	*			1					
6	V211-360-802-50	BOLT,SP/M8X25	*			1					
7	1716-105-001-00	HOSE/08X13X300	*			1					
8	1650-111-034-00	CLIP/HOSE/11-13	*			2					
9	1575-105-001-00	HOSE	*			1					
10	J062-111-120-00	CLIP/HOSE/11.1-12.0	*			2					
11	1703-105-210-10	PUMP/FUEL ASSY	*			1					
12	V230-360-601-60	FLANGEBOLT/M6X16	*			2					
13	1716-105-001-00	HOSE/08X13X300	*			1					
14	1650-111-034-00	CLIP/HOSE/11-13	*			2					
15	1614-105-004-10	HOSE/04X08X400	*			1					
16	J062-104-111-00	CLIP/HOSE/10.4-11.1	*			1					
17	J062-087-093-00	CLIP/HOSE/8.7-9.3	*			1					
18	1770-105-002-10	HOSE/04X08X300	*			1					
19	J062-104-111-00	CLIP/HOSE/10.4-11.1	*			1					
20	J062-087-093-00	CLIP/HOSE/8.7-9.3	*			1					
21	1716-105-210-10	BRACKET/FILTER COMP	*			1					
22	1560-314-001-10	TRIM/30	*			1					
23	V231-360-801-60	FLANGEBOLT/M8X16	*			2					

FIG. 11 TANK(FUEL)SYSTEM(TM3217,3247 TYPE)

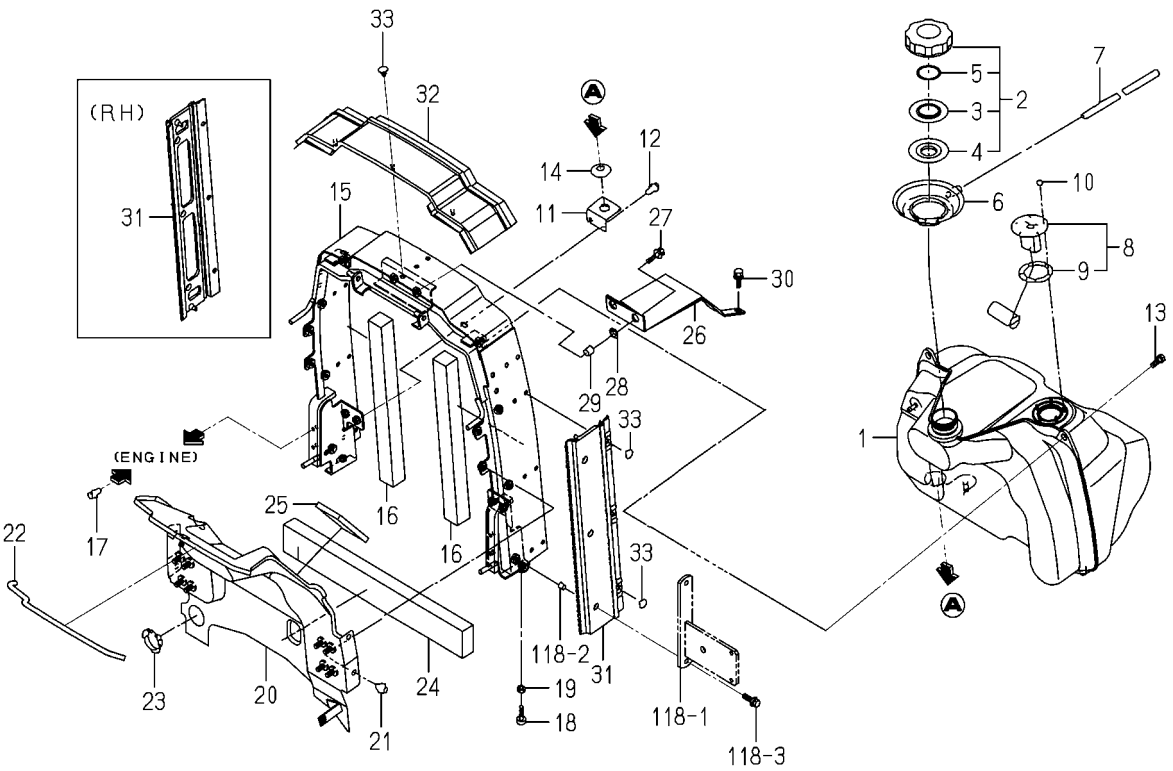

1774-111F-0100

KEY	PART CODE	DESCRIPTION	SPC	TYPE OF MODEL				ITC	COL	GRP	REMARKS
				TM3217	TM3247	TM3267					
1	1774-111-001-10	TANK/FUEL	*	1	1						
2	1774-111-310-10	CAP/NONLEAK ASSY	*	1	1						
3	1729-111-283-00	PLATE	*	1	1						
4	1729-111-284-00	PACKING	*	1	1						
5	1774-111-311-00	PACKINGA	*	1	1						
6	1729-111-005-00	CUP/FUEL	*	1	1						
7	P103-112-003-20	HOSE/700	*	1	1						
8	1774-111-300-00	GAUGE/FUEL ASSY	*	1	1						
9	1416-621-037-00	PACKING/RUBBER	*	1	1						
10	V360-260-004-00	NUT/WASHER/M4	*	5	5						
11	1716-111-005-00	PLATE/L/50X45	*	2	2						
12	V231-360-802-00	FLANGEBOLT/M8X20	*	4	4						
13	2144-415-003-00	BOLT/M8X20(22)	*	2	2						
14	1421-603-004-00	BUSH,LEVER	*	2	2						
15	1774-111-270-10	BRACKET/TANK COMP	*	1	1						
16	1750-605-007-00	INSULATOR	*	2	2						
17	V231-360-802-00	FLANGEBOLT/M8X20	*	4	4						
18	1421-602-005-10	CUSHION,B/ RUBBER	*	2	2						
19	V304-260-008-00	NUT/M8	*	2	2						
20	1774-111-220-20	COVER/TANK/21 COMP	*	1	1						
21	V231-360-801-60	FLANGEBOLT/M8X16	*	4	4						
22	1716-102-003-00	INSULATOR/550	*	1	1						
23	3817-335-021-00	GROMMET	*	1	1						
24	1774-111-021-00	INSULATOR/60X480	*	1	1						
25	1774-111-022-00	INSULATOR/60X90	*	1	1						
26	1774-111-002-00	STAY/COLUMN	*	1	1						
27	V211-360-802-00	BOLT,SP/M8X20	*	1	1						
28	1564-621-030-00	GROMMET/12X17X04	*	2	2						
29	1672-616-002-00	COLLAR/10X14X09	*	2	2						
30	V211-360-802-50	BOLT,SP/M8X25	*	2	2						

FIG. 11 TANK(FUEL)SYSTEM(TM3217,3247 TYPE)

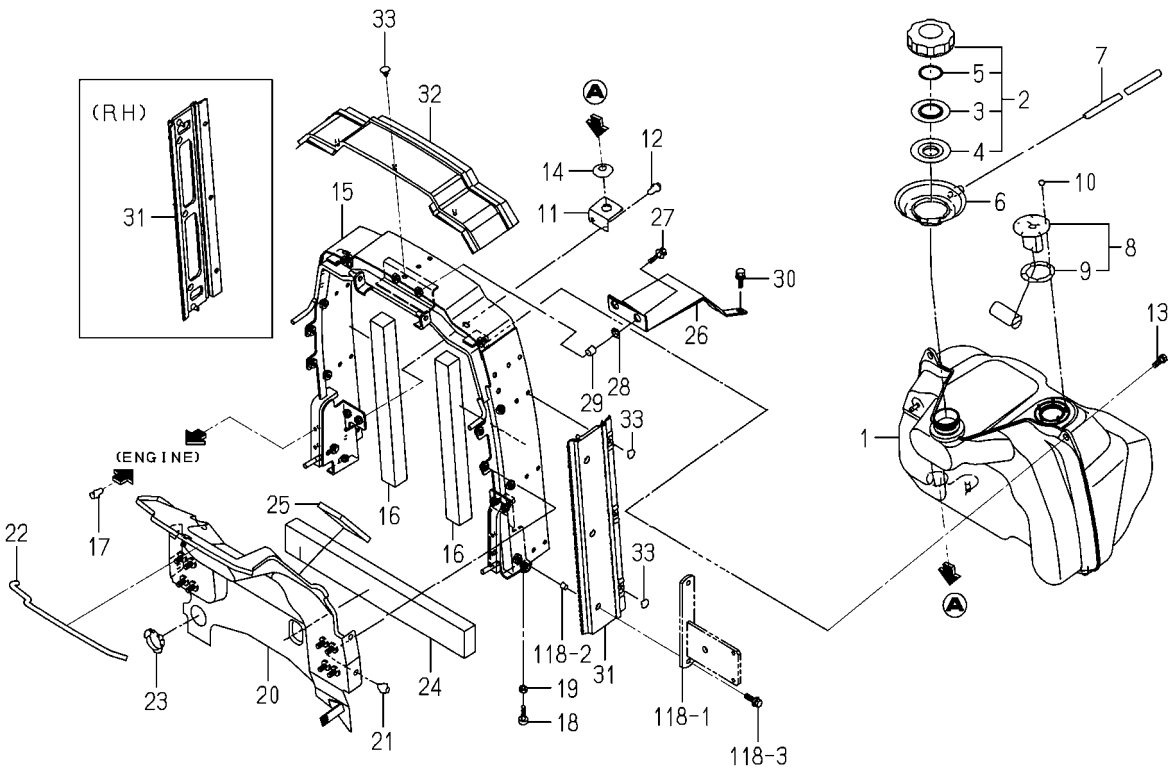

1774-111F-0100

KEY	PART CODE	DESCRIPTION	SPC	TYPE OF MODEL				ITC	COL	GRP	REMARKS
				TM3217	TM3247	TM3267					
31	1774-111-003-00	INSULATOR/SIDE	*	2	2						
32	1774-111-004-00	INSULATOR/UPPER	*	1	1						
33	1527-604-002-00	CLIP(B)	*	9	9						

FIG. 12 TANK(FUEL)SYSTEM(TM3267 TYPE)

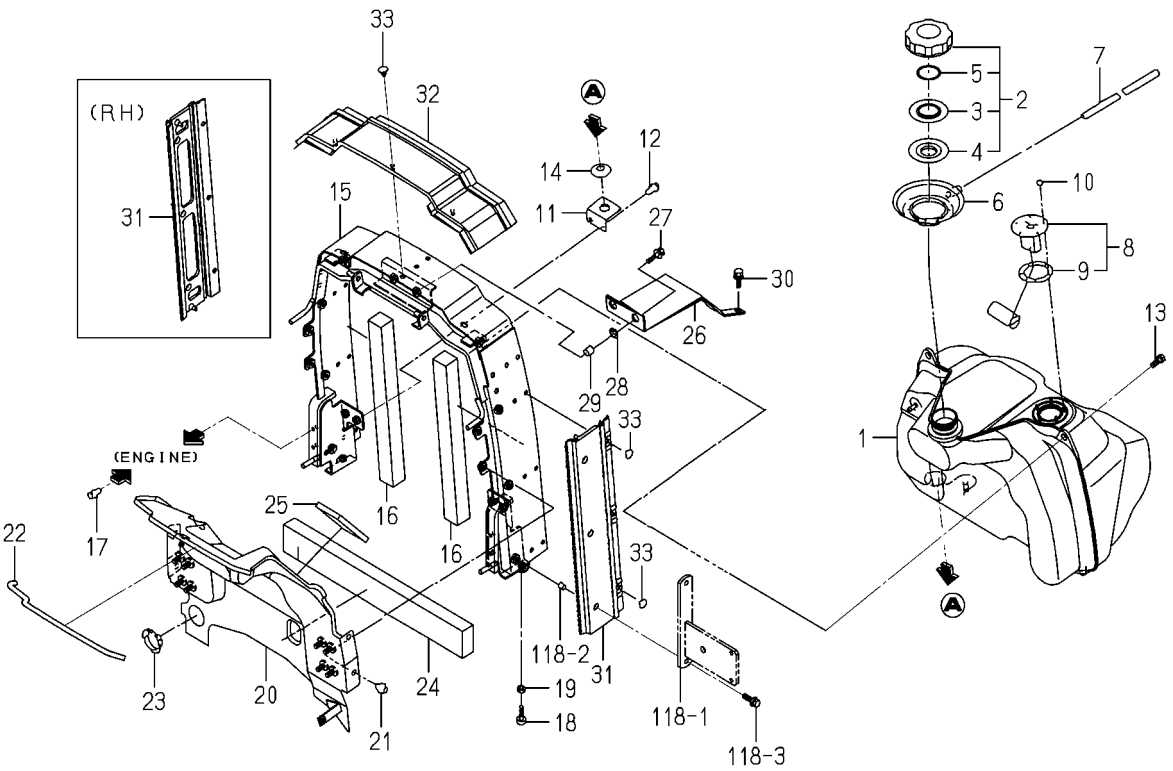

1774-111G-0100

KEY	PART CODE	DESCRIPTION	SPC	TYPE OF MODEL				ITC	COL	GRP	REMARKS
				TM3217	TM3247	TM3267					
1	1774-111-001-10	TANK/FUEL	*			1					
2	1774-111-310-10	CAP/NONLEAK ASSY	*			1					
3	1729-111-283-00	PLATE	*			1					
4	1729-111-284-00	PACKING	*			1					
5	1774-111-311-00	PACKINGA	*			1					
6	1729-111-005-00	CUP/FUEL	*			1					
7	P103-112-003-20	HOSE/700	*			1					
8	1774-111-300-00	GAUGE/FUEL ASSY	*			1					
9	1416-621-037-00	PACKING/RUBBER	*			1					
10	V360-260-004-00	NUT/WASHER/M4	*			5					
11	1716-111-005-00	PLATE/L/50X45	*			2					
12	V231-360-802-00	FLANGEBOLT/M8X20	*			4					
13	2144-415-003-00	BOLT/M8X20(22)	*			2					
14	1421-603-004-00	BUSH,LEVER	*			2					
15	1774-111-270-10	BRACKET/TANK COMP	*			1					
16	1750-605-007-00	INSULATOR	*			2					
17	V231-360-802-00	FLANGEBOLT/M8X20	*			4					
18	1421-602-005-10	CUSHION,B/ RUBBER	*			2					
19	V304-260-008-00	NUT/M8	*			2					
20	1774-111-230-10	COVER/TANK/26 COMP	*			1					
21	V231-360-801-60	FLANGEBOLT/M8X16	*			4					
22	1716-102-003-00	INSULATOR/550	*			1					
23	3817-335-021-00	GROMMET	*			1					
24	1774-111-021-00	INSULATOR/60X480	*			1					
25	1774-111-022-00	INSULATOR/60X90	*			1					
26	1774-111-002-00	STAY/COLUMN	*			1					
27	V211-360-802-00	BOLT,SP/M8X20	*			1					
28	1564-621-030-00	GROMMET/12X17X04	*			2					
29	1672-616-002-00	COLLAR/10X14X09	*			2					
30	V211-360-802-50	BOLT,SP/M8X25	*			2					

FIG. 12 TANK(FUEL)SYSTEM(TM3267 TYPE)

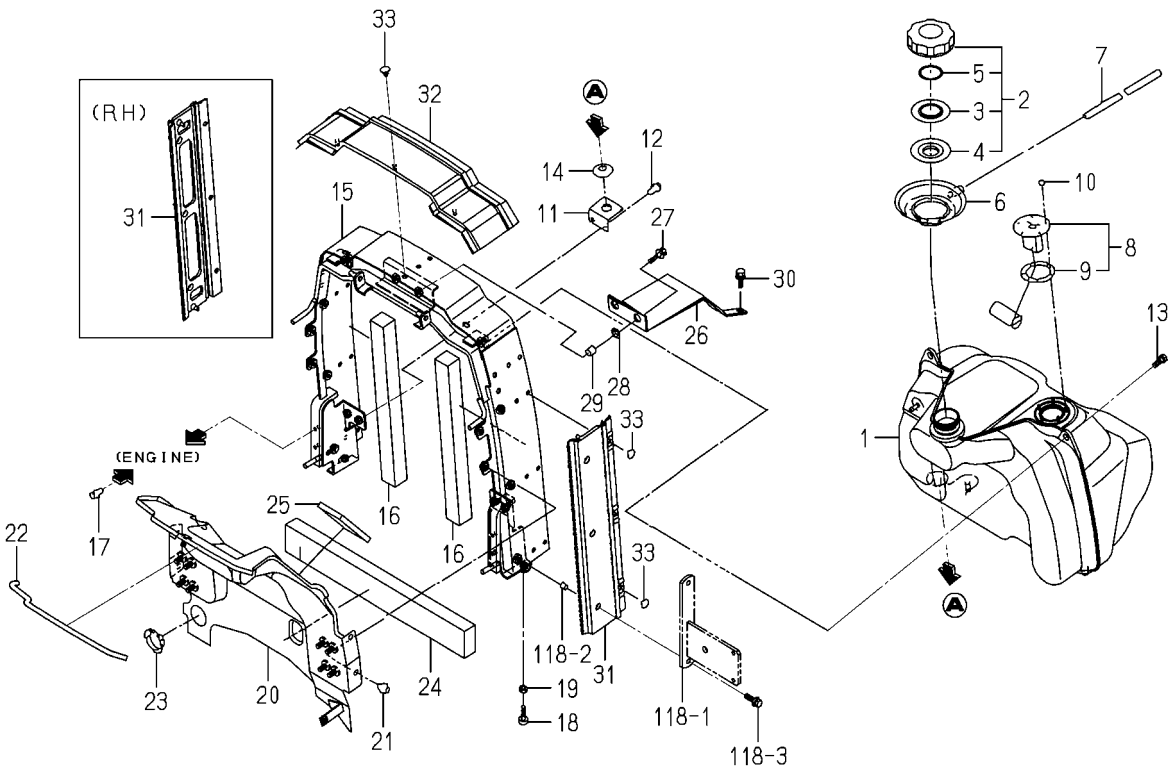

1774-111G-0100

KEY	PART CODE	DESCRIPTION	SPC	TYPE OF MODEL				ITC	COL	GRP	REMARKS
				TM3217	TM3247	TM3267					
31	1774-111-003-00	INSULATOR/SIDE	*			2					
32	1774-111-004-00	INSULATOR/UPPER	*			1					
33	1527-604-002-00	CLIP(B)	*			9					

FIG. 13 BATTERY SYSTEM(TM3217,3247 TYPE)

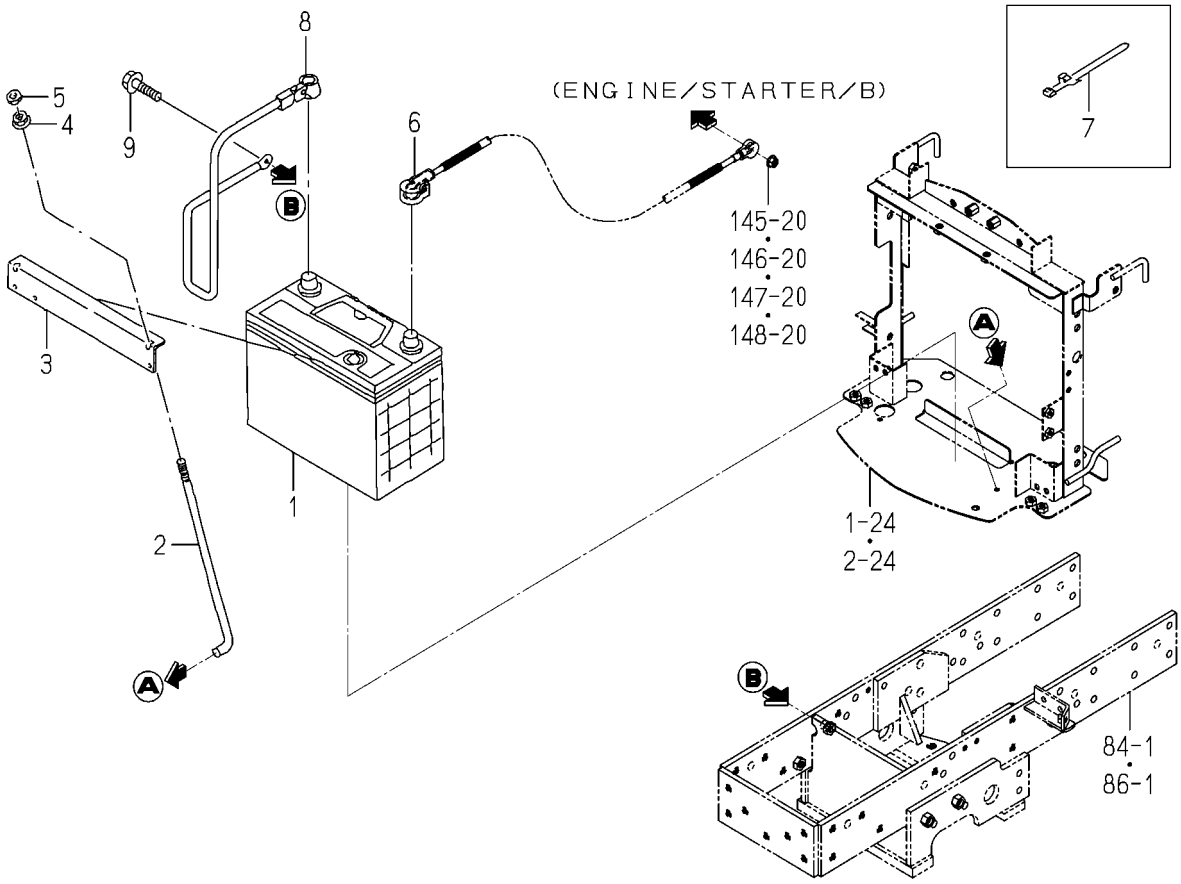

1774-112B-0100

KEY	PART CODE	DESCRIPTION	SPC	TYPE OF MODEL				ITC	COL	GRP	REMARKS
				TM3217	TM3247	TM3267					
1	1684-112-230-00	BATTERY/55B24R ASSY	*	1	1						
2	1675-112-002-00	BOLT/BATTERY	*	2	2						
3	1682-112-006-10	PLATE/BATTERY	*	1	1						
4	V360-260-006-00	NUT/WASHER/M6	*	2	2						
5	V301-260-006-00	NUT/M6	*	2	2						
6	1774-112-200-10	CABLE/BATTERY ASSY	*	1	1						
7	1560-666-004-00	BAND	*	1	1						
8	1774-112-210-10	CABLE/EARTH ASSY	*	1	1						
9	V231-361-002-00	FLANGEBOLT/M10X20	*	1	1						

FIG. 14 BATTERY SYSTEM(TM3267 TYPE)

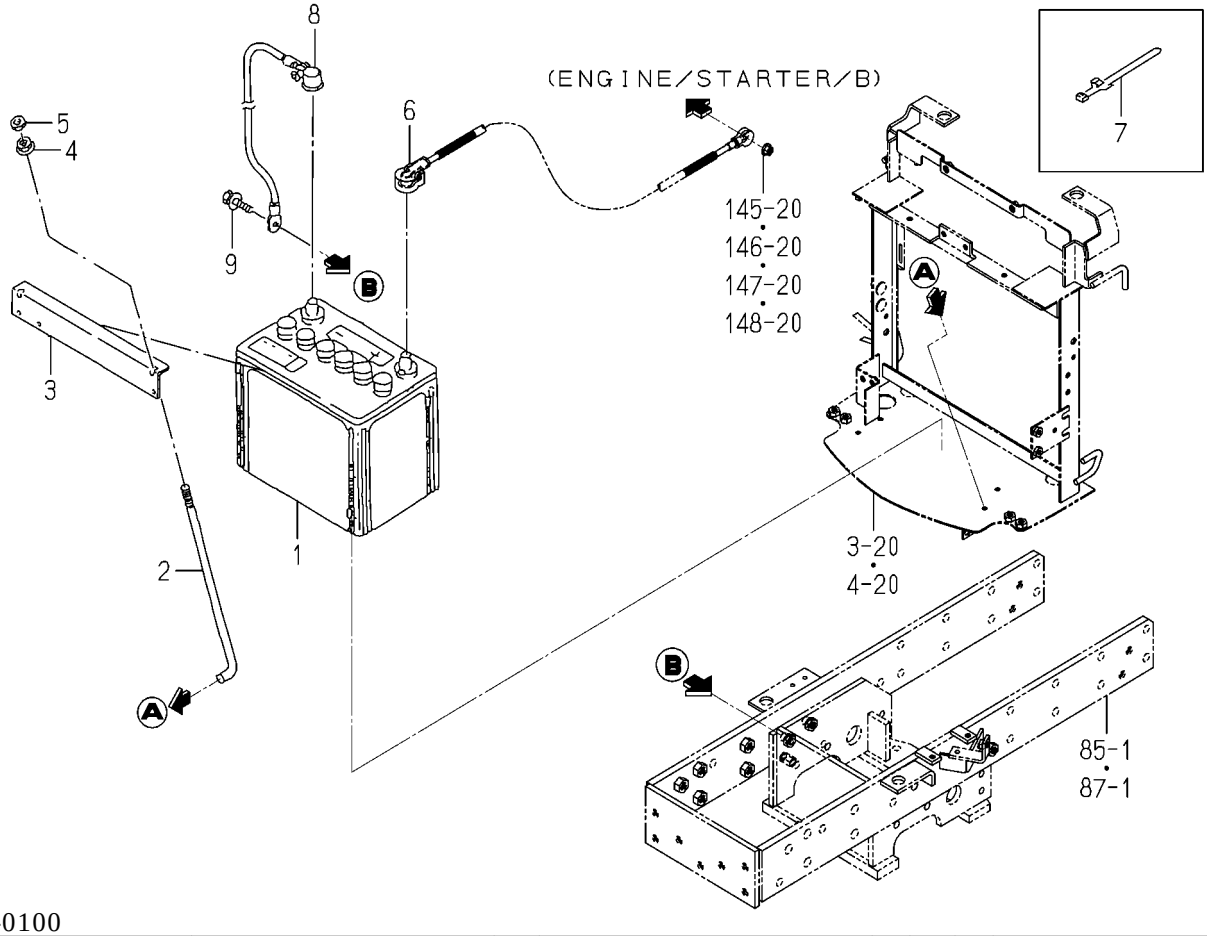

1774-112C-0100

KEY	PART CODE	DESCRIPTION	SPC	TYPE OF MODEL				ITC	COL	GRP	REMARKS
				TM3217	TM3247	TM3267					
1	1659-650-200-20	BATTERY/80D26R ASSY	*			1					
2	1675-112-002-00	BOLT/BATTERY	*			2					
3	1687-112-001-00	PLATE/BATTERY	*			1					
4	V360-260-006-00	NUT/WASHER/M6	*			2					
5	V301-260-006-00	NUT/M6	*			2					
6	1766-112-200-20	CABLE/BATTERY ASSY	*			1					
7	1560-666-004-00	BAND	*			1					
8	1766-112-210-00	CABLE/EARTH ASSY	*			1					
9	V231-361-003-50	FLANGEBOLT/M10X35	*			1					

FIG. 15 PEDAL(ACCELERATOR)SYSTEMX (F TYPE)

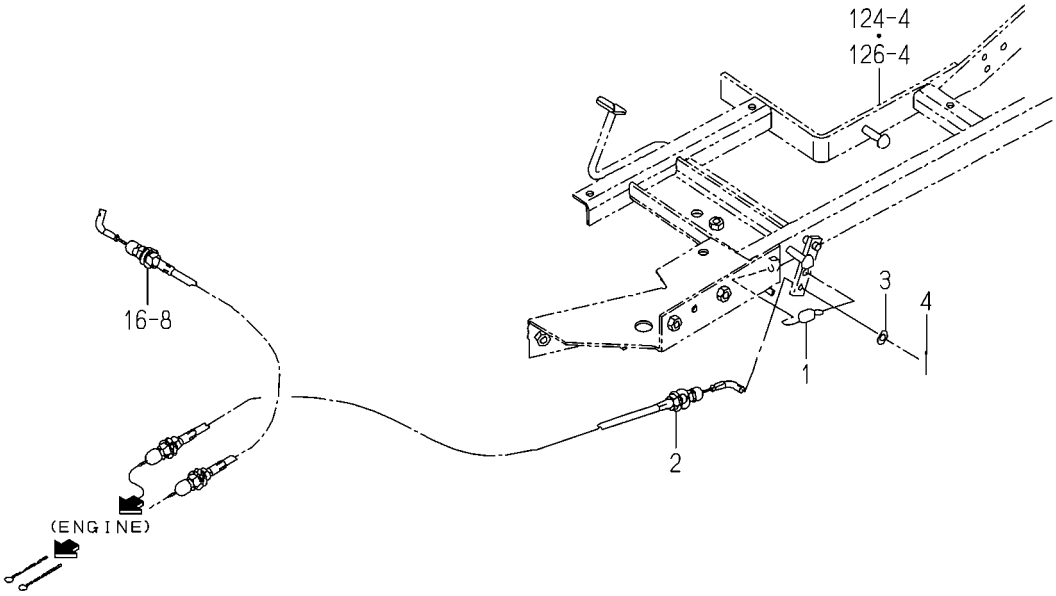

1774-116 -0100

KEY	PART CODE	DESCRIPTION	SPC	TYPE OF MODEL				ITC	COL	GRP	REMARKS
				TM3217	TM3247	TM3267					
1	1414-312-002-00	SPRING,TENSION/53	*	1	1	1					
2	1675-116-210-10	CABLE/PEDAL ASSY	*	1	1	1					
3	V411-260-006-00	WASHER,PL/M6	*	1	1	1					
4	V500-162-002-00	PIN,SPLIT/2X20	*	1	1	1					

FIG. 16 LEVER(ACCELERATOR)SYSTEM

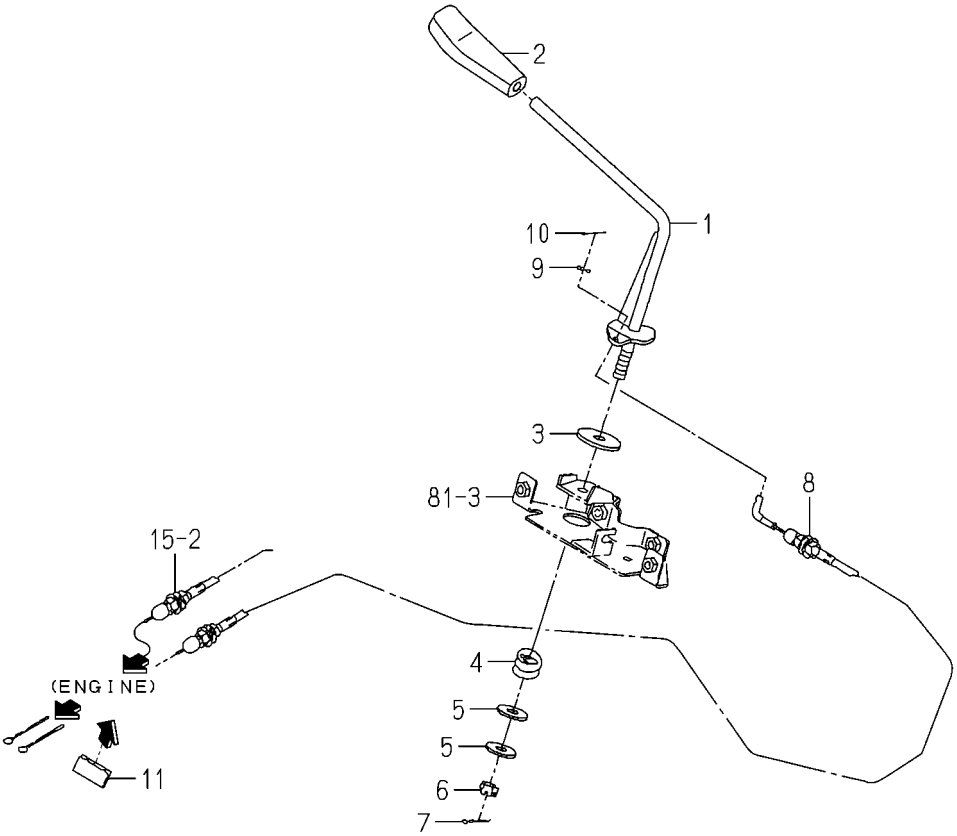

1774-117 -0100

KEY	PART CODE	DESCRIPTION	SPC	TYPE OF MODEL				ITC	COL	GRP	REMARKS
				TM3217	TM3247	TM3267					
1	1763-117-200-30	LEVER COMP	*	1	1	1					
2	1646-116-051-10	GRIP/THROTTLE	*	1	1	1					
3	1600-117-002-10	LINING/11X40X03	*	1	1	1					
4	1404-117-008-00	SPRING,PRESS/22	*	1	1	1					
5	2130-713-002-10	WASHER	*	2	2	2					
6	V328-262-110-00	NUT,CASTLE/M10 P1.25	*	1	1	1					
7	V500-162-501-50	PIN,SPLIT/2.5X15	*	1	1	1					
8	1675-117-210-40	CABLE/ACCELERATOR	*	1	1	1					
9	V411-260-006-00	WASHER,PL/M6	*	1	1	1					
10	V500-162-002-00	PIN,SPLIT/2X20	*	1	1	1					
11	1675-116-001-00	HOLDER	*	1	1	1					

FIG. 17 HOUSING(CLUTCH)SYSTEM(1/2) (TM3217F,3247F TYPE)

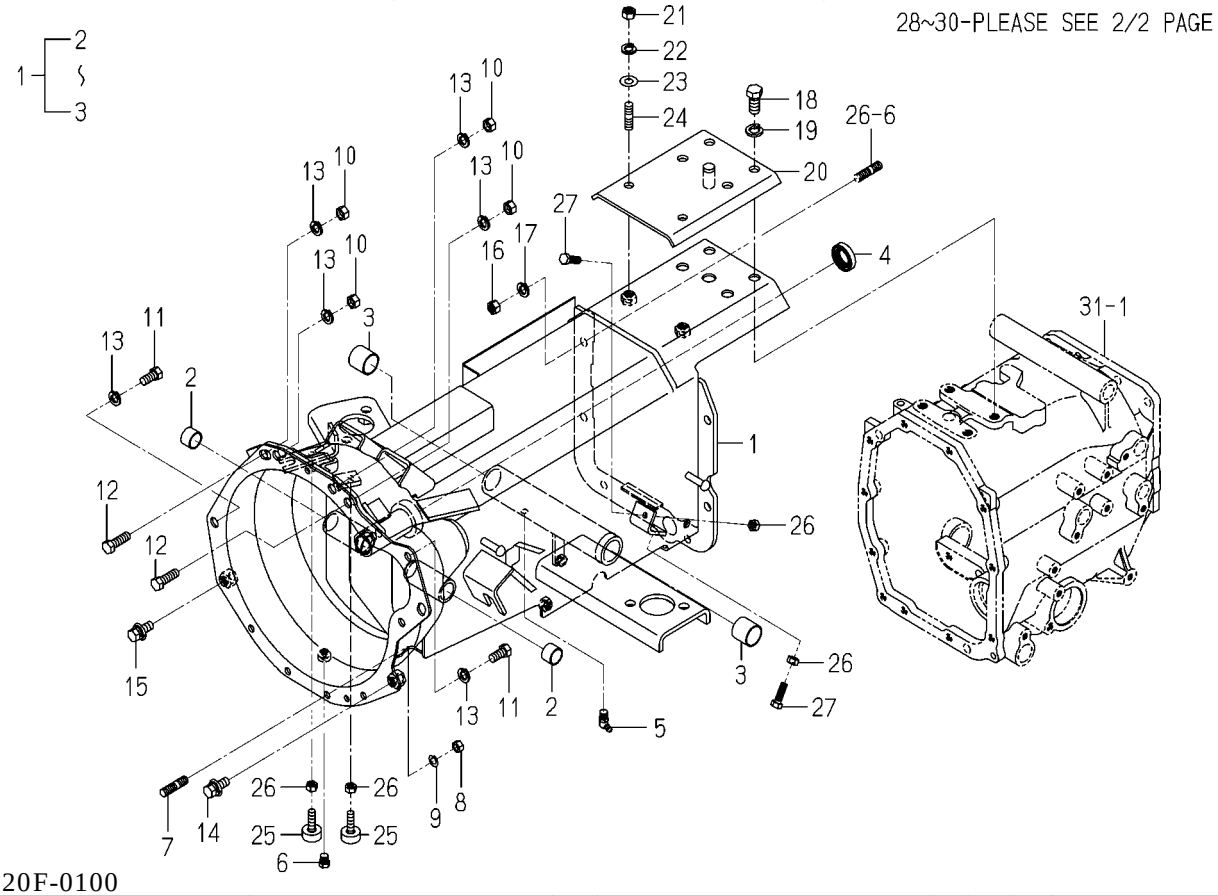

1774-120F-0100

KEY	PART CODE	DESCRIPTION	SPC	TYPE OF MODEL				ITC	COL	GRP	REMARKS
				TM3217	TM3247	TM3267					
1	1774-120-300-60	HOUSING/CLUTCH ASSY	*	1	1						
2	1650-201-202-10	BUSH/19X22X15	*	2	2						
3	2157-201-201-00	BUSH/25X28X25	*	2	2						
4	V744-120-350-70	SEAL,OIL/TC20357	*	1	1						
5	V763-150-000-00	NIPPLE,GREASE/PT1/8	*	1	1						
6	V782-160-000-2T	PLUG/SCREW/SEAL	*	1	1						
7	V251-340-802-50	STUD/M8X25/7T	*	4	4						
8	V304-460-008-00	NUT/M8/7T	*	4	4						
9	V401-160-008-00	WASHER,SP/M8	*	4	4						
10	V334-460-010-00	NUT/M10 P=1.25 7T	*	4	4						
11	V203-361-002-00	BOLT/M10X20/7T,P1.25	*	2	2						
12	V203-361-003-00	BOLT/M10X30/7T,P1.25	*	2	2						
13	V401-160-010-00	WASHER,SP/M10	*	6	6						
14	V231-361-202-50	FLANGEBOLT/M12X25	*	1	1						
15	V231-361-203-50	FLANGEBOLT/M12X35	*	1	1						
16	V304-460-010-00	NUT/M10/7T	*	6	6						
17	V401-160-010-00	WASHER,SP/M10	*	6	6						
18	V201-361-202-50	BOLT/M12X25/7T	*	4	4						
19	V401-160-012-00	WASHER,SP/M12	*	4	4						
20	1774-120-350-00	PLATE COMP	*	1	1						
21	V304-460-010-00	NUT/M10/7T	*	2	2						
22	V401-160-010-00	WASHER,SP/M10	*	2	2						
23	V411-260-010-00	WASHER,PL/M10	*	2	2						
24	V251-341-002-00	STUD/M10X20/7T	*	2	2						
25	1421-602-005-10	CUSHION,B/ RUBBER	*	2	2						
26	V304-260-008-00	NUT/M8	*	4	4						
27	1672-122-003-00	BOLT/TRIMED	*	2	2						
28	1774-120-640-00	COVER/SHAFT/4WD COMP	*	1	1						
29	1672-601-002-00	TRIM/20	*	1	1						
30	V231-360-801-60	FLANGEBOLT/M8X16	*	3	3						

FIG. 17 HOUSING(CLUTCH)SYSTEM(2/2) (TM3217F,3247F TYPE)

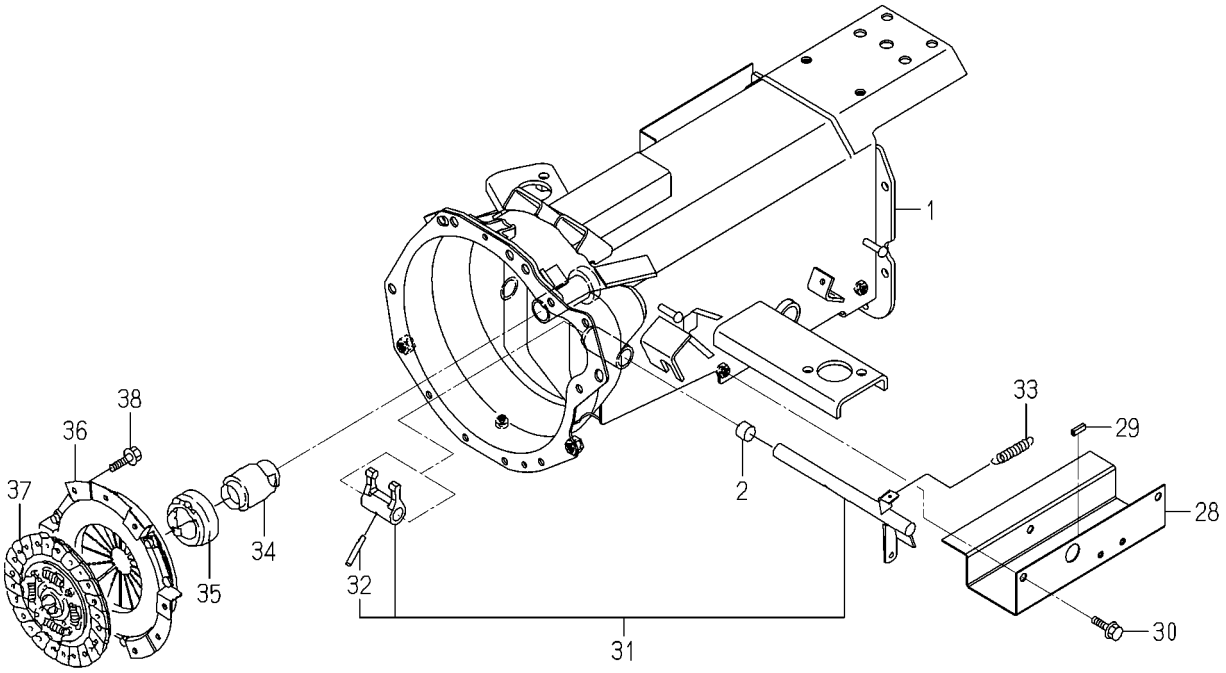

1774-120F-0100

KEY	PART CODE	DESCRIPTION	SPC	TYPE OF MODEL				ITC	COL	GRP	REMARKS
				TM3217	TM3247	TM3267					
31	1774-120-220-00	ARM/CLUTCH SET	*	1	1						
32	1560-130-001-00	PIN	*	1	1						
33	1414-312-002-00	SPRING,TENSION/53	*	1	1						
34	1672-120-007-00	SLEEVE	*	1	1						
35	1491-120-001-00	BEARING,CLUTCH RS	*	1	1						
36	1774-120-200-00	COVER/CLUTCH ASSY	*	1	1						
37	1685-120-220-00	DISK/CLUTCH/200 COMP	*	1	1						
38	V231-360-802-00	FLANGEBOLT/M8X20	*	6	6						

FIG. 18 HOUSING(CLUTCH/HST)SYSTEM(1/2) (TM3217H,3247H TYPE EXCEPT D)

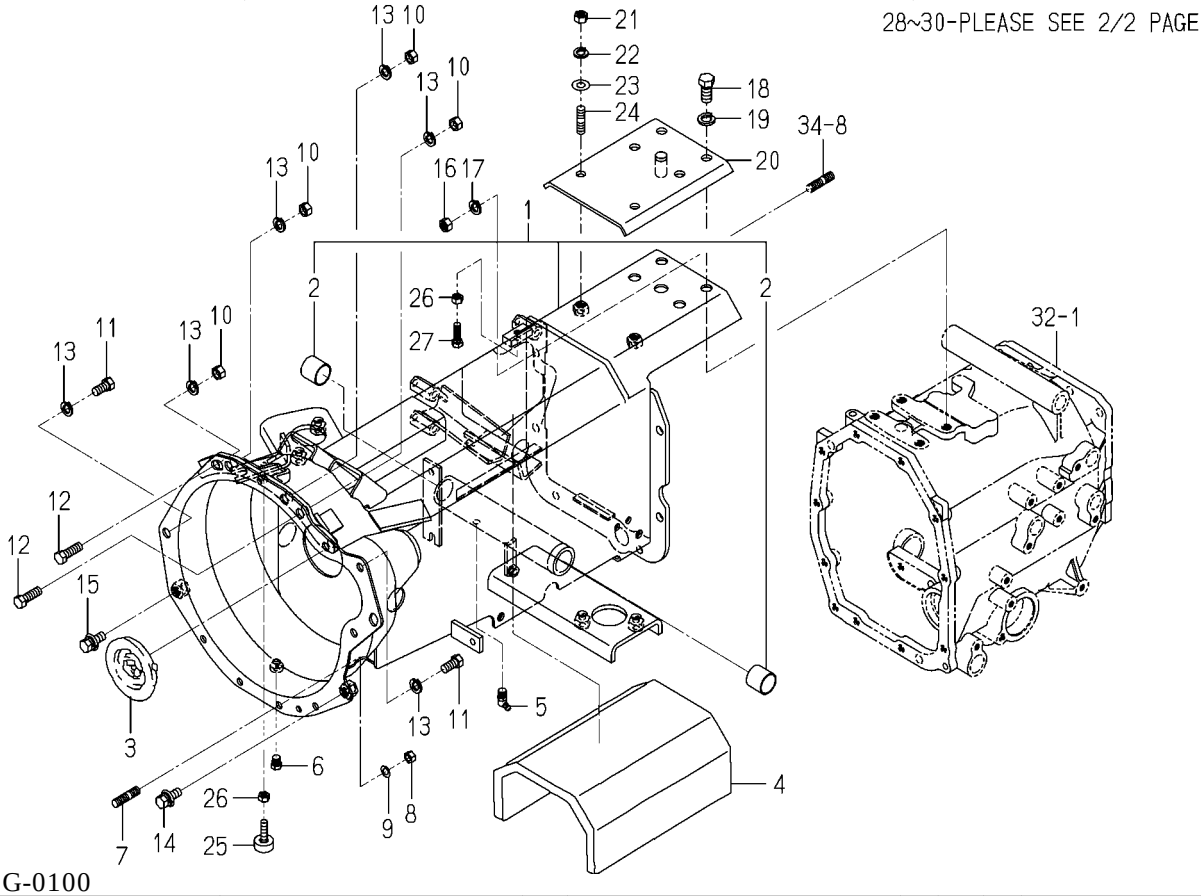

1774-120G-0100

KEY	PART CODE	DESCRIPTION	SPC	TYPE OF MODEL				ITC	COL	GRP	REMARKS
				TM3217	TM3247	TM3267					
1	1774-120-600-00	HOUSING/CLUTCH/HST	*	1	1						
2	2157-201-201-00	BUSH/25X28X25	*	2	2						
3	1688-120-052-00	GROMMET/25X70X03	*	1	1						
4	1750-120-051-20	INSULATOR	*	1	1						
5	V763-150-000-00	NIPPLE,GREASE/PT1/8	*	1	1						
6	V782-160-000-2T	PLUG/SCREW/SEAL	*	1	1						
7	V251-340-802-50	STUD/M8X25/7T	*	4	4						
8	V304-460-008-00	NUT/M8/7T	*	4	4						
9	V401-160-008-00	WASHER,SP/M8	*	4	4						
10	V334-460-010-00	NUT/M10 P=1.25 7T	*	4	4						
11	V203-361-002-00	BOLT/M10X20/7T,P1.25	*	2	2						
12	V203-361-003-00	BOLT/M10X30/7T,P1.25	*	2	2						
13	V401-160-010-00	WASHER,SP/M10	*	6	6						
14	V231-361-202-50	FLANGEBOLT/M12X25	*	1	1						
15	V231-361-203-50	FLANGEBOLT/M12X35	*	1	1						
16	V304-460-010-00	NUT/M10/7T	*	6	6						
17	V401-160-010-00	WASHER,SP/M10	*	6	6						
18	V201-361-202-50	BOLT/M12X25/7T	*	4	4						
19	V401-160-012-00	WASHER,SP/M12	*	4	4						
20	1774-120-350-00	PLATE COMP	*	1	1						
21	V304-460-010-00	NUT/M10/7T	*	2	2						
22	V401-160-010-00	WASHER,SP/M10	*	2	2						
23	V411-260-010-00	WASHER,PL/M10	*	2	2						
24	V251-341-002-00	STUD/M10X20/7T	*	2	2						
25	1421-602-005-10	CUSHION,B/ RUBBER	*	1	1						
26	V304-260-008-00	NUT/M8	*	2	2						
27	1672-122-003-00	BOLT/TRIMED	*	1	1						
28	1774-120-002-00	PLATE/L/203X80	*	1	1						
29	V231-361-001-60	FLANGEBOLT/M10X16	*	3	3						
30	1774-120-640-00	COVER/SHAFT/4WD COMP	*	1	1						

FIG. 18 HOUSING(CLUTCH/HST)SYSTEM(2/2) (TM3217H,3247H TYPE EXCEPT D)

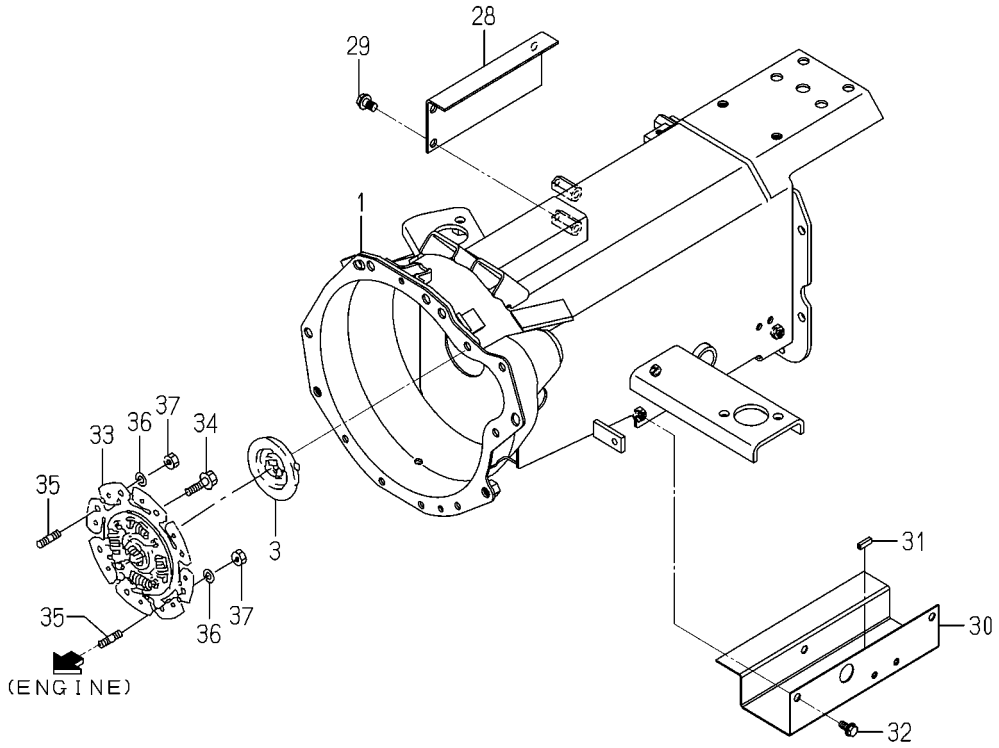

1774-120G-0100

KEY	PART CODE	DESCRIPTION	SPC	TYPE OF MODEL				ITC	COL	GRP	REMARKS
				TM3217	TM3247	TM3267					
31	1672-601-002-00	TRIM/20	*	1	1						
32	V231-360-801-60	FLANGEBOLT/M8X16	*	3	3						
33	1685-120-310-10	DISK/DAMPER ASSY	*	1	1						
34	V231-360-802-00	FLANGEBOLT/M8X20	*	6	6						
35	V251-340-802-50	STUD/M8X25/7T	*	2	2						
36	V401-160-008-00	WASHER,SP/M8	*	2	2						
37	V304-460-008-00	NUT/M8/7T	*	2	2						

FIG. 19 HOUSING(CLUTCH/HST)SYSTEM(1/2) (TM3217D,3247D TYPE)

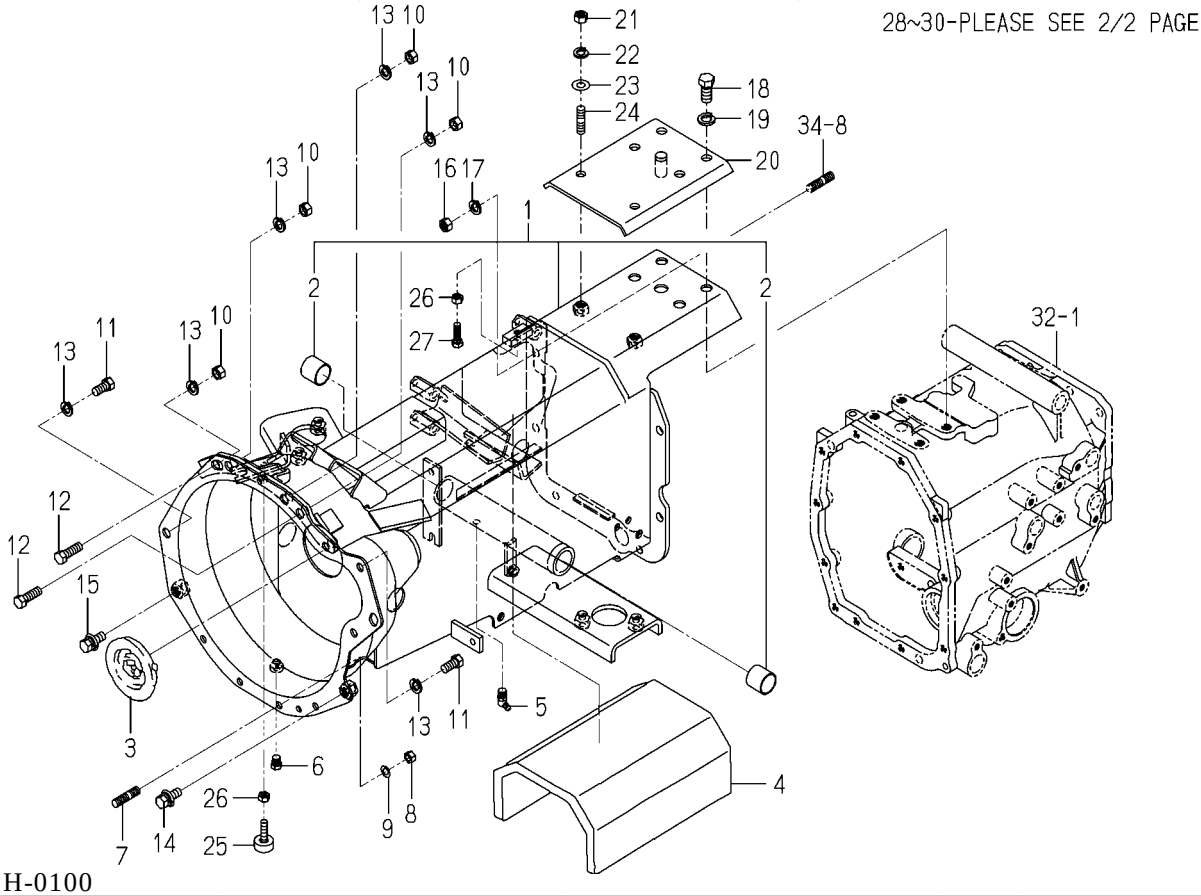

1774-120H-0100

KEY	PART CODE	DESCRIPTION	SPC	TYPE OF MODEL				ITC	COL	GRP	REMARKS
				TM3217	TM3247	TM3267					
1	1774-120-600-00	HOUSING/CLUTCH/HST	*	1	1						
2	2157-201-201-00	BUSH/25X28X25	*	2	2						
3	1688-120-052-00	GROMMET/25X70X03	*	1	1						
4	1750-120-051-20	INSULATOR	*	1	1						
5	V763-150-000-00	NIPPLE,GREASE/PT1/8	*	1	1						
6	V782-160-000-2T	PLUG/SCREW/SEAL	*	1	1						
7	V251-340-802-50	STUD/M8X25/7T	*	4	4						
8	V304-460-008-00	NUT/M8/7T	*	4	4						
9	V401-160-008-00	WASHER,SP/M8	*	4	4						
10	V334-460-010-00	NUT/M10 P=1.25 7T	*	4	4						
11	V203-361-002-00	BOLT/M10X20/7T,P1.25	*	2	2						
12	V203-361-003-00	BOLT/M10X30/7T,P1.25	*	2	2						
13	V401-160-010-00	WASHER,SP/M10	*	6	6						
14	V231-361-202-50	FLANGEBOLT/M12X25	*	1	1						
15	V231-361-203-50	FLANGEBOLT/M12X35	*	1	1						
16	V304-460-010-00	NUT/M10/7T	*	6	6						
17	V401-160-010-00	WASHER,SP/M10	*	6	6						
18	V201-361-202-50	BOLT/M12X25/7T	*	4	4						
19	V401-160-012-00	WASHER,SP/M12	*	4	4						
20	1774-120-350-00	PLATE COMP	*	1	1						
21	V304-460-010-00	NUT/M10/7T	*	2	2						
22	V401-160-010-00	WASHER,SP/M10	*	2	2						
23	V411-260-010-00	WASHER,PL/M10	*	2	2						
24	V251-341-002-00	STUD/M10X20/7T	*	2	2						
25	1421-602-005-10	CUSHION,B/ RUBBER	*	1	1						
26	V304-260-008-00	NUT/M8	*	2	2						
27	1672-122-003-00	BOLT/TRIMED	*	1	1						
28	1774-120-640-00	COVER/SHAFT/4WD COMP	*	1	1						
29	1672-601-002-00	TRIM/20	*	1	1						
30	V231-360-801-60	FLANGEBOLT/M8X16	*	3	3						

FIG. 19 HOUSING(CLUTCH/HST)SYSTEM(2/2) (TM3217D,3247D TYPE)

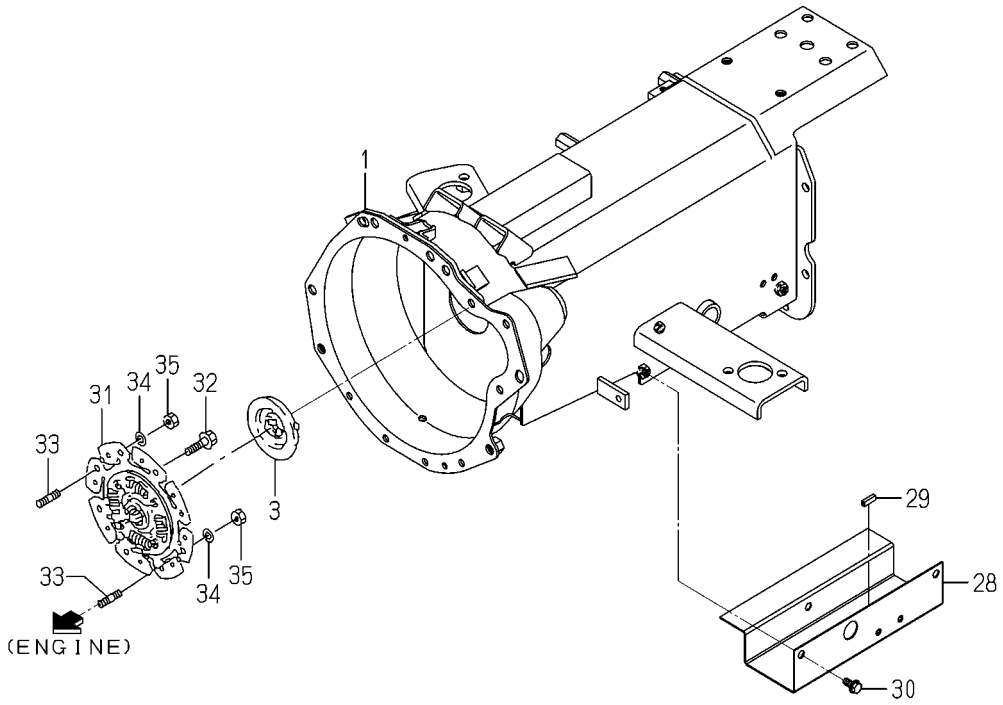

1774-120H-0100

KEY	PART CODE	DESCRIPTION	SPC	TYPE OF MODEL				ITC	COL	GRP	REMARKS
				TM3217	TM3247	TM3267					
31	1685-120-310-10	DISK/DAMPER ASSY	*	1	1						
32	V231-360-802-00	FLANGEBOLT/M8X20	*	6	6						
33	V251-340-802-50	STUD/M8X25/7T	*	2	2						
34	V401-160-008-00	WASHER,SP/M8	*	2	2						
35	V304-460-008-00	NUT/M8/7T	*	2	2						

FIG. 20 HOUSING(CLUTCH/HST)SYSTEM(1/2) (TM3267H TYPE EXCEPT D)

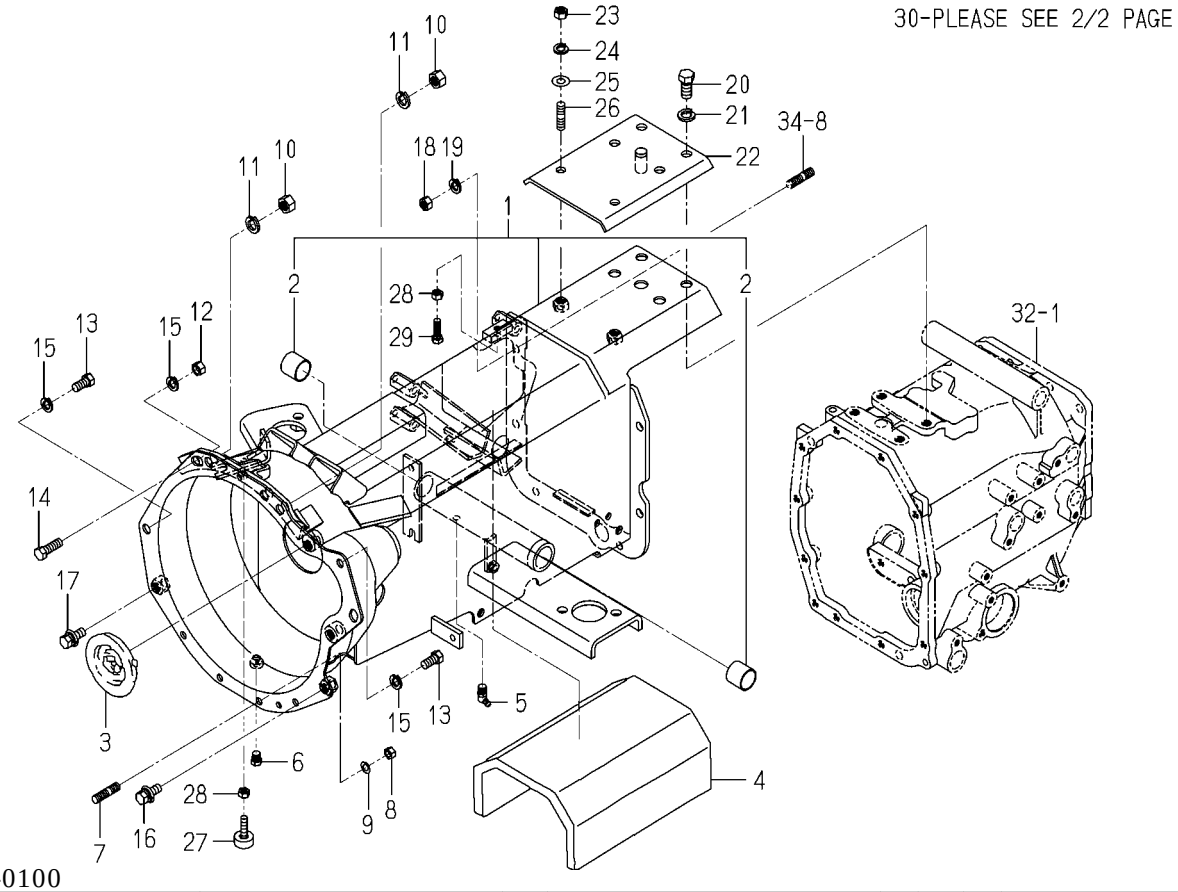

1774-120I-0100

KEY	PART CODE	DESCRIPTION	SPC	TYPE OF MODEL				ITC	COL	GRP	REMARKS
				TM3217	TM3247	TM3267					
1	1774-120-620-00	HOUSING/CLUTCH/HST	*			1					
2	2157-201-201-00	BUSH/25X28X25	*			2					
3	1688-120-052-00	GROMMET/25X70X03	*			1					
4	1750-120-051-20	INSULATOR	*			1					
5	V763-150-000-00	NIPPLE,GREASE/PT1/8	*			1					
6	V782-160-000-2T	PLUG/SCREW/SEAL	*			1					
7	V251-340-802-50	STUD/M8X25/7T	*			4					
8	V304-460-008-00	NUT/M8/7T	*			4					
9	V401-160-008-00	WASHER,SP/M8	*			4					
10	V304-460-012-00	NUT/M12/7T	*			2					
11	V401-160-012-00	WASHER,SP/M12	*			2					
12	V334-460-010-00	NUT/M10 P=1.25 7T	*			1					
13	V203-361-002-00	BOLT/M10X20/7T,P1.25	*			2					
14	V203-361-003-00	BOLT/M10X30/7T,P1.25	*			1					
15	V401-160-010-00	WASHER,SP/M10	*			3					
16	V231-361-202-50	FLANGEBOLT/M12X25	*			1					
17	V231-361-203-50	FLANGEBOLT/M12X35	*			1					
18	V304-460-010-00	NUT/M10/7T	*			6					
19	V401-160-010-00	WASHER,SP/M10	*			6					
20	V201-361-202-50	BOLT/M12X25/7T	*			4					
21	V401-160-012-00	WASHER,SP/M12	*			4					
22	1774-120-350-00	PLATE COMP	*			1					
23	V304-460-010-00	NUT/M10/7T	*			2					
24	V401-160-010-00	WASHER,SP/M10	*			2					
25	V411-260-010-00	WASHER,PL/M10	*			2					
26	V251-341-002-00	STUD/M10X20/7T	*			2					
27	1421-602-005-10	CUSHION,B/ RUBBER	*			1					
28	V304-260-008-00	NUT/M8	*			2					
29	1672-122-003-00	BOLT/TRIMED	*			1					
30	1774-120-002-00	PLATE/L/203X80	*			1					

FIG. 20 HOUSING(CLUTCH/HST)SYSTEM(2/2) (TM3267H TYPE EXCEPT D)

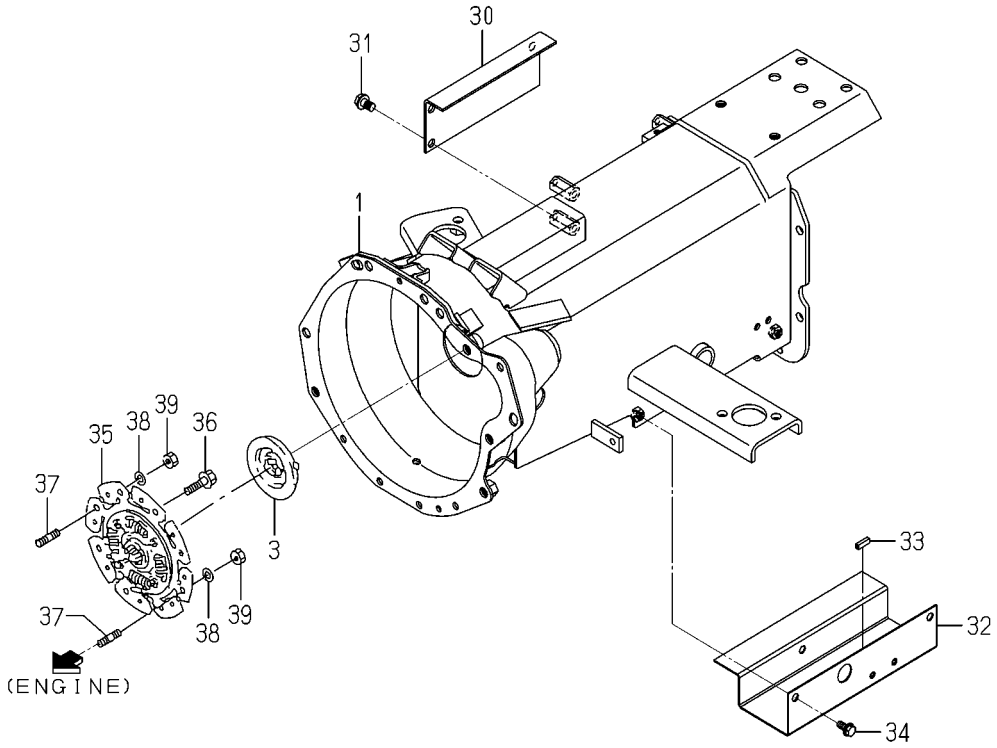

1774-120I-0100

KEY	PART CODE	DESCRIPTION	SPC	TYPE OF MODEL				ITC	COL	GRP	REMARKS
				TM3217	TM3247	TM3267					
31	V231-361-001-60	FLANGEBOLT/M10X16	*			3					
32	1774-120-640-00	COVER/SHAFT/4WD COMP	*			1					
33	1672-601-002-00	TRIM/20	*			1					
34	V231-360-801-60	FLANGEBOLT/M8X16	*			3					
35	1685-120-310-10	DISK/DAMPER ASSY	*			1					
36	V231-360-802-00	FLANGEBOLT/M8X20	*			6					
37	V251-340-802-50	STUD/M8X25/7T	*			2					
38	V401-160-008-00	WASHER,SP/M8	*			2					
39	V304-460-008-00	NUT/M8/7T	*			2					

FIG. 21 HOUSING(CLUTCH/HST)SYSTEM(1/2) (TM326D TYPE)

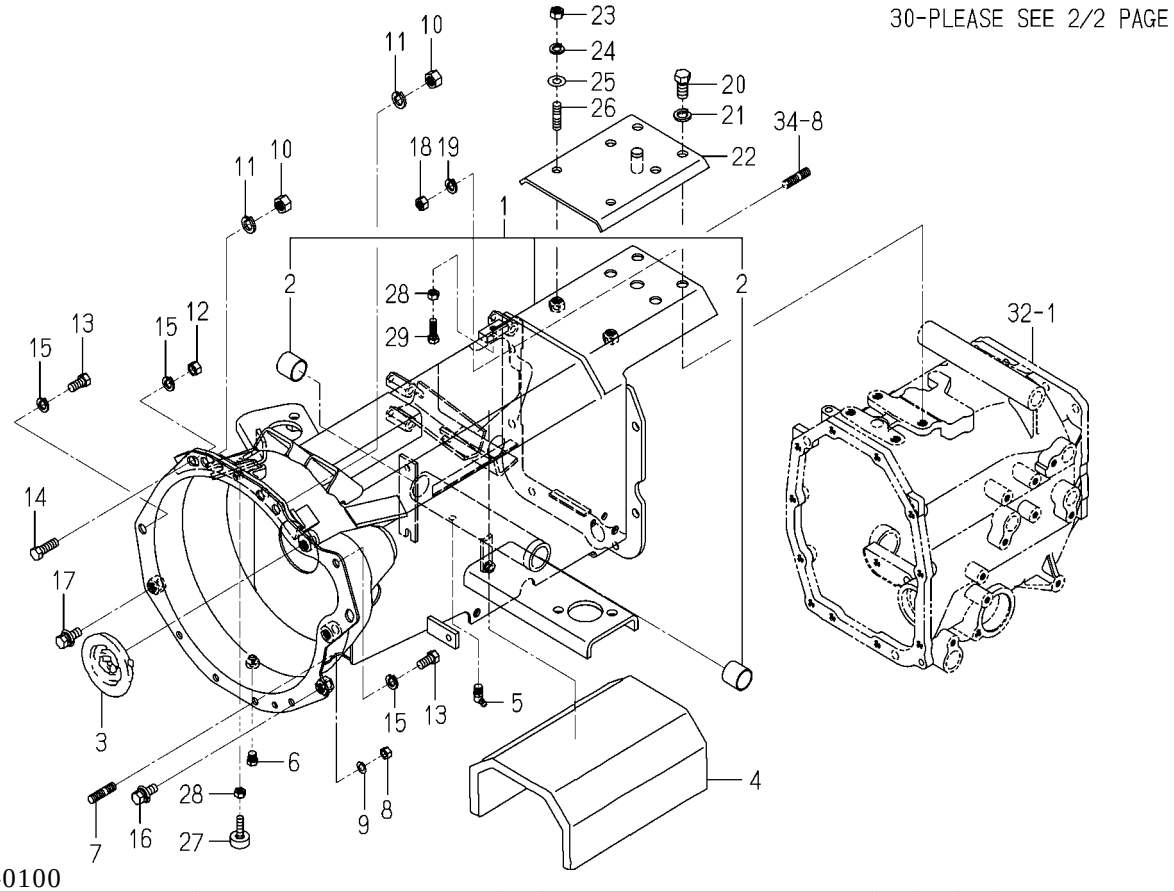

1774-120J-0100

KEY	PART CODE	DESCRIPTION	SPC	TYPE OF MODEL				ITC	COL	GRP	REMARKS
				TM3217	TM3247	TM3267					
1	1774-120-620-00	HOUSING/CLUTCH/HST	*			1					
2	2157-201-201-00	BUSH/25X28X25	*			2					
3	1688-120-052-00	GROMMET/25X70X03	*			1					
4	1750-120-051-20	INSULATOR	*			1					
5	V763-150-000-00	NIPPLE,GREASE/PT1/8	*			1					
6	V782-160-000-2T	PLUG/SCREW/SEAL	*			1					
7	V251-340-802-50	STUD/M8X25/7T	*			4					
8	V304-460-008-00	NUT/M8/7T	*			4					
9	V401-160-008-00	WASHER,SP/M8	*			4					
10	V304-460-012-00	NUT/M12/7T	*			2					
11	V401-160-012-00	WASHER,SP/M12	*			2					
12	V334-460-010-00	NUT/M10 P=1.25 7T	*			1					
13	V203-361-002-00	BOLT/M10X20/7T,P1.25	*			2					
14	V203-361-003-00	BOLT/M10X30/7T,P1.25	*			1					
15	V401-160-010-00	WASHER,SP/M10	*			3					
16	V231-361-202-50	FLANGEBOLT/M12X25	*			1					
17	V231-361-203-50	FLANGEBOLT/M12X35	*			1					
18	V304-460-010-00	NUT/M10/7T	*			6					
19	V401-160-010-00	WASHER,SP/M10	*			6					
20	V201-361-202-50	BOLT/M12X25/7T	*			4					
21	V401-160-012-00	WASHER,SP/M12	*			4					
22	1774-120-350-00	PLATE COMP	*			1					
23	V304-460-010-00	NUT/M10/7T	*			2					
24	V401-160-010-00	WASHER,SP/M10	*			2					
25	V411-260-010-00	WASHER,PL/M10	*			2					
26	V251-341-002-00	STUD/M10X20/7T	*			2					
27	1421-602-005-10	CUSHION,B/ RUBBER	*			1					
28	V304-260-008-00	NUT/M8	*			2					
29	1672-122-003-00	BOLT/TRIMED	*			1					
30	1774-120-640-00	COVER/SHAFT/4WD COMP	*			1					

FIG. 21 HOUSING(CLUTCH/HST)SYSTEM(2/2) (TM326D TYPE)

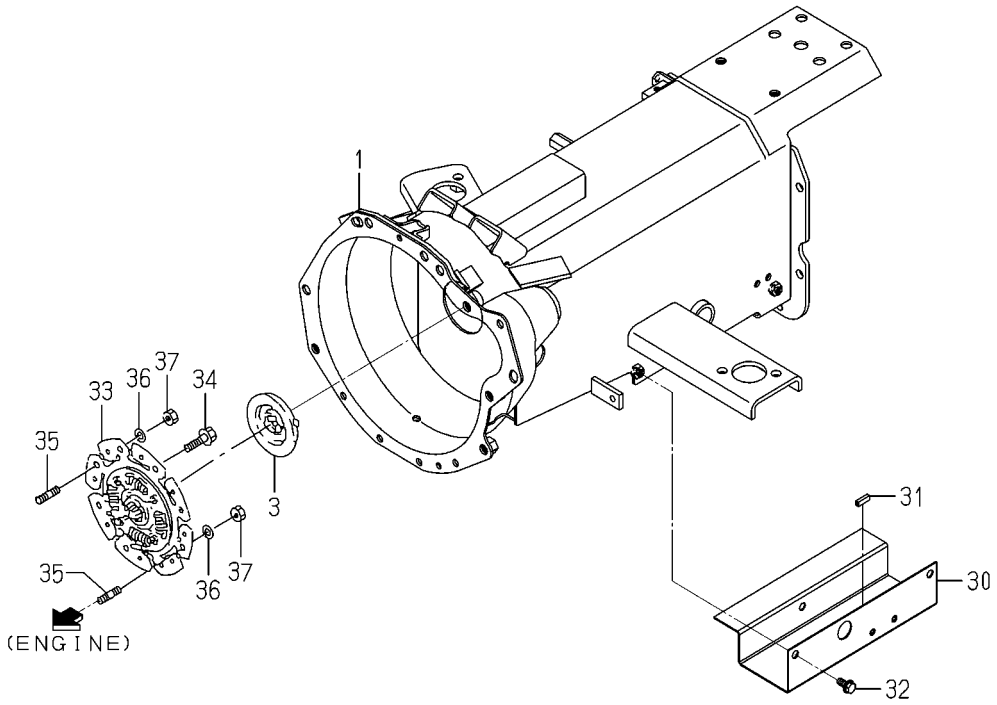

1774-120J-0100

KEY	PART CODE	DESCRIPTION	SPC	TYPE OF MODEL				ITC	COL	GRP	REMARKS
				TM3217	TM3247	TM3267					
31	1672-601-002-00	TRIM/20	*			1					
32	V231-360-801-60	FLANGEBOLT/M8X16	*			3					
33	1685-120-310-10	DISK/DAMPER ASSY	*			1					
34	V231-360-802-00	FLANGEBOLT/M8X20	*			6					
35	V251-340-802-50	STUD/M8X25/7T	*			2					
36	V401-160-008-00	WASHER,SP/M8	*			2					
37	V304-460-008-00	NUT/M8/7T	*			2					

FIG. 22 HOUSING(CLUTCH)SYSTEM(1/2) (TM3267F TYPE)

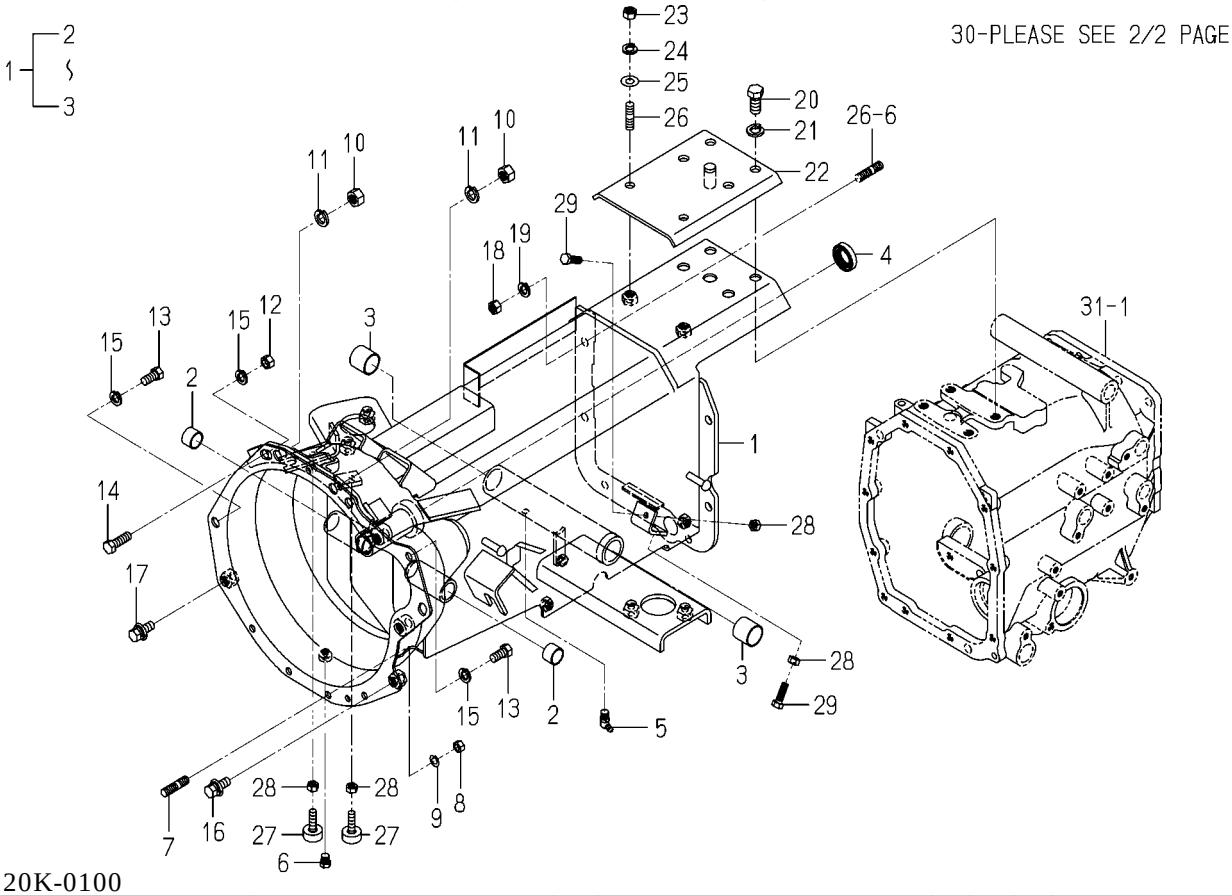

1774-120K-0100

KEY	PART CODE	DESCRIPTION	SPC	TYPE OF MODEL TM3217	TM3247	TM3267		ITC	COL	GRP	REMARKS
1	1774-120-700-60	HOUSING/CLUTCH ASSY	*			1					
2	1650-201-202-10	BUSH/19X22X15	*			2					
3	2157-201-201-00	BUSH/25X28X25	*			2					
4	V744-120-350-70	SEAL,OIL/TC20357	*			1					
5	V763-150-000-00	NIPPLE,GREASE/PT1/8	*			1					
6	V782-160-000-2T	PLUG/SCREW/SEAL	*			1					
7	V251-340-802-50	STUD/M8X25/7T	*			4					
8	V304-460-008-00	NUT/M8/7T	*			4					
9	V401-160-008-00	WASHER,SP/M8	*			4					
10	V304-460-012-00	NUT/M12/7T	*			2					
11	V401-160-012-00	WASHER,SP/M12	*			2					
12	V334-460-010-00	NUT/M10 P=1.25 7T	*			1					
13	V203-361-002-00	BOLT/M10X20/7T,P1.25	*			2					
14	V203-361-003-00	BOLT/M10X30/7T,P1.25	*			1					
15	V401-160-010-00	WASHER,SP/M10	*			3					
16	V231-361-202-50	FLANGEBOLT/M12X25	*			1					
17	V231-361-203-50	FLANGEBOLT/M12X35	*			1					
18	V304-460-010-00	NUT/M10/7T	*			6					
19	V401-160-010-00	WASHER,SP/M10	*			6					
20	V201-361-202-50	BOLT/M12X25/7T	*			4					
21	V401-160-012-00	WASHER,SP/M12	*			4					
22	1774-120-350-00	PLATE COMP	*			1					
23	V304-460-010-00	NUT/M10/7T	*			2					
24	V401-160-010-00	WASHER,SP/M10	*			2					
25	V411-260-010-00	WASHER,PL/M10	*			2					
26	V251-341-002-00	STUD/M10X20/7T	*			2					
27	1421-602-005-10	CUSHION,B/ RUBBER	*			2					
28	V304-260-008-00	NUT/M8	*			4					
29	1672-122-003-00	BOLT/TRIMED	*			2					
30	1774-120-640-00	COVER/SHAFT/4WD COMP	*			1					

FIG. 22 HOUSING(CLUTCH)SYSTEM(2/2) (TM3267F TYPE)

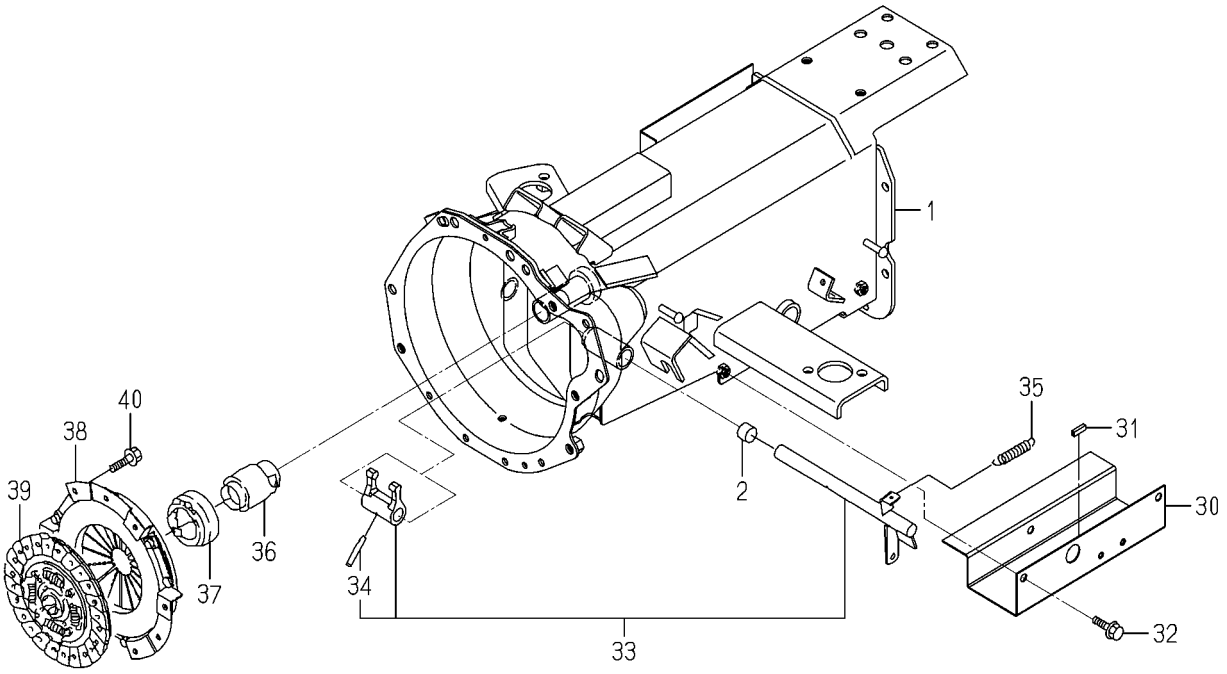

1774-120K-0100

KEY	PART CODE	DESCRIPTION	SPC	TYPE OF MODEL				ITC	COL	GRP	REMARKS
				TM3217	TM3247	TM3267					
31	1672-601-002-00	TRIM/20	*			1					
32	V231-360-801-60	FLANGEBOLT/M8X16	*			3					
33	1774-120-220-00	ARM/CLUTCH SET	*			1					
34	1560-130-001-00	PIN	*			1					
35	1414-312-002-00	SPRING,TENSION/53	*			1					
36	1672-120-007-00	SLEEVE	*			1					
37	1491-120-001-00	BEARING,CLUTCH RS	*			1					
38	1774-120-200-00	COVER/CLUTCH ASSY	*			1					
39	1685-120-220-00	DISK/CLUTCH/200 COMP	*			1					
40	V231-360-802-00	FLANGEBOLT/M8X20	*			6					

FIG. 23 PEDAL(CLUTCH)SYSTEM(F TYPE)

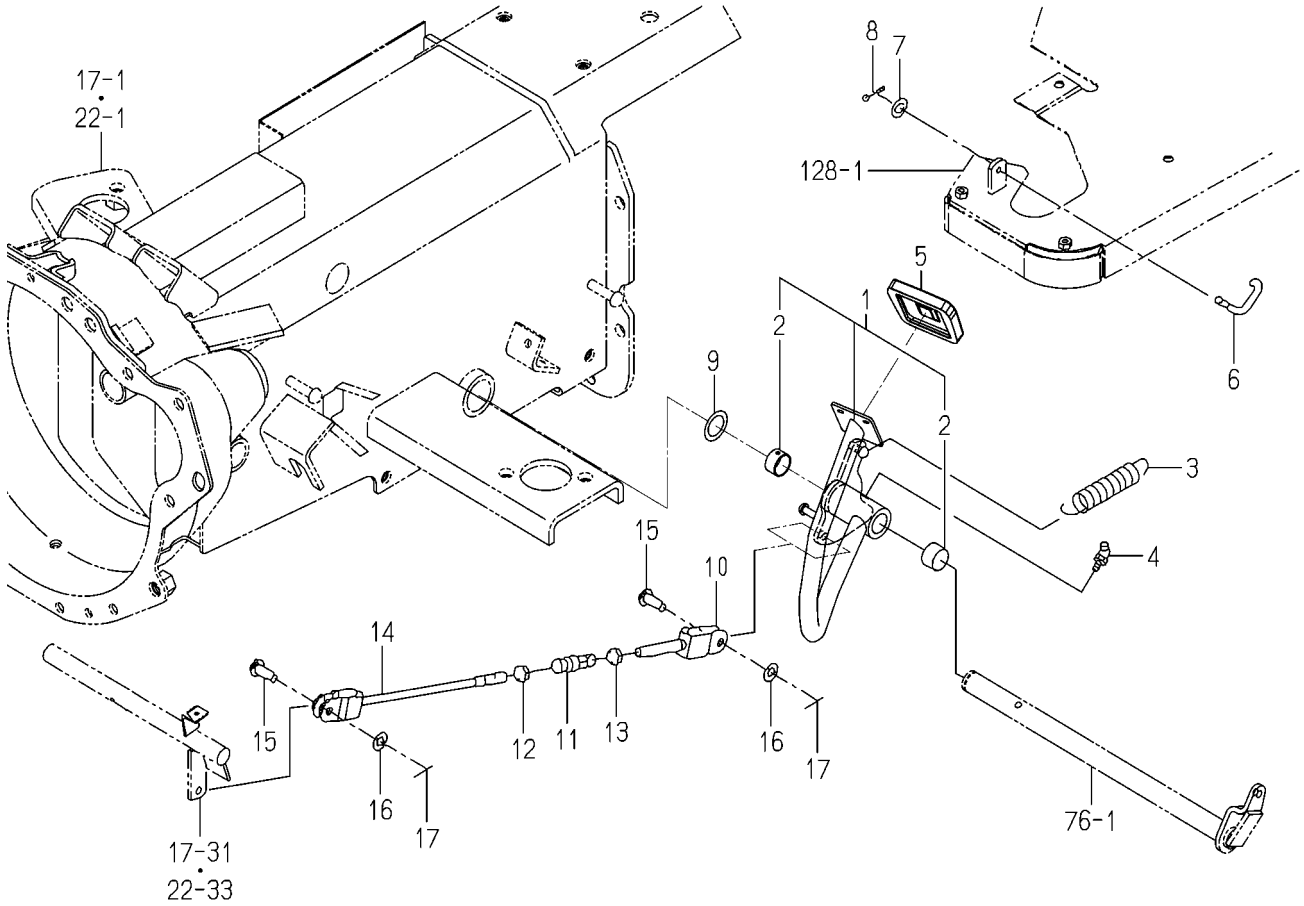

1774-122A-0100

KEY	PART CODE	DESCRIPTION	SPC	TYPE OF MODEL				ITC	COL	GRP	REMARKS
				TM3217	TM3247	TM3267					
1	1774-122-220-00	PEDAL/CLUTCH ASSY	*	1	1	1					
2	8654-203-201-00	BUSH/25X28X15	*	2	2	2					
3	1673-314-001-00	SPRING/HE106	*	1	1	1					
4	V763-150-000-00	NIPPLE,GREASE/PT1/8	*	1	1	1					
5	1774-312-005-00	PAD	*	1	1	1					
6	1675-135-001-00	HOOK	*	1	1	1					
7	V411-260-006-00	WASHER,PL/M6	*	1	1	1					
8	V500-162-002-00	PIN,SPLIT/2X20	*	1	1	1					
9	2152-442-013-00	WASHER/26X38X01	*	1	1	1					
10	1729-135-220-10	ROD/65 COMP	*	1	1	1					
11	1444-122-002-00	TURNBUCKLE/M8	*	1	1	1					
12	1560-132-007-30	NUT/LH/M08	*	1	1	1					
13	V304-260-008-00	NUT/M8	*	1	1	1					
14	1560-132-260-60	ROD COMP	*	1	1	1					
15	1432-242-001-00	PIN	*	2	2	2					
16	V411-260-008-00	WASHER,PL/M8	*	2	2	2					
17	V500-162-002-00	PIN,SPLIT/2X20	*	2	2	2					

FIG. 24 SHAFT(INPUT)SYSTEM(F TYPE)

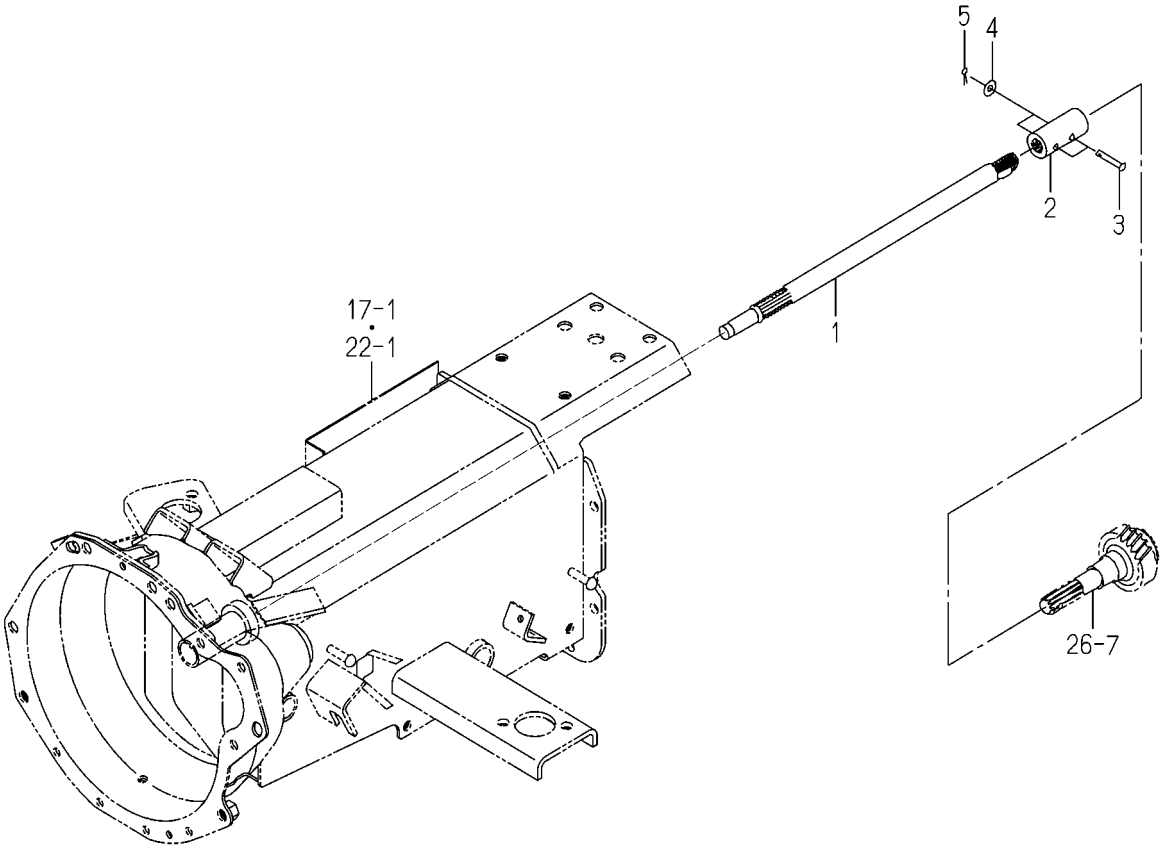

1774-125 -0100

KEY	PART CODE	DESCRIPTION	SPC	TYPE OF MODEL				ITC	COL	GRP	REMARKS
				TM3217	TM3247	TM3267					
1	1774-120-001-00	SHAFT/INPUT	*	1	1	1					
2	1435-120-002-30	COUPLING/16X27X62	*	1	1	1					
3	1774-125-001-00	PIN/06X33	*	2	2	2					
4	V411-260-006-00	WASHER,PL/M6	*	2	2	2					
5	V500-162-001-50	PIN,SPLIT/2X15	*	2	2	2					

FIG. 25 SHAFT(INPUT)SYSTEM(H TYPE)

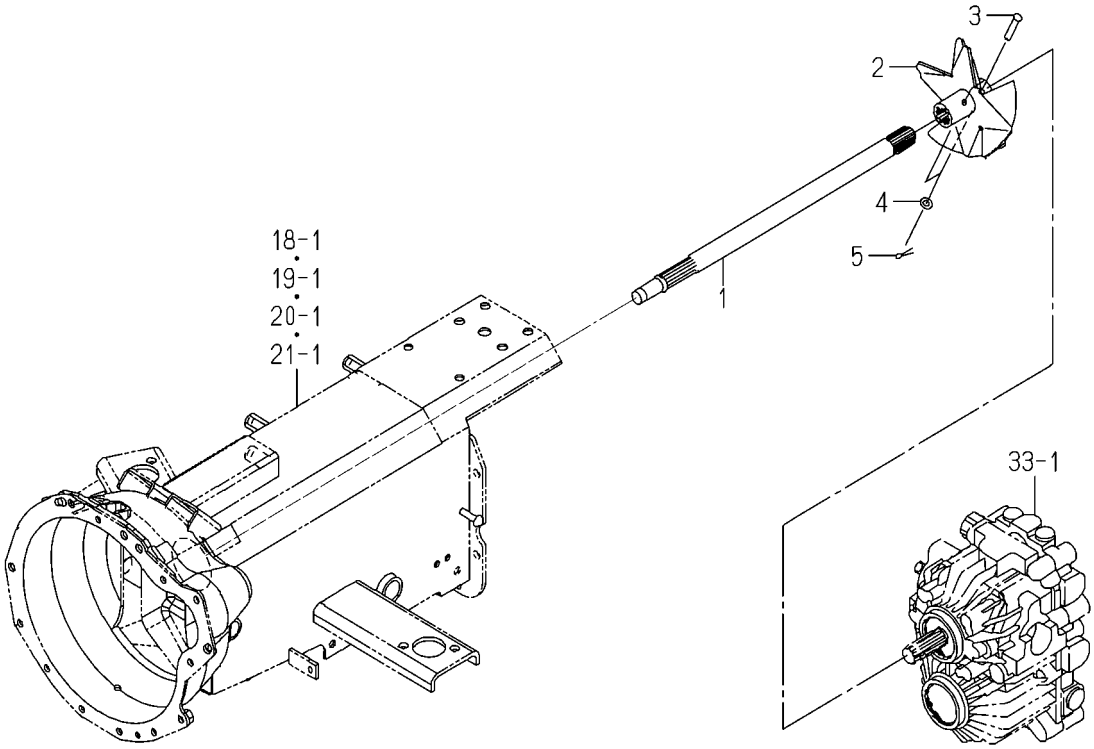

1774-125A-0100

KEY	PART CODE	DESCRIPTION	SPC	TYPE OF MODEL				ITC	COL	GRP	REMARKS
				TM3217	TM3247	TM3267					
1	1774-120-051-00	SHAFT/INPUT	*	1	1	1					
2	1683-120-530-20	FAN/HST COMP	*	1	1	1					
3	1774-125-001-00	PIN/06X33	*	2	2	2					
4	V411-260-006-00	WASHER,PL/M6	*	2	2	2					
5	V500-162-001-50	PIN,SPLIT/2X15	*	2	2	2					

FIG. 26 GEAR(DRIVE)SYSTEM(F TYPE)

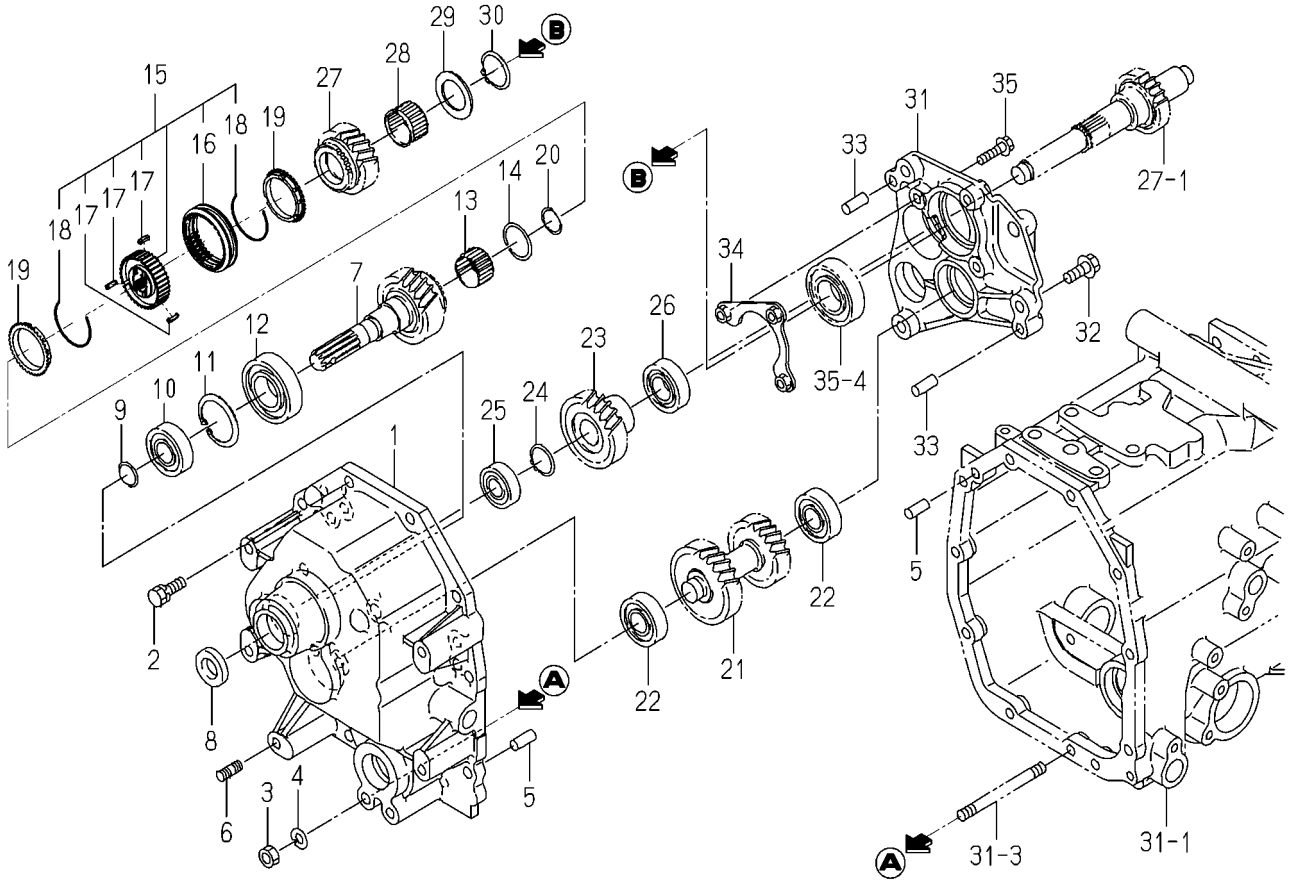

1774-126A-0100

KEY	PART CODE	DESCRIPTION	SPC	TYPE OF MODEL				ITC	COL	GRP	REMARKS
				TM3217	TM3247	TM3267					
1	1774-126-001-10	METAL/INPUT/FRONT	*	1	1	1					
2	V211-561-002-50	BOLT,S/M10X25/7T	*	9	9	9					
3	V304-460-010-00	NUT/M10/7T	*	1	1	1					
4	V401-160-010-00	WASHER,SP/M10	*	1	1	1					
5	V523-101-002-40	PIN,ST,B/10X24	*	2	2	2					
6	V251-341-002-00	STUD/M10X20/7T	*	5	5	5					
7	1774-126-240-00	GEAR/HELICAL/23 COMP	*	1	1	1					
8	V744-120-350-70	SEAL,OIL/TC20357	*	1	1	1					
9	V704-140-020-00	RING,SNAP/20 C	*	1	1	1					
10	V600-110-620-40	BEARING,RB/6204	*	1	1	1					
11	V705-140-047-00	RING,SNAP/47 C	*	1	1	1					
12	1560-206-003-00	BEARING/BALL	*	1	1	1					
13	1729-216-006-00	BEARING/NEEDLE	*	1	1	1					
14	1595-243-002-00	LINK	*	1	1	1					
15	1774-126-900-00	SYNCHRONIZER/30 ASSY	*	1	1	1					
16	1716-126-211-10	SLEEVE	*	1	1	1					
17	1627-205-223-00	PIN/INSERT	*	3	3	3					
18	1650-214-203-00	SPRING	*	2	2	2					
19	1800-214-202-20	RING/SYNCHRONIZER	*	2	2	2					
20	1617-301-002-00	CIRCLIP/30	*	1	1	1					
21	1774-126-002-00	GEAR/HELICAL/27-23	*	1	1	1					
22	V600-110-620-40	BEARING,RB/6204	*	2	2	2					
23	1774-126-003-00	GEAR/HELICAL/24	*	1	1	1					
24	V704-140-025-00	RING,SNAP/25 C	*	1	1	1					
25	V600-110-620-30	BEARING,RB/6203	*	1	1	1					
26	V600-110-620-50	BEARING,RB/6205	*	1	1	1					
27	1774-126-250-00	GEAR/HELICAL/22 COMP	*	1	1	1					
28	1729-203-004-00	BEARING/NEEDLE	*	1	1	1					
29	1641-217-032-00	WASHER/36X46X02	*	1	1	1					
30	V704-140-030-00	RING,SNAP/30 C	*	1	1	1					

FIG. 26 GEAR(DRIVE)SYSTEM(F TYPE)

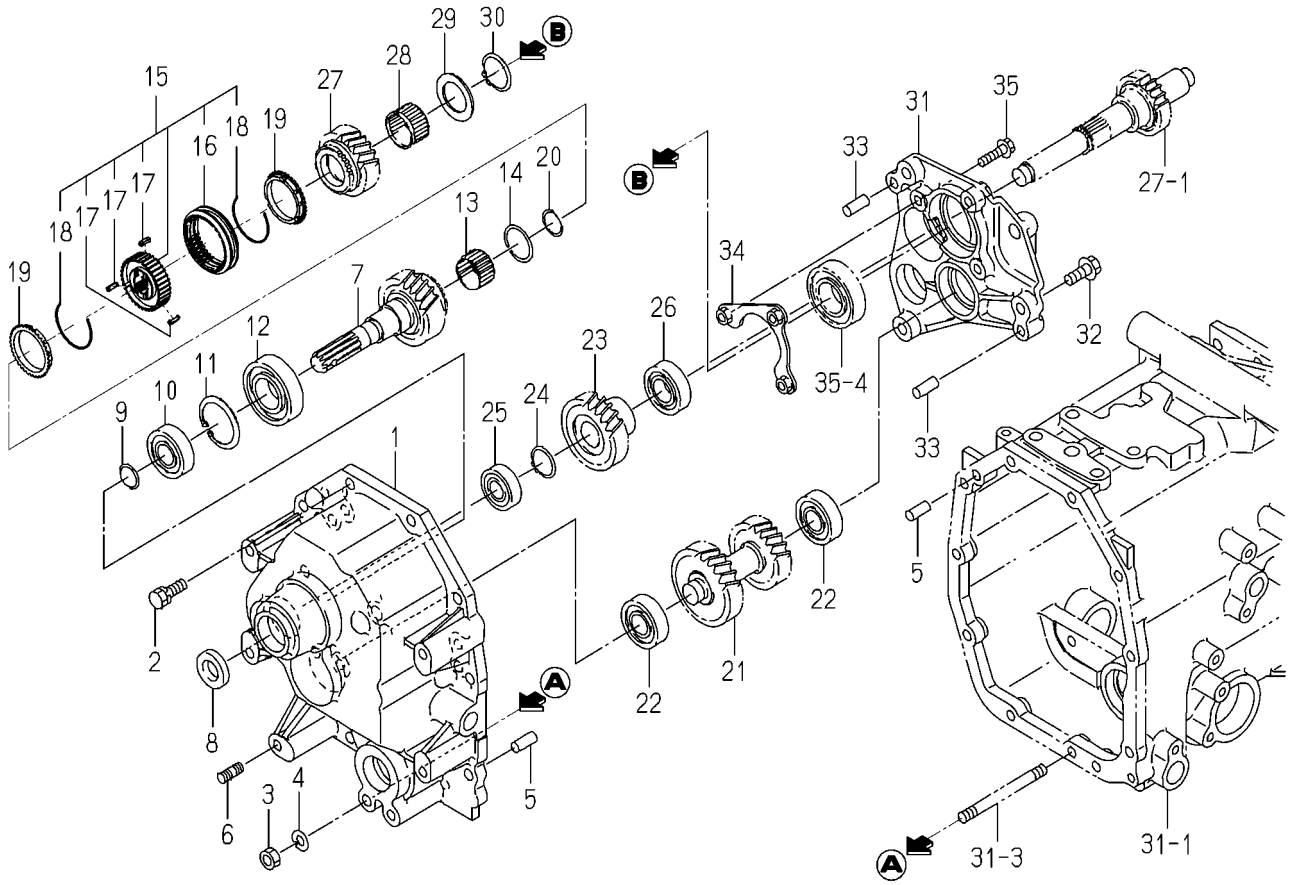

1774-126A-0100

KEY	PART CODE	DESCRIPTION	SPC	TYPE OF MODEL				ITC	COL	GRP	REMARKS
				TM3217	TM3247	TM3267					
31	1774-126-005-00	METAL/INPUT/REAR	*	1	1	1					
32	V231-361-002-50	FLANGEBOLT/M10X25	*	3	3	3					
33	V523-101-002-40	PIN,ST,B/10X24	*	2	2	2					
34	1774-126-220-00	PLATE COMP	*	1	1	1					
35	V231-360-803-50	FLANGEBOLT/M8X35	*	3	3	3					

FIG. 27 GEAR(DRIVE/PTO)SYSTEM(F TYPE)

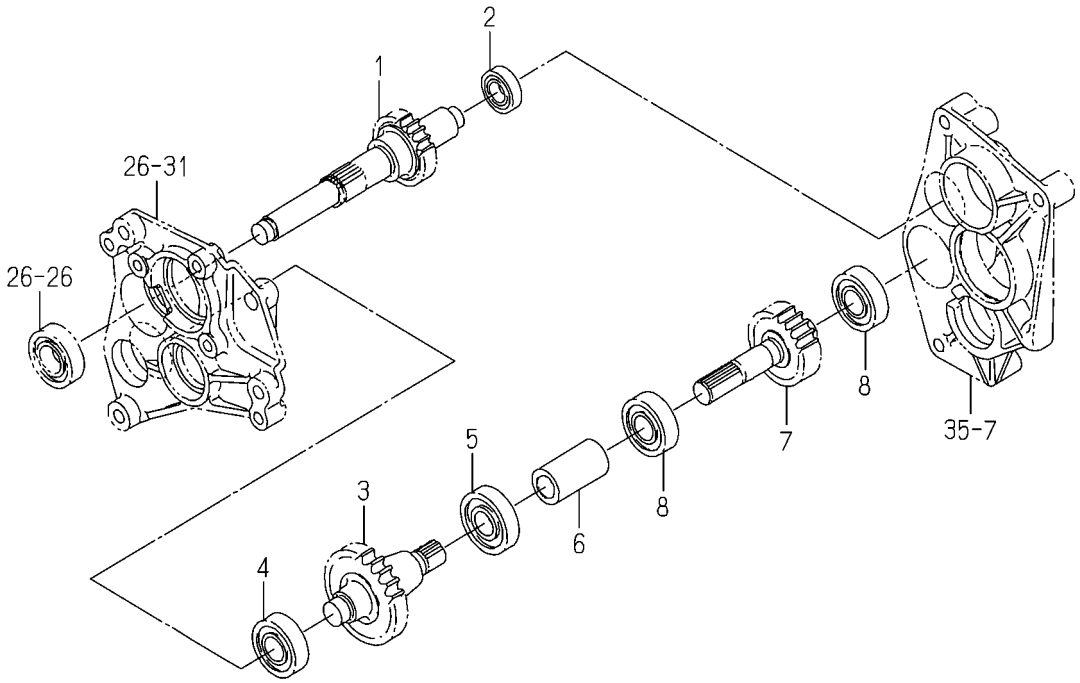

1774-127 -0100

KEY	PART CODE	DESCRIPTION	SPC	TYPE OF MODEL				ITC	COL	GRP	REMARKS
				TM3217	TM3247	TM3267					
1	1774-127-001-00	GEAR/SPUR/21	*	1	1	1					
2	1614-127-024-00	BEARING/BALL	*	1	1	1					
3	1774-127-002-00	GEAR/SPUR/29	*	1	1	1					
4	V600-110-620-40	BEARING,RB/6204	*	1	1	1					
5	1729-202-001-00	BEARING/BALL	*	1	1	1					
6	1602-321-004-00	COUPLING/18X30X55	*	1	1	1					
7	1774-127-004-00	GEAR/SPUR/22	*	1	1	1					
8	V600-110-620-40	BEARING,RB/6204	*	2	2	2					

FIG. 28 GEAR(DRIVE/PTO/HST)SYSTEM (H TYPE)

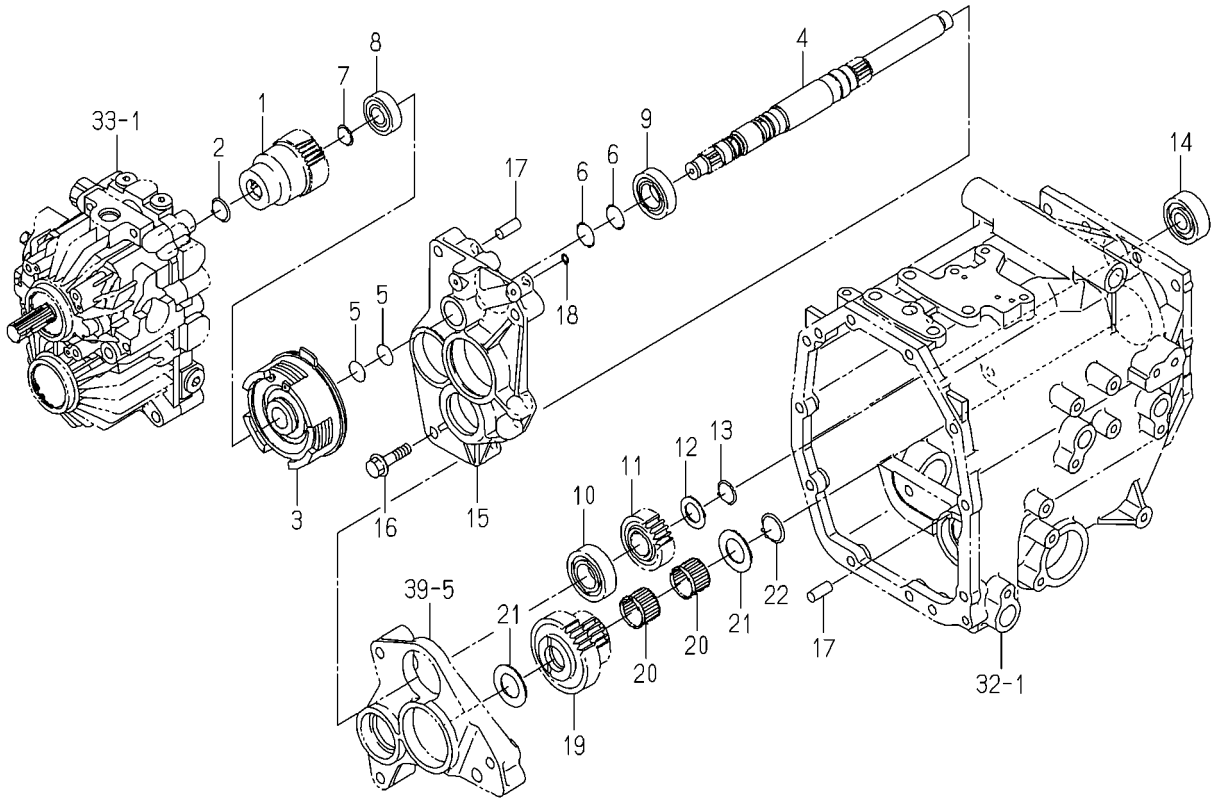

1774-127A-0100

KEY	PART CODE	DESCRIPTION	SPC	TYPE OF MODEL				ITC	COL	GRP	REMARKS
				TM3217	TM3247	TM3267					
1	1774-127-051-00	HUB	*	1	1	1					
2	V704-140-020-00	RING,SNAP/20 C	*	1	1	1					
3	1774-127-510-10	CLUTCH/PTO ASSY	*	1	1	1					FIG 187
4	1774-127-500-10	SHAFT/PTO COMP	*	1	1	1					
5	1688-211-057-00	RING/22	*	2	2	2					
6	1575-261-018-00	RING/25	*	2	2	2					
7	V704-140-017-00	RING,SNAP/17 C	*	1	1	1					
8	V600-110-620-30	BEARING,RB/6203	*	1	1	1					
9	1729-202-002-00	BEARING/BALL	*	1	1	1					
10	1594-221-001-00	BEARING/BALL 6205SH2	*	1	1	1					
11	1774-127-053-00	GEAR/SPUR/20	*	1	1	1					
12	1682-211-002-20	WASHER/20X32X02	*	1	1	1					
13	V704-140-020-00	RING,SNAP/20 C	*	1	1	1					
14	V600-110-630-30	BEARING,RB/6303	*	1	1	1					
15	1774-127-520-00	METAL/FRONT/HST COMP	*	1	1	1					
16	V231-361-004-00	FLANGEBOLT/M10X40	*	3	3	3					
17	V523-101-002-40	PIN,ST,B/10X24	*	2	2	2					
18	V720-111-900-70	O-RING/1B,P7	*	1	1	1					
19	1774-127-055-00	GEAR/SPUR/29-19	*	1	1	1					
20	1719-224-014-00	BEARING/NEEDLE	*	2	2	2					
21	1650-203-011-20	WASHER/25X43X02	*	2	2	2					
22	V704-140-025-00	RING,SNAP/25 C	*	1	1	1					

FIG. 29 LEVER(REVERSE)SYSTEM(F TYPE)

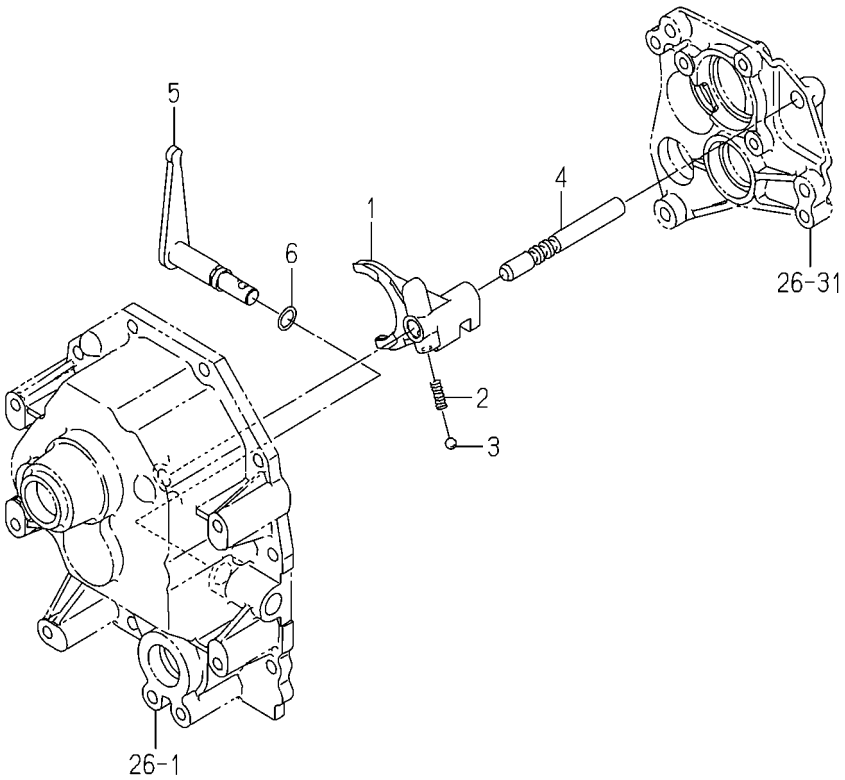

1774-128A-0100

KEY	PART CODE	DESCRIPTION	SPC	TYPE OF MODEL				ITC	COL	GRP	REMARKS
				TM3217	TM3247	TM3267					
1	1774-128-021-00	FORK/SHIFT/REVERSE	*	1	1	1					
2	1650-253-003-00	SPRING/HC022	*	1	1	1					
3	V682-200-001-00	BALL,STEEL	*	1	1	1					
4	1774-128-001-00	STAY/SHIFT/REVERSE	*	1	1	1					
5	1774-128-200-00	ARM/SHIFT/REVERSE	*	1	1	1					
6	V720-102-401-40	O-RING/1A,P14	*	1	1	1					

FIG. 30 LEVER(REVERSE)SYSTEM(F TYPE)

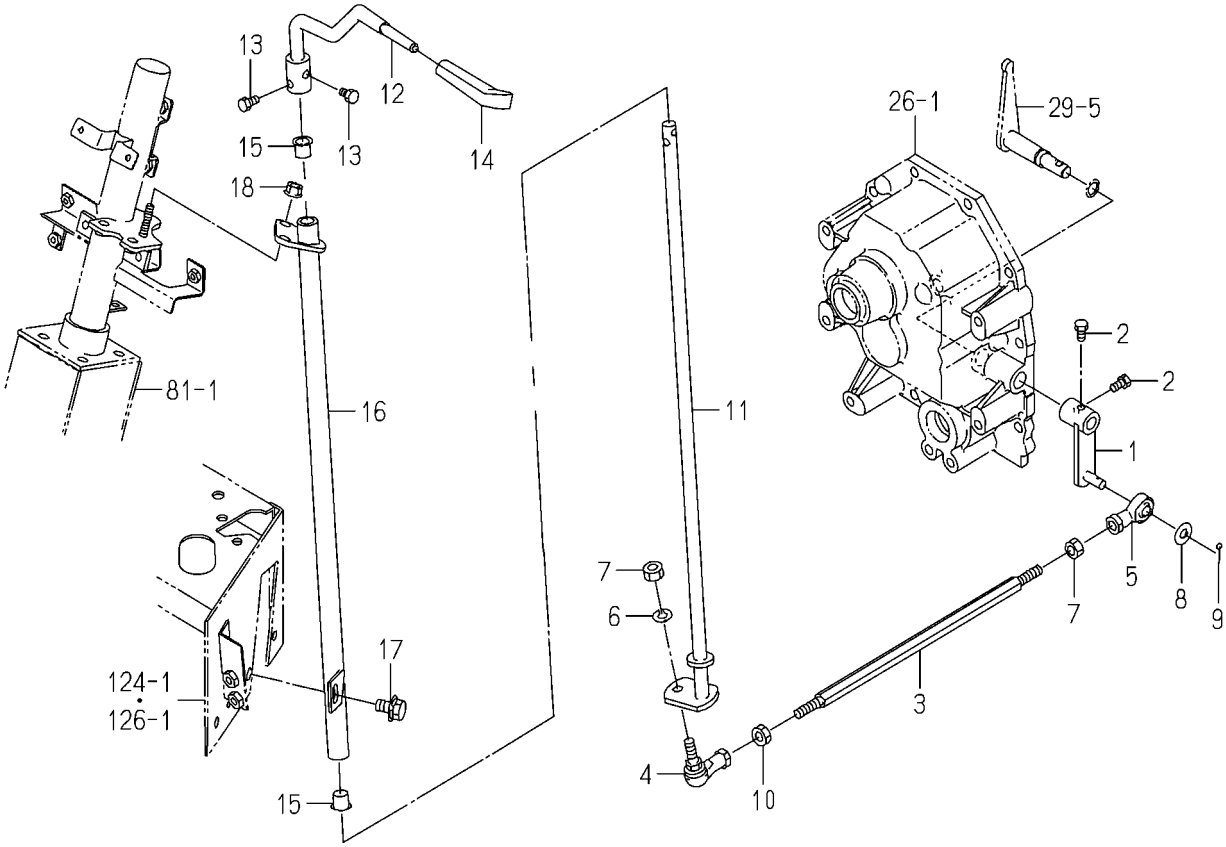

1774-129 -0100

KEY	PART CODE	DESCRIPTION	SPC	TYPE OF MODEL				ITC	COL	GRP	REMARKS
				TM3217	TM3247	TM3267					
1	1774-129-230-00	ARM/REVERSE COMP	*	1	1	1					
2	1560-223-016-00	BOLT/M8X16	*	2	2	2					
3	1774-129-001-00	ROD	*	1	1	1					
4	2163-775-009-00	END,ROD,M10/LH	*	1	1	1					
5	3689-212-002-00	BALL/M10/R	*	1	1	1					
6	V401-160-010-00	WASHER,SP/M10	*	1	1	1					
7	V304-260-010-00	NUT/M10	*	2	2	2					
8	V411-260-010-00	WASHER,PL/M10	*	1	1	1					
9	V500-163-002-00	PIN,SPLIT/3X20	*	1	1	1					
10	3625-212-007-00	NUT/M10	*	1	1	1					
11	1774-129-210-00	ARM/REVERSE COMP	*	1	1	1					
12	1774-129-200-00	LEVER/REVERSE COMP	*	1	1	1					
13	1560-223-016-00	BOLT/M8X16	*	2	2	2					
14	1646-116-051-10	GRIP/THROTTLE	*	1	1	1					
15	4335-145-221-00	BUSH/14X16X15	*	2	2	2					
16	1774-129-220-10	BRACKET/ARM COMP	*	1	1	1					
17	V211-661-002-00	BOLT,SP/M10X20/7T	*	1	1	1					
18	V362-260-008-00	NUT/WASHER/M8	*	2	2	2					

FIG. 31 CASE(MISSION/FRONT)SYSTEM(F TYPE)

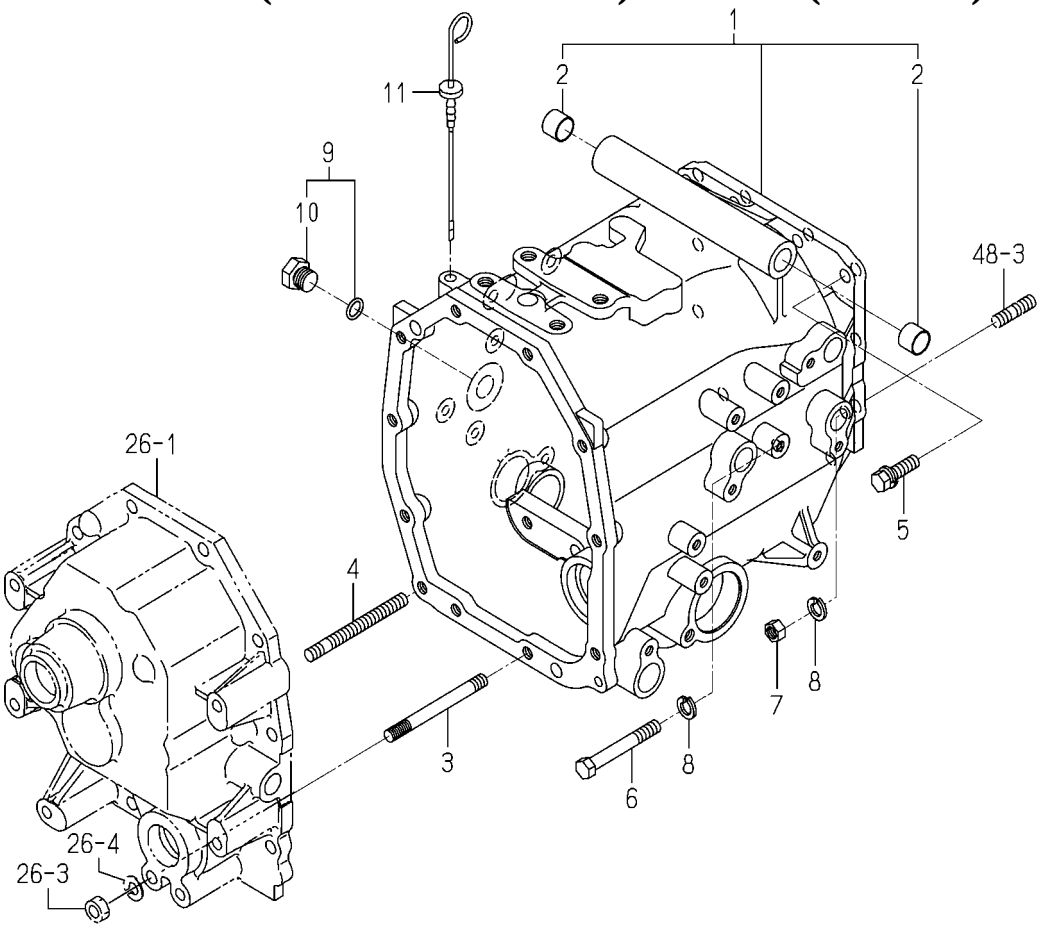

1774-201 -0100

KEY	PART CODE	DESCRIPTION	SPC	TYPE OF MODEL				ITC	COL	GRP	REMARKS
				TM3217	TM3247	TM3267					
1	1774-201-200-50	CASE/TRANSMISSION/F	*	1	1	1					
2	3668-612-001-00	BUSH	*	2	2	2					
3	1774-201-003-10	BOLT/STUD/M10X90	*	1	1	1					
4	V251-341-009-00	STUD/M10X90/7T	*	1	1	1					
5	V211-561-003-50	BOLT,S/M10X35/7T	*	2	2	2					
6	V201-361-007-50	BOLT/M10X75/7T	*	1	1	1					
7	V304-460-010-00	NUT/M10/7T	*	8	8	8					
8	V401-160-010-00	WASHER,SP/M10	*	9	9	9					
9	1725-203-210-00	PLUG/G3/8 ASSY	*	1	1	1					
10	V720-112-401-40	O-RING/1B,P14	*	1	1	1					
11	1774-201-002-00	GAUGE/OIL	*	1	1	1					

FIG. 32 CASE(MISSION/FRONT/HST)SYSTEM (H TYPE)

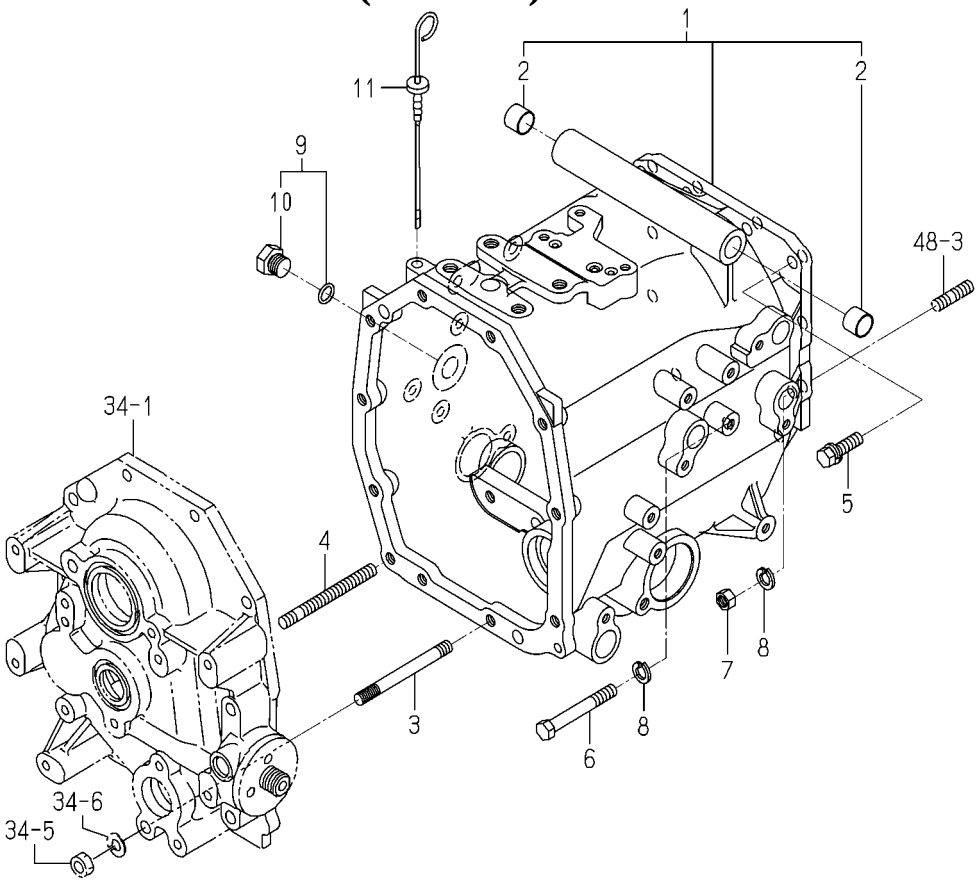

1774-201A-0100

KEY	PART CODE	DESCRIPTION	SPC	TYPE OF MODEL				ITC	COL	GRP	REMARKS
				TM3217	TM3247	TM3267					
1	1774-201-500-50	CASE/TRANSMISSION/F	*	1	1	1					
2	3668-612-001-00	BUSH	*	2	2	2					
3	1774-201-003-10	BOLT/STUD/M10X90	*	1	1	1					
4	V251-341-009-00	STUD/M10X90/7T	*	1	1	1					
5	V211-561-003-50	BOLT,S/M10X35/7T	*	2	2	2					
6	V201-361-007-50	BOLT/M10X75/7T	*	1	1	1					
7	V304-460-010-00	NUT/M10/7T	*	8	8	8					
8	V401-160-010-00	WASHER,SP/M10	*	9	9	9					
9	1725-203-210-00	PLUG/G3/8 ASSY	*	1	1	1					
10	V720-112-401-40	O-RING/1B,P14	*	1	1	1					
11	1774-201-002-00	GAUGE/OIL	*	1	1	1					

FIG. 33 HST SYSTEM(H TYPE)

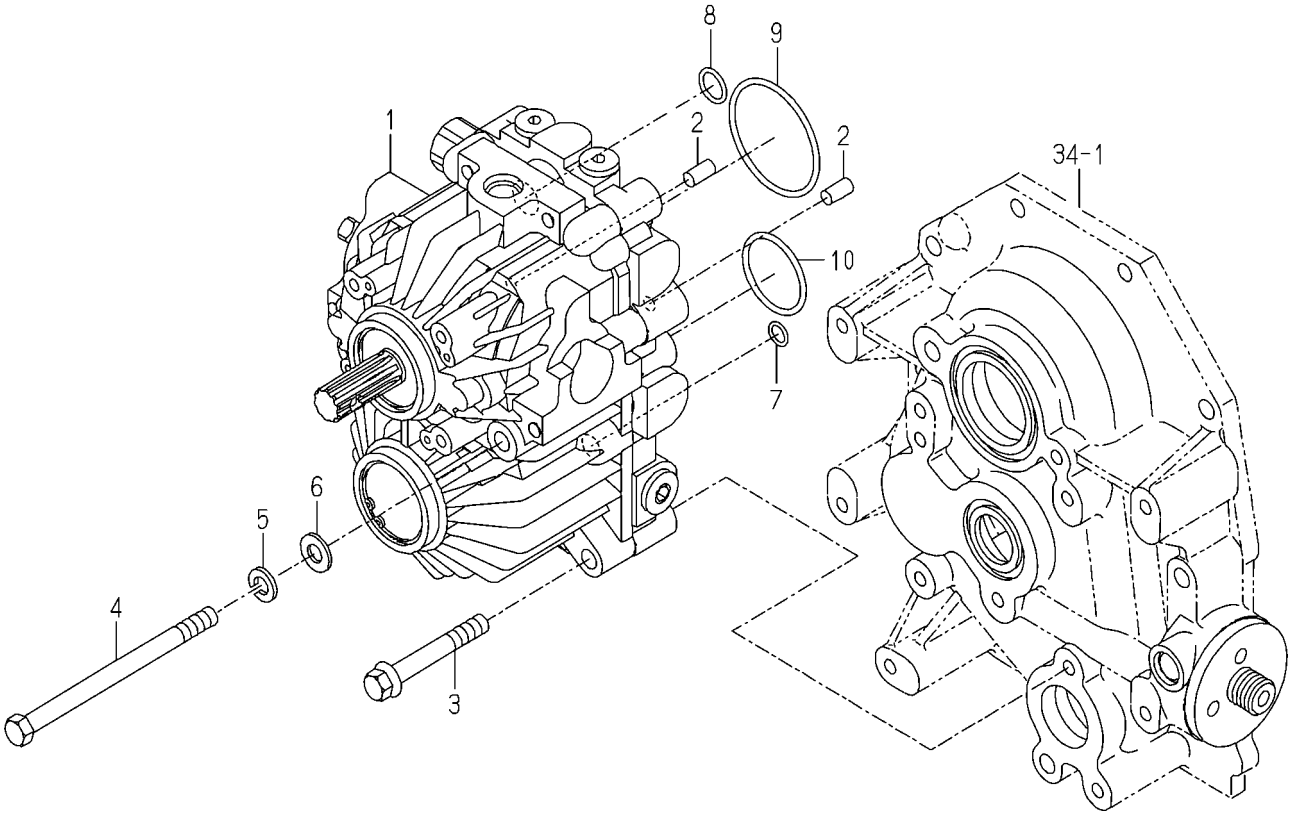

1774-202A-0100

KEY	PART CODE	DESCRIPTION	SPC	TYPE OF MODEL				ITC	COL	GRP	REMARKS
				TM3217	TM3247	TM3267					
1	K510-027-000-00	HST/TME/23 ASSY	*	1	1	1					FIG 184
2	V523-100-801-60	PIN,ST,B/8X16	*	2	2	2					
3	V231-361-007-00	FLANGEBOLT/M10X70	*	2	2	2					
4	V201-361-014-00	BOLT/M10X140/7T	*	2	2	2					
5	V401-160-010-00	WASHER,SP/M10	*	2	2	2					
6	V411-260-010-00	WASHER,PL/M10	*	2	2	2					
7	V720-111-901-00	O-RING/1B,P10	*	1	1	1					
8	V720-112-401-50	O-RING/1B,P15	*	1	1	1					
9	V721-103-106-00	O-RING/1A,G60	*	1	1	1					
10	V721-103-104-00	O-RING/1A,G40	*	1	1	1					

FIG. 34 GEAR(INPUT/HST)SYSTEM(H TYPE)

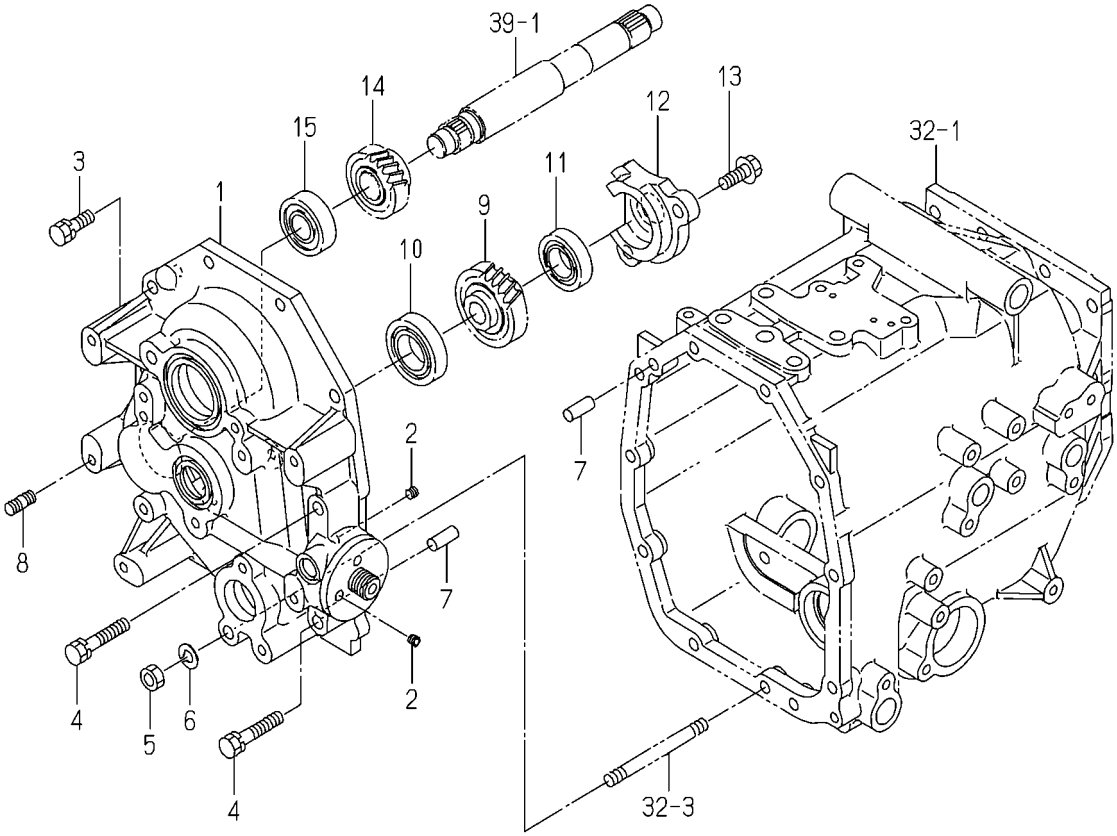

1774-203A-0100

KEY	PART CODE	DESCRIPTION	SPC	TYPE OF MODEL				ITC	COL	GRP	REMARKS
				TM3217	TM3247	TM3267					
1	1774-203-054-10	METAL/INPUT/FRONT/HS	*	1	1	1					
2	V780-140-000-2T	PLUG/SCREW/SEAL	*	2	2	2					
3	V211-561-002-50	BOLT,S/M10X25/7T	*	7	7	7					
4	V211-561-005-00	BOLT,S/M10X50/7T	*	2	2	2					
5	V304-460-010-00	NUT/M10/7T	*	1	1	1					
6	V401-160-010-00	WASHER,SP/M10	*	1	1	1					
7	V523-101-002-40	PIN,ST,B/10X24	*	2	2	2					
8	V251-341-002-00	STUD/M10X20/7T	*	5	5	5					
9	1774-203-051-00	GEAR/HELICAL/22	*	1	1	1					
10	1729-202-003-00	BEARING/BALL	*	1	1	1					
11	1729-202-002-00	BEARING/BALL	*	1	1	1					
12	1774-203-052-00	METAL/INPUT/REAR/HST	*	1	1	1					
13	V231-361-002-50	FLANGEBOLT/M10X25	*	2	2	2					
14	1774-203-053-00	GEAR/HELICAL/19	*	1	1	1					
15	V600-110-620-40	BEARING,RB/6204	*	1	1	1					

FIG. 35 GEAR(INPUT)SYSTEM(F TYPE)

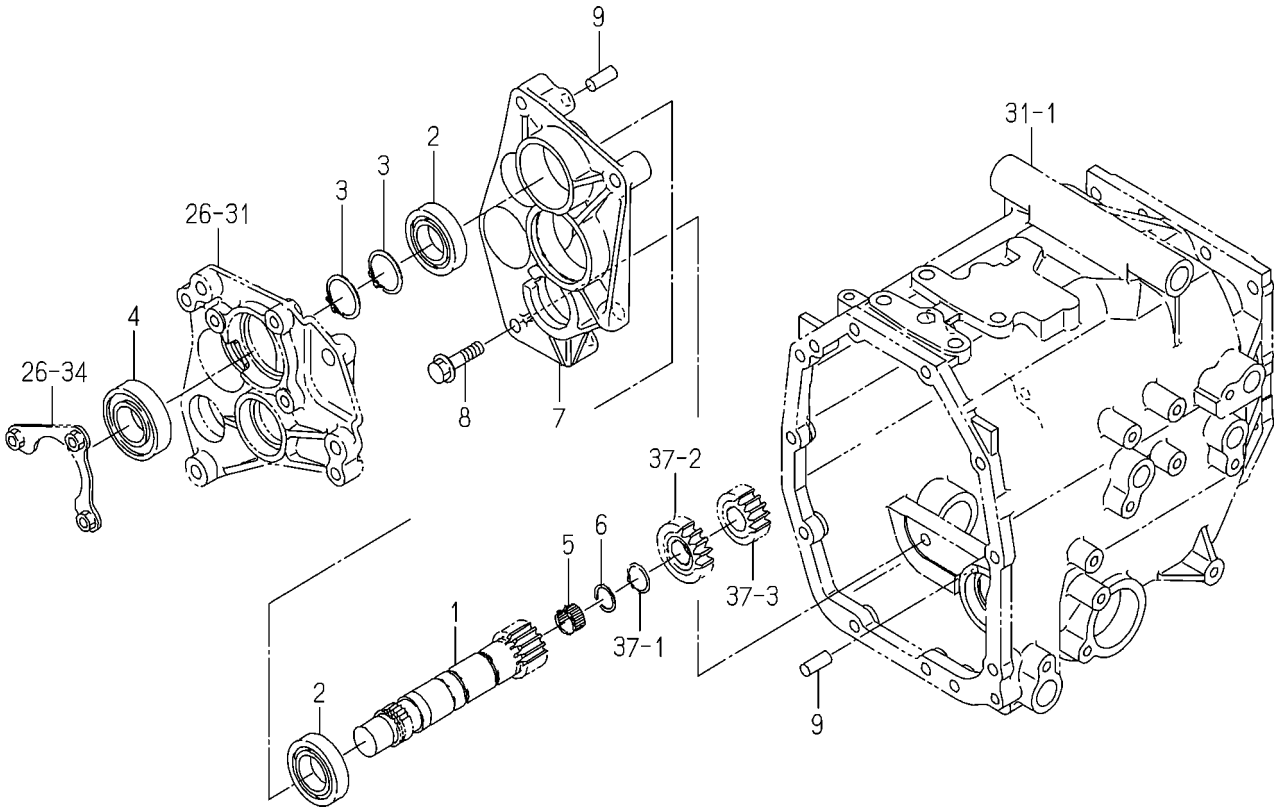

1774-203B-0100

KEY	PART CODE	DESCRIPTION	SPC	TYPE OF MODEL				ITC	COL	GRP	REMARKS
				TM3217	TM3247	TM3267					
1	1774-203-021-00	GEAR/SPUR/13	*	1	1	1					
2	2144-307-003-00	BEARING,6006SH2	*	2	2	2					
3	V704-140-030-00	RING,SNAP/30 C	*	2	2	2					
4	V600-110-620-60	BEARING,RB/6206	*	1	1	1					
5	1703-205-016-00	BEARING/NEEDLE	*	1	1	1					
6	1774-203-005-00	RING/SNAP	*	1	1	1					
7	1774-203-004-00	METAL/FRONT	*	1	1	1					
8	V231-361-004-00	FLANGEBOLT/M10X40	*	3	3	3					
9	V523-101-002-40	PIN,ST,B/10X24	*	2	2	2					

FIG. 36 GEAR(CHANGE/MAIN)SYSTEM(F TYPE)

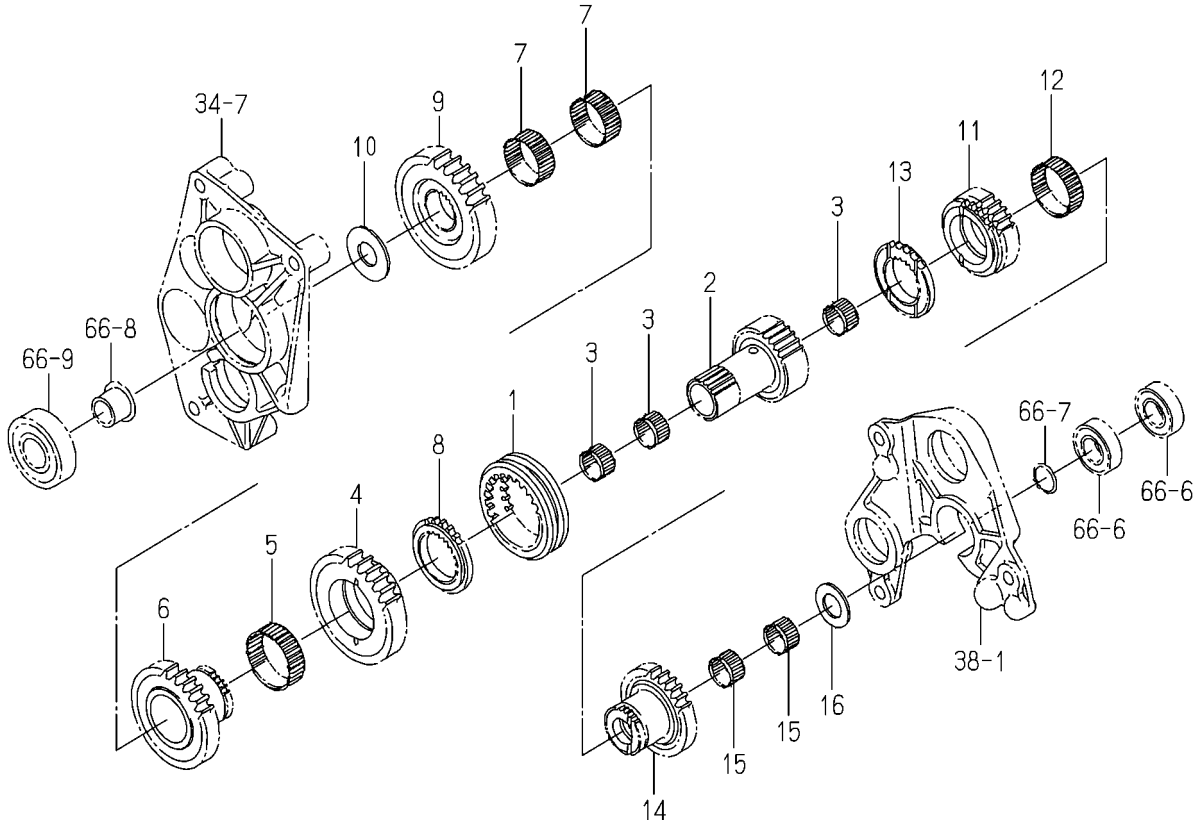

1774-205 -0100

KEY	PART CODE	DESCRIPTION	SPC	TYPE OF MODEL				ITC	COL	GRP	REMARKS
				TM3217	TM3247	TM3267					
1	1763-205-007-20	COUPLING	*	1	1	1					
2	1774-205-004-00	HUB	*	1	1	1					
3	1716-127-011-00	BEARING/NEEDLE	*	3	3	3					
4	1774-205-003-00	GEAR/SPUR/29	*	1	1	1					
5	1757-216-003-00	BEARING/NEEDLE	*	1	1	1					
6	1774-205-002-00	GEAR/SPUR/26	*	1	1	1					
7	1716-221-011-00	BEARING/NEEDLE	*	2	2	2					
8	1773-214-005-00	HUB	*	1	1	1					
9	1774-205-001-00	GEAR/SPUR/36	*	1	1	1					
10	1774-205-007-00	WASHER/20X45X03	*	1	1	1					
11	1774-205-005-00	GEAR/SPUR/19	*	1	1	1					
12	1763-205-011-10	BEARING/NEEDLE	*	1	1	1					
13	1763-205-005-10	HUB	*	1	1	1					
14	1774-205-006-00	GEAR/SPUR/22	*	1	1	1					
15	1716-127-011-00	BEARING/NEEDLE	*	2	2	2					
16	1614-203-005-00	WASHER/20X36X02	*	1	1	1					

FIG. 37 GEAR(COUNTER/MAIN)SYSTEM (F TYPE)

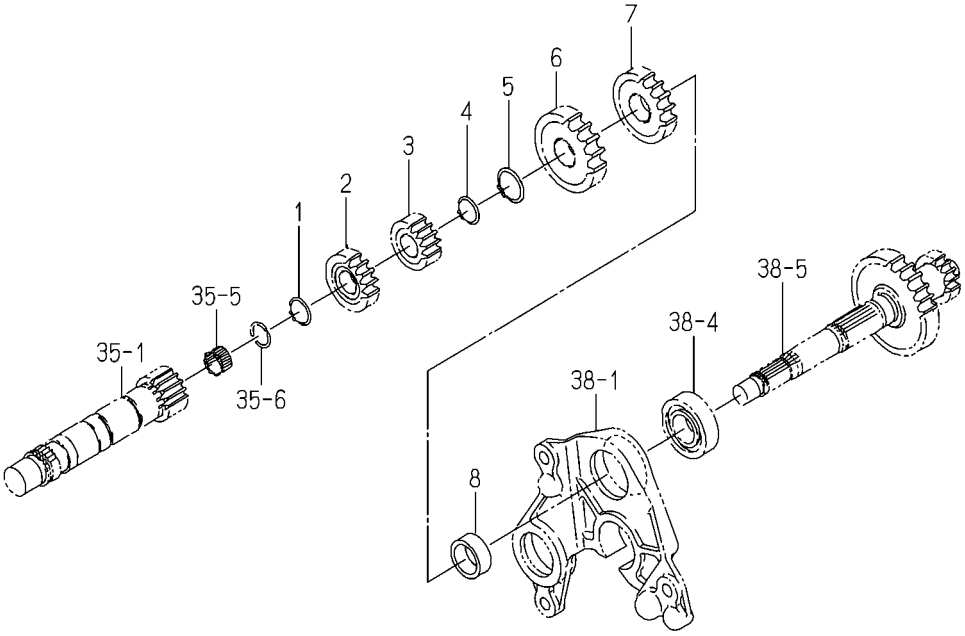

1774-206 -0100

KEY	PART CODE	DESCRIPTION	SPC	TYPE OF MODEL				ITC	COL	GRP	REMARKS
				TM3217	TM3247	TM3267					
1	V704-140-020-00	RING,SNAP/20 C	*	1	1	1					
2	1774-206-001-00	GEAR/SPUR/14	*	1	1	1					
3	1774-206-002-00	GEAR/SPUR/12	*	1	1	1					
4	V704-140-020-00	RING,SNAP/20 C	*	1	1	1					
5	V704-140-025-00	RING,SNAP/25 C	*	1	1	1					
6	1774-206-003-00	GEAR/SPUR/21	*	1	1	1					
7	1774-206-004-00	GEAR/SPUR/18	*	1	1	1					
8	1774-206-005-00	COLLAR/26X34X13	*	1	1	1					

FIG. 38 GEAR(CHANGE/SUB)SYSTEM(F TYPE)

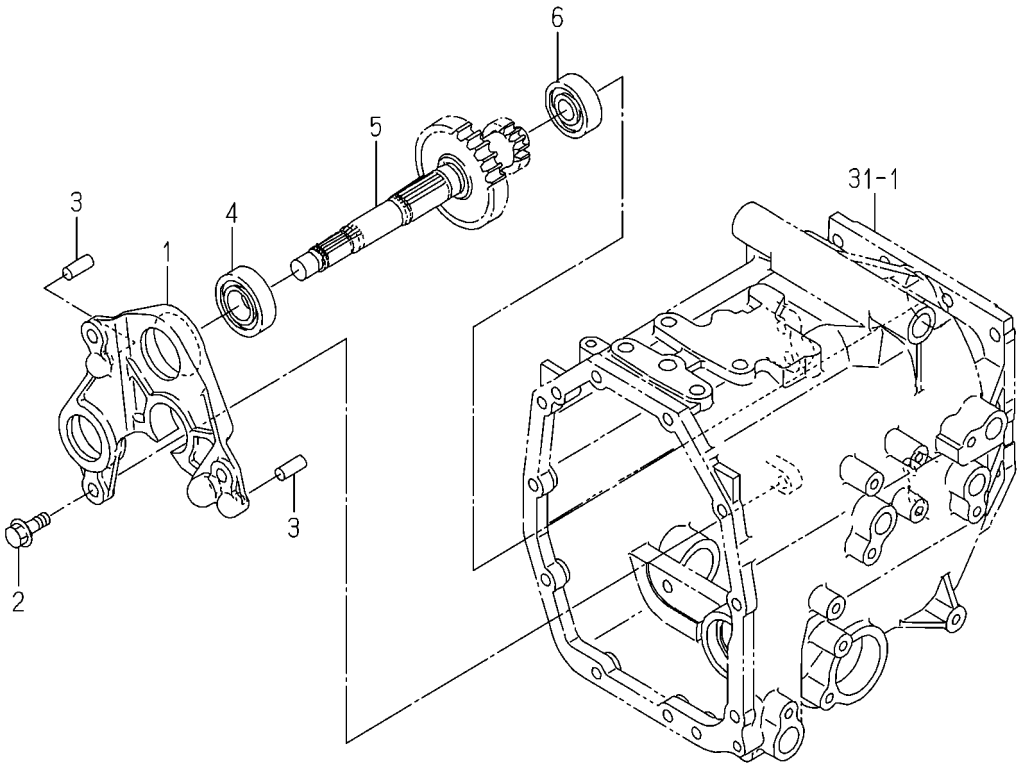

1774-207 -0100

KEY	PART CODE	DESCRIPTION	SPC	TYPE OF MODEL				ITC	COL	GRP	REMARKS
				TM3217	TM3247	TM3267					
1	1774-207-001-00	METAL/REAR	*	1	1	1					
2	V231-361-002-50	FLANGEBOLT/M10X25	*	3	3	3					
3	V523-101-002-40	PIN,ST,B/10X24	*	2	2	2					
4	1594-221-001-00	BEARING/BALL 6205SH2	*	1	1	1					
5	1774-207-005-00	GEAR/SPUR/33-14	*	1	1	1					
6	V600-110-630-30	BEARING,RB/6303	*	1	1	1					

FIG. 39 GEAR(CHANGE/SUB)SYSTEM(H TYPE)

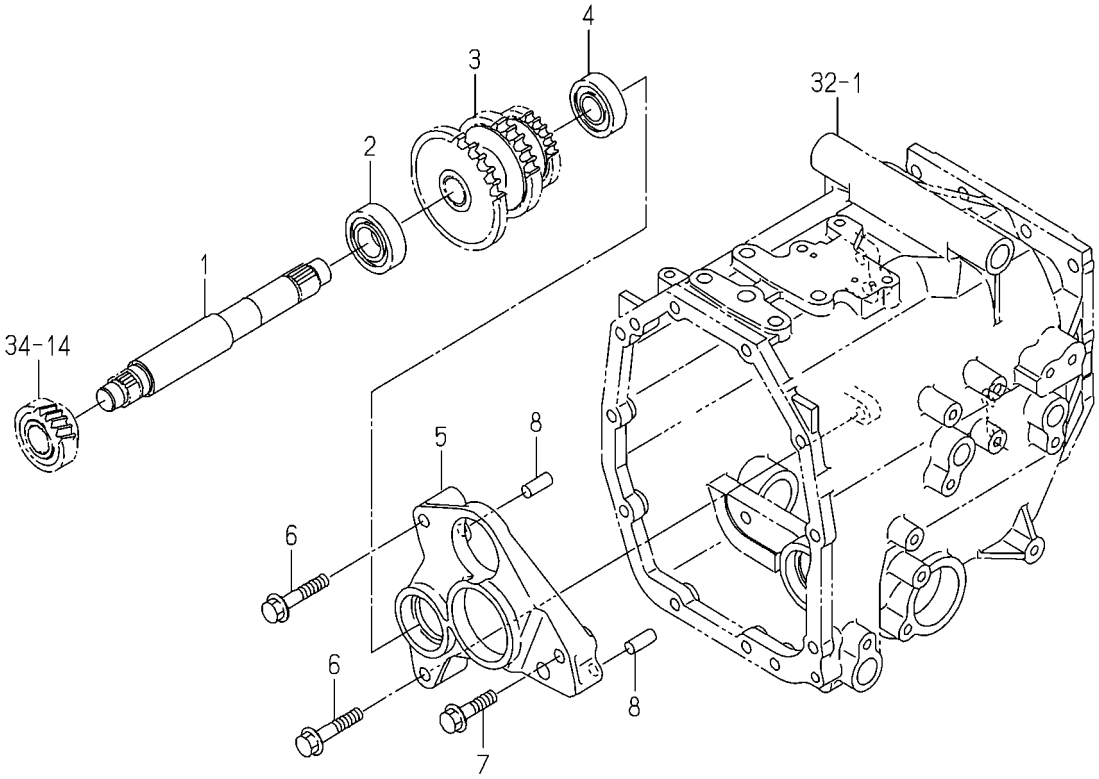

1774-207A-0100

KEY	PART CODE	DESCRIPTION	SPC	TYPE OF MODEL				ITC	COL	GRP	REMARKS
				TM3217	TM3247	TM3267					
1	1774-207-051-00	SHAFT	*	1	1	1					
2	V600-110-620-50	BEARING,RB/6205	*	1	1	1					
3	1774-207-053-00	GEAR/SPUR/38-31-24	*	1	1	1					
4	V600-110-620-40	BEARING,RB/6204	*	1	1	1					
5	1774-207-052-00	METAL/REAR/HST	*	1	1	1					
6	V231-361-005-00	FLANGEBOLT/M10X50	*	2	2	2					
7	V231-361-004-00	FLANGEBOLT/M10X40	*	1	1	1					
8	V523-101-002-40	PIN,ST,B/10X24	*	2	2	2					

FIG. 40 GEAR(COUNTER/SUB)SYSTEM(F TYPE)

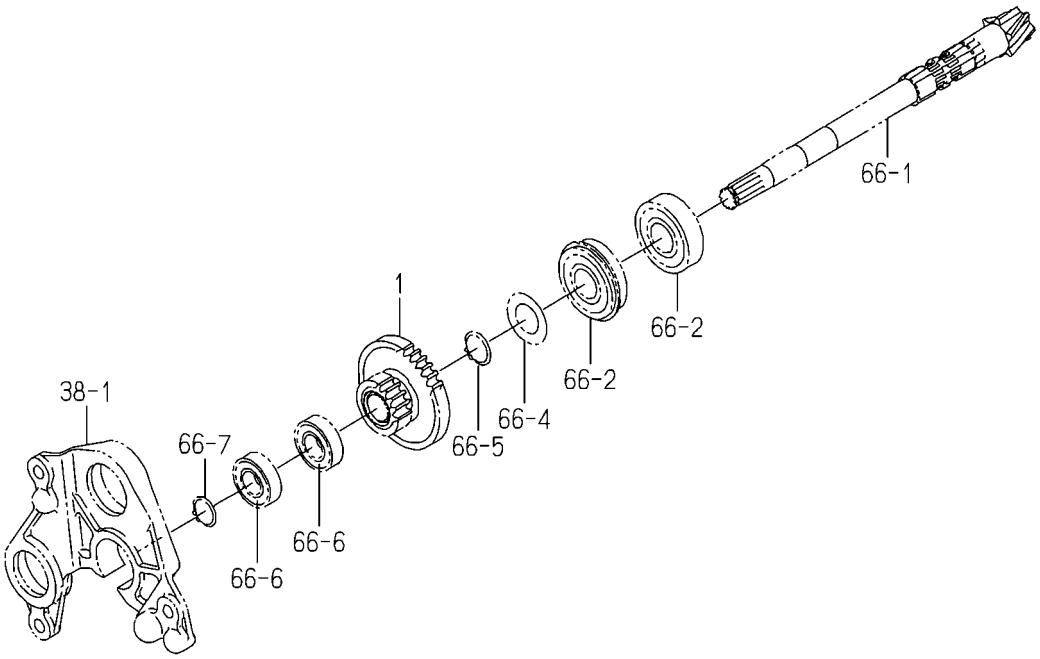

1774-208 -0100

KEY	PART CODE	DESCRIPTION	SPC	TYPE OF MODEL				ITC	COL	GRP	REMARKS
				TM3217	TM3247	TM3267					
1	1774-208-001-00	GEAR/SPUR/16-34	*	1	1	1					

FIG. 41 GEAR(COUNTER/SUB)SYSTEM(H TYPE)

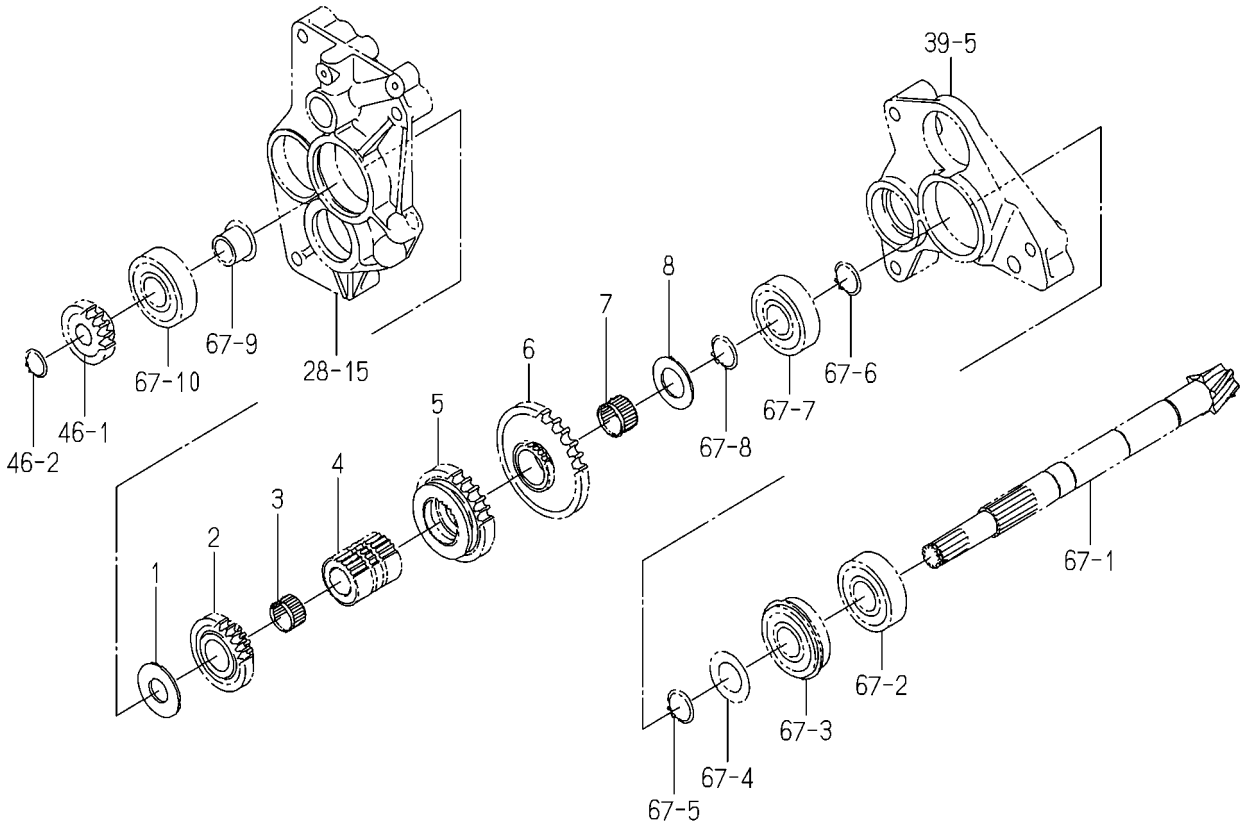

1774-208A-0100

KEY	PART CODE	DESCRIPTION	SPC	TYPE OF MODEL				ITC	COL	GRP	REMARKS
				TM3217	TM3247	TM3267					
1	1774-205-007-00	WASHER/20X45X03	*	1	1	1					
2	1774-208-051-00	GEAR/SPUR/22	*	1	1	1					
3	1716-127-011-00	BEARING/NEEDLE	*	1	1	1					
4	1774-208-053-00	HUB/25X40X49	*	1	1	1					
5	1774-208-052-00	GEAR/SPUR/28	*	1	1	1					
6	1774-208-054-00	GEAR/SPUR/35	*	1	1	1					
7	1709-301-001-00	BEARING/NEEDLE	*	1	1	1					
8	1650-203-011-20	WASHER/25X43X02	*	1	1	1					

FIG. 42 SHIFT(CHANGE/MAIN)SYSTEM(F TYPE)

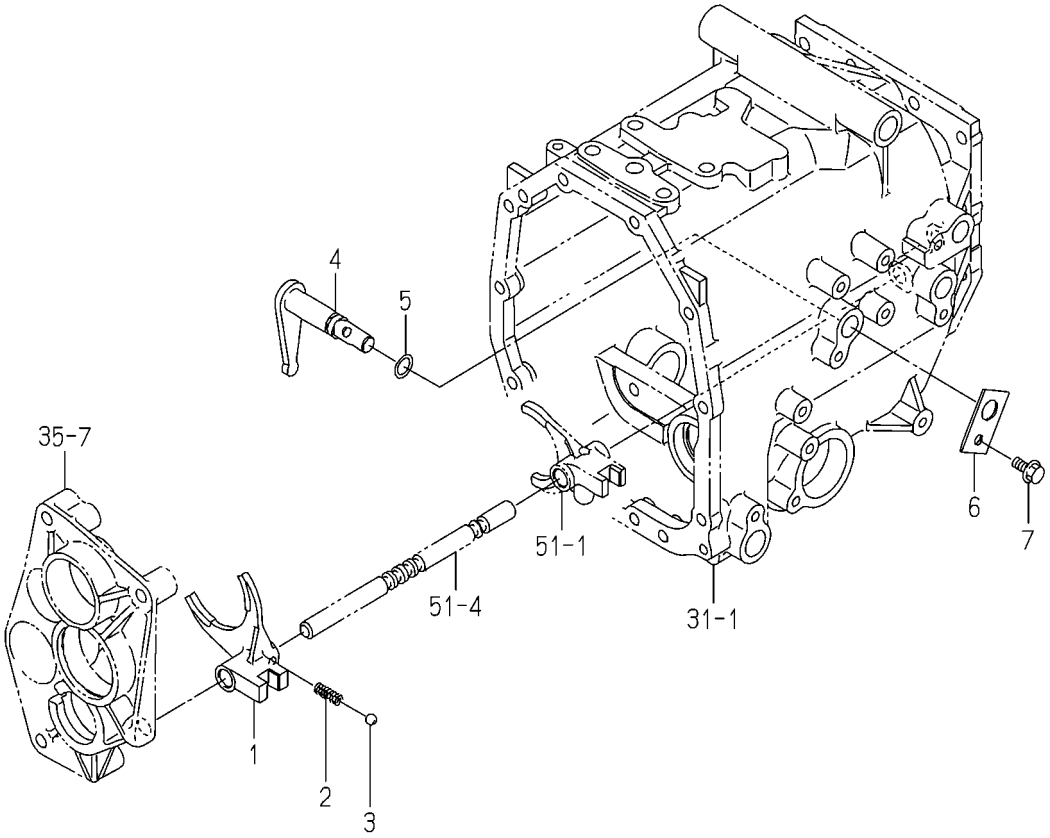

1774-215 -0100

KEY	PART CODE	DESCRIPTION	SPC	TYPE OF MODEL				ITC	COL	GRP	REMARKS
				TM3217	TM3247	TM3267					
1	1774-215-002-00	FORK/SHIFT/MAIN	*	1	1	1					
2	1650-259-010-00	SPRING/HC023	*	1	1	1					
3	V682-200-001-00	BALL,STEEL	*	1	1	1					
4	1774-215-200-10	ARM/SHIFT COMP	*	1	1	1					
5	V720-102-401-40	O-RING/1A,P14	*	1	1	1					
6	1620-255-208-00	PLATE/I/30X50	*	1	1	1					
7	V231-360-801-20	FLANGEBOLT/M8X12	*	1	1	1					

FIG. 43 SHIFT(CHANGE/SUB)SYSTEM(H TYPE)

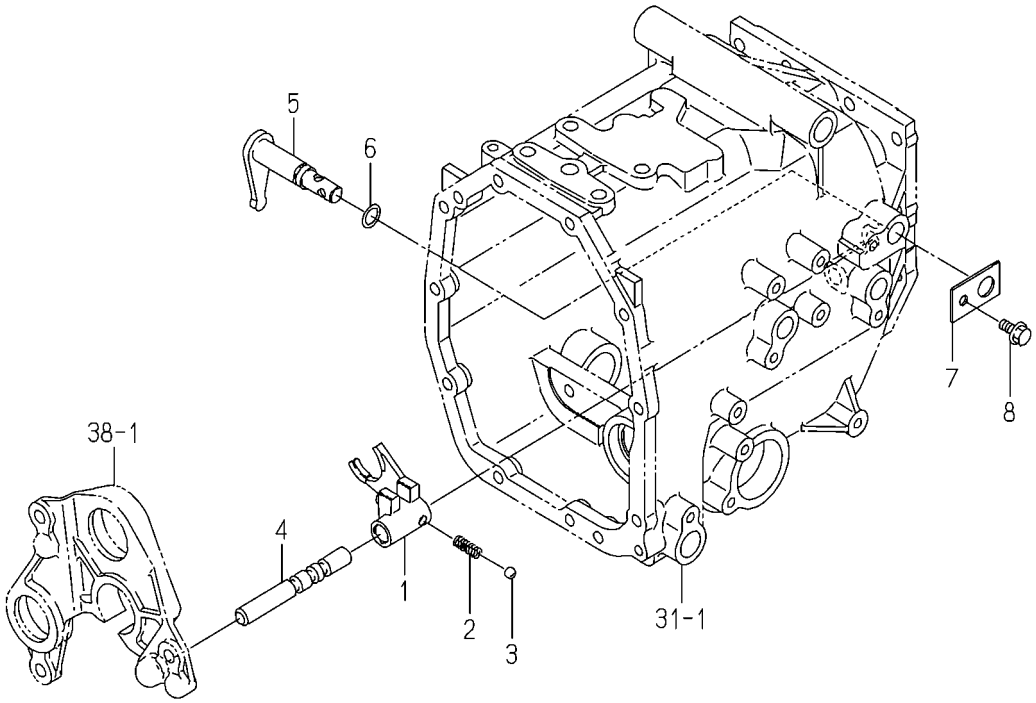

1774-216 -0100

KEY	PART CODE	DESCRIPTION	SPC	TYPE OF MODEL				ITC	COL	GRP	REMARKS
				TM3217	TM3247	TM3267					
1	1774-216-002-00	FORK/SHIFT/SUB	*	1	1	1					
2	1650-259-010-00	SPRING/HC023	*	1	1	1					
3	V682-200-001-00	BALL,STEEL	*	1	1	1					
4	1774-216-001-00	STAY/SHIFT/SUB	*	1	1	1					
5	1774-216-200-10	ARM/SHIFT COMP	*	1	1	1					
6	V720-102-401-40	O-RING/1A,P14	*	1	1	1					
7	1620-255-208-00	PLATE/I/30X50	*	1	1	1					
8	V231-360-801-20	FLANGEBOLT/M8X12	*	1	1	1					

FIG. 44 SHIFT(CHANGE/SUB/HST)SYSTEM (EXCEPT D TYPE)

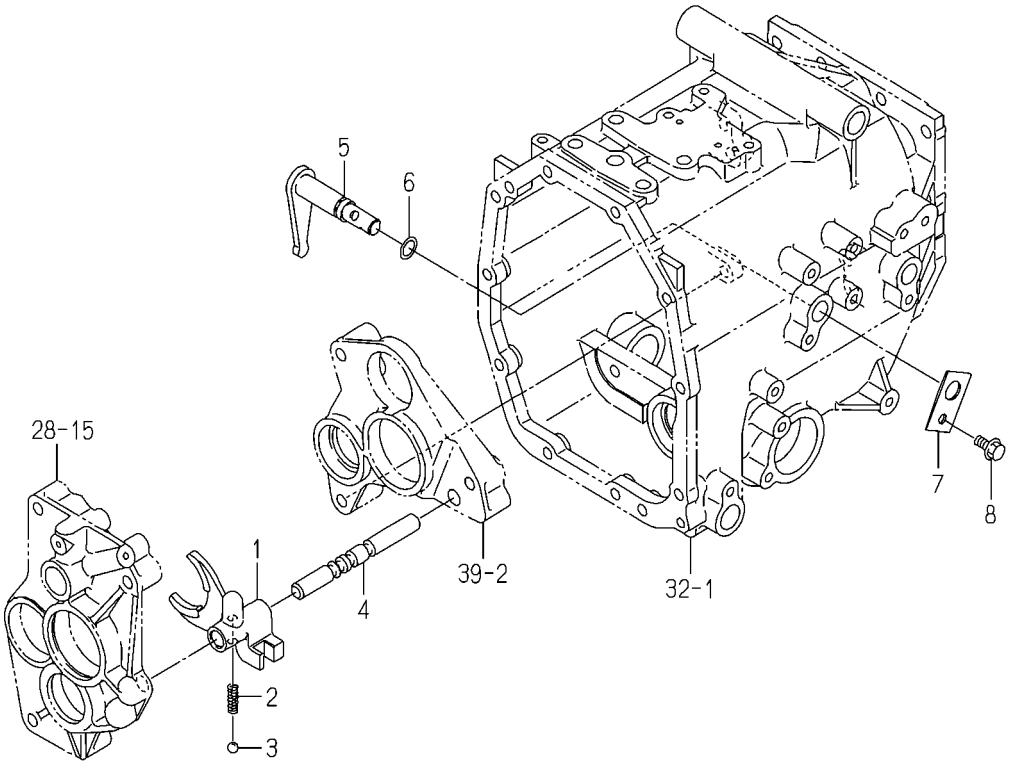

1774-216A-0100

KEY	PART CODE	DESCRIPTION	SPC	TYPE OF MODEL				ITC	COL	GRP	REMARKS
				TM3217	TM3247	TM3267					
1	1774-216-052-10	FORK/SHIFT/SUB	*	1	1	1					
2	1650-253-003-00	SPRING/HC022	*	1	1	1					
3	V682-200-001-00	BALL,STEEL	*	1	1	1					
4	1774-216-051-00	STAY/SHIFT/SUB	*	1	1	1					
5	1774-215-200-10	ARM/SHIFT COMP	*	1	1	1					
6	V720-102-401-40	O-RING/1A,P14	*	1	1	1					
7	1620-255-208-00	PLATE/I/30X50	*	1	1	1					
8	V231-360-801-20	FLANGEBOLT/M8X12	*	1	1	1					

FIG. 45 COVER(SHIELD)SYSTEM

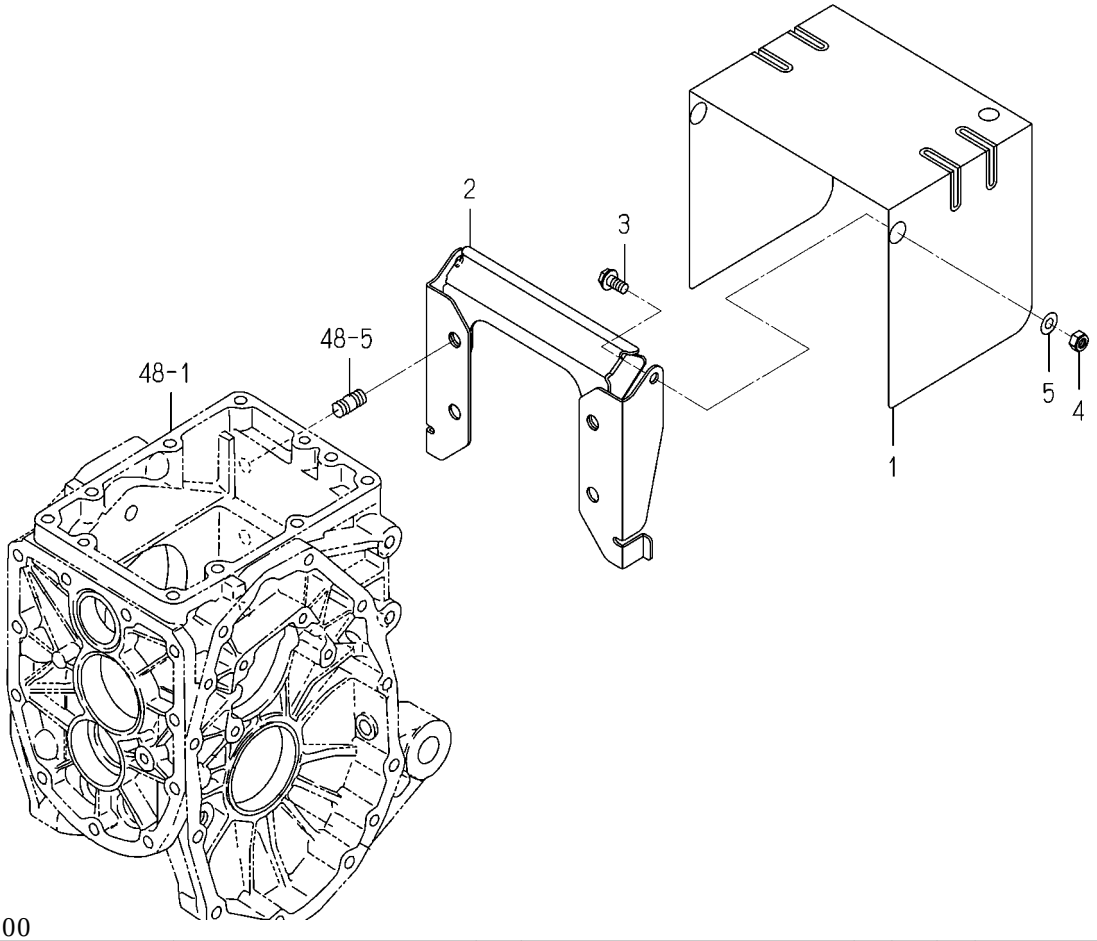

1774-218 -0100

KEY	PART CODE	DESCRIPTION	SPC	TYPE OF MODEL				ITC	COL	GRP	REMARKS
				TM3217	TM3247	TM3267					
1	1774-218-001-00	COVER/SHIELD	*	1	1	1					
2	1774-218-210-00	BRACKET COMP	*	1	1	1					
3	V231-360-801-60	FLANGEBOLT/M8X16	*	2	2	2					
4	1719-312-001-00	U-NUT	*	2	2	2					
5	V411-260-008-00	WASHER,PL/M8	*	2	2	2					

FIG. 46 GEAR(4WD)SYSTEM

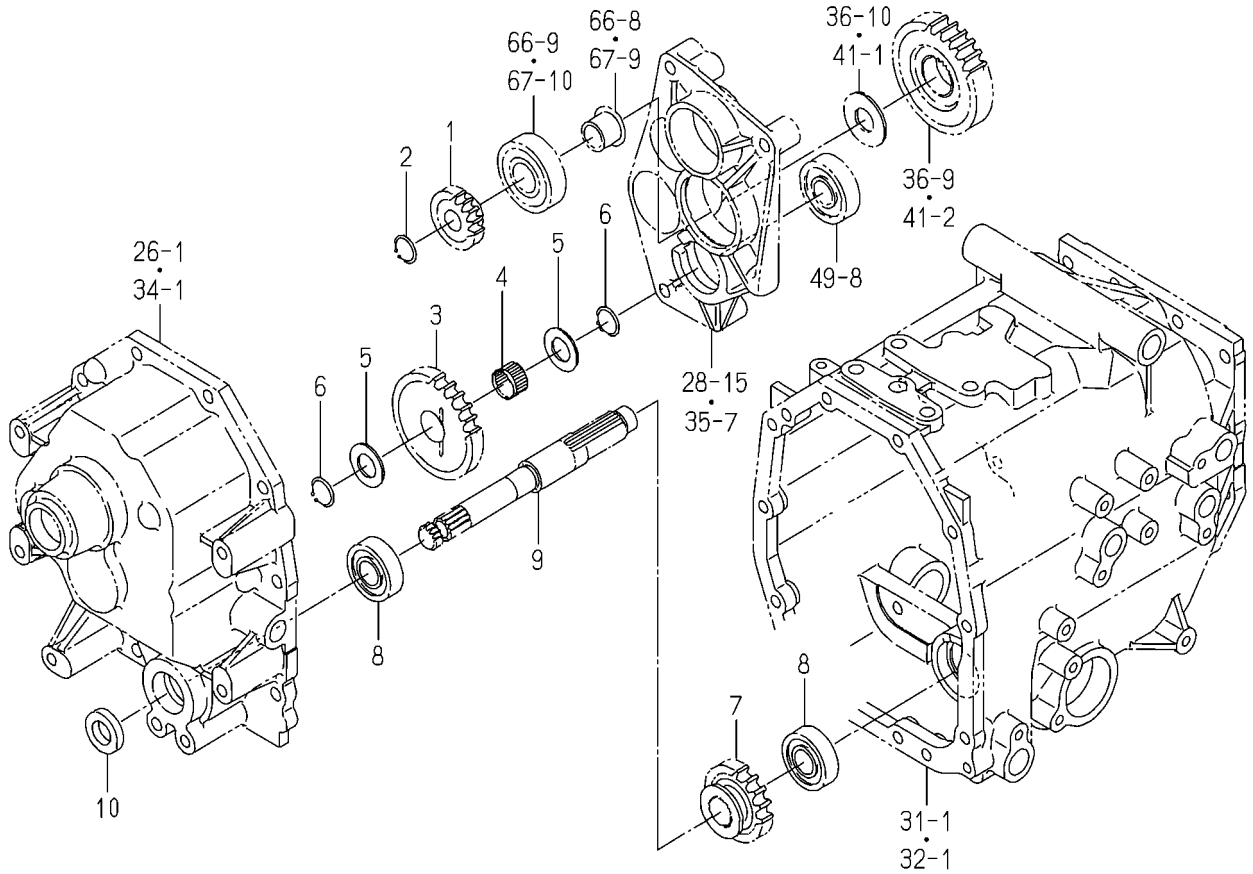

1774-221 -0100

KEY	PART CODE	DESCRIPTION	SPC	TYPE OF MODEL				ITC	COL	GRP	REMARKS
				TM3217	TM3247	TM3267					
1	1774-221-001-00	GEAR/SPUR/14	*	1	1	1					
2	V704-140-019-00	RING,SNAP/19 C	*	1	1	1					
3	1774-221-002-00	GEAR/SPUR/27	*	1	1	1					
4	1716-127-011-00	BEARING/NEEDLE	*	1	1	1					
5	1614-203-005-00	WASHER/20X36X02	*	2	2	2					
6	V704-140-020-00	RING,SNAP/20 C	*	2	2	2					
7	1774-221-003-00	GEAR/SPUR/19	*	1	1	1					
8	V600-110-620-40	BEARING,RB/6204	*	2	2	2					
9	1774-221-004-00	SHAFT/4WD	*	1	1	1					
10	V744-120-350-70	SEAL,OIL/TC20357	*	1	1	1					

FIG. 47 SHIFT(CHANGE/4WD)SYSTEM

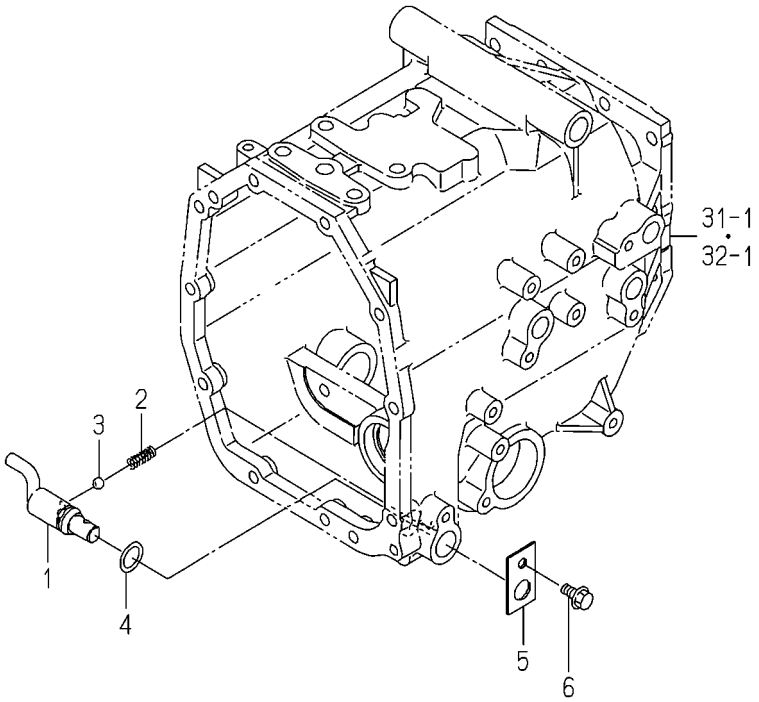

1774-225 -0100

KEY	PART CODE	DESCRIPTION	SPC	TYPE OF MODEL				ITC	COL	GRP	REMARKS
				TM3217	TM3247	TM3267					
1	1774-225-200-00	ARM/SHIFT/4WD COMP	*	1	1	1					
2	1650-259-010-00	SPRING/HC023	*	1	1	1					
3	V682-200-001-00	BALL,STEEL	*	1	1	1					
4	V720-102-401-80	O-RING/1A,P18	*	1	1	1					
5	1620-255-208-00	PLATE/I/30X50	*	1	1	1					
6	V231-360-801-20	FLANGEBOLT/M8X12	*	1	1	1					

FIG. 48 CASE(MISSION/REAR)SYSTEM

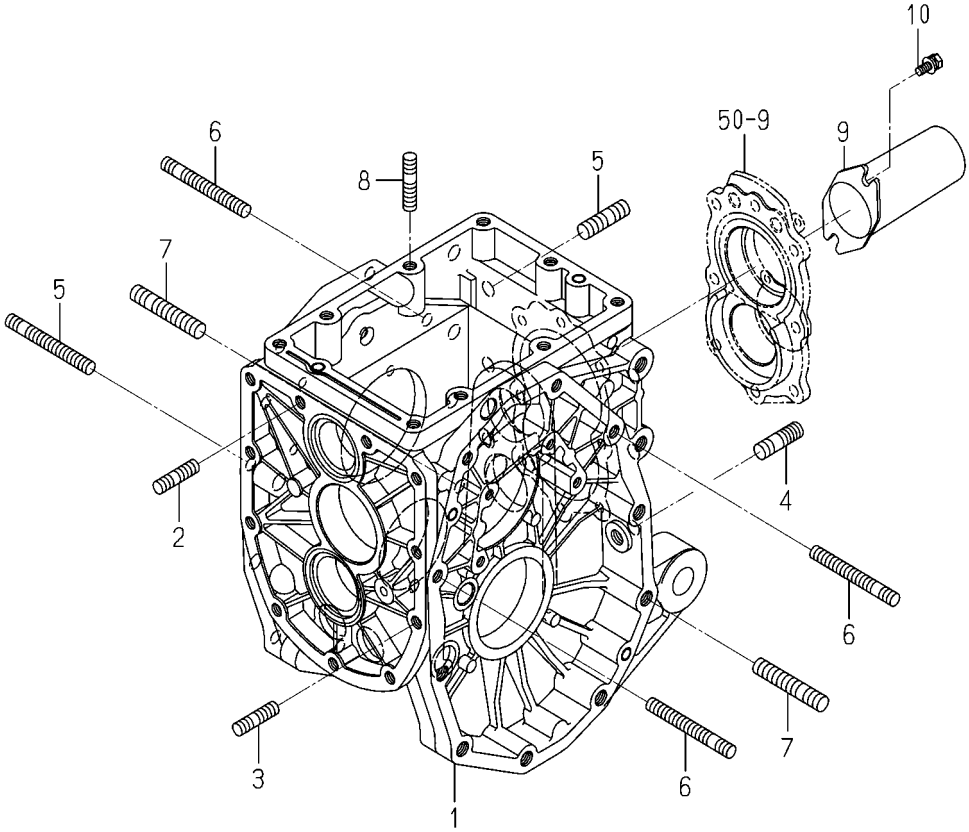

1774-241 -0100

KEY	PART CODE	DESCRIPTION	SPC	TYPE OF MODEL				ITC	COL	GRP	REMARKS
				TM3217	TM3247	TM3267					
1	1774-241-001-10	CASE/TRANSMISSION/RE	*	1	1	1					
2	V251-361-002-5D	STUD/M10X25/7T,SEAL	*	2	2	2					
3	V251-341-002-50	STUD/M10X25/7T	*	6	6	6					
4	1774-241-002-20	BOLT/STUD/M12X25	*	2	2	2					
5	V252-341-202-50	STUD/M12X25/7T	*	4	4	4					
6	V252-341-007-00	STUD/M10X70/7T	*	4	4	4					
7	V252-341-205-00	STUD/M12X50/7T	*	2	2	2					
8	V252-341-003-00	STUD/M10X30/7T	*	2	2	2					
9	1444-314-009-10	CAP,PTO SHAFT	*	1	1	1					
10	V210-360-601-60	BOLT,SP/M6X16	*	2	2	2					

FIG. 49 GEAR(COUNTER/PTO)SYSTEM

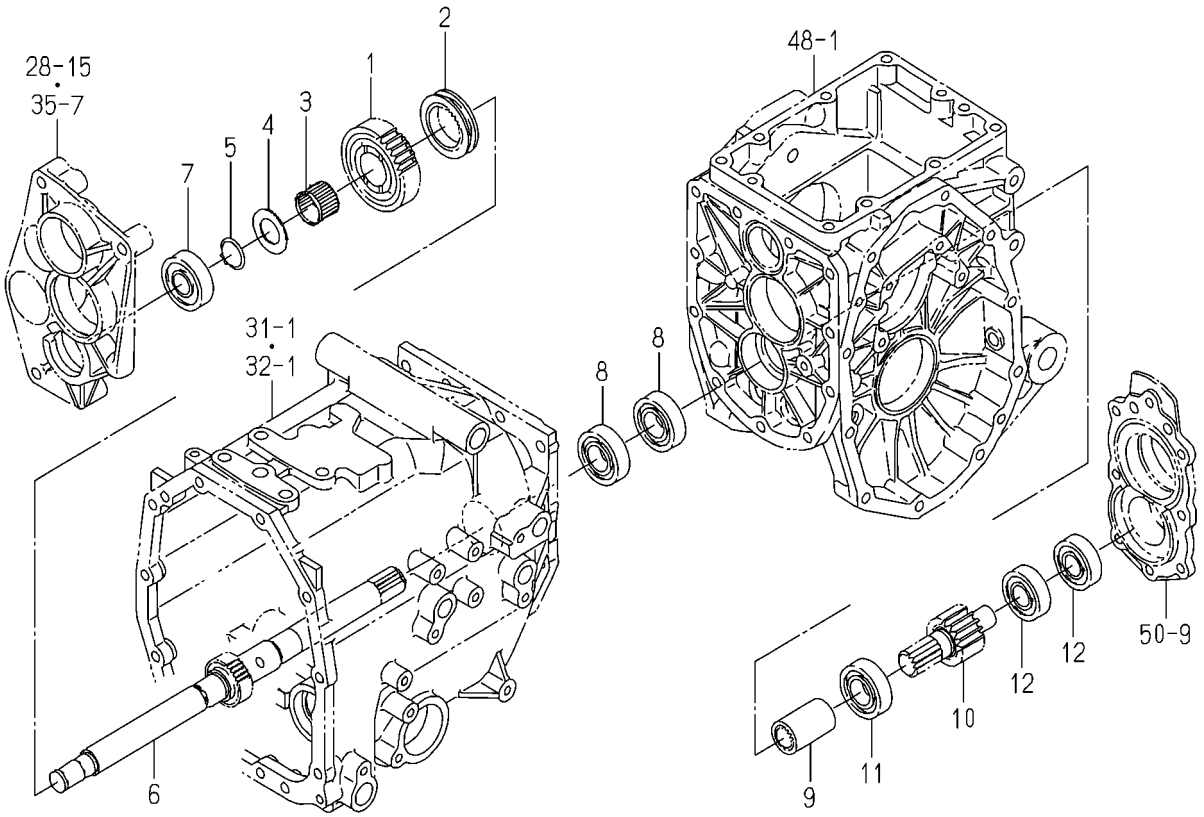

1774-243 -0100

KEY	PART CODE	DESCRIPTION	SPC	TYPE OF MODEL				ITC	COL	GRP	REMARKS
				TM3217	TM3247	TM3267					
1	1774-243-001-00	GEAR/SPUR/31	*	1	1	1					
2	1614-205-004-00	COUPLING	*	1	1	1					
3	1719-224-014-00	BEARING/NEEDLE	*	1	1	1					
4	1650-203-011-20	WASHER/25X43X02	*	1	1	1					
5	V704-140-025-00	RING,SNAP/25 C	*	1	1	1					
6	1774-243-003-00	SHAFT/DRIVE/PTO	*	1	1	1					
7	1729-202-011-00	BEARING/BALL	*	1	1	1					
8	V600-110-620-50	BEARING,RB/6205	*	2	2	2					
9	1650-218-014-00	COUPLING/21X32X50	*	1	1	1					
10	1774-243-004-00	GEAR/SPUR/13	*	1	1	1					
11	3673-701-005-00	BEARING/BALL	*	1	1	1					
12	V600-110-620-40	BEARING,RB/6204	*	2	2	2					

FIG. 50 SHAFT(PTO)SYSTEM

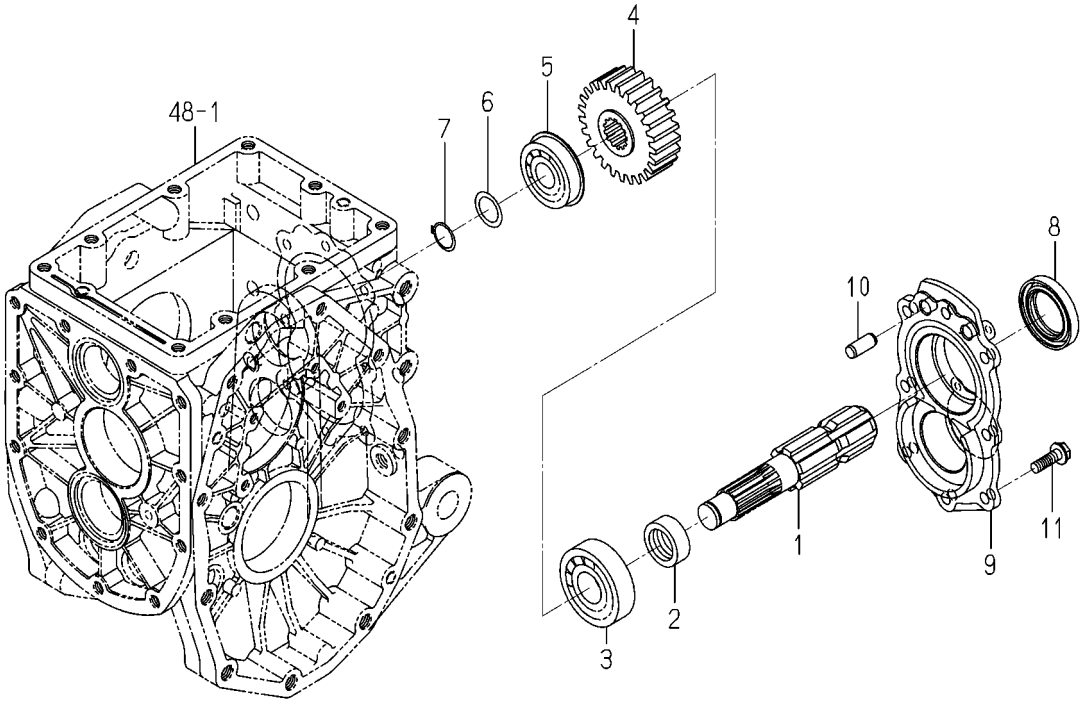

1774-244 -0100

KEY	PART CODE	DESCRIPTION	SPC	TYPE OF MODEL				ITC	COL	GRP	REMARKS
				TM3217	TM3247	TM3267					
1	1738-212-002-00	SHAFT/PTO	*	1	1	1					
2	1427-212-003-20	SLEEVE	*	1	1	1					
3	1594-218-001-00	BEARING/BALL 6305SH2	*	1	1	1					
4	1688-212-001-20	GEAR/SPUR/25	*	1	1	1					
5	V607-110-630-40	BEARING,RB/6304NR	*	1	1	1					
6	1427-212-002-00	WASHER/20X28X2	*	1	1	1					
7	V704-140-020-00	RING,SNAP/20 C	*	1	1	1					
8	V744-135-550-80	SEAL,OIL/TC35558	*	1	1	1					
9	1688-201-056-00	METAL/PTO	*	1	1	1					
10	V523-101-002-40	PIN,ST,B/10X24	*	2	2	2					
11	V231-360-802-50	FLANGEBOLT/M8X25	*	8	8	8					

FIG. 51 CHANGE(PTO)SYSTEM

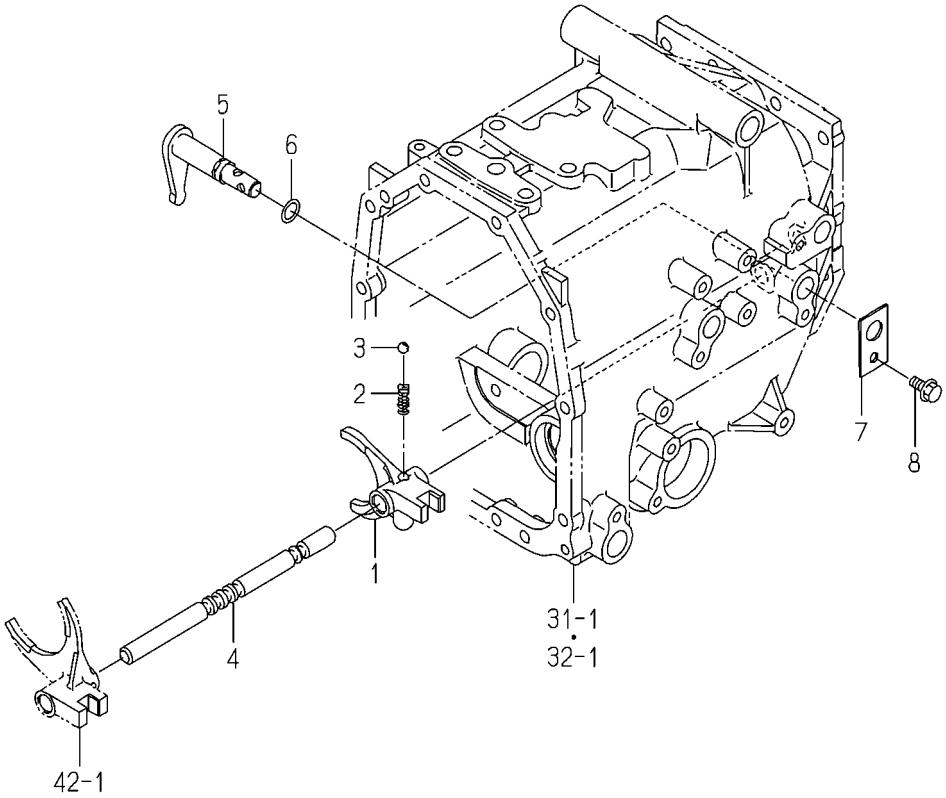

1774-245 -0100

KEY	PART CODE	DESCRIPTION	SPC	TYPE OF MODEL				ITC	COL	GRP	REMARKS
				TM3217	TM3247	TM3267					
1	1774-245-001-00	FORK/SHIFT/PTO	*	1	1	1					
2	1650-253-003-00	SPRING/HC022	*	1	1	1					
3	V682-200-001-00	BALL,STEEL	*	1	1	1					
4	1774-215-001-00	STAY/SHIFT	*	1	1	1					
5	1774-216-200-10	ARM/SHIFT COMP	*	1	1	1					
6	V720-102-401-40	O-RING/1A,P14	*	1	1	1					
7	1620-255-208-00	PLATE/I/30X50	*	1	1	1					
8	V231-360-801-20	FLANGEBOLT/M8X12	*	1	1	1					

FIG. 52 PTO(MID)SYSTEM(EXCEPT A TYPE)

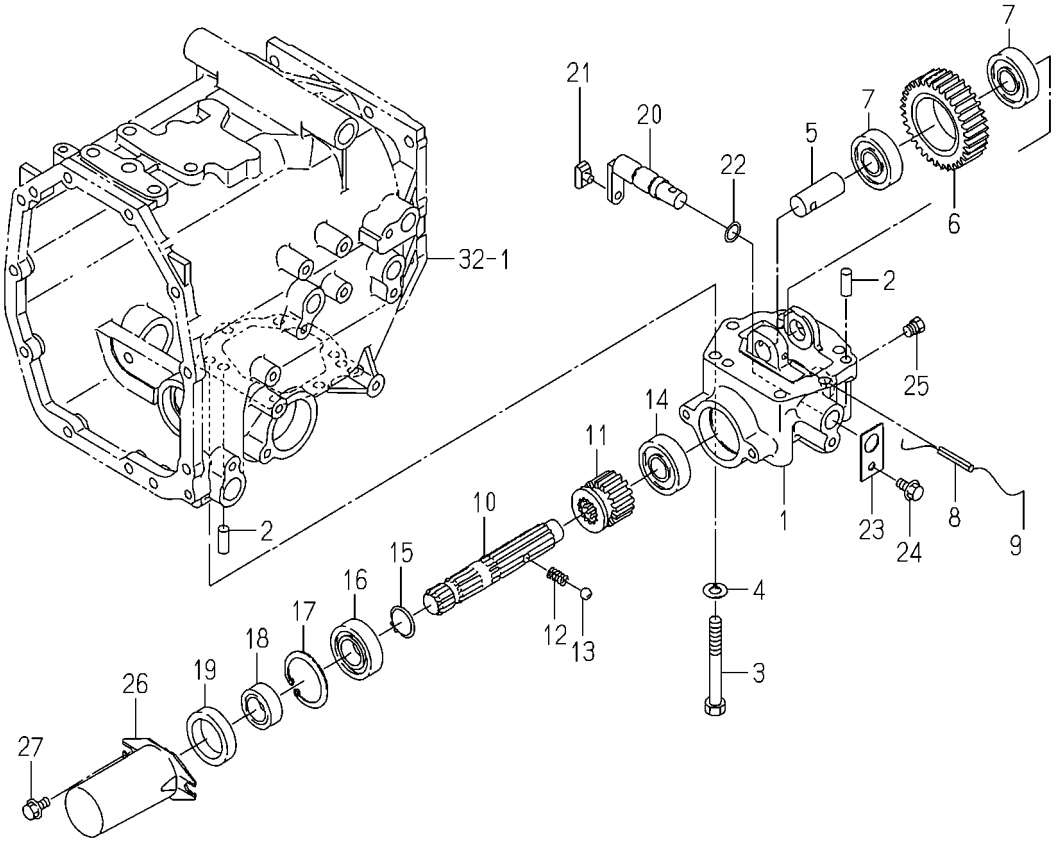

1774-255 -0100

KEY	PART CODE	DESCRIPTION	SPC	TYPE OF MODEL				ITC	COL	GRP	REMARKS
				TM3217	TM3247	TM3267					
1	1774-255-001-20	CASE/PTO/MID	*	1	1	1					
2	V523-101-002-40	PIN,ST,B/10X24	*	2	2	2					
3	V201-361-009-00	BOLT/M10X90/7T	*	6	6	6					
4	V401-160-010-00	WASHER,SP/M10	*	6	6	6					
5	1682-255-203-00	PIN/20X51	*	1	1	1					
6	1774-255-002-00	GEAR/SPUR/33	*	1	1	1					
7	1603-322-003-00	BEARING,BALL	*	2	2	2					
8	V580-140-604-00	PIN,SPRING/6X40 W	*	1	1	1					
9		WIRE	*	1	1	1					
10	1774-255-004-00	SHAFT/PTO/MID	*	1	1	1					
11	1774-255-003-00	GEAR/SPUR/16	*	1	1	1					
12	1302-225-003-00	SPRING,SHIFTER	*	1	1	1					
13	V682-200-001-00	BALL,STEEL	*	1	1	1					
14	V704-140-025-00	RING,SNAP/25 C	*	1	1	1					
15	1729-202-011-00	BEARING/BALL	*	1	1	1					
16	V600-110-620-50	BEARING,RB/6205	*	1	1	1					
17	V705-140-052-00	RING,SNAP/52 C	*	1	1	1					
18	1427-212-003-20	SLEEVE	*	1	1	1					
19	V744-135-520-80	SEAL,OIL/TC35528	*	1	1	1					
20	1682-255-210-40	ARM/SHIFT/MID COMP	*	1	1	1					
21	2703-101-020-00	COLLAR,SHIFTER	*	1	1	1					
22	V720-102-401-40	O-RING/1A,P14	*	1	1	1					
23	1620-255-208-00	PLATE/I/30X50	*	1	1	1					
24	V231-360-801-20	FLANGEBOLT/M8X12	*	1	1	1					
25	V782-160-000-6B	PLUG/SCREW/SEAL	*	1	1	1					
26	1444-314-009-10	CAP,PTO SHAFT	*	1	1	1					
27	V231-360-801-20	FLANGEBOLT/M8X12	*	2	2	2					

FIG. 53 COVER(PTO/MID)SYSTEM(A TYPE)

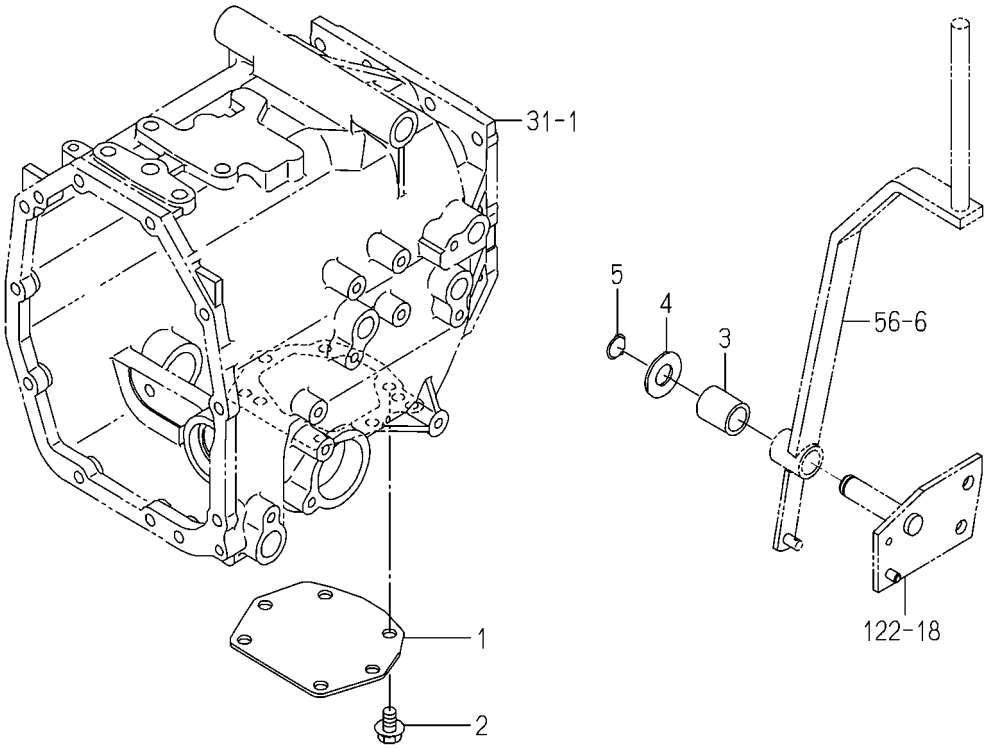

1774-255A-0100

KEY	PART CODE	DESCRIPTION	SPC	TYPE OF MODEL				ITC	COL	GRP	REMARKS
				TM3217	TM3247	TM3267					
1	1774-255-005-00	COVER/PLATE	*	1	1	1					
2	V231-361-001-60	FLANGEBOLT/M10X16	*	6	6	6					
3	1774-261-211-00	HUB/19X27X32	*	1	1	1					
4	V411-260-018-00	WASHER,PL/M18	*	1	1	1					
5	V704-140-018-00	RING,SNAP/18 C	*	1	1	1					

FIG. 54 LEVER(MAIN)SYSTEM(F TYPE)

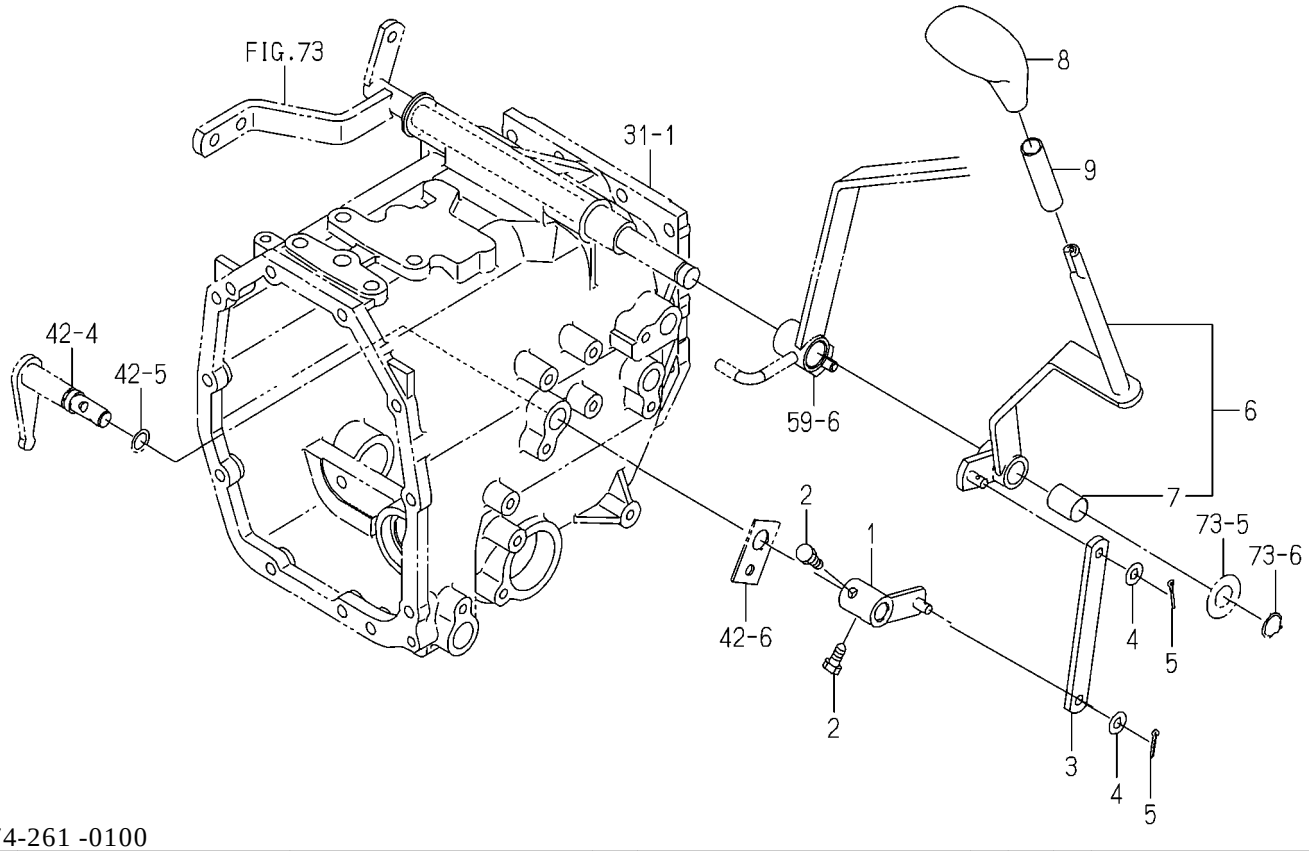

1774-261 -0100

KEY	PART CODE	DESCRIPTION	SPC	TYPE OF MODEL TM3217	TM3247	TM3267		ITC	COL	GRP	REMARKS
1	1774-261-200-10	ARM COMP	*	1	1	1					
2	1560-223-016-00	BOLT/M8X16	*	2	2	2					
3	1774-261-001-10	PLATE/IR/19X144	*	1	1	1					
4	V411-260-008-00	WASHER,PL/M8	*	2	2	2					
5	V500-162-502-50	PIN,SPLIT/2.5X25	*	2	2	2					
6	1774-261-220-10	LEVER/MAIN ASSY	*	1	1	1					
7	1689-272-201-00	BUSH/18X20X25	*	1	1	1					
8	1716-261-001-00	GRIP/MAIN	*	1	1	1					
9	1614-261-006-00	TUBE/14X17X90	*	1	1	1					

FIG. 55 LEVER(SUB/HST)SYSTEM(H TYPE)

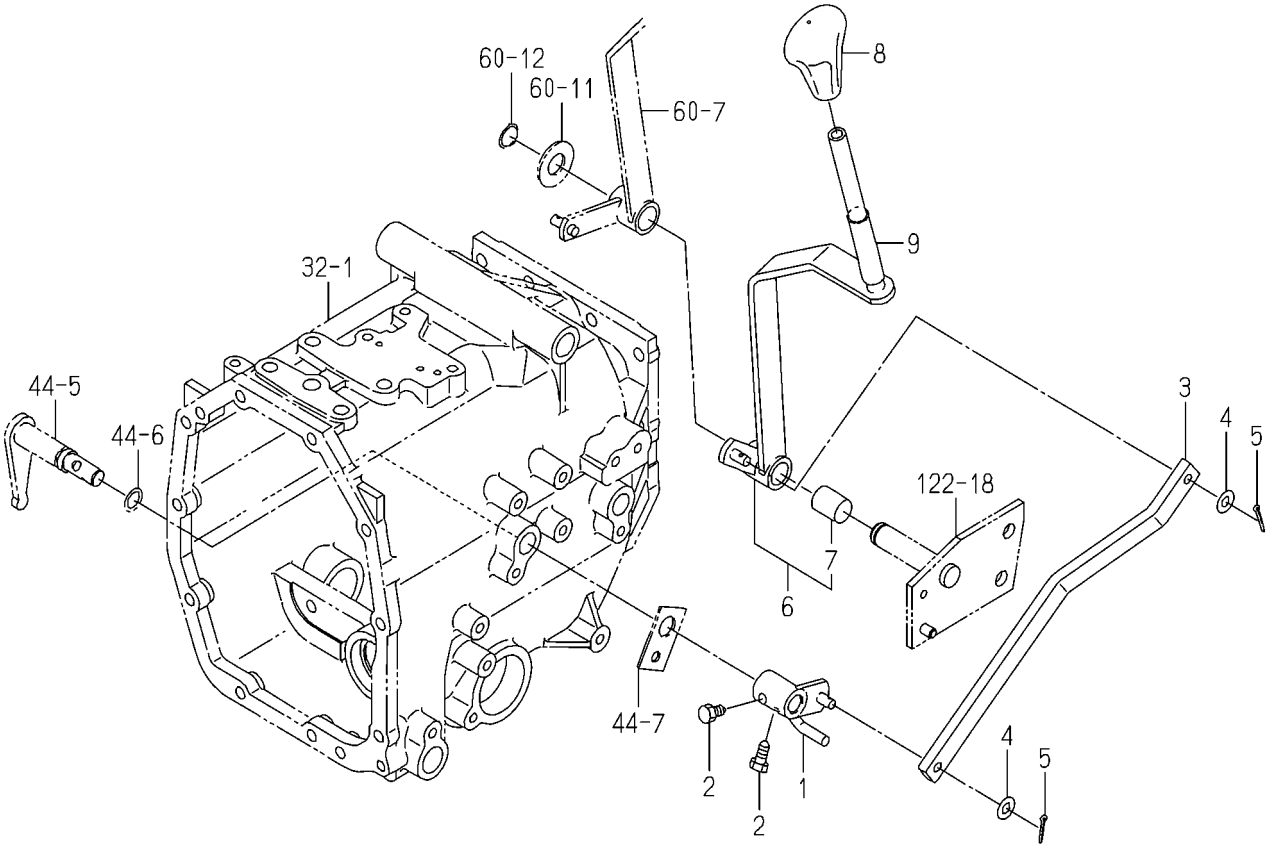

1774-262A-0100

KEY	PART CODE	DESCRIPTION	SPC	TYPE OF MODEL TM3217	TM3247	TM3267		ITC	COL	GRP	REMARKS
1	1774-262-520-00	ARM/SUB/HST COMP	*	1	1	1					
2	1560-223-016-00	BOLT/M8X16	*	2	2	2					
3	1774-262-501-10	PLATE/Z/19X313	*	1	1	1					
4	V411-260-008-00	WASHER,PL/M8	*	2	2	2					
5	V500-162-502-50	PIN,SPLIT/2.5X25	*	2	2	2					
6	1774-262-230-10	LEVER/SUB/HST ASSY	*	1	1	1					
7	1689-272-201-00	BUSH/18X20X25	*	1	1	1					
8	1690-264-001-00	GRIP/MAIN	*	1	1	1					
9	1614-261-006-00	TUBE/14X17X90	*	1	1	1					

FIG. 56 LEVER(SUB)SYSTEM(F TYPE)

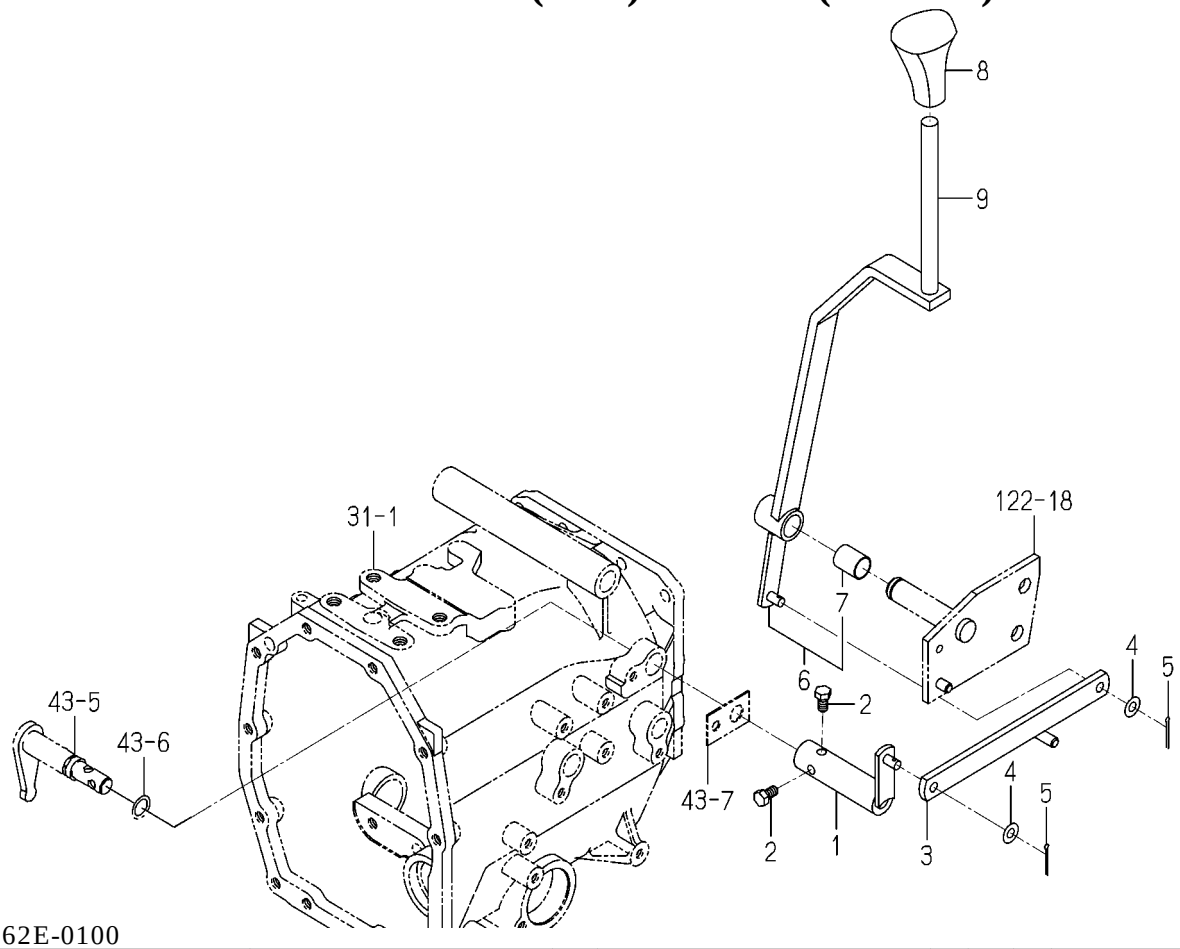

1774-262E-0100

KEY	PART CODE	DESCRIPTION	SPC	TYPE OF MODEL				ITC	COL	GRP	REMARKS
				TM3217	TM3247	TM3267					
1	1774-262-210-10	ARM/SUB/MECH COMP	*	1	1	1					
2	1560-223-016-00	BOLT/M8X16	*	2	2	2					
3	1774-262-320-10	ROD/SUB COMP	*	1	1	1					
4	V411-260-008-00	WASHER,PL/M8	*	2	2	2					
5	V500-162-502-50	PIN,SPLIT/2.5X25	*	2	2	2					
6	1774-262-260-00	LEVER/SUB/MECH ASSY	*	1	1	1					
7	1689-272-201-00	BUSH/18X20X25	*	1	1	1					
8	1690-264-001-00	GRIP/MAIN	*	1	1	1					
9	1614-261-006-00	TUBE/14X17X90	*	1	1	1					

FIG. 57 LEVER(4WD)SYSTEM

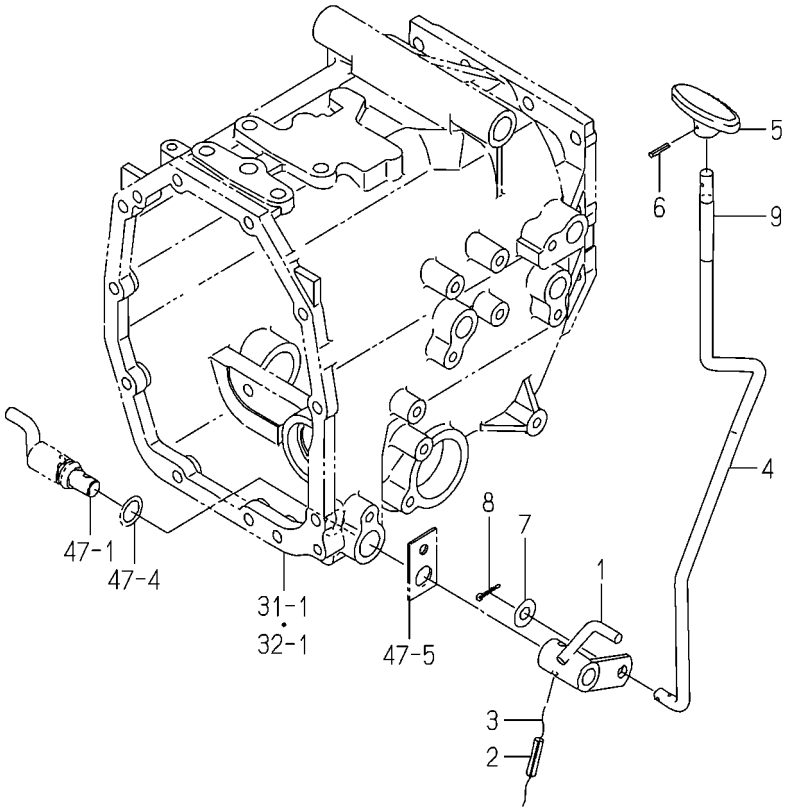

1774-263 -0100

KEY	PART CODE	DESCRIPTION	SPC	TYPE OF MODEL				ITC	COL	GRP	REMARKS
				TM3217	TM3247	TM3267					
1	1774-263-200-00	ARM/4WD COMP	*	1	1	1					
2	V580-140-602-80	PIN,SPRING/6X28 W	*	1	1	1					
3		WIRE	*	1	1	1					
4	1774-263-001-20	ROD/4WD	*	1	1	1					
5	1773-267-002-00	GRIP/4WD	*	1	1	1					
6	V580-140-301-80	PIN,SPRING/3X18 W	*	1	1	1					
7	V411-260-010-00	WASHER,PL/M10	*	1	1	1					
8	V500-162-502-00	PIN,SPLIT/2.5X20	*	1	1	1					
9	3650-580-002-00	HOSE/JOINT	*	1	1	1					

FIG. 58 LEVER(PTO/REAR)SYSTEM(H TYPE)

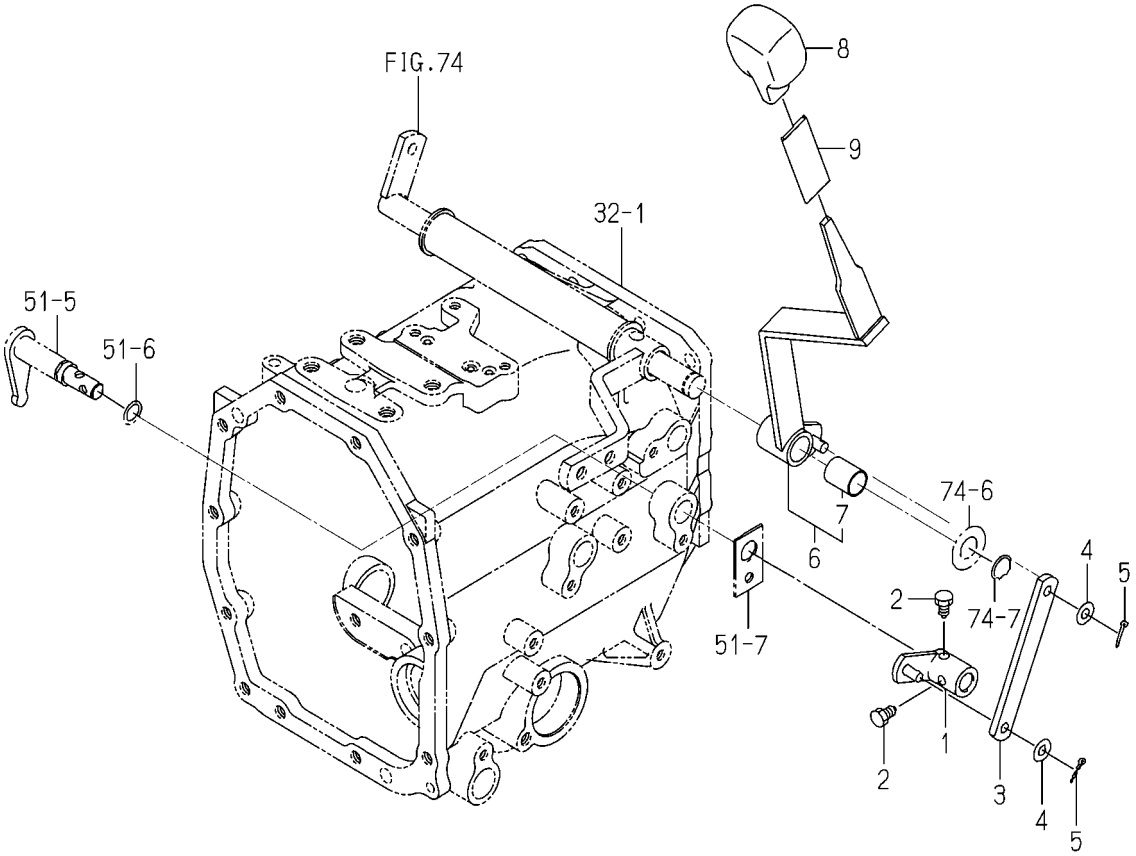

1774-264 -0100

KEY	PART CODE	DESCRIPTION	SPC	TYPE OF MODEL				ITC	COL	GRP	REMARKS
				TM3217	TM3247	TM3267					
1	1774-264-200-00	ARM/PTO/REAR COMP	*	1	1	1					
2	1560-223-016-00	BOLT/M8X16	*	2	2	2					
3	1774-264-001-00	PLATE/IR/19X140	*	1	1	1					
4	V411-260-008-00	WASHER,PL/M8	*	2	2	2					
5	V500-162-502-00	PIN,SPLIT/2.5X20	*	2	2	2					
6	1774-264-220-10	LEVER/PTO/REAR ASSY	*	1	1	1					
7	1689-272-201-00	BUSH/18X20X25	*	1	1	1					
8	1688-265-001-00	GRIP/MID/PTO	*	1	1	1					
9	1675-262-002-00	INSULATOR/LEVER/SUB	*	1	1	1					

FIG. 59 LEVER(PTO/REAR)SYSTEM(F TYPE)

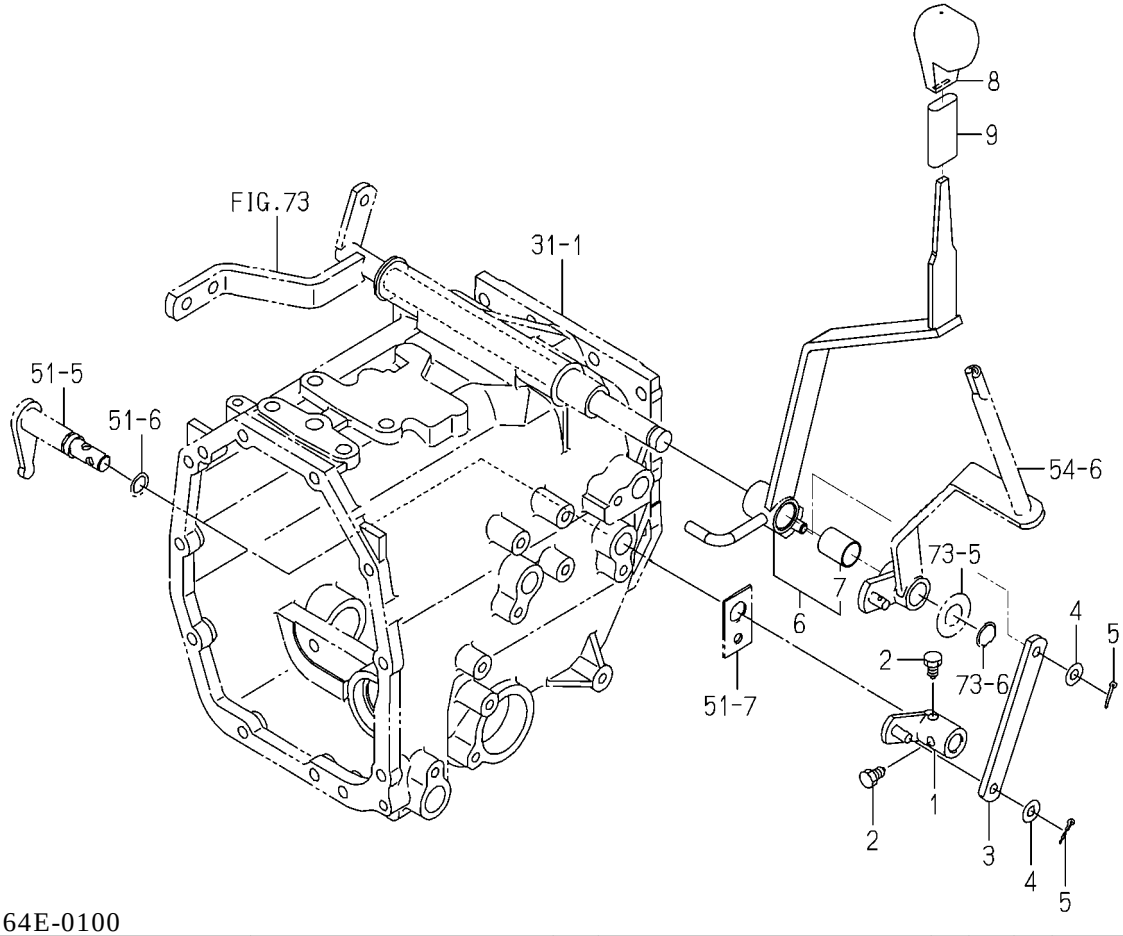

1774-264E-0100

KEY	PART CODE	DESCRIPTION	SPC	TYPE OF MODEL				ITC	COL	GRP	REMARKS
				TM3217	TM3247	TM3267					
1	1774-264-200-00	ARM/PTO/REAR COMP	*	1	1	1					
2	1560-223-016-00	BOLT/M8X16	*	2	2	2					
3	1774-264-001-00	PLATE/IR/19X140	*	1	1	1					
4	V411-260-008-00	WASHER,PL/M8	*	2	2	2					
5	V500-162-502-00	PIN,SPLIT/2.5X20	*	2	2	2					
6	1774-264-300-00	LEVER/PTO/REAR ASSY	*	1	1	1					
7	1689-272-201-00	BUSH/18X20X25	*	1	1	1					
8	1688-265-001-00	GRIP/MID/PTO	*	1	1	1					
9	1675-262-002-00	INSULATOR/LEVER/SUB	*	1	1	1					

FIG. 60 LEVER(PTO/MID)SYSTEM (EXCEPT A TYPE)

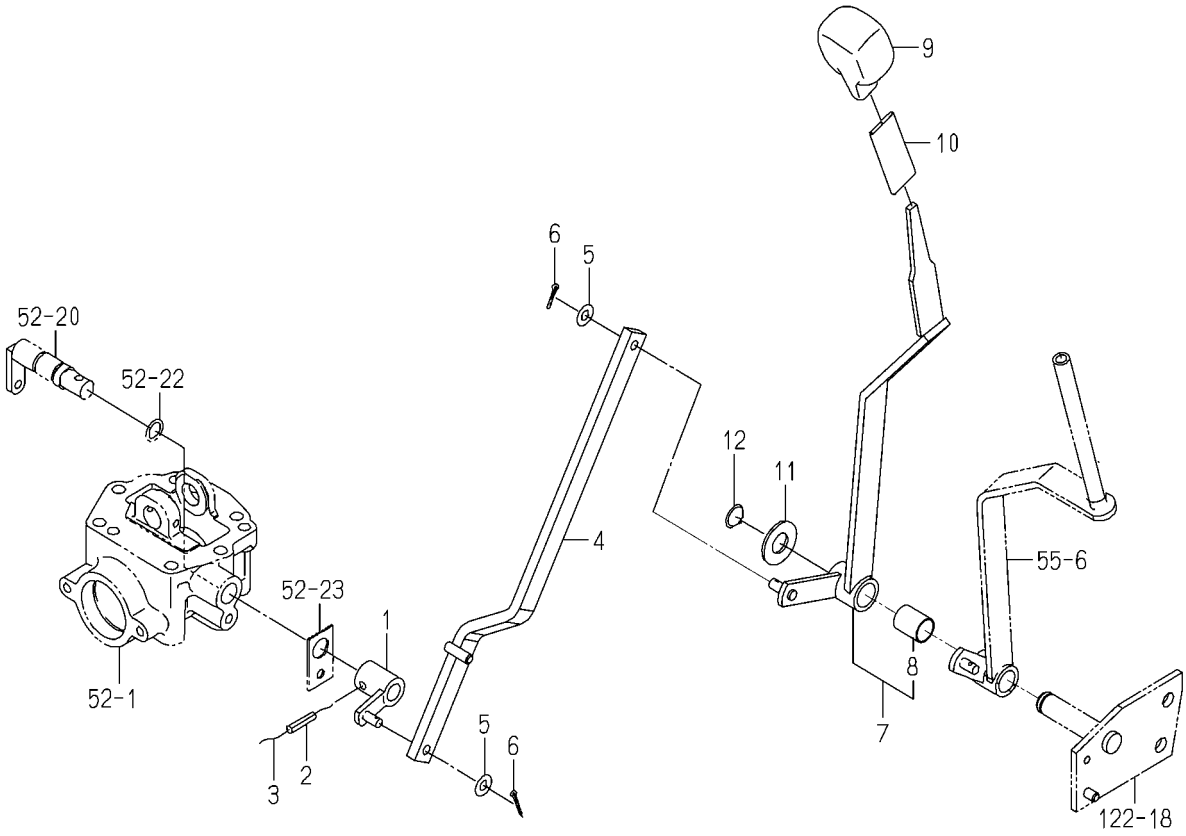

1774-265E-0100

KEY	PART CODE	DESCRIPTION	SPC	TYPE OF MODEL				ITC	COL	GRP	REMARKS
				TM3217	TM3247	TM3267					
1	1774-265-220-00	ARM COMP	*	1	1	1					
2	V580-140-602-80	PIN,SPRING/6X28 W	*	1	1	1					
3		WIRE	*	1	1	1					
4	1774-265-300-10	ROD/MID COMP	*	1	1	1					
5	V411-260-008-00	WASHER,PL/M8	*	2	2	2					
6	V500-162-502-50	PIN,SPLIT/2.5X25	*	2	2	2					
7	1774-265-210-20	LEVER/PTO/MID ASSY	*	1	1	1					
8	1689-272-201-00	BUSH/18X20X25	*	1	1	1					
9	1688-265-001-00	GRIP/MID/PTO	*	1	1	1					
10	1675-262-002-00	INSULATOR/LEVER/SUB	*	1	1	1					
11	V411-260-018-00	WASHER,PL/M18	*	1	1	1					
12	V704-140-018-00	RING,SNAP/18 C	*	1	1	1					

FIG. 61 LINK(HST)SYSTEM(H TYPE)

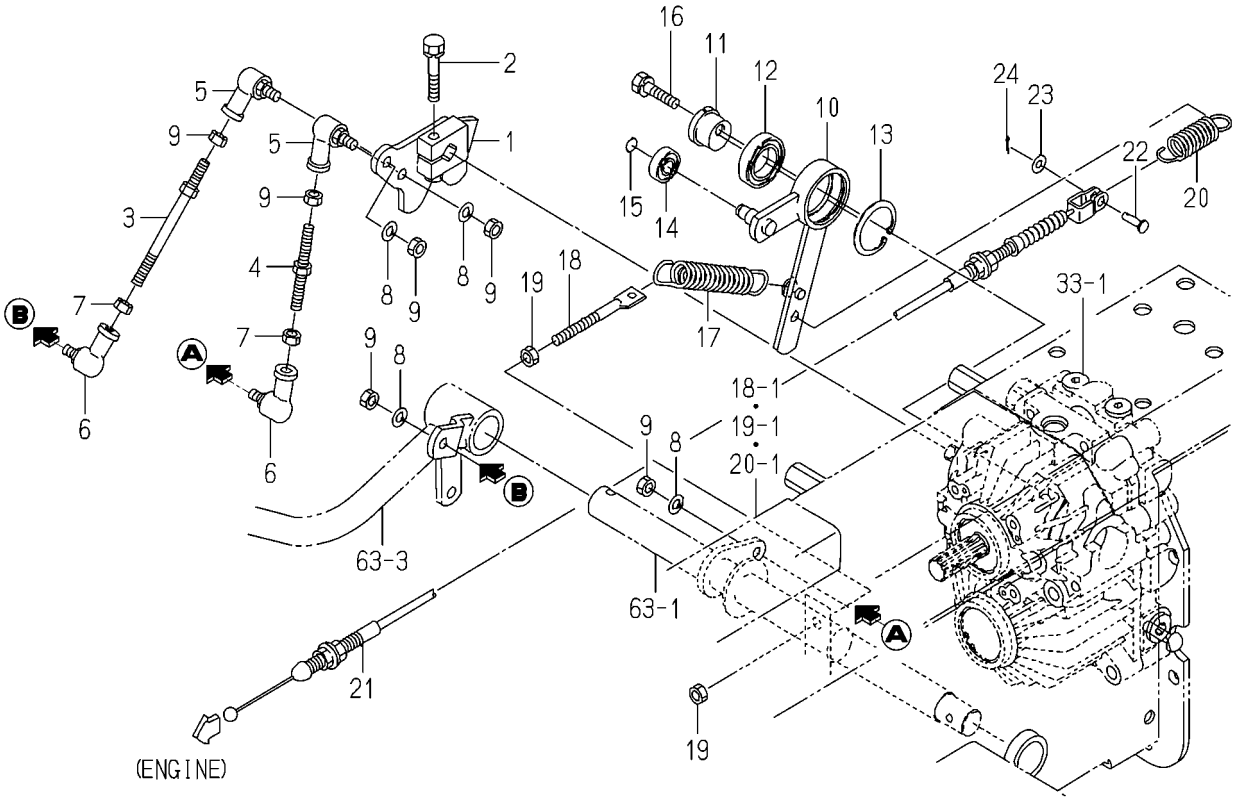

1774-271 -0100

KEY	PART CODE	DESCRIPTION	SPC	TYPE OF MODEL				ITC	COL	GRP	REMARKS
				TM3217	TM3247	TM3267					
1	1774-271-210-10	PIVOT/TRUNNION COMP	*	1	1	1					
2	V211-560-804-50	BOLT,S/M8X45/7T	*	1	1	1					
3	1683-271-560-00	ROD/M08X110 COMP	*	1	1	1					
4	1750-271-220-20	ROD/M8X65 COMP	*	1	1	1					
5	1560-695-021-00	JOINT BALL M08RH	*	2	2	2					
6	1560-695-022-00	JOINT BALL M08LH	*	2	2	2					
7	1560-132-007-30	NUT/LH/M08	*	2	2	2					
8	V401-160-008-00	WASHER,SP/M8	*	4	4	4					
9	V304-260-008-00	NUT/M8	*	6	6	6					
10	1774-271-220-00	ARM/NEUTRAL COMP	*	1	1	1					
11	1774-271-001-00	PIN/NEUTRAL	*	1	1	1					
12	2183-607-013-00	RBB 6905	*	1	1	1					
13	V705-140-042-00	RING,SNAP/42 C	*	1	1	1					
14	V600-150-600-00	BEARING,RB/6000SS	*	1	1	1					
15	V704-140-010-00	RING,SNAP/10 C	*	1	1	1					
16	V211-560-803-50	BOLT,S/M8X35/7T	*	1	1	1					
17	2500-210-016-00	SPRING/HE108	*	1	1	1					
18	1725-272-005-00	ROD/M08X85	*	1	1	1					
19	V304-260-008-00	NUT/M8	*	2	2	2					
20	2149-312-015-60	SPRING/HE068	*	1	1	1					
21	1750-271-300-00	CABLE/PEDAL ASSY	*	1	1	1					
22	1560-116-008-30	PIN/6X16	*	1	1	1					
23	V411-260-006-00	WASHER,PL/M6	*	1	1	1					
24	V500-162-002-00	PIN,SPLIT/2X20	*	1	1	1					

FIG. 62 LEVER(HST)SYSTEM(H TYPE)

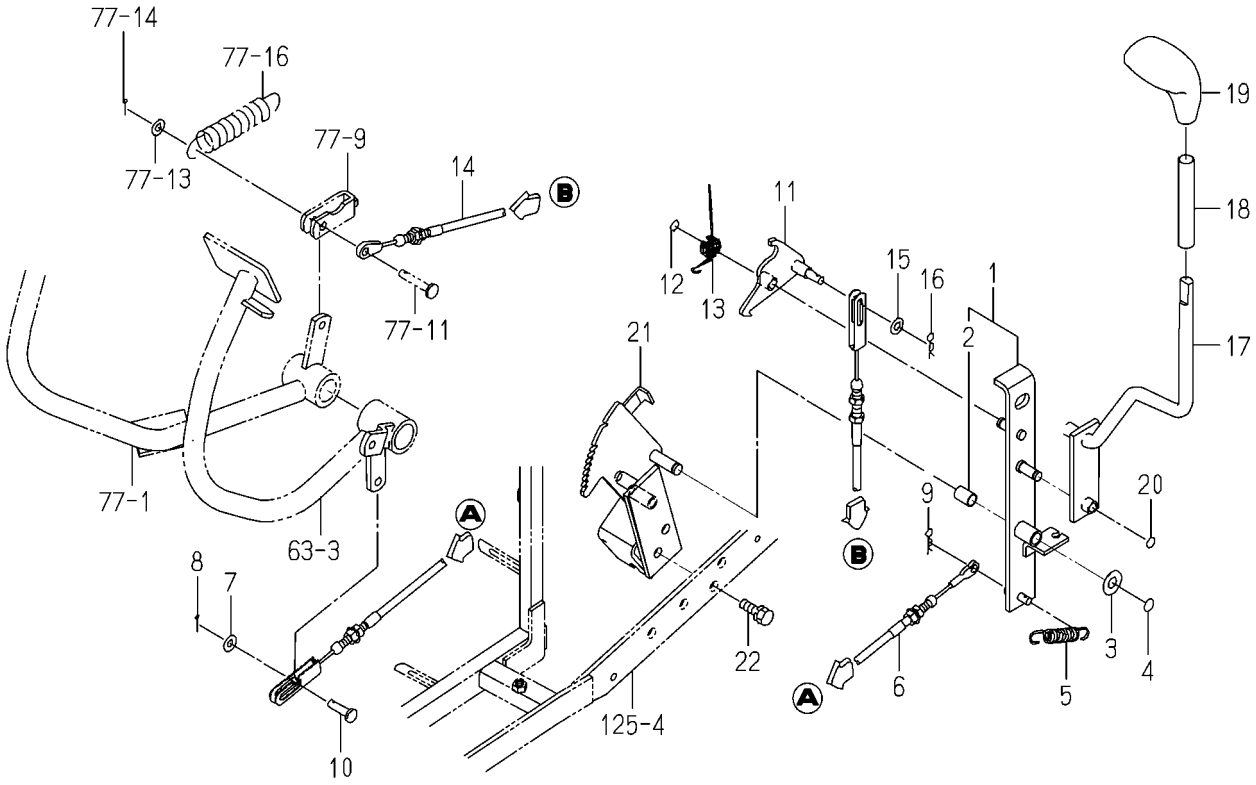

1774-272A-0100

KEY	PART CODE	DESCRIPTION	SPC	TYPE OF MODEL				ITC	COL	GRP	REMARKS
				TM3217	TM3247	TM3267					
1	1774-272-500-30	ARM/CRUISE ASSY	*	1	1	1					
2	3650-440-014-00	BUSH/12X14X20	*	1	1	1					
3	V411-260-012-00	WASHER,PL/M12	*	1	1	1					
4	V704-140-012-00	RING,SNAP/12 C	*	1	1	1					
5	1650-135-002-00	SPRING/HE095	*	1	1	1					
6	1774-272-600-00	CABLE/CRUISE ASSY	*	1	1	1					
7	V411-260-008-00	WASHER,PL/M8	*	1	1	1					
8	V500-162-502-00	PIN,SPLIT/2.5X20	*	1	1	1					
9	V560-160-008-00	PIN/SNAP	*	1	1	1					
10	1432-242-001-00	PIN	*	1	1	1					
11	1774-272-540-00	PLATE/HOOK COMP	*	1	1	1					
12	V704-140-010-00	RING,SNAP/10 C	*	1	1	1					
13	1770-274-001-10	SPRING/HT018	*	1	1	1					
14	1774-272-610-00	CABLE/RELEASE ASSY	*	1	1	1					
15	V411-260-008-00	WASHER,PL/M8	*	1	1	1					
16	V560-160-008-00	PIN/SNAP	*	1	1	1					
17	1774-272-530-20	LEVER/CRUISE COMP	*	1	1	1					
18	1614-261-006-00	TUBE/14X17X90	*	1	1	1					
19	1716-261-001-00	GRIP/MAIN	*	1	1	1					
20	V704-140-010-00	RING,SNAP/10 C	*	1	1	1					
21	1774-272-520-30	HOOK/CRUISE COMP	*	1	1	1					
22	V211-261-002-50	BOLT,S/M10X25	*	2	2	2					

FIG. 63 PEDAL(HST)SYSTEM(H TYPE)

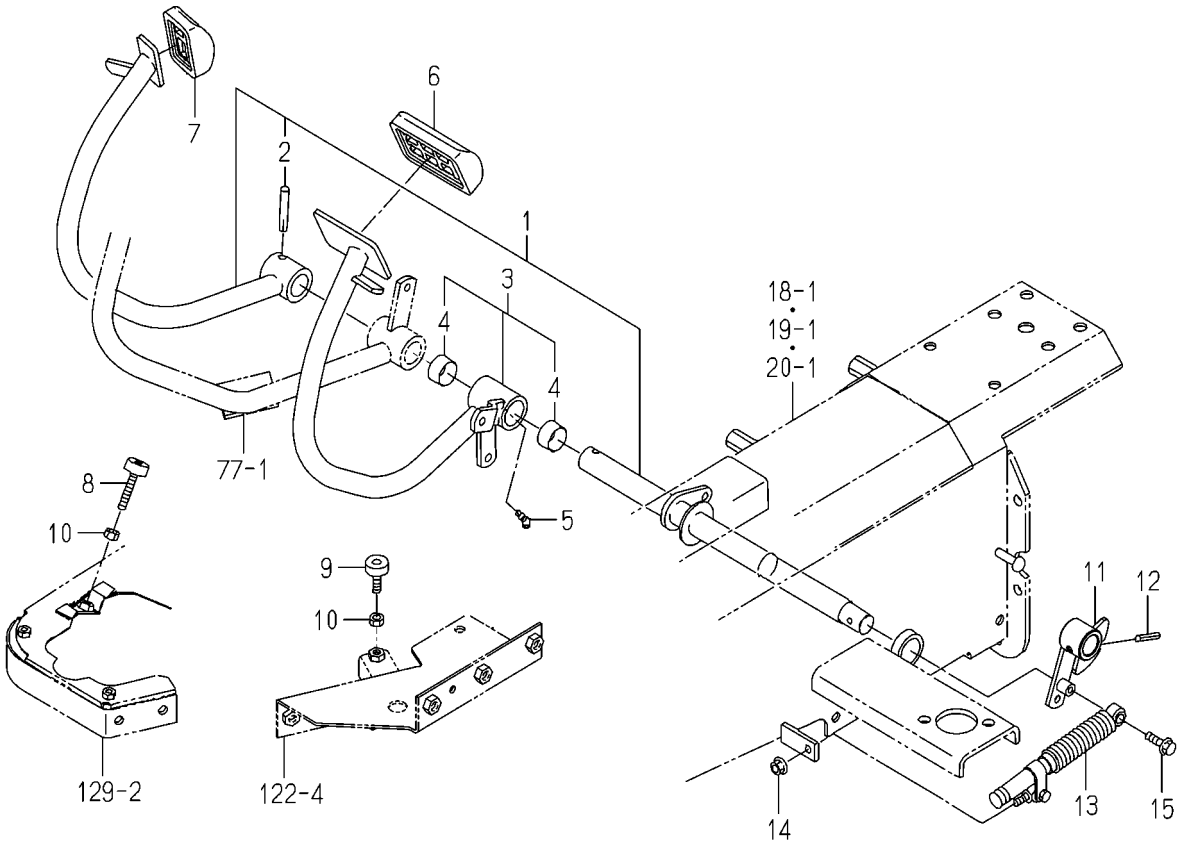

1774-272E-0100

KEY	PART CODE	DESCRIPTION	SPC	TYPE OF MODEL TM3217	TM3247	TM3267		ITC	COL	GRP	REMARKS
1	1774-272-210-20	PEDAL/HST/R SET	*	1	1	1					
2	V511-100-805-00	PIN,TAPER/8X50	*	1	1	1					
3	1774-272-240-00	PEDAL/HST/F ASSY	*	1	1	1					
4	8654-203-201-00	BUSH/25X28X15	*	2	2	2					
5	V763-150-000-00	NIPPLE,GREASE/PT1/8	*	1	1	1					
6	1747-640-067-00	PAD/HST	*	1	1	1					
7	1774-272-071-00	PAD/HST/R	*	1	1	1					
8	1774-272-051-00	INSULATOR	*	1	1	1					
9	1421-602-005-10	CUSHION,B/ RUBBER	*	1	1	1					
10	V304-260-008-00	NUT/M8	*	2	2	2					
11	1774-272-300-10	ARM/NEUTRAL/HST COMP	*	1	1	1					
12	1683-272-054-10	PIN	*	1	1	1					
13	1646-640-580-00	DAMPER/OIL ASSY	*	1	1	1					
14	V362-260-008-00	NUT/WASHER/M8	*	1	1	1					
15	V231-360-802-50	FLANGEBOLT/M8X25	*	1	1	1					

FIG. 64 PIPING(HST)SYSTEM (TM3217H,3247H TYPE)

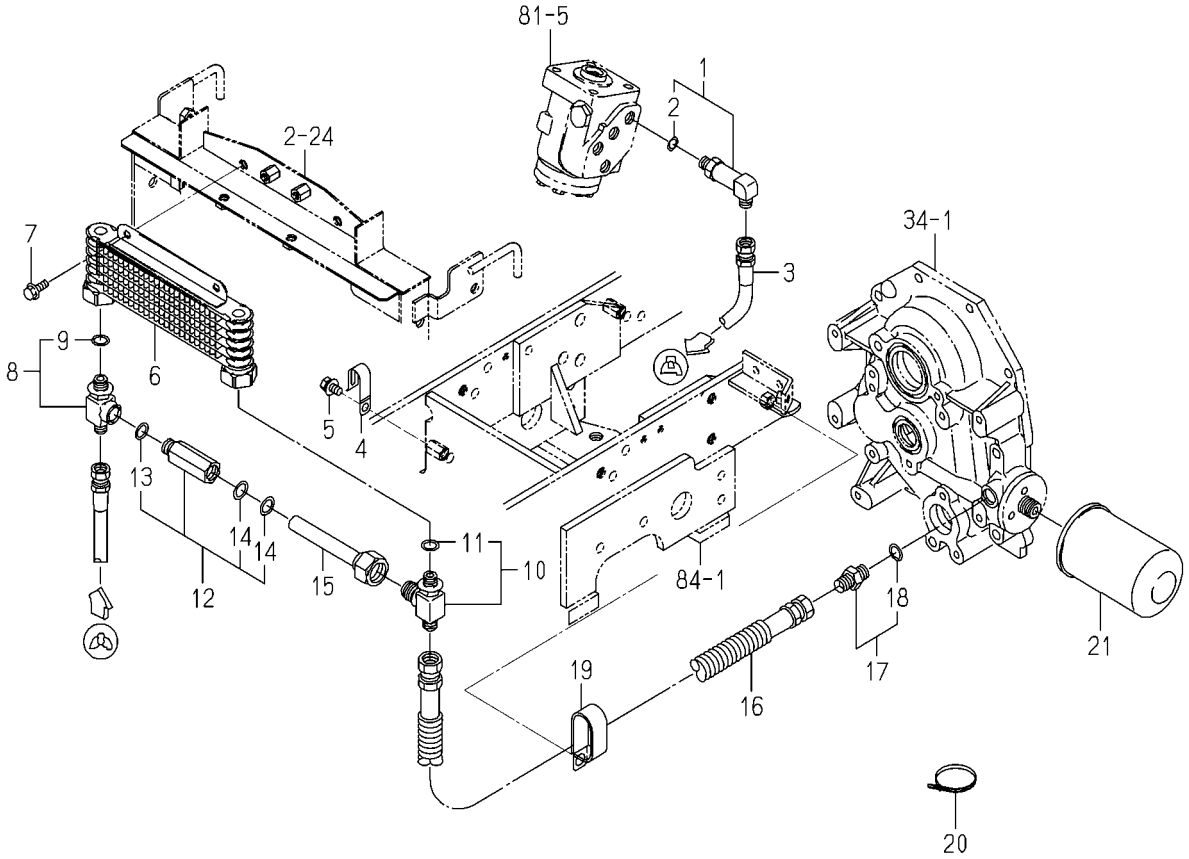

1774-273 -0100

KEY	PART CODE	DESCRIPTION	SPC	TYPE OF MODEL				ITC	COL	GRP	REMARKS
				TM3217	TM3247	TM3267					
1	P113-211-330-00	ELBOW/90DEG/L ASSY	*	1	1						
2	V720-112-401-10	O-RING/1B,P11	*	1	1						
3	3676-374-320-00	HOSE,HYDUALIC/1700	*	1	1						
4	1425-621-004-00	HOLDER/JE/9-9	*	1	1						
5	V211-360-801-60	BOLT,SP/M8X16	*	1	1						
6	1774-273-230-10	COOLER/OIL ASSY	*	1	1						
7	V231-360-801-60	FLANGEBOLT/M8X16	*	2	2						
8	1774-273-210-00	ADAPTER/T ASSY	*	1	1						
9	V720-112-401-40	O-RING/1B,P14	*	1	1						
10	1774-273-220-00	ADAPTER/T ASSY	*	1	1						
11	V720-112-401-40	O-RING/1B,P14	*	1	1						
12	K250-060-000-00	VALVE/RELIEF/060	*	1	1						
13	V720-112-401-40	O-RING/1B,P14	*	1	1						
14	V720-102-401-50	O-RING/1A,P15	*	2	2						
15	1763-458-002-00	PIPE/CHECKVALVE	*	1	1						
16	1775-508-550-10	HOSE/1570 ASSY	*	1	1						
17	1650-508-320-00	ADAPTER/PF3/8 ASSY	*	1	1						
18	V720-112-401-40	O-RING/1B,P14	*	1	1						
19	3650-261-001-00	CLAMP/28X55	*	1	1						
20	1342-402-006-00	BAND,WIRE/250	*	1	1						
21	1725-509-220-00	FILTER/CHARGE ASSY	*	1	1						

FIG. 65 PIPING(HST)SYSTEM(TM3267H TYPE)

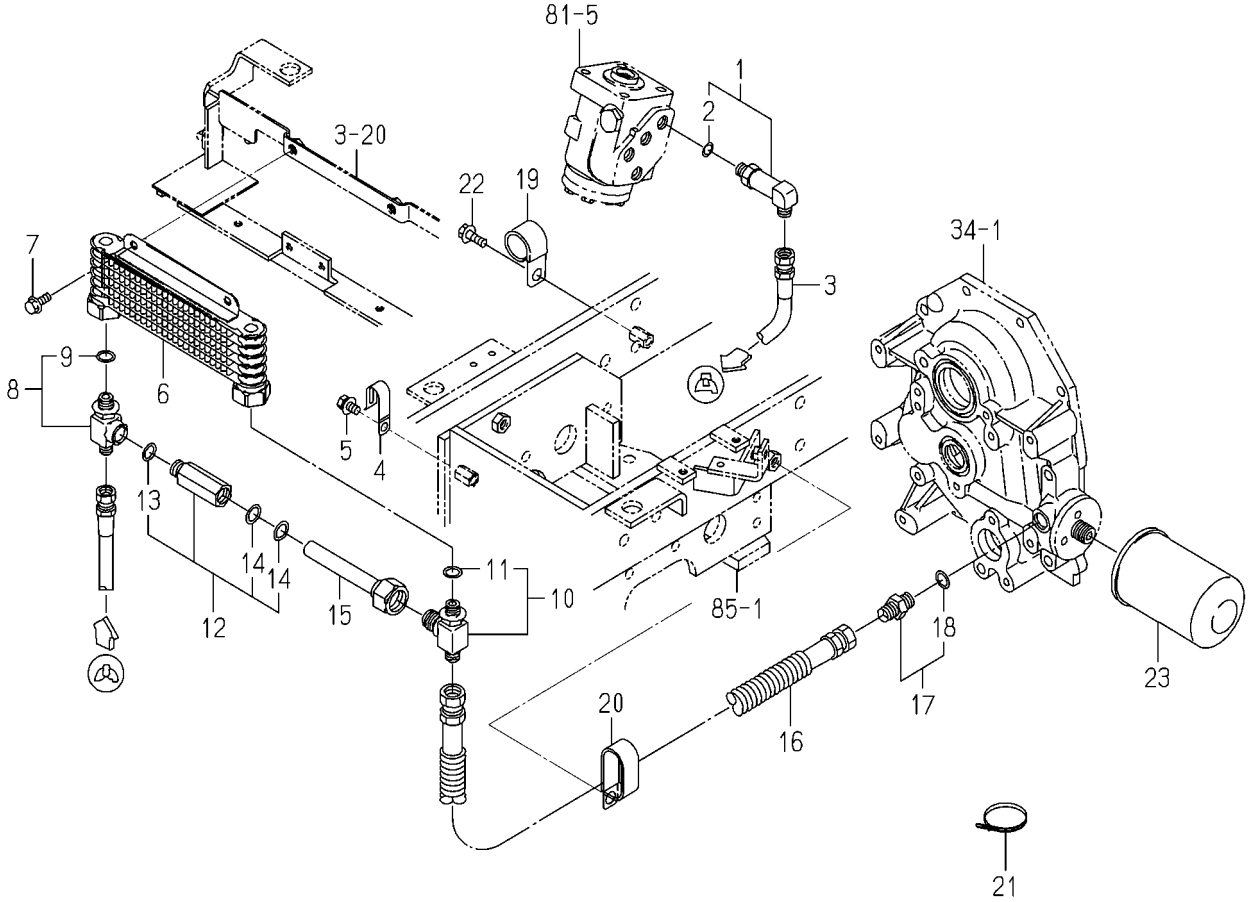

1774-273A-0100

KEY	PART CODE	DESCRIPTION	SPC	TYPE OF MODEL				ITC	COL	GRP	REMARKS
				TM3217	TM3247	TM3267					
1	P113-211-330-00	ELBOW/90DEG/L ASSY	*			1					
2	V720-112-401-10	O-RING/1B,P11	*			1					
3	3676-374-320-00	HOSE,HYDUALIC/1700	*			1					
4	1425-621-004-00	HOLDER/JE/9-9	*			1					
5	V211-360-801-60	BOLT,SP/M8X16	*			1					
6	1774-273-230-10	COOLER/OIL ASSY	*			1					
7	V231-360-801-60	FLANGEBOLT/M8X16	*			2					
8	1774-273-210-00	ADAPTER/T ASSY	*			1					
9	V720-112-401-40	O-RING/1B,P14	*			1					
10	1774-273-220-00	ADAPTER/T ASSY	*			1					
11	V720-112-401-40	O-RING/1B,P14	*			1					
12	K250-060-000-00	VALVE/RELIEF/060	*			1					
13	V720-112-401-40	O-RING/1B,P14	*			1					
14	V720-102-401-50	O-RING/1A,P15	*			2					
15	1763-458-002-00	PIPE/CHECKVALVE	*			1					
16	1775-508-550-10	HOSE/1570 ASSY	*			1					
17	1650-508-320-00	ADAPTER/PF3/8 ASSY	*			1					
18	V720-112-401-40	O-RING/1B,P14	*			1					
19	1518-786-508-00	CLIP B	*			1					
20	3650-261-001-00	CLAMP/28X55	*			1					
21	1342-402-006-00	BAND,WIRE/250	*			2					
22	V231-361-002-00	FLANGEBOLT/M10X20	*			1					
23	1725-509-220-00	FILTER/CHARGE ASSY	*			1					

FIG. 66 PINION(DRIVE)SYSTEM(F TYPE)

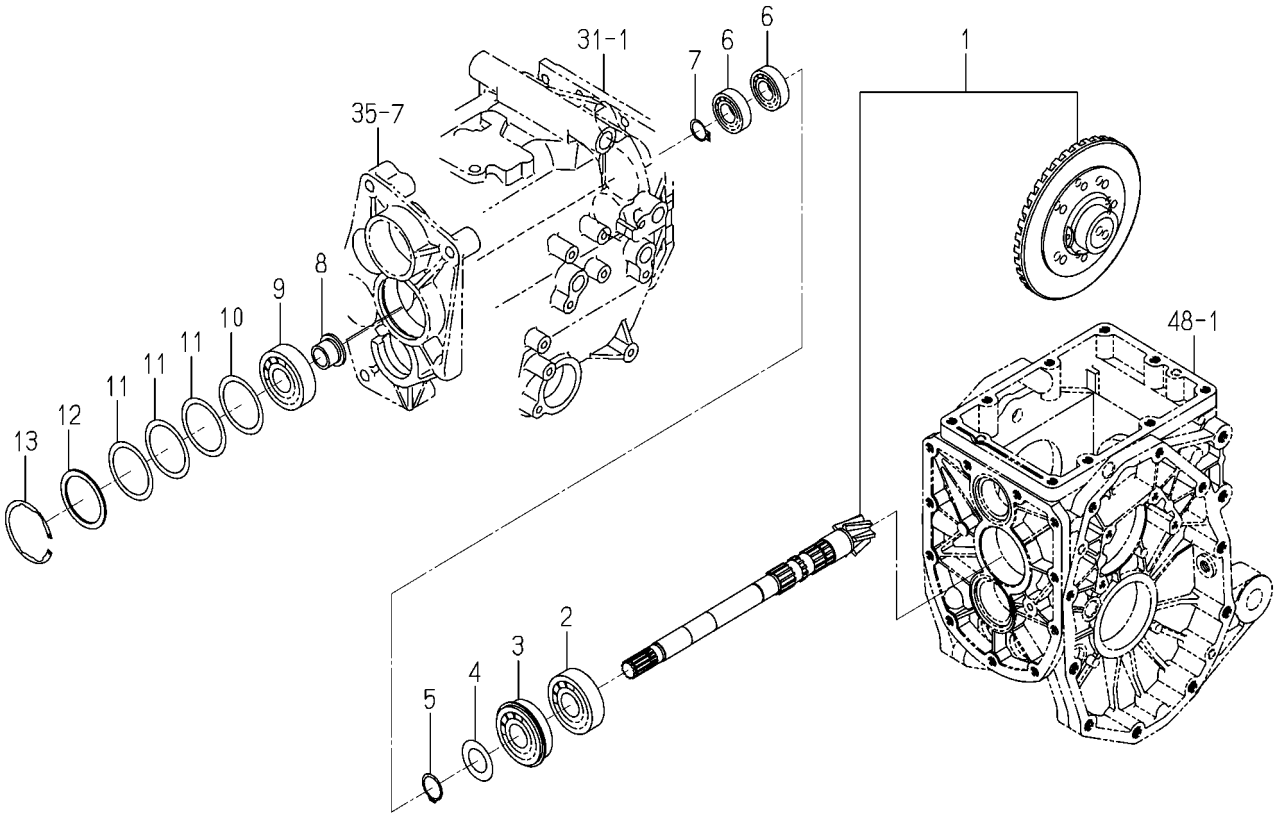

1774-301 -0100

KEY	PART CODE	DESCRIPTION	SPC	TYPE OF MODEL				ITC	COL	GRP	REMARKS
				TM3217	TM3247	TM3267					
1	1774-301-200-00	GEAR/06X37 SET	*	1	1	1					
2	3824-701-011-00	BEARING/BALL	*	1	1	1					
3	1774-301-006-00	BEARING/BALL	*	1	1	1					
4	1650-203-011-20	WASHER/25X43X02	*	1	1	1					
5	1725-218-006-00	RING/SNAP/CS25	*	1	1	1					
6	3651-832-009-00	R.B.B	*	2	2	2					
7	V704-140-020-00	RING,SNAP/20 C	*	1	1	1					
8	1774-301-001-00	BUSH/19X25X19	*	1	1	1					
9	3824-701-011-00	BEARING/BALL	*	1	1	1					
10	8663-201-004-00	SHIM/0.1	*	1	1	1					
11	8663-201-005-00	SHIM/0.2	*	3	3	3					
12	1724-304-005-00	WASHER/50X62X02	*	1	1	1					
13	V707-140-062-00	RING,SNAP/R62	*	1	1	1					

FIG. 67 PINION(DRIVE/HST)SYSTEM(H TYPE)

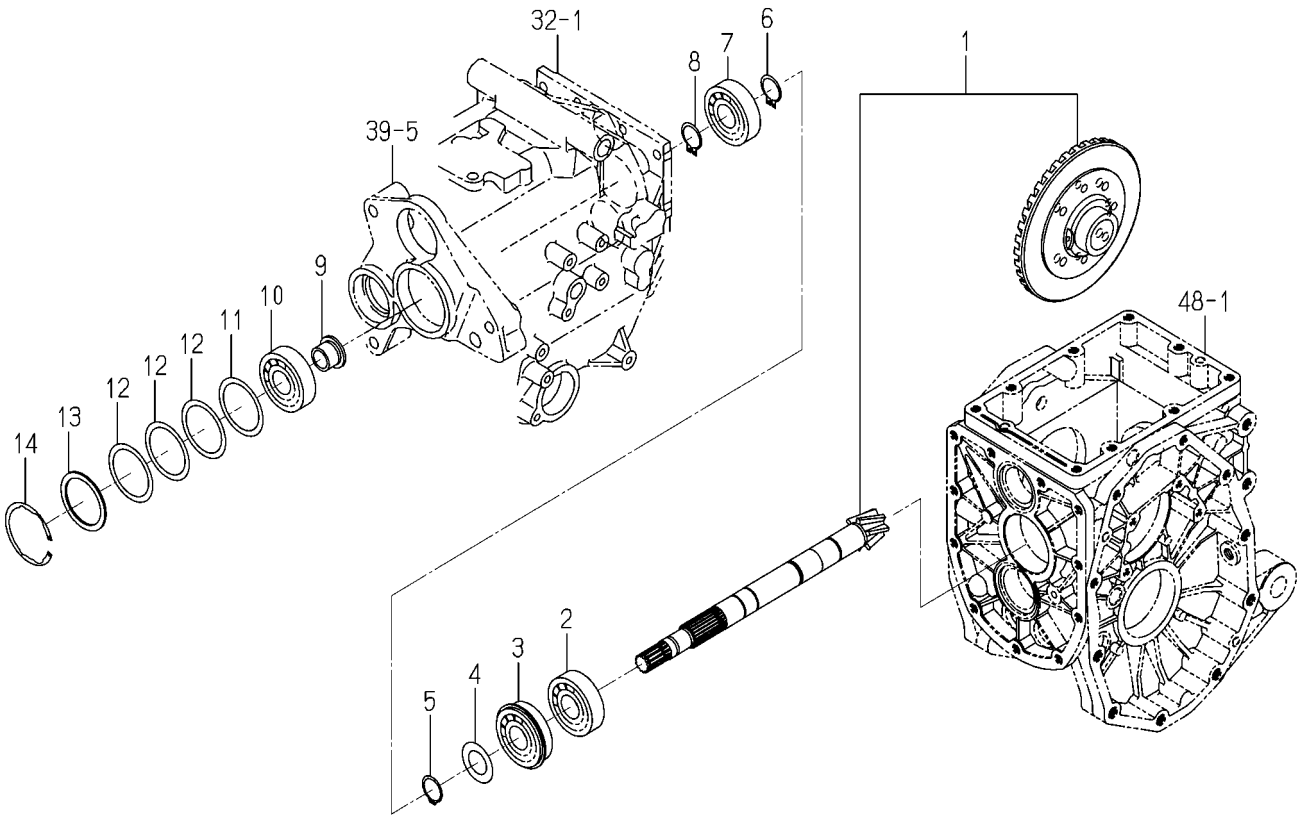

1774-301A-0100

KEY	PART CODE	DESCRIPTION	SPC	TYPE OF MODEL				ITC	COL	GRP	REMARKS
				TM3217	TM3247	TM3267					
1	1774-301-500-00	GEAR/06X37 SET	*	1	1	1					
2	3824-701-011-00	BEARING/BALL	*	1	1	1					
3	1774-301-006-00	BEARING/BALL	*	1	1	1					
4	1650-203-011-20	WASHER/25X43X02	*	1	1	1					
5	1725-218-006-00	RING/SNAP/CS25	*	1	1	1					
6	V704-140-025-00	RING,SNAP/25 C	*	1	1	1					
7	V600-110-630-50	BEARING,RB/6305	*	1	1	1					
8	V704-140-025-00	RING,SNAP/25 C	*	1	1	1					
9	1774-301-001-00	BUSH/19X25X19	*	1	1	1					
10	3824-701-011-00	BEARING/BALL	*	1	1	1					
11	8663-201-004-00	SHIM/0.1	*	1	1	1					
12	8663-201-005-00	SHIM/0.2	*	3	3	3					
13	1724-304-005-00	WASHER/50X62X02	*	1	1	1					
14	V707-140-062-00	RING,SNAP/R62	*	1	1	1					

FIG. 68 CASE(DIFF)SYSTEM(F TYPE)

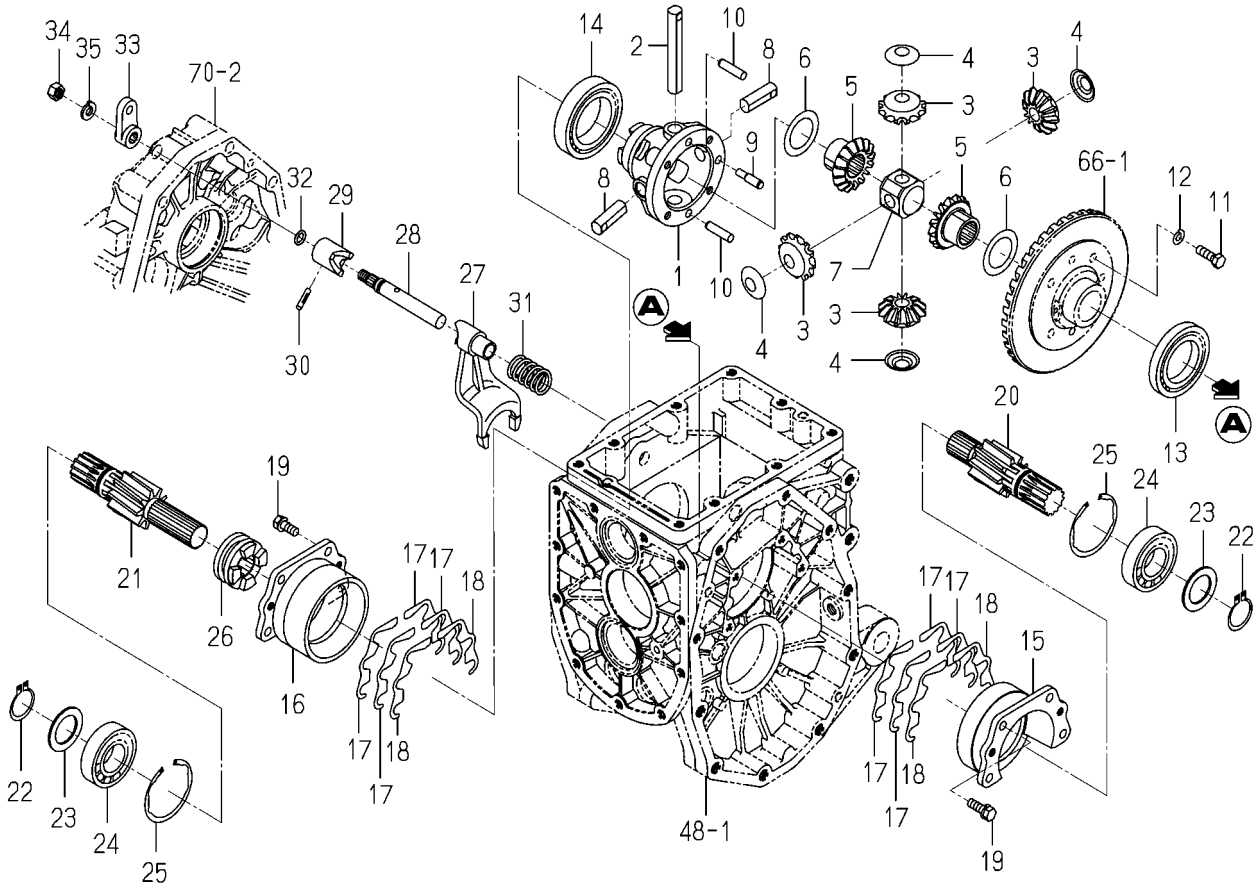

1774-304 -0100

KEY	PART CODE	DESCRIPTION	SPC	TYPE OF MODEL TM3217	TM3247	TM3267		ITC	COL	GRP	REMARKS
1	1774-304-200-10	CASE/DIFF COMP	*	1	1	1					
2	1774-304-009-00	PIN/14X94	*	1	1	1					
3	1717-304-071-10	GEAR/BEVEL/12	*	4	4	4					
4	1427-301-005-00	COLLAR,PINION THRUST	*	4	4	4					
5	1774-304-024-10	GEAR/BEVEL/16	*	2	2	2					
6	1427-301-007-00	COLLAR,THRUST	*	2	2	2					
7	1717-304-073-00	HOLDER/SHAFT/DIFF	*	1	1	1					
8	1717-304-074-00	PIN/14X40	*	2	2	2					
9	1774-304-011-00	PIN/08X32	*	1	1	1					
10	1672-301-002-00	PIN/PARALLEL/08X32	*	2	2	2					
11	1544-304-006-10	BOLT/M8X25	*	4	4	4					
12	V401-160-008-00	WASHER,SP/M8	*	4	4	4					
13	1774-301-004-00	BEARING/BALL	*	1	1	1					
14	V600-110-601-00	BEARING,RB/6010	*	1	1	1					
15	1427-201-012-00	METAL,DIFF-CASE LH	*	1	1	1					
16	1427-201-013-10	METAL/DIFF/RH	*	1	1	1					
17	1427-201-014-10	SHIM,DIFF-CASE A	*	8	8	8					
18	1427-201-015-10	SHIM,DIFF-CASE B	*	4	4	4					
19	V211-260-802-00	BOLT,S/M8X20	*	8	8	8					
20	1774-304-002-00	GEAR/HELICAL/09/LH	*	1	1	1					
21	1774-304-003-00	GEAR/HELICAL/09/RH	*	1	1	1					
22	V704-140-030-00	RING,SNAP/30 C	*	2	2	2					
23	1641-217-032-00	WASHER/36X46X02	*	2	2	2					
24	1614-203-015-00	BEARING/BALL	*	2	2	2					
25	V707-140-062-00	RING,SNAP/R62	*	2	2	2					
26	1776-304-005-00	CLUTCH/DIFF	*	1	1	1					
27	1774-304-019-00	FORK/SHIFT/DIFFLOCK	*	1	1	1					
28	1774-304-004-00	STAY/SHIFTER	*	1	1	1					
29	1774-304-001-00	CAM/DIFFLOCK	*	1	1	1					
30	V530-240-502-40	PIN/GROOVE	*	1	1	1					

FIG. 68 CASE(DIFF)SYSTEM(F TYPE)

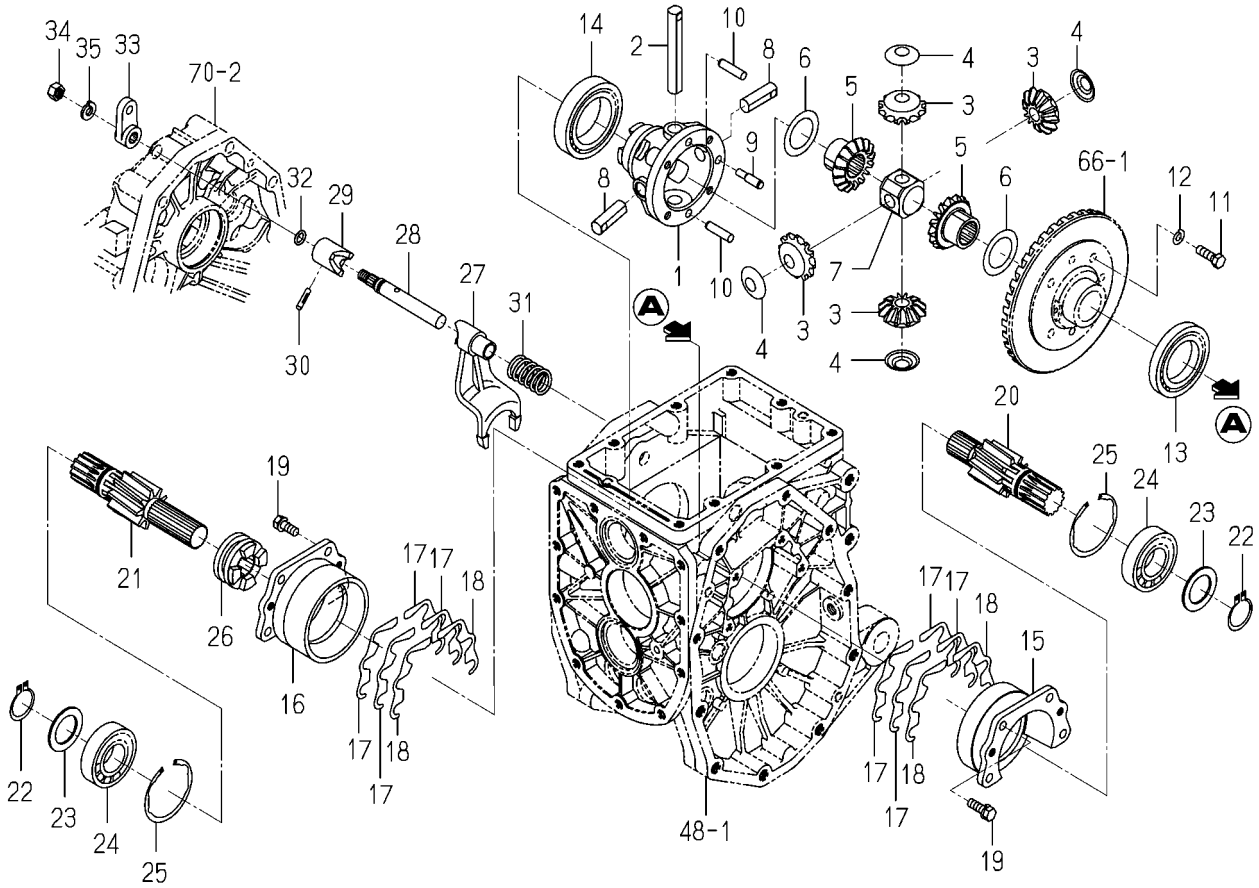

1774-304 -0100

KEY	PART CODE	DESCRIPTION	SPC	TYPE OF MODEL				ITC	COL	GRP	REMARKS
				TM3217	TM3247	TM3267					
31	1427-301-018-00	SPRING,PRESS/40	*	1	1	1					
32	V720-102-401-00	O-RING/1A,P10A	*	1	1	1					
33	1774-304-021-00	ARM/DIFF	*	1	1	1					
34	V304-260-010-00	NUT/M10	*	1	1	1					
35	V401-160-010-00	WASHER,SP/M10	*	1	1	1					

FIG. 69 CASE(DIFF/HST)SYSTEM(H TYPE)

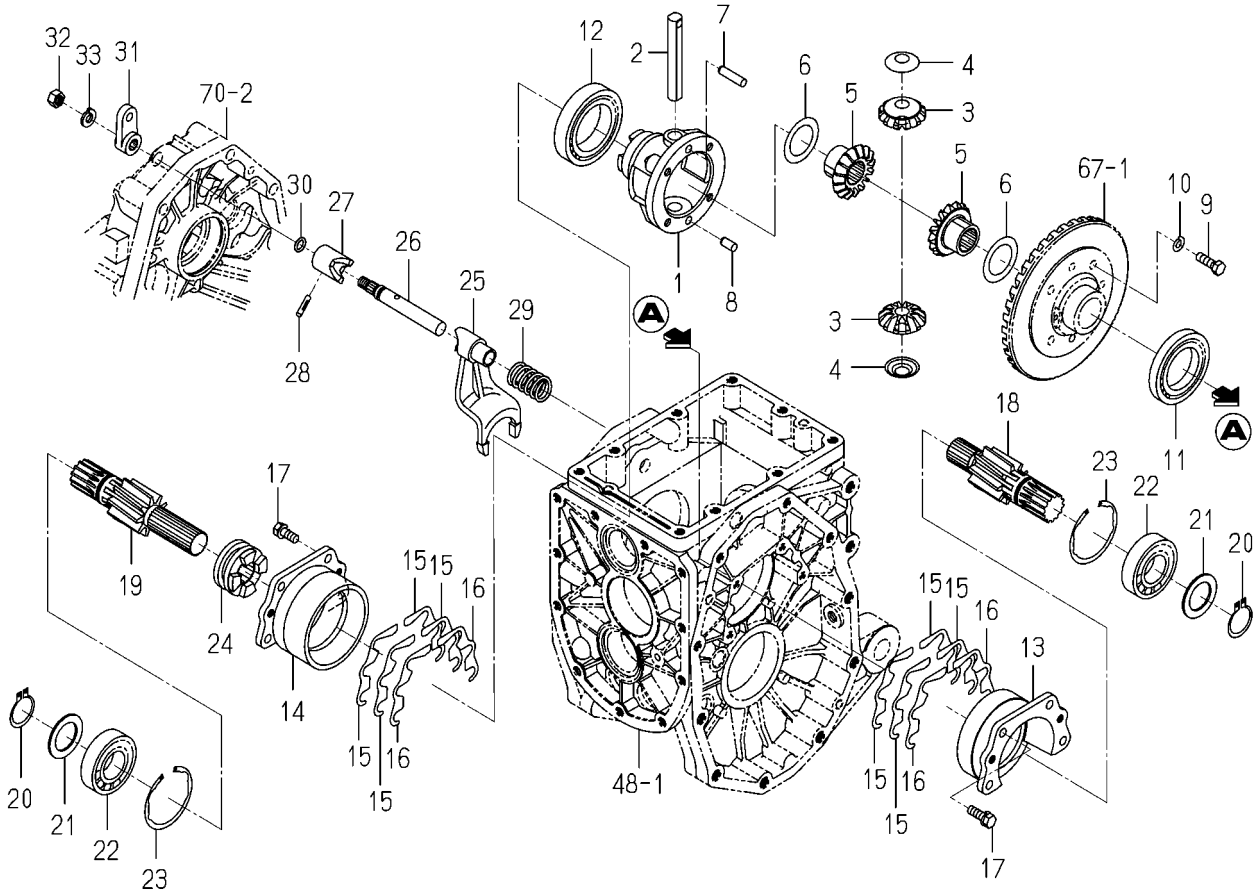

1774-304A-0100

KEY	PART CODE	DESCRIPTION	SPC	TYPE OF MODEL				ITC	COL	GRP	REMARKS
				TM3217	TM3247	TM3267					
1	1774-304-051-00	CASE/DIFF	*	1	1	1					
2	1444-411-006-00	SHAFT,DIFF. PINION	*	1	1	1					
3	1672-301-003-00	PINION/BEVEL/12	*	2	2	2					
4	1427-301-005-00	COLLAR,PINION THRUST	*	2	2	2					
5	1672-301-004-00	GEAR/BEVEL/14	*	2	2	2					
6	1427-301-007-00	COLLAR,THRUST	*	2	2	2					
7	1672-301-002-00	PIN/PARALLEL/08X32	*	1	1	1					
8	V523-100-801-60	PIN,ST,B/8X16	*	1	1	1					
9	1544-304-006-10	BOLT/M8X25	*	4	4	4					
10	V401-160-008-00	WASHER,SP/M8	*	4	4	4					
11	1774-301-004-00	BEARING/BALL	*	1	1	1					
12	V600-110-601-00	BEARING,RB/6010	*	1	1	1					
13	1427-201-012-00	METAL,DIFF-CASE LH	*	1	1	1					
14	1427-201-013-10	METAL/DIFF/RH	*	1	1	1					
15	1427-201-014-10	SHIM,DIFF-CASE A	*	8	8	8					
16	1427-201-015-10	SHIM,DIFF-CASE B	*	4	4	4					
17	V211-260-802-00	BOLT,S/M8X20	*	8	8	8					
18	1774-304-002-00	GEAR/HELICAL/09/LH	*	1	1	1					
19	1774-304-003-00	GEAR/HELICAL/09/RH	*	1	1	1					
20	V704-140-030-00	RING,SNAP/30 C	*	2	2	2					
21	1641-217-032-00	WASHER/36X46X02	*	2	2	2					
22	1614-203-015-00	BEARING/BALL	*	2	2	2					
23	V707-140-062-00	RING,SNAP/R62	*	2	2	2					
24	1776-304-005-00	CLUTCH/DIFF	*	1	1	1					
25	1774-304-019-00	FORK/SHIFT/DIFFLOCK	*	1	1	1					
26	1774-304-004-00	STAY/SHIFTER	*	1	1	1					
27	1774-304-001-00	CAM/DIFFLOCK	*	1	1	1					
28	V530-240-502-40	PIN/GROOVE	*	1	1	1					
29	1427-301-018-00	SPRING,PRESS/40	*	1	1	1					
30	V720-102-401-00	O-RING/1A,P10A	*	1	1	1					

FIG. 69 CASE(DIFF/HST)SYSTEM(H TYPE)

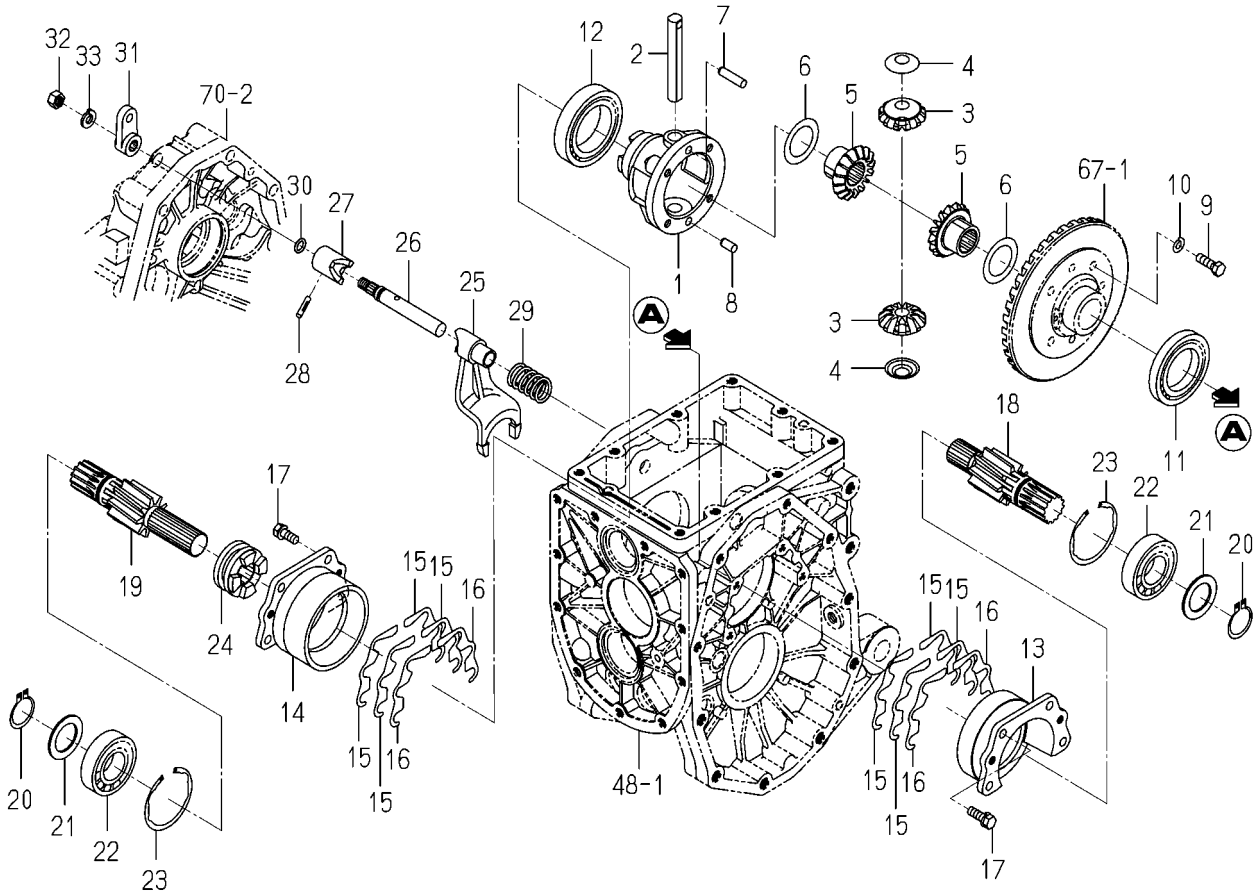

1774-304A-0100

KEY	PART CODE	DESCRIPTION	SPC	TYPE OF MODEL				ITC	COL	GRP	REMARKS
				TM3217	TM3247	TM3267					
31	1774-304-021-00	ARM/DIFF	*	1	1	1					
32	V304-260-010-00	NUT/M10	*	1	1	1					
33	V401-160-010-00	WASHER,SP/M10	*	1	1	1					

FIG. 70 HOUSING(AXLE/REAR)SYSTEM

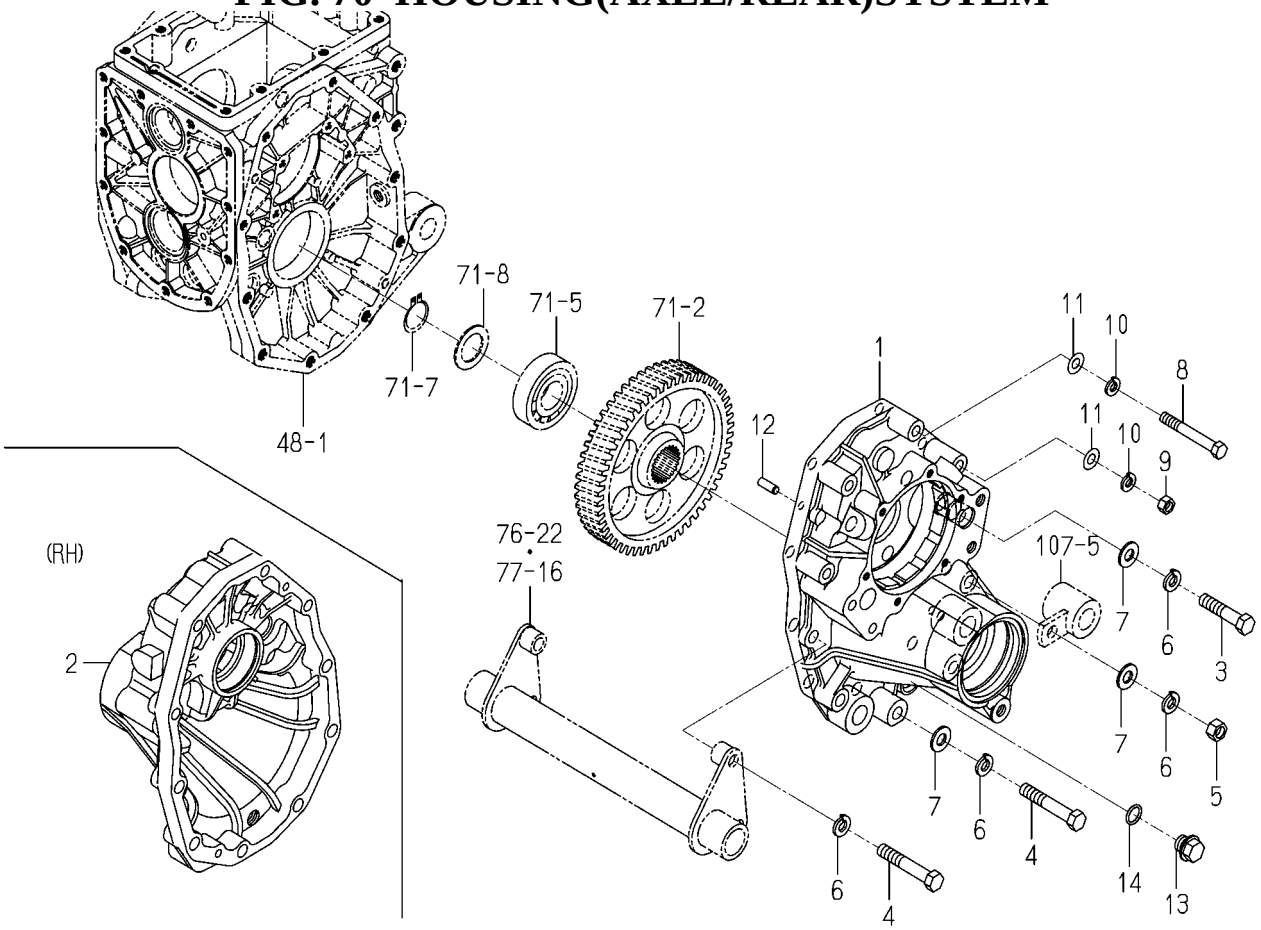

1774-306 -0100

KEY	PART CODE	DESCRIPTION	SPC	TYPE OF MODEL				ITC	COL	GRP	REMARKS
				TM3217	TM3247	TM3267					
1	1774-306-001-30	HOUSING/AXLE/LH	*	1	1	1					
2	1774-306-002-30	HOUSING/AXLE/RH	*	1	1	1					
3	V201-361-205-50	BOLT/M12X55/7T	*	2	2	2					
4	V201-361-207-00	BOLT/M12X70/7T	*	8	8	8					
5	V304-460-012-00	NUT/M12/7T	*	2	2	2					
6	V401-160-012-00	WASHER,SP/M12	*	12	12	12					
7	V411-260-012-00	WASHER,PL/M12	*	8	8	8					
8	V201-361-007-50	BOLT/M10X75/7T	*	4	4	4					
9	V304-460-010-00	NUT/M10/7T	*	4	4	4					
10	V401-160-010-00	WASHER,SP/M10	*	8	8	8					
11	V411-260-010-00	WASHER,PL/M10	*	8	8	8					
12	V522-100-801-80	PIN,ST,A/8X18	*	4	4	4					
13	1427-201-007-00	PLUG,DRAIN	*	2	2	2					
14	V720-102-401-60	O-RING/1A,P16	*	2	2	2					

FIG. 71 SHAFT(WHEEL)SYSTEM

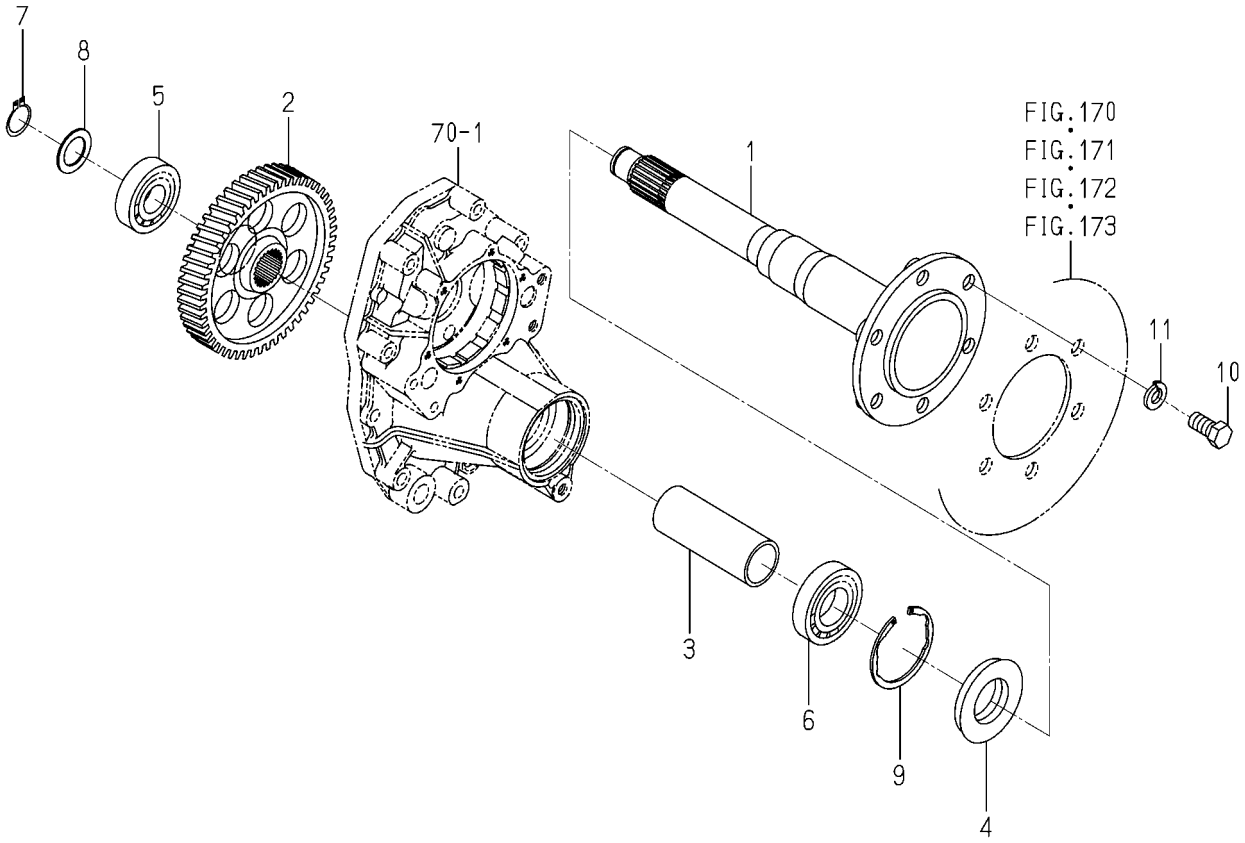

1774-307 -0100

KEY	PART CODE	DESCRIPTION	SPC	TYPE OF MODEL				ITC	COL	GRP	REMARKS
				TM3217	TM3247	TM3267					
1	1774-307-004-00	SHAFT/WHEEL	*	2	2	2					
2	1774-307-003-10	GEAR/HELICAL/52	*	2	2	2					
3	1774-307-001-00	COLLAR/41X49X129	*	2	2	2					
4	1491-307-201-00	SEAL,OIL/QLF488011.5	*	2	2	2					
5	V600-110-630-60	BEARING,RB/6306	*	2	2	2					
6	1729-202-008-00	BEARING/BALL	*	2	2	2					
7	V704-140-030-00	RING,SNAP/30 C	*	2	2	2					
8	1641-217-032-00	WASHER/36X46X02	*	2	2	2					
9	V707-140-080-00	RING,SNAP/R80	*	2	2	2					
10	V201-361-603-00	BOLT/M16X30/7T	*	12	12	12					
11	V401-160-016-00	WASHER,SP/M16	*	12	12	12					

FIG. 72 PEDAL(DIFF-LOCK)SYSTEM(D TYPE)

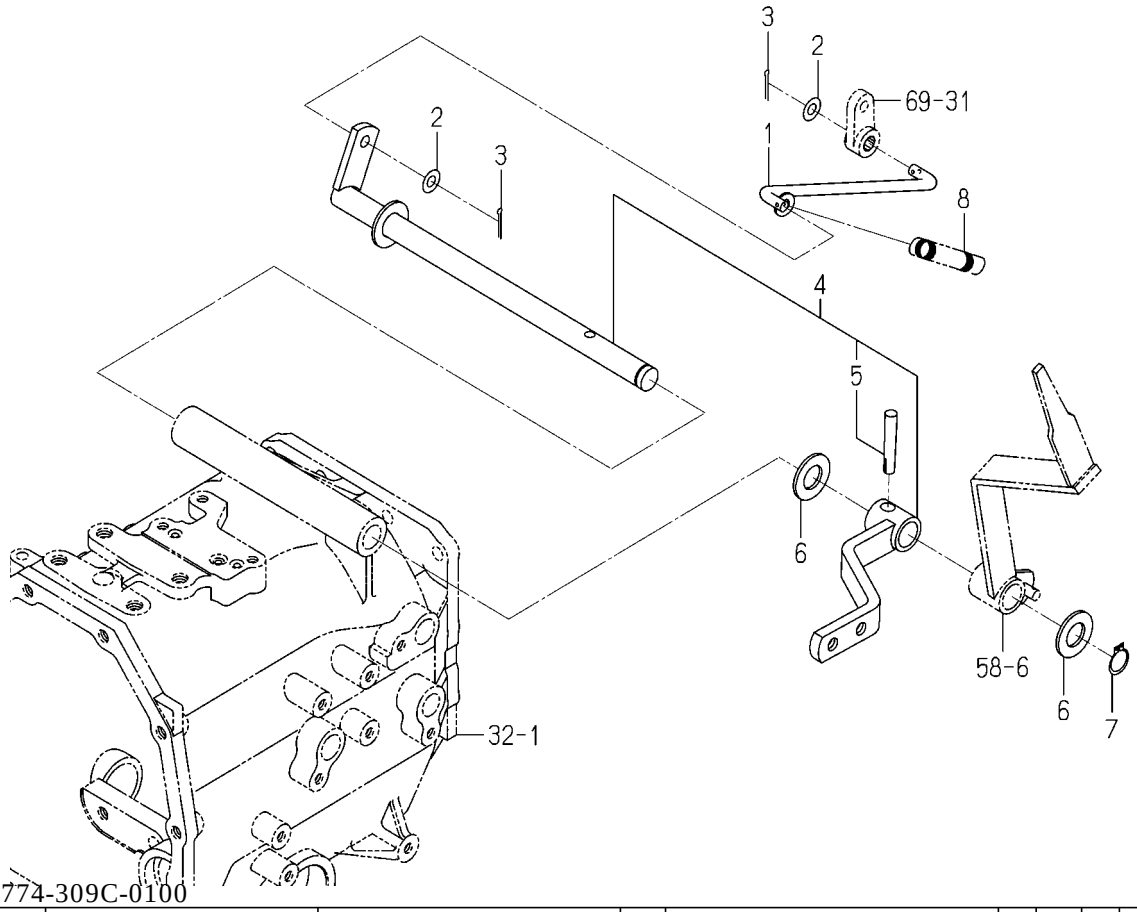

1774-309C-0100

KEY	PART CODE	DESCRIPTION	SPC	TYPE OF MODEL				ITC	COL	GRP	REMARKS
				TM3217	TM3247	TM3267					
1	1774-309-250-00	ROD COMP	*	1	1	1					
2	V411-260-008-00	WASHER,PL/M8	*	2	2	2					
3	V500-162-502-00	PIN,SPLIT/2.5X20	*	2	2	2					
4	1774-309-500-10	SHAFT/DIFF SET	*	1	1	1					
5	V511-100-805-00	PIN,TAPER/8X50	*	1	1	1					
6	V411-260-018-00	WASHER,PL/M18	*	2	2	2					
7	V704-140-018-00	RING,SNAP/18 C	*	1	1	1					
8	1650-135-002-00	SPRING/HE095	*	1	1	1					

FIG. 73 PEDAL(DIFF-LOCK)SYSTEM(F TYPE)

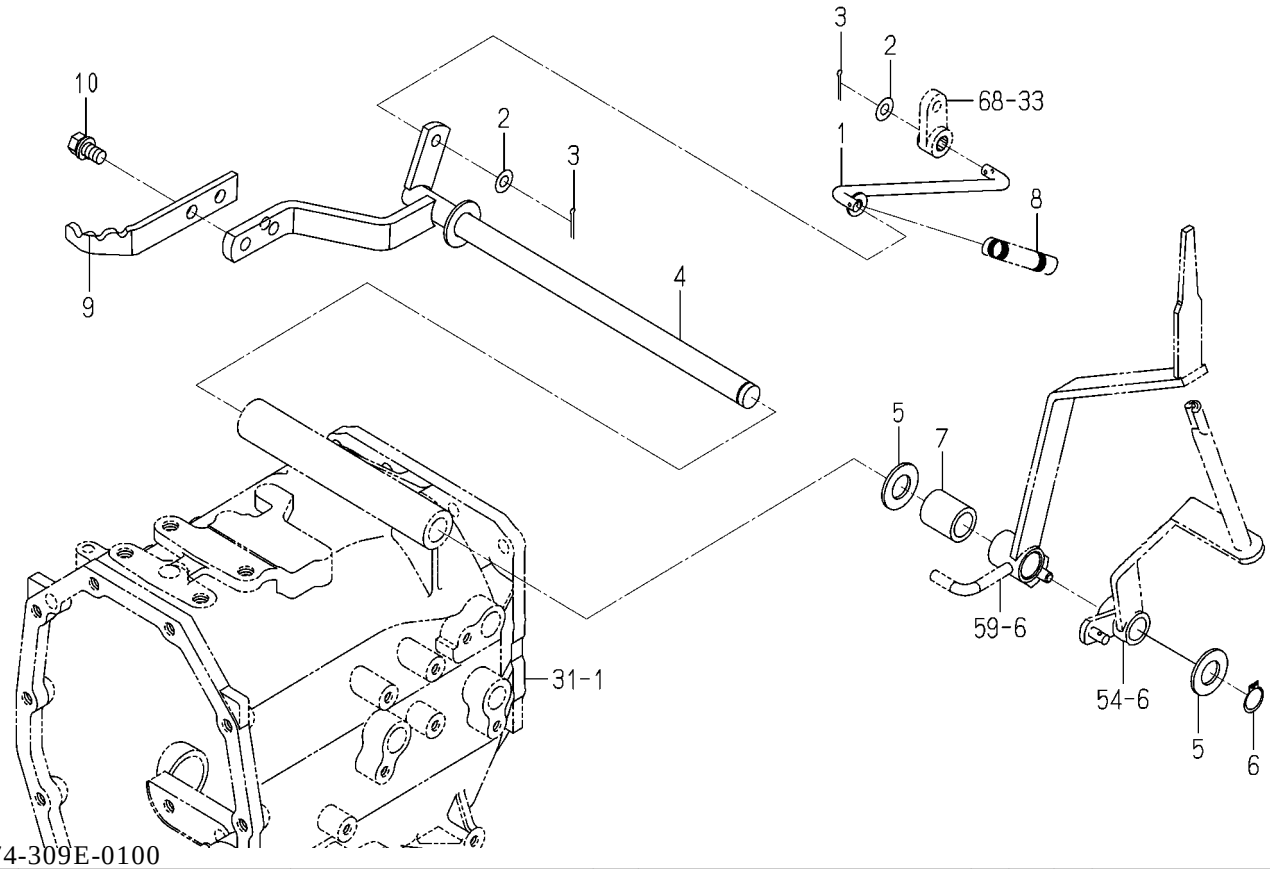

1774-309E-0100

KEY	PART CODE	DESCRIPTION	SPC	TYPE OF MODEL				ITC	COL	GRP	REMARKS
				TM3217	TM3247	TM3267					
1	1774-309-250-00	ROD COMP	*	1	1	1					
2	V411-260-008-00	WASHER,PL/M8	*	2	2	2					
3	V500-162-502-00	PIN,SPLIT/2.5X20	*	2	2	2					
4	1774-309-200-10	SHAFT/ARM/DIFF COMP	*	1	1	1					
5	V411-260-018-00	WASHER,PL/M18	*	2	2	2					
6	V704-140-018-00	RING,SNAP/18 C	*	1	1	1					
7	1774-261-211-00	HUB/19X27X32	*	1	1	1					
8	1650-135-002-00	SPRING/HE095	*	1	1	1					
9	1774-309-004-00	PEDAL/DIFFLOCK	*	1	1	1					
10	V211-261-002-00	BOLT,S/M10X20	*	2	2	2					

FIG. 74 PEDAL(DIFF-LOCK)SYSTEM (H TYPE EXCEPT D)

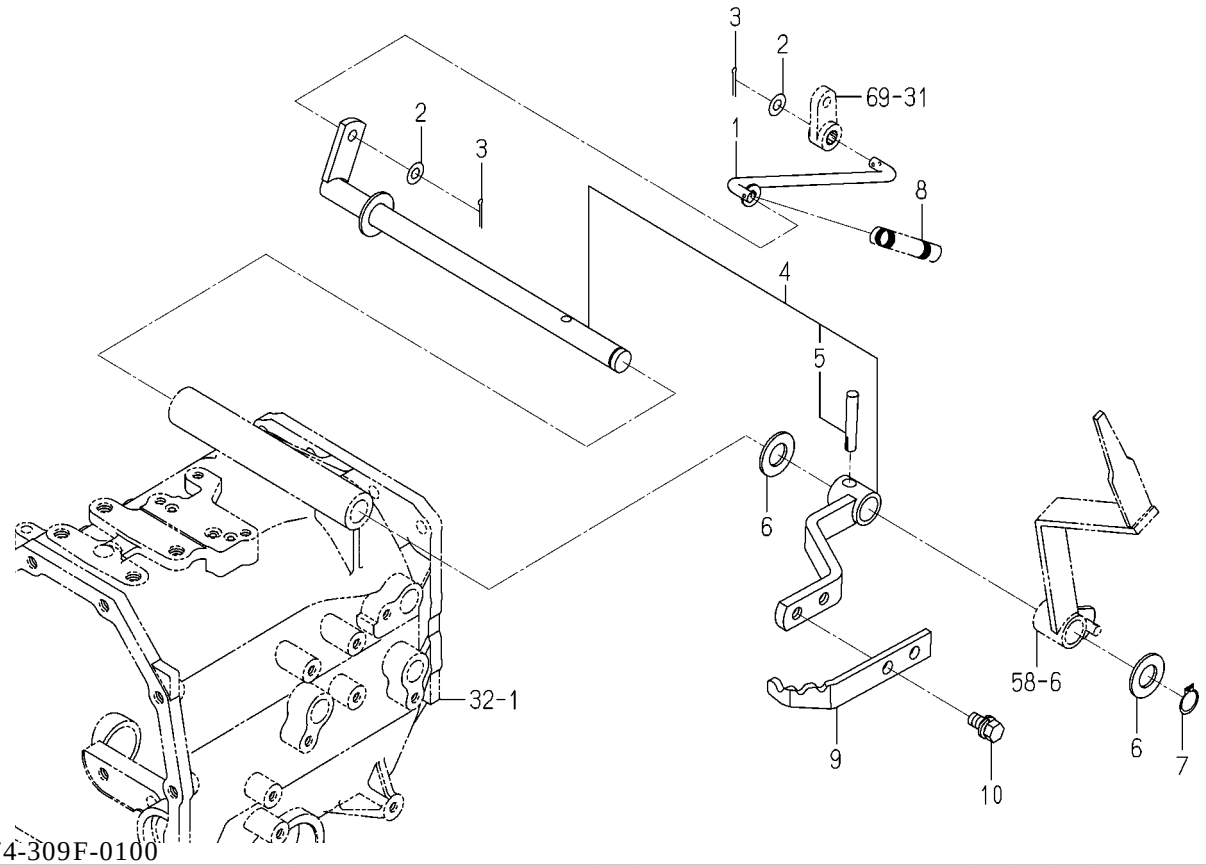

1774-309F-0100

KEY	PART CODE	DESCRIPTION	SPC	TYPE OF MODEL TM3217	TM3247	TM3267		ITC	COL	GRP	REMARKS
1	1774-309-250-00	ROD COMP	*	1	1	1					
2	V411-260-008-00	WASHER,PL/M8	*	2	2	2					
3	V500-162-502-00	PIN,SPLIT/2.5X20	*	2	2	2					
4	1774-309-500-10	SHAFT/DIFF SET	*	1	1	1					
5	V511-100-805-00	PIN,TAPER/8X50	*	1	1	1					
6	V411-260-018-00	WASHER,PL/M18	*	2	2	2					
7	V704-140-018-00	RING,SNAP/18 C	*	1	1	1					
8	1650-135-002-00	SPRING/HE095	*	1	1	1					
9	1774-309-004-00	PEDAL/DIFFLOCK	*	1	1	1					
10	V211-261-002-00	BOLT,S/M10X20	*	2	2	2					

FIG. 75 BRAKE SYSTEM

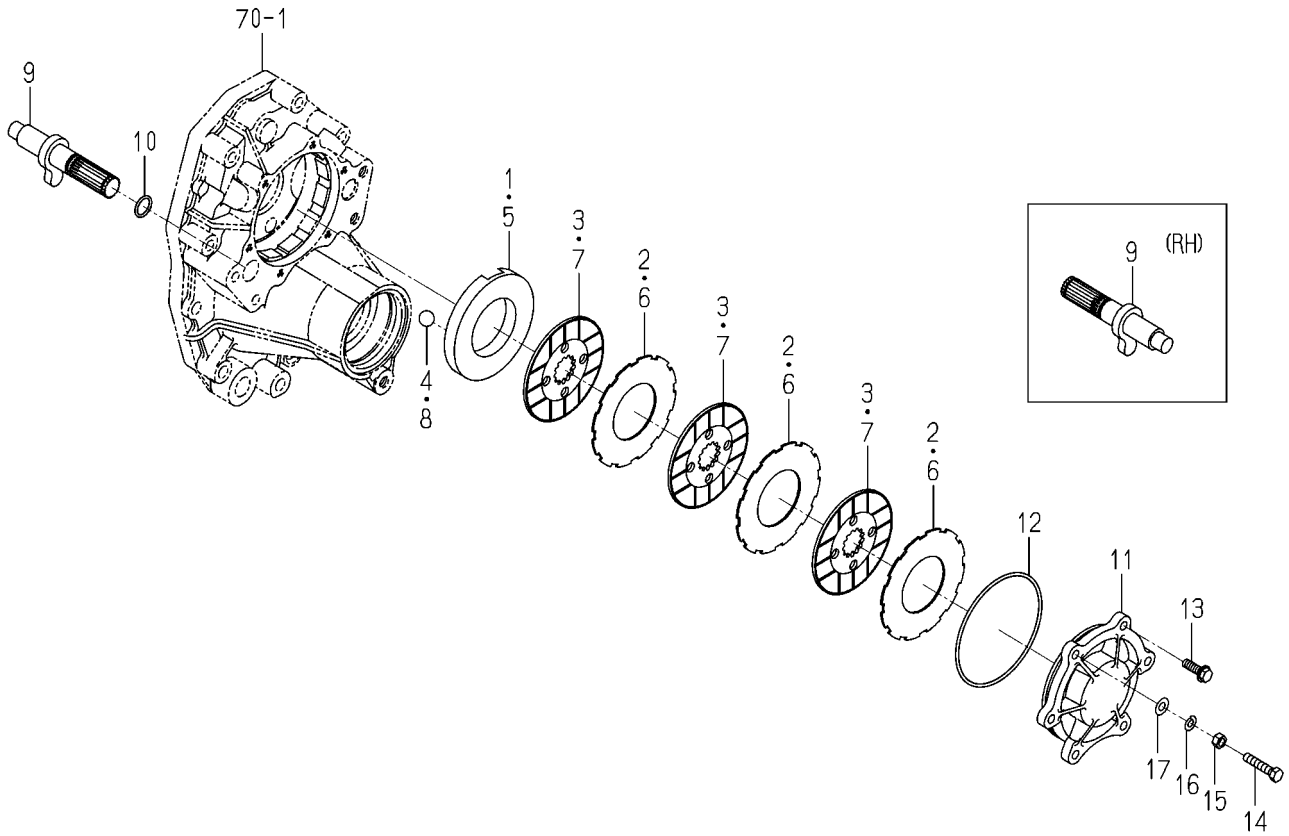

1774-310 -0100

KEY	PART CODE	DESCRIPTION	SPC	TYPE OF MODEL				ITC	COL	GRP	REMARKS
				TM3217	TM3247	TM3267					
1	1774-310-001-00	PLATE/PRESSURE/LH	*	1	1	1					
2	1774-310-003-00	PLATE/SEPARATER	*	3	3	3					
3	1774-310-004-00	PLATE/FRICTION	*	3	3	3					
4	V682-200-001-90	BALL,STEEL	*	3	3	3					
5	1774-310-002-00	PLATE/PRESSURE/RH	*	1	1	1					
6	1774-310-003-00	PLATE/SEPARATER	*	3	3	3					
7	1774-310-004-00	PLATE/FRICTION	*	3	3	3					
8	V682-200-001-90	BALL,STEEL	*	3	3	3					
9	1774-310-200-00	CUM/BRAKE COMP	*	2	2	2					
10	V720-102-401-80	O-RING/1A,P18	*	2	2	2					
11	1717-310-001-00	METAL/BRAKE	*	2	2	2					
12	V721-103-111-50	O-RING/1A,G115	*	2	2	2					
13	V231-360-802-50	FLANGEBOLT/M8X25	*	10	10	10					
14	V201-360-804-00	BOLT/M8X40/7T	*	2	2	2					
15	V304-460-008-00	NUT/M8/7T	*	2	2	2					
16	V401-160-008-00	WASHER,SP/M8	*	2	2	2					
17	V411-260-008-00	WASHER,PL/M8	*	2	2	2					

FIG. 76 PEDAL(BRAKE)SYSTEM(F TYPE)(1/2)

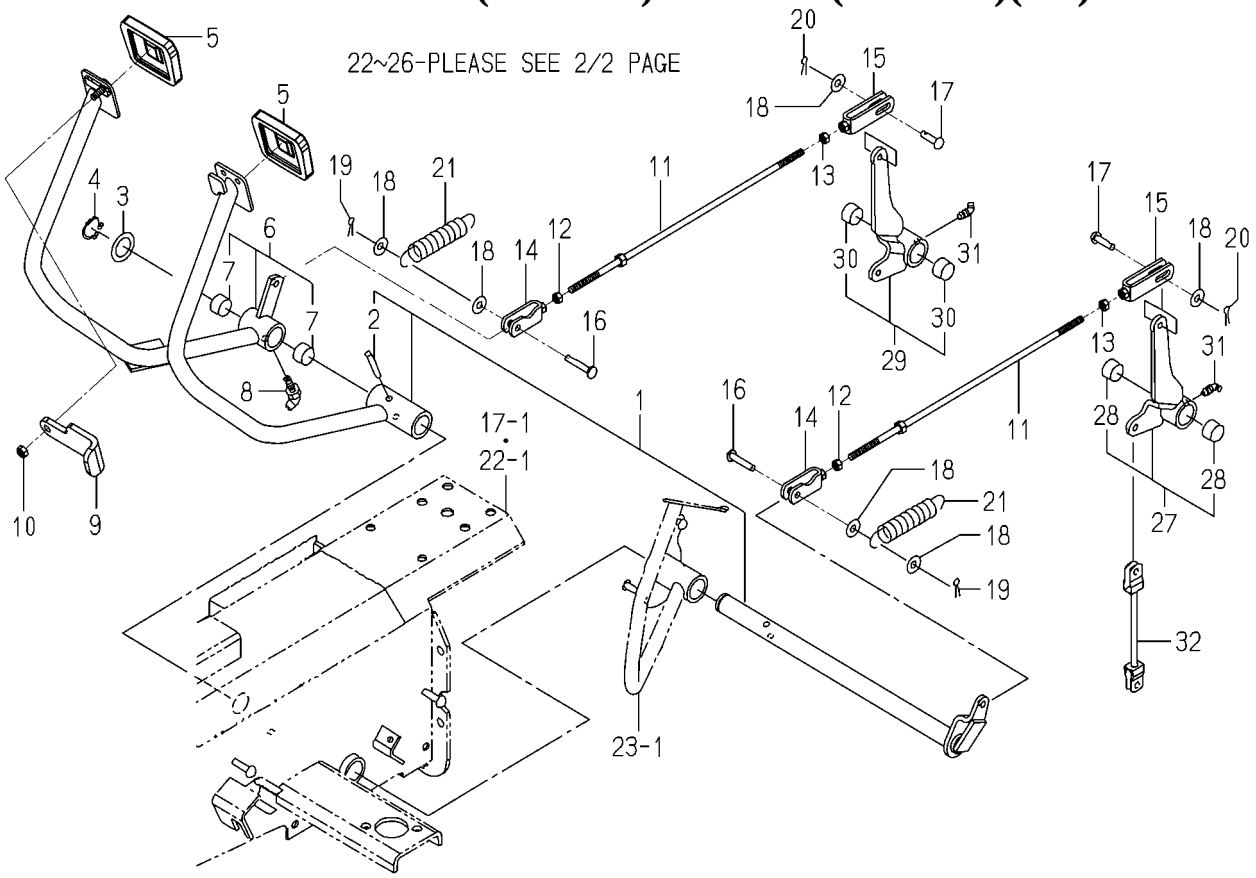

1774-312B-0100

KEY	PART CODE	DESCRIPTION	SPC	TYPE OF MODEL				ITC	COL	GRP	REMARKS
				TM3217	TM3247	TM3267					
1	1774-312-360-00	PEDAL/BRAKE/LH SET	*	1	1	1					
2	V511-100-805-00	PIN,TAPER/8X50	*	1	1	1					
3	2152-442-013-00	WASHER/26X38X01	*	1	1	1					
4	V704-140-025-00	RING,SNAP/25 C	*	1	1	1					
5	1774-312-005-00	PAD	*	2	2	2					
6	1774-312-380-00	PEDAL/BRAKE/RH ASSY	*	1	1	1					
7	8654-203-201-00	BUSH/25X28X15	*	2	2	2					
8	V763-150-000-00	NIPPLE,GREASE/PT1/8	*	1	1	1					
9	1776-312-013-10	LOCKPLATE	*	1	1	1					
10	1719-312-001-00	U-NUT	*	1	1	1					
11	1678-312-200-10	ROD/435 COMP	*	2	2	2					
12	1560-132-007-30	NUT/LH/M08	*	2	2	2					
13	V304-260-008-00	NUT/M8	*	2	2	2					
14	1768-312-500-00	FORK/LH COMP	*	2	2	2					
15	1510-328-260-10	PLATE/U/10X22 COMP	*	2	2	2					
16	3670-472-003-00	PIN/08X39	*	2	2	2					
17	1404-312-006-00	PIN,YOKE A	*	2	2	2					
18	V411-260-008-00	WASHER,PL/M8	*	6	6	6					
19	V500-162-502-00	PIN,SPLIT/2.5X20	*	2	2	2					
20	V500-162-002-00	PIN,SPLIT/2X20	*	2	2	2					
21	1710-312-051-00	SPRING/HE120	*	2	2	2					
22	1774-312-260-10	HOLDER/SHAFT/M ASSY	*	1	1	1					
23	2157-201-201-00	BUSH/25X28X25	*	2	2	2					
24	V763-150-000-00	NIPPLE,GREASE/PT1/8	*	2	2	2					
25	1774-312-630-00	SHAFT/BRAKE/M SET	*	1	1	1					
26	V511-100-805-00	PIN,TAPER/8X50	*	1	1	1					
27	1774-312-330-00	ARM/BRAKE/LH ASSY	*	1	1	1					
28	8654-203-201-00	BUSH/25X28X15	*	2	2	2					
29	1774-312-350-00	ARM/BRAKE/RH ASSY	*	1	1	1					
30	8654-203-201-00	BUSH/25X28X15	*	2	2	2					

FIG. 76 PEDAL(BRAKE)SYSTEM(F TYPE)(2/2)

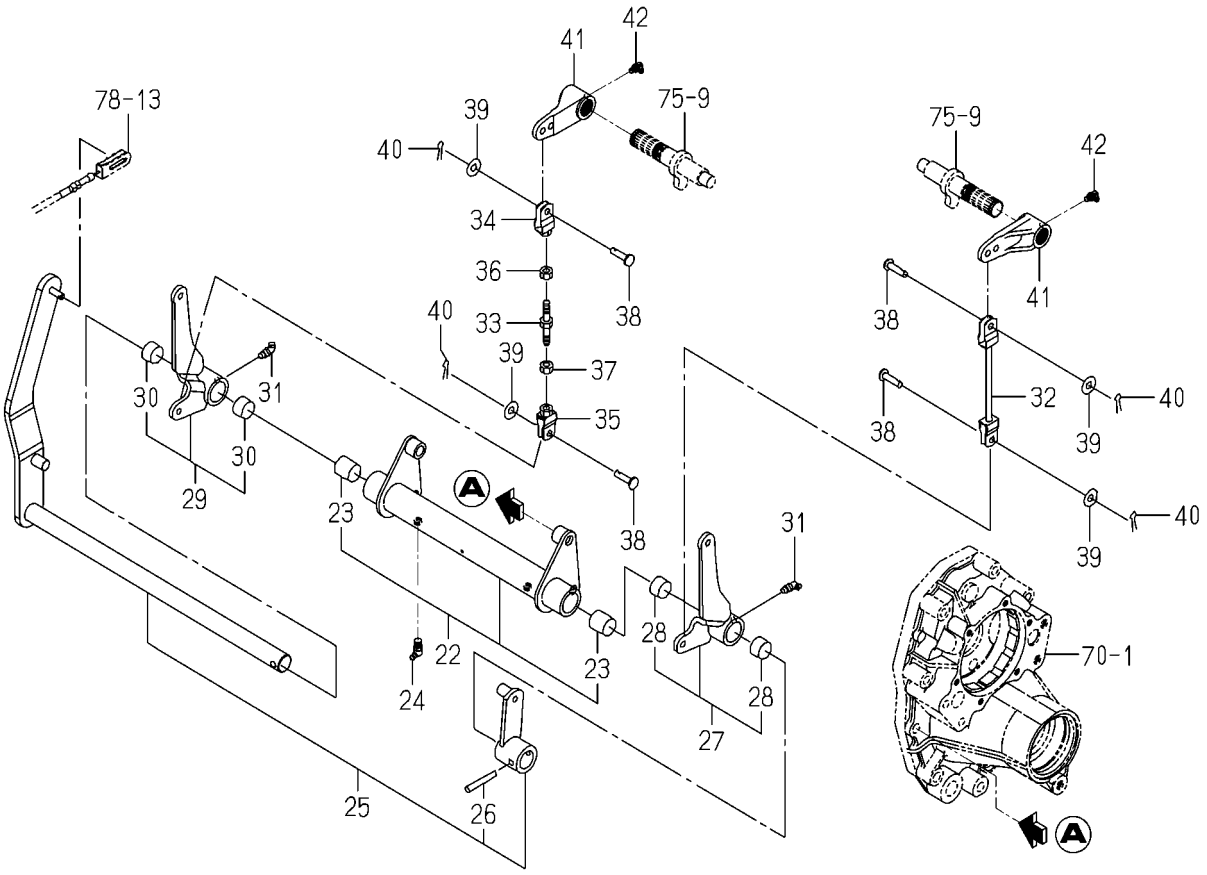

1774-312B-0100

KEY	PART CODE	DESCRIPTION	SPC	TYPE OF MODEL TM3217	TM3247	TM3267		ITC	COL	GRP	REMARKS
31	V763-150-000-00	NIPPLE,GREASE/PT1/8	*	2	2	2					
32	1774-312-440-00	ROD/120 COMP	*	1	1	1					
33	1620-271-560-00	ROD/M08X65 COMP	*	1	1	1					
34	1774-312-420-00	FORK/LH COMP	*	1	1	1					
35	1774-312-430-00	FORK/RH COMP	*	1	1	1					
36	V304-260-008-00	NUT/M8	*	1	1	1					
37	1560-132-007-30	NUT/LH/M08	*	1	1	1					
38	1432-242-001-00	PIN	*	4	4	4					
39	V411-260-008-00	WASHER,PL/M8	*	4	4	4					
40	V500-162-502-00	PIN,SPLIT/2.5X20	*	4	4	4					
41	1774-312-004-30	ARM/BRAKE	*	2	2	2					
42	V762-150-000-00	NIPPLE,GREASE/B-M6F	*	2	2	2					

FIG. 77 PEDAL(BRAKE)SYSTEM(H TYPE)(1/2)

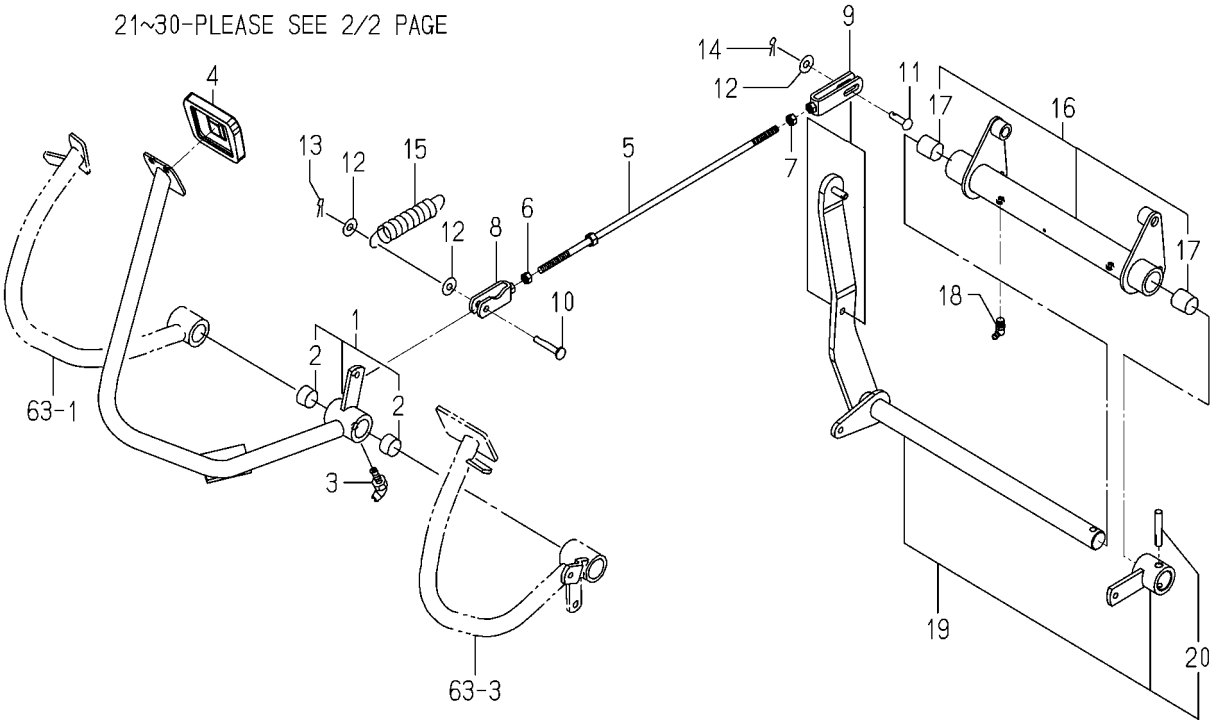

1774-312C-0100

KEY	PART CODE	DESCRIPTION	SPC	TYPE OF MODEL				ITC	COL	GRP	REMARKS
				TM3217	TM3247	TM3267					
1	1774-312-450-00	PEDAL/BRAKE/H ASSY	*	1	1	1					
2	8654-203-201-00	BUSH/25X28X15	*	2	2	2					
3	V763-150-000-00	NIPPLE,GREASE/PT1/8	*	1	1	1					
4	1774-312-005-00	PAD	*	1	1	1					
5	1678-312-200-10	ROD/435 COMP	*	1	1	1					
6	1560-132-007-30	NUT/LH/M08	*	1	1	1					
7	V304-260-008-00	NUT/M8	*	1	1	1					
8	1768-312-500-00	FORK/LH COMP	*	1	1	1					
9	1510-328-260-10	PLATE/U/10X22 COMP	*	1	1	1					
10	3670-472-003-00	PIN/08X39	*	1	1	1					
11	1404-312-006-00	PIN,YOKE A	*	1	1	1					
12	V411-260-008-00	WASHER,PL/M8	*	3	3	3					
13	V500-162-502-00	PIN,SPLIT/2.5X20	*	1	1	1					
14	V500-162-002-00	PIN,SPLIT/2X20	*	1	1	1					
15	1710-312-051-00	SPRING/HE120	*	1	1	1					
16	1774-312-540-10	HOLDER/SHAFT/H ASSY	*	1	1	1					
17	2157-201-201-00	BUSH/25X28X25	*	2	2	2					
18	V763-150-000-00	NIPPLE,GREASE/PT1/8	*	2	2	2					
19	1774-312-660-00	SHAFT/BRAKE/H SET	*	1	1	1					
20	V511-100-805-00	PIN,TAPER/8X50	*	1	1	1					
21	1774-312-440-00	ROD/120 COMP	*	1	1	1					
22	1620-271-560-00	ROD/M08X65 COMP	*	1	1	1					
23	1774-312-420-00	FORK/LH COMP	*	1	1	1					
24	1774-312-430-00	FORK/RH COMP	*	1	1	1					
25	V304-260-008-00	NUT/M8	*	1	1	1					
26	1560-132-007-30	NUT/LH/M08	*	1	1	1					
27	1432-242-001-00	PIN	*	4	4	4					
28	V411-260-008-00	WASHER,PL/M8	*	4	4	4					
29	V500-162-502-00	PIN,SPLIT/2.5X20	*	4	4	4					
30	1774-312-004-30	ARM/BRAKE	*	2	2	2					

FIG. 77 PEDAL(BRAKE)SYSTEM(H TYPE)(2/2)

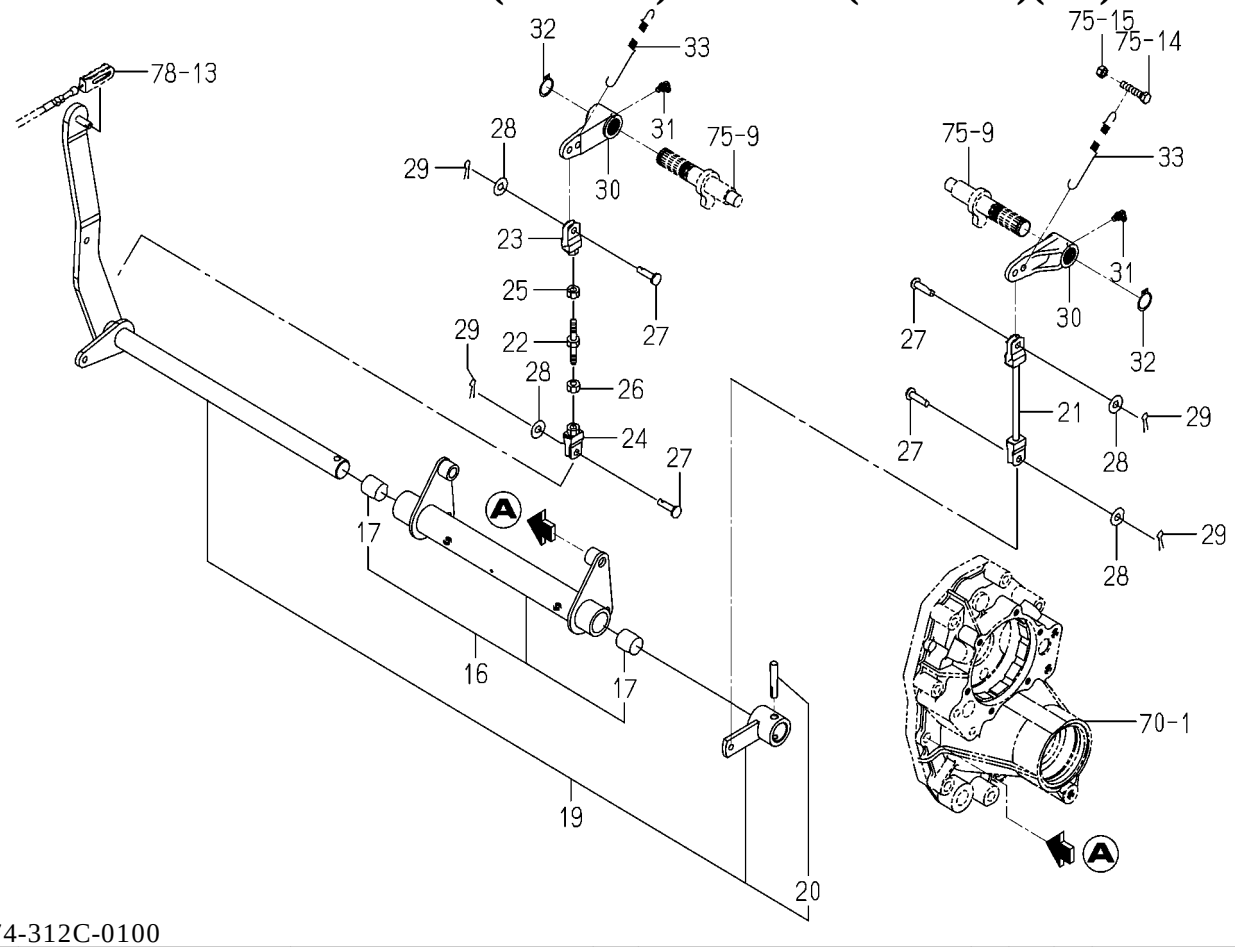

1774-312C-0100

KEY	PART CODE	DESCRIPTION	SPC	TYPE OF MODEL TM3217	TM3247	TM3267		ITC	COL	GRP	REMARKS
31	V762-150-000-00	NIPPLE,GREASE/B-M6F	*	2	2	2					
32	V704-140-022-00	RING,SNAP/22 C	*	2	2	2					
33	3659-480-003-00	SPRING/HE110	*	2	2	2					

FIG. 78 LEVER(PARKING)SYSTEM

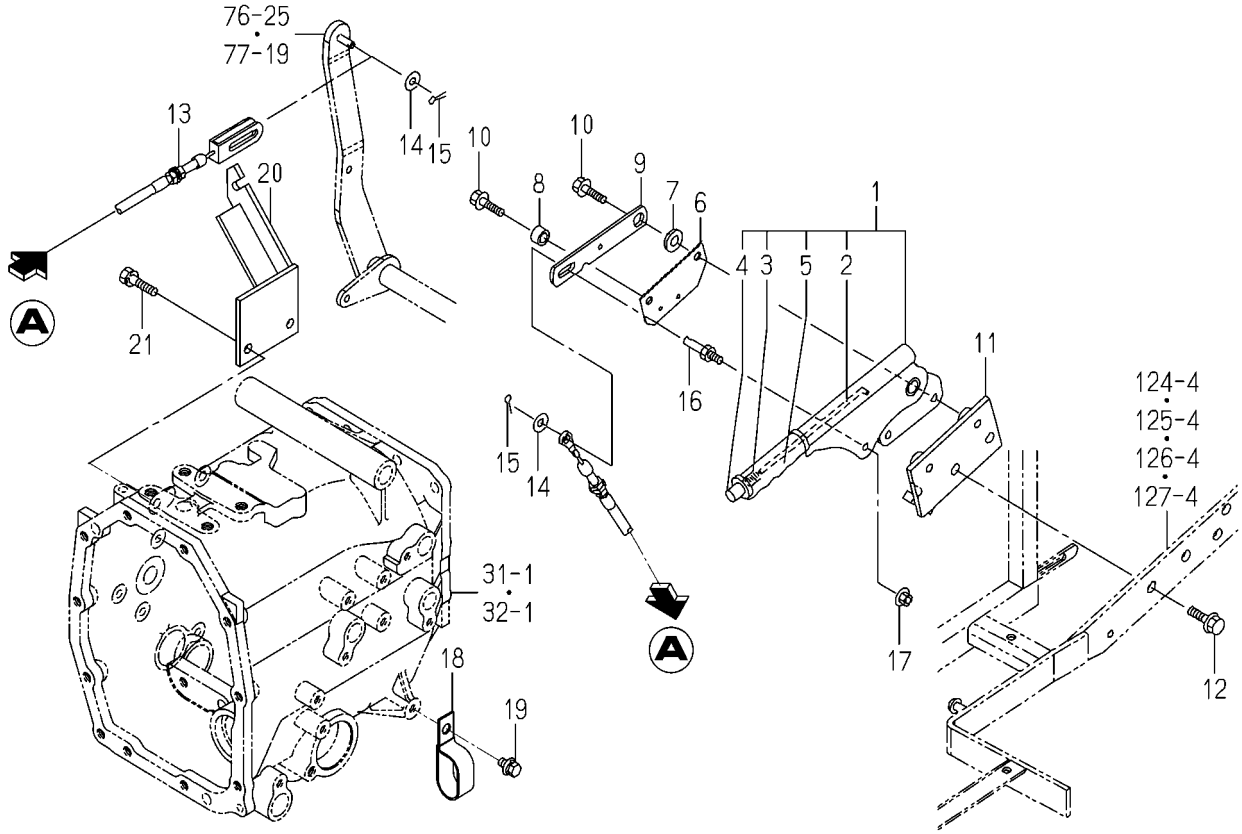

1774-313C-0100

KEY	PART CODE	DESCRIPTION	SPC	TYPE OF MODEL				ITC	COL	GRP	REMARKS
				TM3217	TM3247	TM3267					
1	1740-313-300-10	LEVER/PARKING ASSY	*	1	1	1					
2	1442-313-202-00	ROD	*	1	1	1					
3	1444-328-273-00	SPRING	*	1	1	1					
4	1444-328-272-00	BUTTON	*	1	1	1					
5	1740-313-301-00	GRIP/ORANGE	*	1	1	1					
6	1774-313-001-10	PLATE/I/43X90	*	1	1	1					
7	1705-313-006-00	HUB/SWITCH	*	1	1	1					
8	1705-313-007-10	COLLAR/09X14X08	*	1	1	1					
9	1705-313-240-00	ARM/SWITCH COMP	*	1	1	1					
10	V231-360-803-00	FLANGEBOLT/M8X30	*	2	2	2					
11	1774-313-210-10	BRACKET/PARKING COMP	*	1	1	1					
12	V231-361-002-00	FLANGEBOLT/M10X20	*	2	2	2					
13	1774-313-250-00	CABLE/BRAKE ASSY	*	1	1	1					
14	V411-260-008-00	WASHER,PL/M8	*	2	2	2					
15	V500-162-502-00	PIN,SPLIT/2.5X20	*	2	2	2					
16	1705-313-012-00	BOLT/M08X20	*	1	1	1					
17	V362-260-008-00	NUT/WASHER/M8	*	1	1	1					
18	1444-101-016-10	CLAMP,RADIATOR HOSE	*	2	2	2					
19	V211-360-801-60	BOLT,SP/M8X16	*	2	2	2					
20	1774-313-300-00	BRCKET/CABLE COMP	*	1	1	1					
21	V211-261-002-00	BOLT,S/M10X20	*	2	2	2					

FIG. 79 WHEEL(STEERING)SYSTEM

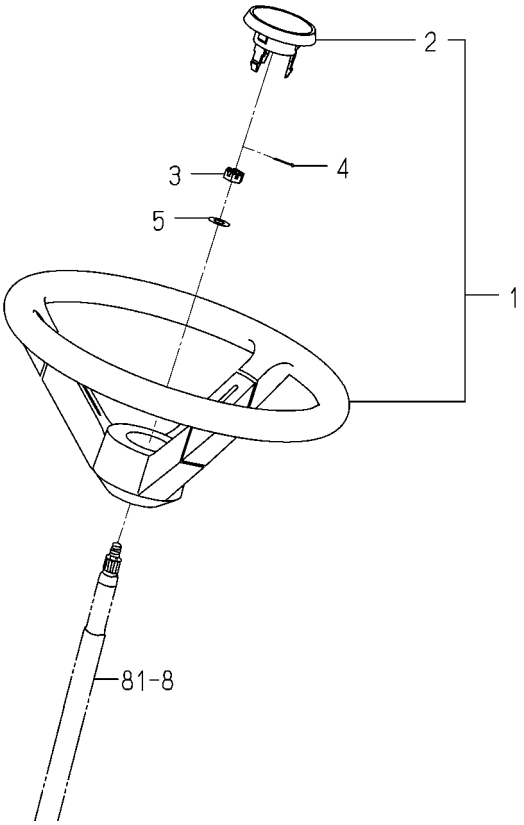

1774-401 -0100

KEY	PART CODE	DESCRIPTION	SPC	TYPE OF MODEL				ITC	COL	GRP	REMARKS
				TM3217	TM3247	TM3267					
1	1774-401-200-00	WHEEL/STEERING/360	*	1	1	1					
2	1773-401-202-10	CAP/WHEEL	*	1	1	1					
3	V328-262-110-00	NUT,CASTLE/M10 P1.25	*	1	1	1					
4	V500-162-002-00	PIN,SPLIT/2X20	*	1	1	1					
5	V411-260-010-00	WASHER,PL/M10	*	1	1	1					

FIG. 80 CYLINDER SYSTEM

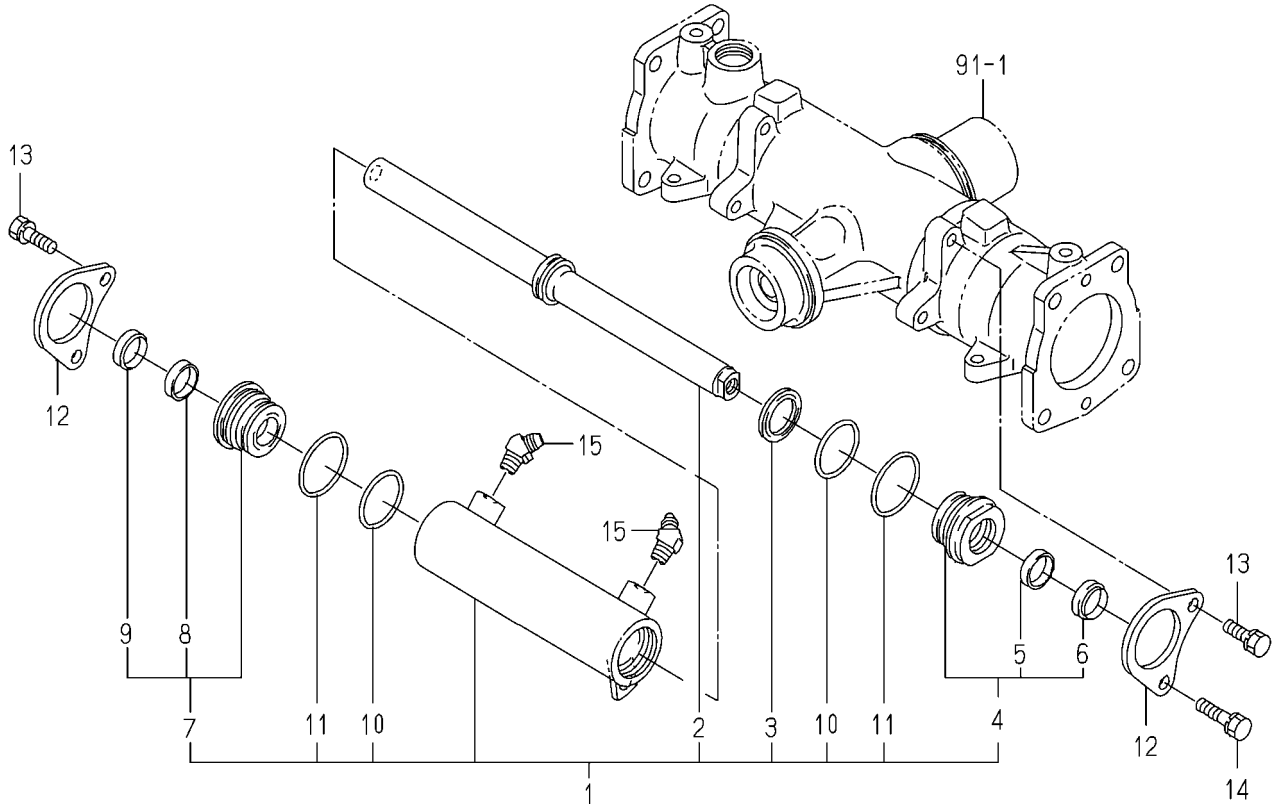

1774-403 -0100

KEY	PART CODE	DESCRIPTION	SPC	TYPE OF MODEL				ITC	COL	GRP	REMARKS
				TM3217	TM3247	TM3267					
1	K167-005-000-20	CYLINDER ASSY	*	1	1	1					
2	K167-005-200-10	ROD/PISTON	*	1	1	1					
3	K167-005-001-10	PACKING/PISTON	*	1	1	1					
4	K167-005-300-10	COVER/ROD/A SET	*	1	1	1					
5	K182-034-002-00	ROD PACKING	*	1	1	1					
6	K182-034-003-00	DUST SEAL	*	1	1	1					
7	K167-005-310-10	COVER/ROD/B SET	*	1	1	1					
8	K182-034-002-00	ROD PACKING	*	1	1	1					
9	K182-034-003-00	DUST SEAL	*	1	1	1					
10	V723-112-003-80	O-RING/1B,S38	*	2	2	2					
11	V723-102-004-20	O-RING/1A,S42	*	2	2	2					
12	1774-403-003-00	STAY/CYLINDER	*	2	2	2					
13	V211-561-003-00	BOLT,S/M10X30/7T	*	3	3	3					
14	V211-561-004-00	BOLT,S/M10X40/7T	*	1	1	1					
15	1725-403-003-00	ADAPTER/45DEG	*	2	2	2					

FIG. 81 STEERING SYSTEM

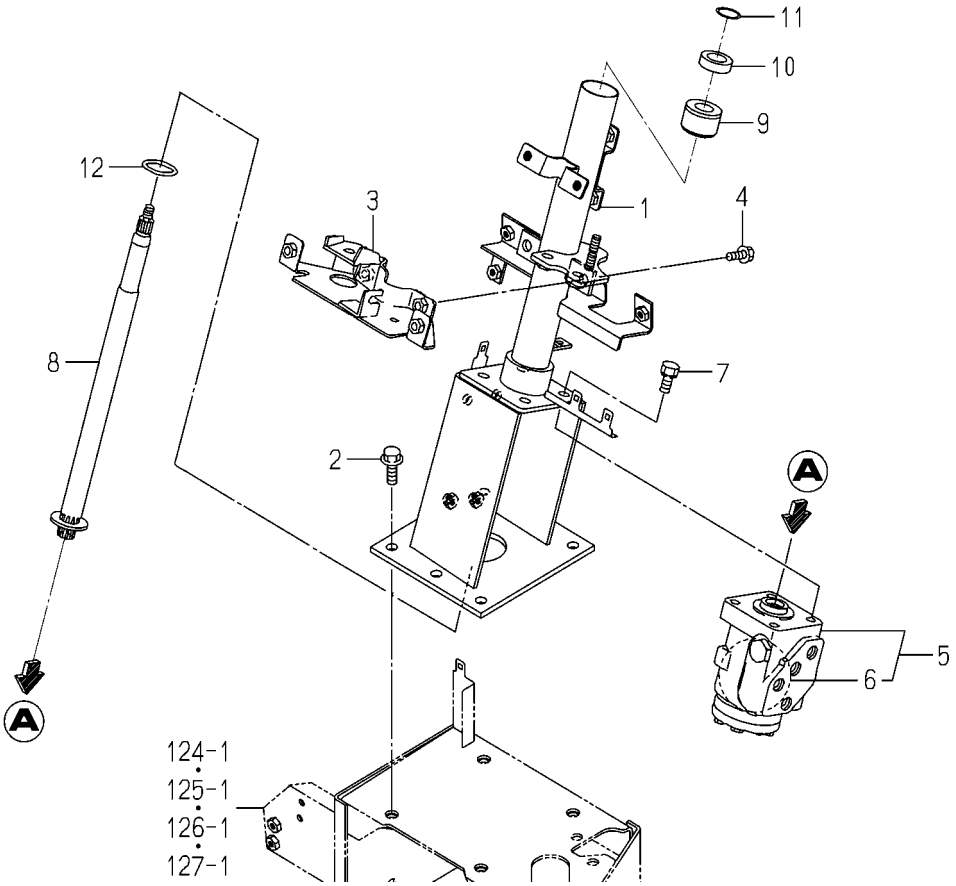

1774-407B-0100

KEY	PART CODE	DESCRIPTION	SPC	TYPE OF MODEL				ITC	COL	GRP	REMARKS
				TM3217	TM3247	TM3267					
1	1774-407-600-00	COLUMN/STEERING COMP	*	1	1	1					
2	V231-361-002-50	FLANGEBOLT/M10X25	*	4	4	4					
3	1774-407-250-00	BRACKET/FRONT COMP	*	1	1	1					
4	V211-360-802-00	BOLT,SP/M8X20	*	2	2	2					
5	1774-407-300-10	CONTROLLER/STEERING	*	1	1	1					
6	1774-407-310-00	KIT/SEAL SET	*	1	1	1					
7	V211-561-002-00	BOLT,S/M10X20/7T	*	4	4	4					
8	1774-407-270-20	SHAFT/STEERING/ COMP	*	1	1	1					
9	1429-406-205-10	INSULATOR/STEERING	*	1	1	1					
10	1770-402-003-10	WASHER/20X32X09	*	1	1	1					
11	1128-709-004-00	WASHER/20X25X01	*	1	1	1					
12	V720-103-503-60	O-RING/1A,P36	*	1	1	1					

FIG. 82 PIPING(SUB)SYSTEM(F TYPE)

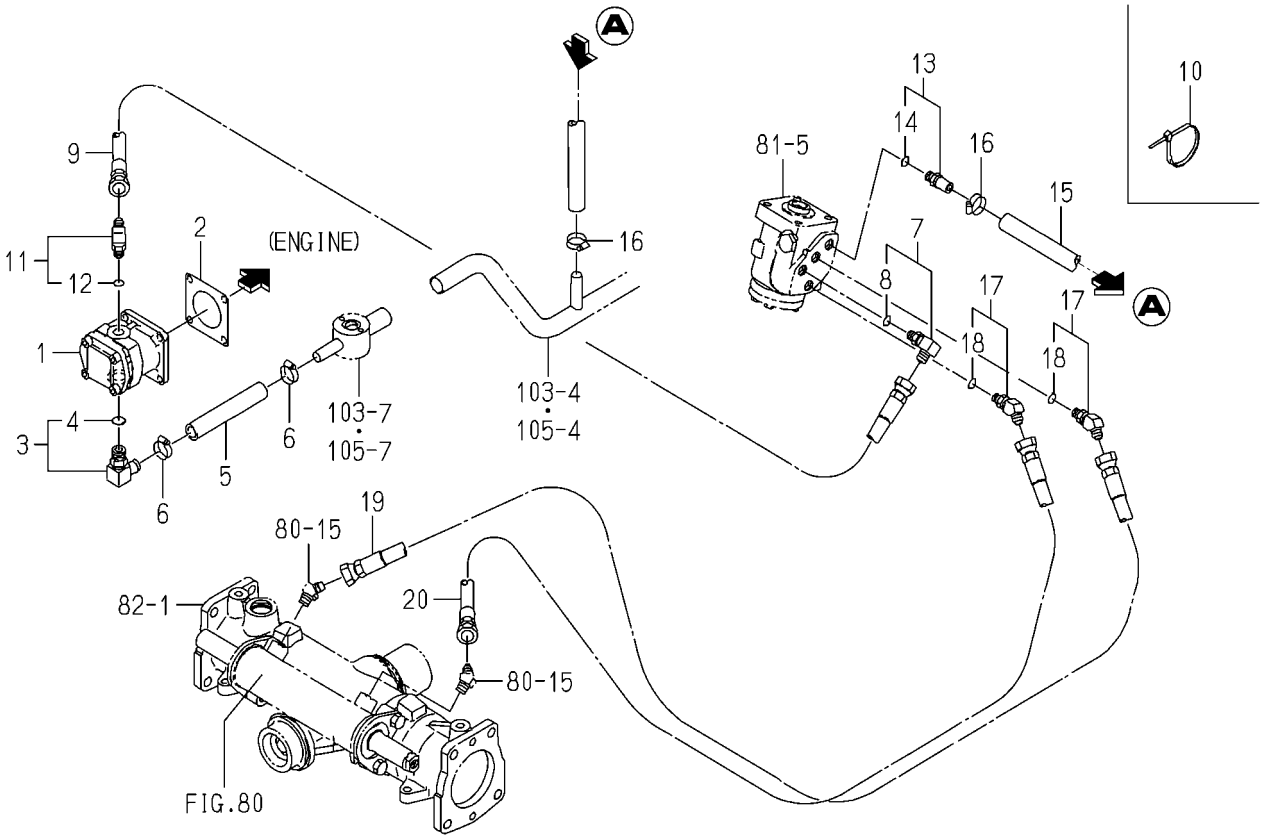

1774-408 -0100

KEY	PART CODE	DESCRIPTION	SPC	TYPE OF MODEL				ITC	COL	GRP	REMARKS
				TM3217	TM3247	TM3267					
1	1773-407-200-00	PUMP/GEAR/5.2/R ASSY	*	1	1	1					
2	1404-503-006-00	PACKING,OIL PUMP	*	1	1	1					
3	1774-408-200-00	ADAPTER/G3/8 ASSY	*	1	1	1					
4	V720-112-401-40	O-RING/1B,P14	*	1	1	1					
5	1773-407-001-10	HOSE/130	*	1	1	1					
6	J061-116-025-00	CLAMP/WORM/16-25	*	2	2	2					
7	1705-408-230-00	ADAPTER/L/G1/4 ASSY	*	1	1	1					
8	V720-112-401-10	O-RING/1B,P11	*	1	1	1					
9	3650-380-220-20	HOSE/HYDRAULIC/900	*	1	1	1					
10	1376-402-003-00	BAND,WIRE/140	*	2	2	2					
11	1705-408-230-00	ADAPTER/L/G1/4 ASSY	*	1	1	1					
12	V720-112-401-10	O-RING/1B,P11	*	1	1	1					
13	1682-408-230-10	ADAPTER/PF1/4 ASSY	*	1	1	1					
14	V720-112-401-10	O-RING/1B,P11	*	1	1	1					
15	1773-407-004-20	HOSE/780	*	1	1	1					
16	J061-116-025-00	CLAMP/WORM/16-25	*	2	2	2					
17	1739-530-290-00	ADAPTER/45/G1/ ASSY	*	2	2	2					
18	V720-112-401-10	O-RING/1B,P11	*	2	2	2					
19	1728-508-310-00	HOSE/HYDRO/950 ASSY	*	1	1	1					
20	1728-408-210-00	HOSE/HYDRO/1050 ASSY	*	1	1	1					

FIG. 83 PIPING(SUB)SYSTEM(H TYPE)

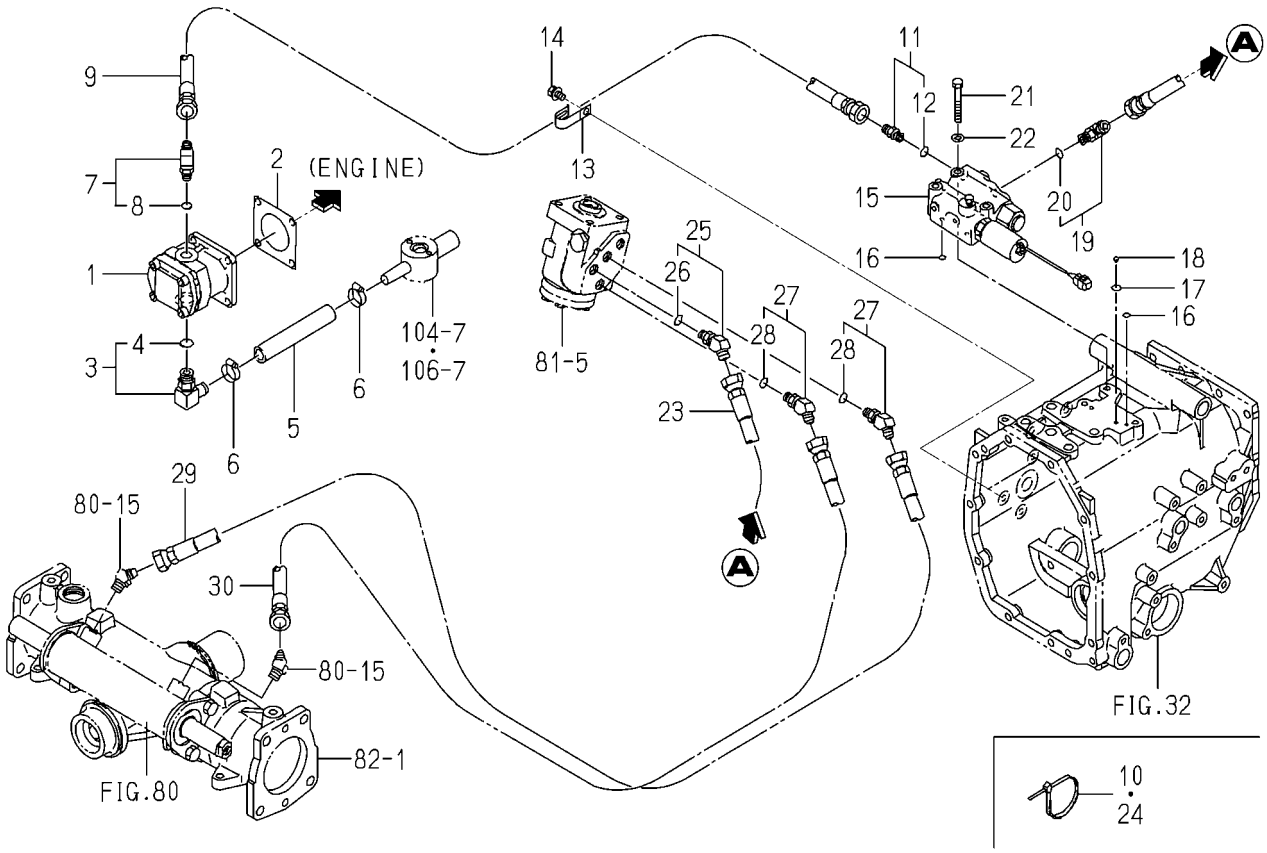

1774-408A-0100

KEY	PART CODE	DESCRIPTION	SPC	TYPE OF MODEL TM3217	TM3247	TM3267		ITC	COL	GRP	REMARKS
1	1773-407-200-00	PUMP/GEAR/5.2/R ASSY	*	1	1	1					
2	1404-503-006-00	PACKING,OIL PUMP	*	1	1	1					
3	1774-408-200-00	ADAPTER/G3/8 ASSY	*	1	1	1					
4	V720-112-401-40	O-RING/1B,P14	*	1	1	1					
5	1773-407-001-10	HOSE/130	*	1	1	1					
6	J061-116-025-00	CLAMP/WORM/16-25	*	2	2	2					
7	1705-408-230-00	ADAPTER/L/G1/4 ASSY	*	1	1	1					
8	V720-112-401-10	O-RING/1B,P11	*	1	1	1					
9	3676-374-320-00	HOSE,HYDUALIC/1700	*	1	1	1					
10	1376-402-003-00	BAND,WIRE/140	*	3	3	3					
11	3829-387-410-00	ADPTER/G1/4.1/4	*	1	1	1					
12	V720-112-401-10	O-RING/1B,P11	*	1	1	1					
13	1425-621-004-00	HOLDER/JE/9-9	*	1	1	1					
14	V211-360-801-60	BOLT,SP/M8X16	*	1	1	1					
15	K200-208-000-10	VALVE/INDEPENDENT	*	1	1	1					FIG 182
16	V720-111-900-70	O-RING/1B,P7	*	2	2	2					
17	V720-111-901-00	O-RING/1B,P10	*	1	1	1					
18	K200-124-106-00	FILTER/08	*	1	1	1					
19	1705-408-230-00	ADAPTER/L/G1/4 ASSY	*	1	1	1					
20	V720-112-401-10	O-RING/1B,P11	*	1	1	1					
21	V201-260-805-50	BOLT/M8X55	*	3	3	3					
22	V401-160-008-00	WASHER,SP/M8	*	3	3	3					
23	1683-273-570-20	HOSE/HYDRAULIC/1350	*	1	1	1					
24	1376-402-003-00	BAND,WIRE/140	*	1	1	1					
25	P113-211-300-00	ELBOW/45DEG ASSY	*	1	1	1					
26	V720-112-401-10	O-RING/1B,P11	*	1	1	1					
27	1739-530-290-00	ADAPTER/45/G1/ ASSY	*	2	2	2					
28	V720-112-401-10	O-RING/1B,P11	*	2	2	2					
29	1728-508-310-00	HOSE/HYDRO/950 ASSY	*	1	1	1					
30	1728-408-210-00	HOSE/HYDRO/1050 ASSY	*	1	1	1					

FIG. 84 BRACKET(AXLE)SYSTEM (TM3217,3247 TYPE EXCEPT A)

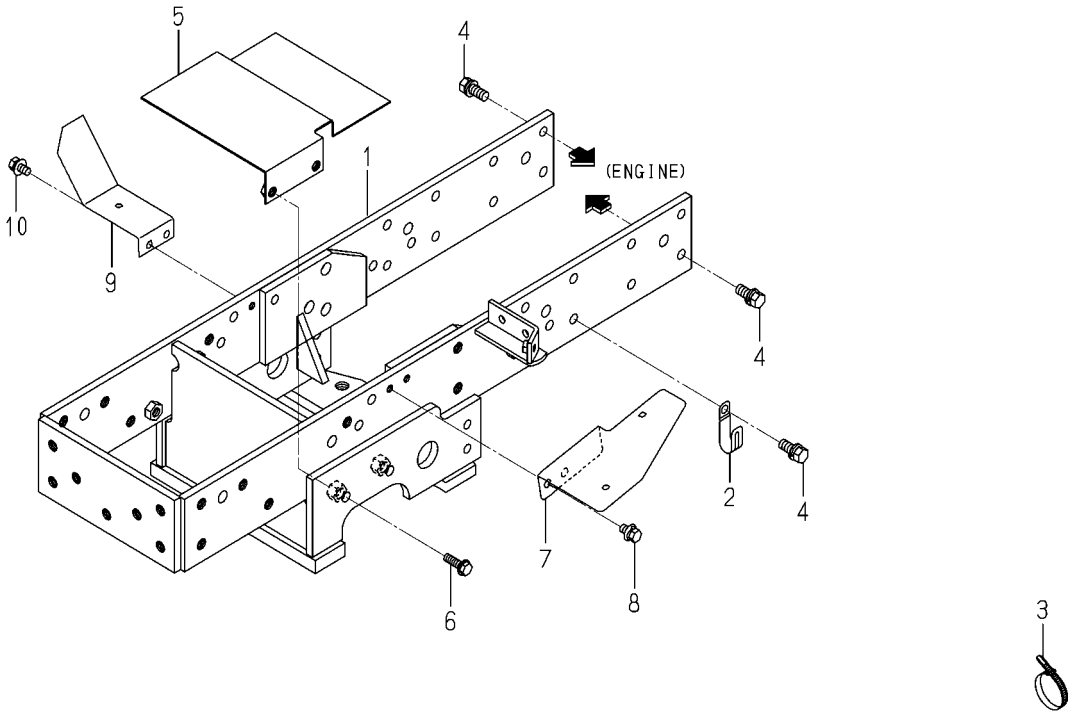

1774-410 -0100

KEY	PART CODE	DESCRIPTION	SPC	TYPE OF MODEL				ITC	COL	GRP	REMARKS
				TM3217	TM3247	TM3267					
1	1774-410-200-50	BRACKET/AXLE COMP	*	1	1						
2	3737-172-011-00	CLAMP,HARNESS	*	1	1						
3	1342-402-006-00	BAND,WIRE/250	*	1	1						
4	6901-911-025-00	BOLT,SEMS/M10X25,7T	*	16	16						
5	1774-410-250-10	COVER/INNER COMP	*	1	1						
6	V231-360-802-50	FLANGEBOLT/M8X25	*	2	2						
7	1774-410-001-00	COVER/SHIELD/LH	*	1	1						
8	3805-208-016-00	BOLT(SP/M8X16)	*	2	2						
9	1774-410-002-00	COVER/SHIELD/RH	*	1	1						
10	3805-208-016-00	BOLT(SP/M8X16)	*	2	2						

FIG. 85 BRACKET(AXLE)SYSTEM (TM3267 TYPE EXCEPT A)

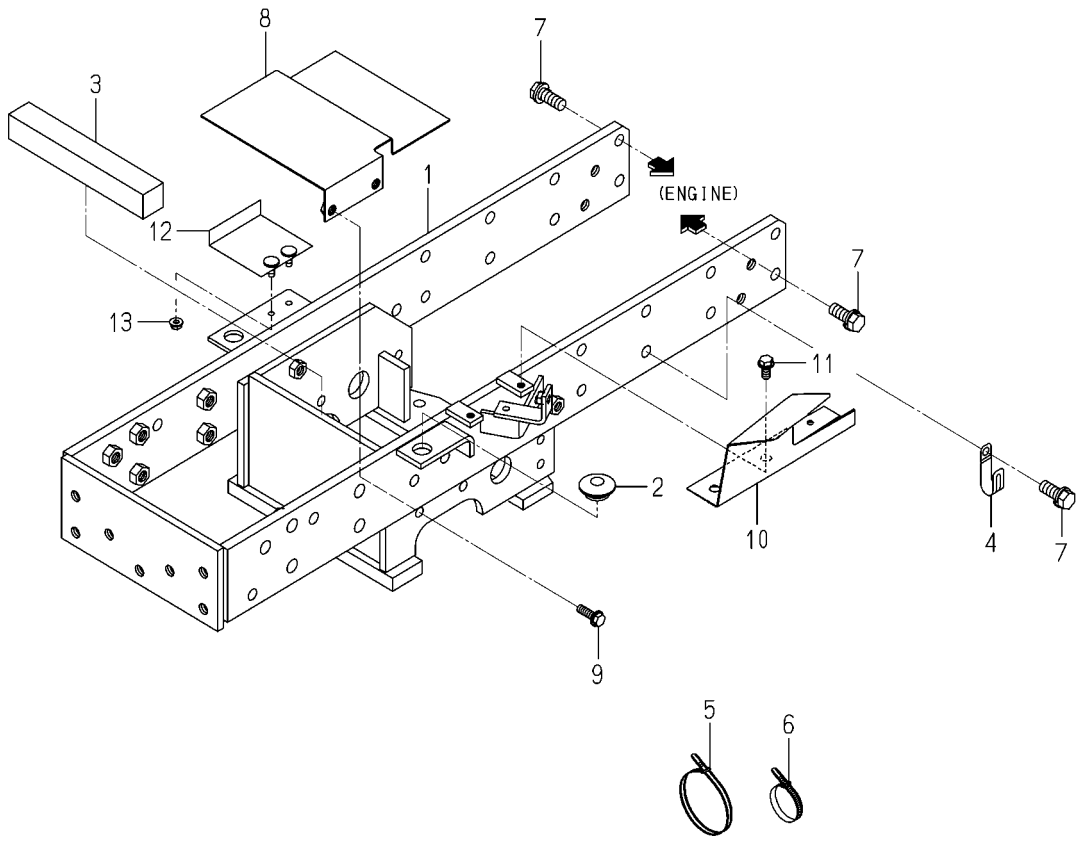

1774-410A-0100

KEY	PART CODE	DESCRIPTION	SPC	TYPE OF MODEL TM3217	TM3247	TM3267		ITC	COL	GRP	REMARKS
1	1774-410-210-20	BRACKET/AXLE/26 COMP	*			1					
2	1421-603-004-00	BUSH,LEVER	*			2					
3	1738-410-001-00	INSULATOR/30X30X200	*			1					
4	3737-172-011-00	CLAMP,HARNESS	*			1					
5	1342-402-006-00	BAND,WIRE/250	*			1					
6	1376-402-003-00	BAND,WIRE/140	*			1					
7	1725-201-002-00	BOLT/S	*			16					
8	1774-410-250-10	COVER/INNER COMP	*			1					
9	V231-360-802-50	FLANGEBOLT/M8X25	*			2					
10	1774-410-011-00	COVER/SHIELD/LH	*			1					
11	V231-360-801-60	FLANGEBOLT/M8X16	*			2					
12	1766-410-700-10	PLATE COMP	*			1					
13	V360-260-006-00	NUT/WASHER/M6	*			2					

FIG. 86 BRACKET(AXLE)SYSTEM (TM3217A,3247A TYPE)

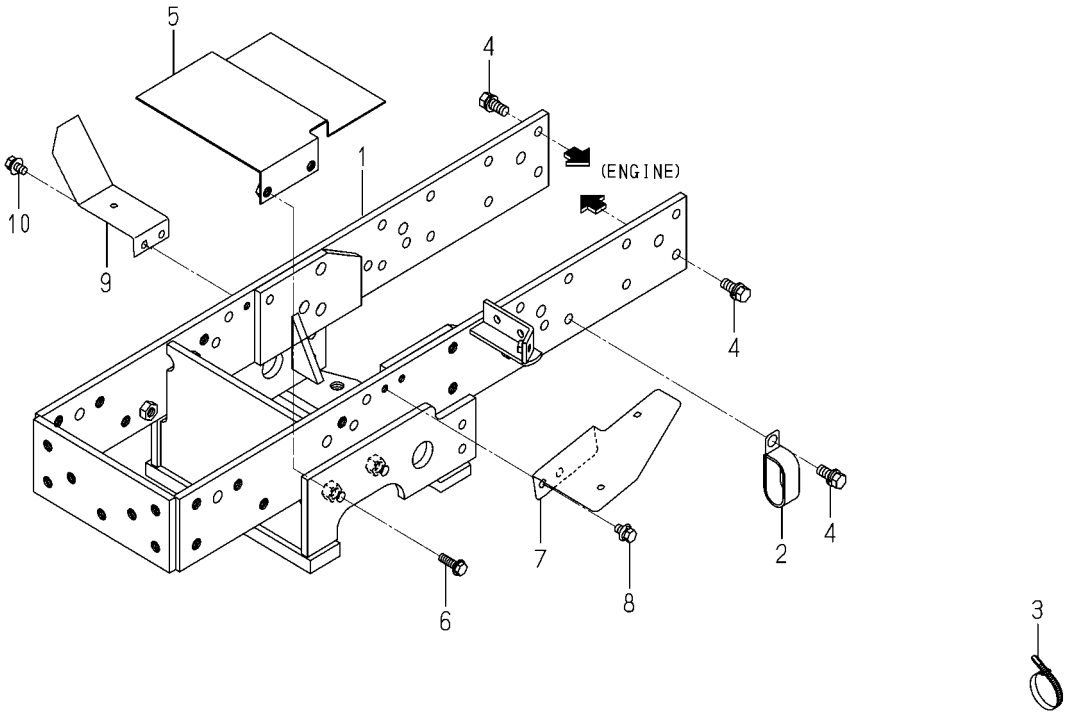

1774-410B-0100

KEY	PART CODE	DESCRIPTION	SPC	TYPE OF MODEL				ITC	COL	GRP	REMARKS
				TM3217	TM3247	TM3267					
1	1774-410-200-50	BRACKET/AXLE COMP	*	1	1						
2	3650-261-001-00	CLAMP/28X55	*	1	1						
3	1376-402-003-00	BAND,WIRE/140	*	1	1						
4	6901-911-025-00	BOLT,SEMS/M10X25,7T	*	6	6						
5	1774-410-250-10	COVER/INNER COMP	*	1	1						
6	V231-360-802-50	FLANGEBOLT/M8X25	*	2	2						
7	1774-410-001-00	COVER/SHIELD/LH	*	1	1						
8	3805-208-016-00	BOLT(SP/M8X16)	*	2	2						
9	1774-410-002-00	COVER/SHIELD/RH	*	1	1						
10	3805-208-016-00	BOLT(SP/M8X16)	*	2	2						

FIG. 87 BRACKET(AXLE)SYSTEM (TM3267A TYPE)

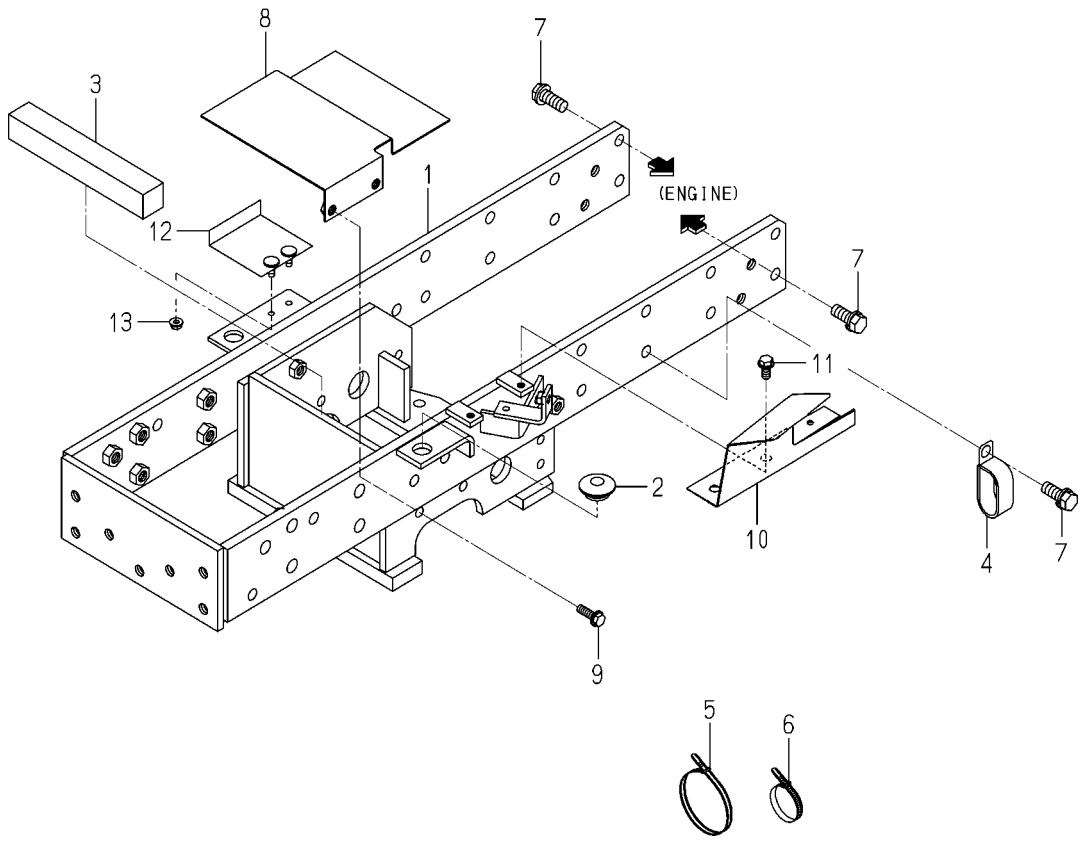

1774-410C-0100

KEY	PART CODE	DESCRIPTION	SPC	TYPE OF MODEL TM3217	TM3247	TM3267		ITC	COL	GRP	REMARKS
1	1774-410-210-20	BRACKET/AXLE/26 COMP	*			1					
2	1421-603-004-00	BUSH,LEVER	*			2					
3	1738-410-001-00	INSULATOR/30X30X200	*			1					
4	3650-261-001-00	CLAMP/28X55	*			1					
5	1342-402-006-00	BAND,WIRE/250	*			1					
6	1376-402-003-00	BAND,WIRE/140	*			1					
7	1725-201-002-00	BOLT/S	*			8					
8	1774-410-250-10	COVER/INNER COMP	*			1					
9	V231-360-802-50	FLANGEBOLT/M8X25	*			1					
10	1774-410-011-00	COVER/SHIELD/LH	*			1					
11	V231-360-801-60	FLANGEBOLT/M8X16	*			2					
12	1766-410-700-10	PLATE COMP	*			1					
13	V360-260-006-00	NUT/WASHER/M6	*			2					

FIG. 88 HITCH(BUMPER)SYSTEM (EXCEPT D TYPE-STANDARD/ D TYPE-OPTION)

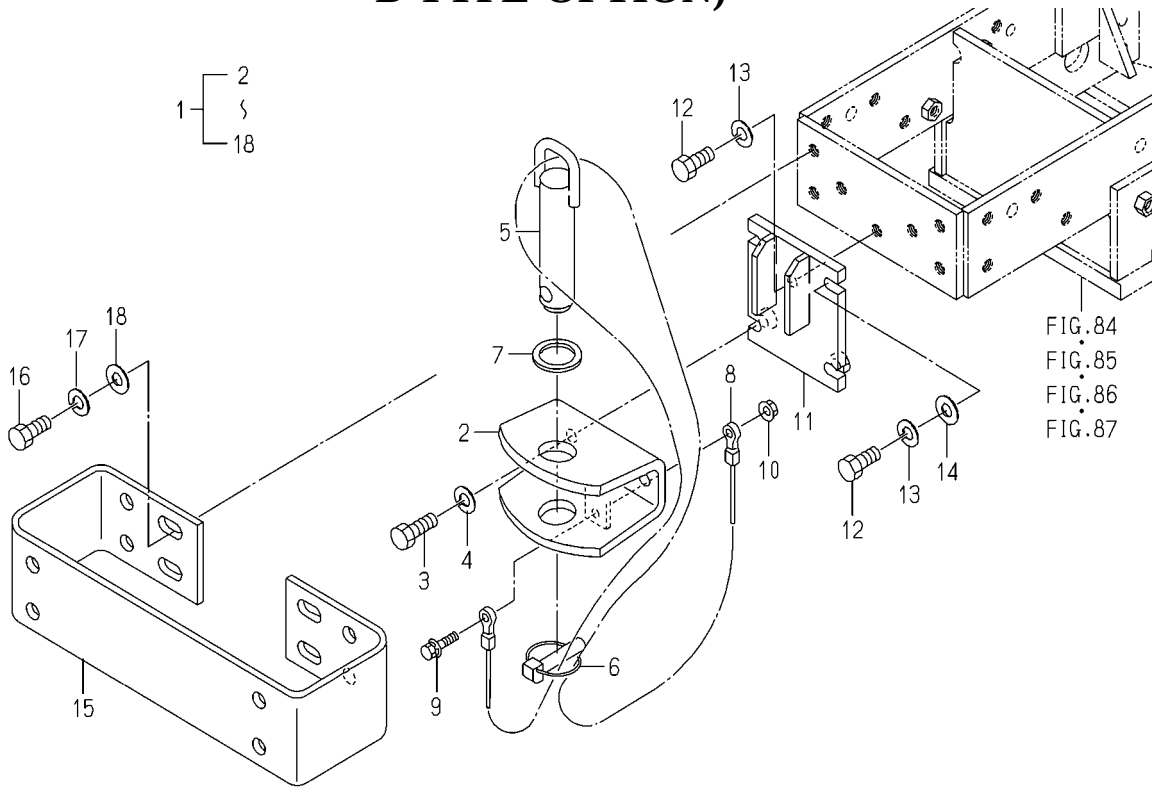

1774-411 -0100

KEY	PART CODE	DESCRIPTION	SPC	TYPE OF MODEL				ITC	COL	GRP	REMARKS
				TM3217	TM3247	TM3267					
1	1774-411-200-00	PLATE/BUMPER SET	*	1	1	1					
2	1738-411-210-00	HITCH/FRONT COMP	*	1	1	1					
3	V201-461-203-00	BOLT/M12X30/9T	*	2	2	2					
4	V401-160-012-00	WASHER,SP/M12	*	2	2	2					
5	1674-410-320-10	PIN/30X120 COMP	*	1	1	1					
6	1673-525-002-30	LINKPIN	*	1	1	1					
7	1674-520-004-00	INSULATOR	*	1	1	1					
8	1674-410-301-00	CABLE	*	1	1	1					
9	V211-360-803-00	BOLT,SP/M8X30	*	1	1	1					
10	V363-260-008-00	NUT/WASHER/M8	*	1	1	1					
11	1741-411-210-00	STAY/HITCH/FRON COMP	*	1	1	1					
12	V201-461-202-50	BOLT/M12X25/9T	*	3	3	3					
13	V401-160-012-00	WASHER,SP/M12	*	3	3	3					
14	V411-260-012-00	WASHER,PL/M12	*	2	2	2					
15	1710-410-001-00	PLATE/BUMPER	*	1	1	1					
16	V201-461-202-50	BOLT/M12X25/9T	*	4	4	4					
17	V401-160-012-00	WASHER,SP/M12	*	4	4	4					
18	V411-260-012-00	WASHER,PL/M12	*	4	4	4					

FIG. 89 SHAFT(4WD)SYSTEM

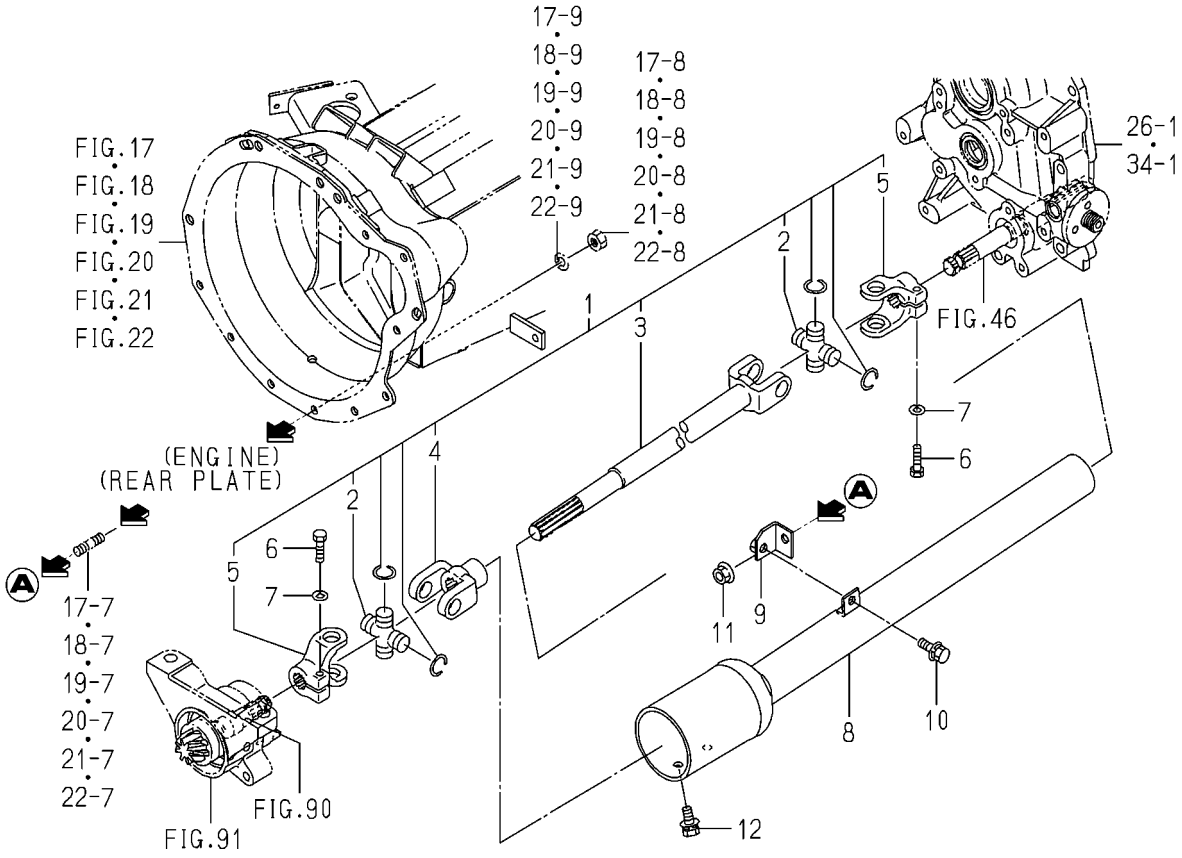

1774-431 -0100

KEY	PART CODE	DESCRIPTION	SPC	TYPE OF MODEL TM3217	TM3247	TM3267		ITC	COL	GRP	REMARKS
1	1774-431-200-00	SHAFT/4WD ASSY	*	1	1	1					
2	1752-120-201-00	JOINT/UNIVERSAL ASSY	*	2	2	2					
3	1774-431-201-00	SHAFT/YOKE	*	1	1	1					
4	1774-431-202-00	SHAFT/YOKE	*	1	1	1					
5	1752-120-204-00	CLAMP/YOKE	*	2	2	2					
6	1575-261-203-00	BOLT/SM/M8X1.25X30	*	2	2	2					
7	V401-160-008-00	WASHER,SP/M8	*	2	2	2					
8	1774-431-210-00	CASE/JOINT COMP	*	1	1	1					
9	1774-431-240-10	PLATE COMP	*	1	1	1					
10	V211-360-802-00	BOLT,SP/M8X20	*	1	1	1					
11	V362-260-008-00	NUT/WASHER/M8	*	1	1	1					
12	V211-360-801-60	BOLT,SP/M8X16	*	1	1	1					

FIG. 90 PINION(DRIVE)SYSTEM

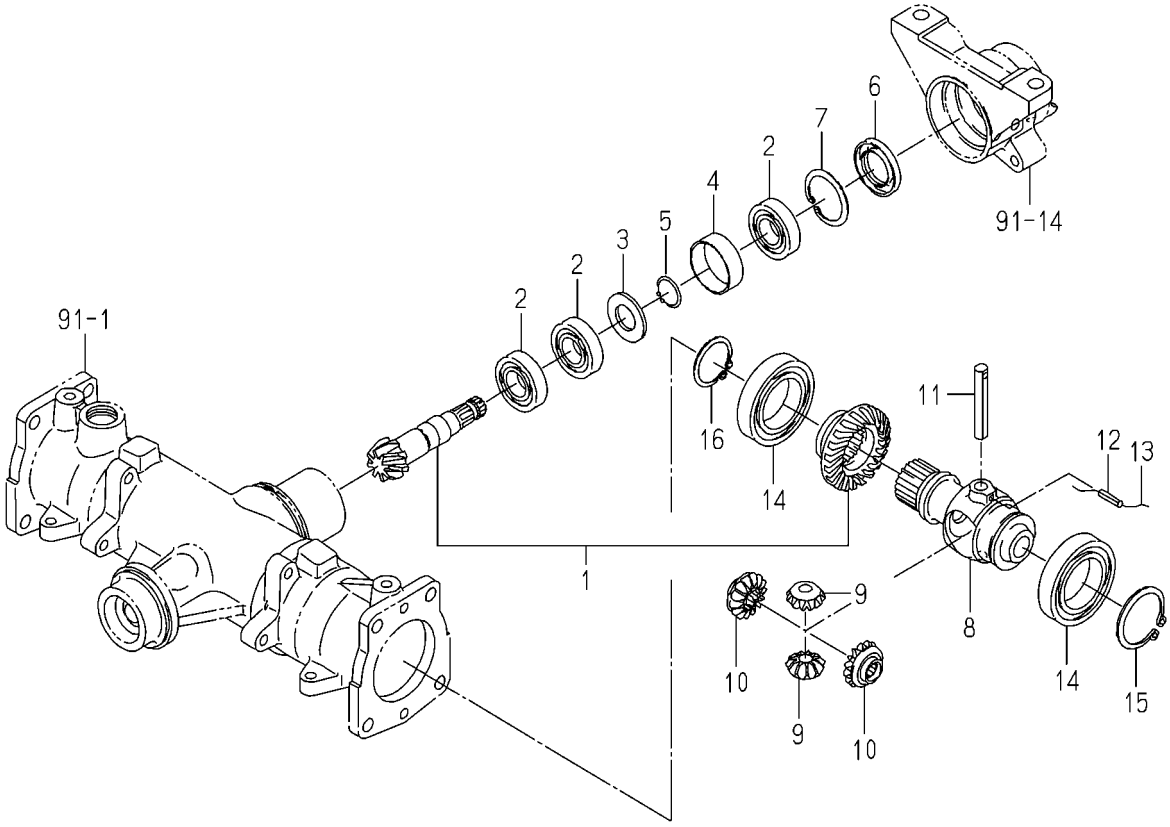

1774-432 -0100

KEY	PART CODE	DESCRIPTION	SPC	TYPE OF MODEL				ITC	COL	GRP	REMARKS
				TM3217	TM3247	TM3267					
1	1774-432-200-30	PINION/BEVEL SET	*	1	1	1					
2	1594-221-001-00	BEARING/BALL 6205SH2	*	3	3	3					
3	1593-303-051-20	SHIM/2	*	1	1	1					
4	1650-432-001-00	COLLAR/48X52X17	*	1	1	1					
5	V704-140-025-00	RING,SNAP/25 C	*	1	1	1					
6	1427-432-016-00	SEAL,OIL/21	*	1	1	1					
7	V705-140-052-00	RING,SNAP/52 C	*	1	1	1					
8	1703-432-001-10	CASE/DIFF	*	1	1	1					
9	1672-432-001-00	PINION/BEVEL/11	*	2	2	2					
10	1672-432-002-10	GEAR/BEVEL/15	*	2	2	2					
11	1614-432-006-00	PIN/12X75	*	1	1	1					
12	V580-140-502-50	PIN,SPRING/5X25 W	*	1	1	1					
13		WIRE	*	1	1	1					
14	V600-110-601-00	BEARING,RB/6010	*	2	2	2					
15	V706-140-050-00	RING,SNAP/S50	*	1	1	1					
16	V706-140-040-00	RING,SNAP/S40	*	1	1	1					

FIG. 91 HOUSING(AXLE)SYSTEM

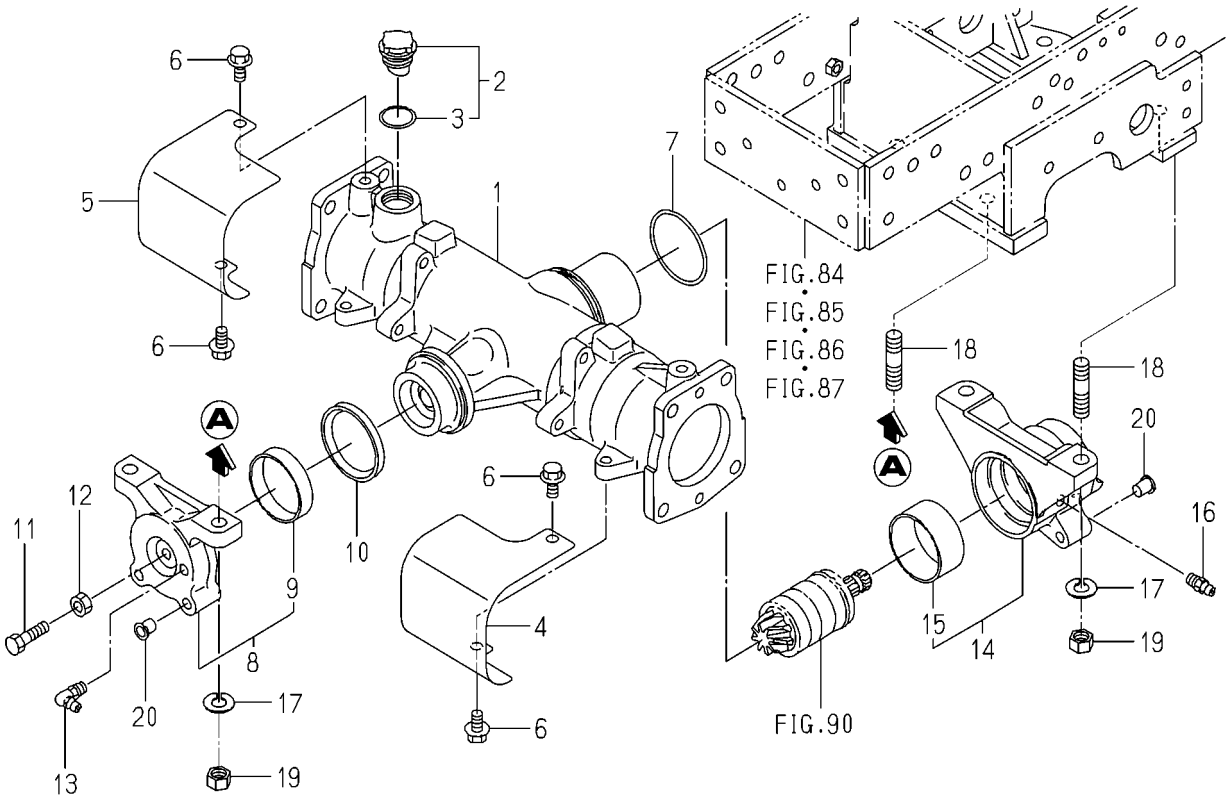

1774-433 -0100

KEY	PART CODE	DESCRIPTION	SPC	TYPE OF MODEL				ITC	COL	GRP	REMARKS
				TM3217	TM3247	TM3267					
1	1774-433-001-00	HOUSING/AXLE	*	1	1	1					
2	1518-432-250-10	CAP,OIL	*	1	1	1					
3	1518-306-203-10	PACKING	*	1	1	1					
4	1774-403-001-10	COVER/CYLINDER/LH	*	1	1	1					
5	1774-403-002-10	COVER/CYLINDER/RH	*	1	1	1					
6	V231-361-001-60	FLANGEBOLT/M10X16	*	4	4	4					
7	V721-103-107-00	O-RING/1A,G70	*	1	1	1					
8	1620-433-200-10	METAL/PIVOT/FRONT	*	1	1	1					
9	1614-433-202-00	BUSH/62X67X15	*	1	1	1					
10	1614-433-002-00	SEAL/OIL	*	1	1	1					
11	V201-261-203-50	BOLT/M12X35	*	1	1	1					
12	V304-260-012-00	NUT/M12	*	1	1	1					
13	V763-150-000-00	NIPPLE,GREASE/PT1/8	*	1	1	1					
14	1774-433-210-00	METAL/PIVOT/REA ASSY	*	1	1	1					
15	1614-433-212-00	BUSH/62X67X30	*	1	1	1					
16	V761-150-000-00	NIPPLE/GREASE	*	1	1	1					
17	V401-160-014-00	WASHER,SP/M14	*	4	4	4					
18	V251-441-403-50	STUD/M14X35/9T	*	4	4	4					
19	V304-460-014-00	NUT/M14/7T	*	4	4	4					
20	1427-120-002-00	CAP,BLANK/M10	*	4	4	4					

FIG. 92 GEAR(FINAL)SYSTEM

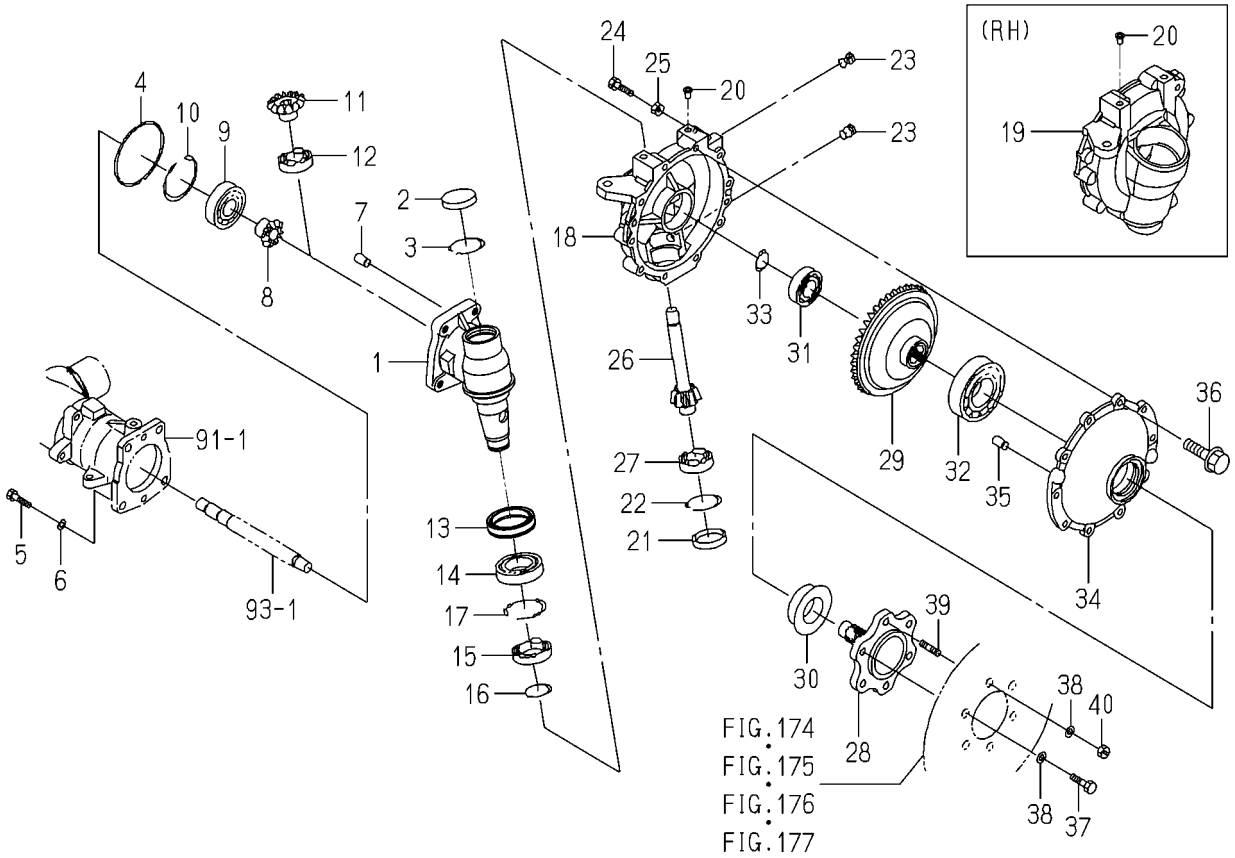

1774-434 -0100

KEY	PART CODE	DESCRIPTION	SPC	TYPE OF MODEL				ITC	COL	GRP	REMARKS
				TM3217	TM3247	TM3267					
1	1774-434-003-10	CASE/FINAL	*	2	2	2					
2	1421-201-003-00	SEAL/52	*	2	2	2					
3	V705-140-052-00	RING,SNAP/52 C	*	2	2	2					
4	V721-103-109-00	O-RING/1A,G90	*	2	2	2					
5	V201-361-203-50	BOLT/M12X35/7T	*	8	8	8					
6	V401-160-012-00	WASHER,SP/M12	*	8	8	8					
7	V523-101-002-40	PIN,ST,B/10X24	*	4	4	4					
8	1774-434-008-10	GEAR/BEVEL/11	*	2	2	2					
9	V600-110-630-50	BEARING,RB/6305	*	2	2	2					
10	V707-140-062-00	RING,SNAP/R62	*	2	2	2					
11	1774-434-009-10	GEAR/BEVEL/15	*	2	2	2					
12	V600-110-620-50	BEARING,RB/6205	*	2	2	2					
13	1709-434-001-00	SEAL/OIL ASSY	*	2	2	2					
14	V600-110-601-00	BEARING,RB/6010	*	2	2	2					
15	1729-202-004-00	BEARING/BALL	*	2	2	2					
16	V704-140-035-00	RING,SNAP/35 C	*	2	2	2					
17	V707-140-062-00	RING,SNAP/R62	*	2	2	2					
18	1774-434-001-20	CASE/FINAL/LH	*	1	1	1					
19	1774-434-002-20	CASE/FINAL/RH	*	1	1	1					
20	1427-120-002-00	CAP,BLANK/M10	*	4	4	4					
21	1421-201-003-00	SEAL/52	*	2	2	2					
22	V705-140-052-00	RING,SNAP/52 C	*	2	2	2					
23	V782-160-000-4B	PLUG/SCREW/SEAL	*	4	4	4					
24	V201-361-204-00	BOLT/M12X40/7T	*	2	2	2					
25	V304-460-012-00	NUT/M12/7T	*	2	2	2					
26	1774-434-004-00	GEAR/BEVEL/08	*	2	2	2					
27	V600-110-620-50	BEARING,RB/6205	*	2	2	2					
28	1774-434-006-00	SHAFT/WHEEL	*	2	2	2					
29	1774-434-005-00	GEAR/BEVEL/41	*	2	2	2					
30	1491-434-017-00	SEAL/QLNY35571116	*	2	2	2					

FIG. 92 GEAR(FINAL)SYSTEM

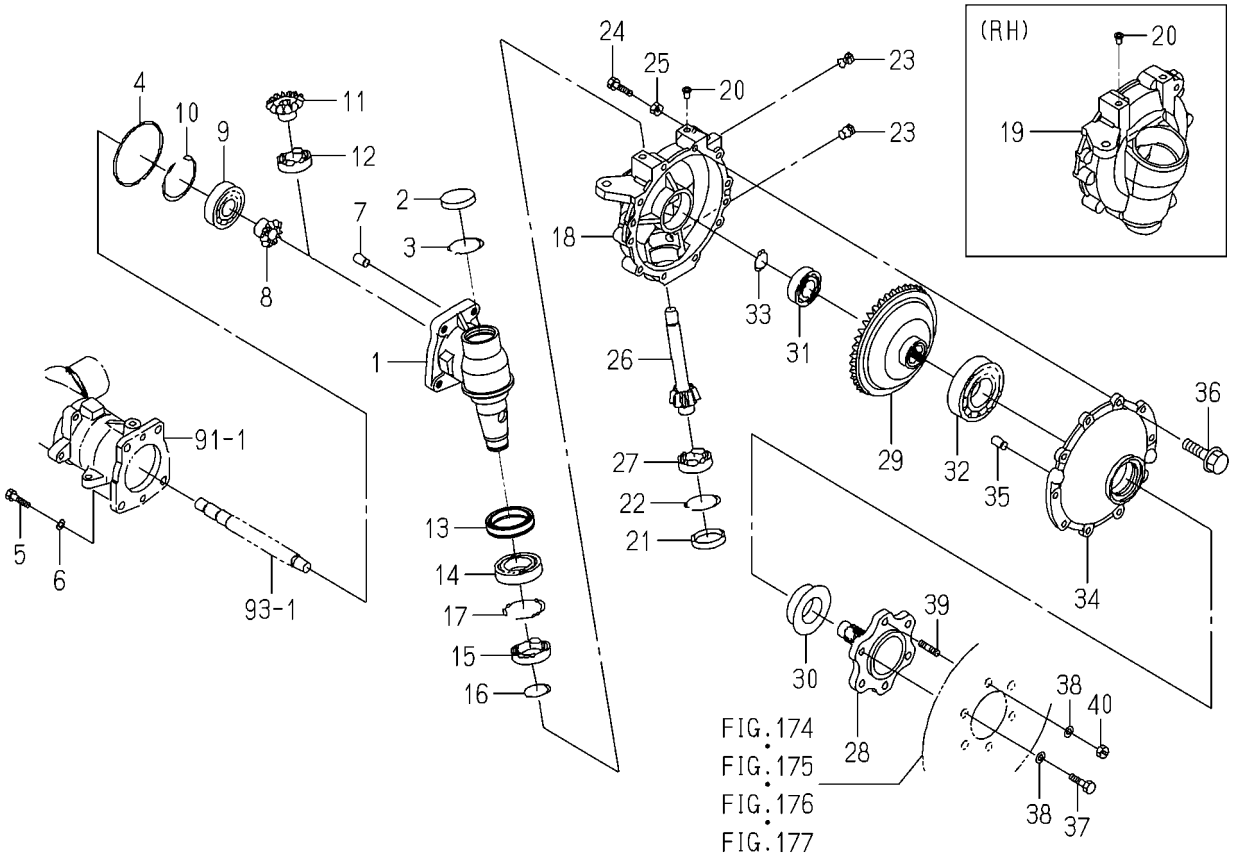

1774-434 -0100

KEY	PART CODE	DESCRIPTION	SPC	TYPE OF MODEL				ITC	COL	GRP	REMARKS
				TM3217	TM3247	TM3267					
31	V600-110-630-50	BEARING,RB/6305	*	2	2	2					
32	V600-110-620-60	BEARING,RB/6206	*	2	2	2					
33	V704-140-030-00	RING,SNAP/30 C	*	2	2	2					
34	1774-434-007-00	COVER/WHEEL	*	2	2	2					
35	V523-101-002-40	PIN,ST,B/10X24	*	4	4	4					
36	V231-361-002-50	FLANGEBOLT/M10X25	*	20	20	20					
37	V201-361-202-50	BOLT/M12X25/7T	*	8	8	8					
38	V401-160-012-00	WASHER,SP/M12	*	12	12	12					
39	V251-341-202-00	STUD/M12X20/7T	*	4	4	4					
40	V304-460-012-00	NUT/M12/7T	*	4	4	4					

FIG. 93 SHAFT(FINAL/DRIVE)SYSTEM

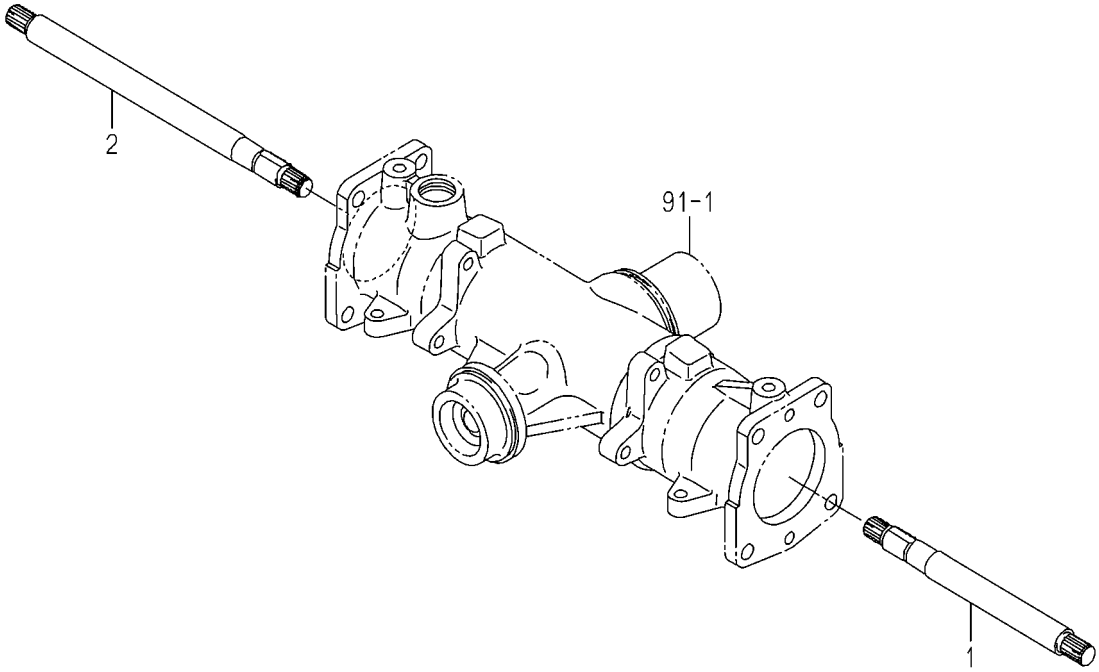

1774-435 -0100

KEY	PART CODE	DESCRIPTION	SPC	TYPE OF MODEL				ITC	COL	GRP	REMARKS
				TM3217	TM3247	TM3267					
1	1774-435-001-10	SHAFT/L	*	1	1	1					
2	1774-435-002-10	SHAFT/R	*	1	1	1					

FIG. 94 ROD(TIE)SYSTEM

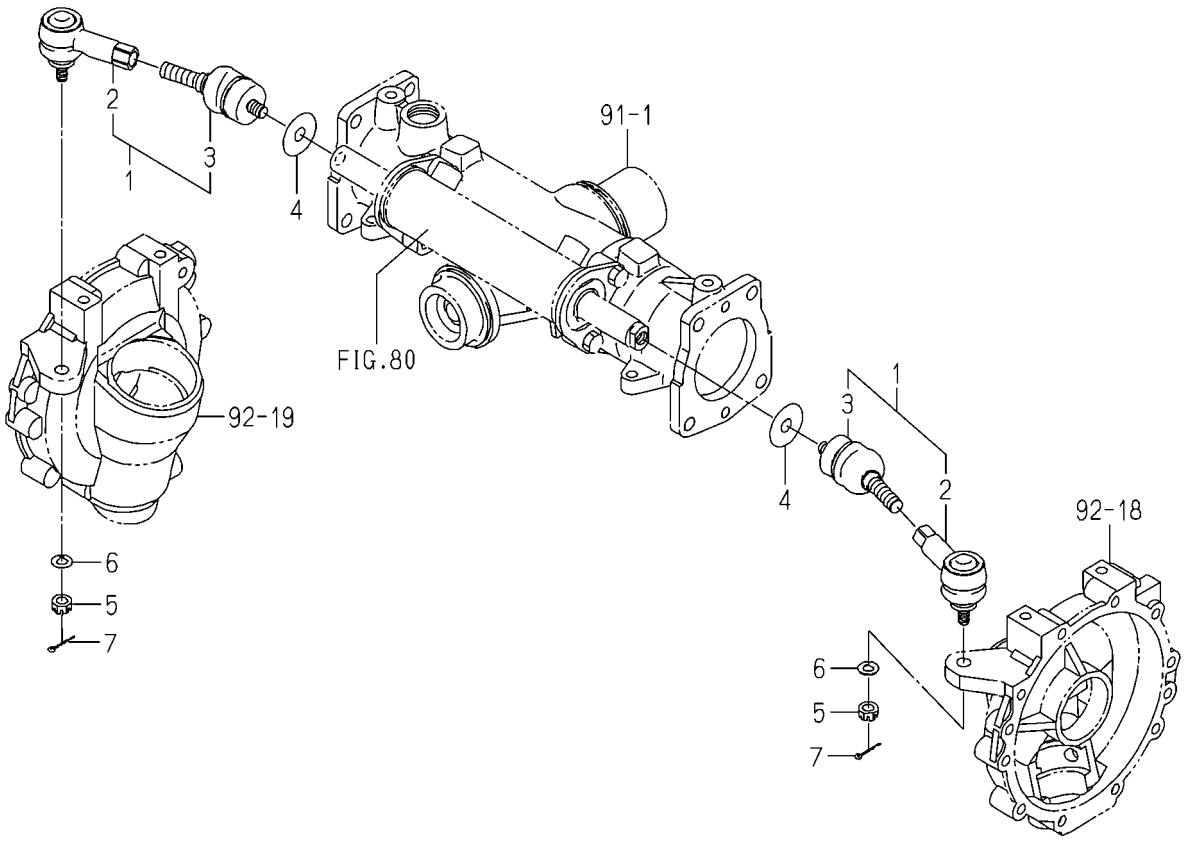

1774-436 -0100

KEY	PART CODE	DESCRIPTION	SPC	TYPE OF MODEL				ITC	COL	GRP	REMARKS
				TM3217	TM3247	TM3267					
1	1774-436-300-10	RODEND ASSY	*	2	2	2					
2	1774-436-320-00	RODEND/B ASSY	*	2	2	2					
3	1774-436-310-10	RODEND/A ASSY	*	2	2	2					
4	1725-436-001-00	WASHER/13X42X01	*	2	2	2					
5	V327-262-110-00	NUT,CASTLE/M10 P1.25	*	2	2	2					
6	V401-160-010-00	WASHER,SP/M10	*	2	2	2					
7	V500-162-502-00	PIN,SPLIT/2.5X20	*	2	2	2					

FIG. 95 CASE(CYLINDER)SYSTEM

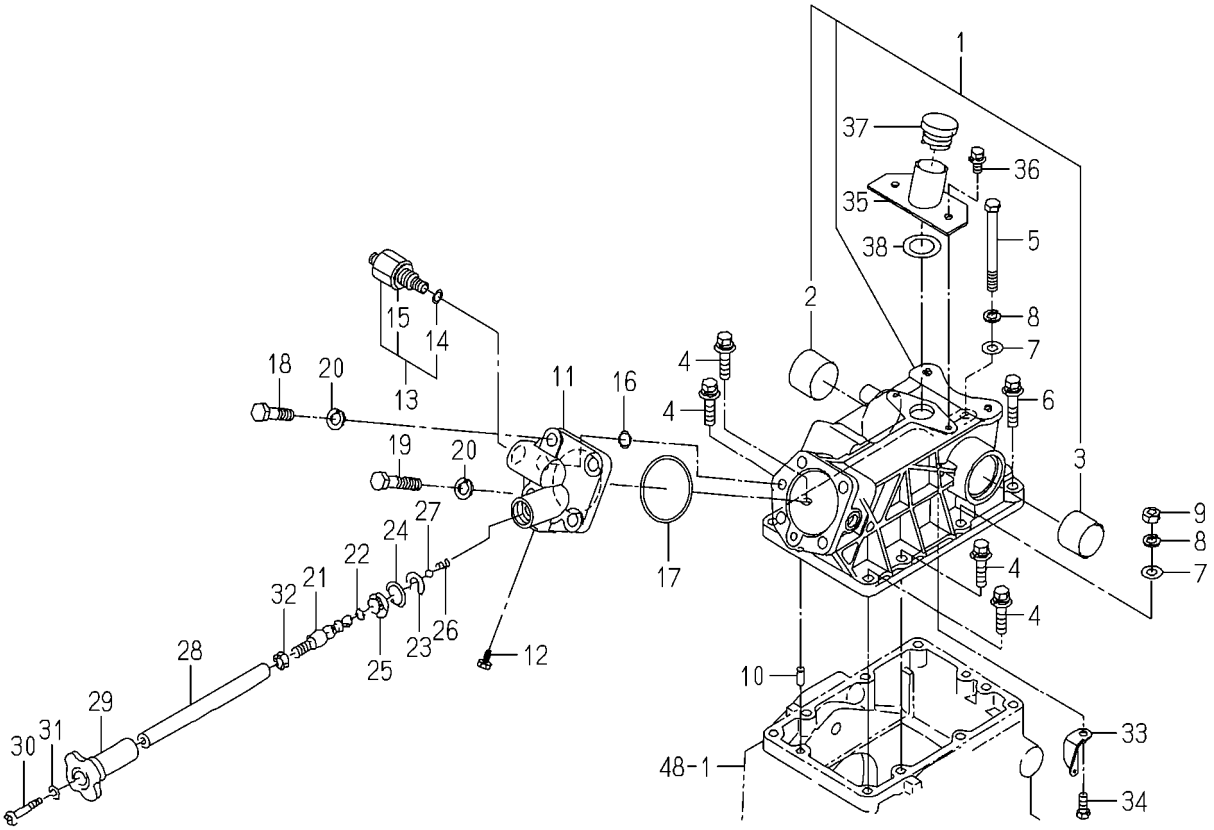

1774-501 -0100

KEY	PART CODE	DESCRIPTION	SPC	TYPE OF MODEL				ITC	COL	GRP	REMARKS
				TM3217	TM3247	TM3267					
1	1774-501-300-00	CASE/CYLINDERASSY	*	1	1	1					
2	1480-501-003-00	BUSH/40X43X30	*	1	1	1					
3	1427-501-003-00	BUSH/35X39X30	*	1	1	1					
4	V211-661-004-00	BOLT,SP/M10X40/7T	*	4	4	4					
5	V201-361-010-00	BOLT/M10X100/7T	*	1	1	1					
6	V211-661-004-50	BOLT,SP/M10X45/7T	*	2	2	2					
7	V411-260-010-00	WASHER,PL/M10	*	3	3	3					
8	V401-160-010-00	WASHER,SP/M10	*	3	3	3					
9	V304-460-010-00	NUT/M10/7T	*	2	2	2					
10	V522-100-801-80	PIN,ST,A/8X18	*	2	2	2					
11	1774-501-001-00	HEAD/CYLINDER	*	1	1	1					
12	V782-160-000-2T	PLUG/SCREW/SEAL	*	1	1	1					
13	K250-001-000-00	VALVE,RELIEF ASSY	*	1	1	1					
14	V720-112-401-20	O-RING/1B,P12	*	1	1	1					
15	K250-001-009-00	PACKING	*	1	1	1					
16	V720-112-401-20	O-RING/1B,P12	*	2	2	2					
17	V721-113-106-00	O-RING/1B,G60	*	1	1	1					
18	6901-931-240-00	BOLT,SEMS/M12X40/7T	*	2	2	2					
19	V201-361-206-00	BOLT/M12X60/7T	*	2	2	2					
20	V401-160-012-00	WASHER,SP/M12	*	2	2	2					
21	1725-508-251-00	SHAFT/SLOWRETURN	*	1	1	1					
22	V720-111-901-00	O-RING/1B,P10	*	1	1	1					
23	1725-508-252-10	PLATE/STOPPER	*	1	1	1					
24	V705-140-025-00	RING,SNAP/25 C	*	1	1	1					
25	1725-508-253-00	SEAL/DUST	*	1	1	1					
26	1725-508-254-00	SPRING/HC015	*	1	1	1					
27	1774-508-401-00	TEELBALL	*	1	1	1					
28	1568-507-001-10	SHAFT/SLOWRETURN	*	1	1	1					
29	1560-507-007-00	KNOB	*	1	1	1					
30	V111-166-004-00	SCREW/M6X40	*	1	1	1					

FIG. 95 CASE(CYLINDER)SYSTEM

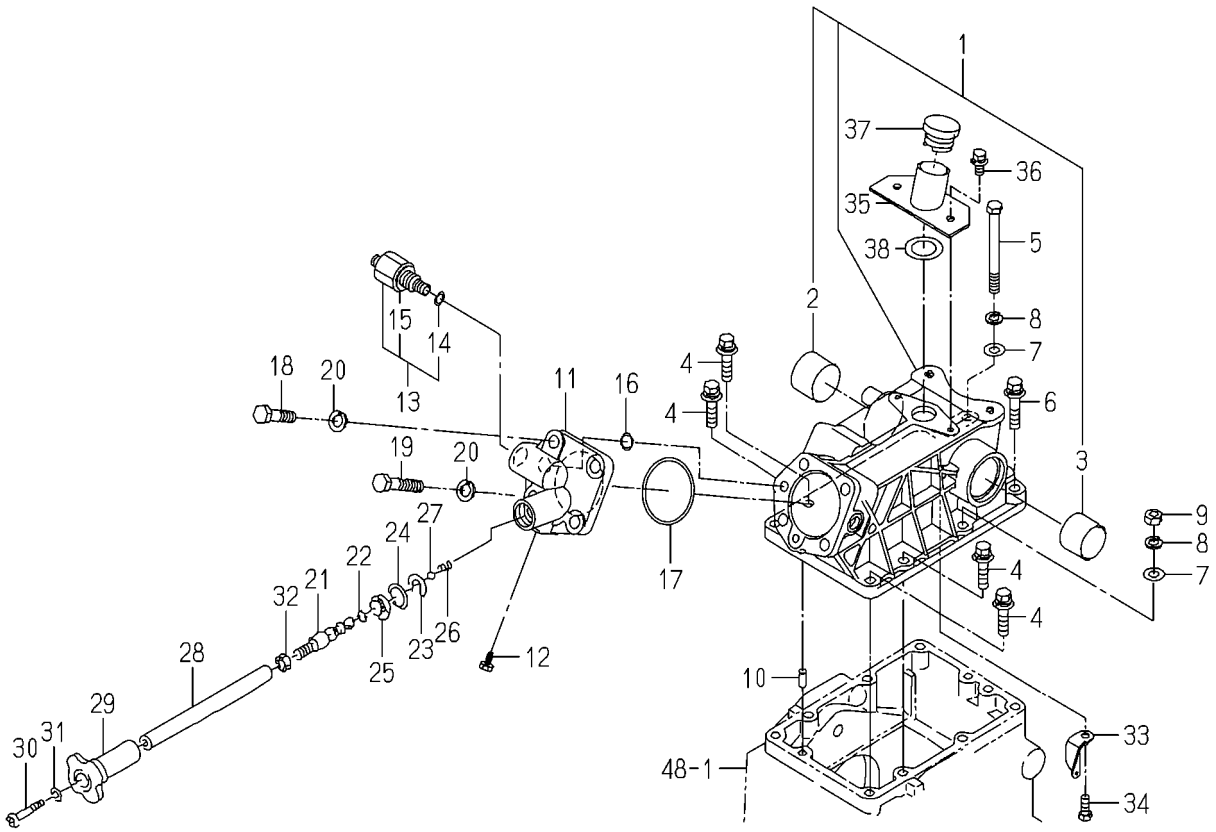

1774-501 -0100

KEY	PART CODE	DESCRIPTION	SPC	TYPE OF MODEL				ITC	COL	GRP	REMARKS
				TM3217	TM3247	TM3267					
31	V401-160-006-00	WASHER,SP/M6	*	1	1	1					
32	V304-260-010-00	NUT/M10	*	1	1	1					
33	1434-501-005-00	HOOK,SPRING	*	1	1	1					
34	V201-260-801-60	BOLT/M8X16	*	1	1	1					
35	1717-501-200-00	PIPE/OIL COMP	*	1	1	1					
36	V211-360-802-00	BOLT,SP/M8X20	*	2	2	2					
37	1614-501-015-10	CAP/OIL/30	*	1	1	1					
38	1427-611-001-00	PACKING/RUBBER	*	1	1	1					

FIG. 96 ARM(LIFT)SYSTEM

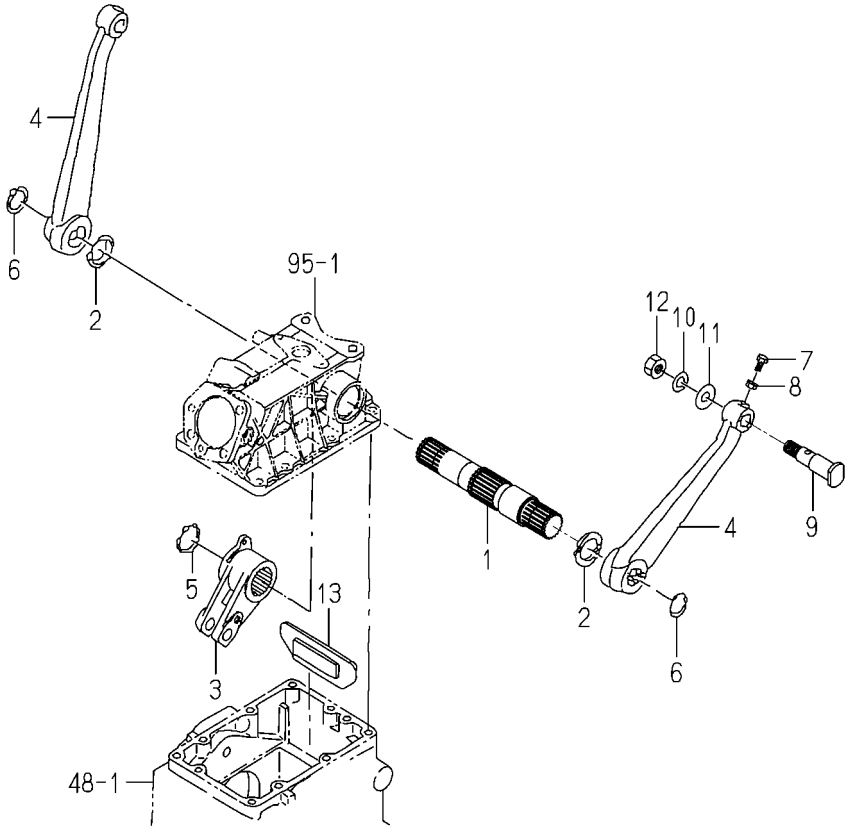

1685-502 -0100

KEY	PART CODE	DESCRIPTION	SPC	TYPE OF MODEL				ITC	COL	GRP	REMARKS
				TM3217	TM3247	TM3267					
1	1825-502-001-00	SHAFT/LIFT	*	1	1	1					
2	V742-135-500-60	SEAL,OIL/VC35506	*	2	2	2					
3	1579-502-001-00	CRANK,LIFT	*	1	1	1					
4	1672-502-004-10	ARM/LIFT	*	2	2	2					
5	V706-140-040-00	RING,SNAP/S40	*	1	1	1					
6	V704-140-035-00	RING,SNAP/35 C	*	2	2	2					
7	1600-502-003-00	BOLT,SM/M08X25	*	2	2	2					
8	V305-260-008-00	NUT/M8	*	2	2	2					
9	1575-511-001-30	PIN/22X86	*	2	2	2					
10	V401-160-016-00	WASHER,SP/M16	*	2	2	2					
11	V411-260-016-00	WASHER,PL/M16	*	2	2	2					
12	V304-260-016-00	NUT/M16	*	2	2	2					
13	1688-502-210-00	PLATE/STOPPER COMP	*	1	1	1					

FIG. 97 CYLINDER SYSTEM

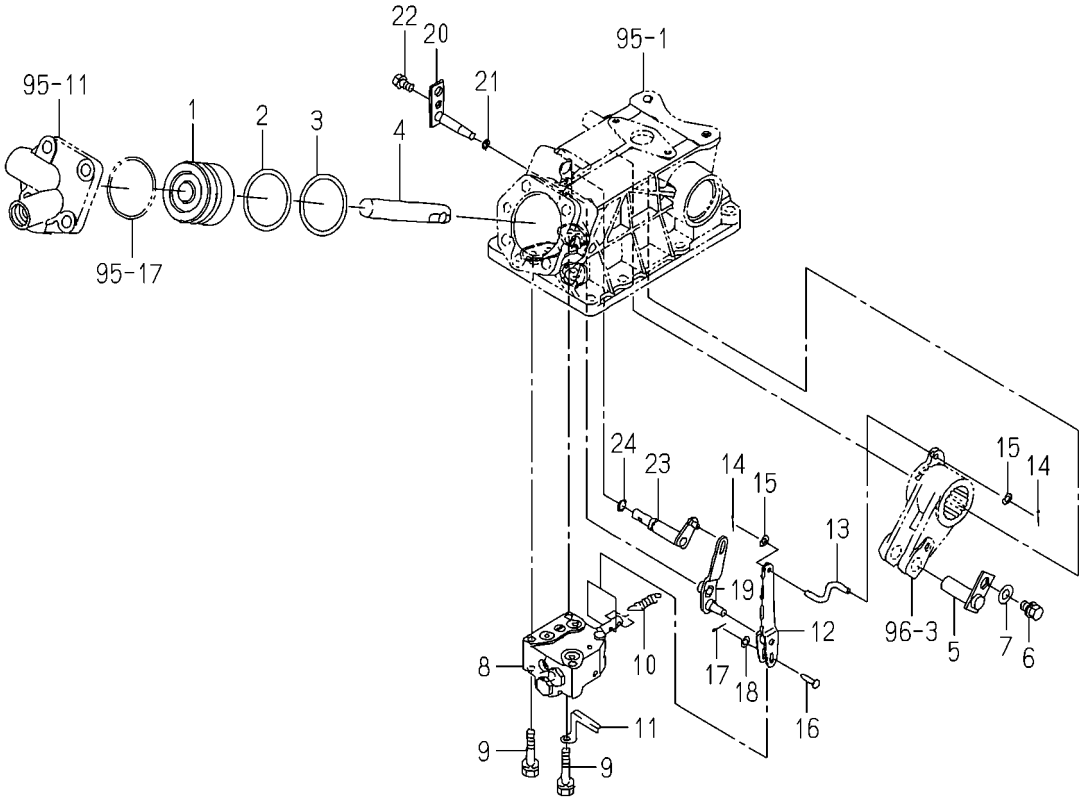

1774-503 -0100

KEY	PART CODE	DESCRIPTION	SPC	TYPE OF MODEL TM3217	TM3247	TM3267		ITC	COL	GRP	REMARKS
1	1421-507-002-10	PISTON	*	1	1	1					
2	V720-105-705-50	O-RING/1A,P55	*	1	1	1					
3	1416-501-011-00	RING,BACKUP	*	1	1	1					
4	1544-503-001-20	ROD	*	1	1	1					
5	1544-503-200-20	PIN,ROD COMP	*	1	1	1					
6	V211-561-001-60	BOLT,S/M10X16/7T	*	1	1	1					
7	V411-260-010-00	WASHER,PL/M10	*	1	1	1					
8	K211-092-000-10	VALVE/CONTROL/092	*	1	1	1					FIG 183
9	V211-260-805-00	BOLT,S/M8X50	*	3	3	3					
10	1434-501-006-00	SPRING,TENSION/31	*	1	1	1					
11	1682-503-001-00	COVER/PLATE	*	1	1	1					
12	1717-503-200-10	LINK/SPOOL COMP	*	1	1	1					
13	1434-503-001-00	LINK,CRANK	*	1	1	1					
14	V500-162-001-50	PIN,SPLIT/2X15	*	2	2	2					
15	V411-260-006-00	WASHER,PL/M6	*	2	2	2					
16	1434-503-002-00	PIN/5X17	*	1	1	1					
17	V500-162-001-50	PIN,SPLIT/2X15	*	1	1	1					
18	V411-260-005-00	WASHER,PL/M5	*	1	1	1					
19	1672-503-210-00	LINK/SUPPORT COMP	*	1	1	1					
20	1434-503-250-10	PIN/SUPPORT COMP	*	1	1	1					
21	V720-101-900-70	O-RING/1A,P7	*	1	1	1					
22	V211-260-801-60	BOLT,S/M8X16	*	1	1	1					
23	1434-503-260-20	LINK SHIFT ARM	*	1	1	1					
24	V720-102-401-00	O-RING/1A,P10A	*	1	1	1					

FIG. 98 LEVER(POSITION)SYSTEM (EXCEPT D TYPE)

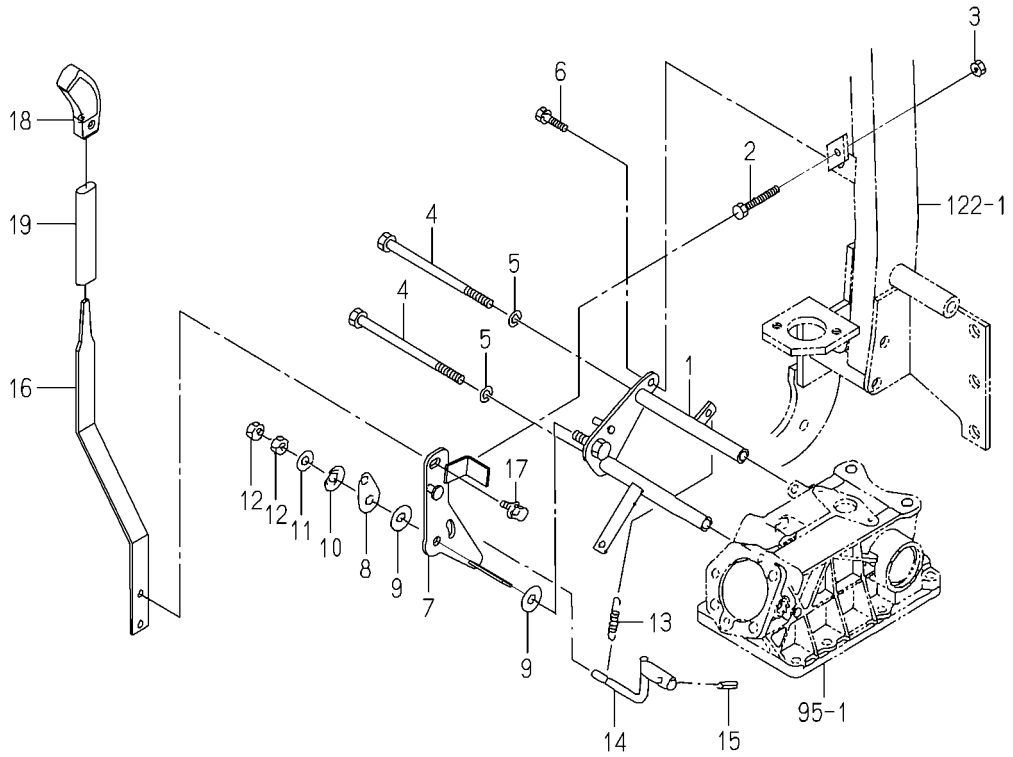

1774-505E-0100

KEY	PART CODE	DESCRIPTION	SPC	TYPE OF MODEL TM3217	TM3247	TM3267		ITC	COL	GRP	REMARKS
1	1774-505-210-10	BRACKET/LEVER COMP	*	1	1	1					
2	W201-260-805-50	BOLT/M8XX55	*	1	1	1					
3	V304-260-008-00	NUT/M8	*	1	1	1					
4	V201-260-817-50	BOLT/M8X175	*	2	2	2					
5	V401-160-008-00	WASHER,SP/M8	*	2	2	2					
6	V211-360-801-60	BOLT,SP/M8X16	*	1	1	1					
7	1774-505-300-10	ARM/POSITION COMP	*	1	1	1		1			
8	1614-505-002-00	PLATE	*	1	1	1					
9	1614-505-003-00	LINING/11X30X02	*	2	2	2					
10	1614-505-004-00	SPRING/WASHER	*	1	1	1					
11	V411-260-010-00	WASHER,PL/M10	*	1	1	1					
12	V304-260-010-00	NUT/M10	*	2	2	2					
13	1414-312-002-00	SPRING,TENSION/53	*	1	1	1					
14	1612-505-220-00	ARM/POSITION COMP	*	1	1	1					
15	V580-140-502-00	PIN,SPRING/5X20 W	*	1	1	1					
16	1774-505-001-00	LEVER/POSITION	*	1	1	1					
17	V211-360-801-60	BOLT,SP/M8X16	*	1	1	1					
18	1614-505-007-00	GRIP/03X17X97	*	1	1	1					
19	1725-266-001-00	INSULATOR/120	*	1	1	1					

FIG. 99 LEVER(POSITION)SYSTEM(D TYPE)

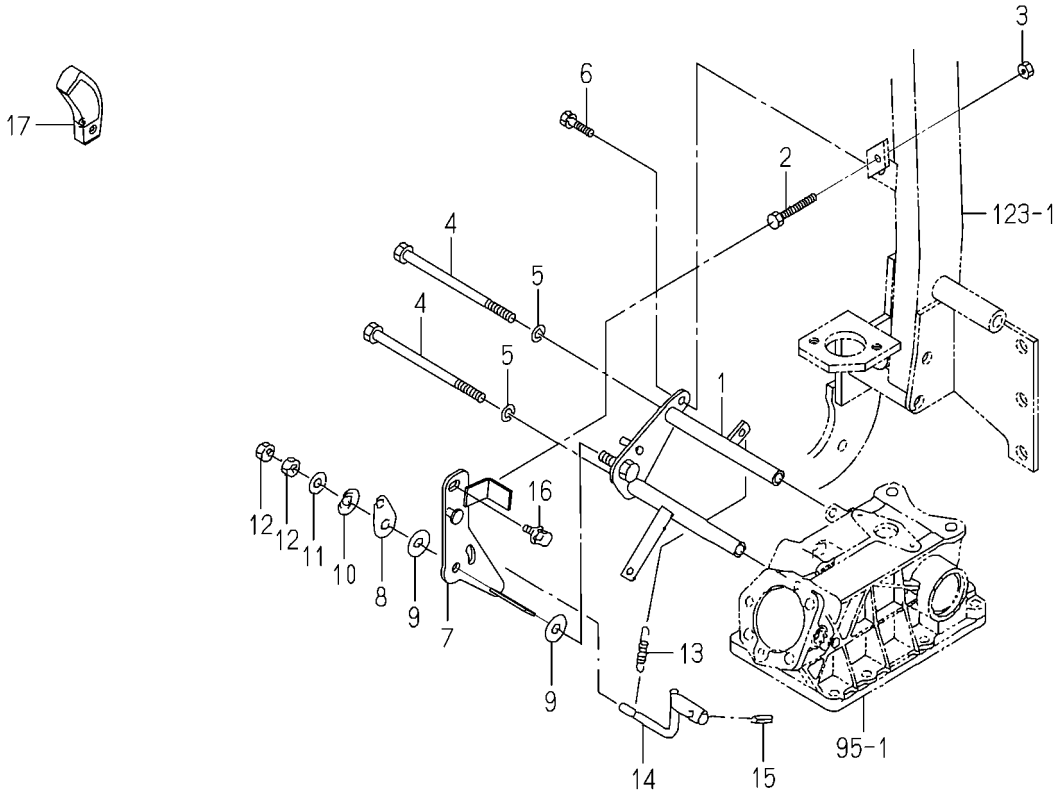

1774-505F-0100

KEY	PART CODE	DESCRIPTION	SPC	TYPE OF MODEL				ITC	COL	GRP	REMARKS
				TM3217	TM3247	TM3267					
1	1774-505-210-10	BRACKET/LEVER COMP	*	1	1	1					
2	W201-260-805-50	BOLT/M8XX55	*	1	1	1					
3	V304-260-008-00	NUT/M8	*	1	1	1					
4	V201-260-817-50	BOLT/M8X175	*	2	2	2					
5	V401-160-008-00	WASHER,SP/M8	*	2	2	2					
6	V211-360-801-60	BOLT,SP/M8X16	*	1	1	1					
7	1774-505-300-10	ARM/POSITION COMP	*	1	1	1		1			
8	1614-505-002-00	PLATE	*	1	1	1					
9	1614-505-003-00	LINING/11X30X02	*	2	2	2					
10	1614-505-004-00	SPRING/WASHER	*	1	1	1					
11	V411-260-010-00	WASHER,PL/M10	*	1	1	1					
12	V304-260-010-00	NUT/M10	*	2	2	2					
13	1414-312-002-00	SPRING,TENSION/53	*	1	1	1					
14	1612-505-220-00	ARM/POSITION COMP	*	1	1	1					
15	V580-140-502-00	PIN,SPRING/5X20 W	*	1	1	1					
16	V211-360-801-60	BOLT,SP/M8X16	*	1	1	1					
17	1614-505-007-00	GRIP/03X17X97	*	1	1	1					

FIG.100 COVER(VALVE)SYSTEM(D TYPE)

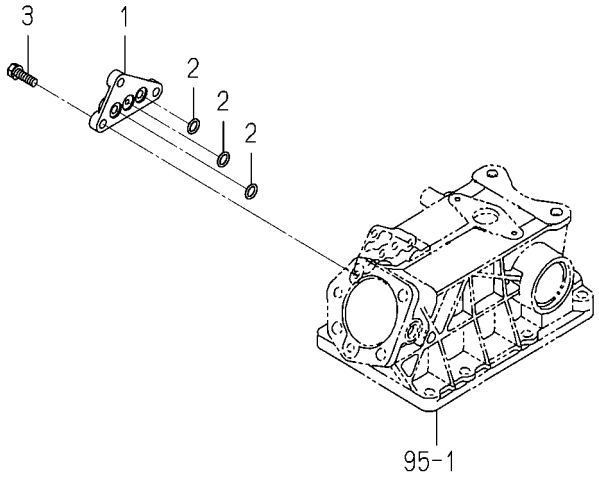

1726-506 -0100

KEY	PART CODE	DESCRIPTION	SPC	TYPE OF MODEL				ITC	COL	GRP	REMARKS
				TM3217	TM3247	TM3267					
1	1434-501-003-10	SUBCONCOVER	*	1	1	1					
2	V720-112-401-20	O-RING/1B,P12	*	3	3	3					
3	V211-260-802-50	BOLT,S/M8X25	*	3	3	3					

FIG.101 VALVE(REMOTE/1R)SYSTEM (TM3217F,3247F TYPE)

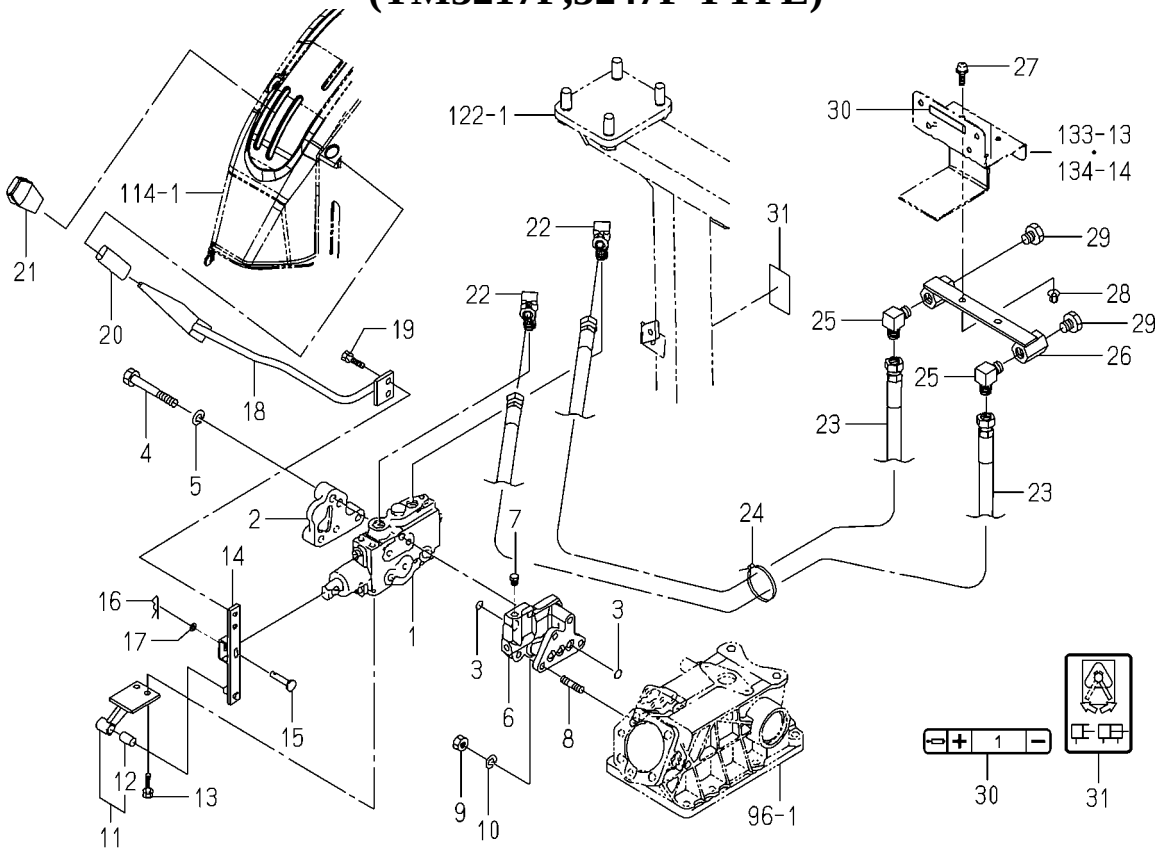

1774-507B-0100

KEY	PART CODE	DESCRIPTION	SPC	TYPE OF MODEL TM3217	TM3247	TM3267		ITC	COL	GRP	REMARKS
1	1719-511-350-00	VALVE/CONTROL ASSY	*	1	1						FIG 185
2	1614-501-003-10	COVER	*	1	1						
3	V720-112-401-20	O-RING/1B,P12	*	6	6						
4	V201-261-008-00	BOLT/M10X80	*	3	3						
5	V401-160-010-00	WASHER,SP/M10	*	3	3						
6	1774-507-001-00	METAL/AUX/VALVE	*	1	1						
7	V782-160-000-2T	PLUG/SCREW/SEAL	*	6	6						
8	V251-260-802-0D	STUD/M8X20,SEAL	*	3	3						
9	V304-460-008-00	NUT/M8/7T	*	3	3						
10	V401-160-008-00	WASHER,SP/M8	*	3	3						
11	1774-507-320-00	HOLDER/1ST ASSY	*	1	1						
12	1560-509-211-00	BUSH/10X12X20	*	1	1						
13	V211-260-802-00	BOLT,S/M8X20	*	2	2						
14	1774-507-230-10	ARM/1ST COMP	*	1	1						
15	2144-519-007-00	PIN/06X31	*	1	1						
16	V560-160-006-00	PIN/SNAP	*	1	1						
17	V411-260-006-00	WASHER,PL/M6	*	1	1						
18	1774-507-250-10	LEVER/1ST COMP	*	1	1						
19	V211-260-801-60	BOLT,S/M8X16	*	2	2						
20	1614-262-006-00	INSULATOR/LEVER/SUB	*	1	1						
21	3659-203-005-00	GRIP/03X17X74	*	1	1						
22	1640-530-003-00	CONNECTOR	*	2	2						
23	1640-530-270-20	HOSE/660 ASSY	*	2	2						
24	1342-402-006-00	BAND,WIRE/250	*	1	1						
25	3768-185-015-20	ADAPTER/90	*	2	2						
26	1774-507-270-00	ADAPTER/1ST COMP	*	1	1						
27	V111-168-002-00	SCREW/M8X20	*	2	2						
28	V362-260-008-00	NUT/WASHER/M8	*	2	2						
29	V782-160-000-6T	PLUG/SCREW/SEAL	*	2	2						
30	1774-902-078-10	LABEL/PORT/1ST/E4	*	1	1						

FIG.101 VALVE(REMOTE/1R)SYSTEM (TM3217F,3247F TYPE)

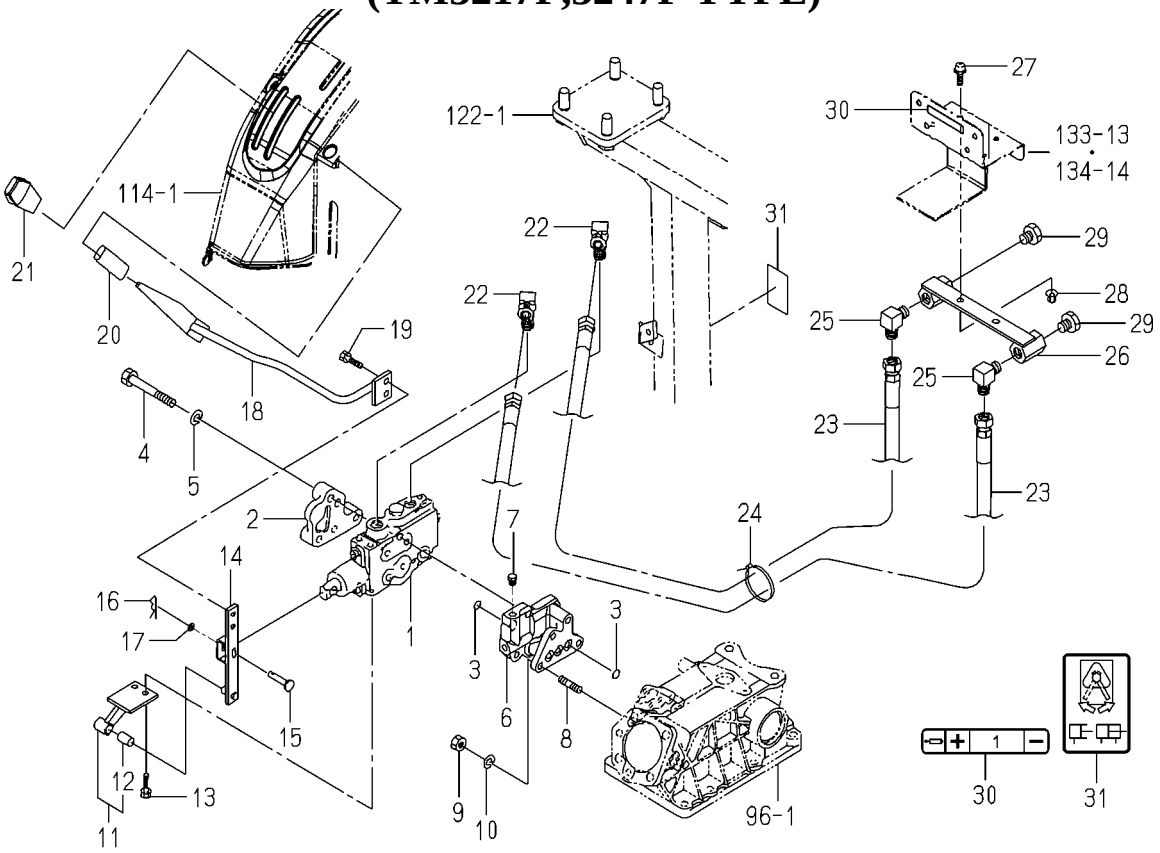

1774-507B-0100

KEY	PART CODE	DESCRIPTION	SPC	TYPE OF MODEL				ITC	COL	GRP	REMARKS
				TM3217	TM3247	TM3267					
31	1640-530-008-00	LABEL/SUBCON	*	1	1						

FIG.102 VALVE(REMOTE/2R)SYSTEM(1/2) (TM3217H,3247H,3267 TYPE @EXCEPT D)

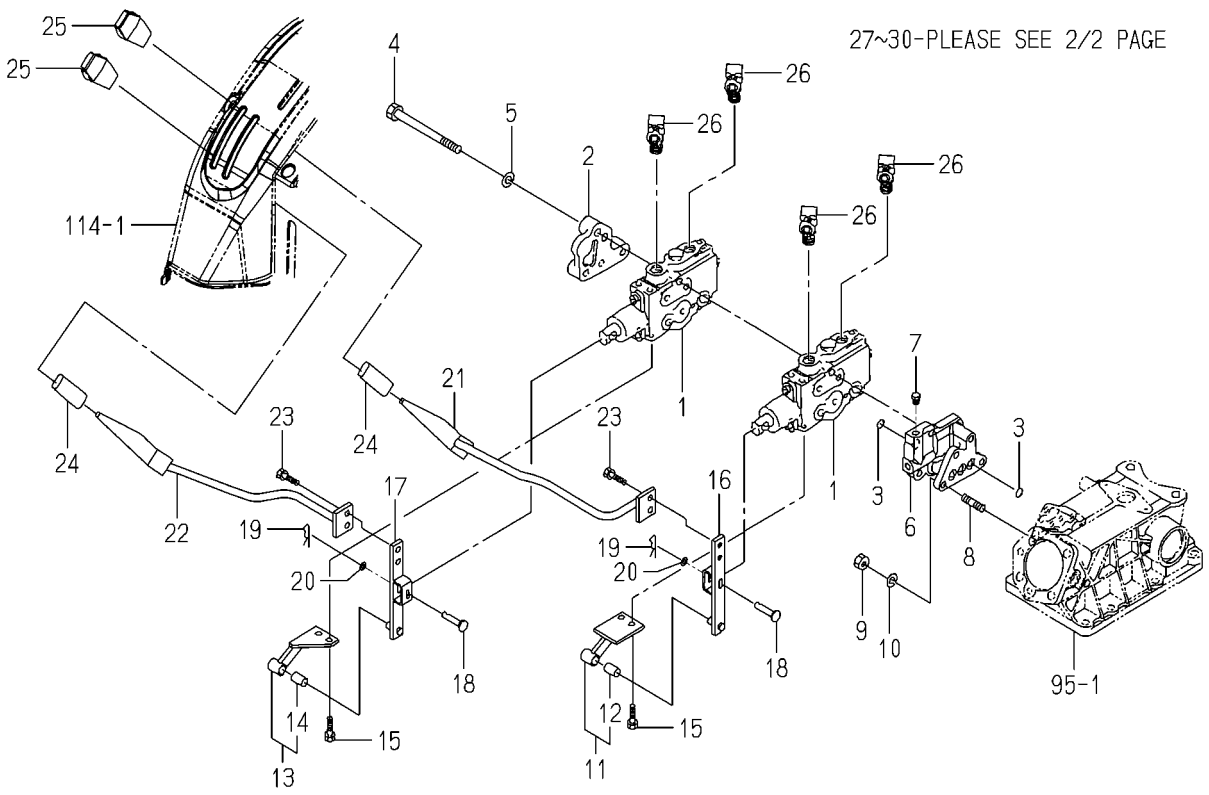

1774-507C-0100

KEY	PART CODE	DESCRIPTION	SPC	TYPE OF MODEL TM3217	TM3247	TM3267		ITC	COL	GRP	REMARKS
1	1719-511-350-00	VALVE/CONTROL ASSY	*	2	2	2					FIG 185
2	1614-501-003-10	COVER	*	1	1	1					
3	V720-112-401-20	O-RING/1B,P12	*	6	6	6					
4	V201-261-012-00	BOLT/M10X120	*	3	3	3					
5	V401-160-010-00	WASHER,SP/M10	*	3	3	3					
6	1774-507-001-00	METAL/AUX/VALVE	*	1	1	1					
7	V782-160-000-2T	PLUG/SCREW/SEAL	*	6	6	6					
8	V251-260-802-0D	STUD/M8X20,SEAL	*	3	3	3					
9	V304-460-008-00	NUT/M8/7T	*	3	3	3					
10	V401-160-008-00	WASHER,SP/M8	*	3	3	3					
11	1774-507-320-00	HOLDER/1ST ASSY	*	1	1	1					
12	1560-509-211-00	BUSH/10X12X20	*	1	1	1					
13	1774-507-330-00	HOLDER/2ND ASSY	*	1	1	1					
14	1560-509-211-00	BUSH/10X12X20	*	1	1	1					
15	V211-260-802-00	BOLT,S/M8X20	*	4	4	4					
16	1774-507-230-10	ARM/1ST COMP	*	1	1	1					
17	1774-507-240-10	ARM/2ND COMP	*	1	1	1					
18	2144-519-007-00	PIN/06X31	*	2	2	2					
19	V560-160-006-00	PIN/SNAP	*	2	2	2					
20	V411-260-006-00	WASHER,PL/M6	*	2	2	2					
21	1774-507-250-10	LEVER/1ST COMP	*	1	1	1					
22	1774-507-260-20	LEVER/2ND COMP	*	1	1	1					
23	V211-260-801-60	BOLT,S/M8X16	*	4	4	4					
24	1614-262-006-00	INSULATOR/LEVER/SUB	*	2	2	2					
25	3659-203-005-00	GRIP/03X17X74	*	2	2	2					
26	1640-530-003-00	CONNECTOR	*	4	4	4					
27	1640-530-270-20	HOSE/660 ASSY	*	4	4	4					
28	1342-402-006-00	BAND,WIRE/250	*	1	1	1					
29	3768-185-015-20	ADAPTER/90	*	4	4	4					
30	1774-507-270-00	ADAPTER/1ST COMP	*	1	1	1					

FIG.102 VALVE(REMOTE/2R)SYSTEM(2/2) (TM3217H,3247H,3267 TYPE @EXCEPT D)

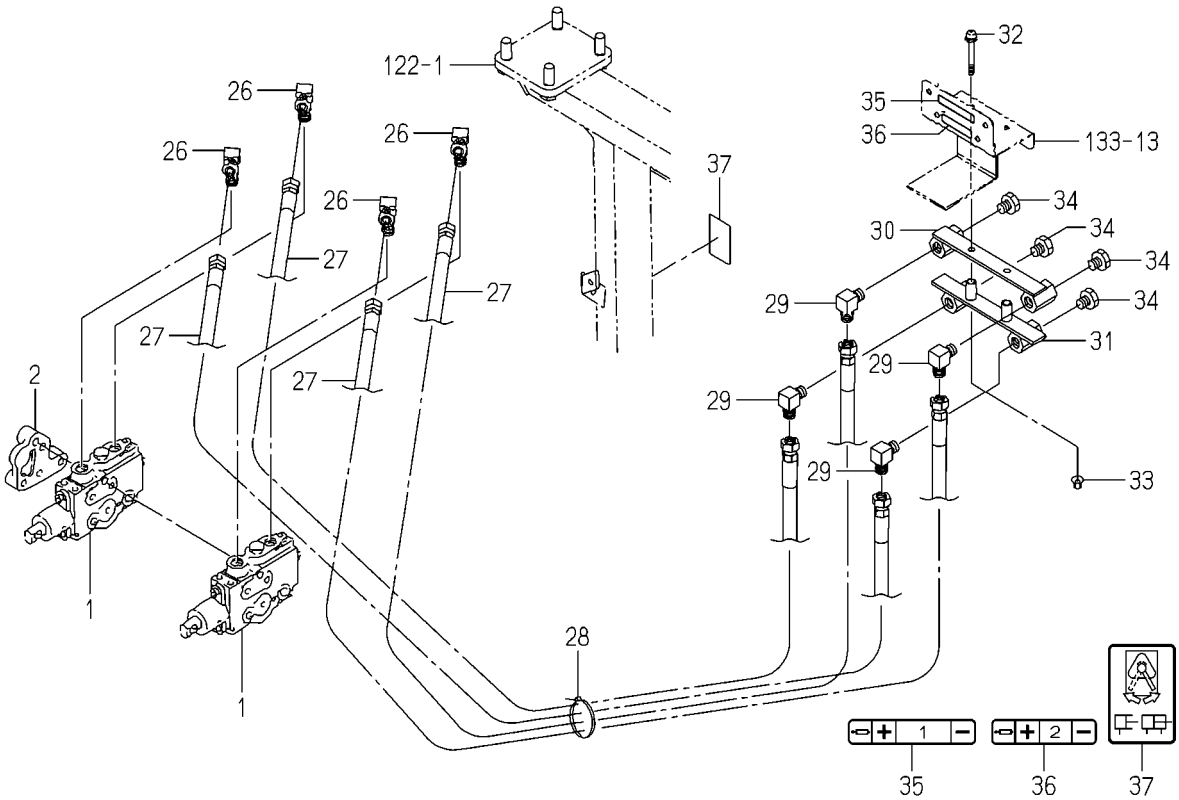

1774-507C-0100

KEY	PART CODE	DESCRIPTION	SPC	TYPE OF MODEL TM3217	TM3247	TM3267		ITC	COL	GRP	REMARKS
31	1774-507-280-10	ADAPTER/2ND COMP	*	1	1	1					
32	V111-178-006-00	SCREW/M8X60	*	2	2	2					
33	V362-260-008-00	NUT/WASHER/M8	*	2	2	2					
34	V782-160-000-6T	PLUG/SCREW/SEAL	*	4	4	4					
35	1774-902-078-10	LABEL/PORT/1ST/E4	*	1	1	1					
36	1774-902-079-10	LABEL/PORT/2ND/E4	*	1	1	1					
37	1640-530-008-00	LABEL/SUBCON	*	1	1	1					

FIG.103 PIPING(MAIN)SYSTEM(TM3267F TYPE)

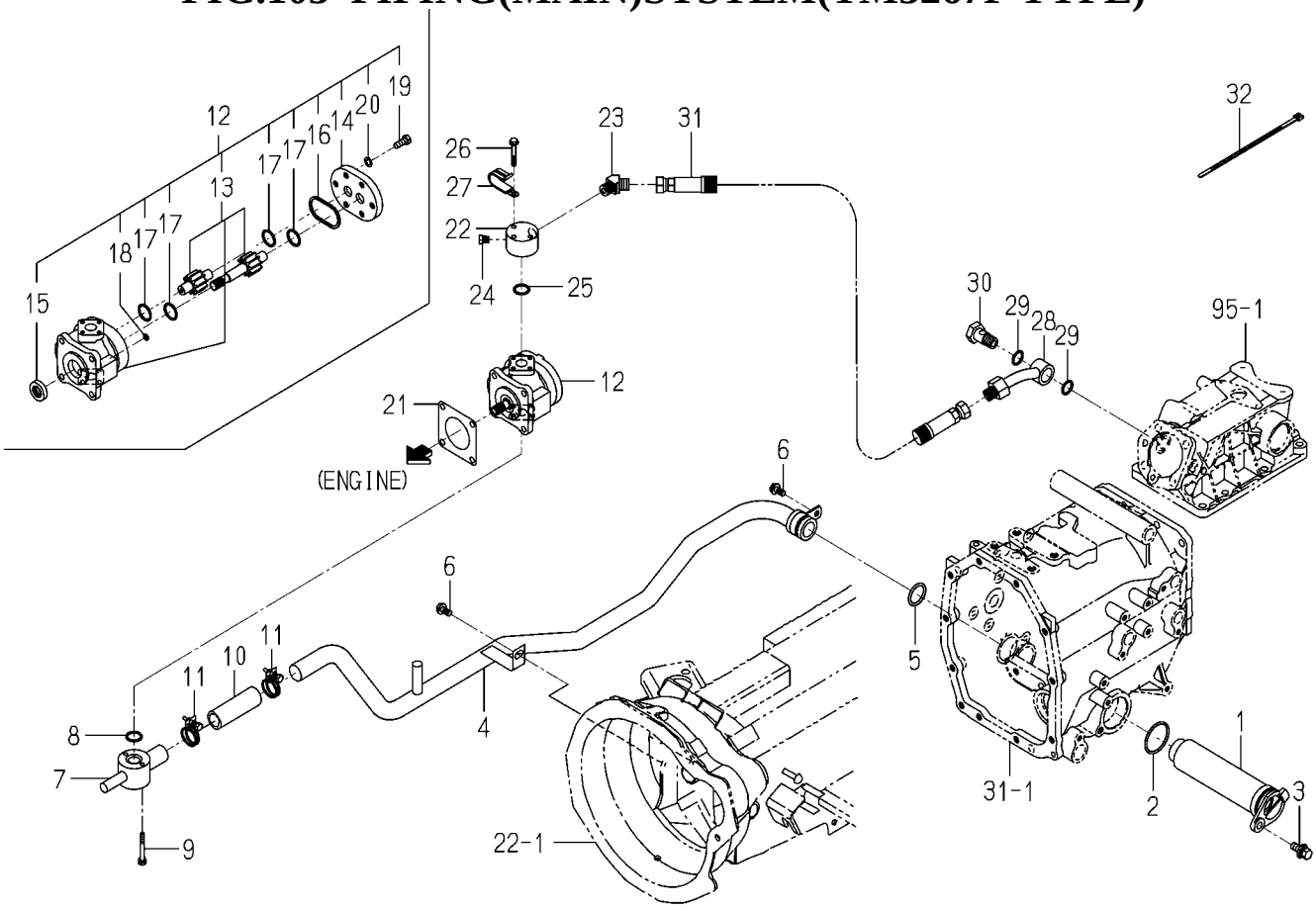

1774-508 -0100

KEY	PART CODE	DESCRIPTION	SPC	TYPE OF MODEL				ITC	COL	GRP	REMARKS
				TM3217	TM3247	TM3267					
1	1620-508-230-00	FILTER/SUCTION ASSY	*			1					
2	V721-103-104-50	O-RING/1A,G45	*			1					
3	V231-361-002-00	FLANGEBOLT/M10X20	*			1					
4	1774-508-210-10	PIPE/SUC/M/C COMP	*			1					
5	V720-103-502-90	O-RING/1A,P29	*			1					
6	V231-360-801-60	FLANGEBOLT/M8X16	*			2					
7	1774-508-530-00	PIPE/SUC/FRONT COMP	*			1					
8	V720-112-402-00	O-RING/1B,P20	*			1					
9	V210-560-605-00	BOLT,S/M6X50/7T	*			2					
10	1550-508-001-20	HOSE/90	*			1					
11	J061-228-036-00	CLAMP/WIRE/28-36	*			2					
12	K135-012-000-00	PUMP,GEAR ASSY	*			1					
13	K135-012-100-00	PUMP,GEAR ASSY	*			1					
14	K135-017-006-00	COVER,PUMP	*			1					
15	V744-114-280-70	SEAL,OIL/TC14287	*			1					
16	V721-113-105-00	O-RING/1B,G50 HS90	*			1					
17	V720-112-402-20	O-RING/1B,P22	*			4					
18	V720-111-900-60	O-RING/1B,P6	*			1					
19	K135-002-009-00	BOLT/M8X28 11T	*			6					
20	V401-170-008-00	WASHER,SP/M8	*			6					
21	1404-503-006-00	PACKING,OIL PUMP	*			1					
22	1775-508-001-00	FLANGE	*			1					
23	1757-501-014-00	ADAPTER/45/R3/8XG3/	*			1					
24	V782-160-000-2T	PLUG/SCREW/SEAL	*			1					
25	V720-112-402-00	O-RING/1B,P20	*			1					
26	V230-360-604-00	FLANGEBOLT/M6X40	*			3					
27	3737-172-009-00	CLAMP,MAIN HARNESS	*			1					
28	1775-508-720-10	PIPE/DEL/REAR COMP	*			1					
29	V720-112-401-80	O-RING/1B,P18	*			2					
30	1738-508-001-00	ADAPTER/BOLT/G3/8	*			1					

FIG.103 PIPING(MAIN)SYSTEM(TM3267F TYPE)

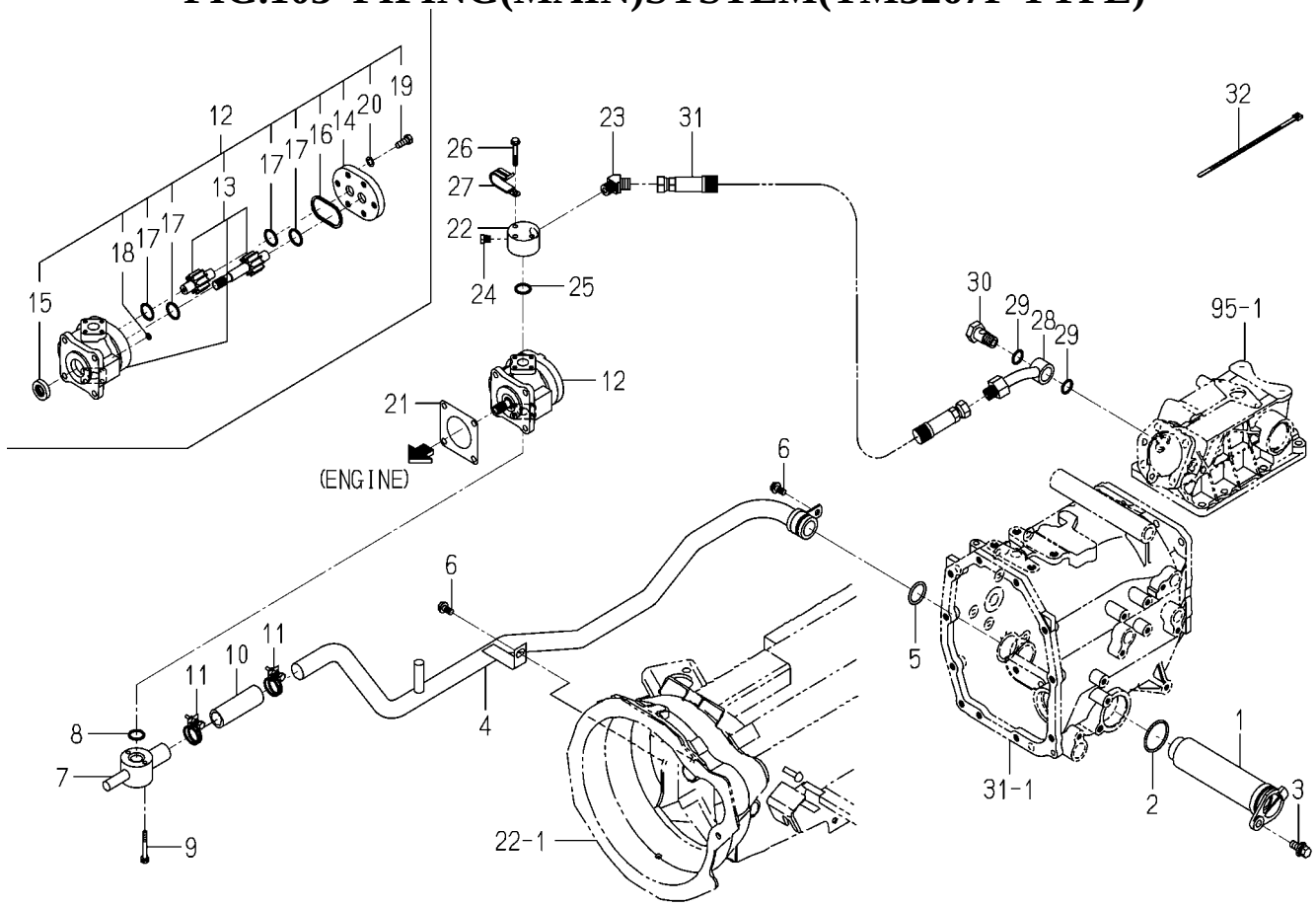

1774-508 -0100

KEY	PART CODE	DESCRIPTION	SPC	TYPE OF MODEL				ITC	COL	GRP	REMARKS
				TM3217	TM3247	TM3267					
31	1775-508-550-10	HOSE/1570 ASSY	*			1					
32	1342-402-006-00	BAND,WIRE/250	*			4					

FIG.104 PIPING(MAIN)SYSTEM(TM3267H TYPE)

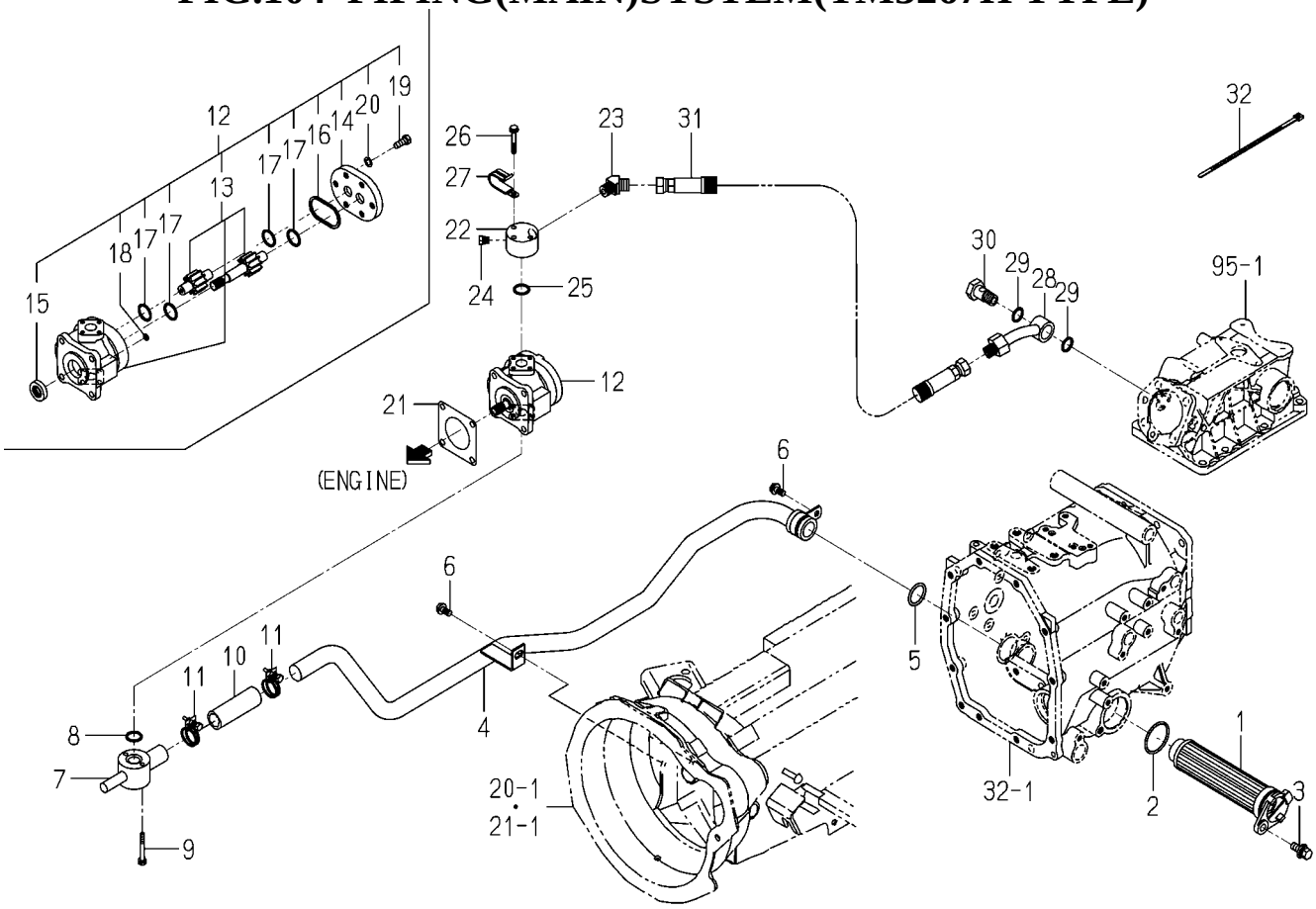

1774-508A-0100

KEY	PART CODE	DESCRIPTION	SPC	TYPE OF MODEL				ITC	COL	GRP	REMARKS
				TM3217	TM3247	TM3267					
1	1805-508-260-00	FILTER/SUCTION/400	*			1					
2	V721-103-104-50	O-RING/1A,G45	*			1					
3	V231-361-002-00	FLANGEBOLT/M10X20	*			1					
4	1774-508-510-10	PIPE/SUC/H/C COMP	*			1					
5	V720-103-502-90	O-RING/1A,P29	*			1					
6	V231-360-801-60	FLANGEBOLT/M8X16	*			2					
7	1774-508-530-00	PIPE/SUC/FRONT COMP	*			1					
8	V720-112-402-00	O-RING/1B,P20	*			1					
9	V210-560-605-00	BOLT,S/M6X50/7T	*			2					
10	1550-508-001-20	HOSE/90	*			1					
11	J061-228-036-00	CLAMP/WIRE/28-36	*			2					
12	K135-012-000-00	PUMP,GEAR ASSY	*			1					
13	K135-012-100-00	PUMP,GEAR ASSY	*			1					
14	K135-017-006-00	COVER,PUMP	*			1					
15	V744-114-280-70	SEAL,OIL/TC14287	*			1					
16	V721-113-105-00	O-RING/1B,G50 HS90	*			1					
17	V720-112-402-20	O-RING/1B,P22	*			4					
18	V720-111-900-60	O-RING/1B,P6	*			1					
19	K135-002-009-00	BOLT/M8X28 11T	*			6					
20	V401-170-008-00	WASHER,SP/M8	*			6					
21	1404-503-006-00	PACKING,OIL PUMP	*			1					
22	1775-508-001-00	FLANGE	*			1					
23	1757-501-014-00	ADAPTER/45/R3/8XG3/	*			1					
24	V782-160-000-2T	PLUG/SCREW/SEAL	*			1					
25	V720-112-402-00	O-RING/1B,P20	*			1					
26	V230-360-604-00	FLANGEBOLT/M6X40	*			3					
27	3737-172-009-00	CLAMP,MAIN HARNESS	*			1					
28	1775-508-720-10	PIPE/DEL/REAR COMP	*			1					
29	V720-112-401-80	O-RING/1B,P18	*			2					
30	1738-508-001-00	ADAPTER/BOLT/G3/8	*			1					

FIG.104 PIPING(MAIN)SYSTEM(TM3267H TYPE)

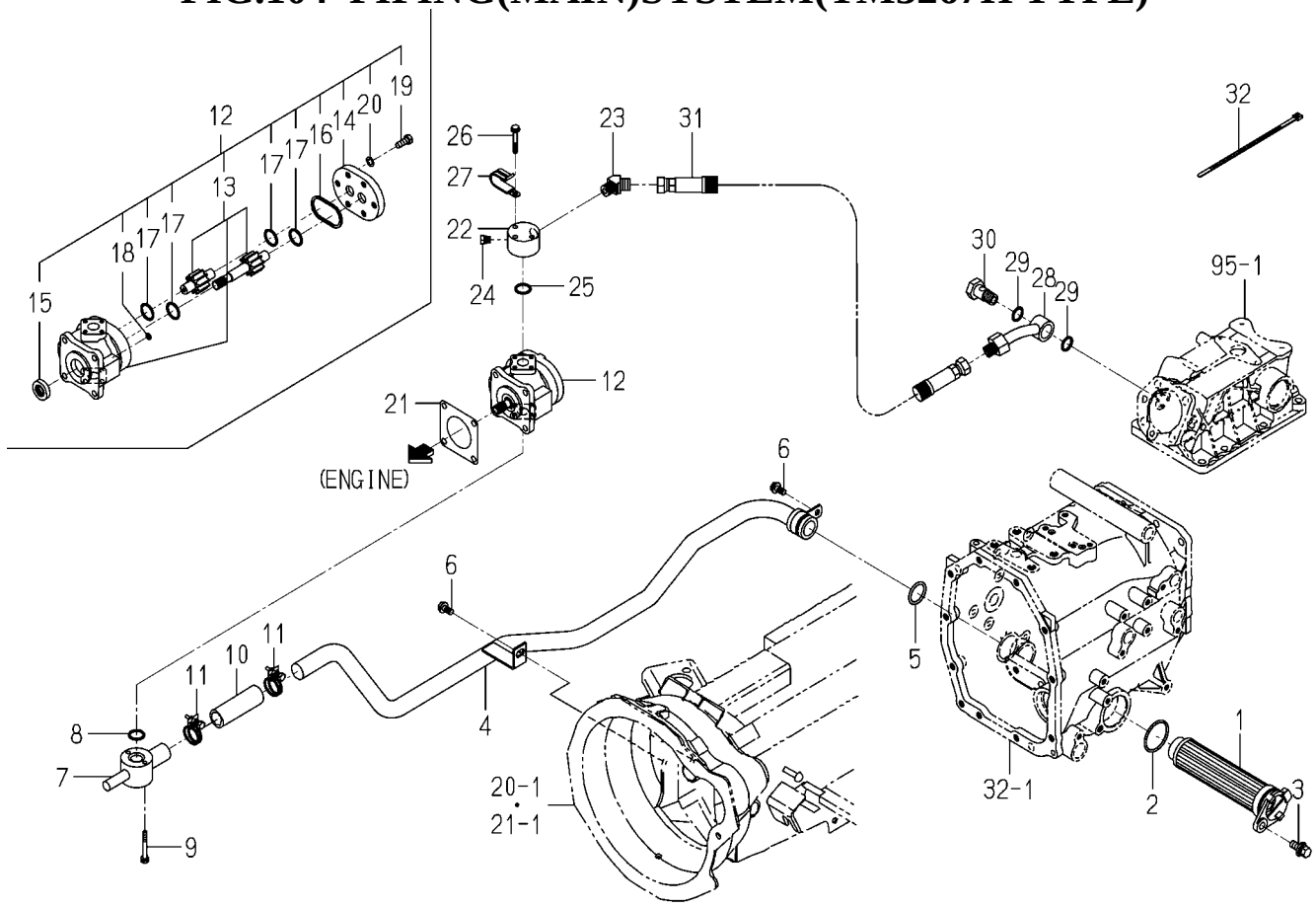

1774-508A-0100

KEY	PART CODE	DESCRIPTION	SPC	TYPE OF MODEL TM3217	TM3247	TM3267		ITC	COL	GRP	REMARKS
31	1775-508-550-10	HOSE/1570 ASSY	*			1					
32	1342-402-006-00	BAND,WIRE/250	*			4					

FIG.105 PIPING(MAIN)SYSTEM (TM3217F,3247F TYPE)

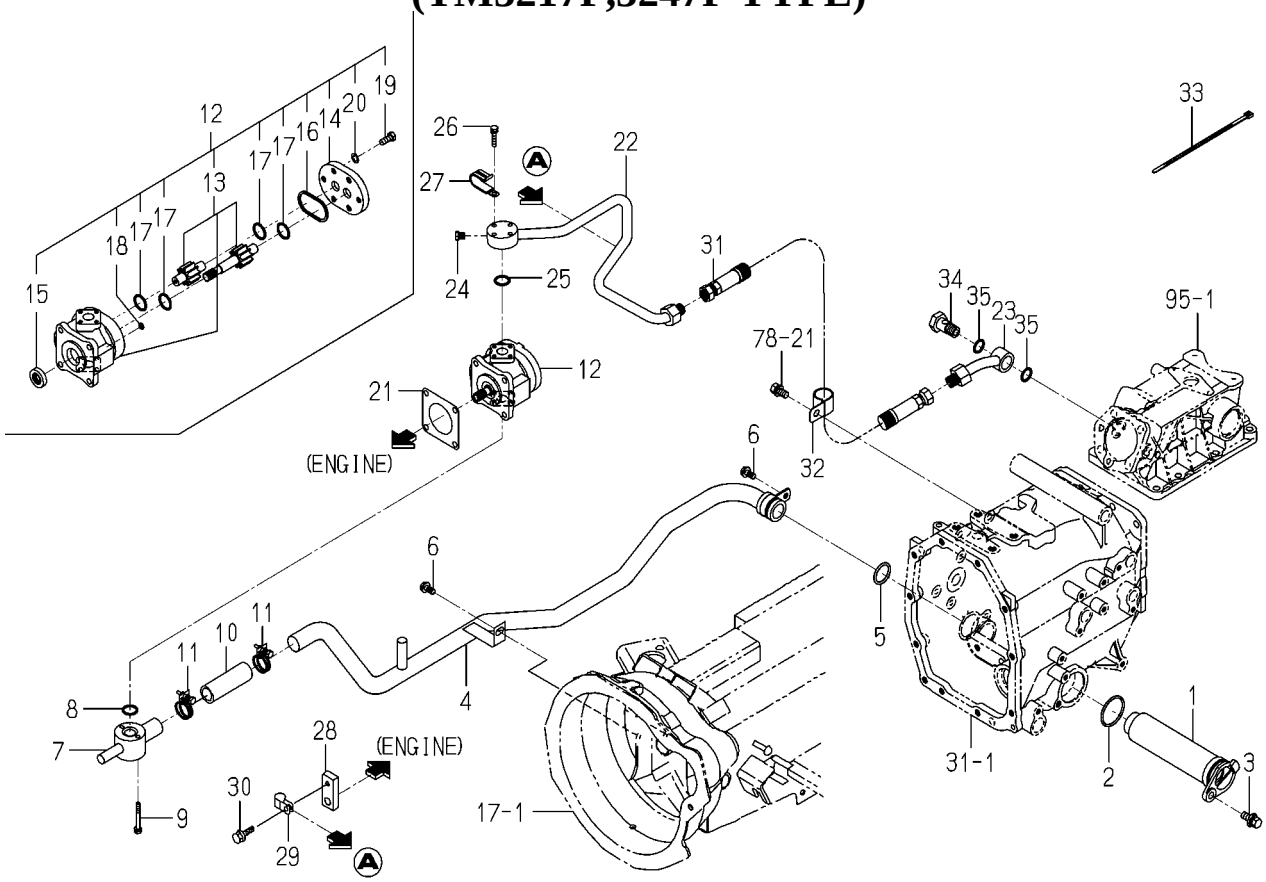

1774-508B-0100

KEY	PART CODE	DESCRIPTION	SPC	TYPE OF MODEL				ITC	COL	GRP	REMARKS
				TM3217	TM3247	TM3267					
1	1620-508-230-00	FILTER/SUCTION ASSY	*	1	1						
2	V721-103-104-50	O-RING/1A,G45	*	1	1						
3	V231-361-002-00	FLANGEBOLT/M10X20	*	1	1						
4	1774-508-220-10	PIPE/SUC/M/B COMP	*	1	1						
5	V720-103-502-90	O-RING/1A,P29	*	1	1						
6	V231-360-801-60	FLANGEBOLT/M8X16	*	2	2						
7	1774-508-530-00	PIPE/SUC/FRONT COMP	*	1	1						
8	V720-112-402-00	O-RING/1B,P20	*	1	1						
9	V210-560-605-00	BOLT,S/M6X50/7T	*	2	2						
10	1550-508-001-20	HOSE/90	*	1	1						
11	J061-228-036-00	CLAMP/WIRE/28-36	*	2	2						
12	K135-012-000-00	PUMP,GEAR ASSY	*	1	1						
13	K135-012-100-00	PUMP,GEAR ASSY	*	1	1						
14	K135-017-006-00	COVER,PUMP	*	1	1						
15	V744-114-280-70	SEAL,OIL/TC14287	*	1	1						
16	V721-113-105-00	O-RING/1B,G50 HS90	*	1	1						
17	V720-112-402-20	O-RING/1B,P22	*	4	4						
18	V720-111-900-60	O-RING/1B,P6	*	1	1						
19	K135-002-009-00	BOLT/M8X28 11T	*	6	6						
20	V401-170-008-00	WASHER,SP/M8	*	6	6						
21	1404-503-006-00	PACKING,OIL PUMP	*	1	1						
22	1774-508-340-00	PIPE/DEL/F/B COMP	*	1	1						
23	1775-508-720-10	PIPE/DEL/REAR COMP	*	1	1						
24	V782-160-000-2T	PLUG/SCREW/SEAL	*	1	1						
25	V720-112-402-00	O-RING/1B,P20	*	1	1						
26	V210-560-603-00	BOLT,S/M6X30/7T	*	4	4						
27	3737-172-009-00	CLAMP,MAIN HARNESS	*	1	1						
28	1774-508-001-00	PLATE/I/25X60	*	1	1						
29	1675-508-003-00	HOLDER/15	*	1	1						
30	V231-360-801-20	FLANGEBOLT/M8X12	*	1	1						

FIG.105 PIPING(MAIN)SYSTEM (TM3217F,3247F TYPE)

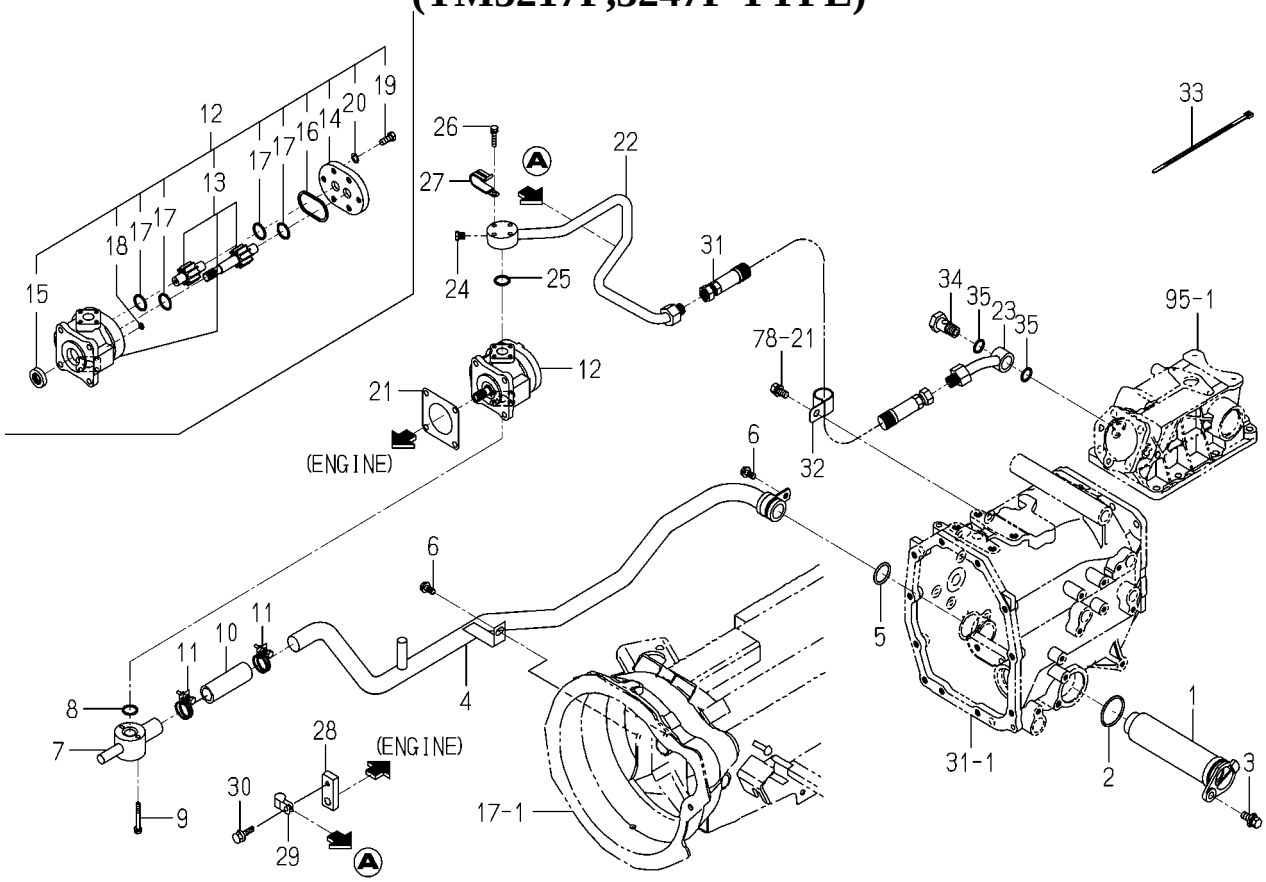

1774-508B-0100

KEY	PART CODE	DESCRIPTION	SPC	TYPE OF MODEL				ITC	COL	GRP	REMARKS
				TM3217	TM3247	TM3267					
31	1801-511-220-10	HOSE/1050 ASSY	*	1	1						
32	1518-786-508-00	CLIP B	*	1	1						
33	1342-402-006-00	BAND,WIRE/250	*	4	4						
34	1738-508-001-00	ADAPTER/BOLT/G3/8	*	1	1						
35	V720-112-401-80	O-RING/1B,P18	*	2	2						

FIG.106 PIPING(MAIN)SYSTEM (TM3217H,3247H TYPE)

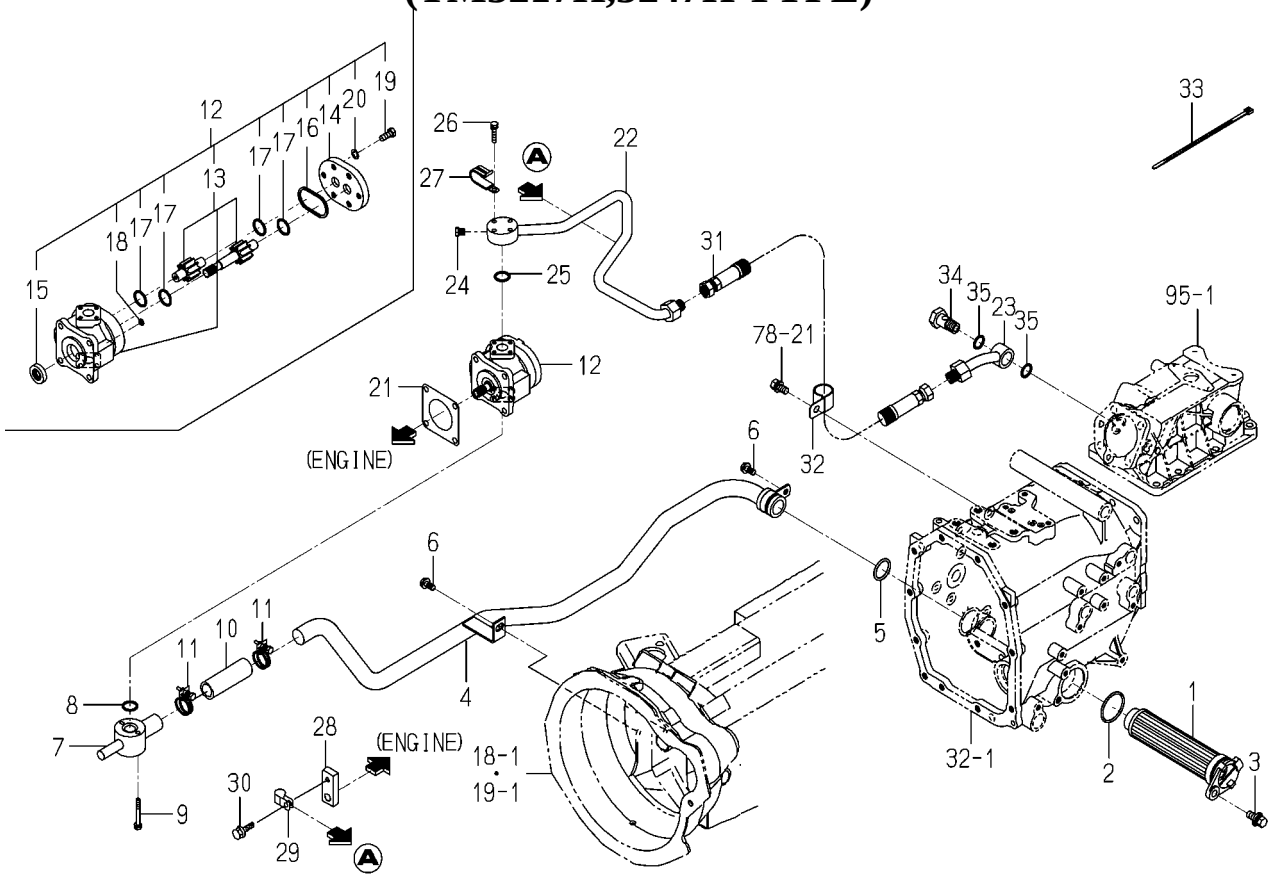

1774-508C-0100

KEY	PART CODE	DESCRIPTION	SPC	TYPE OF MODEL				ITC	COL	GRP	REMARKS
				TM3217	TM3247	TM3267					
1	1805-508-260-00	FILTER/SUCTION/400	*	1	1						
2	V721-103-104-50	O-RING/1A,G45	*	1	1						
3	V231-361-002-00	FLANGEBOLT/M10X20	*	1	1						
4	1774-508-520-10	PIPE/SUC/H/B COMP	*	1	1						
5	V720-103-502-90	O-RING/1A,P29	*	1	1						
6	V231-360-801-60	FLANGEBOLT/M8X16	*	2	2						
7	1774-508-530-00	PIPE/SUC/FRONT COMP	*	1	1						
8	V720-112-402-00	O-RING/1B,P20	*	1	1						
9	V210-560-605-00	BOLT,S/M6X50/7T	*	2	2						
10	1550-508-001-20	HOSE/90	*	1	1						
11	J061-228-036-00	CLAMP/WIRE/28-36	*	2	2						
12	K135-012-000-00	PUMP,GEAR ASSY	*	1	1						
13	K135-012-100-00	PUMP,GEAR ASSY	*	1	1						
14	K135-017-006-00	COVER,PUMP	*	1	1						
15	V744-114-280-70	SEAL,OIL/TC14287	*	1	1						
16	V721-113-105-00	O-RING/1B,G50 HS90	*	1	1						
17	V720-112-402-20	O-RING/1B,P22	*	4	4						
18	V720-111-900-60	O-RING/1B,P6	*	1	1						
19	K135-002-009-00	BOLT/M8X28 11T	*	6	6						
20	V401-170-008-00	WASHER,SP/M8	*	6	6						
21	1404-503-006-00	PACKING,OIL PUMP	*	1	1						
22	1774-508-340-00	PIPE/DEL/F/B COMP	*	1	1						
23	1775-508-720-10	PIPE/DEL/REAR COMP	*	1	1						
24	V782-160-000-2T	PLUG/SCREW/SEAL	*	1	1						
25	V720-112-402-00	O-RING/1B,P20	*	1	1						
26	V210-560-603-00	BOLT,S/M6X30/7T	*	4	4						
27	3737-172-009-00	CLAMP,MAIN HARNESS	*	1	1						
28	1774-508-001-00	PLATE/I/25X60	*	1	1						
29	1675-508-003-00	HOLDER/15	*	1	1						
30	V231-360-801-20	FLANGEBOLT/M8X12	*	1	1						

FIG.106 PIPING(MAIN)SYSTEM (TM3217H,3247H TYPE)

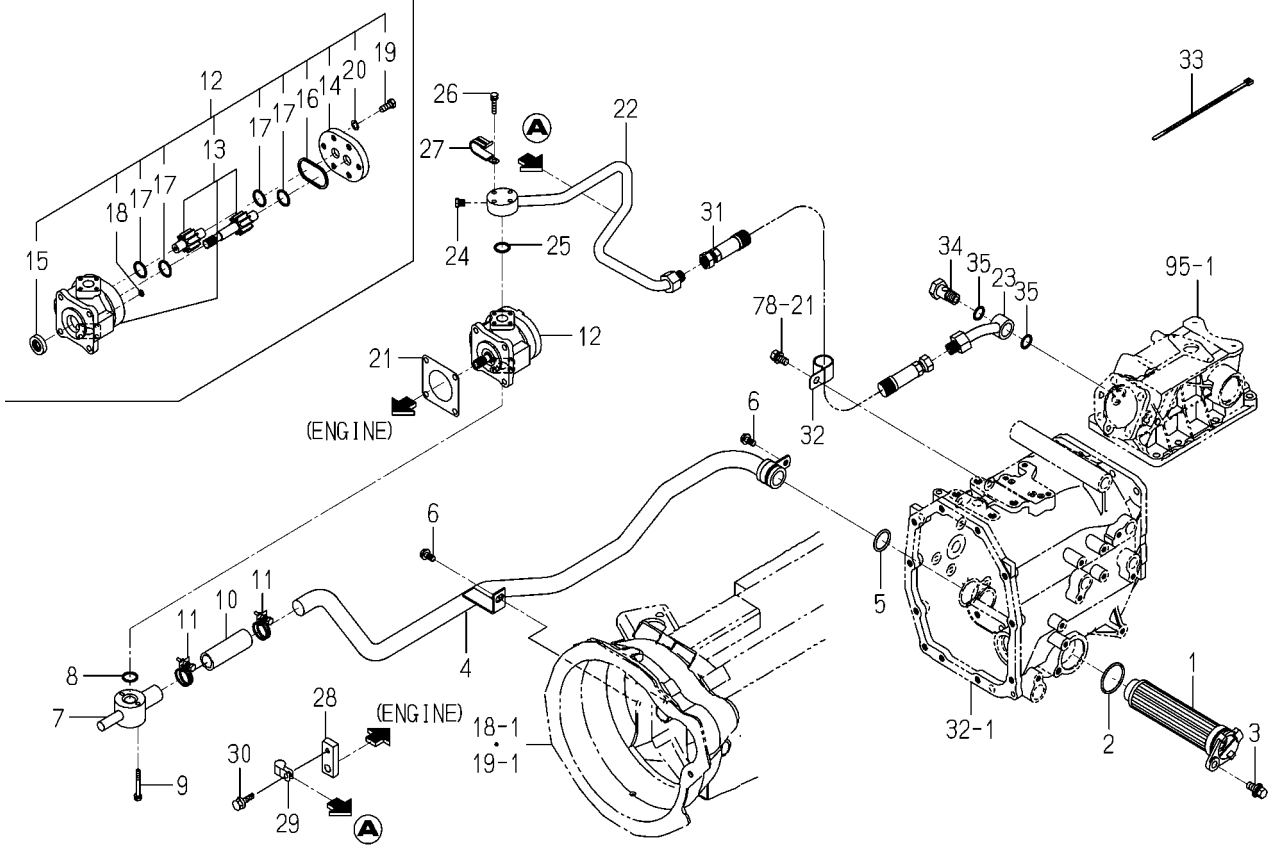

1774-508C-0100

KEY	PART CODE	DESCRIPTION	SPC	TYPE OF MODEL				ITC	COL	GRP	REMARKS
				TM3217	TM3247	TM3267					
31	1801-511-220-10	HOSE/1050 ASSY	*	1	1						
32	1518-786-508-00	CLIP B	*	1	1						
33	1342-402-006-00	BAND,WIRE/250	*	4	4						
34	1738-508-001-00	ADAPTER/BOLT/G3/8	*	1	1						
35	V720-112-401-80	O-RING/1B,P18	*	2	2						

FIG.107 LINK(TM3P)SYSTEM

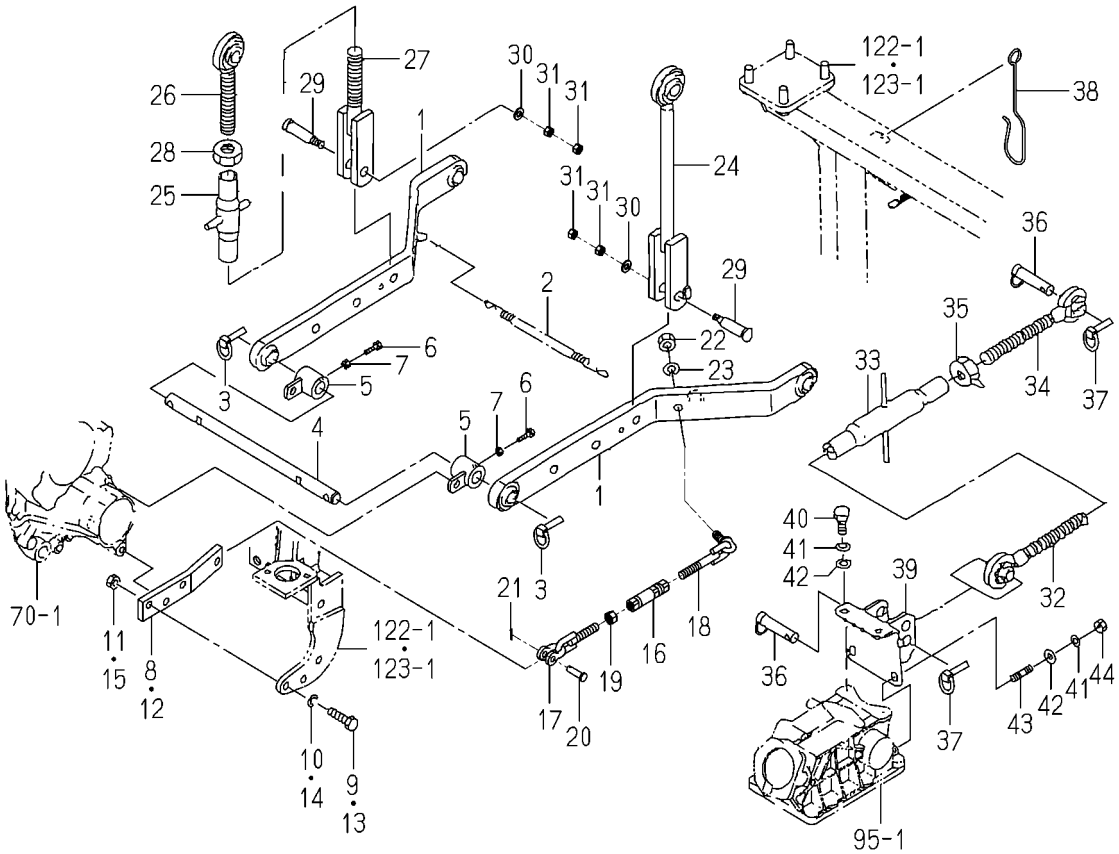

1774-514 -0100

KEY	PART CODE	DESCRIPTION	SPC	TYPE OF MODEL				ITC	COL	GRP	REMARKS
				TM3217	TM3247	TM3267					
1	1685-511-210-10	LINK/LOWER COMP	*	2	2	2					
2	1560-525-001-40	SPRING	*	1	1	1					
3	1673-525-002-30	LINKPIN	*	2	2	2					
4	1738-514-001-00	PIN/22X404	*	1	1	1					
5	1738-514-210-00	HUB/SPACER COMP	*	2	2	2					
6	V201-360-802-50	BOLT/M8X25/7T	*	2	2	2					
7	V305-260-008-00	NUT/M8	*	2	2	2					
8	1750-514-001-20	PLATE/CHAIN/LH	*	1	1	1					
9	V201-361-203-50	BOLT/M12X35/7T	*	2	2	2					
10	V401-160-012-00	WASHER,SP/M12	*	2	2	2					
11	V304-460-012-00	NUT/M12/7T	*	2	2	2					
12	1750-514-002-20	PLATE/CHAIN/RH	*	1	1	1					
13	V201-361-203-50	BOLT/M12X35/7T	*	2	2	2					
14	V401-160-012-00	WASHER,SP/M12	*	2	2	2					
15	V304-460-012-00	NUT/M12/7T	*	2	2	2					
16	1766-514-201-00	BUCKLE/TURN	*	2	2	2					
17	1766-514-210-00	CHAIN/CHECK/FRONT	*	2	2	2					
18	1774-514-230-00	CHAIN/CHECK/REA COMP	*	2	2	2					
19	1766-514-202-00	NUT	*	2	2	2					
20	1766-514-001-00	PIN/12X42	*	2	2	2					
21	V500-163-002-00	PIN,SPLIT/3X20	*	2	2	2					
22	V334-260-016-00	NUT/M16,P=1.5	*	2	2	2					
23	V401-160-016-00	WASHER,SP/M16	*	2	2	2					
24	1685-511-230-20	ROD/LIFT/LH COMP	*	1	1	1					
25	1600-515-240-10	BUCKLE/TURN/M24 COMP	*	1	1	1					
26	1600-515-210-30	SCREW/RH/M24 COMP	*	1	1	1					
27	1685-511-220-10	LIFTROD/L COMP	*	1	1	1					
28	1774-515-001-00	NUT/M24	*	1	1	1					
29	1600-515-001-00	PIN/16X73	*	2	2	2					
30	V411-260-012-00	WASHER,PL/M12	*	2	2	2					

FIG.107 LINK(TM3P)SYSTEM

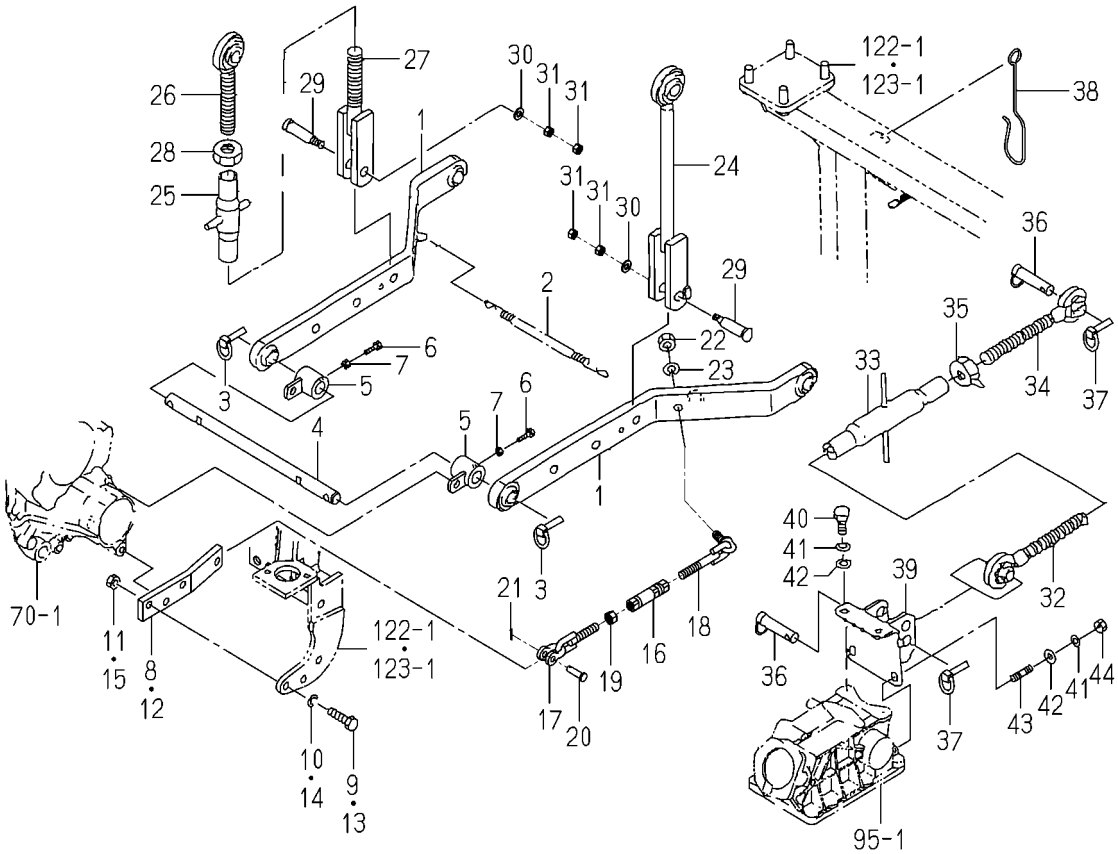

1774-514 -0100

KEY	PART CODE	DESCRIPTION	SPC	TYPE OF MODEL TM3217	TM3247	TM3267		ITC	COL	GRP	REMARKS
31	V304-460-012-00	NUT/M12/7T	*	4	4	4					
32	1427-511-250-40	LINK/TOP/LH COMP	*	1	1	1					
33	1550-514-290-00	TURNBUCLE COMP	*	1	1	1					
34	1568-525-300-40	LINK/TOP/RH COMP	*	1	1	1					
35	1402-511-600-00	NUT,TOP LINK LOCK	*	1	1	1					
36	1434-511-210-00	PIN,TOP LINK	*	2	2	2					
37	1673-525-002-30	LINKPIN	*	2	2	2					
38	1742-514-001-10	HOOK/TOPLINK	*	1	1	1					
39	1434-511-200-20	LINK BRACKET	*	1	1	1					
40	V201-361-203-00	BOLT/M12X30/7T	*	2	2	2					
41	V401-160-012-00	WASHER,SP/M12	*	4	4	4					
42	V411-260-012-00	WASHER,PL/M12	*	2	2	2					
43	V252-341-202-50	STUD/M12X25/7T	*	2	2	2					
44	V304-460-012-00	NUT/M12/7T	*	2	2	2					

FIG.108 HITCH(CREVICE)SYSTEM (EXCEPT D TYPE)

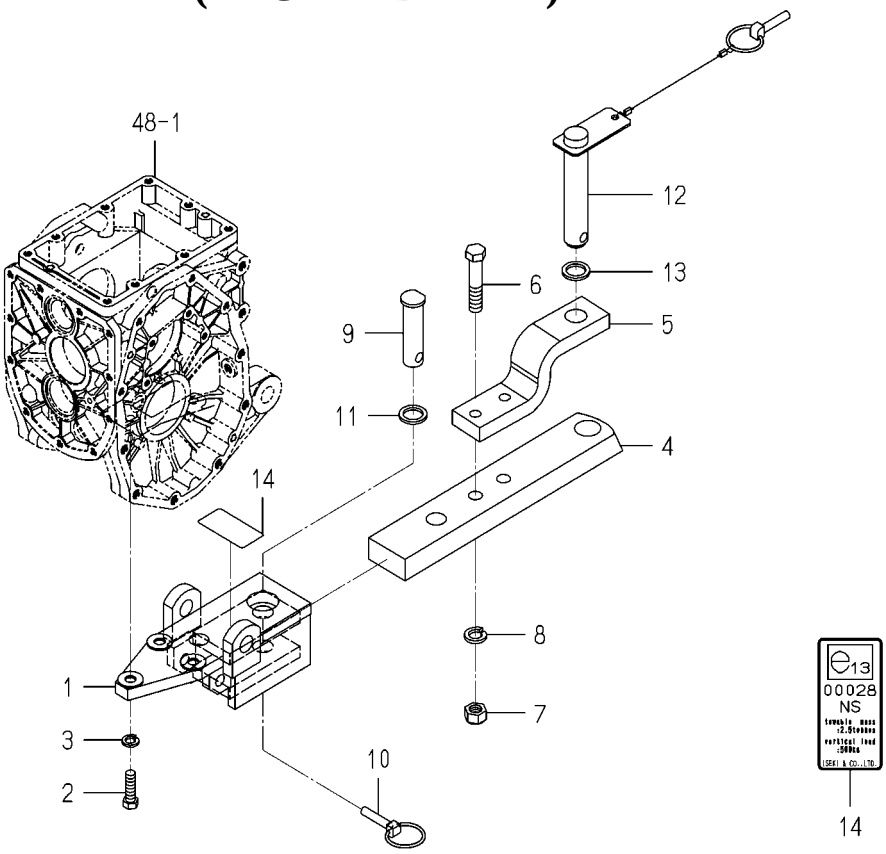

1774-520A-0100

KEY	PART CODE	DESCRIPTION	SPC	TYPE OF MODEL				ITC	COL	GRP	REMARKS
				TM3217	TM3247	TM3267					
1	1774-520-210-10	BRACKET/DRAWBAR COMP	*	1	1	1		1			
2	V201-361-204-00	BOLT/M12X40/7T	*	3	3	3					
3	V401-160-012-00	WASHER,SP/M12	*	3	3	3					
4	1774-520-001-00	DRAWBAR	*	1	1	1					
5	1837-521-061-00	LINK/DRAWBER	*	1	1	1					
6	V201-361-608-50	BOLT/M16X85/7T	*	2	2	2					
7	1518-924-001-00	NUT,U/M16	*	2	2	2					
8	V401-160-016-00	WASHER,SP/M16	*	2	2	2					
9	1640-520-005-00	PIN/25X91	*	1	1	1					
10	1673-525-002-30	LINKPIN	*	1	1	1					
11	1640-520-004-00	INSULATOR	*	1	1	1					
12	1772-521-220-10	PIN COMP	*	1	1	1					
13	1674-520-004-00	INSULATOR	*	1	1	1					
14	1774-520-002-10	LABEL/TRH-1774	*	1	1	1					

FIG.109 HOOD SYSTEM(TM3217,3247 TYPE)(1/2)

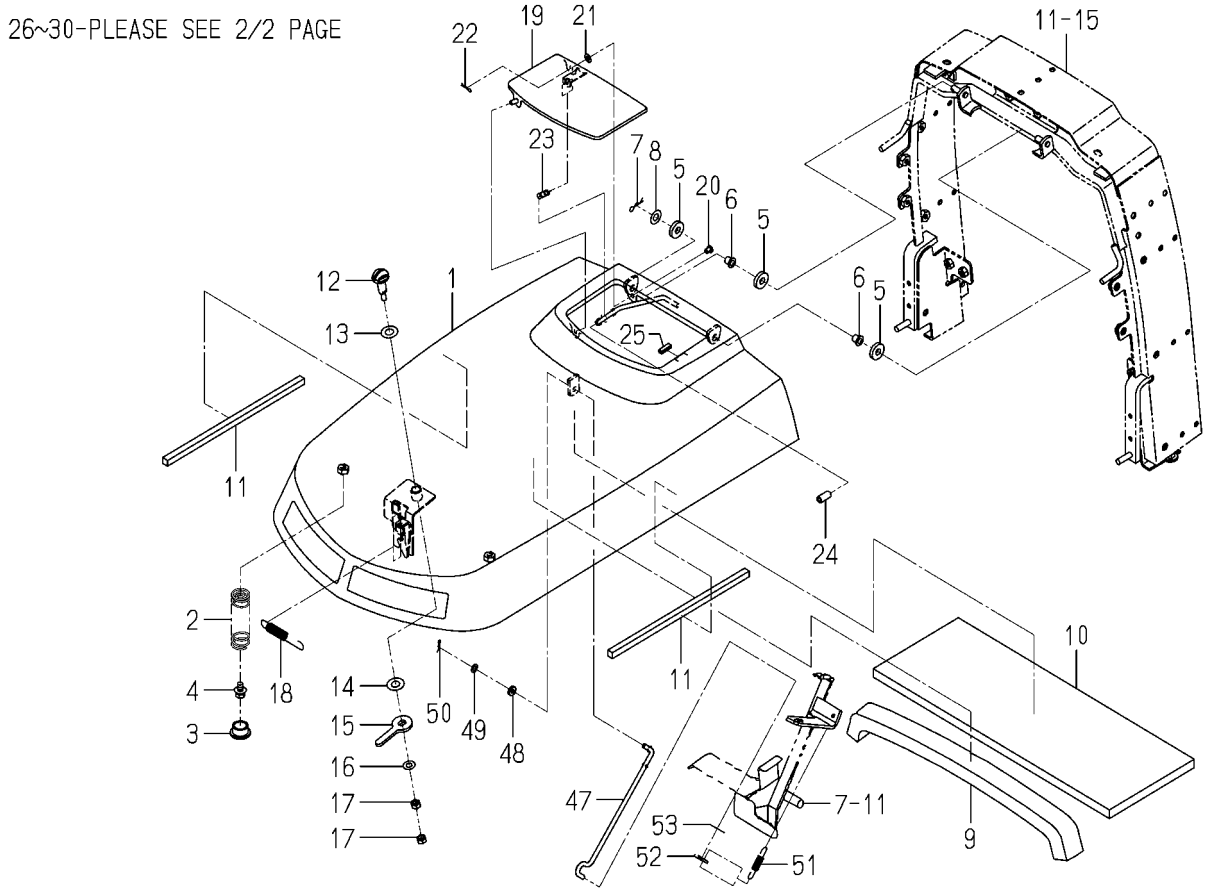

1774-601B-0100

KEY	PART CODE	DESCRIPTION	SPC	TYPE OF MODEL				ITC	COL	GRP	REMARKS
				TM3217	TM3247	TM3267					
1	1774-601-210-00	HOOD COMP	*	1	1				4L		
2	1716-601-001-00	SPRING/HC090	*	2	2						
3	7821-501-005-00	BUSH/19X30X14	*	2	2						
4	V211-360-801-60	BOLT,SP/M8X16	*	2	2						
5	1423-616-004-00	CUSHION/RUBBER/10X25	*	3	3						
6	2150-420-008-00	BUSH/08X15X11	*	2	2						
7	V560-160-008-00	PIN/SNAP	*	1	1						
8	V411-260-010-00	WASHER,PL/M10	*	1	1						
9	1726-601-007-00	INSULATOR	*	1	1						
10	1729-604-053-10	INSULATOR/SIDE	*	1	1						
11	1770-102-005-00	INSULATOR/10X10X290	*	2	2						
12	1774-601-003-00	PIN/HOOD	*	1	1						
13	1650-601-007-00	WASHER/12X25X02	*	1	1						
14	3610-440-018-00	WASHER	*	1	1						
15	1726-601-011-00	ARM/PLATE	*	1	1						
16	V411-260-008-00	WASHER,PL/M8	*	1	1						
17	V304-260-008-00	NUT/M8	*	2	2						
18	1588-117-001-00	SPRING/HE089	*	1	1						
19	1716-601-260-10	COVER COMP	*	1	1				4L		
20	1716-601-021-00	PIN/06X07	*	1	1						
21	V411-260-006-00	WASHER,PL/M6	*	1	1						
22	V560-160-006-00	PIN/SNAP	*	1	1						
23	1716-601-018-00	SPRING/HE036	*	1	1						
24	1716-601-019-00	TUBE/06X10X20	*	1	1						
25	1672-601-002-00	TRIM/20	*	1	1						
26	1763-102-220-10	PLATE/LOCK COMP	*	1	1						
27	V211-360-802-00	BOLT,SP/M8X20	*	2	2						
28	1761-604-710-01	COVER/SIDE/S/LH COMP	*	1	1				4L		
29	1765-604-007-10	INSULATOR	*	1	1						
30	1729-604-003-00	SPRING	*	2	2						

FIG.109 HOOD SYSTEM(TM3217,3247 TYPE)(2/2)

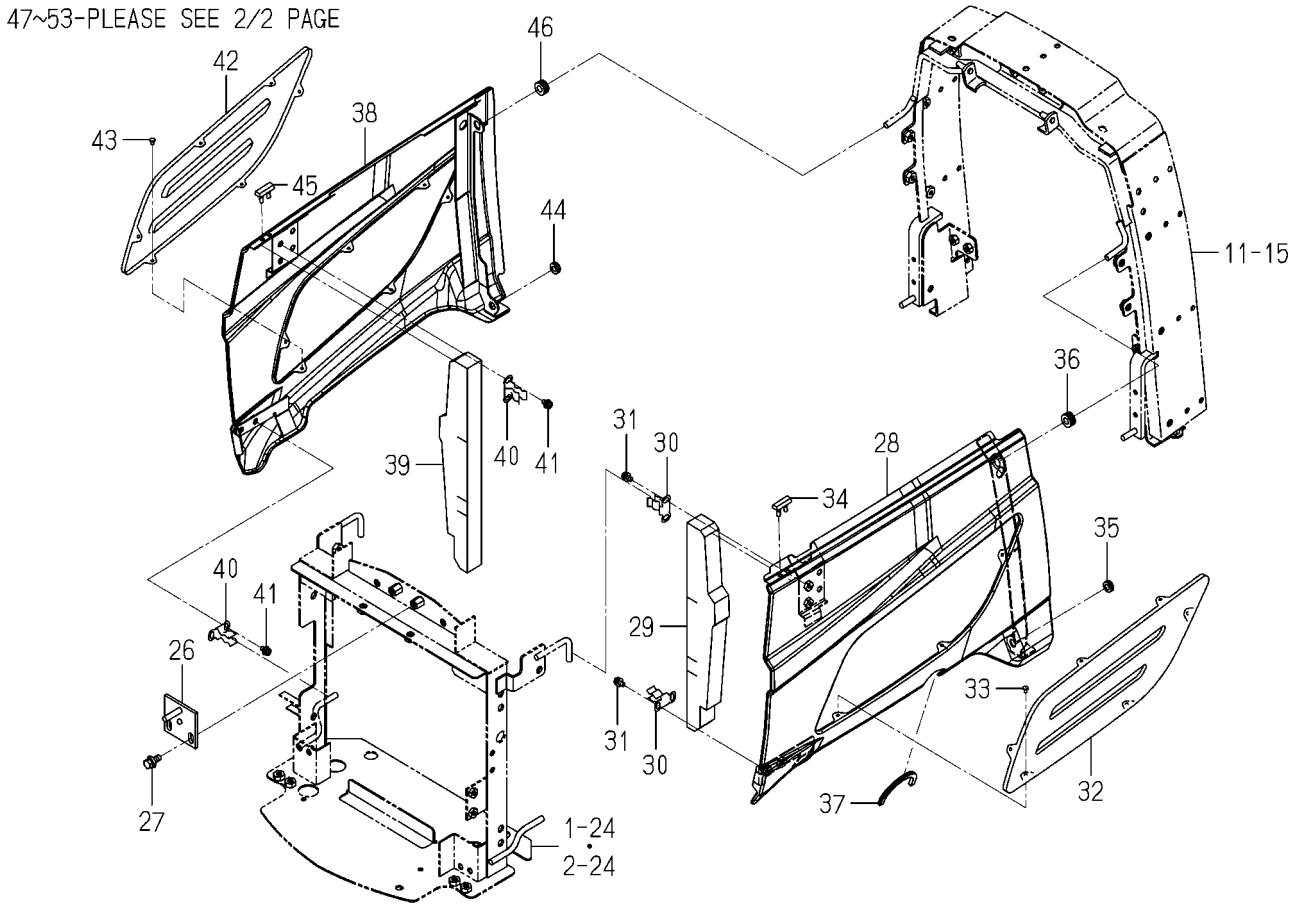

1774-601B-0100

KEY	PART CODE	DESCRIPTION	SPC	TYPE OF MODEL				ITC	COL	GRP	REMARKS
				TM3217	TM3247	TM3267					
31	V120-366-001-20	SCREW,SP/M6X12	*	4	4						
32	1765-604-005-00	NET/SIDE/LH	*	1	1				7F		
33	W296-134-007-00	RIVET,BLIND/4X7	*	6	6						
34	1716-601-017-00	INSULATOR	*	1	1						
35	4335-512-004-00	GROMMET/9	*	1	1						
36	1427-621-012-00	GROMMET	*	1	1						
37	1636-631-008-00	TRIM/140	*	1	1						
38	1761-604-720-11	COVER/SIDE/S/RH COMP	*	1	1				4L		
39	1765-604-007-10	INSULATOR	*	1	1						
40	1729-604-003-00	SPRING	*	2	2						
41	V120-366-001-20	SCREW,SP/M6X12	*	4	4						
42	1765-604-006-00	NET/SIDE/RH	*	1	1				7F		
43	W296-134-007-00	RIVET,BLIND/4X7	*	6	6						
44	4335-512-004-00	GROMMET/9	*	1	1						
45	1716-601-017-00	INSULATOR	*	1	1						
46	1427-621-012-00	GROMMET	*	1	1						
47	1764-601-001-20	ROD/HOOD	*	1	1						
48	1444-601-015-00	WASHER/6X14X3	*	1	1						
49	V411-260-006-00	WASHER,PL/M6	*	1	1						
50	V560-160-006-00	PIN/SNAP	*	1	1						
51	1414-312-002-00	SPRING,TENSION/53	*	1	1						
52	1764-601-002-00	WASHER/08X22X03	*	1	1						
53	1421-507-014-00	WASHER/6X24X2	*	1	1						

FIG.110 HOOD SYSTEM(TM3267 TYPE)(1/2)

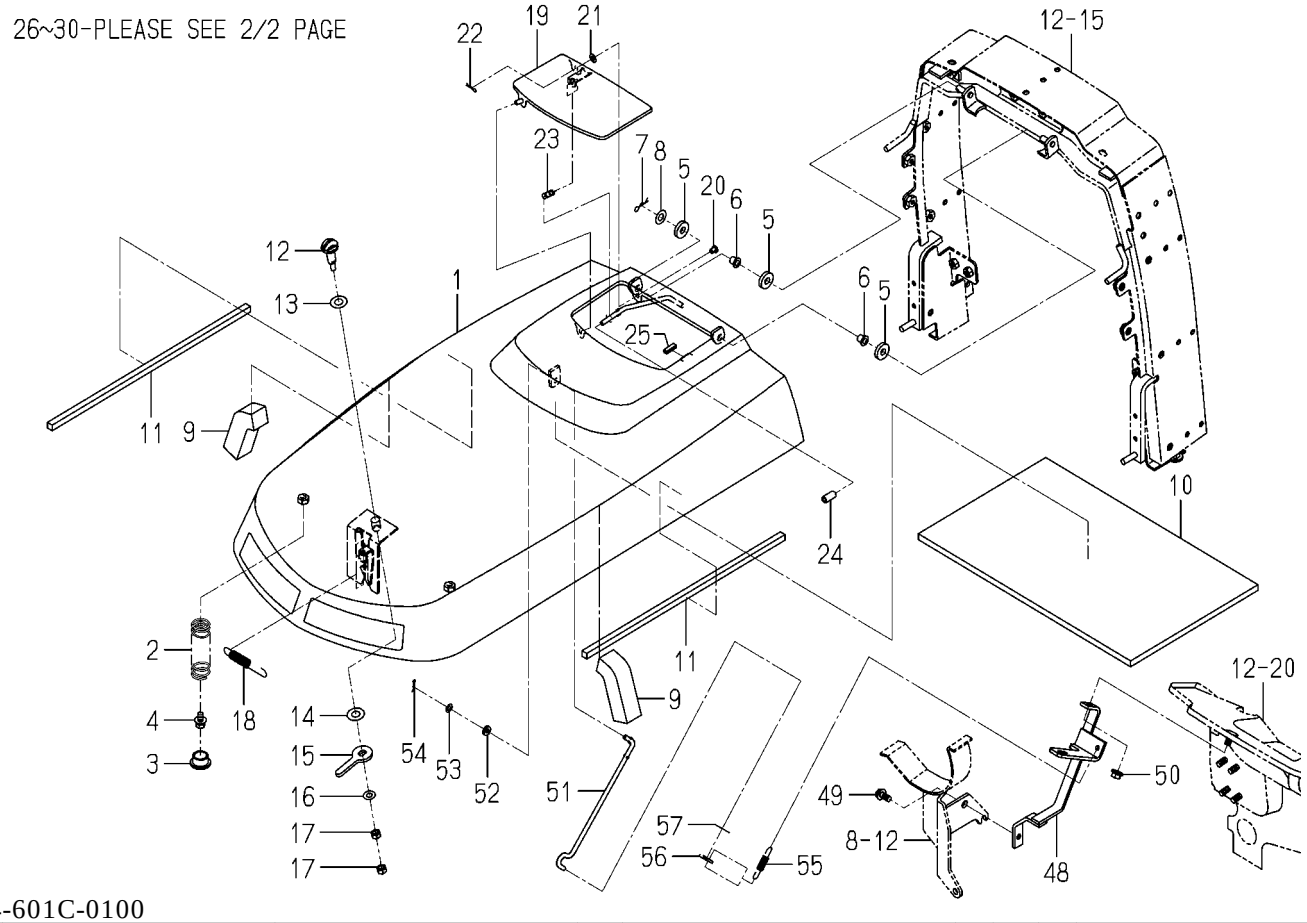

1774-601C-0100

KEY	PART CODE	DESCRIPTION	SPC	TYPE OF MODEL TM3217	TM3247	TM3267		ITC	COL	GRP	REMARKS
1	1766-601-700-10	HOOD/CY COMP	*			1			4L		
2	1716-601-001-00	SPRING/HC090	*			2					
3	7821-501-005-00	BUSH/19X30X14	*			2					
4	V211-360-801-60	BOLT,SP/M8X16	*			2					
5	1423-616-004-00	CUSHION/RUBBER/10X25	*			3					
6	2150-420-008-00	BUSH/08X15X11	*			2					
7	V560-160-008-00	PIN/SNAP	*			1					
8	V411-260-010-00	WASHER,PL/M10	*			1					
9	1672-102-004-00	INSULATOR	*			2					
10	1750-605-001-10	INSULATOR/HOOD	*			1					
11	1705-601-013-00	SEAL/10X10X420	*			2					
12	1774-601-003-00	PIN/HOOD	*			1					
13	1650-601-007-00	WASHER/12X25X02	*			1					
14	3610-440-018-00	WASHER	*			1					
15	1726-601-011-00	ARM/PLATE	*			1					
16	V411-260-008-00	WASHER,PL/M8	*			1					
17	V304-260-008-00	NUT/M8	*			2					
18	1588-117-001-00	SPRING/HE089	*			1					
19	1716-601-260-10	COVER COMP	*			1			4L		
20	1716-601-021-00	PIN/06X07	*			1					
21	V411-260-006-00	WASHER,PL/M6	*			1					
22	V560-160-006-00	PIN/SNAP	*			1					
23	1716-601-018-00	SPRING/HE036	*			1					
24	1716-601-019-00	TUBE/06X10X20	*			1					
25	1672-601-002-00	TRIM/20	*			1					
26	1763-102-220-10	PLATE/LOCK COMP	*			1					
27	V211-360-802-00	BOLT,SP/M8X20	*			2					
28	1761-604-740-01	COVER/SIDE/L/LH COMP	*			1			4L		
29	1765-604-007-10	INSULATOR	*			1					
30	1729-604-003-00	SPRING	*			2					

FIG.110 HOOD SYSTEM(TM3267 TYPE)(2/2)

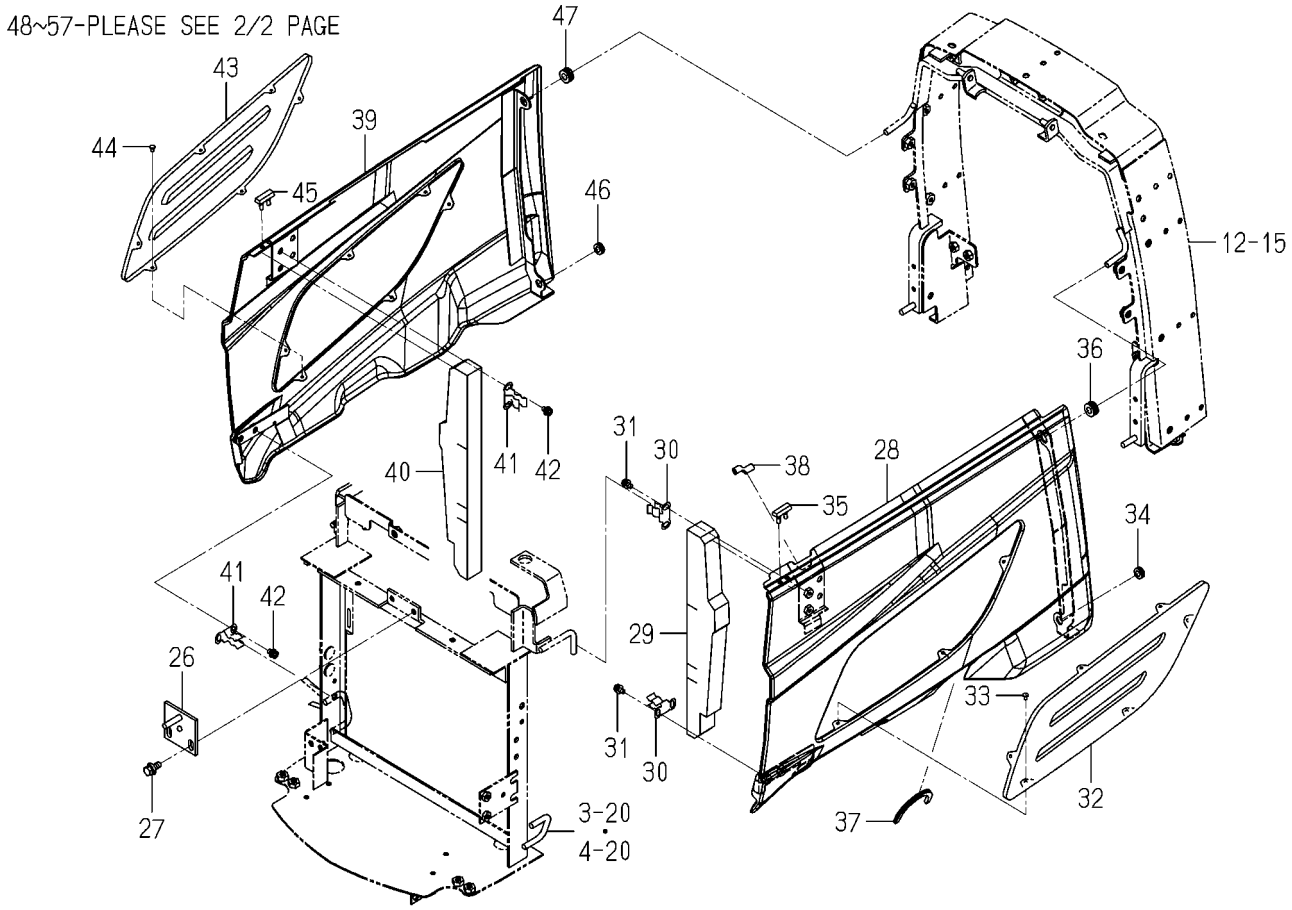

1774-601C-0100

KEY	PART CODE	DESCRIPTION	SPC	TYPE OF MODEL				ITC	COL	GRP	REMARKS
				TM3217	TM3247	TM3267					
31	V120-366-001-20	SCREW,SP/M6X12	*			4					
32	1765-604-005-00	NET/SIDE/LH	*			1			7F		
33	W296-134-007-00	RIVET,BLIND/4X7	*			6					
34	4335-512-004-00	GROMMET/9	*			1					
35	1716-601-017-00	INSULATOR	*			1					
36	1427-621-012-00	GROMMET	*			1					
37	1636-630-008-00	TRIM/150	*			1					
38	3689-582-001-00	INSULATOR/30	*			1					
39	1761-604-750-01	COVER/SIDE/L/RH COMP	*			1			4L		
40	1765-604-007-10	INSULATOR	*			1					
41	1729-604-003-00	SPRING	*			2					
42	V120-366-001-20	SCREW,SP/M6X12	*			4					
43	1765-604-006-00	NET/SIDE/RH	*			1			7F		
44	W296-134-007-00	RIVET,BLIND/4X7	*			6					
45	1716-601-017-00	INSULATOR	*			1					
46	4335-512-004-00	GROMMET/9	*			1					
47	1427-621-012-00	GROMMET	*			1					
48	1766-601-300-10	BRACKET/STAY/HOOD	*			1					
49	V231-360-801-60	FLANGEBOLT/M8X16	*			1					
50	V362-260-008-00	NUT/WASHER/M8	*			1					
51	1764-601-001-20	ROD/HOOD	*			1					
52	1444-601-015-00	WASHER/6X14X3	*			1					
53	V411-260-006-00	WASHER,PL/M6	*			1					
54	V560-160-006-00	PIN/SNAP	*			1					
55	1414-312-002-00	SPRING,TENSION/53	*			1					
56	1764-601-002-00	WASHER/08X22X03	*			1					
57	1421-507-014-00	WASHER/6X24X2	*			1					

FIG.111 GRILLE SYSTEM

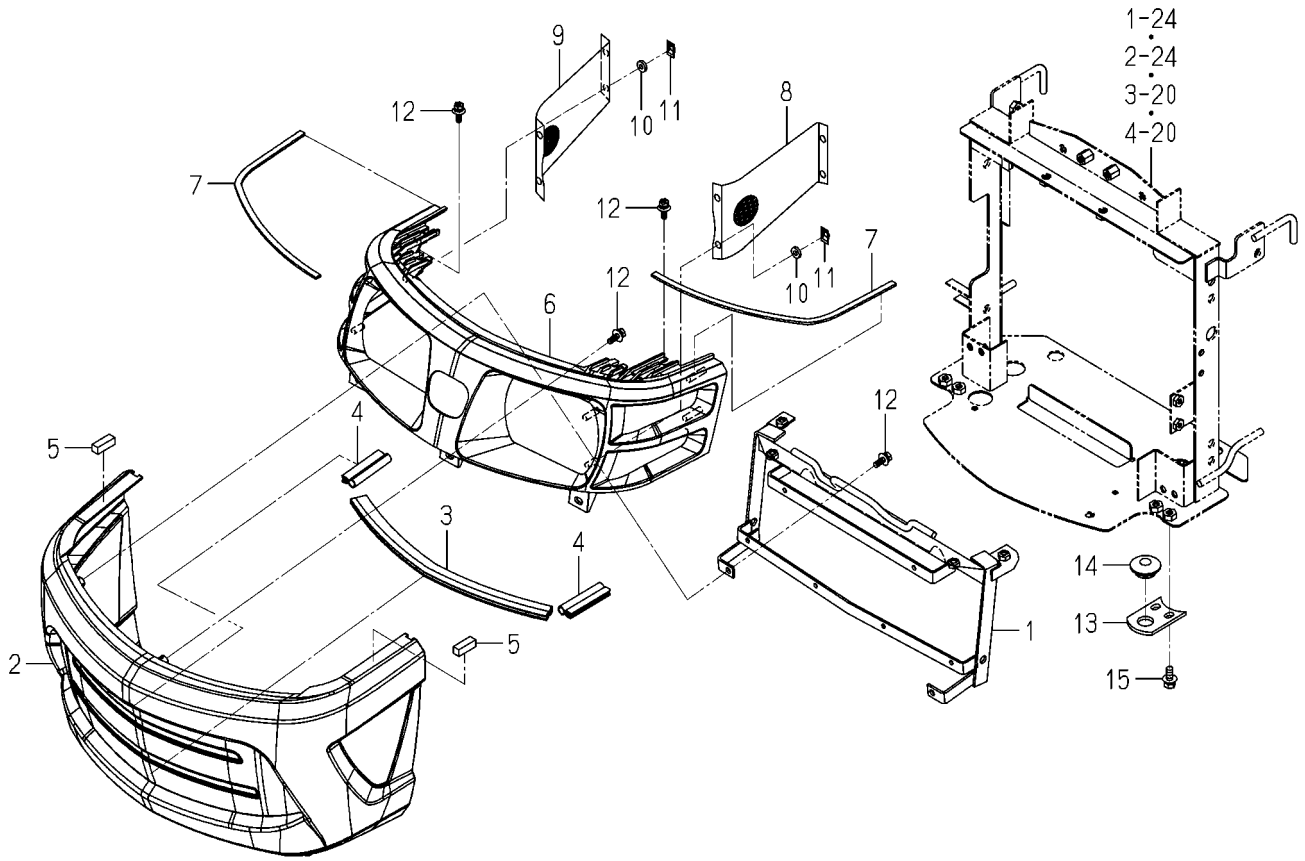

1774-602B-0100

KEY	PART CODE	DESCRIPTION	SPC	TYPE OF MODEL				ITC	COL	GRP	REMARKS
				TM3217	TM3247	TM3267					
1	1774-602-210-00	BRACKET/GRILLE COMP	*	1	1	1					
2	1763-602-011-00	GRILLE	*	1	1	1					
3	1740-602-057-00	INSULATOR/380	*	1	1	1					
4	1675-601-003-00	TRIM/70	*	2	2	2					
5	1774-602-002-00	INSULATOR/10X10X30	*	2	2	2					
6	1740-602-052-10	HOOD/LAMP	*	1	1	1					
7	1614-630-002-00	INSULATOR	*	2	2	2					
8	1740-602-053-00	NET/SIDE/LH	*	1	1	1					
9	1740-602-054-00	NET/SIDE/RH	*	1	1	1					
10	1444-601-015-00	WASHER/6X14X3	*	8	8	8					
11	V350-160-006-00	NUT,SPEED/M6	*	8	8	8					
12	2144-501-012-00	BOLT/M6X20/16	*	7	7	7					
13	1716-410-003-00	PLATE/IR/44X60	*	2	2	2					
14	1421-603-004-00	BUSH,LEVER	*	2	2	2					
15	V211-360-802-00	BOLT,SP/M8X20	*	4	4	4					

FIG.112 COVER(STEERING)SYSTEM(F TYPE)

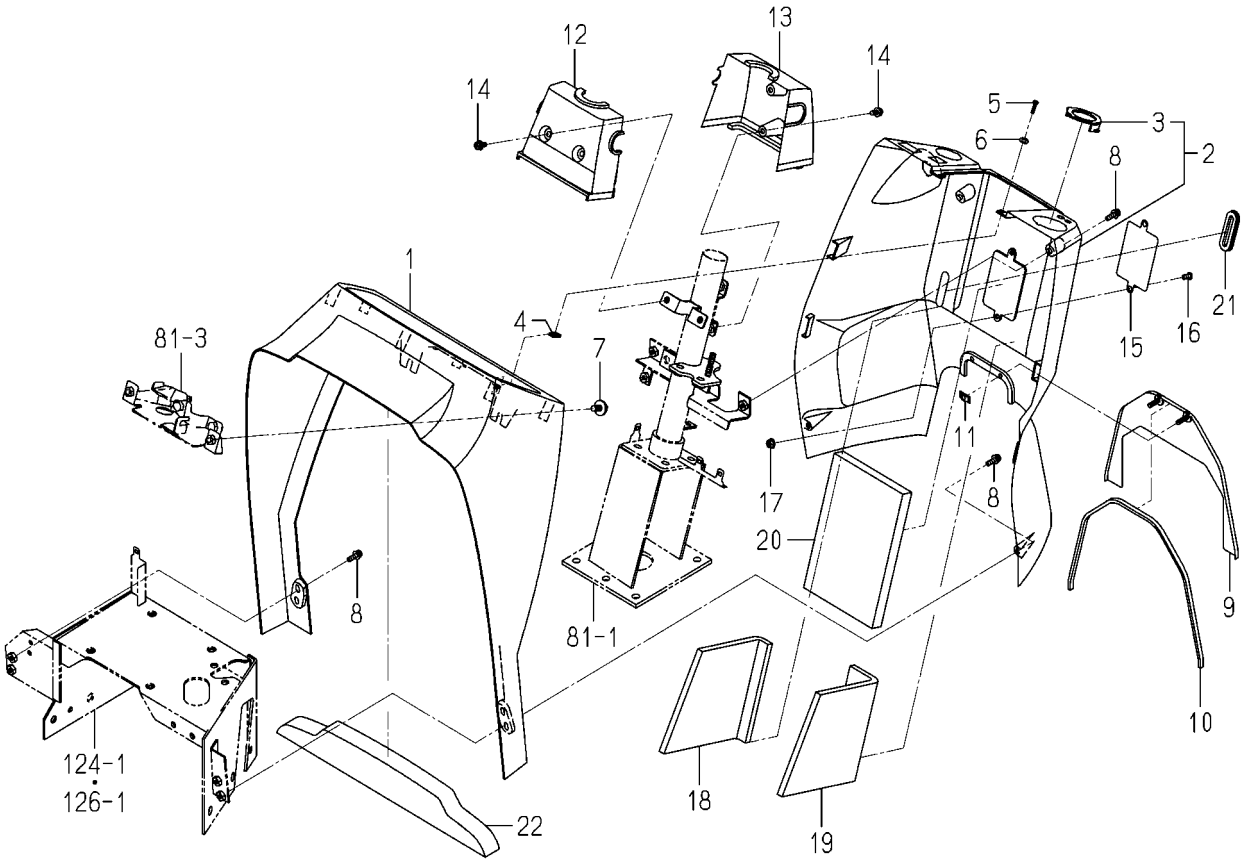

1774-603 -0100

KEY	PART CODE	DESCRIPTION	SPC	TYPE OF MODEL TM3217	TM3247	TM3267		ITC	COL	GRP	REMARKS
1	1775-603-001-00	COVER/DUSH/F	*	1	1	1					
2	1774-603-210-10	COVER/DUSH/REAR ASSY	*	1	1	1					
3	1774-603-212-00	BRACKET/SWITCH	*	1	1	1					
4	1716-603-005-00	NUT/SPRING	*	2	2	2					
5	1560-401-004-40	BOLT/M5X16	*	2	2	2					
6	V411-260-005-00	WASHER,PL/M5	*	2	2	2					
7	2144-415-003-00	BOLT/M8X20(22)	*	2	2	2					
8	V120-376-002-00	SCREW,SP/M6X20	*	6	6	6					
9	1774-603-200-00	COVER/DUSH/REAR COMP	*	1	1	1			5I		
10	1682-603-006-00	TRIM/570	*	1	1	1					
11	V350-160-006-00	NUT,SPEED/M6	*	2	2	2					
12	1774-603-001-00	COVER/STEERING/F	*	1	1	1					
13	1774-603-002-00	COVER/STEERING/R	*	1	1	1					
14	V120-376-001-60	SCREW,SP/M6X16	*	4	4	4					
15	1709-603-001-00	COVER/PLATE	*	1	1	1			5I		
16	V120-376-001-20	SCREW,SP/M6X12	*	2	2	2					
17	V360-260-006-00	NUT/WASHER/M6	*	2	2	2					
18	1614-603-012-00	INSULATOR	*	1	1	1					
19	1614-603-013-00	INSULATOR	*	1	1	1					
20	1716-603-075-00	INSULATOR/145X215	*	1	1	1					
21	1774-603-005-00	PLUG	*	1	1	1					
22	1774-603-007-00	INSULATOR/DASH/UPPER	*	1	1	1					

FIG.113 COVER(STEERING)SYSTEM(H TYPE)

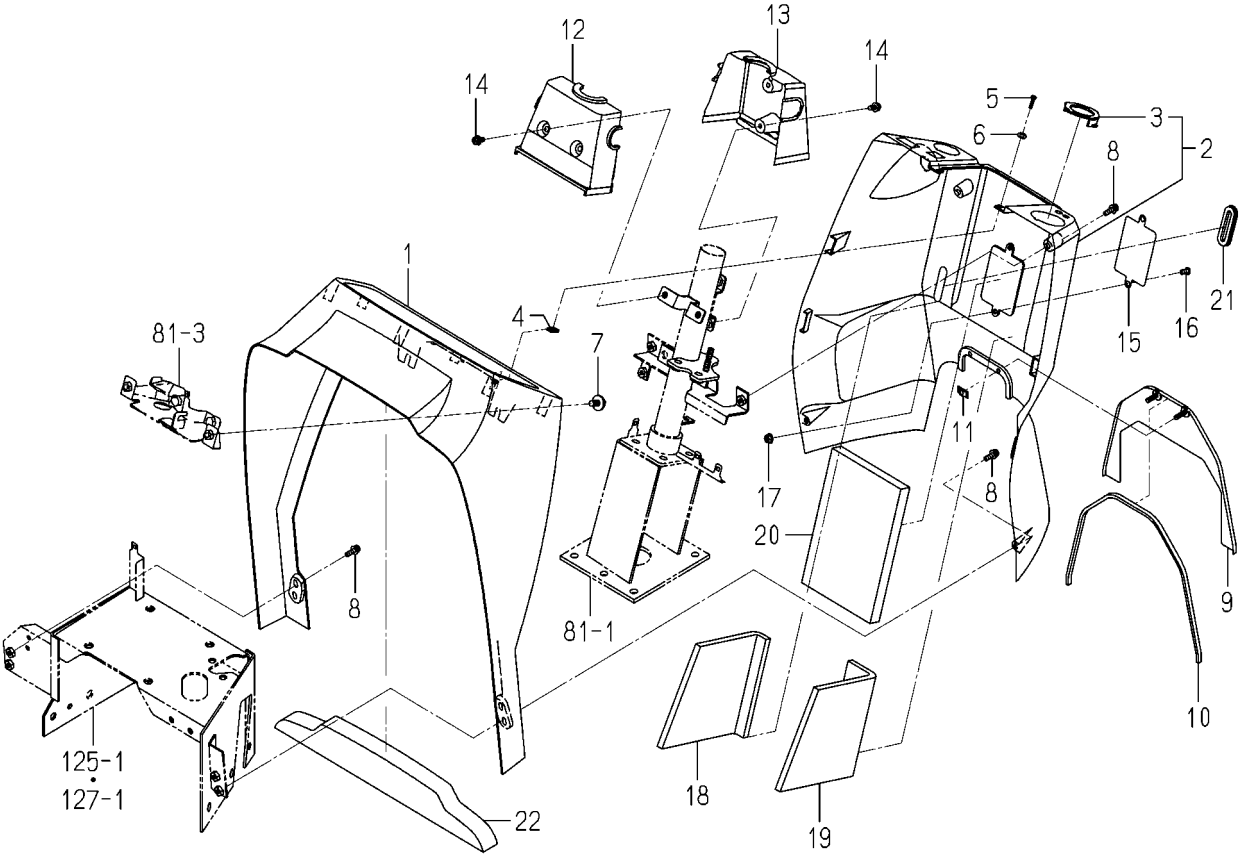

1774-603A-0100

KEY	PART CODE	DESCRIPTION	SPC	TYPE OF MODEL				ITC	COL	GRP	REMARKS
				TM3217	TM3247	TM3267					
1	1775-603-001-00	COVER/DUSH/F	*	1	1	1					
2	1774-603-210-10	COVER/DUSH/REAR ASSY	*	1	1	1					
3	1774-603-212-00	BRACKET/SWITCH	*	1	1	1					
4	1716-603-005-00	NUT/SPRING	*	2	2	2					
5	1560-401-004-40	BOLT/M5X16	*	2	2	2					
6	V411-260-005-00	WASHER,PL/M5	*	2	2	2					
7	2144-415-003-00	BOLT/M8X20(22)	*	2	2	2					
8	V120-376-002-00	SCREW,SP/M6X20	*	6	6	6					
9	1774-603-200-00	COVER/DUSH/REAR COMP	*	1	1	1			5I		
10	1682-603-006-00	TRIM/570	*	1	1	1					
11	V350-160-006-00	NUT,SPEED/M6	*	2	2	2					
12	1774-603-001-00	COVER/STEERING/F	*	1	1	1					
13	1774-603-008-00	COVER/STEERING/H/R	*	1	1	1					
14	V120-376-001-60	SCREW,SP/M6X16	*	4	4	4					
15	1709-603-001-00	COVER/PLATE	*	1	1	1			5I		
16	V120-376-001-20	SCREW,SP/M6X12	*	2	2	2					
17	V360-260-006-00	NUT/WASHER/M6	*	2	2	2					
18	1614-603-012-00	INSULATOR	*	1	1	1					
19	1614-603-013-00	INSULATOR	*	1	1	1					
20	1716-603-075-00	INSULATOR/145X215	*	1	1	1					
21	1774-603-005-00	PLUG	*	1	1	1					
22	1774-603-007-00	INSULATOR/DASH/UPPER	*	1	1	1					

FIG.114 FENDER SYSTEM(EXCEPT D TYPE)

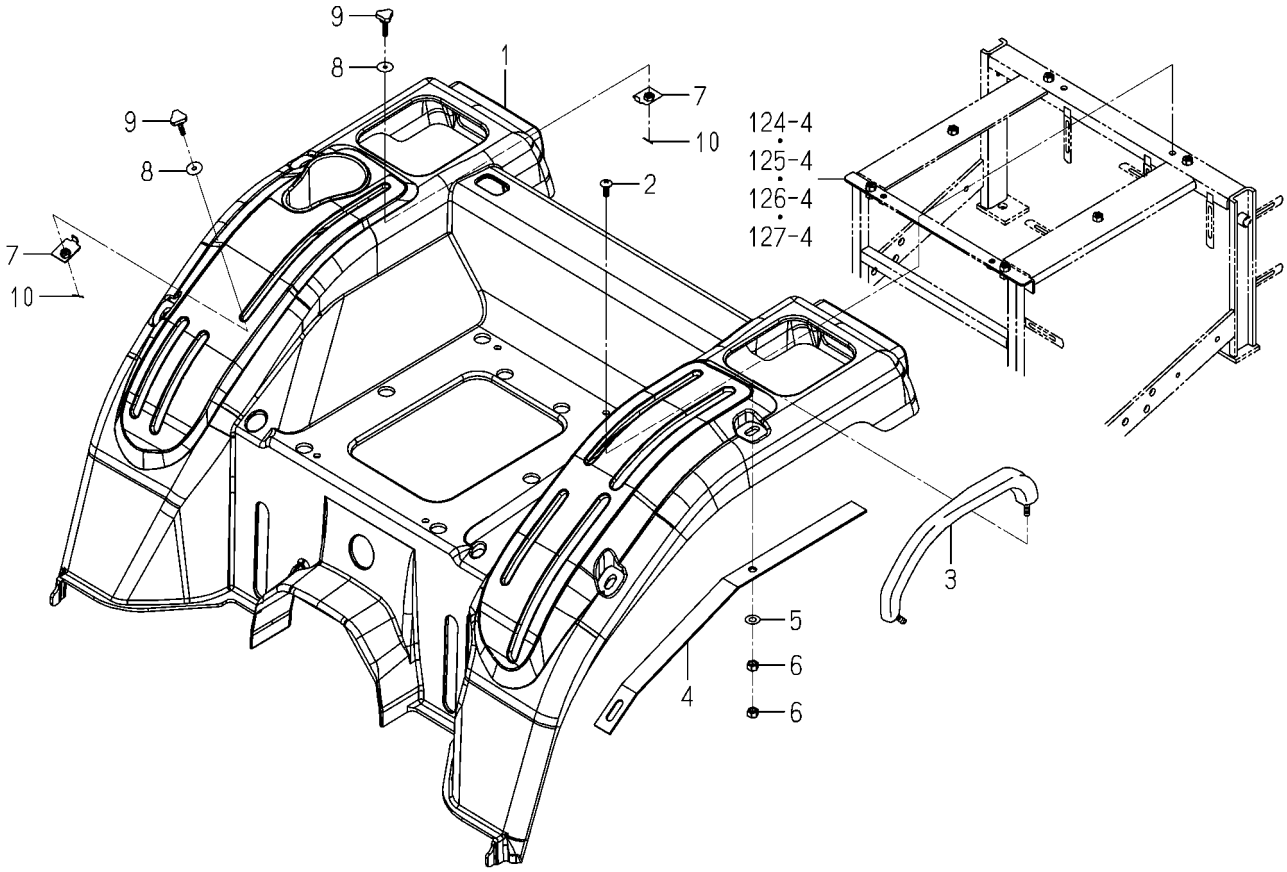

1774-606A-0100

KEY	PART CODE	DESCRIPTION	SPC	TYPE OF MODEL				ITC	COL	GRP	REMARKS
				TM3217	TM3247	TM3267					
1	1774-606-001-30	FENDER	*	1	1	1			4L		
2	3824-232-021-00	SCREW/TRUSS/M08X20	*	4	4	4					
3	1773-631-035-00	GRIP/ASSIST	*	2	2	2					
4	1774-606-010-00	STAY	*	2	2	2					
5	V411-260-010-00	WASHER,PL/M10	*	4	4	4					
6	V304-260-010-00	NUT/M10	*	8	8	8					
7	1614-608-220-10	PLATE/STOP COMP	*	2	2	2					
8	1421-507-014-00	WASHER/6X24X2	*	2	2	2					
9	1690-608-003-10	BOLT/KNOB/M06X27	*	2	2	2					
10	V500-161-601-50	PIN,SPLIT/1.6X15	*	2	2	2					

FIG.115 SEAT(BASE)SYSTEM(EXCEPT D TYPE)

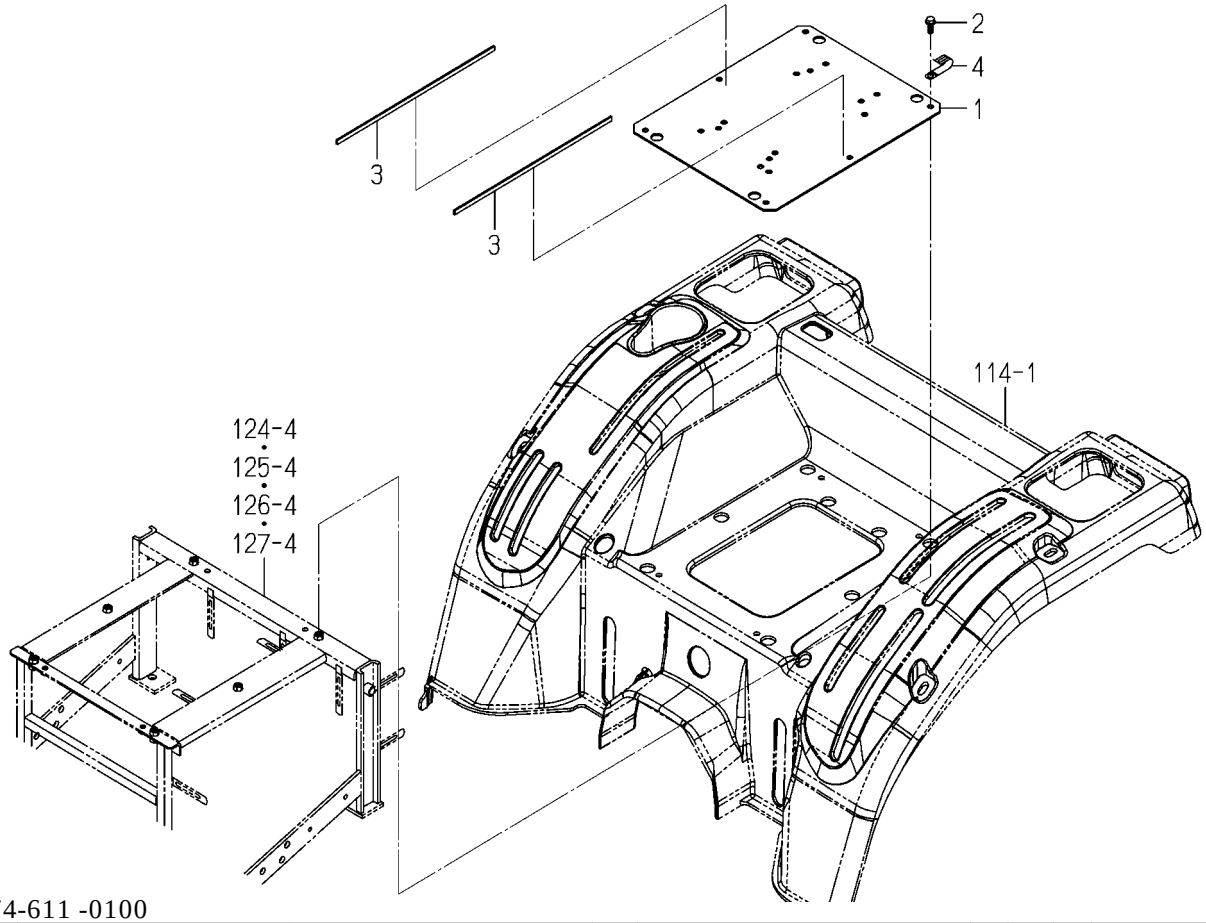

1774-611 -0100

KEY	PART CODE	DESCRIPTION	SPC	TYPE OF MODEL				ITC	COL	GRP	REMARKS
				TM3217	TM3247	TM3267					
1	1774-611-001-10	BRACKET/SEAT	*	1	1	1					
2	V231-360-802-00	FLANGEBOLT/M8X20	*	6	6	6					
3	1614-630-002-00	INSULATOR	*	2	2	2					
4	1425-621-004-00	HOLDER/JE/9-9	*	1	1	1					

FIG.116 SEAT(NUMBER)SYSTEM(S TYPE)

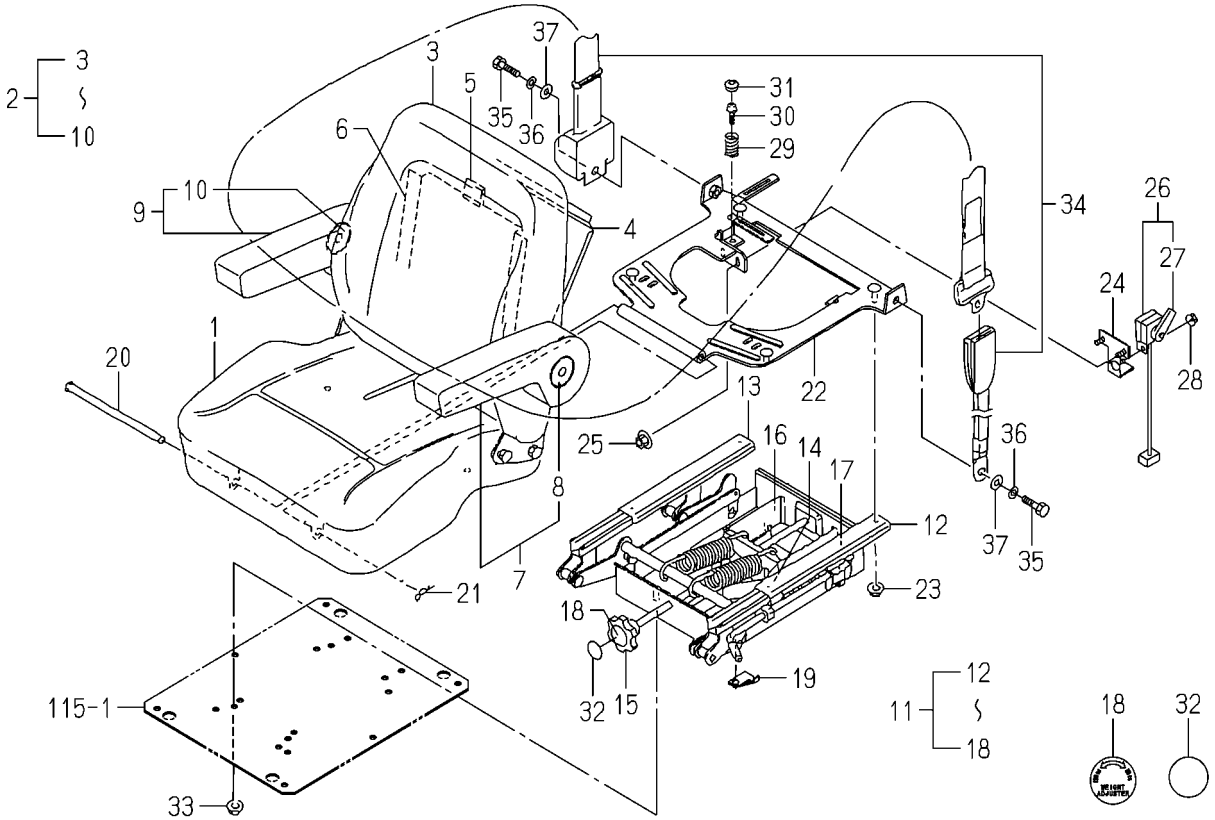

1774-611A-0100

KEY	PART CODE	DESCRIPTION	SPC	TYPE OF MODEL				ITC	COL	GRP	REMARKS
				TM3217	TM3247	TM3267					
1	1773-611-210-00	SEAT ASSY	*		1	1					
2	1773-611-310-10	BACK(ARMREST) ASSY	*		1	1					
3	1773-611-331-00	PANEL/BACK	*		1	1					
4	1773-611-332-00	COVER	*		1	1					
5	1773-611-333-00	STRIKER	*		1	1					
6	1773-611-334-00	STRAP	*		1	1					
7	1773-611-270-10	ARMREST/LH ASSY	*		1	1					
8	1773-611-279-00	COVER	*		1	1					
9	1773-611-280-10	ARMREST/RH ASSY	*		1	1					
10	1773-611-279-00	COVER	*		1	1					
11	1785-611-220-30	SUSPENSION ASSY	*		1	1					
12	1785-611-221-00	RAIL/SLIDE/SEAT/L	*		1	1					
13	1719-611-623-00	RAIL/SLIDE/SEAT/R	*		1	1					
14	1792-611-420-00	DAMPER ASSY	*		1	1					
15	1719-611-624-00	KNOB ASSY	*		1	1					
16	1785-611-012-00	INSULATOR	*		2	2					
17	1785-611-013-00	STOPPER	*		2	2					
18	1785-611-011-00	LABEL/ADJUST	*		1	1					
19	1773-611-002-00	PLATE/STOPPER	*		1	1					
20	1488-611-003-10	PIN,SEAT SET	*		1	1					
21	1305-241-001-00	PIN,HAIR	*		1	1					
22	1774-611-210-10	BRACKET/SEAT COMP	*		1	1					
23	V362-260-008-00	NUT/WASHER/M8	*		4	4					
24	1773-611-250-10	BRACKET/SWITCH COMP	*		1	1					
25	V360-260-006-00	NUT/WASHER/M6	*		2	2					
26	1773-611-260-30	SWITCH/SEAT ASSY	*		1	1					
27	1773-611-262-00	ARM(SWITCH)	*		1	1					
28	V360-260-006-00	NUT/WASHER/M6	*		1	1					
29	1773-611-001-10	SPRING/HC037	*		2	2					
30	V120-366-001-60	SCREW,SP/M6X16	*		2	2					

FIG.116 SEAT(NUMBER)SYSTEM(S TYPE)

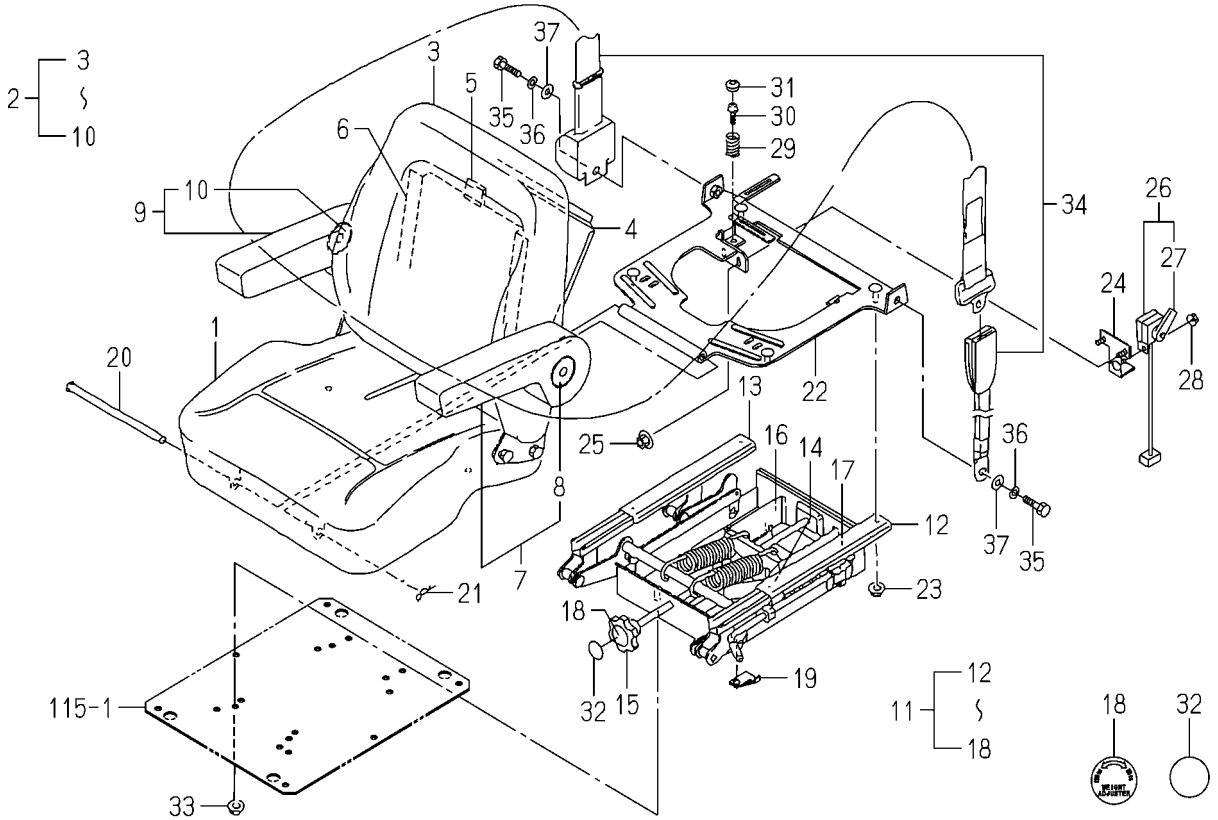

1774-611A-0100

KEY	PART CODE	DESCRIPTION	SPC	TYPE OF MODEL				ITC	COL	GRP	REMARKS
				TM3217	TM3247	TM3267					
31	1773-611-003-10	GROMMET	*		2	2					
32	1773-611-005-00	LABEL/SEAT	*		1	1					
33	V362-260-008-00	NUT/WASHER/M8	*		4	4					
34	1742-611-240-00	BELT/SEAT SET	*		1	1					
35	V201-461-002-00	BOLT/M10X20/9T	*		2	2					
36	V401-160-010-00	WASHER,SP/M10	*		2	2					
37	V411-260-010-00	WASHER,PL/M10	*		2	2					

FIG.117 SEAT(W10)SYSTEM (Z TYPE-STANDARD/ EXCEPT Z,S,D TYPE-OPTION)

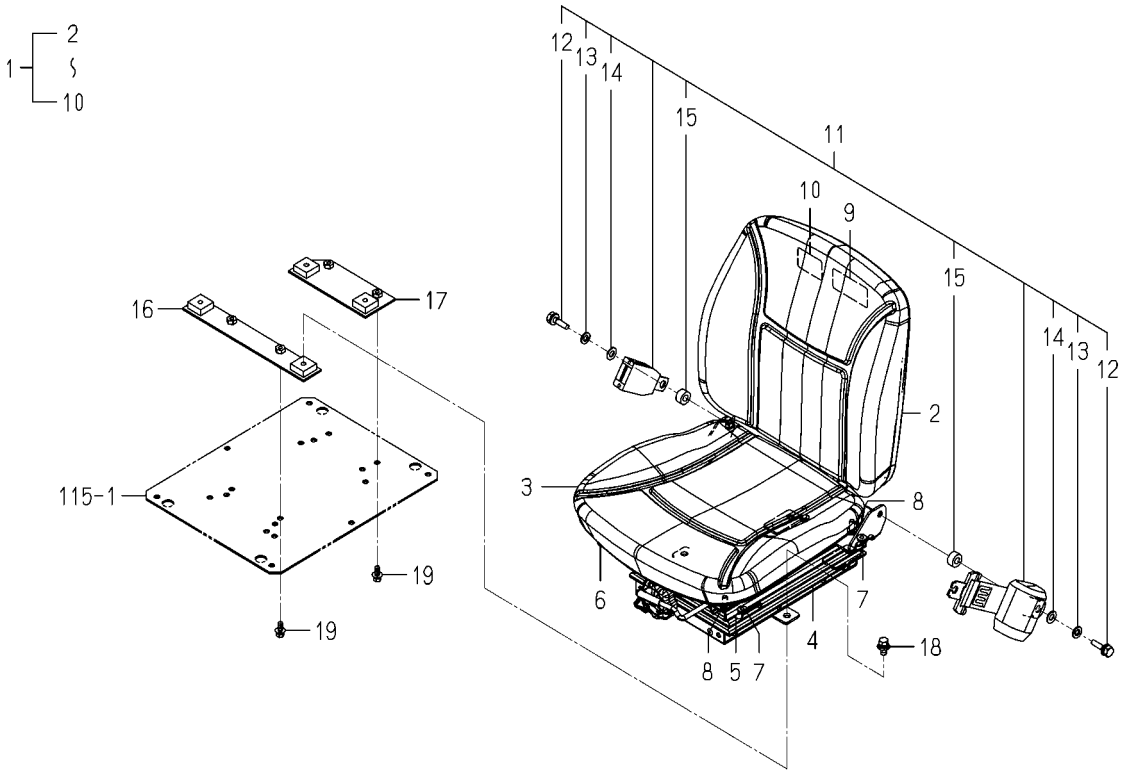

1774-612 -0100

KEY	PART CODE	DESCRIPTION	SPC	TYPE OF MODEL				ITC	COL	GRP	REMARKS
				TM3217	TM3247	TM3267					
1	1776-612-210-30	SEAT/W10 SET	*	1	1	1					
2	1776-612-211-10	SEAT/BACK ASSY	*	1	1	1					
3	1776-612-212-00	SEAT/CUSHION ASSY	*	1	1	1					
4	1776-612-213-00	SEAT/SUSPENSION ASSY	*	1	1	1					
5	1776-612-214-00	SEAT/SLIDE/LEVE ASSY	*	1	1	1					
6	1776-612-215-00	SEAT/SLIDE ASSY	*	1	1	1					
7	1776-612-216-00	NUT/FLANGE/M08	*	4	4	4					
8	1776-612-217-00	FLANGEBOLT	*	6	6	6					
9	1776-612-218-00	LABEL/78/764	*	1	1	1					
10	1776-612-219-00	LABEL/1322/2014	*	1	1	1					
11	1776-612-250-00	BELT/SEAT SET	*	1	1	1					
12	1776-612-252-00	BOLT/M10X1.25X20	*	2	2	2					
13	1776-612-253-00	WASHER/SPRING/10	*	2	2	2					
14	1776-612-254-00	WASHER/11X22X02	*	2	2	2					
15	1776-612-255-00	COLLAR/12X24X12	*	2	2	2					
16	1774-612-300-00	BRACKET/SEAT/F/W10	*	1	1	1					
17	1774-612-310-00	BACKET/SEAT/R/W10	*	1	1	1					
18	V211-661-002-00	BOLT,SP/M10X20/7T	*	4	4	4					
19	V211-660-802-00	BOLT,SP/M8X20/7T	*	4	4	4					

FIG.118 MIRROR SYSTEM(EXCEPT A,D TYPE)

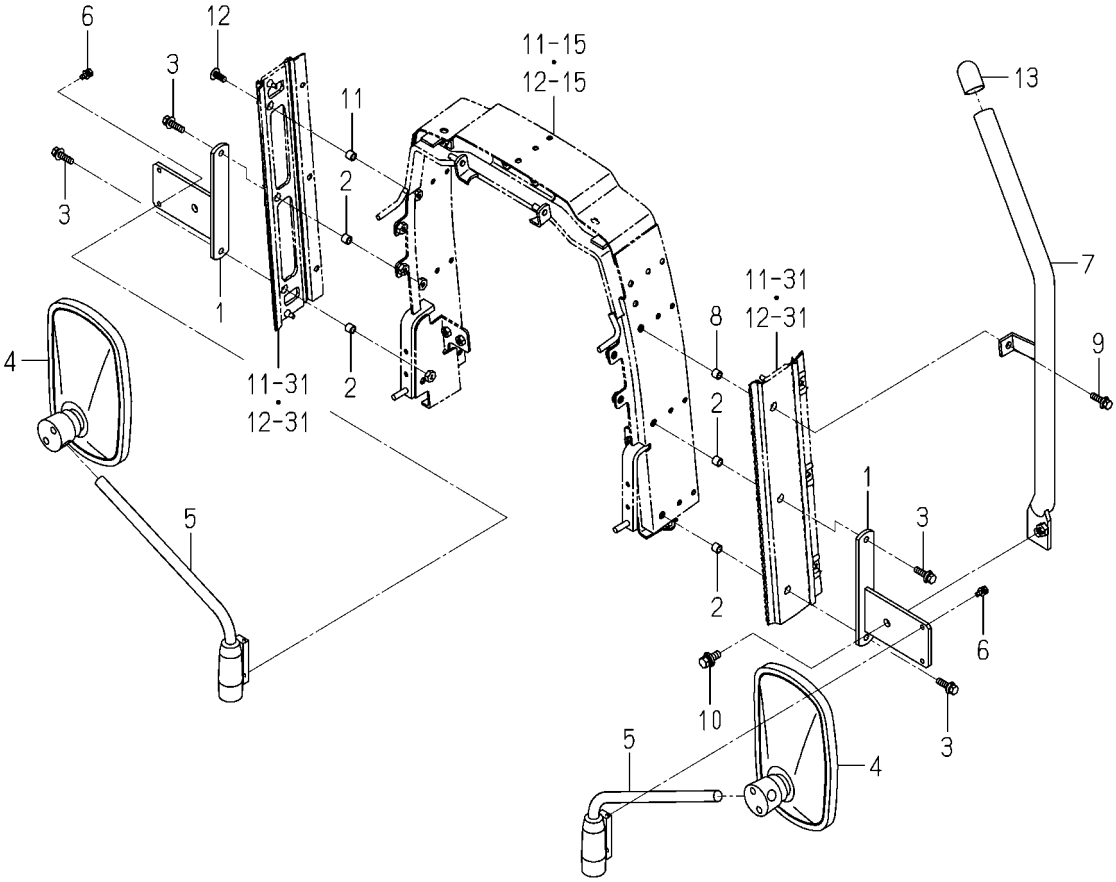

1774-619A-0100

KEY	PART CODE	DESCRIPTION	SPC	TYPE OF MODEL				ITC	COL	GRP	REMARKS
				TM3217	TM3247	TM3267					
1	1774-619-210-10	STAY/MIRROR COMP	*	2	2	2					
2	2502-616-004-00	COLLAR/08X12X10	*	4	4	4					
3	V211-370-803-00	BOLT,SP/M8X30	*	4	4	4					
4	1674-619-300-10	MIRROR ASSY	*	2	2	2					
5	1674-619-310-00	ARM/MIRROR ASSY	*	2	2	2					
6	V210-360-601-60	BOLT,SP/M6X16	*	4	4	4					
7	1774-619-220-10	STAY/LH COMP	*	1	1	1					
8	2502-616-004-00	COLLAR/08X12X10	*	1	1	1					
9	V211-370-803-00	BOLT,SP/M8X30	*	1	1	1					
10	V211-361-002-50	BOLT,SP/M10X25	*	1	1	1					
11	2502-616-004-00	COLLAR/08X12X10	*	1	1	1					
12	3824-232-021-00	SCREW/TRUSS/M08X20	*	1	1	1					
13	1792-590-004-00	CAP/28	*	1	1	1					

FIG.119 MIRROR SYSTEM(A,D TYPE)

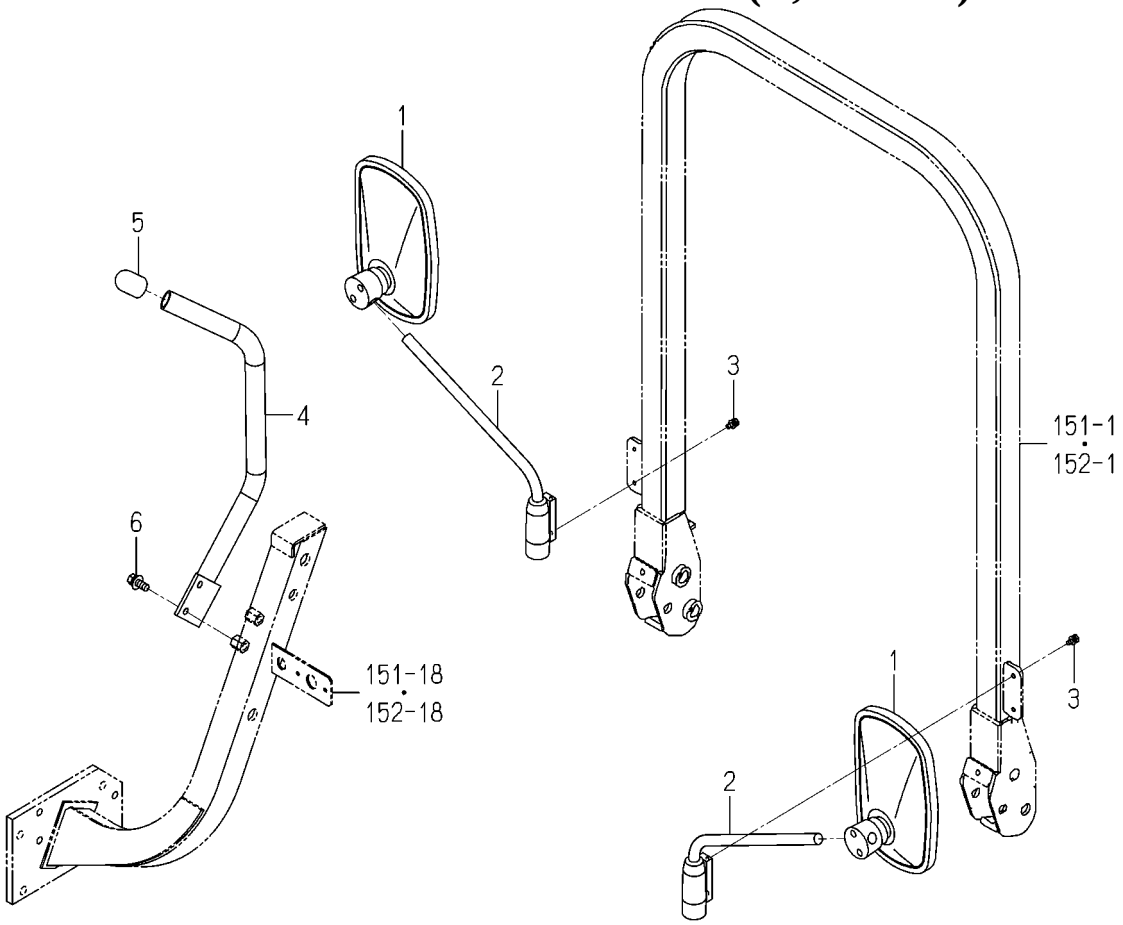

1774-619B-0100

KEY	PART CODE	DESCRIPTION	SPC	TYPE OF MODEL				ITC	COL	GRP	REMARKS
				TM3217	TM3247	TM3267					
1	1674-619-300-10	MIRROR ASSY	*	2	2	2					
2	1674-619-310-00	ARM/MIRROR ASSY	*	2	2	2					
3	V210-360-601-60	BOLT,SP/M6X16	*	4	4	4					
4	1774-619-300-00	GRIP/ASSIST COMP	*	1	1	1					
5	1792-590-004-00	CAP/28	*	1	1	1					
6	V211-361-002-50	BOLT,SP/M10X25	*	2	2	2					

FIG.120 MOUNT(FRONT)SYSTEM (EXCEPT D TYPE)

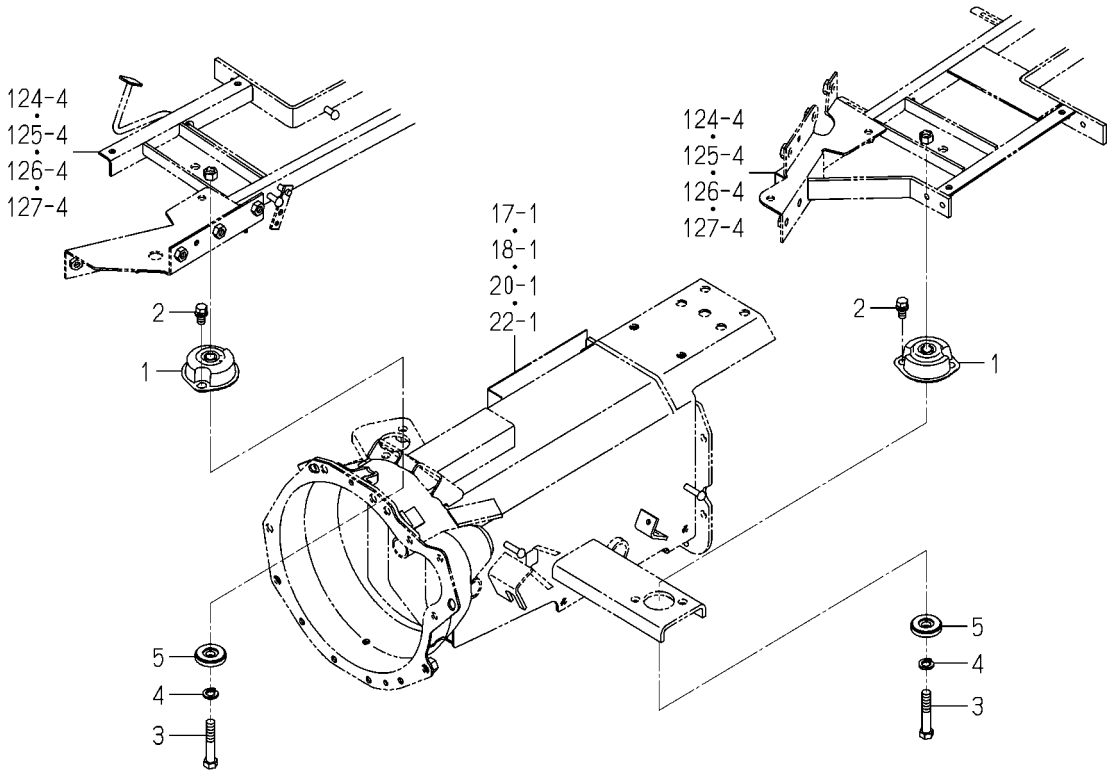

1774-625 -0100

KEY	PART CODE	DESCRIPTION	SPC	TYPE OF MODEL TM3217	TM3247	TM3267		ITC	COL	GRP	REMARKS
1	1617-625-001-10	INSULATOR/MOUNT	*	2	2	2					
2	V211-261-002-00	BOLT,S/M10X20	*	4	4	4					
3	V201-361-206-50	BOLT/M12X65/7T	*	2	2	2					
4	V401-160-012-00	WASHER,SP/M12	*	2	2	2					
5	1614-626-400-00	WASHER COMP	*	2	2	2					

FIG.121 MOUNT(FRONT)SYSTEM(D TYPE)

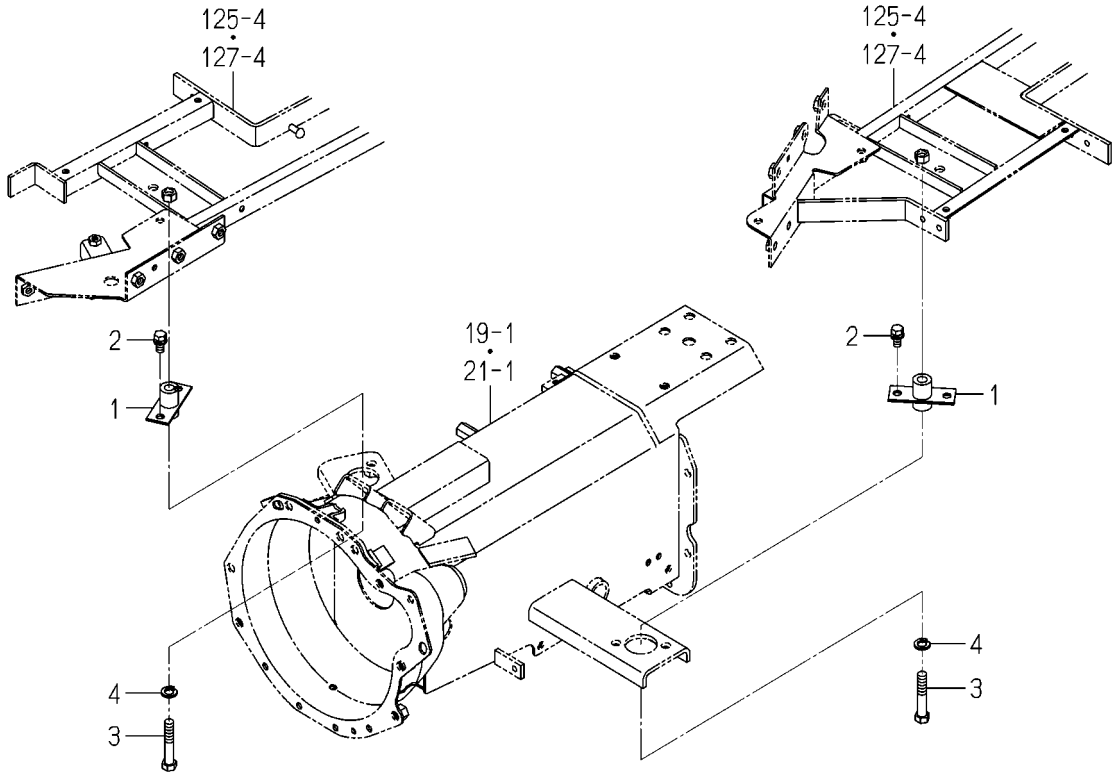

1774-625A-0100

KEY	PART CODE	DESCRIPTION	SPC	TYPE OF MODEL				ITC	COL	GRP	REMARKS
				TM3217	TM3247	TM3267					
1	1774-625-210-00	BRACKET COMP	*	2	2	2					
2	V211-261-002-00	BOLT,S/M10X20	*	4	4	4					
3	V201-361-206-50	BOLT/M12X65/7T	*	2	2	2					
4	V401-160-012-00	WASHER,SP/M12	*	2	2	2					

FIG.122 MOUNT(REAR)SYSTEM (EXCEPT D TYPE)

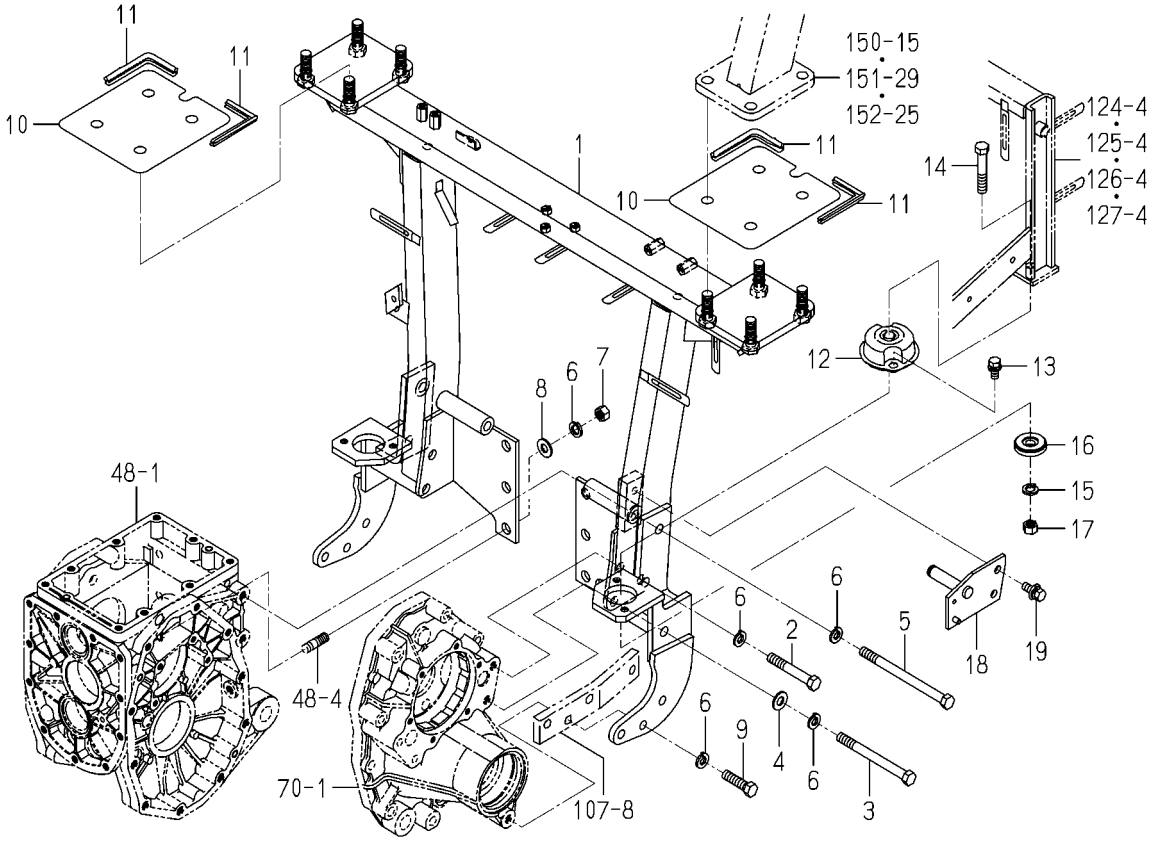

1774-626E-0100

KEY	PART CODE	DESCRIPTION	SPC	TYPE OF MODEL				ITC	COL	GRP	REMARKS
				TM3217	TM3247	TM3267					
1	1774-626-310-00	FRAME/REAR COMP	*	1	1	1					
2	V201-361-208-00	BOLT/M12X80/7T	*	2	2	2					
3	V201-361-213-00	BOLT/M12X130/7T	*	2	2	2					
4	V411-260-012-00	WASHER,PL/M12	*	2	2	2					
5	V201-361-216-00	BOLT/M12X160/7T	*	2	2	2					
6	V401-160-012-00	WASHER,SP/M12	*	14	14	14					
7	V304-460-012-00	NUT/M12/7T	*	2	2	2					
8	V411-260-012-00	WASHER,PL/M12	*	2	2	2					
9	V201-361-204-50	BOLT/M12X45/7T	*	2	2	2					
10	1774-626-001-00	PLATE/I/166X182	*	2	2	2					
11	1752-601-024-00	INSULATOR/170	*	4	4	4					
12	1617-625-001-10	INSULATOR/MOUNT	*	2	2	2					
13	V211-261-002-00	BOLT,S/M10X20	*	4	4	4					
14	V201-361-206-50	BOLT/M12X65/7T	*	2	2	2					
15	V401-160-012-00	WASHER,SP/M12	*	2	2	2					
16	1614-626-400-00	WASHER COMP	*	2	2	2					
17	V304-460-012-00	NUT/M12/7T	*	2	2	2					
18	1774-626-300-10	BRACKET/LEVER COMP	*	1	1	1					
19	V211-661-002-50	BOLT,SP/M10X25/7T	*	2	2	2					

FIG.123 MOUNT(REAR)SYSTEM(D TYPE)

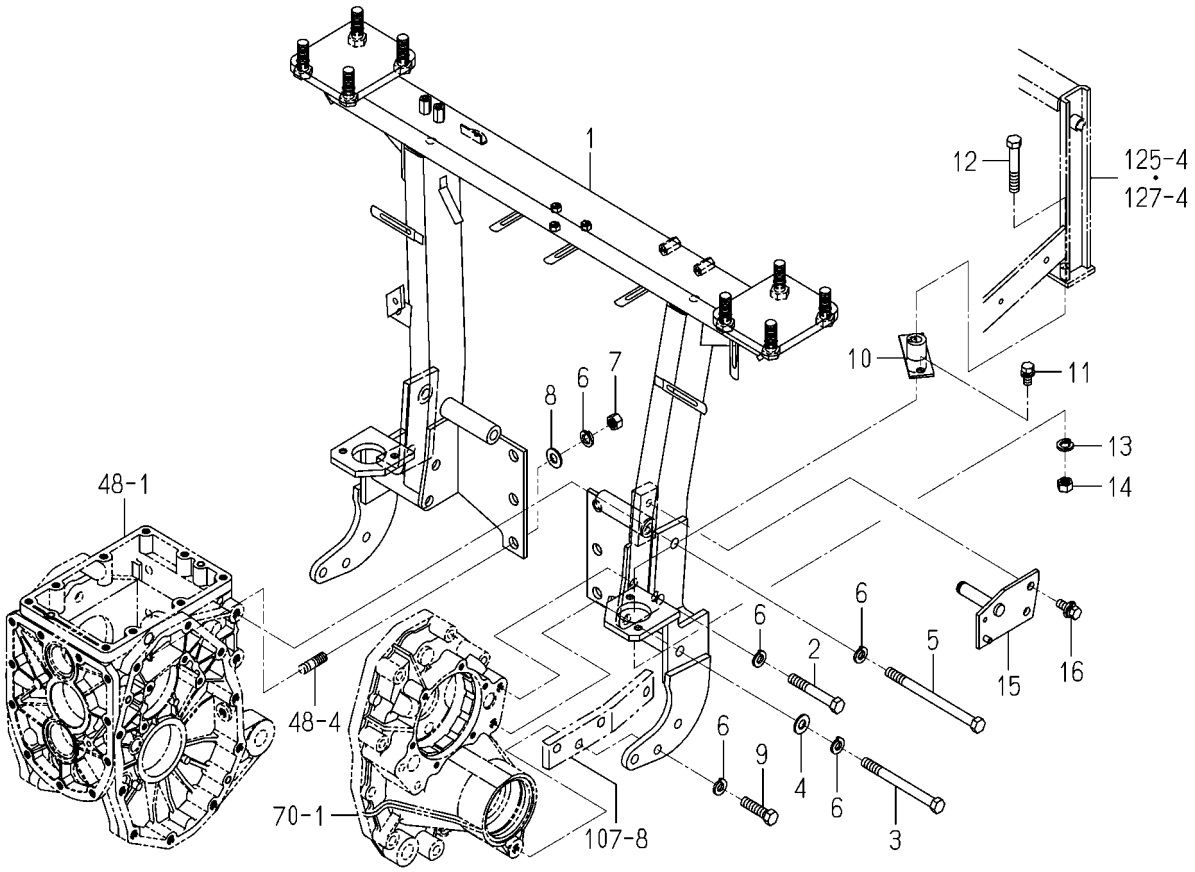

1774-626F-0100

KEY	PART CODE	DESCRIPTION	SPC	TYPE OF MODEL				ITC	COL	GRP	REMARKS
				TM3217	TM3247	TM3267					
1	1774-626-310-00	FRAME/REAR COMP	*	1	1	1					
2	V201-361-208-00	BOLT/M12X80/7T	*	2	2	2					
3	V201-361-213-00	BOLT/M12X130/7T	*	2	2	2					
4	V411-260-012-00	WASHER,PL/M12	*	2	2	2					
5	V201-361-216-00	BOLT/M12X160/7T	*	2	2	2					
6	V401-160-012-00	WASHER,SP/M12	*	14	14	14					
7	V304-460-012-00	NUT/M12/7T	*	2	2	2					
8	V411-260-012-00	WASHER,PL/M12	*	2	2	2					
9	V201-361-204-50	BOLT/M12X45/7T	*	2	2	2					
10	1774-625-210-00	BRACKET COMP	*	2	2	2					
11	V211-261-002-00	BOLT,S/M10X20	*	4	4	4					
12	V201-361-207-00	BOLT/M12X70/7T	*	2	2	2					
13	V401-160-012-00	WASHER,SP/M12	*	2	2	2					
14	V304-460-012-00	NUT/M12/7T	*	2	2	2					
15	1774-626-300-10	BRACKET/LEVER COMP	*	1	1	1					
16	V211-661-002-50	BOLT,SP/M10X25/7T	*	2	2	2					

FIG.124 FLOOR SYSTEM(TM3217F,3247F TYPE)

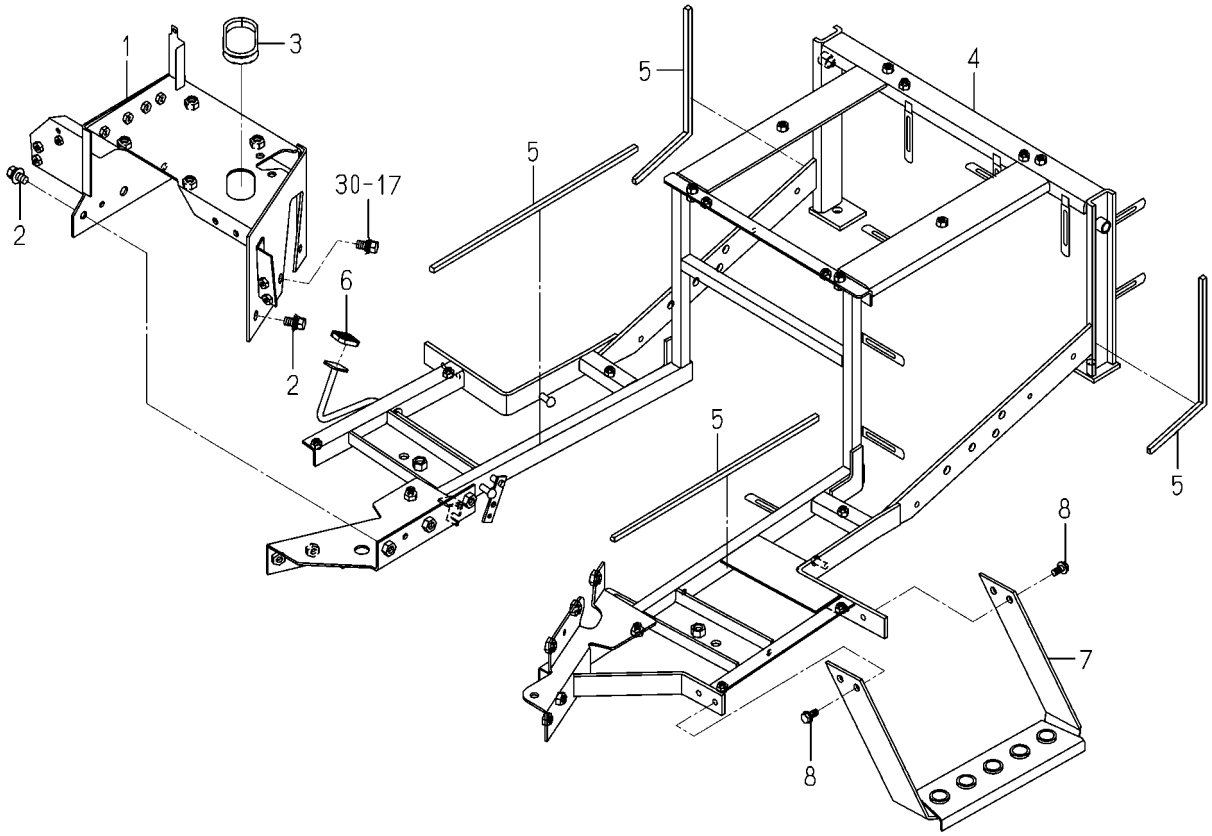

1774-630F-0100

KEY	PART CODE	DESCRIPTION	SPC	TYPE OF MODEL				ITC	COL	GRP	REMARKS
				TM3217	TM3247	TM3267					
1	1774-630-600-00	BRACKET/COLUMN/ COMP	*	1	1						
2	V211-661-002-00	BOLT,SP/M10X20/7T	*	5	5						
3	1725-410-078-00	GROMMET/53X59X06	*	1	1						
4	1774-630-340-10	FRAME COMP	*	1	1						
5	1614-630-002-00	INSULATOR	*	4	4						
6	1776-630-008-00	PAD	*	1	1						
7	1775-631-210-00	STEP/SUB COMP	*	1	1						
8	V231-360-801-60	FLANGEBOLT/M8X16	*	4	4						

FIG.125 FLOOR SYSTEM(TM3217H,3247H TYPE)

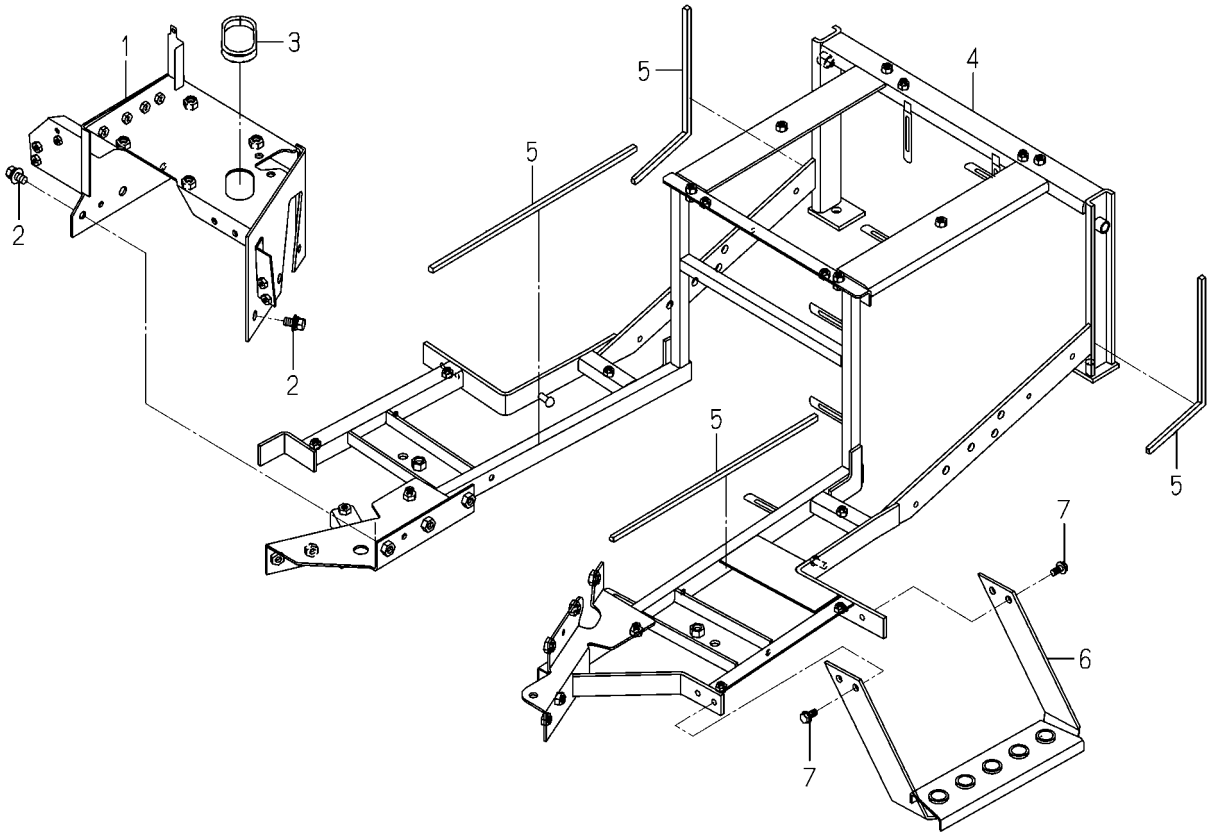

1774-630G-0100

KEY	PART CODE	DESCRIPTION	SPC	TYPE OF MODEL				ITC	COL	GRP	REMARKS
				TM3217	TM3247	TM3267					
1	1774-630-600-00	BRACKET/COLUMN/ COMP	*	1	1						
2	V211-661-002-00	BOLT,SP/M10X20/7T	*	6	6						
3	1725-410-078-00	GROMMET/53X59X06	*	1	1						
4	1774-630-350-00	FRAME/HST COMP	*	1	1						
5	1614-630-002-00	INSULATOR	*	4	4						
6	1775-631-210-00	STEP/SUB COMP	*	1	1						
7	V231-360-801-60	FLANGEBOLT/M8X16	*	4	4						

FIG.126 FLOOR SYSTEM(TM3267F TYPE)

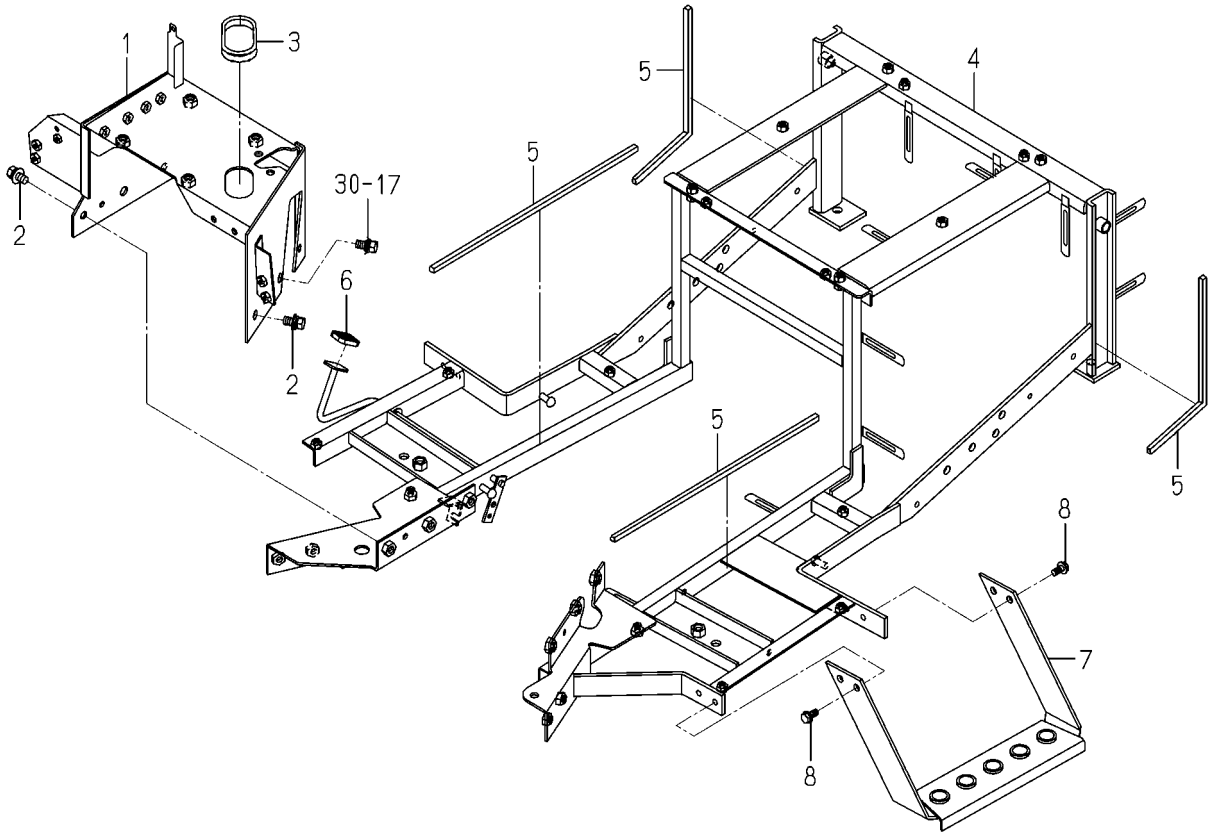

1774-630H-0100

KEY	PART CODE	DESCRIPTION	SPC	TYPE OF MODEL				ITC	COL	GRP	REMARKS
				TM3217	TM3247	TM3267					
1	1774-630-610-00	BRACKET/COLUMN/ COMP	*			1					
2	V211-661-002-00	BOLT,SP/M10X20/7T	*			5					
3	1725-410-078-00	GROMMET/53X59X06	*			1					
4	1774-630-340-10	FRAME COMP	*			1					
5	1614-630-002-00	INSULATOR	*			4					
6	1776-630-008-00	PAD	*			1					
7	1775-631-210-00	STEP/SUB COMP	*			1					
8	V231-360-801-60	FLANGEBOLT/M8X16	*			4					

FIG.127 FLOOR SYSTEM(TM3267H TYPE)

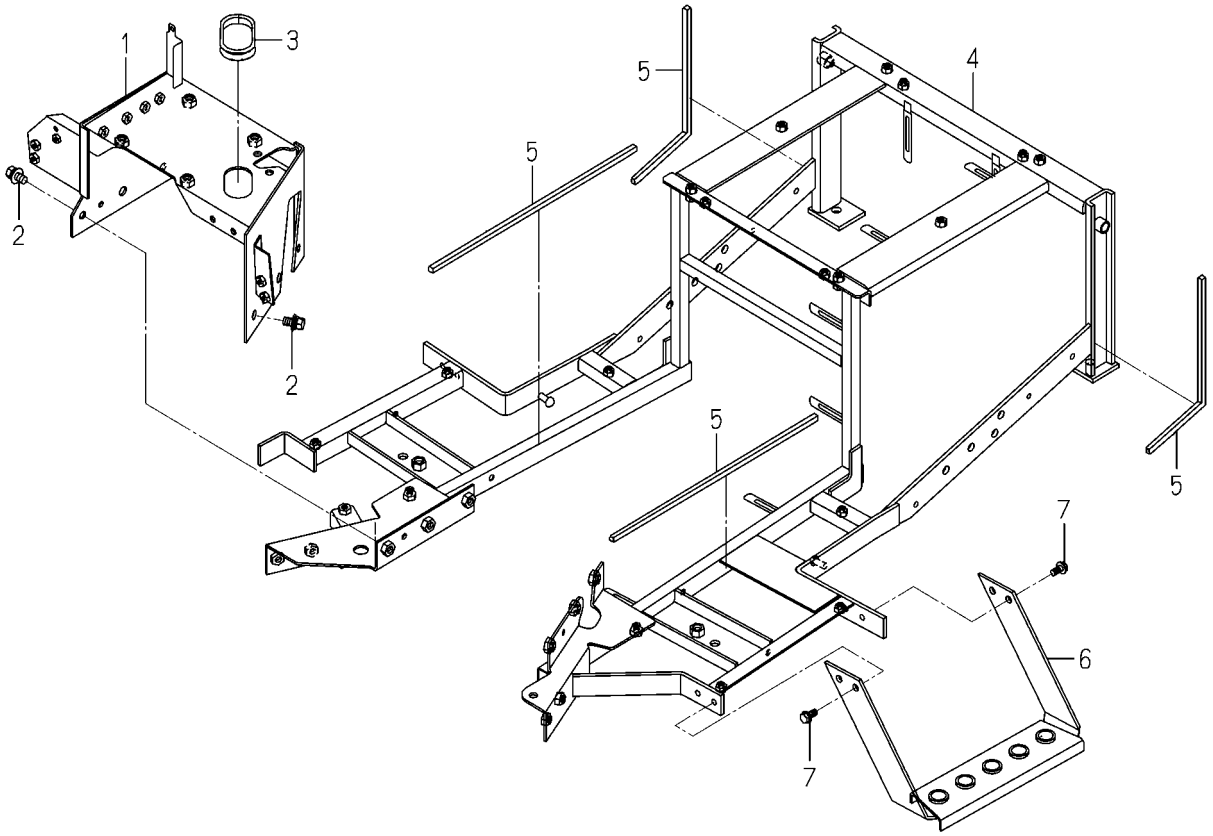

1774-630I-0100

KEY	PART CODE	DESCRIPTION	SPC	TYPE OF MODEL				ITC	COL	GRP	REMARKS
				TM3217	TM3247	TM3267					
1	1774-630-610-00	BRACKET/COLUMN/ COMP	*			1					
2	V211-661-002-00	BOLT,SP/M10X20/7T	*			6					
3	1725-410-078-00	GROMMET/53X59X06	*			1					
4	1774-630-350-00	FRAME/HST COMP	*			1					
5	1614-630-002-00	INSULATOR	*			4					
6	1775-631-210-00	STEP/SUB COMP	*			1					
7	V231-360-801-60	FLANGEBOLT/M8X16	*			4					

FIG.128 STEP SYSTEM(F TYPE)

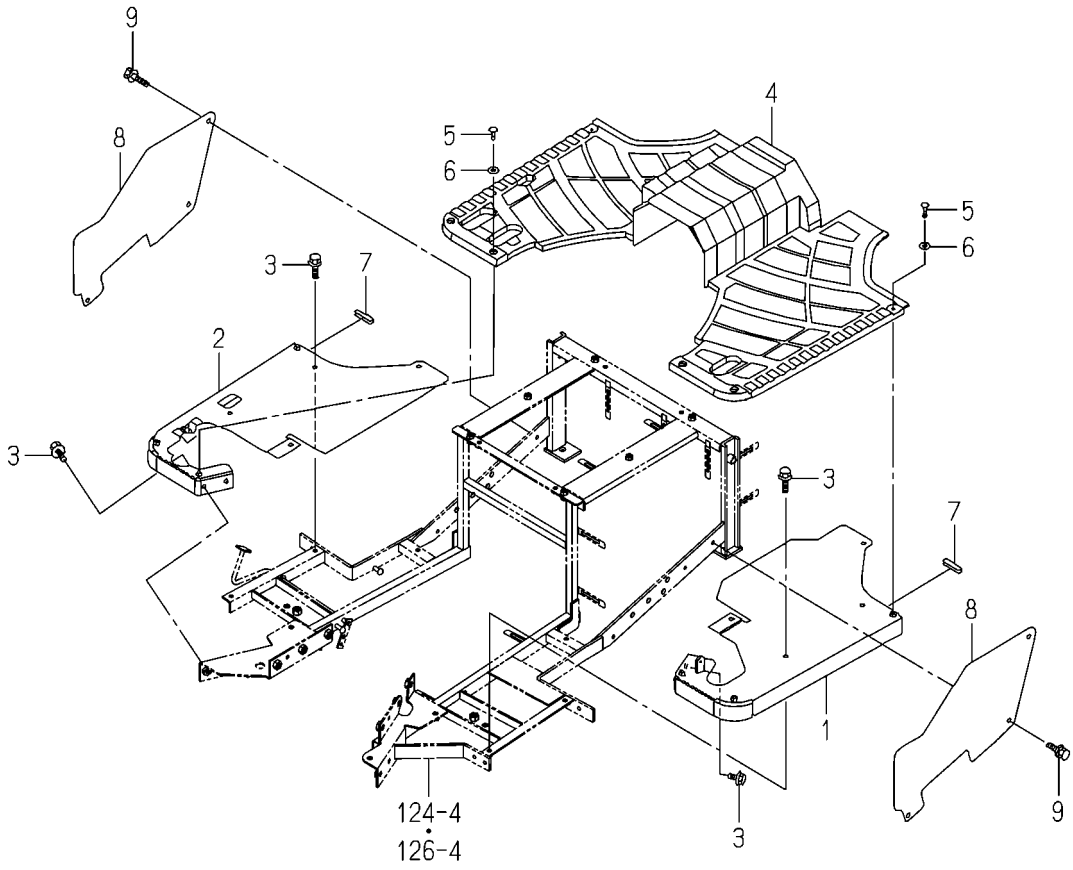

1774-631 -0100

KEY	PART CODE	DESCRIPTION	SPC	TYPE OF MODEL TM3217	TM3247	TM3267		ITC	COL	GRP	REMARKS
1	1774-630-320-10	COVER/STEP/LH COMP	*	1	1	1			4L		
2	1774-630-310-10	COVER/STEP/RH COMP	*	1	1	1			4L		
3	V231-360-801-60	FLANGEBOLT/M8X16	*	12	12	12					
4	1774-630-007-00	MAT/MECH	*	1	1	1					
5	1729-705-009-00	SCREW/TRUSS/M06X16	*	6	6	6					
6	3819-261-005-00	WASHER/07X18X01	*	6	6	6					
7	1614-601-008-00	INSULATOR	*	2	2	2					
8	1774-630-005-10	COVER/LEVER	*	2	2	2			4L		
9	3805-208-016-00	BOLT(SP/M8X16)	*	6	6	6					

FIG.129 STEP SYSTEM(H TYPE EXCEPT D)

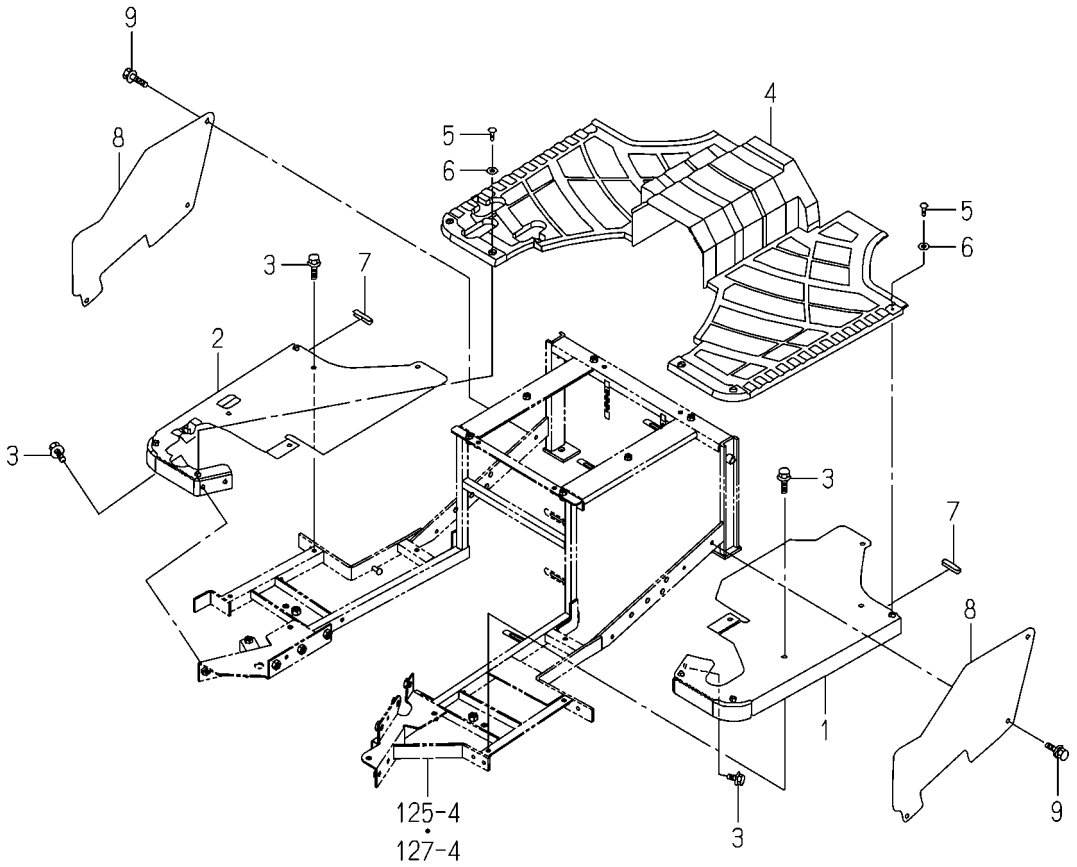

1774-631A-0100

KEY	PART CODE	DESCRIPTION	SPC	TYPE OF MODEL				ITC	COL	GRP	REMARKS
				TM3217	TM3247	TM3267					
1	1774-630-300-10	COVER/STEP/LH COMP	*	1	1	1			4L		
2	1774-630-310-10	COVER/STEP/RH COMP	*	1	1	1			4L		
3	V231-360-801-60	FLANGEBOLT/M8X16	*	12	12	12					
4	1774-630-006-00	MAT/HST	*	1	1	1					
5	1729-705-009-00	SCREW/TRUSS/M06X16	*	6	6	6					
6	3819-261-005-00	WASHER/07X18X01	*	6	6	6					
7	1614-601-008-00	INSULATOR	*	2	2	2					
8	1774-630-005-10	COVER/LEVER	*	2	2	2			4L		
9	3805-208-016-00	BOLT(SP/M8X16)	*	6	6	6					

FIG.130 PLATE(NUMBER)SYSTEM (EXCEPT D,S TYPE)

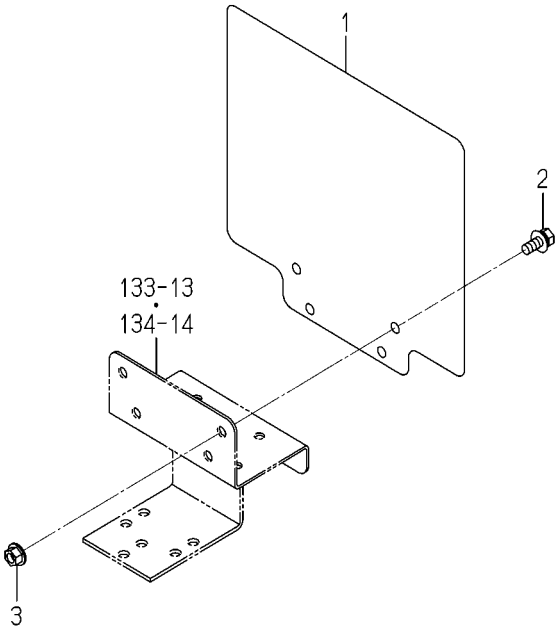

1772-635 -0100

KEY	PART CODE	DESCRIPTION	SPC	TYPE OF MODEL				ITC	COL	GRP	REMARKS
				TM3217	TM3247	TM3267					
1	1772-635-001-10	PLATE/NUMBER/E4	*	1	1	1					
2	V211-360-802-00	BOLT,SP/M8X20	*	2	2	2					
3	V362-260-008-00	NUT/WASHER/M8	*	2	2	2					

FIG.131 LAMP(HEAD)SYSTEM (EXCEPT G,E6 TYPE)

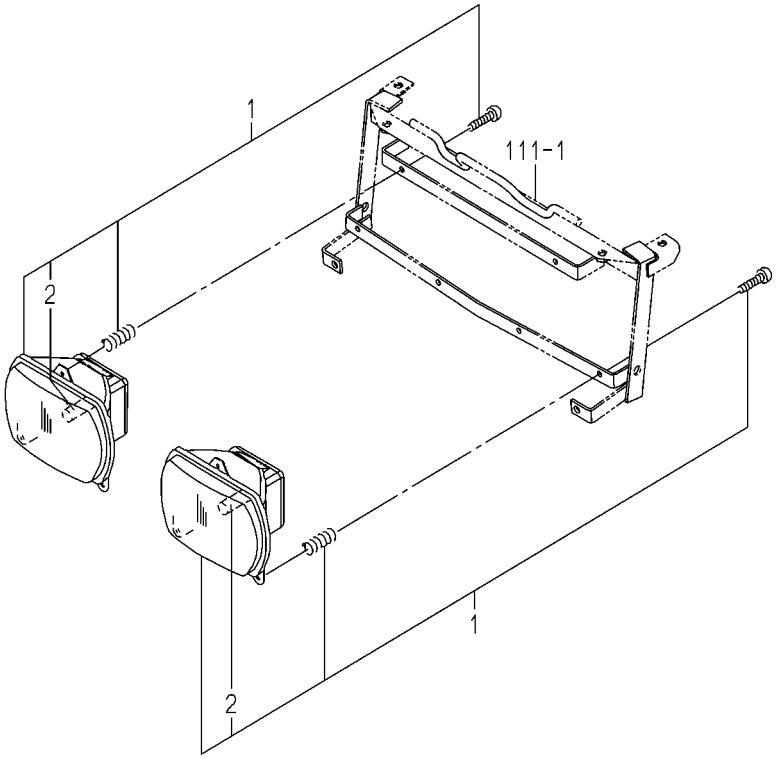

1774-650 -0100

KEY	PART CODE	DESCRIPTION	SPC	TYPE OF MODEL				ITC	COL	GRP	REMARKS
				TM3217	TM3247	TM3267					
1	1774-650-210-00	LAMP/HEAD/H4 ASSY	*	2	2	2					
2	1774-650-212-00	BULB/H4/60/55W	*	2	2	2					

FIG.132 LAMP(HEAD)SYSTEM (G,E6 TYPE-STANDARD/ EXCEPT D,G,E6 TYPE-OPTION)

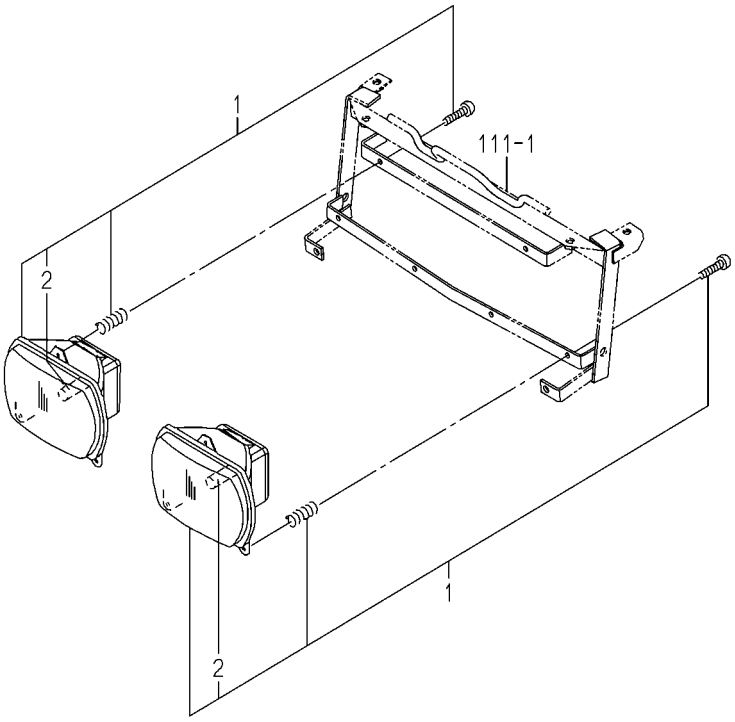

1774-650A-0100

KEY	PART CODE	DESCRIPTION	SPC	TYPE OF MODEL				ITC	COL	GRP	REMARKS
				TM3217	TM3247	TM3267					
1	1774-650-220-00	LAMP/HEAD/G ASSY	*	2	2	2					
2	1774-650-222-00	BULB/H4/60/55W	*	2	2	2					

FIG.133 LAMP SYSTEM(EXCEPT A,D TYPE)

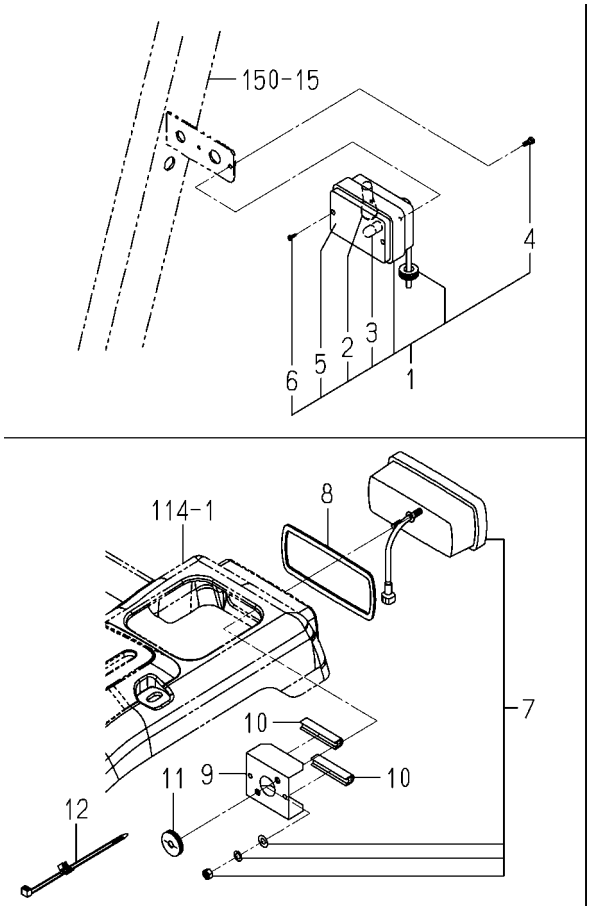

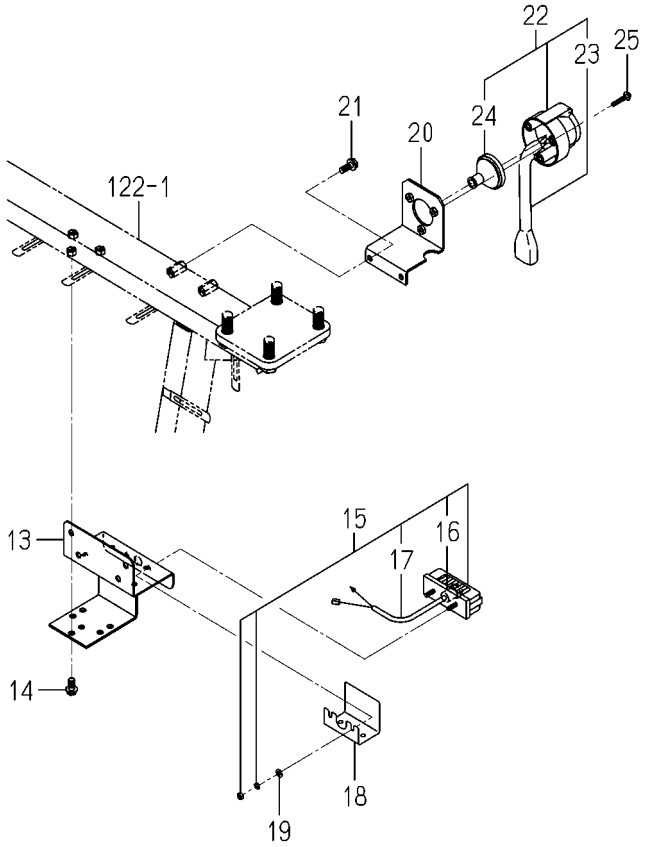

1774-660D-0100

KEY	PART CODE	DESCRIPTION	SPC	TYPE OF MODEL TM3217	TM3247	TM3267		ITC	COL	GRP	REMARKS
1	1772-654-220-00	LAMP/COMBINATION/FRO	*	2	2	2					
2	1674-654-211-00	BULB/12V21W	*	2	2	2					
3	1674-654-212-00	BULB/12V5W	*	2	2	2					
4	1772-654-221-00	BOLT/S	*	4	4	4					
5	1772-654-222-00	LENS	*	2	2	2					
6	1772-654-223-00	SCREW	*	4	4	4					
7	1772-654-210-00	LAMP/COMBINATION/REA	*	2	2	2					FIG 186
8	1772-654-001-00	INSULATOR/LAMP	*	2	2	2					
9	1772-654-310-00	STAY/LAMP COMP	*	2	2	2					
10	P113-201-007-00	TRIM/70	*	4	4	4					
11	1678-782-003-00	GROMMET/10X30X1	*	2	2	2					
12	1560-666-004-00	BAND	*	2	2	2					
13	1774-660-210-10	BRACKET/LAMP/REGISTR	*	1	1	1					
14	V231-360-801-60	FLANGEBOLT/M8X16	*	3	3	3					
15	1674-654-270-00	LAMP/NUMBERPLAT SET	*	1	1	1					
16	1674-654-271-00	BULB/12V/5W	*	1	1	1					
17	1674-654-272-00	HARNESS/LAMP	*	1	1	1					
18	1774-660-003-10	GUARD/LIGHT	*	1	1	1					
19	V411-260-005-00	WASHER,PL/M5	*	2	2	2					
20	1637-690-260-00	PLATE/SOCKET COMP	*	1	1	1					
21	V231-360-802-00	FLANGEBOLT/M8X20	*	2	2	2					
22	1807-652-500-00	HARNESS/TRAILER/E4	*	1	1	1					
23	1807-652-510-00	HARNESS/SOCKET/E4	*	1	1	1					
24	1650-654-036-00	GROMMET/10X40X03	*	1	1	1					
25	V120-265-003-00	SCREW,SEMS/M5X30	*	3	3	3					

FIG.134 LAMP SYSTEM(A TYPE)

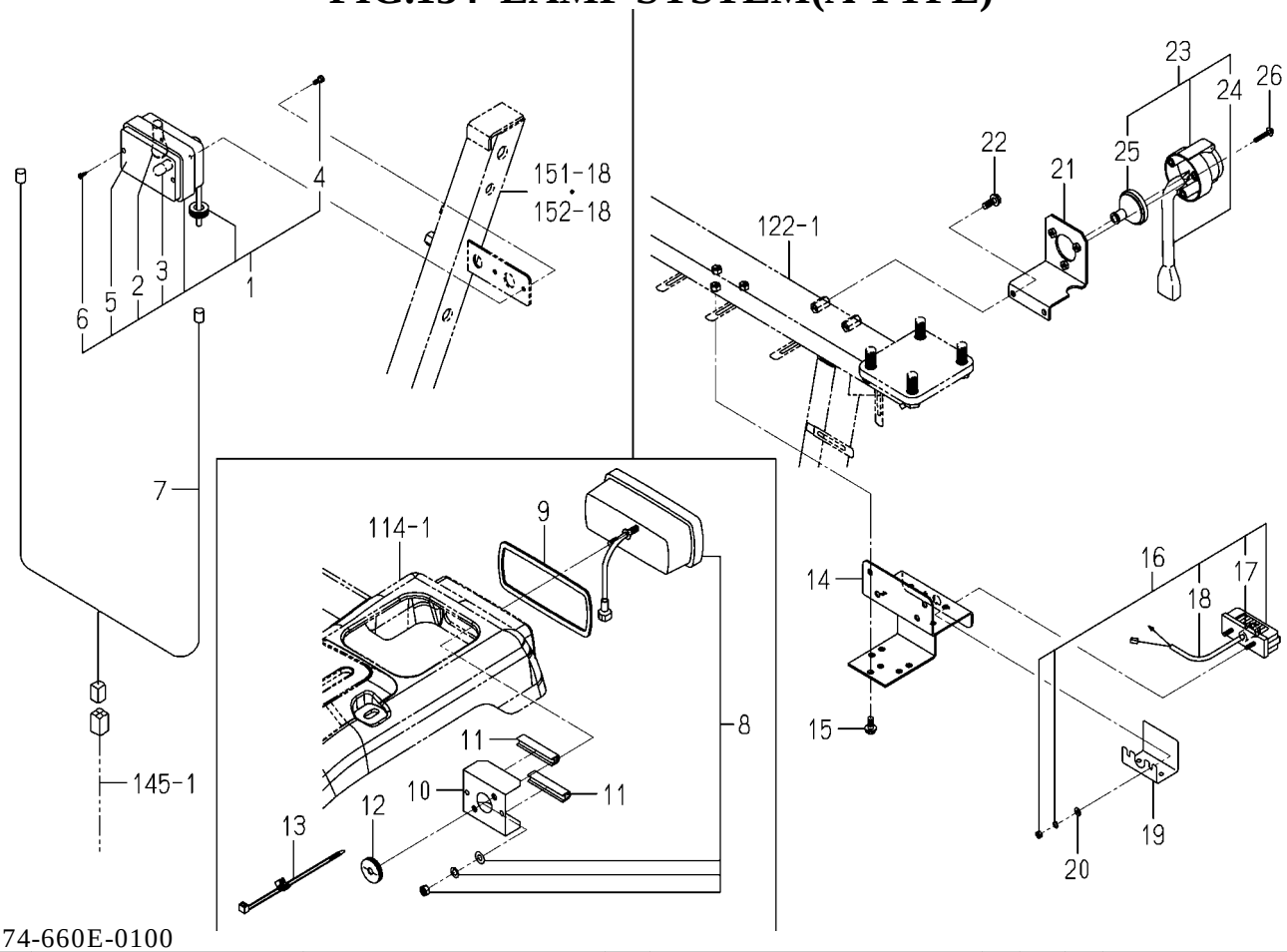

1774-660E-0100

KEY	PART CODE	DESCRIPTION	SPC	TYPE OF MODEL TM3217	TM3247	TM3267		ITC	COL	GRP	REMARKS
1	1772-654-220-00	LAMP/COMBINATION/FRO	*	2	2	2					
2	1674-654-211-00	BULB/12V21W	*	2	2	2					
3	1674-654-212-00	BULB/12V5W	*	2	2	2					
4	1772-654-221-00	BOLT/S	*	4	4	4					
5	1772-654-222-00	LENS	*	2	2	2					
6	1772-654-223-00	SCREW	*	4	4	4					
7	1772-652-240-00	HARNESS/LAMP/FRONT	*	1	1	1					
8	1772-654-210-00	LAMP/COMBINATION/REA	*	2	2	2					FIG 186
9	1772-654-001-00	INSULATOR/LAMP	*	2	2	2					
10	1772-654-310-00	STAY/LAMP COMP	*	2	2	2					
11	P113-201-007-00	TRIM/70	*	4	4	4					
12	1678-782-003-00	GROMMET/10X30X1	*	2	2	2					
13	1560-666-004-00	BAND	*	2	2	2					
14	1774-660-210-10	BRACKET/LAMP/REGISTR	*	1	1	1					
15	V231-360-801-60	FLANGEBOLT/M8X16	*	3	3	3					
16	1674-654-270-00	LAMP/NUMBERPLAT SET	*	1	1	1					
17	1674-654-271-00	BULB/12V/5W	*	1	1	1					
18	1674-654-272-00	HARNESS/LAMP	*	1	1	1					
19	1774-660-003-10	GUARD/LIGHT	*	1	1	1					
20	V411-260-005-00	WASHER,PL/M5	*	2	2	2					
21	1637-690-260-00	PLATE/SOCKET COMP	*	1	1	1					
22	V231-360-802-00	FLANGEBOLT/M8X20	*	2	2	2					
23	1807-652-500-00	HARNESS/TRAILER/E4	*	1	1	1					
24	1807-652-510-00	HARNESS/SOCKET/E4	*	1	1	1					
25	1650-654-036-00	GROMMET/10X40X03	*	1	1	1					
26	V120-265-003-00	SCREW,SEMS/M5X30	*	3	3	3					

FIG.135 LAMP SYSTEM(D TYPE)

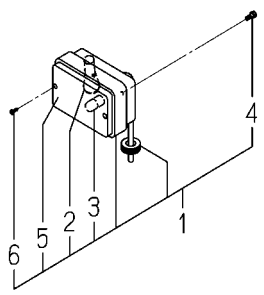

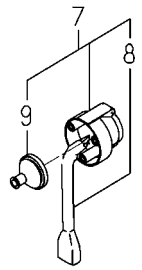

1774-660F-0100

KEY	PART CODE	DESCRIPTION	SPC	TYPE OF MODEL				ITC	COL	GRP	REMARKS
				TM3217	TM3247	TM3267					
1	1772-654-220-00	LAMP/COMBINATION/FRO	*	2	2	2					
2	1674-654-211-00	BULB/12V21W	*	2	2	2					
3	1674-654-212-00	BULB/12V5W	*	2	2	2					
4	1772-654-221-00	BOLT/S	*	4	4	4					
5	1772-654-222-00	LENS	*	2	2	2					
6	1772-654-223-00	SCREW	*	4	4	4					
7	1807-652-500-00	HARNESS/TRAILER/E4	*	1	1	1					
8	1807-652-510-00	HARNESS/SOCKET/E4	*	1	1	1					
9	1650-654-036-00	GROMMET/10X40X03	*	1	1	1					

FIG.136 METER PANEL SYSTEM

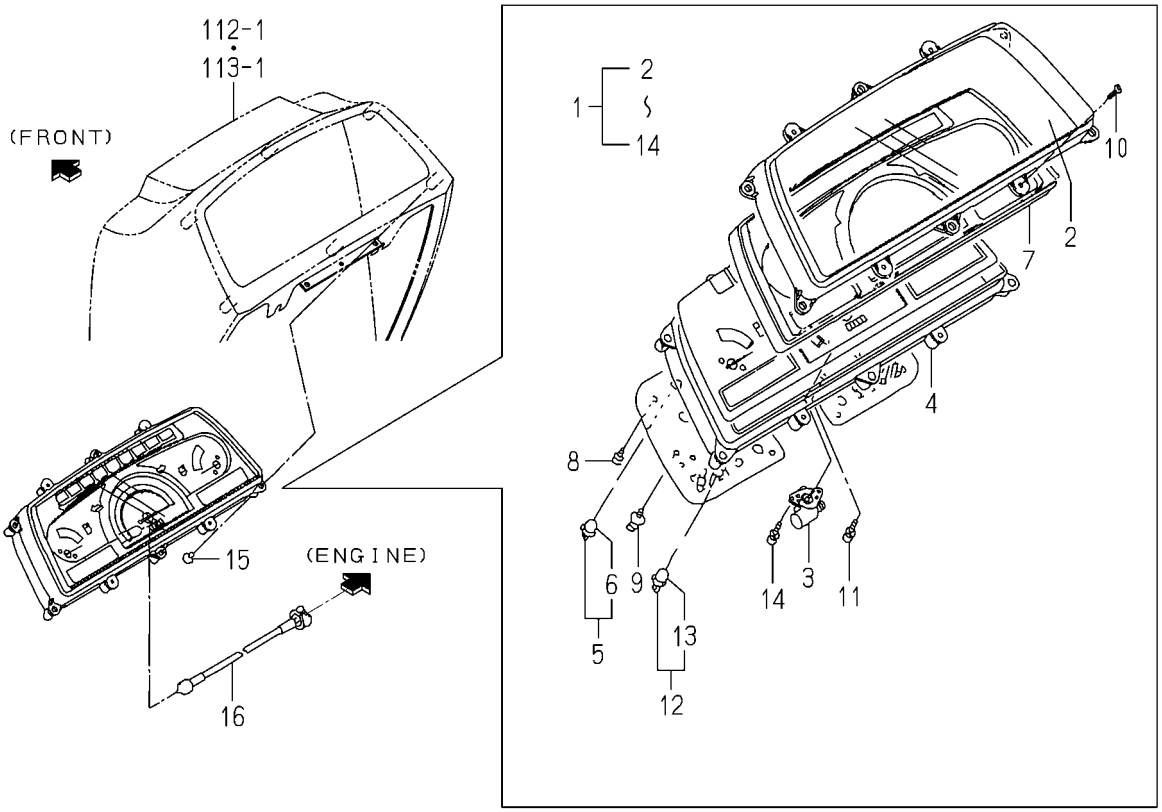

1774-670A-0100

KEY	PART CODE	DESCRIPTION	SPC	TYPE OF MODEL				ITC	COL	GRP	REMARKS
				TM3217	TM3247	TM3267					
1	1774-670-400-00	PANEL/INSTRUMEN ASSY	*	1	1	1					
2	1774-670-211-00	COVER/GLASS	*	1	1	1					
3	1785-656-310-00	CASE/GEAR ASSY	*	1	1	1					
4	1785-656-320-00	CASE/BODY	*	1	1	1					
5	1785-656-330-00	LAMP/SOCKET ASSY	*	11	11	11					
6	3650-270-214-00	BULB/12V3.4W	*	11	11	11					
7	1774-670-212-00	ESCUTCHEON	*	1	1	1					
8	1785-656-303-00	SCREW/TAPPING	*	6	6	6					
9	1785-656-304-00	SCREW/M03X22	*	6	6	6					
10	V195-164-016-40	SCREW/4X16	*	4	4	4					
11	1785-656-305-00	SCREW/TAPPING	*	3	3	3					
12	1785-656-340-00	LAMP/SOCKET ASSY	*	4	4	4					
13	1614-670-281-00	BULB/LAMP/12V/1.7W	*	4	4	4					
14	1785-656-306-00	SCREW	*	2	2	2					
15	V120-366-001-60	SCREW,SP/M6X16	*	4	4	4					
16	1614-670-001-10	CABLE ASSY	*	1	1	1					

FIG.137 SWITCH SYSTEM(TM3267A TYPE)(1/2)

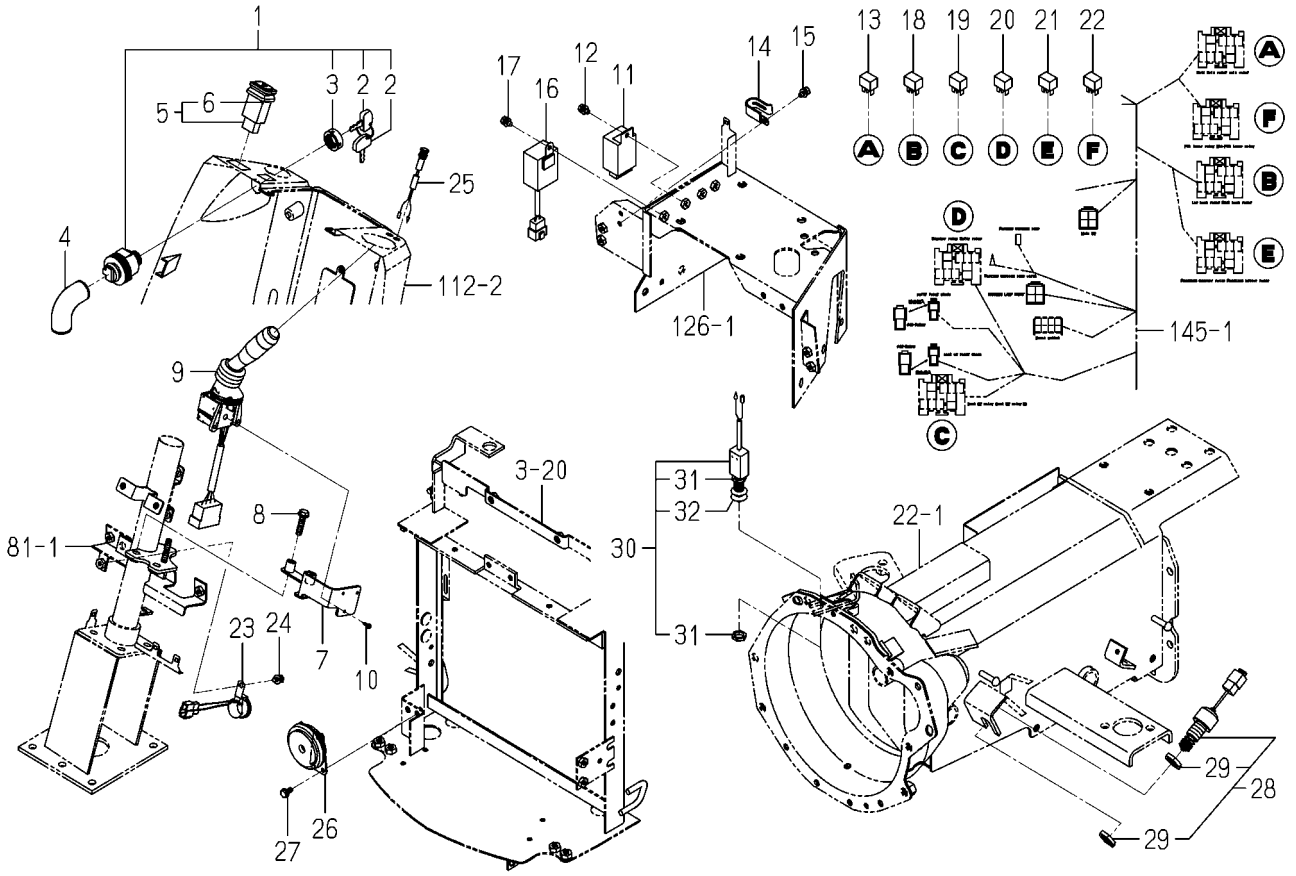

1774-680E-0100

KEY	PART CODE	DESCRIPTION	SPC	TYPE OF MODEL				ITC	COL	GRP	REMARKS
				TM3217	TM3247	TM3267					
1	1716-680-200-20	SWITCH/MAIN ASSY	*			1					
2	2186-536-211-00	KEY	*			2					
3	2186-536-212-00	NUT/RING	*			1					
4	1716-680-006-00	COVER/SWITCH	*			1					
5	1740-680-550-00	SWITCH/HAZARD ASSY	*			1					
6	1740-680-551-00	BULB/LAMP/14V60MA	*			1					
7	1774-680-210-00	BRACKET/SWITCH/COMBI	*			1					
8	V231-360-803-00	FLANGEBOLT/M8X30	*			2					
9	1774-680-260-00	SWITCH/COMBINATION	*			1					
10	1772-652-001-00	SCREW/TAPPING/3.5X13	*			3					
11	1739-681-220-20	RELAY/FLASHER/EEC	*			1					
12	V210-360-601-20	BOLT,SP/M6X12	*			1					
13	1800-652-400-00	RELAY/5P ASSY	*			2					
14	3737-172-009-00	CLAMP,MAIN HARNESS	*			1					
15	V120-365-001-60	SCREW,SP/M5X16	*			1					
16	1774-680-250-00	UNIT/TIMER ASSY	*			1					
17	V210-360-601-20	BOLT,SP/M6X12	*			1					
18	1800-652-400-00	RELAY/5P ASSY	*			2					
19	1800-652-400-00	RELAY/5P ASSY	*			2					
20	1800-652-400-00	RELAY/5P ASSY	*			2					
21	1800-652-400-00	RELAY/5P ASSY	*			2					
22	1800-652-400-00	RELAY/5P ASSY	*			2					
23	2515-665-210-00	BUZZER ASSY	*			1					
24	V210-360-601-20	BOLT,SP/M6X12	*			1					
25	1837-652-610-00	LAMP/LED ASSY	*			1					
26	1740-680-530-20	HORN ASSY	*			1					
27	V230-360-601-20	FLANGEBOLT/M6X12	*			2					
28	1772-654-250-10	SWITCH/PUSH ASSY	*			1					
29	1772-654-251-00	NUT	*			2					
30	1772-654-280-10	SWITCH/PUSH ASSY	*			1					

FIG.137 SWITCH SYSTEM(TM3267A TYPE)(2/2)

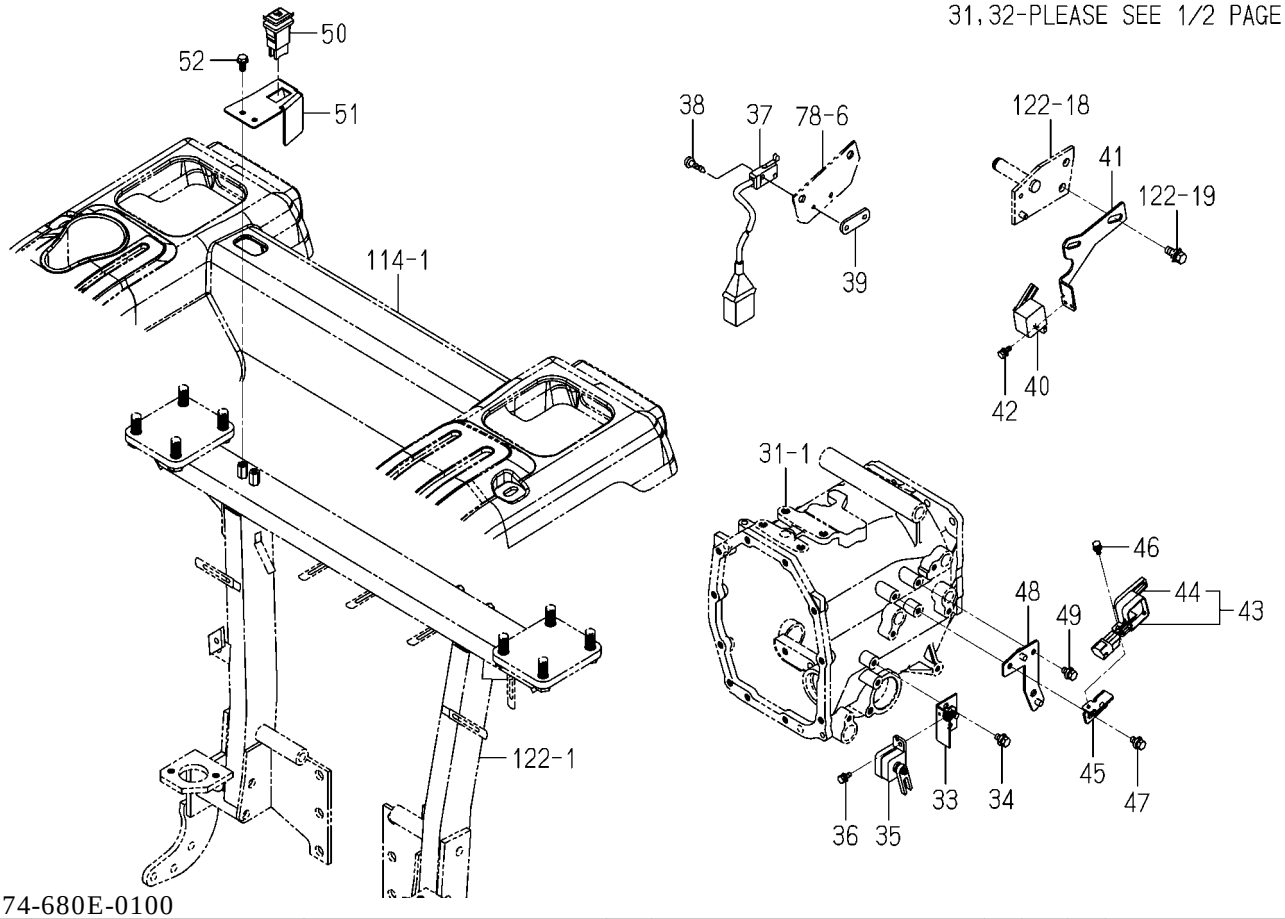

1774-680E-0100

KEY	PART CODE	DESCRIPTION	SPC	TYPE OF MODEL TM3217	TM3247	TM3267		ITC	COL	GRP	REMARKS
31	1772-654-281-00	NUT	*			2					
32	1772-654-282-00	BOOT	*			1					
33	1774-680-230-00	BRACKET/SENSOR COMP	*			1					
34	V211-360-801-60	BOLT,SP/M8X16	*			2					
35	1740-680-520-10	SWITCH/SENSOR ASSY	*			1					
36	V210-360-601-60	BOLT,SP/M6X16	*			1					
37	1774-680-240-00	SWITCH/LIMIT ASSY	*			1					
38	1614-129-003-00	SCREW/M03X20	*			2					
39	3642-496-007-10	PLATE,SWITCH	*			1					
40	1773-654-240-10	SWITCH/LEVER ASSY	*			1					
41	1774-680-038-00	BRACKET/SENSOR/SUB	*			1					
42	V210-360-601-60	BOLT,SP/M6X16	*			1					
43	1716-680-330-10	SWITCH/LEVER ASSY	*			1					
44	1716-680-222-00	ARM	*			1					
45	1774-680-032-00	BRACKET/SWITCH/PTO	*			1					
46	V210-360-601-60	BOLT,SP/M6X16	*			1					
47	V211-360-801-60	BOLT,SP/M8X16	*			1					
48	1774-680-310-00	STAY/SWITCH COMP	*			1					
49	V211-360-801-60	BOLT,SP/M8X16	*			1					
50	1809-670-290-00	SWITCH/BEACON ASSY	*			1					
51	1774-680-037-00	BRACKET/SWITCH/BEACO	*			1					
52	V231-360-801-60	FLANGEBOLT/M8X16	*			2					

FIG.138 SWITCH SYSTEM(TM3267H TYPE)(1/2)

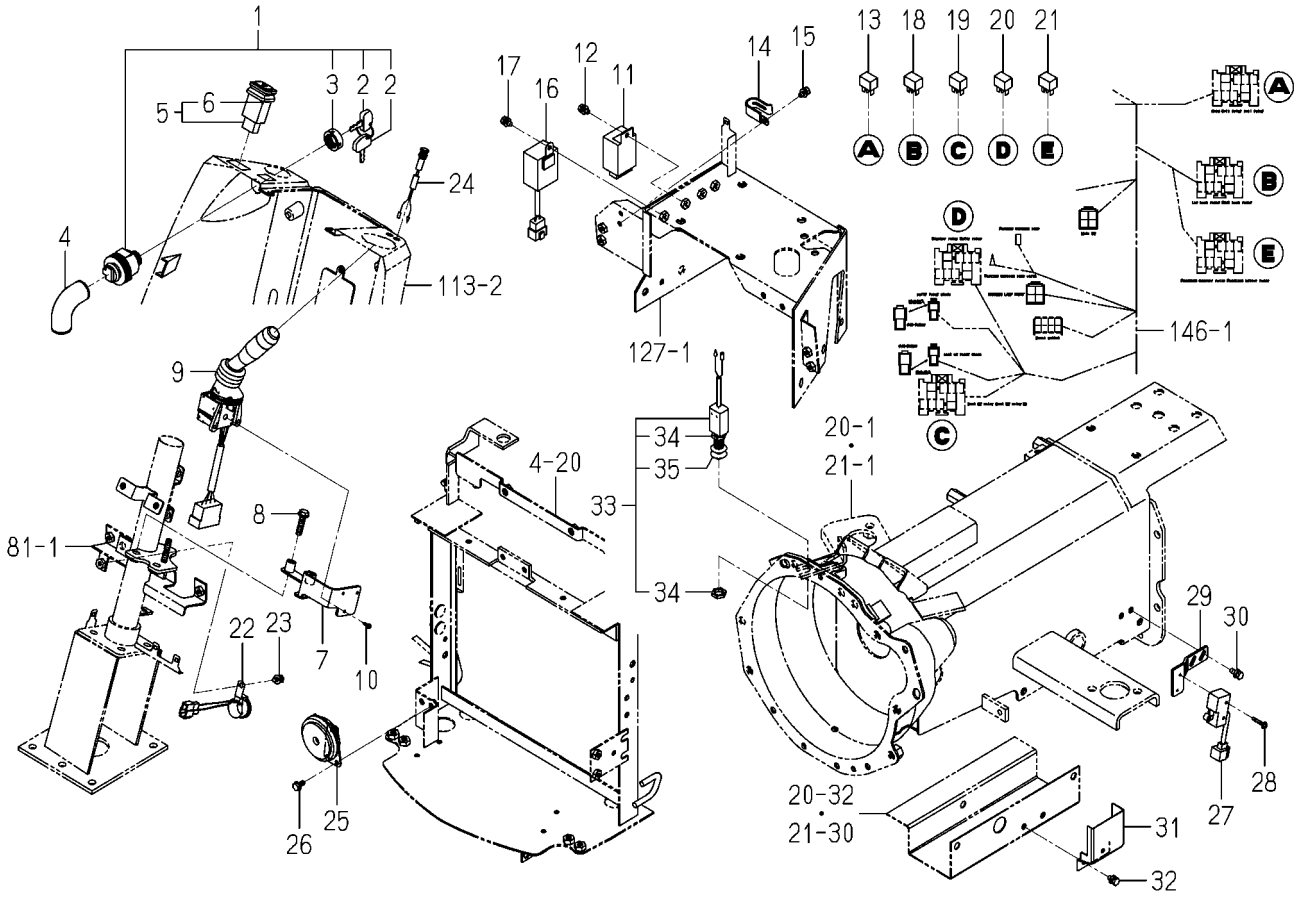

1774-680F-0100

KEY	PART CODE	DESCRIPTION	SPC	TYPE OF MODEL				ITC	COL	GRP	REMARKS
				TM3217	TM3247	TM3267					
1	1716-680-200-20	SWITCH/MAIN ASSY	*			1					
2	2186-536-211-00	KEY	*			2					
3	2186-536-212-00	NUT/RING	*			1					
4	1716-680-006-00	COVER/SWITCH	*			1					
5	1740-680-550-00	SWITCH/HAZARD ASSY	*			1					
6	1740-680-551-00	BULB/LAMP/14V60MA	*			1					
7	1774-680-210-00	BRACKET/SWITCH/COMBI	*			1					
8	V231-360-803-00	FLANGEBOLT/M8X30	*			2					
9	1774-680-260-00	SWITCH/COMBINATION	*			1					
10	1772-652-001-00	SCREW/TAPPING/3.5X13	*			3					
11	1739-681-220-20	RELAY/FLASHER/EEC	*			1					
12	V210-360-601-20	BOLT,SP/M6X12	*			1					
13	1800-652-400-00	RELAY/5P ASSY	*			2					
14	3737-172-009-00	CLAMP,MAIN HARNESS	*			1					
15	V120-365-001-60	SCREW,SP/M5X16	*			1					
16	1774-680-250-00	UNIT/TIMER ASSY	*			1					
17	V210-360-601-20	BOLT,SP/M6X12	*			1					
18	1800-652-400-00	RELAY/5P ASSY	*			2					
19	1800-652-400-00	RELAY/5P ASSY	*			2					
20	1800-652-400-00	RELAY/5P ASSY	*			2					
21	1800-652-400-00	RELAY/5P ASSY	*			2					
22	2515-665-210-00	BUZZER ASSY	*			1					
23	V210-360-601-20	BOLT,SP/M6X12	*			1					
24	1837-652-610-00	LAMP/LED ASSY	*			1					
25	1740-680-530-20	HORN ASSY	*			1					
26	V230-360-601-20	FLANGEBOLT/M6X12	*			2					
27	1518-621-470-00	SWITCH,SAFETY ASSY	*			1					
28	V120-364-002-50	SCREW,SP/M4X25	*			2					
29	1774-680-035-00	BRACKET/SENSOR/HST	*			1					
30	V210-360-601-60	BOLT,SP/M6X16	*			2					

FIG.138 SWITCH SYSTEM(TM3267H TYPE)(2/2)

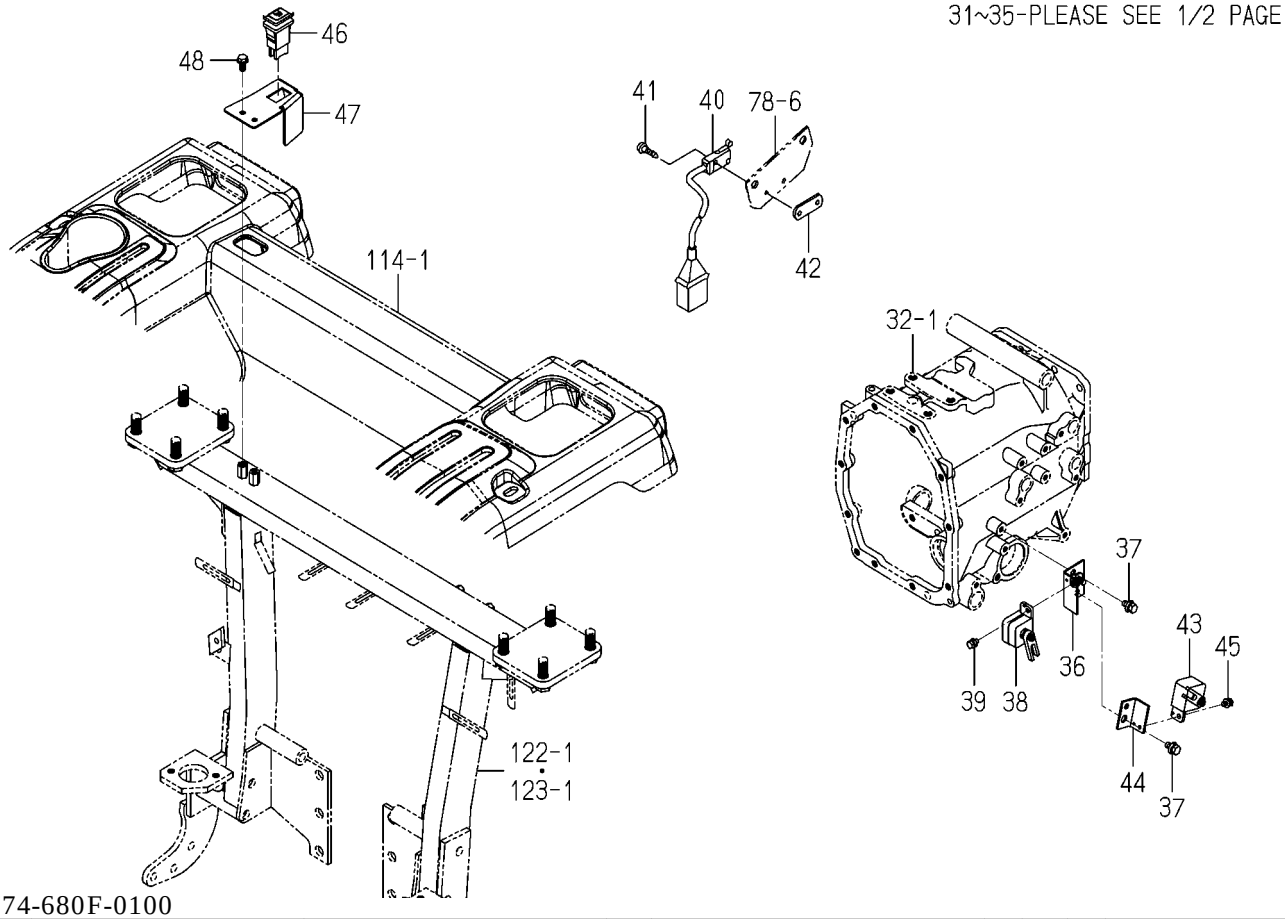

1774-680F-0100

KEY	PART CODE	DESCRIPTION	SPC	TYPE OF MODEL TM3217	TM3247	TM3267		ITC	COL	GRP	REMARKS
31	1774-680-036-00	COVER/SENSOR/HST	*			1					
32	V210-360-601-20	BOLT,SP/M6X12	*			2					
33	1772-654-280-10	SWITCH/PUSH ASSY	*			1					
34	1772-654-281-00	NUT	*			2					
35	1772-654-282-00	BOOT	*			1					
36	1774-680-230-00	BRACKET/SENSOR COMP	*			1					
37	V211-360-801-60	BOLT,SP/M8X16	*			2					
38	1740-680-520-10	SWITCH/SENSOR ASSY	*			1					
39	V210-360-601-60	BOLT,SP/M6X16	*			1					
40	1774-680-240-00	SWITCH/LIMIT ASSY	*			1					
41	1614-129-003-00	SCREW/M03X20	*			2					
42	3642-496-007-10	PLATE,SWITCH	*			1					
43	1773-654-240-10	SWITCH/LEVER ASSY	*			1					
44	1774-680-052-00	BRACKET/SWITCH/SUB	*			1					
45	V210-360-601-20	BOLT,SP/M6X12	*			1					
46	1809-670-290-00	SWITCH/BEACON ASSY	*			1					
47	1774-680-037-00	BRACKET/SWITCH/BEACO	*			1					
48	V231-360-801-60	FLANGEBOLT/M8X16	*			2					

FIG.139 SWITCH SYSTEM(1/2) (TM3217A,3247A TYPE)

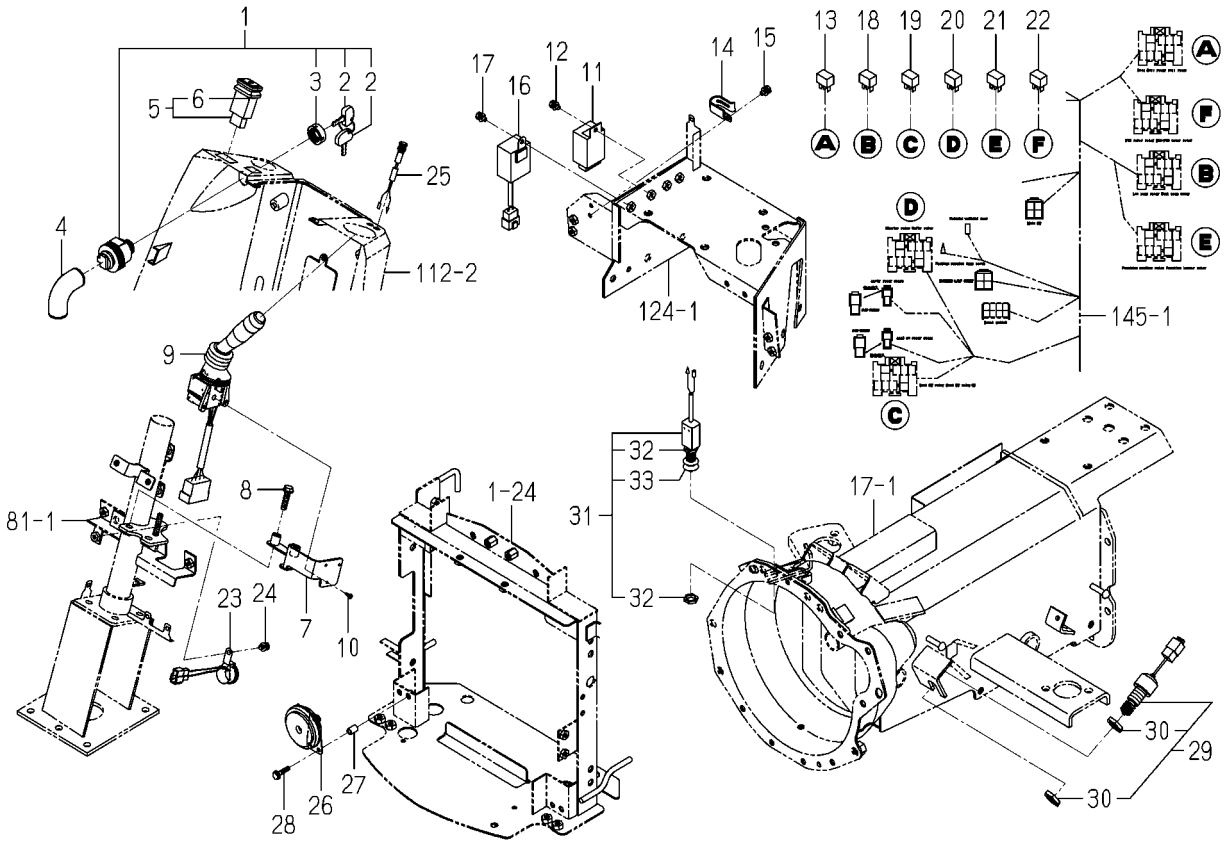

1774-680G-0100

KEY	PART CODE	DESCRIPTION	SPC	TYPE OF MODEL				ITC	COL	GRP	REMARKS
				TM3217	TM3247	TM3267					
1	1716-680-200-20	SWITCH/MAIN ASSY	*	1	1						
2	2186-536-211-00	KEY	*	2	2						
3	2186-536-212-00	NUT/RING	*	1	1						
4	1716-680-006-00	COVER/SWITCH	*	1	1						
5	1740-680-550-00	SWITCH/HAZARD ASSY	*	1	1						
6	1740-680-551-00	BULB/LAMP/14V60MA	*	1	1						
7	1774-680-210-00	BRACKET/SWITCH/COMBI	*	1	1						
8	V231-360-803-00	FLANGEBOLT/M8X30	*	2	2						
9	1774-680-260-00	SWITCH/COMBINATION	*	1	1						
10	1772-652-001-00	SCREW/TAPPING/3.5X13	*	3	3						
11	1739-681-220-20	RELAY/FLASHER/EEC	*	1	1						
12	V210-360-601-20	BOLT,SP/M6X12	*	1	1						
13	1800-652-400-00	RELAY/5P ASSY	*	2	2						
14	3737-172-009-00	CLAMP,MAIN HARNESS	*	1	1						
15	V120-365-001-60	SCREW,SP/M5X16	*	1	1						
16	1774-680-250-00	UNIT/TIMER ASSY	*	1	1						
17	V210-360-601-20	BOLT,SP/M6X12	*	1	1						
18	1800-652-400-00	RELAY/5P ASSY	*	2	2						
19	1800-652-400-00	RELAY/5P ASSY	*	2	2						
20	1800-652-400-00	RELAY/5P ASSY	*	2	2						
21	1800-652-400-00	RELAY/5P ASSY	*	2	2						
22	1800-652-400-00	RELAY/5P ASSY	*	2	2						
23	2515-665-210-00	BUZZER ASSY	*	1	1						
24	V210-360-601-20	BOLT,SP/M6X12	*	1	1						
25	1837-652-610-00	LAMP/LED ASSY	*	1	1						
26	1740-680-530-20	HORN ASSY	*	1	1						
27	2150-661-002-00	COLLAR	*	2	2						
28	V230-360-602-50	FLANGEBOLT/M6X25	*	2	2						
29	1772-654-250-10	SWITCH/PUSH ASSY	*	1	1						
30	1772-654-251-00	NUT	*	2	2						

FIG.139 SWITCH SYSTEM(2/2)
(TM3217A,3247A TYPE)

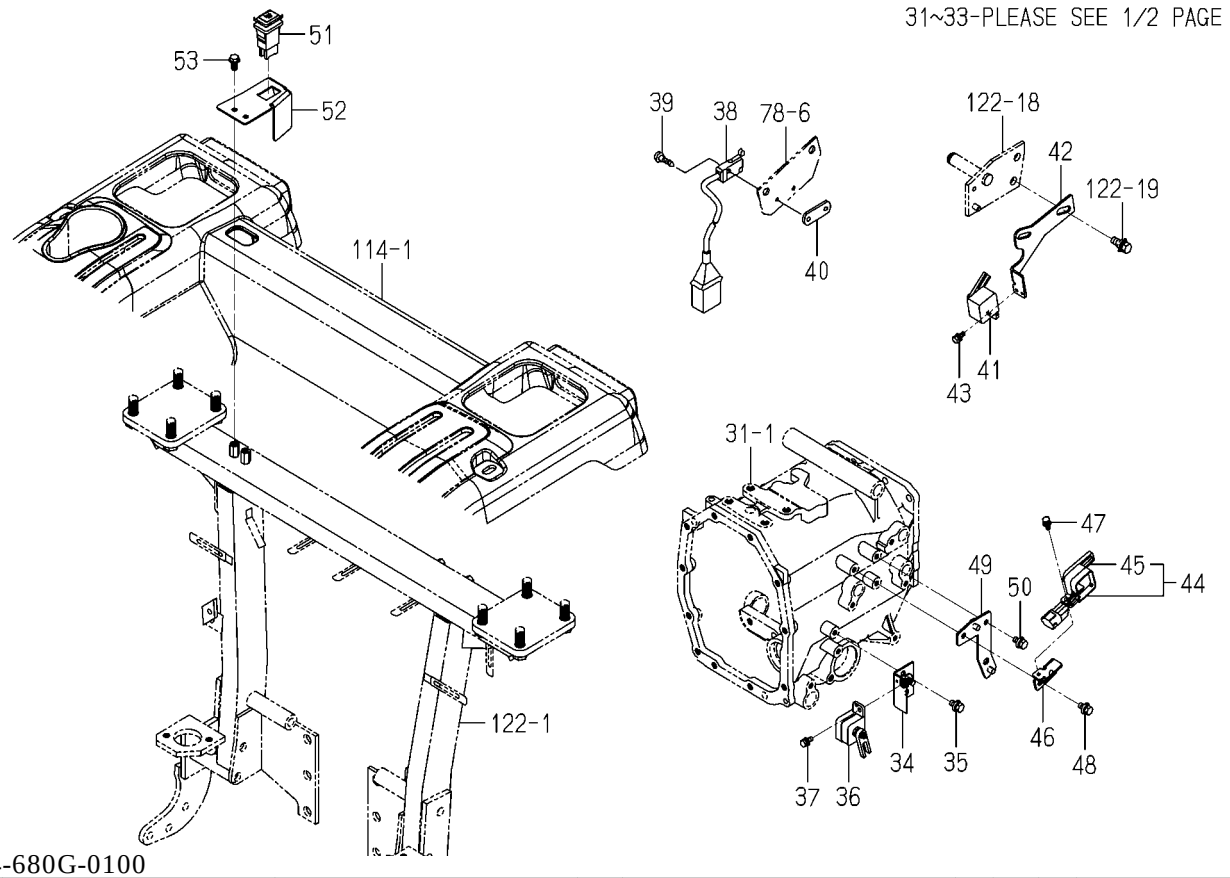

1774-680G-0100

KEY	PART CODE	DESCRIPTION	SPC	TYPE OF MODEL				ITC	COL	GRP	REMARKS
				TM3217	TM3247	TM3267					
31	1772-654-280-10	SWITCH/PUSH ASSY	*	1	1						
32	1772-654-281-00	NUT	*	2	2						
33	1772-654-282-00	BOOT	*	1	1						
34	1774-680-230-00	BRACKET/SENSOR COMP	*	1	1						
35	V211-360-801-60	BOLT,SP/M8X16	*	2	2						
36	1740-680-520-10	SWITCH/SENSOR ASSY	*	1	1						
37	V210-360-601-60	BOLT,SP/M6X16	*	1	1						
38	1774-680-240-00	SWITCH/LIMIT ASSY	*	1	1						
39	1614-129-003-00	SCREW/M03X20	*	2	2						
40	3642-496-007-10	PLATE,SWITCH	*	1	1						
41	1773-654-240-10	SWITCH/LEVER ASSY	*	1	1						
42	1774-680-038-00	BRACKET/SENSOR/SUB	*	1	1						
43	V210-360-601-60	BOLT,SP/M6X16	*	1	1						
44	1716-680-330-10	SWITCH/LEVER ASSY	*	1	1						
45	1716-680-222-00	ARM	*	1	1						
46	1774-680-032-00	BRACKET/SWITCH/PTO	*	1	1						
47	V210-360-601-60	BOLT,SP/M6X16	*	1	1						
48	V211-360-801-60	BOLT,SP/M8X16	*	1	1						
49	1774-680-310-00	STAY/SWITCH COMP	*	1	1						
50	V211-360-801-60	BOLT,SP/M8X16	*	1	1						
51	1809-670-290-00	SWITCH/BEACON ASSY	*	1	1						
52	1774-680-037-00	BRACKET/SWITCH/BEACO	*	1	1						
53	V231-360-801-60	FLANGEBOLT/M8X16	*	2	2						

FIG.140 SWITCH SYSTEM(1/2) (TM3217H,3247H TYPE)

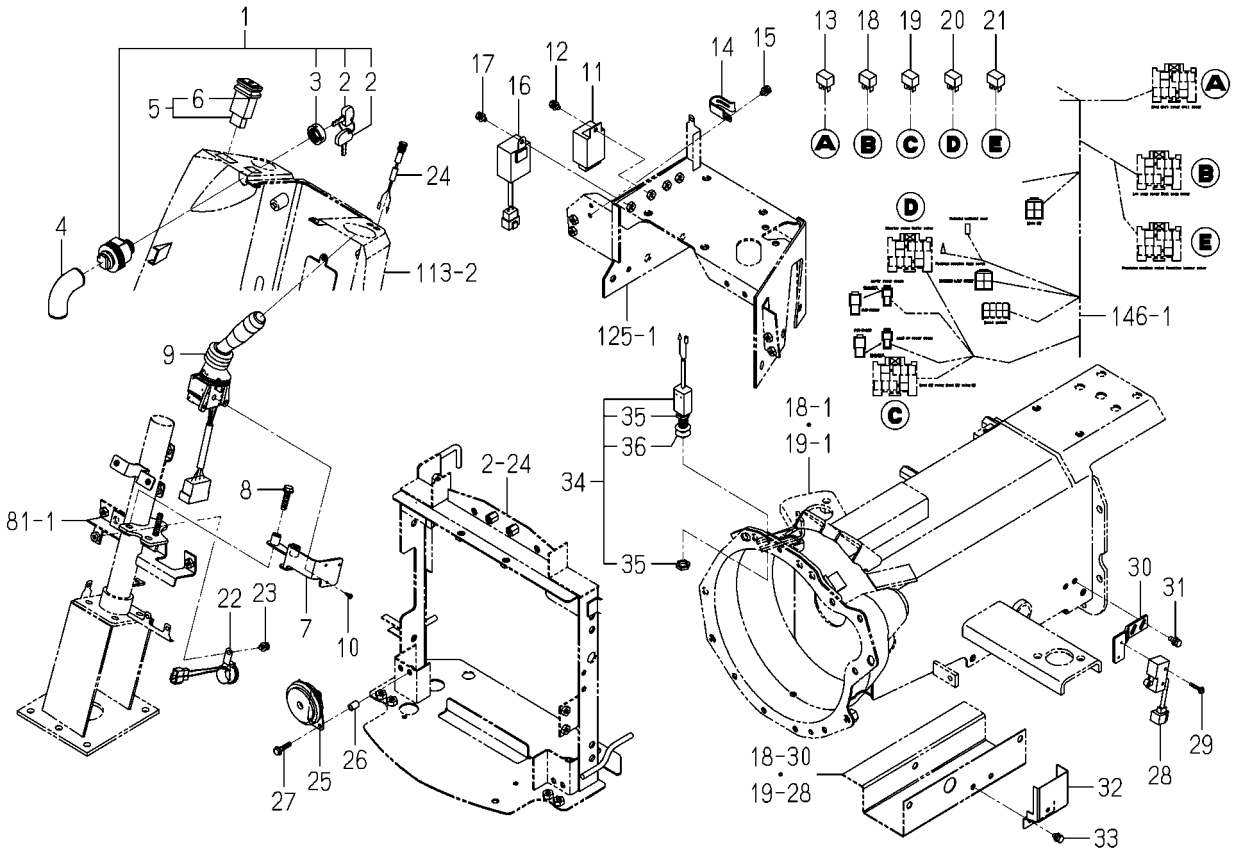

1774-680H-0100

KEY	PART CODE	DESCRIPTION	SPC	TYPE OF MODEL				ITC	COL	GRP	REMARKS
				TM3217	TM3247	TM3267					
1	1716-680-200-20	SWITCH/MAIN ASSY	*	1	1						
2	2186-536-211-00	KEY	*	2	2						
3	2186-536-212-00	NUT/RING	*	1	1						
4	1716-680-006-00	COVER/SWITCH	*	1	1						
5	1740-680-550-00	SWITCH/HAZARD ASSY	*	1	1						
6	1740-680-551-00	BULB/LAMP/14V60MA	*	1	1						
7	1774-680-210-00	BRACKET/SWITCH/COMBI	*	1	1						
8	V231-360-803-00	FLANGEBOLT/M8X30	*	2	2						
9	1774-680-260-00	SWITCH/COMBINATION	*	1	1						
10	1772-652-001-00	SCREW/TAPPING/3.5X13	*	3	3						
11	1739-681-220-20	RELAY/FLASHER/EEC	*	1	1						
12	V210-360-601-20	BOLT,SP/M6X12	*	1	1						
13	1800-652-400-00	RELAY/5P ASSY	*	2	2						
14	3737-172-009-00	CLAMP,MAIN HARNESS	*	1	1						
15	V120-365-001-60	SCREW,SP/M5X16	*	1	1						
16	1774-680-250-00	UNIT/TIMER ASSY	*	1	1						
17	V210-360-601-20	BOLT,SP/M6X12	*	1	1						
18	1800-652-400-00	RELAY/5P ASSY	*	2	2						
19	1800-652-400-00	RELAY/5P ASSY	*	2	2						
20	1800-652-400-00	RELAY/5P ASSY	*	2	2						
21	1800-652-400-00	RELAY/5P ASSY	*	2	2						
22	2515-665-210-00	BUZZER ASSY	*	1	1						
23	V210-360-601-20	BOLT,SP/M6X12	*	1	1						
24	1837-652-610-00	LAMP/LED ASSY	*	1	1						
25	1740-680-530-20	HORN ASSY	*	1	1						
26	2150-661-002-00	COLLAR	*	1	1						
27	V230-360-602-50	FLANGEBOLT/M6X25	*	2	2						
28	1518-621-470-00	SWITCH,SAFETY ASSY	*	1	1						
29	V120-364-002-50	SCREW,SP/M4X25	*	2	2						
30	1774-680-035-00	BRACKET/SENSOR/HST	*	1	1						

FIG.140 SWITCH SYSTEM(2/2)
(TM3217H,3247H TYPE)

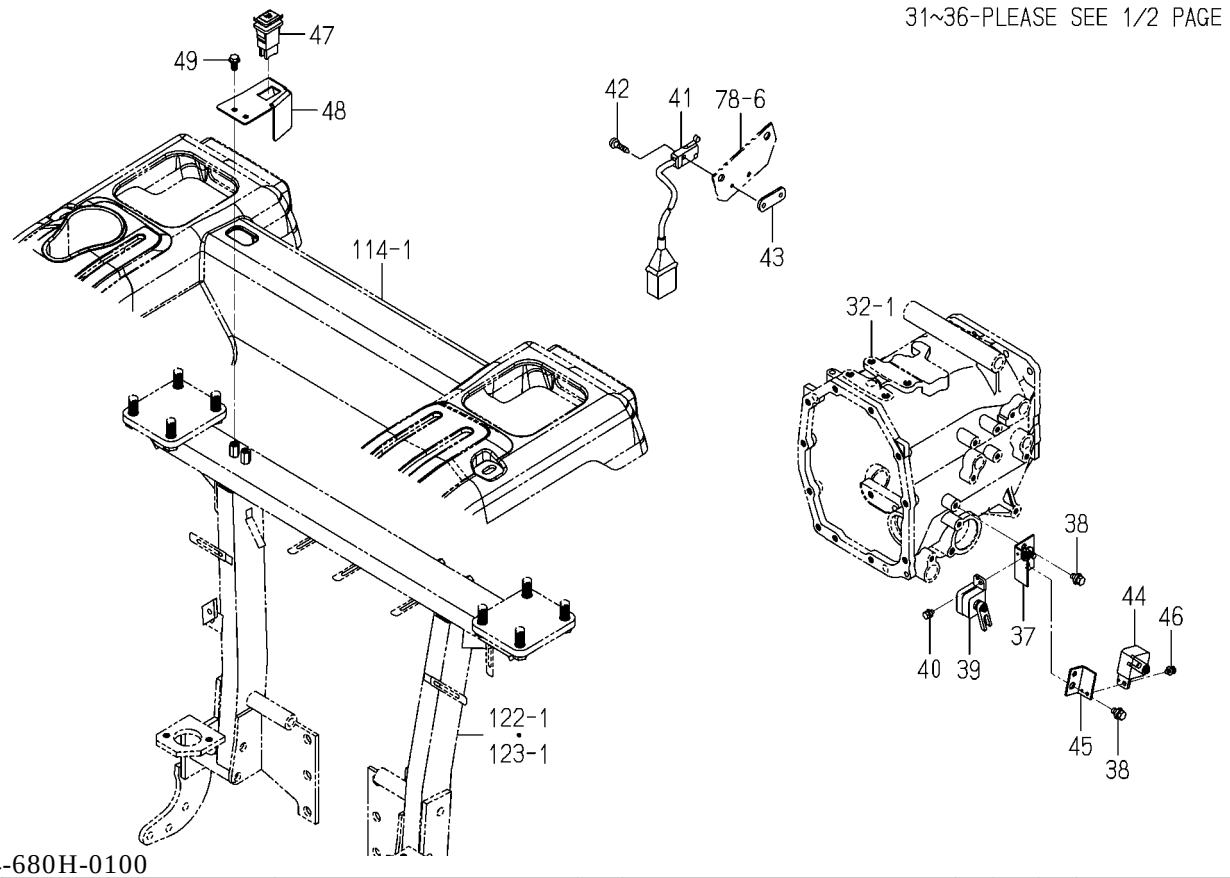

1774-680H-0100

KEY	PART CODE	DESCRIPTION	SPC	TYPE OF MODEL				ITC	COL	GRP	REMARKS
				TM3217	TM3247	TM3267					
31	V210-360-601-60	BOLT,SP/M6X16	*	2	2						
32	1774-680-036-00	COVER/SENSOR/HST	*	1	1						
33	V210-360-601-20	BOLT,SP/M6X12	*	2	2						
34	1772-654-280-10	SWITCH/PUSH ASSY	*	1	1						
35	1772-654-281-00	NUT	*	2	2						
36	1772-654-282-00	BOOT	*	1	1						
37	1774-680-230-00	BRACKET/SENSOR COMP	*	1	1						
38	V211-360-801-60	BOLT,SP/M8X16	*	2	2						
39	1740-680-520-10	SWITCH/SENSOR ASSY	*	1	1						
40	V210-360-601-60	BOLT,SP/M6X16	*	1	1						
41	1774-680-240-00	SWITCH/LIMIT ASSY	*	1	1						
42	1614-129-003-00	SCREW/M03X20	*	2	2						
43	3642-496-007-10	PLATE,SWITCH	*	1	1						
44	1773-654-240-10	SWITCH/LEVER ASSY	*	1	1						
45	1774-680-052-00	BRACKET/SWITCH/SUB	*	1	1						
46	V210-360-601-20	BOLT,SP/M6X12	*	1	1						
47	1809-670-290-00	SWITCH/BEACON ASSY	*	1	1						
48	1774-680-037-00	BRACKET/SWITCH/BEACO	*	1	1						
49	V231-360-801-60	FLANGEBOLT/M8X16	*	2	2						

FIG.141 SWITCH SYSTEM(1/2)
(TM3267F TYPE EXCEPT A)

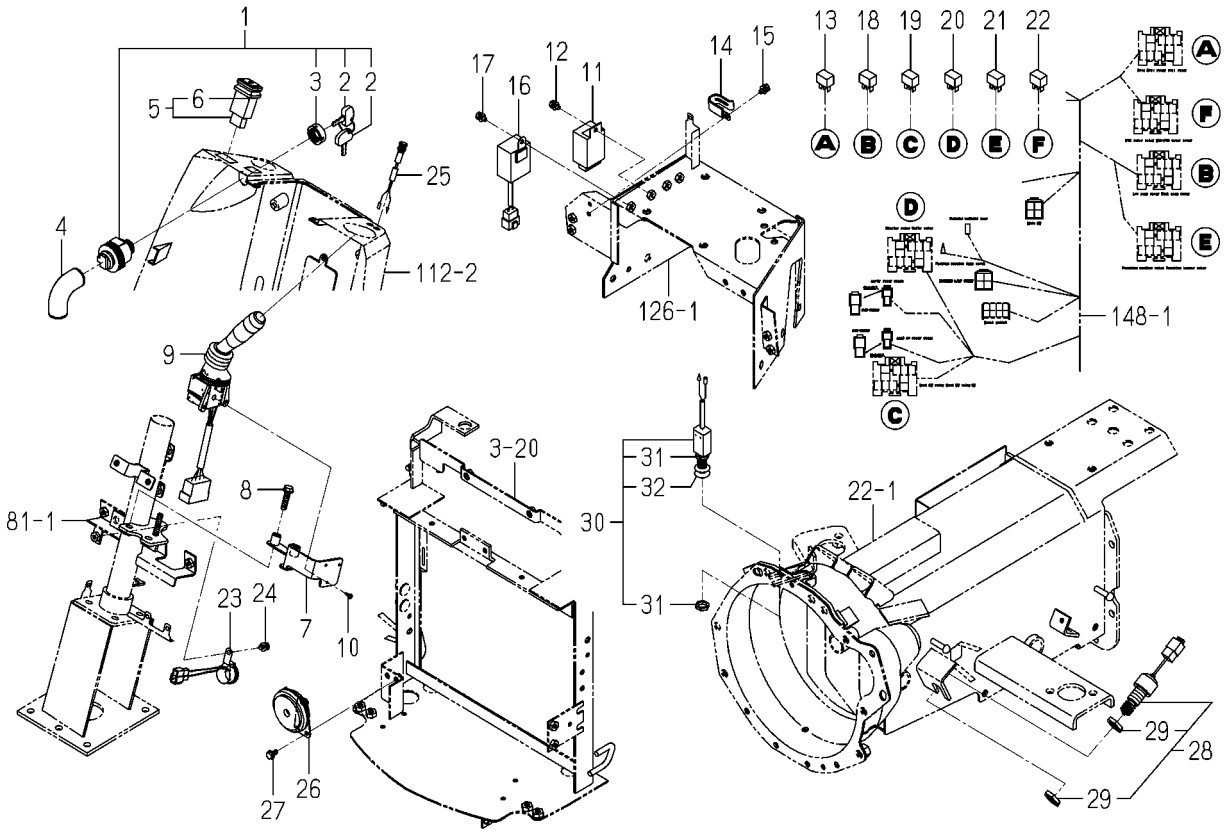

1774-680I-0100

KEY	PART CODE	DESCRIPTION	SPC	TYPE OF MODEL				ITC	COL	GRP	REMARKS
				TM3217	TM3247	TM3267					
1	1716-680-200-20	SWITCH/MAIN ASSY	*			1					
2	2186-536-211-00	KEY	*			2					
3	2186-536-212-00	NUT/RING	*			1					
4	1716-680-006-00	COVER/SWITCH	*			1					
5	1740-680-550-00	SWITCH/HAZARD ASSY	*			1					
6	1740-680-551-00	BULB/LAMP/14V60MA	*			1					
7	1774-680-210-00	BRACKET/SWITCH/COMBI	*			1					
8	V231-360-803-00	FLANGEBOLT/M8X30	*			2					
9	1774-680-260-00	SWITCH/COMBINATION	*			1					
10	1772-652-001-00	SCREW/TAPPING/3.5X13	*			3					
11	1739-681-220-20	RELAY/FLASHER/EEC	*			1					
12	V210-360-601-20	BOLT,SP/M6X12	*			1					
13	1800-652-400-00	RELAY/5P ASSY	*			2					
14	3737-172-009-00	CLAMP,MAIN HARNESS	*			1					
15	V120-365-001-60	SCREW,SP/M5X16	*			1					
16	1774-680-250-00	UNIT/TIMER ASSY	*			1					
17	V210-360-601-20	BOLT,SP/M6X12	*			1					
18	1800-652-400-00	RELAY/5P ASSY	*			2					
19	1800-652-400-00	RELAY/5P ASSY	*			2					
20	1800-652-400-00	RELAY/5P ASSY	*			2					
21	1800-652-400-00	RELAY/5P ASSY	*			2					
22	1800-652-400-00	RELAY/5P ASSY	*			2					
23	2515-665-210-00	BUZZER ASSY	*			1					
24	V210-360-601-20	BOLT,SP/M6X12	*			1					
25	1837-652-610-00	LAMP/LED ASSY	*			1					
26	1740-680-530-20	HORN ASSY	*			1					
27	V230-360-601-20	FLANGEBOLT/M6X12	*			2					
28	1772-654-250-10	SWITCH/PUSH ASSY	*			1					
29	1772-654-251-00	NUT	*			2					
30	1772-654-280-10	SWITCH/PUSH ASSY	*			1					

FIG.141 SWITCH SYSTEM(2/2)
(TM3267F TYPE EXCEPT A)

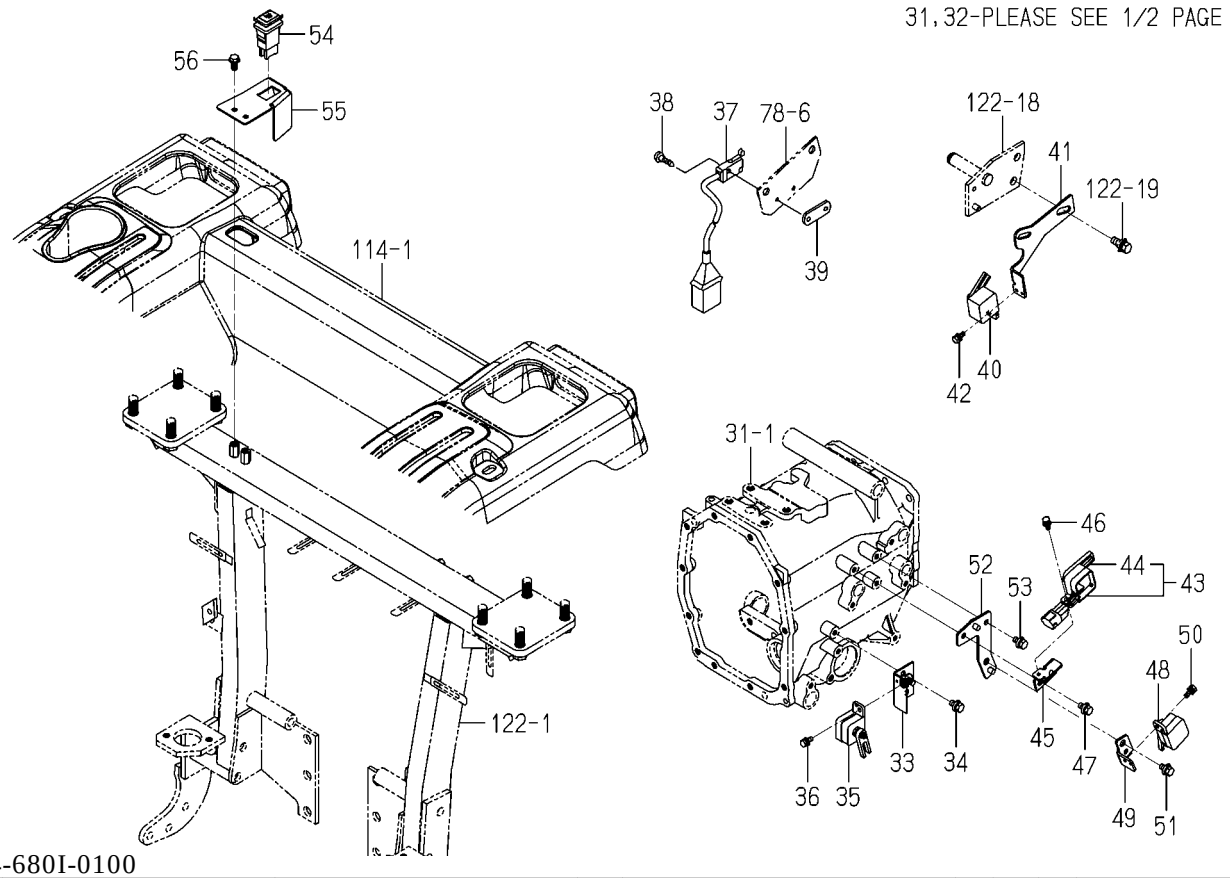

1774-680I-0100

KEY	PART CODE	DESCRIPTION	SPC	TYPE OF MODEL TM3217	TM3247	TM3267		ITC	COL	GRP	REMARKS
31	1772-654-281-00	NUT	*			2					
32	1772-654-282-00	BOOT	*			1					
33	1774-680-230-00	BRACKET/SENSOR COMP	*			1					
34	V211-360-801-60	BOLT,SP/M8X16	*			2					
35	1740-680-520-10	SWITCH/SENSOR ASSY	*			1					
36	V210-360-601-60	BOLT,SP/M6X16	*			1					
37	1774-680-240-00	SWITCH/LIMIT ASSY	*			1					
38	1614-129-003-00	SCREW/M03X20	*			2					
39	3642-496-007-10	PLATE,SWITCH	*			1					
40	1773-654-240-10	SWITCH/LEVER ASSY	*			1					
41	1774-680-038-00	BRACKET/SENSOR/SUB	*			1					
42	V210-360-601-60	BOLT,SP/M6X16	*			1					
43	1716-680-330-10	SWITCH/LEVER ASSY	*			1					
44	1716-680-222-00	ARM	*			1					
45	1774-680-032-00	BRACKET/SWITCH/PTO	*			1					
46	V210-360-601-60	BOLT,SP/M6X16	*			1					
47	V211-360-801-60	BOLT,SP/M8X16	*			1					
48	1740-680-520-10	SWITCH/SENSOR ASSY	*			1					
49	1774-680-031-00	BRACKET/SWITCH/MID	*			1					
50	V210-360-601-60	BOLT,SP/M6X16	*			1					
51	V211-360-801-60	BOLT,SP/M8X16	*			1					
52	1774-680-310-00	STAY/SWITCH COMP	*			1					
53	V211-360-801-60	BOLT,SP/M8X16	*			1					
54	1809-670-290-00	SWITCH/BEACON ASSY	*			1					
55	1774-680-037-00	BRACKET/SWITCH/BEACO	*			1					
56	V231-360-801-60	FLANGEBOLT/M8X16	*			2					

FIG.142 SWITCH SYSTEM(1/2) (TM3217F,3247F TYPE EXCEPT A)

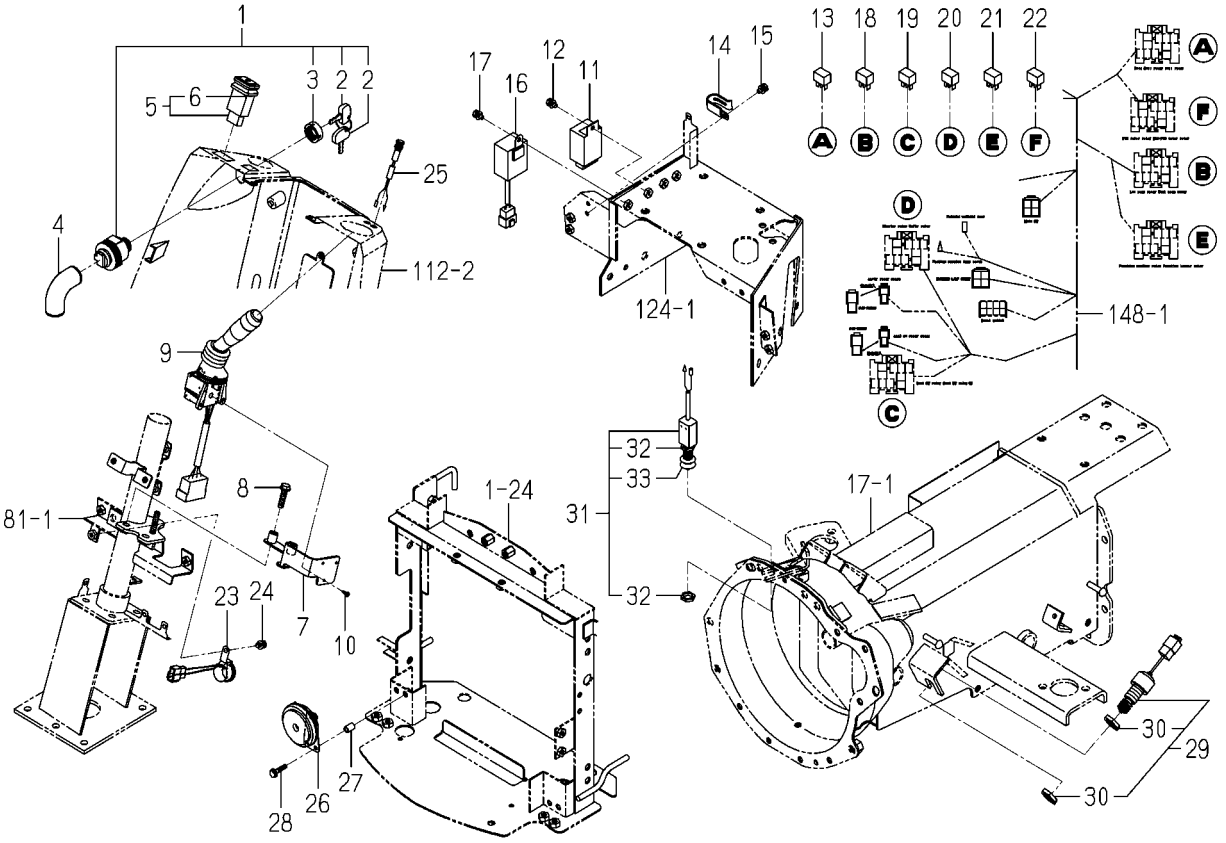

1774-680J-0100

KEY	PART CODE	DESCRIPTION	SPC	TYPE OF MODEL				ITC	COL	GRP	REMARKS
				TM3217	TM3247	TM3267					
1	1716-680-200-20	SWITCH/MAIN ASSY	*	1	1						
2	2186-536-211-00	KEY	*	2	2						
3	2186-536-212-00	NUT/RING	*	1	1						
4	1716-680-006-00	COVER/SWITCH	*	1	1						
5	1740-680-550-00	SWITCH/HAZARD ASSY	*	1	1						
6	1740-680-551-00	BULB/LAMP/14V60MA	*	1	1						
7	1774-680-210-00	BRACKET/SWITCH/COMBI	*	1	1						
8	V231-360-803-00	FLANGEBOLT/M8X30	*	2	2						
9	1774-680-260-00	SWITCH/COMBINATION	*	1	1						
10	1772-652-001-00	SCREW/TAPPING/3.5X13	*	3	3						
11	1739-681-220-20	RELAY/FLASHER/EEC	*	1	1						
12	V210-360-601-20	BOLT,SP/M6X12	*	1	1						
13	1800-652-400-00	RELAY/5P ASSY	*	2	2						
14	3737-172-009-00	CLAMP,MAIN HARNESS	*	1	1						
15	V120-365-001-60	SCREW,SP/M5X16	*	1	1						
16	1774-680-250-00	UNIT/TIMER ASSY	*	1	1						
17	V210-360-601-20	BOLT,SP/M6X12	*	1	1						
18	1800-652-400-00	RELAY/5P ASSY	*	2	2						
19	1800-652-400-00	RELAY/5P ASSY	*	2	2						
20	1800-652-400-00	RELAY/5P ASSY	*	2	2						
21	1800-652-400-00	RELAY/5P ASSY	*	2	2						
22	1800-652-400-00	RELAY/5P ASSY	*	2	2						
23	2515-665-210-00	BUZZER ASSY	*	1	1						
24	V210-360-601-20	BOLT,SP/M6X12	*	1	1						
25	1837-652-610-00	LAMP/LED ASSY	*	1	1						
26	1740-680-530-20	HORN ASSY	*	1	1						
27	2150-661-002-00	COLLAR	*	2	2						
28	V230-360-602-50	FLANGEBOLT/M6X25	*	2	2						
29	1772-654-250-10	SWITCH/PUSH ASSY	*	1	1						
30	1772-654-251-00	NUT	*	2	2						

FIG.142 SWITCH SYSTEM(2/2)
(TM3217F,3247F TYPE EXCEPT A)

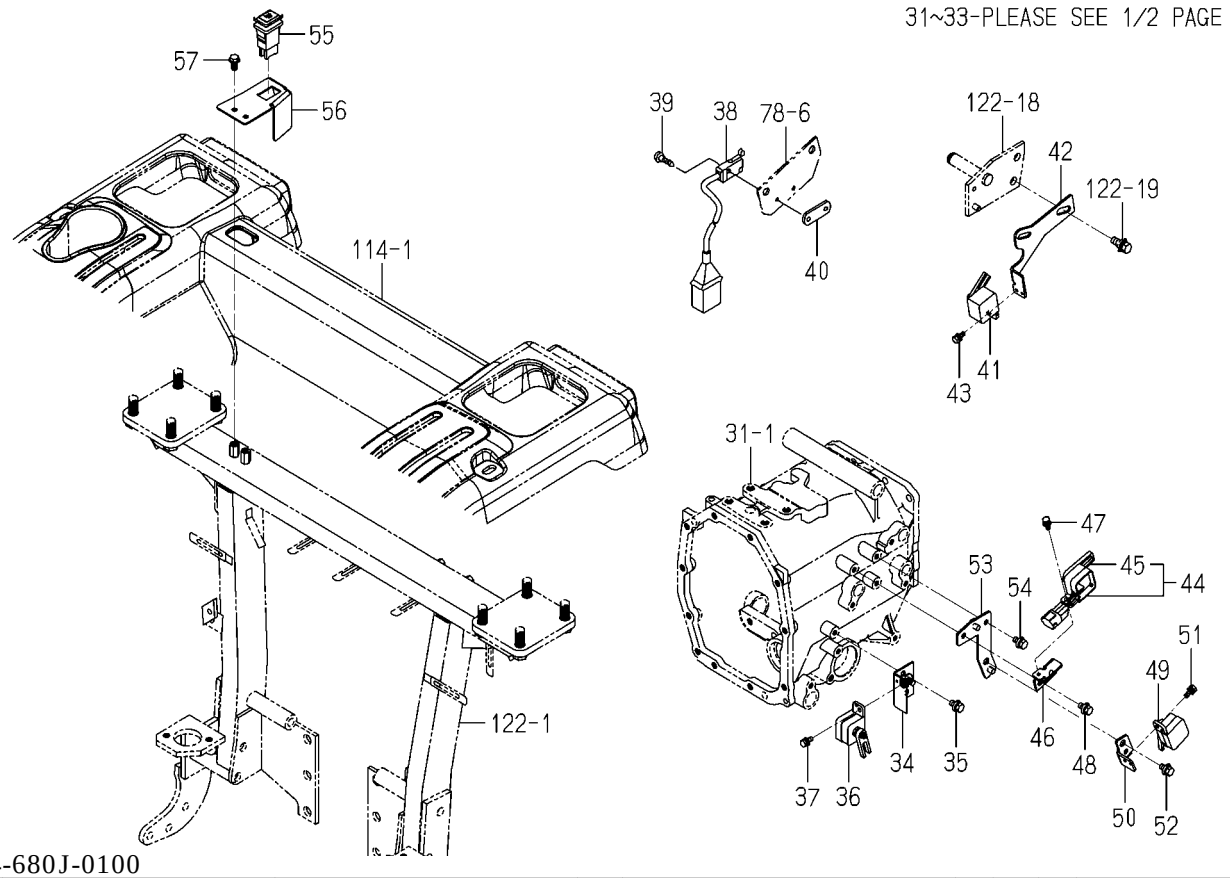

1774-680J-0100

KEY	PART CODE	DESCRIPTION	SPC	TYPE OF MODEL TM3217	TM3247	TM3267		ITC	COL	GRP	REMARKS
31	1772-654-280-10	SWITCH/PUSH ASSY	*	1	1						
32	1772-654-281-00	NUT	*	2	2						
33	1772-654-282-00	BOOT	*	1	1						
34	1774-680-230-00	BRACKET/SENSOR COMP	*	1	1						
35	V211-360-801-60	BOLT,SP/M8X16	*	2	2						
36	1740-680-520-10	SWITCH/SENSOR ASSY	*	1	1						
37	V210-360-601-60	BOLT,SP/M6X16	*	1	1						
38	1774-680-240-00	SWITCH/LIMIT ASSY	*	1	1						
39	1614-129-003-00	SCREW/M03X20	*	2	2						
40	3642-496-007-10	PLATE,SWITCH	*	1	1						
41	1773-654-240-10	SWITCH/LEVER ASSY	*	1	1						
42	1774-680-038-00	BRACKET/SENSOR/SUB	*	1	1						
43	V210-360-601-60	BOLT,SP/M6X16	*	1	1						
44	1716-680-330-10	SWITCH/LEVER ASSY	*	1	1						
45	1716-680-222-00	ARM	*	1	1						
46	1774-680-032-00	BRACKET/SWITCH/PTO	*	1	1						
47	V210-360-601-60	BOLT,SP/M6X16	*	1	1						
48	V211-360-801-60	BOLT,SP/M8X16	*	1	1						
49	1740-680-520-10	SWITCH/SENSOR ASSY	*	1	1						
50	1774-680-031-00	BRACKET/SWITCH/MID	*	1	1						
51	V210-360-601-60	BOLT,SP/M6X16	*	1	1						
52	V211-360-801-60	BOLT,SP/M8X16	*	1	1						
53	1774-680-310-00	STAY/SWITCH COMP	*	1	1						
54	V211-360-801-60	BOLT,SP/M8X16	*	1	1						
55	1809-670-290-00	SWITCH/BEACON ASSY	*	1	1						
56	1774-680-037-00	BRACKET/SWITCH/BEACO	*	1	1						
57	V231-360-801-60	FLANGEBOLT/M8X16	*	2	2						

FIG.143 SWITCH SYSTEM(TM3267S TYPE)(1/2)

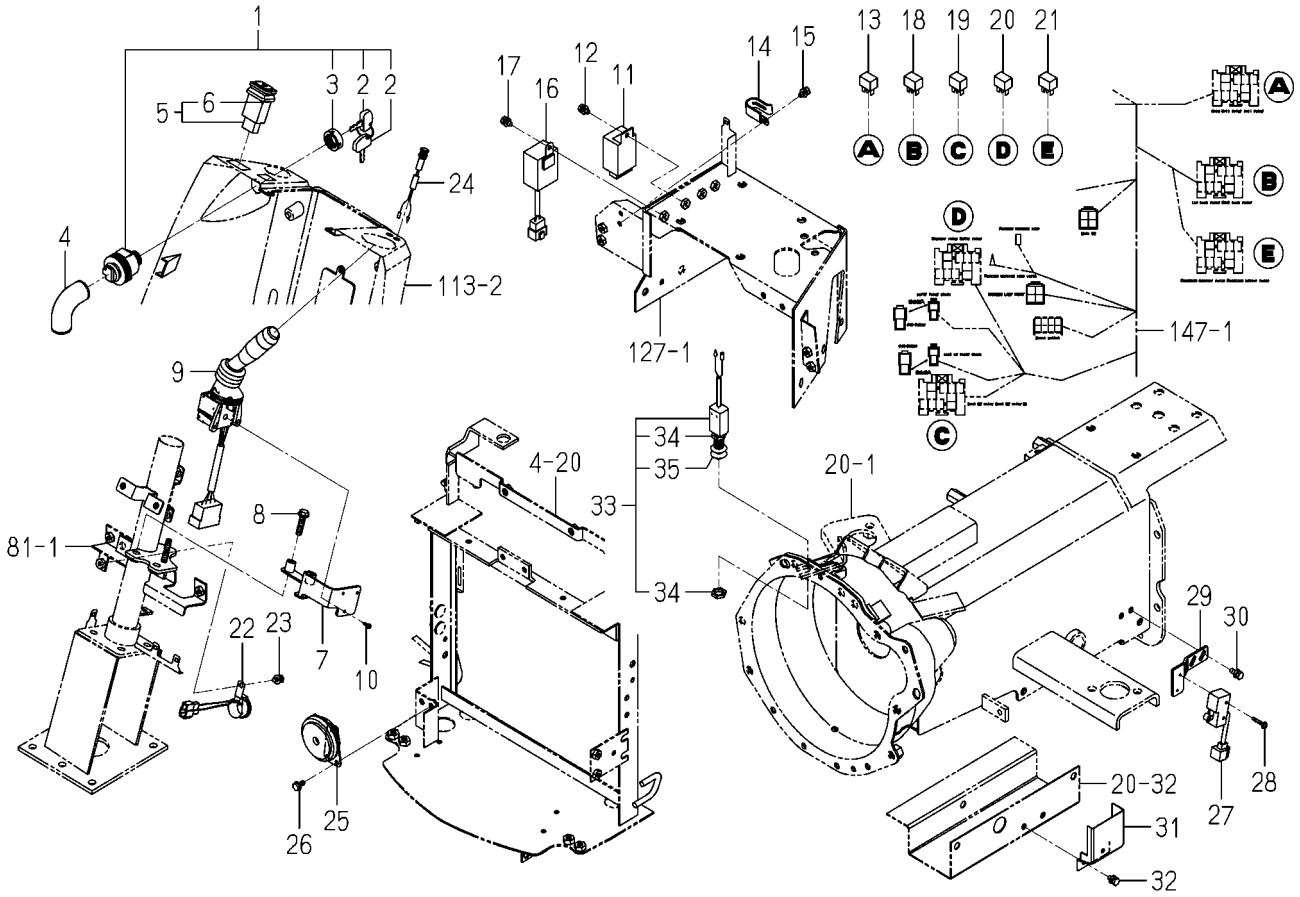

1774-680K-0100

KEY	PART CODE	DESCRIPTION	SPC	TYPE OF MODEL				ITC	COL	GRP	REMARKS
				TM3217	TM3247	TM3267					
1	1716-680-200-20	SWITCH/MAIN ASSY	*			1					
2	2186-536-211-00	KEY	*			2					
3	2186-536-212-00	NUT/RING	*			1					
4	1716-680-006-00	COVER/SWITCH	*			1					
5	1740-680-550-00	SWITCH/HAZARD ASSY	*			1					
6	1740-680-551-00	BULB/LAMP/14V60MA	*			1					
7	1774-680-210-00	BRACKET/SWITCH/COMBI	*			1					
8	V231-360-803-00	FLANGEBOLT/M8X30	*			2					
9	1774-680-260-00	SWITCH/COMBINATION	*			1					
10	1772-652-001-00	SCREW/TAPPING/3.5X13	*			3					
11	1739-681-220-20	RELAY/FLASHER/EEC	*			1					
12	V210-360-601-20	BOLT,SP/M6X12	*			1					
13	1800-652-400-00	RELAY/5P ASSY	*			2					
14	3737-172-009-00	CLAMP,MAIN HARNESS	*			1					
15	V120-365-001-60	SCREW,SP/M5X16	*			1					
16	1774-680-250-00	UNIT/TIMER ASSY	*			1					
17	V210-360-601-20	BOLT,SP/M6X12	*			1					
18	1800-652-400-00	RELAY/5P ASSY	*			2					
19	1800-652-400-00	RELAY/5P ASSY	*			2					
20	1800-652-400-00	RELAY/5P ASSY	*			2					
21	1800-652-400-00	RELAY/5P ASSY	*			2					
22	2515-665-210-00	BUZZER ASSY	*			1					
23	V210-360-601-20	BOLT,SP/M6X12	*			1					
24	1837-652-610-00	LAMP/LED ASSY	*			1					
25	1740-680-530-20	HORN ASSY	*			1					
26	V230-360-601-20	FLANGEBOLT/M6X12	*			2					
27	1518-621-470-00	SWITCH,SAFETY ASSY	*			1					
28	V120-364-002-50	SCREW,SP/M4X25	*			2					
29	1774-680-035-00	BRACKET/SENSOR/HST	*			1					
30	V210-360-601-60	BOLT,SP/M6X16	*			2					

FIG.143 SWITCH SYSTEM(TM3267S TYPE)(2/2)

31~35-PLEASE SEE 1/2 PAGE

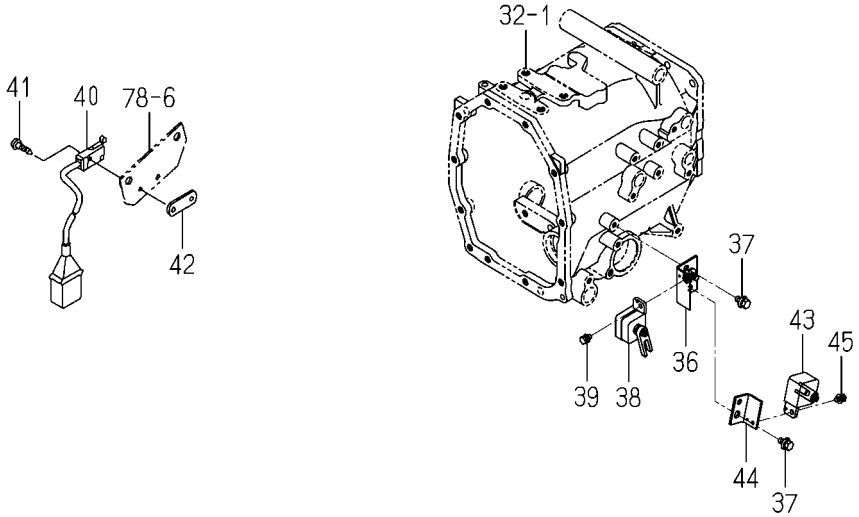

1774-680K-0100

KEY	PART CODE	DESCRIPTION	SPC	TYPE OF MODEL				ITC	COL	GRP	REMARKS
				TM3217	TM3247	TM3267					
31	1774-680-036-00	COVER/SENSOR/HST	*			1					
32	V210-360-601-20	BOLT,SP/M6X12	*			2					
33	1772-654-280-10	SWITCH/PUSH ASSY	*			1					
34	1772-654-281-00	NUT	*			2					
35	1772-654-282-00	BOOT	*			1					
36	1774-680-230-00	BRACKET/SENSOR COMP	*			1					
37	V211-360-801-60	BOLT,SP/M8X16	*			2					
38	1740-680-520-10	SWITCH/SENSOR ASSY	*			1					
39	V210-360-601-60	BOLT,SP/M6X16	*			1					
40	1774-680-240-00	SWITCH/LIMIT ASSY	*			1					
41	1614-129-003-00	SCREW/M03X20	*			2					
42	3642-496-007-10	PLATE,SWITCH	*			1					
43	1773-654-240-10	SWITCH/LEVER ASSY	*			1					
44	1774-680-052-00	BRACKET/SWITCH/SUB	*			1					
45	V210-360-601-20	BOLT,SP/M6X12	*			1					

FIG.144 SWITCH SYSTEM(TM3247S TYPE)(1/2)

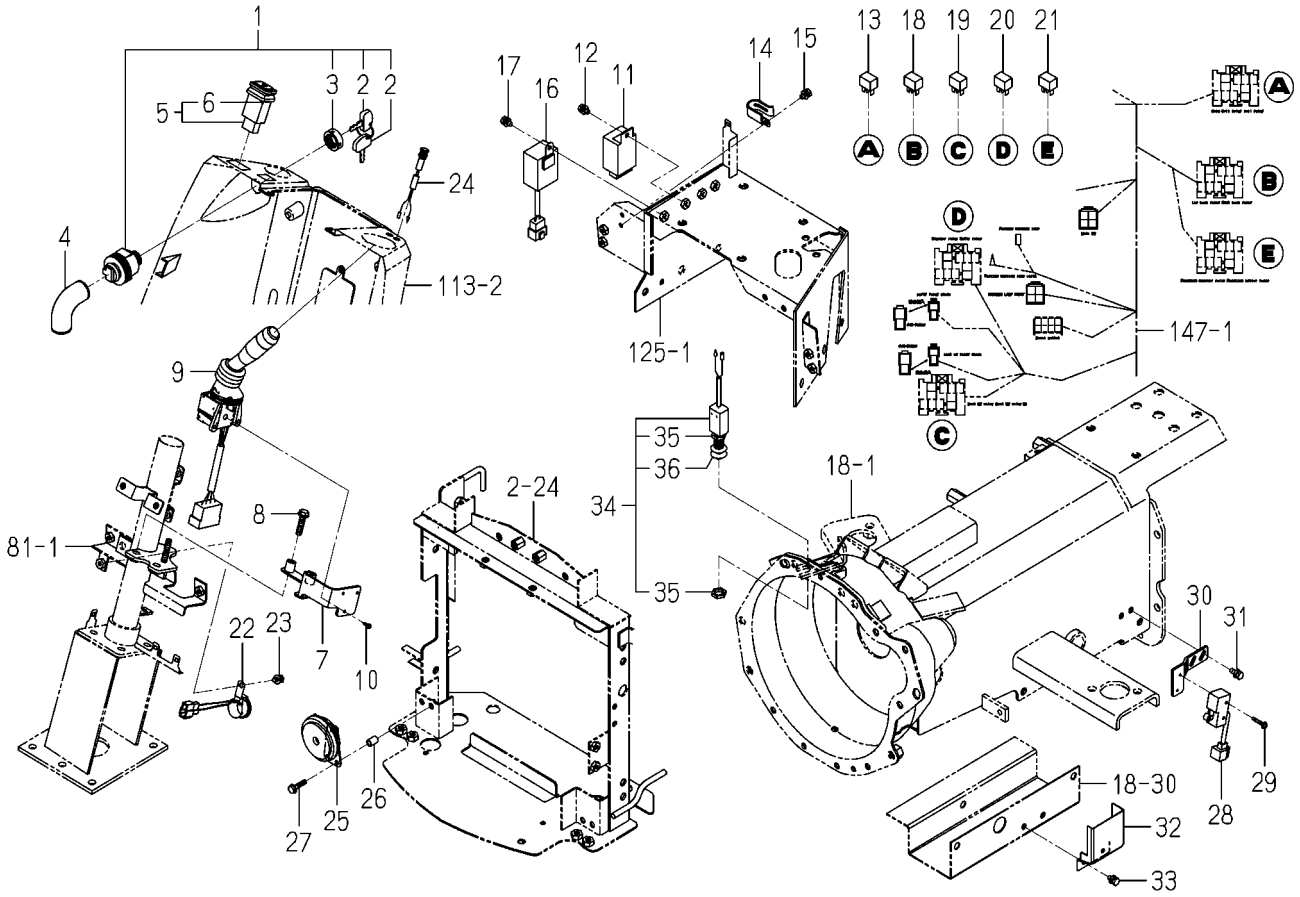

1774-680L-0100

KEY	PART CODE	DESCRIPTION	SPC	TYPE OF MODEL				ITC	COL	GRP	REMARKS
				TM3217	TM3247	TM3267					
1	1716-680-200-20	SWITCH/MAIN ASSY	*		1						
2	2186-536-211-00	KEY	*		2						
3	2186-536-212-00	NUT/RING	*		1						
4	1716-680-006-00	COVER/SWITCH	*		1						
5	1740-680-550-00	SWITCH/HAZARD ASSY	*		1						
6	1740-680-551-00	BULB/LAMP/14V60MA	*		1						
7	1774-680-210-00	BRACKET/SWITCH/COMBI	*		1						
8	V231-360-803-00	FLANGEBOLT/M8X30	*		2						
9	1774-680-260-00	SWITCH/COMBINATION	*		1						
10	1772-652-001-00	SCREW/TAPPING/3.5X13	*		3						
11	1739-681-220-20	RELAY/FLASHER/EEC	*		1						
12	V210-360-601-20	BOLT,SP/M6X12	*		1						
13	1800-652-400-00	RELAY/5P ASSY	*		2						
14	3737-172-009-00	CLAMP,MAIN HARNESS	*		1						
15	V120-365-001-60	SCREW,SP/M5X16	*		1						
16	1774-680-250-00	UNIT/TIMER ASSY	*		1						
17	V210-360-601-20	BOLT,SP/M6X12	*		1						
18	1800-652-400-00	RELAY/5P ASSY	*		2						
19	1800-652-400-00	RELAY/5P ASSY	*		2						
20	1800-652-400-00	RELAY/5P ASSY	*		2						
21	1800-652-400-00	RELAY/5P ASSY	*		2						
22	2515-665-210-00	BUZZER ASSY	*		1						
23	V210-360-601-20	BOLT,SP/M6X12	*		1						
24	1837-652-610-00	LAMP/LED ASSY	*		1						
25	1740-680-530-20	HORN ASSY	*		1						
26	2150-661-002-00	COLLAR	*		1						
27	V230-360-602-50	FLANGEBOLT/M6X25	*		2						
28	1518-621-470-00	SWITCH,SAFETY ASSY	*		1						
29	V120-364-002-50	SCREW,SP/M4X25	*		2						
30	1774-680-035-00	BRACKET/SENSOR/HST	*		1						

FIG.144 SWITCH SYSTEM(TM3247S TYPE)(2/2)

31~36-PLEASE SEE 1/2 PAGE

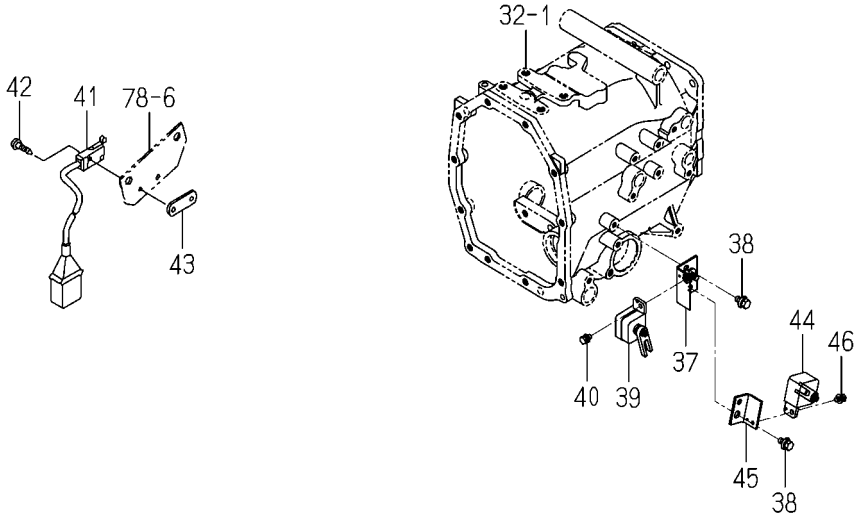

1774-680L-0100

KEY	PART CODE	DESCRIPTION	SPC	TYPE OF MODEL				ITC	COL	GRP	REMARKS
				TM3217	TM3247	TM3267					
31	V210-360-601-60	BOLT,SP/M6X16	*		2						
32	1774-680-036-00	COVER/SENSOR/HST	*		1						
33	V210-360-601-20	BOLT,SP/M6X12	*		2						
34	1772-654-280-10	SWITCH/PUSH ASSY	*		1						
35	1772-654-281-00	NUT	*		2						
36	1772-654-282-00	BOOT	*		1						
37	1774-680-230-00	BRACKET/SENSOR COMP	*		1						
38	V211-360-801-60	BOLT,SP/M8X16	*		2						
39	1740-680-520-10	SWITCH/SENSOR ASSY	*		1						
40	V210-360-601-60	BOLT,SP/M6X16	*		1						
41	1774-680-240-00	SWITCH/LIMIT ASSY	*		1						
42	1614-129-003-00	SCREW/M03X20	*		2						
43	3642-496-007-10	PLATE,SWITCH	*		1						
44	1773-654-240-10	SWITCH/LEVER ASSY	*		1						
45	1774-680-052-00	BRACKET/SWITCH/SUB	*		1						
46	V210-360-601-20	BOLT,SP/M6X12	*		1						

FIG.145 HARNESS SYSTEM(A TYPE)

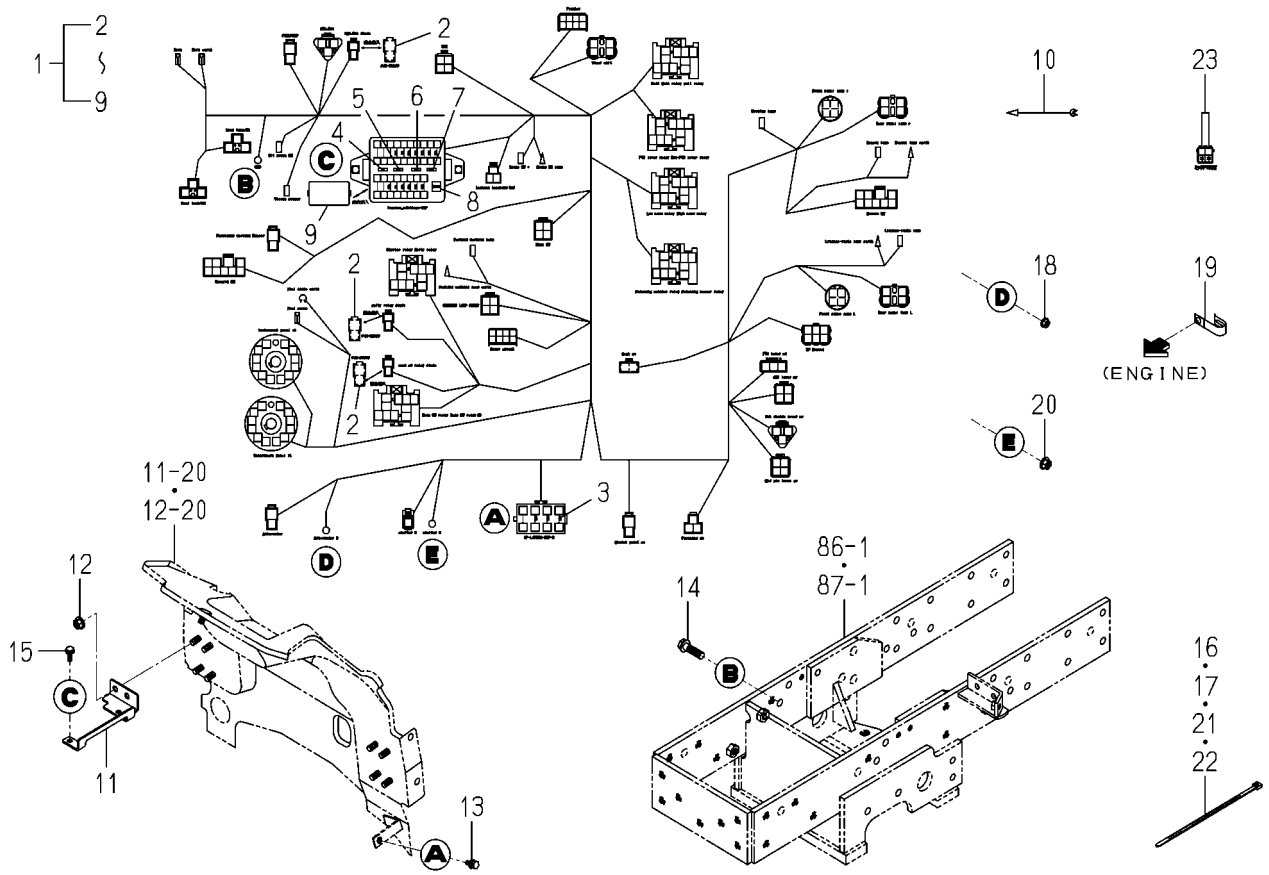

1774-690C-0100

KEY	PART CODE	DESCRIPTION	SPC	TYPE OF MODEL				ITC	COL	GRP	REMARKS
				TM3217	TM3247	TM3267					
1	1774-690-400-20	HARNESS/MAIN/FE ASSY	*	1	1	1					
2	1773-652-212-00	DIODE/3A	*	3	3	3					
3	1650-650-222-00	FUSE/SLOW BLOW/40A	*	3	3	3					
4	3824-247-202-00	FUSE/BLADE/32V05A	*	3	3	3					
5	3821-262-202-00	FUSE/BLADE/32V10A	*	6	6	6					
6	3821-262-203-00	FUSE(BLADE/32V15A)	*	6	6	6					
7	3821-262-204-00	FUSE/BLADE/32V20A	*	2	2	2					
8	3827-270-002-00	TOOL/FUSE	*	1	1	1					
9	3827-270-001-00	COVER/FUSE	*	1	1	1					
10	1600-624-004-10	HARNESS/OILPRESSURE	*	1	1	1					
11	1774-690-003-00	BRACKET/FUSE	*	1	1	1					
12	V362-260-008-00	NUT/WASHER/M8	*	2	2	2					
13	V210-360-601-60	BOLT,SP/M6X16	*	1	1	1					
14	V231-361-003-50	FLANGEBOLT/M10X35	*	1	1	1					
15	V230-360-601-60	FLANGEBOLT/M6X16	*	2	2	2					
16	1342-402-006-00	BAND,WIRE/250	*	2	2	2					
17	1376-402-003-00	BAND,WIRE/140	*	4	4	4					
18	V360-260-006-00	NUT/WASHER/M6	*	1	1	1					
19	1425-621-004-00	HOLDER/JE/9-9	*	1	1	1					
20	V362-260-008-00	NUT/WASHER/M8	*	1	1	1					
21	1342-402-006-00	BAND,WIRE/250	*	2	2	2					
22	1376-402-003-00	BAND,WIRE/140	*	1	1	1					
23	1774-690-420-00	HARNESS/LOOP/CIRCUIT	*	1	1	1					

FIG.146 HARNESS SYSTEM(H TYPE)

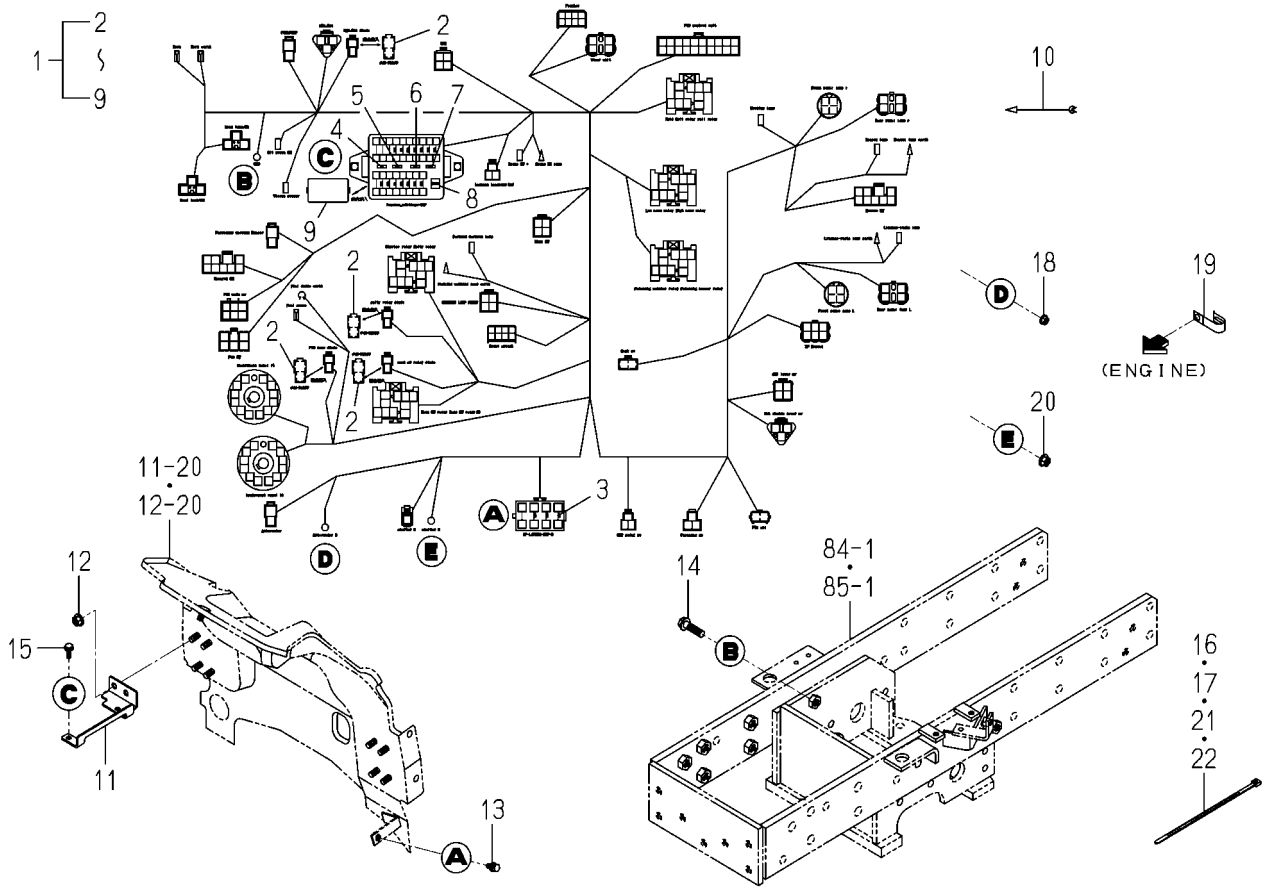

1774-690D-0100

KEY	PART CODE	DESCRIPTION	SPC	TYPE OF MODEL				ITC	COL	GRP	REMARKS
				TM3217	TM3247	TM3267					
1	1774-690-410-20	HARNESS/MAIN/HE ASSY	*	1	1	1					
2	1773-652-212-00	DIODE/3A	*	4	4	4					
3	1650-650-222-00	FUSE/SLOW BLOW/40A	*	3	3	3					
4	3824-247-202-00	FUSE/BLADE/32V05A	*	3	3	3					
5	3821-262-202-00	FUSE/BLADE/32V10A	*	7	7	7					
6	3821-262-203-00	FUSE(BLADE/32V15A)	*	6	6	6					
7	3821-262-204-00	FUSE/BLADE/32V20A	*	2	2	2					
8	3827-270-002-00	TOOL/FUSE	*	1	1	1					
9	3827-270-001-00	COVER/FUSE	*	1	1	1					
10	1600-624-004-10	HARNESS/OILPRESSURE	*	1	1	1					
11	1774-690-003-00	BRACKET/FUSE	*	1	1	1					
12	V362-260-008-00	NUT/WASHER/M8	*	2	2	2					
13	V210-360-601-60	BOLT,SP/M6X16	*	1	1	1					
14	V231-361-003-50	FLANGEBOLT/M10X35	*	1	1	1					
15	V230-360-601-60	FLANGEBOLT/M6X16	*	2	2	2					
16	1342-402-006-00	BAND,WIRE/250	*	2	2	2					
17	1376-402-003-00	BAND,WIRE/140	*	4	4	4					
18	V360-260-006-00	NUT/WASHER/M6	*	1	1	1					
19	1425-621-004-00	HOLDER/JE/9-9	*	1	1	1					
20	V362-260-008-00	NUT/WASHER/M8	*	1	1	1					
21	1342-402-006-00	BAND,WIRE/250	*	2	2	2					
22	1376-402-003-00	BAND,WIRE/140	*	1	1	1					

FIG.147 HARNESS SYSTEM(E6 TYPE)

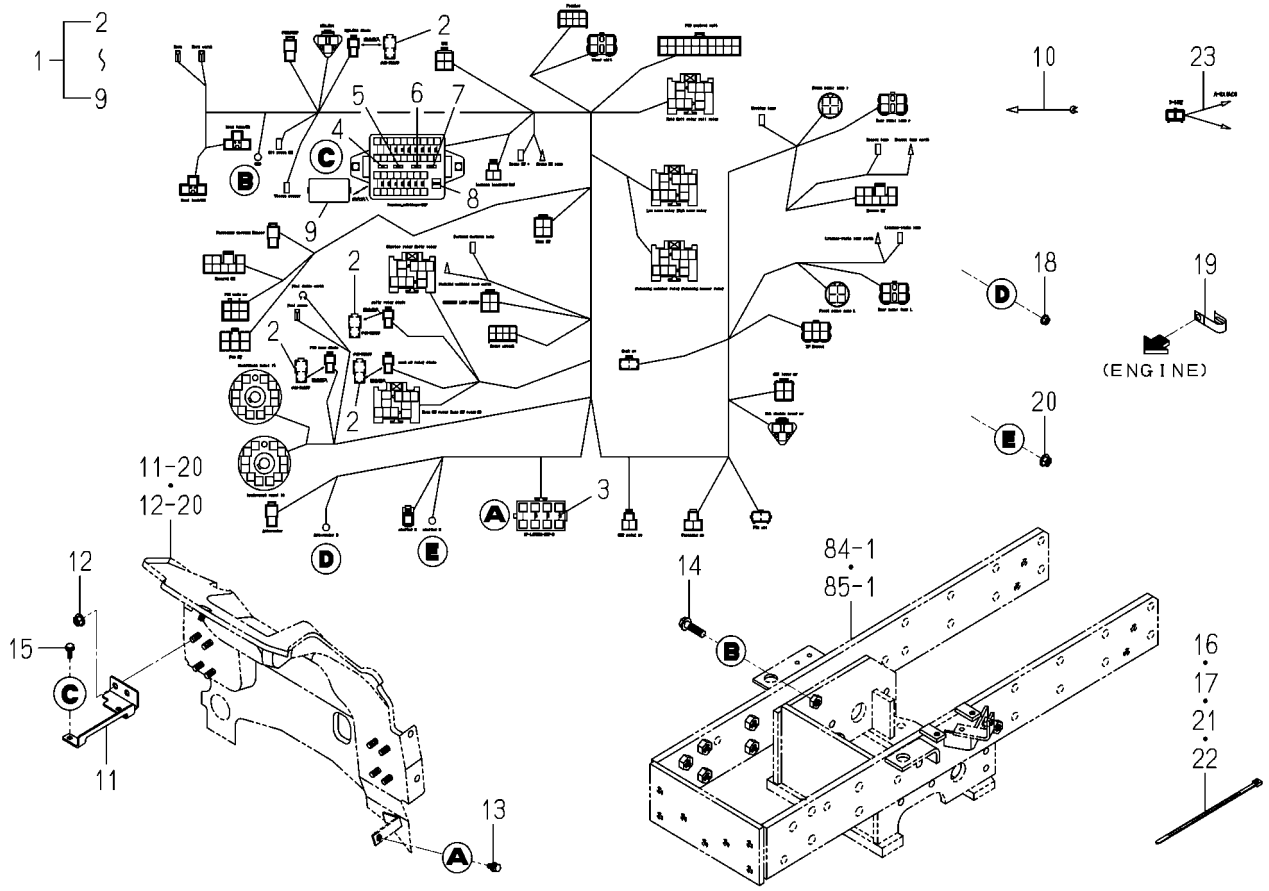

1774-690E-0100

KEY	PART CODE	DESCRIPTION	SPC	TYPE OF MODEL TM3217	TM3247	TM3267		ITC	COL	GRP	REMARKS
1	1774-690-410-20	HARNESS/MAIN/HE ASSY	*		1	1					
2	1773-652-212-00	DIODE/3A	*		4	4					
3	1650-650-222-00	FUSE/SLOW BLOW/40A	*		3	3					
4	3824-247-202-00	FUSE/BLADE/32V05A	*		3	3					
5	3821-262-202-00	FUSE/BLADE/32V10A	*		7	7					
6	3821-262-203-00	FUSE(BLADE/32V15A)	*		6	6					
7	3821-262-204-00	FUSE/BLADE/32V20A	*		2	2					
8	3827-270-002-00	TOOL/FUSE	*		1	1					
9	3827-270-001-00	COVER/FUSE	*		1	1					
10	1600-624-004-10	HARNESS/OILPRESSURE	*		1	1					
11	1774-690-003-00	BRACKET/FUSE	*		1	1					
12	V362-260-008-00	NUT/WASHER/M8	*		2	2					
13	V210-360-601-60	BOLT,SP/M6X16	*		1	1					
14	V231-361-003-50	FLANGEBOLT/M10X35	*		1	1					
15	V230-360-601-60	FLANGEBOLT/M6X16	*		2	2					
16	1342-402-006-00	BAND,WIRE/250	*		2	2					
17	1376-402-003-00	BAND,WIRE/140	*		4	4					
18	V360-260-006-00	NUT/WASHER/M6	*		1	1					
19	1425-621-004-00	HOLDER/JE/9-9	*		1	1					
20	V362-260-008-00	NUT/WASHER/M8	*		1	1					
21	1342-402-006-00	BAND,WIRE/250	*		2	2					
22	1376-402-003-00	BAND,WIRE/140	*		1	1					
23	1739-690-720-00	HARNESS/SWITCH/SEAT	*		1	1					

FIG.148 HARNESS SYSTEM(F TYPE EXCEPT A)

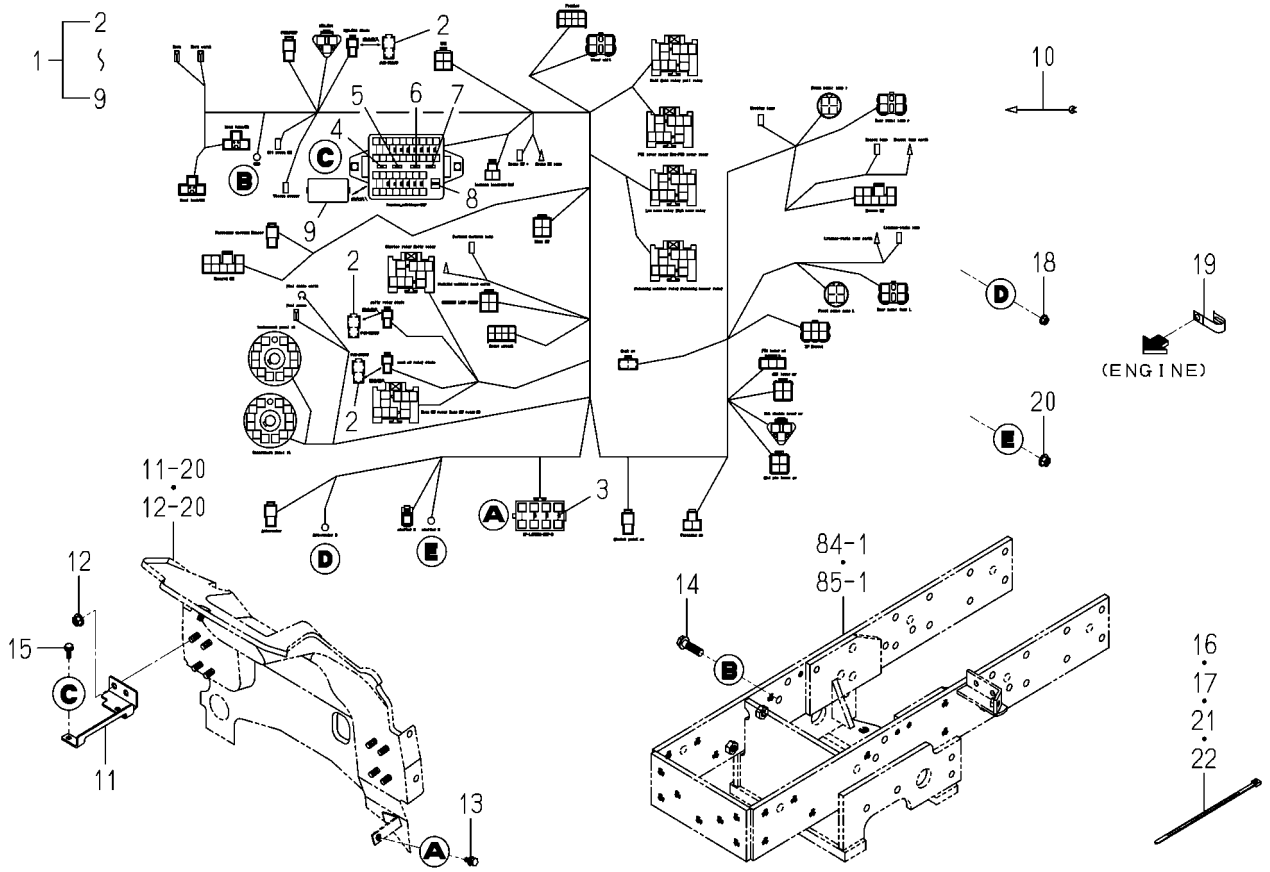

1774-690F-0100

KEY	PART CODE	DESCRIPTION	SPC	TYPE OF MODEL				ITC	COL	GRP	REMARKS
				TM3217	TM3247	TM3267					
1	1774-690-400-20	HARNESS/MAIN/FE ASSY	*	1	1	1					
2	1773-652-212-00	DIODE/3A	*	3	3	3					
3	1650-650-222-00	FUSE/SLOW BLOW/40A	*	3	3	3					
4	3824-247-202-00	FUSE/BLADE/32V05A	*	3	3	3					
5	3821-262-202-00	FUSE/BLADE/32V10A	*	6	6	6					
6	3821-262-203-00	FUSE(BLADE/32V15A)	*	6	6	6					
7	3821-262-204-00	FUSE/BLADE/32V20A	*	2	2	2					
8	3827-270-002-00	TOOL/FUSE	*	1	1	1					
9	3827-270-001-00	COVER/FUSE	*	1	1	1					
10	1600-624-004-10	HARNESS/OILPRESSURE	*	1	1	1					
11	1774-690-003-00	BRACKET/FUSE	*	1	1	1					
12	V362-260-008-00	NUT/WASHER/M8	*	2	2	2					
13	V210-360-601-60	BOLT,SP/M6X16	*	1	1	1					
14	V231-361-003-50	FLANGEBOLT/M10X35	*	1	1	1					
15	V230-360-601-60	FLANGEBOLT/M6X16	*	2	2	2					
16	1342-402-006-00	BAND,WIRE/250	*	2	2	2					
17	1376-402-003-00	BAND,WIRE/140	*	4	4	4					
18	V360-260-006-00	NUT/WASHER/M6	*	1	1	1					
19	1425-621-004-00	HOLDER/JE/9-9	*	1	1	1					
20	V362-260-008-00	NUT/WASHER/M8	*	1	1	1					
21	1342-402-006-00	BAND,WIRE/250	*	2	2	2					
22	1376-402-003-00	BAND,WIRE/140	*	1	1	1					

FIG.149 CONTROL(PTO)SYSTEM(H TYPE)

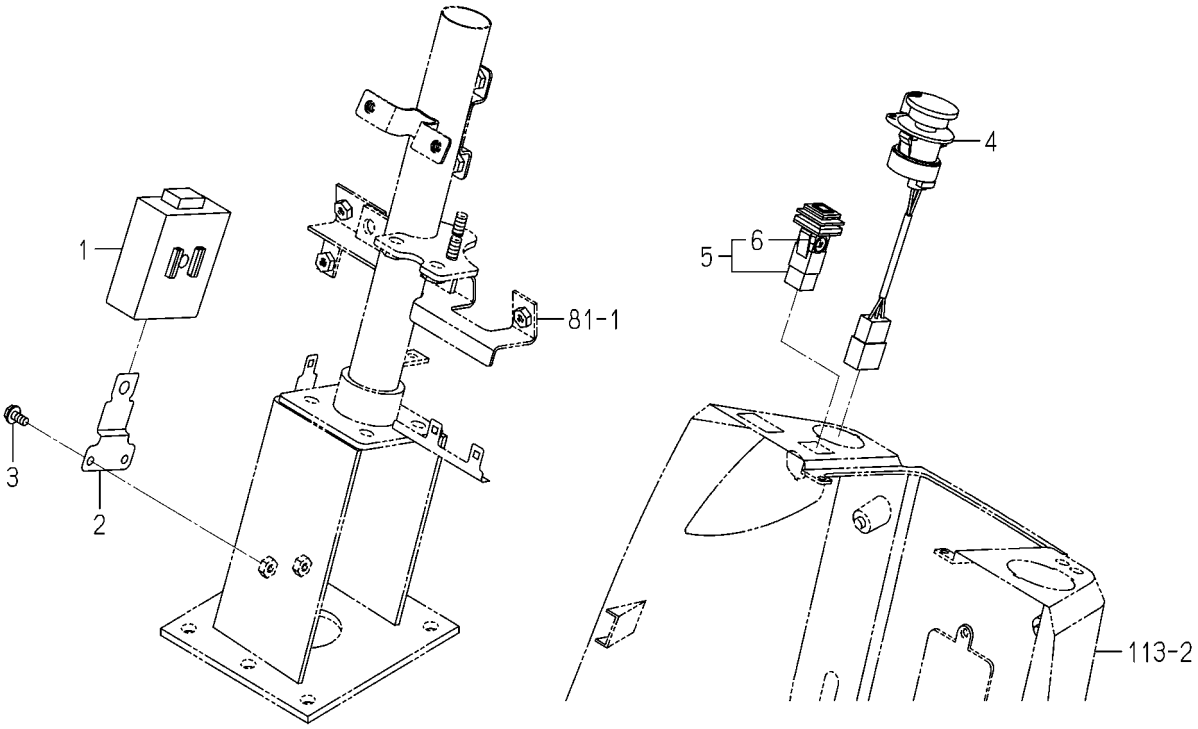

1774-695B-0100

KEY	PART CODE	DESCRIPTION	SPC	TYPE OF MODEL				ITC	COL	GRP	REMARKS
				TM3217	TM3247	TM3267					
1	1772-662-210-10	CONTROLLER/PTO ASSY	*	1	1	1					
2	1742-662-001-00	STAY/CONTROLLER	*	1	1	1					
3	V230-360-601-20	FLANGEBOLT/M6X12	*	2	2	2					
4	1837-652-600-00	SWITCH/PTO ASSY	*	1	1	1					
5	1742-652-260-00	SWITCH/ALTERNAT ASSY	*	1	1	1					
6	3801-272-302-00	BULB/LAMP/12V1W	*	1	1	1					

FIG.150 ROPS SYSTEM(EXCEPT A,D TYPE)

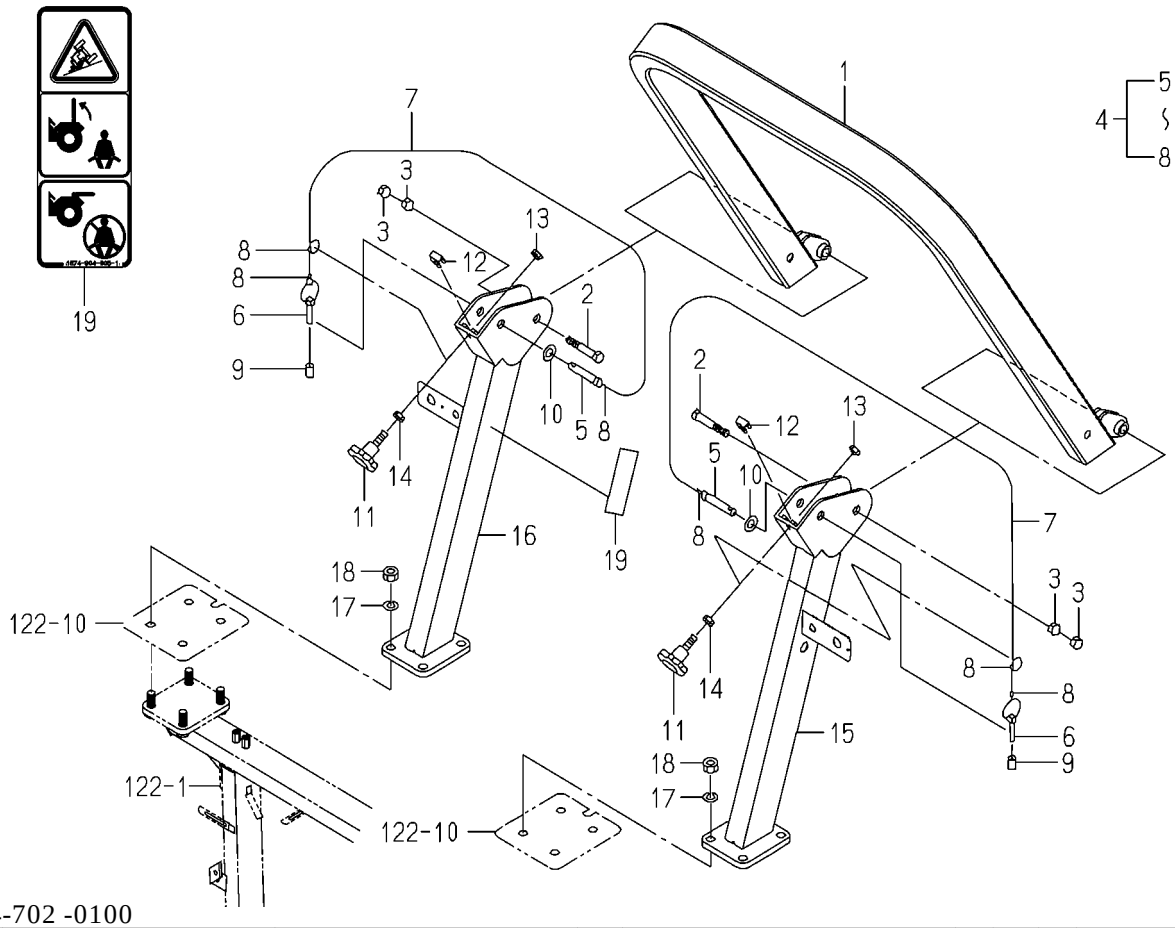

1774-702 -0100

KEY	PART CODE	DESCRIPTION	SPC	TYPE OF MODEL TM3217	TM3247	TM3267		ITC	COL	GRP	REMARKS
1	1774-702-270-10	FRAME/UPPER COMP	*	1	1	1					
2	1757-625-005-00	BOLT/M16X90	*	2	2	2					
3	1773-702-001-00	NUT/M16	*	4	4	4					
4	1773-702-260-10	PIN ASSY	*	2	2	2					
5	1636-701-251-00	PIN/19X94	*	2	2	2					
6	1673-525-002-30	LINKPIN	*	2	2	2					
7	1614-702-551-20	BAND	*	2	2	2					
8	1614-702-552-00	RING	*	6	6	6					
9	1785-702-005-00	TUBE/020	*	2	2	2					
10	1773-702-002-00	INSULATOR	*	2	2	2					
11	1773-702-012-00	NOB/LOCK	*	2	2	2					
12	1773-702-011-00	PLATE	*	2	2	2					
13	1725-611-087-00	U-NUT/M10X1.5	*	2	2	2					
14	V304-260-010-00	NUT/M10	*	2	2	2					
15	1774-702-280-10	FRAME/LH COMP	*	1	1	1					
16	1774-702-290-10	FRAME/RH COMP	*	1	1	1					
17	V401-160-014-00	WASHER,SP/M14	*	8	8	8					
18	V304-460-014-00	NUT/M14/7T	*	8	8	8					
19	1674-904-005-10	LABEL/ROPS	*	1	1	1					

FIG.151 ROPS(CENTER)SYSTEM (TM3217A,3247A TYPE)

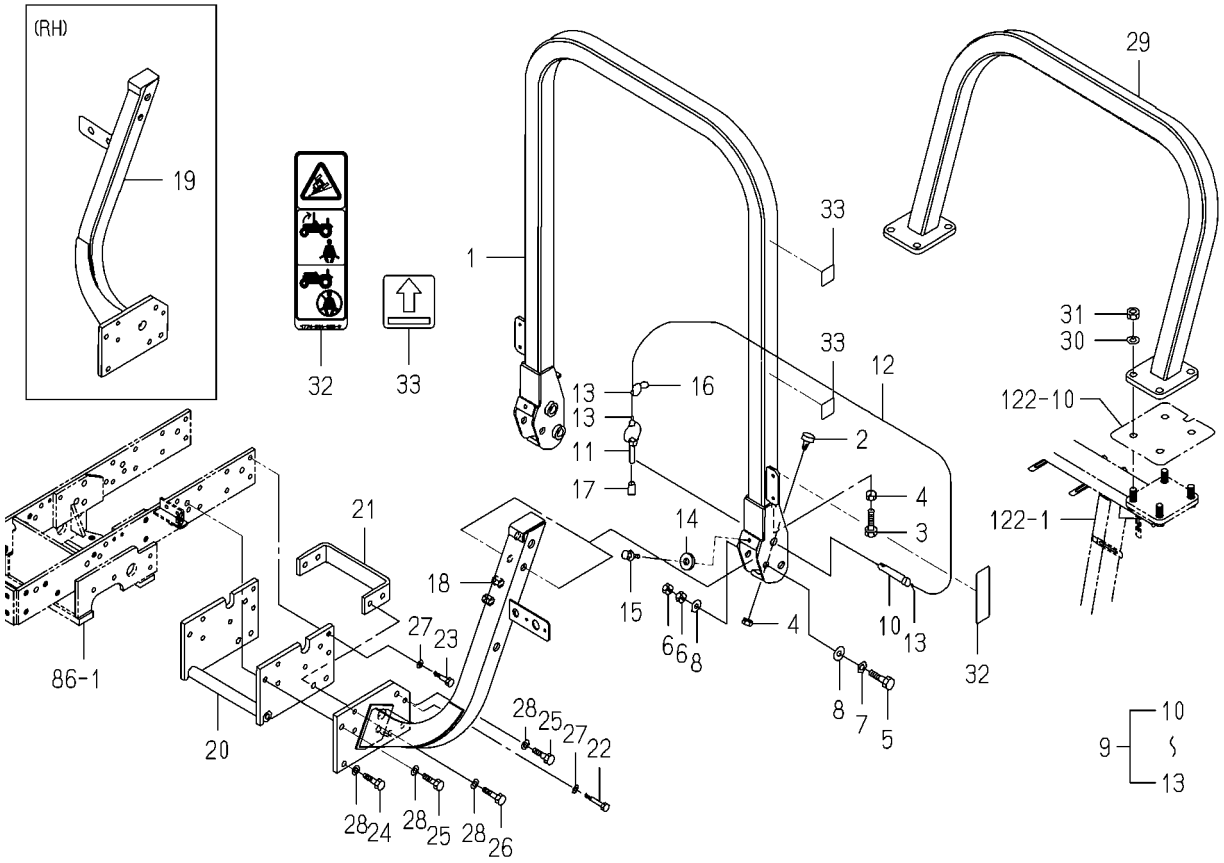

1774-702C-0100

KEY	PART CODE	DESCRIPTION	SPC	TYPE OF MODEL				ITC	COL	GRP	REMARKS
				TM3217	TM3247	TM3267					
1	1774-702-530-10	FRAME/UPPER/FRONT	*	1	1						
2	1421-602-005-10	CUSHION,B/ RUBBER	*	2	2						
3	1672-122-003-00	BOLT/TRIMED	*	2	2						
4	V304-260-008-00	NUT/M8	*	4	4						
5	V201-361-610-00	BOLT/M16X100/7T	*	2	2						
6	V304-460-016-00	NUT/M16/7T	*	4	4						
7	V401-160-016-00	WASHER,SP/M16	*	2	2						
8	V411-260-016-00	WASHER,PL/M16	*	4	4						
9	1614-702-550-10	PIN ASSY	*	2	2						
10	1614-702-560-00	PIN/19X94 COMP	*	2	2						
11	1673-525-002-30	LINKPIN	*	2	2						
12	1614-702-551-20	BAND	*	2	2						
13	1614-702-552-00	RING	*	6	6						
14	1423-616-004-00	CUSHION/RUBBER/10X25	*	2	2						
15	V211-360-801-60	BOLT,SP/M8X16	*	2	2						
16	V720-112-401-80	O-RING/1B,P18	*	2	2						
17	1785-702-005-00	TUBE/020	*	2	2						
18	1774-702-550-20	FRAME/LOWER/LH COMP	*	1	1						
19	1774-702-560-10	FRAME/LOWER/RH COMP	*	1	1						
20	1774-702-580-00	FRAME/SUB COMP	*	1	1						
21	1774-702-051-00	PLATE/U/196X44	*	1	1						
22	V203-361-005-00	BOLT/M10X50/7T,P1.25	*	6	6						
23	V203-361-004-00	BOLT/M10X40/7T,P1.25	*	4	4						
24	V201-361-203-00	BOLT/M12X30/7T	*	2	2						
25	V201-361-202-50	BOLT/M12X25/7T	*	4	4						
26	V201-361-204-00	BOLT/M12X40/7T	*	4	4						
27	V401-160-010-00	WASHER,SP/M10	*	10	10						
28	V401-160-012-00	WASHER,SP/M12	*	10	10						
29	1774-702-540-00	FRAME/UPPER COMP	*	1	1						
30	V401-160-014-00	WASHER,SP/M14	*	8	8						

FIG.151 ROPS(CENTER)SYSTEM (TM3217A,3247A TYPE)

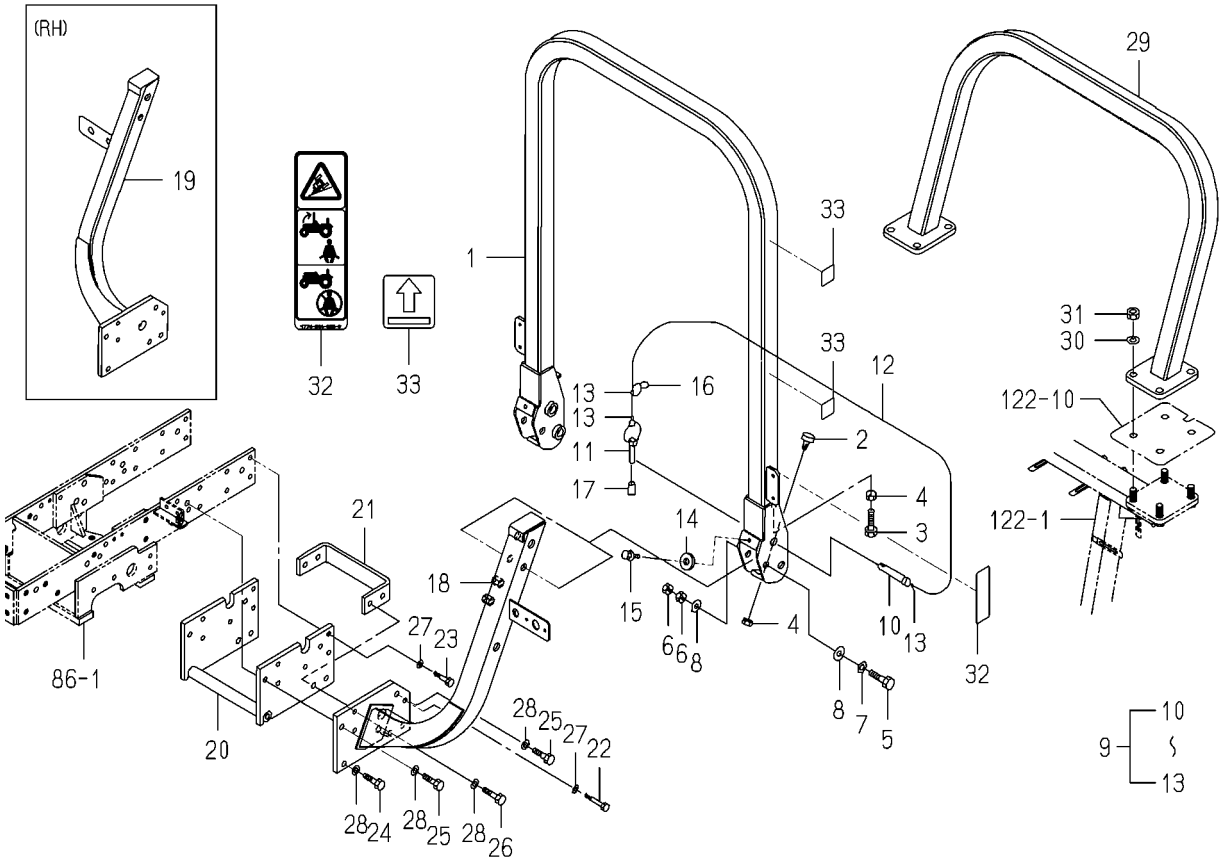

1774-702C-0100

KEY	PART CODE	DESCRIPTION	SPC	TYPE OF MODEL				ITC	COL	GRP	REMARKS
				TM3217	TM3247	TM3267					
31	V304-460-014-00	NUT/M14/7T	*	8	8						
32	1774-904-003-00	LABEL/ROPS/CENTER	*	1	1						
33	1774-902-085-00	LABEL/CONTROL/ROPS	*	4	4						

FIG.152 ROPS(CENTER)SYSTEM(TM3267A TYPE)

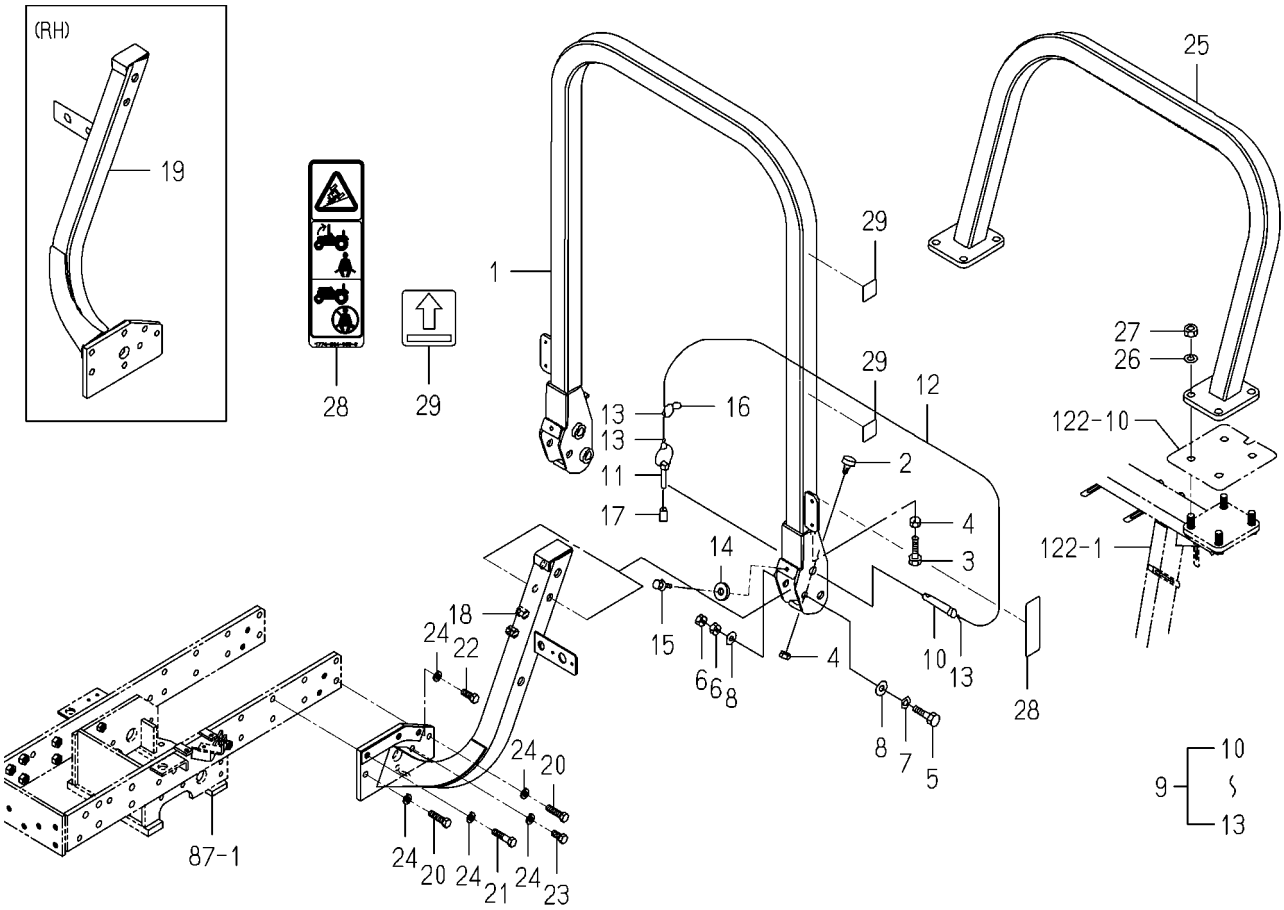

1774-702D-0100

KEY	PART CODE	DESCRIPTION	SPC	TYPE OF MODEL				ITC	COL	GRP	REMARKS
				TM3217	TM3247	TM3267					
1	1774-702-530-10	FRAME/UPPER/FRONT	*			1					
2	1421-602-005-10	CUSHION,B/ RUBBER	*			2					
3	1672-122-003-00	BOLT/TRIMED	*			2					
4	V304-260-008-00	NUT/M8	*			4					
5	V201-361-610-00	BOLT/M16X100/7T	*			2					
6	V304-460-016-00	NUT/M16/7T	*			4					
7	V401-160-016-00	WASHER,SP/M16	*			2					
8	V411-260-016-00	WASHER,PL/M16	*			4					
9	1614-702-550-10	PIN ASSY	*			2					
10	1614-702-560-00	PIN/19X94 COMP	*			2					
11	1673-525-002-30	LINKPIN	*			2					
12	1614-702-551-20	BAND	*			2					
13	1614-702-552-00	RING	*			6					
14	1423-616-004-00	CUSHION/RUBBER/10X25	*			2					
15	V211-360-801-60	BOLT,SP/M8X16	*			2					
16	V720-112-401-80	O-RING/1B,P18	*			2					
17	1785-702-005-00	TUBE/020	*			2					
18	1774-702-510-20	FRAME/LOWER/LH COMP	*			1					
19	1774-702-520-10	FRAME/LOWER/RH COMP	*			1					
20	V201-361-204-50	BOLT/M12X45/7T	*			4					
21	V201-361-205-00	BOLT/M12X50/7T	*			4					
22	V201-361-203-00	BOLT/M12X30/7T	*			2					
23	V201-361-202-50	BOLT/M12X25/7T	*			2					
24	V401-160-012-00	WASHER,SP/M12	*			12					
25	1774-702-540-00	FRAME/UPPER COMP	*			1					
26	V401-160-014-00	WASHER,SP/M14	*			8					
27	V304-460-014-00	NUT/M14/7T	*			8					
28	1774-904-003-00	LABEL/ROPS/CENTER	*			1					
29	1774-902-085-00	LABEL/CONTROL/ROPS	*			4					

FIG.153 ORNAMENT(HYDRO)(H TYPE)

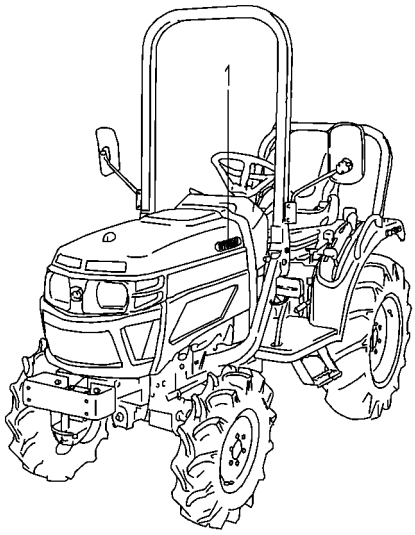

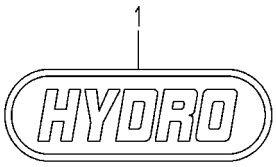

1646-901E-0100

KEY	PART CODE	DESCRIPTION	SPC	TYPE OF MODEL				ITC	COL	GRP	REMARKS
				TM3217	TM3247	TM3267					
1	1646-901-061-00	ORNAMENT/HYDRO	*	2	2	2					

FIG.154 ORNAMENT(TM3267 TYPE EXCEPT D)

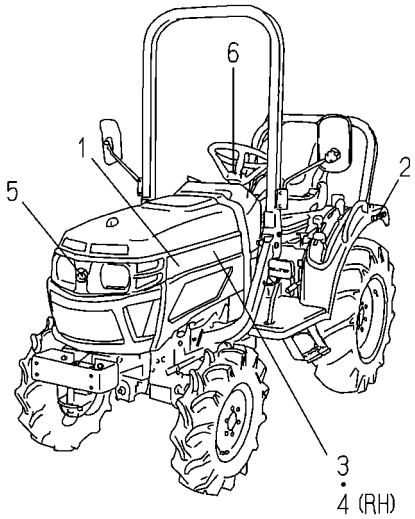

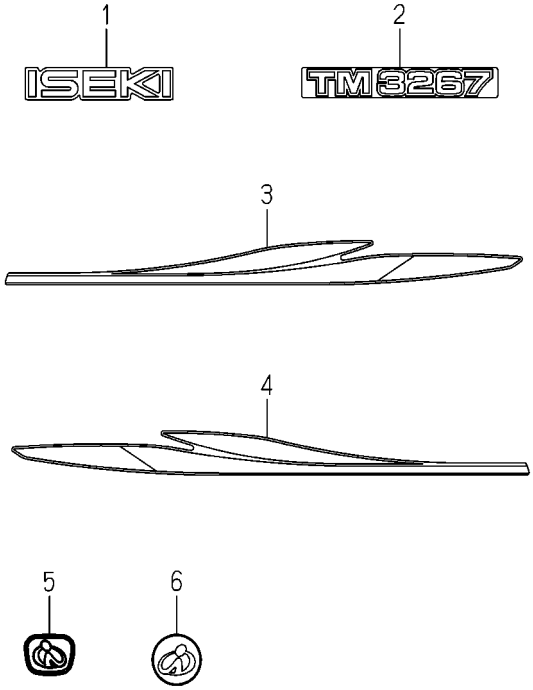

1774-901F-0100

KEY	PART CODE	DESCRIPTION	SPC	TYPE OF MODEL				ITC	COL	GRP	REMARKS
				TM3217	TM3247	TM3267					
1	1774-901-031-00	ORNAMENT/ISEKI/170	*			2					
2	1774-901-032-00	ORNAMENT/3267	*			2					
3	1774-901-035-00	MOLDING/LH/L	*			1					
4	1774-901-036-00	MOLDING/RH/L	*			1					
5	1118-901-002-00	ORNAMENT/I	*			1					
6	1696-901-006-00	ORNAMENT/STEERING	*			1					

FIG.155 ORNAMENT(TM3247 TYPE EXCEPT D)

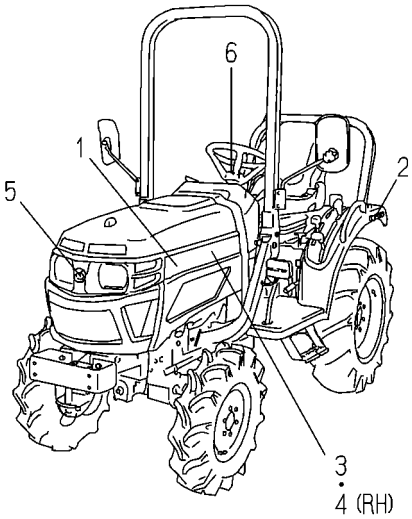

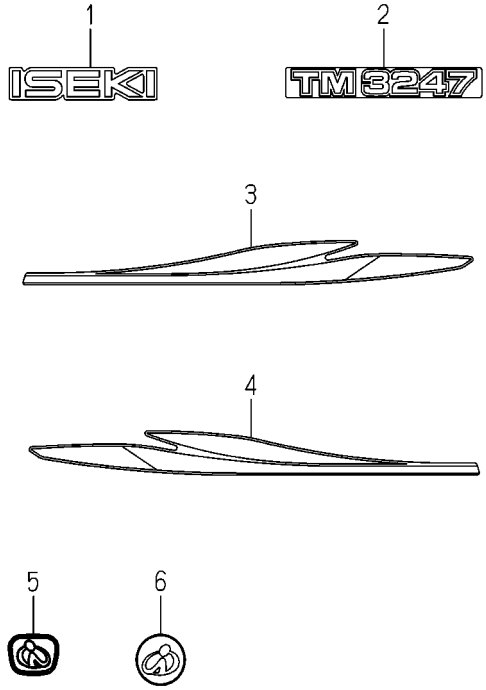

1774-901G-0100

KEY	PART CODE	DESCRIPTION	SPC	TYPE OF MODEL				ITC	COL	GRP	REMARKS
				TM3217	TM3247	TM3267					
1	1774-901-031-00	ORNAMENT/ISEKI/170	*		2						
2	1774-901-033-00	ORNAMENT/3247	*		2						
3	1774-901-037-00	MOLDING/LH/M	*		1						
4	1774-901-038-00	MOLDING/RH/M	*		1						
5	1118-901-002-00	ORNAMENT/I	*		1						
6	1696-901-006-00	ORNAMENT/STEERING	*		1						

FIG.156 ORNAMENT(TM3217 TYPE EXCEPT D)

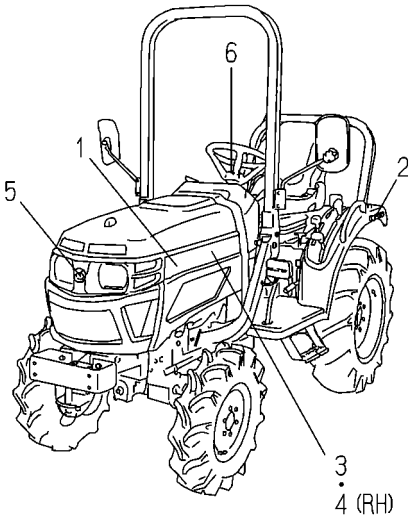

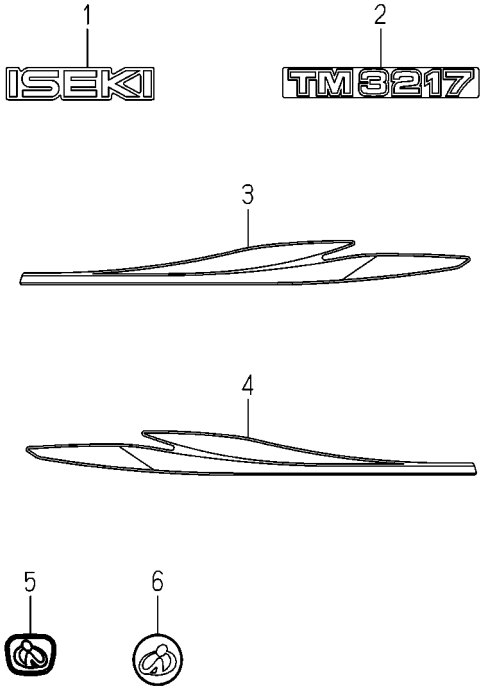

1774-901H-0100

KEY	PART CODE	DESCRIPTION	SPC	TYPE OF MODEL				ITC	COL	GRP	REMARKS
				TM3217	TM3247	TM3267					
1	1774-901-031-00	ORNAMENT/ISEKI/170	*	2							
2	1774-901-034-00	ORNAMENT/3217	*	2							
3	1774-901-037-00	MOLDING/LH/M	*	1							
4	1774-901-038-00	MOLDING/RH/M	*	1							
5	1118-901-002-00	ORNAMENT/I	*	1							
6	1696-901-006-00	ORNAMENT/STEERING	*	1							

FIG.157 ORNAMENT(TM3267D TYPE)

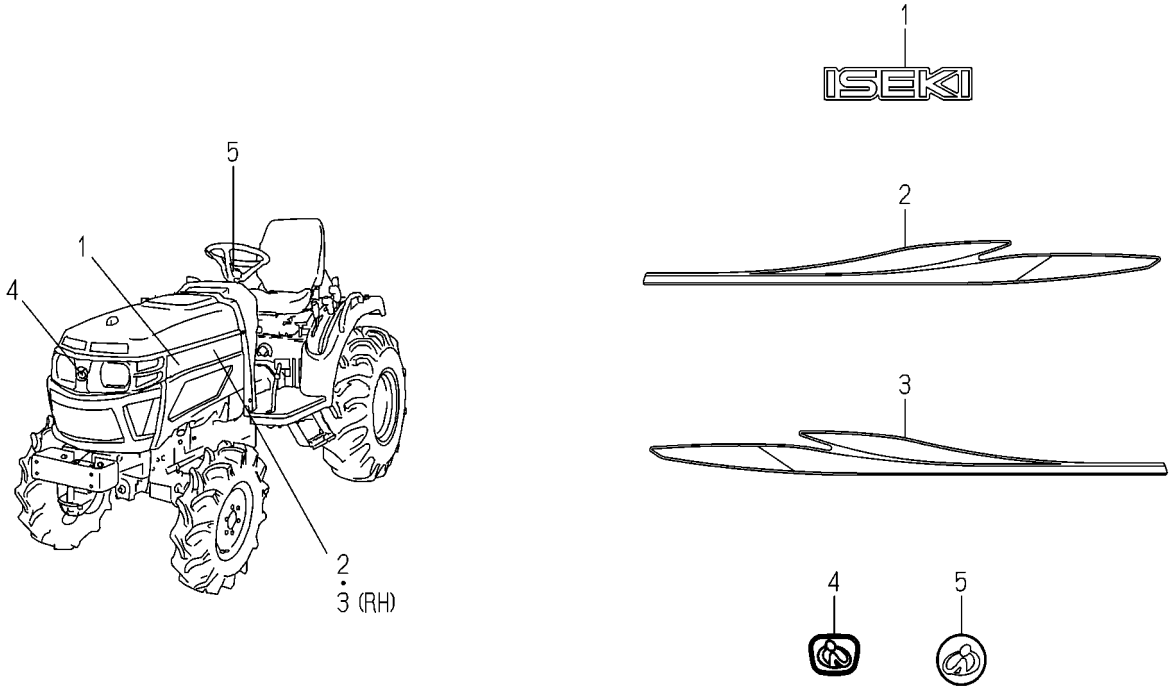

1774-901I-0100

KEY	PART CODE	DESCRIPTION	SPC	TYPE OF MODEL				ITC	COL	GRP	REMARKS
				TM3217	TM3247	TM3267					
1	1774-901-031-00	ORNAMENT/ISEKI/170	*			2					
2	1774-901-035-00	MOLDING/LH/L	*			1					
3	1774-901-036-00	MOLDING/RH/L	*			1					
4	1118-901-002-00	ORNAMENT/I	*			1					
5	1696-901-006-00	ORNAMENT/STEERING	*			1					

FIG.158 ORNAMENT(TM3217D,3247D TYPE)

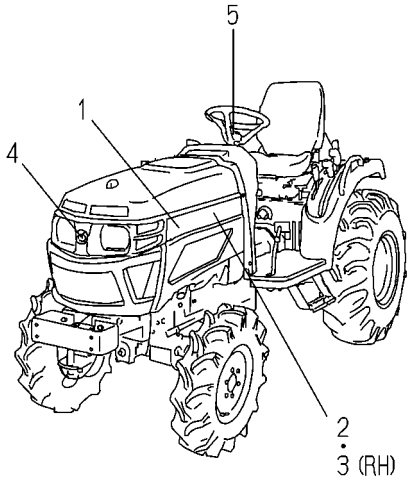

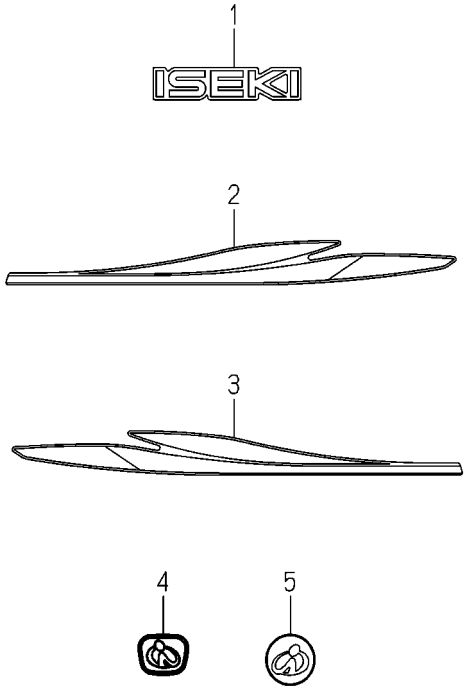

1774-901J-0100

KEY	PART CODE	DESCRIPTION	SPC	TYPE OF MODEL				ITC	COL	GRP	REMARKS
				TM3217	TM3247	TM3267					
1	1774-901-031-00	ORNAMENT/ISEKI/170	*	2	2						
2	1774-901-037-00	MOLDING/LH/M	*	1	1						
3	1774-901-038-00	MOLDING/RH/M	*	1	1						
4	1118-901-002-00	ORNAMENT/I	*	1	1						
5	1696-901-006-00	ORNAMENT/STEERING	*	1	1						

FIG.159 LABEL(PROTECTION LEVEL)(D TYPE)

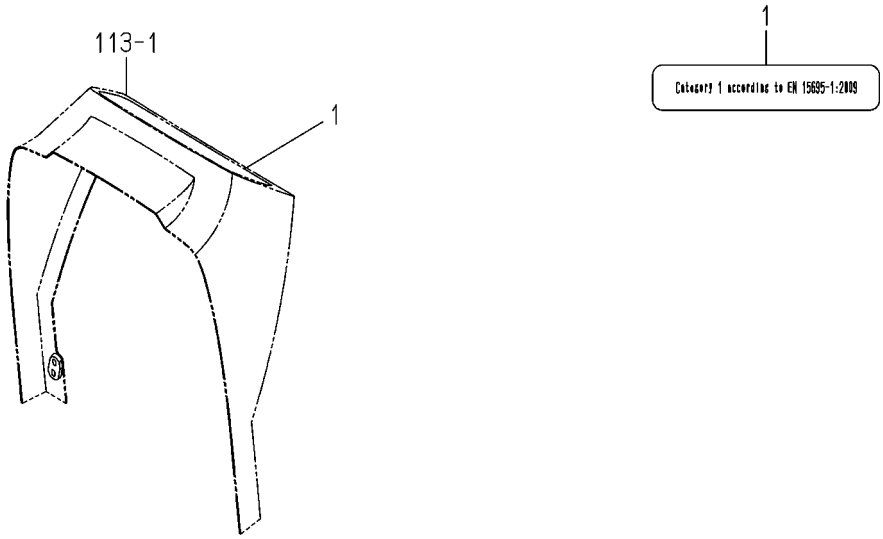

1746-902D-0100

KEY	PART CODE	DESCRIPTION	SPC	TYPE OF MODEL				ITC	COL	GRP	REMARKS
				TM3217	TM3247	TM3267					
1	1746-904-051-00	LABEL/PROTECTION LEV	*	1	1	1					

FIG.160 LABEL(CONTROL)(F TYPE)

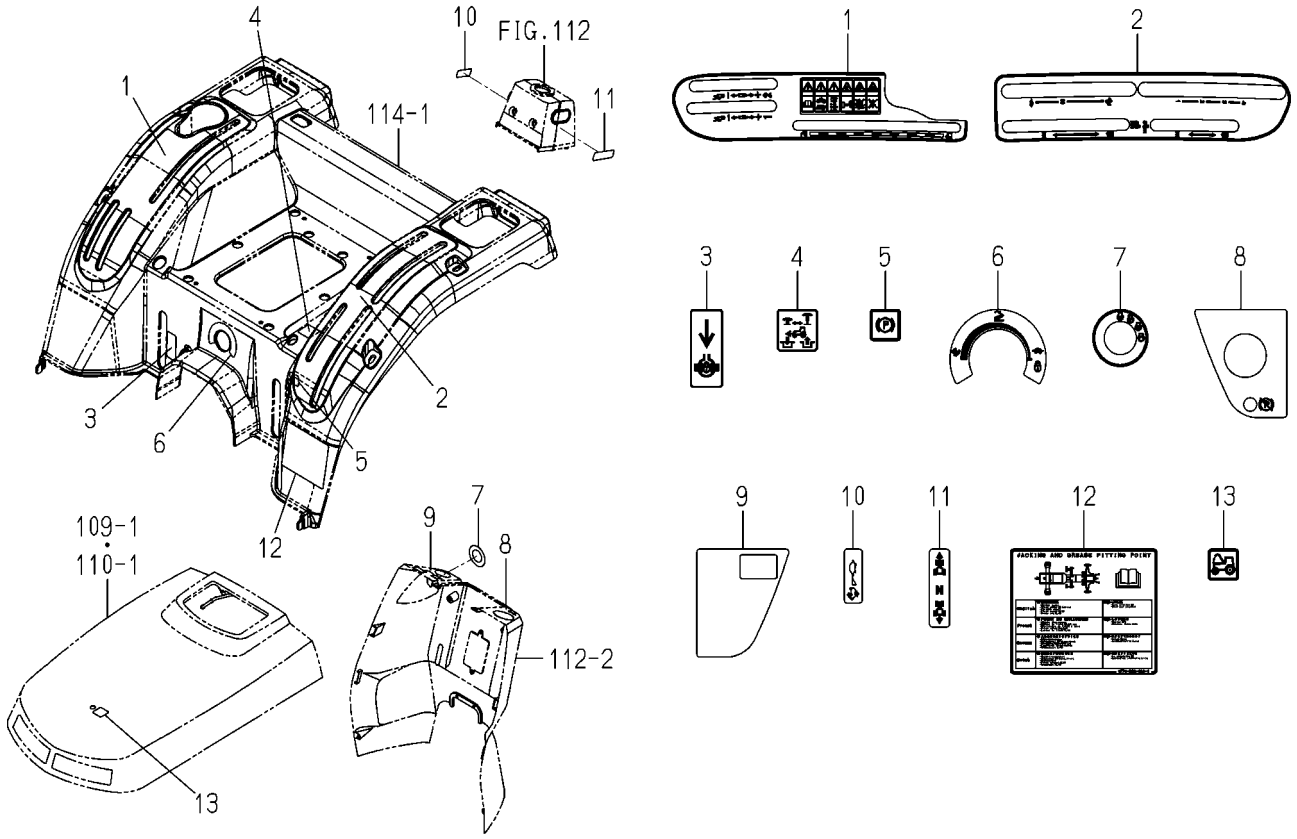

1774-902E-0100

KEY	PART CODE	DESCRIPTION	SPC	TYPE OF MODEL TM3217	TM3247	TM3267		ITC	COL	GRP	REMARKS
1	1774-902-071-00	LABEL/CONTROL/RH	*	1	1	1					
2	1774-902-072-00	LABEL/CONTROL/LH	*	1	1	1					
3	1774-902-086-00	LABEL/DIFF/TM/E4	*	1	1	1					
4	1817-902-026-00	LABEL/4WD/E4	*	1	1	1					
5	1774-902-005-00	LABEL/PARKING	*	1	1	1					
6	1774-902-077-00	LABEL/CONTROL/SLOWRE	*	1	1	1					
7	1774-902-075-00	LABEL/SWITCH/MAIN/E4	*	1	1	1					
8	1774-902-082-00	LABEL/COLUMN/LH/7	*	1	1	1					
9	1774-902-007-00	LABEL/COLUMN/RH	*	1	1	1					
10	1774-902-006-00	LABEL/CONTROL/THROTT	*	1	1	1					
11	1774-902-076-00	LABEL/CONTROL/LINEAR	*	1	1	1					
12	1774-902-081-10	LABEL/MAINTENANCE/TM	*	1	1	1		1			
13	1817-902-008-00	LABEL/CONTROL/FOOD	*	1	1	1					

FIG.161 LABEL(CONTROL)(H TYPE EXCEPT D)

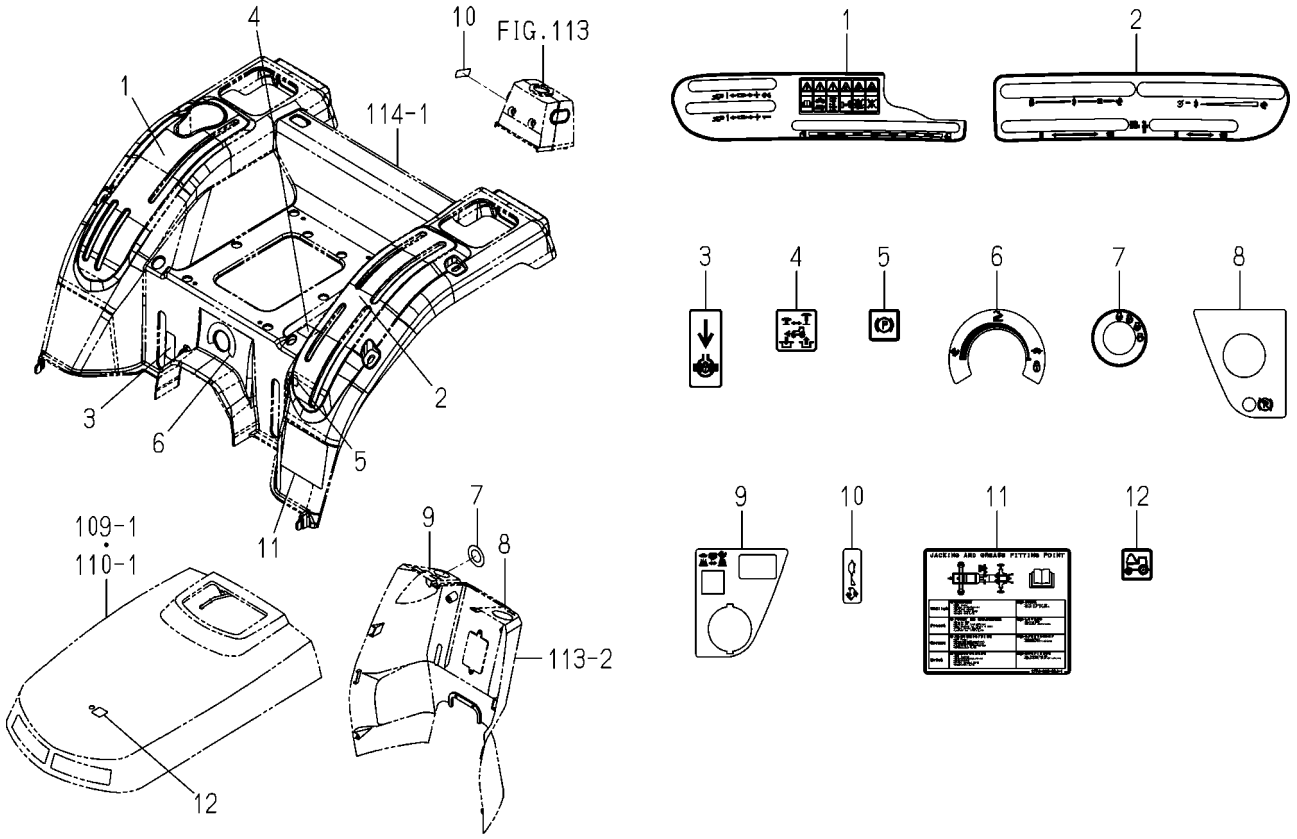

1774-902F-0100

KEY	PART CODE	DESCRIPTION	SPC	TYPE OF MODEL TM3217	TM3247	TM3267		ITC	COL	GRP	REMARKS
1	1774-902-071-00	LABEL/CONTROL/RH	*	1	1	1					
2	1774-902-073-00	LABEL/CONTROL/HST/LH	*	1	1	1					
3	1774-902-086-00	LABEL/DIFF/TM/E4	*	1	1	1					
4	1817-902-026-00	LABEL/4WD/E4	*	1	1	1					
5	1774-902-005-00	LABEL/PARKING	*	1	1	1					
6	1774-902-077-00	LABEL/CONTROL/SLOWRE	*	1	1	1					
7	1774-902-075-00	LABEL/SWITCH/MAIN/E4	*	1	1	1					
8	1774-902-082-00	LABEL/COLUMN/LH/7	*	1	1	1					
9	1774-902-074-10	LABEL/COLUMN/RH/E4	*	1	1	1					
10	1774-902-006-00	LABEL/CONTROL/THROTT	*	1	1	1					
11	1774-902-084-10	LABEL/MAINTENANCE/TM	*	1	1	1		1			
12	1817-902-008-00	LABEL/CONTROL/FOOD	*	1	1	1					

FIG.162 LABEL(CONTROL)(D TYPE)

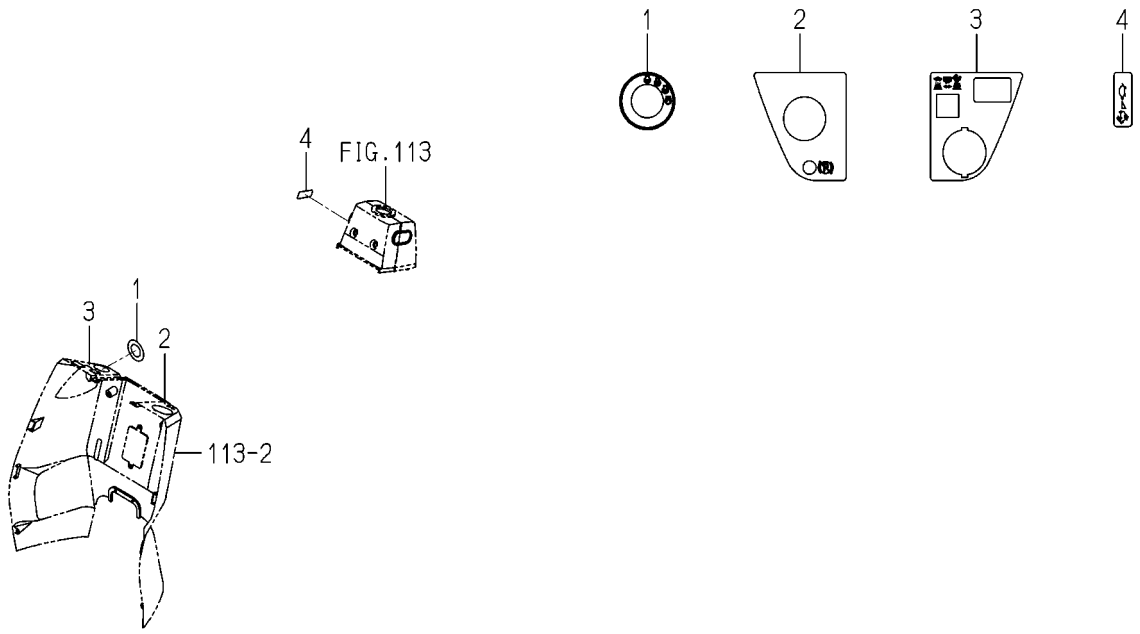

1774-902G-0100

KEY	PART CODE	DESCRIPTION	SPC	TYPE OF MODEL				ITC	COL	GRP	REMARKS
				TM3217	TM3247	TM3267					
1	1774-902-075-00	LABEL/SWITCH/MAIN/E4	*	1	1	1					
2	1774-902-082-00	LABEL/COLUMN/LH/7	*	1	1	1					
3	1774-902-074-10	LABEL/COLUMN/RH/E4	*	1	1	1					
4	1774-902-006-00	LABEL/CONTROL/THROTT	*	1	1	1					

FIG.163 LABEL(CAUTION)(D TYPE)

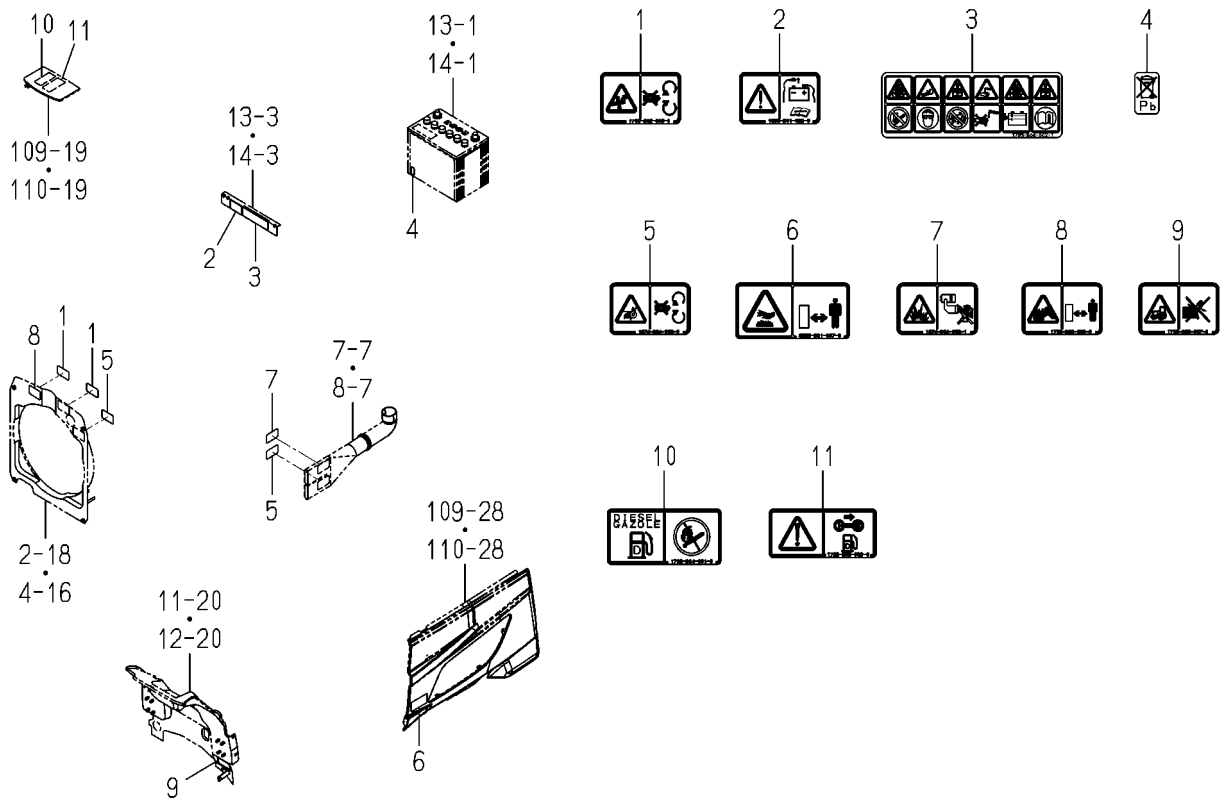

1774-904C-0100

KEY	PART CODE	DESCRIPTION	SPC	TYPE OF MODEL				ITC	COL	GRP	REMARKS
				TM3217	TM3247	TM3267					
1	1705-902-006-00	LABEL/W/FAN	*	2	2	2					
2	1636-901-022-00	LABEL/CAUTION/BATTER	*	1	1	1					
3	1705-904-002-10	LABEL/BATTERY	*	1	1	1					
4	1728-903-003-00	LABEL/BATTERY	*	1	1	1					
5	1674-904-008-00	LABEL/WARNING/BELT	*	2	2	2					
6	8595-901-007-00	LABEL/WARNING/HOT	*	1	1	1					
7	1674-904-002-10	LABEL/ETHER	*	1	1	1					
8	1705-902-008-00	LABEL/W/RADIATOR	*	1	1	1					
9	1705-902-007-00	LABEL/W/STARTER	*	1	1	1					
10	1705-904-001-00	LABEL/FUEL	*	1	1	1					
11	1728-903-002-00	LABEL/WARNING/FUEL	*	1	1	1					

FIG.164 LABEL(CAUTION)(TM3217F,3247F TYPE)

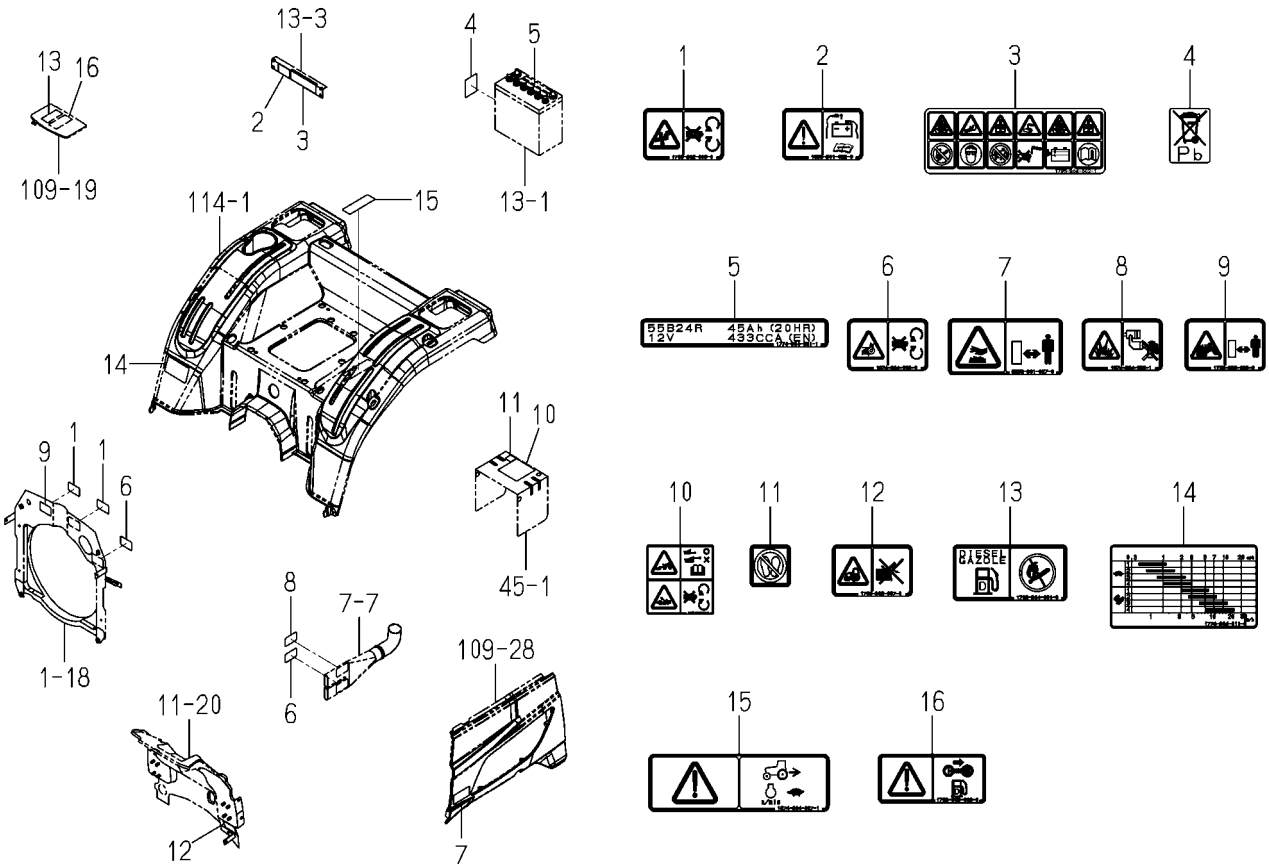

1774-904D-0100

KEY	PART CODE	DESCRIPTION	SPC	TYPE OF MODEL				ITC	COL	GRP	REMARKS
				TM3217	TM3247	TM3267					
1	1705-902-006-00	LABEL/W/FAN	*	2	2						
2	1636-901-022-00	LABEL/CAUTION/BATTER	*	1	1						
3	1705-904-002-10	LABEL/BATTERY	*	1	1						
4	1817-904-004-00	LABEL/BATTERY	*	1	1						
5	1774-904-031-10	LABEL/BATTERY/55B24R	*	1	1						
6	1674-904-008-00	LABEL/WARNING/BELT	*	2	2						
7	8595-901-007-00	LABEL/WARNING/HOT	*	1	1						
8	1674-904-002-10	LABEL/ETHER	*	1	1						
9	1705-902-008-00	LABEL/W/RADIATOR	*	1	1						
10	1776-904-004-00	LABEL/PTO/TRAILER	*	1	1						
11	1817-904-001-00	LABEL/CAUTION/STEP	*	1	1						
12	1705-902-007-00	LABEL/W/STARTER	*	1	1						
13	1705-904-001-00	LABEL/FUEL	*	1	1						
14	1774-904-011-00	LABEL/SPEED/M/E4	*	1	1						
15	1674-904-007-10	LABEL/SHIFT	*	1	1						
16	1728-903-002-00	LABEL/WARNING/FUEL	*	1	1						

FIG.165 LABEL(CAUTION)
(TM3217H,3247H TYPE EXCEPT D)

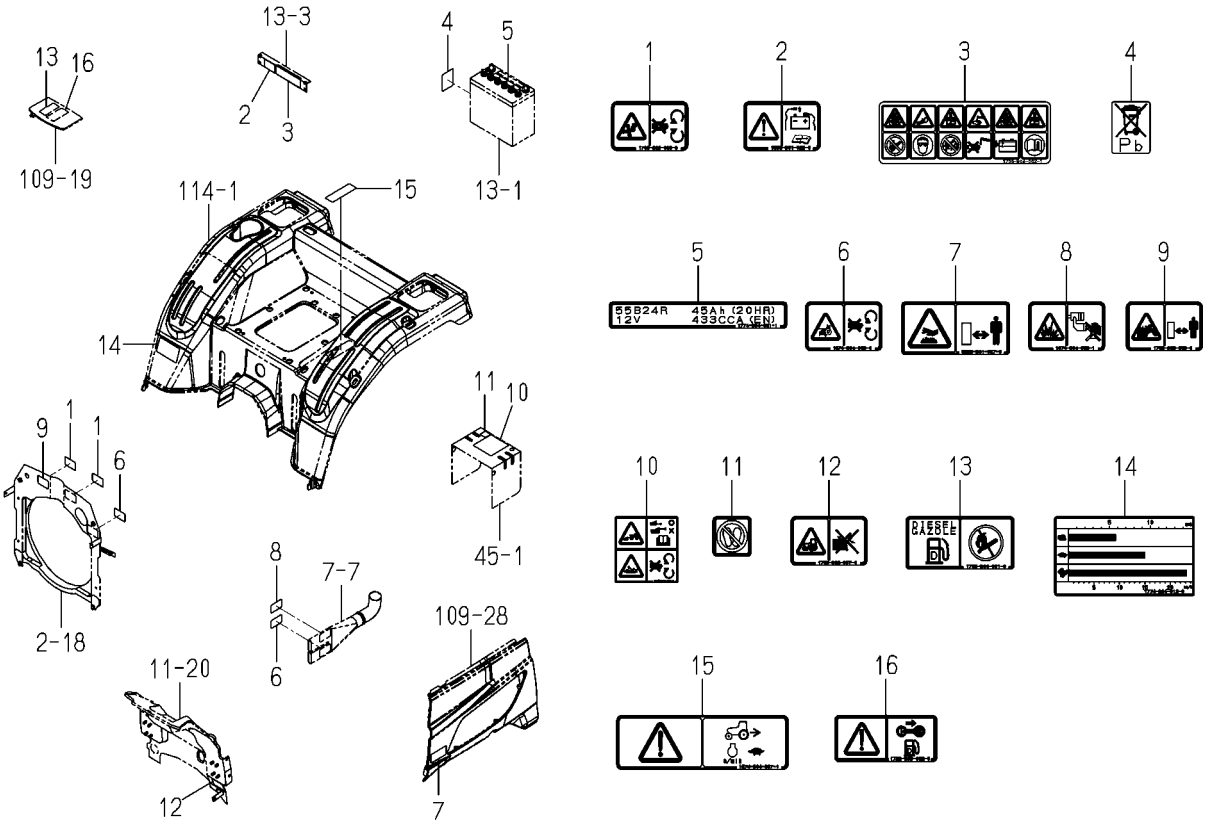

1774-904E-0100

KEY	PART CODE	DESCRIPTION	SPC	TYPE OF MODEL				ITC	COL	GRP	REMARKS
				TM3217	TM3247	TM3267					
1	1705-902-006-00	LABEL/W/FAN	*	2	2						
2	1636-901-022-00	LABEL/CAUTION/BATTER	*	1	1						
3	1705-904-002-10	LABEL/BATTERY	*	1	1						
4	1817-904-004-00	LABEL/BATTERY	*	1	1						
5	1774-904-031-10	LABEL/BATTERY/55B24R	*	1	1						
6	1674-904-008-00	LABEL/WARNING/BELT	*	2	2						
7	8595-901-007-00	LABEL/WARNING/HOT	*	1	1						
8	1674-904-002-10	LABEL/ETHER	*	1	1						
9	1705-902-008-00	LABEL/W/RADIATOR	*	1	1						
10	1776-904-004-00	LABEL/PTO/TRAILER	*	1	1						
11	1817-904-001-00	LABEL/CAUTION/STEP	*	1	1						
12	1705-902-007-00	LABEL/W/STARTER	*	1	1						
13	1705-904-001-00	LABEL/FUEL	*	1	1						
14	1774-904-012-00	LABEL/SPEED/HST/E4	*	1	1						
15	1674-904-007-10	LABEL/SHIFT	*	1	1						
16	1728-903-002-00	LABEL/WARNING/FUEL	*	1	1						

FIG.166 LABEL(CAUTION)(TM3267F TYPE)

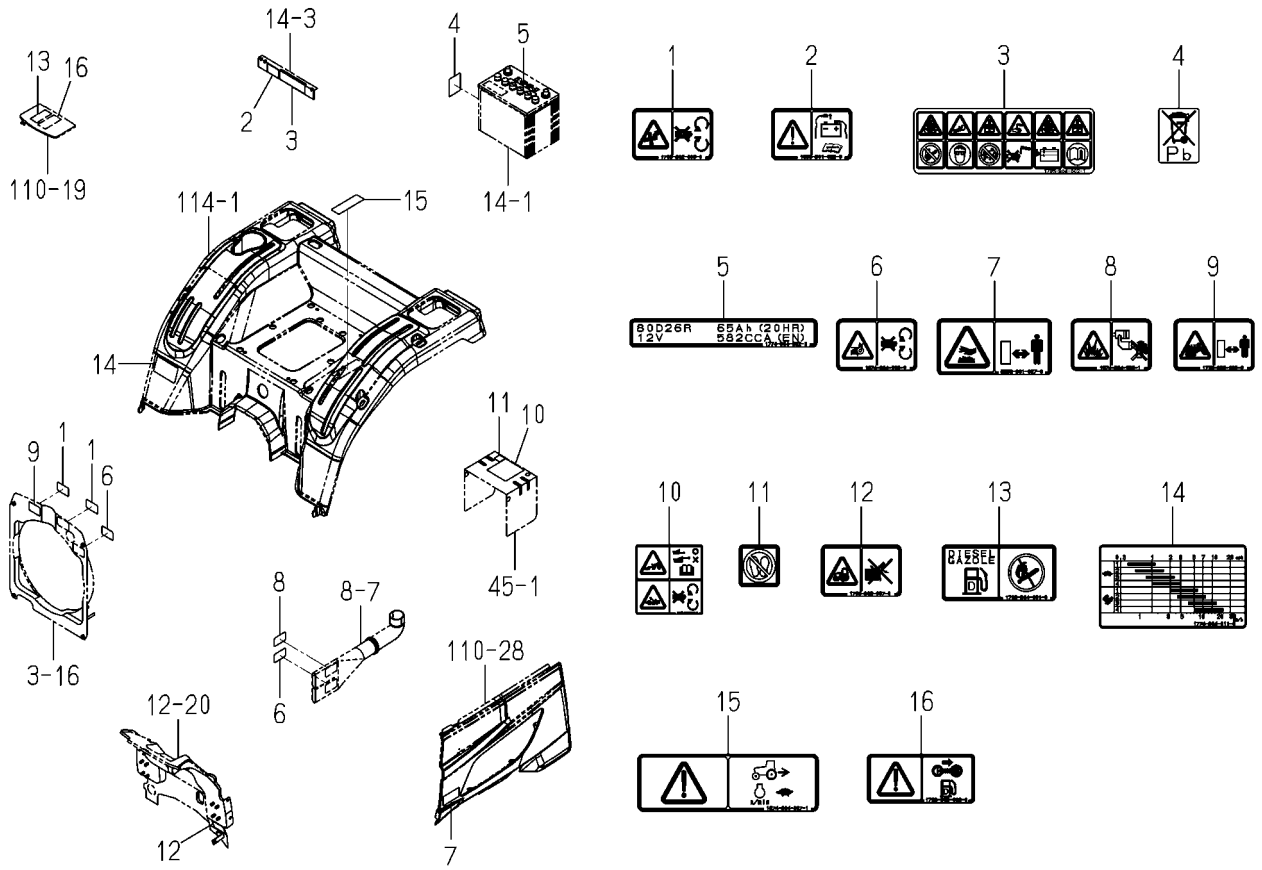

1774-904F-0100

KEY	PART CODE	DESCRIPTION	SPC	TYPE OF MODEL				ITC	COL	GRP	REMARKS
				TM3217	TM3247	TM3267					
1	1705-902-006-00	LABEL/W/FAN	*			2					
2	1636-901-022-00	LABEL/CAUTION/BATTER	*			1					
3	1705-904-002-10	LABEL/BATTERY	*			1					
4	1817-904-004-00	LABEL/BATTERY	*			1					
5	1774-904-032-00	LABEL/BATTERY/80D26R	*			1					
6	1674-904-008-00	LABEL/WARNING/BELT	*			2					
7	8595-901-007-00	LABEL/WARNING/HOT	*			1					
8	1674-904-002-10	LABEL/ETHER	*			1					
9	1705-902-008-00	LABEL/W/RADIATOR	*			1					
10	1776-904-004-00	LABEL/PTO/TRAILER	*			1					
11	1817-904-001-00	LABEL/CAUTION/STEP	*			1					
12	1705-902-007-00	LABEL/W/STARTER	*			1					
13	1705-904-001-00	LABEL/FUEL	*			1					
14	1774-904-011-00	LABEL/SPEED/M/E4	*			1					
15	1674-904-007-10	LABEL/SHIFT	*			1					
16	1728-903-002-00	LABEL/WARNING/FUEL	*			1					

FIG.167 LABEL(CAUTION)
(TM3267H TYPE EXCEPT D)

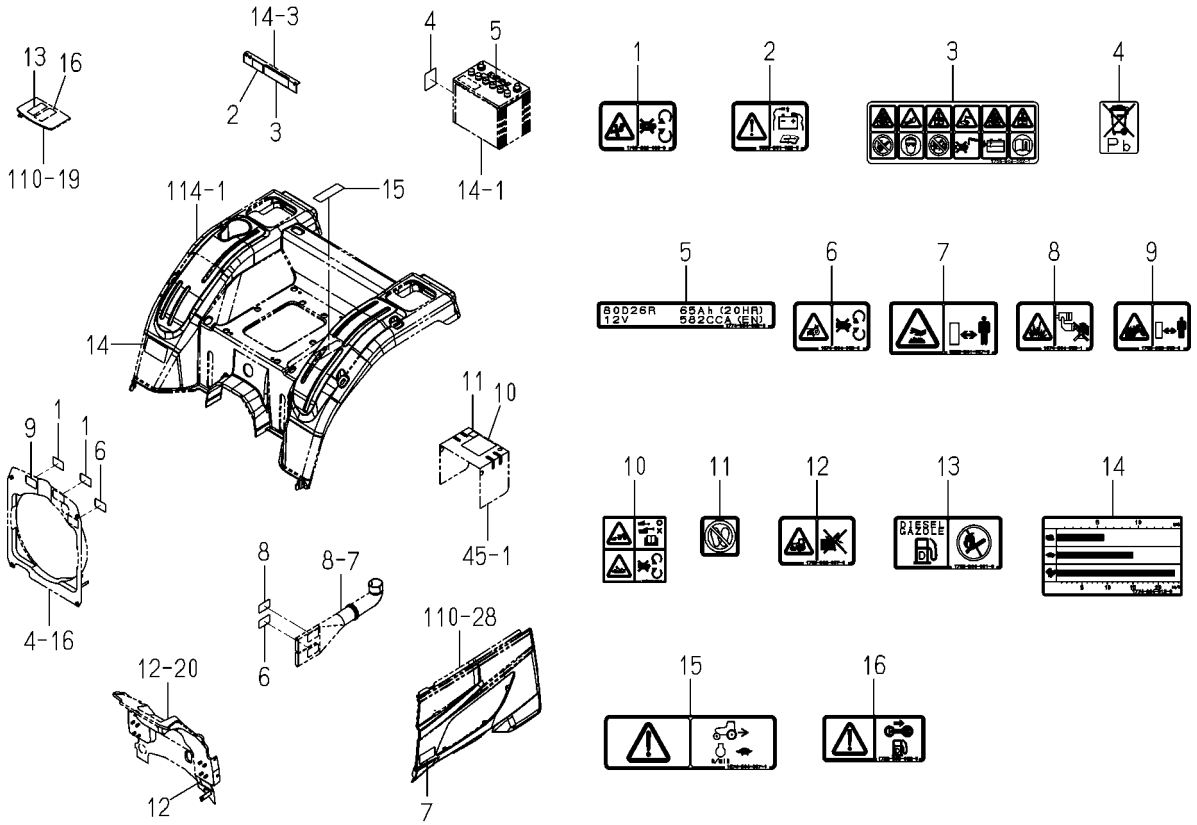

1774-904G-0100

KEY	PART CODE	DESCRIPTION	SPC	TYPE OF MODEL				ITC	COL	GRP	REMARKS
				TM3217	TM3247	TM3267					
1	1705-902-006-00	LABEL/W/FAN	*			2					
2	1636-901-022-00	LABEL/CAUTION/BATTER	*			1					
3	1705-904-002-10	LABEL/BATTERY	*			1					
4	1817-904-004-00	LABEL/BATTERY	*			1					
5	1774-904-032-00	LABEL/BATTERY/80D26R	*			1					
6	1674-904-008-00	LABEL/WARNING/BELT	*			2					
7	8595-901-007-00	LABEL/WARNING/HOT	*			1					
8	1674-904-002-10	LABEL/ETHER	*			1					
9	1705-902-008-00	LABEL/W/RADIATOR	*			1					
10	1776-904-004-00	LABEL/PTO/TRAILER	*			1					
11	1817-904-001-00	LABEL/CAUTION/STEP	*			1					
12	1705-902-007-00	LABEL/W/STARTER	*			1					
13	1705-904-001-00	LABEL/FUEL	*			1					
14	1774-904-012-00	LABEL/SPEED/HST/E4	*			1					
15	1674-904-007-10	LABEL/SHIFT	*			1					
16	1728-903-002-00	LABEL/WARNING/FUEL	*			1					

FIG.168 TOOLS

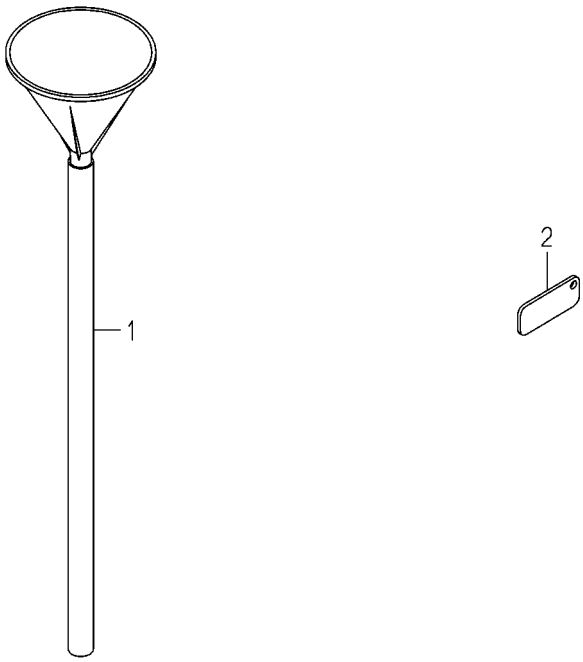

1774-910 -0100

KEY	PART CODE	DESCRIPTION	SPC	TYPE OF MODEL				ITC	COL	GRP	REMARKS
				TM3217	TM3247	TM3267					
1	2188-973-200-00	FUNNEL ASSY	*	1	1	1					
2	1774-601-004-00	TOOL/HOOD	*	1	1	1					

FIG.169 PTO(MID)SET(A TYPE)(OPTION)(1/2)

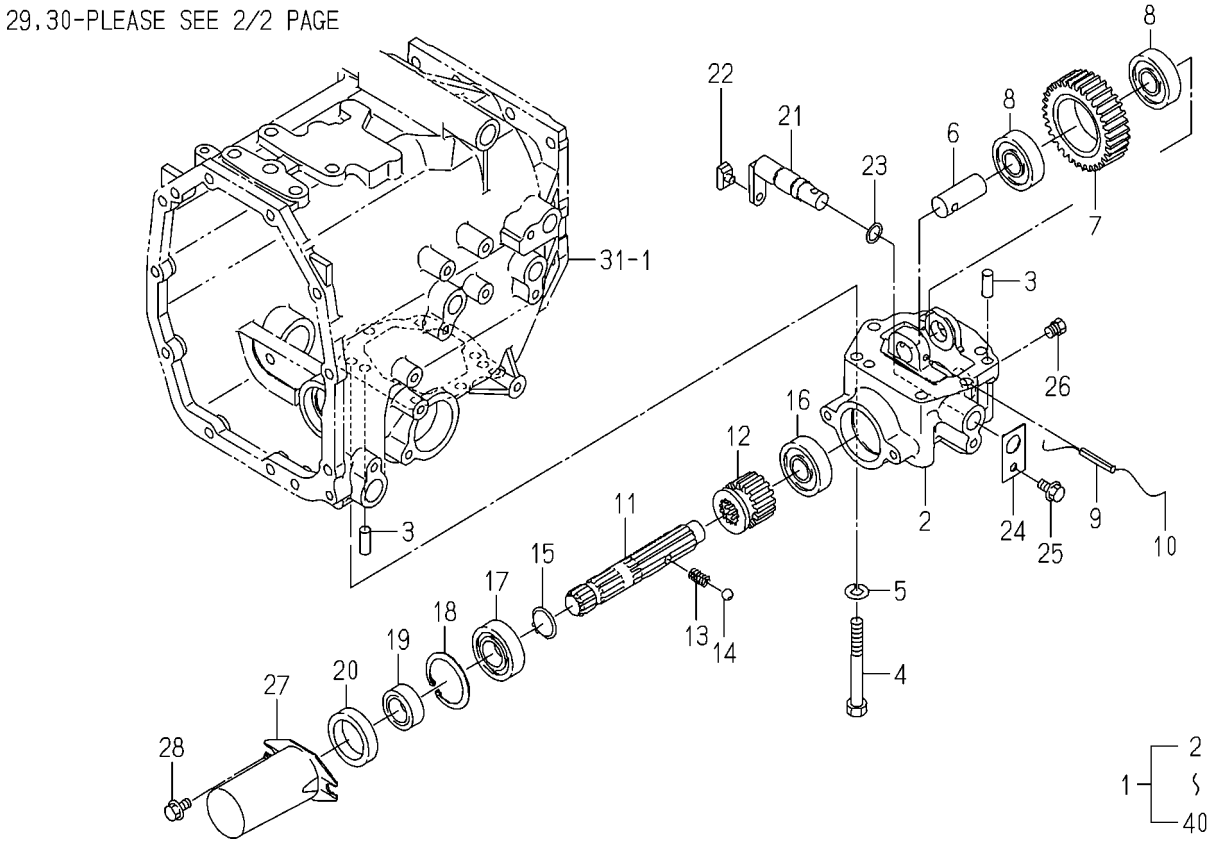

1774-255B-0100

KEY	PART CODE	DESCRIPTION	SPC	TYPE OF MODEL				ITC	COL	GRP	REMARKS
				TM3217	TM3247	TM3267					
1	1774-255-200-70	PTO/MID SET	T	1	1	1					
2	1774-255-001-20	CASE/PTO/MID	T	1	1	1					
3	V523-101-002-40	PIN,ST,B/10X24	T	2	2	2					
4	V201-361-009-00	BOLT/M10X90/7T	T	6	6	6					
5	V401-160-010-00	WASHER,SP/M10	T	6	6	6					
6	1682-255-203-00	PIN/20X51	T	1	1	1					
7	1774-255-002-00	GEAR/SPUR/33	T	1	1	1					
8	1603-322-003-00	BEARING,BALL	T	2	2	2					
9	V580-140-604-00	PIN,SPRING/6X40 W	T	1	1	1					
10		WIRE	T	1	1	1					
11	1774-255-004-00	SHAFT/PTO/MID	T	1	1	1					
12	1774-255-003-00	GEAR/SPUR/16	T	1	1	1					
13	1302-225-003-00	SPRING,SHIFTER	T	1	1	1					
14	V682-200-001-00	BALL,STEEL	T	1	1	1					
15	V704-140-025-00	RING,SNAP/25 C	T	1	1	1					
16	V600-110-630-40	BEARING,RB/6304	T	1	1	1					
17	V600-110-620-50	BEARING,RB/6205	T	1	1	1					
18	V705-140-052-00	RING,SNAP/52 C	T	1	1	1					
19	1427-212-003-20	SLEEVE	T	1	1	1					
20	V744-135-520-80	SEAL,OIL/TC35528	T	1	1	1					
21	1682-255-210-40	ARM/SHIFT/MID COMP	T	1	1	1					
22	2703-101-020-00	COLLAR,SHIFTER	T	1	1	1					
23	V720-102-401-40	O-RING/1A,P14	T	1	1	1					
24	1620-255-208-00	PLATE/I/30X50	T	1	1	1					
25	V231-360-801-20	FLANGEBOLT/M8X12	T	1	1	1					
26	V782-160-000-6B	PLUG/SCREW/SEAL	T	1	1	1					
27	1444-314-009-10	CAP,PTO SHAFT	T	1	1	1					
28	V231-360-801-20	FLANGEBOLT/M8X12	T	2	2	2					
29	1774-265-220-00	ARM COMP	T	1	1	1					
30	V580-140-602-80	PIN,SPRING/6X28 W	T	1	1	1					

FIG.169 PTO(MID)SET(A TYPE)(OPTION)(2/2)

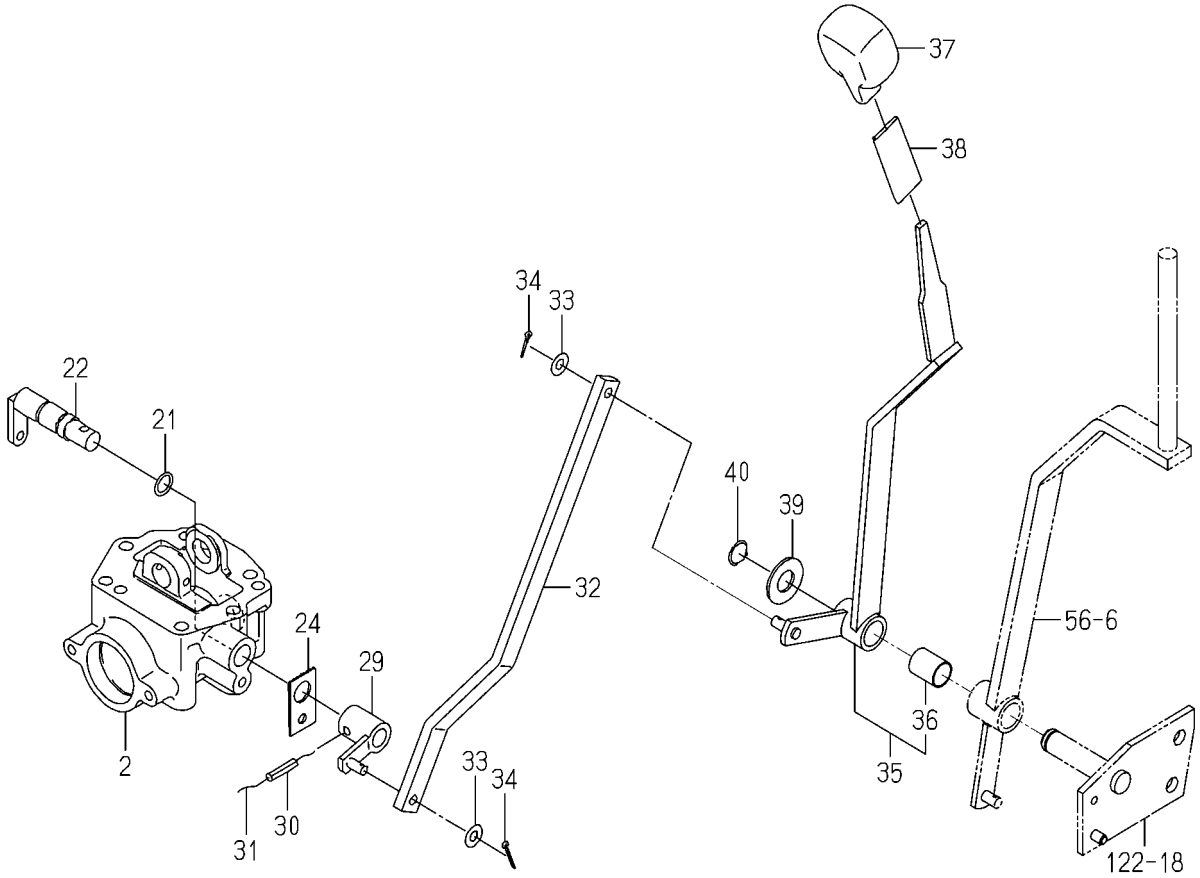

1774-255B-0100

KEY	PART CODE	DESCRIPTION	SPC	TYPE OF MODEL				ITC	COL	GRP	REMARKS
				TM3217	TM3247	TM3267					
31		WIRE	T	1	1	1					
32	1774-265-001-20	PLATE/Z/19X380	T	1	1	1					
33	V411-260-008-00	WASHER,PL/M8	T	2	2	2					
34	V500-162-502-50	PIN,SPLIT/2.5X25	T	2	2	2					
35	1774-265-210-20	LEVER/PTO/MID ASSY	T	1	1	1					
36	1689-272-201-00	BUSH/18X20X25	T	1	1	1					
37	1688-265-001-00	GRIP/MID/PTO	T	1	1	1					
38	1675-262-002-00	INSULATOR/LEVER/SUB	T	1	1	1					
39	V411-260-018-00	WASHER,PL/M18	T	1	1	1					
40	V704-140-018-00	RING,SNAP/18 C	T	1	1	1					

FIG.170 TIRE(31X13.5-15)SYSTEM (3217,3247A,3267A TYPE) (OPTION)

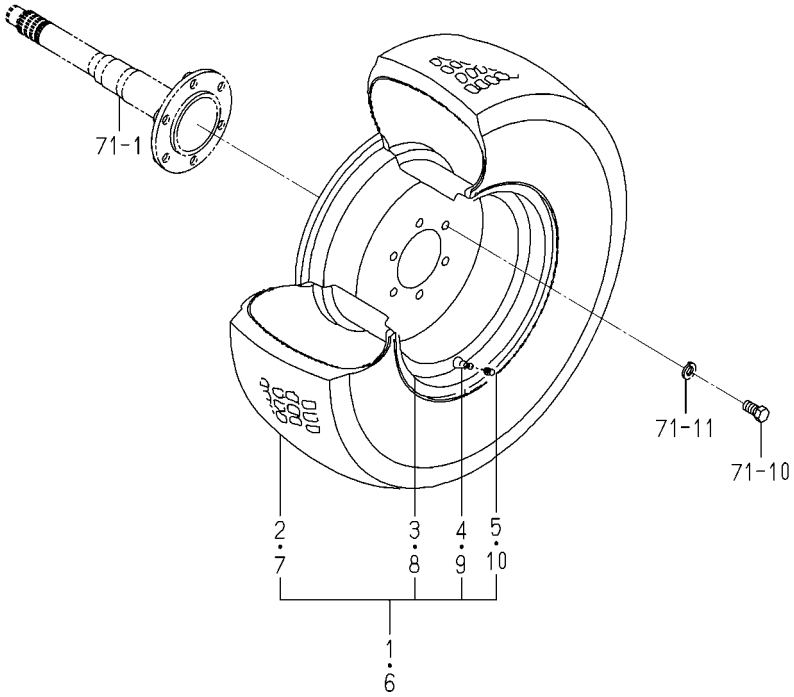

1774-317 -0100

KEY	PART CODE	DESCRIPTION	SPC	TYPE OF MODEL				ITC	COL	GRP	REMARKS
				TM3217	TM3247	TM3267					
1	1774-317-210-10	TIRE/REAR/LH ASSY	T	1	1	1			6G		
2	1774-317-211-10	TIRE/31X13.5-15	T	1	1	1					
3	1774-317-230-00	WHEEL/15X10LB COMP	T	1	1	1			6G		
4	1386-241-002-00	VALVE/RIM	T	1	1	1					
5	V999-200-003-00	CAP,TIRE VALVE	T	1	1	1					
6	1774-317-220-10	TIRE/REAR/RH ASSY	T	1	1	1			6G		
7	1774-317-211-10	TIRE/31X13.5-15	T	1	1	1					
8	1774-317-230-00	WHEEL/15X10LB COMP	T	1	1	1			6G		
9	1386-241-002-00	VALVE/RIM	T	1	1	1					
10	V999-200-003-00	CAP,TIRE VALVE	T	1	1	1					

FIG.171 TIRE(9.5-18)SYSTEM (EXCEPT S TYPE)(OPTION)

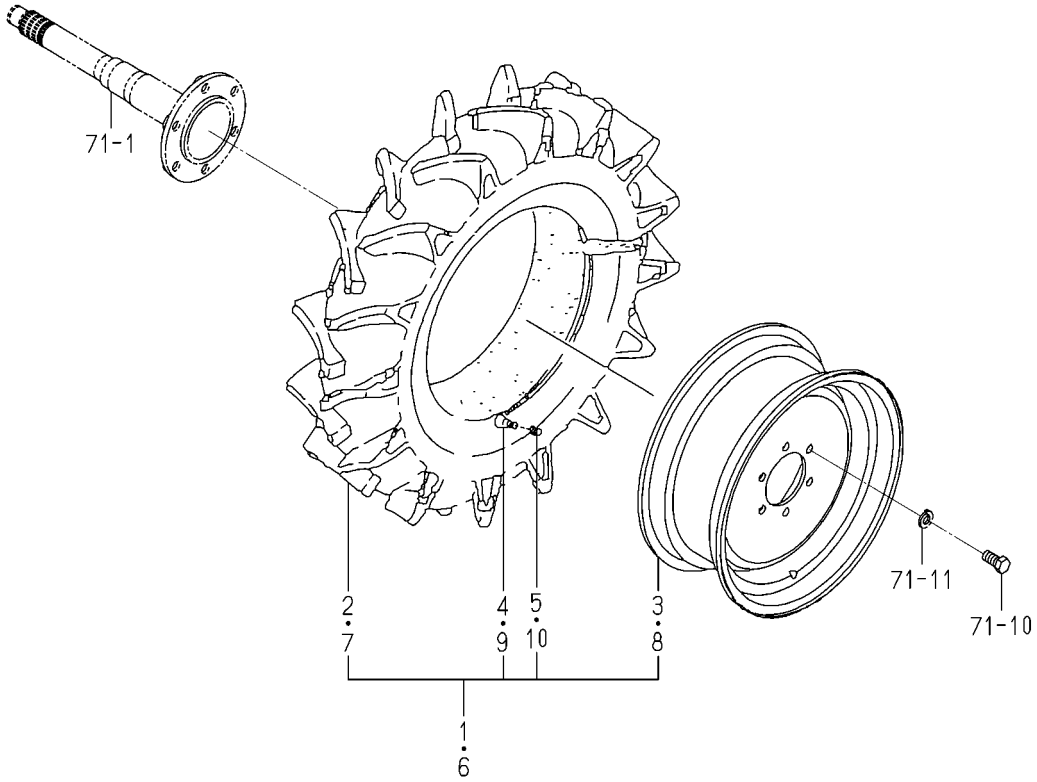

1774-317A-0100

KEY	PART CODE	DESCRIPTION	SPC	TYPE OF MODEL TM3217	TM3247	TM3267		ITC	COL	GRP	REMARKS
1	1774-317-310-10	TIRE/REAR/LH ASSY	T		1	1			6G		
2	1647-437-211-10	TIRE/9.5-18-6	T		1	1					
3	1774-317-320-00	WHEEL/W8-18 COMP	T		1	1			6G		
4	1647-437-212-00	TUBE	T		1	1					
5	V999-200-003-00	CAP,TIRE VALVE	T		1	1					
6	1774-317-330-10	TIRE/REAR/RH ASSY	T		1	1			6G		
7	1647-437-211-10	TIRE/9.5-18-6	T		1	1					
8	1774-317-320-00	WHEEL/W8-18 COMP	T		1	1			6G		
9	1647-437-212-00	TUBE	T		1	1					
10	V999-200-003-00	CAP,TIRE VALVE	T		1	1					

FIG.172 TIRE(315/75D-15)SYSTEM (3247,3267 TYPE EXCEPT A) (OPTION)

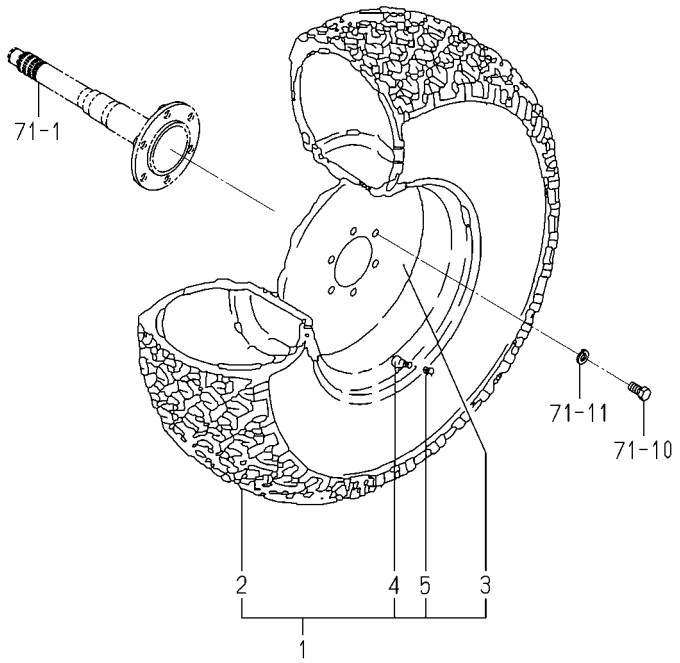

1774-317B-0100

KEY	PART CODE	DESCRIPTION	SPC	TYPE OF MODEL				ITC	COL	GRP	REMARKS
				TM3217	TM3247	TM3267					
1	1774-317-350-10	TIRE/315/75D-15 ASSY	T		2	2			6G		
2	1600-317-281-10	TIRE/315/75D-15-4	T		2	2					
3	1774-317-360-00	WHEEL/15X10LB COMP	T		2	2			6G		
4	1386-241-002-00	VALVE/RIM	T		2	2					
5	V999-200-003-00	CAP,TIRE VALVE	T		2	2					

FIG.173 TIRE(9.5-16)SYSTEM (3247,3267 TYPE EXCEPT A) (OPTION)

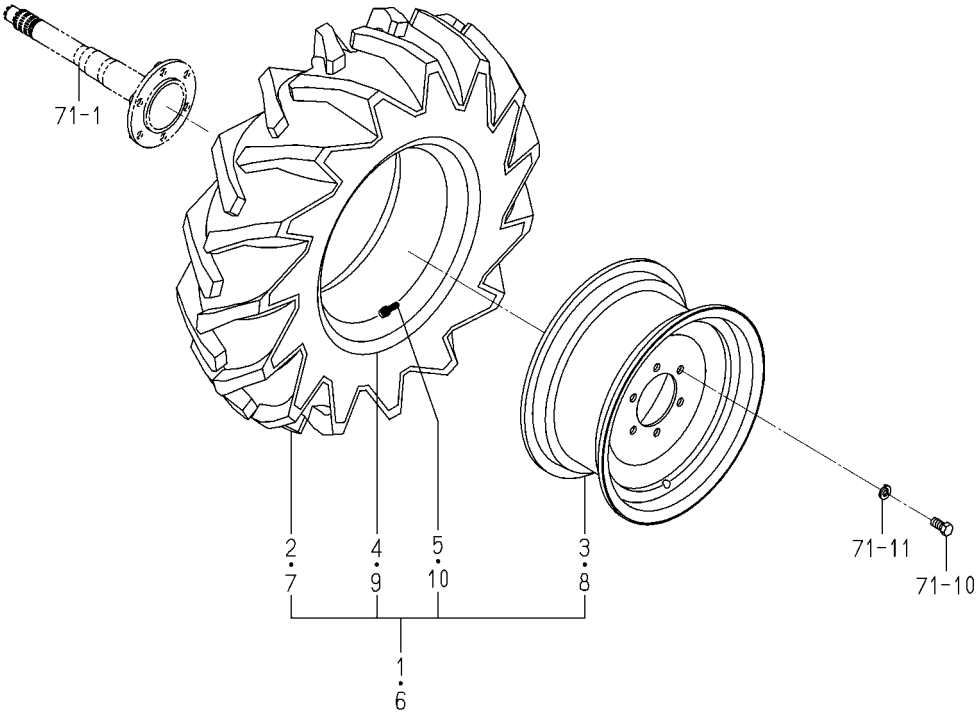

1774-317C-0100

KEY	PART CODE	DESCRIPTION	SPC	TYPE OF MODEL				ITC	COL	GRP	REMARKS
				TM3217	TM3247	TM3267					
1	1774-317-260-10	TIRE/9.5-16/LH ASSY	T	1	1	1			6G		
2	1646-437-211-10	TIRE/9.5-16-6	T	1	1	1					
3	1774-317-270-00	WHEEL/16XW8 COMP	T	1	1	1			6G		
4	1646-437-212-00	TUBE	T	1	1	1					
5	V999-200-003-00	CAP,TIRE VALVE	T	1	1	1					
6	1774-317-280-10	TIRE/9.5-16/RH ASSY	T	1	1	1			6G		
7	1646-437-211-10	TIRE/9.5-16-6	T	1	1	1					
8	1774-317-270-00	WHEEL/16XW8 COMP	T	1	1	1			6G		
9	1646-437-212-00	TUBE	T	1	1	1					
10	V999-200-003-00	CAP,TIRE VALVE	T	1	1	1					

FIG.174 TIRE(22X8.50-12)SYSTEM (3217,3267 TYPE EXCEPT A) (OPTION)

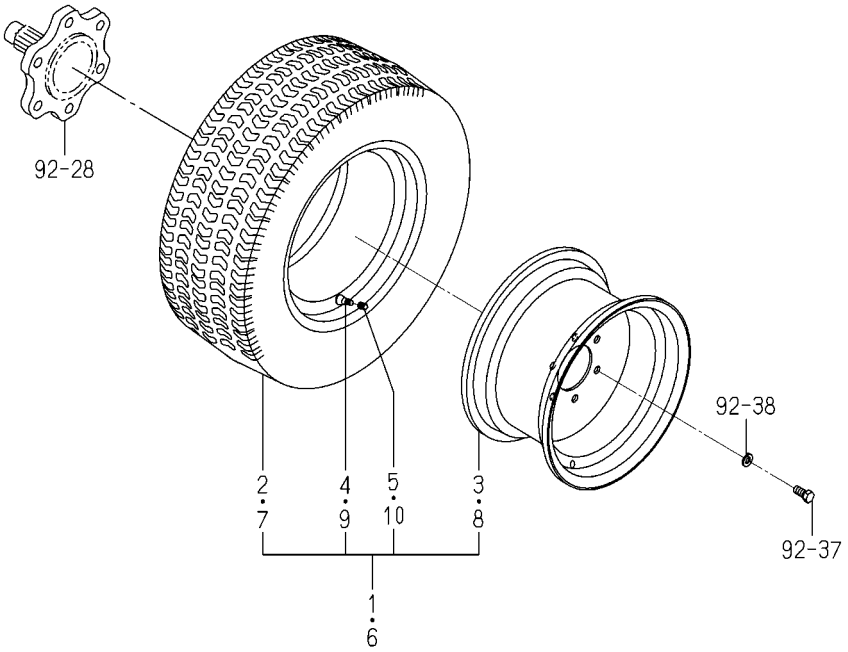

1774-437 -0100

KEY	PART CODE	DESCRIPTION	SPC	TYPE OF MODEL				ITC	COL	GRP	REMARKS
				TM3217	TM3247	TM3267					
1	1774-437-210-10	TIRE/FRONT/LH ASSY	T	1	1	1			6G		
2	1770-437-311-10	TIRE/22X8.50-12-4	T	1	1	1					
3	1600-441-270-01	DISK/WHEEL COMP	T	1	1	1			6G		
4	1386-241-002-00	VALVE/RIM	T	1	1	1					
5	V999-200-003-00	CAP,TIRE VALVE	T	1	1	1					
6	1774-437-220-10	TIRE/FRONT/RH ASSY	T	1	1	1			6G		
7	1770-437-311-10	TIRE/22X8.50-12-4	T	1	1	1					
8	1600-441-270-01	DISK/WHEEL COMP	T	1	1	1			6G		
9	1386-241-002-00	VALVE/RIM	T	1	1	1					
10	V999-200-003-00	CAP,TIRE VALVE	T	1	1	1					

FIG.175 WHEEL(FRONT/4WD)SYSTEM (3217,3247A,3267A TYPE)(OPTION)

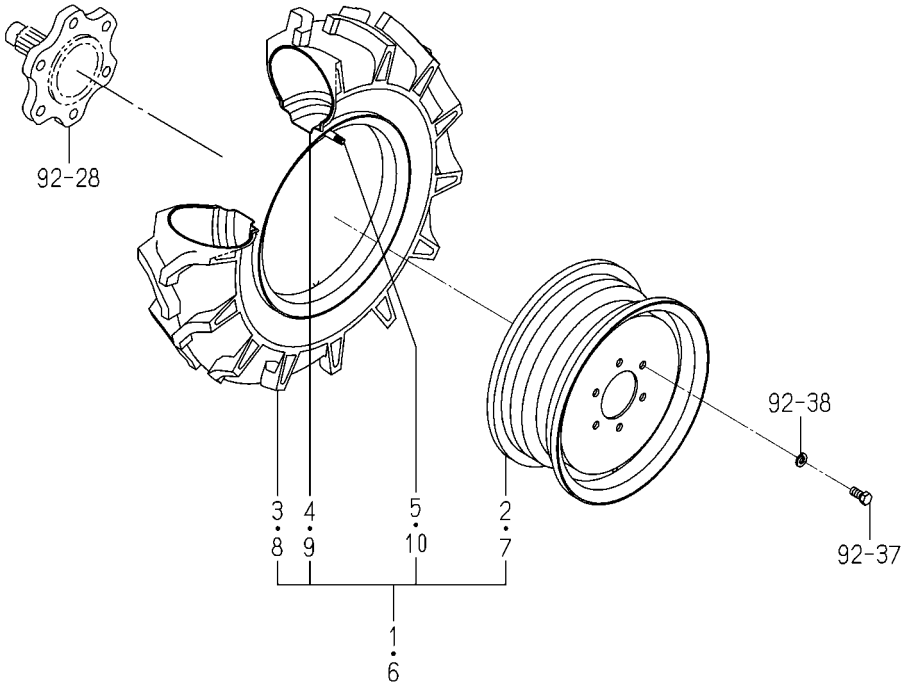

1480-441 -0100

KEY	PART CODE	DESCRIPTION	SPC	TYPE OF MODEL				ITC	COL	GRP	REMARKS
				TM3217	TM3247	TM3267					
1	1480-441-210-10	TIRE/FRONT/LH ASSY	T	1	1	1			6G		
2	1614-441-200-01	WHEEL/12X5J COMP	T	1	1	1			6G		
3	1480-441-221-10	TIRE/6-12-4	T	1	1	1					
4	V881-000-061-20	TUBE/6-12	T	1	1	1					
5	V999-200-003-00	CAP,TIRE VALVE	T	1	1	1					
6	1480-441-230-10	TIRE/FRONT/RH ASSY	T	1	1	1			6G		
7	1614-441-200-01	WHEEL/12X5J COMP	T	1	1	1			6G		
8	1480-441-221-10	TIRE/6-12-4	T	1	1	1					
9	V881-000-061-20	TUBE/6-12	T	1	1	1					
10	V999-200-003-00	CAP,TIRE VALVE	T	1	1	1					

FIG.176 WHEEL(FRONT/4WD)SYSTEM (3217,3247A,3267A TYPE)(OPTION)

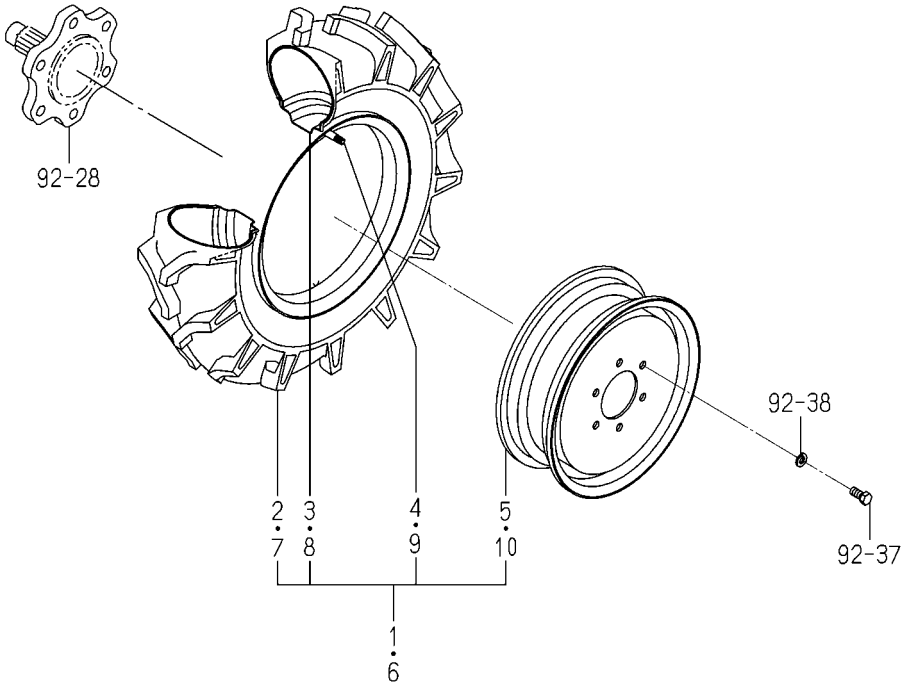

1481-441 -0100

KEY	PART CODE	DESCRIPTION	SPC	TYPE OF MODEL				ITC	COL	GRP	REMARKS
				TM3217	TM3247	TM3267					
1	1509-441-300-10	TIRE/LH ASSY	T		1	1			6G		
2	1603-441-201-10	TIRE/6.00-12-4	T		1	1					
3	V883-000-061-20	TUBE/6-12	T		1	1					
4	V999-200-003-00	CAP,TIRE VALVE	T		1	1					
5	1509-441-320-00	DISK,WHEEL/4.00BX12	T		1	1			6G		
6	1509-441-310-10	TIRE/RH ASSY	T		1	1			6G		
7	1603-441-201-10	TIRE/6.00-12-4	T		1	1					
8	V883-000-061-20	TUBE/6-12	T		1	1					
9	V999-200-003-00	CAP,TIRE VALVE	T		1	1					
10	1509-441-320-00	DISK,WHEEL/4.00BX12	T		1	1			6G		

FIG.177 WHEEL(FRONT/TURF)SYSTEM (3247,3267 TYPE EXCEPT A)(OPTION)

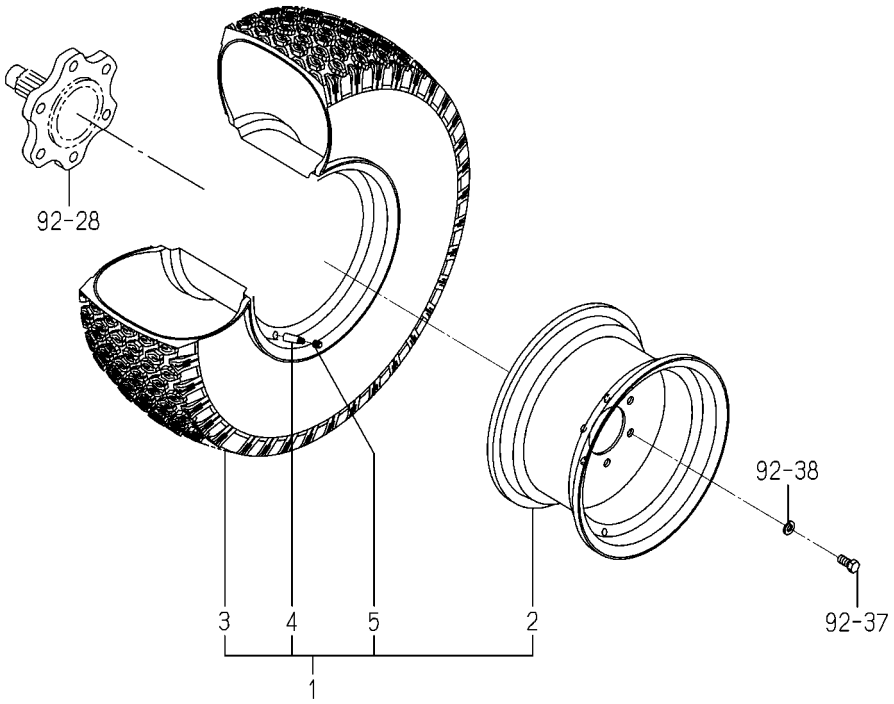

1602-441 -0100

KEY	PART CODE	DESCRIPTION	SPC	TYPE OF MODEL TM3217	TM3247	TM3267		ITC	COL	GRP	REMARKS
1	1602-441-200-10	TIRE/TURF ASSY	T		2	2			6G		
2	1600-441-270-01	DISK/WHEEL COMP	T		2	2			6G		
3	1602-441-201-10	TIRE/24X8.50-12-4	T		2	2					
4	1386-241-002-00	VALVE/RIM	T		2	2					
5	V999-200-003-00	CAP,TIRE VALVE	T		2	2					

FIG.178 VALVE(AUX/1ST)SET (3247,3267 TYPE EXCEPT A)(OPTION)

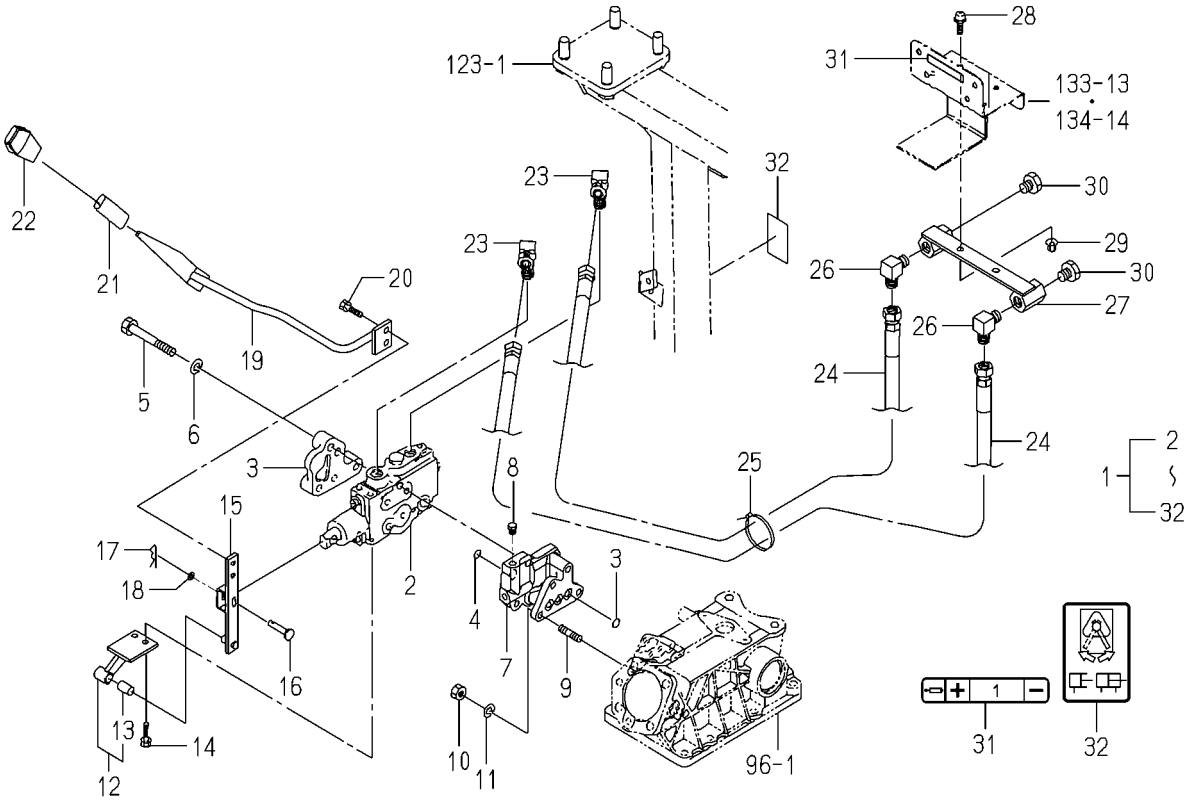

1774-507V-0100

KEY	PART CODE	DESCRIPTION	SPC	TYPE OF MODEL TM3217	TM3247	TM3267		ITC	COL	GRP	REMARKS
1	1774-507-930-00	VALVE/AUX/1ST SET	T	1	1	1					
2	1719-511-350-00	VALVE/CONTROL ASSY	T	1	1	1					FIG 185
3	1614-501-003-10	COVER	T	1	1	1					
4	V720-112-401-20	O-RING/1B,P12	T	6	6	6					
5	V201-261-008-00	BOLT/M10X80	T	3	3	3					
6	V401-160-010-00	WASHER,SP/M10	T	3	3	3					
7	1774-507-001-00	METAL/AUX/VALVE	T	1	1	1					
8	V782-160-000-2T	PLUG/SCREW/SEAL	T	6	6	6					
9	V251-260-802-0D	STUD/M8X20,SEAL	T	3	3	3					
10	V304-460-008-00	NUT/M8/7T	T	3	3	3					
11	V401-160-008-00	WASHER,SP/M8	T	3	3	3					
12	1774-507-320-00	HOLDER/1ST ASSY	T	1	1	1					
13	1560-509-211-00	BUSH/10X12X20	T	1	1	1					
14	V211-260-802-00	BOLT,S/M8X20	T	2	2	2					
15	1774-507-230-10	ARM/1ST COMP	T	1	1	1					
16	2144-519-007-00	PIN/06X31	T	1	1	1					
17	V560-160-006-00	PIN/SNAP	T	1	1	1					
18	V411-260-006-00	WASHER,PL/M6	T	1	1	1					
19	1774-507-250-10	LEVER/1ST COMP	T	1	1	1					
20	V211-260-801-60	BOLT,S/M8X16	T	2	2	2					
21	1614-262-006-00	INSULATOR/LEVER/SUB	T	1	1	1					
22	3659-203-005-00	GRIP/03X17X74	T	1	1	1					
23	1640-530-003-00	CONNECTOR	T	2	2	2					
24	1640-530-270-20	HOSE/660 ASSY	T	2	2	2					
25	1342-402-006-00	BAND,WIRE/250	T	1	1	1					
26	3768-185-015-20	ADAPTER/90	T	2	2	2					
27	1774-507-270-00	ADAPTER/1ST COMP	T	1	1	1					
28	V111-168-002-00	SCREW/M8X20	T	2	2	2					
29	V362-260-008-00	NUT/WASHER/M8	T	2	2	2					
30	V782-160-000-6T	PLUG/SCREW/SEAL	T	2	2	2					

FIG.178 VALVE(AUX/1ST)SET (3247,3267 TYPE EXCEPT A)(OPTION)

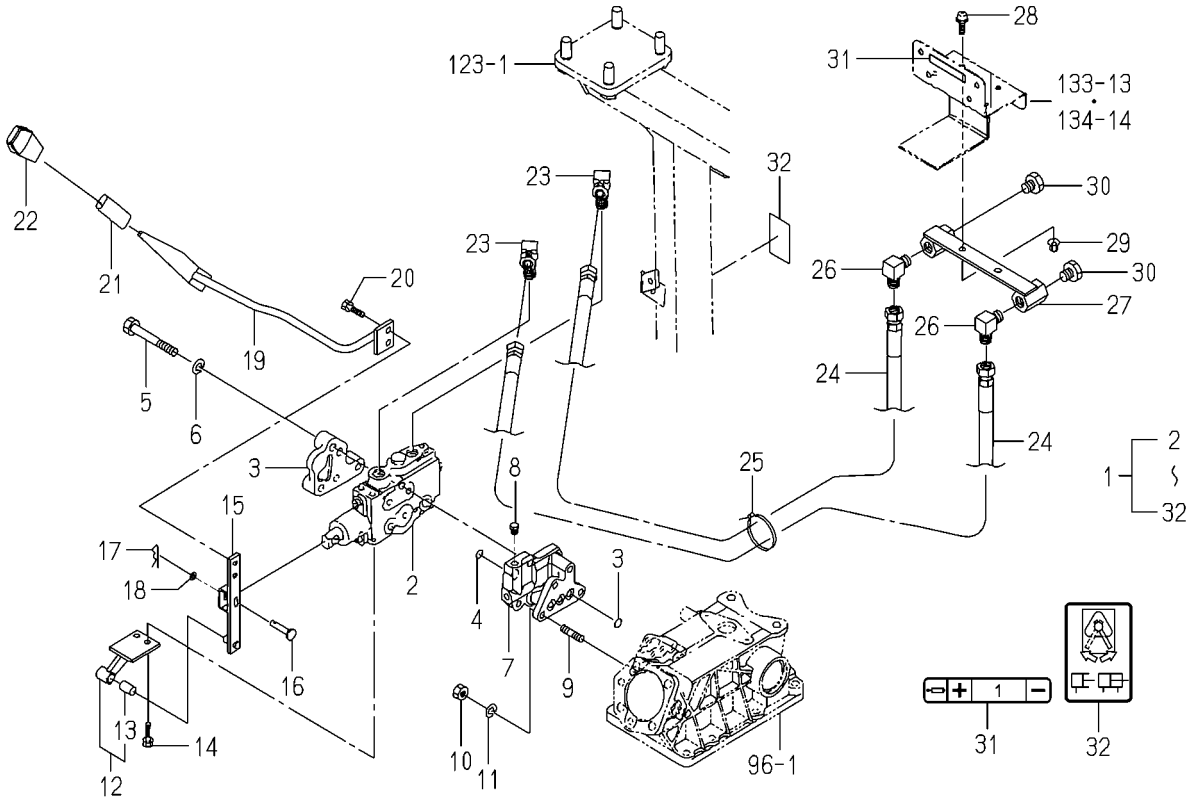

1774-507V-0100

KEY	PART CODE	DESCRIPTION	SPC	TYPE OF MODEL				ITC	COL	GRP	REMARKS
				TM3217	TM3247	TM3267					
31	1774-902-078-10	LABEL/PORT/1ST/E4	T	1	1	1					
32	1640-530-008-00	LABEL/SUBCON	T	1	1	1					

FIG.179 VALVE(AUX/2ND)SET(D TYPE)(OPTION)

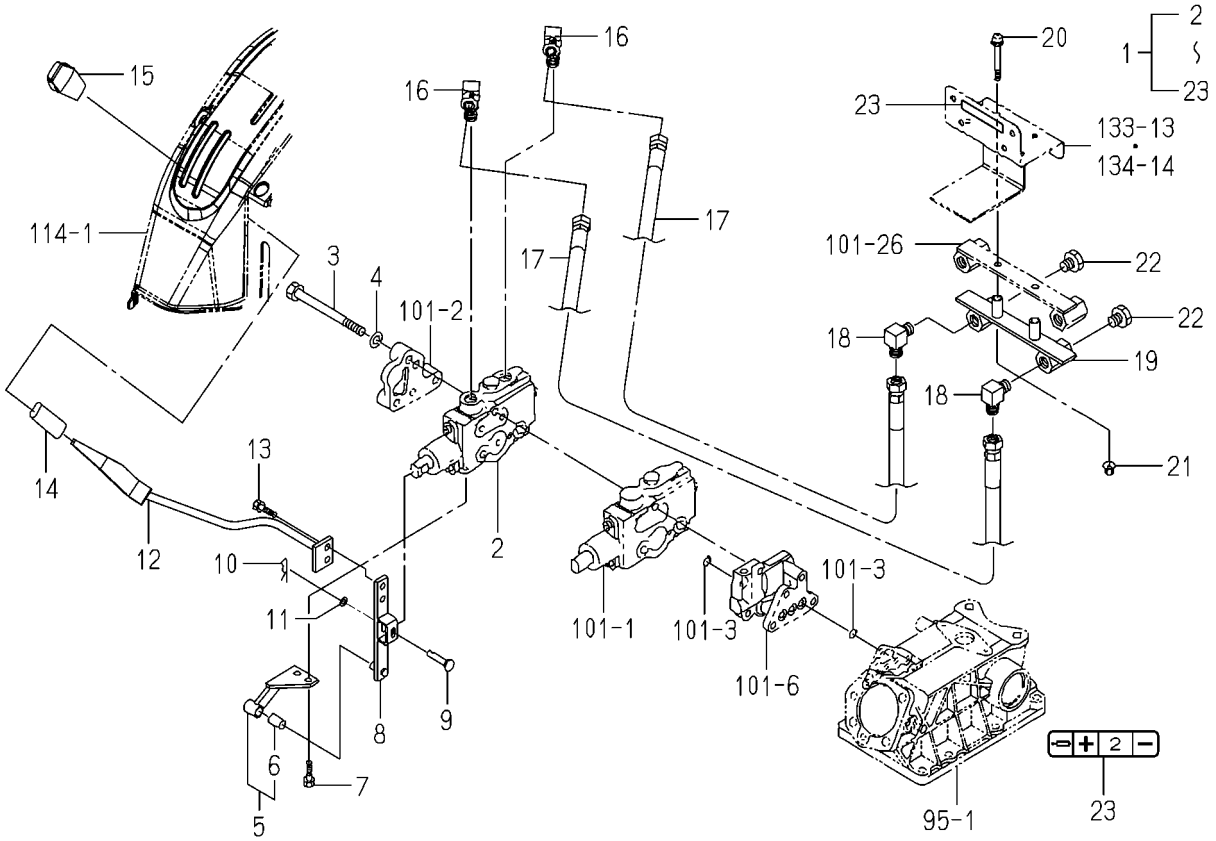

1774-507W-0100

KEY	PART CODE	DESCRIPTION	SPC	TYPE OF MODEL				ITC	COL	GRP	REMARKS
				TM3217	TM3247	TM3267					
1	1774-507-940-00	VALVE/AUX/2ND SET	T	1	1	1					
2	1719-511-350-00	VALVE/CONTROL ASSY	T	1	1	1					FIG 185
3	V201-261-012-00	BOLT/M10X120	T	3	3	3					
4	V401-160-010-00	WASHER,SP/M10	T	3	3	3					
5	1774-507-330-00	HOLDER/2ND ASSY	T	1	1	1					
6	1560-509-211-00	BUSH/10X12X20	T	1	1	1					
7	V211-260-802-00	BOLT,S/M8X20	T	2	2	2					
8	1774-507-240-10	ARM/2ND COMP	T	1	1	1					
9	2144-519-007-00	PIN/06X31	T	1	1	1					
10	V560-160-006-00	PIN/SNAP	T	1	1	1					
11	V411-260-006-00	WASHER,PL/M6	T	1	1	1					
12	1774-507-260-20	LEVER/2ND COMP	T	1	1	1					
13	V211-260-801-60	BOLT,S/M8X16	T	2	2	2					
14	1614-262-006-00	INSULATOR/LEVER/SUB	T	1	1	1					
15	3659-203-005-00	GRIP/03X17X74	T	1	1	1					
16	1640-530-003-00	CONNECTOR	T	2	2	2					
17	1640-530-270-20	HOSE/660 ASSY	T	2	2	2					
18	3768-185-015-20	ADAPTER/90	T	2	2	2					
19	1774-507-280-10	ADAPTER/2ND COMP	T	1	1	1					
20	V111-178-006-00	SCREW/M8X60	T	2	2	2					
21	V362-260-008-00	NUT/WASHER/M8	T	2	2	2					
22	V782-160-000-6T	PLUG/SCREW/SEAL	T	2	2	2					
23	1774-902-079-10	LABEL/PORT/2ND/E4	T	1	1	1					

FIG.180 KIT(CN-4P-M)SET (3217F,3247F,3267D TYPE)(OPTION)

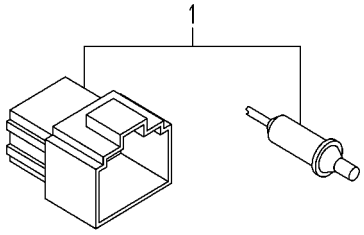

1739-690C-0100

KEY	PART CODE	DESCRIPTION	SPC	TYPE OF MODEL				ITC	COL	GRP	REMARKS
				TM3217	TM3247	TM3267					
1	1739-690-730-00	KIT/CN-4P-M SET	T	1	1	1					

FIG.181 WEIGHT(15)SET(OPTION)

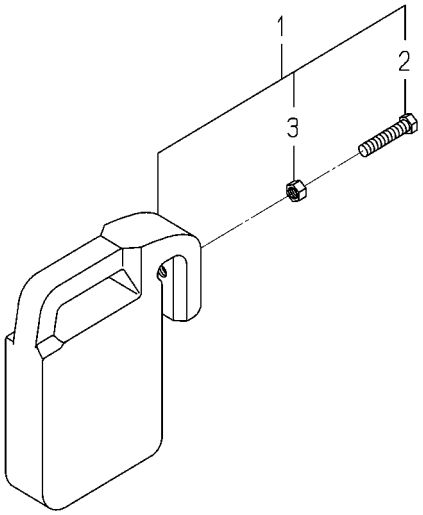

1774-922A-0100

KEY	PART CODE	DESCRIPTION	SPC	TYPE OF MODEL				ITC	COL	GRP	REMARKS
				TM3217	TM3247	TM3267					
1	1774-922-200-10	WEIGHT/15 SET	T	1	1	1					
2	W201-261-206-00	BOLT/M12X60	T	1	1	1					
3	V305-260-012-00	NUT/M12	T	1	1	1					

FIG.182 COMPONENT PARTS FOR K200-208-000-10 ON Fig.83

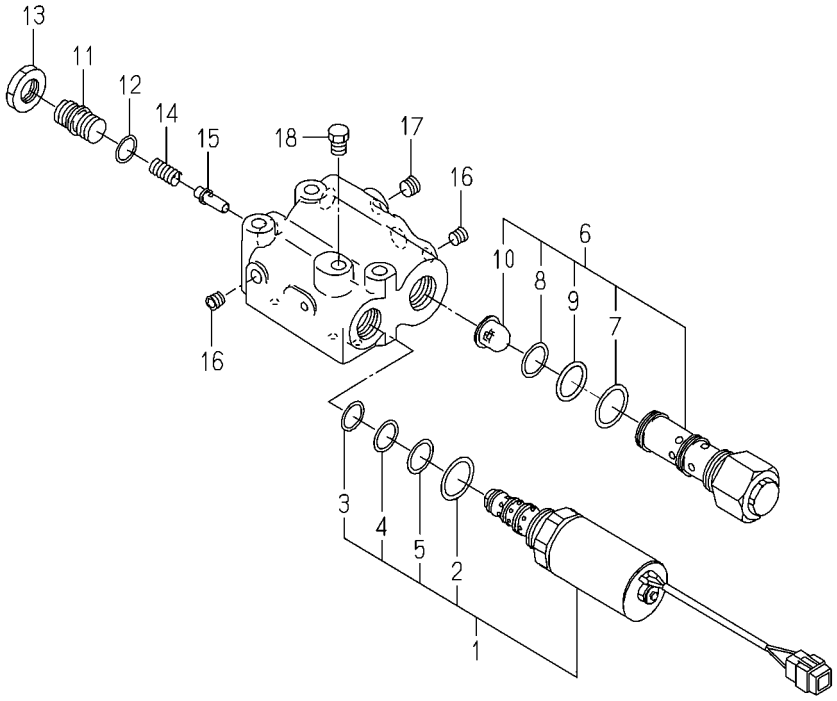

K200-208-000-1D

KEY	PART CODE	DESCRIPTION	SPC	TYPE OF MODEL				ITC	COL	GRP	REMARKS
				TM3217	TM3247	TM3267					
1	K290-004-000-00	VALVE/PRV/B/2 ASSY	*	1	1	1					
2	V720-112-402-00	O-RING/1B,P20	*	1	1	1					
3	K290-001-001-00	O-RING/AS568/013	*	1	1	1					
4	K290-001-002-00	O-RING/AS568/014	*	1	1	1					
5	K290-001-003-00	O-RING/AS568/015	*	1	1	1					
6	K200-094-100-10	VALVE/FLOW PRIORITY/	*	1	1	1					
7	V720-112-402-00	O-RING/1B,P20	*	1	1	1					
8	V723-111-501-60	O-RING/1B,S16	*	1	1	1					
9	K211-066-103-00	RING/O/F404/1015	*	1	1	1					
10	1650-508-002-00	FILTER/LINE/12X18X15	*	1	1	1					
11	K250-064-003-00	ADJUSTSCREW/064	*	1	1	1					
12	V720-112-401-20	O-RING/1B,P12	*	1	1	1					
13	K250-001-007-00	NUT	*	1	1	1					
14	K200-114-002-00	SPRING/HC017	*	1	1	1					
15	K190-001-202-10	POPPET	*	1	1	1					
16	V780-140-000-1T	PLUG/SCREW/SEAL	*	2	2	2					
17	V780-140-000-2T	PLUG/SCREW/SEAL	*	1	1	1					
18	V782-160-000-2T	PLUG/SCREW/SEAL	*	1	1	1					

FIG.183 COMPONENT PARTS FOR K211-092-000-10 ON Fig.97

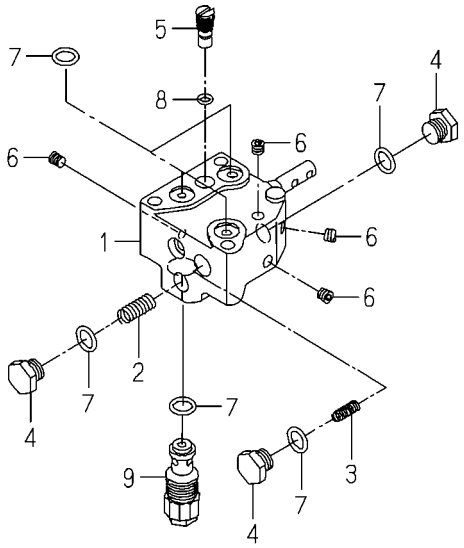

K211-092-000-1E

KEY	PART CODE	DESCRIPTION	SPC	TYPE OF MODEL				ITC	COL	GRP	REMARKS
				TM3217	TM3247	TM3267					
1	K211-001-100-10	VALVE SET	*	1	1	1					
2	K211-001-006-20	SPRING	*	1	1	1					
3	K211-001-007-00	SPRING	*	1	1	1					
4	K211-001-008-00	PLUG	*	3	3	3					
5	K211-011-001-10	PLUG/M12	*	1	1	1					
6	V780-140-000-1T	PLUG/SCREW/SEAL	*	4	4	4					
7	V720-112-401-20	O-RING/1B,P12	*	7	7	7					
8	V720-111-900-60	O-RING/1B,P6	*	1	1	1					
9	K250-067-000-00	VALVE/RELIEF/06 ASSY	*	1	1	1					

FIG.184 COMPONENT PARTS FOR K510-027-000-00 ON Fig.33

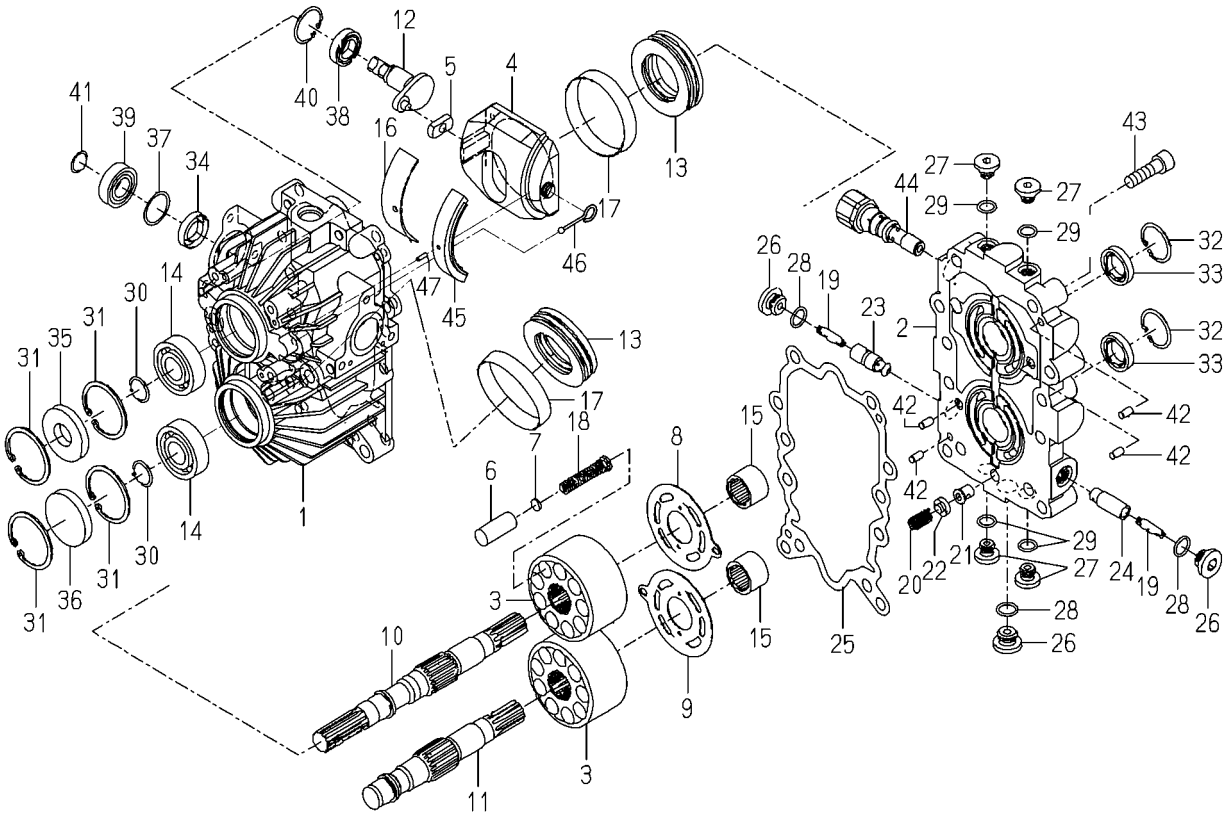

K510-027-000-0

KEY	PART CODE	DESCRIPTION	SPC	TYPE OF MODEL				ITC	COL	GRP	REMARKS
				TM3217	TM3247	TM3267					
1	K510-027-001-00	CASE/HMS1/027	*	1	1	1					
2	K510-014-004-00	BLOCK/PORT	*	1	1	1					
3	K510-019-005-10	BLOCK/CYLINDER/23CC	*	2	2	2					
4	K510-027-006-00	PLATE/SWASH/HMS1/027	*	1	1	1					
5	K510-001-007-00	METAL/SLIDE	*	1	1	1					
6	K510-006-008-00	PISTON	*	18	18	18					
7	K510-010-009-00	SHIM/1.8	*	18	18	18					
8	K510-008-010-00	PLATE/VALVE/PUMP	*	1	1	1					
9	K510-001-011-00	PLATE/VALVE/MOTOR	*	1	1	1					
10	K510-014-012-10	SHAFT/PUMP/HMS1/014	*	1	1	1					
11	K510-005-013-00	SHAFT/MOTOR	*	1	1	1					
12	K510-006-014-00	ARM/TRUNNION/HMS1/00	*	1	1	1					
13	K510-001-015-00	BEARING/THRUST	*	2	2	2					
14	V600-110-620-40	BEARING,RB/6204	*	2	2	2					
15	K510-001-016-00	NEEDLE	*	2	2	2					
16	K510-001-017-00	BUSH/95X100X22	*	1	1	1					
17	K510-001-018-00	BUSH/68X71X14	*	2	2	2					
18	K510-001-019-00	SPRING/HC053	*	18	18	18					
19	K510-001-020-00	SPRING/HC030	*	2	2	2					
20	K510-003-021-00	SPRING/HC021	*	1	1	1					
21	K510-003-022-00	POPPET/RELIEF	*	1	1	1					
22	K510-003-037-00	PLATE/SPRING	*	1	1	1					
23	K510-005-024-00	POPPET/CHECK/1.3	*	1	1	1					
24	K510-006-023-00	POPPET/CHECK	*	1	1	1					
25	K510-001-026-00	GASKET	*	1	1	1					
26	K510-001-029-00	PLUG(G3/8)	*	3	3	3					
27	K275-001-003-00	PLUG(PF1/4)	*	4	4	4					
28	V720-112-401-40	O-RING/1B,P14	*	3	3	3					
29	V720-112-401-10	O-RING/1B,P11	*	4	4	4					
30	V704-140-020-00	RING,SNAP/20 C	*	2	2	2					

FIG.184 COMPONENT PARTS FOR K510-027-000-00 ON Fig.33

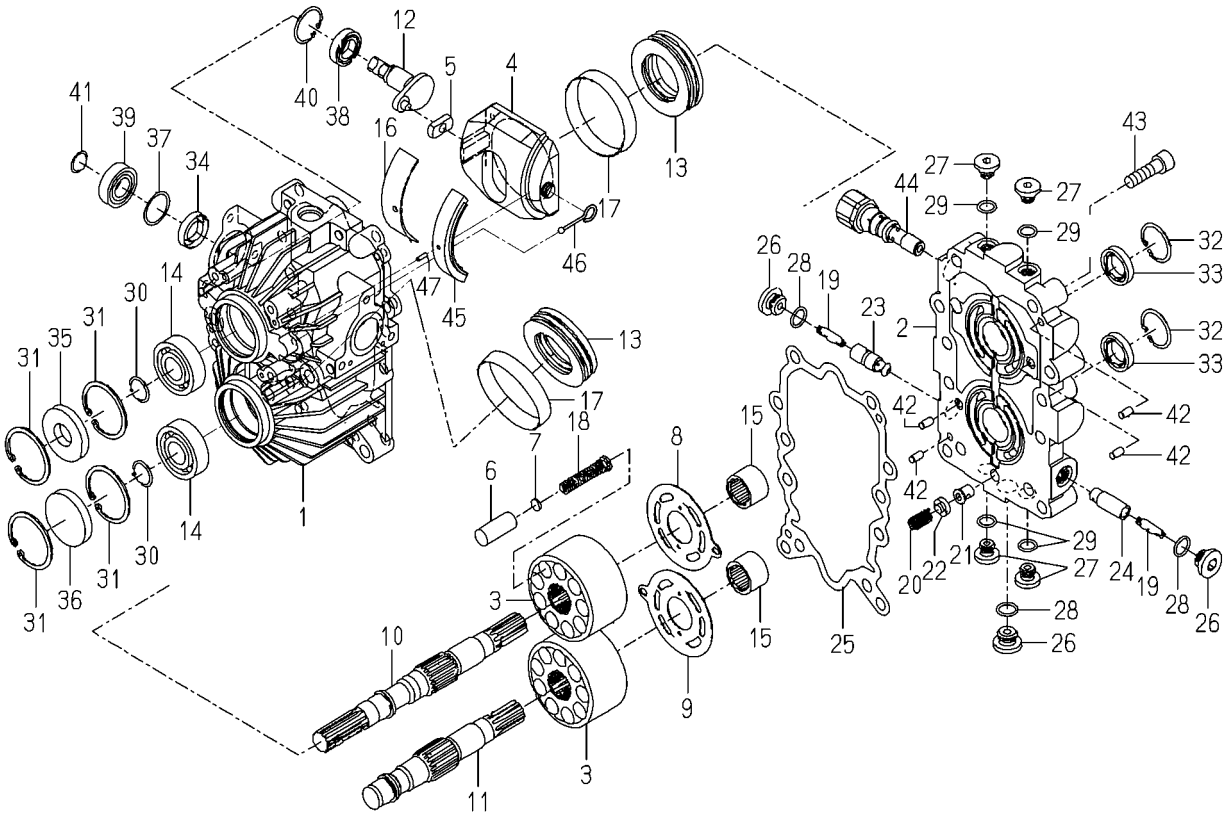

K510-027-000-0

KEY	PART CODE	DESCRIPTION	SPC	TYPE OF MODEL				ITC	COL	GRP	REMARKS
				TM3217	TM3247	TM3267					
31	V705-140-047-00	RING,SNAP/47 C	*	4	4	4					
32	V705-140-032-00	RING,SNAP/32 C	*	2	2	2					
33	K510-001-039-00	OIL SEAL	*	2	2	2					
34	K510-001-031-00	SEAL/OIL	*	1	1	1					
35	V744-120-470-70	SEAL,OIL/TC20477	*	1	1	1					
36	1421-201-002-00	SEAL/47	*	1	1	1					
37	K510-001-034-00	WASHER/25X30X1	*	1	1	1					
38	K510-017-047-00	BEARING,RB/6903	*	1	1	1					
39	K510-017-048-00	BEARING,RB/6003SS	*	1	1	1					
40	V705-140-030-00	RING,SNAP/30 C	*	1	1	1					
41	V704-140-017-00	RING,SNAP/17 C	*	1	1	1					
42	K510-001-036-00	PIN,ST	*	4	4	4					
43	V220-541-003-50	SCREW,SOCKET/M10X35	*	8	8	8					
44	K510-003-100-00	VALVE/RELIEF SET	*	1	1	1					
45	K510-003-017-00	BEARING/NEEDLE	*	1	1	1					
46	K510-003-500-00	PIN	*	1	1	1					
47	V523-100-301-00	PIN,ST,B/3X10	*	1	1	1					

FIG.185 COMPONENT PARTS FOR 1719-511-350-00 ON Fig.101,102,178,179

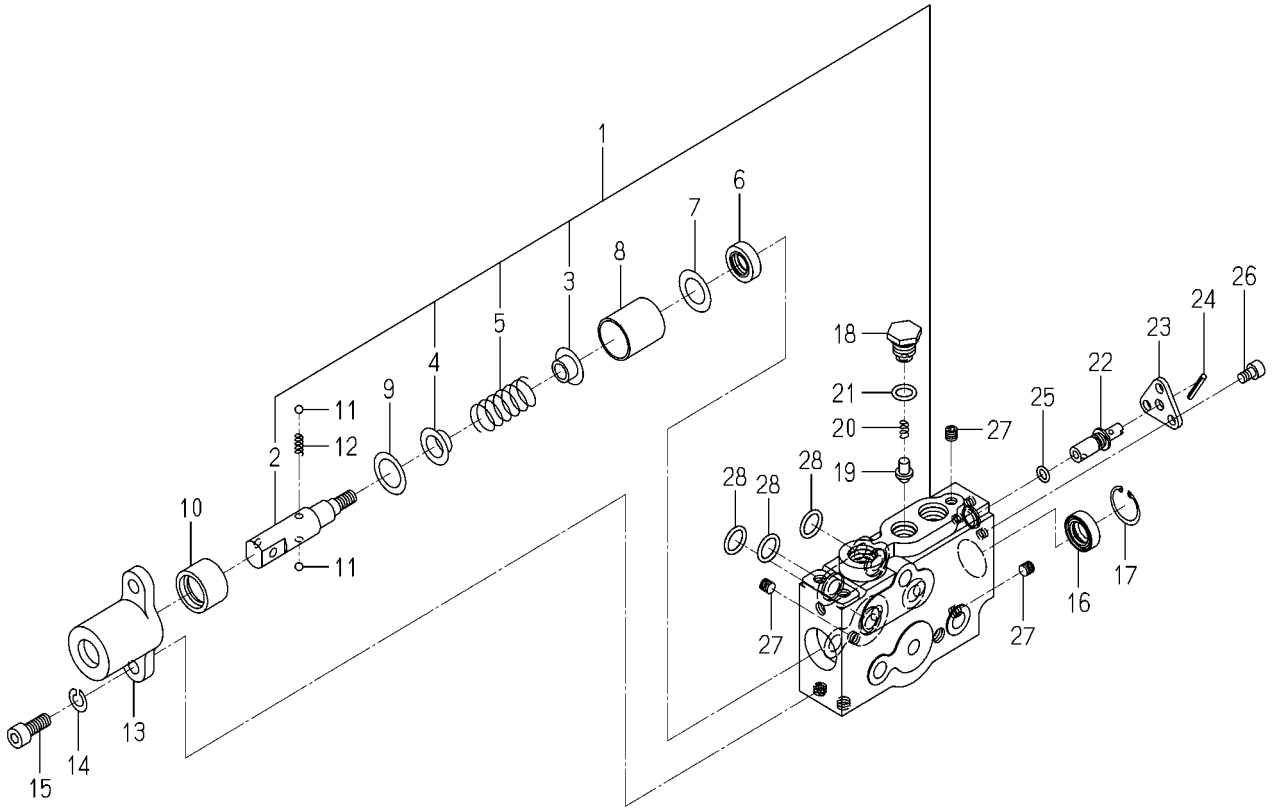

1719-511-350-0

KEY	PART CODE	DESCRIPTION	SPC	TYPE OF MODEL				ITC	COL	GRP	REMARKS
				TM3217	TM3247	TM3267					
1	1640-530-610-10	VALVE SET	*	1	1	1					
1	1640-530-610-10	VALVE SET	*	2	2	2					
2	1640-530-613-00	HEAD/SPOOL	*	1	1	1					
2	1640-530-613-00	HEAD/SPOOL	*	2	2	2					
3	1640-530-614-00	STOPPER/SPRING/A	*	1	1	1					
3	1640-530-614-00	STOPPER/SPRING/A	*	2	2	2					
4	1640-530-615-00	STOPPER/SPRING/B	*	1	1	1					
4	1640-530-615-00	STOPPER/SPRING/B	*	2	2	2					
5	K211-012-006-00	SPRING/HC042	*	1	1	1					
5	K211-012-006-00	SPRING/HC042	*	2	2	2					
6	K211-004-007-00	SEAL,OIL/TC4,14247	*	1	1	1					
6	K211-004-007-00	SEAL,OIL/TC4,14247	*	2	2	2					
7	K211-004-006-00	COLLAR	*	1	1	1					
7	K211-004-006-00	COLLAR	*	2	2	2					
8	1640-530-622-00	SLEEVE	*	1	1	1					
8	1640-530-622-00	SLEEVE	*	2	2	2					
9	1640-530-623-00	COLLAR/19X28X02	*	1	1	1					
9	1640-530-623-00	COLLAR/19X28X02	*	2	2	2					
10	1640-530-624-00	SLEEVE/DETENT	*	1	1	1					
10	1640-530-624-00	SLEEVE/DETENT	*	2	2	2					
11	V682-200-000-60	BALL,STEEL	*	2	2	2					
11	V682-200-000-60	BALL,STEEL	*	4	4	4					
12	1640-530-625-00	SPRING/HC015	*	1	1	1					
12	1640-530-625-00	SPRING/HC015	*	2	2	2					
13	1640-530-626-00	COVER	*	1	1	1					
13	1640-530-626-00	COVER	*	2	2	2					
14	V401-160-008-00	WASHER,SP/M8	*	2	2	2					
14	V401-160-008-00	WASHER,SP/M8	*	4	4	4					
15	V220-540-802-00	SCREW,SOCKET/M8X20	*	2	2	2					
15	V220-540-802-00	SCREW,SOCKET/M8X20	*	4	4	4					

FIG.185 COMPONENT PARTS FOR 1719-511-350-00 ON Fig.101,102,178,179

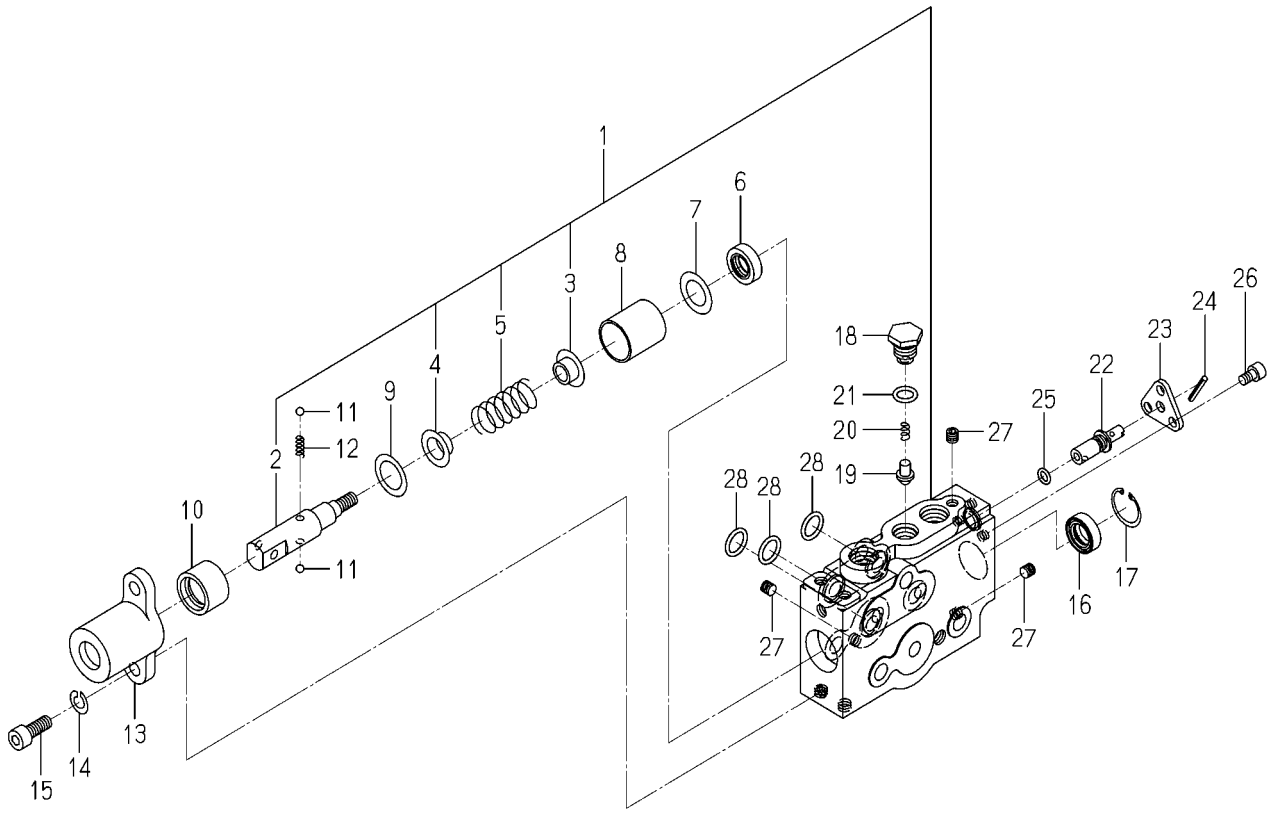

1719-511-350-0

KEY	PART CODE	DESCRIPTION	SPC	TYPE OF MODEL				ITC	COL	GRP	REMARKS
				TM3217	TM3247	TM3267					
16	K211-004-007-00	SEAL,OIL/TC4,14247	*	1	1	1					
16	K211-004-007-00	SEAL,OIL/TC4,14247	*	2	2	2					
17	V705-140-024-00	RING,SNAP/24 C	*	1	1	1					
17	V705-140-024-00	RING,SNAP/24 C	*	2	2	2					
18	1640-530-628-00	PLUG/M14	*	1	1	1					
18	1640-530-628-00	PLUG/M14	*	2	2	2					
19	1640-530-629-00	POPPET	*	1	1	1					
19	1640-530-629-00	POPPET	*	2	2	2					
20	K110-001-106-00	SPRING	*	1	1	1					
20	K110-001-106-00	SPRING	*	2	2	2					
21	V720-112-401-20	O-RING/1B,P12	*	1	1	1					
21	V720-112-401-20	O-RING/1B,P12	*	2	2	2					
22	1640-530-631-00	SPOOL/DELECT	*	1	1	1					
22	1640-530-631-00	SPOOL/DELECT	*	2	2	2					
23	1640-530-632-00	PLATE	*	1	1	1					
23	1640-530-632-00	PLATE	*	2	2	2					
24	V580-140-302-50	PIN,SPRING/3X25 W	*	1	1	1					
24	V580-140-302-50	PIN,SPRING/3X25 W	*	2	2	2					
25	V720-111-900-70	O-RING/1B,P7	*	1	1	1					
25	V720-111-900-70	O-RING/1B,P7	*	2	2	2					
26	V220-540-601-00	SCREW,SOCKET/M6X10	*	3	3	3					
26	V220-540-601-00	SCREW,SOCKET/M6X10	*	6	6	6					
27	K200-014-007-00	PLUG/SEAL	*	3	3	3					
27	K200-014-007-00	PLUG/SEAL	*	6	6	6					
28	V720-112-401-40	O-RING/1B,P14	*	3	3	3					
28	V720-112-401-40	O-RING/1B,P14	*	6	6	6					

FIG.186 COMPONENT PARTS FOR 1772-654-210-00 ON Fig.133,134

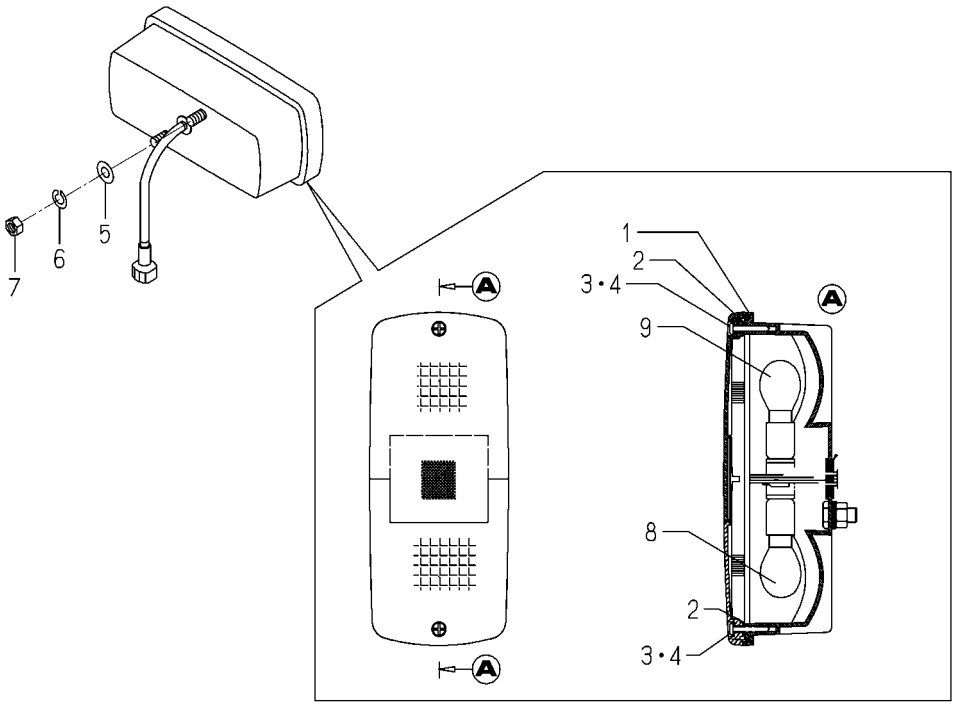

1772-654-210-0B

KEY	PART CODE	DESCRIPTION	SPC	TYPE OF MODEL				ITC	COL	GRP	REMARKS
				TM3217	TM3247	TM3267					
1	1772-654-212-00	GASKET	*	2	2	2					
2	1772-654-213-00	WASHER/RUBBER	*	4	4	4					
3	1772-654-214-00	SCREW	*	4	4	4					
4	1772-654-215-00	WASHER	*	4	4	4					
5	V411-260-008-00	WASHER,PL/M8	*	4	4	4					
6	V401-160-008-00	WASHER,SP/M8	*	4	4	4					
7	V304-260-008-00	NUT/M8	*	4	4	4					
8	1772-654-216-00	BULB/12V21W	*	2	2	2					
9	1772-654-217-00	BULB/12V21/5W	*	2	2	2					

FIG.187 COMPONENT PARTS FOR 1774-127-510-10 ON Fig.28

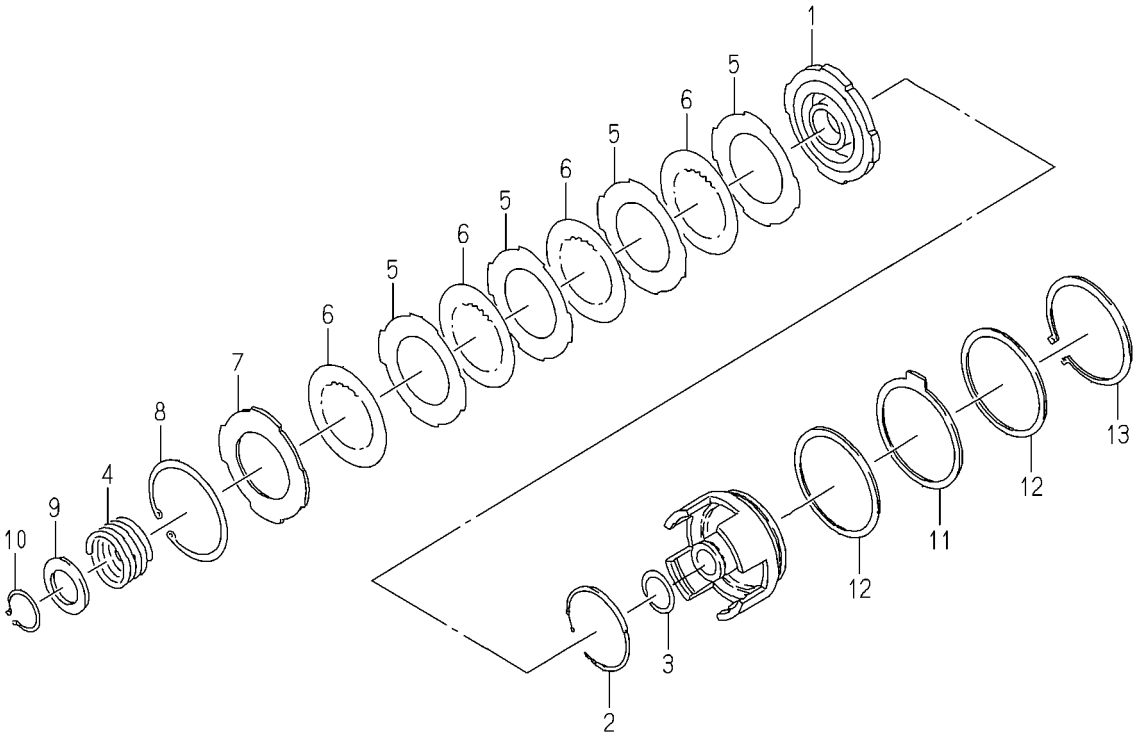

1774-127-510-1C

KEY	PART CODE	DESCRIPTION	SPC	TYPE OF MODEL				ITC	COL	GRP	REMARKS
				TM3217	TM3247	TM3267					
1	1725-219-218-00	PISTON	*	1	1	1					
2	1725-219-219-00	RING/O	*	1	1	1					
3	1725-219-231-00	RING/O	*	1	1	1					
4	1688-211-505-00	SPRING	*	1	1	1					
5	1725-219-214-00	PLATE/SEPARATER	*	4	4	4					
6	1575-261-016-00	DISKPLATE	*	4	4	4					
7	1725-219-216-00	PLATE/BACK	*	1	1	1					
8	1688-211-506-00	SNAPRING	*	1	1	1					
9	1688-211-507-00	WASHER	*	1	1	1					
10	1688-211-508-00	SNAPRING/32	*	1	1	1					
11	1688-211-509-00	DISK/BRAKE	*	1	1	1					
12	1725-219-217-00	PRESSURE/BRAKE	*	2	2	2					
13	1688-211-522-00	SNAPRING/85	*	1	1	1					

WIRING DIAGRAM(F TYPE)(1/2)

(F TYPE)

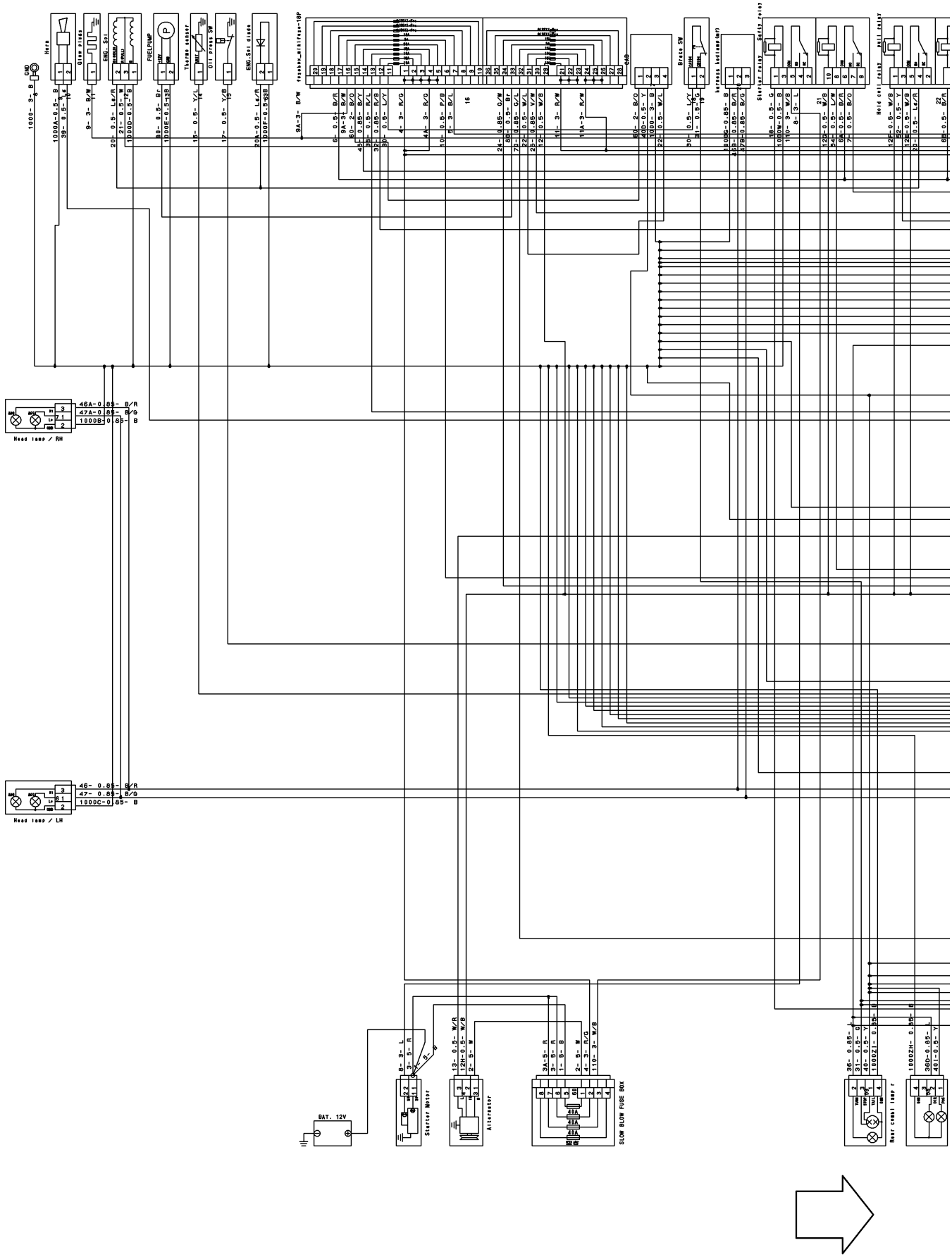

WIRING DIAGRAM(F TYPE)(2/2)

(F TYPE)

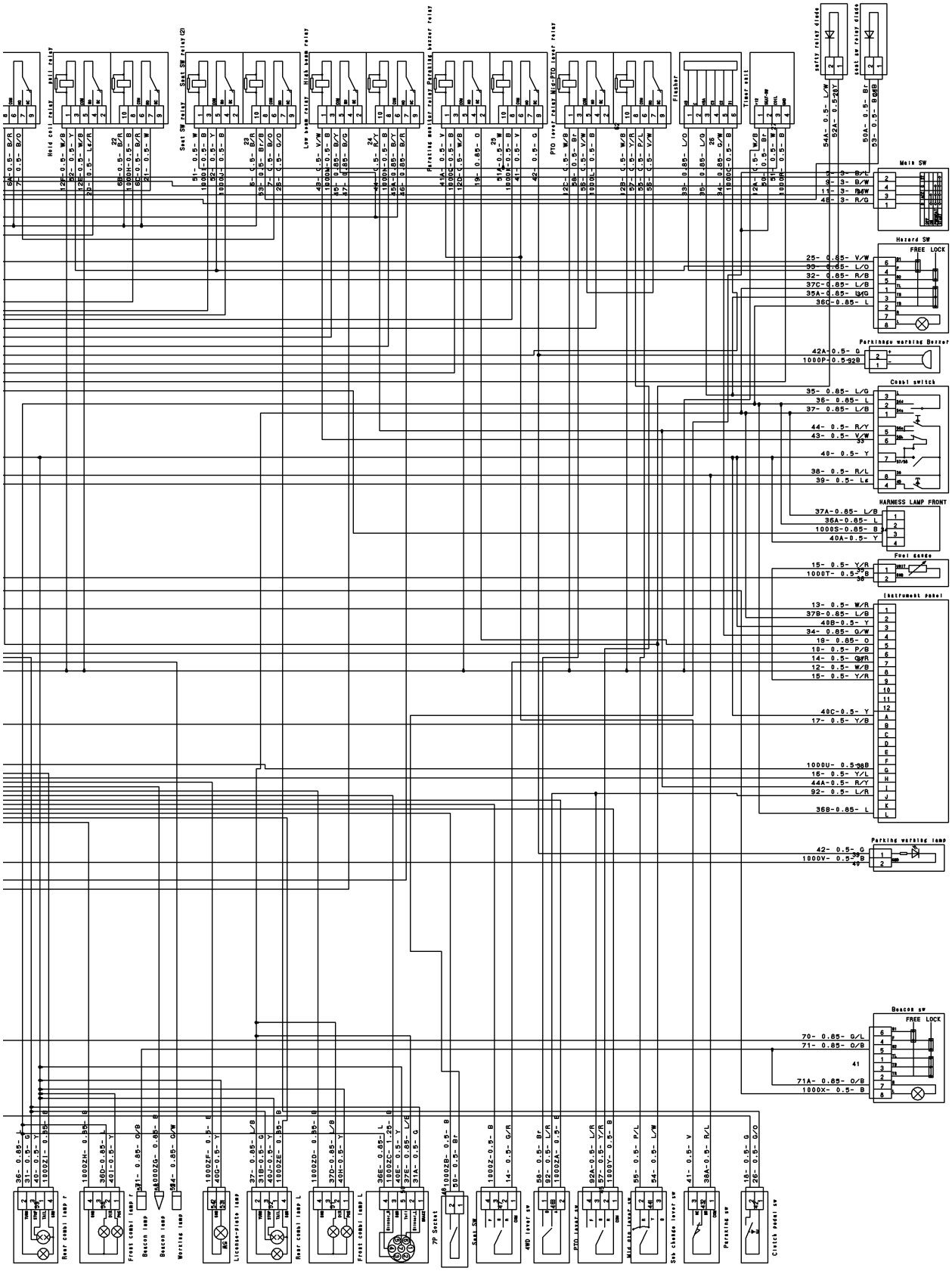

WIRING DIAGRAM(H TYPE)(1/2)

(H TYPE)

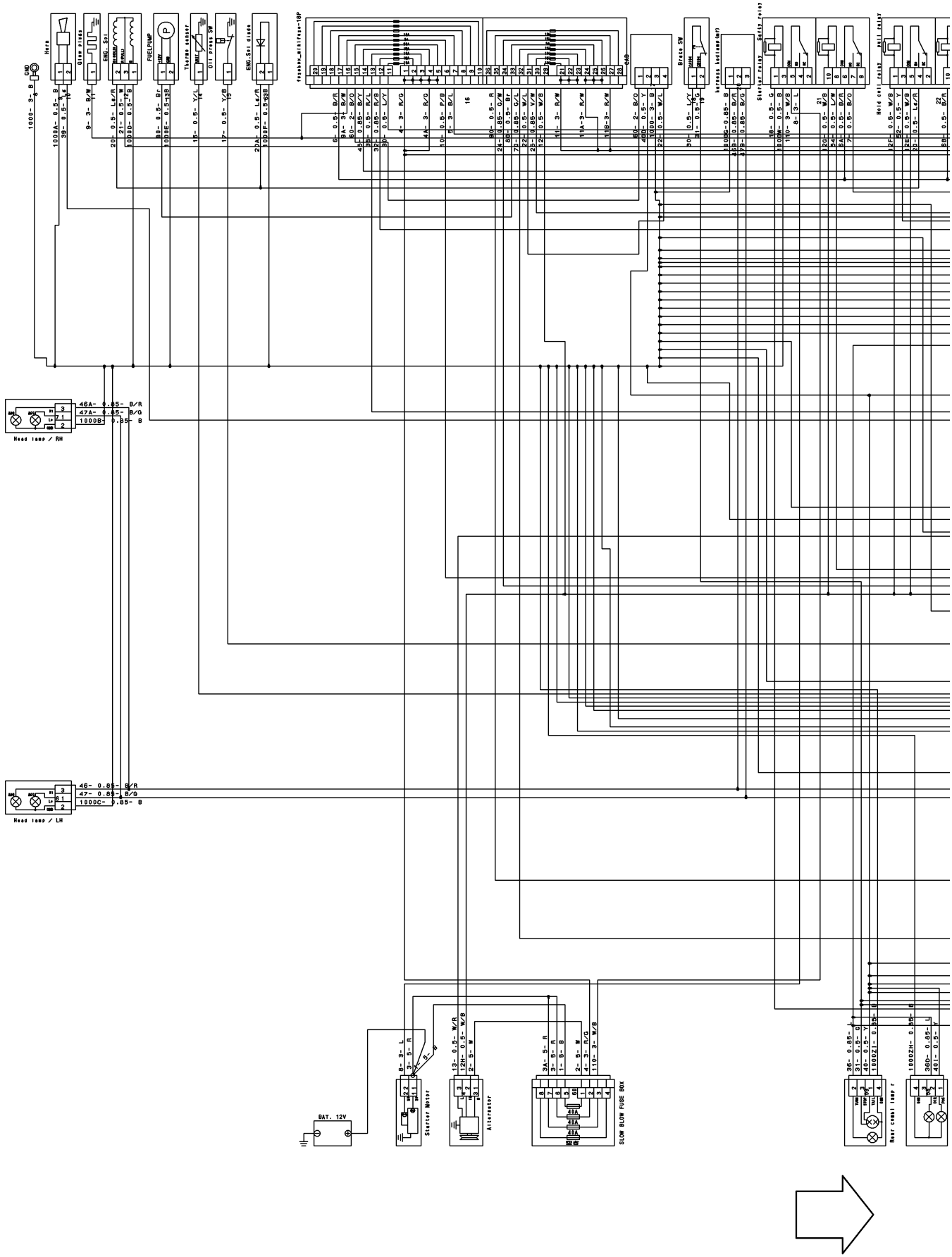

WIRING DIAGRAM(H TYPE)(2/2)

(H TYPE)

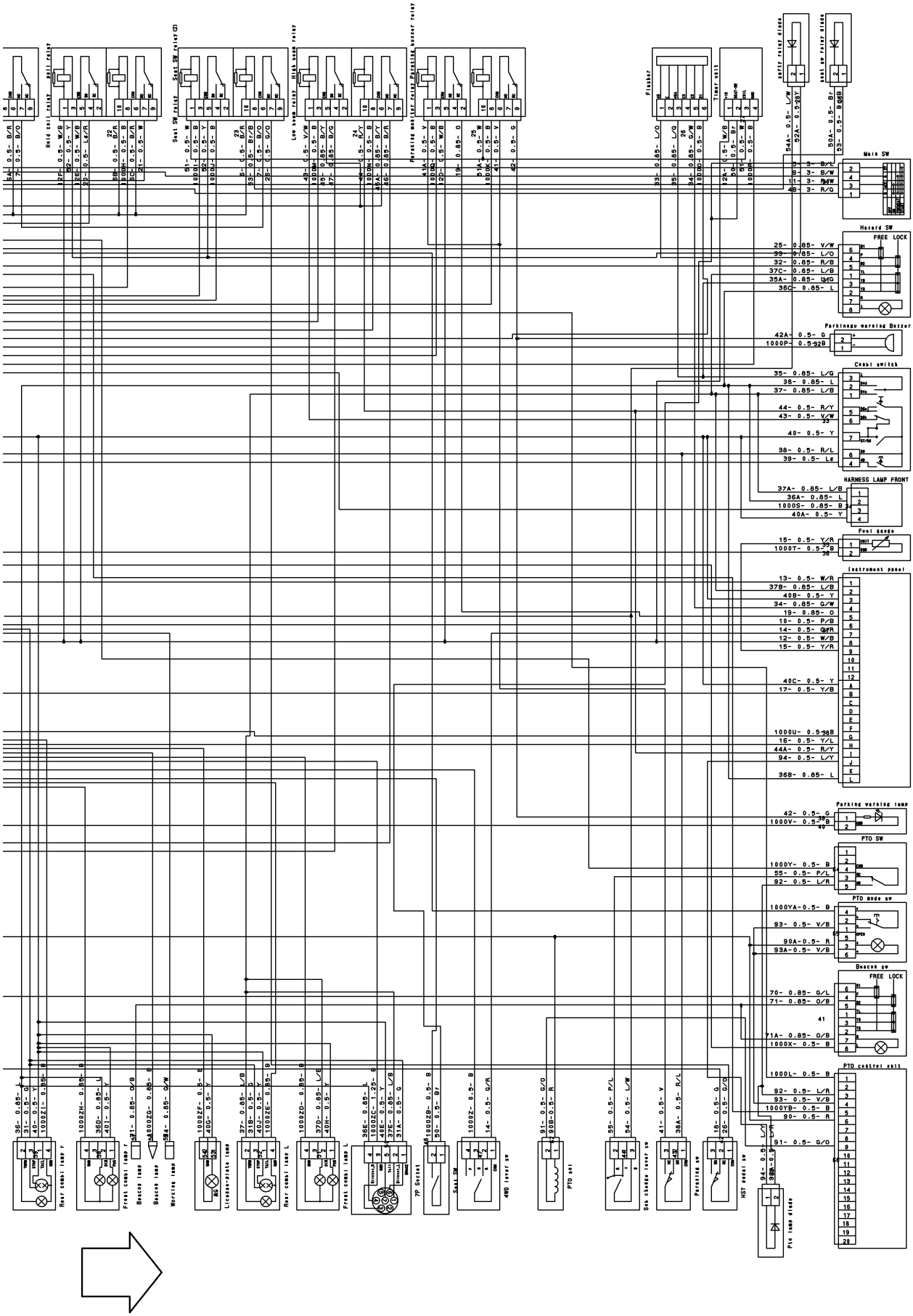

Numerical Index

Part Code	Fig.	Key	Part Code	Fig.	Key	Part Code	Fig.	Key
1373-121-001-00	27	4	6209-587-001-00	14	4	6211-312-003-20	30	14
1425-621-004-00	10	14	6209-600-004-00	10	24	6211-312-004-20	10	40
1729-202-001-00	22	14	6209-605-004-10	2	3		30	15
	23	14	6209-605-007-10	6	5	6211-319-003-00	10	42
1729-202-002-00	10	47		10	2	6211-341-087-00	9	1
3625-540-004-00	10	38	6209-610-001-10	6	3	6211-342-002-10	9	2
3640-586-004-00	24	4	6209-610-007-00	10	3	6211-361-010-10	8	1
3805-355-002-20	8	2	6209-610-008-00	6	7	6211-510-021-00	6	10
3817-401-001-00	10	10	6209-610-009-00	6	4	6211-511-023-00	6	11
	12	20	6209-625-001-00	6	14	6211-511-024-00	6	12
	19	4		30	10	6211-540-018-00	7	1
	19	9	6209-625-002-00	10	7	6211-560-007-00	7	3
	22	9		30	12	6211-599-012-00	6	13
	23	9	6209-630-002-10	28	7		7	2
6004-010-119-00	1	1		30	22		7	4
6209-000-002-00	12	18	6209-730-005-00	13	3	6211-751-001-10	3	2
6209-000-004-10	6	2		22	12	6211-760-026-40	6	30
6209-000-043-00	16	14		23	12	6211-766-012-10	6	31
	17	15	6209-730-006-00	16	4	6211-777-007-30	11	1
6209-000-044-00	2	7		17	4	6212-111-094-20	14	1
6209-030-043-00	22	18	6209-740-001-00	10	26	6212-114-094-20	15	1
	23	18	6209-740-005-00	6	18	6212-116-094-20	15	3
6209-030-044-00	20	4	6209-749-001-20	6	15	6212-121-014-20	14	2
6209-030-085-00	27	8		10	44	6212-124-014-10	15	2
6209-046-015-00	16	8	6209-920-002-00	10	20	6212-126-014-10	15	4
	17	9		18	12	6212-211-001-10	14	3
6209-050-001-00	10	32		30	13	6212-230-004-10	14	5
6209-050-002-00	10	33	6209-940-004-00	12	14	6212-235-005-00	14	6
6209-300-013-00	6	32	6211-110-057-50	2	1	6212-271-016-00	14	7
6209-300-014-00	2	8	6211-141-029-20	2	6	6212-274-016-00	7	5
6209-360-011-00	24	3		30	3	6212-276-016-00	7	6
6209-360-028-20	3	6	6211-170-004-20	3	1	6212-310-009-60	16	1
6209-360-143-00	24	6	6211-173-003-00	3	3		17	1
6209-409-001-00	10	18		30	4	6212-330-051-10	16	5
6209-409-003-00	12	17	6211-210-113-10	6	1	6212-330-090-10	17	5
6209-440-005-00	28	4	6211-258-001-00	6	8	6212-333-009-00	16	6
6209-440-007-00	27	6		30	8		17	6
6209-490-002-10	3	4	6211-258-002-00	6	9	6212-370-011-00	16	9
6209-500-003-00	10	16		30	9		17	10
	10	25	6211-291-016-00	6	26	6212-371-009-00	16	10
	30	23	6211-292-001-20	6	27		17	11
6209-572-003-00	3	5		30	11	6212-372-002-10	16	11
	30	5	6211-310-012-50	10	1		17	12
6209-580-002-10	22	27	6211-311-007-40	10	39	6212-511-002-00	13	1
	23	27	6211-312-003-20	10	27	6212-521-008-00	16	3

Numerical Index

Part Code	Fig.	Key	Part Code	Fig.	Key	Part Code	Fig.	Key
6212-521-008-00	17	3	6213-614-019-00	30	19	6215-345-017-00	31	23
6212-522-010-00	13	2	6213-619-001-00	19	5	6215-345-018-00	31	24
6212-523-023-00	13	6	6213-641-002-10	20	2	6215-345-019-00	31	25
6212-524-002-40	22	11	6213-660-007-00	20	1	6215-345-020-00	31	26
	23	11	6213-669-008-00	20	3	6215-345-021-00	31	27
6212-530-022-00	10	46	6213-671-003-00	20	5	6215-345-022-00	31	28
6212-531-014-00	6	6	6213-674-006-20	27	2	6215-345-023-00	31	29
6212-535-010-10	22	15	6213-711-003-20	19	17	6215-345-024-00	31	30
	23	15	6213-716-004-20	19	12	6215-345-025-00	31	31
6212-535-014-00	13	4	6213-721-007-00	6	24	6215-345-026-00	31	32
6212-551-028-00	12	1	6213-729-011-00	19	20	6215-345-027-00	31	33
6212-552-014-00	12	2	6213-729-013-10	19	10	6215-345-028-00	31	34
6212-561-001-10	12	3	6213-743-002-10	19	13	6215-345-029-00	31	35
6212-563-005-00	12	4		30	20	6215-345-030-00	31	36
6212-565-001-00	12	5	6214-111-011-20	4	1	6215-345-031-00	31	37
6212-569-002-00	2	4	6214-115-001-20	4	2	6215-345-032-00	31	38
	30	2		30	6	6215-345-033-00	31	39
6212-571-006-00	12	6	6214-141-010-10	5	1	6215-345-034-00	31	40
6212-575-002-00	12	7	6214-145-001-30	5	2	6215-345-035-00	31	41
6212-600-002-30	12	8		30	7	6215-345-036-00	31	42
6212-611-004-10	12	9	6215-300-036-10	21	1	6215-345-037-00	31	43
6212-616-002-00	12	16	6215-311-027-00	31	51	6215-345-038-00	31	44
6212-620-001-20	12	10	6215-315-002-00	21	3	6215-345-039-00	31	45
6212-626-002-10	12	11	6215-330-024-10	31	1	6215-345-040-00	31	46
6212-628-004-00	12	12	6215-331-008-00	31	2	6215-345-041-00	31	47
6212-628-005-00	12	13	6215-332-013-00	31	5	6215-345-042-00	31	48
6213-100-003-30	18	1	6215-339-001-00	31	6	6215-345-043-00	31	49
6213-111-001-30	18	2	6215-342-001-00	31	3	6215-359-001-00	21	2
6213-119-001-00	18	4	6215-343-001-00	31	4	6215-359-002-00	31	50
6213-129-003-00	18	3	6215-345-001-00	31	7	6215-411-126-10	21	4
6213-129-006-00	6	16	6215-345-002-00	31	8	6215-411-127-00	21	5
	9	3	6215-345-003-00	31	9	6215-411-128-00	21	6
	17	7	6215-345-004-00	31	10	6215-411-198-00	24	2
6213-140-034-10	18	6	6215-345-005-00	31	11	6215-412-018-10	24	1
6213-149-002-00	18	8	6215-345-006-00	31	12	6215-520-001-00	22	17
6213-160-002-20	10	28	6215-345-007-00	31	13		23	17
6213-161-001-20	10	29	6215-345-008-00	31	14	6215-526-004-00	22	19
6213-164-001-00	10	30	6215-345-009-00	31	15		23	19
6213-240-002-20	18	13	6215-345-010-00	31	16	6215-531-008-00	22	24
6213-311-006-00	18	10	6215-345-011-00	31	17	6215-531-019-00	23	24
6213-319-001-00	6	25	6215-345-012-00	31	18	6215-541-001-10	22	20
6213-610-011-20	19	1	6215-345-013-00	31	19		23	20
6213-614-018-00	19	2	6215-345-014-00	31	20	6215-541-016-40	25	2
	30	18	6215-345-015-00	31	21		26	2
6213-614-019-00	19	6	6215-345-016-00	31	22	6215-541-024-50	22	25

Part Code	Fig.	Key	Part Code	Fig.	Key	Part Code	Fig.	Key
6215-541-024-50	23	25	6215-635-001-00	32	14	6281-129-075-00	33	24
6215-542-004-20	10	21	6215-637-001-00	32	13	6281-129-076-00	33	25
6215-542-005-20	10	23	6215-639-004-00	32	15	6281-129-077-00	33	26
6215-542-006-00	22	22	6215-639-005-00	32	17	6281-129-078-00	33	27
	23	22	6215-641-006-00	32	5	6281-129-079-00	33	34
6215-543-002-10	22	21	6215-643-006-00	32	1	6281-129-080-00	33	8
	23	21	6215-644-007-00	32	2	6281-151-014-00	33	20
6215-546-003-30	10	17	6215-649-002-00	32	4	6281-200-005-00	27	1
6215-548-026-30	26	1	6215-649-019-00	32	3	6281-213-018-00	34	7
6215-548-029-20	25	1	6219-310-003-20	10	35	6281-214-003-00	34	12
6215-549-007-10	22	28	6219-732-017-00	28	5	6281-214-004-00	34	13
	23	28	6219-752-044-00	22	5	6281-215-001-00	34	17
6215-549-012-00	22	32		23	5	6281-216-001-00	34	18
	23	32	6219-752-045-00	22	4	6281-217-002-00	34	16
6215-549-013-00	6	29		23	4	6281-221-007-00	34	4
6215-600-103-30	22	1	6219-752-046-00	22	6	6281-222-004-00	34	1
	23	1		23	6	6281-229-002-00	34	2
6215-611-001-00	32	6	6219-752-047-00	22	7	6281-229-003-00	34	3
6215-612-001-00	32	9		23	7	6281-229-004-00	34	5
6215-619-009-00	22	3	6281-100-014-00	27	7	6281-229-006-00	34	8
	23	3	6281-111-009-00	33	1	6281-229-007-00	34	9
6215-619-010-00	22	2	6281-115-017-00	33	10	6281-229-008-00	34	10
	23	2	6281-115-018-00	33	11	6281-229-011-00	34	15
6215-619-022-00	32	8	6281-117-003-00	33	4	6281-229-012-00	34	19
6215-621-016-30	22	10	6281-118-007-00	33	3	6281-229-013-00	34	20
	23	10	6281-119-009-00	33	2	6281-229-014-00	34	21
6215-622-001-00	32	12	6281-121-010-00	33	5	6281-229-015-00	34	22
6215-629-001-00	32	10	6281-124-011-00	33	6	6281-229-016-00	34	23
6215-629-002-00	32	11	6281-127-003-00	33	19	6281-229-017-00	34	24
6215-629-003-00	32	18	6281-129-029-00	33	29	6281-229-018-00	34	25
6215-629-004-00	32	19	6281-129-030-00	33	28	6281-229-029-00	34	14
6215-629-005-00	32	20	6281-129-043-00	33	30	6281-229-032-00	34	6
6215-629-006-00	32	21	6281-129-058-00	33	9	6281-229-033-00	34	11
6215-629-007-00	32	22	6281-129-062-00	33	33	6281-271-003-00	29	1
6215-629-008-00	32	23	6281-129-064-00	33	7	6281-271-008-00	34	26
6215-629-009-00	32	24	6281-129-065-00	33	12	6281-410-023-10	28	3
6215-629-010-00	32	25	6281-129-066-00	33	13	6281-910-013-00	28	6
6215-629-011-00	32	26	6281-129-067-00	33	14	6281-971-003-00	28	1
6215-629-012-00	32	27	6281-129-068-00	33	15	6282-450-006-00	28	2
6215-629-013-00	32	28	6281-129-069-00	33	16	6287-810-015-30	30	1
6215-629-014-00	32	29	6281-129-070-00	33	17	6294-453-002-00	6	22
6215-629-015-00	32	30	6281-129-071-00	33	18	6513-770-022-10	19	16
6215-629-016-00	32	31	6281-129-072-00	33	21	6901-911-025-00	9	4
6215-631-019-00	32	7	6281-129-073-00	33	22	6902-050-610-00	16	12
6215-634-001-00	32	16	6281-129-074-00	33	23		17	13

Numerical Index

Part Code	Fig.	Key	Part Code	Fig.	Key	Part Code	Fig.	Key
6902-050-816-00	10	41	V231-360-807-50	19	15			
6904-110-818-00	6	20	V231-360-808-50	10	8			
6904-110-822-00	6	21	V233-361-002-00	11	2			
	10	4	V233-361-007-00	27	5			
	10	45	V301-260-006-00	10	34			
6904-110-840-00	6	19		22	29			
	19	7		23	29			
6904-110-850-00	10	6	V304-260-008-00	10	48			
6904-110-855-00	10	5		10	50			
6909-110-408-00	33	32	V341-120-008-00	10	19			
6909-150-506-00	16	13	V401-160-006-00	22	31			
	17	14		23	31			
6909-150-508-00	33	31	V401-160-008-00	10	49			
6909-902-299-00	6	23		10	51			
6909-906-105-10	18	11	V411-260-006-00	22	30			
6911-129-006-00	2	2		23	30			
J061-210-015-00	19	11	V523-100-802-40	6	17			
J061-220-024-00	19	21	V523-101-001-80	16	2			
J062-076-082-00	24	5		17	2			
P117-303-003-00	10	22	V600-110-620-30	22	13			
V201-360-802-00	22	8		23	13			
	23	8	V600-150-600-20	16	7			
V210-560-601-20	13	5		17	8			
	22	16	V682-200-000-60	2	5			
	23	16	V704-140-016-00	12	15			
V210-560-602-50	18	5	V705-140-012-00	10	31			
V211-560-802-50	5	3	V710-140-004-00	22	23			
V230-360-601-00	8	4		23	23			
V230-360-601-20	6	28	V720-101-900-80	22	26			
V230-360-601-60	10	37		23	26			
	28	8	V720-102-401-50	18	7			
V231-360-801-60	10	11		30	17			
	18	9	V720-102-401-80	8	3			
V231-360-802-00	4	3	V723-102-002-40	10	36			
	19	8	V723-102-005-00	10	43			
	19	14		30	16			
	27	3	V723-102-005-50	19	18			
V231-360-802-50	19	19		30	21			
V231-360-803-00	10	15						
V231-360-804-00	4	4						
V231-360-804-50	10	12						
	19	3						
V231-360-805-00	12	19						
V231-360-805-50	10	9						
V231-360-807-50	10	13						

Numerical Index

Part Code	Fig.	Key	Part Code	Fig.	Key	Part Code	Fig.	Key
1373-121-001-00	25	4	6209-610-003-00	6	6	6211-510-008-00	6	11
1425-621-004-00	10	15	6209-610-004-00	10	3	6211-511-007-00	6	12
1729-202-001-00	22	12	6209-610-007-00	6	3	6211-511-008-00	6	13
1729-202-002-00	10	48	6209-610-009-00	6	5	6211-530-008-00	7	1
3640-586-004-00	23	4	6209-625-002-00	10	7	6211-540-008-00	7	3
3805-355-002-20	8	2		28	12	6211-599-004-00	6	14
3817-401-001-00	10	11	6209-625-003-20	6	15		7	2
	12	20		28	10		7	4
	19	3	6209-630-002-10	26	7	6211-751-001-10	3	5
	19	9		28	22	6211-751-002-00	6	32
	22	7	6209-730-005-00	13	3	6211-760-032-20	6	30
6005-010-233-00	1	1		22	10	6211-766-025-00	6	31
6115-639-008-00	30	50	6209-730-006-00	16	4	6211-777-007-30	11	1
6209-000-005-00	2	7		17	4	6212-111-095-40	14	1
6209-000-006-00	6	2	6209-740-005-00	6	19	6212-114-095-40	15	1
6209-000-043-00	16	10	6209-740-006-00	10	27	6212-116-095-40	15	3
	17	11	6209-749-001-20	6	16	6212-121-028-30	14	2
6209-030-043-00	22	16		10	45	6212-124-028-30	15	2
6209-030-044-00	20	4	6209-920-002-00	10	21	6212-126-028-30	15	4
6209-030-091-00	9	4	6211-110-084-40	2	1	6212-211-002-00	14	3
6209-046-015-00	16	8	6211-141-057-10	2	6	6212-230-011-30	14	5
	17	9		28	3	6212-235-004-10	14	6
6209-050-001-00	10	34	6211-170-007-30	3	1	6212-271-009-00	14	7
6209-050-002-00	10	35	6211-173-005-00	3	6	6212-273-009-00	7	5
6209-300-014-00	2	8		28	4	6212-274-009-00	7	6
6209-300-030-00	6	34	6211-179-011-20	3	2	6212-310-011-50	16	1
6209-360-011-00	23	3	6211-210-081-30	6	1		17	1
6209-360-109-10	3	9	6211-258-001-00	6	9	6212-330-091-20	17	5
6209-360-143-00	23	6		28	8	6212-330-096-20	16	5
6209-409-001-00	10	19	6211-258-002-00	6	10	6212-333-007-10	16	6
6209-440-005-00	26	4		28	9		17	6
6209-440-007-00	25	6	6211-291-010-00	3	3	6212-371-070-00	16	9
6209-490-002-10	3	7	6211-291-015-20	6	26		17	10
6209-500-003-00	10	17	6211-292-001-20	6	27	6212-511-005-10	13	1
	10	26		28	11	6212-521-008-00	16	3
	28	13	6211-310-063-10	10	1		17	3
6209-572-003-00	3	8	6211-311-013-20	10	40	6212-522-004-20	13	2
	28	5	6211-312-005-10	10	28	6212-523-006-50	13	6
6209-580-002-10	22	26		28	14	6212-524-006-30	22	9
6209-600-004-00	10	25	6211-312-006-10	10	41	6212-530-022-00	10	47
6209-605-003-20	10	2		28	15	6212-531-008-30	6	8
6209-605-004-10	2	3	6211-319-003-00	10	43	6212-535-007-00	13	4
6209-605-007-10	6	7	6211-341-088-00	9	1	6212-535-009-00	22	13
6209-610-001-10	6	4	6211-342-002-10	9	2	6212-551-020-10	12	1
6209-610-003-00	2	2	6211-361-022-20	8	1	6212-552-008-00	12	2

Numerical Index

Part Code	Fig.	Key	Part Code	Fig.	Key	Part Code	Fig.	Key
6212-561-003-00	12	3	6213-711-004-00	19	17	6215-531-010-00	22	23
6212-563-005-00	12	4	6213-716-004-20	19	12	6215-537-002-10	22	32
6212-565-001-00	12	5	6213-721-007-00	6	24	6215-541-001-10	22	18
6212-569-002-00	2	4	6213-721-023-00	3	10	6215-541-016-40	24	2
	28	2	6213-729-011-00	19	20	6215-541-045-10	22	24
6212-571-002-30	12	6	6213-729-013-10	19	10	6215-542-004-20	10	22
6212-575-003-00	12	7	6213-743-002-10	19	13	6215-542-005-20	10	24
6212-600-019-00	12	8		28	20	6215-542-006-00	22	20
6212-611-014-00	12	9	6214-110-003-00	4	1	6215-543-002-10	22	19
6212-620-017-00	12	10	6214-115-003-10	4	2	6215-546-003-30	10	18
6212-626-003-00	12	11		28	6	6215-548-088-20	24	1
6212-628-022-00	12	12	6214-141-023-00	5	1	6215-549-013-00	6	29
6212-628-023-00	12	13	6214-145-004-20	5	2	6215-549-031-10	22	22
6212-629-006-00	12	14		28	7	6215-549-039-00	22	31
6212-629-007-00	12	15	6215-300-037-00	21	1	6215-549-076-10	22	27
6212-629-008-00	12	16	6215-311-005-00	29	16	6215-600-155-00	22	1
6212-629-009-00	12	17	6215-315-002-00	21	2	6215-619-023-00	30	49
6212-629-010-00	12	18	6215-315-005-00	21	4	6215-619-024-00	30	51
6213-100-004-30	18	1	6215-315-006-00	21	3	6215-621-045-00	22	8
6213-111-002-20	18	2	6215-315-007-00	21	5	6215-622-003-00	30	10
6213-119-001-00	18	6	6215-330-022-00	29	1	6215-629-017-00	30	11
6213-120-002-30	18	3	6215-332-006-00	29	15	6215-629-035-00	30	12
6213-125-002-10	18	4	6215-339-004-00	29	14	6215-629-036-00	30	24
6213-129-003-00	18	5	6215-342-002-00	29	13	6215-629-037-00	30	25
6213-129-006-00	6	17	6215-343-002-00	29	12	6215-629-038-00	30	26
	9	3	6215-345-044-00	29	2	6215-629-039-00	30	27
	17	7	6215-345-045-00	29	3	6215-629-040-00	30	28
6213-140-012-10	18	8	6215-345-046-00	29	4	6215-629-041-00	30	29
6213-149-003-20	18	10	6215-345-047-00	29	5	6215-629-042-00	30	30
6213-160-005-00	10	29	6215-345-048-00	29	6	6215-629-043-00	30	31
6213-161-003-10	10	30	6215-345-049-00	29	7	6215-629-044-00	30	32
6213-164-001-00	10	31	6215-345-050-00	29	8	6215-629-045-00	30	33
6213-240-002-20	18	12	6215-345-051-00	29	9	6215-629-046-00	30	34
6213-319-001-00	6	25	6215-345-052-00	29	10	6215-629-047-00	30	35
6213-610-011-20	19	1	6215-345-053-00	29	11	6215-629-048-00	30	36
6213-614-013-00	19	2	6215-359-003-00	29	17	6215-629-049-00	30	37
	28	18	6215-359-004-00	29	18	6215-629-050-00	30	38
6213-614-014-00	19	5	6215-359-006-00	30	52	6215-629-051-00	30	39
	28	19	6215-411-133-00	21	6	6215-629-052-00	30	40
6213-619-006-00	19	4	6215-411-134-00	21	7	6215-629-053-00	30	41
6213-641-022-20	20	2	6215-411-135-00	21	8	6215-629-054-00	30	42
6213-660-016-00	20	1	6215-411-136-00	23	2	6215-629-055-00	30	43
6213-669-008-00	20	3	6215-412-004-00	23	1	6215-629-056-00	30	44
6213-671-055-00	20	5	6215-520-007-10	22	15	6215-629-058-00	30	45
6213-674-006-20	25	2	6215-526-004-00	22	17	6215-629-059-00	30	46

Part Code	Fig.	Key	Part Code	Fig.	Key	Part Code	Fig.	Key
6215-629-060-00	30	16	6281-129-062-00	31	14	6904-110-840-00	6	20
6215-629-061-00	30	17	6281-151-025-10	31	13		19	6
6215-629-062-00	30	18	6281-200-021-00	25	1	6904-110-850-00	10	6
6215-629-063-00	30	19	6281-213-018-00	32	7	6904-110-855-00	10	5
6215-629-064-00	30	20	6281-214-003-00	32	12	6909-111-508-00	31	21
6215-629-065-00	30	21	6281-214-004-00	32	13	6909-950-115-00	14	4
6215-629-066-00	30	22	6281-215-001-00	32	17	J061-210-015-00	19	11
6215-629-067-00	30	23	6281-216-001-00	32	18	J061-220-024-00	19	21
6215-631-033-00	30	1	6281-217-002-00	32	16	J062-076-082-00	23	5
6215-634-003-00	30	13	6281-221-007-00	32	4	P117-303-003-00	10	23
6215-635-004-00	30	7	6281-222-012-00	32	1	V195-164-008-30	3	4
6215-635-005-00	30	48	6281-229-002-00	32	2	V201-361-204-50	25	8
6215-637-004-00	30	47	6281-229-003-00	32	3	V210-560-601-20	13	5
6215-639-008-00	30	14	6281-229-004-00	32	5		22	14
6215-639-009-00	30	15	6281-229-006-00	32	8	V211-560-802-50	5	3
6215-641-002-00	30	2	6281-229-007-00	32	9	V220-540-602-00	18	7
6215-643-005-00	30	3	6281-229-008-00	32	10	V230-360-601-00	8	4
6215-644-009-00	30	5	6281-229-011-00	32	15	V230-360-601-20	6	28
6215-649-008-00	30	4	6281-229-012-00	32	19	V230-360-601-60	10	39
6215-649-011-00	30	9	6281-229-013-00	32	20		26	8
6215-649-013-00	30	8	6281-229-014-00	32	21	V231-360-801-60	10	12
6215-649-014-00	30	6	6281-229-015-00	32	22		18	11
6219-310-003-20	10	37	6281-229-016-00	32	23	V231-360-802-00	19	8
6219-732-017-00	26	5	6281-229-017-00	32	24		19	14
6219-752-044-00	22	3	6281-229-018-00	32	25		22	6
6219-752-045-00	22	2	6281-229-029-00	32	14		25	3
6219-752-046-00	22	4	6281-229-032-00	32	6	V231-360-802-50	4	3
6219-752-047-00	22	5	6281-229-033-00	32	11		19	19
6281-100-002-50	25	7	6281-229-041-00	31	22	V231-360-803-00	10	16
6281-111-005-00	31	1	6281-271-003-00	27	1	V231-360-804-50	19	7
6281-115-008-00	31	10	6281-271-008-00	32	26	V231-360-805-00	10	13
6281-115-010-00	31	23	6281-410-023-10	26	3	V231-360-805-50	12	19
6281-115-016-00	31	20	6281-910-013-00	26	6	V231-360-806-00	10	14
6281-116-004-00	31	11	6281-971-003-00	26	1	V231-360-807-00	10	10
6281-121-006-00	31	2	6282-450-006-00	26	2	V231-360-807-50	10	9
6281-123-005-00	31	8	6287-810-040-00	28	1		19	15
6281-124-007-10	31	5	6294-453-002-00	6	23	V231-360-808-50	10	8
6281-129-003-00	31	19	6513-770-022-10	19	16	V233-361-002-00	11	2
6281-129-038-00	31	3	6581-117-007-00	31	12	V233-361-007-00	25	5
6281-129-039-00	31	4	6581-129-092-00	31	17	V251-340-806-00	6	22
6281-129-040-00	31	7	6581-129-099-00	31	6	V301-260-006-00	10	36
6281-129-041-10	31	9	6902-050-816-00	10	42		22	28
6281-129-042-00	31	15	6904-110-822-00	6	21	V304-260-008-00	10	49
6281-129-043-00	31	16		10	4		10	51
6281-129-044-00	31	18		10	46	V341-120-008-00	10	20

Numerical Index

6005-097-235-00

Part Code	Fig.	Key	Part Code	Fig.	Key	Part Code	Fig.	Key
V401-160-006-00	22	30						
V401-160-008-00	10	50						
	10	52						
V401-160-012-00	25	9						
V411-260-006-00	22	29						
V523-100-802-40	6	18						
V523-101-001-80	16	2						
	17	2						
V600-110-620-30	22	11						
V600-150-600-20	16	7						
	17	8						
V682-200-000-60	2	5						
V705-140-012-00	10	32						
V710-140-004-00	22	21						
V720-101-900-80	22	25						
V720-102-401-80	8	3						
	10	33						
V720-103-502-20	18	9						
	28	17						
V720-103-502-50	6	33						
V723-102-002-40	10	38						
V723-102-005-00	10	44						
	28	16						
V723-102-005-50	19	18						
	28	21						

Part Code	Fig.	Key
1118-901-002-00	154	5
	155	5
	156	5
	157	4
	158	4
1128-709-004-00	81	11
1302-225-003-00	52	12
	169	13
1305-241-001-00	116	21
1342-402-006-00	64	20
	65	21
	84	3
	85	5
	87	5
	101	24
	102	28
	103	32
	104	32
	105	33
	106	33
	145	16
	145	21
	146	16
	146	21
	147	16
	147	21
	148	16
	148	21
	178	25
1376-402-003-00	82	10
	83	10
	83	24
	85	6
	86	3
	87	6
	145	17
	145	22
	146	17
	146	22
	147	17
	147	22
	148	17
	148	22
1386-241-002-00	170	4
	170	9
1386-241-002-00	172	4
	174	4
	174	9
	177	4
1402-511-600-00	107	35
1404-117-008-00	16	4
1404-312-006-00	76	17
	77	11
1404-503-006-00	82	2
	83	2
	103	21
	104	21
	105	21
	106	21
1414-312-002-00	15	1
	17	33
	22	35
	98	13
	99	13
	109	51
	110	55
1416-501-011-00	97	3
1416-621-037-00	11	9
	12	9
1421-201-002-00	184	36
1421-201-003-00	92	2
	92	21
1421-507-002-10	97	1
1421-507-014-00	109	53
	110	57
	114	8
1421-602-005-10	11	18
	12	18
	17	25
	18	25
	19	25
	20	27
	21	27
	22	27
	63	9
	151	2
	152	2
1421-603-004-00	11	14
	12	14
	85	2
1421-603-004-00	87	2
	111	14
1423-616-004-00	109	5
	110	5
	151	14
	152	14
1424-101-203-00	1	15
	2	15
	3	13
	4	13
1424-101-204-00	1	16
	2	16
	3	14
	4	14
1425-621-004-00	1	8
	2	8
	64	4
	65	4
	83	13
	115	4
	145	19
	146	19
	147	19
	148	19
1427-111-229-00	7	14
	8	13
1427-120-002-00	91	20
	92	20
1427-201-007-00	70	13
1427-201-012-00	68	15
	69	13
1427-201-013-10	68	16
	69	14
1427-201-014-10	68	17
	69	15
1427-201-015-10	68	18
	69	16
1427-212-002-00	50	6
1427-212-003-20	50	2
	52	18
	169	19
1427-301-005-00	68	4
	69	4
1427-301-007-00	68	6
	69	6

Numerical Index

Part Code	Fig.	Key
1427-301-018-00	68	31
	69	29
1427-432-016-00	90	6
1427-501-003-00	95	3
1427-511-250-40	107	32
1427-611-001-00	95	38
1427-621-012-00	109	36
	109	46
	110	36
	110	47
1429-406-205-10	81	9
1432-242-001-00	23	15
	62	10
	76	38
	77	27
1434-501-003-10	100	1
1434-501-005-00	95	33
1434-501-006-00	97	10
1434-503-001-00	97	13
1434-503-002-00	97	16
1434-503-250-10	97	20
1434-503-260-20	97	23
1434-511-200-20	107	39
1434-511-210-00	107	36
1435-120-002-30	24	2
1442-313-202-00	78	2
1444-101-016-10	78	18
1444-122-002-00	23	11
1444-314-009-10	48	9
	52	26
	169	27
1444-328-272-00	78	4
1444-328-273-00	78	3
1444-411-006-00	69	2
1444-601-015-00	109	48
	110	52
	111	10
1480-441-210-10	175	1
1480-441-221-10	175	3
	175	8
1480-441-230-10	175	6
1480-501-003-00	95	2
1488-611-003-10	116	20
1491-120-001-00	17	35
	22	37

Part Code	Fig.	Key
1491-307-201-00	71	4
1491-434-017-00	92	30
1509-441-300-10	176	1
1509-441-310-10	176	6
1509-441-320-00	176	5
	176	10
1510-328-260-10	76	15
	77	9
1518-306-203-10	91	3
1518-432-250-10	91	2
1518-621-470-00	138	27
	140	28
	143	27
	144	28
1518-786-508-00	65	19
	105	32
	106	32
1518-924-001-00	108	7
1527-604-002-00	11	33
	12	33
1544-104-205-00	7	4
	8	5
1544-304-006-10	68	11
	69	9
1544-503-001-20	97	4
1544-503-200-20	97	5
1550-508-001-20	103	10
	104	10
	105	10
	106	10
1550-514-290-00	107	33
1560-104-010-40	1	14
	2	14
	3	12
	4	12
1560-116-008-30	61	22
1560-130-001-00	17	32
	22	34
1560-132-007-30	23	12
	61	7
	76	12
	76	37
	77	6
	77	26
1560-132-260-60	23	14

Part Code	Fig.	Key
1560-206-003-00	26	12
1560-223-016-00	30	2
	30	13
	54	2
	55	2
	56	2
	58	2
	59	2
1560-314-001-10	9	22
	10	22
1560-401-004-40	112	5
	113	5
1560-507-007-00	95	29
1560-509-211-00	101	12
	102	12
	102	14
	178	13
	179	6
1560-525-001-40	107	2
1560-630-029-00	1	42
	3	37
1560-666-004-00	13	7
	14	7
	133	12
	134	13
1560-695-021-00	61	5
1560-695-022-00	61	6
1564-621-030-00	11	28
	12	28
1568-507-001-10	95	28
1568-525-300-40	107	34
1575-105-001-00	9	9
	10	9
1575-261-016-00	187	6
1575-261-018-00	28	6
1575-261-203-00	89	6
1575-511-001-30	96	9
1579-502-001-00	96	3
1588-117-001-00	109	18
	110	18
1593-102-003-20	3	10
	4	10
1593-303-051-20	90	3
1593-406-008-00	1	31
	2	31

Part Code	Fig.	Key	Part Code	Fig.	Key	Part Code	Fig.	Key
1593-406-008-00	3	25	1614-203-005-00	46	5	1614-670-001-10	136	16
	4	25	1614-203-015-00	68	24	1614-670-281-00	136	13
1594-105-001-00	5	2		69	22	1614-702-550-10	151	9
	6	2	1614-205-004-00	49	2		152	9
1594-218-001-00	50	3	1614-261-006-00	54	9	1614-702-551-20	150	7
1594-221-001-00	28	10		55	9		151	12
	38	4		56	9		152	12
	90	2		62	18	1614-702-552-00	150	8
1595-243-002-00	26	14	1614-262-006-00	101	20		151	13
1600-117-002-10	16	3		102	24		152	13
1600-317-281-10	172	2		178	21	1614-702-560-00	151	10
1600-441-270-01	174	3		179	14		152	10
	174	8	1614-432-006-00	90	11	1617-301-002-00	26	20
	177	2	1614-433-002-00	91	10	1617-625-001-10	120	1
1600-502-003-00	96	7	1614-433-202-00	91	9		122	12
1600-515-001-00	107	29	1614-433-212-00	91	15	1620-255-208-00	42	6
1600-515-210-30	107	26	1614-441-200-01	175	2		43	7
1600-515-240-10	107	25		175	7		44	7
1600-624-004-10	145	10	1614-501-003-10	101	2		47	5
	146	10		102	2		51	7
	147	10		178	3		52	23
	148	10	1614-501-015-10	95	37		169	24
1602-321-004-00	27	6	1614-505-002-00	98	8	1620-271-560-00	76	33
1602-441-200-10	177	1		99	8		77	22
1602-441-201-10	177	3	1614-505-003-00	98	9	1620-433-200-10	91	8
1603-322-003-00	52	7		99	9	1620-508-230-00	103	1
	169	8	1614-505-004-00	98	10		105	1
1603-441-201-10	176	2		99	10	1627-205-223-00	26	17
	176	7	1614-505-007-00	98	18	1636-630-008-00	110	37
1612-505-220-00	98	14		99	17	1636-631-008-00	109	37
	99	14	1614-601-008-00	128	7	1636-701-251-00	150	5
1614-102-003-00	1	11		129	7	1636-901-022-00	163	2
	2	11	1614-603-012-00	112	18		164	2
1614-105-004-10	9	15		113	18		165	2
	10	15	1614-603-013-00	112	19		166	2
1614-127-024-00	27	2		113	19		167	2
1614-129-003-00	137	38	1614-608-220-10	114	7	1637-690-260-00	133	20
	138	41	1614-626-400-00	120	5		134	21
	139	39		122	16	1640-520-004-00	108	11
	140	42	1614-630-002-00	111	7	1640-520-005-00	108	9
	141	38		115	3	1640-530-003-00	101	22
	142	39		124	5		102	26
	143	41		125	5		178	23
	144	42		126	5		179	16
1614-203-005-00	36	16		127	5	1640-530-008-00	101	31

Numerical Index

Part Code	Fig.	Key
1640-530-008-00	102	37
	178	32
1640-530-270-20	101	23
	102	27
	178	24
	179	17
1640-530-610-10	185	1
	185	1
1640-530-613-00	185	2
	185	2
1640-530-614-00	185	3
	185	3
1640-530-615-00	185	4
	185	4
1640-530-622-00	185	8
	185	8
1640-530-623-00	185	9
	185	9
1640-530-624-00	185	10
	185	10
1640-530-625-00	185	12
	185	12
1640-530-626-00	185	13
	185	13
1640-530-628-00	185	18
	185	18
1640-530-629-00	185	19
	185	19
1640-530-631-00	185	22
	185	22
1640-530-632-00	185	23
	185	23
1641-217-032-00	26	29
	68	23
	69	21
	71	8
1646-116-051-10	16	2
	30	14
1646-437-211-10	173	2
	173	7
1646-437-212-00	173	4
	173	9
1646-640-580-00	63	13
1646-901-061-00	153	1
1647-437-211-10	171	2

Part Code	Fig.	Key
1647-437-211-10	171	7
1647-437-212-00	171	4
	171	9
1650-102-006-10	1	20
	2	20
1650-104-200-10	8	1
1650-104-201-00	7	5
	8	3
1650-104-203-10	8	4
1650-104-210-00	8	2
1650-111-034-00	9	8
	9	14
	10	8
	10	14
1650-135-002-00	62	5
	72	8
	73	8
	74	8
1650-201-202-10	17	2
	22	2
1650-203-011-20	28	21
	41	8
	49	4
	66	4
	67	4
1650-214-203-00	26	18
1650-218-014-00	49	9
1650-253-003-00	29	2
	44	2
	51	2
1650-259-010-00	42	2
	43	2
	47	2
1650-432-001-00	90	4
1650-508-002-00	182	10
1650-508-320-00	64	17
	65	17
1650-601-007-00	109	13
	110	13
1650-601-009-00	3	26
	4	26
1650-650-222-00	145	3
	146	3
	147	3
	148	3

Part Code	Fig.	Key
1650-654-036-00	133	24
	134	25
	135	9
1659-650-200-20	14	1
1672-102-004-00	110	9
1672-103-001-00	5	5
	6	5
1672-120-007-00	17	34
	22	36
1672-122-003-00	17	27
	18	27
	19	27
	20	29
	21	29
	22	29
	151	3
	152	3
1672-301-002-00	68	10
	69	7
1672-301-003-00	69	3
1672-301-004-00	69	5
1672-432-001-00	90	9
1672-432-002-10	90	10
1672-502-004-10	96	4
1672-503-210-00	97	19
1672-601-002-00	17	29
	18	31
	19	29
	20	33
	21	31
	22	31
	109	25
	110	25
1672-616-002-00	11	29
	12	29
1673-314-001-00	23	3
1673-525-002-30	88	6
	107	3
	107	37
	108	10
	150	6
	151	11
	152	11
1674-410-301-00	88	8
1674-410-320-10	88	5

Part Code	Fig.	Key	Part Code	Fig.	Key	Part Code	Fig.	Key
1674-520-004-00	88	7	1675-116-001-00	16	11	1688-120-052-00	19	3
	108	13	1675-116-210-10	15	2		20	3
1674-619-300-10	118	4	1675-117-210-40	16	8		21	3
	119	1	1675-135-001-00	23	6	1688-201-056-00	50	9
1674-619-310-00	118	5	1675-262-002-00	58	9	1688-211-057-00	28	5
	119	2		59	9	1688-211-505-00	187	4
1674-654-211-00	133	2		60	10	1688-211-506-00	187	8
	134	2		169	38	1688-211-507-00	187	9
	135	2	1675-508-003-00	105	29	1688-211-508-00	187	10
1674-654-212-00	133	3		106	29	1688-211-509-00	187	11
	134	3	1675-601-003-00	111	4	1688-211-522-00	187	13
	135	3	1677-104-001-00	8	7	1688-212-001-20	50	4
1674-654-270-00	133	15	1678-102-002-00	3	4	1688-265-001-00	58	8
	134	16		4	4		59	8
1674-654-271-00	133	16	1678-104-002-00	8	9		60	9
	134	17	1678-312-200-10	76	11		169	37
1674-654-272-00	133	17		77	5	1688-502-210-00	96	13
	134	18	1678-782-003-00	133	11	1689-272-201-00	54	7
1674-904-002-10	163	7		134	12		55	7
	164	8	1682-112-006-10	13	3		56	7
	165	8	1682-211-002-20	28	12		58	7
	166	8	1682-255-203-00	52	5		59	7
	167	8		169	6		60	8
1674-904-005-10	150	19	1682-255-210-40	52	20		169	36
1674-904-007-10	164	15		169	21	1689-603-012-00	3	24
	165	15	1682-408-230-10	82	13		4	24
	166	15	1682-503-001-00	97	11	1690-264-001-00	55	8
	167	15	1682-603-006-00	112	10		56	8
1674-904-008-00	163	5		113	10	1690-608-003-10	114	9
	164	6	1683-120-530-20	25	2	1696-901-006-00	154	6
	165	6	1683-271-560-00	61	3		155	6
	166	6	1683-272-054-10	63	12		156	6
	167	6	1683-273-570-20	83	23		157	5
1675-102-002-00	1	19	1684-112-230-00	13	1		158	5
	2	19	1685-120-220-00	17	37	1698-102-003-00	1	12
	3	17		22	39		2	12
	4	17	1685-120-310-10	18	33	1703-104-003-10	7	6
1675-102-004-00	1	4		19	31		8	6
	2	4		20	35	1703-105-210-10	9	11
1675-104-001-00	7	7		21	33		10	11
1675-104-210-10	7	1	1685-511-210-10	107	1	1703-205-016-00	35	5
1675-104-211-00	7	2	1685-511-220-10	107	27	1703-432-001-10	90	8
1675-104-213-00	7	3	1685-511-230-20	107	24	1705-102-014-00	1	23
1675-112-002-00	13	2	1687-112-001-00	14	3		2	23
	14	2	1688-120-052-00	18	3	1705-104-002-00	7	9

Numerical Index

Part Code	Fig.	Key
1705-313-006-00	78	7
1705-313-007-10	78	8
1705-313-012-00	78	16
1705-313-240-00	78	9
1705-408-230-00	82	7
	82	11
	83	7
	83	19
1705-601-013-00	110	11
1705-902-006-00	163	1
	164	1
	165	1
	166	1
	167	1
1705-902-007-00	163	9
	164	12
	165	12
	166	12
	167	12
1705-902-008-00	163	8
	164	9
	165	9
	166	9
	167	9
1705-904-001-00	163	10
	164	13
	165	13
	166	13
	167	13
1705-904-002-10	163	3
	164	3
	165	3
	166	3
	167	3
1709-301-001-00	41	7
1709-434-001-00	92	13
1709-603-001-00	112	15
	113	15
1710-312-051-00	76	21
	77	15
1710-410-001-00	88	15
1716-102-003-00	11	22
	12	22
1716-102-081-00	3	7
	4	7
1716-102-270-00	1	32
	2	32
	3	27
	4	27
1716-102-281-00	1	36
	2	36
	3	31
	4	31
1716-102-282-00	1	37
	2	37
	3	32
	4	32
1716-102-810-00	3	16
	4	16
1716-103-200-30	5	1
1716-103-210-30	6	1
1716-104-210-40	8	12
1716-105-001-00	9	7
	9	13
	10	7
	10	13
1716-105-210-10	9	21
	10	21
1716-111-005-00	11	11
	12	11
1716-126-211-10	26	16
1716-127-011-00	36	3
	36	15
	41	3
	46	4
1716-221-011-00	36	7
1716-261-001-00	54	8
	62	19
1716-410-003-00	111	13
1716-410-004-10	1	29
	2	29
1716-601-001-00	109	2
	110	2
1716-601-009-00	1	27
	1	47
	2	27
	2	46
	3	22
	3	42
	4	22
1716-601-009-00	4	41
1716-601-017-00	109	34
	109	45
	110	35
	110	45
1716-601-018-00	109	23
	110	23
1716-601-019-00	109	24
	110	24
1716-601-021-00	109	20
	110	20
1716-601-260-10	109	19
	110	19
1716-603-005-00	112	4
	113	4
1716-603-075-00	112	20
	113	20
1716-680-006-00	137	4
	138	4
	139	4
	140	4
	141	4
	142	4
	143	4
	144	4
1716-680-200-20	137	1
	138	1
	139	1
	140	1
	141	1
	142	1
	143	1
	144	1
1716-680-222-00	137	44
	139	45
	141	44
	142	45
1716-680-330-10	137	43
	139	44
	141	43
	142	44
1717-103-001-10	5	7
1717-304-071-10	68	3
1717-304-073-00	68	7
1717-304-074-00	68	8

Part Code	Fig.	Key	Part Code	Fig.	Key	Part Code	Fig.	Key
1717-310-001-00	75	11	1728-408-210-00	82	20	1738-508-001-00	104	30
1717-501-200-00	95	35		83	30		105	34
1717-503-200-10	97	12	1728-508-310-00	82	19		106	34
1719-224-014-00	28	20		83	29	1738-514-001-00	107	4
	49	3	1728-903-002-00	163	11	1738-514-210-00	107	5
1719-312-001-00	45	4		164	16	1739-530-290-00	82	17
	76	10		165	16		83	27
1719-511-350-00	101	1		166	16	1739-681-220-20	137	11
	102	1		167	16		138	11
	178	2	1728-903-003-00	163	4		139	11
	179	2	1729-111-005-00	11	6		140	11
1719-611-623-00	116	13		12	6		141	11
1719-611-624-00	116	15	1729-111-283-00	11	3		142	11
1724-304-005-00	66	12		12	3		143	11
	67	13	1729-111-284-00	11	4		144	11
1725-201-002-00	85	7		12	4	1739-690-720-00	147	23
	87	7	1729-135-220-10	23	10	1739-690-730-00	180	1
1725-203-210-00	31	9	1729-202-001-00	27	5	1740-313-300-10	78	1
	32	9	1729-202-002-00	28	9	1740-313-301-00	78	5
1725-218-006-00	66	5		34	11	1740-602-052-10	111	6
	67	5	1729-202-003-00	34	10	1740-602-053-00	111	8
1725-219-214-00	187	5	1729-202-004-00	92	15	1740-602-054-00	111	9
1725-219-216-00	187	7	1729-202-008-00	71	6	1740-602-057-00	111	3
1725-219-217-00	187	12	1729-202-011-00	49	7	1740-680-520-10	137	35
1725-219-218-00	187	1		52	15		138	38
1725-219-219-00	187	2	1729-203-004-00	26	28		139	36
1725-219-231-00	187	3	1729-216-006-00	26	13		140	39
1725-266-001-00	98	19	1729-604-003-00	1	45		141	35
1725-272-005-00	61	18		2	44		141	48
1725-403-003-00	80	15		3	40		142	36
1725-410-078-00	124	3		4	39		142	49
	125	3		109	30		143	38
	126	3		109	40		144	39
	127	3		110	30	1740-680-530-20	137	26
1725-436-001-00	94	4		110	41		138	25
1725-508-251-00	95	21	1729-604-053-10	109	10		139	26
1725-508-252-10	95	23	1729-705-009-00	128	5		140	25
1725-508-253-00	95	25		129	5		141	26
1725-508-254-00	95	26	1738-102-001-10	1	7		142	26
1725-509-220-00	64	21		2	7		143	25
	65	23	1738-212-002-00	50	1		144	25
1725-611-087-00	150	13	1738-410-001-00	85	3	1740-680-550-00	137	5
1726-601-007-00	109	9		87	3		138	5
1726-601-011-00	109	15	1738-411-210-00	88	2		139	5
	110	15	1738-508-001-00	103	30		140	5

Numerical Index

Part Code	Fig.	Key	Part Code	Fig.	Key	Part Code	Fig.	Key
1740-680-550-00	141	5	1761-604-740-01	110	28	1770-105-002-10	9	18
	142	5	1761-604-750-01	110	39		10	18
	143	5	1763-102-220-10	109	26	1770-274-001-10	62	13
	144	5		110	26	1770-402-003-10	81	10
1740-680-551-00	137	6	1763-117-200-30	16	1	1770-437-311-10	174	2
	138	6	1763-205-005-10	36	13		174	7
	139	6	1763-205-007-20	36	1	1772-521-220-10	108	12
	140	6	1763-205-011-10	36	12	1772-635-001-10	130	1
	141	6	1763-458-002-00	64	15	1772-652-001-00	137	10
	142	6		65	15		138	10
	143	6	1763-602-011-00	111	2		139	10
	144	6	1763-602-210-20	1	43		140	10
1741-112-053-10	1	41		2	42		141	10
	2	41	1764-601-001-20	109	47		142	10
	3	36		110	51		143	10
	4	36	1764-601-002-00	109	52		144	10
1741-411-210-00	88	11		110	56	1772-652-240-00	134	7
1742-514-001-10	107	38	1765-604-005-00	109	32	1772-654-001-00	133	8
1742-611-240-00	116	34		110	32		134	9
1742-652-260-00	149	5	1765-604-006-00	109	42	1772-654-210-00	133	7
1742-662-001-00	149	2		110	43		134	8
1746-904-051-00	159	1	1765-604-007-10	109	29	1772-654-212-00	186	1
1747-640-067-00	63	6		109	39	1772-654-213-00	186	2
1750-102-820-00	1	18		110	29	1772-654-214-00	186	3
	2	18		110	40	1772-654-215-00	186	4
1750-120-051-20	18	4	1766-103-001-10	6	7	1772-654-216-00	186	8
	19	4	1766-112-200-20	14	6	1772-654-217-00	186	9
	20	4	1766-112-210-00	14	8	1772-654-220-00	133	1
	21	4	1766-410-700-10	85	12		134	1
1750-271-220-20	61	4		87	12		135	1
1750-271-300-00	61	21	1766-514-001-00	107	20	1772-654-221-00	133	4
1750-514-001-20	107	8	1766-514-201-00	107	16		134	4
1750-514-002-20	107	12	1766-514-202-00	107	19		135	4
1750-605-001-10	110	10	1766-514-210-00	107	17	1772-654-222-00	133	5
1750-605-007-00	11	16	1766-601-300-10	110	48		134	5
	12	16	1766-601-700-10	110	1		135	5
1752-120-201-00	89	2	1766-602-200-20	3	38	1772-654-223-00	133	6
1752-120-204-00	89	5		4	37		134	6
1752-601-024-00	122	11	1768-312-500-00	76	14		135	6
1757-216-003-00	36	5		77	8	1772-654-250-10	137	28
1757-501-014-00	103	23	1770-102-005-00	1	3		139	29
	104	23		2	3		141	28
1757-625-005-00	150	2		3	3		142	29
1761-604-710-01	109	28		4	3	1772-654-251-00	137	29
1761-604-720-11	109	38		109	11		139	30

Part Code	Fig.	Key	Part Code	Fig.	Key	Part Code	Fig.	Key
1772-654-251-00	141	29	1773-611-270-10	116	7	1774-105-205-00	9	5
	142	30	1773-611-279-00	116	8		10	5
1772-654-280-10	137	30		116	10	1774-111-001-10	11	1
	138	33	1773-611-280-10	116	9		12	1
	139	31	1773-611-310-10	116	2	1774-111-002-00	11	26
	140	34	1773-611-331-00	116	3		12	26
	141	30	1773-611-332-00	116	4	1774-111-003-00	11	31
	142	31	1773-611-333-00	116	5		12	31
	143	33	1773-611-334-00	116	6	1774-111-004-00	11	32
	144	34	1773-631-035-00	114	3		12	32
1772-654-281-00	137	31	1773-652-212-00	145	2	1774-111-021-00	11	24
	138	34		146	2		12	24
	139	32		147	2	1774-111-022-00	11	25
	140	35		148	2		12	25
	141	31	1773-654-240-10	137	40	1774-111-220-20	11	20
	142	32		138	43	1774-111-230-10	12	20
	143	34		139	41	1774-111-270-10	11	15
	144	35		140	44		12	15
1772-654-282-00	137	32		141	40	1774-111-300-00	11	8
	138	35		142	41		12	8
	139	33		143	43	1774-111-310-10	11	2
	140	36		144	44		12	2
	141	32	1773-702-001-00	150	3	1774-111-311-00	11	5
	142	33	1773-702-002-00	150	10		12	5
	143	35	1773-702-011-00	150	12	1774-112-200-10	13	6
	144	36	1773-702-012-00	150	11	1774-112-210-10	13	8
1772-654-310-00	133	9	1773-702-260-10	150	4	1774-120-001-00	24	1
	134	10	1774-102-250-00	1	24	1774-120-002-00	18	28
1772-662-210-10	149	1		2	24		20	30
1773-214-005-00	36	8	1774-102-260-00	3	20	1774-120-051-00	25	1
1773-267-002-00	57	5		4	20	1774-120-200-00	17	36
1773-401-202-10	79	2	1774-102-270-00	1	1		22	38
1773-407-001-10	82	5		2	1	1774-120-220-00	17	31
	83	5	1774-103-220-00	5	8		22	33
1773-407-004-20	82	15	1774-103-230-00	5	10	1774-120-300-60	17	1
1773-407-200-00	82	1	1774-104-001-30	8	14	1774-120-350-00	17	20
	83	1	1774-104-210-00	7	11		18	20
1773-611-001-10	116	29	1774-105-200-00	9	1		19	20
1773-611-002-00	116	19		10	1		20	22
1773-611-003-10	116	31	1774-105-202-00	9	2		21	22
1773-611-005-00	116	32		10	2		22	22
1773-611-210-00	116	1	1774-105-203-00	9	3	1774-120-600-00	18	1
1773-611-250-10	116	24		10	3		19	1
1773-611-260-30	116	26	1774-105-204-00	9	4	1774-120-620-00	20	1
1773-611-262-00	116	27		10	4		21	1

Numerical Index

Part Code	Fig.	Key	Part Code	Fig.	Key	Part Code	Fig.	Key
1774-120-640-00	17	28	1774-203-052-00	34	12	1774-243-001-00	49	1
	18	30	1774-203-053-00	34	14	1774-243-003-00	49	6
	19	28	1774-203-054-10	34	1	1774-243-004-00	49	10
	20	32	1774-205-001-00	36	9	1774-245-001-00	51	1
	21	30	1774-205-002-00	36	6	1774-255-001-20	52	1
	22	30	1774-205-003-00	36	4		169	2
1774-120-700-60	22	1	1774-205-004-00	36	2	1774-255-002-00	52	6
1774-122-220-00	23	1	1774-205-005-00	36	11		169	7
1774-125-001-00	24	3	1774-205-006-00	36	14	1774-255-003-00	52	11
	25	3	1774-205-007-00	36	10		169	12
1774-126-001-10	26	1		41	1	1774-255-004-00	52	10
1774-126-002-00	26	21	1774-206-001-00	37	2		169	11
1774-126-003-00	26	23	1774-206-002-00	37	3	1774-255-005-00	53	1
1774-126-005-00	26	31	1774-206-003-00	37	6	1774-255-200-70	169	1
1774-126-220-00	26	34	1774-206-004-00	37	7	1774-261-001-10	54	3
1774-126-240-00	26	7	1774-206-005-00	37	8	1774-261-200-10	54	1
1774-126-250-00	26	27	1774-207-001-00	38	1	1774-261-211-00	53	3
1774-126-900-00	26	15	1774-207-005-00	38	5		73	7
1774-127-001-00	27	1	1774-207-051-00	39	1	1774-261-220-10	54	6
1774-127-002-00	27	3	1774-207-052-00	39	5	1774-262-210-10	56	1
1774-127-004-00	27	7	1774-207-053-00	39	3	1774-262-230-10	55	6
1774-127-051-00	28	1	1774-208-001-00	40	1	1774-262-260-00	56	6
1774-127-053-00	28	11	1774-208-051-00	41	2	1774-262-320-10	56	3
1774-127-055-00	28	19	1774-208-052-00	41	5	1774-262-501-10	55	3
1774-127-500-10	28	4	1774-208-053-00	41	4	1774-262-520-00	55	1
1774-127-510-10	28	3	1774-208-054-00	41	6	1774-263-001-20	57	4
1774-127-520-00	28	15	1774-215-001-00	51	4	1774-263-200-00	57	1
1774-128-001-00	29	4	1774-215-002-00	42	1	1774-264-001-00	58	3
1774-128-021-00	29	1	1774-215-200-10	42	4		59	3
1774-128-200-00	29	5		44	5	1774-264-200-00	58	1
1774-129-001-00	30	3	1774-216-001-00	43	4		59	1
1774-129-200-00	30	12	1774-216-002-00	43	1	1774-264-220-10	58	6
1774-129-210-00	30	11	1774-216-051-00	44	4	1774-264-300-00	59	6
1774-129-220-10	30	16	1774-216-052-10	44	1	1774-265-001-20	169	32
1774-129-230-00	30	1	1774-216-200-10	43	5	1774-265-210-20	60	7
1774-201-002-00	31	11		51	5		169	35
	32	11	1774-218-001-00	45	1	1774-265-220-00	60	1
1774-201-003-10	31	3	1774-218-210-00	45	2		169	29
	32	3	1774-221-001-00	46	1	1774-265-300-10	60	4
1774-201-200-50	31	1	1774-221-002-00	46	3	1774-271-001-00	61	11
1774-201-500-50	32	1	1774-221-003-00	46	7	1774-271-210-10	61	1
1774-203-004-00	35	7	1774-221-004-00	46	9	1774-271-220-00	61	10
1774-203-005-00	35	6	1774-225-200-00	47	1	1774-272-051-00	63	8
1774-203-021-00	35	1	1774-241-001-10	48	1	1774-272-071-00	63	7
1774-203-051-00	34	9	1774-241-002-20	48	4	1774-272-210-20	63	1

Part Code	Fig.	Key	Part Code	Fig.	Key	Part Code	Fig.	Key
1774-272-240-00	63	3	1774-309-004-00	74	9	1774-317-270-00	173	3
1774-272-300-10	63	11	1774-309-200-10	73	4		173	8
1774-272-500-30	62	1	1774-309-250-00	72	1	1774-317-280-10	173	6
1774-272-520-30	62	21		73	1	1774-317-310-10	171	1
1774-272-530-20	62	17		74	1	1774-317-320-00	171	3
1774-272-540-00	62	11	1774-309-500-10	72	4		171	8
1774-272-600-00	62	6		74	4	1774-317-330-10	171	6
1774-272-610-00	62	14	1774-310-001-00	75	1	1774-317-350-10	172	1
1774-273-210-00	64	8	1774-310-002-00	75	5	1774-317-360-00	172	3
	65	8	1774-310-003-00	75	2	1774-401-200-00	79	1
1774-273-220-00	64	10		75	6	1774-403-001-10	91	4
	65	10	1774-310-004-00	75	3	1774-403-002-10	91	5
1774-273-230-10	64	6		75	7	1774-403-003-00	80	12
	65	6	1774-310-200-00	75	9	1774-407-250-00	81	3
1774-301-001-00	66	8	1774-312-004-30	76	41	1774-407-270-20	81	8
	67	9		77	30	1774-407-300-10	81	5
1774-301-004-00	68	13	1774-312-005-00	23	5	1774-407-310-00	81	6
	69	11		76	5	1774-407-600-00	81	1
1774-301-006-00	66	3		77	4	1774-408-200-00	82	3
	67	3	1774-312-260-10	76	22		83	3
1774-301-200-00	66	1	1774-312-330-00	76	27	1774-410-001-00	84	7
1774-301-500-00	67	1	1774-312-350-00	76	29		86	7
1774-304-001-00	68	29	1774-312-360-00	76	1	1774-410-002-00	84	9
	69	27	1774-312-380-00	76	6		86	9
1774-304-002-00	68	20	1774-312-420-00	76	34	1774-410-011-00	85	10
	69	18		77	23		87	10
1774-304-003-00	68	21	1774-312-430-00	76	35	1774-410-200-50	84	1
	69	19		77	24		86	1
1774-304-004-00	68	28	1774-312-440-00	76	32	1774-410-210-20	85	1
	69	26		77	21		87	1
1774-304-009-00	68	2	1774-312-450-00	77	1	1774-410-250-10	84	5
1774-304-011-00	68	9	1774-312-540-10	77	16		85	8
1774-304-019-00	68	27	1774-312-630-00	76	25		86	5
	69	25	1774-312-660-00	77	19		87	8
1774-304-021-00	68	33	1774-313-001-10	78	6	1774-411-200-00	88	1
	69	31	1774-313-210-10	78	11	1774-431-200-00	89	1
1774-304-024-10	68	5	1774-313-250-00	78	13	1774-431-201-00	89	3
1774-304-051-00	69	1	1774-313-300-00	78	20	1774-431-202-00	89	4
1774-304-200-10	68	1	1774-317-210-10	170	1	1774-431-210-00	89	8
1774-306-001-30	70	1	1774-317-211-10	170	2	1774-431-240-10	89	9
1774-306-002-30	70	2		170	7	1774-432-200-30	90	1
1774-307-001-00	71	3	1774-317-220-10	170	6	1774-433-001-00	91	1
1774-307-003-10	71	2	1774-317-230-00	170	3	1774-433-210-00	91	14
1774-307-004-00	71	1		170	8	1774-434-001-20	92	18
1774-309-004-00	73	9	1774-317-260-10	173	1	1774-434-002-20	92	19

Numerical Index

Part Code	Fig.	Key	Part Code	Fig.	Key	Part Code	Fig.	Key
1774-434-003-10	92	1	1774-507-940-00	179	1	1774-619-210-10	118	1
1774-434-004-00	92	26	1774-508-001-00	105	28	1774-619-220-10	118	7
1774-434-005-00	92	29		106	28	1774-619-300-00	119	4
1774-434-006-00	92	28	1774-508-210-10	103	4	1774-625-210-00	121	1
1774-434-007-00	92	34	1774-508-220-10	105	4		123	10
1774-434-008-10	92	8	1774-508-340-00	105	22	1774-626-001-00	122	10
1774-434-009-10	92	11		106	22	1774-626-300-10	122	18
1774-435-001-10	93	1	1774-508-401-00	95	27		123	15
1774-435-002-10	93	2	1774-508-510-10	104	4	1774-626-310-00	122	1
1774-436-300-10	94	1	1774-508-520-10	106	4		123	1
1774-436-310-10	94	3	1774-508-530-00	103	7	1774-630-005-10	128	8
1774-436-320-00	94	2		104	7		129	8
1774-437-210-10	174	1		105	7	1774-630-006-00	129	4
1774-437-220-10	174	6		106	7	1774-630-007-00	128	4
1774-501-001-00	95	11	1774-514-230-00	107	18	1774-630-300-10	129	1
1774-501-300-00	95	1	1774-515-001-00	107	28	1774-630-310-10	128	2
1774-505-001-00	98	16	1774-520-001-00	108	4		129	2
1774-505-210-10	98	1	1774-520-002-10	108	14	1774-630-320-10	128	1
	99	1	1774-520-210-10	108	1	1774-630-340-10	124	4
1774-505-300-10	98	7	1774-601-003-00	109	12		126	4
	99	7		110	12	1774-630-350-00	125	4
1774-507-001-00	101	6	1774-601-004-00	168	2		127	4
	102	6	1774-601-210-00	109	1	1774-630-600-00	124	1
	178	7	1774-602-002-00	111	5		125	1
1774-507-230-10	101	14	1774-602-210-00	111	1	1774-630-610-00	126	1
	102	16	1774-603-001-00	112	12		127	1
	178	15		113	12	1774-650-210-00	131	1
1774-507-240-10	102	17	1774-603-002-00	112	13	1774-650-212-00	131	2
	179	8	1774-603-005-00	112	21	1774-650-220-00	132	1
1774-507-250-10	101	18		113	21	1774-650-222-00	132	2
	102	21	1774-603-007-00	112	22	1774-660-003-10	133	18
	178	19		113	22		134	19
1774-507-260-20	102	22	1774-603-008-00	113	13	1774-660-210-10	133	13
	179	12	1774-603-200-00	112	9		134	14
1774-507-270-00	101	26		113	9	1774-670-211-00	136	2
	102	30	1774-603-210-10	112	2	1774-670-212-00	136	7
	178	27		113	2	1774-670-400-00	136	1
1774-507-280-10	102	31	1774-603-212-00	112	3	1774-680-031-00	141	49
	179	19		113	3		142	50
1774-507-320-00	101	11	1774-606-001-30	114	1	1774-680-032-00	137	45
	102	11	1774-606-010-00	114	4		139	46
	178	12	1774-611-001-10	115	1		141	45
1774-507-330-00	102	13	1774-611-210-10	116	22		142	46
	179	5	1774-612-300-00	117	16	1774-680-035-00	138	29
1774-507-930-00	178	1	1774-612-310-00	117	17		140	30

Part Code	Fig.	Key
1774-680-035-00	143	29
	144	30
1774-680-036-00	138	31
	140	32
	143	31
	144	32
1774-680-037-00	137	51
	138	47
	139	52
	140	48
	141	55
	142	56
1774-680-038-00	137	41
	139	42
	141	41
	142	42
1774-680-052-00	138	44
	140	45
	143	44
	144	45
1774-680-210-00	137	7
	138	7
	139	7
	140	7
	141	7
	142	7
	143	7
	144	7
1774-680-230-00	137	33
	138	36
	139	34
	140	37
	141	33
	142	34
	143	36
	144	37
1774-680-240-00	137	37
	138	40
	139	38
	140	41
	141	37
	142	38
	143	40
	144	41
1774-680-250-00	137	16

Part Code	Fig.	Key
1774-680-250-00	138	16
	139	16
	140	16
	141	16
	142	16
	143	16
	144	16
1774-680-260-00	137	9
	138	9
	139	9
	140	9
	141	9
	142	9
	143	9
	144	9
1774-680-310-00	137	48
	139	49
	141	52
	142	53
1774-690-003-00	145	11
	146	11
	147	11
	148	11
1774-690-400-20	145	1
	148	1
1774-690-410-20	146	1
	147	1
1774-690-420-00	145	23
1774-702-051-00	151	21
1774-702-270-10	150	1
1774-702-280-10	150	15
1774-702-290-10	150	16
1774-702-510-20	152	18
1774-702-520-10	152	19
1774-702-530-10	151	1
	152	1
1774-702-540-00	151	29
	152	25
1774-702-550-20	151	18
1774-702-560-10	151	19
1774-702-580-00	151	20
1774-901-031-00	154	1
	155	1
	156	1
	157	1

Part Code	Fig.	Key
1774-901-031-00	158	1
1774-901-032-00	154	2
1774-901-033-00	155	2
1774-901-034-00	156	2
1774-901-035-00	154	3
	157	2
1774-901-036-00	154	4
	157	3
1774-901-037-00	155	3
	156	3
	158	2
1774-901-038-00	155	4
	156	4
	158	3
1774-902-005-00	160	5
	161	5
1774-902-006-00	160	10
	161	10
	162	4
1774-902-007-00	160	9
1774-902-071-00	160	1
	161	1
1774-902-072-00	160	2
1774-902-073-00	161	2
1774-902-074-10	161	9
	162	3
1774-902-075-00	160	7
	161	7
	162	1
1774-902-076-00	160	11
1774-902-077-00	160	6
	161	6
1774-902-078-10	101	30
	102	35
	178	31
1774-902-079-10	102	36
	179	23
1774-902-081-10	160	12
1774-902-082-00	160	8
	161	8
	162	2
1774-902-084-10	161	11
1774-902-085-00	151	33
	152	29
1774-902-086-00	160	3

Numerical Index

Part Code	Fig.	Key
1774-902-086-00	161	3
1774-904-003-00	151	32
	152	28
1774-904-011-00	164	14
	166	14
1774-904-012-00	165	14
	167	14
1774-904-031-10	164	5
	165	5
1774-904-032-00	166	5
	167	5
1774-922-200-10	181	1
1775-508-001-00	103	22
	104	22
1775-508-550-10	64	16
	65	16
	103	31
	104	31
1775-508-720-10	103	28
	104	28
	105	23
	106	23
1775-603-001-00	112	1
	113	1
1775-631-210-00	124	7
	125	6
	126	7
	127	6
1776-304-005-00	68	26
	69	24
1776-312-013-10	76	9
1776-612-210-30	117	1
1776-612-211-10	117	2
1776-612-212-00	117	3
1776-612-213-00	117	4
1776-612-214-00	117	5
1776-612-215-00	117	6
1776-612-216-00	117	7
1776-612-217-00	117	8
1776-612-218-00	117	9
1776-612-219-00	117	10
1776-612-250-00	117	11
1776-612-252-00	117	12
1776-612-253-00	117	13
1776-612-254-00	117	14

Part Code	Fig.	Key
1776-612-255-00	117	15
1776-630-008-00	124	6
	126	6
1776-904-004-00	164	10
	165	10
	166	10
	167	10
1785-611-011-00	116	18
1785-611-012-00	116	16
1785-611-013-00	116	17
1785-611-220-30	116	11
1785-611-221-00	116	12
1785-656-303-00	136	8
1785-656-304-00	136	9
1785-656-305-00	136	11
1785-656-306-00	136	14
1785-656-310-00	136	3
1785-656-320-00	136	4
1785-656-330-00	136	5
1785-656-340-00	136	12
1785-702-005-00	150	9
	151	17
	152	17
1792-590-004-00	118	13
	119	5
1792-611-420-00	116	14
1800-214-202-20	26	19
1800-652-400-00	137	13
	137	18
	137	19
	137	20
	137	21
	137	22
	138	13
	138	18
	138	19
	138	20
	138	21
	139	13
	139	18
	139	19
	139	20
	139	21
	139	22
	140	13

Part Code	Fig.	Key
1800-652-400-00	140	18
	140	19
	140	20
	140	21
	141	13
	141	18
	141	19
	141	20
	141	21
	141	22
	142	13
	142	18
	142	19
	142	20
	142	21
	142	22
	143	13
	143	18
	143	19
	143	20
	143	21
	144	13
	144	18
	144	19
	144	20
	144	21
1801-511-220-10	105	31
	106	31
1805-508-260-00	104	1
	106	1
1807-652-500-00	133	22
	134	23
	135	7
1807-652-510-00	133	23
	134	24
	135	8
1809-670-290-00	137	50
	138	46
	139	51
	140	47
	141	54
	142	55
1817-902-008-00	160	13
	161	12
1817-902-026-00	160	4

Part Code	Fig.	Key	Part Code	Fig.	Key	Part Code	Fig.	Key
1817-902-026-00	161	4	2150-661-002-00	144	26	3610-440-018-00	110	14
1817-904-001-00	164	11	2152-442-013-00	23	9	3625-212-007-00	30	10
	165	11		76	3	3642-496-007-10	137	39
	166	11	2157-201-201-00	17	3		138	42
	167	11		18	2		139	40
1817-904-004-00	164	4		19	2		140	43
	165	4		20	2		141	39
	166	4		21	2		142	40
	167	4		22	3		143	42
1825-502-001-00	96	1		76	23		144	43
1827-102-230-00	3	1		77	17	3650-261-001-00	64	19
	4	1	2163-775-009-00	30	4		65	20
1837-521-061-00	108	5	2183-607-013-00	61	12		86	2
1837-652-600-00	149	4	2186-536-211-00	137	2		87	4
1837-652-610-00	137	25		138	2	3650-270-214-00	136	6
	138	24		139	2	3650-380-220-20	82	9
	139	25		140	2	3650-440-014-00	62	2
	140	24		141	2	3650-580-002-00	57	9
	141	25		142	2	3651-832-009-00	66	6
	142	25		143	2	3659-203-005-00	101	21
	143	24		144	2		102	25
	144	24	2186-536-212-00	137	3		178	22
2130-713-002-10	16	5		138	3		179	15
2139-505-002-00	1	30		139	3	3659-480-003-00	77	33
	2	30		140	3	3668-612-001-00	31	2
2142-581-002-00	1	22		141	3		32	2
	2	22		142	3	3670-472-003-00	76	16
2144-307-003-00	35	2		143	3		77	10
2144-415-003-00	5	6		144	3	3673-701-005-00	49	11
	6	6	2188-973-200-00	168	1	3676-374-320-00	64	3
	11	13	2500-210-016-00	61	17		65	3
	12	13	2502-616-004-00	118	2		83	9
	112	7		118	8	3680-155-005-00	3	19
	113	7		118	11		4	19
2144-501-012-00	111	12	2515-665-210-00	137	23	3689-212-002-00	30	5
2144-519-007-00	101	15		138	22	3689-582-001-00	110	38
	102	18		139	23	3737-172-009-00	103	27
	178	16		140	22		104	27
	179	9		141	23		105	27
2149-312-015-60	61	20		142	23		106	27
2150-420-008-00	109	6		143	22		137	14
	110	6		144	22		138	14
2150-661-002-00	139	27	2703-101-020-00	52	21		139	14
	140	26		169	22		140	14
	142	27	3610-440-018-00	109	14		141	14

Numerical Index

Part Code	Fig.	Key
3737-172-009-00	142	14
	143	14
	144	14
3737-172-011-00	84	2
	85	4
3768-185-015-20	101	25
	102	29
	178	26
	179	18
3801-272-302-00	149	6
3805-208-016-00	5	9
	6	8
	84	8
	84	10
	86	8
	86	10
	128	9
	129	9
3817-330-202-00	1	28
	2	28
	3	23
	4	23
3817-335-021-00	11	23
	12	23
3819-261-005-00	128	6
	129	6
3821-262-202-00	145	5
	146	5
	147	5
	148	5
3821-262-203-00	145	6
	146	6
	147	6
	148	6
3821-262-204-00	145	7
	146	7
	147	7
	148	7
3824-232-021-00	114	2
	118	12
3824-247-202-00	145	4
	146	4
	147	4
	148	4
3824-701-011-00	66	2

Part Code	Fig.	Key
3824-701-011-00	66	9
	67	2
	67	10
3827-270-001-00	145	9
	146	9
	147	9
	148	9
3827-270-002-00	145	8
	146	8
	147	8
	148	8
3829-387-410-00	83	11
3834-336-051-00	1	2
	2	2
	3	2
	4	2
4335-145-221-00	30	15
4335-512-004-00	109	35
	109	44
	110	34
	110	46
6221-408-003-00	1	39
	2	39
	3	34
	4	34
6221-408-008-00	1	35
	2	35
	3	30
	4	30
6221-408-009-00	1	34
	2	34
	3	29
	4	29
6221-408-011-00	1	38
	2	38
	3	33
	4	33
6221-408-013-00	1	33
	2	33
	3	28
	4	28
6901-911-025-00	84	4
	86	4
6901-931-240-00	95	18
7821-501-005-00	109	3

Part Code	Fig.	Key
7821-501-005-00	110	3
8595-901-007-00	163	6
	164	7
	165	7
	166	7
	167	7
8654-203-201-00	23	2
	63	4
	76	7
	76	28
	76	30
	77	2
8663-201-004-00	66	10
	67	11
8663-201-005-00	66	11
	67	12
J061-116-025-00	82	6
	82	16
	83	6
J061-228-036-00	103	11
	104	11
	105	11
	106	11
J061-230-038-00	1	6
	1	9
	2	6
	2	9
	3	6
	3	8
	4	6
	4	8
J061-236-044-00	1	5
	1	10
	2	5
	2	10
	3	5
	3	9
	4	5
	4	9
J061-242-050-00	7	8
J061-247-055-00	7	10
	8	8
J061-249-060-00	8	11
J061-252-063-00	8	10
J062-087-093-00	9	17

Part Code	Fig.	Key	Part Code	Fig.	Key	Part Code	Fig.	Key
J062-087-093-00	9	20	K200-124-106-00	83	18	K510-003-022-00	184	21
	10	17	K200-208-000-10	83	15	K510-003-037-00	184	22
	10	20	K211-001-006-20	183	2	K510-003-100-00	184	44
J062-104-111-00	9	16	K211-001-007-00	183	3	K510-003-500-00	184	46
	9	19	K211-001-008-00	183	4	K510-005-013-00	184	11
	10	16	K211-001-100-10	183	1	K510-005-024-00	184	23
	10	19	K211-004-006-00	185	7	K510-006-008-00	184	6
J062-111-120-00	9	10		185	7	K510-006-014-00	184	12
	10	10	K211-004-007-00	185	6	K510-006-023-00	184	24
J062-147-159-00	1	13		185	6	K510-008-010-00	184	8
	2	13		185	16	K510-010-009-00	184	7
	3	11		185	16	K510-014-004-00	184	2
	4	11	K211-011-001-10	183	5	K510-014-012-10	184	10
K110-001-106-00	185	20	K211-012-006-00	185	5	K510-017-047-00	184	38
	185	20		185	5	K510-017-048-00	184	39
K135-002-009-00	103	19	K211-066-103-00	182	9	K510-019-005-10	184	3
	104	19	K211-092-000-10	97	8	K510-027-000-00	33	1
	105	19	K250-001-000-00	95	13	K510-027-001-00	184	1
	106	19	K250-001-007-00	182	13	K510-027-006-00	184	4
K135-012-000-00	103	12	K250-001-009-00	95	15	P103-112-003-20	11	7
	104	12	K250-060-000-00	64	12		12	7
	105	12		65	12	P113-201-007-00	133	10
	106	12	K250-064-003-00	182	11		134	11
K135-012-100-00	103	13	K250-067-000-00	183	9	P113-211-300-00	83	25
	104	13	K275-001-003-00	184	27	P113-211-330-00	64	1
	105	13	K290-001-001-00	182	3		65	1
	106	13	K290-001-002-00	182	4	V111-166-004-00	95	30
K135-017-006-00	103	14	K290-001-003-00	182	5	V111-168-002-00	101	27
	104	14	K290-004-000-00	182	1		178	28
	105	14	K510-001-007-00	184	5	V111-178-006-00	102	32
	106	14	K510-001-011-00	184	9		179	20
K167-005-000-20	80	1	K510-001-015-00	184	13	V120-265-003-00	133	25
K167-005-001-10	80	3	K510-001-016-00	184	15		134	26
K167-005-200-10	80	2	K510-001-017-00	184	16	V120-364-002-50	138	28
K167-005-300-10	80	4	K510-001-018-00	184	17		140	29
K167-005-310-10	80	7	K510-001-019-00	184	18		143	28
K182-034-002-00	80	5	K510-001-020-00	184	19		144	29
	80	8	K510-001-026-00	184	25	V120-365-001-60	137	15
K182-034-003-00	80	6	K510-001-029-00	184	26		138	15
	80	9	K510-001-031-00	184	34		139	15
K190-001-202-10	182	15	K510-001-034-00	184	37		140	15
K200-014-007-00	185	27	K510-001-036-00	184	42		141	15
	185	27	K510-001-039-00	184	33		142	15
K200-094-100-10	182	6	K510-003-017-00	184	45		143	15
K200-114-002-00	182	14	K510-003-021-00	184	20		144	15

Numerical Index

Part Code	Fig.	Key
V120-366-001-20	1	46
	2	45
	3	41
	4	40
	109	31
	109	41
	110	31
	110	42
V120-366-001-60	116	30
	136	15
V120-376-001-20	112	16
	113	16
V120-376-001-60	112	14
	113	14
V120-376-002-00	112	8
	113	8
V195-164-016-40	136	10
V201-260-801-60	95	34
V201-260-805-50	83	21
V201-260-817-50	98	4
	99	4
V201-261-008-00	101	4
	178	5
V201-261-012-00	102	4
	179	3
V201-261-203-50	91	11
V201-360-802-50	107	6
V201-360-804-00	75	14
V201-361-007-50	31	6
	32	6
	70	8
V201-361-009-00	52	3
	169	4
V201-361-010-00	95	5
V201-361-014-00	33	4
V201-361-202-50	17	18
	18	18
	19	18
	20	20
	21	20
	22	20
	92	37
	151	25
	152	23
V201-361-203-00	107	40
V201-361-203-00	151	24
	152	22
V201-361-203-50	92	5
	107	9
	107	13
V201-361-204-00	92	24
	108	2
	151	26
V201-361-204-50	122	9
	123	9
	152	20
V201-361-205-00	152	21
V201-361-205-50	70	3
V201-361-206-00	95	19
V201-361-206-50	120	3
	121	3
	122	14
V201-361-207-00	70	4
	123	12
V201-361-208-00	122	2
	123	2
V201-361-213-00	122	3
	123	3
V201-361-216-00	122	5
	123	5
V201-361-603-00	71	10
V201-361-608-50	108	6
V201-361-610-00	151	5
	152	5
V201-461-002-00	116	35
V201-461-202-50	88	12
	88	16
V201-461-203-00	88	3
V203-361-002-00	17	11
	18	11
	19	11
	20	13
	21	13
	22	13
V203-361-003-00	5	3
	6	3
	17	12
	18	12
	19	12
	20	14
V203-361-003-00	21	14
	22	14
V203-361-004-00	151	23
V203-361-005-00	151	22
V210-360-601-20	137	12
	137	17
	137	24
	138	12
	138	17
	138	23
	138	32
	138	45
	139	12
	139	17
	139	24
	140	12
	140	17
	140	23
	140	33
	140	46
	141	12
	141	17
	141	24
	142	12
	142	17
	142	24
	143	12
	143	17
	143	23
	143	32
	143	45
	144	12
	144	17
	144	23
	144	33
	144	46
V210-360-601-60	48	10
	118	6
	119	3
	137	36
	137	42
	137	46
	138	30
	138	39
	139	37

Part Code	Fig.	Key
V210-360-601-60	139	43
	139	47
	140	31
	140	40
	141	36
	141	42
	141	46
	141	50
	142	37
	142	43
	142	47
	142	51
	143	30
	143	39
	144	31
	144	40
	145	13
	146	13
	147	13
	148	13
V210-560-603-00	105	26
	106	26
V210-560-605-00	103	9
	104	9
	105	9
	106	9
V211-260-801-60	97	22
	101	19
	102	23
	178	20
	179	13
V211-260-802-00	68	19
	69	17
	101	13
	102	15
	178	14
	179	7
V211-260-802-50	100	3
V211-260-805-00	97	9
V211-261-002-00	73	10
	74	10
	78	21
	120	2
	121	2
	122	13

Part Code	Fig.	Key
V211-261-002-00	123	11
V211-261-002-50	62	22
V211-360-801-60	1	44
	2	43
	3	39
	4	38
	64	5
	65	5
	78	19
	83	14
	89	12
	98	6
	98	17
	99	6
	99	16
	109	4
	110	4
	137	34
	137	47
	137	49
	138	37
	139	35
	139	48
	139	50
	140	38
	141	34
	141	47
	141	51
	141	53
	142	35
	142	48
	142	52
	142	54
	143	37
	144	38
	151	15
	152	15
V211-360-802-00	1	17
	2	17
	3	15
	4	15
	11	27
	12	27
	81	4
	89	10

Part Code	Fig.	Key
V211-360-802-00	95	36
	109	27
	110	27
	111	15
	130	2
V211-360-802-50	9	6
	10	6
	11	30
	12	30
V211-360-803-00	88	9
V211-361-002-50	118	10
	119	6
V211-370-803-00	118	3
	118	9
V211-560-803-50	61	16
V211-560-804-50	61	2
V211-561-001-60	97	6
V211-561-002-00	81	7
V211-561-002-50	26	2
	34	3
V211-561-003-00	80	13
V211-561-003-50	31	5
	32	5
V211-561-004-00	80	14
V211-561-005-00	34	4
V211-660-802-00	117	19
V211-661-002-00	30	17
	117	18
	124	2
	125	2
	126	2
	127	2
V211-661-002-50	122	19
	123	16
V211-661-004-00	95	4
V211-661-004-50	95	6
V220-540-601-00	185	26
	185	26
V220-540-802-00	185	15
	185	15
V220-541-003-50	184	43
V230-360-601-20	1	40
	2	40
	3	35
	4	35

Numerical Index

Part Code	Fig.	Key
V230-360-601-20	137	27
	138	26
	141	27
	143	26
	149	3
V230-360-601-60	9	12
	10	12
	145	15
	146	15
	147	15
	148	15
V230-360-602-00	1	21
	2	21
	3	18
	4	18
V230-360-602-50	139	28
	140	27
	142	28
	144	27
V230-360-604-00	103	26
	104	26
V231-360-801-20	1	26
	2	26
	42	7
	43	8
	44	8
	47	6
	51	8
	52	24
	52	27
	105	30
	106	30
	169	25
	169	28
V231-360-801-60	7	12
	9	23
	10	23
	11	21
	12	21
	17	30
	18	32
	19	30
	20	34
	21	32
	22	32
V231-360-801-60	45	3
	64	7
	65	7
	85	11
	87	11
	103	6
	104	6
	105	6
	106	6
	110	49
	124	8
	125	7
	126	8
	127	7
	128	3
	129	3
	133	14
	134	15
	137	52
	138	48
	139	53
	140	49
	141	56
	142	57
V231-360-802-00	11	12
	11	17
	12	12
	12	17
	17	38
	18	34
	19	32
	20	36
	21	34
	22	40
	115	2
	133	21
	134	22
V231-360-802-50	50	11
	63	15
	75	13
	84	6
	85	9
	86	6
	87	9
V231-360-803-00	78	10
V231-360-803-00	137	8
	138	8
	139	8
	140	8
	141	8
	142	8
	143	8
	144	8
V231-360-803-50	26	35
V231-360-808-00	7	13
V231-361-001-60	18	29
	20	31
	53	2
	91	6
V231-361-002-00	13	9
	65	22
	78	12
	103	3
	104	3
	105	3
	106	3
V231-361-002-50	26	32
	34	13
	38	2
	81	2
	92	36
V231-361-003-50	14	9
	145	14
	146	14
	147	14
	148	14
V231-361-004-00	28	16
	35	8
	39	7
V231-361-005-00	39	6
V231-361-007-00	33	3
V231-361-201-60	1	25
	2	25
V231-361-202-50	3	21
	4	21
	17	14
	18	14
	19	14
	20	16
	21	16

Part Code	Fig.	Key
V231-361-202-50	22	16
V231-361-203-50	17	15
	18	15
	19	15
	20	17
	21	17
	22	17
V251-260-802-0D	101	8
	102	8
	178	9
V251-340-802-50	17	7
	18	7
	18	35
	19	7
	19	33
	20	7
	20	37
	21	7
	21	35
	22	7
V251-341-002-00	17	24
	18	24
	19	24
	20	26
	21	26
	22	26
	26	6
	34	8
V251-341-002-50	48	3
V251-341-009-00	31	4
	32	4
V251-341-202-00	92	39
V251-361-002-5D	48	2
V251-441-403-50	91	18
V252-341-003-00	48	8
V252-341-007-00	48	6
V252-341-202-50	48	5
	107	43
V252-341-205-00	48	7
V301-260-006-00	13	5
	14	5
V304-260-008-00	11	19
	12	19
	17	26
	18	26
V304-260-008-00	19	26
	20	28
	21	28
	22	28
	23	13
	61	9
	61	19
	63	10
	76	13
	76	36
	77	7
	77	25
	98	3
	99	3
	109	17
	110	17
	151	4
	152	4
	186	7
V304-260-010-00	30	7
	68	34
	69	32
	95	32
	98	12
	99	12
	114	6
	150	14
V304-260-012-00	91	12
V304-260-016-00	96	12
V304-460-008-00	17	8
	18	8
	18	37
	19	8
	19	35
	20	8
	20	39
	21	8
	21	37
	22	8
	75	15
	101	9
	102	9
	178	10
V304-460-010-00	17	16
	17	21
V304-460-010-00	18	16
	18	21
	19	16
	19	21
	20	18
	20	23
	21	18
	21	23
	22	18
	22	23
	26	3
	31	7
	32	7
	34	5
	70	9
	95	9
V304-460-012-00	20	10
	21	10
	22	10
	70	5
	92	25
	92	40
	107	11
	107	15
	107	31
	107	44
	122	7
	122	17
	123	7
	123	14
V304-460-014-00	91	19
	150	18
	151	31
	152	27
V304-460-016-00	151	6
	152	6
V305-260-008-00	96	8
	107	7
V305-260-012-00	181	3
V327-262-110-00	94	5
V328-262-110-00	16	6
	79	3
V334-260-016-00	107	22
V334-460-010-00	17	10
	18	10

Numerical Index

Part Code	Fig.	Key
V334-460-010-00	19	10
	20	12
	21	12
	22	12
V350-160-006-00	111	11
	112	11
	113	11
V360-260-004-00	11	10
	12	10
V360-260-006-00	5	11
	13	4
	14	4
	85	13
	87	13
	112	17
	113	17
	116	25
	116	28
	145	18
	146	18
	147	18
	148	18
V362-260-008-00	7	15
	8	15
	30	18
	63	14
	78	17
	89	11
	101	28
	102	33
	110	50
	116	23
	116	33
	130	3
	145	12
	145	20
	146	12
	146	20
	147	12
	147	20
	148	12
	148	20
	178	29
	179	21
V363-260-008-00	88	10

Part Code	Fig.	Key
V401-160-006-00	95	31
V401-160-008-00	17	9
	18	9
	18	36
	19	9
	19	34
	20	9
	20	38
	21	9
	21	36
	22	9
	61	8
	68	12
	69	10
	75	16
	83	22
	89	7
	98	5
	99	5
	101	10
	102	10
	178	11
	185	14
	185	14
	186	6
V401-160-010-00	5	4
	6	4
	17	13
	17	17
	17	22
	18	13
	18	17
	18	22
	19	13
	19	17
	19	22
	20	15
	20	19
	20	24
	21	15
	21	19
	21	24
	22	15
	22	19
	22	24

Part Code	Fig.	Key
V401-160-010-00	26	4
	30	6
	31	8
	32	8
	33	5
	34	6
	52	4
	68	35
	69	33
	70	10
	94	6
	95	8
	101	5
	102	5
	116	36
	151	27
	169	5
	178	6
	179	4
V401-160-012-00	17	19
	18	19
	19	19
	20	11
	20	21
	21	11
	21	21
	22	11
	22	21
	70	6
	88	4
	88	13
	88	17
	92	6
	92	38
	95	20
	107	10
	107	14
	107	41
	108	3
	120	4
	121	4
	122	6
	122	15
	123	6
	123	13

Part Code	Fig.	Key
V401-160-012-00	151	28
	152	24
V401-160-014-00	91	17
	150	17
	151	30
	152	26
V401-160-016-00	71	11
	96	10
	107	23
	108	8
	151	7
	152	7
V401-170-008-00	103	20
	104	20
	105	20
	106	20
V411-260-005-00	97	18
	112	6
	113	6
	133	19
	134	20
V411-260-006-00	15	3
	16	9
	23	7
	24	4
	25	4
	61	23
	97	15
	101	17
	102	20
	109	21
	109	49
	110	21
	110	53
	178	18
	179	11
V411-260-008-00	23	16
	45	5
	54	4
	55	4
	56	4
	58	4
	59	4
	60	5
	62	7

Part Code	Fig.	Key
V411-260-008-00	62	15
	72	2
	73	2
	74	2
	75	17
	76	18
	76	39
	77	12
	77	28
	78	14
	109	16
	110	16
	169	33
	186	5
V411-260-010-00	17	23
	18	23
	19	23
	20	25
	21	25
	22	25
	30	8
	33	6
	57	7
	70	11
	79	5
	95	7
	97	7
	98	11
	99	11
	109	8
	110	8
	114	5
	116	37
V411-260-012-00	62	3
	70	7
	88	14
	88	18
	107	30
	107	42
	122	4
	122	8
	123	4
	123	8
V411-260-016-00	96	11
	151	8

Part Code	Fig.	Key
V411-260-016-00	152	8
V411-260-018-00	53	4
	60	11
	72	6
	73	5
	74	6
	169	39
V500-161-601-50	114	10
V500-162-001-50	24	5
	25	5
	97	14
	97	17
V500-162-002-00	15	4
	16	10
	23	8
	23	17
	61	24
	76	20
	77	14
	79	4
V500-162-501-50	16	7
V500-162-502-00	57	8
	58	5
	59	5
	62	8
	72	3
	73	3
	74	3
	76	19
	76	40
	77	13
	77	29
	78	15
	94	7
V500-162-502-50	54	5
	55	5
	56	5
	60	6
	169	34
V500-163-002-00	30	9
	107	21
V511-100-805-00	63	2
	72	5
	74	5
	76	2

Numerical Index

Part Code	Fig.	Key
V511-100-805-00	76	26
	77	20
V522-100-801-80	70	12
	95	10
V523-100-301-00	184	47
V523-100-801-60	33	2
	69	8
V523-101-002-40	26	5
	26	33
	28	17
	34	7
	35	9
	38	3
	39	8
	50	10
	52	2
	92	7
	92	35
	169	3
V530-240-502-40	68	30
	69	28
V560-160-006-00	101	16
	102	19
	109	22
	109	50
	110	22
	110	54
	178	17
	179	10
V560-160-008-00	62	9
	62	16
	109	7
	110	7
V580-140-301-80	57	6
V580-140-302-50	185	24
	185	24
V580-140-502-00	98	15
	99	15
V580-140-502-50	90	12
V580-140-602-80	57	2
	60	2
	169	30
V580-140-604-00	52	8
	169	9
V600-110-601-00	68	14
V600-110-601-00	69	12
	90	14
	92	14
V600-110-620-30	26	25
	28	8
V600-110-620-40	26	10
	26	22
	27	4
	27	8
	34	15
	39	4
	46	8
	49	12
	184	14
V600-110-620-50	26	26
	39	2
	49	8
	52	16
	92	12
	92	27
	169	17
V600-110-620-60	35	4
	92	32
V600-110-630-30	28	14
	38	6
V600-110-630-40	169	16
V600-110-630-50	67	7
	92	9
	92	31
V600-110-630-60	71	5
V600-150-600-00	61	14
V607-110-630-40	50	5
V682-200-000-60	185	11
	185	11
V682-200-001-00	29	3
	42	3
	43	3
	44	3
	47	3
	51	3
	52	13
	169	14
V682-200-001-90	75	4
	75	8
V704-140-010-00	61	15
V704-140-010-00	62	12
	62	20
V704-140-012-00	62	4
V704-140-017-00	28	7
	184	41
V704-140-018-00	53	5
	60	12
	72	7
	73	6
	74	7
	169	40
V704-140-019-00	46	2
V704-140-020-00	26	9
	28	2
	28	13
	37	1
	37	4
	46	6
	50	7
	66	7
	184	30
V704-140-022-00	77	32
V704-140-025-00	26	24
	28	22
	37	5
	49	5
	52	14
	67	6
	67	8
	76	4
	90	5
	169	15
V704-140-030-00	26	30
	35	3
	68	22
	69	20
	71	7
	92	33
V704-140-035-00	92	16
	96	6
V705-140-024-00	185	17
	185	17
V705-140-025-00	95	24
V705-140-030-00	184	40
V705-140-032-00	184	32

Part Code	Fig.	Key
V705-140-042-00	61	13
V705-140-047-00	26	11
	184	31
V705-140-052-00	52	17
	90	7
	92	3
	92	22
	169	18
V706-140-040-00	90	16
	96	5
V706-140-050-00	90	15
V707-140-062-00	66	13
	67	14
	68	25
	69	23
	92	10
	92	17
V707-140-080-00	71	9
V720-101-900-70	97	21
V720-102-401-00	68	32
	69	30
	97	24
V720-102-401-40	29	6
	42	5
	43	6
	44	6
	51	6
	52	22
	169	23
V720-102-401-50	64	14
	65	14
V720-102-401-60	70	14
V720-102-401-80	47	4
	75	10
V720-103-502-90	103	5
	104	5
	105	5
	106	5
V720-103-503-60	81	12
V720-105-705-50	97	2
V720-111-900-60	103	18
	104	18
	105	18
	106	18
	183	8
V720-111-900-70	28	18
	83	16
	185	25
	185	25
V720-111-901-00	33	7
	83	17
	95	22
V720-112-401-10	64	2
	65	2
	82	8
	82	12
	82	14
	82	18
	83	8
	83	12
	83	20
	83	26
	83	28
	184	29
V720-112-401-20	95	14
	95	16
	100	2
	101	3
	102	3
	178	4
	182	12
	183	7
	185	21
	185	21
V720-112-401-40	31	10
	32	10
	64	9
	64	11
	64	13
	64	18
	65	9
	65	11
	65	13
	65	18
	82	4
	83	4
	184	28
	185	28
	185	28
V720-112-401-50	33	8
V720-112-401-80	103	29
	104	29
	105	35
	106	35
	151	16
	152	16
V720-112-402-00	103	8
	103	25
	104	8
	104	25
	105	8
	105	25
	106	8
	106	25
	182	2
	182	7
V720-112-402-20	103	17
	104	17
	105	17
	106	17
V721-103-104-00	33	10
V721-103-104-50	103	2
	104	2
	105	2
	106	2
V721-103-106-00	33	9
V721-103-107-00	91	7
V721-103-109-00	92	4
V721-103-111-50	75	12
V721-113-105-00	103	16
	104	16
	105	16
	106	16
V721-113-106-00	95	17
V723-102-004-20	80	11
V723-111-501-60	182	8
V723-112-003-80	80	10
V742-135-500-60	96	2
V744-114-280-70	103	15
	104	15
	105	15
	106	15
V744-120-350-70	17	4
	22	4
	26	8

Numerical Index

Part Code	Fig.	Key	Part Code	Fig.	Key	Part Code	Fig.	Key
V744-120-350-70	46	10	V782-160-000-6T	102	34			
V744-120-470-70	184	35		178	30			
V744-135-520-80	52	19		179	22			
	169	20	V881-000-061-20	175	4			
V744-135-550-80	50	8		175	9			
V761-150-000-00	91	16	V883-000-061-20	176	3			
V762-150-000-00	76	42		176	8			
	77	31	V999-200-003-00	170	5			
V763-150-000-00	17	5		170	10			
	18	5		171	5			
	19	5		171	10			
	20	5		172	5			
	21	5		173	5			
	22	5		173	10			
	23	4		174	5			
	63	5		174	10			
	76	8		175	5			
	76	24		175	10			
	76	31		176	4			
	77	3		176	9			
	77	18		177	5			
	91	13	W201-260-805-50	98	2			
V780-140-000-1T	182	16		99	2			
	183	6	W201-261-206-00	181	2			
V780-140-000-2T	34	2	W296-134-007-00	109	33			
	182	17		109	43			
V782-160-000-2T	17	6		110	33			
	18	6		110	44			
	19	6						
	20	6						
	21	6						
	22	6						
	95	12						
	101	7						
	102	7						
	103	24						
	104	24						
	105	24						
	106	24						
	178	8						
	182	18						
V782-160-000-4B	92	23						
V782-160-000-6B	52	25						
	169	26						
V782-160-000-6T	101	29						

Alpabetical Index

Description	Fig.	Key
ADAPTER/220X100 ASSY	26	1
ADAPTER/255X065 ASSY	25	1
ARM/CONTROL	22	28
	23	28
ARM/FLOATING COMP	22	20
	23	20
ARM/TENSION	25	2
	26	2
ARMATURE/STARTE ASSY	33	5
BALL,STEEL	2	5
BEARING,RB/6002SS	16	7
	17	8
BEARING,RB/6203	22	13
	23	13
BEARING/BALL	10	47
	22	14
	23	14
	34	6
	34	11
BEARING/CONNECTING R	14	7
BEARING/CRANK/LOWER	6	12
BEARING/CRANK/UPPER	6	11
BEARING/CRANKSET	6	10
BEARING/NEEDLE	33	8
	33	9
BEARING/OILLESS	33	12
	33	14
	33	16
BEARING/THRUST/CRANK	6	13
	7	2
	7	4
BEARING/WITH SHOCKAB	33	13
BELT VHM034	20	5
BODY/NOZZLE HOLDER	31	2
BODY/OILPUMP	18	2
BOLT	2	7
	6	2
	10	41
	12	18
	16	12
	17	13
	34	9
	34	10
	34	19
	34	20

Description	Fig.	Key
BOLT	34	21
	34	22
	34	24
BOLT,JOINT	18	11
BOLT,S/M6X12/7T	13	5
	22	16
	23	16
BOLT,S/M6X25/7T	18	5
BOLT,S/M8X25/7T	5	3
BOLT,SEMS/M10X25,7T	9	4
BOLT/CONNECTINGROD	14	6
BOLT/CRANK	16	14
	17	15
BOLT/FLANGE	16	8
	17	9
BOLT/M6	10	32
	10	33
BOLT/M6X10	22	18
	23	18
BOLT/M8X20/7T	22	8
	23	8
BOLT/THROUGH	33	30
BOLT/WASHERHEAD	32	8
BOLT/WS	18	4
	20	4
	27	8
BRACKET ROCKER SHAFT	12	12
BRACKET,ROCKER SHAFT	12	13
BRG/CONROD/UN050 SET	7	5
BRG/CONROD/UN100 SET	7	6
BRG/CRANK/UN050 SET	7	1
BRG/CRANK/UN100 SET	7	3
BRUSH	34	17
BRUSH/STARTER	33	2
BUSH	34	15
CAMSHAFT/INJECTION P	22	10
	23	10
CAP	19	20
CAP,BLANK/30	10	38
CAP,OIL FILLER	3	2
CAP,SEALING	2	2
CARTRIDGE/OILFILTER	18	13
CENTER CRANK PULLEY	16	11
	17	12
CLAMP,STRAINER	18	8

Description	Fig.	Key
CLAMP/WIRE/10-15	19	11
CLAMP/WIRE/20-24	19	21
CLIP/HOSE/7.6-8.2	24	5
CLUTCH/STARTER ASSY	33	6
COLLOR	34	3
CONNECTINGROD ASSY	14	5
CONNECTOR,OIL FILTER	6	25
CONNECTOR/FUEL	24	1
CONNECTOR/GLOWPLUG	28	5
CORRUGATEDTUBE	24	6
COVER	33	11
	34	13
COVER,BEARING	34	5
COVER/CYLINDER HEAD	3	1
COVER/INJECTIONPUMP	6	26
CRANKSHAFT ASSY	16	1
	17	1
CUP/SEALING/12	6	7
CUP/SEALING/16	10	3
CUP/SEALING/28	6	3
CUP/SEALING/36	6	4
CUTTER,VALVE	12	5
CYLINDERBLOCK ASSY	6	1
CYLINDERHEAD ASSY	2	1
DOWEL	6	22
DRIVE/TACHOMETE ASSY	10	35
ELEMENT ASSY	32	7
FAN/COOLING	20	1
FLANGEBOLT/M10X20	11	2
FLANGEBOLT/M10X70	27	5
FLANGEBOLT/M6X10	8	4
FLANGEBOLT/M6X12	6	28
FLANGEBOLT/M6X16	10	37
	28	8
FLANGEBOLT/M8X16	10	11
	18	9
FLANGEBOLT/M8X20	4	3
	19	8
	19	14
	27	3
FLANGEBOLT/M8X25	19	19
FLANGEBOLT/M8X30	10	15
FLANGEBOLT/M8X40	4	4
FLANGEBOLT/M8X45	10	12
	19	3

Alpabetical Index

6004-097-680-00

Description	Fig.	Key
FLANGEBOLT/M8X50	12	19
FLANGEBOLT/M8X55	10	9
FLANGEBOLT/M8X75	10	13
	19	15
FLANGEBOLT/M8X85	10	8
FLYWEIGHT	22	17
	23	17
FLYWHEEL ASSY	16	5
	17	5
FRAME	34	12
FRAME/COMMUTATOR END	33	10
FRAME/DRIVEEND ASSY	34	7
GASKET	3	5
	28	7
	30	5
	30	22
GASKET,EXH.MANIFOLD	5	2
	30	7
GASKET,INLET MANIFOL	4	2
	30	6
GASKET,NOZZLE	21	3
GASKET/COVER	6	27
	30	11
GASKET/CYLINDERHEAD	2	6
	30	3
GASKET/DELIVERYVALVE	32	4
GASKET/GEARCASE	10	27
	30	14
GASKET/HOUSING	19	13
	30	20
GASKET/PLATE	10	40
	30	15
GASKET/SPACER	19	6
	30	19
GASKET/WATERPUMP	19	2
	30	18
GEAR/CAMSHAFT	13	2
GEAR/CRANK	16	3
	17	3
GEAR/IDLE ASSY	13	6
GEAR/INJECTIONPUMP	22	11
	23	11
GEAR/STARTER PLANETA	33	17
GEAR/STARTERINTERNAL	33	18
GEARCASE ASSY	10	1
GENERATOR ASSY	27	1
GLOWPLUG	28	3
GUIDE/LEVELGAGE COMP	6	31
HANGER	11	1
HOLDER ASSY	34	14
HOLDER/BRUSH ASSY	34	16
HOLDER/DELIVERYVALVE	32	2
HOLDER/JE/9-9	10	14
HOLDER/NOZZLE ASSY	31	1
HOLDER/STARTER ASSY	33	3
HOSE/RUBBER	3	6
	19	10
	24	3
HOUSING ASSY	32	6
HOUSING/STARTER ASSY	33	7
HOUSING/THERMOSTAT	19	12
INJECTIONNOZZLE ASSY	21	1
INJECTIONPUMP ASSY	22	1
	23	1
KEY/07X05X09	13	3
	22	12
	23	12
KEY/07X05X43	16	4
	17	4
LEVEL/GAGE	6	30
LEVER/CONTROL COMP	22	25
	23	25
LEVER/PINIONDRIVE	33	19
MANIFOLD(INLET) ASSY	4	1
MANIFOLD,EXH	5	1
NIPPLE	6	23
NOZZLE ASSY	31	51
NUT	12	17
	31	50
	33	28
	33	29
	33	34
	34	2
	34	23
	34	25
NUT,CAP/M8	10	19
NUT/CAP	3	4
NUT/FLANGE	28	4
NUT/FLANGE/M10	27	6
NUT/M08	10	10
NUT/M08	12	20
	19	4
	19	9
	22	9
	23	9
NUT/M6	10	34
	22	29
	23	29
NUT/M8	10	18
	10	48
	10	50
	33	32
NUT/NOZZLERETAINING	31	5
NUT/PINIONSTOP	33	23
OILPUMP ASSY	18	1
ORING	32	3
O-RING/1A,P15	18	7
	30	17
O-RING/1A,P18	8	3
O-RING/1A,P8	22	26
	23	26
O-RING/1A,S24	10	36
O-RING/1A,S50	10	43
	30	16
O-RING/1A,S55	19	18
	30	21
PACKING	10	20
	18	12
	30	13
PAN,OIL COMP	8	1
PIECE,DISTANCE	31	6
PIN	6	18
	6	29
	10	23
PIN,CONTROL	22	22
	23	22
PIN,GROOVE	10	26
PIN,NOZZLE HOLDER	31	3
PIN,PISTON	14	3
PIN,ST,B/10X18	16	2
	17	2
PIN,ST,B/8X24	6	17
PIN/ARM	10	21
PIN/IDLEGEAR	6	6
PIN/INJECTIONPUMP	32	10

Description	Fig.	Key
PIN/SNAP	10	22
PIN/STRAIGHT	6	16
	9	3
	17	7
	18	3
PIN/TUBE	6	15
	10	44
PIPE,OIL	18	10
PIPE,WATER OUTLET	19	17
PIPE/FUEL	24	2
PIPE/INJECTION ASSY	21	4
	21	5
	21	6
PIPE/WATERDRAIN	6	24
PISTON	14	1
PISTON(OV/050)	15	1
PISTON(OV/100)	15	3
PISTON/VALVE/RELIEF	10	29
PLATE	32	11
	33	27
	34	8
PLATE/ADJUST	27	2
PLATE/ADJUSTING	32	9
PLATE/FRONT	10	39
PLATE/REAR	9	1
PLATE/TAPPET/AD 0.2	32	23
PLATE/TAPPET/AD 0.25	32	27
PLATE/TAPPET/AD 0.3	32	24
PLATE/TAPPET/AD 0.35	32	28
PLATE/TAPPET/AD 0.4	32	25
PLATE/TAPPET/AD 0.45	32	29
PLATE/TAPPET/AD 0.5	32	26
PLATE/TAPPET/AD 0.55	32	30
PLATE/TAPPET/AD 0.6	32	18
PLATE/TAPPET/AD 0.65	32	31
PLATE/TAPPET/AD 0.7	32	19
PLATE/TAPPET/AD 0.8	32	20
PLATE/TAPPET/AD 0.9	32	21
PLATE/TAPPET/AD 1.0	32	22
PLATE/THRUST	13	4
PLATE/THRUST/INJECTI	22	15
	23	15
PLUG	12	11
PLUG/M14X1.5	8	2
PLUG/PT1/2	2	3

Description	Fig.	Key
PLUG/PT1/8	6	5
	10	2
PLUG/SCREW	10	24
POINTER	9	2
PULLEY	16	10
	17	11
	34	1
PULLEY ASSY	16	9
	17	10
PULLEY,WATER PUMP	20	2
RACK/CONTROL ASSY	32	13
REGULATOR ASSY	29	1
	34	26
REPAIR/ENGINE SET	30	1
RESISTANCE/1.0	24	4
RING,SNAP	14	4
RING,SNAP/12 C	10	31
RING,SNAP/16 C	12	15
RING,SNAP/4 E	22	23
	23	23
RING/PISTON SET	14	2
RING/SNAP	33	21
	33	22
RINGGEAR	16	6
	17	6
RINGPISTON/OV050 SET	15	2
RINGPISTON/OV100 SET	15	4
RINK/CONTROL	22	21
	23	21
ROCKERARM	12	9
ROCKERSHAFT ASSY	12	8
ROD,PUSH	12	7
ROTOR ASSY	34	4
SCREW	33	33
SCREW ADJUST	12	16
SCREW/HOLLOW	22	3
	23	3
SEAL,BEARING CAP	6	8
	30	8
SEAL,BEARING CAP/7	6	9
	30	9
SEAL,CYL.HEAD COVER	3	3
	30	4
SEAL,OIL	2	4
	6	14

Description	Fig.	Key
SEAL,OIL	10	7
	30	2
	30	10
	30	12
SEAT/SPRING/LOWER	32	17
SEAT/SPRING/UPPER	32	15
SEAT/VALVESPRING	12	4
SHAFT,CAM	13	1
SHAFT/HYDRAULIC ASSY	10	46
SHAFT/ROCKERARM ASSY	12	10
SHAFT/STARTER PLANET	33	15
SHIM/INJECTIONPUMP	22	4
	22	5
	22	6
	22	7
	23	4
	23	5
	23	6
	23	7
SHORTBLOCKENGIN ASSY	1	1
SLEEVE/PLUNGER	32	14
SOLENOID	28	6
SPACER	10	42
SPACER,PUMP.WATER	19	5
SPACER/FAN/48	20	3
SPRING	12	14
	34	18
SPRING,RETURN	22	27
	23	27
SPRING,STARTING	22	32
	23	32
SPRING/DELIVERYVALVE	32	1
SPRING/GOVERNOR	22	24
	23	24
SPRING/NOZZLEHOLDER	31	4
SPRING/PUMPPLUNGER	32	16
SPRING/RELIEF VALVE	10	30
SPRING/STARTERBRUSH	33	4
SPRING/VALVE	12	3
STARTER ASSY	27	7
STOPPER/FULLLOAD	10	17
STRAINER	18	6
STUD	2	8
	6	20
	6	21

Alpabetical Index

Description	Fig.	Key
STUD	6	32
	10	4
	10	5
	10	6
	10	45
STUD/M8X40	6	19
	19	7
SWITCH/MAGNETIC ASSY	33	20
SWITCH/OILPRESSURE	28	1
TAPPET	12	6
TAPPET/INJECTIO ASSY	32	12
THERMOMETER	28	2
THERMOSTAT	19	16
THRUSTPIECE	22	19
	23	19
VALVE ASSY	32	5
VALVE/EXHAUST	12	2
VALVE/INTAKE	12	1
VALVE/RELIEF ASSY	10	28
WASHER	21	2
	33	31
WASHER,PL/M6	22	30
	23	30
WASHER,SP/M6	16	13
	17	14
	22	31
	23	31
WASHER,SP/M8	10	49
	10	51
WASHER/0.9	31	7
WASHER/0.925	31	8
WASHER/0.95	31	9
WASHER/0.975	31	10
WASHER/08X14X01	10	16
	10	25
	30	23
WASHER/1.0	31	11
WASHER/1.025	31	12
WASHER/1.05	31	13
WASHER/1.075	31	14
WASHER/1.1	31	15
WASHER/1.125	31	16
WASHER/1.15	31	17
WASHER/1.175	31	18
WASHER/1.2	31	19
WASHER/1.225	31	20
WASHER/1.25	31	21
WASHER/1.275	31	22
WASHER/1.3	31	23
WASHER/1.325	31	24
WASHER/1.35	31	25
WASHER/1.375	31	26
WASHER/1.4	31	27
WASHER/1.425	31	28
WASHER/1.45	31	29
WASHER/1.475	31	30
WASHER/1.5	31	31
WASHER/1.525	31	32
WASHER/1.55	31	33
WASHER/1.575	31	34
WASHER/1.6	31	35
WASHER/1.625	31	36
WASHER/1.65	31	37
WASHER/1.675	31	38
WASHER/1.7	31	39
WASHER/1.725	31	40
WASHER/1.75	31	41
WASHER/1.775	31	42
WASHER/1.8	31	43
WASHER/1.825	31	44
WASHER/1.85	31	45
WASHER/1.875	31	46
WASHER/1.9	31	47
WASHER/1.925	31	48
WASHER/1.95	31	49
WASHER/9X22X2	27	4
WASHER/AIR BLEEDER	22	2
	23	2
WASHER/SK	33	24
	33	25
	33	26
WATERPUMP ASSY	19	1
YOKE/STARTER ASSY	33	1

Alpabetical Index

Description	Fig.	Key
ADAPTER/225X060 ASSY	24	1
ARM/CONTROL	22	27
ARM/FLOATING COMP	22	18
ARM/TENSION	24	2
ARMATURE/STARTE ASSY	31	2
BALL	31	17
BALL,STEEL	2	5
BEARING	31	3
	31	4
BEARING,RB/6002SS	16	7
	17	8
BEARING,RB/6203	22	11
BEARING/BALL	10	48
	22	12
	32	6
	32	11
BEARING/CONNECTING R	14	7
BEARING/CRANK SET	6	11
BEARING/CRANK/LOWER	6	13
BEARING/CRANK/UPPER	6	12
BEARING/THRUST/CRANK	6	14
	7	2
	7	4
BELT/VNR5A38.5	20	5
BODY/OILPUMP	18	2
BOLT	2	7
	6	2
	10	42
	12	18
	30	9
	30	51
	32	9
	32	10
	32	19
	32	20
	32	21
	32	22
	32	24
BOLT,S/M6X12/7T	13	5
	22	14
BOLT,S/M8X25/7T	5	3
BOLT/CONNECTINGROD	14	6
BOLT/CRANK	16	10
	17	11
BOLT/FLANGE	16	8
BOLT/FLANGE	17	9
BOLT/M12X45/7T	25	8
BOLT/M6	10	34
	10	35
BOLT/M6X10	22	16
BOLT/THROUGH	31	16
BOLT/WS	9	4
	18	6
	20	4
	31	15
BRACKET/ROCKERSHAFT	12	12
	12	13
BRG/CONROD/UN025 SET	7	5
BRG/CONROD/UN050 SET	7	6
BRG/CRANK/UN025 SET	7	1
BRG/CRANK/UN050 SET	7	3
BRUSH	32	17
BUSH	32	15
BUSHING/DRAIN	31	20
CAMSHAFT	13	1
CAMSHAFT/INJECTION P	22	8
CAP	19	20
CAP,OIL FILLER	3	5
CAP/OILFILLER	6	32
CARTRIDGE/OILFILTER	18	12
CLAMP/STRAINER	18	10
CLAMP/WIRE/10-15	19	11
CLAMP/WIRE/20-24	19	21
CLIP/HOSE/7.6-8.2	23	5
CLUTCH/STARTER ASSY	31	5
COLLOR	32	3
CONNECTINGROD ASSY	14	5
CONNECTOR,OIL FILTER	6	25
CONNECTOR/FUEL	23	1
CONNECTOR/GLOWPLUG	26	5
CONTROLRACK	30	47
CONTROLSLEEVE	30	48
CORRUGATEDTUBE	23	6
COVER	31	23
	32	13
COVER,BEARING	32	5
COVER/BLOWBY	3	3
COVER/CYLINDER HEAD	3	1
COVER/INJECTIONPUMP	6	26
CRANKSHAFT ASSY	16	1
CRANKSHAFT ASSY	17	1
CUP/SEALING/16	6	3
CUP/SEALING/20	10	3
CUP/SEALING/28	6	4
CUP/SEALING/36	6	5
CUP/SEALING/50	2	2
	6	6
CUTTER,VALVE	12	5
CYLINDERBLOCK ASSY	6	1
CYLINDERHEAD ASSY	2	1
DOWEL	6	23
DRIVE/TACHOMETE ASSY	10	37
EYEBOLT	30	49
FAN/COOLING	20	1
FLANGEBOLT/M10X20	11	2
FLANGEBOLT/M10X70	25	5
FLANGEBOLT/M6X10	8	4
FLANGEBOLT/M6X12	6	28
FLANGEBOLT/M6X16	10	39
	26	8
FLANGEBOLT/M8X16	10	12
	18	11
FLANGEBOLT/M8X20	19	8
	19	14
	22	6
	25	3
FLANGEBOLT/M8X25	4	3
	19	19
FLANGEBOLT/M8X30	10	16
FLANGEBOLT/M8X45	19	7
FLANGEBOLT/M8X50	10	13
FLANGEBOLT/M8X55	12	19
FLANGEBOLT/M8X60	10	14
FLANGEBOLT/M8X70	10	10
FLANGEBOLT/M8X75	10	9
	19	15
FLANGEBOLT/M8X85	10	8
FLYWEIGHT ASSY	22	15
FLYWHEEL ASSY	16	5
	17	5
FRAME	32	12
FRAME/DRIVEEND ASSY	32	7
FRAME/STARTEREND	31	10
GASKET	3	8
	21	5

Alpabetical Index

6005-097-235-00

Description	Fig.	Key
GASKET	26	7
	28	5
	28	22
	29	17
	30	4
	30	50
	30	52
GASKET,NOZZLE	21	2
GASKET/COVER	6	27
	28	11
GASKET/CYLINDERHEAD	2	6
	28	3
GASKET/EXH MANIFOLD	5	2
	28	7
GASKET/GEARCASE	10	28
	28	14
GASKET/HOUSING	19	13
	28	20
GASKET/INLETMANIFOLD	4	2
	28	6
GASKET/PLATE	10	41
	28	15
GASKET/SPACER	19	5
	28	19
GASKET/WATERPUMP	19	2
	28	18
GEAR/CAMSHAFT	13	2
GEAR/CRANK	16	3
	17	3
GEAR/IDLE ASSY	13	6
GEAR/INJECTIONPUMP	22	9
GEAR/OILPUMP ASSY	18	3
GEARCASE ASSY	10	1
GENERATOR ASSY	25	1
GLOWPLUG	26	3
GUIDE/LEVELGAGE COMP	6	31
HANGER	11	1
HEATSHILD/NOZZLE	21	3
HOLDER ASSY	32	14
HOLDER/BRUSH ASSY	32	16
HOLDER/DELIVERYVALVE	30	5
HOLDER/JE/9-9	10	15
HOLDER/NOZZLE ASSY	29	1
HOLDER/STARTER ASSY	31	11
HOSE/RUBBER	3	9
HOSE/RUBBER	19	10
	23	3
HOUSING/STARTER ASSY	31	9
HOUSING/THERMOSTAT	19	12
INJECTIONNOZZLE ASSY	21	1
INJECTIONPUMP ASSY	22	1
KEY/07X05X09	13	3
	22	10
KEY/07X05X43	16	4
	17	4
LEVELGAGE	6	30
LEVER/CONTROL COMP	22	24
MANIFOLD/EXHAUST	5	1
MANIFOLD/INLET ASSY	4	1
NOZZLE	29	16
NUT	12	17
	29	18
	31	21
	31	22
	32	2
	32	23
	32	25
NUT,CAP/M8	10	20
NUT/CAP	3	7
NUT/FLANGE	26	4
NUT/FLANGE/M10	25	6
NUT/M08	10	11
	12	20
	19	3
	19	9
	22	7
NUT/M6	10	36
	22	28
NUT/M8	10	19
	10	49
	10	51
NUT/NOZZLERETAINING	29	15
OILPAN COMP	8	1
OILPUMP ASSY	18	1
OILSEAL	6	15
	28	10
ORIFICE	3	10
O-RING	31	19
ORING	30	6
	30	8
O-RING/1A,P18	8	3
	10	33
O-RING/1A,P22A	18	9
	28	17
O-RING/1A,P25	6	33
O-RING/1A,P8	22	25
O-RING/1A,S24	10	38
O-RING/1A,S50	10	44
	28	16
O-RING/1A,S55	19	18
	28	21
PACKING	10	21
PIN	6	19
	6	29
	10	24
	30	11
PIN,CONTROL	22	20
PIN,ST,B/10X18	16	2
	17	2
PIN,ST,B/8X24	6	18
PIN/ARM	10	22
PIN/GROOVE	10	27
PIN/IDLEGEAR	6	8
PIN/PISTON	14	3
PIN/SNAP	10	23
PIN/STRAIGHT	6	17
	9	3
	17	7
	18	5
PIN/TUBE	6	16
	10	45
PINION/STARTER	31	8
PIPE/FUEL	23	2
PIPE/INJECTION ASSY	21	6
	21	7
	21	8
PIPE/WATERDRAIN	6	24
PIPE/WATEROUTLET	19	17
PISTON	14	1
PISTON(OV/050)	15	1
PISTON(OV/100)	15	3
PISTON/VALVE/RELIEF	10	30
PLATE	32	8
PLATE/ADJUST	25	2
PLATE/FRONT	10	40

Description	Fig.	Key
PLATE/REAR	9	1
PLATE/T=2.60	30	16
PLATE/T=2.65	30	17
PLATE/T=2.70	30	18
PLATE/T=2.75	30	19
PLATE/T=2.80	30	20
PLATE/T=2.85	30	21
PLATE/T=2.90	30	22
PLATE/T=2.95	30	23
PLATE/T=3.00	30	24
PLATE/T=3.05	30	25
PLATE/T=3.10	30	26
PLATE/T=3.15	30	27
PLATE/T=3.20	30	28
PLATE/T=3.25	30	29
PLATE/T=3.30	30	30
PLATE/T=3.35	30	31
PLATE/T=3.40	30	32
PLATE/T=3.45	30	33
PLATE/T=3.50	30	34
PLATE/T=3.55	30	35
PLATE/T=3.60	30	36
PLATE/T=3.65	30	37
PLATE/T=3.70	30	38
PLATE/T=3.75	30	39
PLATE/T=3.80	30	40
PLATE/T=3.85	30	41
PLATE/T=3.90	30	42
PLATE/T=3.95	30	43
PLATE/T=4.00	30	44
PLATE/T=4.05	30	45
PLATE/T=4.10	30	46
PLATE/THRUST	13	4
PLATE/THRUST/INJPUMP	22	13
PLUG	12	11
PLUG/M14X1.5	8	2
PLUG/PT1/2	2	3
PLUG/PT1/4	10	2
PLUG/PT1/8	6	7
PLUG/SCREW	10	25
PLUNGER ASSY	30	1
POINTER	9	2
PULLEY	32	1
PULLEY/CRANK	16	9
	17	10
PULLEY/WATERPUMP	20	2
PUSHROD	12	7
REGULATOR ASSY	27	1
	32	26
REPAIR/ENGINESET	28	1
RESISTANCE/1.0	23	4
RETAINER	31	7
RING SNAP	14	4
RING,SNAP/12 C	10	32
RING,SNAP/4 E	22	21
RING/PISTONSET	14	2
RING/SNAP	12	15
RINGGEAR	16	6
	17	6
RINGPISTON/OV050 SET	15	2
RINGPISTON/OV100 SET	15	4
RINK/CONTROL	22	19
ROCKERARM	12	9
ROCKERSHAFT ASSY	12	8
RORA	31	6
ROTOR ASSY	32	4
ROTOR/OUTER	18	4
RUBBERFLANGE	3	2
SCREW	31	14
SCREW,SOCKET/M6X20	18	7
SCREW/ADJUST	12	16
SCREW/TAPPING	3	4
SEAL,BEARING CAP	6	9
	28	8
SEAL,BEARING CAP/7	6	10
	28	9
SEAL,OIL	2	4
	10	7
	28	2
	28	12
SEAL/CYL HEAD/UNDER	3	6
	28	4
SEAT/VALVESPRING	12	4
SHAFT/HYDRAULIC ASSY	10	47
SHAFT/ROCKERARM ASSY	12	10
SHIM/0.10	29	2
SHIM/0.20	29	3
SHIM/0.30	29	4
SHIM/0.40	29	5
SHIM/0.50	29	6
SHIM/0.52	29	7
SHIM/0.54	29	8
SHIM/0.56	29	9
SHIM/0.58	29	10
SHIM/0.80	29	11
SHIM/INJECTIONPUMP	22	2
	22	3
	22	4
	22	5
SHORTBLOCKENGIN ASSY	1	1
SLEEVEFLANGE	30	7
SNAPRING	30	12
SOLENOID	26	6
SPACER	10	43
	29	14
SPACER/FAN/48	20	3
SPACER/WATERPUMP	19	4
SPRING	12	14
	32	18
SPRING,BRUSH	31	12
SPRING,NOZZLE	29	12
SPRING,RETURN	22	26
SPRING/DELIVERYVALVE	30	3
SPRING/GOVERNOR	22	23
SPRING/IDLE	22	32
SPRING/PLUNGER	30	13
SPRING/RELIEF VALVE	10	31
SPRING/RETURN	31	18
SPRING/SETTING	22	22
SPRING/STARTING	22	31
SPRING/VALVE	12	3
SPRINGSEAT	29	13
	30	14
	30	15
STARTER ASSY	25	7
STOPPER/FULLLOAD	10	18
STRAINER	18	8
STUD	2	8
	6	21
	6	34
	10	4
	10	5
	10	6
	10	46
STUD/M8X40	6	20

Alpabetical Index

Description	Fig.	Key	Description	Fig.	Key	Description	Fig.	Key
STUD/M8X40	19	6						
STUD/M8X60/7T	6	22						
SWITCH/MAGNETIC ASSY	31	13						
SWITCH/OILPRESSURE	26	1						
TAPPET	12	6						
	30	10						
THERMOMETER	26	2						
THERMOSTAT	19	16						
THRUSTPIECE	22	17						
VALVE,DELIVERY	30	2						
VALVE/EXHAUST	12	2						
VALVE/INTAKE	12	1						
VALVE/RELIEF ASSY	10	29						
WASHER,PL/M6	22	29						
WASHER,SP/M12	25	9						
WASHER,SP/M6	22	30						
WASHER,SP/M8	10	50						
	10	52						
WASHER/08X14X01	10	17						
	10	26						
	28	13						
WASHER/9X22X2	25	4						
WASHER/CORRUGATE	21	4						
WATERPUMP ASSY	19	1						
YOKE/STARTER ASSY	31	1						

Description	Fig.	Key
ADAPTER/1ST COMP	101	26
	102	30
	178	27
ADAPTER/2ND COMP	102	31
	179	19
ADAPTER/45/G1/ ASSY	82	17
	83	27
ADAPTER/45/R3/8XG3/	103	23
	104	23
ADAPTER/45DEG	80	15
ADAPTER/90	101	25
	102	29
	178	26
	179	18
ADAPTER/BOLT/G3/8	103	30
	104	30
	105	34
	106	34
ADAPTER/G3/8 ASSY	82	3
	83	3
ADAPTER/L/G1/4 ASSY	82	7
	82	11
	83	7
	83	19
ADAPTER/PF1/4 ASSY	82	13
ADAPTER/PF3/8 ASSY	64	17
	65	17
ADAPTER/T ASSY	64	8
	64	10
	65	8
	65	10
ADJUSTSCREW/064	182	11
ADPTER/G1/4.1/4	83	11
ARM	137	44
	139	45
	141	44
	142	45
ARM COMP	54	1
	60	1
	169	29
ARM(SWITCH)	116	27
ARM/1ST COMP	101	14
	102	16
	178	15
ARM/2ND COMP	102	17
ARM/2ND COMP	179	8
ARM/4WD COMP	57	1
ARM/BRAKE	76	41
	77	30
ARM/BRAKE/LH ASSY	76	27
ARM/BRAKE/RH ASSY	76	29
ARM/CLUTCH SET	17	31
	22	33
ARM/CRUISE ASSY	62	1
ARM/DIFF	68	33
	69	31
ARM/LIFT	96	4
ARM/MIRROR ASSY	118	5
	119	2
ARM/NEUTRAL COMP	61	10
ARM/NEUTRAL/HST COMP	63	11
ARM/PLATE	109	15
	110	15
ARM/POSITION COMP	98	7
	98	14
	99	7
	99	14
ARM/PTO/REAR COMP	58	1
	59	1
ARM/REVERSE COMP	30	1
	30	11
ARM/SHIFT COMP	42	4
	43	5
	44	5
	51	5
ARM/SHIFT/4WD COMP	47	1
ARM/SHIFT/MID COMP	52	20
	169	21
ARM/SHIFT/REVERSE	29	5
ARM/SUB/HST COMP	55	1
ARM/SUB/MECH COMP	56	1
ARM/SWITCH COMP	78	9
ARM/TRUNNION/HMS1/00	184	12
ARMREST/LH ASSY	116	7
ARMREST/RH ASSY	116	9
BACK(ARMREST) ASSY	116	2
BACKET/SEAT/R/W10	117	17
BALL,STEEL	29	3
	42	3
	43	3
BALL,STEEL	44	3
	47	3
	51	3
	52	13
	75	4
	75	8
	169	14
	185	11
	185	11
BALL/M10/R	30	5
BAND	13	7
	14	7
	133	12
	134	13
	150	7
	151	12
	152	12
BAND,WIRE/140	82	10
	83	10
	83	24
	85	6
	86	3
	87	6
	145	17
	145	22
	146	17
	146	22
	147	17
	147	22
	148	17
	148	22
BAND,WIRE/250	64	20
	65	21
	84	3
	85	5
	87	5
	101	24
	102	28
	103	32
	104	32
	105	33
	106	33
	145	16
	145	21
	146	16

Alpabetical Index

Description	Fig.	Key
BAND,WIRE/250	146	21
	147	16
	147	21
	148	16
	148	21
	178	25
BAND/CLEANER	7	6
	8	6
BATTERY/55B24R ASSY	13	1
BATTERY/80D26R ASSY	14	1
BEARING,6006SH2	35	2
BEARING,BALL	52	7
	169	8
BEARING,CLUTCH RS	17	35
	22	37
BEARING,RB/6000SS	61	14
BEARING,RB/6003SS	184	39
BEARING,RB/6010	68	14
	69	12
	90	14
	92	14
BEARING,RB/6203	26	25
	28	8
BEARING,RB/6204	26	10
	26	22
	27	4
	27	8
	34	15
	39	4
	46	8
	49	12
	184	14
BEARING,RB/6205	26	26
	39	2
	49	8
	52	16
	92	12
	92	27
	169	17
BEARING,RB/6206	35	4
	92	32
BEARING,RB/6303	28	14
	38	6
BEARING,RB/6304	169	16
BEARING,RB/6304NR	50	5

Description	Fig.	Key
BEARING,RB/6305	67	7
	92	9
	92	31
BEARING,RB/6306	71	5
BEARING,RB/6903	184	38
BEARING/BALL	26	12
	27	2
	27	5
	28	9
	34	10
	34	11
	49	7
	49	11
	52	15
	66	2
	66	3
	66	9
	67	2
	67	3
	67	10
	68	13
	68	24
	69	11
	69	22
	71	6
	92	15
BEARING/BALL 6205SH2	28	10
	38	4
	90	2
BEARING/BALL 6305SH2	50	3
BEARING/NEEDLE	26	13
	26	28
	28	20
	35	5
	36	3
	36	5
	36	7
	36	12
	36	15
	41	3
	41	7
	46	4
	49	3
	184	45
BEARING/THRUST	184	13

Description	Fig.	Key
BELT/SEAT SET	116	34
	117	11
BLOCK/CYLINDER/23CC	184	3
BLOCK/PORT	184	2
BOLT(SP/M8X16)	5	9
	6	8
	84	8
	84	10
	86	8
	86	10
	128	9
	129	9
BOLT,S/M10X16/7T	97	6
BOLT,S/M10X20	73	10
	74	10
	78	21
	120	2
	121	2
	122	13
	123	11
BOLT,S/M10X20/7T	81	7
BOLT,S/M10X25	62	22
BOLT,S/M10X25/7T	26	2
	34	3
BOLT,S/M10X30/7T	80	13
BOLT,S/M10X35/7T	31	5
	32	5
BOLT,S/M10X40/7T	80	14
BOLT,S/M10X50/7T	34	4
BOLT,S/M6X30/7T	105	26
	106	26
BOLT,S/M6X50/7T	103	9
	104	9
	105	9
	106	9
BOLT,S/M8X16	97	22
	101	19
	102	23
	178	20
	179	13
BOLT,S/M8X20	68	19
	69	17
	101	13
	102	15
	178	14

Description	Fig.	Key
BOLT,S/M8X20	179	7
BOLT,S/M8X25	100	3
BOLT,S/M8X35/7T	61	16
BOLT,S/M8X45/7T	61	2
BOLT,S/M8X50	97	9
BOLT,SEMS/M10X25,7T	84	4
	86	4
BOLT,SEMS/M12X40/7T	95	18
BOLT,SM/M08X25	96	7
BOLT,SP/M10X20/7T	30	17
	117	18
	124	2
	125	2
	126	2
	127	2
BOLT,SP/M10X25	118	10
	119	6
BOLT,SP/M10X25/7T	122	19
	123	16
BOLT,SP/M10X40/7T	95	4
BOLT,SP/M10X45/7T	95	6
BOLT,SP/M6X12	137	12
	137	17
	137	24
	138	12
	138	17
	138	23
	138	32
	138	45
	139	12
	139	17
	139	24
	140	12
	140	17
	140	23
	140	33
	140	46
	141	12
	141	17
	141	24
	142	12
	142	17
	142	24
	143	12
	143	17
BOLT,SP/M6X12	143	23
	143	32
	143	45
	144	12
	144	17
	144	23
	144	33
	144	46
BOLT,SP/M6X16	48	10
	118	6
	119	3
	137	36
	137	42
	137	46
	138	30
	138	39
	139	37
	139	43
	139	47
	140	31
	140	40
	141	36
	141	42
	141	46
	141	50
	142	37
	142	43
	142	47
	142	51
	143	30
	143	39
	144	31
	144	40
	145	13
	146	13
	147	13
	148	13
BOLT,SP/M8X16	1	44
	2	43
	3	39
	4	38
	64	5
	65	5
	78	19
	83	14
BOLT,SP/M8X16	89	12
	98	6
	98	17
	99	6
	99	16
	109	4
	110	4
	137	34
	137	47
	137	49
	138	37
	139	35
	139	48
	139	50
	140	38
	141	34
	141	47
	141	51
	141	53
	142	35
	142	48
	142	52
	142	54
	143	37
	144	38
	151	15
	152	15
BOLT,SP/M8X20	1	17
	2	17
	3	15
	4	15
	11	27
	12	27
	81	4
	89	10
	95	36
	109	27
	110	27
	111	15
	130	2
BOLT,SP/M8X20/7T	117	19
BOLT,SP/M8X25	9	6
	10	6
	11	30
	12	30

Alpabetical Index

Description	Fig.	Key
BOLT,SP/M8X30	88	9
	118	3
	118	9
BOLT/BATTERY	13	2
	14	2
BOLT/KNOB/M06X27	114	9
BOLT/M08X20	78	16
BOLT/M10X1.25X20	117	12
BOLT/M10X100/7T	95	5
BOLT/M10X120	102	4
	179	3
BOLT/M10X140/7T	33	4
BOLT/M10X20/7T,P1.25	17	11
	18	11
	19	11
	20	13
	21	13
	22	13
BOLT/M10X20/9T	116	35
BOLT/M10X30/7T,P1.25	5	3
	6	3
	17	12
	18	12
	19	12
	20	14
	21	14
	22	14
BOLT/M10X40/7T,P1.25	151	23
BOLT/M10X50/7T,P1.25	151	22
BOLT/M10X75/7T	31	6
	32	6
	70	8
BOLT/M10X80	101	4
	178	5
BOLT/M10X90/7T	52	3
	169	4
BOLT/M12X130/7T	122	3
	123	3
BOLT/M12X160/7T	122	5
	123	5
BOLT/M12X25/7T	17	18
	18	18
	19	18
	20	20
	21	20
BOLT/M12X25/7T	22	20
	92	37
	151	25
	152	23
BOLT/M12X25/9T	88	12
	88	16
BOLT/M12X30/7T	107	40
	151	24
	152	22
BOLT/M12X30/9T	88	3
BOLT/M12X35	91	11
BOLT/M12X35/7T	92	5
	107	9
	107	13
BOLT/M12X40/7T	92	24
	108	2
	151	26
BOLT/M12X45/7T	122	9
	123	9
	152	20
BOLT/M12X50/7T	152	21
BOLT/M12X55/7T	70	3
BOLT/M12X60	181	2
BOLT/M12X60/7T	95	19
BOLT/M12X65/7T	120	3
	121	3
	122	14
BOLT/M12X70/7T	70	4
	123	12
BOLT/M12X80/7T	122	2
	123	2
BOLT/M16X100/7T	151	5
	152	5
BOLT/M16X30/7T	71	10
BOLT/M16X85/7T	108	6
BOLT/M16X90	150	2
BOLT/M5X16	112	5
	113	5
BOLT/M6X20/16	111	12
BOLT/M8X16	30	2
	30	13
	54	2
	55	2
	56	2
	58	2
BOLT/M8X16	59	2
	95	34
BOLT/M8X175	98	4
	99	4
BOLT/M8X20(22)	5	6
	6	6
	11	13
	12	13
	112	7
	113	7
BOLT/M8X25	68	11
	69	9
BOLT/M8X25/7T	107	6
BOLT/M8X28 11T	103	19
	104	19
	105	19
	106	19
BOLT/M8X40/7T	75	14
BOLT/M8X55	83	21
BOLT/M8XX55	98	2
	99	2
BOLT/S	85	7
	87	7
	133	4
	134	4
	135	4
BOLT/SM/M8X1.25X30	89	6
BOLT/STUD/M10X90	31	3
	32	3
BOLT/STUD/M12X25	48	4
BOLT/TRIMED	17	27
	18	27
	19	27
	20	29
	21	29
	22	29
	151	3
	152	3
BOOT	137	32
	138	35
	139	33
	140	36
	141	32
	142	33
	143	35

Description	Fig.	Key
BOOT	144	36
BRACKET COMP	1	43
	2	42
	3	38
	4	37
	45	2
	121	1
	123	10
BRACKET/ARM COMP	30	16
BRACKET/AXLE COMP	84	1
	86	1
BRACKET/AXLE/26 COMP	85	1
	87	1
BRACKET/CLEANER COMP	7	11
	8	12
BRACKET/COLUMN/ COMP	124	1
	125	1
	126	1
	127	1
BRACKET/DRAWBAR COMP	108	1
BRACKET/FILTER COMP	9	21
	10	21
BRACKET/FRONT COMP	81	3
BRACKET/FUSE	145	11
	146	11
	147	11
	148	11
BRACKET/GRILLE COMP	111	1
BRACKET/LAMP/REGISTR	133	13
	134	14
BRACKET/LEVER COMP	98	1
	99	1
	122	18
	123	15
BRACKET/PARKING COMP	78	11
BRACKET/RADIATO COMP	1	24
	2	24
BRACKET/RADIATOR/67	3	20
	4	20
BRACKET/RESERVE TANK	1	39
	2	39
	3	34
	4	34
BRACKET/SEAT	115	1
BRACKET/SEAT COMP	116	22
BRACKET/SEAT/F/W10	117	16
BRACKET/SENSOR COMP	137	33
	138	36
	139	34
	140	37
	141	33
	142	34
	143	36
	144	37
BRACKET/SENSOR/HST	138	29
	140	30
	143	29
	144	30
BRACKET/SENSOR/SUB	137	41
	139	42
	141	41
	142	42
BRACKET/STAY/HOOD	110	48
BRACKET/SWITCH	112	3
	113	3
BRACKET/SWITCH COMP	116	24
BRACKET/SWITCH/BEACO	137	51
	138	47
	139	52
	140	48
	141	55
	142	56
BRACKET/SWITCH/COMBI	137	7
	138	7
	139	7
	140	7
	141	7
	142	7
	143	7
	144	7
BRACKET/SWITCH/MID	141	49
	142	50
BRACKET/SWITCH/PTO	137	45
	139	46
	141	45
	142	46
BRACKET/SWITCH/SUB	138	44
	140	45
	143	44
	144	45
BRACKET/TANK COMP	11	15
	12	15
BRCKET/CABLE COMP	78	20
BUCKLE/TURN	107	16
BUCKLE/TURN/M24 COMP	107	25
BULB/12V/5W	133	16
	134	17
BULB/12V21/5W	186	9
BULB/12V21W	133	2
	134	2
	135	2
	186	8
BULB/12V3.4W	136	6
BULB/12V5W	133	3
	134	3
	135	3
BULB/H4/60/55W	131	2
	132	2
BULB/LAMP/12V/1.7W	136	13
BULB/LAMP/12V1W	149	6
BULB/LAMP/14V60MA	137	6
	138	6
	139	6
	140	6
	141	6
	142	6
	143	6
	144	6
BUSH	31	2
	32	2
BUSH,LEVER	11	14
	12	14
	85	2
	87	2
	111	14
BUSH/08X15X11	109	6
	110	6
BUSH/10X12X20	101	12
	102	12
	102	14
	178	13
	179	6
BUSH/12X14X20	62	2
BUSH/14X16X15	30	15
BUSH/18X20X25	54	7

Alpabetical Index

Description	Fig.	Key
BUSH/18X20X25	55	7
	56	7
	58	7
	59	7
	60	8
	169	36
BUSH/19X22X15	17	2
	22	2
BUSH/19X25X19	66	8
	67	9
BUSH/19X30X14	109	3
	110	3
BUSH/25X28X15	23	2
	63	4
	76	7
	76	28
	76	30
	77	2
BUSH/25X28X25	17	3
	18	2
	19	2
	20	2
	21	2
	22	3
	76	23
	77	17
BUSH/35X39X30	95	3
BUSH/40X43X30	95	2
BUSH/62X67X15	91	9
BUSH/62X67X30	91	15
BUSH/68X71X14	184	17
BUSH/95X100X22	184	16
BUTTON	78	4
BUZZER ASSY	137	23
	138	22
	139	23
	140	22
	141	23
	142	23
	143	22
	144	22
CABLE	88	8
CABLE ASSY	136	16
CABLE/ACCELERATOR	16	8
CABLE/BATTERY ASSY	13	6

Description	Fig.	Key
CABLE/BATTERY ASSY	14	6
CABLE/BRAKE ASSY	78	13
CABLE/CRUISE ASSY	62	6
CABLE/EARTH ASSY	13	8
	14	8
CABLE/PEDAL ASSY	15	2
	61	21
CABLE/RELEASE ASSY	62	14
CAM/DIFFLOCK	68	29
	69	27
CAP	1	35
	2	35
	3	30
	4	30
CAP,BLANK/M10	91	20
	92	20
CAP,OIL	91	2
CAP,PTO SHAFT	48	9
	52	26
	169	27
CAP,TIRE VALVE	170	5
	170	10
	171	5
	171	10
	172	5
	173	5
	173	10
	174	5
	174	10
	175	5
	175	10
	176	4
	176	9
	177	5
CAP/28	118	13
	119	5
CAP/30	1	42
	3	37
CAP/NONLEAK ASSY	11	2
	12	2
CAP/OIL/30	95	37
CAP/WHEEL	79	2
CASE/BODY	136	4
CASE/CYLINDERASSY	95	1
CASE/DIFF	69	1

Description	Fig.	Key
CASE/DIFF	90	8
CASE/DIFF COMP	68	1
CASE/FINAL	92	1
CASE/FINAL/LH	92	18
CASE/FINAL/RH	92	19
CASE/GEAR ASSY	136	3
CASE/HMS1/027	184	1
CASE/JOINT COMP	89	8
CASE/PTO/MID	52	1
	169	2
CASE/TRANSMISSION/F	31	1
	32	1
CASE/TRANSMISSION/RE	48	1
CHAIN/CHECK/FRONT	107	17
CHAIN/CHECK/REA COMP	107	18
CIRCLIP/30	26	20
CLAMP	1	33
	2	33
	3	28
	4	28
CLAMP,HARNESS	84	2
	85	4
CLAMP,MAIN HARNESS	103	27
	104	27
	105	27
	106	27
	137	14
	138	14
	139	14
	140	14
	141	14
	142	14
	143	14
	144	14
CLAMP,RADIATOR HOSE	78	18
CLAMP/28X55	64	19
	65	20
	86	2
	87	4
CLAMP/32	5	5
	6	5
CLAMP/WIRE/28-36	103	11
	104	11
	105	11
	106	11

Description	Fig.	Key
CLAMP/WIRE/30-38	1	6
	1	9
	2	6
	2	9
	3	6
	3	8
	4	6
	4	8
CLAMP/WIRE/36-44	1	5
	1	10
	2	5
	2	10
	3	5
	3	9
	4	5
	4	9
CLAMP/WIRE/42-50	7	8
CLAMP/WIRE/47-55	7	10
	8	8
CLAMP/WIRE/49-60	8	11
CLAMP/WIRE/52-63	8	10
CLAMP/WORM/16-25	82	6
	82	16
	83	6
CLAMP/YOKE	89	5
CLEANER/AIR ASSY	7	1
	8	1
CLIP	7	5
	8	3
CLIP B	65	19
	105	32
	106	32
CLIP(B)	11	33
	12	33
CLIP/HOSE/10.4-11.1	9	16
	9	19
	10	16
	10	19
CLIP/HOSE/11.1-12.0	9	10
	10	10
CLIP/HOSE/11-13	9	8
	9	14
	10	8
	10	14
CLIP/HOSE/14.7-15.9	1	13

Description	Fig.	Key
CLIP/HOSE/14.7-15.9	2	13
	3	11
	4	11
CLIP/HOSE/8.7-9.3	9	17
	9	20
	10	17
	10	20
CLUTCH/DIFF	68	26
	69	24
CLUTCH/PTO ASSY	28	3
COLLAR	139	27
	140	26
	142	27
	144	26
	185	7
	185	7
COLLAR,PINION THRUST	68	4
	69	4
COLLAR,SHIFTER	52	21
	169	22
COLLAR,THRUST	68	6
	69	6
COLLAR/08X12X10	118	2
	118	8
	118	11
COLLAR/09X14X08	78	8
COLLAR/10X14X09	11	29
	12	29
COLLAR/12X24X12	117	15
COLLAR/19X28X02	185	9
	185	9
COLLAR/26X34X13	37	8
COLLAR/41X49X129	71	3
COLLAR/48X52X17	90	4
COLUMN/STEERING COMP	81	1
CONNECTOR	1	14
	2	14
	3	12
	4	12
	101	22
	102	26
	178	23
	179	16
CONTROLLER/PTO ASSY	149	1
CONTROLLER/STEERING	81	5

Description	Fig.	Key
COOLER/OIL ASSY	64	6
	65	6
COUPLING	36	1
	49	2
COUPLING/16X27X62	24	2
COUPLING/18X30X55	27	6
COUPLING/21X32X50	49	9
COVER	5	7
	6	7
	101	2
	102	2
	116	4
	116	8
	116	10
	178	3
	185	13
	185	13
COVER ASSY	7	2
	8	2
COVER COMP	109	19
	110	19
COVER,PUMP	103	14
	104	14
	105	14
	106	14
COVER/ALTERNATO COMP	5	8
COVER/CLUTCH ASSY	17	36
	22	38
COVER/CYLINDER/LH	91	4
COVER/CYLINDER/RH	91	5
COVER/DUSH/F	112	1
	113	1
COVER/DUSH/REAR ASSY	112	2
	113	2
COVER/DUSH/REAR COMP	112	9
	113	9
COVER/FUSE	145	9
	146	9
	147	9
	148	9
COVER/GLASS	136	2
COVER/INNER COMP	84	5
	85	8
	86	5
	87	8

Description	Fig.	Key
COVER/LEVER	128	8
	129	8
COVER/PLATE	53	1
	97	11
	112	15
	113	15
COVER/ROD/A SET	80	4
COVER/ROD/B SET	80	7
COVER/SENSOR/HST	138	31
	140	32
	143	31
	144	32
COVER/SHAFT/4WD COMP	17	28
	18	30
	19	28
	20	32
	21	30
	22	30
COVER/SHIELD	45	1
COVER/SHIELD/LH	84	7
	85	10
	86	7
	87	10
COVER/SHIELD/RH	84	9
	86	9
COVER/SIDE/L/LH COMP	110	28
COVER/SIDE/L/RH COMP	110	39
COVER/SIDE/S/LH COMP	109	28
COVER/SIDE/S/RH COMP	109	38
COVER/STARTOR/1.1	5	10
COVER/STEERING/F	112	12
	113	12
COVER/STEERING/H/R	113	13
COVER/STEERING/R	112	13
COVER/STEP/LH COMP	128	1
	129	1
COVER/STEP/RH COMP	128	2
	129	2
COVER/SWITCH	137	4
	138	4
	139	4
	140	4
	141	4
	142	4
	143	4

Description	Fig.	Key
COVER/SWITCH	144	4
COVER/TANK/21 COMP	11	20
COVER/TANK/26 COMP	12	20
COVER/WHEEL	92	34
CRANK,LIFT	96	3
CUM/BRAKE COMP	75	9
CUP	9	2
	10	2
CUP/FUEL	11	6
	12	6
CUSHION,B/ RUBBER	11	18
	12	18
	17	25
	18	25
	19	25
	20	27
	21	27
	22	27
	63	9
	151	2
	152	2
CUSHION,RUBBER	7	14
	8	13
CUSHION/RUBBER/10X25	109	5
	110	5
	151	14
	152	14
CYLINDER ASSY	80	1
DAMPER ASSY	116	14
DAMPER/OIL ASSY	63	13
DIODE/3A	145	2
	146	2
	147	2
	148	2
DISK,WHEEL/4.00BX12	176	5
	176	10
DISK/BRAKE	187	11
DISK/CLUTCH/200 COMP	17	37
	22	39
DISK/DAMPER ASSY	18	33
	19	31
	20	35
	21	33
DISK/WHEEL COMP	174	3
	174	8

Description	Fig.	Key
DISK/WHEEL COMP	177	2
DISKPLATE	187	6
DRAWBAR	108	4
DUST SEAL	80	6
	80	9
ELBOW/45DEG ASSY	83	25
ELBOW/90DEG/L ASSY	64	1
	65	1
ELEMENT	9	3
	10	3
ELEMENT ASSY	7	3
	8	4
END,ROD,M10/LH	30	4
ESCUTCHEON	136	7
FAN/HST COMP	25	2
FENDER	114	1
FILTER/08	83	18
FILTER/CHARGE ASSY	64	21
	65	23
FILTER/FUEL	9	1
	10	1
FILTER/LINE/12X18X15	182	10
FILTER/SUCTION ASSY	103	1
	105	1
FILTER/SUCTION/400	104	1
	106	1
FLANGE	103	22
	104	22
FLANGEBOLT	117	8
FLANGEBOLT/M10X16	18	29
	20	31
	53	2
	91	6
FLANGEBOLT/M10X20	13	9
	65	22
	78	12
	103	3
	104	3
	105	3
	106	3
FLANGEBOLT/M10X25	26	32
	34	13
	38	2
	81	2
	92	36

Description	Fig.	Key
FLANGEBOLT/M10X35	14	9
	145	14
	146	14
	147	14
	148	14
FLANGEBOLT/M10X40	28	16
	35	8
	39	7
FLANGEBOLT/M10X50	39	6
FLANGEBOLT/M10X70	33	3
FLANGEBOLT/M12X16	1	25
	2	25
FLANGEBOLT/M12X25	3	21
	4	21
	17	14
	18	14
	19	14
	20	16
	21	16
	22	16
FLANGEBOLT/M12X35	17	15
	18	15
	19	15
	20	17
	21	17
	22	17
FLANGEBOLT/M6X12	1	40
	2	40
	3	35
	4	35
	137	27
	138	26
	141	27
	143	26
	149	3
FLANGEBOLT/M6X16	9	12
	10	12
	145	15
	146	15
	147	15
	148	15
FLANGEBOLT/M6X20	1	21
	2	21
	3	18
	4	18
FLANGEBOLT/M6X25	139	28
	140	27
	142	28
	144	27
FLANGEBOLT/M6X40	103	26
	104	26
FLANGEBOLT/M8X12	1	26
	2	26
	42	7
	43	8
	44	8
	47	6
	51	8
	52	24
	52	27
	105	30
	106	30
	169	25
	169	28
FLANGEBOLT/M8X16	7	12
	9	23
	10	23
	11	21
	12	21
	17	30
	18	32
	19	30
	20	34
	21	32
	22	32
	45	3
	64	7
	65	7
	85	11
	87	11
	103	6
	104	6
	105	6
	106	6
	110	49
	124	8
	125	7
	126	8
	127	7
	128	3
FLANGEBOLT/M8X16	129	3
	133	14
	134	15
	137	52
	138	48
	139	53
	140	49
	141	56
	142	57
FLANGEBOLT/M8X20	11	12
	11	17
	12	12
	12	17
	17	38
	18	34
	19	32
	20	36
	21	34
	22	40
	115	2
	133	21
	134	22
FLANGEBOLT/M8X25	50	11
	63	15
	75	13
	84	6
	85	9
	86	6
	87	9
FLANGEBOLT/M8X30	78	10
	137	8
	138	8
	139	8
	140	8
	141	8
	142	8
	143	8
	144	8
FLANGEBOLT/M8X35	26	35
FLANGEBOLT/M8X80	7	13
FORK/LH COMP	76	14
	76	34
	77	8
	77	23
FORK/RH COMP	76	35

Alpabetical Index

Description	Fig.	Key
FORK/RH COMP	77	24
FORK/SHIFT/DIFFLOCK	68	27
	69	25
FORK/SHIFT/MAIN	42	1
FORK/SHIFT/PTO	51	1
FORK/SHIFT/REVERSE	29	1
FORK/SHIFT/SUB	43	1
	44	1
FRAME COMP	124	4
	126	4
FRAME/HST COMP	125	4
	127	4
FRAME/LH COMP	150	15
FRAME/LOWER/LH COMP	151	18
	152	18
FRAME/LOWER/RH COMP	151	19
	152	19
FRAME/REAR COMP	122	1
	123	1
FRAME/RH COMP	150	16
FRAME/SUB COMP	151	20
FRAME/UPPER COMP	150	1
	151	29
	152	25
FRAME/UPPER/FRONT	151	1
	152	1
FUNNEL ASSY	168	1
FUSE(BLADE/32V15A)	145	6
	146	6
	147	6
	148	6
FUSE/BLADE/32V05A	145	4
	146	4
	147	4
	148	4
FUSE/BLADE/32V10A	145	5
	146	5
	147	5
	148	5
FUSE/BLADE/32V20A	145	7
	146	7
	147	7
	148	7
FUSE/SLOW BLOW/40A	145	3
	146	3

Description	Fig.	Key
FUSE/SLOW BLOW/40A	147	3
	148	3
GASKET	5	2
	6	2
	184	25
	186	1
GAUGE/FUEL ASSY	11	8
	12	8
GAUGE/OIL	31	11
	32	11
GEAR/06X37 SET	66	1
	67	1
GEAR/BEVEL/08	92	26
GEAR/BEVEL/11	92	8
GEAR/BEVEL/12	68	3
GEAR/BEVEL/14	69	5
GEAR/BEVEL/15	90	10
	92	11
GEAR/BEVEL/16	68	5
GEAR/BEVEL/41	92	29
GEAR/HELICAL/09/LH	68	20
	69	18
GEAR/HELICAL/09/RH	68	21
	69	19
GEAR/HELICAL/19	34	14
GEAR/HELICAL/22	34	9
GEAR/HELICAL/22 COMP	26	27
GEAR/HELICAL/23 COMP	26	7
GEAR/HELICAL/24	26	23
GEAR/HELICAL/27-23	26	21
GEAR/HELICAL/52	71	2
GEAR/SPUR/12	37	3
GEAR/SPUR/13	35	1
	49	10
GEAR/SPUR/14	37	2
	46	1
GEAR/SPUR/16	52	11
	169	12
GEAR/SPUR/16-34	40	1
GEAR/SPUR/18	37	7
GEAR/SPUR/19	36	11
	46	7
GEAR/SPUR/20	28	11
GEAR/SPUR/21	27	1
	37	6

Description	Fig.	Key
GEAR/SPUR/22	27	7
	36	14
	41	2
GEAR/SPUR/25	50	4
GEAR/SPUR/26	36	6
GEAR/SPUR/27	46	3
GEAR/SPUR/28	41	5
GEAR/SPUR/29	27	3
	36	4
GEAR/SPUR/29-19	28	19
GEAR/SPUR/31	49	1
GEAR/SPUR/33	52	6
	169	7
GEAR/SPUR/33-14	38	5
GEAR/SPUR/35	41	6
GEAR/SPUR/36	36	9
GEAR/SPUR/38-31-24	39	3
GRILLE	111	2
GRIP/03X17X74	101	21
	102	25
	178	22
	179	15
GRIP/03X17X97	98	18
	99	17
GRIP/4WD	57	5
GRIP/ASSIST	114	3
GRIP/ASSIST COMP	119	4
GRIP/MAIN	54	8
	55	8
	56	8
	62	19
GRIP/MID/PTO	58	8
	59	8
	60	9
	169	37
GRIP/ORANGE	78	5
GRIP/THROTTLE	16	2
	30	14
GROMMET	1	30
	2	30
	11	23
	12	23
	109	36
	109	46
	110	36

Description	Fig.	Key
GROMMET	110	47
	116	31
GROMMET/10X30X1	133	11
	134	12
GROMMET/10X40X03	133	24
	134	25
	135	9
GROMMET/12X17X04	11	28
	12	28
GROMMET/15	1	22
	2	22
GROMMET/25X70X03	18	3
	19	3
	20	3
	21	3
GROMMET/53X59X06	124	3
	125	3
	126	3
	127	3
GROMMET/9	109	35
	109	44
	110	34
	110	46
GUARD/INLET	8	14
GUARD/LIGHT	133	18
	134	19
HARNESS/LAMP	133	17
	134	18
HARNESS/LAMP/FRONT	134	7
HARNESS/LOOP/CIRCUIT	145	23
HARNESS/MAIN/FE ASSY	145	1
	148	1
HARNESS/MAIN/HE ASSY	146	1
	147	1
HARNESS/OILPRESSURE	145	10
	146	10
	147	10
	148	10
HARNESS/SOCKET/E4	133	23
	134	24
	135	8
HARNESS/SWITCH/SEAT	147	23
HARNESS/TRAILER/E4	133	22
	134	23
	135	7

Description	Fig.	Key
HEAD/CYLINDER	95	11
HEAD/SPOOL	185	2
	185	2
HITCH/FRONT COMP	88	2
HOLDER	16	11
HOLDER/15	105	29
	106	29
HOLDER/1ST ASSY	101	11
	102	11
	178	12
HOLDER/2ND ASSY	102	13
	179	5
HOLDER/JE/9-9	1	8
	2	8
	64	4
	65	4
	83	13
	115	4
	145	19
	146	19
	147	19
	148	19
HOLDER/SHAFT/DIFF	68	7
HOLDER/SHAFT/H ASSY	77	16
HOLDER/SHAFT/M ASSY	76	22
HOOD COMP	109	1
HOOD/CY COMP	110	1
HOOD/LAMP	111	6
HOOK	23	6
HOOK,SPRING	95	33
HOOK/CRUISE COMP	62	21
HOOK/TOPLINK	107	38
HORN ASSY	137	26
	138	25
	139	26
	140	25
	141	26
	142	26
	143	25
	144	25
HOSE	9	9
	10	9
HOSE,HYDUALIC/1700	64	3
	65	3
	83	9

Description	Fig.	Key
HOSE/04X08X300	9	18
	10	18
HOSE/04X08X400	9	15
	10	15
HOSE/08X13X300	9	7
	9	13
	10	7
	10	13
HOSE/1050 ASSY	105	31
	106	31
HOSE/130	82	5
	83	5
HOSE/1570 ASSY	64	16
	65	16
	103	31
	104	31
HOSE/205	1	11
	2	11
HOSE/230	1	12
	2	12
HOSE/270	3	10
	4	10
HOSE/660 ASSY	101	23
	102	27
	178	24
	179	17
HOSE/700	11	7
	12	7
HOSE/780	82	15
HOSE/90	103	10
	104	10
	105	10
	106	10
HOSE/CLEANER/OUTLET	7	9
	8	9
HOSE/HYDRAULIC/1350	83	23
HOSE/HYDRAULIC/900	82	9
HOSE/HYDRO/1050 ASSY	82	20
	83	30
HOSE/HYDRO/950 ASSY	82	19
	83	29
HOSE/JOINT	57	9
HOSE/RADIATOR/INLET	1	4
	2	4
	3	4

Alpabetical Index

Description	Fig.	Key
HOSE/RADIATOR/INLET	4	4
HOSE/RADIATOR/OUTLET	1	7
	2	7
	3	7
	4	7
HOSE/RUBBER	1	36
	1	37
	2	36
	2	37
	3	31
	3	32
	4	31
	4	32
HOUSING/AXLE	91	1
HOUSING/AXLE/LH	70	1
HOUSING/AXLE/RH	70	2
HOUSING/CLUTCH ASSY	17	1
	22	1
HOUSING/CLUTCH/HST	18	1
	19	1
	20	1
	21	1
HST/TME/23 ASSY	33	1
HUB	28	1
	36	2
	36	8
	36	13
HUB/19X27X32	53	3
	73	7
HUB/25X40X49	41	4
HUB/SPACER COMP	107	5
HUB/SWITCH	78	7
INSULATOR	1	19
	1	20
	1	28
	1	29
	2	19
	2	20
	2	28
	2	29
	3	17
	3	23
	4	17
	4	23
	11	16
INSULATOR	12	16
	18	4
	19	4
	20	4
	21	4
	63	8
	88	7
	108	11
	108	13
	109	9
	109	29
	109	34
	109	39
	109	45
	110	9
	110	29
	110	35
	110	40
	110	45
	111	7
	112	18
	112	19
	113	18
	113	19
	115	3
	116	16
	124	5
	125	5
	126	5
	127	5
	128	7
	129	7
	150	10
INSULATOR/10X10X290	1	3
	2	3
	3	3
	4	3
	109	11
INSULATOR/10X10X30	111	5
INSULATOR/120	98	19
INSULATOR/145X215	112	20
	113	20
INSULATOR/170	122	11
INSULATOR/20X350	1	2
	2	2
INSULATOR/20X350	3	2
	4	2
INSULATOR/220	3	24
	4	24
INSULATOR/30	110	38
INSULATOR/30X30X200	85	3
	87	3
INSULATOR/380	111	3
INSULATOR/50X50X15	1	41
	2	41
	3	36
	4	36
INSULATOR/550	11	22
	12	22
INSULATOR/60X480	11	24
	12	24
INSULATOR/60X90	11	25
	12	25
INSULATOR/DASH/UPPER	112	22
	113	22
INSULATOR/HOOD	110	10
INSULATOR/LAMP	133	8
	134	9
INSULATOR/LEVER/SUB	58	9
	59	9
	60	10
	101	20
	102	24
	169	38
	178	21
	179	14
INSULATOR/MOUNT	120	1
	122	12
INSULATOR/SIDE	11	31
	12	31
	109	10
INSULATOR/STEERING	81	9
INSULATOR/UPPER	11	32
	12	32
JOINT BALL M08LH	61	6
JOINT BALL M08RH	61	5
JOINT/UNIVERSAL ASSY	89	2
KEY	137	2
	138	2
	139	2

Description	Fig.	Key
KEY	140	2
	141	2
	142	2
	143	2
	144	2
KIT/CN-4P-M SET	180	1
KIT/SEAL SET	81	6
KNOB	95	29
KNOB ASSY	116	15
LABEL/1322/2014	117	10
LABEL/4WD/E4	160	4
	161	4
LABEL/78/764	117	9
LABEL/ADJUST	116	18
LABEL/BATTERY	163	3
	163	4
	164	3
	164	4
	165	3
	165	4
	166	3
	166	4
	167	3
	167	4
LABEL/BATTERY/55B24R	164	5
	165	5
LABEL/BATTERY/80D26R	166	5
	167	5
LABEL/CAUTION/BATTER	163	2
	164	2
	165	2
	166	2
	167	2
LABEL/CAUTION/STEP	164	11
	165	11
	166	11
	167	11
LABEL/COLUMN/LH/7	160	8
	161	8
	162	2
LABEL/COLUMN/RH	160	9
LABEL/COLUMN/RH/E4	161	9
	162	3
LABEL/CONTROL/FOOD	160	13
	161	12
LABEL/CONTROL/HST/LH	161	2
LABEL/CONTROL/LH	160	2
LABEL/CONTROL/LINEAR	160	11
LABEL/CONTROL/RH	160	1
	161	1
LABEL/CONTROL/ROPS	151	33
	152	29
LABEL/CONTROL/SLOWRE	160	6
	161	6
LABEL/CONTROL/THROTT	160	10
	161	10
	162	4
LABEL/DIFF/TM/E4	160	3
	161	3
LABEL/ETHER	163	7
	164	8
	165	8
	166	8
	167	8
LABEL/FUEL	163	10
	164	13
	165	13
	166	13
	167	13
LABEL/MAINTENANCE/TM	160	12
	161	11
LABEL/PARKING	160	5
	161	5
LABEL/PORT/1ST/E4	101	30
	102	35
	178	31
LABEL/PORT/2ND/E4	102	36
	179	23
LABEL/PROTECTION LEV	159	1
LABEL/PTO/TRAILER	164	10
	165	10
	166	10
	167	10
LABEL/ROPS	150	19
LABEL/ROPS/CENTER	151	32
	152	28
LABEL/SEAT	116	32
LABEL/SHIFT	164	15
	165	15
	166	15
LABEL/SHIFT	167	15
LABEL/SPEED/HST/E4	165	14
	167	14
LABEL/SPEED/M/E4	164	14
	166	14
LABEL/SUBCON	101	31
	102	37
	178	32
LABEL/SWITCH/MAIN/E4	160	7
	161	7
	162	1
LABEL/TRH-1774	108	14
LABEL/W/FAN	163	1
	164	1
	165	1
	166	1
	167	1
LABEL/W/RADIATOR	163	8
	164	9
	165	9
	166	9
	167	9
LABEL/W/STARTER	163	9
	164	12
	165	12
	166	12
	167	12
LABEL/WARNING/BELT	163	5
	164	6
	165	6
	166	6
	167	6
LABEL/WARNING/FUEL	163	11
	164	16
	165	16
	166	16
	167	16
LABEL/WARNING/HOT	163	6
	164	7
	165	7
	166	7
	167	7
LAMP/COMBINATION/FRO	133	1
	134	1
	135	1

Description	Fig.	Key
LAMP/COMBINATION/REA	133	7
	134	8
LAMP/HEAD/G ASSY	132	1
LAMP/HEAD/H4 ASSY	131	1
LAMP/LED ASSY	137	25
	138	24
	139	25
	140	24
	141	25
	142	25
	143	24
	144	24
LAMP/NUMBERPLAT SET	133	15
	134	16
LAMP/SOCKET ASSY	136	5
	136	12
LENS	133	5
	134	5
	135	5
LEVER COMP	16	1
LEVER/1ST COMP	101	18
	102	21
	178	19
LEVER/2ND COMP	102	22
	179	12
LEVER/CRUISE COMP	62	17
LEVER/MAIN ASSY	54	6
LEVER/PARKING ASSY	78	1
LEVER/POSITION	98	16
LEVER/PTO/MID ASSY	60	7
	169	35
LEVER/PTO/REAR ASSY	58	6
	59	6
LEVER/REVERSE COMP	30	12
LEVER/SUB/HST ASSY	55	6
LEVER/SUB/MECH ASSY	56	6
LIFTROD/L COMP	107	27
LINING/11X30X02	98	9
	99	9
LINING/11X40X03	16	3
LINK	26	14
LINK BRACKET	107	39
LINK SHIFT ARM	97	23
LINK,CRANK	97	13
LINK/DRAWBER	108	5

Description	Fig.	Key
LINK/LOWER COMP	107	1
LINK/SPOOL COMP	97	12
LINK/SUPPORT COMP	97	19
LINK/TOP/LH COMP	107	32
LINK/TOP/RH COMP	107	34
LINKPIN	88	6
	107	3
	107	37
	108	10
	150	6
	151	11
	152	11
LOCKPLATE	76	9
MAT/HST	129	4
MAT/MECH	128	4
METAL,DIFF-CASE LH	68	15
	69	13
METAL/AUX/VALVE	101	6
	102	6
	178	7
METAL/BRAKE	75	11
METAL/DIFF/RH	68	16
	69	14
METAL/FRONT	35	7
METAL/FRONT/HST COMP	28	15
METAL/INPUT/FRONT	26	1
METAL/INPUT/FRONT/HS	34	1
METAL/INPUT/REAR	26	31
METAL/INPUT/REAR/HST	34	12
METAL/PIVOT/FRONT	91	8
METAL/PIVOT/REA ASSY	91	14
METAL/PTO	50	9
METAL/REAR	38	1
METAL/REAR/HST	39	5
METAL/SLIDE	184	5
MIRROR ASSY	118	4
	119	1
MOLDING/LH/L	154	3
	157	2
MOLDING/LH/M	155	3
	156	3
	158	2
MOLDING/RH/L	154	4
	157	3
MOLDING/RH/M	155	4

Description	Fig.	Key
MOLDING/RH/M	156	4
	158	3
MUFFLER COMP	5	1
	6	1
NEEDLE	184	15
NET/SIDE/LH	109	32
	110	32
	111	8
NET/SIDE/RH	109	42
	110	43
	111	9
NIPPLE,GREASE/B-M6F	76	42
	77	31
NIPPLE,GREASE/PT1/8	17	5
	18	5
	19	5
	20	5
	21	5
	22	5
	23	4
	63	5
	76	8
	76	24
	76	31
	77	3
	77	18
	91	13
NIPPLE/GREASE	91	16
NOB/LOCK	150	11
NUT	107	19
	137	29
	137	31
	138	34
	139	30
	139	32
	140	35
	141	29
	141	31
	142	30
	142	32
	143	34
	144	35
	182	13
NUT,CASTLE/M10 P1.25	16	6
	79	3

Description	Fig.	Key
NUT,CASTLE/M10 P1.25	94	5
NUT,SPEED/M6	111	11
	112	11
	113	11
NUT,TOP LINK LOCK	107	35
NUT,U/M16	108	7
NUT/FLANGE/M08	117	7
NUT/LH/M08	23	12
	61	7
	76	12
	76	37
	77	6
	77	26
NUT/M10	30	7
	30	10
	68	34
	69	32
	95	32
	98	12
	99	12
	114	6
	150	14
NUT/M10 P=1.25 7T	17	10
	18	10
	19	10
	20	12
	21	12
	22	12
NUT/M10/7T	17	16
	17	21
	18	16
	18	21
	19	16
	19	21
	20	18
	20	23
	21	18
	21	23
	22	18
	22	23
	26	3
	31	7
	32	7
	34	5
	70	9

Description	Fig.	Key
NUT/M10/7T	95	9
NUT/M12	91	12
	181	3
NUT/M12/7T	20	10
	21	10
	22	10
	70	5
	92	25
	92	40
	107	11
	107	15
	107	31
	107	44
	122	7
	122	17
	123	7
	123	14
NUT/M14/7T	91	19
	150	18
	151	31
	152	27
NUT/M16	96	12
	150	3
NUT/M16,P=1.5	107	22
NUT/M16/7T	151	6
	152	6
NUT/M24	107	28
NUT/M6	13	5
	14	5
NUT/M8	11	19
	12	19
	17	26
	18	26
	19	26
	20	28
	21	28
	22	28
	23	13
	61	9
	61	19
	63	10
	76	13
	76	36
	77	7
	77	25

Description	Fig.	Key
NUT/M8	96	8
	98	3
	99	3
	107	7
	109	17
	110	17
	151	4
	152	4
	186	7
NUT/M8/7T	17	8
	18	8
	18	37
	19	8
	19	35
	20	8
	20	39
	21	8
	21	37
	22	8
	75	15
	101	9
	102	9
	178	10
NUT/RING	137	3
	138	3
	139	3
	140	3
	141	3
	142	3
	143	3
	144	3
NUT/SPRING	112	4
	113	4
NUT/WASHER/M4	11	10
	12	10
NUT/WASHER/M6	5	11
	13	4
	14	4
	85	13
	87	13
	112	17
	113	17
	116	25
	116	28
	145	18

Alpabetical Index

Description	Fig.	Key
NUT/WASHER/M6	146	18
	147	18
	148	18
NUT/WASHER/M8	7	15
	8	15
	30	18
	63	14
	78	17
	88	10
	89	11
	101	28
	102	33
	110	50
	116	23
	116	33
	130	3
	145	12
	145	20
	146	12
	146	20
	147	12
	147	20
	148	12
	148	20
	178	29
	179	21
OIL SEAL	184	33
O-RING/1A,G115	75	12
O-RING/1A,G40	33	10
O-RING/1A,G45	103	2
	104	2
	105	2
	106	2
O-RING/1A,G60	33	9
O-RING/1A,G70	91	7
O-RING/1A,G90	92	4
O-RING/1A,P10A	68	32
	69	30
	97	24
O-RING/1A,P14	29	6
	42	5
	43	6
	44	6
	51	6
	52	22

Description	Fig.	Key
O-RING/1A,P14	169	23
O-RING/1A,P15	64	14
	65	14
O-RING/1A,P16	70	14
O-RING/1A,P18	47	4
	75	10
O-RING/1A,P29	103	5
	104	5
	105	5
	106	5
O-RING/1A,P36	81	12
O-RING/1A,P55	97	2
O-RING/1A,P7	97	21
O-RING/1A,S42	80	11
O-RING/1B,G50 HS90	103	16
	104	16
	105	16
	106	16
O-RING/1B,G60	95	17
O-RING/1B,P10	33	7
	83	17
	95	22
O-RING/1B,P11	64	2
	65	2
	82	8
	82	12
	82	14
	82	18
	83	8
	83	12
	83	20
	83	26
	83	28
	184	29
O-RING/1B,P12	95	14
	95	16
	100	2
	101	3
	102	3
	178	4
	182	12
	183	7
	185	21
	185	21
O-RING/1B,P14	31	10

Description	Fig.	Key
O-RING/1B,P14	32	10
	64	9
	64	11
	64	13
	64	18
	65	9
	65	11
	65	13
	65	18
	82	4
	83	4
	184	28
	185	28
	185	28
O-RING/1B,P15	33	8
O-RING/1B,P18	103	29
	104	29
	105	35
	106	35
	151	16
	152	16
O-RING/1B,P20	103	8
	103	25
	104	8
	104	25
	105	8
	105	25
	106	8
	106	25
	182	2
	182	7
O-RING/1B,P22	103	17
	104	17
	105	17
	106	17
O-RING/1B,P6	103	18
	104	18
	105	18
	106	18
	183	8
O-RING/1B,P7	28	18
	83	16
	185	25
	185	25
O-RING/1B,S16	182	8

Description	Fig.	Key
O-RING/1B,S38	80	10
O-RING/AS568/013	182	3
O-RING/AS568/014	182	4
O-RING/AS568/015	182	5
ORNAMENT/3217	156	2
ORNAMENT/3247	155	2
ORNAMENT/3267	154	2
ORNAMENT/HYDRO	153	1
ORNAMENT/I	154	5
	155	5
	156	5
	157	4
	158	4
ORNAMENT/ISEKI/170	154	1
	155	1
	156	1
	157	1
	158	1
ORNAMENT/STEERING	154	6
	155	6
	156	6
	157	5
	158	5
PACKING	1	16
	1	34
	2	16
	2	34
	3	14
	3	29
	4	14
	4	29
	11	4
	12	4
	91	3
	95	15
PACKING,OIL PUMP	82	2
	83	2
	103	21
	104	21
	105	21
	106	21
PACKING/PISTON	80	3
PACKING/RUBBER	11	9
	12	9
	95	38

Description	Fig.	Key
PACKINGA	11	5
	12	5
PAD	23	5
	76	5
	77	4
	124	6
	126	6
PAD/HST	63	6
PAD/HST/R	63	7
PANEL/BACK	116	3
PANEL/INSTRUMEN ASSY	136	1
PEDAL/BRAKE/H ASSY	77	1
PEDAL/BRAKE/LH SET	76	1
PEDAL/BRAKE/RH ASSY	76	6
PEDAL/CLUTCH ASSY	23	1
PEDAL/DIFFLOCK	73	9
	74	9
PEDAL/HST/F ASSY	63	3
PEDAL/HST/R SET	63	1
PIN	17	32
	22	34
	23	15
	62	10
	63	12
	76	38
	77	27
	184	46
PIN ASSY	150	4
	151	9
	152	9
PIN COMP	108	12
PIN,HAIR	116	21
PIN,ROD COMP	97	5
PIN,SEAT SET	116	20
PIN,SPLIT/1.6X15	114	10
PIN,SPLIT/2.5X15	16	7
PIN,SPLIT/2.5X20	57	8
	58	5
	59	5
	62	8
	72	3
	73	3
	74	3
	76	19
	76	40

Description	Fig.	Key
PIN,SPLIT/2.5X20	77	13
	77	29
	78	15
	94	7
PIN,SPLIT/2.5X25	54	5
	55	5
	56	5
	60	6
	169	34
PIN,SPLIT/2X15	24	5
	25	5
	97	14
	97	17
PIN,SPLIT/2X20	15	4
	16	10
	23	8
	23	17
	61	24
	76	20
	77	14
	79	4
PIN,SPLIT/3X20	30	9
	107	21
PIN,SPRING/3X18 W	57	6
PIN,SPRING/3X25 W	185	24
	185	24
PIN,SPRING/5X20 W	98	15
	99	15
PIN,SPRING/5X25 W	90	12
PIN,SPRING/6X28 W	57	2
	60	2
	169	30
PIN,SPRING/6X40 W	52	8
	169	9
PIN,ST	184	42
PIN,ST,A/8X18	70	12
	95	10
PIN,ST,B/10X24	26	5
	26	33
	28	17
	34	7
	35	9
	38	3
	39	8
	50	10

Alpabetical Index

Description	Fig.	Key
PIN,ST,B/10X24	52	2
	92	7
	92	35
	169	3
PIN,ST,B/3X10	184	47
PIN,ST,B/8X16	33	2
	69	8
PIN,TAPER/8X50	63	2
	72	5
	74	5
	76	2
	76	26
	77	20
PIN,TOP LINK	107	36
PIN,YOKE A	76	17
	77	11
PIN/06X07	109	20
	110	20
PIN/06X31	101	15
	102	18
	178	16
	179	9
PIN/06X33	24	3
	25	3
PIN/08X32	68	9
PIN/08X39	76	16
	77	10
PIN/12X42	107	20
PIN/12X75	90	11
PIN/14X40	68	8
PIN/14X94	68	2
PIN/16X73	107	29
PIN/19X94	150	5
PIN/19X94 COMP	151	10
	152	10
PIN/20X51	52	5
	169	6
PIN/22X404	107	4
PIN/22X86	96	9
PIN/25X91	108	9
PIN/30X120 COMP	88	5
PIN/5X17	97	16
PIN/6X16	61	22
PIN/GROOVE	68	30
	69	28

Description	Fig.	Key
PIN/HOOD	109	12
	110	12
PIN/INSERT	26	17
PIN/NEUTRAL	61	11
PIN/PARALLEL/08X32	68	10
	69	7
PIN/SNAP	62	9
	62	16
	101	16
	102	19
	109	7
	109	22
	109	50
	110	7
	110	22
	110	54
	178	17
	179	10
PIN/SUPPORT COMP	97	20
PINION/BEVEL SET	90	1
PINION/BEVEL/11	90	9
PINION/BEVEL/12	69	3
PIPE	1	38
	2	38
	3	33
	4	33
PIPE/CHECKVALVE	64	15
	65	15
PIPE/CLEANER/INLET	7	7
	8	7
PIPE/DEL/F/B COMP	105	22
	106	22
PIPE/DEL/REAR COMP	103	28
	104	28
	105	23
	106	23
PIPE/OIL COMP	95	35
PIPE/SUC/FRONT COMP	103	7
	104	7
	105	7
	106	7
PIPE/SUC/H/B COMP	106	4
PIPE/SUC/H/C COMP	104	4
PIPE/SUC/M/B COMP	105	4
PIPE/SUC/M/C COMP	103	4

Description	Fig.	Key
PISTON	97	1
	184	6
	187	1
PIVOT/TRUNNION COMP	61	1
PLATE	11	3
	12	3
	98	8
	99	8
	150	12
	185	23
	185	23
PLATE COMP	17	20
	18	20
	19	20
	20	22
	21	22
	22	22
	26	34
	85	12
	87	12
	89	9
PLATE,SWITCH	137	39
	138	42
	139	40
	140	43
	141	39
	142	40
	143	42
	144	43
PLATE/BACK	187	7
PLATE/BATTERY	13	3
	14	3
PLATE/BUMPER	88	15
PLATE/BUMPER SET	88	1
PLATE/CHAIN/LH	107	8
PLATE/CHAIN/RH	107	12
PLATE/FRICTION	75	3
	75	7
PLATE/HOOK COMP	62	11
PLATE/I/166X182	122	10
PLATE/I/25X60	105	28
	106	28
PLATE/I/30X50	42	6
	43	7
	44	7

Description	Fig.	Key
PLATE/I/30X50	47	5
	51	7
	52	23
	169	24
PLATE/I/43X90	78	6
PLATE/IR/19X140	58	3
	59	3
PLATE/IR/19X144	54	3
PLATE/IR/44X60	111	13
PLATE/L/203X80	18	28
	20	30
PLATE/L/50X45	11	11
	12	11
PLATE/LOCK COMP	109	26
	110	26
PLATE/NUMBER/E4	130	1
PLATE/PRESSURE/LH	75	1
PLATE/PRESSURE/RH	75	5
PLATE/SEPARATER	75	2
	75	6
	187	5
PLATE/SOCKET COMP	133	20
	134	21
PLATE/SPRING	184	22
PLATE/STOP COMP	114	7
PLATE/STOPPER	95	23
	116	19
PLATE/STOPPER COMP	96	13
PLATE/SWASH/HMS1/027	184	4
PLATE/U/10X22 COMP	76	15
	77	9
PLATE/U/196X44	151	21
PLATE/VALVE/MOTOR	184	9
PLATE/VALVE/PUMP	184	8
PLATE/Z/19X313	55	3
PLATE/Z/19X380	169	32
PLUG	1	15
	2	15
	3	13
	4	13
	112	21
	113	21
	183	4
PLUG(G3/8)	184	26
PLUG(PF1/4)	184	27

Description	Fig.	Key
PLUG,DRAIN	70	13
PLUG/G3/8 ASSY	31	9
	32	9
PLUG/M12	183	5
PLUG/M14	185	18
	185	18
PLUG/SCREW/SEAL	17	6
	18	6
	19	6
	20	6
	21	6
	22	6
	34	2
	52	25
	92	23
	95	12
	101	7
	101	29
	102	7
	102	34
	103	24
	104	24
	105	24
	106	24
	169	26
	178	8
	178	30
	179	22
	182	16
	182	17
	182	18
	183	6
PLUG/SEAL	185	27
	185	27
POPPET	182	15
	185	19
	185	19
POPPET/CHECK	184	24
POPPET/CHECK/1.3	184	23
POPPET/RELIEF	184	21
PRESSURE/BRAKE	187	12
PROTECTOR/040	3	19
	4	19
PTO/MID SET	169	1
PUMP,GEAR ASSY	103	13

Description	Fig.	Key
PUMP,GEAR ASSY	104	13
	105	13
	106	13
PUMP,GEAR ASSY	103	12
	104	12
	105	12
	106	12
PUMP/FUEL ASSY	9	11
	10	11
PUMP/GEAR/5.2/R ASSY	82	1
	83	1
R.B.B	66	6
RADIATOR/390X30 ASSY	1	1
	2	1
RADIATOR/390X35 ASSY	3	1
	4	1
RAIL/SLIDE/SEAT/L	116	12
RAIL/SLIDE/SEAT/R	116	13
RBB 6905	61	12
RELAY/5P ASSY	137	13
	137	18
	137	19
	137	20
	137	21
	137	22
	138	13
	138	18
	138	19
	138	20
	138	21
	139	13
	139	18
	139	19
	139	20
	139	21
	139	22
	140	13
	140	18
	140	19
	140	20
	140	21
	141	13
	141	18
	141	19
	141	20

Description	Fig.	Key
RELAY/5P ASSY	141	21
	141	22
	142	13
	142	18
	142	19
	142	20
	142	21
	142	22
	143	13
	143	18
	143	19
	143	20
	143	21
	144	13
	144	18
	144	19
	144	20
	144	21
RELAY/FLASHER/EEC	137	11
	138	11
	139	11
	140	11
	141	11
	142	11
	143	11
	144	11
RESERVETANK ASSY	1	32
	2	32
	3	27
	4	27
RING	150	8
	151	13
	152	13
RING,BACKUP	97	3
RING,SNAP/10 C	61	15
	62	12
	62	20
RING,SNAP/12 C	62	4
RING,SNAP/17 C	28	7
	184	41
RING,SNAP/18 C	53	5
	60	12
	72	7
	73	6
	74	7

Description	Fig.	Key
RING,SNAP/18 C	169	40
RING,SNAP/19 C	46	2
RING,SNAP/20 C	26	9
	28	2
	28	13
	37	1
	37	4
	46	6
	50	7
	66	7
	184	30
RING,SNAP/22 C	77	32
RING,SNAP/24 C	185	17
	185	17
RING,SNAP/25 C	26	24
	28	22
	37	5
	49	5
	52	14
	67	6
	67	8
	76	4
	90	5
	95	24
	169	15
RING,SNAP/30 C	26	30
	35	3
	68	22
	69	20
	71	7
	92	33
	184	40
RING,SNAP/32 C	184	32
RING,SNAP/35 C	92	16
	96	6
RING,SNAP/42 C	61	13
RING,SNAP/47 C	26	11
	184	31
RING,SNAP/52 C	52	17
	90	7
	92	3
	92	22
	169	18
RING,SNAP/R62	66	13
	67	14

Description	Fig.	Key
RING,SNAP/R62	68	25
	69	23
	92	10
	92	17
RING,SNAP/R80	71	9
RING,SNAP/S40	90	16
	96	5
RING,SNAP/S50	90	15
RING/22	28	5
RING/25	28	6
RING/O	9	4
	9	5
	10	4
	10	5
	187	2
	187	3
RING/O/F404/1015	182	9
RING/SNAP	35	6
RING/SNAP/CS25	66	5
	67	5
RING/SYNCHRONIZER	26	19
RIVET,BLIND/4X7	109	33
	109	43
	110	33
	110	44
ROD	30	3
	78	2
	97	4
ROD COMP	23	14
	72	1
	73	1
	74	1
ROD PACKING	80	5
	80	8
ROD/120 COMP	76	32
	77	21
ROD/435 COMP	76	11
	77	5
ROD/4WD	57	4
ROD/65 COMP	23	10
ROD/HOOD	109	47
	110	51
ROD/LIFT/LH COMP	107	24
ROD/M08X110 COMP	61	3
ROD/M08X65 COMP	76	33

Description	Fig.	Key
ROD/M08X65 COMP	77	22
ROD/M08X85	61	18
ROD/M8X65 COMP	61	4
ROD/MID COMP	60	4
ROD/PISTON	80	2
ROD/SUB COMP	56	3
RODEND ASSY	94	1
RODEND/A ASSY	94	3
RODEND/B ASSY	94	2
SCREW	133	6
	134	6
	135	6
	136	14
	186	3
SCREW,SEMS/M5X30	133	25
	134	26
SCREW,SOCKET/M10X35	184	43
SCREW,SOCKET/M6X10	185	26
	185	26
SCREW,SOCKET/M8X20	185	15
	185	15
SCREW,SP/M4X25	138	28
	140	29
	143	28
	144	29
SCREW,SP/M5X16	137	15
	138	15
	139	15
	140	15
	141	15
	142	15
	143	15
	144	15
SCREW,SP/M6X12	1	46
	2	45
	3	41
	4	40
	109	31
	109	41
	110	31
	110	42
	112	16
	113	16
SCREW,SP/M6X16	112	14
	113	14
SCREW,SP/M6X16	116	30
	136	15
SCREW,SP/M6X20	112	8
	113	8
SCREW/4X16	136	10
SCREW/M03X20	137	38
	138	41
	139	39
	140	42
	141	38
	142	39
	143	41
	144	42
SCREW/M03X22	136	9
SCREW/M6X40	95	30
SCREW/M8X20	101	27
	178	28
SCREW/M8X60	102	32
	179	20
SCREW/RH/M24 COMP	107	26
SCREW/TAPPING	136	8
	136	11
SCREW/TAPPING/3.5X13	137	10
	138	10
	139	10
	140	10
	141	10
	142	10
	143	10
	144	10
SCREW/TRUSS/M06X16	128	5
	129	5
SCREW/TRUSS/M08X20	114	2
	118	12
SEAL,OIL/21	90	6
SEAL,OIL/QLF488011.5	71	4
SEAL,OIL/TC14287	103	15
	104	15
	105	15
	106	15
SEAL,OIL/TC20357	17	4
	22	4
	26	8
	46	10
SEAL,OIL/TC20477	184	35
SEAL,OIL/TC35528	52	19
	169	20
SEAL,OIL/TC35558	50	8
SEAL,OIL/TC4,14247	185	6
	185	6
	185	16
	185	16
SEAL,OIL/VC35506	96	2
SEAL/10X10X420	110	11
SEAL/30X30X50	1	31
	2	31
	3	25
	4	25
SEAL/47	184	36
SEAL/52	92	2
	92	21
SEAL/DUST	95	25
SEAL/OIL	91	10
	184	34
SEAL/OIL ASSY	92	13
SEAL/QLNY35571116	92	30
SEAT ASSY	116	1
SEAT/BACK ASSY	117	2
SEAT/CUSHION ASSY	117	3
SEAT/SLIDE ASSY	117	6
SEAT/SLIDE/LEVE ASSY	117	5
SEAT/SUSPENSION ASSY	117	4
SEAT/W10 SET	117	1
SHAFT	39	1
SHAFT,DIFF. PINION	69	2
SHAFT/4WD	46	9
SHAFT/4WD ASSY	89	1
SHAFT/ARM/DIFF COMP	73	4
SHAFT/BRAKE/H SET	77	19
SHAFT/BRAKE/M SET	76	25
SHAFT/DIFF SET	72	4
	74	4
SHAFT/DRIVE/PTO	49	6
SHAFT/INPUT	24	1
	25	1
SHAFT/L	93	1
SHAFT/LIFT	96	1
SHAFT/MOTOR	184	11
SHAFT/PTO	50	1
SHAFT/PTO COMP	28	4

Description	Fig.	Key
SHAFT/PTO/MID	52	10
	169	11
SHAFT/PUMP/HMS1/014	184	10
SHAFT/R	93	2
SHAFT/SLOWRETURN	95	21
	95	28
SHAFT/STEERING/ COMP	81	8
SHAFT/WHEEL	71	1
	92	28
SHAFT/YOKE	89	3
	89	4
SHIM,DIFF-CASE A	68	17
	69	15
SHIM,DIFF-CASE B	68	18
	69	16
SHIM/0.1	66	10
	67	11
SHIM/0.2	66	11
	67	12
SHIM/1.8	184	7
SHIM/2	90	3
SHROUD COMP	1	18
	2	18
	3	16
	4	16
SLEEVE	17	34
	22	36
	26	16
	50	2
	52	18
	169	19
	185	8
	185	8
SLEEVE/DETENT	185	10
	185	10
SNAPRING	187	8
SNAPRING/32	187	10
SNAPRING/85	187	13
SPOOL/DELECT	185	22
	185	22
SPRING	1	45
	2	44
	3	40
	4	39
	26	18
SPRING	78	3
	107	2
	109	30
	109	40
	110	30
	110	41
	183	2
	183	3
	185	20
	185	20
	187	4
SPRING,PRESS/22	16	4
SPRING,PRESS/40	68	31
	69	29
SPRING,SHIFTER	52	12
	169	13
SPRING,TENSION/31	97	10
SPRING,TENSION/53	15	1
	17	33
	22	35
	98	13
	99	13
	109	51
	110	55
SPRING/HC015	95	26
	185	12
	185	12
SPRING/HC017	182	14
SPRING/HC021	184	20
SPRING/HC022	29	2
	44	2
	51	2
SPRING/HC023	42	2
	43	2
	47	2
SPRING/HC030	184	19
SPRING/HC037	116	29
SPRING/HC042	185	5
	185	5
SPRING/HC053	184	18
SPRING/HC090	109	2
	110	2
SPRING/HE036	109	23
	110	23
SPRING/HE068	61	20
SPRING/HE089	109	18
	110	18
SPRING/HE095	62	5
	72	8
	73	8
	74	8
SPRING/HE106	23	3
SPRING/HE108	61	17
SPRING/HE110	77	33
SPRING/HE120	76	21
	77	15
SPRING/HT018	62	13
SPRING/WASHER	98	10
	99	10
STAY	114	4
STAY/COLUMN	11	26
	12	26
STAY/CONTROLLER	149	2
STAY/CYLINDER	80	12
STAY/HITCH/FRON COMP	88	11
STAY/LAMP COMP	133	9
	134	10
STAY/LH COMP	118	7
STAY/MIRROR COMP	118	1
STAY/SHIFT	51	4
STAY/SHIFT/REVERSE	29	4
STAY/SHIFT/SUB	43	4
	44	4
STAY/SHIFTER	68	28
	69	26
STAY/SWITCH COMP	137	48
	139	49
	141	52
	142	53
STEP/SUB COMP	124	7
	125	6
	126	7
	127	6
STOPPER	116	17
STOPPER/SPRING/A	185	3
	185	3
STOPPER/SPRING/B	185	4
	185	4
STRAP	116	6
STRIKER	116	5

Description	Fig.	Key
STUD/M10X20/7T	17	24
	18	24
	19	24
	20	26
	21	26
	22	26
	26	6
	34	8
STUD/M10X25/7T	48	3
STUD/M10X25/7T,SEAL	48	2
STUD/M10X30/7T	48	8
STUD/M10X70/7T	48	6
STUD/M10X90/7T	31	4
	32	4
STUD/M12X20/7T	92	39
STUD/M12X25/7T	48	5
	107	43
STUD/M12X50/7T	48	7
STUD/M14X35/9T	91	18
STUD/M8X20,SEAL	101	8
	102	8
	178	9
STUD/M8X25/7T	17	7
	18	7
	18	35
	19	7
	19	33
	20	7
	20	37
	21	7
	21	35
	22	7
SUBCONCOVER	100	1
SUSPENSION ASSY	116	11
SWITCH,SAFETY ASSY	138	27
	140	28
	143	27
	144	28
SWITCH/ALTERNAT ASSY	149	5
SWITCH/BEACON ASSY	137	50
	138	46
	139	51
	140	47
	141	54
	142	55

Description	Fig.	Key
SWITCH/COMBINATION	137	9
	138	9
	139	9
	140	9
	141	9
	142	9
	143	9
	144	9
SWITCH/HAZARD ASSY	137	5
	138	5
	139	5
	140	5
	141	5
	142	5
	143	5
	144	5
SWITCH/LEVER ASSY	137	40
	137	43
	138	43
	139	41
	139	44
	140	44
	141	40
	141	43
	142	41
	142	44
	143	43
	144	44
SWITCH/LIMIT ASSY	137	37
	138	40
	139	38
	140	41
	141	37
	142	38
	143	40
	144	41
SWITCH/MAIN ASSY	137	1
	138	1
	139	1
	140	1
	141	1
	142	1
	143	1
	144	1
SWITCH/PTO ASSY	149	4

Description	Fig.	Key
SWITCH/PUSH ASSY	137	28
	137	30
	138	33
	139	29
	139	31
	140	34
	141	28
	141	30
	142	29
	142	31
	143	33
	144	34
SWITCH/SEAT ASSY	116	26
SWITCH/SENSOR ASSY	137	35
	138	38
	139	36
	140	39
	141	35
	141	48
	142	36
	142	49
	143	38
	144	39
SYNCHRONIZER/30 ASSY	26	15
TANK/FUEL	11	1
	12	1
TEELBALL	95	27
TIRE/22X8.50-12-4	174	2
	174	7
TIRE/24X8.50-12-4	177	3
TIRE/315/75D-15 ASSY	172	1
TIRE/315/75D-15-4	172	2
TIRE/31X13.5-15	170	2
	170	7
TIRE/6.00-12-4	176	2
	176	7
TIRE/6-12-4	175	3
	175	8
TIRE/9.5-16/LH ASSY	173	1
TIRE/9.5-16/RH ASSY	173	6
TIRE/9.5-16-6	173	2
	173	7
TIRE/9.5-18-6	171	2
	171	7
TIRE/FRONT/LH ASSY	174	1

Description	Fig.	Key
TIRE/FRONT/LH ASSY	175	1
TIRE/FRONT/RH ASSY	174	6
	175	6
TIRE/LH ASSY	176	1
TIRE/REAR/LH ASSY	170	1
	171	1
TIRE/REAR/RH ASSY	170	6
	171	6
TIRE/RH ASSY	176	6
TIRE/TURF ASSY	177	1
TOOL/FUSE	145	8
	146	8
	147	8
	148	8
TOOL/HOOD	168	2
TRIM/130	1	23
	2	23
TRIM/140	109	37
TRIM/150	110	37
TRIM/20	17	29
	18	31
	19	29
	20	33
	21	31
	22	31
	109	25
	110	25
TRIM/30	9	22
	10	22
TRIM/570	112	10
	113	10
TRIM/70	111	4
	133	10
	134	11
TRIM/90	3	26
	4	26
TUBE	171	4
	171	9
	173	4
	173	9
TUBE/020	150	9
	151	17
	152	17
TUBE/06X10X20	109	24
	110	24

Description	Fig.	Key
TUBE/07X09X30	1	27
	1	47
	2	27
	2	46
	3	22
	3	42
	4	22
	4	41
TUBE/14X17X90	54	9
	55	9
	56	9
	62	18
TUBE/6-12	175	4
	175	9
	176	3
	176	8
TURNBUCKLE/M8	23	11
TURNBUCLE COMP	107	33
UNIT/TIMER ASSY	137	16
	138	16
	139	16
	140	16
	141	16
	142	16
	143	16
	144	16
U-NUT	45	4
	76	10
U-NUT/M10X1.5	150	13
VALVE	7	4
	8	5
VALVE SET	183	1
VALVE SET	185	1
	185	1
VALVE,RELIEF ASSY	95	13
VALVE/AUX/1ST SET	178	1
VALVE/AUX/2ND SET	179	1
VALVE/CONTROL ASSY	101	1
	102	1
	178	2
	179	2
VALVE/CONTROL/092	97	8
VALVE/FLOW PRIORITY/	182	6
VALVE/INDEPENDENT	83	15
VALVE/PRV/B/2 ASSY	182	1

Description	Fig.	Key
VALVE/RELIEF SET	184	44
VALVE/RELIEF/06 ASSY	183	9
VALVE/RELIEF/060	64	12
	65	12
VALVE/RIM	170	4
	170	9
	172	4
	174	4
	174	9
	177	4
WASHER	16	5
	109	14
	110	14
	186	4
	187	9
WASHER COMP	120	5
	122	16
WASHER,PL/M10	17	23
	18	23
	19	23
	20	25
	21	25
	22	25
	30	8
	33	6
	57	7
	70	11
	79	5
	95	7
	97	7
	98	11
	99	11
	109	8
	110	8
	114	5
	116	37
WASHER,PL/M12	62	3
	70	7
	88	14
	88	18
	107	30
	107	42
	122	4
	122	8
	123	4

Description	Fig.	Key
WASHER,PL/M12	123	8
WASHER,PL/M16	96	11
	151	8
	152	8
WASHER,PL/M18	53	4
	60	11
	72	6
	73	5
	74	6
	169	39
WASHER,PL/M5	97	18
	112	6
	113	6
	133	19
	134	20
WASHER,PL/M6	15	3
	16	9
	23	7
	24	4
	25	4
	61	23
	97	15
	101	17
	102	20
	109	21
	109	49
	110	21
	110	53
	178	18
	179	11
WASHER,PL/M8	23	16
	45	5
	54	4
	55	4
	56	4
	58	4
	59	4
	60	5
	62	7
	62	15
	72	2
	73	2
	74	2
	75	17
	76	18

Description	Fig.	Key
WASHER,PL/M8	76	39
	77	12
	77	28
	78	14
	109	16
	110	16
	169	33
	186	5
WASHER,SP/M10	5	4
	6	4
	17	13
	17	17
	17	22
	18	13
	18	17
	18	22
	19	13
	19	17
	19	22
	20	15
	20	19
	20	24
	21	15
	21	19
	21	24
	22	15
	22	19
	22	24
	26	4
	30	6
	31	8
	32	8
	33	5
	34	6
	52	4
	68	35
	69	33
	70	10
	94	6
	95	8
	101	5
	102	5
	116	36
	151	27
	169	5

Description	Fig.	Key
WASHER,SP/M10	178	6
	179	4
WASHER,SP/M12	17	19
	18	19
	19	19
	20	11
	20	21
	21	11
	21	21
	22	11
	22	21
	70	6
	88	4
	88	13
	88	17
	92	6
	92	38
	95	20
	107	10
	107	14
	107	41
	108	3
	120	4
	121	4
	122	6
	122	15
	123	6
	123	13
	151	28
	152	24
WASHER,SP/M14	91	17
	150	17
	151	30
	152	26
WASHER,SP/M16	71	11
	96	10
	107	23
	108	8
	151	7
	152	7
WASHER,SP/M6	95	31
WASHER,SP/M8	17	9
	18	9
	18	36
	19	9

Description	Fig.	Key
WASHER,SP/M8	19	34
	20	9
	20	38
	21	9
	21	36
	22	9
	61	8
	68	12
	69	10
	75	16
	83	22
	89	7
	98	5
	99	5
	101	10
	102	10
	103	20
	104	20
	105	20
	106	20
	178	11
	185	14
	185	14
	186	6
WASHER/07X18X01	128	6
	129	6
WASHER/08X22X03	109	52
	110	56
WASHER/11X22X02	117	14
WASHER/12X25X02	109	13
	110	13
WASHER/13X42X01	94	4
WASHER/20X25X01	81	11
WASHER/20X28X2	50	6
WASHER/20X32X02	28	12
WASHER/20X32X09	81	10
WASHER/20X36X02	36	16
	46	5
WASHER/20X45X03	36	10
	41	1
WASHER/25X30X1	184	37
WASHER/25X43X02	28	21
	41	8
	49	4
	66	4
WASHER/25X43X02	67	4
WASHER/26X38X01	23	9
	76	3
WASHER/36X46X02	26	29
	68	23
	69	21
	71	8
WASHER/50X62X02	66	12
	67	13
WASHER/6X14X3	109	48
	110	52
	111	10
WASHER/6X24X2	109	53
	110	57
	114	8
WASHER/RUBBER	186	2
WASHER/SPRING/10	117	13
WEIGHT/15 SET	181	1
WHEEL/12X5J COMP	175	2
	175	7
WHEEL/15X10LB COMP	170	3
	170	8
	172	3
WHEEL/16XW8 COMP	173	3
	173	8
WHEEL/STEERING/360	79	1
WHEEL/W8-18 COMP	171	3
	171	8