Directions for use of Parts Catalogue

1. Applicable model of machines

All component and option parts used for TM3185 tractor s are listed in this parts catalogue.

1) MODEL TYPE

F····· FOUR WHEEL DRIVE

U····· POWER STEERING

Z····· EEC TYPE SEAT

V····· VALVE(REMOTE/1)

R····· ROPS

D····· WITHOUT REAR AND FRONT HITCH

2) AREA CODE

E4····· EUROPE

2. Explanation for head paragraph

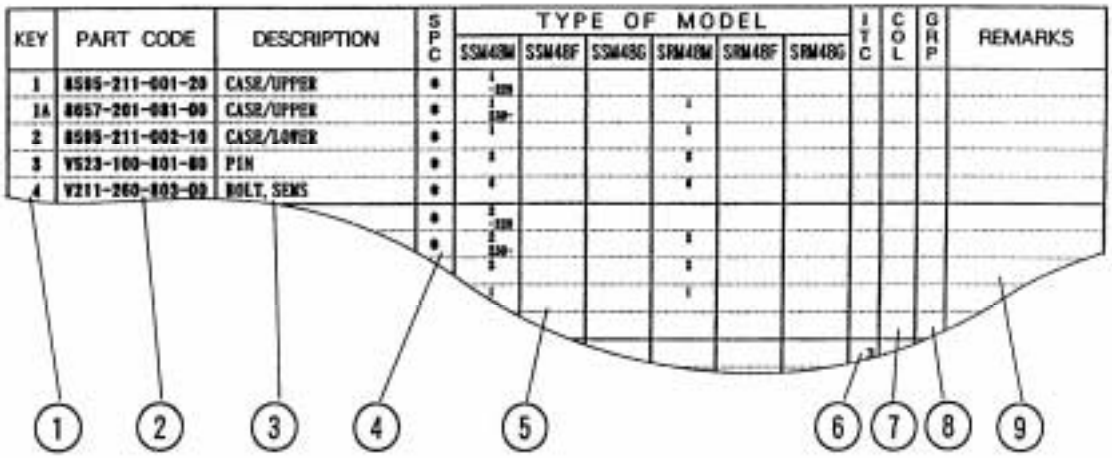

① KEY shows the location of parts diagramed in the illustration.

② Parts numbers begin with `V´ and `W´ are standard parts of the market.

③ `LH´ and `RH´ on the parts name are described against the moving direction of the machine or are described on the condition how to install parts on the machines.

④ SPC : The following symbol classifies parts to be used for machines. `*´ means standard parts.

`T´ shows that the parts can be installed as optional parts.

`R´ shows that the parts can be used as applicable parts to replace originally equipped parts.

⑤ Upper column : QTY shows the number of parts to be used for one unit of machine.

`M´ is indicated for parts supplied by a meter long.

`l´ is indicated for parts supplied by liter.

`AR´ is indicated for parts need to be adjusted or regulated.

Lower column : serial number

—229 means serial number up to 229.

230— means serial number 230 and after.

⑥ ITC : Interchangeability

`1´…OLD ← NEW

New parts can be used in place of the old parts.

`2´…OLD → NEW

Old parts can be used in place of the new parts.

`3´…OLD →← NEW

Old parts and new parts can not be replaced each other.

⑦ COL : Color code

Color is signified with color code number for colored parts.

Please see the color list shown in the next page.

⑧ GRP : Parts shown in this column can be replaced by SET parts.

Example : Parts marked Ⓐ can be replaced by parts marked Ⓑ, and Ⓓ for Ⓒ, so the rest follow in the same alphabetical order.

⑨ Remarks

＊Other maker's part code number is shown in this column.

＊When Fig. No. is shown in the Remark column of SET parts or ASSY parts, each of their component parts are listed in said Fig. No.

3. Color :

The following colors are used color parts.

COLOR CODE	COLOR	SPRAY TYPE PARTS CODE	PAINTS 4K DRUM PARTS CODE	PAINTS 16K DRUM PARTS CODE
4L	NEO BLUE	1300-985-001-10	1300-985-003-00	――――――
6G	SUMMER WHITE	1300-958-001-10	1300-958-003-00	1300-958-004-00
7F	MIRROR BLACK	1300-954-001-10	1300-954-003-00	1300-954-004-00

NOTE : Color code is signified only for the parts assigned by the maker as color parts.

4. Serial Numbers :

1) For engines serial number is stamped on CYLINDER BLOCK ASSY.
   Please see Fig. No. 6－1.
2) For chassies serial number is shown on the LABEL.
   Please see

5. Parts Order

1) When you order parts, please make sure of correct numbers.
2) When substitute parts is available, the part number ordered will be automatically turned to a new part number.
3) Please be sure to use “ISEKI GENUINE PARTS”.
   Any other similar parts other than ISEKI parts when used may cause a trouble that makes us unable to repair or guarantee the warrant.

*** Structure Table of Model ***

MODEL / FIG.	TM185FU	144ED	ERZ44D	EEZ44D	ZZRE4	ZVRE4							
101	*	*	*	*	*	*							
102	*	*	*	*	*	*							
103	*	*	*	*	*	*							
104	*	*	*	*	*	*							
105	*	*	*	*	*	*							
106	*	*	*	*	*	*							
107	*	*	*	*	*	*							
108	*	*	*	*	*	*							
109	*	*	*	*	*	*							
110	*	*	*	*	*	*							
111	*	*	*	*	*	*							
201	*	*	*	*	*	*							
202	*	*	*	*	*	*							
203	*	*	*	*	*	*							
204	*	*	*	*	*	*							
205	*	*	*	*	*	*							
206	*	*	*	*	*	*							
207	*	*	*	*	*	*							
208	*	*	*	*	*	*							
209	*	*	*	*	*	*							
210	*	*	*	*	*	*							
211	*	*	*	*	*	*							
212	*	*	*	*	*	*							
213	*	*			*								
214				*		*	*						
301	*	*	*	*	*	*							
302	*	*	*	*	*	*							
303	*	*	*	*	*	*							
304	*	*	*	*	*	*							
305	*	*	*	*	*	*							
306	*	*	*	*	*	*							
401	*	*	*	*	*	*							
402	*	*	*	*	*	*							
403	*	*	*	*	*	*							
404	*			*	*	*							
405	*	*	*	*	*	*							
406	*	*	*	*	*	*							
407	*	*	*	*	*	*							
408	*	*	*	*	*	*							
501	*	*	*	*	*	*							
502	*	*	*	*	*	*							
503	*	*	*	*	*	*							
504	*	*	*	*	*	*							
505	*	*	*	*	*								
506						*							

*** Structure Table of Model ***

MODEL / FIG.	TM3185FU	E4	E4D	RE4D	ZE4	ZRE4	ZVRE4									
507		*	*	*	*	*	*									
508		*	*		*											
509				*		*	*									
510		*			*	*	*									
601		*	*	*	*	*	*									
602		*	*	*	*	*	*									
603		*	*	*	*	*	*									
604		*	*	*	*	*										
605							*									
606		*	*	*	*	*	*									
607					*											
608						*	*									
609		*	*		*											
610				*		*	*									
611		*	*	*	*	*	*									
612		*	*	*	*	*	*									
613		*	*	*	*	*	*									
614		*	*		*											
615				*		*	*									
616		*	*	*	*	*	*									
617		*	*	*	*	*	*									
618		*	*	*	*	*	*									
619		*	*	*												
701				*		*	*									
901		*	*	*	*	*	*									
902		*	*	*	*	*	*									
903		*	*	*	*	*	*									
904			*	*												
905		*	*	*	*	*	*									
P01		T	T	T	T	T	T									
P02		T	T	T	T	T	T									
P03		T	T	T	T	T	T									
P04			T	T												
P05		T	T	T	T	T	T									
P06		T	T	T	T	T	T									
P07		T	T	T	T	T	T									
P08		T	T	T	T	T										
P09			T	T												
P10		T	T		T											
P11		T	T	T	T	T	T									
P12		T	T	T	T	T	T									
S01		*	*	*	*	*	*									
S02		T	T	T	T	T										
S03							*									

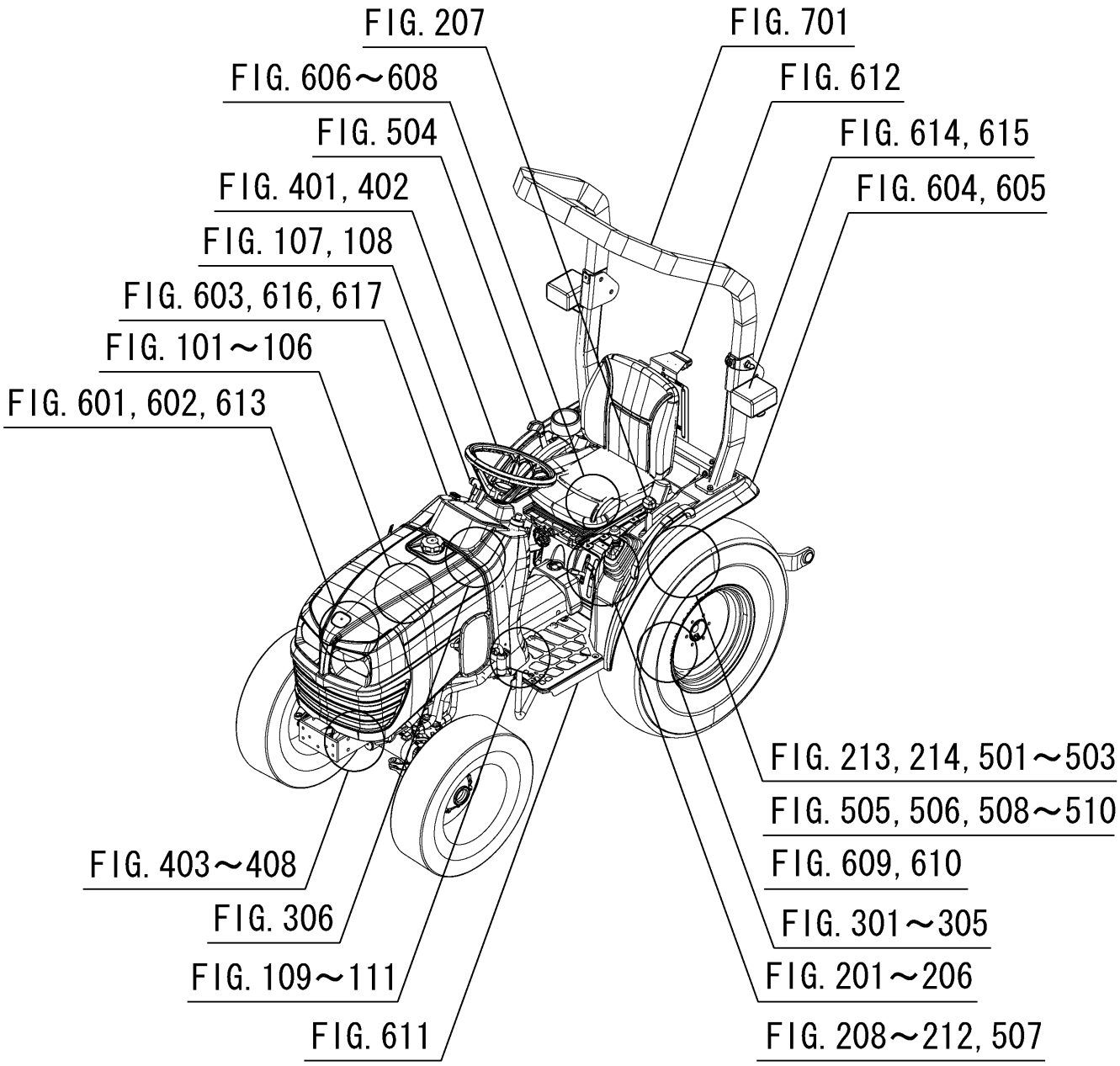
FIG. 207
FIG. 701
FIG. 606～608
FIG. 612
FIG. 504
FIG. 614, 615
FIG. 401, 402
FIG. 604, 605
FIG. 107, 108
FIG. 603, 616, 617
FIG. 101～106
FIG. 601, 602, 613
FIG. 213, 214, 501～503
FIG. 505, 506, 508～510
FIG. 403～408
FIG. 609, 610
FIG. 306
FIG. 301～305
FIG. 109～111
FIG. 201～206
FIG. 611
FIG. 208～212, 507

Contents

TM3185FU

ENGINE(E673L-D4501)

CYLINDER BLOCK····· Fig.001
CRANKSHAFT/PISTON····· Fig.002
OIL PUMP/CAMSHAFT····· Fig.003
TIMING GEAR CASE/GOVERNOR····· Fig.004
CYLINDER HEAD/MANIFOLD EXHAUST····· Fig.005
OIL PAN/FLYWHEEL/STARTER MORTOR····· Fig.006
INJECTION PUMP/INJECTOR····· Fig.007
ROCKER ARM····· Fig.008
HEAD COVER····· Fig.009
WATER PUMP/THERMOSTAT CASE····· Fig.010
COOLING FAN/ALTERNATER/OIL FILTER····· Fig.011
ACCESSORY PARTS····· Fig.012
INJECTION PUMP ASSY/INJECTOR ASSY····· Fig.013
ALTERNATER ASSY····· Fig.014
STARTER MORTOR ASSY····· Fig.015

Contents

CHASSIS

RADIATOR SYSTEM Fig.101
MUFFLER SYSTEM Fig.102
CLEANER(AIR)SYSTEM Fig.103
FILTER(FUEL)SYSTEM Fig.104
TANK(FUEL)SYSTEM Fig.105
BATTERY SYSTEM Fig.106
CABLE(ACCELERATOR)SYSTEM Fig.107
LEVER(ACCELERATOR)SYSTEM Fig.108
CLUTCH(MAIN)SYSTEM Fig.109
PEDAL(CLUTCH)SYSTEM Fig.110
SHAFT(INPUT)SYSTEM Fig.111
CASE(TRANSMISSION)SYSTEM Fig.201
GEAR(INPUT)SYSTEM Fig.202
PINION(DRIVE)SYSTEM Fig.203
GEAR(REVERSE)SYSTEM Fig.204
GEAR(4WD)SYSTEM Fig.205
LEVER(MAIN)SYSTEM Fig.206
LEVER(SUB)SYSTEM Fig.207
LEVER(4WD)SYSTEM Fig.208
SHIFT(MAIN)SYSTEM Fig.209
GEAR(PTO)SYSTEM Fig.210
SHAFT(PTO)SYSTEM Fig.211
LEVER(PTO)SYSTEM Fig.212
COVER(SHAFT/PTO)SYSTEM
(EXCEPT R TYPE) Fig.213
COVER(SHAFT/PTO)SYSTEM(R TYPE) Fig.214
CASE(DIFFERENTIAL GEAR/REAR)SYSTEM Fig.301

HOUSING(AXLE/REAR)SYSTEM……Fig.302
SHAFT(WHEEL/REAR)SYSTEM……Fig.303
PEDAL
(CLUTCH/DIFFERENTIAL GEAR)SYSTEM……Fig.304
BRAKE SYSTEM……Fig.305
PEDAL(BRAKE)SYSTEM(1/2)(2/2)……Fig.306
WHEEL(STEERING)SYSTEM……Fig.401
CONTROL(STEERING)SYSTEM(1/2)(2/2)……Fig.402
BRACKET(AXLE)SYSTEM……Fig.403
HITCH(FRONT)SYSTEM(EXCEPT D TYPE)……Fig.404
AXLE(FRONT)SYSTEM(1/2)(2/2)……Fig.405
SHAFT(DRIVE/FRONT)SYSTEM……Fig.406
METAL
(PIVOT/REAR)&BOLT(SET/TIRE)SYSTEM……Fig.407
ROD(TIE)SYSTEM……Fig.408
CASE(CYLINDER)SYSTEM……Fig.501
ARM(LIFT)SYSTEM……Fig.502
CYLINDER SYSTEM……Fig.503
LEVER(POSITION)SYSTEM……Fig.504
COVER(VALVE)SYSTEM(EXCEPT V TYPE)……Fig.505
VALVE(CONTROL)SYSTEM(V TYPE)……Fig.506
PIPING SYSTEM……Fig.507
LINK(3P)SYSTEM(EXCEPT R TYPE)……Fig.508
LINK(3P)SYSTEM(R TYPE)……Fig.509
HITCH(TRAILER)SYSTEM(EXCEPT D TYPE)……Fig.510
HOOD SYSTEM……Fig.601
GRILLE SYSTEM……Fig.602
COVER(DASH BOARD)SYSTEM……Fig.603
FENDER SYSTEM(EXCEPT V TYPE)……Fig.604
FENDER SYSTEM(V TYPE)……Fig.605
BRACKET(SEAT)SYSTEM……Fig.606
SEAT SYSTEM(Z TYPE)……Fig.607
SEAT SYSTEM(ZR TYPE)……Fig.608

FRAME(REAR)SYSTEM(EXCEPT R TYPE)……Fig.609
FRAME(REAR/UNDER)SYSTEM(R TYPE)……Fig.610
STEP SYSTEM……Fig.611
PLATE(REGISTRATION)SYSTEM(R TYPE)……Fig.612
LAMP(HEAD)SYSTEM……Fig.613
LAMP(REAR)SYSTEM(EXCEPT R TYPE)……Fig.614
LAMP(REAR)SYSTEM(R TYPE)……Fig.615
PANEL(INSTRUMENT)SYSTEM……Fig.616
HORN,SWITCH&RELAY SYSTEM……Fig.617
HARNESS SYSTEM……Fig.618
HARNESS(SEAT)SYSTEM(EXCEPT Z TYPE)……Fig.619
ROPS SYSTEM(R TYPE)……Fig.701
ORNAMENT&LABEL(ENGINE)……Fig.901
LABEL(CONTROL)……Fig.902
LABEL(CAUTION)……Fig.903
LABEL(CE)(D TYPE)……Fig.904
PARTS(ENGINE)SYSTEM……Fig.905

OPTIONAL PARTS

WHEEL
(REAR/TURF/212/80D-15PD)SYSTEM(OPTION)……Fig.P01
WHEEL(REAR/AGR/8-16)SYSTEM(OPTION)……Fig.P02
WHEEL(REAR/AGR/9.5-16)SYSTEM(OPTION)……Fig.P03
HITCH(FRONT)SET(D TYPE)(OPTION)……Fig.P04
WHEEL(FRONT/AGR/5-12)SYSTEM(OPTION)……Fig.P05
WHEEL
(FRONT/AGR/5.00-12)SYSTEM(OPTION)……Fig.P06
WHEEL
(FRONT/TURF/20X8.00-10)SYSTEM(OPTION)……Fig.P07
VALVE(AUX)SET(EXCEPT V TYPE)(OPTION)……Fig.P08
HITCH(REAR)SET(D TYPE)(OPTION)……Fig.P09
FRAME(ROPS)SET
(EXCEPT R TYPE)(OPTION)(1/2)(2/2)……Fig.P10

PLATE
(BUMPER)&BOLT(SET)SYSTEM(OPTION)····· Fig.P11
WEIGHT(15)SET(OPTION)·····Fig.P12

COMPONENT PARTS

COMPONENT PARTS
FOR K211-001-000-00 ON Fig.503·····Fig.S01
COMPONENT PARTS
FOR 1640-530-600-10 ON Fig.P08····· Fig.S02
COMPONENT PARTS
FOR 1719-511-350-00 ON Fig.507·····Fig.S03

WIRING DIAGRAM

WIRING DIAGRAM(1/2)
WIRING DIAGRAM(2/2)

E N G I N E

E673LD4501···TM3185FU

FIG.001 CYLINDER BLOCK

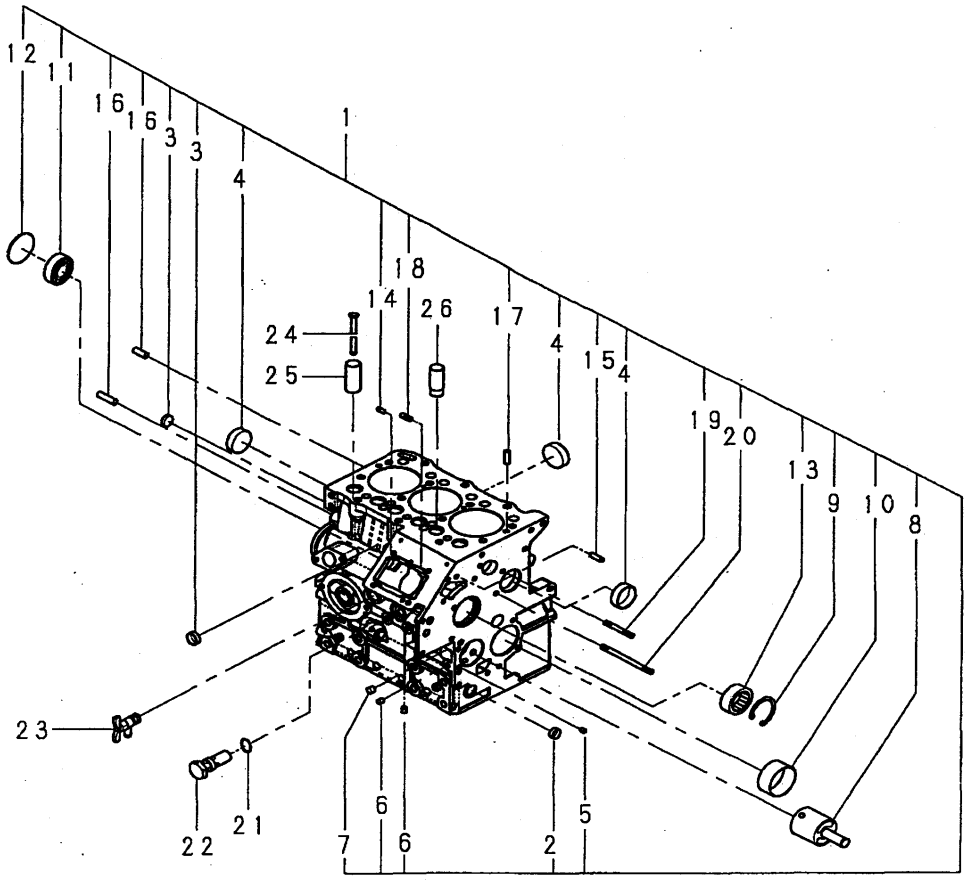

SB01-001A-

KEY	PART CODE	DESCRIPTION	SPC	TYPE OF MODEL E673L D4501		ITC	COL	GRP	REMARKS
1	BR11-010-066-00	CYLINDER BLOCK	*	1					110100660
2	BR06-421-001-50	SEALING CAP	*	1					064210015
3	BR06-421-001-80	SEALING CAP	*	2					064210018
4	BR06-421-003-50	SEALING CAP	*	4					064210035
5	BR19-846-605-00	PLUG	*	1					198466050
6	BR19-846-603-00	PLUG	*	5					198466030
7	BR19-846-601-00	PLUG	*	4					198466010
8	BR16-529-616-20	SHAFT.IDLE GEAR	*	1					165296162
9	BR03-650-900-50	SNAP RING	*	1					036509005
10	BR19-851-730-20	BUSH:STD	*	1					198517302
11	BR04-010-620-30	BALL BEARING	*	1					040106203
12	BR06-410-004-50	EXPANSION PLUG	*	1					064100045
13	BR04-230-301-50	NEEDLE BEARING	*	1					042303015
14	BR03-050-051-20	DOWEL PIN	*	2					030500512
15	BR03-050-061-60	DOWEL PIN	*	2					030500616
16	BR03-050-082-00	DOWEL PIN	*	2					030500820
17	BR03-030-900-50	SPRING PIN	*	2					030309005
18	BR01-211-062-00	STUD BOLT	*	2					012110620
19	BR01-211-063-50	STUD BOLT	*	1					012110635
20	BR01-211-066-00	STUD BOLT	*	1					012110660
21	BR05-210-907-80	O-RING	*	1					052109078
22	BR14-003-622-00	VALVE ASSY.RELIEF	*	1					140036220
23	BR19-873-605-00	COCK	*	1					198736050
24	BR12-045-632-00	ROD.PUSH	*	6					120456320
25	BR12-011-610-00	TAPPET	*	5					120116100
26	BR12-011-618-00	TAPPET	*	1					120116180

FIG.002 CRANKSHAFT/PISTON

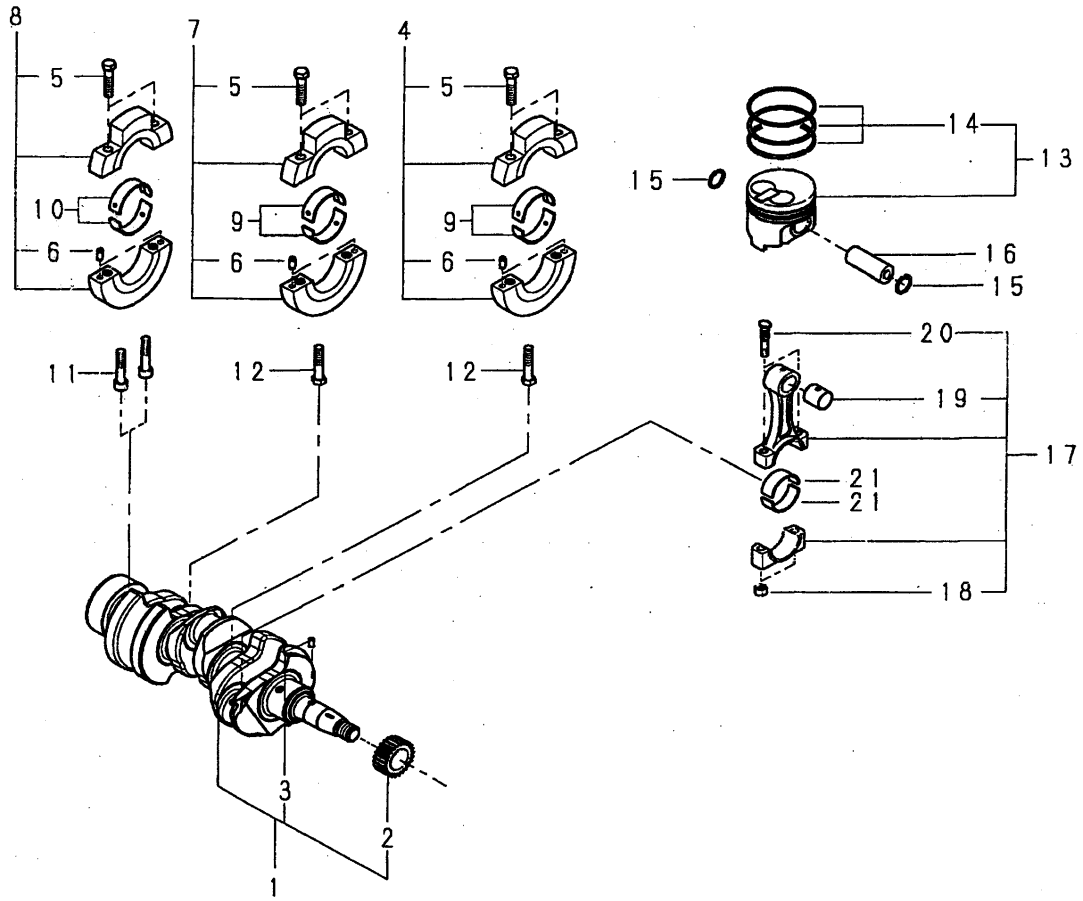

SB01-002A-

KEY	PART CODE	DESCRIPTION	SPC	TYPE OF MODEL E673L D4501		ITC	COL	GRP	REMARKS
1	BR11-525-689-00	CRANKSHAFT COMPL	*	1					115256890
2	BR11-527-621-00	GEAR.CRANKSHAFT	*	1					115276210
3	BR03-050-902-00	DOWEL PIN	*	1					030509020
4	BR11-015-644-00	HOLDER ASSY.BEARING	*	1					110156440
5	BR01-081-084-50	BOLT	*	6					010810845
6	BR03-050-061-20	DOWEL PIN	*	6					030500612
7	BR11-015-645-00	HOLDER ASSY.BEARING	*	1					110156450
8	BR11-015-646-00	HOLDER ASSY.BEARING	*	1					110156460
9	BR19-858-640-20	METAL KIT:S.T.D.	*	2					198586402
10	BR19-858-628-10	METAL KIT:STD.	*	1					198586281
11	BR01-070-084-50	BOLT	*	2					010700845
12	BR01-151-085-00	BOLT	*	2					011510850
13	BR11-501-763-00	PISTON KIT:STD	*	3					115017630
14	BR11-510-405-00	RING KIT.PISTON	*	3					115104050
15	BR03-650-001-90	SNAP RING	*	6					036500019
16	BR11-532-626-00	PIN.PISTON	*	3					115326260
17	BR11-502-635-00	ROD ASSY.CONNECTING	*	3					115026350
18	BR02-010-910-30	NUT	*	6					020109103
19	BR19-851-732-50	BUSHING	*	3					198517325
20	BR11-517-613-00	BOLT.CONNECTING ROD	*	6					115176130
21	BR19-851-731-20	METAL.PIN:STD	*	6					198517312

FIG.003 OIL PUMP/CAMSHAFT

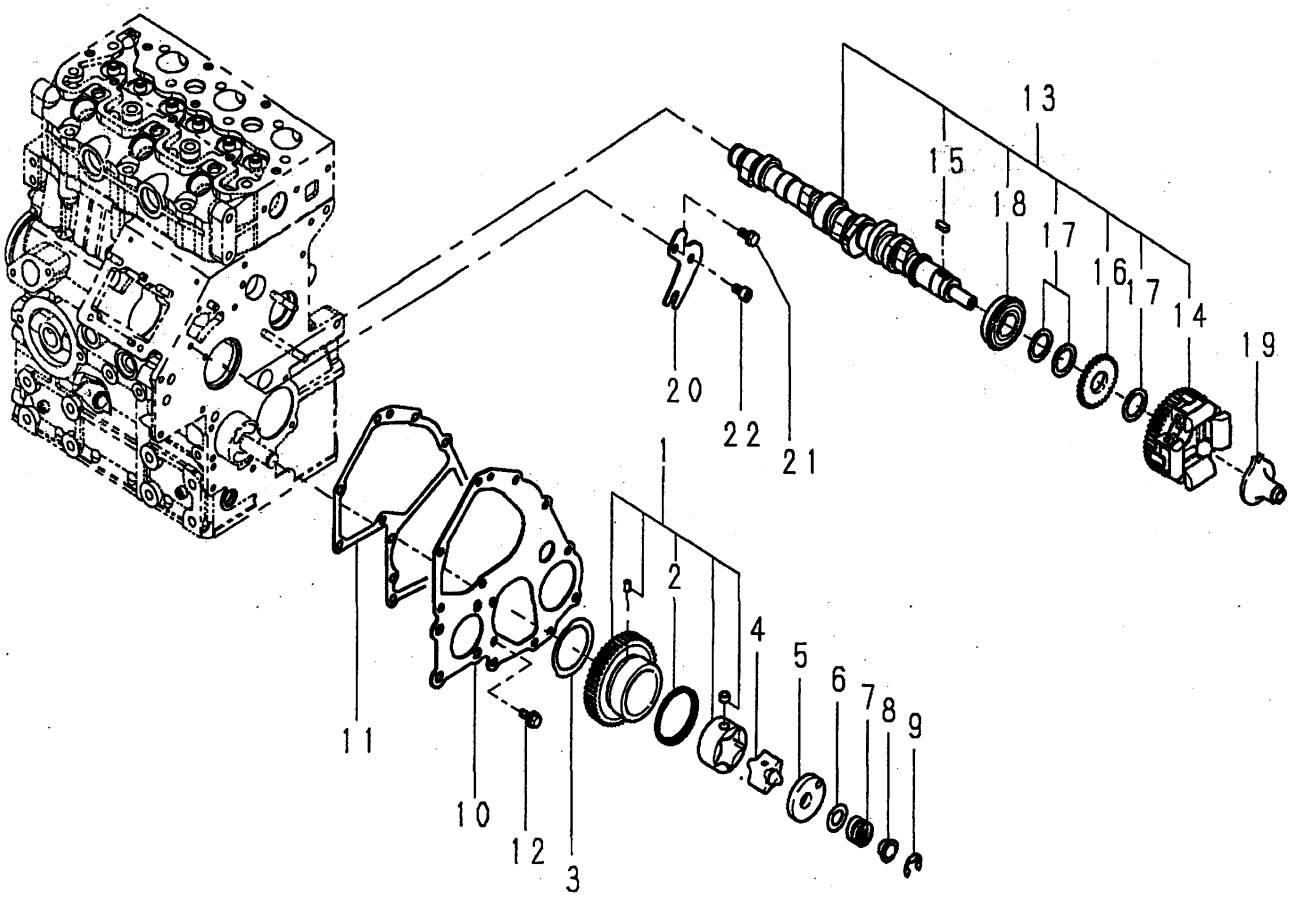

SB01-003A-

KEY	PART CODE	DESCRIPTION	SPC	TYPE OF MODEL E673L D4501		ITC	COL	GRP	REMARKS
1	BR16-502-611-10	GEAR ASSY.IDLE	*	1					165026111
2	BR19-821-682-10	SPRING	*	1					198216821
3	BR19-926-618-00	WASHER.THRUST	*	1					199266180
4	BR14-016-613-10	ROTOR	*	1					140166131
5	BR14-011-614-00	OIL PUMP COVER	*	1					140116140
6	BR19-928-634-00	SHIM SET	*	1					199286340
7	BR19-821-672-00	SPRING	*	1					198216720
8	BR19-923-654-00	COLLAR	*	1					199236540
9	BR03-680-001-00	SNAP RING	*	1					036800010
10	BR16-516-642-00	PLATE.FRONT	*	1					165166420
11	BR16-599-649-00	GASKET	*	1					165996490
12	BR01-131-061-20	BOLT	*	3					011310612
13	BR12-002-678-00	CAMSHAFT ASSY	*	1					120026780
14	BR12-001-614-00	GEAR COMPL.CAMSHAFT	*	1					120016140
15	BR03-410-050-80	KEY	*	1					034100508
16	BR12-073-608-10	GEAR	*	1					120736081
17	BR19-921-623-00	SPACER	*	3					199216230
18	BR04-010-905-90	BALL BEARING	*	1					040109059
19	BR12-525-612-00	SLIDER COMPL	*	1					125256120
20	BR19-956-665-10	PLATE	*	1					199566651
21	BR01-131-061-20	BOLT	*	1					011310612
22	BR01-070-061-00	BOLT	*	1					010700610

FIG.004 TIMING GEAR CASE/GOVERNOR

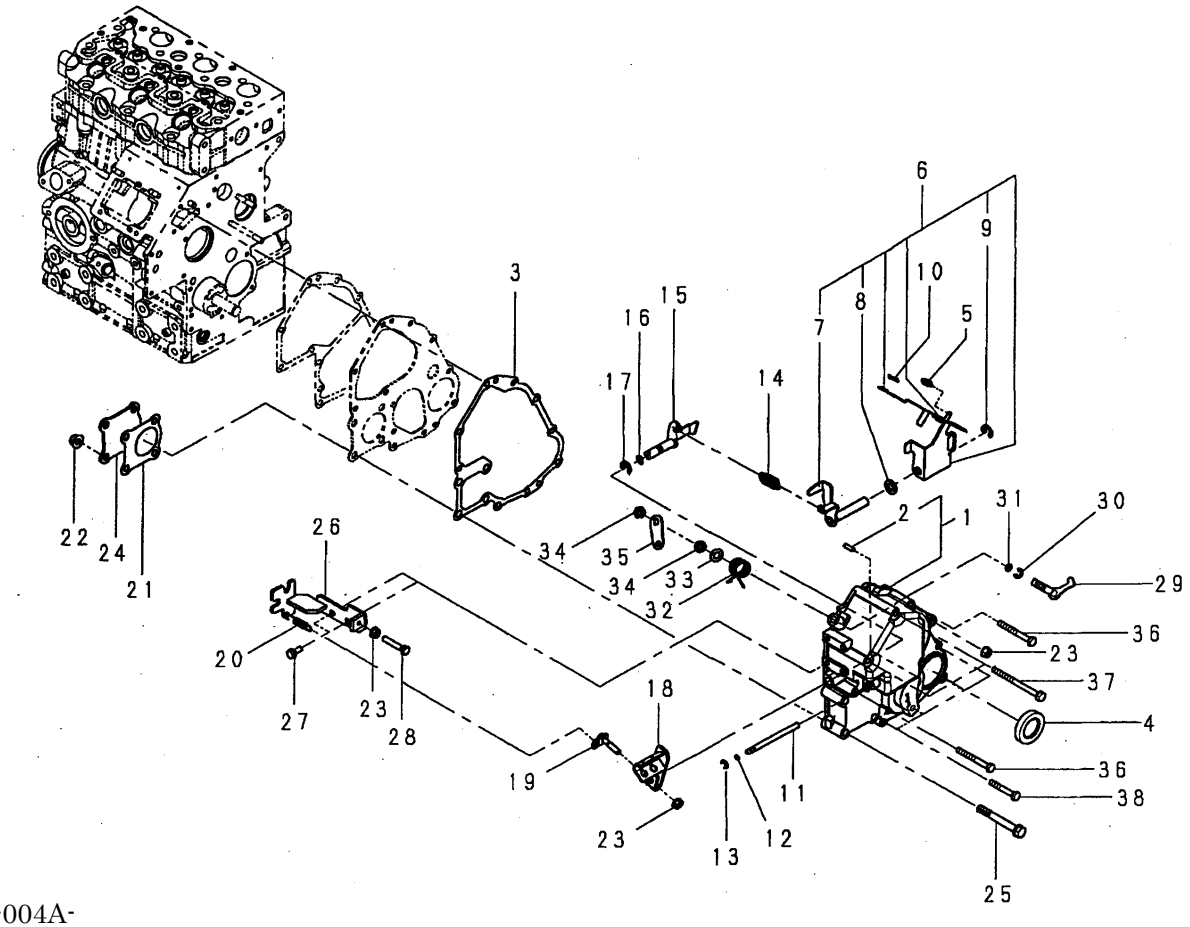

SB01-004A-

KEY	PART CODE	DESCRIPTION	SPC	TYPE OF MODEL E673L D4501		ITC	COL	GRP	REMARKS
1	BR16-510-634-00	CASE.GEAR	*	1					165106340
2	BR03-030-041-40	SPRING PIN	*	1					030300414
3	BR16-599-650-00	GASKET	*	1					165996500
4	BR19-863-609-00	OIL SEAL	*	1					198636090
5	BR19-821-742-00	SPRING:START	*	1					198217420
6	BR12-504-625-00	LEVER ASSY.GOVERNOR	*	1					125046250
7	BR12-540-607-10	LEVER.GOVERNOR	*	1					125406071
8	BR02-620-001-00	WASHER	*	1					026200010
9	BR03-680-000-80	SNAP RING	*	1					036800008
10	BR03-110-000-40	SNAP PIN	*	1					031100004
11	BR12-511-613-10	SHAFT.GOVERNOR	*	1					125116131
12	BR05-210-910-80	O-RING	*	2					052109108
13	BR03-680-000-50	SNAP RING	*	1					036800005
14	BR19-821-714-00	SPRING	*	1					198217140
15	BR12-515-617-00	ARM COMPL	*	1					125156170
16	BR05-210-911-00	O-RING	*	1					052109110
17	BR03-680-000-80	SNAP RING	*	1					036800008
18	BR12-541-655-00	LEVER.GOVERNOR	*	1					125416550
19	BR13-517-614-00	PLATE	*	1					135176140
20	BR19-821-115-00	SPRING:RETURN	*	1					198211150
21	BR16-599-651-00	GASKET	*	1					165996510
22	BR02-310-000-80	NUT	*	4					023100008
23	BR02-310-000-60	NUT	*	2					023100006
24	BR16-520-654-00	COVER	*	1					165206540
25	BR01-031-085-00	BOLT	*	4					010310850
26	BR12-597-628-00	STAY	*	1					125976280
27	BR01-131-061-40	BOLT	*	2					011310614
28	BR01-281-063-50	BOLT	*	1					012810635
29	BR12-515-618-00	ARM	*	1					125156180
30	BR03-680-000-60	SNAP RING	*	1					036800006

FIG.004 TIMING GEAR CASE/GOVERNOR

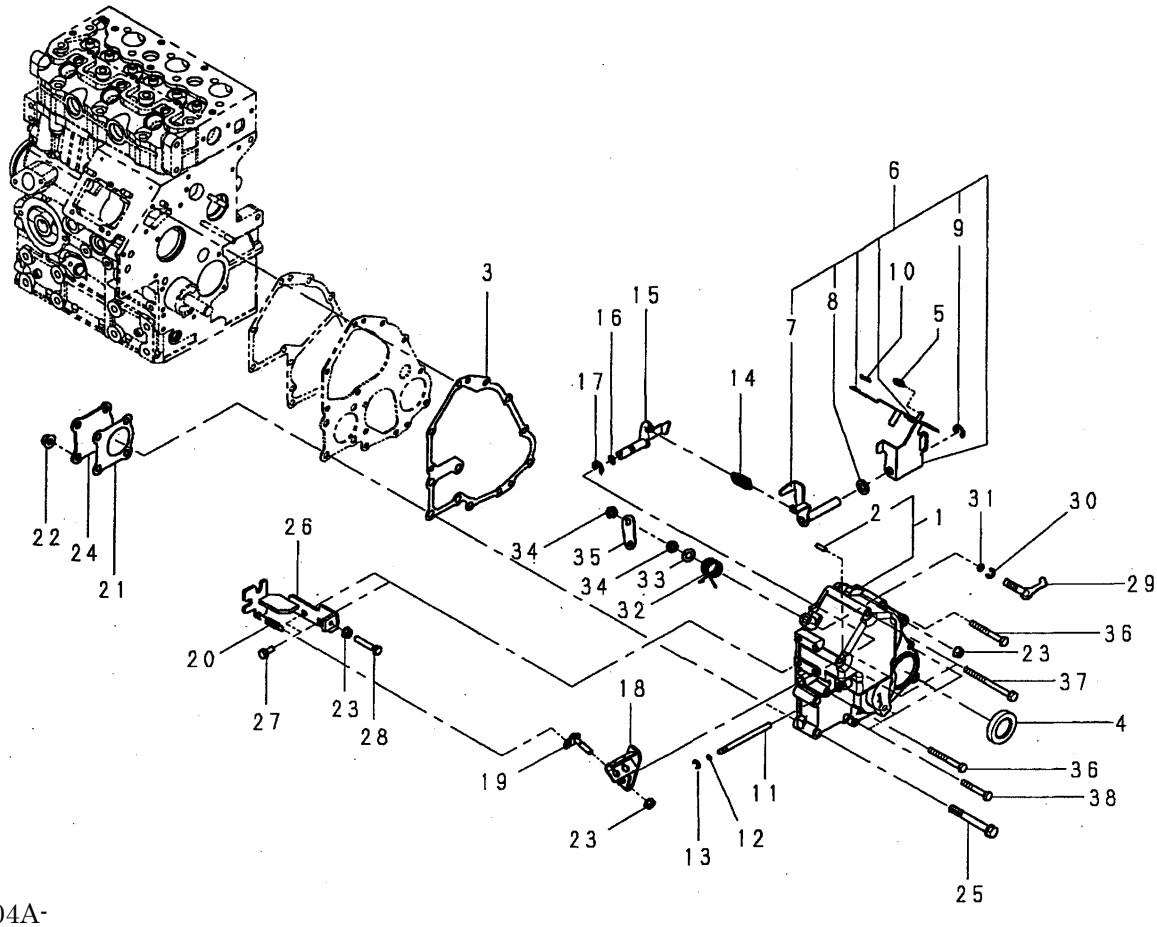

SB01-004A-

KEY	PART CODE	DESCRIPTION	SPC	TYPE OF MODEL E673L D4501		ITC	COL	GRP	REMARKS
31	BR05-210-910-90	O-RING	*	1					052109109
32	BR19-821-676-00	SPRING	*	1					198216760
33	BR02-620-000-80	WASHER	*	1					026200008
34	BR02-070-000-80	NUT	*	2					020700008
35	BR12-517-615-00	STOP LEVER	*	1					125176150
36	BR01-131-066-00	BOLT	*	2					011310660
37	BR01-131-068-00	BOLT	*	2					011310680
38	BR01-131-064-00	BOLT	*	4					011310640

FIG.005 CYLINDER HEAD/MANIFOLD EXHAUST

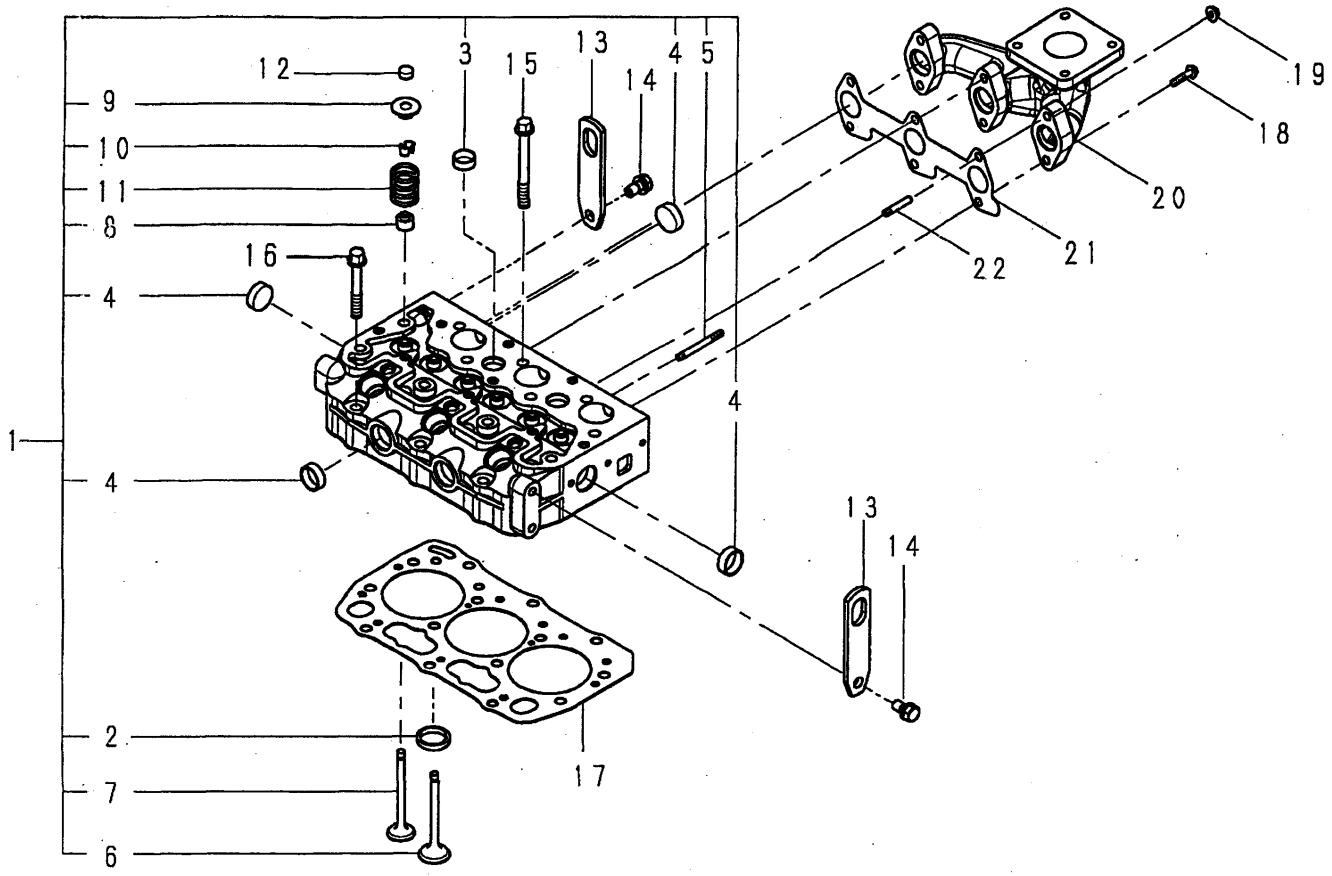

SB01-005A-

KEY	PART CODE	DESCRIPTION	SPC	TYPE OF MODEL E673L D4501		ITC	COL	GRP	REMARKS
1	BR11-101-164-00	HEAD ASSY.CYLINDER	*	1					111011640
2	BR11-013-644-50	SEAT.VALVE:IN	*	3					110136445
3	BR06-421-001-80	SEALING CAP	*	2					064210018
4	BR06-421-002-20	SEALING CAP	*	6					064210022
5	BR01-211-065-00	STUD BOLT	*	1					012110650
6	BR12-016-637-00	VALVE.INTAKE	*	3					120166370
7	BR12-017-629-00	VALVE.EXHAUST	*	3					120176290
8	BR12-040-608-00	SEAL.VALVE GUIDE	*	6					120406080
9	BR12-018-610-00	RETAINER	*	6					120186100
10	BR12-022-608-00	COTTER	*	12					120226080
11	BR19-821-707-00	SPRING	*	6					198217070
12	BR12-021-613-00	VALVE CAP	*	6					120216130
13	BR19-581-660-20	HANGER:NO COLOUR	*	2					195816602
14	BR01-151-081-60	BOLT	*	2					011510816
15	BR11-113-646-00	BOLT.CYLINDER HEAD	*	11					111136460
16	BR11-113-647-00	BOLT.CYLINDER HEAD	*	3					111136470
17	BR11-114-765-00	GASKET.CYLINDER HEAD	*	1					111147650 T1.2
17	BR11-114-766-00	GASKET.CYLINDER HEAD	*	1					111147660 T1.3
18	BR01-131-062-50	BOLT	*	4					011310625
19	BR02-310-000-60	NUT	*	2					023100006
20	BR13-561-663-00	EXHAUST MANIFOLD	*	1					135616630
21	BR13-599-652-10	GASKET:EXH	*	1					135996521
22	BR01-211-062-50	STUD BOLT	*	2					012110625

FIG.006 OIL PAN/FLYWHEEL/STARTER MORTOR

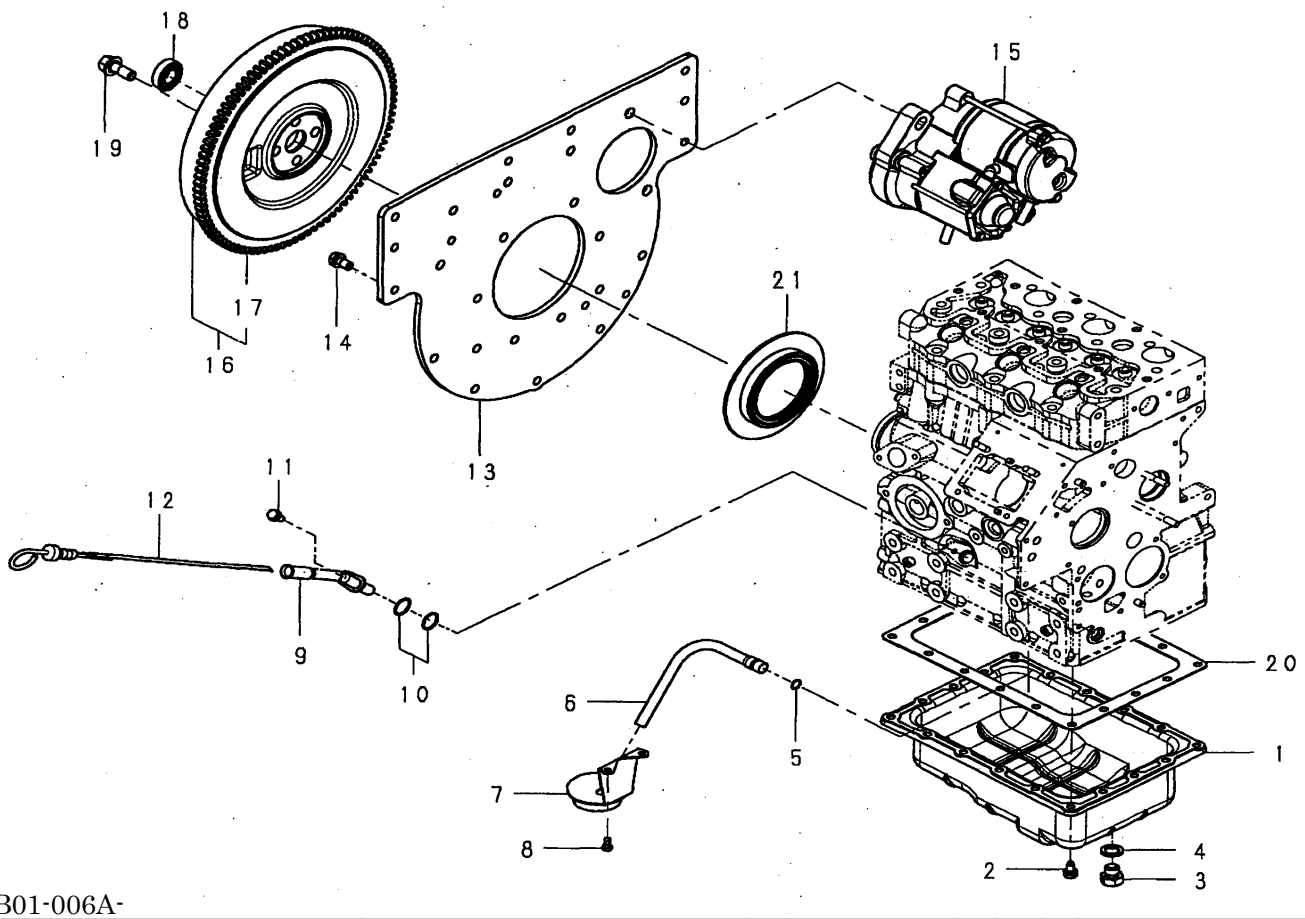

SB01-006A-

KEY	PART CODE	DESCRIPTION	SPC	TYPE OF MODEL E673L D4501		ITC	COL	GRP	REMARKS
1	BR11-070-732-00	OIL PAN	*	1					110707320
2	BR01-010-923-50	BOLT	*	18					010109235
3	BR01-041-121-20	BOLT	*	1					010411212
4	BR02-510-001-20	SEAL WASHER	*	1					025100012
5	BR05-210-907-60	O-RING	*	1					052109076
6	BR14-098-696-00	PIPE	*	1					140986960
7	BR14-040-663-00	FILTER.SUCTION	*	1					140406630
8	BR01-131-061-20	BOLT	*	2					011310612
9	BR11-075-615-00	GUIDE	*	1					110756150
10	BR05-210-911-30	O-RING	*	2					052109113
11	BR01-131-061-20	BOLT	*	1					011310612
12	BR19-841-627-00	LEVEL GAUGE COMPL	*	1					198416270
13	BR11-036-135-00	REAR PLATE	*	1					110361350
14	BR01-010-968-30	BOLT	*	10					010109683
15	BR18-508-667-00	MOTOR ASSY.STARTING	*	1					185086670
16	BR11-535-126-00	FLYWHEEL COMPL	*	1					115351260
17	BR11-537-613-00	GEAR.RING	*	1					115376130
18	BR04-012-600-20	BEARING	*	1					040126002
19	BR01-010-933-00	BOLT	*	4					010109330
20	BR11-099-676-00	GASKET	*	1					110996760
21	BR19-863-608-00	OIL SEAL	*	1					198636080

FIG.007 INJECTION PUMP/INJECTOR

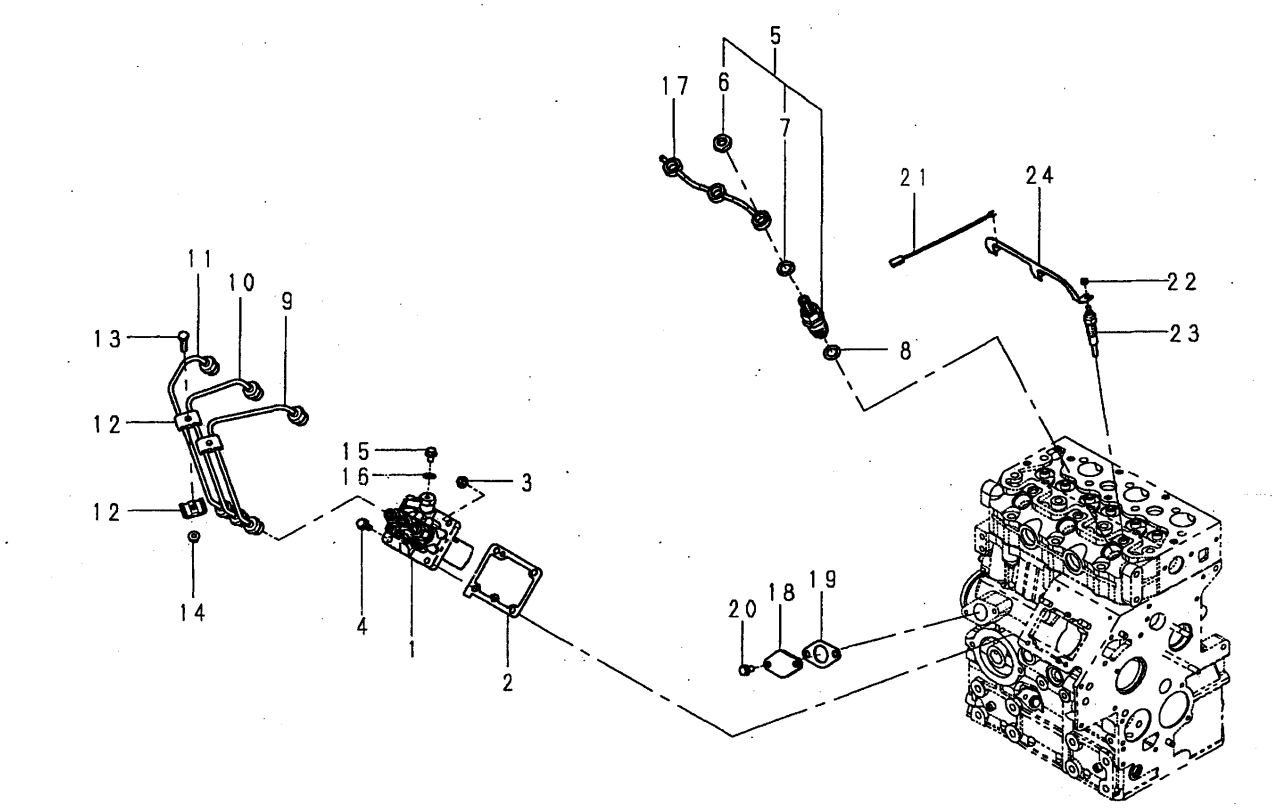

SB01-007A-

KEY	PART CODE	DESCRIPTION	SPC	TYPE OF MODEL E673L D4501		ITC	COL	GRP	REMARKS
1	BR13-101-002-10	PUMP ASSY.INJECTION	*	1					131010021
2	BR13-142-630-00	SHIM SET	*	1					131426300
3	BR02-310-000-60	NUT	*	2					023100006
4	BR01-131-062-00	BOLT	*	2					011310620
5	BR13-140-648-00	INJECTOR	*	3					131406480
6	BR13-144-606-90	NUT	*	3					131446069
7	BR13-142-621-00	WASHER	*	3					131426210
8	BR13-142-620-00	GASKET	*	3					131426200
9	BR13-150-792-00	PIPE.INJECTION	*	1					131507920
10	BR13-150-793-00	PIPE.INJECTION	*	1					131507930
11	BR13-150-794-00	PIPE.INJECTION	*	1					131507940
12	BR19-910-602-10	CLAMP	*	4					199106021
13	BR01-011-062-50	BOLT	*	2					010110625
14	BR02-310-000-60	NUT	*	2					023100006
15	BR13-123-628-00	SCREW	*	1					131236280
16	BR02-510-000-60	SEAL WASHER	*	1					025100006
17	BR13-160-626-00	PIPE.RETURN	*	1					131606260
18	BR16-520-664-00	COVER	*	1					165206640
19	BR13-099-613-00	GASKET	*	1					130996130
20	BR01-131-061-20	BOLT	*	2					011310612
21	BR18-560-653-00	HARNESS.WIRE	*	1					185606530
22	BR02-310-000-40	NUT	*	3					023100004
23	BR18-536-622-00	PLUG.GLOW	*	3					185366220
24	BR18-537-639-00	CONNECTOR	*	1					185376390

FIG.008 ROCKER ARM

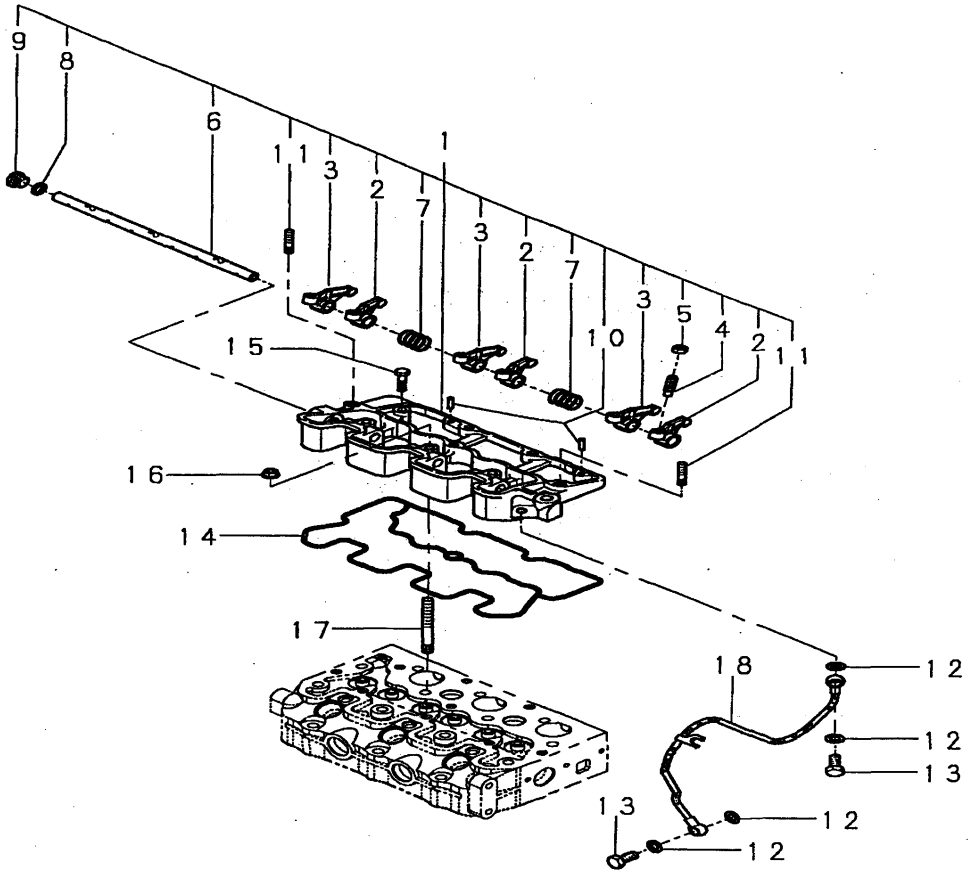

SB01-008A-

KEY	PART CODE	DESCRIPTION	SPC	TYPE OF MODEL E673L D4501		ITC	COL	GRP	REMARKS
1	BR12-003-719-00	ROCKER ARM ASSY	*	1					120037190
2	BR12-036-632-00	ROCKER ARM	*	3					120366320
3	BR12-036-633-00	ROCKER ARM	*	3					120366330
4	BR19-948-622-00	SCREW	*	6					199486220
5	BR02-010-907-60	NUT	*	6					020109076
6	BR12-031-632-00	SHAFT.ROCKER ARM	*	1					120316320
7	BR19-821-766-00	SPRING	*	2					198217660
8	BR05-210-010-00	O-RING	*	1					052100100
9	BR19-843-637-00	PLUG	*	1					198436370
10	BR03-030-041-60	SPRING PIN	*	2					030300416
11	BR01-211-062-00	STUD BOLT	*	2					012110620
12	BR14-099-626-00	GASKET:M8	*	4					140996260
13	BR19-848-678-00	BOLT BANJO	*	2					198486780
14	BR12-099-620-00	GASKET	*	1					120996200
15	BR01-131-062-50	BOLT	*	2					011310625
16	BR02-310-000-60	NUT	*	3					023100006
17	BR01-210-925-90	STUD BOLT	*	3					012109259
18	BR14-060-741-00	PIPE.OIL	*	1					140607410

FIG.009 HEAD COVER

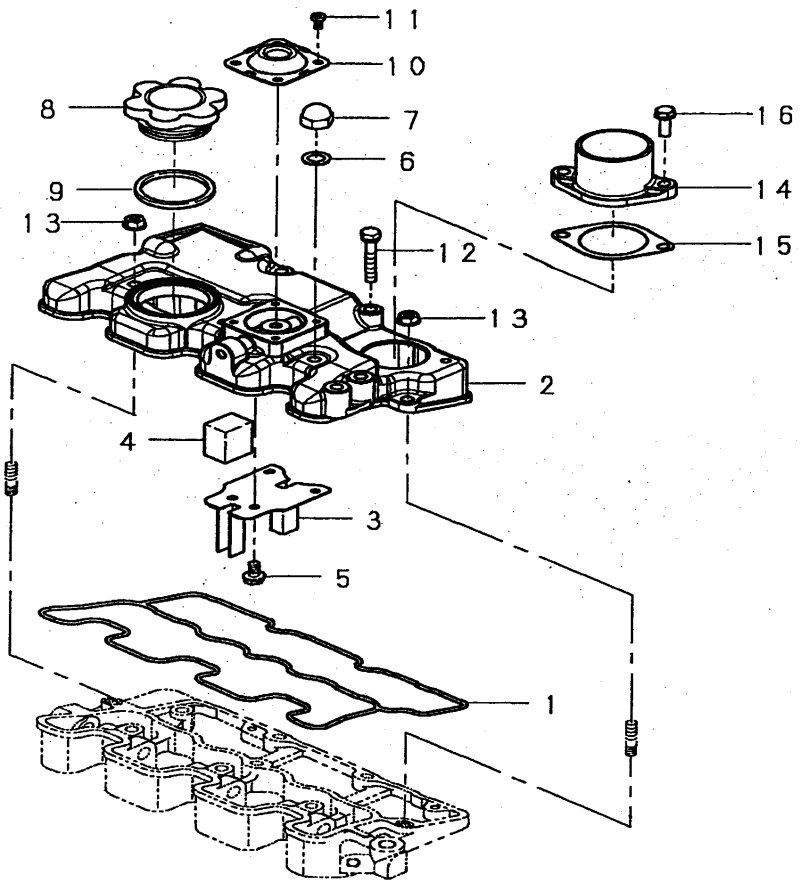

SB01-009A-

KEY	PART CODE	DESCRIPTION	SPC	TYPE OF MODEL E673L D4501		ITC	COL	GRP	REMARKS
1	BR11-199-647-00	GASKET:HEAD COVER	*	1					111996470
2	BR11-121-789-00	COVER.CYLINDER HEAD	*	1					111217890
3	BR11-066-624-00	STOPPER.OIL	*	1					110666240
4	BR11-066-625-00	OIL STOPPER	*	1					110666250
5	BR01-560-040-60	SCREW	*	4					015600406
6	BR14-099-638-00	GASKET	*	3					140996380
7	BR02-450-000-60	CAP NUT	*	3					024500006
8	BR19-843-601-00	CAP	*	1					198436010
9	BR05-210-040-00	O-RING	*	1					052100400
10	BR11-056-607-00	VALVE.BREATHER	*	1					110566070
11	BR01-110-040-80	BOLT	*	4					011100408
12	BR01-131-067-00	BOLT	*	3					011310670
13	BR02-310-000-60	NUT	*	2					023100006
14	BR13-556-662-00	ELBOW.INTAKE:SB	*	1					135566620
15	BR13-599-675-10	GASKET:AIR INTAKE	*	1					135996751
16	BR01-131-062-00	BOLT	*	2					011310620

FIG.010 WATER PUMP/THERMOSTAT CASE

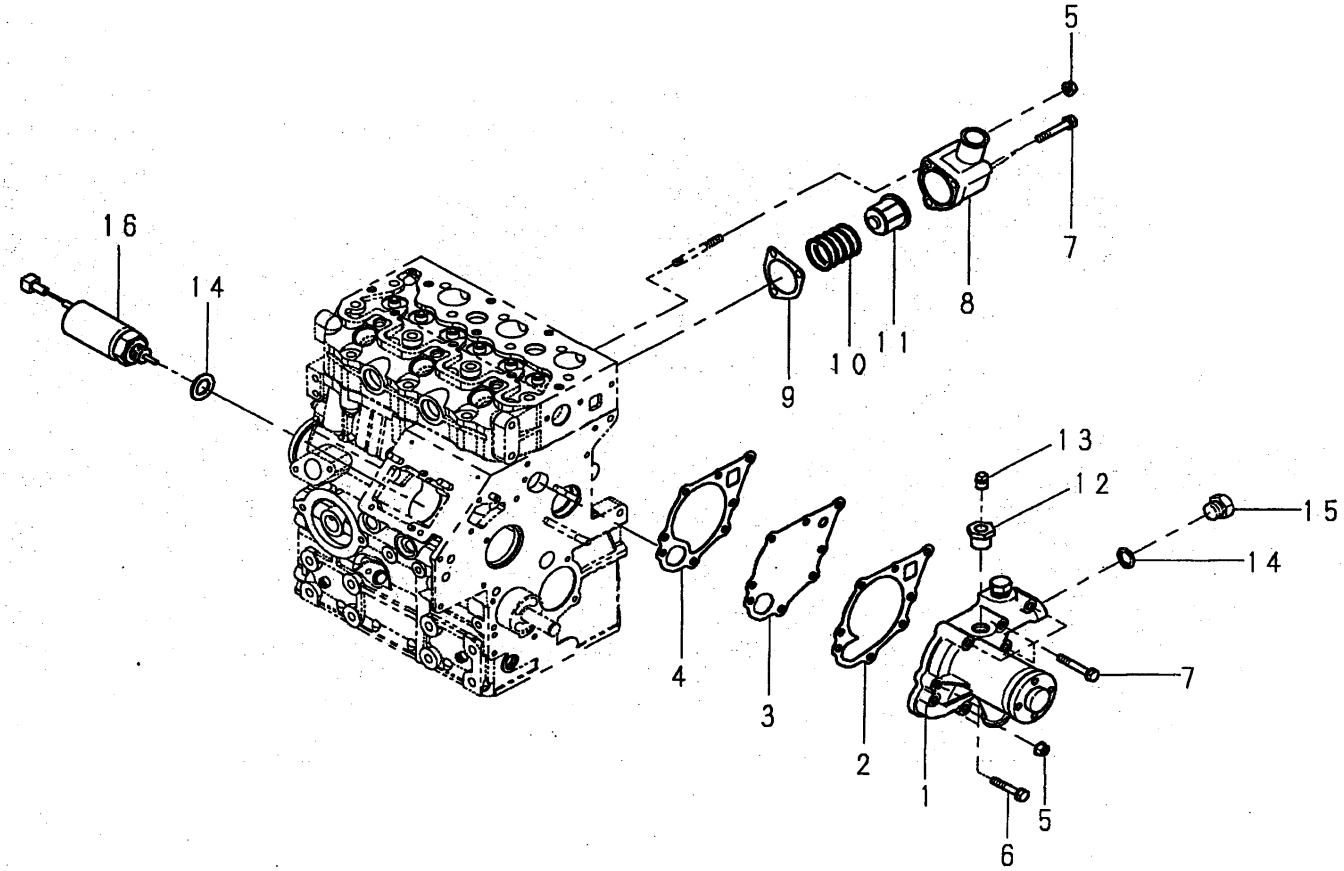

SB01-010A-

KEY	PART CODE	DESCRIPTION	SPC	TYPE OF MODEL E673L D4501		ITC	COL	GRP	REMARKS
1	BR14-501-715-10	PUMP ASSY.WATER	*	1					145017151
2	BR14-599-664-00	GASKET	*	1					145996640
3	BR14-514-649-00	PLATE.SET	*	1					145146490
4	BR14-599-663-00	GASKET	*	1					145996630
5	BR02-310-000-60	NUT	*	2					023100006
6	BR01-131-063-50	BOLT	*	3					011310635
7	BR01-131-065-00	BOLT	*	6					011310650
8	BR14-521-634-10	CASE.THERMOSTAT	*	1					145216341
9	BR14-599-674-00	GASKET	*	1					145996740
10	BR19-821-741-00	SPRING	*	1					198217410
11	BR14-520-632-00	THERMOSTAT COMPL	*	1					145206320
12	BR19-848-771-00	CONNECTOR	*	1					198487710
13	BR06-450-001-00	PLUG	*	1					064500010
14	BR02-510-001-60	SEAL WASHER	*	2					025100016
15	BR01-010-957-60	BOLT	*	1					010109576
16	BR18-520-633-20	SOLENOID	*	1					185206332

FIG.011 COOLING FAN/ALTERNATER/OIL FILTER

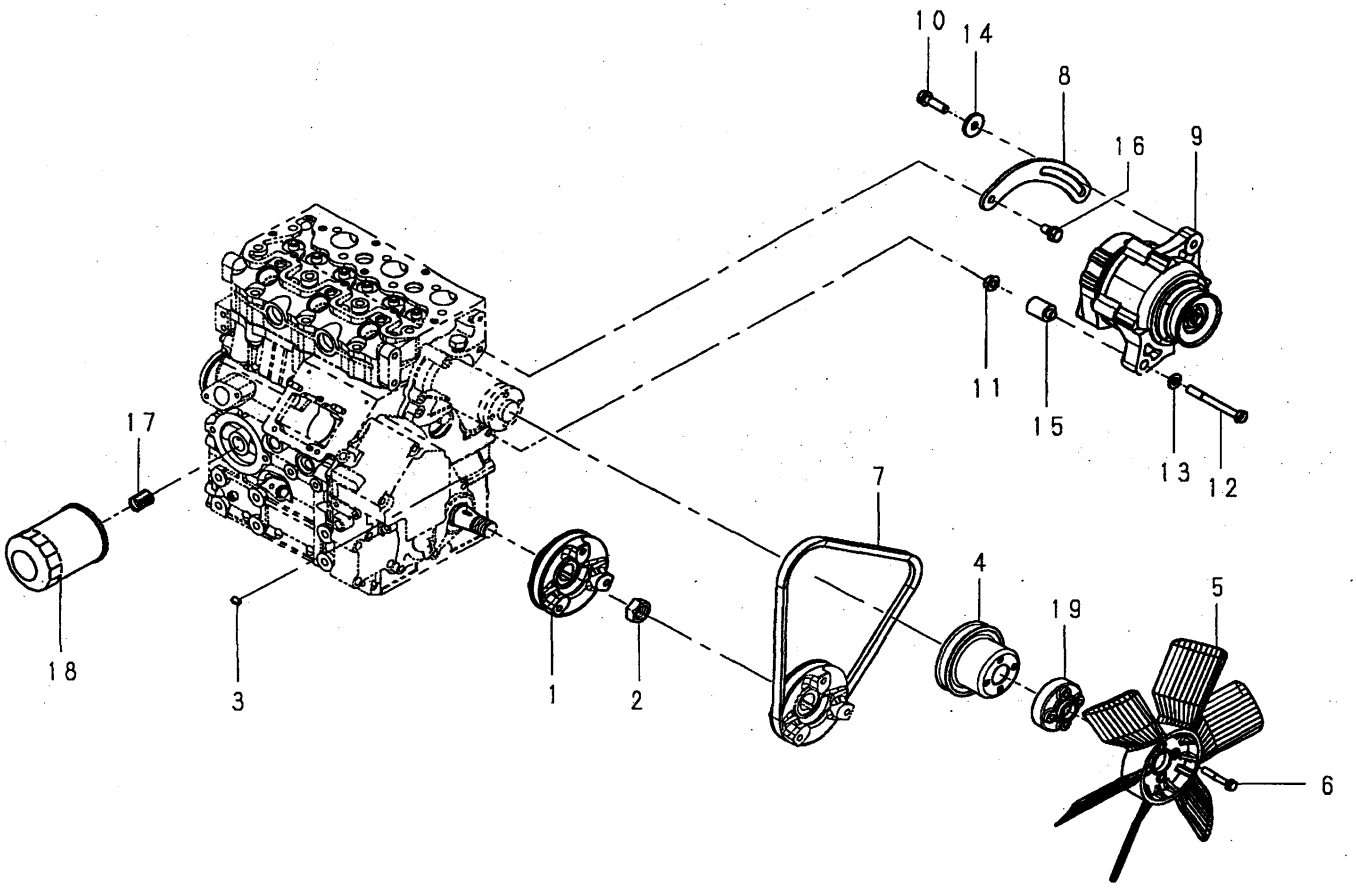

SB01-011A-

KEY	PART CODE	DESCRIPTION	SPC	TYPE OF MODEL E673L D4501		ITC	COL	GRP	REMARKS
1	BR11-539-755-00	PULLEY.CRANKSHAFT	*	1					115397550
2	BR02-080-001-80	NUT	*	1					020800018
3	BR03-410-050-80	KEY	*	1					034100508
4	BR14-533-649-00	PULLEY.FAN	*	1					145336490
5	BR14-530-659-00	FAN.COOLING	*	1					145306590
6	BR01-131-064-00	BOLT	*	4					011310640
7	BR08-010-908-30	V-BELT:FM29	*	1					080109083
8	BR18-572-689-00	PLATE.ADJUSTING	*	1					185726890
9	BR18-504-644-00	ALTERNATOR ASSY	*	1					185046440
10	BR01-151-083-00	BOLT	*	1					011510830
11	BR02-310-000-80	NUT	*	1					023100008
12	BR01-151-087-50	BOLT	*	1					011510875
13	BR02-610-000-80	WASHER	*	1					026100008
14	BR02-610-901-70	WASHER	*	1					026109017
15	BR19-923-683-00	COLLAR	*	1					199236830
16	BR01-151-081-60	BOLT	*	1					011510816
17	BR14-054-602-00	JOINT.FILTER	*	1					140546020
18	BR14-051-703-00	FILTER.OIL	*	1					140517030
19	BR14-538-692-00	HOLDER.FAN	*	1					145386920

FIG.012 ACCESSORY PARTS

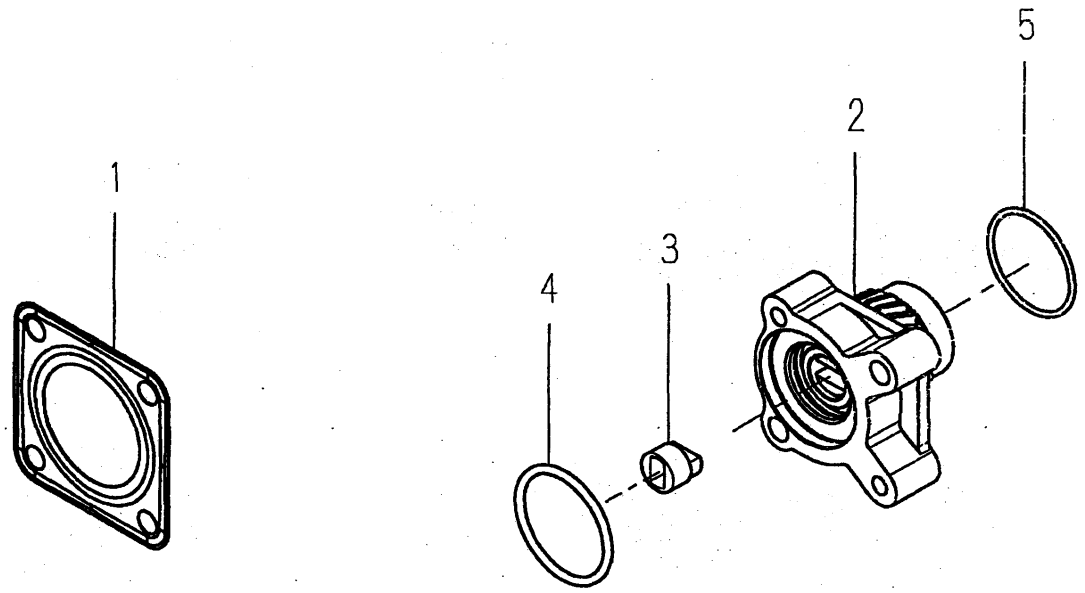

SB01-012A-

KEY	PART CODE	DESCRIPTION	SPC	TYPE OF MODEL E673L D4501		ITC	COL	GRP	REMARKS
1	BR31-499-001-30	GASKET	*	1					314990013
2	BR11-015-635-00	HOLDER ASSY.BEARING	*	1					110156350
3	BR13-172-614-00	COUPLING	*	1					131726140
4	BR05-230-040-00	O-RING	*	1					052300400
5	BR05-240-040-00	O-RING	*	1					052400400

FIG.013 INJECTION PUMP ASSY/INJECTOR ASSY

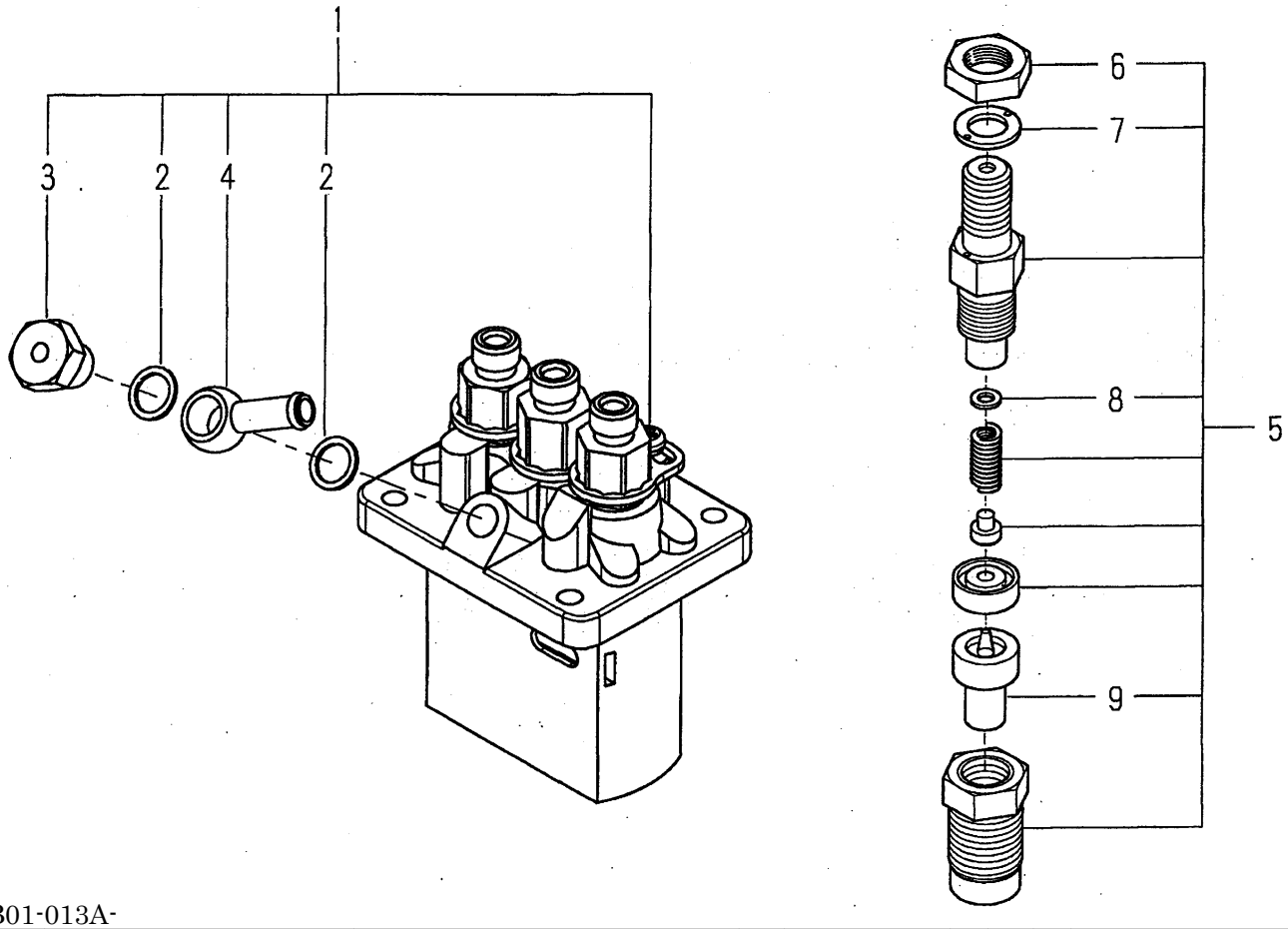

SB01-013A-

KEY	PART CODE	DESCRIPTION	SPC	TYPE OF MODEL E673L D4501		ITC	COL	GRP	REMARKS
1	BR13-101-002-10	PUMP ASSY.INJECTION	*	1					131010021
2	BR13-142-618-00	GASKET	*	2					131426180
3	BR13-123-619-00	EYE BOLT	*	1					131236190
4	BR13-124-613-00	JOINT	*	1					131246130
5	BR13-140-648-00	INJECTOR	*	3					131406480
6	BR13-144-606-90	NUT	*	1					131446069
7	BR13-142-621-00	WASHER	*	1					131426210
8	BR13-143-764-00	SHIM SET	*	1					131437640
9	BR13-141-626-00	NOZZLE ASSY	*	1					131416260

FIG.014 ALTERNATER ASSY

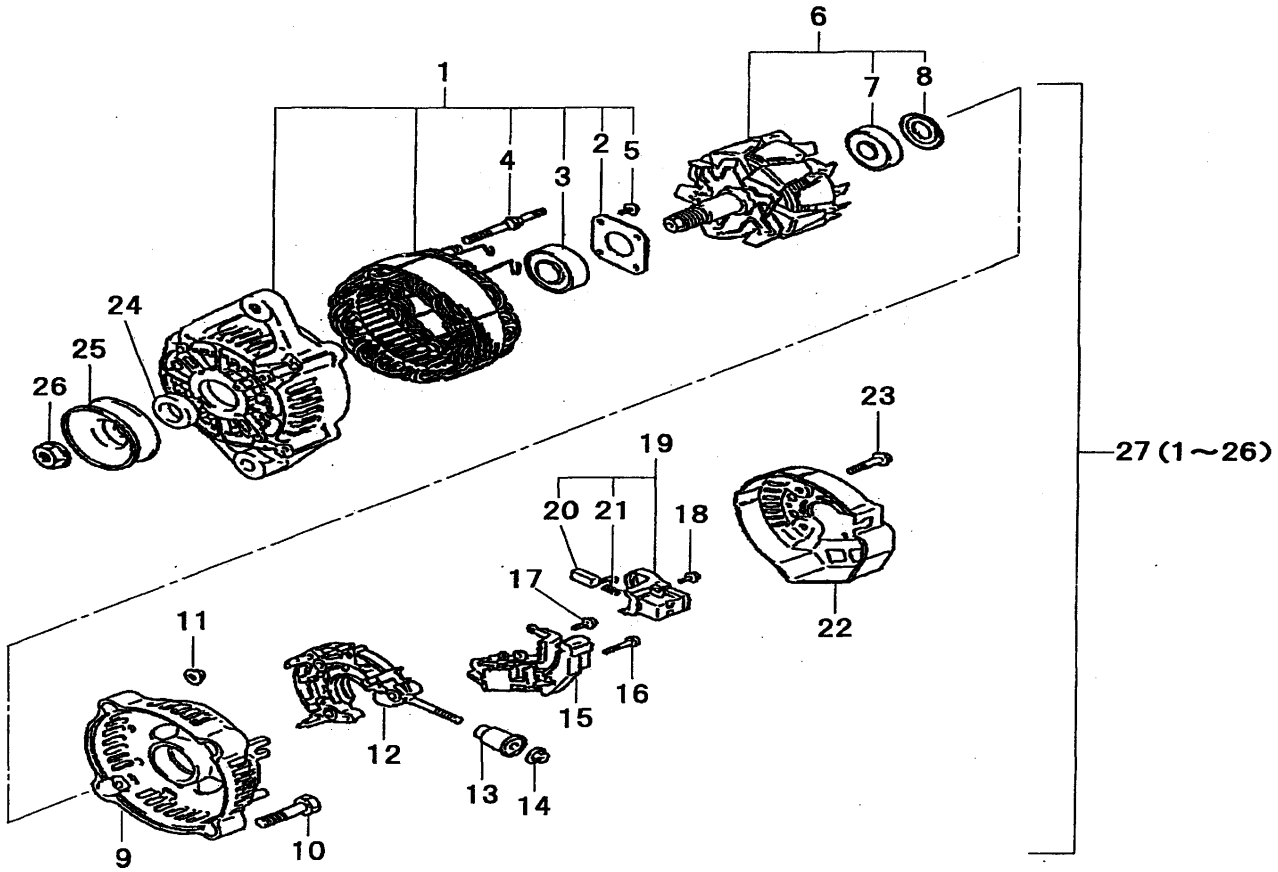

SB01-014A-

KEY	PART CODE	DESCRIPTION	SPC	TYPE OF MODEL E673L D4501		ITC	COL	GRP	REMARKS
1	BR18-544-622-10	SERVICE PARTS	*	1					185446221
2	BR18-544-622-30	RETAINER PLATE	*	1					185446223
3	BR18-544-622-40	BALL BEARING	*	1					185446224
4	BR18-544-622-70	STUD BOLT	*	2					185446227
5	BR18-544-625-80	BOLT	*	4					185446258
6	BR18-544-624-00	ROTOR ASSY	*	1					185446240
7	BR18-544-624-10	BALL BEARING	*	1					185446241
8	BR18-544-624-20	BEARING COVER	*	1					185446242
9	BR18-544-622-80	REAR END FRAME	*	1					185446228
10	BR18-544-623-80	BOLT	*	2					185446238
11	BR18-544-625-90	NUT	*	2					185446259
12	BR18-544-622-90	HOLDER ASSY	*	1					185446229
13	BR18-544-623-70	SERVICE PARTS	*	1					185446237
14	BR18-544-623-90	NUT	*	1					185446239
15	BR18-544-630-70	REGULATOR ASSY	*	1					185446307
16	BR18-544-626-20	SCREW	*	2					185446262
17	BR18-544-626-10	SCREW	*	1					185446261
18	BR18-544-626-00	BOLT	*	6					185446260
19	BR18-544-630-60	HOLDER ASSY. BRUSH	*	1					185446306
20	BR18-544-623-10	BRUSH SUB ASSY	*	2					185446231
21	BR18-544-623-20	SPRING	*	2					185446232
22	BR18-544-630-80	COVER END	*	1					185446308
23	BR18-544-624-50	BOLT	*	3					185446245
24	BR18-544-624-40	COLLAR	*	1					185446244
25	BR18-544-624-30	PULLEY	*	1					185446243
26	BR18-544-623-60	SERVICE PARTS	*	1					185446236
27	BR18-504-644-00	ALTERNATOR ASSY	*	1					185046440

FIG.015 STARTER MORTOR ASSY

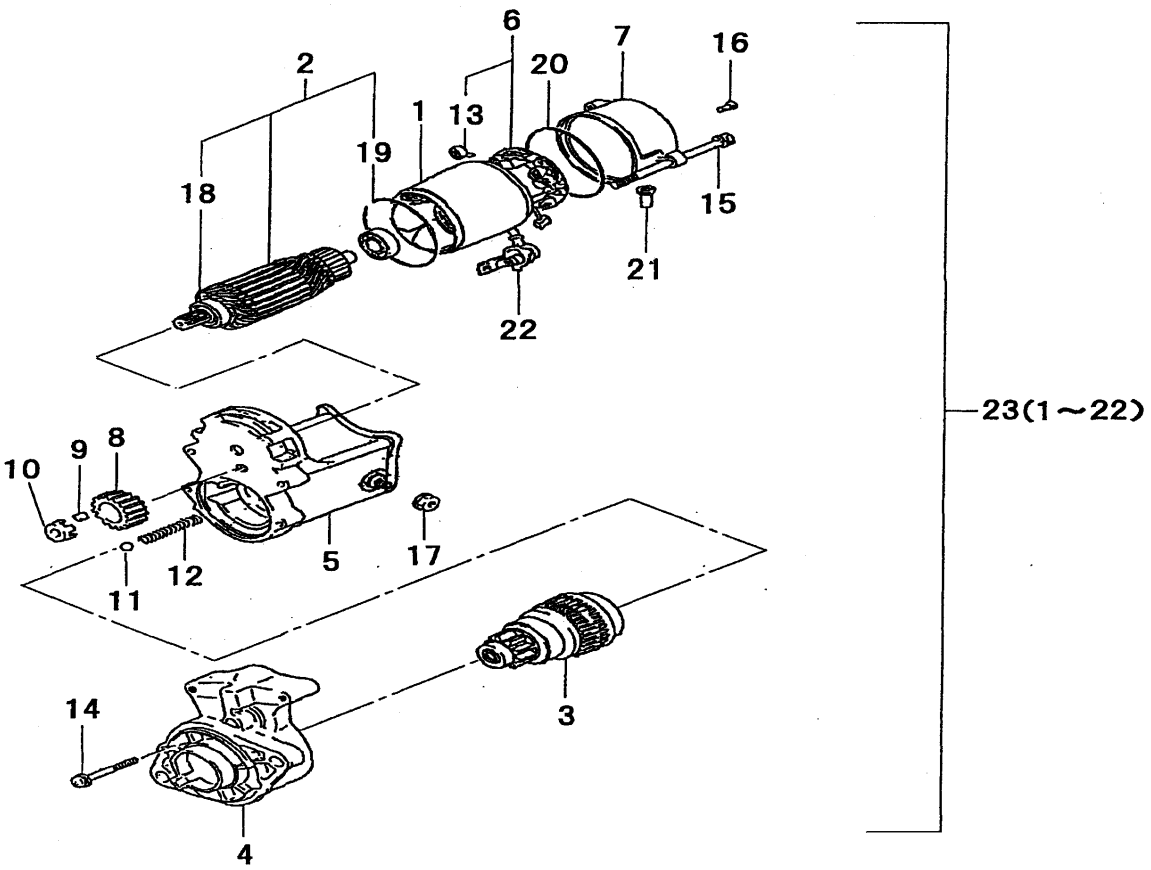

SB01-015A-

KEY	PART CODE	DESCRIPTION	SPC	TYPE OF MODEL E673L D4501		ITC	COL	GRP	REMARKS
1	BR18-584-667-70	YOKE ASSY	*	1					185846677
2	BR18-584-667-60	ARMATURE ASSY	*	1					185846676
3	BR18-584-667-50	CLUCH SUB ASSY	*	1					185846675
4	BR18-584-667-40	HOUSING ASSY	*	1					185846674
5	BR18-584-667-30	SWICH ASSY	*	1					185846673
6	BR18-584-667-20	HOLDER ASSY	*	1					185846672
7	BR18-584-667-10	SERVICE PARTS	*	1					185846671
8	BR18-584-655-20	PINION	*	1					185846552
9	BR18-584-637-10	ROLLER	*	5					185846371
10	BR18-584-655-10	RETAINER	*	1					185846551
11	BR18-584-628-60	STEEL BALL	*	1					185846286
12	BR18-584-656-00	SPRING	*	1					185846560
13	BR18-584-667-00	SPRING	*	4					185846670
14	BR18-584-655-80	BOLT	*	2					185846558
15	BR18-584-666-90	BOLT	*	2					185846669
16	BR18-584-666-80	SCREW	*	2					185846668
17	BR18-584-637-80	NUT	*	1					185846378
18	BR18-584-654-90	BEARING	*	1					185846549
19	BR18-584-654-80	BEARING	*	1					185846548
20	BR18-584-656-10	O-RING	*	2					185846561
21	BR18-584-666-70	BUSHING	*	1					185846667
22	BR18-584-640-10	RUBBER CAP	*	1					185846401
23	BR18-508-667-00	MOTOR ASSY.STARTING	*	1					185086670

C H A S S I S

FIG.101 RADIATOR SYSTEM

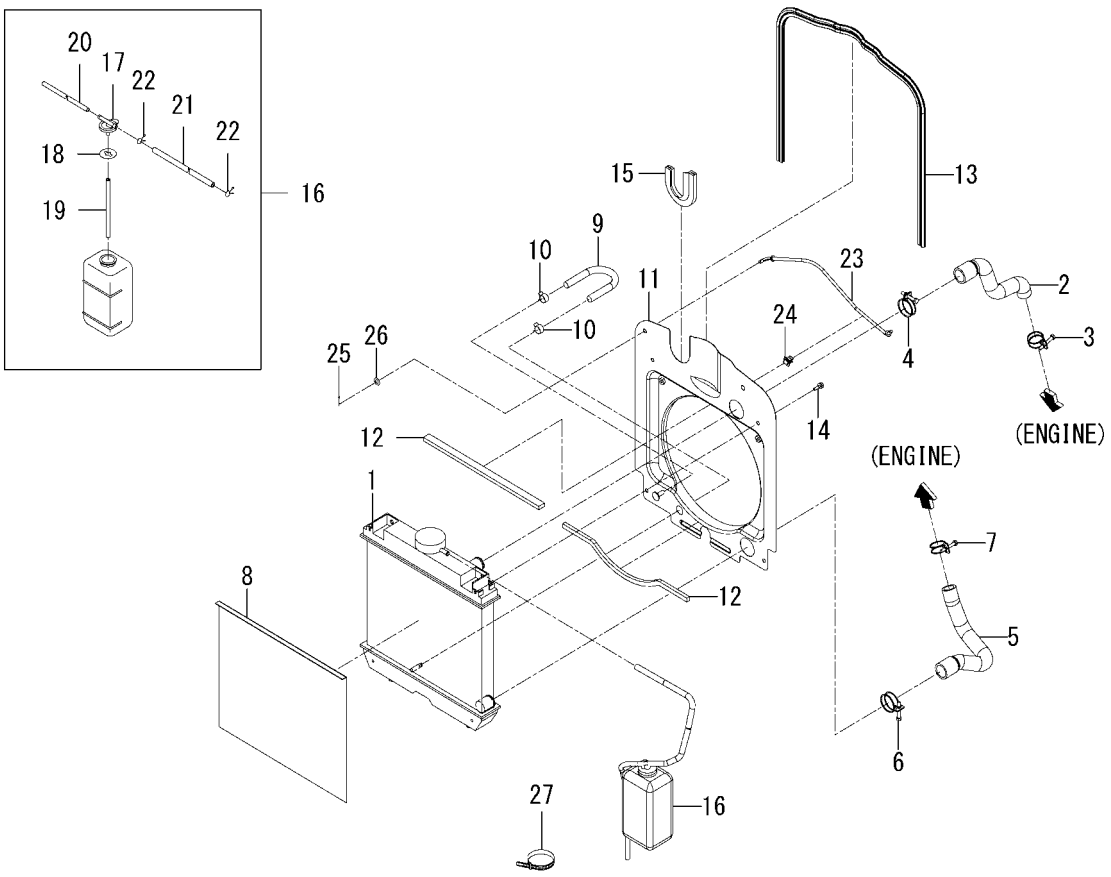

1776-102 -0100

KEY	PART CODE	DESCRIPTION	SPC	TYPE OF MODEL TM3185 FU		ITC	COL	GRP	REMARKS
1	1776-102-200-00	RADIATOR ASSY	*	1					
2	1776-102-001-00	HOSE/RADIATOR/INLET	*	1					
3	J061-224-032-00	CLAMP/WIRE/24-32	*	1					
4	J061-230-038-00	CLAMP/WIRE/30-38	*	1					
5	1776-102-002-00	HOSE/RADIATOR/OUTLET	*	1					
6	J061-230-038-00	CLAMP/WIRE/30-38	*	1					
7	J061-224-032-00	CLAMP/WIRE/24-32	*	1					
8	1776-102-003-00	NET	*	1					
9	1682-102-004-00	HOSE/250	*	1					
10	J062-147-159-00	CLIP/HOSE/14.7-15.9	*	2					
11	1776-102-210-00	SHROUD COMP	*	1					
12	1675-102-002-00	INSULATOR	*	2					
13	1776-102-004-00	INSULATOR/1140	*	1					
14	V210-360-602-00	BOLT/SP	*	2					
15	1776-208-004-00	TRIM/01X170	*	1					
16	1705-102-240-20	RESERVETANK ASSY	*	1					
17	6221-408-008-00	CAP	*	1					
18	6221-408-009-00	PACKING	*	1					
19	6221-408-010-00	HOSE/RUBBER	*	1					
20	1705-102-251-10	PIPE	*	1					
21	1705-102-252-20	HOSE/RUBBER	*	1					
22	6221-408-013-00	CLAMP	*	2					
23	- - - - - -	BLANK	*						- - - - - -
24	- - - - - -	BLANK	*						- - - - - -
25	- - - - - -	BLANK	*						- - - - - -
26	- - - - - -	BLANK	*						- - - - - -
27	1376-402-003-00	BAND,WIRE/140	*	1					

FIG.102 MUFFLER SYSTEM

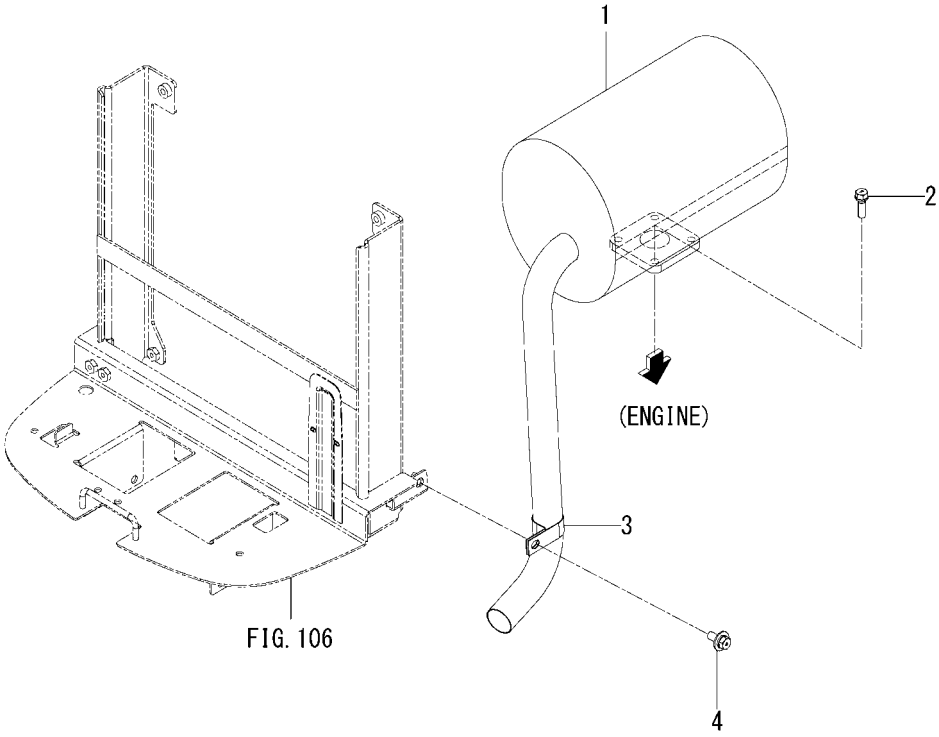

1776-103 -0100

KEY	PART CODE	DESCRIPTION	SPC	TYPE OF MODEL TM3185 FU		ITC	COL	GRP	REMARKS
1	1776-103-210-00	MUFFLER COMP	*	1					
2	V211-560-802-00	BOLT/M8X20	*	4					
3	1672-103-001-00	CLAMP/32	*	1					
4	3650-831-004-00	BOLT	*	1					

FIG.103 CLEANER(AIR)SYSTEM

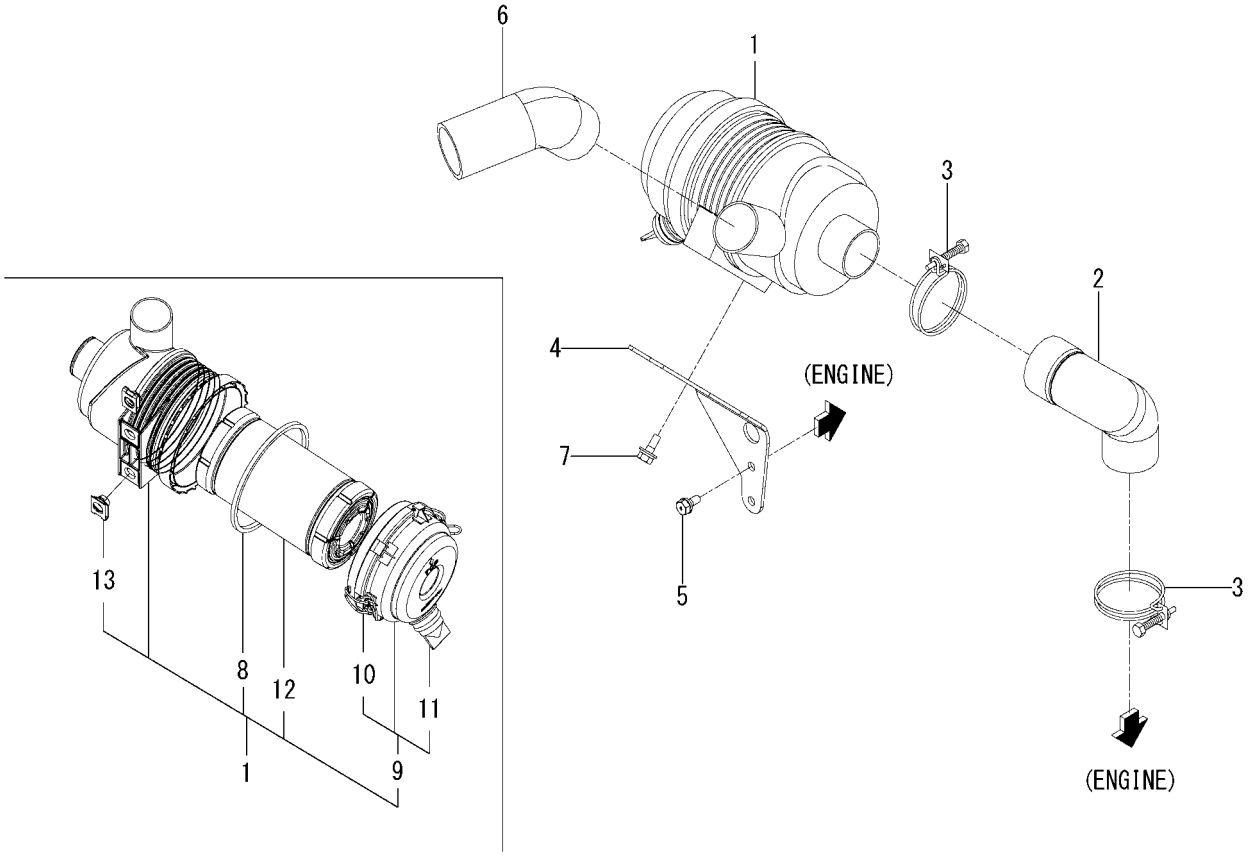

1776-104 -0100

KEY	PART CODE	DESCRIPTION	SPC	TYPE OF MODEL TM3185 FU		ITC	COL	GRP	REMARKS
1	1776-104-210-00	CLEANER/AIR ASSY	*	1					
2	1776-104-001-00	HOSE/CLEANER/OUTLET	*	1					
3	J061-247-055-00	CLAMP/WIRE/47-55	*	2					
4	1776-104-002-00	PLATE/CLEANER	*	1					
5	V211-260-801-60	BOLT,SEMS (S) M8X16	*	2					
6	1776-104-003-00	HOSE	*	1					
7	V211-360-802-00	BOLT/SP	*	2					
8	1725-104-312-00	GASKET	*	1					
9	1725-104-330-00	CAP COMP	*	1					
10	1725-104-332-00	CLAMP COMP	*	2					
11	1725-104-333-00	VALVE/UNLOAD	*	1					
12	1725-104-313-00	FILTER COMP	*	1					
13	1801-104-205-00	NUT/CLIP	*	2					

FIG.104 FILTER(FUEL)SYSTEM

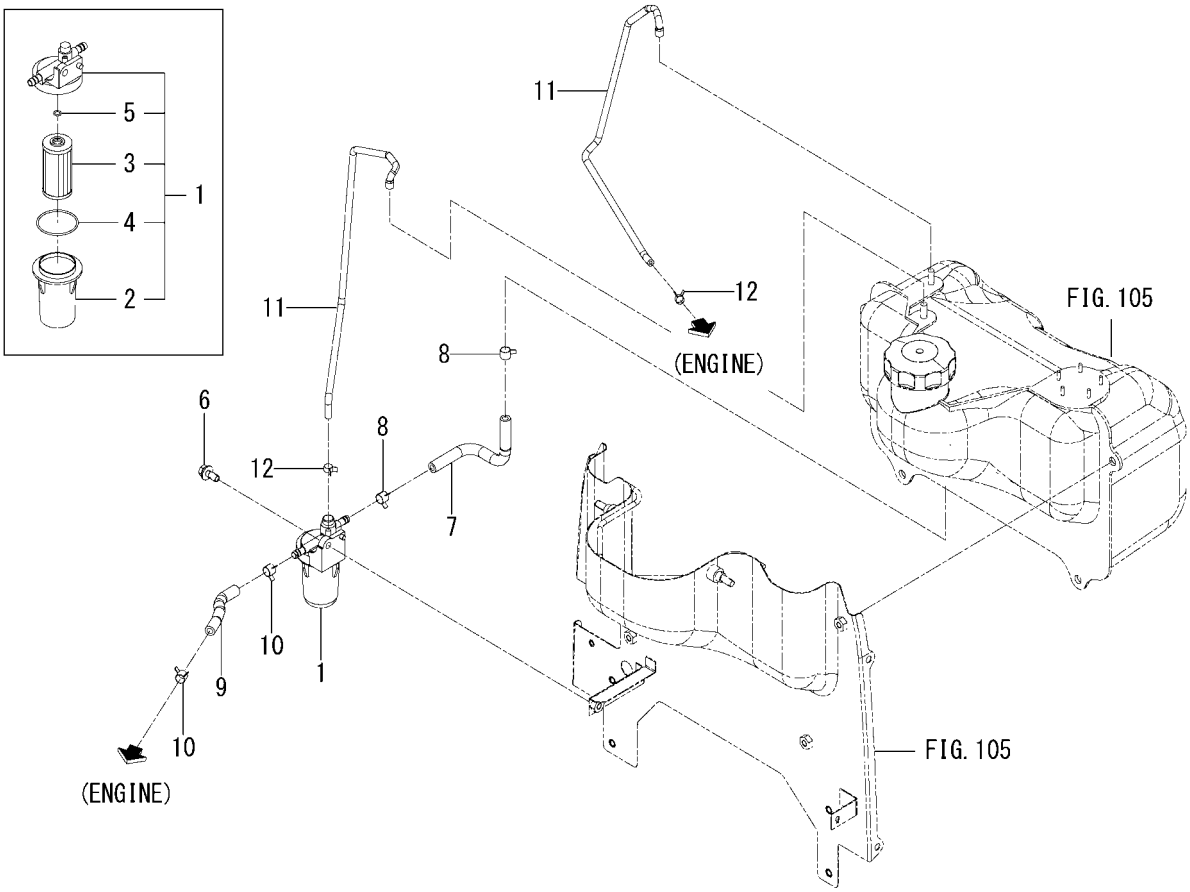

1776-105 -0100

KEY	PART CODE	DESCRIPTION	SPC	TYPE OF MODEL TM3185 FU		ITC	COL	GRP	REMARKS
1	1774-105-200-00	FILTER/FUEL	*	1					
2	1774-105-202-00	CUP	*	1					
3	1774-105-203-00	ELEMENT	*	1					
4	1774-105-204-00	RING/O	*	1					
5	1774-105-205-00	RING/O	*	1					
6	V211-360-802-00	BOLT/SP	*	1					
7	1776-105-003-00	HOSE/08X13X170	*	1					
8	1650-111-034-00	CLIP/HOSE/11-13	*	2					
9	1776-105-002-00	HOSE/08X13X95	*	1					
10	1650-111-034-00	CLIP/HOSE/11-13	*	2					
11	1776-105-001-00	HOSE/500	*	2					
12	J062-087-093-00	CLIP/HOSE/8.7-9.3	*	2					

FIG.105 TANK(FUEL)SYSTEM

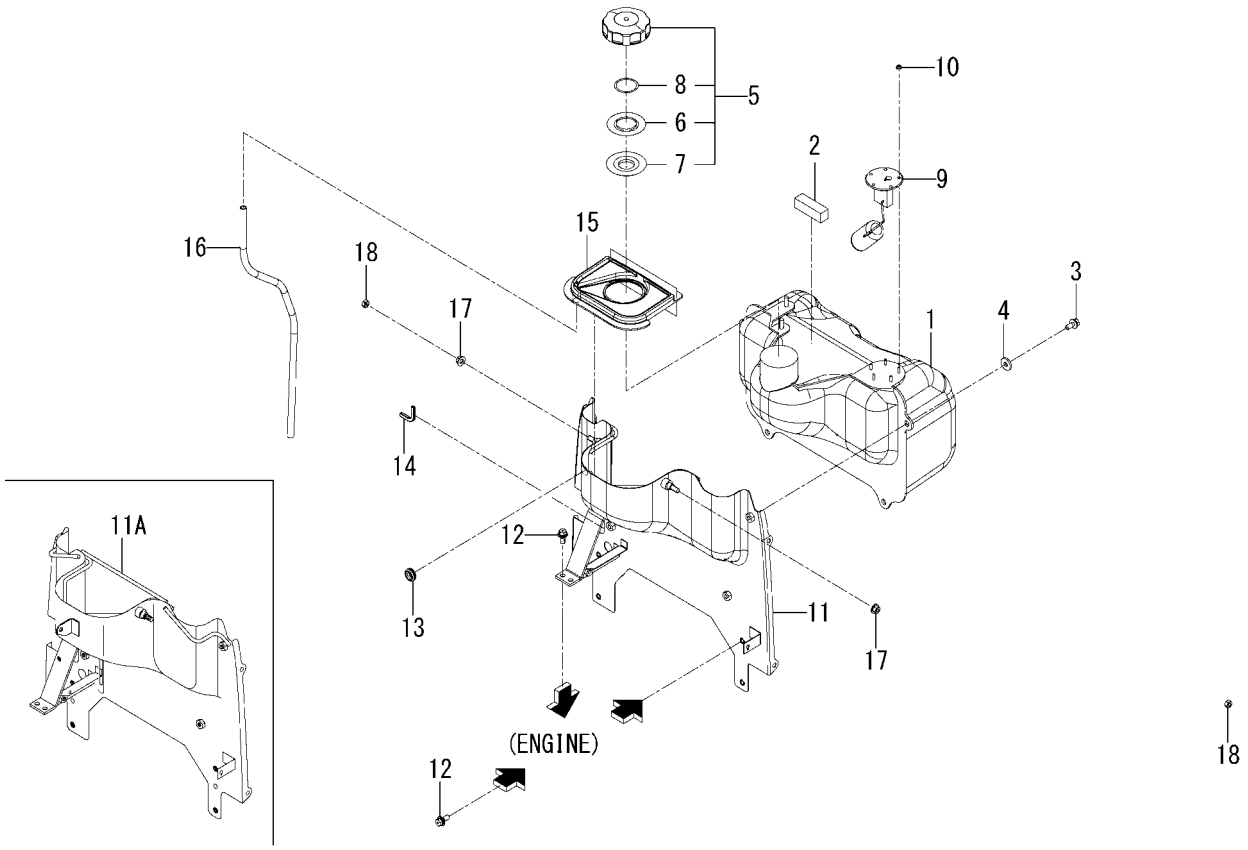

1776-111 -0100

KEY	PART CODE	DESCRIPTION	SPC	TYPE OF MODEL TM3185 FU		ITC	COL	GRP	REMARKS
1	1776-111-001-00	TANK/FUEL	*	1					
2	1776-111-004-00	INSULATOR/50	*	1					
3	V211-360-802-00	BOLT/SP	*	4					
4	4101-102-038-00	WASHER/24X9X3.2	*	4					
5	1774-111-310-10	CAP/NONLEAK ASSY	*	1					
6	1729-111-283-00	PLATE	*	1					
7	1729-111-284-00	PACKING	*	1					
8	1774-111-311-00	PACKINGA	*	1					
9	1776-111-210-00	GAUGE/FUEL ASSY	*	1					
10	V360-260-004-00	NUT	*	5					
11	- - - - - -	BLANK	*						- - - - - -
11A	1776-111-200-30	BRACKET/TANK COMP	*	1					
12	V211-360-802-00	BOLT/SP	*	6					
13	2139-505-002-00	GROMMET	*	1					
14	1760-604-001-00	INSULATOR	*	1					
15	1776-111-003-00	CUP/FUEL	*	1					
16	P103-112-003-20	HOSE/700	*	1					
17	V362-260-008-00	NUT/WASHER	*	2					
18	- - - - - -	BLANK	*						- - - - - -

FIG.106 BATTERY SYSTEM

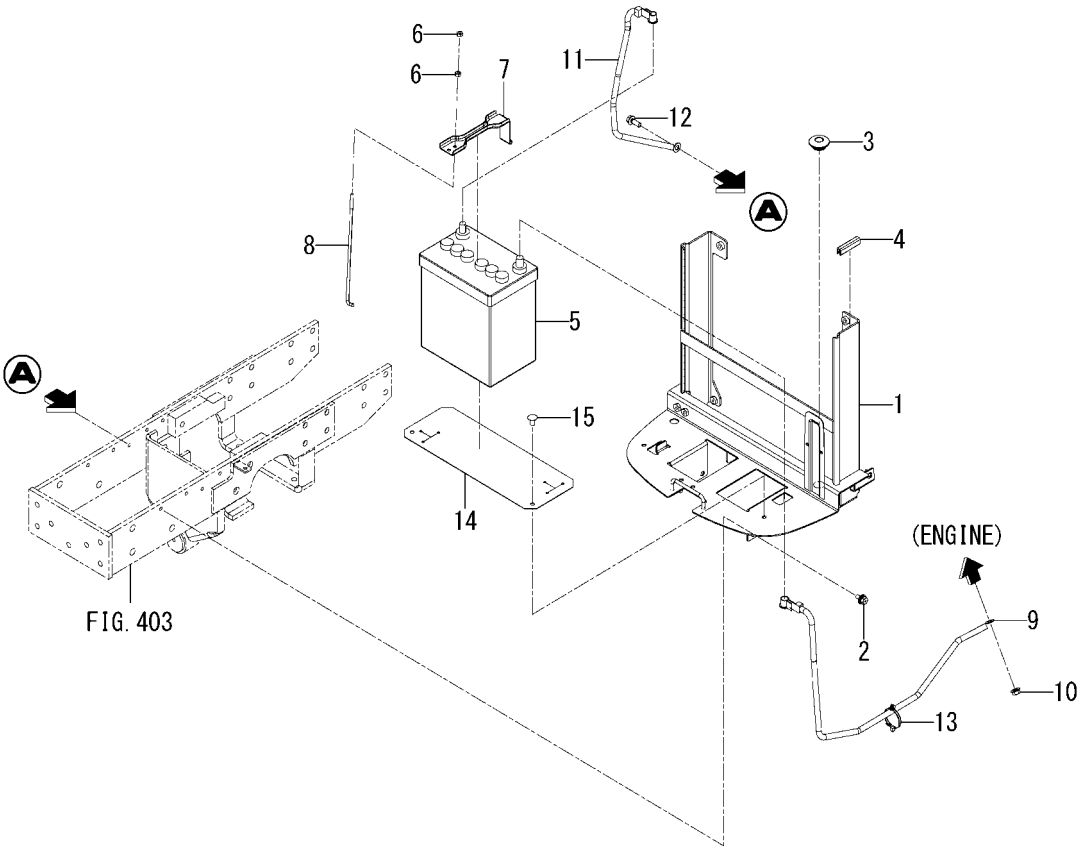

1776-112 -0100

KEY	PART CODE	DESCRIPTION	SPC	TYPE OF MODEL TM3185 FU		ITC	COL	GRP	REMARKS
1	1776-112-210-10	BRACKET/BATTERY COMP	*	1					
2	V211-360-801-60	BOLT,SEMS (SP)	*	6					
3	1421-603-004-00	BUSH,LEVER	*	2					
4	3666-202-005-10	PAD/50	*	1					
5	1672-112-240-10	BATTERY/44B19R ASSY	*	1					
6	V301-260-006-00	NUT/M6	*	2					
7	- - - - - -	BLANK	*						- - - - - -
7	1776-112-001-10	STOPPER/BATTERY	*	1					
8	1593-112-002-50	BOLT,BATTERY	*	1					
9	1776-112-310-10	CABLE/BATTERY ASSY	*	1					
10	V362-260-008-00	NUT/WASHER	*	1					
11	3662-260-003-00	CABLE/BATTERY/420	*	1					
12	- - - - - -	BLANK	*						- - - - - -
12	V211-360-801-60	BOLT,SEMS (SP)	*	1					
13	1560-666-004-00	BAND	*	1					
14	1776-112-002-00	INSULATOR/BATTERY	*	1					
15	1527-604-002-00	CLIP(B)	*	2					

FIG.107 CABLE(ACCELERATOR)SYSTEM

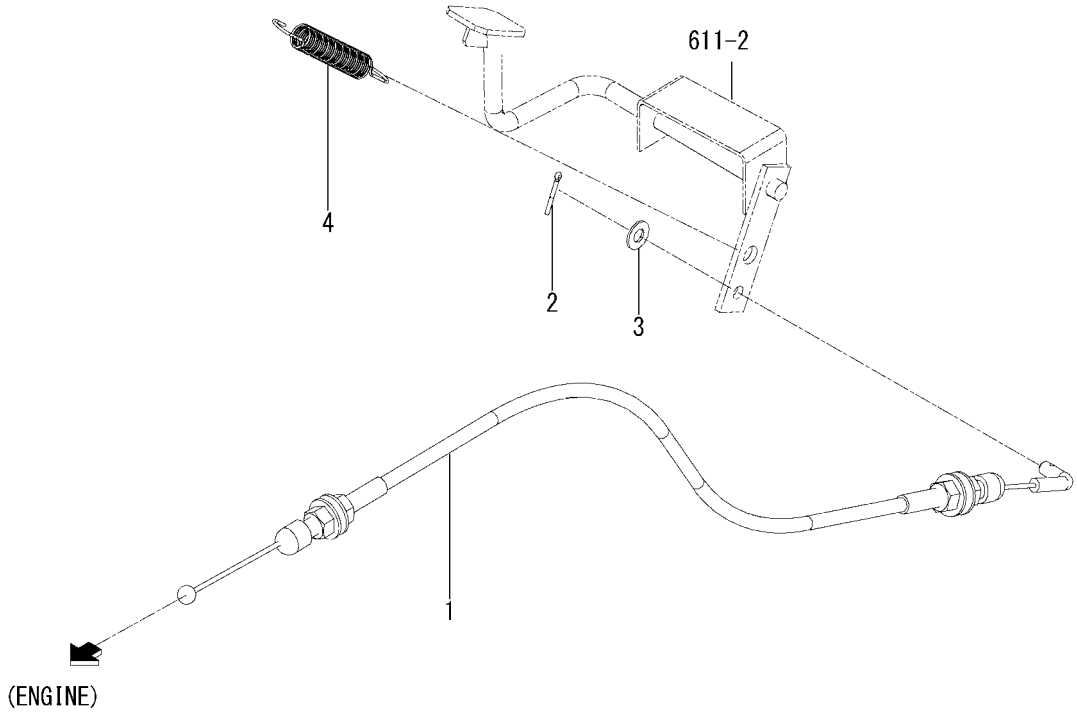

1776-116 -0100

KEY	PART CODE	DESCRIPTION	SPC	TYPE OF MODEL TM3185 FU		ITC	COL	GRP	REMARKS
1	1776-116-200-10	CABLE/ACCELERATOR	*	1					
2	V500-162-001-50	PIN,SPLIT/2 X15	*	1					
3	V411-260-006-00	WASHER / M6	*	1					
4	1414-312-002-00	SPRING,TENSION/53	*	1					

FIG.108 LEVER(ACCELERATOR)SYSTEM

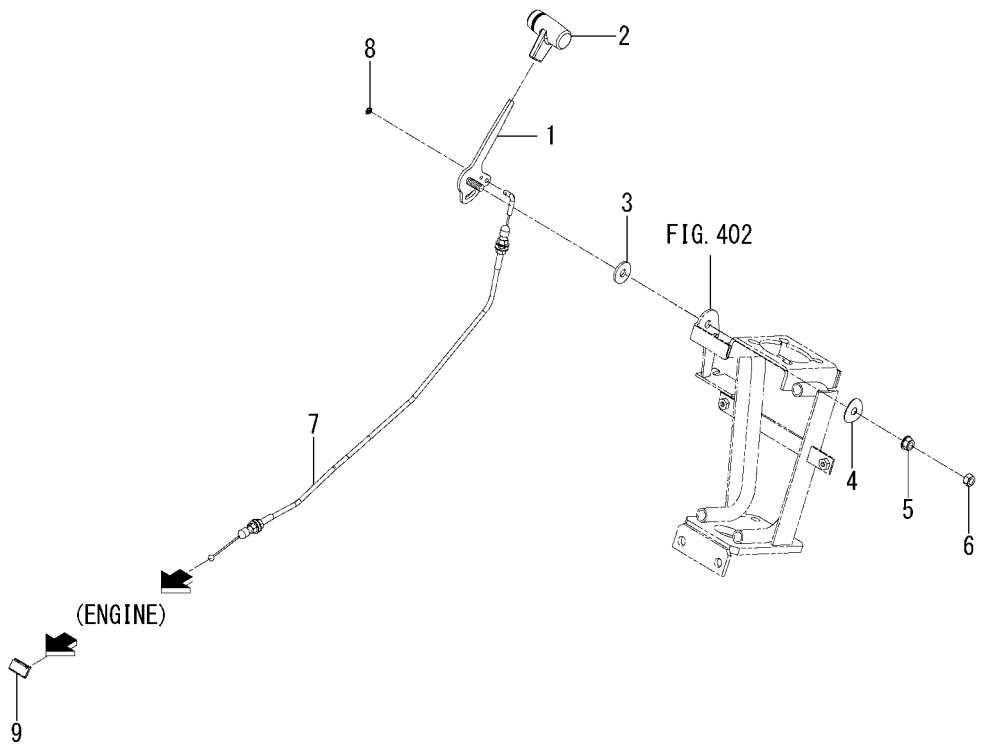

1776-117 -0100

KEY	PART CODE	DESCRIPTION	SPC	TYPE OF MODEL TM3185 FU		ITC	COL	GRP	REMARKS
1	1776-117-210-10	LEVER COMP	*	1					
2	3104-210-007-00	GRIP/TRAVELING	*	1					
3	1596-512-002-10	LINING/11X30X03	*	1					
4	1593-117-003-10	SPRING,DISK	*	1					
5	1776-201-011-00	NUT/FLANGE/M10	*	1					
6	V304-260-010-00	NUT	*	1					
7	1776-117-200-00	CABLE/THROTTLE ASSY	*	1					
8	V500-162-001-50	PIN,SPLIT/2 X15	*	1					
9	1776-117-002-00	HOLDER	*	1					

FIG.109 CLUTCH(MAIN)SYSTEM

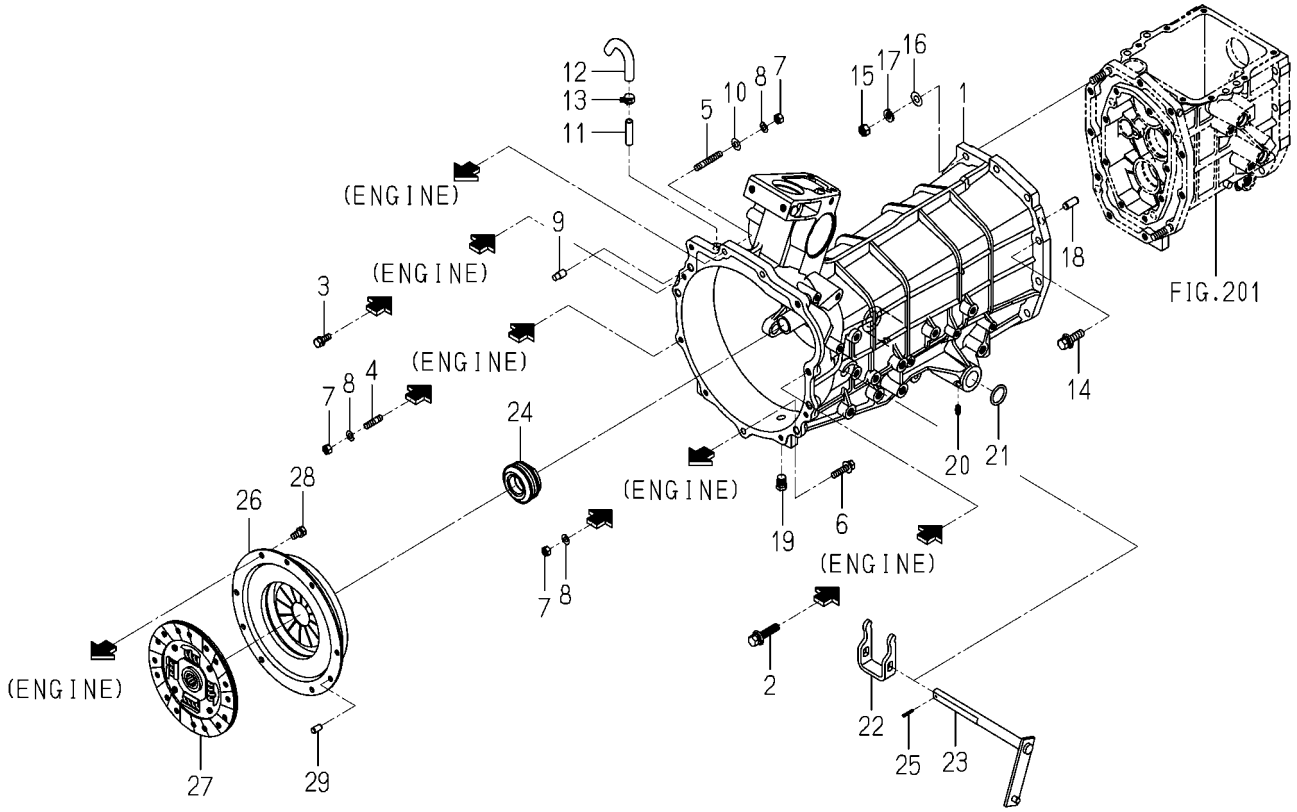

1776-120A-0100

KEY	PART CODE	DESCRIPTION	SPC	TYPE OF MODEL TM3185 FU		ITC	COL	GRP	REMARKS
1	- - - - - -	BLANK	*						- - - - - -
1	- - - - - -	BLANK	*						- - - - - -
1	1776-120-001-40	HOUSING/CLUTCH	*	1					
2	V211-661-004-50	BOLT/SP	*	2					
3	V211-560-802-00	BOLT/M8X20	*	2					
4	V251-340-802-00	BOLT/STUD	*	4					
5	V251-340-804-00	BOLT/STUD	*	2					
6	V211-660-803-50	BOLT/SP	*	1					
7	V304-460-008-00	NUT/M8	*	7					
8	V401-160-008-00	WASHER,SP/M 8	*	7					
9	1421-433-004-00	PIN,KNOCK	*	2					
10	V411-260-008-00	WASHER,PL/M 8	*	2					
11	1544-120-008-10	PIPE,BREATHER	*	1					
12	1716-501-006-10	HOSE/BREATHER	*	1					
13	J062-138-148-00	CLIP/HOSE/13.8-14.8	*	1					
14	V211-661-003-50	BOLT/SP	*	9					
15	V304-460-010-00	NUT/M10	*	2					
16	V411-260-010-00	WASHER/M10	*	2					
17	V401-160-010-00	WASHER,SP/M10	*	2					
18	V523-101-002-40	PIN	*	2					
19	V782-160-000-4B	PLUG/SCREW/SEAL	*	1					
20	V760-150-000-00	NIPPLE,GREASE	*	2					
21	V720-103-502-50	O-RING/P25	*	2					
22	1776-120-002-00	FORK	*	1					
23	1776-120-240-00	ARM/CLUTCH COMP	*	1					
24	1776-120-230-00	RBB/CLUTCH/RELEASE	*	1					
25	V580-140-302-00	PIN/SPRING	*	1					
26	1776-120-210-00	COVER/CLUTCH/18 COMP	*	1					
27	1776-120-220-00	DISC/CLUTCH/180 COMP	*	1					
28	V211-260-801-60	BOLT,SEMS (S) M8X16	*	6					

FIG.109 CLUTCH(MAIN)SYSTEM

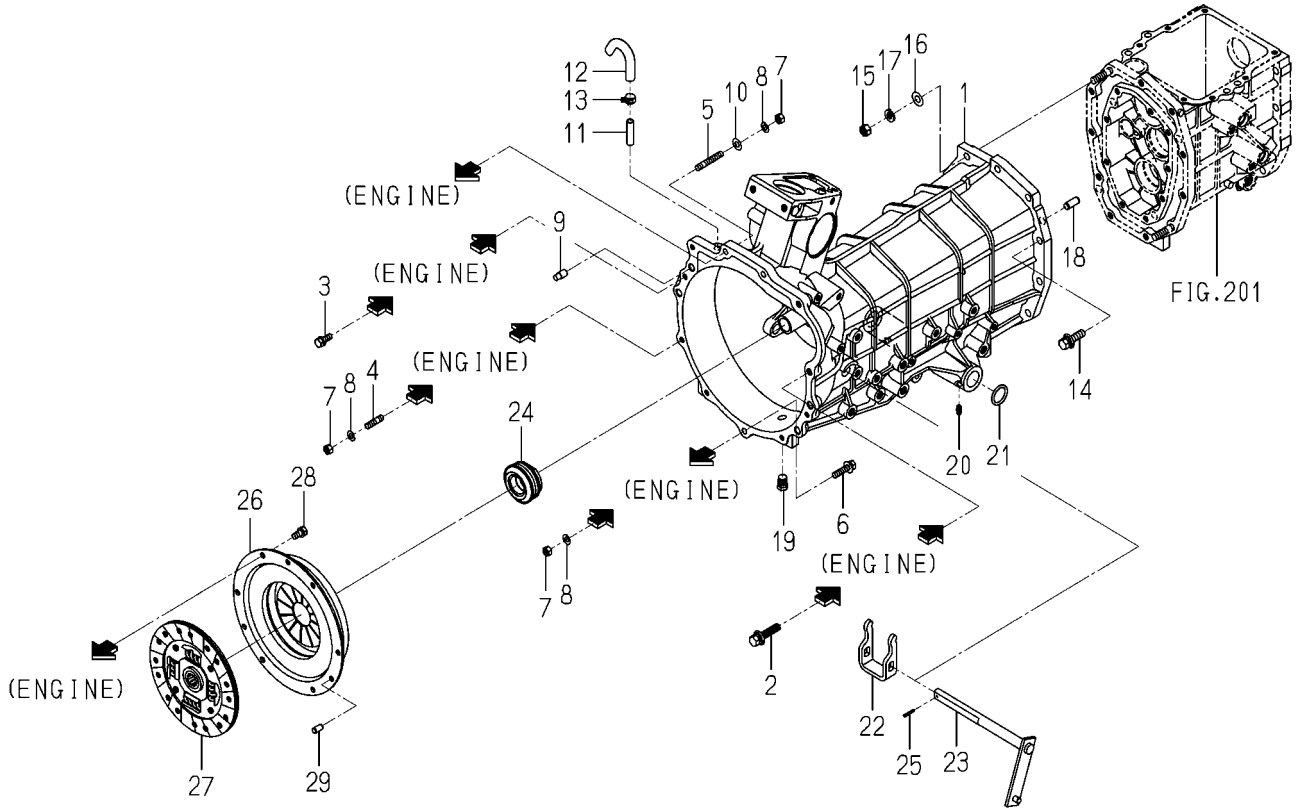

1776-120A-0100

KEY	PART CODE	DESCRIPTION	SPC	TYPE OF MODEL TM3185 FU		ITC	COL	GRP	REMARKS
29	V523-100-801-60	PIN	*	3					

FIG.110 PEDAL(CLUTCH)SYSTEM

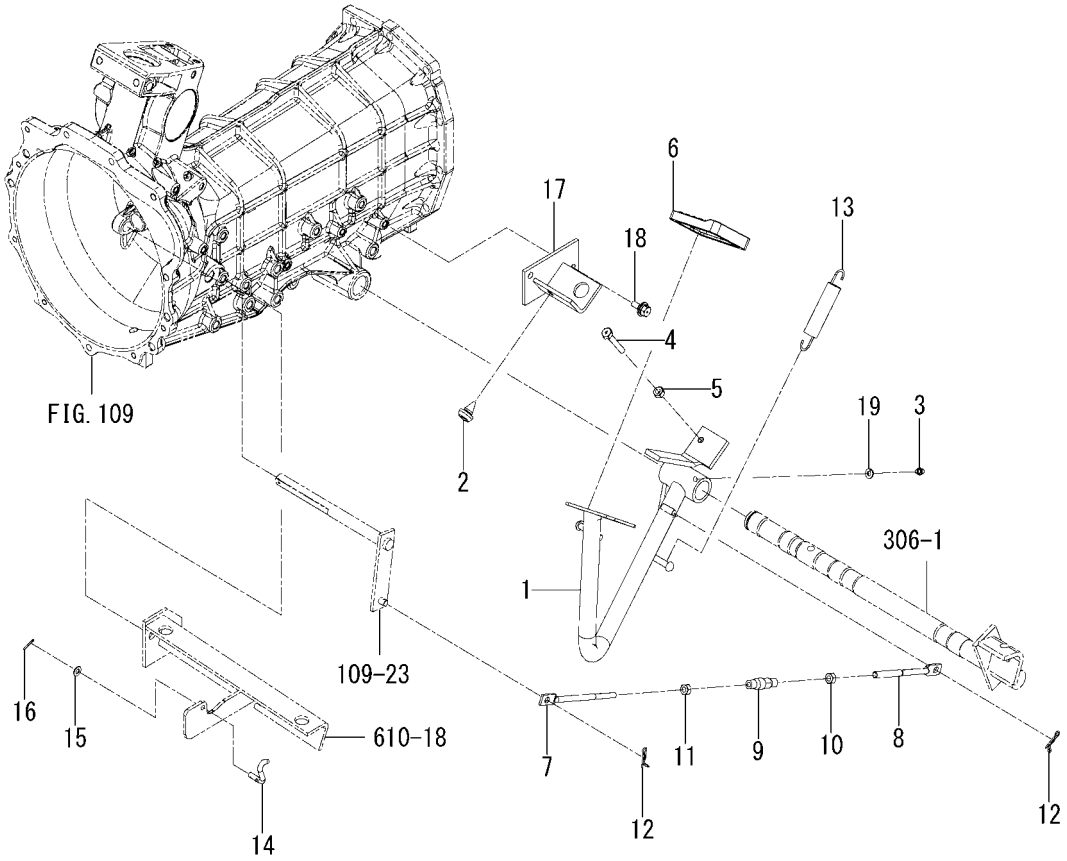

1776-122 -0100

KEY	PART CODE	DESCRIPTION	SPC	TYPE OF MODEL TM3185 FU		ITC	COL	GRP	REMARKS
1	- - - - - -	BLANK	*						- - - - - -
1	1776-122-200-10	PEDAL/CLUTCH COMP	*	1					
2	1432-616-002-00	RUBBER,CUSHION	*	1					
3	- - - - - -	BLANK	*						- - - - - -
3	V760-150-000-00	NIPPLE,GREASE	*	1					
4	1696-120-001-00	BOLT/SM/M08X40	*	1					
5	V304-260-008-00	NUT	*	1					
6	2512-206-001-00	PAD	*	1					
7	3662-223-003-00	ROD/TENSION/08X140	*	1					
8	1742-504-004-00	ROD/M08X120	*	1					
9	1444-122-002-00	TURNBUCKLE/M8	*	1					
10	V304-260-008-00	NUT	*	1					
11	1560-132-007-30	NUT/M8	*	1					
12	1725-271-003-00	PIN/SNAP/B	*	2					
13	1673-314-001-00	SPRING/HE106	*	1					
14	1776-122-001-00	HOOK	*	1					
15	V411-260-006-00	WASHER / M6	*	1					
16	V500-162-001-50	PIN,SPLIT/2 X15	*	1					
17	1776-122-260-00	BRACKET/SWITCH COMP	*	1					
18	V211-360-802-00	BOLT/SP	*	2					
19	V401-160-006-00	WASHER,SP/M 6	*	1					

FIG.111 SHAFT(INPUT)SYSTEM

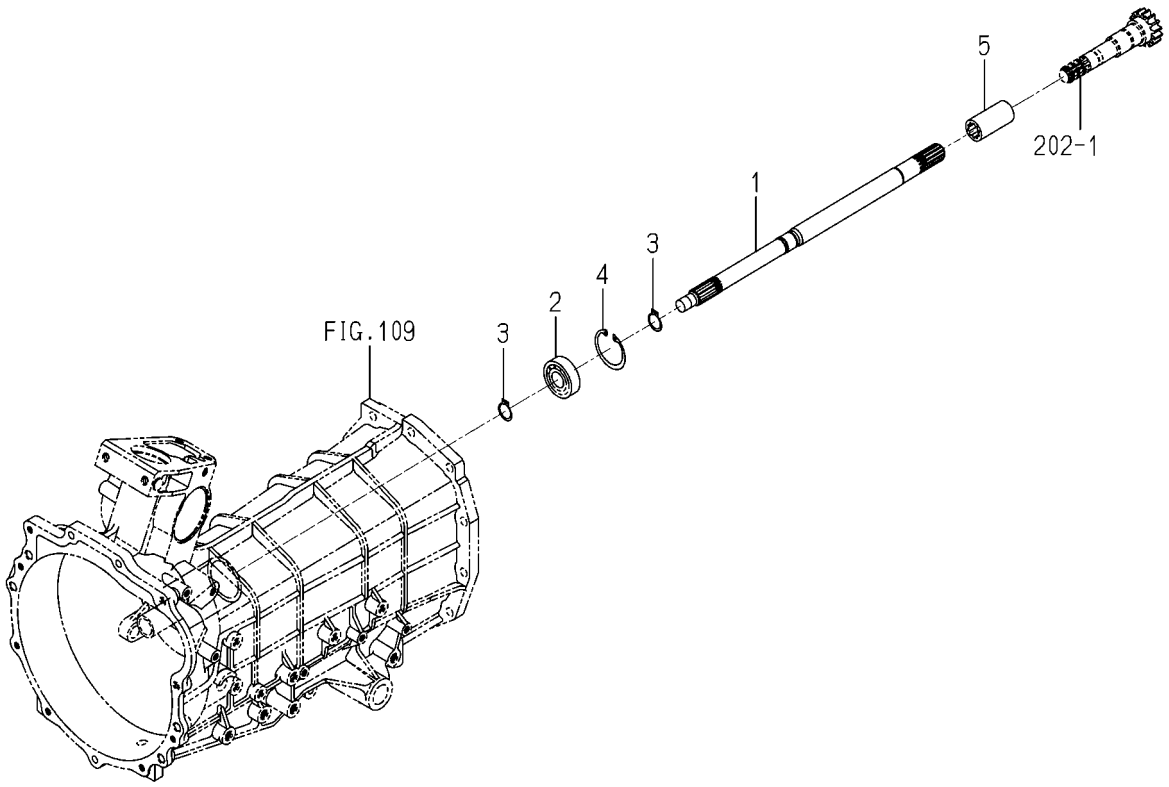

1776-125 -0100

KEY	PART CODE	DESCRIPTION	SPC	TYPE OF MODEL TM3185 FU		ITC	COL	GRP	REMARKS
1	1776-125-001-10	SHAFT/INPUT	*	1					
2	1729-202-014-00	BEARING/BALL	*	1					
3	V704-140-020-00	RING,SNAP/20C	*	2					
4	V705-140-047-00	RING,SNAP/47 C	*	1					
5	1673-431-001-10	COUPRING/16X27X55	*	1					

FIG.201 CASE(TRANSMISSION)SYSTEM

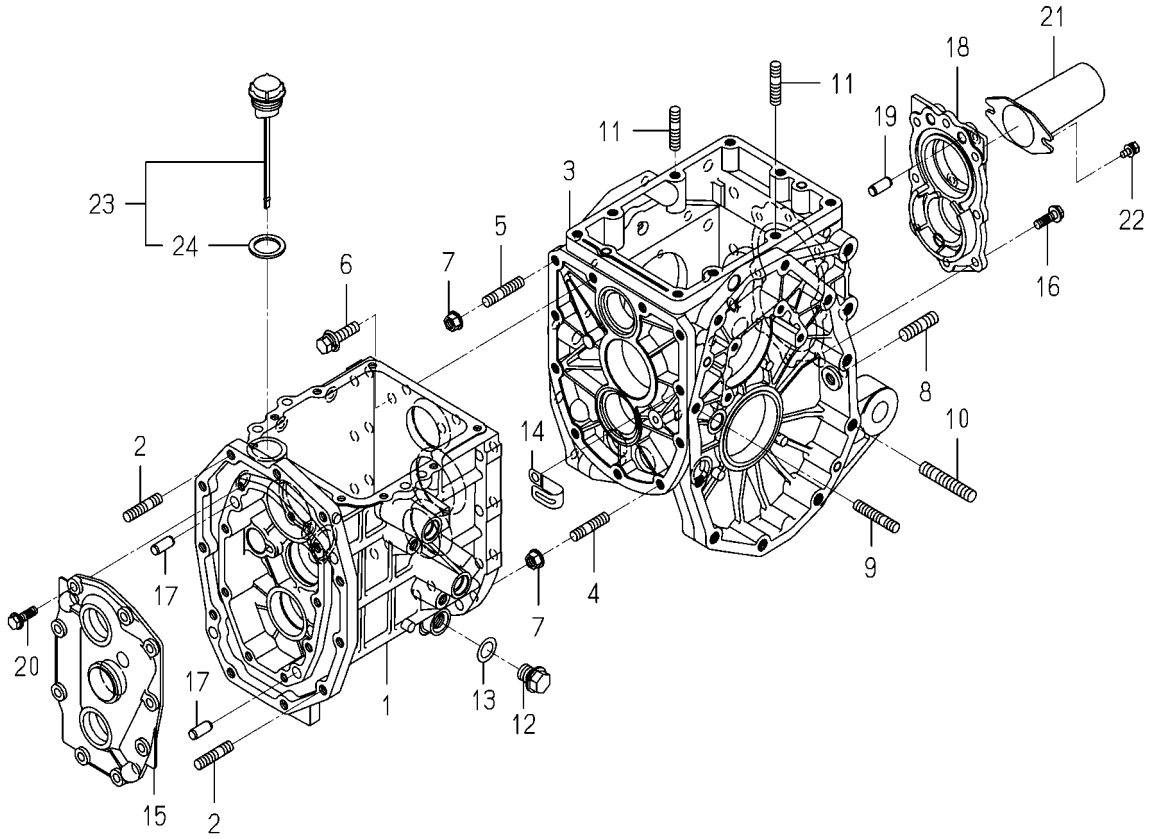

1776-201A-0100

KEY	PART CODE	DESCRIPTION	SPC	TYPE OF MODEL TM3185 FU		ITC	COL	GRP	REMARKS
1	1776-201-001-20	CASE/TRANSMISSION/FR	*	1					
2	V251-341-003-00	BOLT/STUD	*	2					
3	1688-201-055-10	CASE/TRANSMISSION/RE	*	1					
4	V252-341-003-00	BOLT/STUD	*	1					
5	V252-341-003-50	BOLT/M10X35	*	1					
6	V211-661-004-00	BOLT/SP	*	9					
7	1776-201-011-00	NUT/FLANGE/M10	*	2					
8	V251-361-202-5D	BOLT/STUD/SEAL	*	2					
9	- - - - - -	BLANK	*						- - - - - -
9	V252-341-005-50	BOLT/STUD	*	2					
10	V252-341-205-00	BOLT/STUD	*	2					
11	V252-341-003-00	BOLT/STUD	*	2					
12	1427-201-007-00	PLUG,DRAIN	*	1					
13	V720-102-401-60	O-RING/P16	*	1					
14	3737-172-011-00	CLAMP,HARNESS	*	1					
15	1776-201-002-10	METAL/INPUT	*	1					
16	V231-360-802-50	FLANGEBOLT	*	8					
17	V523-101-002-40	PIN	*	2					
18	1776-201-003-00	METAL/PTO	*	1					
19	V523-101-002-40	PIN	*	2					
20	V231-360-802-50	FLANGEBOLT	*	9					
21	1444-314-009-10	CAP,PTO SHAFT	*	1					
22	V210-360-601-60	BOLT(SP)/M6X16	*	2					
23	1789-120-210-20	GAUGE/OIL ASSY	*	1					
24	1518-306-203-10	PACKING	*	1					

FIG.202 GEAR(INPUT)SYSTEM

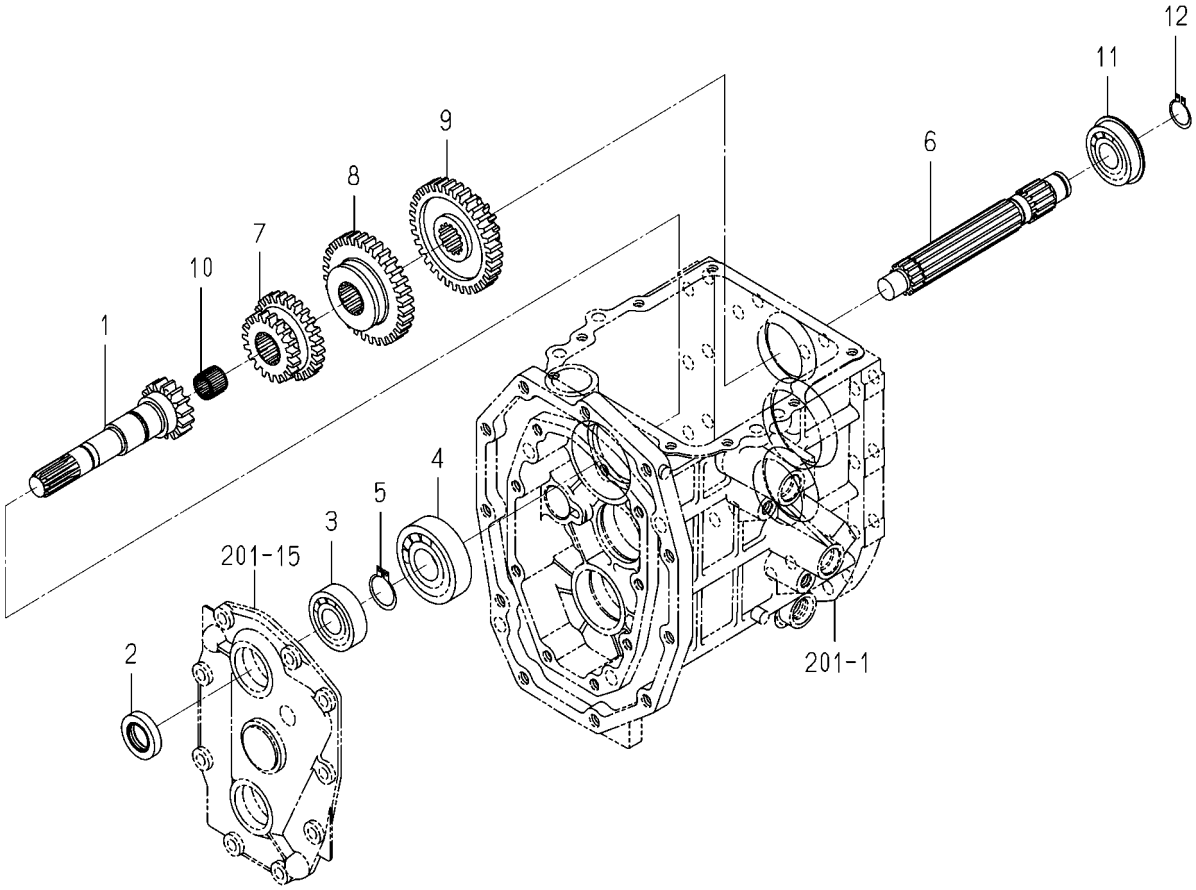

1776-202 -0100

KEY	PART CODE	DESCRIPTION	SPC	TYPE OF MODEL TM3185 FU		ITC	COL	GRP	REMARKS
1	1776-202-001-10	GEAR/SPUR/15	*	1					
2	V744-120-350-70	SEAL,OIL/TC20357	*	1					
3	V600-110-620-40	BEARING,RB/6204	*	1					
4	V600-110-630-50	BEARING,RB/6305	*	1					
5	V704-140-025-00	RING,SNAP/25 C	*	1					
6	1776-202-002-10	SHAFT/CHANGE	*	1					
7	1776-202-003-00	GEAR/SPUR/19-25	*	1					
8	1776-202-004-00	GEAR/SPUR/32	*	1					
9	1776-202-005-00	GEAR/SPUR/14-33	*	1					
10	1776-202-006-00	BEARING/NEEDLE	*	1					
11	V607-110-620-40	BEARING,RB/6204NR	*	1					
12	V704-140-020-00	RING,SNAP/20C	*	1					

FIG.203 PINION(DRIVE)SYSTEM

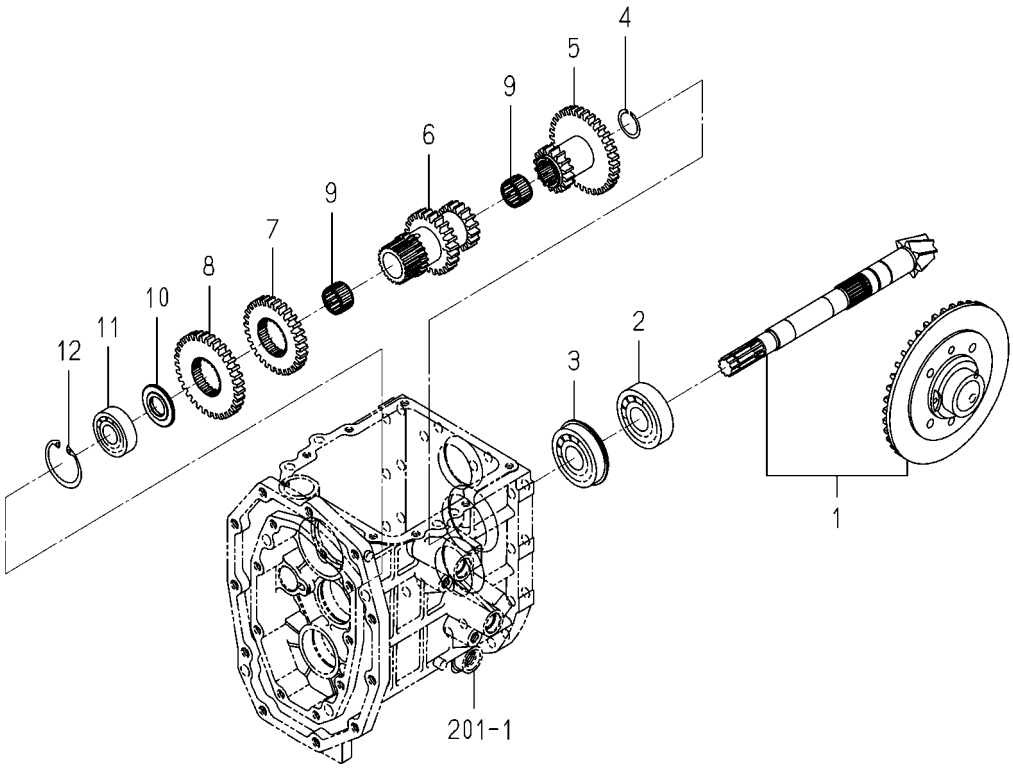

1776-203A-0100

KEY	PART CODE	DESCRIPTION	SPC	TYPE OF MODEL TM3185 FU		ITC	COL	GRP	REMARKS
1	1776-203-200-00	GEAR/07-42 SET	*	1					
2	1594-218-001-00	BEARING/BALL 6305SH2	*	1					
3	1491-203-006-10	BEARING	*	1					
4	1427-203-002-00	RING,SNAP/25	*	1					
5	1776-203-001-00	GEAR/SPUR/16-34	*	1					
6	1776-203-002-00	GEAR/SPUR/17-24	*	1					
7	1776-203-003-00	GEAR/SPUR/30	*	1					
8	1776-203-004-00	GEAR/SPUR/33	*	1					
9	1776-203-005-00	BEARING/NEEDLE	*	2					
10	1434-203-002-00	COLLAR,THRUST	*	1					
11	V600-110-620-40	BEARING,RB/6204	*	1					
12	V705-140-047-00	RING,SNAP/47 C	*	1					

FIG.204 GEAR(REVERSE)SYSTEM

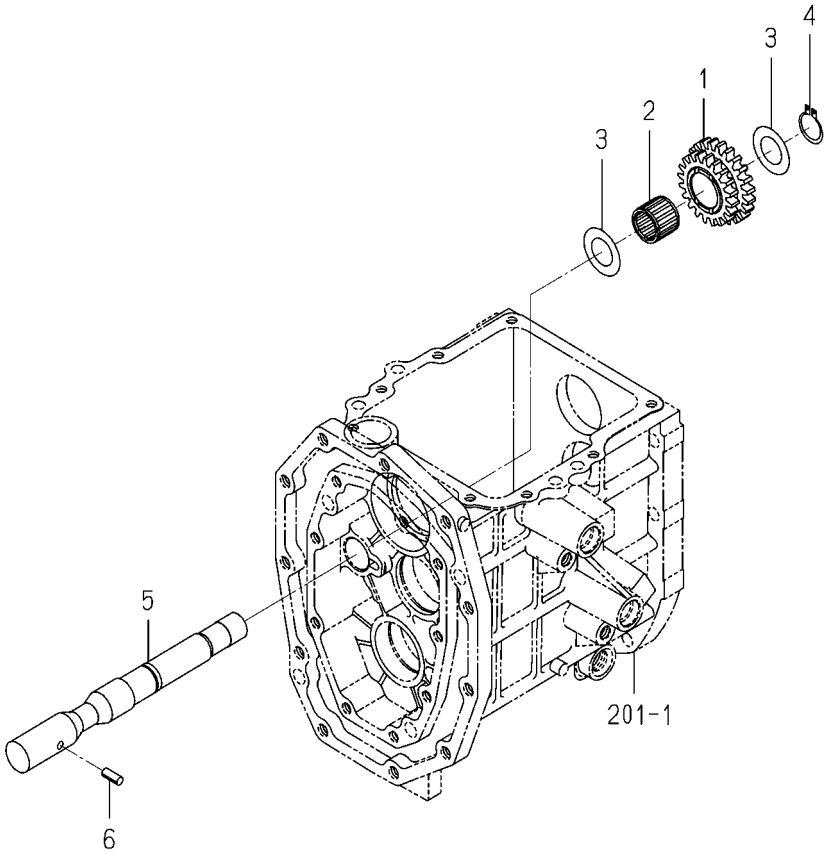

1776-204 -0100

KEY	PART CODE	DESCRIPTION	SPC	TYPE OF MODEL TM3185 FU		ITC	COL	GRP	REMARKS
1	1776-204-001-00	GEAR/SPUR/20-23	*	1					
2	1776-203-005-00	BEARING/NEEDLE	*	1					
3	P103-208-005-10	WASHER/22X38X02	*	2					
4	V704-140-022-00	RING,SNAP/22 C	*	1					
5	1776-204-002-00	SHAFT/REVERSE	*	1					
6	V580-140-601-60	PIN SPLIT W 6.0X16	*	1					

FIG.205 GEAR(4WD)SYSTEM

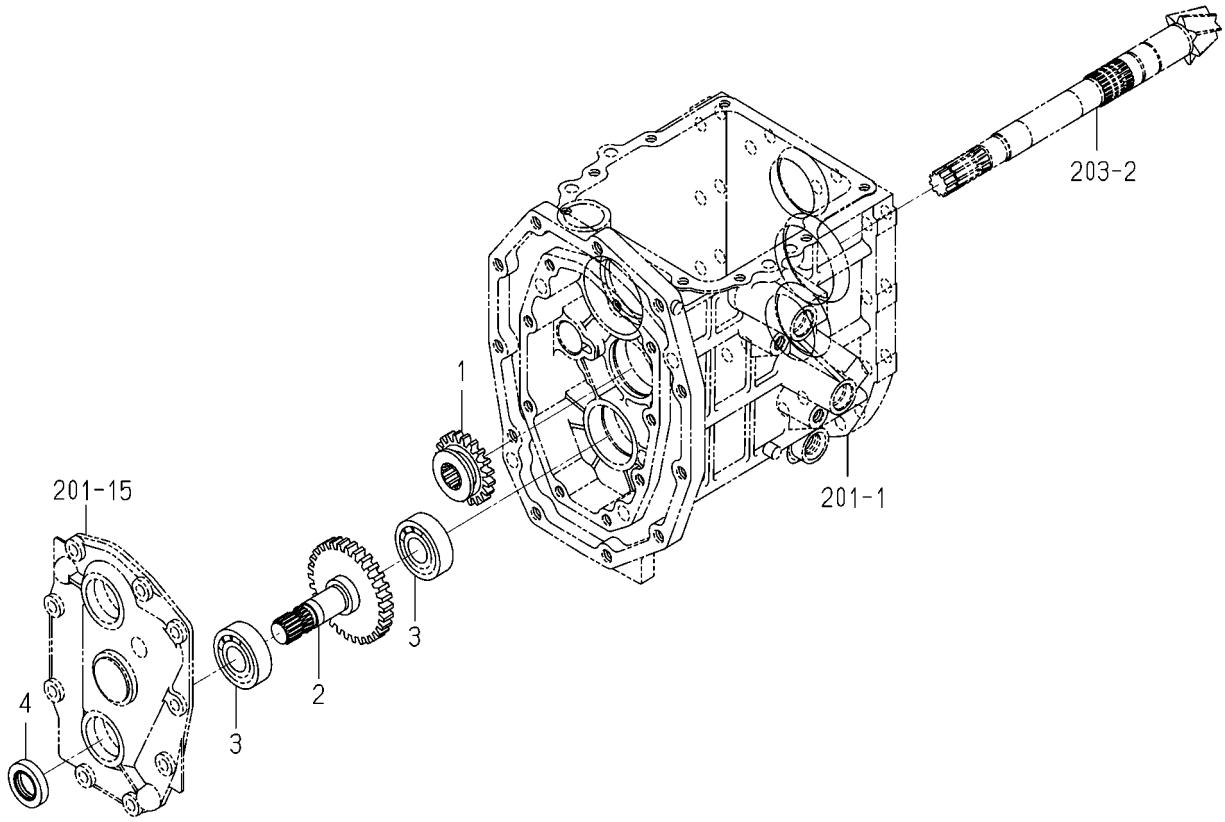

1776-205 -0100

KEY	PART CODE	DESCRIPTION	SPC	TYPE OF MODEL TM3185 FU		ITC	COL	GRP	REMARKS
1	1776-205-001-00	GEAR/SPUR/20	*	1					
2	1776-205-002-00	GEAR/SPUR/30	*	1					
3	V600-110-620-40	BEARING,RB/6204	*	2					
4	V744-120-350-70	SEAL,OIL/TC20357	*	1					

FIG.206 LEVER(MAIN)SYSTEM

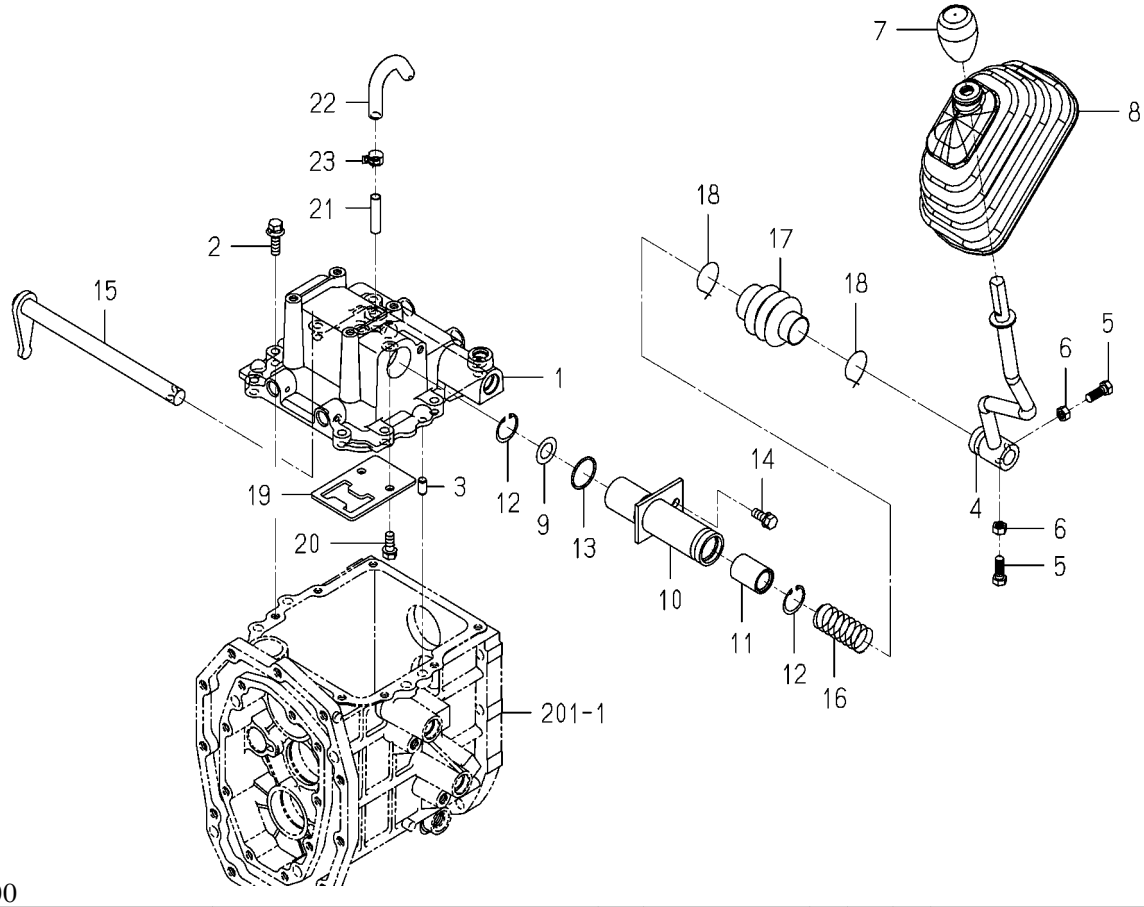

1776-207 -0100

KEY	PART CODE	DESCRIPTION	SPC	TYPE OF MODEL TM3185 FU		ITC	COL	GRP	REMARKS
1	1776-207-001-10	METAL/SHIFT	*	1					
2	V211-360-803-00	BOLT/SP	*	8					
3	V523-100-801-60	PIN	*	2					
4	- - - - - -	BLANK	*						- - - - - -
4	1776-207-200-20	LEVER/MAIN COMP	*	1					
5	1600-502-003-00	BOLT,SM/M08X25	*	2					
6	V304-260-008-00	NUT	*	2					
7	1776-207-002-00	GRIP/14X55	*	1					
8	1776-207-008-00	BOOT	*	1					
9	1776-207-004-00	WASHER/16X28X02	*	1					
10	1776-207-220-00	TUBE/SHIFT/MAIN COMP	*	1					
11	1544-215-015-00	BEARING	*	1					
12	V705-140-028-00	RING,SNAP/28 C	*	2					
13	V723-102-003-00	O-RING	*	1					
14	V211-260-802-00	BOLT/S	*	1					
15	1776-207-230-10	ARM/SHIFT/MAIN COMP	*	1					
16	1614-215-006-00	SPRING/HC060	*	1					
17	1544-215-016-00	BOOT,CHANGE	*	1					
18		WIRE	*	2					
19	1776-207-003-10	PLATE/GUIDE/MAIN	*	1					
20	V211-560-802-00	BOLT/M8X20	*	2					
21	1544-120-008-10	PIPE,BREATHER	*	1					
22	1716-501-006-10	HOSE/BREATHER	*	1					
23	J062-138-148-00	CLIP/HOSE/13.8-14.8	*	1					

FIG.207 LEVER(SUB)SYSTEM

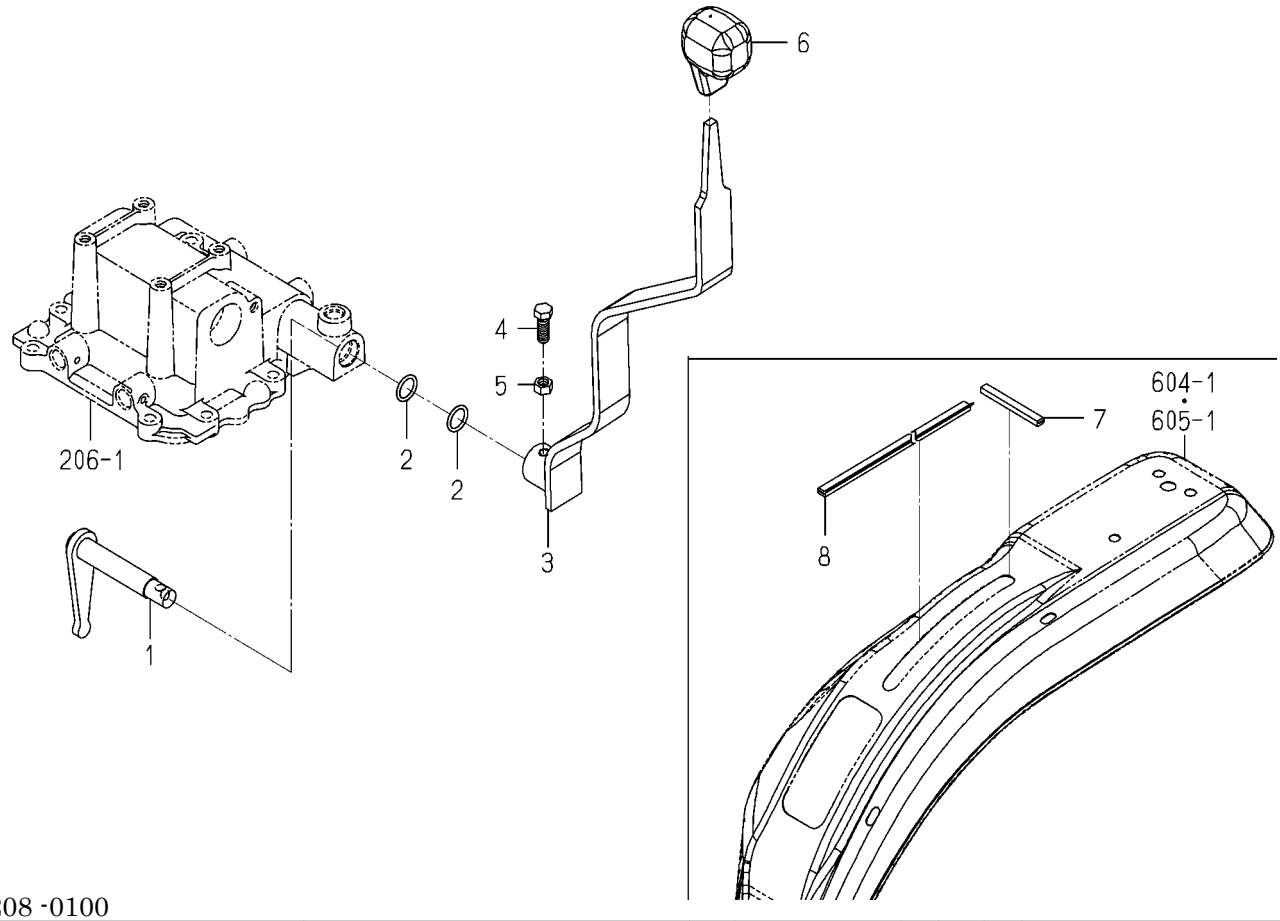

1776-208 -0100

KEY	PART CODE	DESCRIPTION	SPC	TYPE OF MODEL TM3185 FU		ITC	COL	GRP	REMARKS
1	1776-208-210-20	ARM/SHIFT/SUB COMP	*	1					
2	V720-102-401-60	O-RING/P16	*	2					
3	1776-208-220-10	LEVER/SUB COMP	*	1					
4	1600-502-003-00	BOLT,SM/M08X25	*	2					
5	V304-260-008-00	NUT	*	2					
6	1776-208-002-00	GRIP/SUB	*	1					
7	1776-208-004-00	TRIM/01X170	*	2					
8	1760-604-001-00	INSULATOR	*	2					

FIG.208 LEVER(4WD)SYSTEM

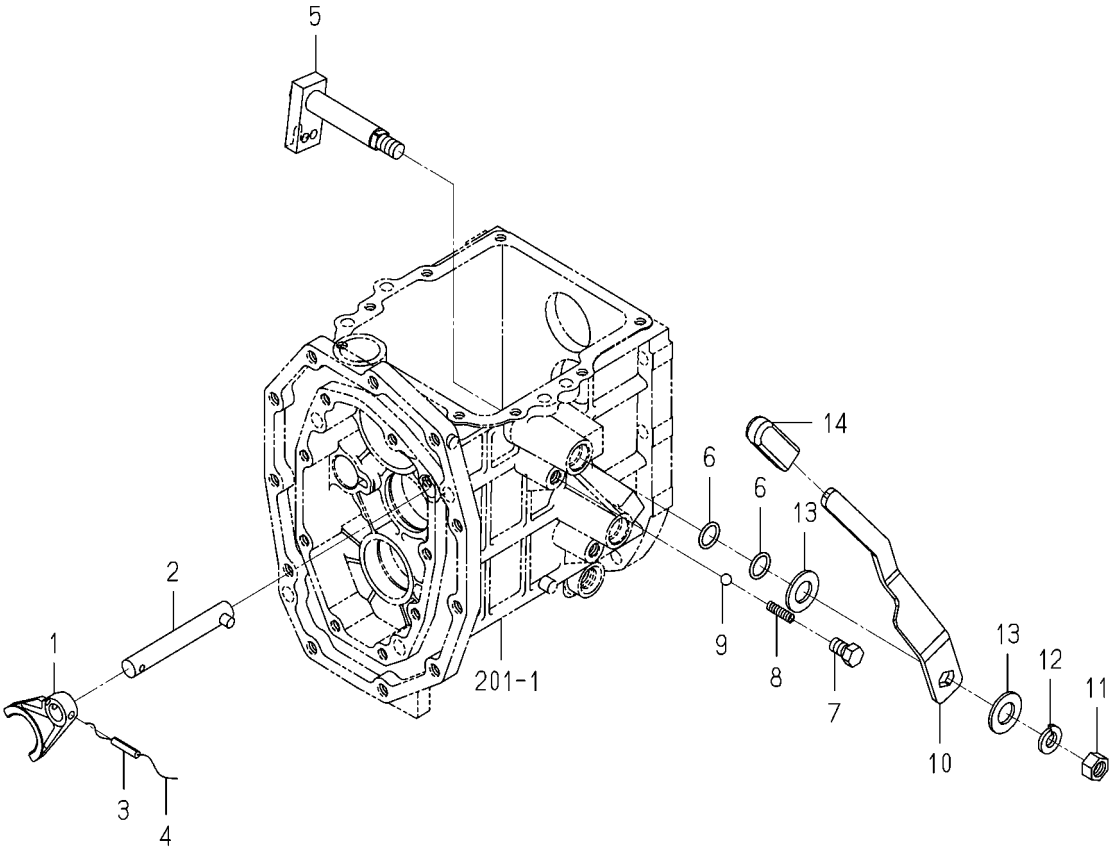

1776-209 -0100

KEY	PART CODE	DESCRIPTION	SPC	TYPE OF MODEL TM3185 FU		ITC	COL	GRP	REMARKS
1	1776-209-001-00	FORK/SHIFT/4WD	*	1					
2	1776-209-200-00	STAY/SHIFT/4WD COMP	*	1					
3	V580-140-502-50	PIN,SPRING/5 X25 W	*	1					
4		WIRE	*	1					
5	1776-209-210-00	ARM/SHIFT/4WD COMP	*	1					
6	V720-102-401-60	O-RING/P16	*	2					
7	V201-261-001-6B	BOLT/SEAL	*	1					
8	1650-259-010-00	SPRING/HC023	*	1					
9	V682-200-001-00	BALL	*	1					
10	- - - - - -	BLANK	*						- - - - - -
10	1776-209-004-10	LEVER/4WD	*	1					
11	V304-460-012-00	NUT/M12	*	1					
12	V401-160-012-00	WASHER,SP/M12	*	1					
13	V411-260-016-00	WASHER / M16	*	2					
14	2171-213-002-00	GRIP/04X12X50	*	1					

FIG.209 SHIFT(MAIN)SYSTEM

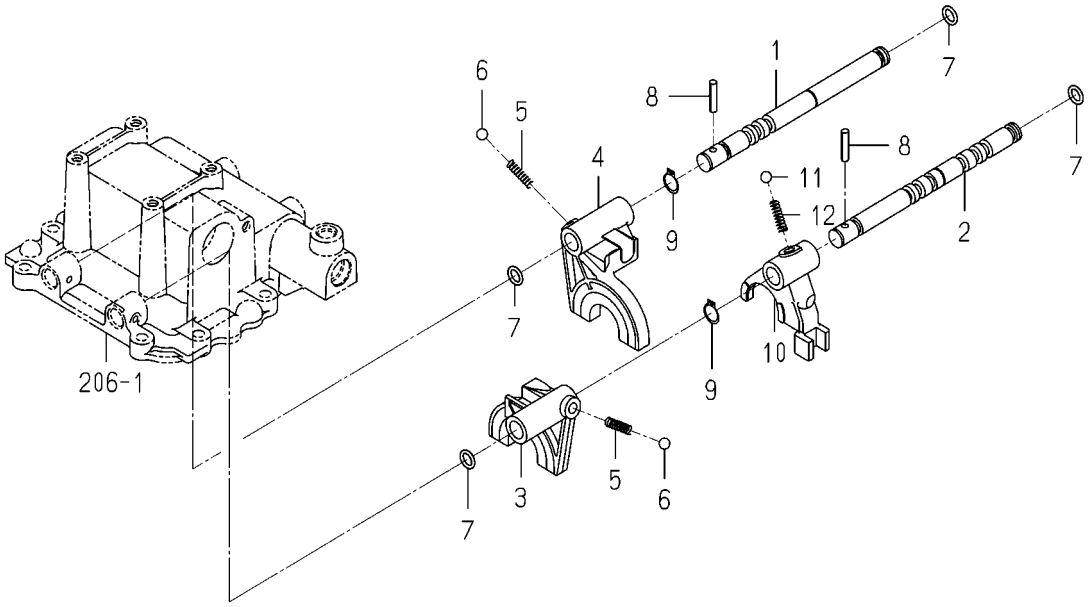

1776-210 -0100

KEY	PART CODE	DESCRIPTION	SPC	TYPE OF MODEL TM3185 FU		ITC	COL	GRP	REMARKS
1	1776-210-001-00	STAY/SHIFT/MAIN/3-N-	*	1					
2	1776-210-002-00	STAY/SHIFT/MAIN-SUB	*	1					
3	1776-210-003-10	FORK/SHIFT/1-N-R	*	1					
4	1776-210-004-10	FORK/SHIFT/3-N-2	*	1					
5	1650-259-010-00	SPRING/HC023	*	2					
6	V682-200-001-00	BALL	*	2					
7	V720-102-401-00	O-RING/P10A	*	4					
8	V580-140-502-50	PIN,SPRING/5 X25 W	*	2					
9	V704-140-014-00	RING,SNAP/14 C	*	2					
10	1776-210-005-00	FORK/SHIFT/SUB	*	1					
11	1650-259-010-00	SPRING/HC023	*	1					
12	V682-200-001-00	BALL	*	1					

FIG.210 GEAR(PTO)SYSTEM

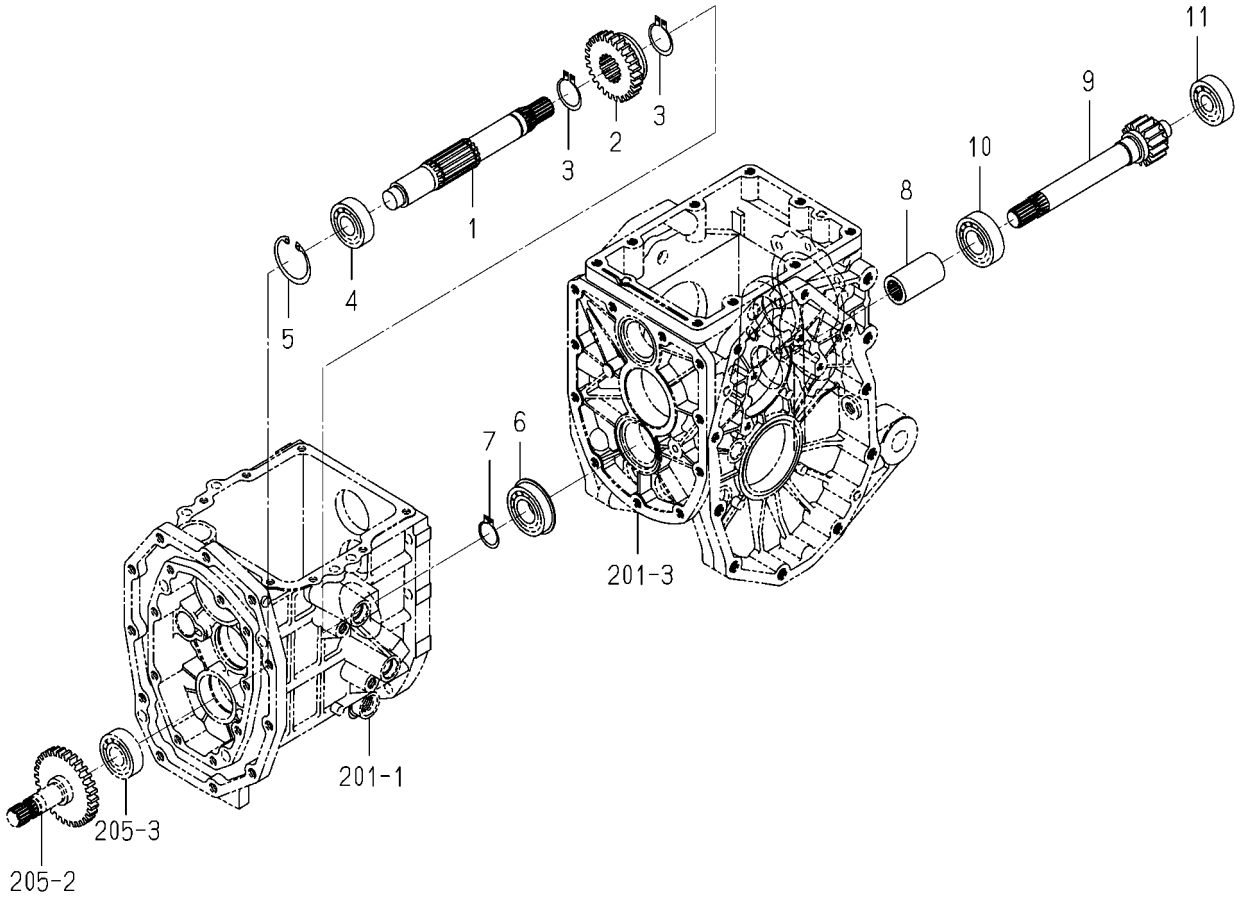

1776-211 -0100

KEY	PART CODE	DESCRIPTION	SPC	TYPE OF MODEL TM3185 FU		ITC	COL	GRP	REMARKS
1	1776-211-001-10	SHAFT/DRIVE/PTO	*	1					
2	1776-211-002-10	GEAR/SPUR/26	*	1					
3	V704-140-030-00	RING,SNAP/30 C	*	2					
4	V600-110-620-40	BEARING,RB/6204	*	1					
5	V705-140-047-00	RING,SNAP/47 C	*	1					
6	V607-110-620-50	BEARING,RB/6205NR	*	1					
7	V704-140-025-00	RING,SNAP/25 C	*	1					
8	1602-321-004-00	COUPLING/18X30X55	*	1					
9	1776-211-003-10	GEAR/SPUR/15	*	1					
10	V600-110-620-50	BEARING,RB/6205	*	1					
11	V600-110-630-30	BEARING,RB/6303	*	1					

FIG.211 SHAFT(PTO)SYSTEM

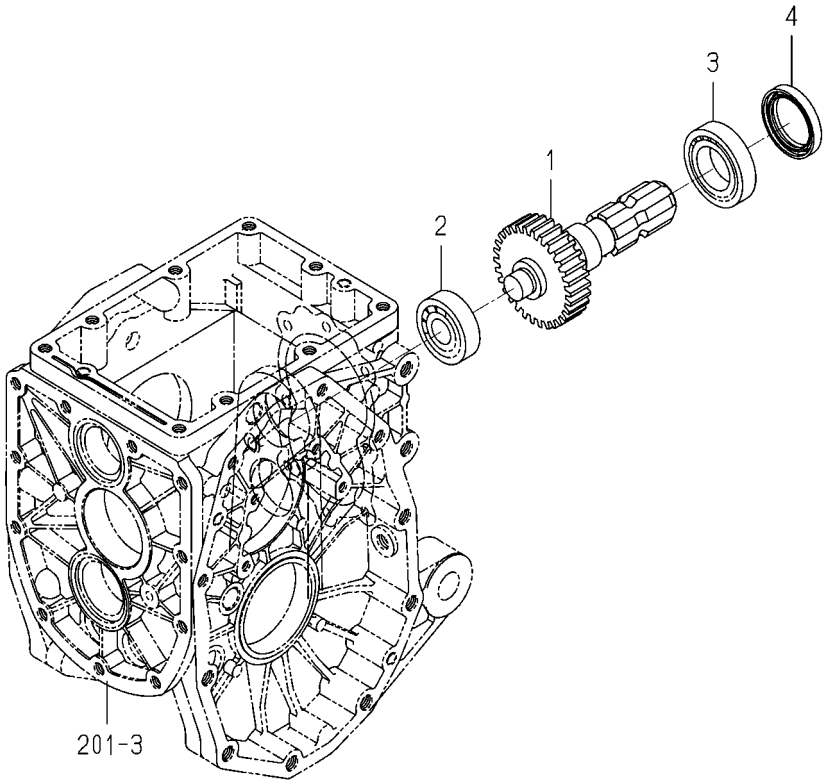

1776-212 -0100

KEY	PART CODE	DESCRIPTION	SPC	TYPE OF MODEL TM3185 FU		ITC	COL	GRP	REMARKS
1	1776-212-001-10	GEAR/SPUR/30	*	1					
2	1729-202-011-00	BEARING/BALL	*	1					
3	1729-202-004-00	BEARING/BALL	*	1					
4	V744-135-550-80	SEAL,OIL/TC35558	*	1					

FIG.212 LEVER(PTO)SYSTEM

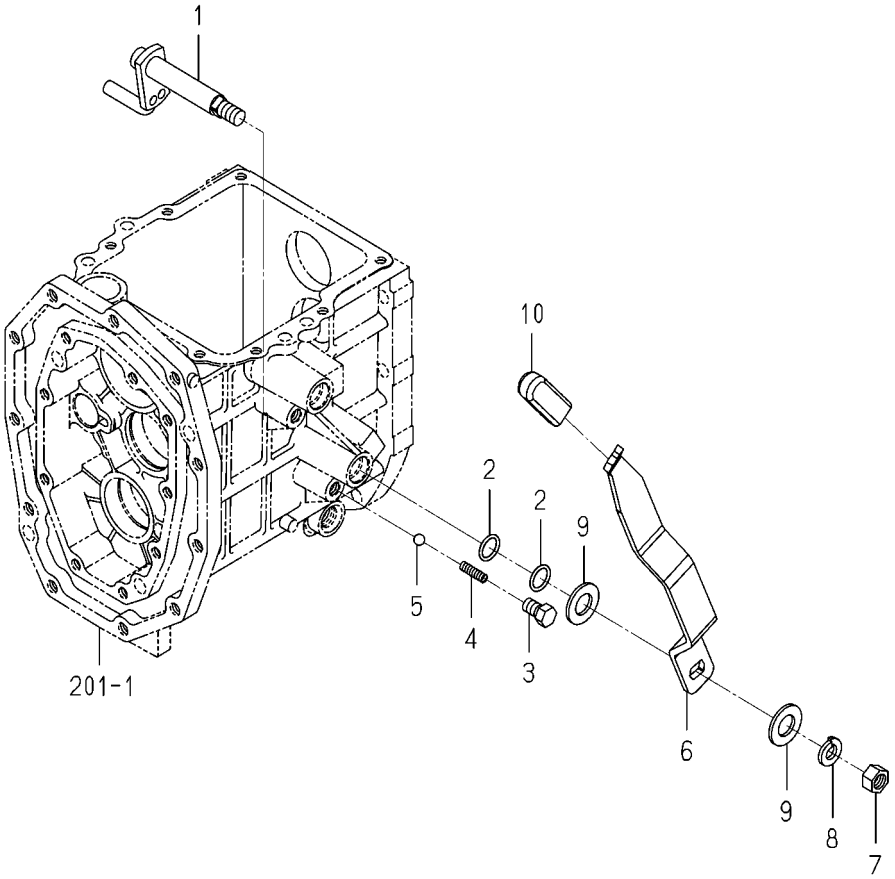

1776-216 -0100

KEY	PART CODE	DESCRIPTION	SPC	TYPE OF MODEL TM3185 FU		ITC	COL	GRP	REMARKS
1	1776-216-210-00	ARM/SHIFT/PTO COMP	*	1					
2	V720-102-401-60	O-RING/P16	*	2					
3	V201-261-001-6B	BOLT/SEAL	*	1					
4	1650-259-010-00	SPRING/HC023	*	1					
5	V682-200-001-00	BALL	*	1					
6	- - - - - -	BLANK	*						- - - - - -
6	1776-216-002-10	LEVER/PTO	*	1					
7	V304-460-012-00	NUT/M12	*	1					
8	V401-160-012-00	WASHER,SP/M12	*	1					
9	V411-260-016-00	WASHER / M16	*	2					
10	3680-214-004-00	GRIP/04X12X50	*	1					

FIG.213 COVER(SHAFT/PTO)SYSTEM (EXCEPT R TYPE)

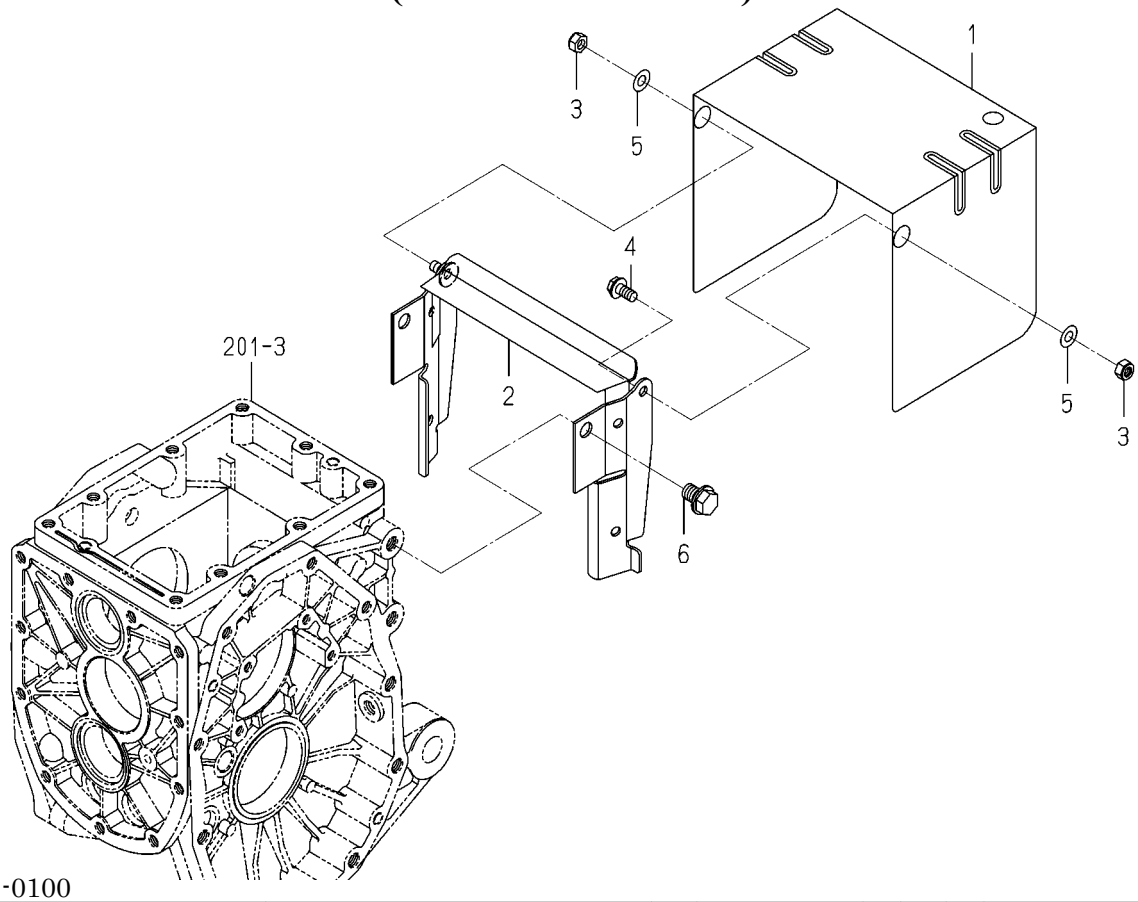

1776-218 -0100

KEY	PART CODE	DESCRIPTION	SPC	TYPE OF MODEL TM3185 FU		ITC	COL	GRP	REMARKS
1	1774-218-001-00	COVER/SHIELD	*	1					
2	1776-218-210-00	BRACKET COMP	*	1					
3	1719-312-001-00	U-NUT	*	2					
4	V231-360-801-60	FLANGEBOLT	*	1					
5	V411-260-008-00	WASHER,PL/M 8	*	2					
6	V231-361-201-60	FLANGEBOLT	*	2					

FIG.214 COVER(SHAFT/PTO)SYSTEM(R TYPE)

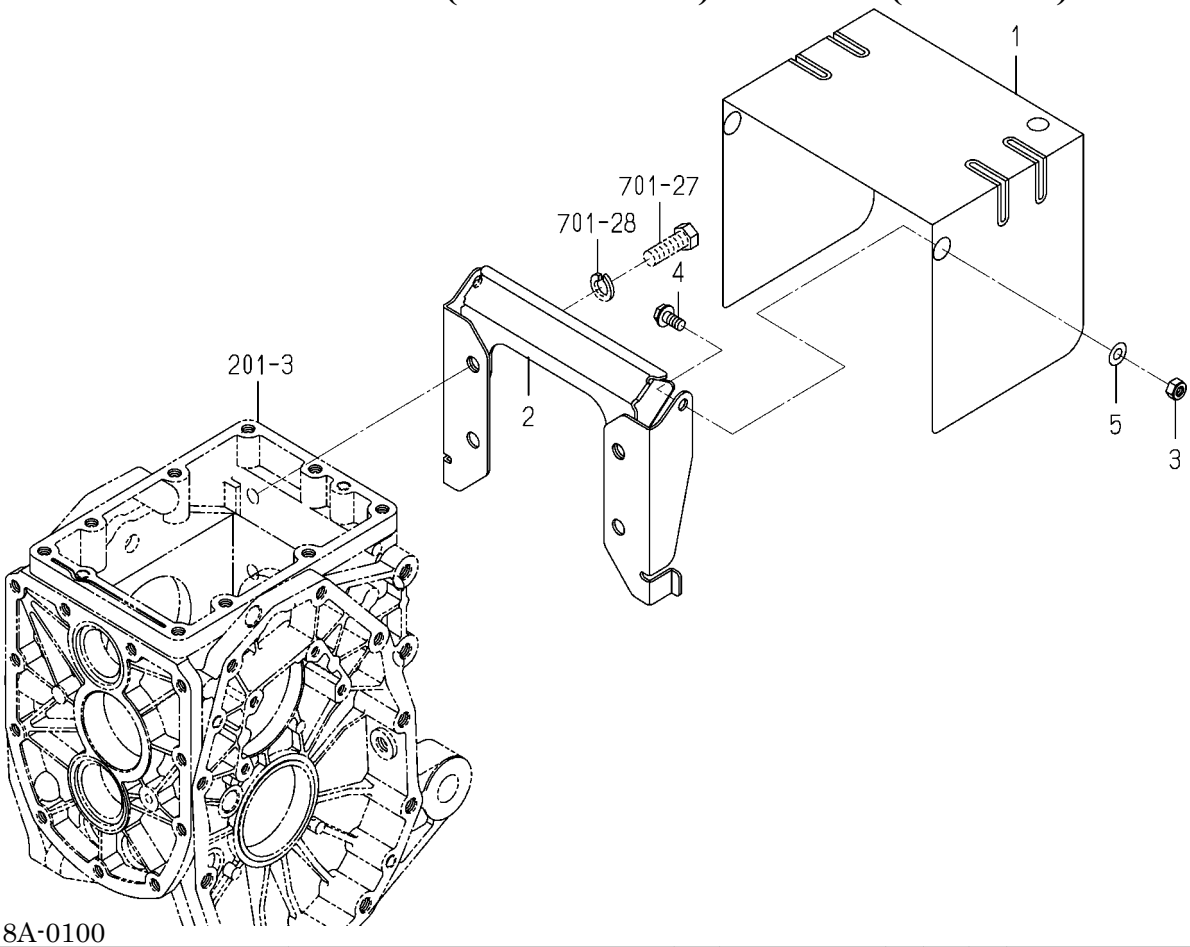

1776-218A-0100

KEY	PART CODE	DESCRIPTION	SPC	TYPE OF MODEL TM3185 FU		ITC	COL	GRP	REMARKS
1	1774-218-001-00	COVER/SHIELD	*	1					
2	1774-218-210-00	BRACKET COMP	*	1					
3	1719-312-001-00	U-NUT	*	2					
4	V231-360-801-60	FLANGEBOLT	*	2					
5	V411-260-008-00	WASHER,PL/M 8	*	2					

FIG.301 CASE(DIFFERENTIAL GEAR/REAR)SYSTEM

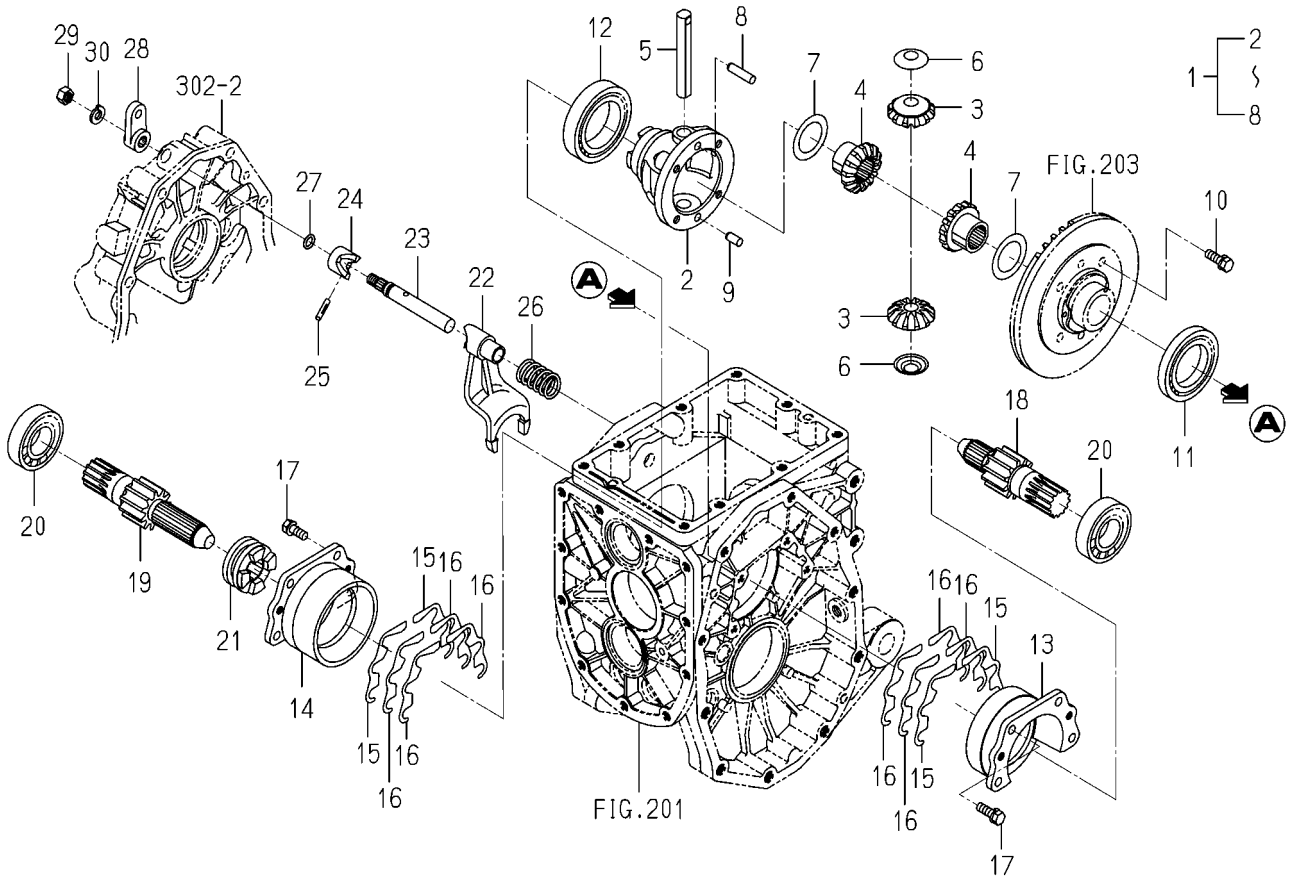

1776-304 -0100

KEY	PART CODE	DESCRIPTION	SPC	TYPE OF MODEL TM3185 FU		ITC	COL	GRP	REMARKS
1	1776-304-510-00	CASE/DIFFERENTIAL/RE	*	1					
2	1776-304-511-00	CASE/DIFF	*	1					
3	1776-304-512-00	GEAR/BEVEL/12	*	2					
4	1776-304-513-00	GEAR/BEVEL/14	*	2					
5	1776-304-514-00	SHAFT/PINION	*	1					
6	1776-304-515-00	WASHER/PINION	*	2					
7	1776-304-516-00	WASHER/32X48X01	*	2					
8	1776-304-517-00	PIN/PARALLEL/08X32	*	1					
9	V523-100-801-60	PIN	*	1					
10	V211-560-802-50	BOLT,SEMS/M8X25 7T	*	4					
11	V600-110-600-90	BEARING,RB/6009	*	1					
12	V600-110-601-00	BEARING,RB/6010	*	1					
13	1427-201-012-00	METAL,DIFF-CASE LH	*	1					
14	1427-201-013-00	METAL,DIFF-CASE RH	*	1					
15	1427-201-014-10	SHIM,DIFF-CASE A	*	4					
16	1427-201-015-10	SHIM,DIFF-CASE B	*	8					
17	V211-560-802-50	BOLT,SEMS/M8X25 7T	*	8					
18	1776-304-001-10	GEAR/SPUR/11/LH	*	1					
19	1776-304-002-00	GEAR/SPUR/11/RH	*	1					
20	1805-202-011-00	BEARING/BALL/6206	*	2					
21	1776-304-005-00	CLUTCH/DIFF	*	1					
22	1427-301-014-10	FORK/SHIFT/DIFFLOCK	*	1					
23	1427-301-015-10	STAY,SHIFTER	*	1					
24	1427-301-016-00	CAM,DIFF-LOCK	*	1					
25	V530-240-502-40	PIN/SLITTED	*	1					
26	1427-301-018-00	SPRING,PRESS/40	*	1					
27	V720-102-401-00	O-RING/P10A	*	1					
28	1427-301-019-00	ARM/DIFFLOCK	*	1					
29	V304-260-010-00	NUT	*	1					
30	V401-160-010-00	WASHER,SP/M10	*	1					

FIG.302 HOUSING(AXLE/REAR)SYSTEM

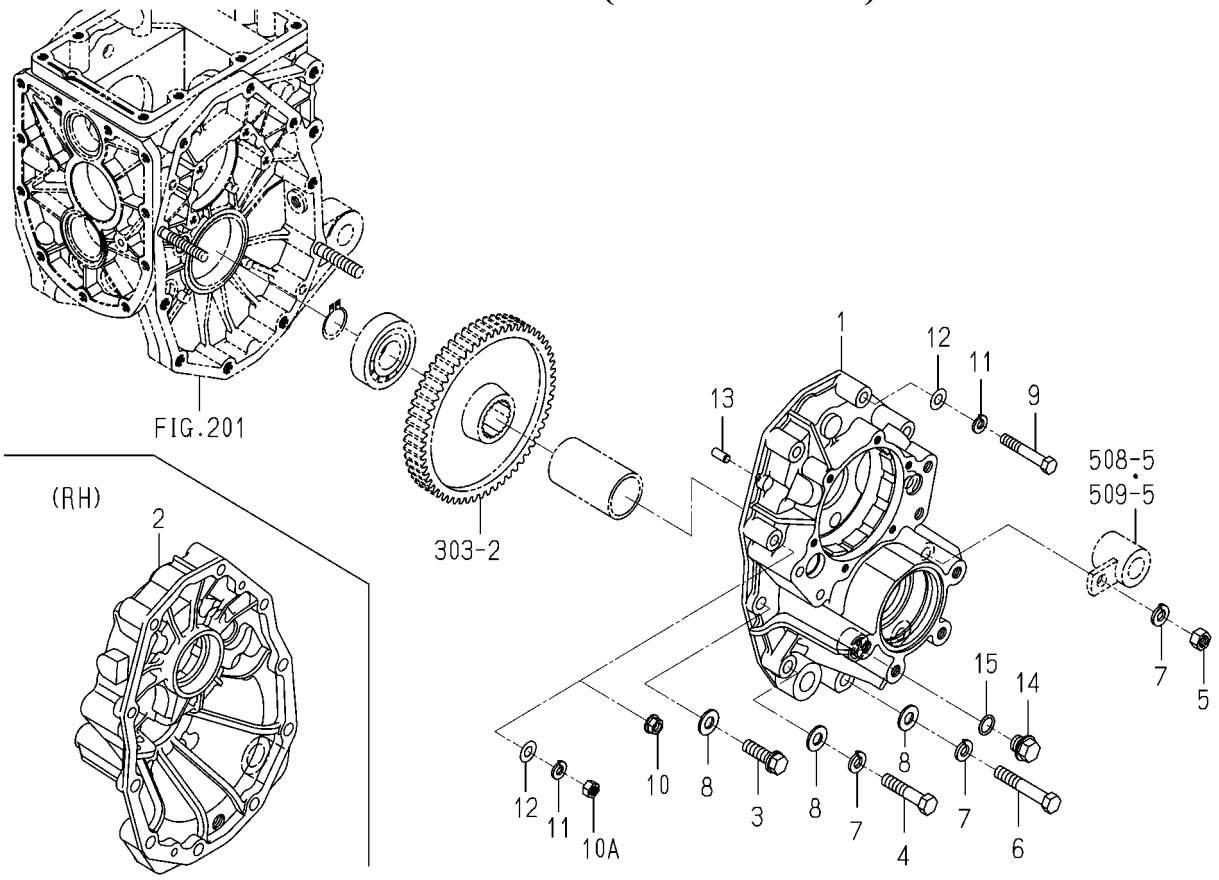

1776-306 -0100

KEY	PART CODE	DESCRIPTION	SPC	TYPE OF MODEL TM3185 FU		ITC	COL	GRP	REMARKS
1	- - - - - -	BLANK	*						- - - - - -
1	1776-306-001-20	HOUSING/AXLE/LH	*	1					
2	- - - - - -	BLANK	*						- - - - - -
2	1776-306-002-20	HOUSING/AXLE/RH	*	1					
3	6901-931-240-00	BOLT	*	4					
4	- - - - - -	BLANK	*						- - - - - -
4	V201-361-205-50	BOLT	*	2					
5	V304-460-012-00	NUT/M12	*	2					
6	- - - - - -	BLANK	*						- - - - - -
6	V201-361-207-00	BOLT/M12X70	*	4					
7	V401-160-012-00	WASHER,SP/M12	*	8					
8	V411-260-012-00	WASHER /M12	*	10					
9	- - - - - -	BLANK	*						- - - - - -
9	V201-361-006-00	BOLT	*	6					
10	- - - - - -	BLANK	*						- - - - - -
10A	V304-460-010-00	NUT/M10	*	2					
11	- - - - - -	BLANK	*						- - - - - -
11	V401-160-010-00	WASHER,SP/M10	*	8					
12	- - - - - -	BLANK	*						- - - - - -
12	V411-260-010-00	WASHER/M10	*	8					
13	V522-100-801-80	PIN	*	4					
14	1427-201-007-00	PLUG,DRAIN	*	2					
15	V720-102-401-60	O-RING/P16	*	2					

FIG.303 SHAFT(WHEEL/REAR)SYSTEM

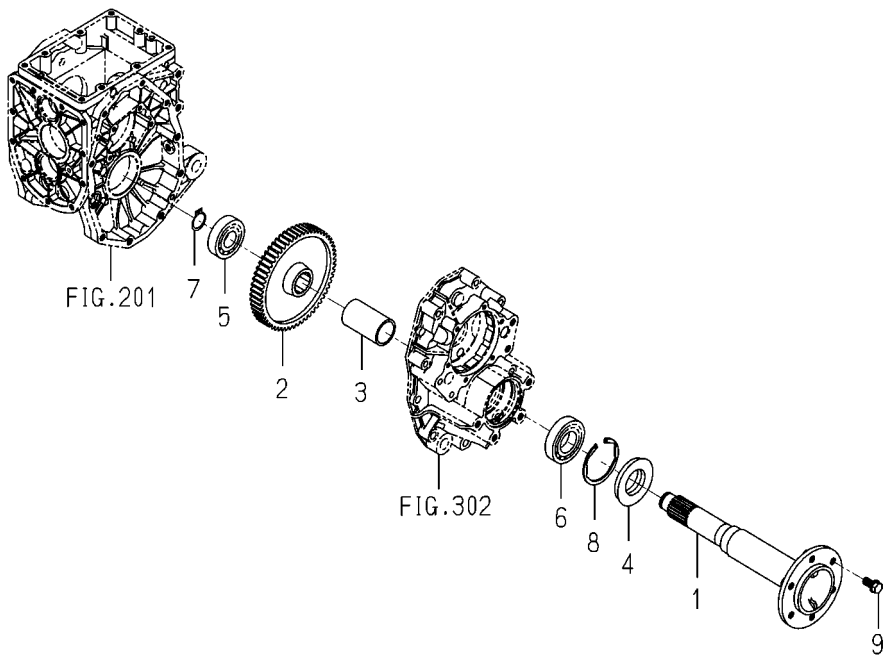

1776-307 -0100

KEY	PART CODE	DESCRIPTION	SPC	TYPE OF MODEL TM3185 FU		ITC	COL	GRP	REMARKS
1	1776-307-001-00	SHAFT/WHEEL	*	2					
2	1776-307-002-00	GEAR/SPUR/58	*	2					
3	1703-307-003-00	PIPE/84	*	2					
4	1491-307-201-00	SEAL,OIL/QLF488011.5	*	2					
5	1805-202-017-00	BEARING/BALL/6306	*	2					
6	1729-202-008-00	BEARING/BALL	*	2					
7	V704-140-030-00	RING,SNAP/30 C	*	2					
8	V707-140-080-00	RING/SNAP	*	2					
9	6901-931-225-00	BOLT,SEMS/M12X25	*	12					

FIG.304 PEDAL (CLUTCH/DIFFERENTIAL GEAR)SYSTEM

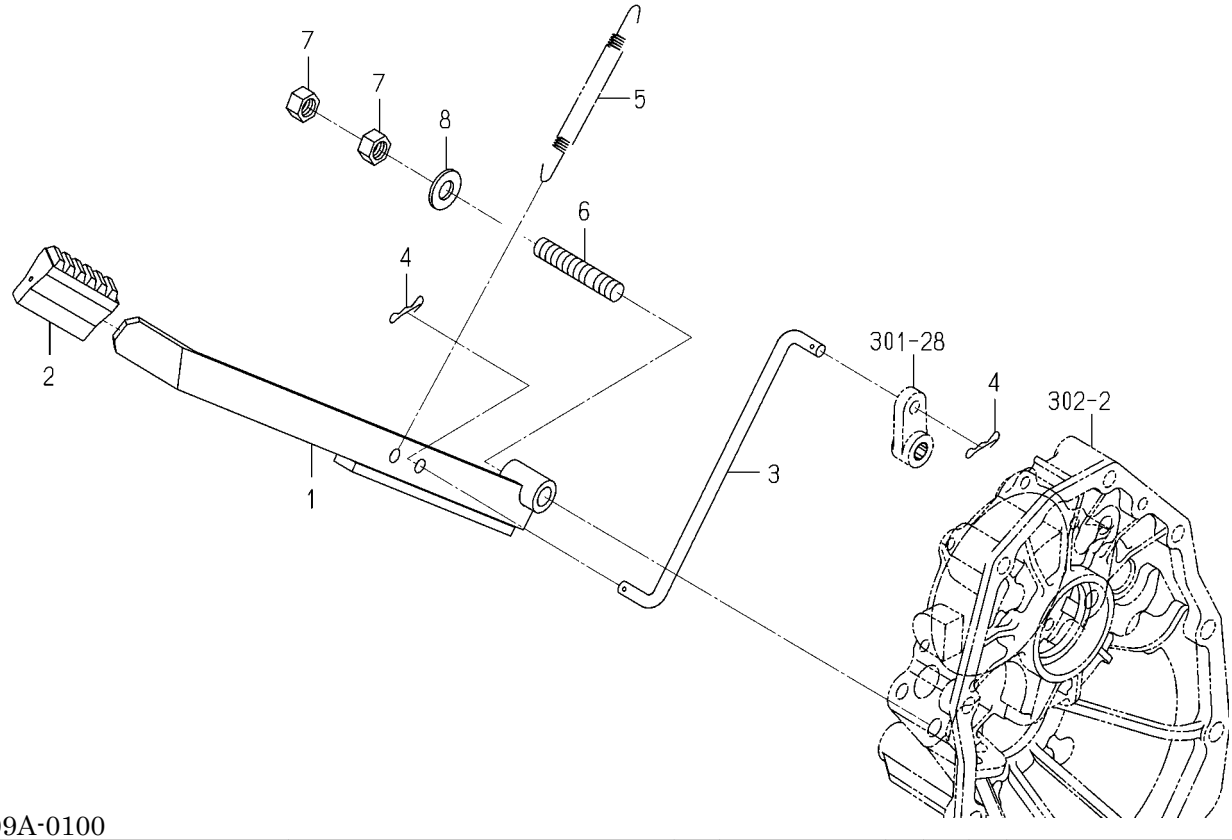

1776-309A-0100

KEY	PART CODE	DESCRIPTION	SPC	TYPE OF MODEL TM3185 FU		ITC	COL	GRP	REMARKS
1	1776-309-200-10	ARM/DIFF COMP	*	1					
2	1518-406-006-00	COVER,PEDAL	*	1					
3	1776-309-001-00	ROD/188	*	1					
4	1725-271-003-00	PIN/SNAP/B	*	2					
5	1427-301-021-00	SPRING,TENSION/121	*	1					
6	V251-261-205-50	BOLT/STUD	*	1					
7	V304-260-012-00	NUT/M12	*	2					
8	V411-260-012-00	WASHER /M12	*	1					

FIG.305 BRAKE SYSTEM

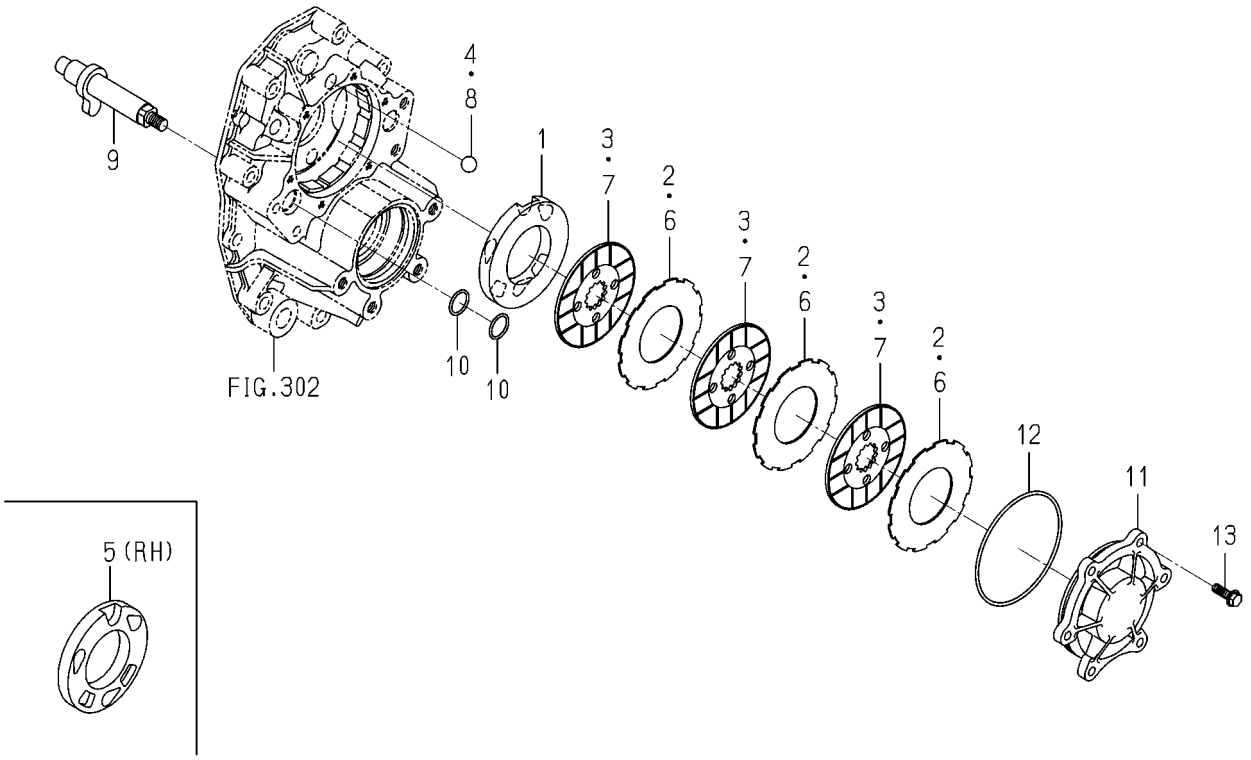

1776-310 -0100

KEY	PART CODE	DESCRIPTION	SPC	TYPE OF MODEL TM3185 FU		ITC	COL	GRP	REMARKS
1	1774-310-001-00	PLATE/PRESSURE/LH	*	1					
2	1774-310-003-00	PLATE/SEPARATER	*	3					
3	1774-310-004-00	PLATE/FRICTION	*	3					
4	V682-200-001-90	BALL	*	3					
5	1774-310-002-00	PLATE/PRESSURE/RH	*	1					
6	1774-310-003-00	PLATE/SEPARATER	*	3					
7	1774-310-004-00	PLATE/FRICTION	*	3					
8	V682-200-001-90	BALL	*	3					
9	1776-310-200-00	CAM/BRAKE COMP	*	2					
10	V720-102-402-20	O-RING/P22	*	4					
11	1717-310-001-00	METAL/BRAKE	*	2					
12	V721-103-111-50	O-RING/G115	*	2					
13	V231-360-802-50	FLANGEBOLT	*	12					

FIG.306 PEDAL(BRAKE)SYSTEM(1/2)

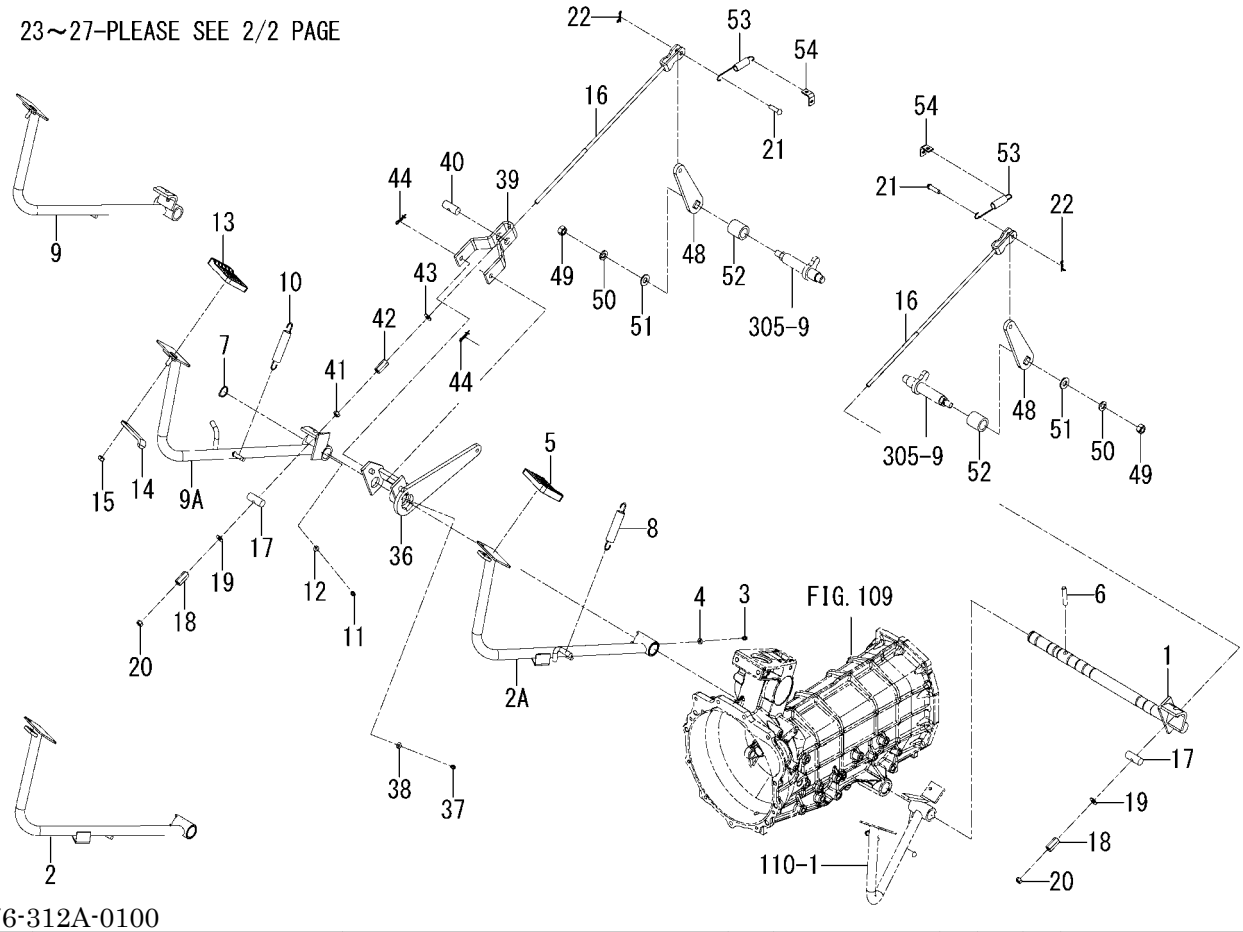

1776-312A-0100

KEY	PART CODE	DESCRIPTION	SPC	TYPE OF MODEL TM3185 FU		ITC	COL	GRP	REMARKS
1	1776-312-230-00	SHAFT COMP	*	1					
2	- - - - - -	BLANK	*						- - - - - -
2A	1776-312-210-10	PEDAL/BRAKE/LH COMP	*	1					
3	V760-150-000-00	NIPPLE,GREASE	*	1					
4	V401-160-006-00	WASHER,SP/M 6	*	1					
5	2512-206-001-00	PAD	*	1					
6	1776-312-004-00	PIN/09X47	*	1					
7	V704-140-025-00	RING,SNAP/25 C	*	1					
8	1673-314-001-00	SPRING/HE106	*	1					
9	- - - - - -	BLANK	*						- - - - - -
9A	1776-312-220-10	PEDAL/BRAKE/RH COMP	*	1					
10	1673-314-001-00	SPRING/HE106	*	1					
11	V760-150-000-00	NIPPLE,GREASE	*	1					
12	V401-160-006-00	WASHER,SP/M 6	*	1					
13	2512-206-001-00	PAD	*	1					
14	1675-312-051-00	PLATE/LOCK	*	1			7F		
15	1719-312-001-00	U-NUT	*	1					
16	- - - - - -	BLANK	*						- - - - - -
16	1776-312-300-10	ROD/482 COMP	*	2					
17	1776-312-006-00	PIN/16X40	*	2					
18	3820-412-051-00	NUT/M8X30	*	2					
19	V411-260-008-00	WASHER,PL/M 8	*	2					
20	V304-260-008-00	NUT	*	2					
21	1404-312-006-00	PIN,YOKE A	*	2					
22	1725-271-003-00	PIN/SNAP/B	*	2					
23	1740-313-300-10	LEVER/PARKING ASSY	*	1					
24	1442-313-202-00	ROD	*	1					
25	1444-328-273-00	SPRING	*	1					
26	1444-328-272-00	BUTTON	*	1					
27	1740-313-301-00	GRIP/ORANGE	*	1					

FIG.306 PEDAL(BRAKE)SYSTEM(2/2)

37～44-PLEASE SEE 1/2 PAGE

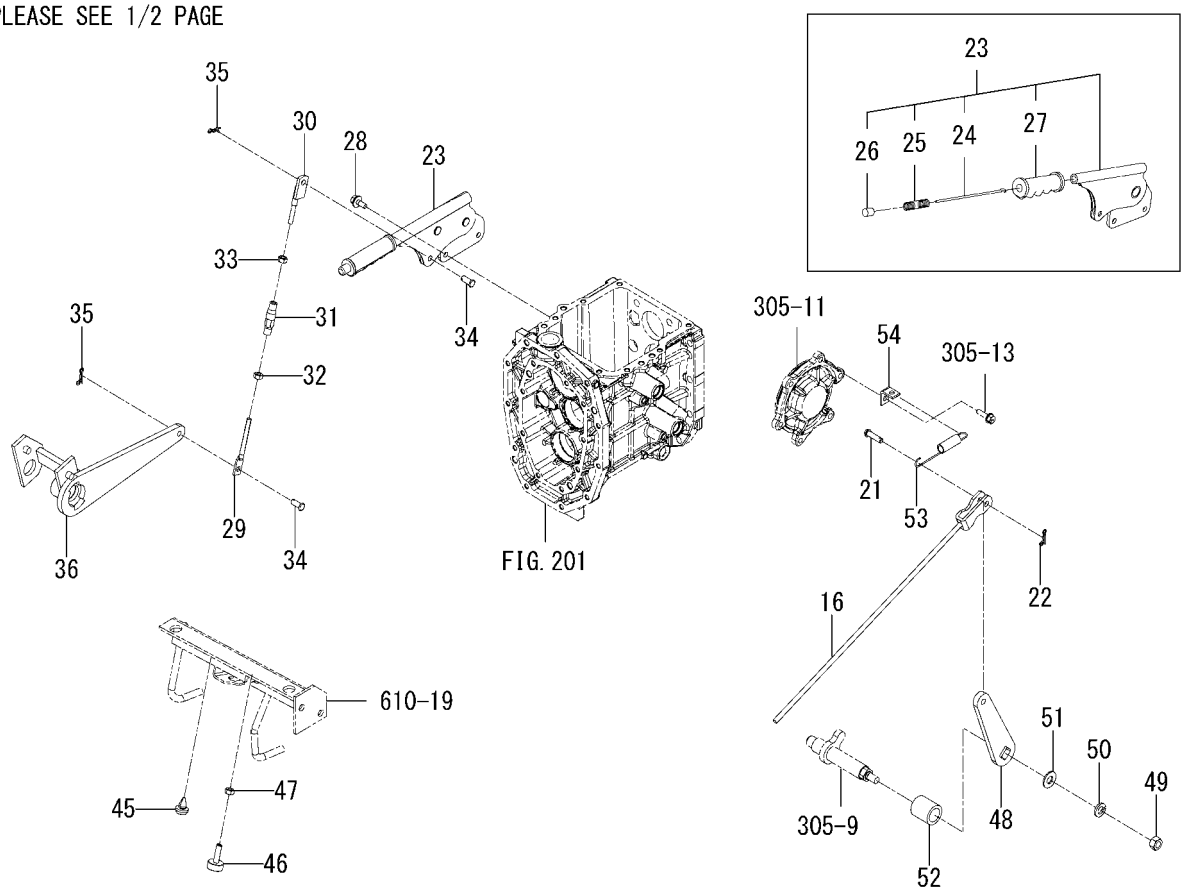

1776-312A-0100

KEY	PART CODE	DESCRIPTION	SPC	TYPE OF MODEL TM3185 FU		ITC	COL	GRP	REMARKS
28	V211-360-802-00	BOLT/SP	*	2					
29	3814-114-001-00	ROD/M8X92	*	1					
30	1738-312-290-00	ROD/70 COMP	*	1					
31	1444-122-002-00	TURNBUCKLE/M8	*	1					
32	V304-260-008-00	NUT	*	1					
33	1560-132-007-30	NUT/M8	*	1					
34	1673-730-008-00	PIN/08X19	*	2					
35	1725-271-003-00	PIN/SNAP/B	*	2					
36	1776-312-340-00	ARM/PARKING COMP	*	1					
37	V760-150-000-00	NIPPLE,GREASE	*	1					
38	V401-160-006-00	WASHER,SP/M 6	*	1					
39	1776-312-005-10	ARM/PARKING	*	1					
40	1776-312-006-00	PIN/16X40	*	1					
41	V304-260-008-00	NUT	*	1					
42	3820-412-051-00	NUT/M8X30	*	1					
43	3830-201-001-00	WASHER/09X15X02	*	1					
44	2161-222-003-00	PIN,SNAP	*	2					
45	1432-616-002-00	RUBBER,CUSHION	*	1					
46	1560-630-024-00	INSULATOR	*	1					
47	V304-260-008-00	NUT	*	1					
48	1776-312-012-00	ARM/BRAKE	*	2					
49	V304-260-012-00	NUT/M12	*	2					
50	V401-160-012-00	WASHER,SP/M12	*	2					
51	V411-260-012-00	WASHER /M12	*	2					
52	1776-312-011-00	COLLAR/22X32X35	*	2					
53	3659-480-003-00	SPRING/HE110	*	2					
54	1738-312-009-00	PLATE/L/28X28	*	2					

FIG.401 WHEEL(STEERING)SYSTEM

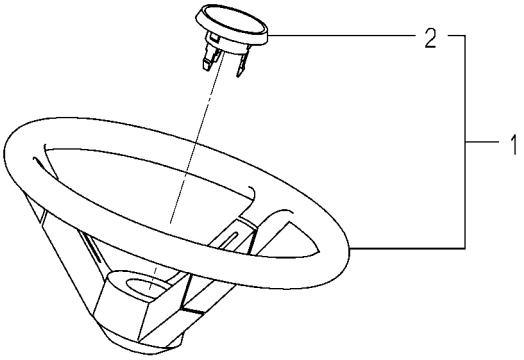

1773-401 -0100

KEY	PART CODE	DESCRIPTION	SPC	TYPE OF MODEL TM3185 FU		ITC	COL	GRP	REMARKS
1	1773-401-200-00	WHEEL/STEERING/360	*	1					
2	1773-401-202-10	CAP/WHEEL	*	1					

FIG.402 CONTROL(STEERING)SYSTEM(1/2)

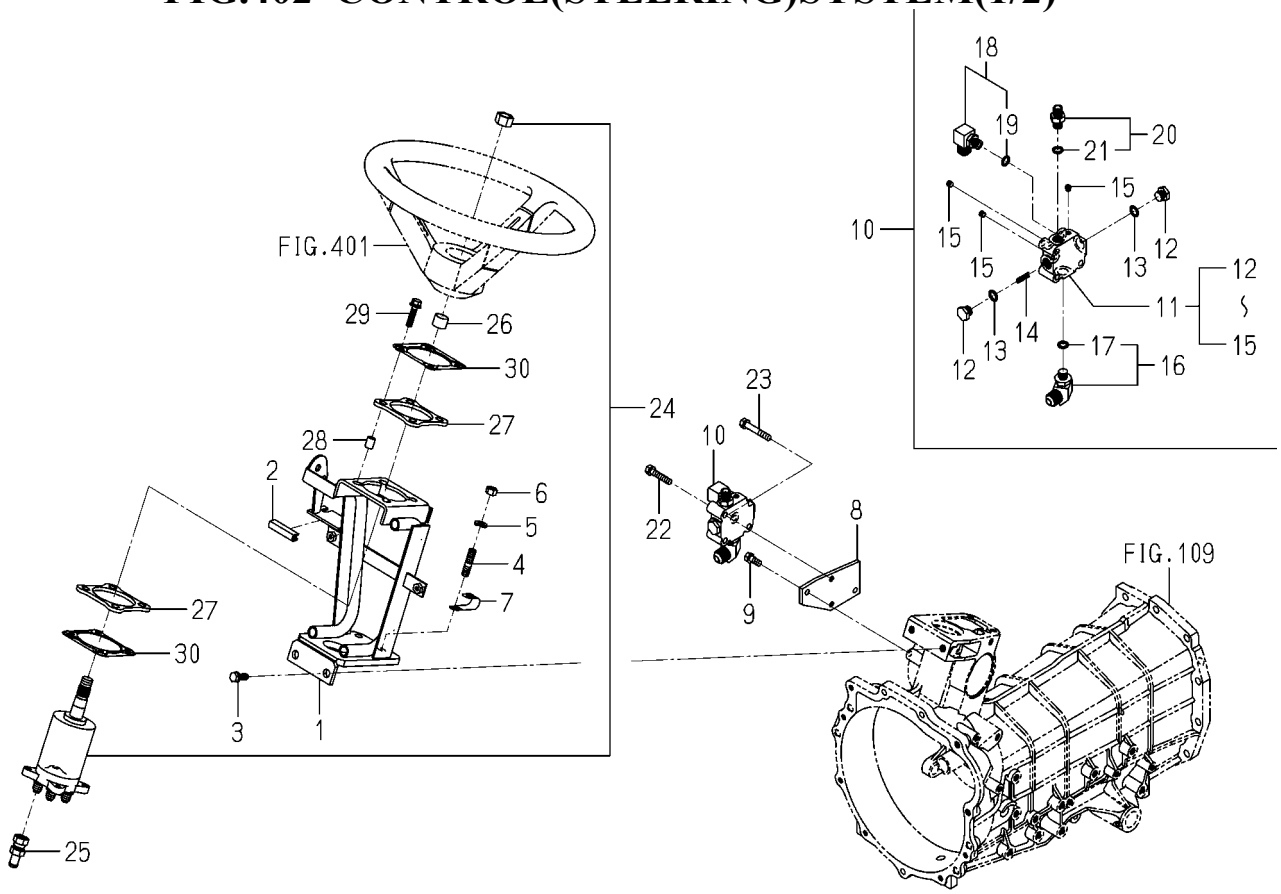

1776-407 -0100

KEY	PART CODE	DESCRIPTION	SPC	TYPE OF MODEL TM3185 FU		ITC	COL	GRP	REMARKS
1	1776-407-210-00	COLUMN/U COMP	*	1					
2	3666-202-005-10	PAD/50	*	1					
3	V211-561-002-50	BOLT/M10X25	*	2					
4	V251-341-002-50	BOLT/STUD	*	2					
5	V401-160-010-00	WASHER,SP/M10	*	2					
6	V304-460-010-00	NUT/M10	*	2					
7	3737-172-011-00	CLAMP,HARNESS	*	2					
8	1776-407-001-00	PLATE/I/68X122	*	1					
9	V211-560-802-00	BOLT/M8X20	*	1					
10	1776-407-320-00	VALVE/021/U SET	*	1					
11	K233-021-000-00	VALVE/FLOW PRIORITY/	*	1					
12	K211-001-008-00	PLUG	*	2					
13	V720-112-401-20	O-RING/P12	*	2					
14	K211-035-005-00	SPRING/HC026	*	1					
15	V780-140-000-1T	PLUG/SCREW/SEAL	*	3					
16	1776-407-220-00	ADAPTER/M20-G1/ ASSY	*	1					
17	V720-112-401-10	RING/O	*	1					
18	1690-509-340-10	ADAPTER/L/G1/4 ASSY	*	1					
19	V720-112-401-80	O-RING/P18	*	1					
20	K200-103-300-00	ADAPTER/G1/4	*	1					
21	V720-112-401-10	RING/O	*	1					
22	V211-260-804-00	BOLT,SEMS	*	2					
23	V211-260-805-00	BOLT/M8X50	*	1					
24	1776-407-310-00	CONTROLLER/STEERING	*	1					
25	1789-408-006-00	ADAPTER/G1/4	*	1					
26	1739-401-001-00	INSULATOR/15	*	1					
27	1771-407-001-10	PAD/PS	*	2					
28	1739-407-074-00	COLLAR/08X12X15	*	4					
29	V211-660-803-50	BOLT/SP	*	4					
30	1728-407-076-10	PLATE/CONTROLLER	*	2					

FIG.402 CONTROL(STEERING)SYSTEM(2/2)

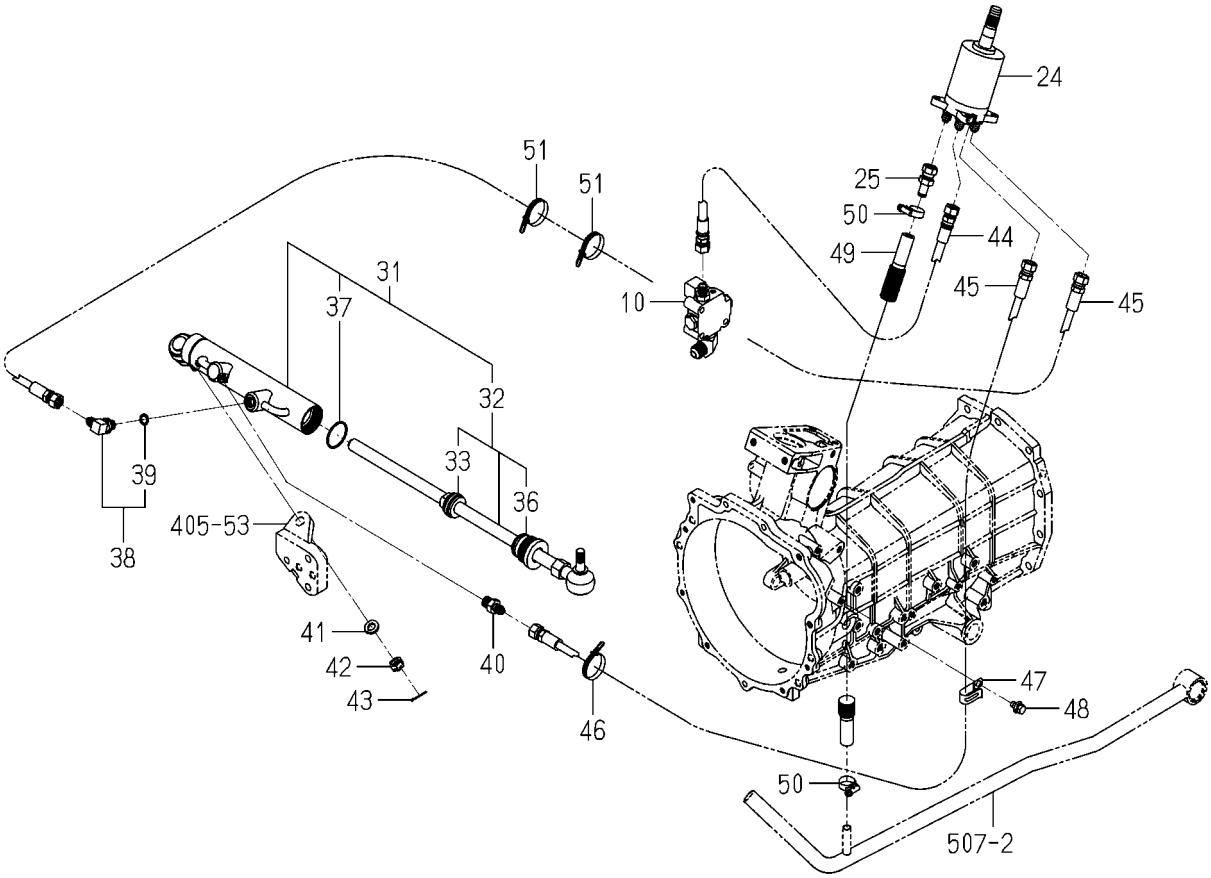

1776-407 -0100

KEY	PART CODE	DESCRIPTION	SPC	TYPE OF MODEL TM3185 FU		ITC	COL	GRP	REMARKS
31	1776-407-250-00	CYLINDER ASSY	*	1					
32	1789-408-300-10	ROD/PISTON COMP	*	1					
33	1672-403-003-00	PACKING/PISTON	*	1					
36	V720-113-502-90	RING/O	*	1					
37	V723-102-003-80	O-RING	*	1					
38	1725-508-310-00	ADAPTER/L/G1/4 ASSY	*	1					
39	V720-112-401-10	RING/O	*	1					
40	P118-601-005-00	ADAPTER	*	1					
41	V401-160-012-00	WASHER,SP/M12	*	2					
42	V328-262-112-00	NUT/M12X1.25	*	2					
43	V500-162-502-50	PIN,SPLIT/2.5X25	*	2					
44	1776-407-230-00	HOSE/285 ASSY	*	1					
45	1725-408-200-00	HOSE/LH ASSY	*	2					
46	1376-402-003-00	BAND,WIRE/140	*	1					
47	1425-621-004-00	HOLDER/JE/9-9	*	1					
48	V211-360-801-60	BOLT,SEMS (SP)	*	1					
49	1789-408-011-00	HOSE/700	*	1					
50	J061-112-022-00	CLAMP/WORM/12-22	*	2					
51	1376-402-003-00	BAND,WIRE/140	*	2					

FIG.403 BRACKET(AXLE)SYSTEM

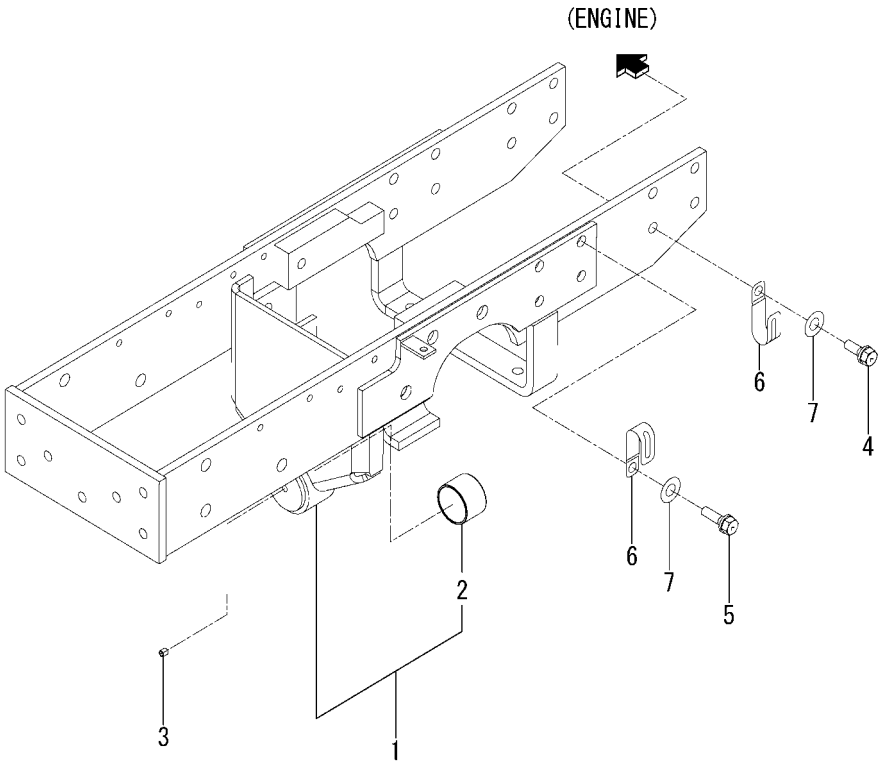

1776-410A-0100

KEY	PART CODE	DESCRIPTION	SPC	TYPE OF MODEL TM3185 FU		ITC	COL	GRP	REMARKS
1	1776-410-310-10	BRACKET/AXLE/U ASSY	*	1					
2	1564-434-222-10	BUSH/35X39X26	*	1					
3	V780-140-000-10	PLUG/SCREW	*	1					
4	V211-561-002-50	BOLT/M10X25	*	8					
5	V211-561-003-00	BOLT/M10X30	*	8					
6	3737-172-011-00	CLAMP,HARNESS	*	2					
7	V411-260-010-00	WASHER/M10	*	2					

FIG.404 HITCH(FRONT)SYSTEM(EXCEPT D TYPE)

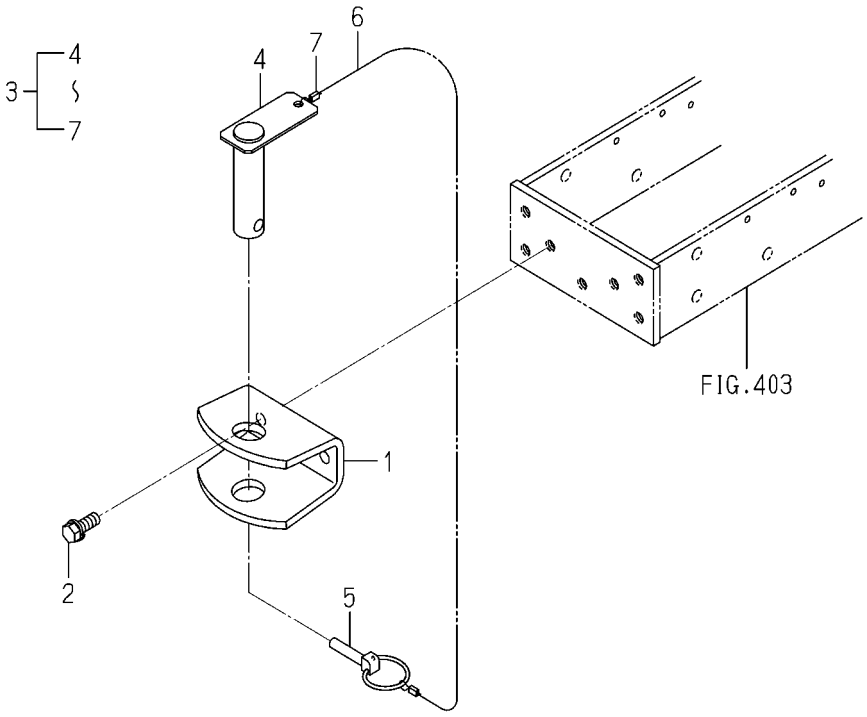

1776-411A-0100

KEY	PART CODE	DESCRIPTION	SPC	TYPE OF MODEL TM3185 FU		ITC	COL	GRP	REMARKS
1	1776-411-002-00	PLATE/HITCH	*	1					
2	1725-201-002-00	BOLT/S	*	2					
3	1776-411-200-00	PIN ASSY	*	1					
4	1776-411-210-00	PIN/30X116 COMP	*	1					
5	1673-525-002-30	LINKPIN	*	1					
6	1772-521-221-20	WIRE/02X300	*	1					
7	1614-702-552-00	RING	*	2					

FIG.405 AXLE(FRONT)SYSTEM(1/2)

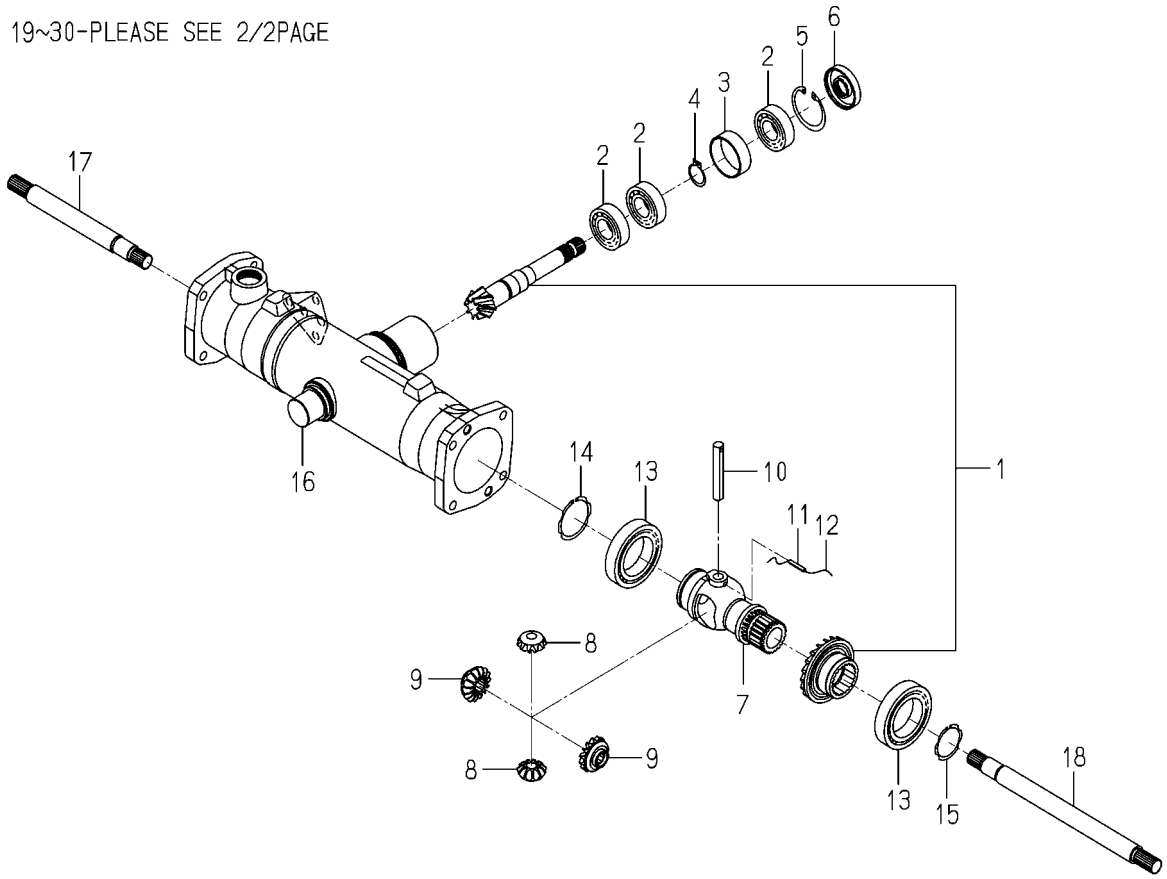

1776-430A-0100

KEY	PART CODE	DESCRIPTION	SPC	TYPE OF MODEL TM3185 FU		ITC	COL	GRP	REMARKS
1	1776-432-210-10	GEAR/BEVEL/08-2 SET	*	1					
2	1725-432-109-00	BEARING/6205HL/KBC	*	3					
3	1725-432-107-00	COLLAR/48X52X17	*	1					
4	1725-218-109-00	RING/SNAP/CS25	*	3					
5	1725-219-121-00	RING/SNAP/CR52	*	1					
6	1776-432-003-00	SEAL/OIL	*	1					
7	1725-432-711-00	CASE/DIFFERENTIAL/FR	*	1					
8	1725-432-712-10	PINION/BEVEL/11	*	2					
9	1725-432-713-00	GEAR/BEVEL/15	*	2					
10	1725-432-714-00	PIN/12X75	*	1					
11	1725-432-715-00	PIN/SPRING	*	1					
12		WIRE	*	1					
13	1725-432-801-00	BEARING/6010/KBC	*	2					
14	1725-432-113-00	RING/SNAP/CS50	*	1					
15	1725-432-114-00	RING/SNAP/CS40	*	1					
16	1776-433-002-00	HOUSING/AXLE/U	*	1					
17	1776-435-001-00	SHAFT/228	*	1					
18	1776-435-002-00	SHAFT/312	*	1					
19	1776-434-001-00	CASE/FINAL/A	*	2					
20	1776-434-003-00	GEAR/BEVEL/11	*	2					
21	1776-434-024-00	BEARING/6305/KBC	*	2					
22	1725-308-103-00	RING/SNAP/CR62	*	2					
23	1776-434-004-00	GEAR/BEVEL/15	*	2					
24	1725-212-105-00	BEARING/6005/KBC	*	4					
25	1776-434-002-10	CASE/FINAL/B	*	2					
26	1776-434-007-00	SHAFT	*	2					
27	1776-434-005-00	GEAR/BEVEL/12	*	2					
28	1776-434-027-00	BEARING/6008/KBC	*	2					
29	1685-434-001-00	SEAL/OIL ASSY	*	2					
30	V600-110-690-70	BEARING	*	2					

FIG.405 AXLE(FRONT)SYSTEM(2/2)

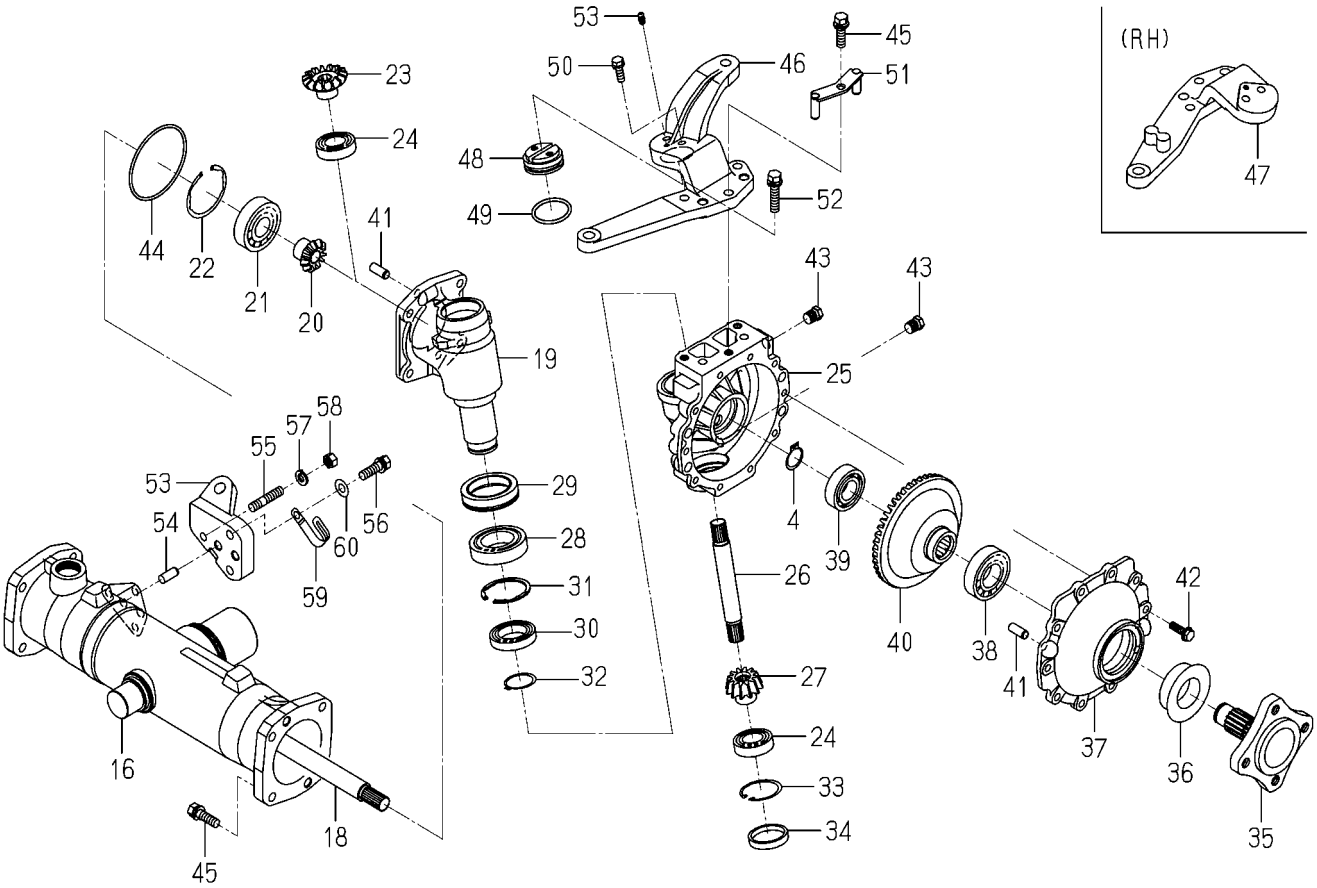

1776-430A-0100

KEY	PART CODE	DESCRIPTION	SPC	TYPE OF MODEL TM3185 FU		ITC	COL	GRP	REMARKS
31	1776-434-032-00	RING/SNAP/CH55	*	2					
32	1725-308-102-00	RING/SNAP/CS35	*	2					
33	1776-434-031-00	RING/SNAP/CH47	*	2					
34	1776-434-021-00	PLUG/SEAL/47	*	2					
35	1776-434-008-00	SHAFT/WHEEL	*	2					
36	1491-434-017-00	SEAL/QLNY35571116	*	2					
37	1776-434-009-00	COVER/WHEEL	*	2					
38	1725-434-116-00	BEARING/6206/KBC	*	2					
39	1725-201-806-00	BEARING/6205/KBC	*	2					
40	1776-434-006-00	GEAR/BEVEL/47	*	2					
41	1725-304-713-00	PIN/B	*	8					
42	1776-434-041-00	BOLT/FLANGE/M08X05	*	20					
43	1725-434-121-00	PLUG/SCREW/R1/4	*	4					
44	1725-434-114-00	RING/O/1A/G90	*	2					
45	1776-434-042-00	BOLT/S/M10X35	*	14					
46	1776-434-051-00	ARM/KNUCKLE/LH/U	*	1					
47	1776-434-012-00	ARM/KNUCKLE/RH	*	1					
48	1776-434-013-00	PIN/47X19	*	2					
49	1776-434-035-00	RING/O/1A/P41	*	2					
50	1776-434-043-00	BOLT/S/M08X25	*	4					
51	1776-434-220-00	PIN COMP	*	2					
52	1776-434-038-00	NIPPLE/GREASE	*	2					
53	1776-433-003-00	STAY/CYLINDER	*	1					
54	1725-304-713-00	PIN/B	*	2					
55	1776-433-004-00	BOLT/STUD	*	1					
56	1776-434-042-00	BOLT/S/M10X35	*	2					
57	1725-501-118-00	WASHER/LOCK/M10	*	1					
58	1776-433-005-00	NUT/SM/M10	*	1					
59	3737-172-011-00	CLAMP,HARNESS	*	1					
60	1776-433-006-00	WASHER/M10	*	1					

FIG.406 SHAFT(DRIVE/FRONT)SYSTEM

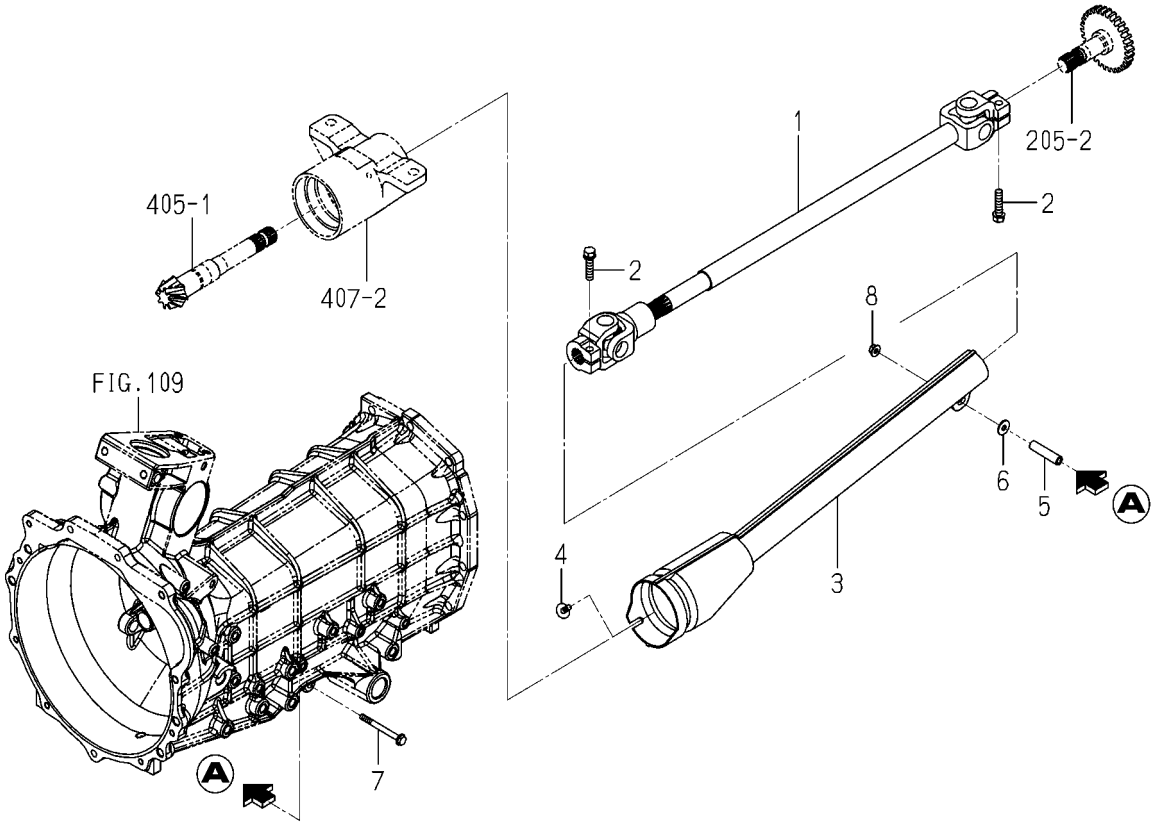

1776-431A-0100

KEY	PART CODE	DESCRIPTION	SPC	TYPE OF MODEL TM3185 FU		ITC	COL	GRP	REMARKS
1	1776-431-210-00	SHAFT/4WD ASSY	*	1					
2	V211-560-803-50	BOLT/S	*	2					
3	1776-431-001-00	CASE/JOINT	*	1					
4	1690-705-008-00	BOLT/M06X16	*	1					
5	1776-431-002-00	PIPE/07X11X45	*	1					
6	3560-503-302-00	WASHER,WIRE TENSION	*	1					
7	V230-360-606-50	FLANGEBOLT	*	1					
8	V361-260-006-00	NUT	*	1					

FIG.407 METAL (PIVOT/REAR)&BOLT(SET/TIRE)SYSTEM

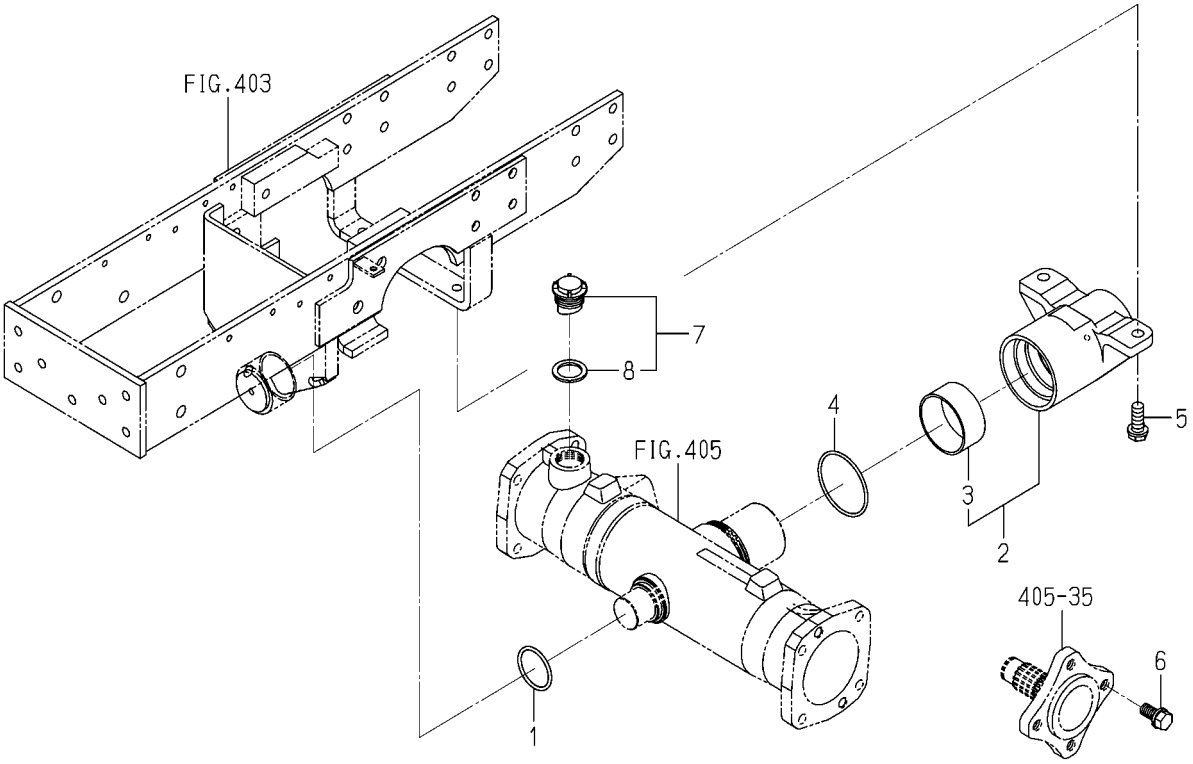

1776-433A-0100

KEY	PART CODE	DESCRIPTION	SPC	TYPE OF MODEL TM3185 FU		ITC	COL	GRP	REMARKS
1	V720-103-504-20	RING/O	*	1					
2	1776-433-510-00	METAL/PIVOT/REA ASSY	*	1					
3	1614-433-212-00	BUSH/62X67X30	*	1					
4	V721-103-107-00	O-RING/G70	*	1					
5	1725-201-002-00	BOLT/S	*	2					
6	6901-931-225-00	BOLT,SEMS/M12X25	*	8					
7	1518-432-250-10	CAP,OIL	*	1					
8	1518-306-203-10	PACKING	*	1					

FIG.408 ROD(TIE)SYSTEM

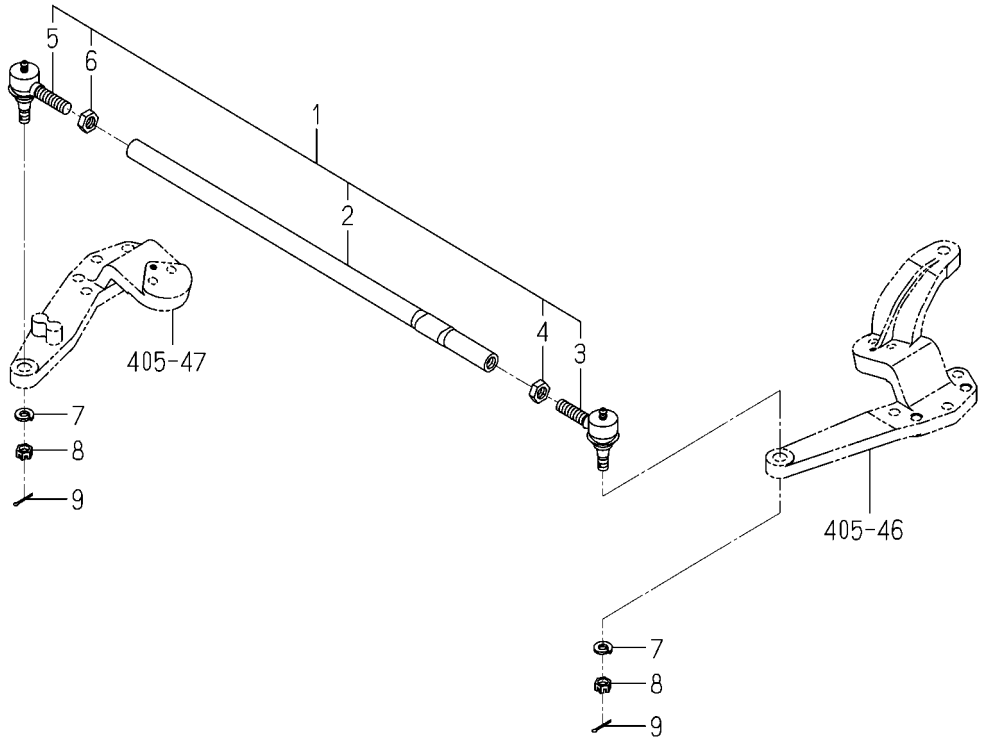

1776-436 -0100

KEY	PART CODE	DESCRIPTION	SPC	TYPE OF MODEL TM3185 FU		ITC	COL	GRP	REMARKS
1	1776-436-210-00	ROD/TIE ASSY	*	1					
2	1776-436-211-00	ROD/TIE	*	1					
3	1427-433-240-30	JOINT/BALL/LH ASSY	*	1					
4	1427-433-023-00	NUT/LH THREAD	*	1					
5	1427-433-250-30	JOINT/BALL/RH ASSY	*	1					
6	1427-433-022-00	NUT/M12	*	1					
7	V401-160-010-00	WASHER,SP/M10	*	2					
8	V327-262-110-00	NUT/M10X1.25	*	2					
9	V500-162-502-00	PIN,SPLIT/2.5X20	*	2					

FIG.501 CASE(CYLINDER)SYSTEM

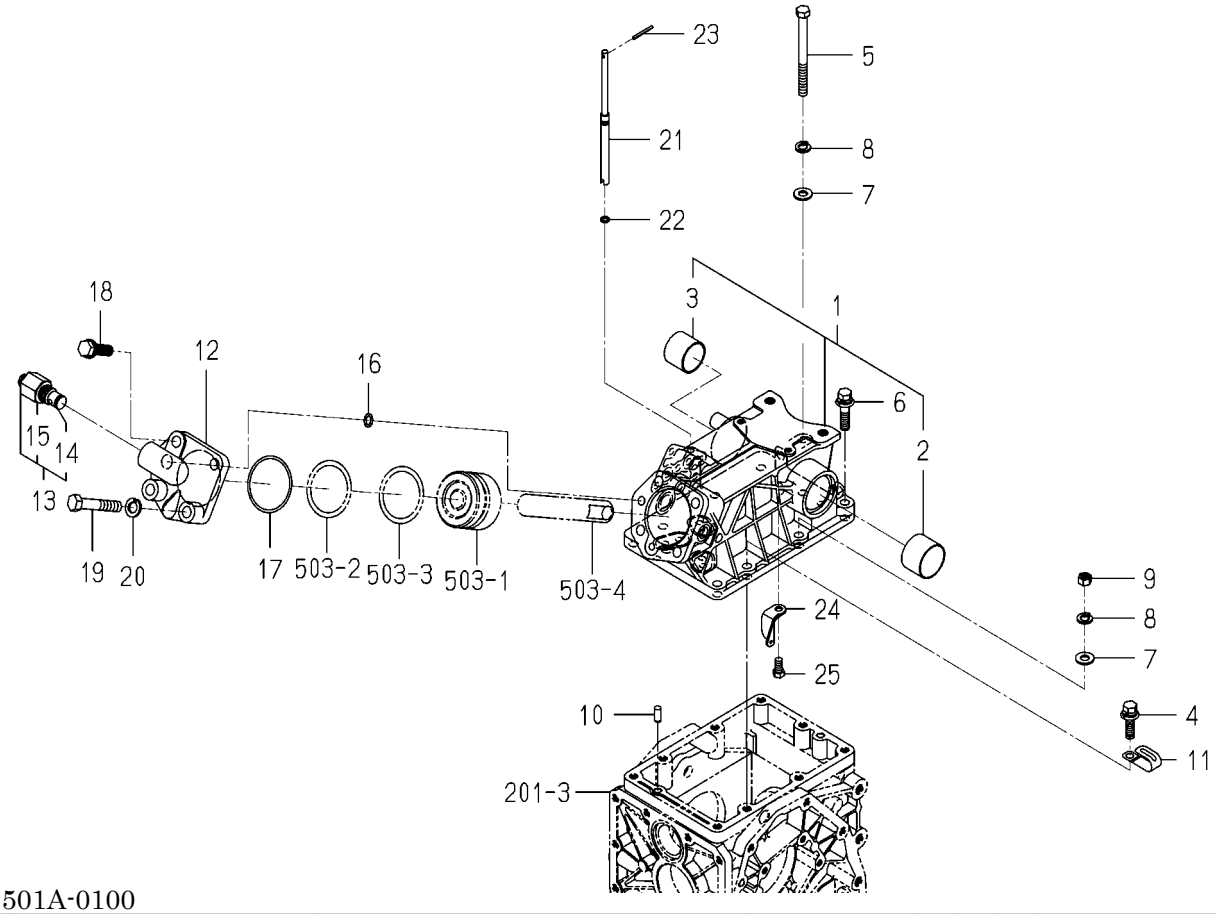

1776-501A-0100

KEY	PART CODE	DESCRIPTION	SPC	TYPE OF MODEL TM3185 FU		ITC	COL	GRP	REMARKS
1	1776-501-300-00	CASE/CYLINDER ASSY	*	1					
2	1480-501-003-00	BUSH/40X43X30	*	1					
3	1427-501-003-00	BUSH/35X39X30	*	1					
4	V211-661-004-00	BOLT/SP	*	4					
5	V201-361-010-00	BOLT/M10X100	*	1					
6	V211-661-004-50	BOLT/SP	*	2					
7	V411-260-010-00	WASHER/M10	*	3					
8	V401-160-010-00	WASHER,SP/M10	*	3					
9	V304-460-010-00	NUT/M10	*	2					
10	V522-100-801-80	PIN	*	2					
11	3737-172-011-00	CLAMP,HARNESS	*	1					
12	1579-501-002-00	HEAD,SYLINDER	*	1					
13	K250-001-000-00	VALVE,RELIEF ASSY	*	1					
14	V720-112-401-20	O-RING/P12	*	1					
15	K250-001-009-00	PACKING	*	1					
16	V720-112-401-20	O-RING/P12	*	2					
17	V721-113-106-00	O-RING G60	*	1					
18	6901-931-240-00	BOLT	*	2					
19	V201-361-206-00	BOLT	*	2					
20	V401-160-012-00	WASHER,SP/M12	*	2					
21	1434-501-004-00	PIN,ADJ	*	1					
22	V720-101-900-70	O-RING/P 7	*	1					
23	V580-140-403-20	PIN/SPRING	*	1					
24	1434-501-005-00	HOOK,SPRING	*	1					
25	V201-260-801-60	BOLT/M 8X16	*	1					

FIG.502 ARM(LIFT)SYSTEM

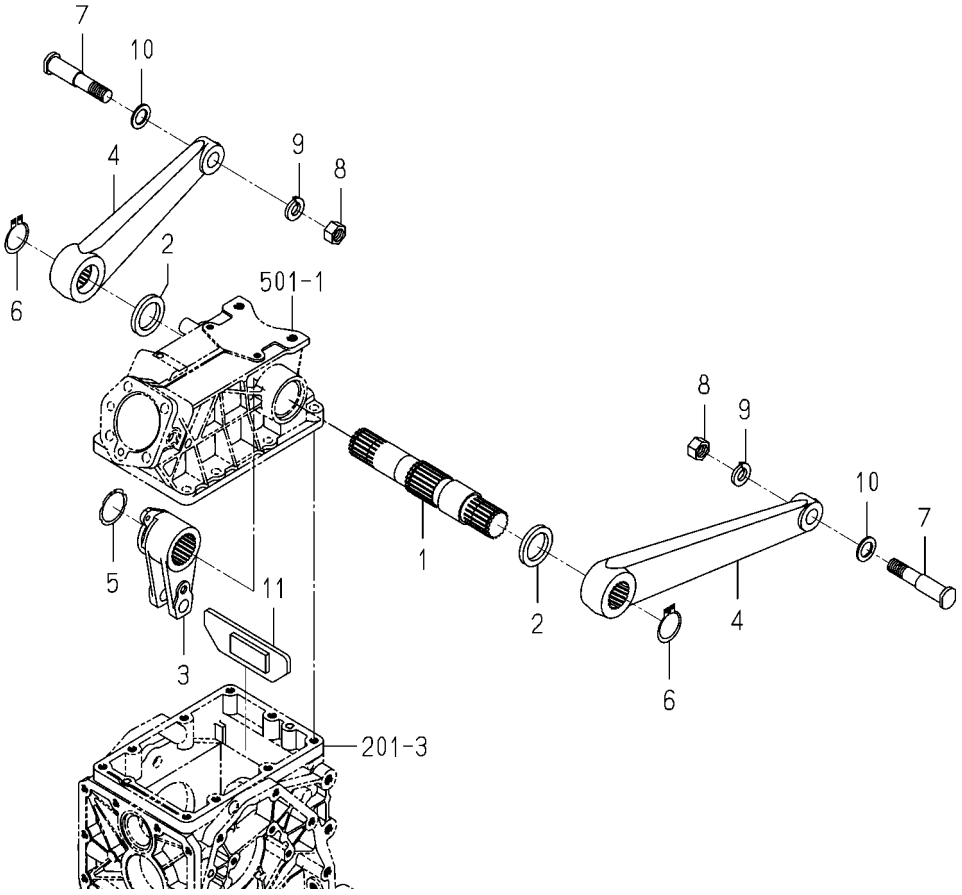

1776-502 -0100

KEY	PART CODE	DESCRIPTION	SPC	TYPE OF MODEL TM3185 FU		ITC	COL	GRP	REMARKS
1	1672-502-003-00	SHAFT/LIFT	*	1					
2	V742-135-500-60	SEAL,OIL/VC35506	*	2					
3	1738-502-001-00	CRANK/LIFT	*	1					
4	1776-502-001-00	ARM/LIFT	*	2					
5	V706-140-040-00	RING/SNAP	*	1					
6	V704-140-035-00	RING,SNAP/35 C	*	2					
7	1716-502-004-10	PIN/19X92	*	2					
8	V304-260-016-00	NUT/M16	*	2					
9	V402-160-016-00	WASHER,SP/M16	*	2					
10	1782-407-006-00	WASHER/19X30X02	*	2					
11	1738-502-210-10	STOPPER/CRANK COMP	*	1					

FIG.503 CYLINDER SYSTEM

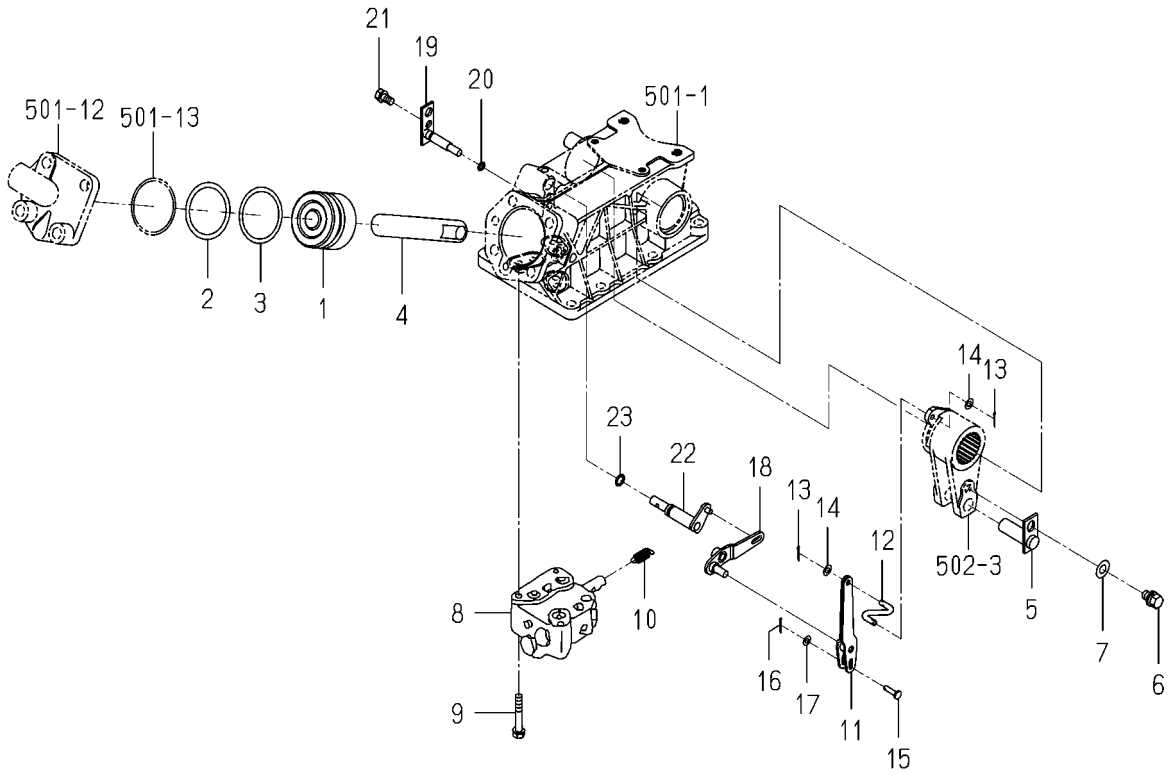

1672-503 -0100

KEY	PART CODE	DESCRIPTION	SPC	TYPE OF MODEL TM3185 FU		ITC	COL	GRP	REMARKS
1	1421-507-002-10	PISTON	*	1					
2	V720-105-705-50	O-RING/P55	*	1					
3	1416-501-011-00	RING,BACKUP	*	1					
4	1544-503-001-20	ROD	*	1					
5	1544-503-200-20	PIN,ROD COMP	*	1					
6	V211-561-001-60	BOLT(S)7	*	1					
7	V411-260-010-00	WASHER/M10	*	1					
8	K211-001-000-00	VALVE CONTROL ASSY	*	1					FIG S01
9	V211-260-805-00	BOLT/M8X50	*	3					
10	1434-501-006-00	SPRING,TENSION/31	*	1					
11	1717-503-200-10	LINK/SPOOL COMP	*	1					
12	1434-503-001-00	LINK,CRANK	*	1					
13	V500-162-001-50	PIN,SPLIT/2 X15	*	2					
14	V411-260-006-00	WASHER / M6	*	2					
15	1434-503-002-00	PIN/5X17	*	1					
16	V500-162-001-50	PIN,SPLIT/2 X15	*	1					
17	V411-260-005-00	WASHER	*	1					
18	1672-503-210-00	LINK/SUPPORT COMP	*	1					
19	1434-503-250-10	PIN/SUPPORT COMP	*	1					
20	V720-101-900-70	O-RING/P 7	*	1					
21	V211-260-801-60	BOLT,SEMS (S) M8X16	*	1					
22	1434-503-260-20	LINK SHIFT ARM	*	1					
23	V720-102-401-00	O-RING/P10A	*	1					

FIG.504 LEVER(POSITION)SYSTEM

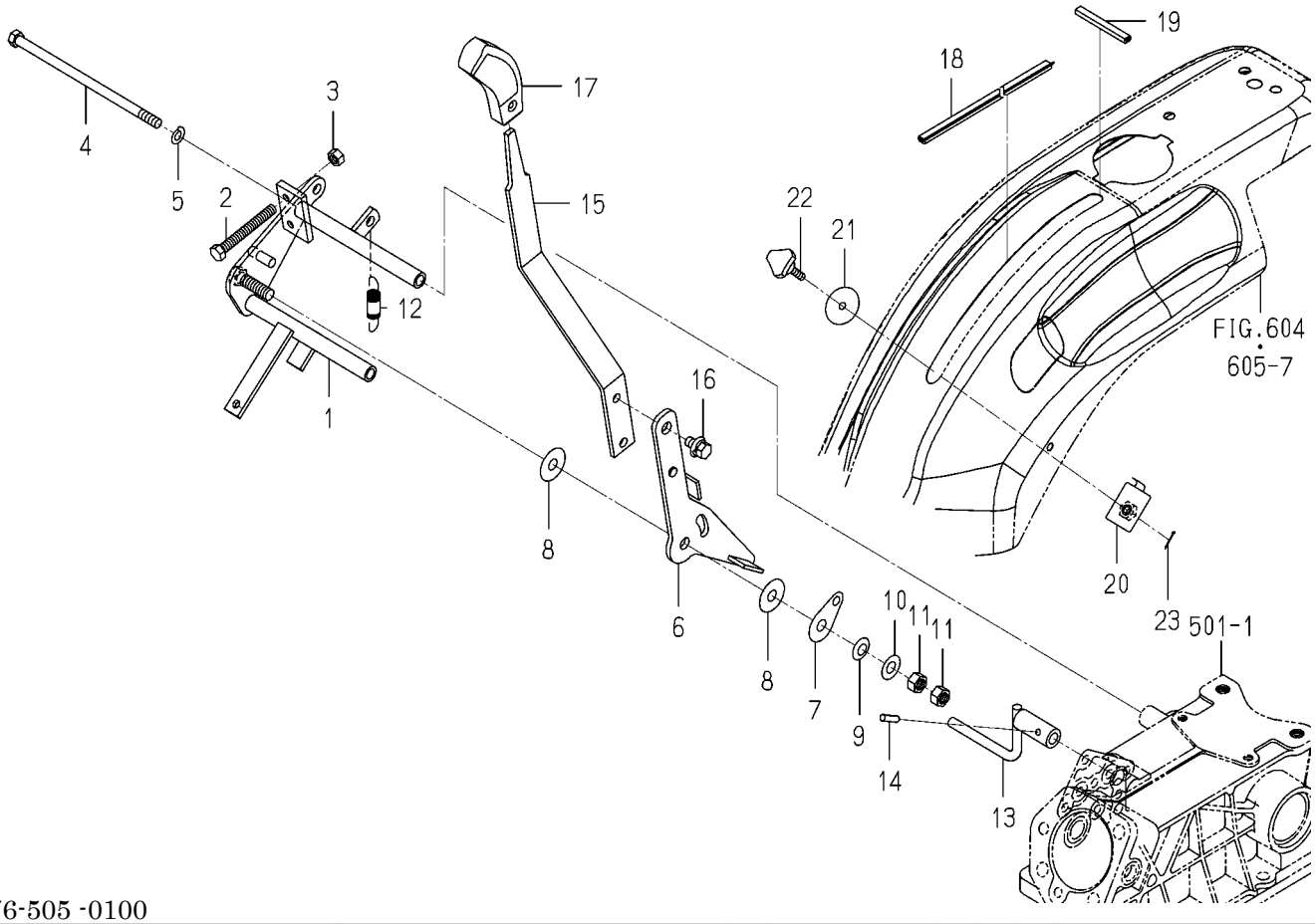

1776-505 -0100

KEY	PART CODE	DESCRIPTION	SPC	TYPE OF MODEL TM3185 FU		ITC	COL	GRP	REMARKS
1	1776-505-310-20	BRACKET/LEVER COMP	*	1					
2	W201-260-806-50	BOLT	*	1					
3	V304-260-008-00	NUT	*	1					
4	V201-260-817-00	BOLT.S M8X170	*	2					
5	V401-160-008-00	WASHER,SP/M 8	*	2					
6	1776-505-320-00	ARM/POSITION COMP	*	1					
7	1614-505-002-00	PLATE	*	1					
8	1614-505-003-00	LINING/11X30X02	*	2					
9	1614-505-004-00	SPRING/WASHER	*	1					
10	V411-260-010-00	WASHER/M10	*	1					
11	V304-260-010-00	NUT	*	2					
12	1776-505-004-00	SPRING/HE053	*	1					
13	1612-505-220-00	ARM/POSITION COMP	*	1					
14	V580-140-502-00	PIN,SPRING/5 X20 W	*	1					
15	1776-505-001-00	LEVER/POSITION	*	1					
16	V211-360-801-60	BOLT,SEMS (SP)	*	1					
17	1614-505-007-00	GRIP/03X17X97	*	1					
18	1776-505-005-00	TRIM/01X268	*	2					
19	1760-604-001-00	INSULATOR	*	2					
20	1614-608-220-10	PLATE/STOP COMP	*	1					
21	1710-608-056-00	WASHER/06X33X02	*	1					
22	1690-608-003-00	BOLT/KNOB/M06X27	*	1					
23	V500-161-601-50	PIN,SPLIT/1.6X15	*	1					

FIG.505 COVER(VALVE)SYSTEM(EXCEPT V TYPE)

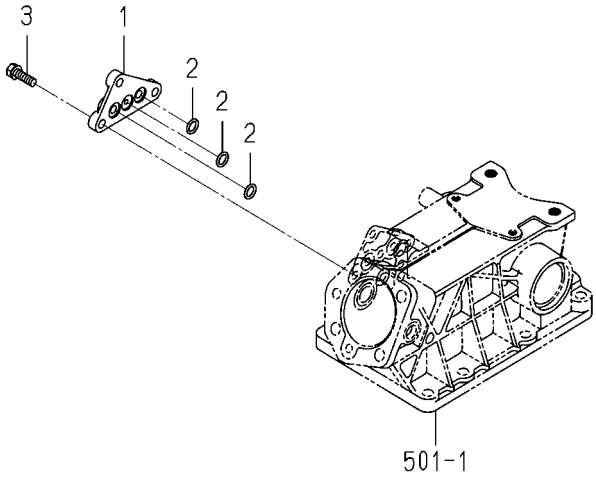

1726-506 -0100

KEY	PART CODE	DESCRIPTION	SPC	TYPE OF MODEL TM3185 FU		ITC	COL	GRP	REMARKS
1	- - - - - -	BLANK	*						- - - - - -
1	1434-501-003-10	SUBCONCOVER	*	1					
2	- - - - - -	BLANK	*						- - - - - -
2	V720-112-401-20	O-RING/P12	*	3					
3	V211-260-802-50	BOLT/S	*	3					

FIG.506 VALVE(CONTROL)SYSTEM(V TYPE)

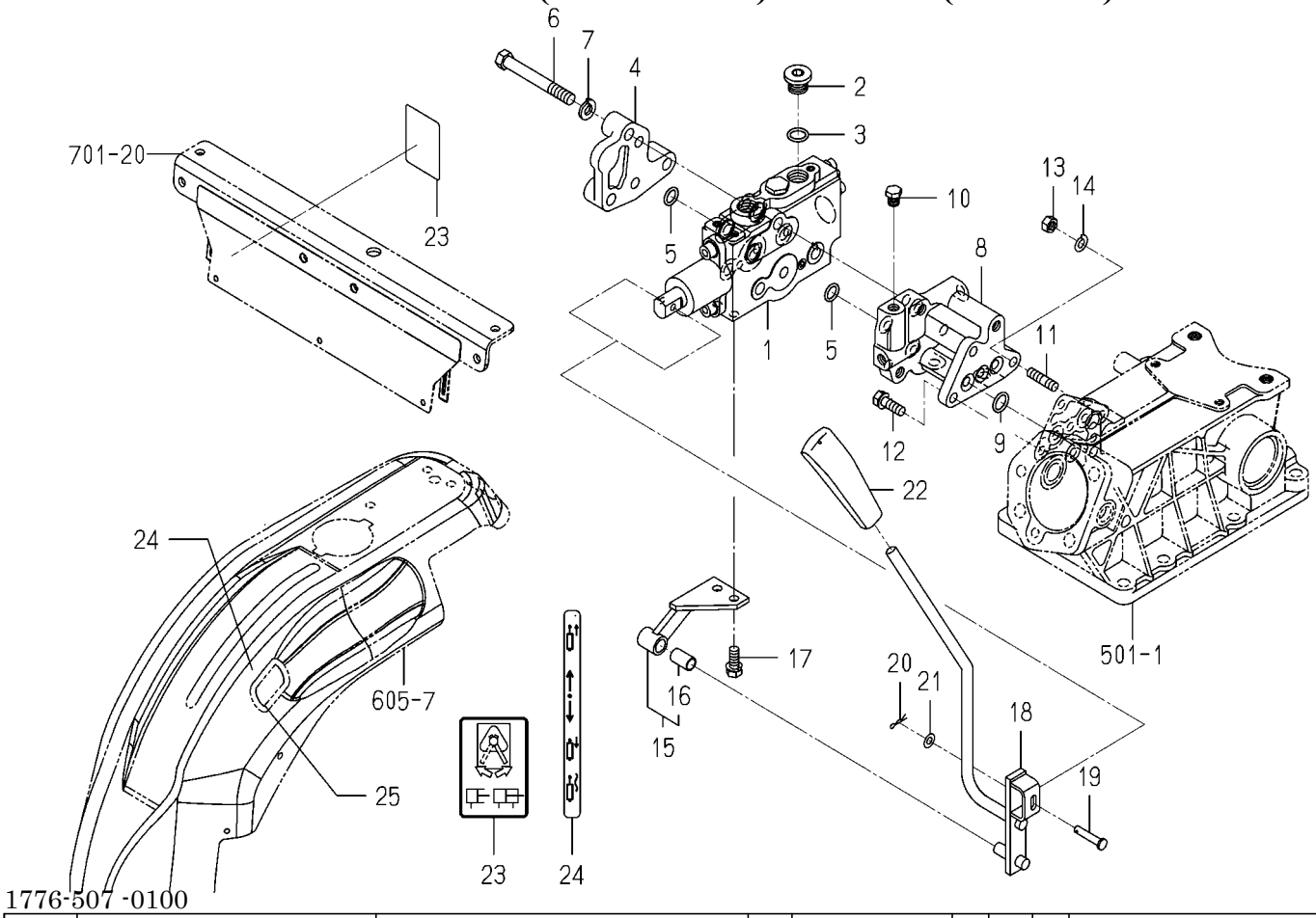

KEY	PART CODE	DESCRIPTION	SPC	TYPE OF MODEL TM3185 FU		ITC	COL	GRP	REMARKS
1	1719-511-350-00	VALVE/CONTROL ASSY	*	1					FIG S03
2	K510-001-029-00	PLUG(G3/8)	*	2					
3	V720-112-401-40	O-RING/P14	*	2					
4	1614-501-003-10	COVER	*	1					
5	V720-112-401-20	O-RING/P12	*	6					
6	V201-261-008-00	BOLT/M10X80	*	3					
7	V401-160-010-00	WASHER,SP/M10	*	3					
8	1776-507-001-00	METAL/AUX/VALVE	*	1					
9	V720-112-401-20	O-RING/P12	*	3					
10	V782-160-000-2T	PLUG/SCREW/SEAL	*	6					
11	V251-260-802-0D	BOLT/STUD/SEAL	*	1					
12	V211-560-802-50	BOLT,SEMS/M8X25 7T	*	2					
13	V304-460-008-00	NUT/M8	*	1					
14	V401-160-008-00	WASHER,SP/M 8	*	1					
15	1774-507-330-00	HOLDER/2ND ASSY	*	1					
16	1560-509-211-00	BUSH/10X12X20	*	1					
17	V211-260-802-00	BOLT/S	*	2					
18	1776-507-210-10	ARM/1ST COMP	*	1					
19	2144-519-007-00	PIN/06X31	*	1					
20	V560-160-006-00	PIN/SNAP	*	1					
21	V411-260-006-00	WASHER / M6	*	1					
22	1614-117-001-00	GRIP/THROTTLE	*	1					
23	1640-530-008-00	LABEL/SUBCON	*	1					
24	1773-902-015-00	LABEL/CONTROL/AUX	*	1					
25	1719-604-011-00	TRIM/250	*	1					

FIG.507 PIPING SYSTEM

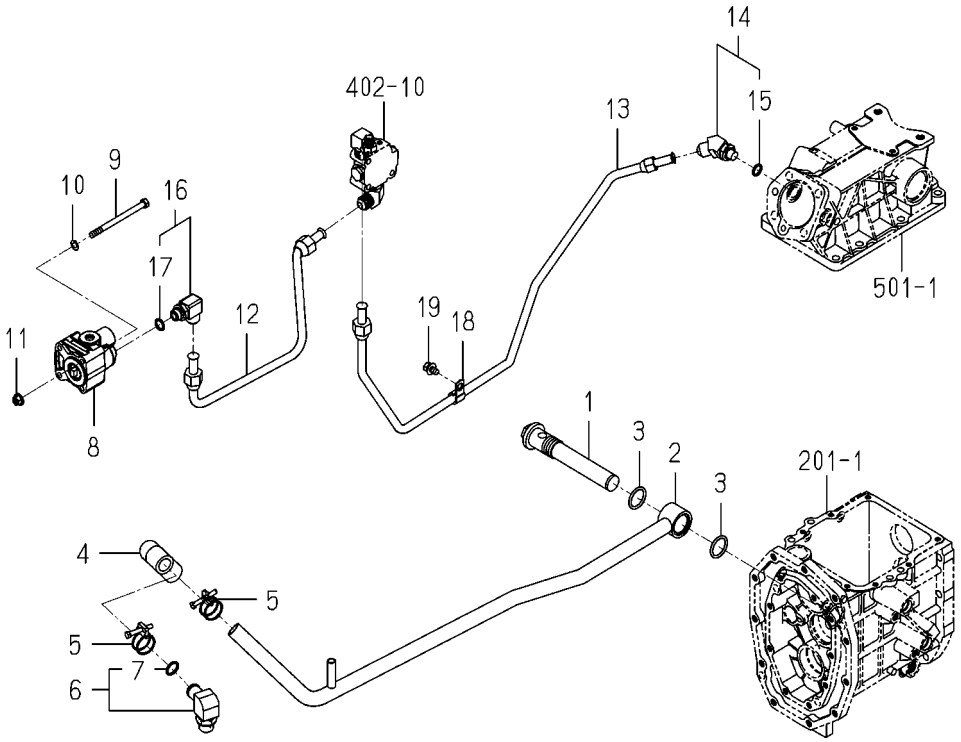

1776-509 -0100

KEY	PART CODE	DESCRIPTION	SPC	TYPE OF MODEL TM3185 FU		ITC	COL	GRP	REMARKS
1	1738-508-210-00	FILTER/SUCTION COMP	*	1					
2	1776-509-240-00	PIPE/SUCTION/U COMP	*	1					
3	V720-103-502-80	O-RING/P28	*	2					
4	1776-508-001-00	HOSE	*	1					
5	J061-120-032-00	CLAMP/WORM/20-32	*	2					
6	2512-501-240-00	ADAPTER/G1/2-L20	*	1					
7	V720-112-401-80	O-RING/P18	*	1					
8	1776-508-500-00	PUMP/GEAR/R5 ASSY	*	1					
9	V201-260-811-00	BOLT/M 8X110	*	2					
10	V401-160-008-00	WASHER,SP/M 8	*	2					
11	V362-260-008-00	NUT/WASHER	*	2					
12	1776-509-210-00	PIPE/DEL/F COMP	*	1					
13	1776-509-220-00	PIPE/DEL/RCOMP	*	1					
14	1776-508-280-00	ADAPTER/M20-G3/ ASSY	*	1					
15	V720-112-401-40	O-RING/P14	*	1					
16	1641-516-560-00	ADAPTER/L/M20 ASSY	*	1					
17	V720-112-401-40	O-RING/P14	*	1					
18	1650-509-012-00	HOLDER/12	*	1					
19	V211-360-801-60	BOLT,SEMS (SP)	*	1					

FIG.508 LINK(3P)SYSTEM(EXCEPT R TYPE)

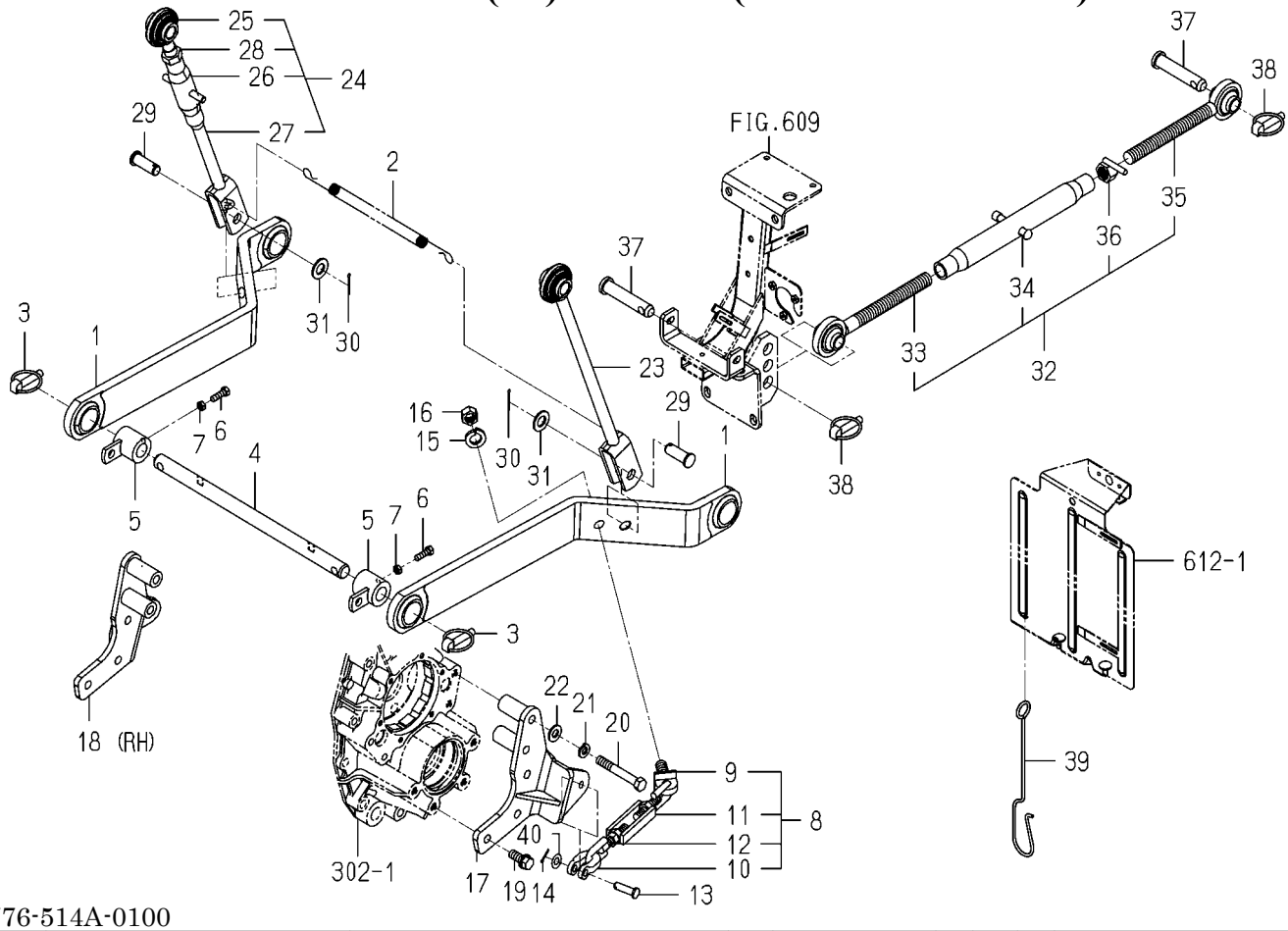

1776-514A-0100

KEY	PART CODE	DESCRIPTION	SPC	TYPE OF MODEL TM3185 FU		ITC	COL	GRP	REMARKS
1	1776-514-220-00	LINK/LOWER COMP	*	2					
2	1560-525-001-40	SPRING	*	1					
3	1673-525-002-30	LINKPIN	*	2					
4	1738-514-001-00	PIN/22X404	*	1					
5	1738-514-210-00	HUB/SPACER COMP	*	2					
6	V201-360-802-50	BOLT/M 8X25	*	2					
7	V305-260-008-00	NUT/M 8	*	2					
8	1776-514-500-00	CHIN/CHECK ASSY	*	2					
9	1776-514-510-00	CHAIN/CHECK/LH COMP	*	2					
10	1776-514-530-00	CHAIN/CHECK/RH COMP	*	2					
11	1776-514-520-00	BACKLE/TURN COMP	*	2					
12	1776-514-501-00	NUT	*	2					
13	1427-511-001-00	PIN/10X32	*	2					
14	V500-162-502-00	PIN,SPLIT/2.5X20	*	2					
15	V401-160-016-00	WASHER,SP/M16	*	2					
16	V334-460-016-00	NUT	*	2					
17	1776-514-410-10	BRACKET/LH COMP	*	1					
18	1776-514-420-10	BRACKET/RH COMP	*	1					
19	1725-201-002-00	BOLT/S	*	6					
20	V201-361-208-50	BOLT	*	4					
21	V401-160-012-00	WASHER,SP/M12	*	4					
22	V411-260-012-00	WASHER /M12	*	4					
23	1776-514-230-00	ROD/LIFT/LH COMP	*	1					
24	1776-514-240-00	ROD/LIFT/RH ASSY	*	1					
25	1776-514-250-00	ROD/LIFT/RH/B COMP	*	1					
26	1776-514-260-00	BACKLE/TURN COMP	*	1					
27	1776-514-270-00	ROD/LIFT/RH/U COMP	*	1					
28	1776-514-241-00	NUT	*	1					
29	1427-511-005-00	PIN/16X44	*	2					
30	3817-710-009-00	PIN,SPLIT/4X30XSUS	*	2					

FIG.508 LINK(3P)SYSTEM(EXCEPT R TYPE)

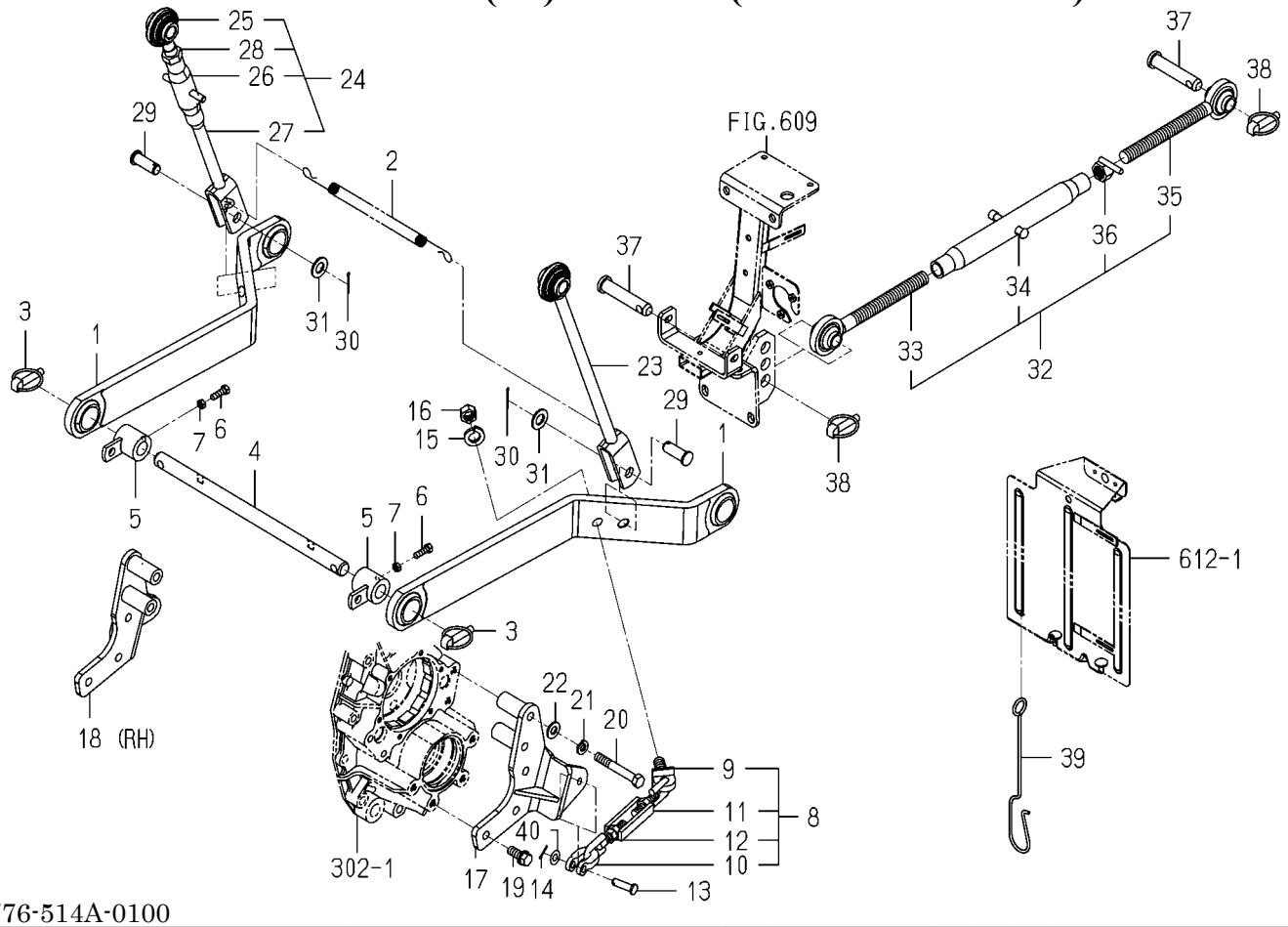

1776-514A-0100

KEY	PART CODE	DESCRIPTION	SPC	TYPE OF MODEL TM3185 FU		ITC	COL	GRP	REMARKS
31	V411-260-016-00	WASHER / M16	*	2					
32	1776-514-310-00	LINK/TOP ASSY	*	1					
33	1776-514-320-00	LINK/TOP/LH COMP	*	1					
34	1776-514-330-00	BACKLE/TURN COMP	*	1					
35	1776-514-340-00	LINK/TOP/RH COMP	*	1					
36	1776-514-350-00	NUT/LOCK COMP	*	1					
37	1620-514-005-00	PIN/19X94	*	2					
38	1673-525-002-30	LINKPIN	*	2					
39	1566-525-101-00	HOOK,TOP LINK	*	1					
40	V411-260-010-00	WASHER/M10	*	2					

FIG.509 LINK(3P)SYSTEM(R TYPE)

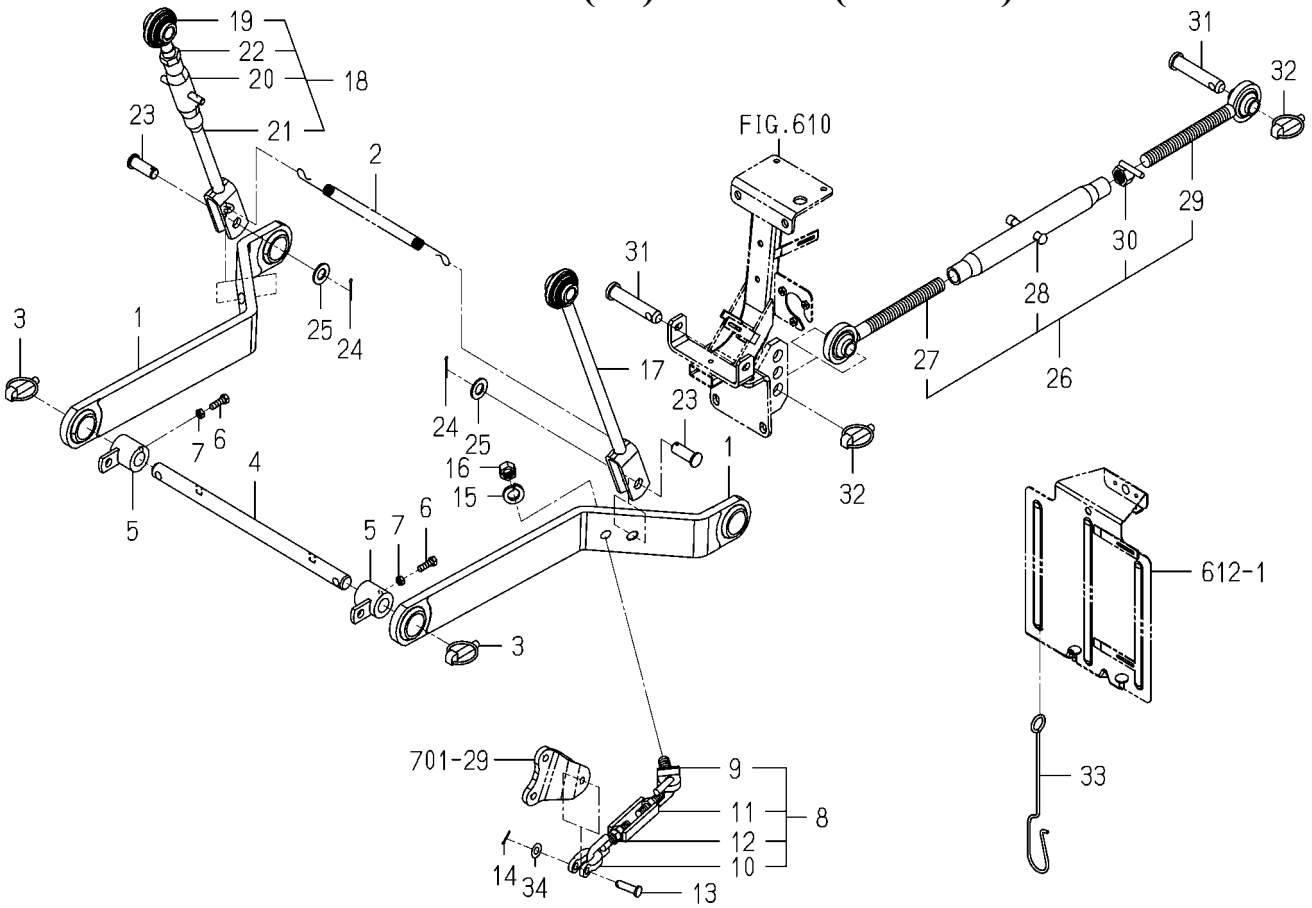

1776-514B-0100

KEY	PART CODE	DESCRIPTION	SPC	TYPE OF MODEL TM3185 FU		ITC	COL	GRP	REMARKS
1	1776-514-220-00	LINK/LOWER COMP	*	2					
2	1560-525-001-40	SPRING	*	1					
3	1673-525-002-30	LINKPIN	*	2					
4	1738-514-001-00	PIN/22X404	*	1					
5	1738-514-210-00	HUB/SPACER COMP	*	2					
6	V201-360-802-50	BOLT/M 8X25	*	2					
7	V305-260-008-00	NUT/M 8	*	2					
8	1776-514-500-00	CHIN/CHECK ASSY	*	2					
9	1776-514-510-00	CHAIN/CHECK/LH COMP	*	2					
10	1776-514-530-00	CHAIN/CHECK/RH COMP	*	2					
11	1776-514-520-00	BACKLE/TURN COMP	*	2					
12	1776-514-501-00	NUT	*	2					
13	1427-511-001-00	PIN/10X32	*	2					
14	V500-162-502-00	PIN,SPLIT/2.5X20	*	2					
15	V401-160-016-00	WASHER,SP/M16	*	2					
16	V334-460-016-00	NUT	*	2					
17	1776-514-230-00	ROD/LIFT/LH COMP	*	1					
18	1776-514-240-00	ROD/LIFT/RH ASSY	*	1					
19	1776-514-250-00	ROD/LIFT/RH/B COMP	*	1					
20	1776-514-260-00	BACKLE/TURN COMP	*	1					
21	1776-514-270-00	ROD/LIFT/RH/U COMP	*	1					
22	1776-514-241-00	NUT	*	1					
23	1427-511-005-00	PIN/16X44	*	2					
24	3817-710-009-00	PIN,SPLIT/4X30XSUS	*	2					
25	V411-260-016-00	WASHER / M16	*	2					
26	1776-514-310-00	LINK/TOP ASSY	*	1					
27	1776-514-320-00	LINK/TOP/LH COMP	*	1					
28	1776-514-330-00	BACKLE/TURN COMP	*	1					
29	1776-514-340-00	LINK/TOP/RH COMP	*	1					
30	1776-514-350-00	NUT/LOCK COMP	*	1					

FIG.509 LINK(3P)SYSTEM(R TYPE)

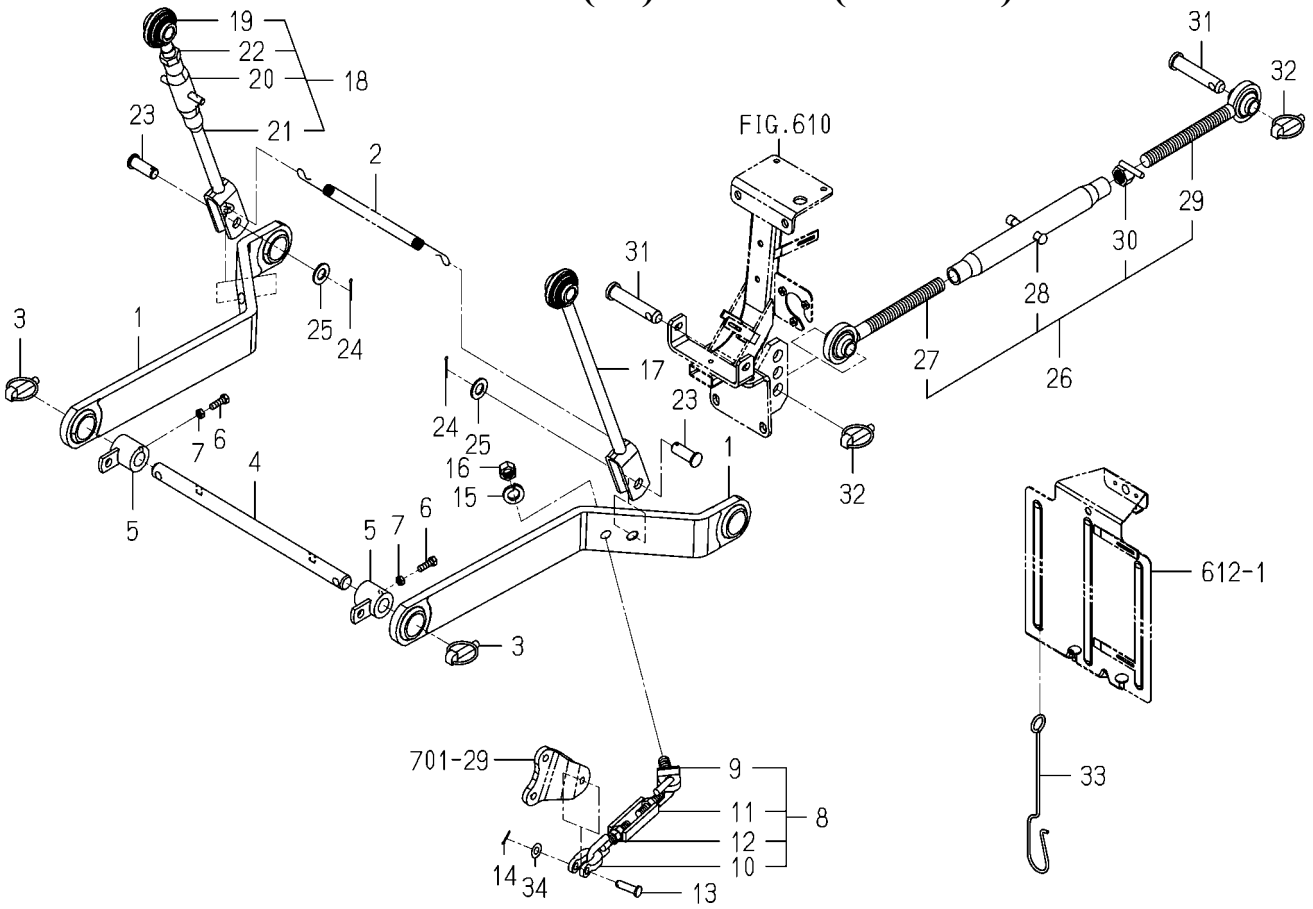

1776-514B-0100

KEY	PART CODE	DESCRIPTION	SPC	TYPE OF MODEL TM3185 FU		ITC	COL	GRP	REMARKS
31	1620-514-005-00	PIN/19X94	*	2					
32	1673-525-002-30	LINKPIN	*	2					
33	1566-525-101-00	HOOK,TOP LINK	*	1					
34	V411-260-010-00	WASHER/M10	*	2					

FIG.510 HITCH(TRAILER)SYSTEM(EXCEPT D TYPE)

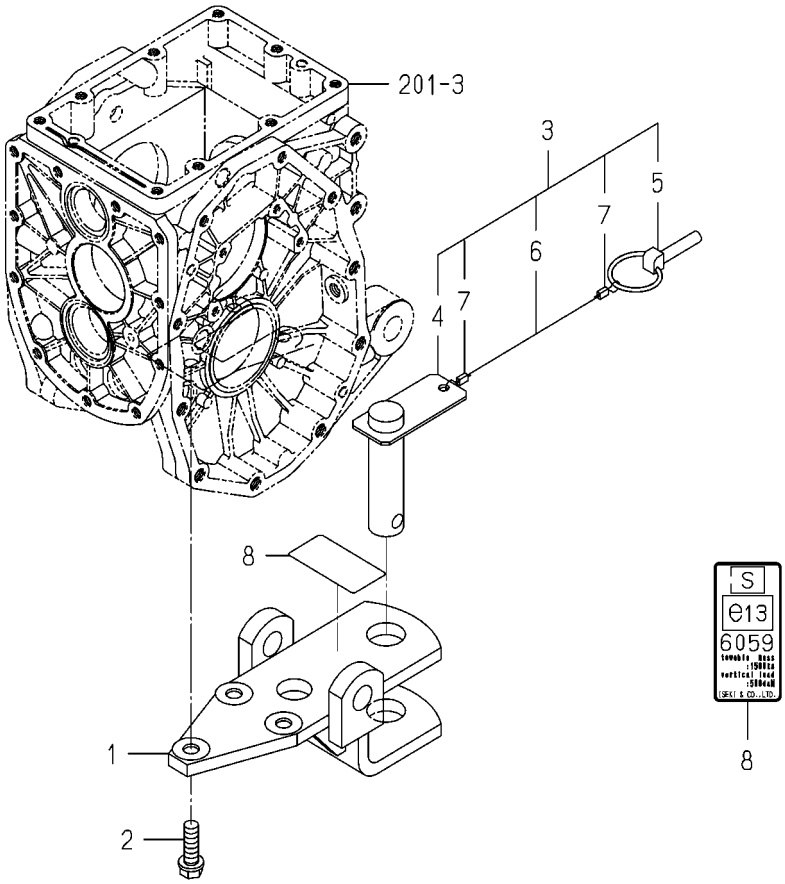

1776-520B-0100

KEY	PART CODE	DESCRIPTION	SPC	TYPE OF MODEL TM3185 FU		ITC	COL	GRP	REMARKS
1	1776-520-210-00	PLATE/HITCH COMP	*	1					
2	6901-931-240-00	BOLT	*	3					
3	1776-411-200-00	PIN ASSY	*	1					
4	1776-411-210-00	PIN/30X116 COMP	*	1					
5	1673-525-002-30	LINKPIN	*	1					
6	1772-521-221-20	WIRE/02X300	*	1					
7	1614-702-552-00	RING	*	2					
8	1776-520-001-10	LABEL/TRH1776	*	1					

FIG.601 HOOD SYSTEM

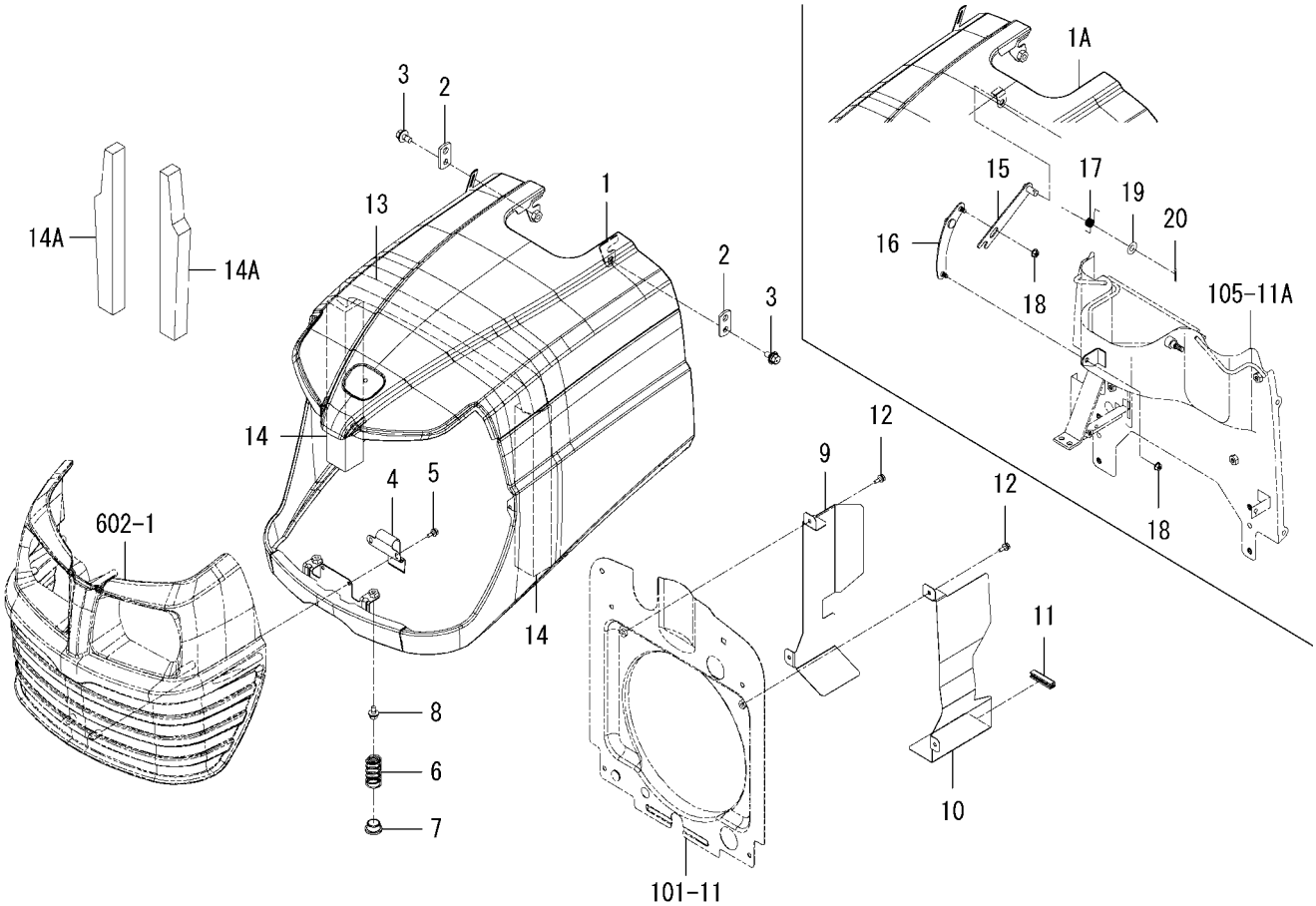

1776-601 -0100

KEY	PART CODE	DESCRIPTION	SPC	TYPE OF MODEL TM3185 FU		ITC	COL	GRP	REMARKS
1	- - - - - -	BLANK	*						- - - - - -
1A	1776-601-200-30	HOOD COMP	*	1			4L		
2	1776-601-002-00	PLATE	*	2					
3	V211-661-002-00	BOLT/M10X20	*	2					
4	1776-601-003-00	PLATE/LOCK	*	1					
5	V210-360-601-60	BOLT(SP)/M6X16	*	2					
6	1789-601-007-20	SPRING/HC053	*	2					
7	7821-501-005-00	BUSH/19X30X14	*	2					
8	V211-360-801-60	BOLT,SEMS (SP)	*	2					
9	1776-601-004-00	PLATE(SAFETY/RH)	*	1					
10	1776-601-005-00	PLATE(SAFETY/LH)	*	1					
11	3666-202-005-10	PAD/50	*	1					
12	V210-360-601-60	BOLT(SP)/M6X16	*	4					
13	1726-601-007-00	INSULATOR	*	1					
14	- - - - - -	BLANK	*						- - - - - -
14A	1776-601-006-10	SEAL/330	*	2					
15	- - - - - -	BLANK	*						- - - - - -
15	1776-601-220-10	PLATE/A COMP	*	1					
16	1776-601-230-00	PLATE/B COMP	*	1					
17	- - - - - -	BLANK	*						- - - - - -
17	1776-601-007-10	SPRING/HT014	*	1					
18	V360-260-006-00	NUT/M6	*	2					
19	- - - - - -	BLANK	*						- - - - - -
19	- - - - - -	BLANK	*						- - - - - -
19	V411-260-010-00	WASHER/M10	*	1					
20	V500-162-502-00	PIN,SPLIT/2.5X20	*	1					

FIG.602 GRILLE SYSTEM

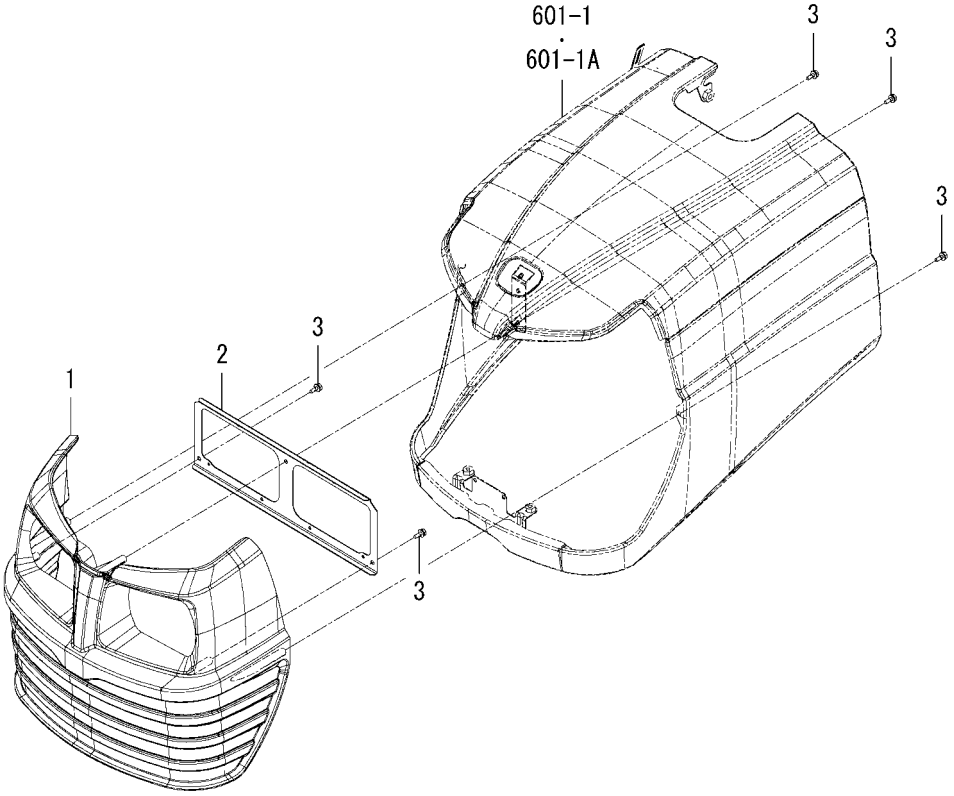

1776-602 -0100

KEY	PART CODE	DESCRIPTION	SPC	TYPE OF MODEL TM3185 FU		ITC	COL	GRP	REMARKS
1	1776-602-001-00	GRILLE	*	1					
2	1776-602-002-00	BRACKET/GRILLE	*	1					
3	V210-360-601-60	BOLT(SP)/M6X16	*	5					

FIG.603 COVER(DASH BOARD)SYSTEM

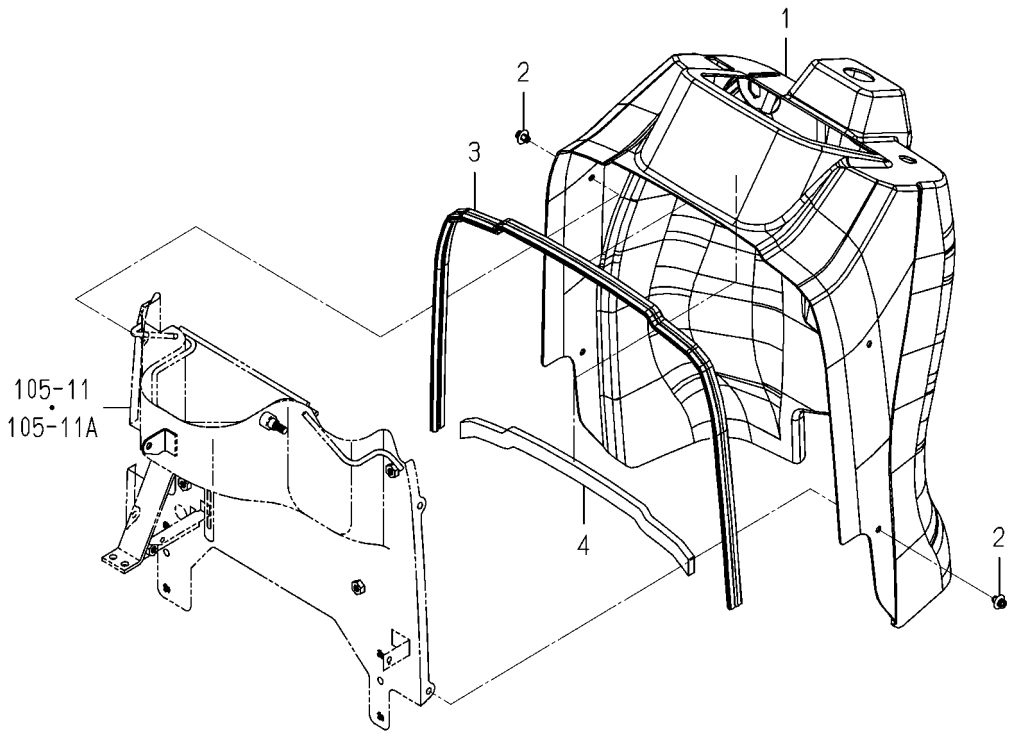

1776-603 -0100

KEY	PART CODE	DESCRIPTION	SPC	TYPE OF MODEL TM3185 FU		ITC	COL	GRP	REMARKS
1	1776-603-004-00	COVER/DASH	*	1					
2	1650-705-006-00	RIVET	*	4					
3	- - - - - -	BLANK	*						- - - - - -
3	1776-603-005-00	INSULATOR/1100	*	1					
4	1675-102-002-00	INSULATOR	*	1					

FIG.604 FENDER SYSTEM(EXCEPT V TYPE)

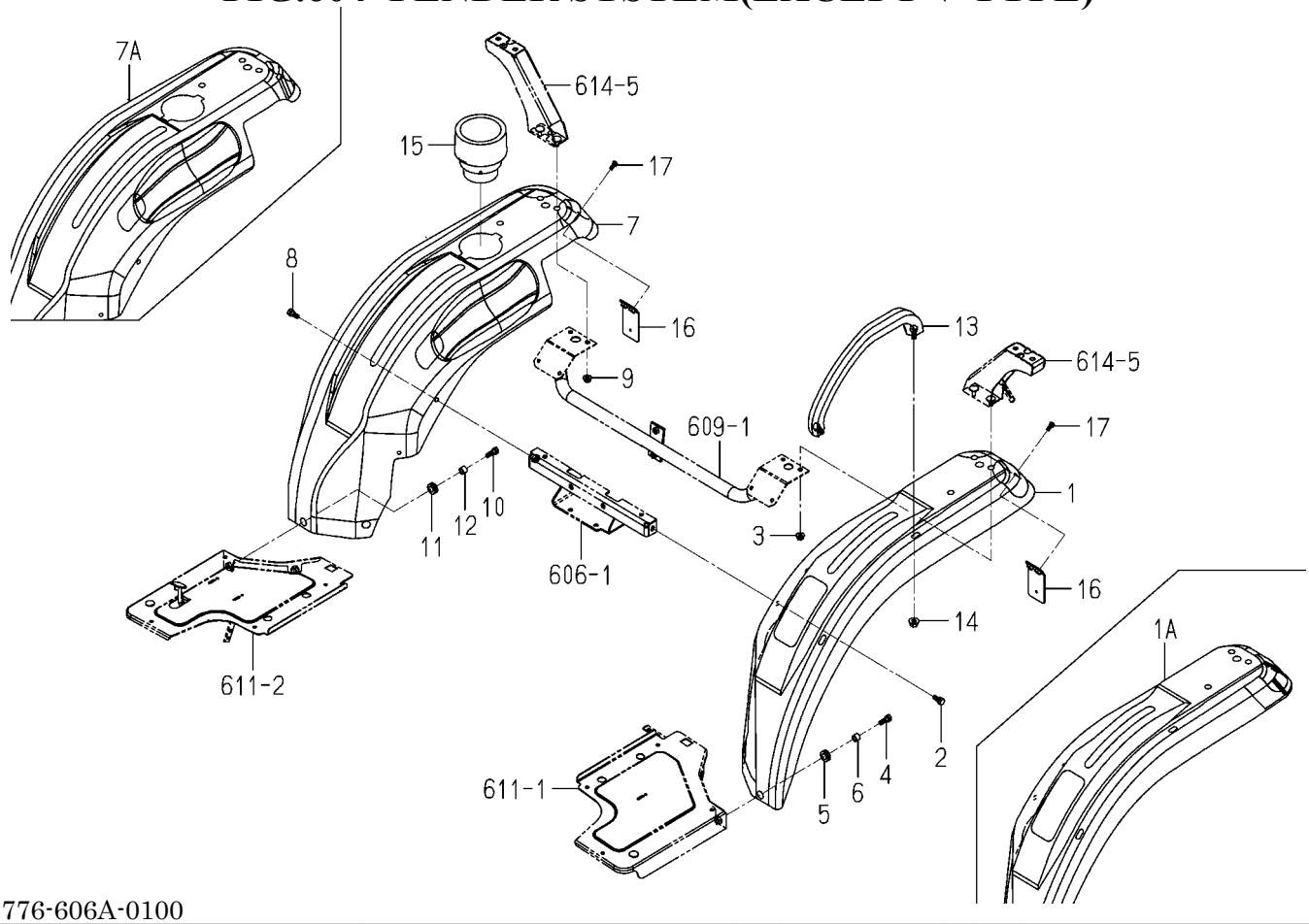

1776-606A-0100

KEY	PART CODE	DESCRIPTION	SPC	TYPE OF MODEL TM3185 FU		ITC	COL	GRP	REMARKS
1	- - - - - -	BLANK	*						- - - - - -
1A	1776-606-005-20	FENDER/LH	*	1			4L		
2	V211-360-802-00	BOLT/SP	*	1					
3	V362-260-008-00	NUT/WASHER	*	2					
4	V211-360-802-50	BOLT/SP	*	2					
5	2139-505-002-00	GROMMET	*	2					
6	1421-507-017-00	COLLAR/9X14X8	*	2					
7	- - - - - -	BLANK	*						- - - - - -
7A	- - - - - -	BLANK	*						- - - - - -
7A	1776-606-006-30	FENDER/RH	*	1			4L		
8	V211-360-802-00	BOLT/SP	*	1					
9	V362-260-008-00	NUT/WASHER	*	2					
10	V211-360-802-50	BOLT/SP	*	2					
11	2139-505-002-00	GROMMET	*	2					
12	1421-507-017-00	COLLAR/9X14X8	*	2					
13	1765-608-001-10	GRIP/ASSIST/B	*	1					
14	V363-260-010-00	NUT/M10	*	2					
15	1742-606-001-10	TRAY/BOTTLE	*	1					
16	1776-606-230-00	BRACKET/REFLECTOR	*	2					
17	V120-376-001-60	SCREW/SP	*	4					

FIG.605 FENDER SYSTEM(V TYPE)

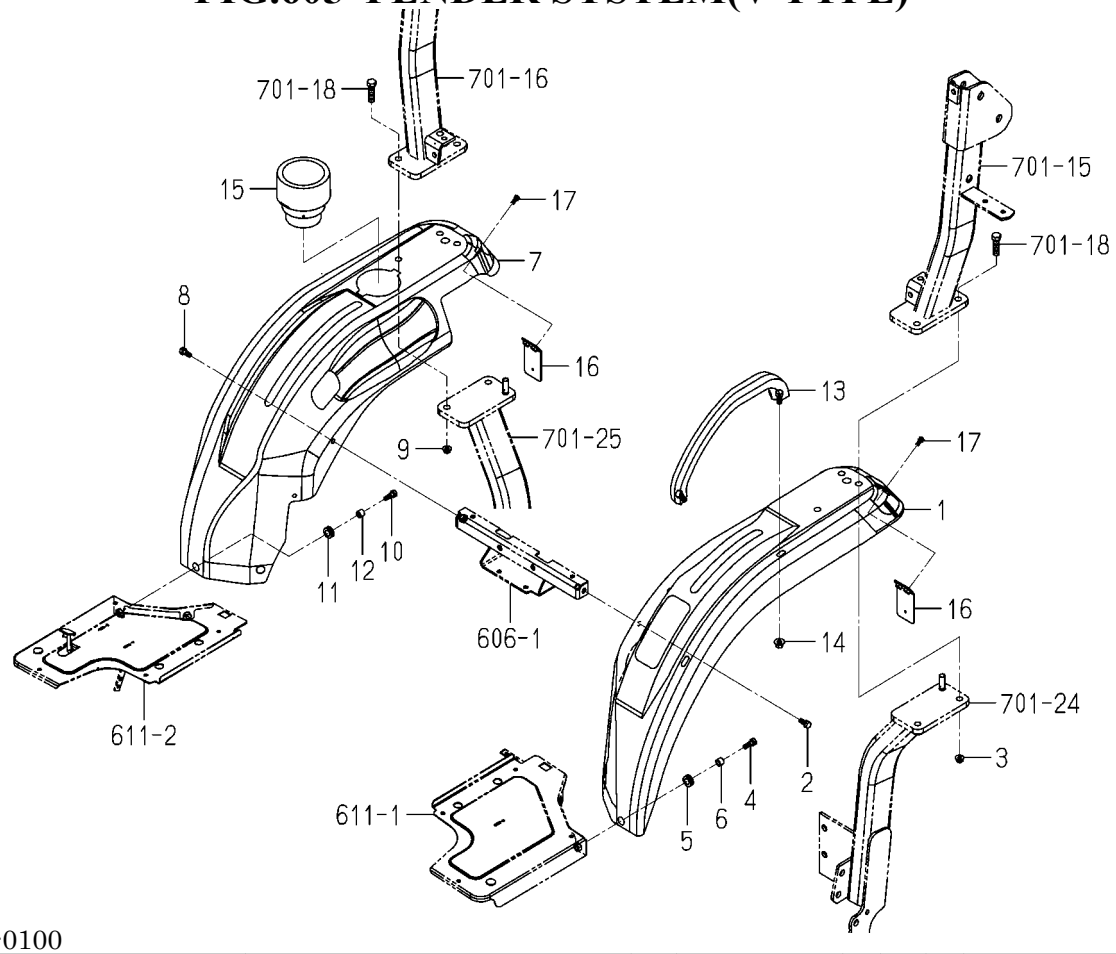

1776-606B-0100

KEY	PART CODE	DESCRIPTION	SPC	TYPE OF MODEL TM3185 FU		ITC	COL	GRP	REMARKS
1	1776-606-005-20	FENDER/LH	*	1			4L		
2	V211-360-802-00	BOLT/SP	*	1					
3	V362-260-008-00	NUT/WASHER	*	2					
4	V211-360-802-50	BOLT/SP	*	2					
5	2139-505-002-00	GROMMET	*	2					
6	1421-507-017-00	COLLAR/9X14X8	*	2					
7	1776-606-007-10	FENDER/RH/V	*	1			4L		
8	V211-360-802-00	BOLT/SP	*	1					
9	V362-260-008-00	NUT/WASHER	*	2					
10	V211-360-802-50	BOLT/SP	*	2					
11	2139-505-002-00	GROMMET	*	2					
12	1421-507-017-00	COLLAR/9X14X8	*	2					
13	1765-608-001-10	GRIP/ASSIST/B	*	1					
14	V363-260-010-00	NUT/M10	*	2					
15	1742-606-001-10	TRAY/BOTTLE	*	1					
16	1776-606-230-00	BRACKET/REFLECTOR	*	2					
17	V120-376-001-60	SCREW/SP	*	4					

FIG.606 BRACKET(SEAT)SYSTEM

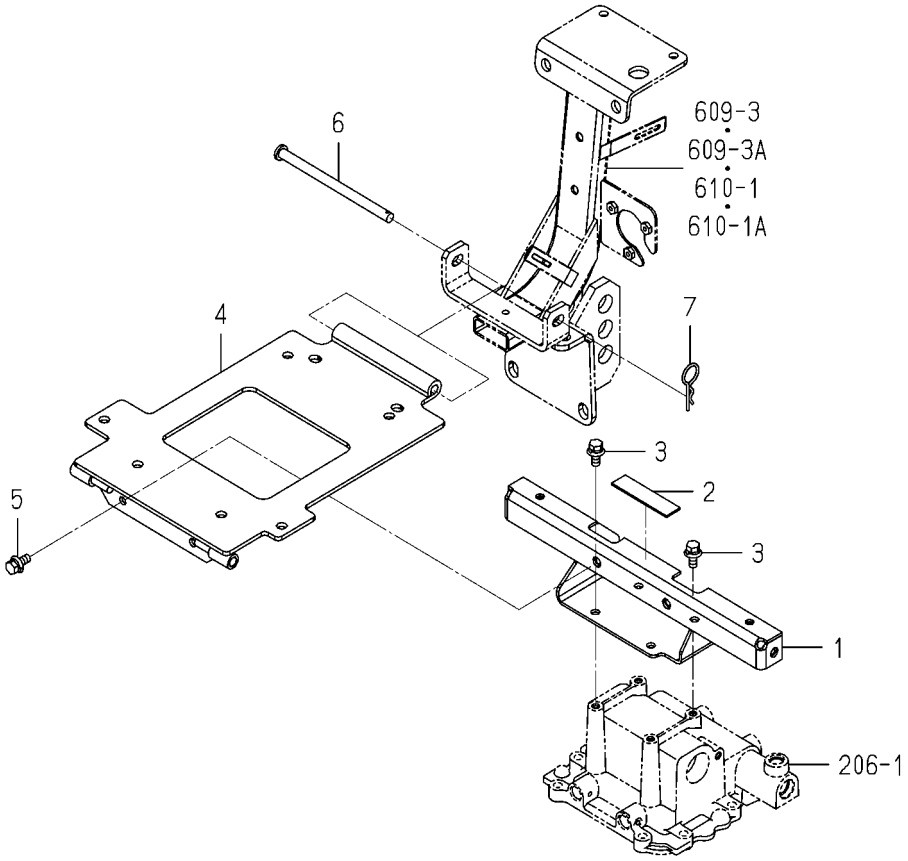

1776-611A-0100

KEY	PART CODE	DESCRIPTION	SPC	TYPE OF MODEL TM3185 FU		ITC	COL	GRP	REMARKS
1	1776-611-280-10	BRACKET/SEAT/F COMP	*	1					
2	1776-611-005-00	INSULATOR	*	1					
3	V211-360-802-00	BOLT/SP	*	4					
4	1776-611-270-10	BRACKET/SEAT COMP	*	1					
5	V211-360-802-00	BOLT/SP	*	2					
6	3801-493-003-00	PIN/10X154	*	1					
7	7957-501-004-00	PIN,HAIR	*	1					

FIG.607 SEAT SYSTEM(Z TYPE)

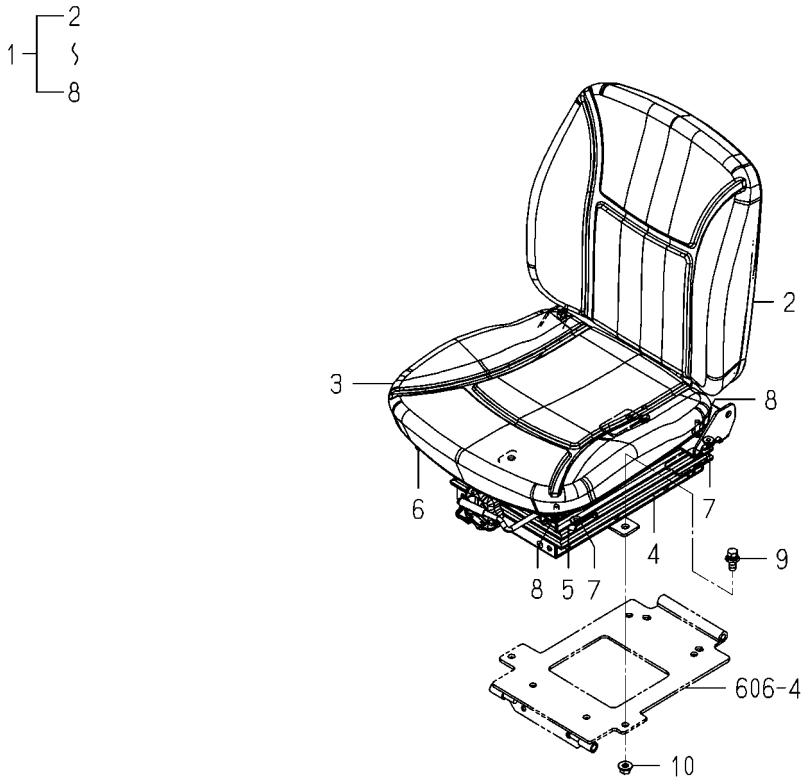

1776-612 -0100

KEY	PART CODE	DESCRIPTION	SPC	TYPE OF MODEL TM3185 FU		ITC	COL	GRP	REMARKS
1	- - - - - -	BLANK	*						- - - - - -
1	1776-612-210-20	SEAT/W10 SET	*	1					
2	- - - - - -	BLANK	*						- - - - - -
2	1776-612-211-10	SEAT/BACK ASSY	*	1					
3	1776-612-212-00	SEAT/CUSHION ASSY	*	1					
4	1776-612-213-00	SEAT/SUSPENSION ASSY	*	1					
5	1776-612-214-00	SEAT/SLIDE/LEVE ASSY	*	1					
6	1776-612-215-00	SEAT/SLIDE ASSY	*	1					
7	1776-612-216-00	NUT/FLANGE/M08	*	4					
8	1776-612-217-00	FLANGEBOLT	*	6					
9	V211-661-002-50	BOLT 7T(SP)	*	4					
10	V363-260-010-00	NUT/M10	*	4					

FIG.608 SEAT SYSTEM(ZR TYPE)

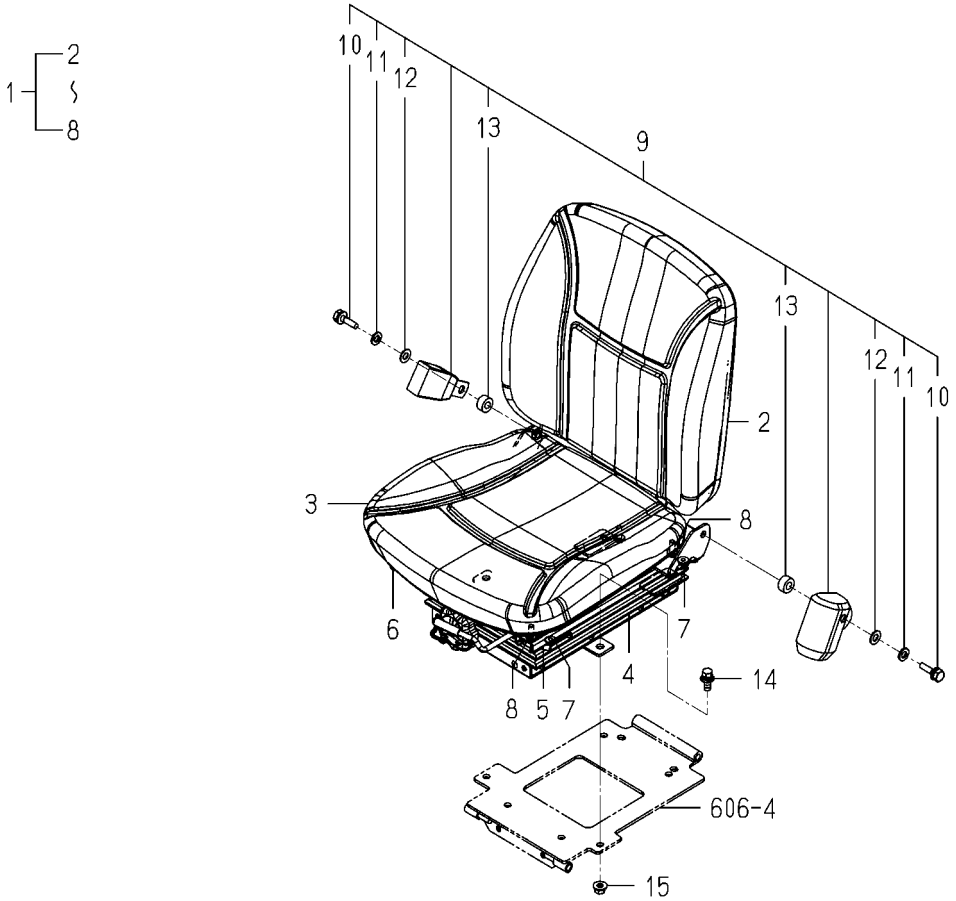

1776-612A-0100

KEY	PART CODE	DESCRIPTION	SPC	TYPE OF MODEL TM3185 FU		ITC	COL	GRP	REMARKS
1	- - - - - -	BLANK	*						- - - - - -
1	1776-612-210-20	SEAT/W10 SET	*	1					
2	- - - - - -	BLANK	*						- - - - - -
2	1776-612-211-10	SEAT/BACK ASSY	*	1					
3	1776-612-212-00	SEAT/CUSHION ASSY	*	1					
4	1776-612-213-00	SEAT/SUSPENSION ASSY	*	1					
5	1776-612-214-00	SEAT/SLIDE/LEVE ASSY	*	1					
6	1776-612-215-00	SEAT/SLIDE ASSY	*	1					
7	1776-612-216-00	NUT/FLANGE/M08	*	4					
8	1776-612-217-00	FLANGEBOLT	*	6					
9	1776-612-250-00	BELT/SEAT SET	*	1					
10	1776-612-252-00	BOLT/M10X1.25X20	*	2					
11	1776-612-253-00	WASHER/SPRING/10	*	2					
12	1776-612-254-00	WASHER/11X22X02	*	2					
13	1776-612-255-00	COLLAR/12X24X12	*	2					
14	V211-661-002-50	BOLT 7T(SP)	*	4					
15	V363-260-010-00	NUT/M10	*	4					

FIG.609 FRAME(REAR)SYSTEM(EXCEPT R TYPE)

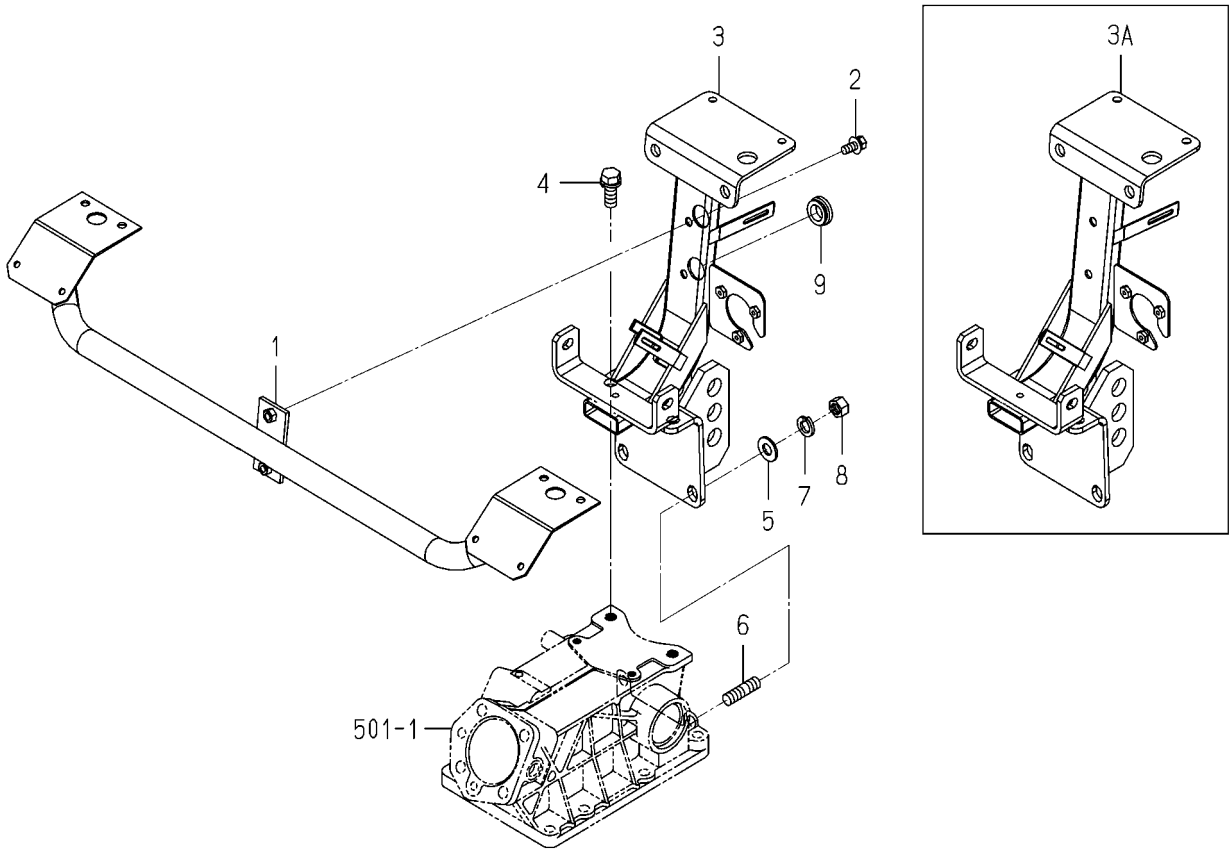

1776-626A-0100

KEY	PART CODE	DESCRIPTION	SPC	TYPE OF MODEL TM3185 FU		ITC	COL	GRP	REMARKS
1	- - - - - -	BLANK	*						- - - - - -
1	1776-626-200-10	FRAME/REAR/UPPE COMP	*	1			7F		
2	V211-360-802-00	BOLT/SP	*	2					
3	- - - - - -	BLANK	*						- - - - - -
3A	1776-626-210-10	FRAME/REAR/UNDE COMP	*	1					
4	1725-201-002-00	BOLT/S	*	2					
5	V411-260-012-00	WASHER /M12	*	2					
6	V252-341-202-50	BOLT/STUD	*	2					
7	V401-160-012-00	WASHER,SP/M12	*	2					
8	V304-460-012-00	NUT/M12	*	2					
9	1771-603-001-00	CAP/22	*	2					

FIG.610 FRAME(REAR/UNDER)SYSTEM(R TYPE)

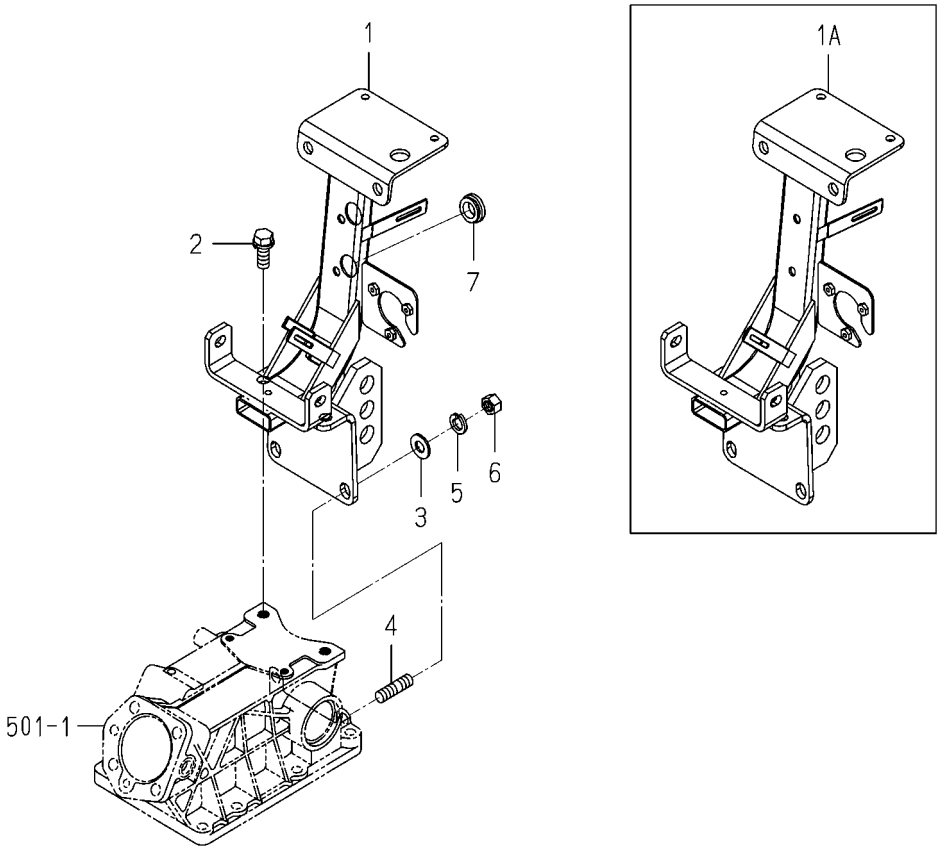

1776-626B-0100

KEY	PART CODE	DESCRIPTION	SPC	TYPE OF MODEL TM3185 FU		ITC	COL	GRP	REMARKS
1	- - - - - -	BLANK	*						- - - - - -
1A	1776-626-210-10	FRAME/REAR/UNDE COMP	*	1					
2	1725-201-002-00	BOLT/S	*	2					
3	V411-260-012-00	WASHER /M12	*	2					
4	V252-341-202-50	BOLT/STUD	*	2					
5	V401-160-012-00	WASHER,SP/M12	*	2					
6	V304-460-012-00	NUT/M12	*	2					
7	1771-603-001-00	CAP/22	*	2					

FIG.611 STEP SYSTEM

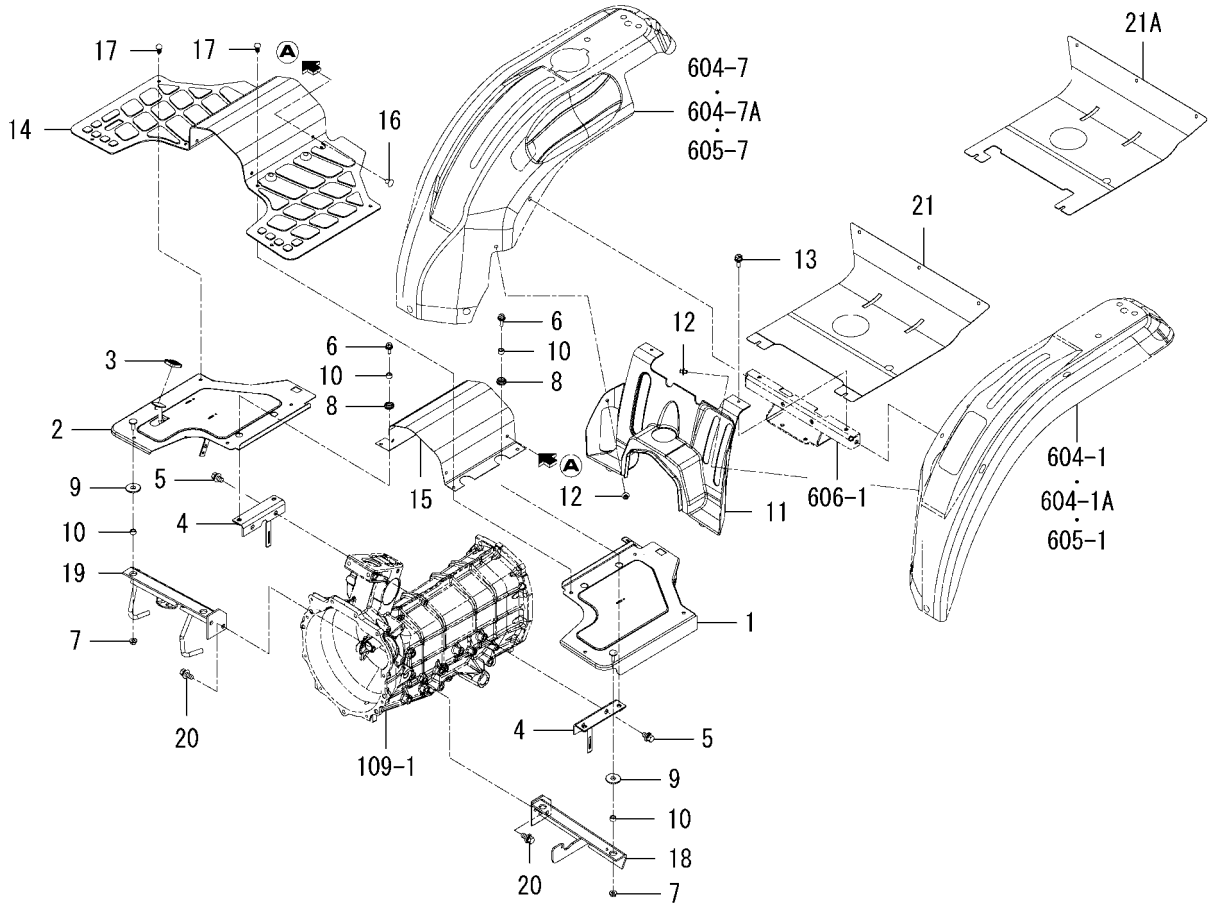

1776-630A-0100

KEY	PART CODE	DESCRIPTION	SPC	TYPE OF MODEL TM3185 FU		ITC	COL	GRP	REMARKS
1	1776-630-270-10	STEP/LH COMP	*	1			4L		
2	1776-630-280-10	STEP/RH COMP	*	1			4L		
3	1776-630-008-00	PAD	*	1					
4	1776-630-310-00	STAY COMP	*	2					
5	V211-361-002-00	BOLT,SEMS	*	4					
6	V211-360-802-50	BOLT/SP	*	4					
7	- - - - - -	BLANK	*						- - - - - -
7	V363-260-008-00	NUT/WASHER	*	2					
8	2139-505-002-00	GROMMET	*	4					
9	1581-740-113-00	GROMMET	*	2					
10	1421-507-017-00	COLLAR/9X14X8	*	6					
11	- - - - - -	BLANK	*						- - - - - -
11	1776-630-005-10	COVER/SEAT	*	1					
12	1650-705-006-00	RIVET	*	2					
13	- - - - - -	BLANK	*						- - - - - -
13	1690-705-008-00	BOLT/M06X16	*	2					
14	1776-630-003-00	MAT/FLOOR	*	1					
15	1776-630-006-00	COVER/CENTER	*	1			7F		
16	1527-604-002-00	CLIP(B)	*	4					
17	1773-631-034-00	RIVET	*	8					
18	- - - - - -	BLANK	*						- - - - - -
18	- - - - - -	BLANK	*						- - - - - -
18	1776-630-290-20	BRACKET/STEP/LH COMP	*	1					
19	- - - - - -	BLANK	*						- - - - - -
19	1776-630-300-10	BRACKET/STEP/RH COMP	*	1					
20	V211-361-002-50	BOLT/SP	*	4					
21	- - - - - -	BLANK	*						- - - - - -
21A	1776-630-007-20	COVER/SEAT	*	1					

FIG.612 PLATE(REGISTRATION)SYSTEM(R TYPE)

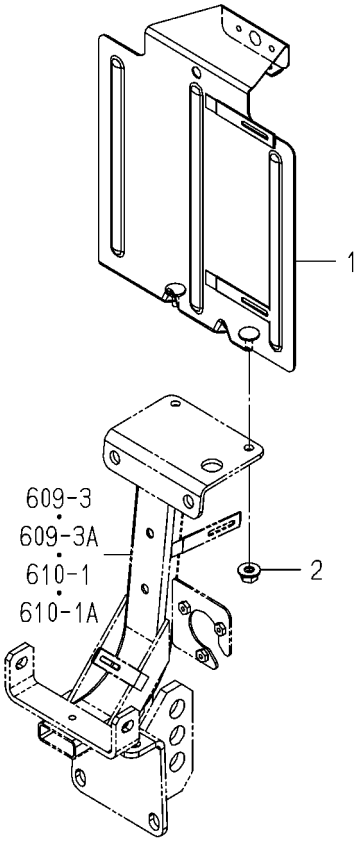

1776-635A-0100

KEY	PART CODE	DESCRIPTION	SPC	TYPE OF MODEL TM3185 FU		ITC	COL	GRP	REMARKS
1	1776-635-200-00	PLATE/REGISTRATION	*	1					
2	V362-260-008-00	NUT/WASHER	*	2					

FIG.613 LAMP(HEAD)SYSTEM

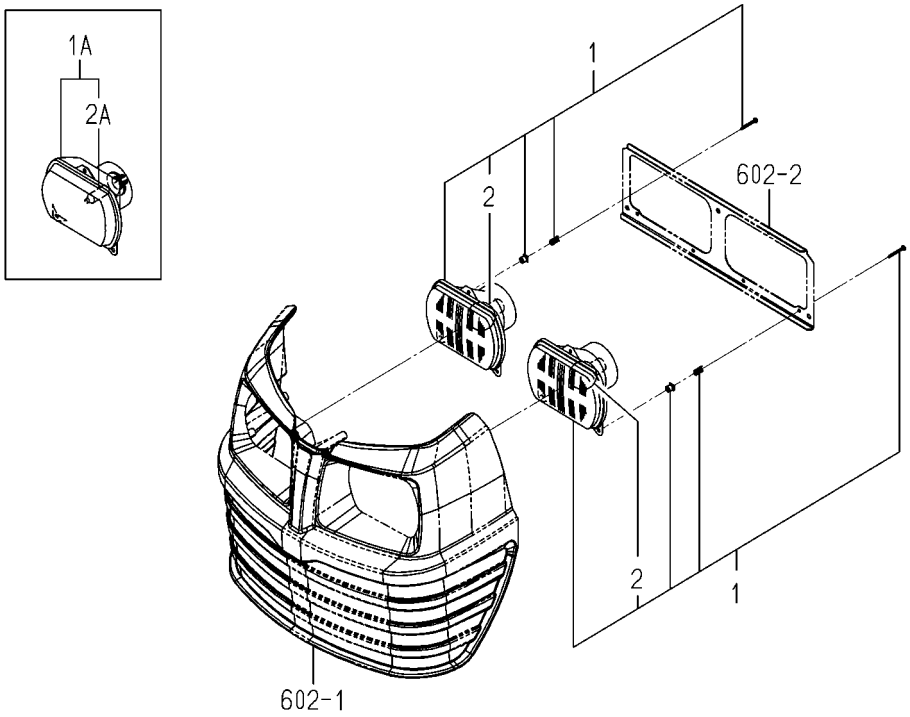

1682-650 -0100

KEY	PART CODE	DESCRIPTION	SPC	TYPE OF MODEL TM3185 FU		ITC	COL	GRP	REMARKS
1	- - - - - -	BLANK	*						- - - - - -
1	- - - - - -	BLANK	*						- - - - - -
1A	1674-652-200-20	LAMP/HEAD ASSY	*	2					
2	- - - - - -	BLANK	*						- - - - - -
2A	1674-652-202-10	BULB/12V/45/40W	*	2					

FIG.614 LAMP(REAR)SYSTEM(EXCEPT R TYPE)

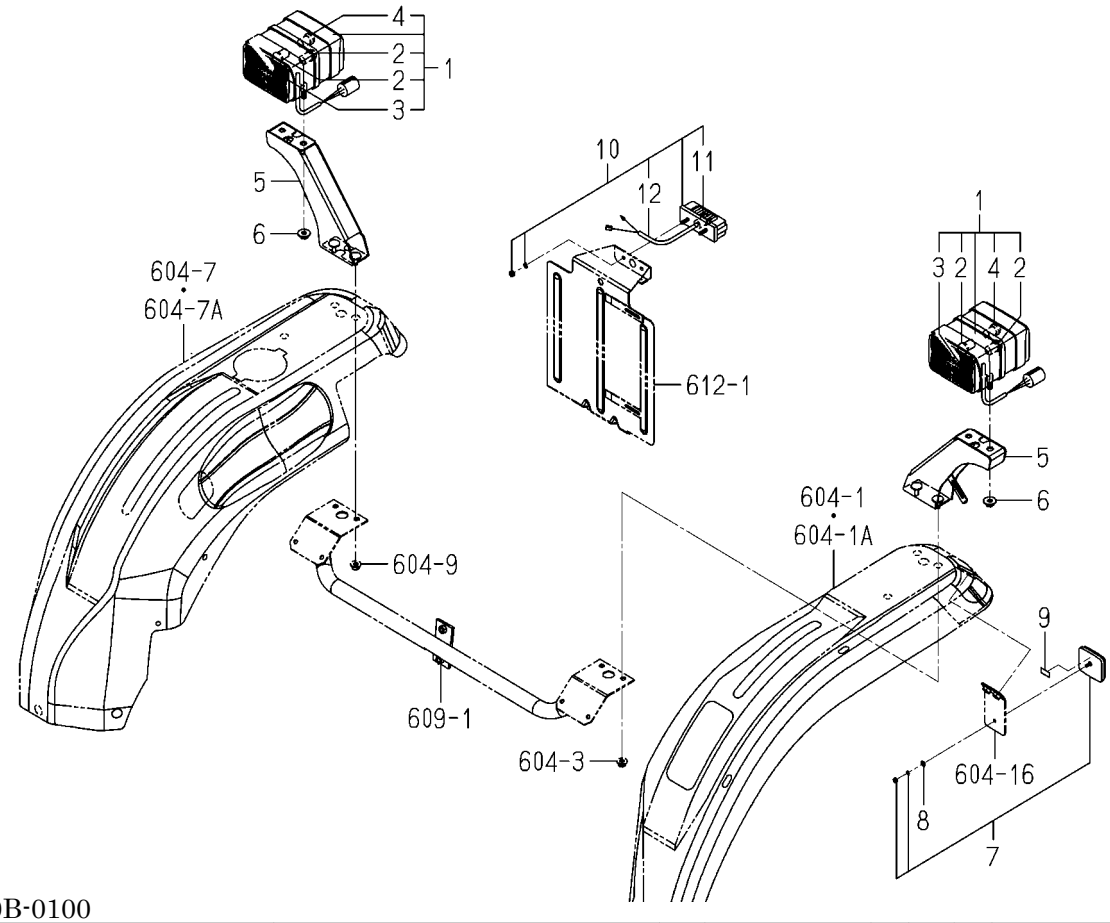

1776-660B-0100

KEY	PART CODE	DESCRIPTION	SPC	TYPE OF MODEL TM3185 FU		ITC	COL	GRP	REMARKS
1	1739-660-210-30	LAMP/COMBINATIO ASSY	*	2					
2	1674-654-211-00	BULB/12V21W	*	4					
3	1674-654-212-00	BULB/12V5W	*	2					
4	1739-660-212-00	BLUB/12V-21/5W	*	2					
5	1776-660-230-10	BRACKET/LAMP COMP	*	2					
6	V362-260-008-00	NUT/WASHER	*	4					
7	1674-654-400-10	REFLECTOR ASSY	*	2					
8	V411-260-004-00	WASHER,PL/M 4	*	2					
9	1674-654-004-00	TAPE/10X20	*	2					
10	1674-654-270-00	LAMP/NUMBERPLAT SET	*	1					
11	1674-654-271-00	BULB/12V/5W	*	1					
12	1674-654-272-00	HARNESS/LAMP	*	1					

FIG.615 LAMP(REAR)SYSTEM(R TYPE)

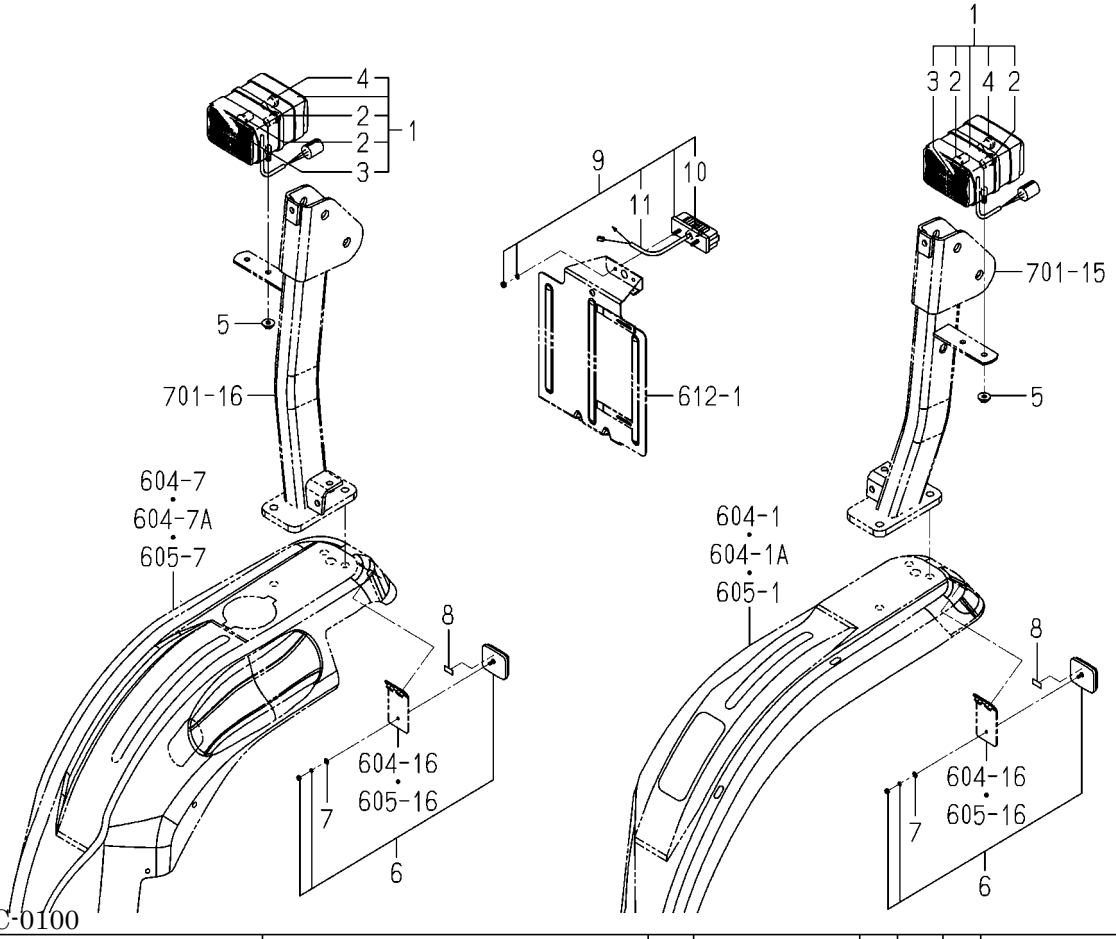

1776-660C-0100

KEY	PART CODE	DESCRIPTION	SPC	TYPE OF MODEL TM3185 FU		ITC	COL	GRP	REMARKS
1	1739-660-210-30	LAMP/COMBINATIO ASSY	*	2					
2	1674-654-211-00	BULB/12V21W	*	4					
3	1674-654-212-00	BULB/12V5W	*	2					
4	1739-660-212-00	BLUB/12V-21/5W	*	2					
5	V362-260-008-00	NUT/WASHER	*	4					
6	1674-654-400-10	REFLECTOR ASSY	*	2					
7	V411-260-004-00	WASHER,PL/M 4	*	2					
8	1674-654-004-00	TAPE/10X20	*	2					
9	1674-654-270-00	LAMP/NUMBERPLAT SET	*	1					
10	1674-654-271-00	BULB/12V/5W	*	1					
11	1674-654-272-00	HARNESS/LAMP	*	1					

FIG.616 PANEL(INSTRUMENT)SYSTEM

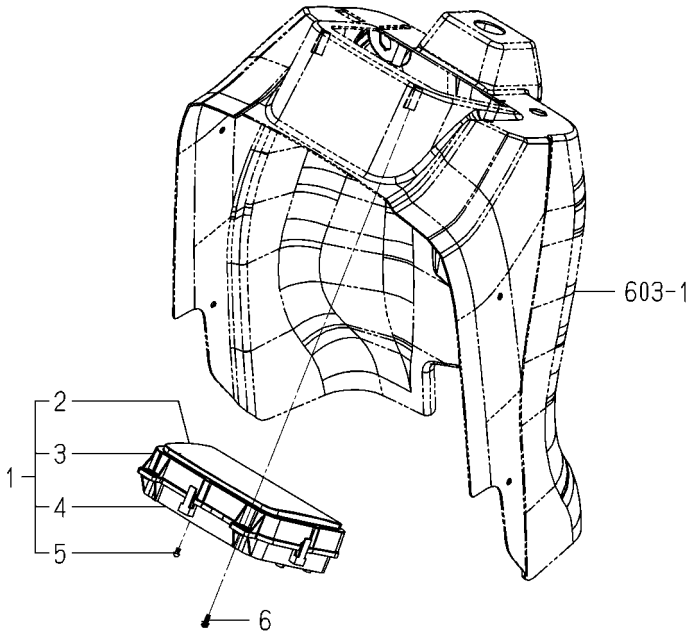

1776-670A-0100

KEY	PART CODE	DESCRIPTION	SPC	TYPE OF MODEL TM3185 FU		ITC	COL	GRP	REMARKS
1	1776-670-310-00	PANEL/INSTRUMEN ASSY	*	1					
2	1739-670-712-00	GLASS	*	1					
3	1739-670-713-00	MICAHESSIE	*	1					
4	1739-670-714-00	COVER	*	1					
5	1739-670-715-00	SCREW	*	6					
6	V120-366-002-00	SCREW,SEMS	*	4					

FIG.617 HORN,SWITCH&RELAY SYSTEM

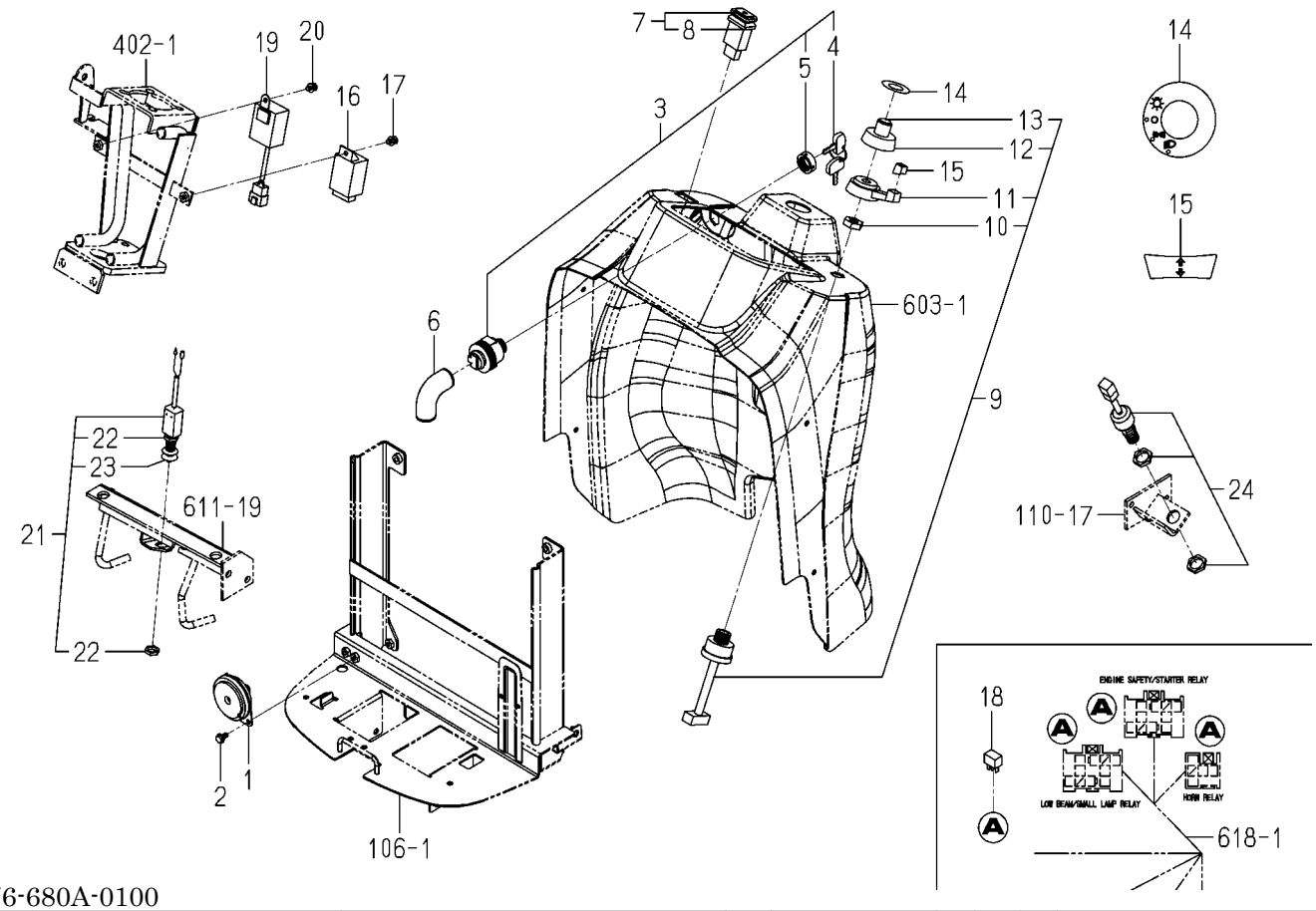

1776-680A-0100

KEY	PART CODE	DESCRIPTION	SPC	TYPE OF MODEL TM3185 FU		ITC	COL	GRP	REMARKS
1	1740-680-530-20	HORN ASSY	*	1					
2	V230-360-601-20	FLANGEBOLT	*	2					
3	1716-680-200-20	SWITCH/MAIN ASSY	*	1					
4	2186-536-211-00	KEY	*	2					
5	2186-536-212-00	NUT/RING	*	1					
6	1716-680-006-00	COVER/SWITCH	*	1					
7	1740-680-550-00	SWITCH/HAZARD ASSY	*	1					
8	1740-680-551-00	BULB/LAMP/14V60MA	*	1					
9	1544-623-001-00	SWITCH ASSY	*	1					
10	1544-623-232-00	NUT/M22	*	1					
11	1544-623-233-00	LEVER	*	1					
12	1544-623-234-00	KNOB	*	1					
13	1544-623-235-00	BOOT/HORN	*	1					
14	1776-680-001-00	LABEL/SWITCH/COMBINA	*	1					
15	1776-680-002-00	LABEL/COMBINATION	*	1					
16	1739-681-220-10	RELAY/FLASHER/EEC	*	1					
17	V210-360-601-20	BOLT,SEMS	*	1					
18	1800-652-400-00	RELAY/5P ASSY	*	5					
19	1773-652-220-00	RELAY/CONTROL/ENGINE	*	1					
20	V210-360-601-20	BOLT,SEMS	*	1					
21	1772-654-280-10	SWITCH/PUSH ASSY	*	1					
22	1772-654-281-00	NUT	*	2					
23	1772-654-282-00	BOOT	*	1					
24	1789-680-240-00	SWITCH/PUSH ASSY	*	1					

FIG.618 HARNESS SYSTEM

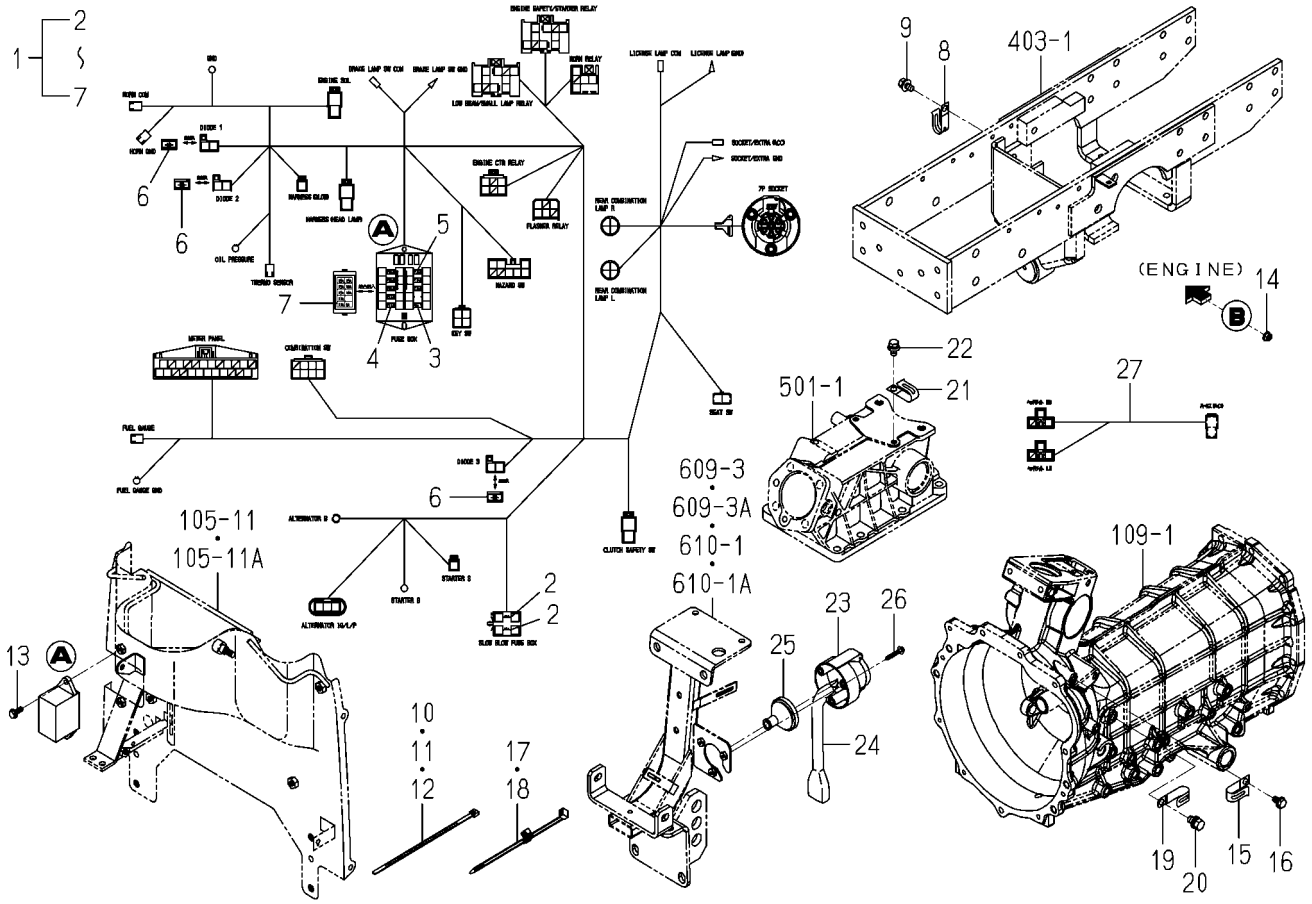

1776-690A-0100

KEY	PART CODE	DESCRIPTION	SPC	TYPE OF MODEL TM3185 FU		ITC	COL	GRP	REMARKS
1	- - - - - -	BLANK	*						- - - - - -
1	1776-690-310-20	HARNESS/MAIN ASSY	*	1					
2	1650-650-222-00	FUSE/SLOWBLOW	*	2					
3	3824-247-202-00	FUSE/BLADE/32V05A	*	1					
4	3821-262-202-00	FUSE/BLADE/32V10A	*	4					
5	3821-262-203-00	FUSE(BLADE/32V15A)	*	4					
6	1773-652-212-00	DIODE/3A	*	3					
7	1776-690-312-00	LABEL/FUSE	*	1					
8	1425-621-004-00	HOLDER/JE/9-9	*	1					
9	V211-360-801-60	BOLT,SEMS (SP)	*	1					
10	1342-402-006-00	BAND/WIRE/250	*	1					
11	1376-402-003-00	BAND,WIRE/140	*	1					
12	1376-402-003-00	BAND,WIRE/140	*	1					
13	V230-360-601-60	FLANGEBOLT	*	2					
14	2500-326-017-00	NUT/FLANGE/M6	*	1					
15	1425-621-004-00	HOLDER/JE/9-9	*	1					
16	V231-360-801-20	FLANGEBOLT	*	1					
17	1560-666-004-00	BAND	*	1					
18	1560-666-004-00	BAND	*	1					
19	3737-172-011-00	CLAMP,HARNESS	*	1					
20	V211-261-001-60	BOLT(S) M10X16	*	1					
21	1425-621-004-00	HOLDER/JE/9-9	*	1					
22	- - - - - -	BLANK	*						- - - - - -
22	V211-360-801-60	BOLT,SEMS (SP)	*	1					
23	1600-624-201-00	PLUG/7P	*	1					8JB0-019-430-01
24	1682-690-380-00	HARNESS/SOCKET ASSY	*	1					
25	1650-654-036-00	GROMMET/10X40X03	*	1					
26	V120-265-003-00	BOLT/M5X30	*	3					
27	1776-690-320-00	HARNESS/HEADLAM ASSY	*	1					

FIG.619 HARNESS(SEAT)SYSTEM(EXCEPT Z TYPE)

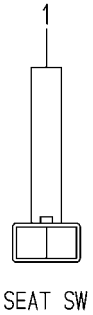

1776-690B-0100

KEY	PART CODE	DESCRIPTION	SPC	TYPE OF MODEL TM3185 FU		ITC	COL	GRP	REMARKS
1	1776-690-330-00	HARNESS/LOOP/CIRCUIT	*	1					

FIG.701 ROPS SYSTEM(R TYPE)

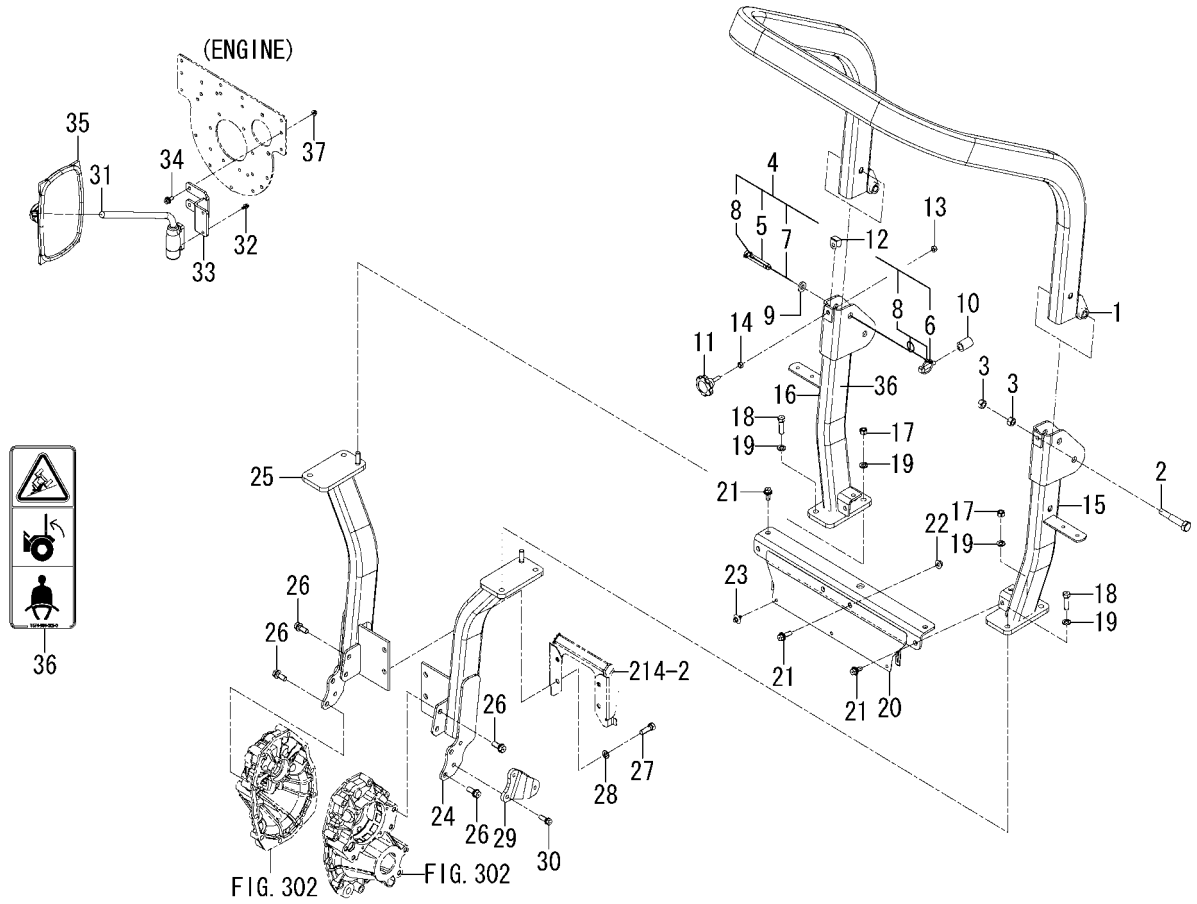

1776-702B-0100

KEY	PART CODE	DESCRIPTION	SPC	TYPE OF MODEL TM3185 FU		ITC	COL	GRP	REMARKS
1	1776-702-250-10	FRAME/UPPER	*	1			7F		
2	1757-625-005-00	BOLT/M16X90	*	2					
3	1773-702-001-00	NUT/M16	*	4					
4	1773-702-260-10	PIN ASSY	*	2					
5	1636-701-251-00	PIN/19X94	*	2					
6	1673-525-002-30	LINKPIN	*	2					
7	1614-702-551-20	BAND	*	2					
8	1614-702-552-00	RING	*	6					
9	1773-702-002-00	INSULATOR	*	2					
10	1785-702-005-00	TUBE/020	*	2					
11	1773-702-012-00	NOB/LOCK	*	2					
12	1773-702-011-00	PLATE	*	2					
13	1725-611-087-00	U-NUT/M10X1.5	*	2					
14	V304-260-010-00	NUT	*	2					
15	1776-702-270-10	FRAME/REAR/LH COMP	*	1			7F		
16	1776-702-240-10	FRAME/REAR/RH COMP	*	1			7F		
17	V304-460-012-00	NUT/M12	*	2					
18	V201-361-204-00	BOLT/M12X40	*	4					
19	V401-160-012-00	WASHER,SP/M12	*	6					
20	1776-702-260-10	FRAME/CENTER COMP	*	1			7F		
21	V211-661-002-50	BOLT 7T(SP)	*	6					
22	V363-260-010-00	NUT/M10	*	2					
23	1726-630-013-00	RIVET	*	3					
24	1776-702-220-00	FRAME/REAR/LH COMP	*	1					
25	1776-702-230-00	FRAME/REAR/RH COMP	*	1					
26	1725-201-002-00	BOLT/S	*	8					
27	V201-361-203-50	BOLT/M12X35	*	4					
28	V401-160-012-00	WASHER,SP/M12	*	4					
29	1776-702-003-00	PLATE	*	1					
30	V211-561-003-00	BOLT/M10X30	*	2					

FIG.701 ROPS SYSTEM(R TYPE)

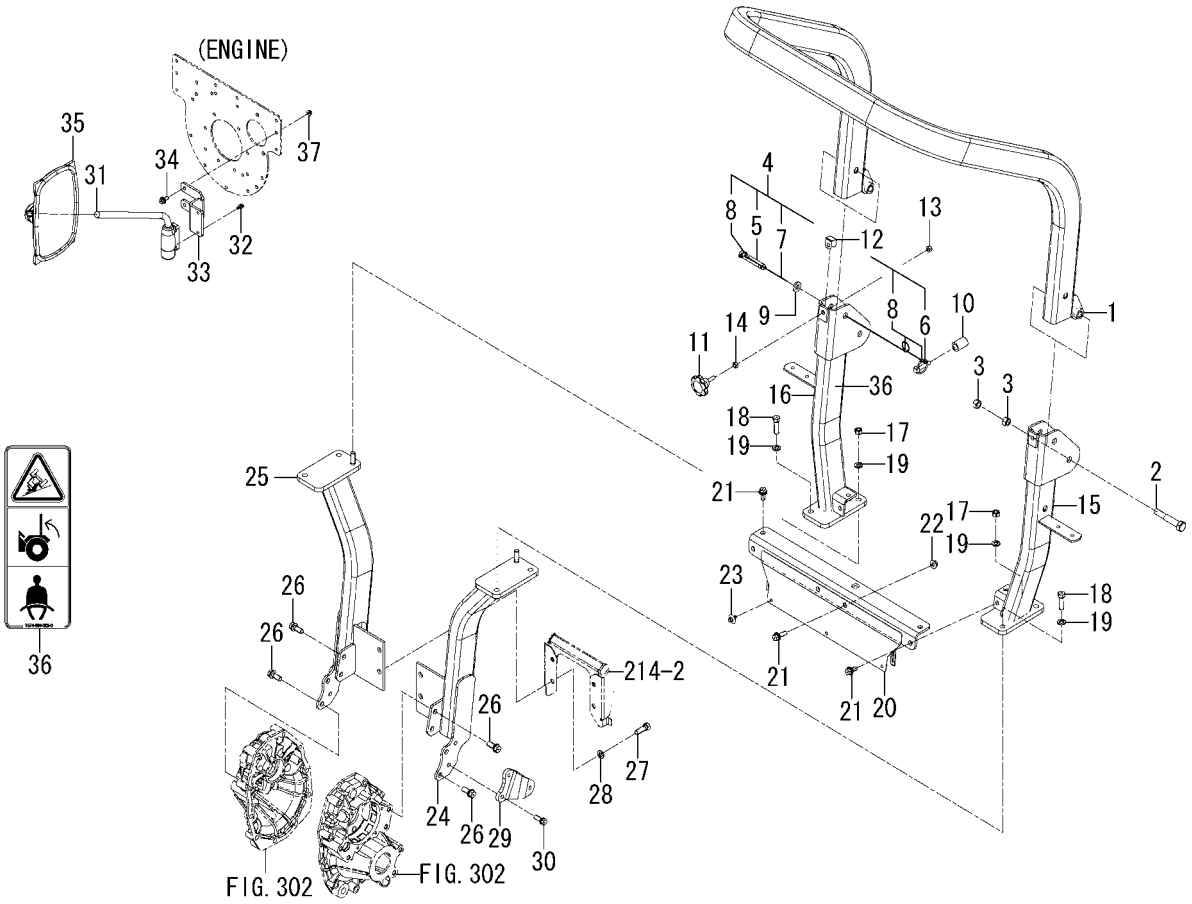

1776-702B-0100

KEY	PART CODE	DESCRIPTION	SPC	TYPE OF MODEL TM3185 FU		ITC	COL	GRP	REMARKS
31	1674-619-310-00	ARM/MIRROR ASSY	*	1					
32	V210-360-601-60	BOLT(SP)/M6X16	*	2					
33	1776-702-002-10	BRACKET/MIRROR	*	1					
34	V211-360-802-50	BOLT/SP	*	2					
35	1674-619-300-10	MIRROR ASSY	*	1					
36	1674-904-005-00	LABEL/ROPS	*	1					
37	V362-260-008-00	NUT/WASHER	*	1					

FIG.901 ORNAMENT&LABEL(ENGINE)

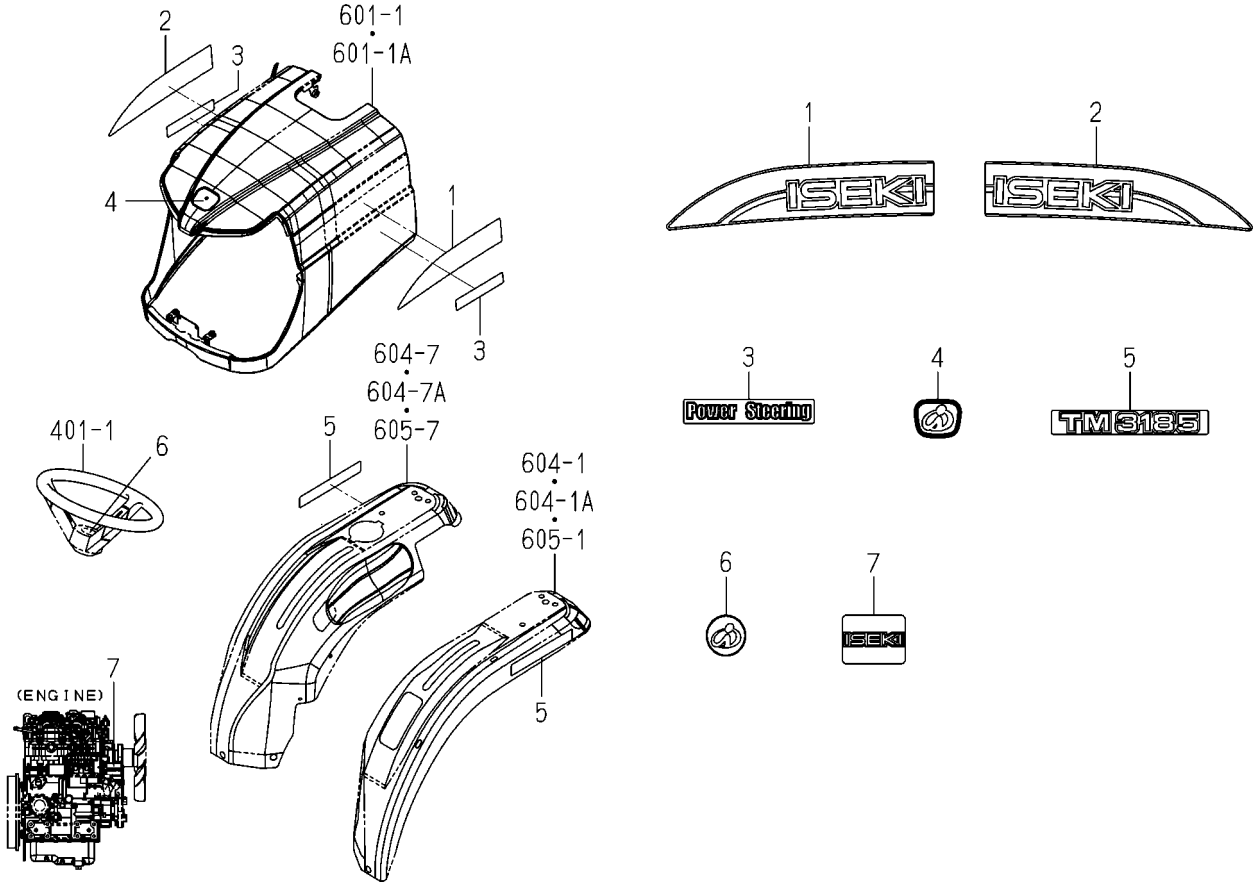

1776-901B-0100

KEY	PART CODE	DESCRIPTION	SPC	TYPE OF MODEL TM3185 FU		ITC	COL	GRP	REMARKS
1	1776-901-001-00	ORNAMENT/ISEKI/LH	*	1					
2	1776-901-002-00	ORNAMENT/ISEKI/RH	*	1					
3	1776-901-005-00	ORNAMENT/POWER STEER	*	2					
4	3533-901-012-00	ORNAMENT/ISEKI	*	1					
5	1776-901-003-00	ORNAMENT/3185	*	2					
6	1696-901-006-00	ORNAMENT/STEERING	*	1					
7	1776-901-004-00	LABEL/ISEKI/ENGINE	*	1					

FIG.902 LABEL(CONTROL)

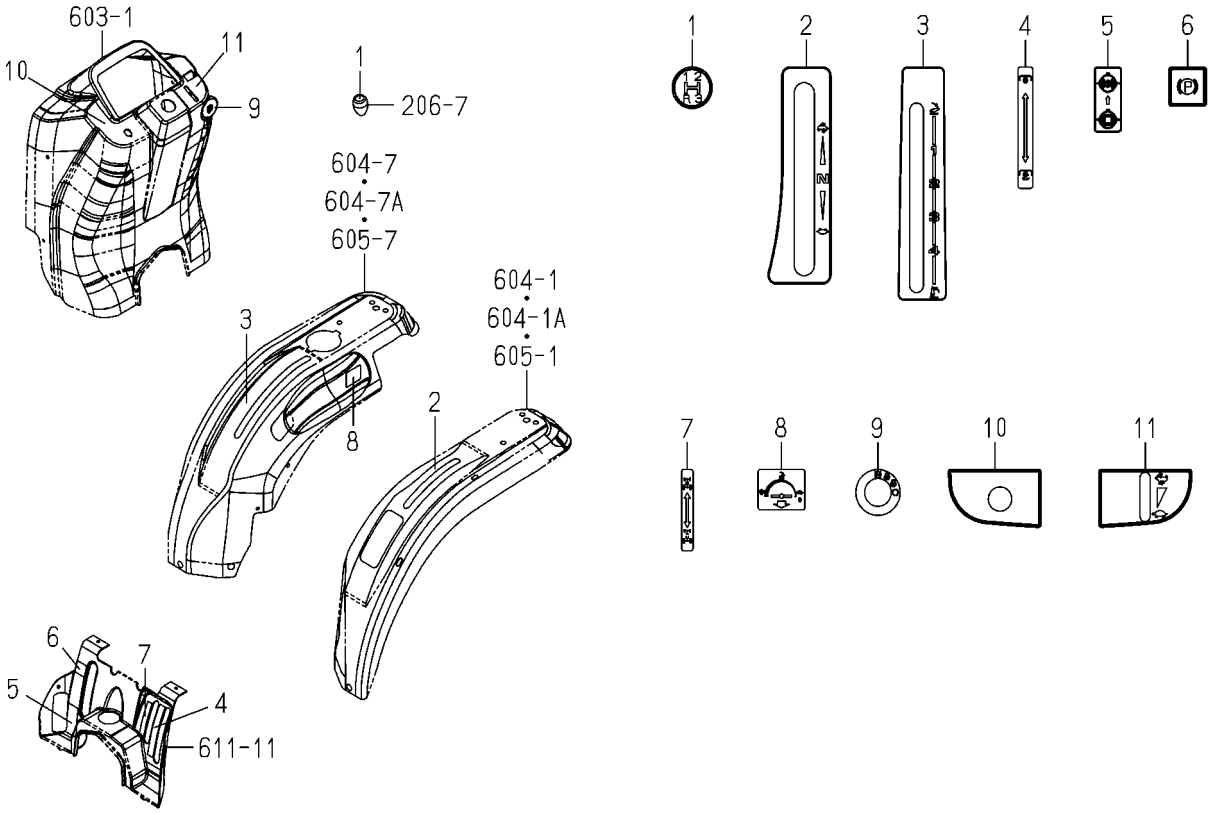

1776-902A-0100

KEY	PART CODE	DESCRIPTION	SPC	TYPE OF MODEL TM3185 FU		ITC	COL	GRP	REMARKS
1	1776-902-001-00	LABEL/CONTROL/MAIN	*	1					
2	1776-902-002-00	LABEL/CONTROL/SUB	*	1					
3	1776-902-003-00	LABEL/CONTROL/POSITI	*	1					
4	1776-902-004-00	LABEL/CONTROL/PTO	*	1					
5	1740-903-075-00	LABEL/DIFF	*	1					
6	1682-902-014-00	LABEL/CONTROL/PARKIN	*	1					
7	1776-902-005-00	LABEL/4WD	*	1					
8	1776-902-006-00	LABEL/CONTROL/SLOW R	*	1					
9	1776-902-007-00	LABEL/SWITCH/MAIN	*	1					
10	1776-902-008-00	LABEL/COLUMN/LH	*	1					
11	1776-902-009-00	LABEL/COLUMN/RH	*	1					

FIG.903 LABEL(CAUTION)

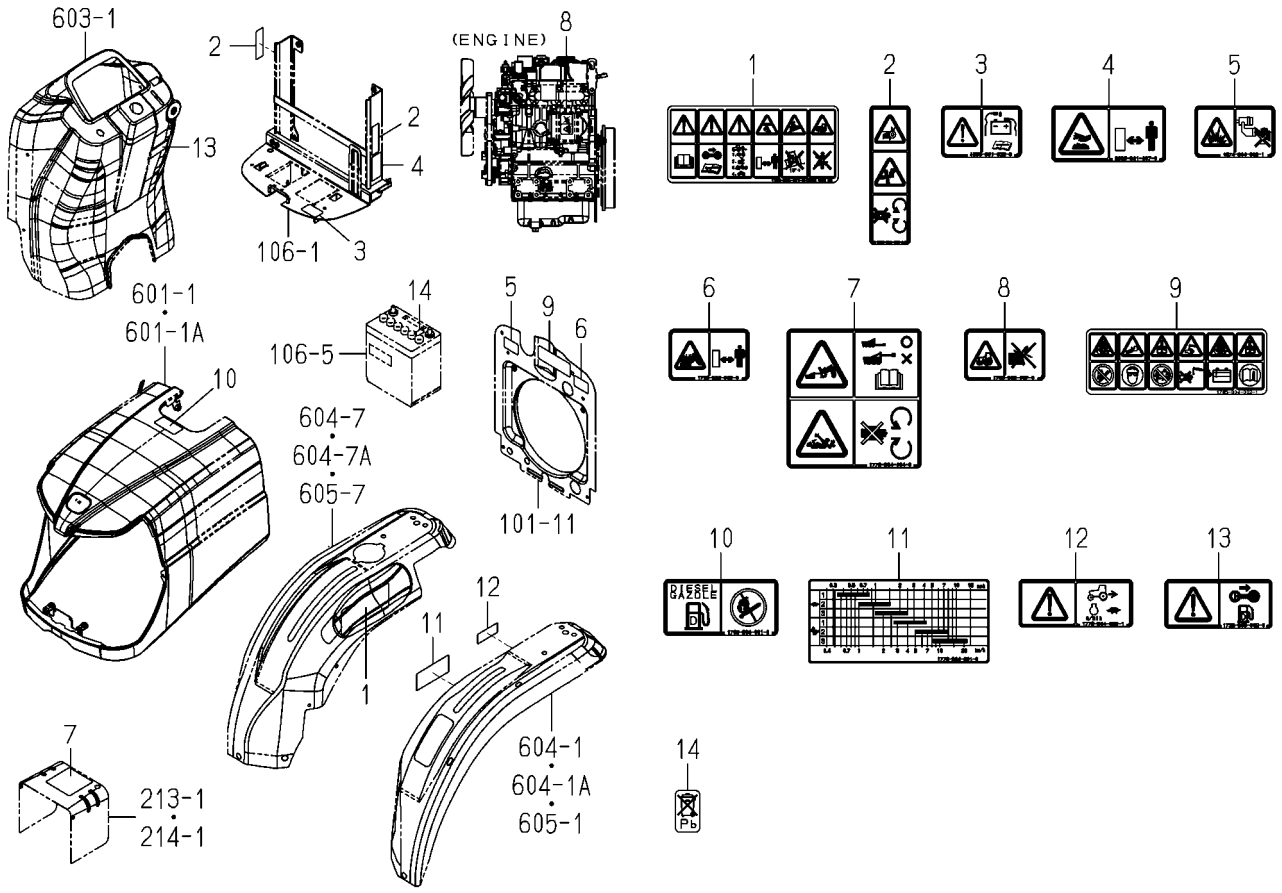

1776-904 -0100

KEY	PART CODE	DESCRIPTION	SPC	TYPE OF MODEL TM3185 FU		ITC	COL	GRP	REMARKS
1	1750-904-001-00	LABEL/DRIVE	*	1					
2	1776-904-002-00	LABEL/WARNING/FAN/BE	*	2					
3	1636-901-022-00	LABEL/CAUTION/BATTER	*	1					
4	8595-901-007-00	LABEL/WARNING/HOT	*	1					
5	1674-904-002-10	LABEL/ETHER	*	1					
6	1705-902-008-00	LABEL/W/RADIATOR	*	1					
7	1776-904-004-00	LABEL/PTO/TRAILER	*	1					
8	1705-902-007-00	LABEL/W/STARTER	*	1					
9	1705-904-002-10	LABEL/BATTERY	*	1					
10	1705-904-001-00	LABEL/FUEL	*	1					
11	1776-904-001-00	LABEL/SPEED	*	1					
12	1776-904-003-10	LABEL/SHIFT	*	1					
13	1728-903-002-00	LABEL/WARNING/FUEL	*	1					
14	1728-903-003-00	LABEL/BATTERY	*	1					

FIG.904 LABEL(CE)(D TYPE)

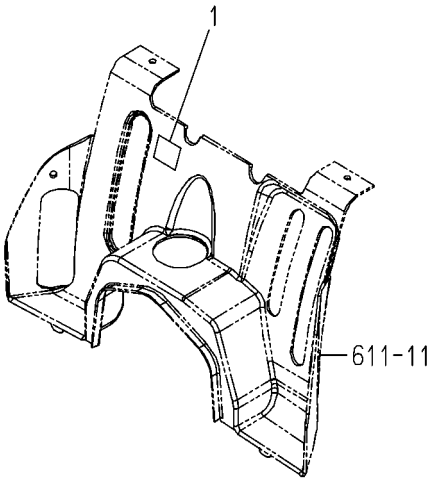

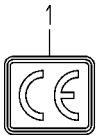

1709-905 -0100

KEY	PART CODE	DESCRIPTION	SPC	TYPE OF MODEL TM3185 FU		ITC	COL	GRP	REMARKS
1	2500-901-027-00	LABEL/CE	*	1					

FIG.905 PARTS(ENGINE)SYSTEM

6013-980 -0100

KEY	PART CODE	DESCRIPTION	SPC	TYPE OF MODEL TM3185 FU		ITC	COL	GRP	REMARKS
1	6281-971-003-00	SWITCH/OILPRESSURE	*	1					
2	6282-450-012-00	THERMOMETER	*	1					

FIG.P01 WHEEL
(REAR/TURF/212/80D-15PD)SYSTEM(OPTION)

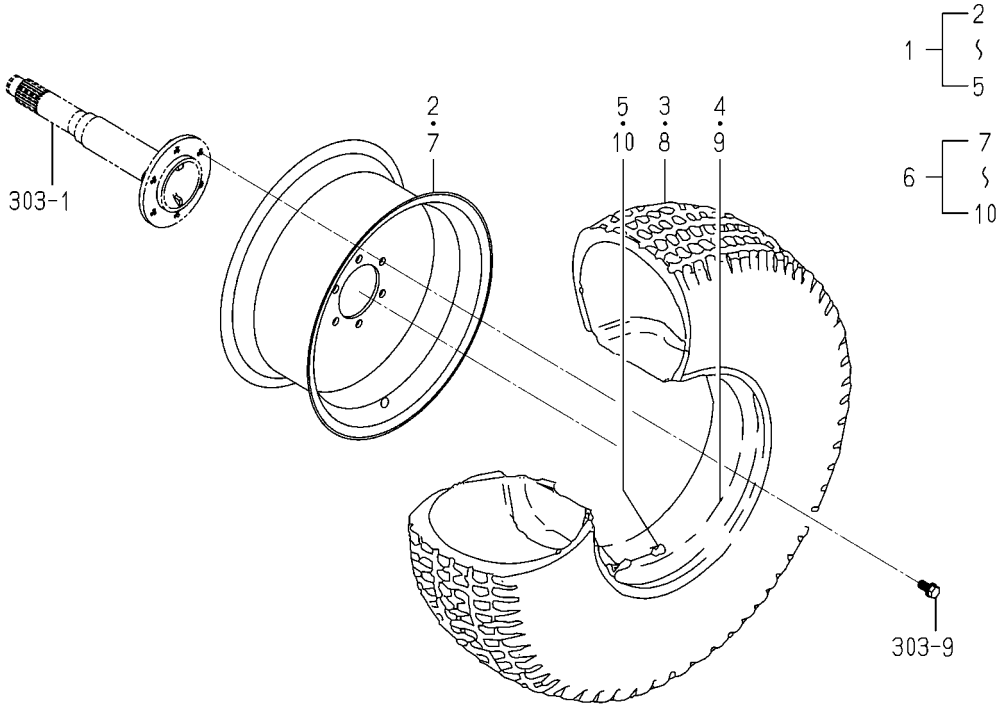

1714-317 -0100

KEY	PART CODE	DESCRIPTION	SPC	TYPE OF MODEL TM3185 FU		ITC	COL	GRP	REMARKS
1	1714-317-200-10	TIRE/TURF/LH ASSY	T	1			6G		
2	1714-317-210-20	WHEEL/15X7JA COMP	T	1			6G		
3	1510-417-311-00	TIRE,F.TURF212-80-15	T	1					
4	1510-417-312-00	TUBE	T	1					
5	V999-200-003-00	CAP,TIRE VALVE	T	1					
6	1714-317-220-10	TIRE/TURF/RH ASSY	T	1			6G		
7	1714-317-210-20	WHEEL/15X7JA COMP	T	1			6G		
8	1510-417-311-00	TIRE,F.TURF212-80-15	T	1					
9	1510-417-312-00	TUBE	T	1					
10	V999-200-003-00	CAP,TIRE VALVE	T	1					

FIG.P02 WHEEL(REAR/AGR/8-16)SYSTEM(OPTION)

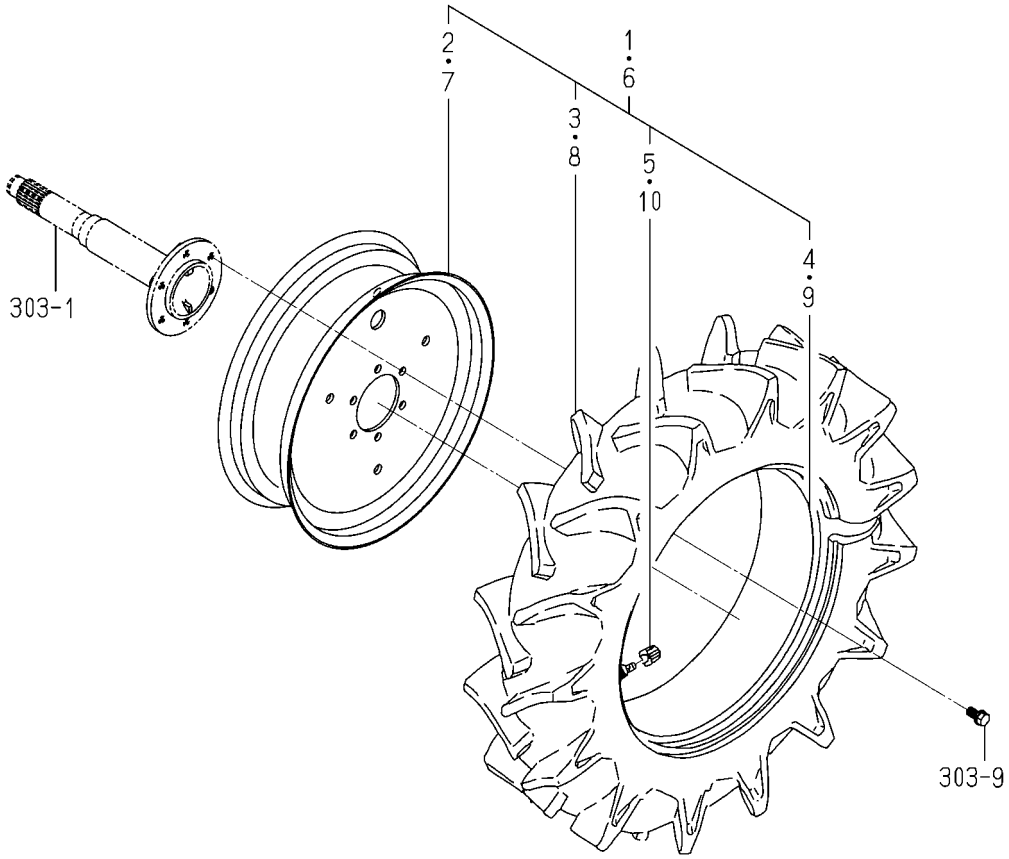

1738-317 -0100

KEY	PART CODE	DESCRIPTION	SPC	TYPE OF MODEL TM3185 FU		ITC	COL	GRP	REMARKS
1	1738-317-210-00	TIRE/8-16-4/LH ASSY	T	1			6G		
2	1434-317-201-10	WHEEL/16X5JA COMP	T	1			6G		
3	1600-317-211-00	TIRE	T	1					
4	V889-000-081-60	TUBE/ 8-16	T	1					
5	V999-200-003-00	CAP,TIRE VALVE	T	1					
6	1738-317-220-00	TIRE/8-16-4/RH ASSY	T	1			6G		
7	1434-317-201-10	WHEEL/16X5JA COMP	T	1			6G		
8	1600-317-211-00	TIRE	T	1					
9	V889-000-081-60	TUBE/ 8-16	T	1					
10	V999-200-003-00	CAP,TIRE VALVE	T	1					

FIG.P03 WHEEL(REAR/AGR/9.5-16)SYSTEM(OPTION)

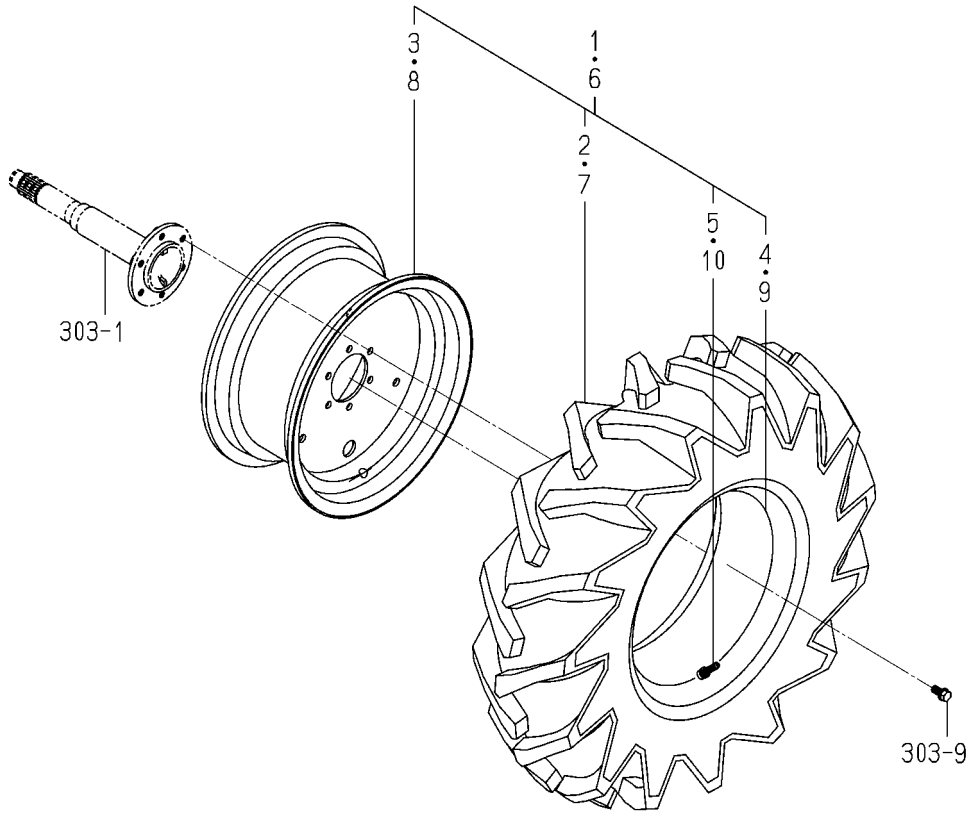

1776-317 -0100

KEY	PART CODE	DESCRIPTION	SPC	TYPE OF MODEL TM3185 FU		ITC	COL	GRP	REMARKS
1	1776-317-210-00	TIRE/9.5-16/LH ASSY	T	1			6G		
2	1646-437-211-00	TIRE	T	1					
3	1685-317-230-10	RIM/WHEEL COMP	T	1			6G		
4	1646-437-212-00	TUBE	T	1					
5	V999-200-003-00	CAP,TIRE VALVE	T	1					
6	1776-317-220-00	TIRE/9.5-16/RH ASSY	T	1			6G		
7	1646-437-211-00	TIRE	T	1					
8	1685-317-230-10	RIM/WHEEL COMP	T	1			6G		
9	1646-437-212-00	TUBE	T	1					
10	V999-200-003-00	CAP,TIRE VALVE	T	1					

FIG.P04 HITCH(FRONT)SET(D TYPE)(OPTION)

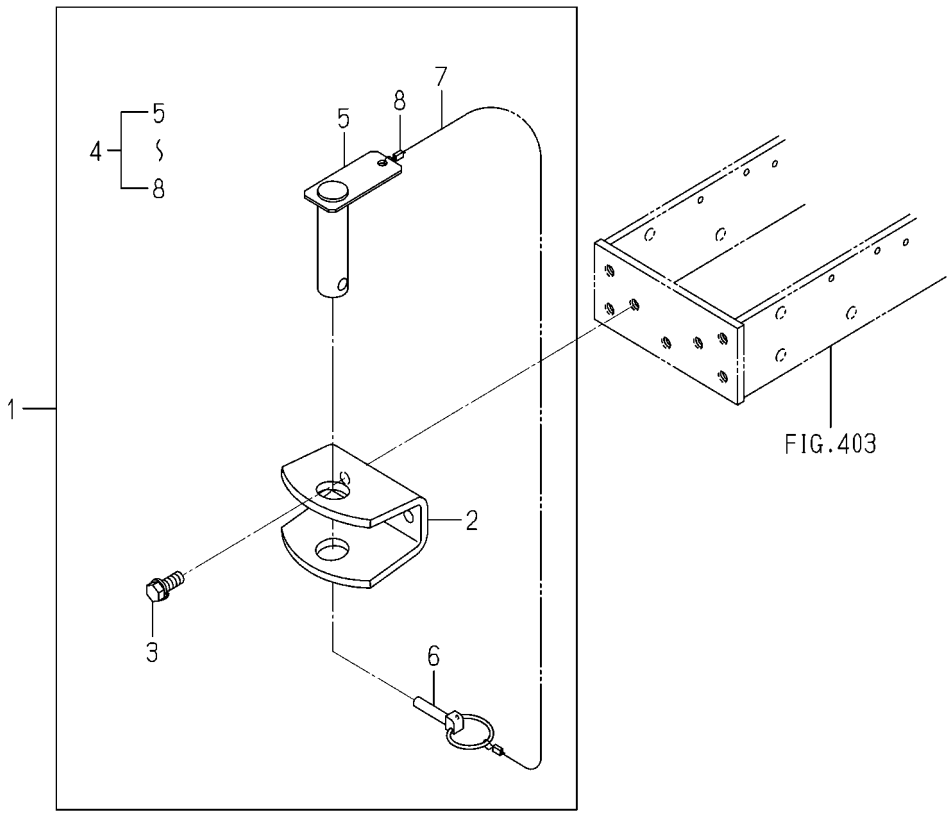

1776-411Y-0100

KEY	PART CODE	DESCRIPTION	SPC	TYPE OF MODEL TM3185 FU		ITC	COL	GRP	REMARKS
1	1776-411-300-00	HITCH/FRONT SET	T	1					
2	1776-411-002-00	PLATE/HITCH	T	1					
3	1725-201-002-00	BOLT/S	T	2					
4	1776-411-200-00	PIN ASSY	T	1					
5	1776-411-210-00	PIN/30X116 COMP	T	1					
6	1673-525-002-30	LINKPIN	T	1					
7	1772-521-221-20	WIRE/02X300	T	1					
8	1614-702-552-00	RING	T	2					

FIG.P05 WHEEL(FRONT/AGR/5-12)SYSTEM(OPTION)

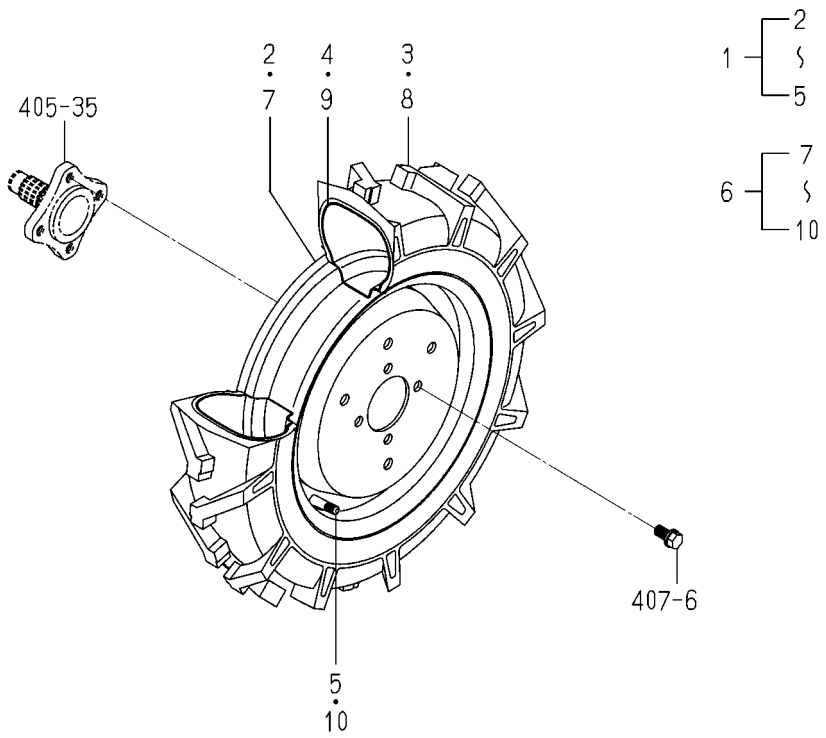

1613-437 -0100

KEY	PART CODE	DESCRIPTION	SPC	TYPE OF MODEL TM3185 FU		ITC	COL	GRP	REMARKS
1	1493-441-200-00	TIRE/FRONT/LH ASSY	T	1			6G		
2	1427-441-210-02	WHEEL/12X3.00D COMP	T	1			6G		
3	- - - - - -	BLANK	T						- - - - - -
3	1575-441-251-00	TIRE	T	1					
4	V881-005-001-20	TUBE/TIRE	T	1					
5	V999-200-003-00	CAP,TIRE VALVE	T	1					
6	1493-441-210-00	TIRE/FRONT/RH ASSY	T	1			6G		
7	1427-441-210-02	WHEEL/12X3.00D COMP	T	1			6G		
8	- - - - - -	BLANK	T						- - - - - -
8	1575-441-251-00	TIRE	T	1					
9	V881-005-001-20	TUBE/TIRE	T	1					
10	V999-200-003-00	CAP,TIRE VALVE	T	1					

FIG.P06 WHEEL (FRONT/AGR/5.00-12)SYSTEM(OPTION)

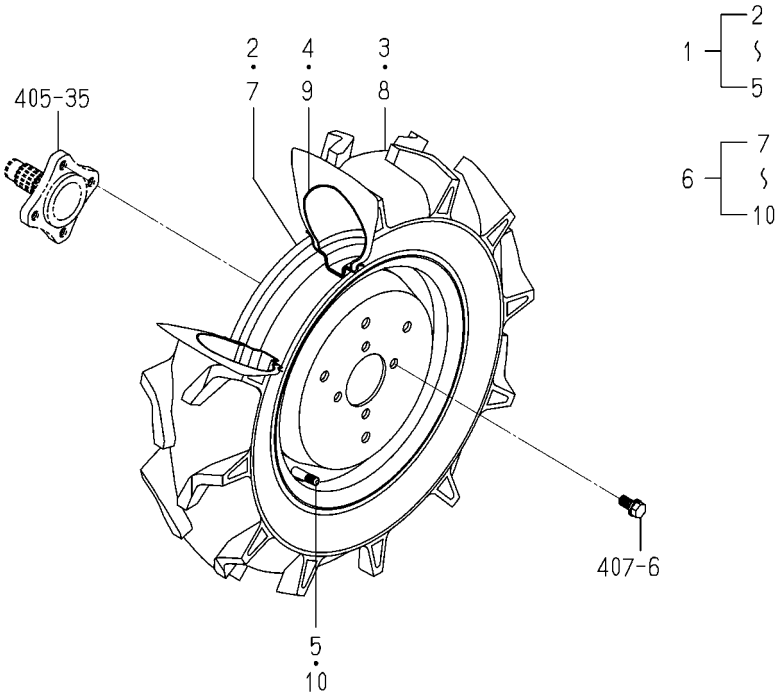

1776-437 -0100

KEY	PART CODE	DESCRIPTION	SPC	TYPE OF MODEL TM3185 FU		ITC	COL	GRP	REMARKS
1	1776-437-210-00	TIRE/LH/5.00-12-4	T	1			6G		
2	1427-441-210-00	WHEEL/12X3.00D COMP	T	1					
3	1434-441-201-10	TIRE/4P 500-12	T	1					
4	V883-005-001-20	TUBE/500-12	T	1					
5	V999-200-003-00	CAP,TIRE VALVE	T	1					
6	1776-437-220-00	TIRE/RH/5.00-12-4	T	1			6G		
7	1427-441-210-00	WHEEL/12X3.00D COMP	T	1					
8	1434-441-201-10	TIRE/4P 500-12	T	1					
9	V883-005-001-20	TUBE/500-12	T	1					
10	V999-200-003-00	CAP,TIRE VALVE	T	1					

FIG.P07 WHEEL (FRONT/TURF/20X8.00-10)SYSTEM(OPTION)

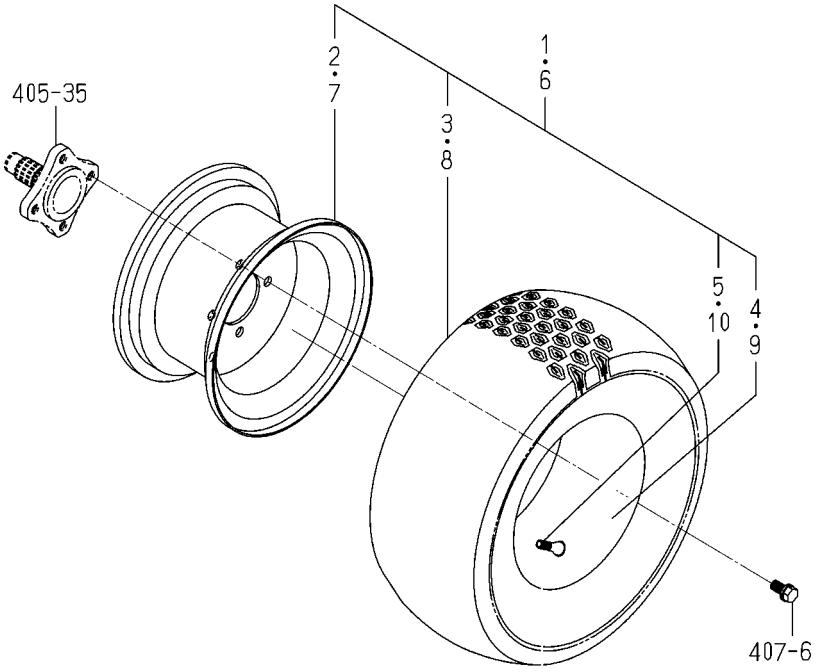

1714-441 -0100

KEY	PART CODE	DESCRIPTION	SPC	TYPE OF MODEL TM3185 FU		ITC	COL	GRP	REMARKS
1	1714-441-200-00	TIRE/TURF/LH ASSY	T	1			6G		
2	1434-441-240-01	RIM/WHEEL/600IX10	T	1			6G		
3	1714-441-201-00	TIRE/TURF	T	1					
4	1714-441-202-00	TUBE	T	1					
5	V999-200-003-00	CAP,TIRE VALVE	T	1					
6	1714-441-220-00	TIRE/TURF/RH ASSY	T	1			6G		
7	1434-441-240-01	RIM/WHEEL/600IX10	T	1			6G		
8	1714-441-201-00	TIRE/TURF	T	1					
9	1714-441-202-00	TUBE	T	1					
10	V999-200-003-00	CAP,TIRE VALVE	T	1					

FIG.P08 VALVE(AUX)SET(EXCEPT V TYPE)(OPTION)

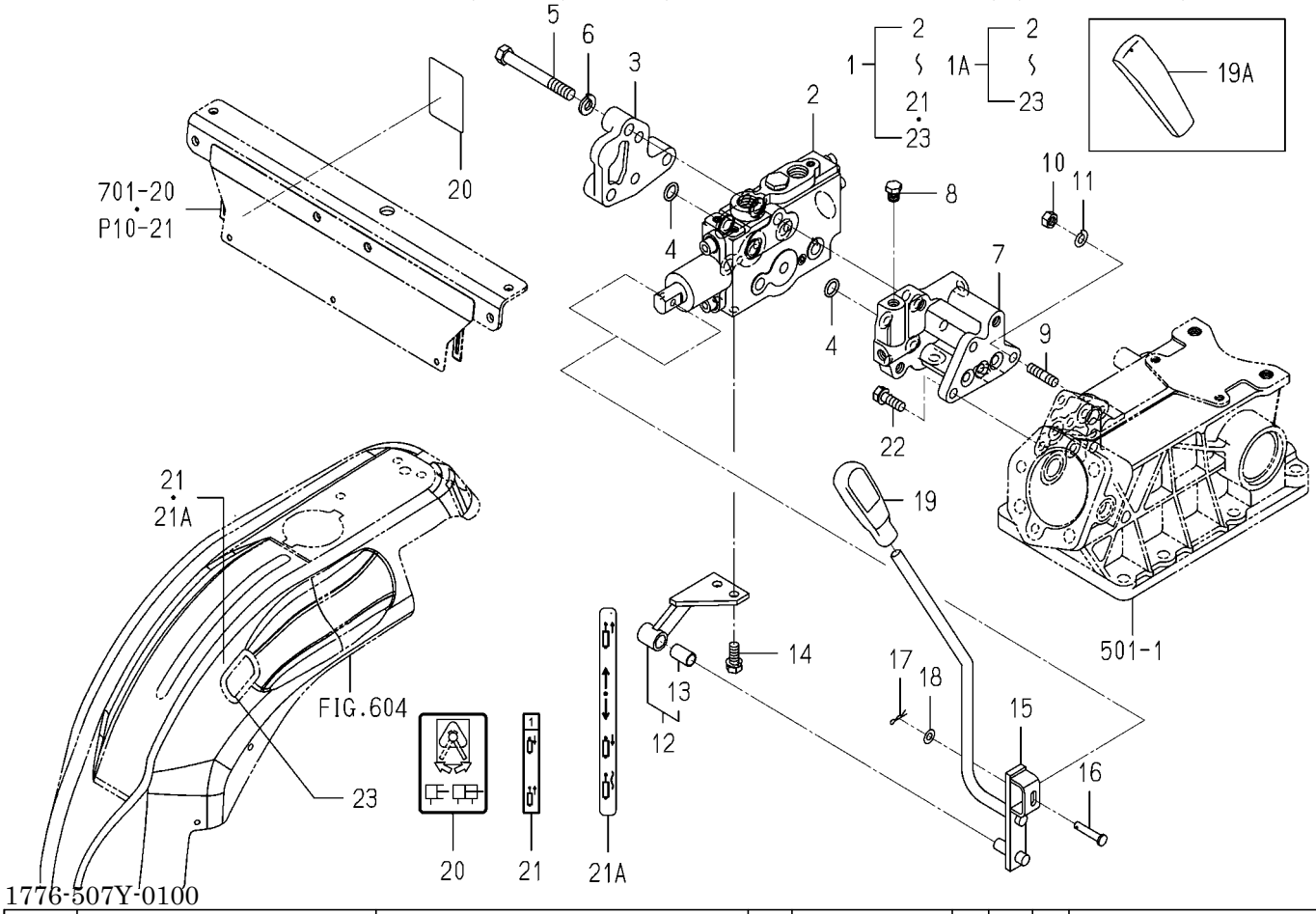

KEY	PART CODE	DESCRIPTION	SPC	TYPE OF MODEL TM3185 FU		ITC	COL	GRP	REMARKS
1	- - - - - -	BLANK	T						- - - - - -
1	- - - - - -	BLANK	T						- - - - - -
1A	1776-507-910-30	VALVE/AUXSET	T	1					
2	1640-530-600-10	VALVE/CONTROL ASSY	T	1					FIG S02
3	1614-501-003-10	COVER	T	1					
4	V720-112-401-20	O-RING/P12	T	6					
5	V201-261-008-00	BOLT/M10X80	T	3					
6	V401-160-010-00	WASHER,SP/M10	T	3					
7	1776-507-001-00	METAL/AUX/VALVE	T	1					
8	V782-160-000-2T	PLUG/SCREW/SEAL	T	6					
9	- - - - - -	BLANK	T						- - - - - -
9	V251-260-802-0D	BOLT/STUD/SEAL	T	1					
10	- - - - - -	BLANK	T						- - - - - -
10	V304-460-008-00	NUT/M8	T	1					
11	- - - - - -	BLANK	T						- - - - - -
11	V401-160-008-00	WASHER,SP/M 8	T	1					
12	1774-507-330-00	HOLDER/2ND ASSY	T	1					
13	1560-509-211-00	BUSH/10X12X20	T	1					
14	V211-260-802-00	BOLT/S	T	2					
15	- - - - - -	BLANK	T						- - - - - -
15	1776-507-210-10	ARM/1ST COMP	T	1					
16	2144-519-007-00	PIN/06X31	T	1					
17	V560-160-006-00	PIN/SNAP	T	1					
18	V411-260-006-00	WASHER / M6	T	1					
19	- - - - - -	BLANK	T						- - - - - -
19A	1614-117-001-00	GRIP/THROTTLE	T	1					
20	1640-530-008-00	LABEL/SUBCON	T	1					
21	- - - - - -	BLANK	T						- - - - - -
21A	1773-902-015-00	LABEL/CONTROL/AUX	T	1					
22	V211-560-802-50	BOLT,SEMS/M8X25 7T	T	2					

FIG.P08 VALVE(AUX)SET(EXCEPT V TYPE)(OPTION)

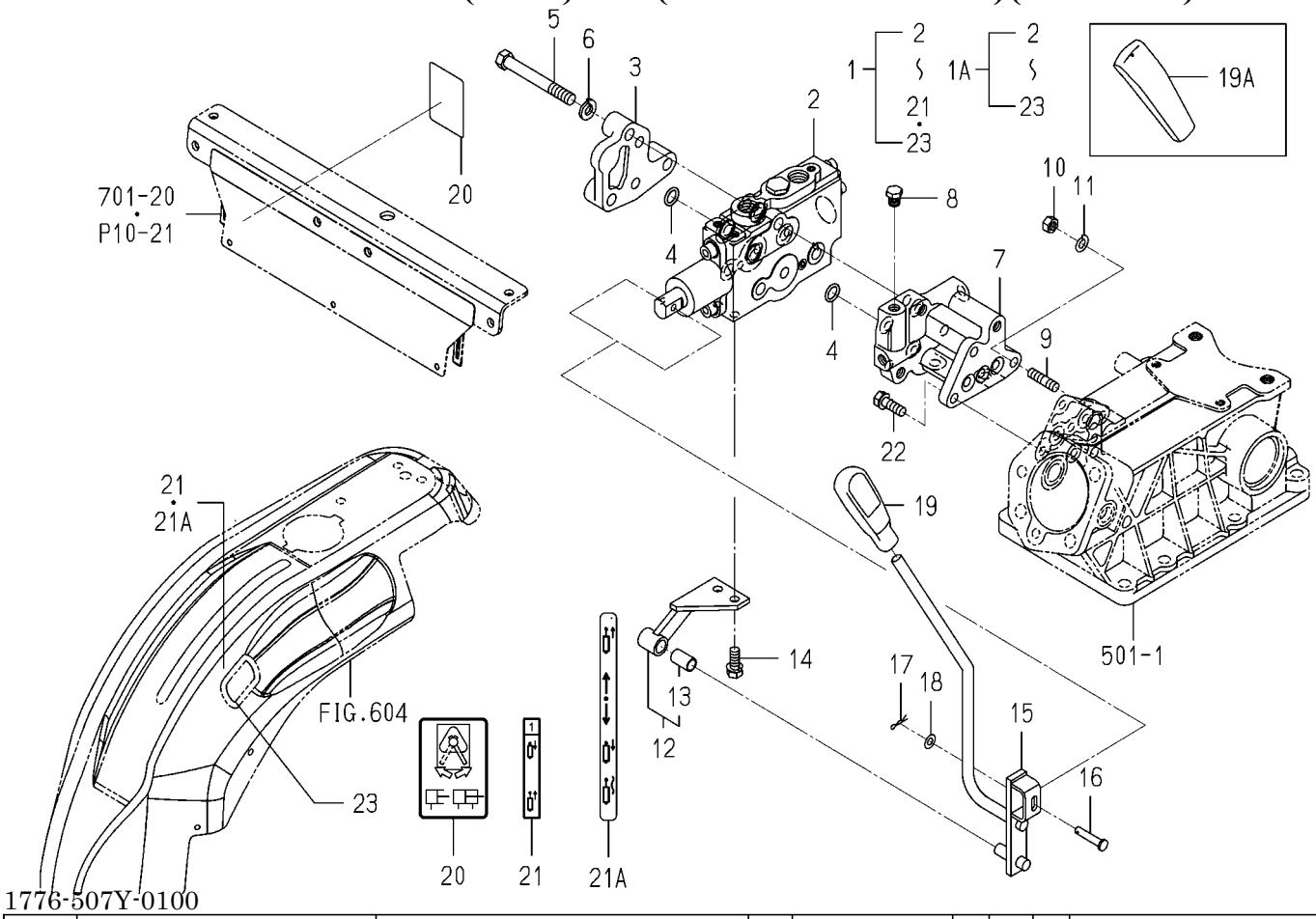

KEY	PART CODE	DESCRIPTION	SPC	TYPE OF MODEL TM3185 FU		ITC	COL	GRP	REMARKS
23	- - - - - -	BLANK	T						- - - - - -
23	1719-604-011-00	TRIM/250	T	1					

FIG.P09 HITCH(REAR)SET(D TYPE)(OPTION)

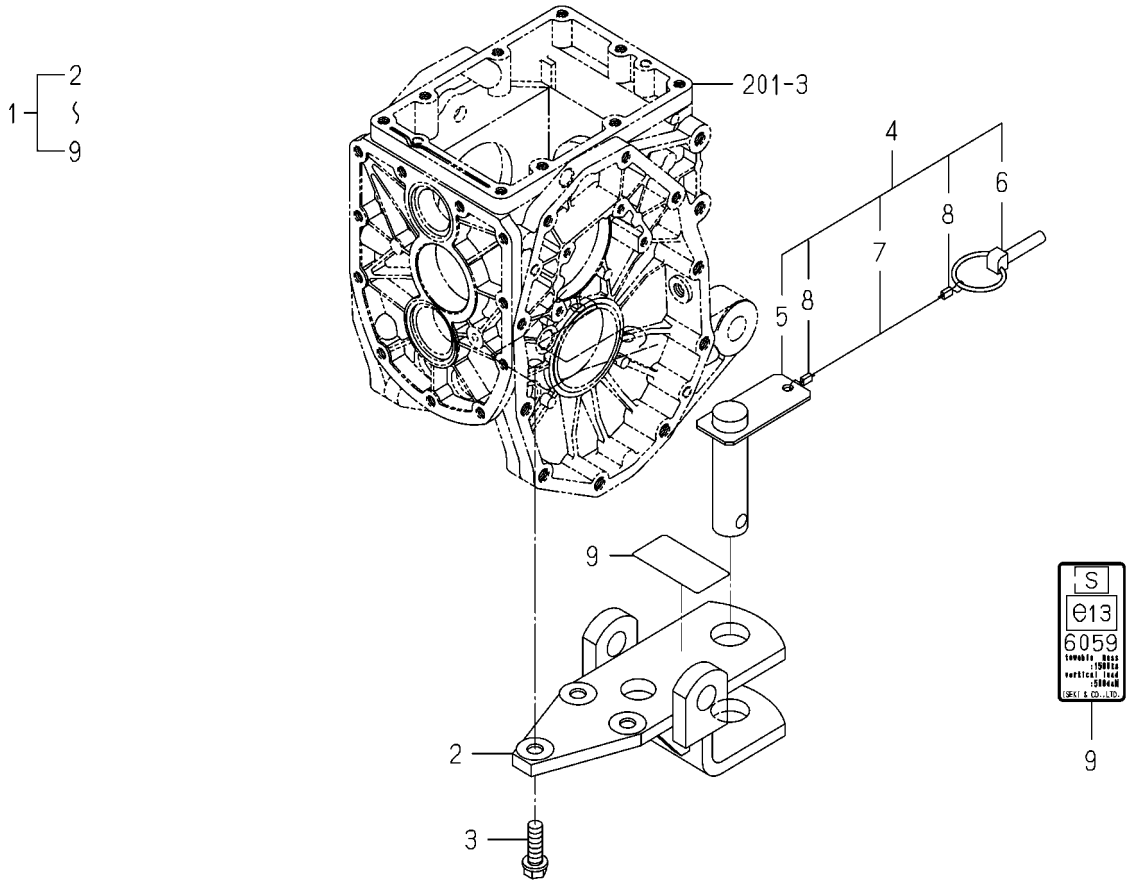

1776-520Y-0100

KEY	PART CODE	DESCRIPTION	SPC	TYPE OF MODEL TM3185 FU		ITC	COL	GRP	REMARKS
1	1776-520-300-00	HITCH/REAR SET	T	1					
2	1776-520-210-00	PLATE/HITCH COMP	T	1					
3	6901-931-240-00	BOLT	T	3					
4	1776-411-200-00	PIN ASSY	T	1					
5	1776-411-210-00	PIN/30X116 COMP	T	1					
6	1673-525-002-30	LINKPIN	T	1					
7	1772-521-221-20	WIRE/02X300	T	1					
8	1614-702-552-00	RING	T	2					
9	1776-520-001-10	LABEL/TRH1776	T	1					

FIG.P10 FRAME(ROPS)SET(1/2) (EXCEPT R TYPE)(OPTION)

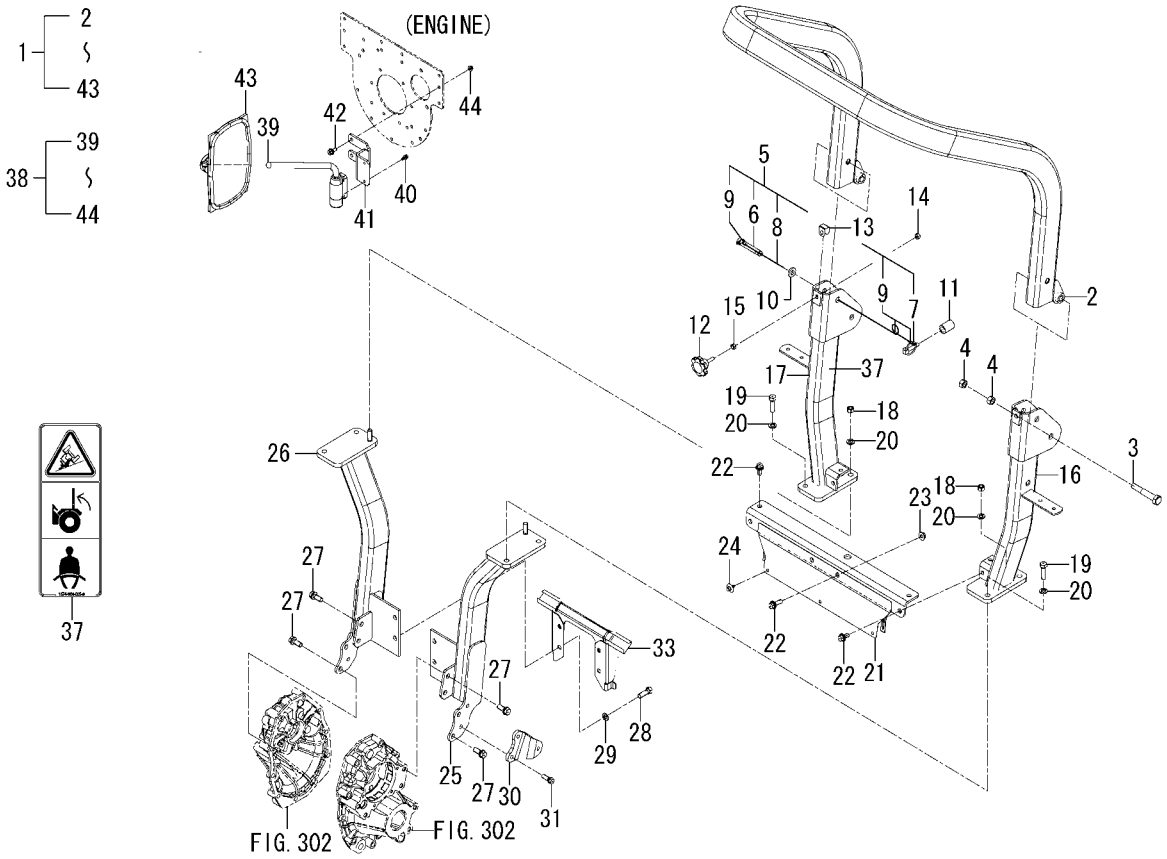

1776-702Y-0100

KEY	PART CODE	DESCRIPTION	SPC	TYPE OF MODEL TM3185 FU		ITC	COL	GRP	REMARKS
1	1776-702-200-10	FRAME SET	T	1					
2	1776-702-250-10	FRAME/UPPER	T	1			7F		
3	1757-625-005-00	BOLT/M16X90	T	2					
4	1773-702-001-00	NUT/M16	T	4					
5	1773-702-260-10	PIN ASSY	T	2					
6	1636-701-251-00	PIN/19X94	T	2					
7	1673-525-002-30	LINKPIN	T	2					
8	1614-702-551-20	BAND	T	2					
9	1614-702-552-00	RING	T	6					
10	1773-702-002-00	INSULATOR	T	2					
11	1785-702-005-00	TUBE/020	T	2					
12	1773-702-012-00	NOB/LOCK	T	2					
13	1773-702-011-00	PLATE	T	2					
14	1725-611-087-00	U-NUT/M10X1.5	T	2					
15	V304-260-010-00	NUT	T	2					
16	1776-702-270-10	FRAME/REAR/LH COMP	T	1			7F		
17	1776-702-240-10	FRAME/REAR/RH COMP	T	1			7F		
18	V304-460-012-00	NUT/M12	T	2					
19	V201-361-204-00	BOLT/M12X40	T	4					
20	V401-160-012-00	WASHER,SP/M12	T	6					
21	1776-702-260-10	FRAME/CENTER COMP	T	1			7F		
22	V211-661-002-50	BOLT 7T(SP)	T	6					
23	V363-260-010-00	NUT/M10	T	2					
24	1726-630-013-00	RIVET	T	3					
25	1776-702-220-00	FRAME/REAR/LH COMP	T	1					
26	1776-702-230-00	FRAME/REAR/RH COMP	T	1					
27	1725-201-002-00	BOLT/S	T	8					
28	V201-361-203-50	BOLT/M12X35	T	4					
29	V401-160-012-00	WASHER,SP/M12	T	4					
30	1776-702-003-00	PLATE	T	1					

FIG.P10 FRAME(ROPS)SET(2/2) (EXCEPT R TYPE)(OPTION)

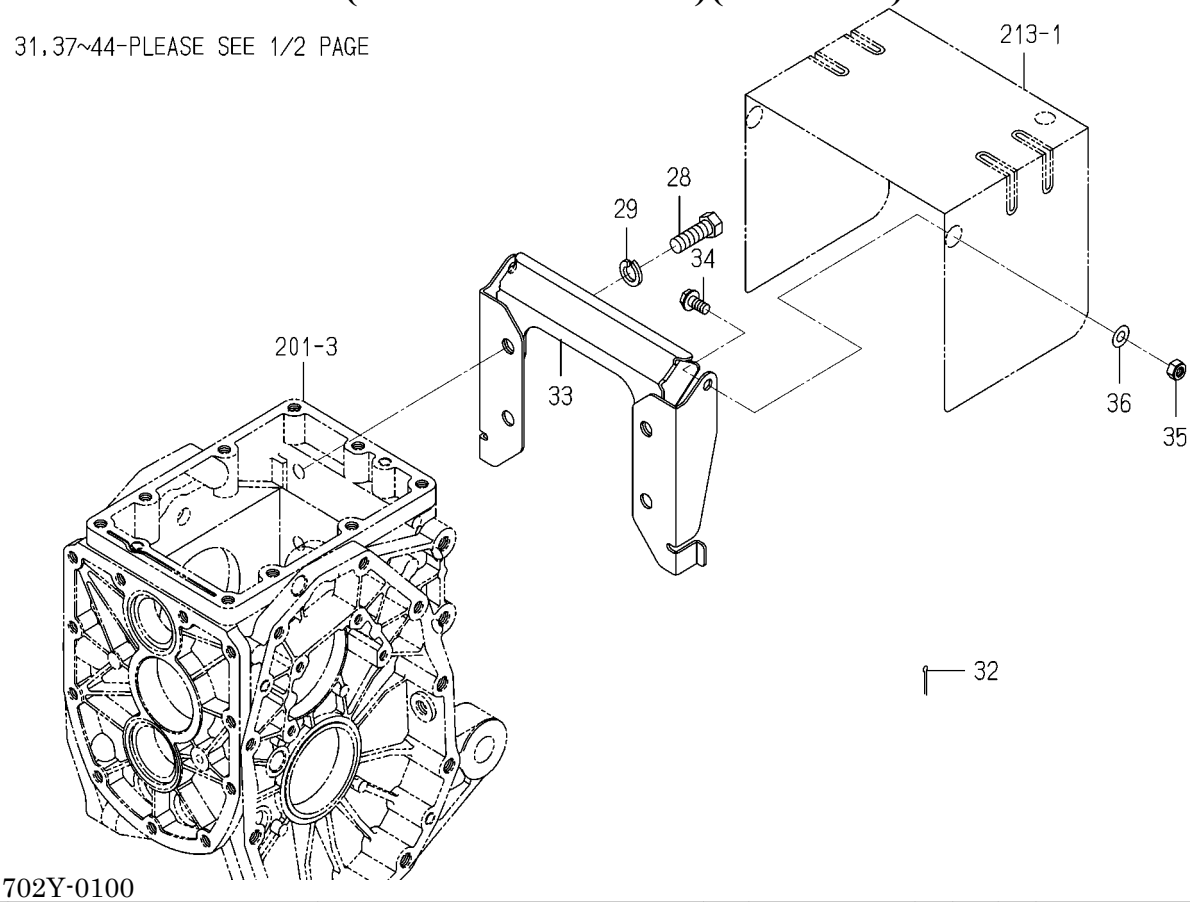

1776-702Y-0100

KEY	PART CODE	DESCRIPTION	SPC	TYPE OF MODEL TM3185 FU		ITC	COL	GRP	REMARKS
31	V211-561-003-00	BOLT/M10X30	T	2					
32	V500-162-502-00	PIN,SPLIT/2.5X20	T	2					
33	1774-218-210-00	BRACKET COMP	T	1					
34	V231-360-801-60	FLANGEBOLT	T	2					
35	1719-312-001-00	U-NUT	T	2					
36	V411-260-008-00	WASHER,PL/M 8	T	2					
37	1674-904-005-00	LABEL/ROPS	T	1					
38	- - - - - -	BLANK	T						- - - - - -
38	1776-702-400-20	MIRROR SET	T	1					
39	1674-619-310-00	ARM/MIRROR ASSY	T	1					
40	V210-360-601-60	BOLT(SP)/M6X16	T	2					
41	1776-702-002-10	BRACKET/MIRROR	T	1					
42	V211-360-802-50	BOLT/SP	T	2					
43	1674-619-300-10	MIRROR ASSY	T	1					
44	V362-260-008-00	NUT/WASHER	T	1					

FIG.P11 PLATE (BUMPER)&BOLT(SET)SYSTEM(OPTION)

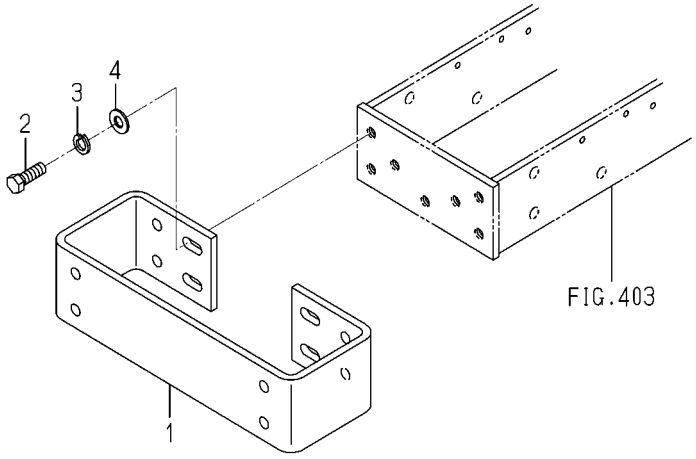

1776-922 -0100

KEY	PART CODE	DESCRIPTION	SPC	TYPE OF MODEL TM3185 FU		ITC	COL	GRP	REMARKS
1	1710-410-001-00	PLATE/BUMPER	T	1					
2	V201-361-202-50	BOLT/M12X25	T	4					
3	V401-160-012-00	WASHER,SP/M12	T	4					
4	V411-260-012-00	WASHER /M12	T	4					

FIG.P12 WEIGHT(15)SET(OPTION)

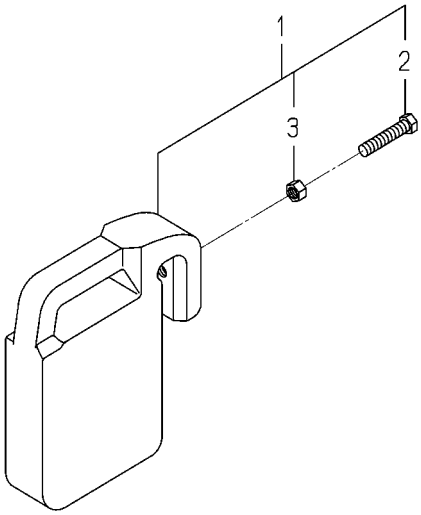

1774-922A-0100

KEY	PART CODE	DESCRIPTION	SPC	TYPE OF MODEL TM3185 FU		ITC	COL	GRP	REMARKS
1	- - - - - -	BLANK	T						- - - - - -
1	1774-922-200-10	WEIGHT/15 SET	T	1					
2	W201-261-206-00	BOLT/M12X60	T	1					
3	V305-260-012-00	NUT/M12	T	1					

FIG.S01 COMPONENT PARTS FOR K211-001-000-00 ON Fig.503

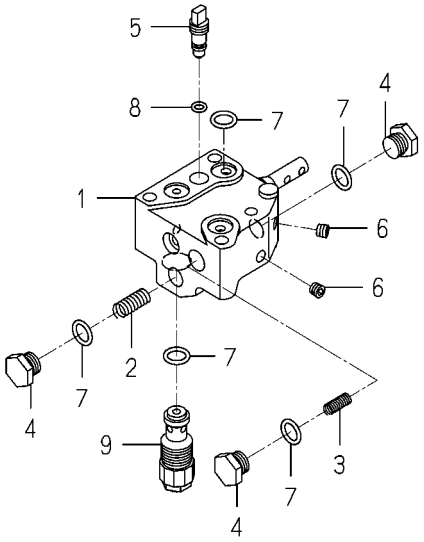

K211-001-000-0L

KEY	PART CODE	DESCRIPTION	SPC	TYPE OF MODEL TM3185 FU		ITC	COL	GRP	REMARKS
1	K211-001-100-10	VALVE SET	*	1					
2	K211-001-006-20	SPRING	*	1					
3	K211-001-007-00	SPRING	*	1					
4	K211-001-008-00	PLUG	*	3					
5	K211-001-009-00	NEEDLE	*	1					
6	V780-140-000-1T	PLUG/SCREW/SEAL	*	4					
7	V720-112-401-20	O-RING/P12	*	7					
8	V720-111-900-60	O-RING P6 HS90	*	1					
9	K250-019-000-10	VALVE/RELIEF ASSY	*	1					

FIG.S02 COMPONENT PARTS FOR 1640-530-600-10 ON Fig.P08

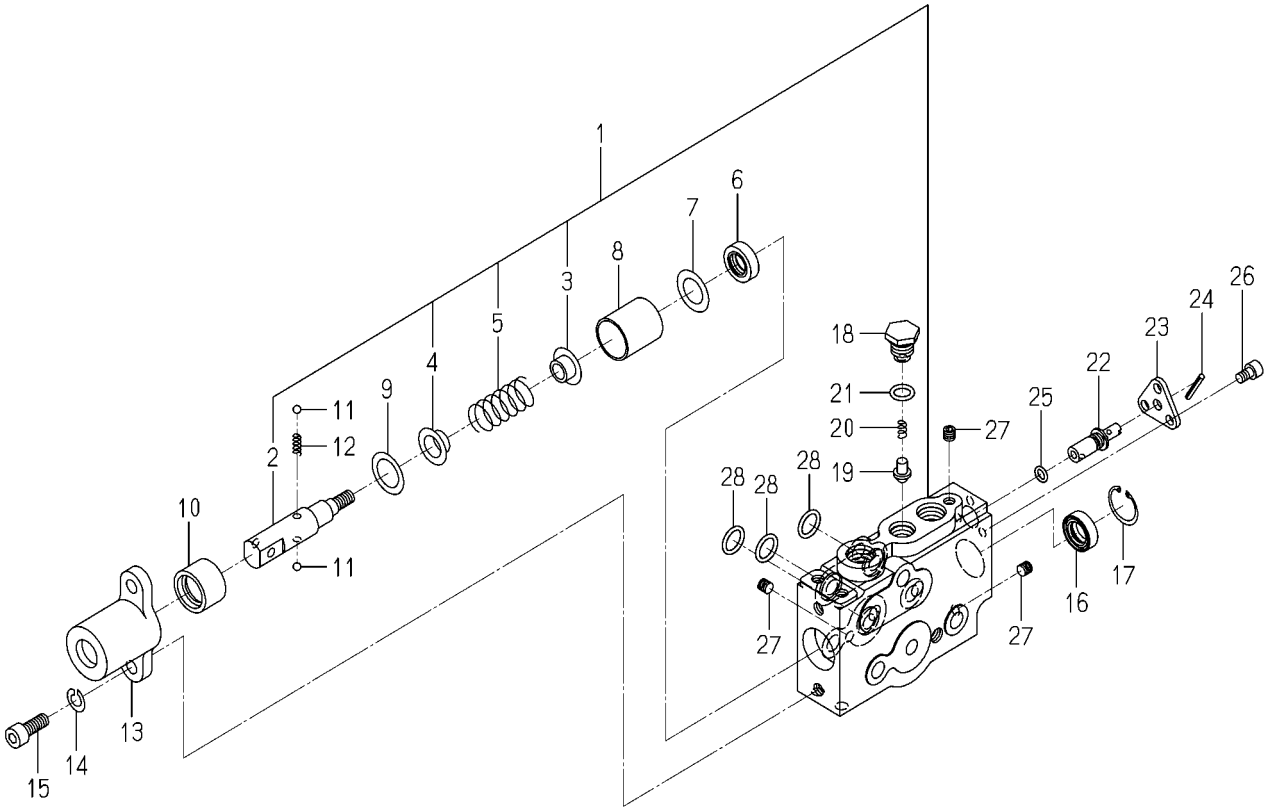

1640-530-600-1D

KEY	PART CODE	DESCRIPTION	SPC	TYPE OF MODEL TM3185 FU		ITC	COL	GRP	REMARKS
1	1640-530-610-10	VALVE SET	T	1					
2	1640-530-613-00	HEAD/SPOOL	T	1					
3	1640-530-614-00	STOPPER/SPRING/A	T	1					
4	1640-530-615-00	STOPPER/SPRING/B	T	1					
5	K211-012-006-00	SPRING/HC042	T	1					
6	K211-004-007-00	SEAL,OIL/TC4,14247	T	1					
7	K211-004-006-00	COLLAR	T	1					
8	1640-530-622-00	SLEEVE	T	1					
9	1640-530-623-00	COLLAR/19X28X02	T	1					
10	1640-530-624-00	SLEEVE/DETENT	T	1					
11	V682-200-000-60	BALL	T	2					
12	1640-530-625-00	SPRING/HC015	T	1					
13	1640-530-626-00	COVER	T	1					
14	V401-160-008-00	WASHER,SP/M 8	T	2					
15	V220-540-802-00	SCREW/SOCKET	T	2					
16	K211-004-007-00	SEAL,OIL/TC4,14247	T	1					
17	V705-140-024-00	RING,SNAP	T	1					
18	1640-530-628-00	PLUG/M14	T	1					
19	1640-530-629-00	POPPET	T	1					
20	K110-001-106-00	SPRING	T	1					
21	V720-112-401-20	O-RING/P12	T	1					
22	1640-530-631-00	SPOOL/DELECT	T	1					
23	1640-530-632-00	PLATE	T	1					
24	V580-140-302-50	SPRING PIN (W)	T	1					
25	V720-111-900-70	O-RING/P 7	T	1					
26	V220-540-601-00	BOLT	T	3					
27	K200-014-007-00	PLUG/SEAL	T	3					
28	V720-112-401-40	O-RING/P14	T	3					

FIG.S03 COMPONENT PARTS FOR 1719-511-350-00 ON Fig.507

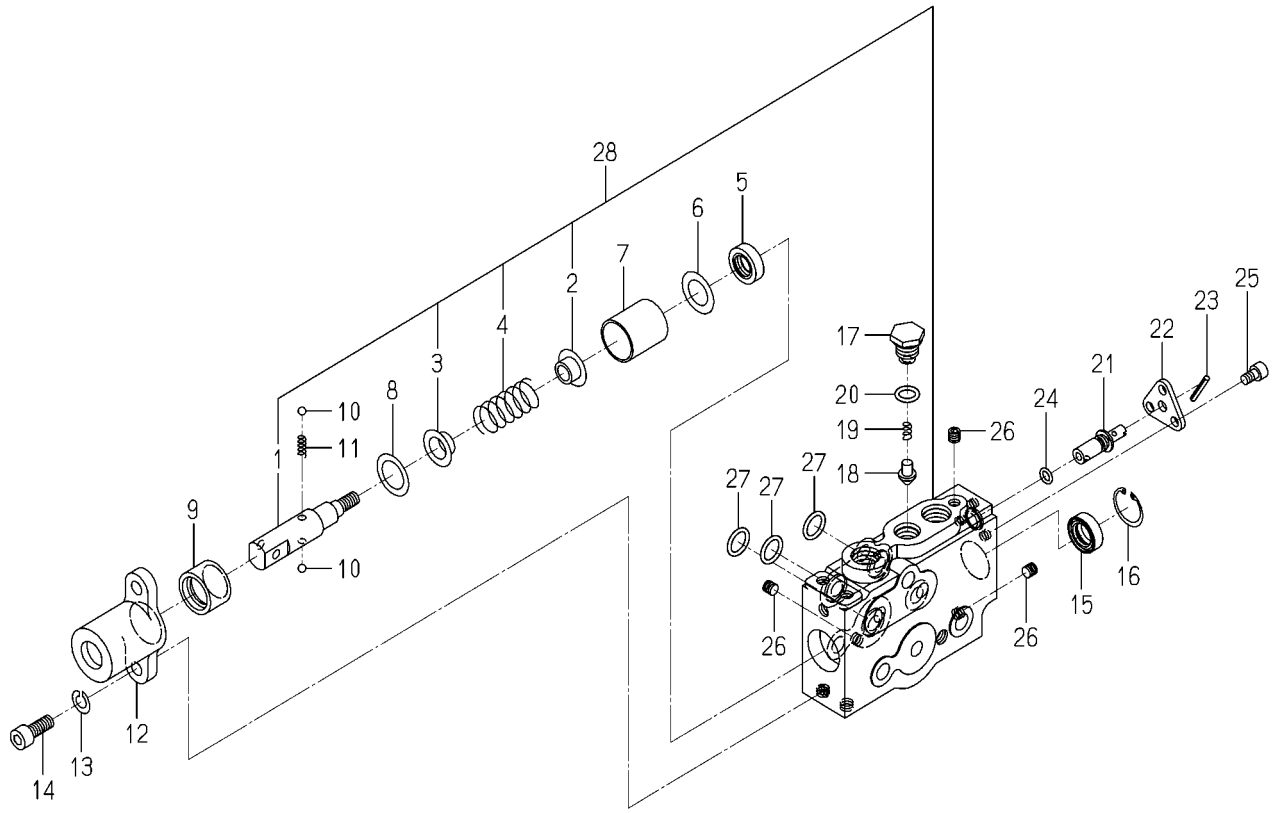

1719-511-350-0

KEY	PART CODE	DESCRIPTION	SPC	TYPE OF MODEL TM3185 FU		ITC	COL	GRP	REMARKS
1	1640-530-613-00	HEAD/SPOOL	*	1					
2	1640-530-614-00	STOPPER/SPRING/A	*	1					
3	1640-530-615-00	STOPPER/SPRING/B	*	1					
4	K211-012-006-00	SPRING/HC042	*	1					
5	K211-004-007-00	SEAL,OIL/TC4,14247	*	1					
6	K211-004-006-00	COLLAR	*	1					
7	1640-530-622-00	SLEEVE	*	1					
8	1640-530-623-00	COLLAR/19X28X02	*	1					
9	1640-530-624-00	SLEEVE/DETENT	*	1					
10	V682-200-000-60	BALL	*	2					
11	1640-530-625-00	SPRING/HC015	*	1					
12	1640-530-626-00	COVER	*	1					
13	V401-160-008-00	WASHER,SP/M 8	*	2					
14	V220-540-802-00	SCREW/SOCKET	*	2					
15	K211-004-007-00	SEAL,OIL/TC4,14247	*	1					
16	V705-140-024-00	RING,SNAP	*	1					
17	1640-530-628-00	PLUG/M14	*	1					
18	1640-530-629-00	POPPET	*	1					
19	K110-001-106-00	SPRING	*	1					
20	V720-112-401-20	O-RING/P12	*	1					
21	1640-530-631-00	SPOOL/DELECT	*	1					
22	1640-530-632-00	PLATE	*	1					
23	V580-140-302-50	SPRING PIN (W)	*	1					
24	V720-111-900-70	O-RING/P 7	*	1					
25	V220-540-601-00	BOLT	*	3					
26	K200-014-007-00	PLUG/SEAL	*	3					
27	V720-112-401-40	O-RING/P14	*	3					
28	1640-530-610-10	VALVE SET	*	1					

WIRING DIAGRAM(1/2)

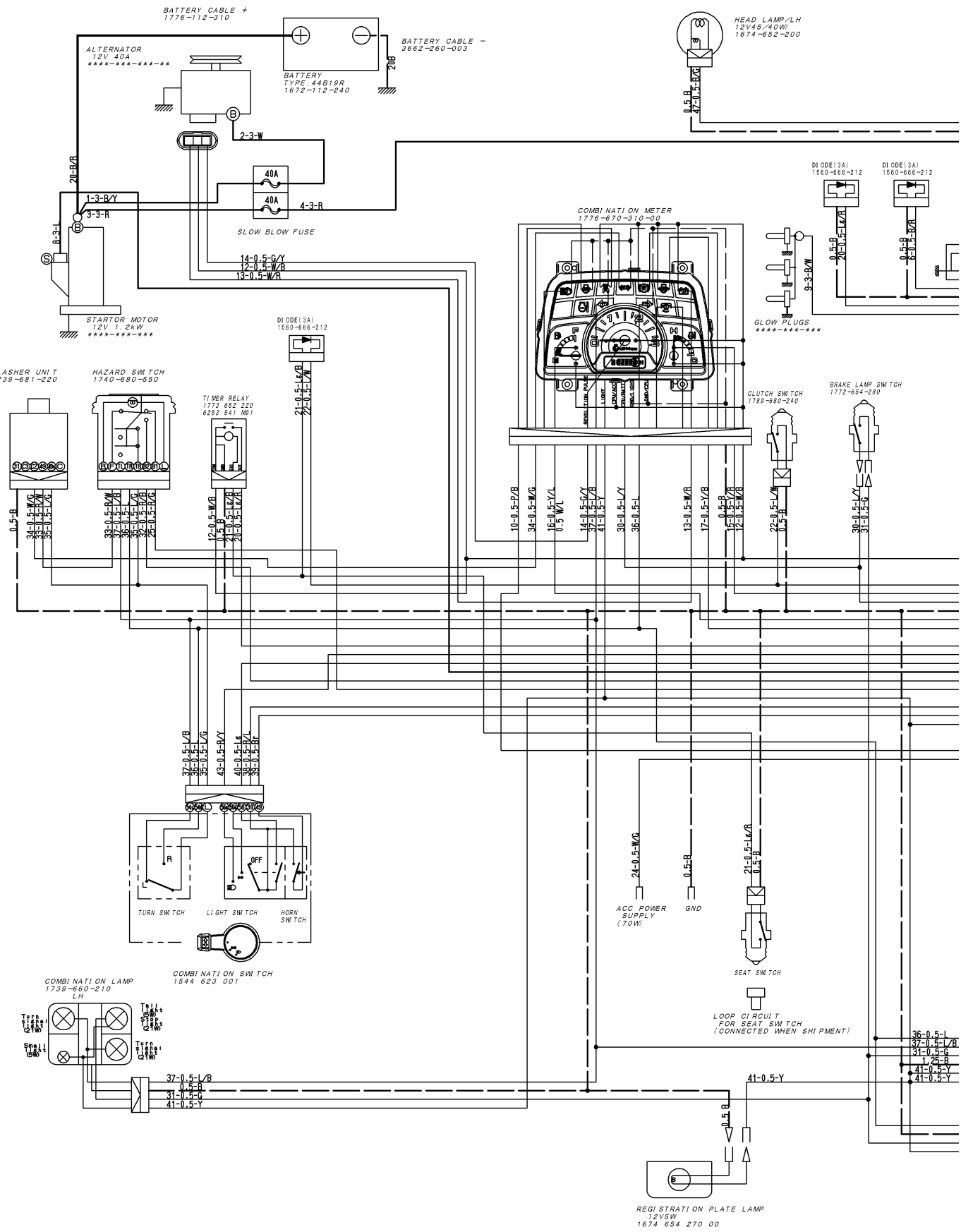

WIRING DIAGRAM(2/2)

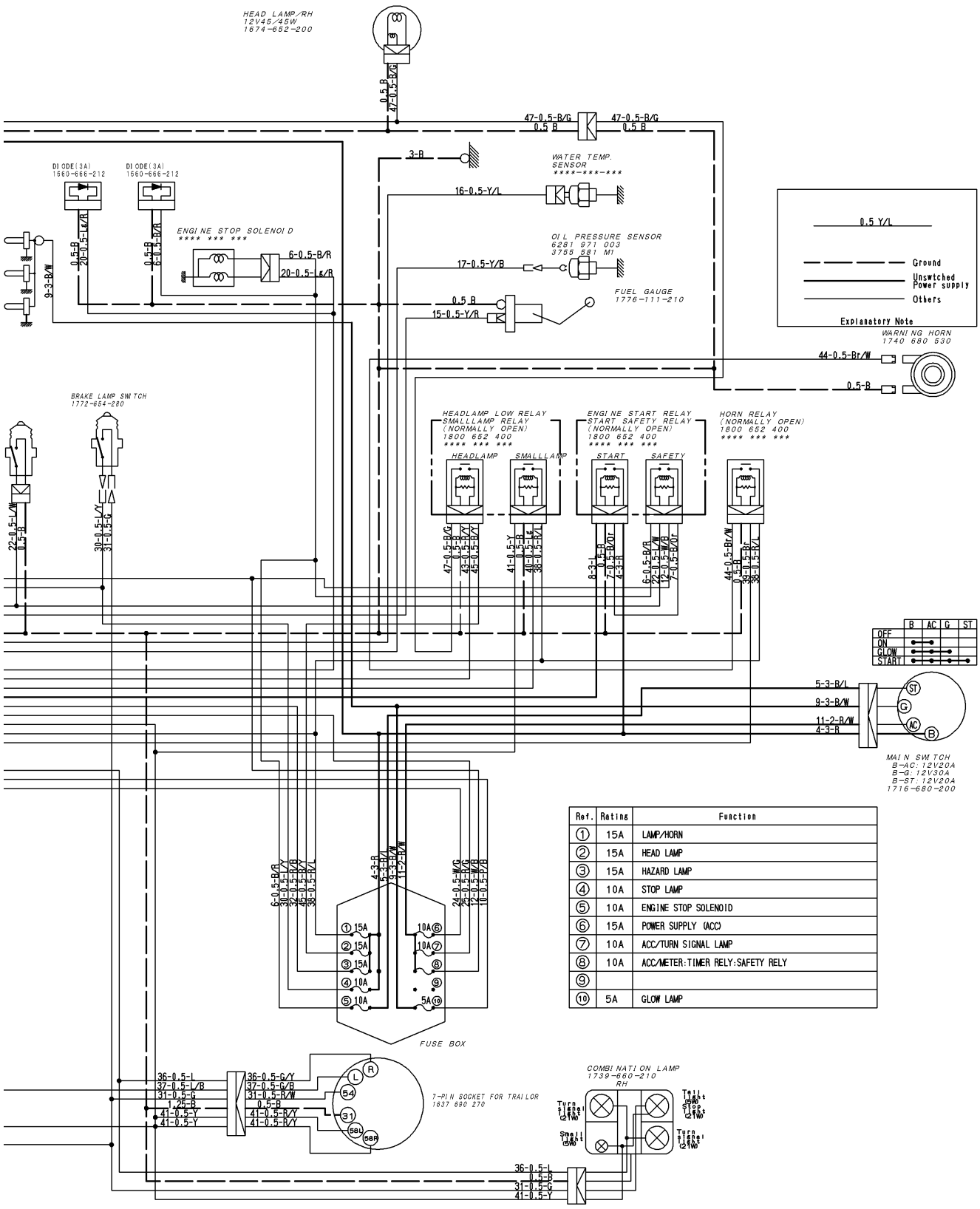

Ref.	Rating	Function
①	15A	LAMP/HORN
②	15A	HEAD LAMP
③	15A	HAZARD LAMP
④	10A	STOP LAMP
⑤	10A	ENGINE STOP SOLENOID
⑥	15A	POWER SUPPLY (ACC)
⑦	10A	ACC/TURN SIGNAL LAMP
⑧	10A	ACC/METER:TIMER RELY:SAFETY RELY
⑨		
⑩	5A	GLOW LAMP

Numerical Index

Part Code	Fig.	Key	Part Code	Fig.	Key	Part Code	Fig.	Key
BR01-010-923-50	6	2	BR02-080-001-80	11	2	BR05-210-910-80	4	12
BR01-010-933-00	6	19	BR02-310-000-40	7	22	BR05-210-910-90	4	31
BR01-010-957-60	10	15	BR02-310-000-60	4	23	BR05-210-911-00	4	16
BR01-010-968-30	6	14		5	19	BR05-210-911-30	6	10
BR01-011-062-50	7	13		7	3	BR05-230-040-00	12	4
BR01-031-085-00	4	25		7	14	BR05-240-040-00	12	5
BR01-041-121-20	6	3		8	16	BR06-410-004-50	1	12
BR01-070-061-00	3	22		9	13	BR06-421-001-50	1	2
BR01-070-084-50	2	11		10	5	BR06-421-001-80	1	3
BR01-081-084-50	2	5	BR02-310-000-80	4	22		5	3
BR01-110-040-80	9	11		11	11	BR06-421-002-20	5	4
BR01-131-061-20	3	12	BR02-450-000-60	9	7	BR06-421-003-50	1	4
	3	21	BR02-510-000-60	7	16	BR06-450-001-00	10	13
	6	8	BR02-510-001-20	6	4	BR08-010-908-30	11	7
	6	11	BR02-510-001-60	10	14	BR11-010-066-00	1	1
	7	20	BR02-610-000-80	11	13	BR11-013-644-50	5	2
BR01-131-061-40	4	27	BR02-610-901-70	11	14	BR11-015-635-00	12	2
BR01-131-062-00	7	4	BR02-620-000-80	4	33	BR11-015-644-00	2	4
	9	16	BR02-620-001-00	4	8	BR11-015-645-00	2	7
BR01-131-062-50	5	18	BR03-030-041-40	4	2	BR11-015-646-00	2	8
	8	15	BR03-030-041-60	8	10	BR11-036-135-00	6	13
BR01-131-063-50	10	6	BR03-030-900-50	1	17	BR11-056-607-00	9	10
BR01-131-064-00	4	38	BR03-050-051-20	1	14	BR11-066-624-00	9	3
	11	6	BR03-050-061-20	2	6	BR11-066-625-00	9	4
BR01-131-065-00	10	7	BR03-050-061-60	1	15	BR11-070-732-00	6	1
BR01-131-066-00	4	36	BR03-050-082-00	1	16	BR11-075-615-00	6	9
BR01-131-067-00	9	12	BR03-050-902-00	2	3	BR11-099-676-00	6	20
BR01-131-068-00	4	37	BR03-110-000-40	4	10	BR11-101-164-00	5	1
BR01-151-081-60	5	14	BR03-410-050-80	3	15	BR11-113-646-00	5	15
	11	16		11	3	BR11-113-647-00	5	16
BR01-151-083-00	11	10	BR03-650-001-90	2	15	BR11-114-765-00	5	17
BR01-151-085-00	2	12	BR03-650-900-50	1	9	BR11-114-766-00	5	17
BR01-151-087-50	11	12	BR03-680-000-50	4	13	BR11-121-789-00	9	2
BR01-210-925-90	8	17	BR03-680-000-60	4	30	BR11-199-647-00	9	1
BR01-211-062-00	1	18	BR03-680-000-80	4	9	BR11-501-763-00	2	13
	8	11		4	17	BR11-502-635-00	2	17
BR01-211-062-50	5	22	BR03-680-001-00	3	9	BR11-510-405-00	2	14
BR01-211-063-50	1	19	BR04-010-620-30	1	11	BR11-517-613-00	2	20
BR01-211-065-00	5	5	BR04-010-905-90	3	18	BR11-525-689-00	2	1
BR01-211-066-00	1	20	BR04-012-600-20	6	18	BR11-527-621-00	2	2
BR01-281-063-50	4	28	BR04-230-301-50	1	13	BR11-532-626-00	2	16
BR01-560-040-60	9	5	BR05-210-010-00	8	8	BR11-535-126-00	6	16
BR02-010-907-60	8	5	BR05-210-040-00	9	9	BR11-537-613-00	6	17
BR02-010-910-30	2	18	BR05-210-907-60	6	5	BR11-539-755-00	11	1
BR02-070-000-80	4	34	BR05-210-907-80	1	21	BR12-001-614-00	3	14

Numerical Index

Part Code	Fig.	Key	Part Code	Fig.	Key	Part Code	Fig.	Key
BR12-002-678-00	3	13	BR13-160-626-00	7	17	BR18-544-622-40	14	3
BR12-003-719-00	8	1	BR13-172-614-00	12	3	BR18-544-622-70	14	4
BR12-011-610-00	1	25	BR13-517-614-00	4	19	BR18-544-622-80	14	9
BR12-011-618-00	1	26	BR13-556-662-00	9	14	BR18-544-622-90	14	12
BR12-016-637-00	5	6	BR13-561-663-00	5	20	BR18-544-623-10	14	20
BR12-017-629-00	5	7	BR13-599-652-10	5	21	BR18-544-623-20	14	21
BR12-018-610-00	5	9	BR13-599-675-10	9	15	BR18-544-623-60	14	26
BR12-021-613-00	5	12	BR14-003-622-00	1	22	BR18-544-623-70	14	13
BR12-022-608-00	5	10	BR14-011-614-00	3	5	BR18-544-623-80	14	10
BR12-031-632-00	8	6	BR14-016-613-10	3	4	BR18-544-623-90	14	14
BR12-036-632-00	8	2	BR14-040-663-00	6	7	BR18-544-624-00	14	6
BR12-036-633-00	8	3	BR14-051-703-00	11	18	BR18-544-624-10	14	7
BR12-040-608-00	5	8	BR14-054-602-00	11	17	BR18-544-624-20	14	8
BR12-045-632-00	1	24	BR14-060-741-00	8	18	BR18-544-624-30	14	25
BR12-073-608-10	3	16	BR14-098-696-00	6	6	BR18-544-624-40	14	24
BR12-099-620-00	8	14	BR14-099-626-00	8	12	BR18-544-624-50	14	23
BR12-504-625-00	4	6	BR14-099-638-00	9	6	BR18-544-625-80	14	5
BR12-511-613-10	4	11	BR14-501-715-10	10	1	BR18-544-625-90	14	11
BR12-515-617-00	4	15	BR14-514-649-00	10	3	BR18-544-626-00	14	18
BR12-515-618-00	4	29	BR14-520-632-00	10	11	BR18-544-626-10	14	17
BR12-517-615-00	4	35	BR14-521-634-10	10	8	BR18-544-626-20	14	16
BR12-525-612-00	3	19	BR14-530-659-00	11	5	BR18-544-630-60	14	19
BR12-540-607-10	4	7	BR14-533-649-00	11	4	BR18-544-630-70	14	15
BR12-541-655-00	4	18	BR14-538-692-00	11	19	BR18-544-630-80	14	22
BR12-597-628-00	4	26	BR14-599-663-00	10	4	BR18-560-653-00	7	21
BR13-099-613-00	7	19	BR14-599-664-00	10	2	BR18-572-689-00	11	8
BR13-101-002-10	7	1	BR14-599-674-00	10	9	BR18-584-628-60	15	11
	13	1	BR16-502-611-10	3	1	BR18-584-637-10	15	9
BR13-123-619-00	13	3	BR16-510-634-00	4	1	BR18-584-637-80	15	17
BR13-123-628-00	7	15	BR16-516-642-00	3	10	BR18-584-640-10	15	22
BR13-124-613-00	13	4	BR16-520-654-00	4	24	BR18-584-654-80	15	19
BR13-140-648-00	7	5	BR16-520-664-00	7	18	BR18-584-654-90	15	18
	13	5	BR16-529-616-20	1	8	BR18-584-655-10	15	10
BR13-141-626-00	13	9	BR16-599-649-00	3	11	BR18-584-655-20	15	8
BR13-142-618-00	13	2	BR16-599-650-00	4	3	BR18-584-655-80	15	14
BR13-142-620-00	7	8	BR16-599-651-00	4	21	BR18-584-656-00	15	12
BR13-142-621-00	7	7	BR18-504-644-00	11	9	BR18-584-656-10	15	20
	13	7		14	27	BR18-584-666-70	15	21
BR13-142-630-00	7	2	BR18-508-667-00	6	15	BR18-584-666-80	15	16
BR13-143-764-00	13	8		15	23	BR18-584-666-90	15	15
BR13-144-606-90	7	6	BR18-520-633-20	10	16	BR18-584-667-00	15	13
	13	6	BR18-536-622-00	7	23	BR18-584-667-10	15	7
BR13-150-792-00	7	9	BR18-537-639-00	7	24	BR18-584-667-20	15	6
BR13-150-793-00	7	10	BR18-544-622-10	14	1	BR18-584-667-30	15	5
BR13-150-794-00	7	11	BR18-544-622-30	14	2	BR18-584-667-40	15	4

Numerical Index

Part Code	Fig.	Key	Part Code	Fig. Key	Part Code	Fig. Key
BR18-584-667-50	15	3				
BR18-584-667-60	15	2				
BR18-584-667-70	15	1				
BR19-581-660-20	5	13				
BR19-821-115-00	4	20				
BR19-821-672-00	3	7				
BR19-821-676-00	4	32				
BR19-821-682-10	3	2				
BR19-821-707-00	5	11				
BR19-821-714-00	4	14				
BR19-821-741-00	10	10				
BR19-821-742-00	4	5				
BR19-821-766-00	8	7				
BR19-841-627-00	6	12				
BR19-843-601-00	9	8				
BR19-843-637-00	8	9				
BR19-846-601-00	1	7				
BR19-846-603-00	1	6				
BR19-846-605-00	1	5				
BR19-848-678-00	8	13				
BR19-848-771-00	10	12				
BR19-851-730-20	1	10				
BR19-851-731-20	2	21				
BR19-851-732-50	2	19				
BR19-858-628-10	2	10				
BR19-858-640-20	2	9				
BR19-863-608-00	6	21				
BR19-863-609-00	4	4				
BR19-873-605-00	1	23				
BR19-910-602-10	7	12				
BR19-921-623-00	3	17				
BR19-923-654-00	3	8				
BR19-923-683-00	11	15				
BR19-926-618-00	3	3				
BR19-928-634-00	3	6				
BR19-948-622-00	8	4				
BR19-956-665-10	3	20				
BR31-499-001-30	12	1				

Numerical Index

Part Code	Fig.	Key	Part Code	Fig.	Key	Part Code	Fig.	Key
1342-402-006-00	618	10	1427-511-005-00	508	29	1544-503-001-20	503	4
1376-402-003-00	101	27		509	23	1544-503-200-20	503	5
	402	46	1432-616-002-00	110	2	1544-623-001-00	617	9
	402	51		306	45	1544-623-232-00	617	10
	618	11	1434-203-002-00	203	10	1544-623-233-00	617	11
	618	12	1434-317-201-10	P02	2	1544-623-234-00	617	12
1404-312-006-00	306	21		P02	7	1544-623-235-00	617	13
1414-312-002-00	107	4	1434-441-201-10	P06	3	1560-132-007-30	110	11
1416-501-011-00	503	3		P06	8		306	33
1421-433-004-00	109	9	1434-441-240-01	P07	2	1560-509-211-00	506	16
1421-507-002-10	503	1		P07	7		P08	13
1421-507-017-00	604	6	1434-501-003-10	505	1	1560-525-001-40	508	2
	604	12	1434-501-004-00	501	21		509	2
	605	6	1434-501-005-00	501	24	1560-630-024-00	306	46
	605	12	1434-501-006-00	503	10	1560-666-004-00	106	13
	611	10	1434-503-001-00	503	12		618	17
1421-603-004-00	106	3	1434-503-002-00	503	15		618	18
1425-621-004-00	402	47	1434-503-250-10	503	19	1564-434-222-10	403	2
	618	8	1434-503-260-20	503	22	1566-525-101-00	508	39
	618	15	1442-313-202-00	306	24		509	33
	618	21	1444-122-002-00	110	9	1575-441-251-00	P05	3
1427-201-007-00	201	12		306	31		P05	8
	302	14	1444-314-009-10	201	21	1579-501-002-00	501	12
1427-201-012-00	301	13	1444-328-272-00	306	26	1581-740-113-00	611	9
1427-201-013-00	301	14	1444-328-273-00	306	25	1593-112-002-50	106	8
1427-201-014-10	301	15	1480-501-003-00	501	2	1593-117-003-10	108	4
1427-201-015-10	301	16	1491-203-006-10	203	3	1594-218-001-00	203	2
1427-203-002-00	203	4	1491-307-201-00	303	4	1596-512-002-10	108	3
1427-301-014-10	301	22	1491-434-017-00	405	36	1600-317-211-00	P02	3
1427-301-015-10	301	23	1493-441-200-00	P05	1		P02	8
1427-301-016-00	301	24	1493-441-210-00	P05	6	1600-502-003-00	206	5
1427-301-018-00	301	26	1510-417-311-00	P01	3		207	4
1427-301-019-00	301	28		P01	8	1600-624-201-00	618	23
1427-301-021-00	304	5	1510-417-312-00	P01	4	1602-321-004-00	210	8
1427-433-022-00	408	6		P01	9	1612-505-220-00	504	13
1427-433-023-00	408	4	1518-306-203-10	201	24	1614-117-001-00	506	22
1427-433-240-30	408	3		407	8		P08	19-A
1427-433-250-30	408	5	1518-406-006-00	304	2	1614-215-006-00	206	16
1427-441-210-00	P06	2	1518-432-250-10	407	7	1614-433-212-00	407	3
	P06	7	1527-604-002-00	106	15	1614-501-003-10	506	4
1427-441-210-02	P05	2		611	16		P08	3
	P05	7	1544-120-008-10	109	11	1614-505-002-00	504	7
1427-501-003-00	501	3		206	21	1614-505-003-00	504	8
1427-511-001-00	508	13	1544-215-015-00	206	11	1614-505-004-00	504	9
	509	13	1544-215-016-00	206	17	1614-505-007-00	504	17

Numerical Index

Part Code	Fig.	Key
1614-608-220-10	504	20
1614-702-551-20	701	7
	P10	8
1614-702-552-00	404	7
	510	7
	701	8
	P04	8
	P09	8
	P10	9
1620-514-005-00	508	37
	509	31
1636-701-251-00	701	5
	P10	6
1636-901-022-00	903	3
1640-530-008-00	506	23
	P08	20
1640-530-600-10	P08	2
1640-530-610-10	S02	1
	S03	28
1640-530-613-00	S02	2
	S03	1
1640-530-614-00	S02	3
	S03	2
1640-530-615-00	S02	4
	S03	3
1640-530-622-00	S02	8
	S03	7
1640-530-623-00	S02	9
	S03	8
1640-530-624-00	S02	10
	S03	9
1640-530-625-00	S02	12
	S03	11
1640-530-626-00	S02	13
	S03	12
1640-530-628-00	S02	18
	S03	17
1640-530-629-00	S02	19
	S03	18
1640-530-631-00	S02	22
	S03	21
1640-530-632-00	S02	23
	S03	22
1641-516-560-00	507	16
1646-437-211-00	P03	2

Part Code	Fig.	Key
1646-437-211-00	P03	7
1646-437-212-00	P03	4
	P03	9
1650-111-034-00	104	8
	104	10
1650-259-010-00	208	8
	209	5
	209	11
	212	4
1650-509-012-00	507	18
1650-650-222-00	618	2
1650-654-036-00	618	25
1650-705-006-00	603	2
	611	12
1672-103-001-00	102	3
1672-112-240-10	106	5
1672-403-003-00	402	33
1672-502-003-00	502	1
1672-503-210-00	503	18
1673-314-001-00	110	13
	306	8
	306	10
1673-431-001-10	111	5
1673-525-002-30	404	5
	508	3
	508	38
	509	3
	509	32
	510	5
	701	6
	P04	6
	P09	6
	P10	7
1673-730-008-00	306	34
1674-619-300-10	701	35
	P10	43
1674-619-310-00	701	31
	P10	39
1674-652-200-20	613	1-A
1674-652-202-10	613	2-A
1674-654-004-00	614	9
	615	8
1674-654-211-00	614	2
	615	2
1674-654-212-00	614	3

Part Code	Fig.	Key
1674-654-212-00	615	3
1674-654-270-00	614	10
	615	9
1674-654-271-00	614	11
	615	10
1674-654-272-00	614	12
	615	11
1674-654-400-10	614	7
	615	6
1674-904-002-10	903	5
1674-904-005-00	701	36
	P10	37
1675-102-002-00	101	12
	603	4
1675-312-051-00	306	14
1682-102-004-00	101	9
1682-690-380-00	618	24
1682-902-014-00	902	6
1685-317-230-10	P03	3
	P03	8
1685-434-001-00	405	29
1688-201-055-10	201	3
1690-509-340-10	402	18
1690-608-003-00	504	22
1690-705-008-00	406	4
	611	13
1696-120-001-00	110	4
1696-901-006-00	901	6
1703-307-003-00	303	3
1705-102-240-20	101	16
1705-102-251-10	101	20
1705-102-252-20	101	21
1705-902-007-00	903	8
1705-902-008-00	903	6
1705-904-001-00	903	10
1705-904-002-10	903	9
1710-410-001-00	P11	1
1710-608-056-00	504	21
1714-317-200-10	P01	1
1714-317-210-20	P01	2
	P01	7
1714-317-220-10	P01	6
1714-441-200-00	P07	1
1714-441-201-00	P07	3
	P07	8

Numerical Index

Part Code	Fig.	Key	Part Code	Fig.	Key	Part Code	Fig.	Key
1714-441-202-00	P07	4	1725-432-113-00	405	14	1739-670-713-00	616	3
	P07	9	1725-432-114-00	405	15	1739-670-714-00	616	4
1714-441-220-00	P07	6	1725-432-711-00	405	7	1739-670-715-00	616	5
1716-501-006-10	109	12	1725-432-712-10	405	8	1739-681-220-10	617	16
	206	22	1725-432-713-00	405	9	1740-313-300-10	306	23
1716-502-004-10	502	7	1725-432-714-00	405	10	1740-313-301-00	306	27
1716-680-006-00	617	6	1725-432-715-00	405	11	1740-680-530-20	617	1
1716-680-200-20	617	3	1725-432-801-00	405	13	1740-680-550-00	617	7
1717-310-001-00	305	11	1725-434-114-00	405	44	1740-680-551-00	617	8
1717-503-200-10	503	11	1725-434-116-00	405	38	1740-903-075-00	902	5
1719-312-001-00	213	3	1725-434-121-00	405	43	1742-504-004-00	110	8
	214	3	1725-501-118-00	405	57	1742-606-001-10	604	15
	306	15	1725-508-310-00	402	38		605	15
	P10	35	1725-611-087-00	701	13	1750-904-001-00	903	1
1719-511-350-00	506	1		P10	14	1757-625-005-00	701	2
1719-604-011-00	506	25	1726-601-007-00	601	13		P10	3
	P08	23	1726-630-013-00	701	23	1760-604-001-00	105	14
1725-104-312-00	103	8		P10	24		207	8
1725-104-313-00	103	12	1728-407-076-10	402	30		504	19
1725-104-330-00	103	9	1728-903-002-00	903	13	1765-608-001-10	604	13
1725-104-332-00	103	10	1728-903-003-00	903	14		605	13
1725-104-333-00	103	11	1729-111-283-00	105	6	1771-407-001-10	402	27
1725-201-002-00	404	2	1729-111-284-00	105	7	1771-603-001-00	609	9
	407	5	1729-202-004-00	211	3		610	7
	508	19	1729-202-008-00	303	6	1772-521-221-20	404	6
	609	4	1729-202-011-00	211	2		510	6
	610	2	1729-202-014-00	111	2		P04	7
	701	26	1738-312-009-00	306	54		P09	7
	P04	3	1738-312-290-00	306	30	1772-654-280-10	617	21
	P10	27	1738-317-210-00	P02	1	1772-654-281-00	617	22
1725-201-806-00	405	39	1738-317-220-00	P02	6	1772-654-282-00	617	23
1725-212-105-00	405	24	1738-502-001-00	502	3	1773-401-200-00	401	1
1725-218-109-00	405	4	1738-502-210-10	502	11	1773-401-202-10	401	2
1725-219-121-00	405	5	1738-508-210-00	507	1	1773-631-034-00	611	17
1725-271-003-00	110	12	1738-514-001-00	508	4	1773-652-212-00	618	6
	304	4		509	4	1773-652-220-00	617	19
	306	22	1738-514-210-00	508	5	1773-702-001-00	701	3
	306	35		509	5		P10	4
1725-304-713-00	405	41	1739-401-001-00	402	26	1773-702-002-00	701	9
	405	54	1739-407-074-00	402	28		P10	10
1725-308-102-00	405	32	1739-660-210-30	614	1	1773-702-011-00	701	12
1725-308-103-00	405	22		615	1		P10	13
1725-408-200-00	402	45	1739-660-212-00	614	4	1773-702-012-00	701	11
1725-432-107-00	405	3		615	4		P10	12
1725-432-109-00	405	2	1739-670-712-00	616	2	1773-702-260-10	701	4

Numerical Index

Part Code	Fig.	Key	Part Code	Fig.	Key	Part Code	Fig.	Key
1773-702-260-10	P10	5	1776-112-310-10	106	9	1776-208-002-00	207	6
1773-902-015-00	506	24	1776-116-200-10	107	1	1776-208-004-00	101	15
	P08	21-A	1776-117-002-00	108	9		207	7
1774-105-200-00	104	1	1776-117-200-00	108	7	1776-208-210-20	207	1
1774-105-202-00	104	2	1776-117-210-10	108	1	1776-208-220-10	207	3
1774-105-203-00	104	3	1776-120-001-40	109	1	1776-209-001-00	208	1
1774-105-204-00	104	4	1776-120-002-00	109	22	1776-209-004-10	208	10
1774-105-205-00	104	5	1776-120-210-00	109	26	1776-209-200-00	208	2
1774-111-310-10	105	5	1776-120-220-00	109	27	1776-209-210-00	208	5
1774-111-311-00	105	8	1776-120-230-00	109	24	1776-210-001-00	209	1
1774-218-001-00	213	1	1776-120-240-00	109	23	1776-210-002-00	209	2
	214	1	1776-122-001-00	110	14	1776-210-003-10	209	3
1774-218-210-00	214	2	1776-122-200-10	110	1	1776-210-004-10	209	4
	P10	33	1776-122-260-00	110	17	1776-210-005-00	209	10
1774-310-001-00	305	1	1776-125-001-10	111	1	1776-211-001-10	210	1
1774-310-002-00	305	5	1776-201-001-20	201	1	1776-211-002-10	210	2
1774-310-003-00	305	2	1776-201-002-10	201	15	1776-211-003-10	210	9
	305	6	1776-201-003-00	201	18	1776-212-001-10	211	1
1774-310-004-00	305	3	1776-201-011-00	108	5	1776-216-002-10	212	6
	305	7		201	7	1776-216-210-00	212	1
1774-507-330-00	506	15	1776-202-001-10	202	1	1776-218-210-00	213	2
	P08	12	1776-202-002-10	202	6	1776-304-001-10	301	18
1774-922-200-10	P12	1	1776-202-003-00	202	7	1776-304-002-00	301	19
1776-102-001-00	101	2	1776-202-004-00	202	8	1776-304-005-00	301	21
1776-102-002-00	101	5	1776-202-005-00	202	9	1776-304-510-00	301	1
1776-102-003-00	101	8	1776-202-006-00	202	10	1776-304-511-00	301	2
1776-102-004-00	101	13	1776-203-001-00	203	5	1776-304-512-00	301	3
1776-102-200-00	101	1	1776-203-002-00	203	6	1776-304-513-00	301	4
1776-102-210-00	101	11	1776-203-003-00	203	7	1776-304-514-00	301	5
1776-103-210-00	102	1	1776-203-004-00	203	8	1776-304-515-00	301	6
1776-104-001-00	103	2	1776-203-005-00	203	9	1776-304-516-00	301	7
1776-104-002-00	103	4		204	2	1776-304-517-00	301	8
1776-104-003-00	103	6	1776-203-200-00	203	1	1776-306-001-20	302	1
1776-104-210-00	103	1	1776-204-001-00	204	1	1776-306-002-20	302	2
1776-105-001-00	104	11	1776-204-002-00	204	5	1776-307-001-00	303	1
1776-105-002-00	104	9	1776-205-001-00	205	1	1776-307-002-00	303	2
1776-105-003-00	104	7	1776-205-002-00	205	2	1776-309-001-00	304	3
1776-111-001-00	105	1	1776-207-001-10	206	1	1776-309-200-10	304	1
1776-111-003-00	105	15	1776-207-002-00	206	7	1776-310-200-00	305	9
1776-111-004-00	105	2	1776-207-003-10	206	19	1776-312-004-00	306	6
1776-111-200-30	105	11-A	1776-207-004-00	206	9	1776-312-005-10	306	39
1776-111-210-00	105	9	1776-207-008-00	206	8	1776-312-006-00	306	17
1776-112-001-10	106	7	1776-207-200-20	206	4		306	40
1776-112-002-00	106	14	1776-207-220-00	206	10	1776-312-011-00	306	52
1776-112-210-10	106	1	1776-207-230-10	206	15	1776-312-012-00	306	48

Numerical Index

Part Code	Fig.	Key	Part Code	Fig.	Key	Part Code	Fig.	Key
1776-312-210-10	306	2-A	1776-434-009-00	405	37	1776-514-240-00	509	18
1776-312-220-10	306	9-A	1776-434-012-00	405	47	1776-514-241-00	508	28
1776-312-230-00	306	1	1776-434-013-00	405	48		509	22
1776-312-300-10	306	16	1776-434-021-00	405	34	1776-514-250-00	508	25
1776-312-340-00	306	36	1776-434-024-00	405	21		509	19
1776-317-210-00	P03	1	1776-434-027-00	405	28	1776-514-260-00	508	26
1776-317-220-00	P03	6	1776-434-031-00	405	33		509	20
1776-407-001-00	402	8	1776-434-032-00	405	31	1776-514-270-00	508	27
1776-407-210-00	402	1	1776-434-035-00	405	49		509	21
1776-407-220-00	402	16	1776-434-038-00	405	52	1776-514-310-00	508	32
1776-407-230-00	402	44	1776-434-041-00	405	42		509	26
1776-407-250-00	402	31	1776-434-042-00	405	45	1776-514-320-00	508	33
1776-407-310-00	402	24		405	56		509	27
1776-407-320-00	402	10	1776-434-043-00	405	50	1776-514-330-00	508	34
1776-410-310-10	403	1	1776-434-051-00	405	46		509	28
1776-411-002-00	404	1	1776-434-220-00	405	51	1776-514-340-00	508	35
	P04	2	1776-435-001-00	405	17		509	29
1776-411-200-00	404	3	1776-435-002-00	405	18	1776-514-350-00	508	36
	510	3	1776-436-210-00	408	1		509	30
	P04	4	1776-436-211-00	408	2	1776-514-410-10	508	17
	P09	4	1776-437-210-00	P06	1	1776-514-420-10	508	18
1776-411-210-00	404	4	1776-437-220-00	P06	6	1776-514-500-00	508	8
	510	4	1776-501-300-00	501	1		509	8
	P04	5	1776-502-001-00	502	4	1776-514-501-00	508	12
	P09	5	1776-505-001-00	504	15		509	12
1776-411-300-00	P04	1	1776-505-004-00	504	12	1776-514-510-00	508	9
1776-431-001-00	406	3	1776-505-005-00	504	18		509	9
1776-431-002-00	406	5	1776-505-310-20	504	1	1776-514-520-00	508	11
1776-431-210-00	406	1	1776-505-320-00	504	6		509	11
1776-432-003-00	405	6	1776-507-001-00	506	8	1776-514-530-00	508	10
1776-432-210-10	405	1		P08	7		509	10
1776-433-002-00	405	16	1776-507-210-10	506	18	1776-520-001-10	510	8
1776-433-003-00	405	53		P08	15		P09	9
1776-433-004-00	405	55	1776-507-910-30	P08	1-A	1776-520-210-00	510	1
1776-433-005-00	405	58	1776-508-001-00	507	4		P09	2
1776-433-006-00	405	60	1776-508-280-00	507	14	1776-520-300-00	P09	1
1776-433-510-00	407	2	1776-508-500-00	507	8	1776-601-002-00	601	2
1776-434-001-00	405	19	1776-509-210-00	507	12	1776-601-003-00	601	4
1776-434-002-10	405	25	1776-509-220-00	507	13	1776-601-004-00	601	9
1776-434-003-00	405	20	1776-509-240-00	507	2	1776-601-005-00	601	10
1776-434-004-00	405	23	1776-514-220-00	508	1	1776-601-006-10	601	14-A
1776-434-005-00	405	27		509	1	1776-601-007-10	601	17
1776-434-006-00	405	40	1776-514-230-00	508	23	1776-601-200-30	601	1-A
1776-434-007-00	405	26		509	17	1776-601-220-10	601	15
1776-434-008-00	405	35	1776-514-240-00	508	24	1776-601-230-00	601	16

Numerical Index

Part Code	Fig.	Key	Part Code	Fig.	Key	Part Code	Fig.	Key
1776-602-001-00	602	1	1776-630-300-10	611	19	1776-904-003-10	903	12
1776-602-002-00	602	2	1776-630-310-00	611	4	1776-904-004-00	903	7
1776-603-004-00	603	1	1776-635-200-00	612	1	1782-407-006-00	502	10
1776-603-005-00	603	3	1776-660-230-10	614	5	1785-702-005-00	701	10
1776-606-005-20	604	1-A	1776-670-310-00	616	1		P10	11
	605	1	1776-680-001-00	617	14	1789-120-210-20	201	23
1776-606-006-30	604	7-A	1776-680-002-00	617	15	1789-408-006-00	402	25
1776-606-007-10	605	7	1776-690-310-20	618	1	1789-408-011-00	402	49
1776-606-230-00	604	16	1776-690-312-00	618	7	1789-408-300-10	402	32
	605	16	1776-690-320-00	618	27	1789-601-007-20	601	6
1776-611-005-00	606	2	1776-690-330-00	619	1	1789-680-240-00	617	24
1776-611-270-10	606	4	1776-702-002-10	701	33	1800-652-400-00	617	18
1776-611-280-10	606	1		P10	41	1801-104-205-00	103	13
1776-612-210-20	607	1	1776-702-003-00	701	29	1805-202-011-00	301	20
	608	1		P10	30	1805-202-017-00	303	5
1776-612-211-10	607	2	1776-702-200-10	P10	1	2139-505-002-00	105	13
	608	2	1776-702-220-00	701	24		604	5
1776-612-212-00	607	3		P10	25		604	11
	608	3	1776-702-230-00	701	25		605	5
1776-612-213-00	607	4		P10	26		605	11
	608	4	1776-702-240-10	701	16		611	8
1776-612-214-00	607	5		P10	17	2144-519-007-00	506	19
	608	5	1776-702-250-10	701	1		P08	16
1776-612-215-00	607	6		P10	2	2161-222-003-00	306	44
	608	6	1776-702-260-10	701	20	2171-213-002-00	208	14
1776-612-216-00	607	7		P10	21	2186-536-211-00	617	4
	608	7	1776-702-270-10	701	15	2186-536-212-00	617	5
1776-612-217-00	607	8		P10	16	2500-326-017-00	618	14
	608	8	1776-702-400-20	P10	38	2500-901-027-00	904	1
1776-612-250-00	608	9	1776-901-001-00	901	1	2512-206-001-00	110	6
1776-612-252-00	608	10	1776-901-002-00	901	2		306	5
1776-612-253-00	608	11	1776-901-003-00	901	5		306	13
1776-612-254-00	608	12	1776-901-004-00	901	7	2512-501-240-00	507	6
1776-612-255-00	608	13	1776-901-005-00	901	3	3104-210-007-00	108	2
1776-626-200-10	609	1	1776-902-001-00	902	1	3533-901-012-00	901	4
1776-626-210-10	609	3-A	1776-902-002-00	902	2	3560-503-302-00	406	6
	610	1-A	1776-902-003-00	902	3	3650-831-004-00	102	4
1776-630-003-00	611	14	1776-902-004-00	902	4	3659-480-003-00	306	53
1776-630-005-10	611	11	1776-902-005-00	902	7	3662-223-003-00	110	7
1776-630-006-00	611	15	1776-902-006-00	902	8	3662-260-003-00	106	11
1776-630-007-20	611	21-A	1776-902-007-00	902	9	3666-202-005-10	106	4
1776-630-008-00	611	3	1776-902-008-00	902	10		402	2
1776-630-270-10	611	1	1776-902-009-00	902	11		601	11
1776-630-280-10	611	2	1776-904-001-00	903	11	3680-214-004-00	212	10
1776-630-290-20	611	18	1776-904-002-00	903	2	3737-172-011-00	201	14

Numerical Index

Part Code	Fig.	Key
3737-172-011-00	402	7
	403	6
	405	59
	501	11
	618	19
3801-493-003-00	606	6
3814-114-001-00	306	29
3817-710-009-00	508	30
	509	24
3820-412-051-00	306	18
	306	42
3821-262-202-00	618	4
3821-262-203-00	618	5
3824-247-202-00	618	3
3830-201-001-00	306	43
4101-102-038-00	105	4
6221-408-008-00	101	17
6221-408-009-00	101	18
6221-408-010-00	101	19
6221-408-013-00	101	22
6281-971-003-00	905	1
6282-450-012-00	905	2
6901-931-225-00	303	9
	407	6
6901-931-240-00	302	3
	501	18
	510	2
	P09	3
7821-501-005-00	601	7
7957-501-004-00	606	7
8595-901-007-00	903	4
J061-112-022-00	402	50
J061-120-032-00	507	5
J061-224-032-00	101	3
	101	7
J061-230-038-00	101	4
	101	6
J061-247-055-00	103	3
J062-087-093-00	104	12
J062-138-148-00	109	13
	206	23
J062-147-159-00	101	10
K110-001-106-00	S02	20
	S03	19
K200-014-007-00	S02	27

Part Code	Fig.	Key
K200-014-007-00	S03	26
K200-103-300-00	402	20
K211-001-000-00	503	8
K211-001-006-20	S01	2
K211-001-007-00	S01	3
K211-001-008-00	402	12
	S01	4
K211-001-009-00	S01	5
K211-001-100-10	S01	1
K211-004-006-00	S02	7
	S03	6
K211-004-007-00	S02	6
	S02	16
	S03	5
	S03	15
K211-012-006-00	S02	5
	S03	4
K211-035-005-00	402	14
K233-021-000-00	402	11
K250-001-000-00	501	13
K250-001-009-00	501	15
K250-019-000-10	S01	9
K510-001-029-00	506	2
P103-112-003-20	105	16
P103-208-005-10	204	3
P118-601-005-00	402	40
V120-265-003-00	618	26
V120-366-002-00	616	6
V120-376-001-60	604	17
	605	17
V201-260-801-60	501	25
V201-260-811-00	507	9
V201-260-817-00	504	4
V201-261-001-6B	208	7
	212	3
V201-261-008-00	506	6
	P08	5
V201-360-802-50	508	6
	509	6
V201-361-006-00	302	9
V201-361-010-00	501	5
V201-361-202-50	P11	2
V201-361-203-50	701	27
	P10	28
V201-361-204-00	701	18

Part Code	Fig.	Key
V201-361-204-00	P10	19
V201-361-205-50	302	4
V201-361-206-00	501	19
V201-361-207-00	302	6
V201-361-208-50	508	20
V210-360-601-20	617	17
	617	20
V210-360-601-60	201	22
	601	5
	601	12
	602	3
	701	32
	P10	40
V210-360-602-00	101	14
V211-260-801-60	103	5
	109	28
	503	21
V211-260-802-00	206	14
	506	17
	P08	14
V211-260-802-50	505	3
V211-260-804-00	402	22
V211-260-805-00	402	23
	503	9
V211-261-001-60	618	20
V211-360-801-60	106	2
	106	12
	402	48
	504	16
	507	19
	601	8
	618	9
	618	22
V211-360-802-00	103	7
	104	6
	105	3
	105	12
	110	18
	306	28
	604	2
	604	8
	605	2
	605	8
	606	3
	606	5

Numerical Index

Part Code	Fig.	Key
V211-360-802-00	609	2
V211-360-802-50	604	4
	604	10
	605	4
	605	10
	611	6
	701	34
	P10	42
V211-360-803-00	206	2
V211-361-002-00	611	5
V211-361-002-50	611	20
V211-560-802-00	102	2
	109	3
	206	20
	402	9
V211-560-802-50	301	10
	301	17
	506	12
	P08	22
V211-560-803-50	406	2
V211-561-001-60	503	6
V211-561-002-50	402	3
	403	4
V211-561-003-00	403	5
	701	30
	P10	31
V211-660-803-50	109	6
	402	29
V211-661-002-00	601	3
V211-661-002-50	607	9
	608	14
	701	21
	P10	22
V211-661-003-50	109	14
V211-661-004-00	201	6
	501	4
V211-661-004-50	109	2
	501	6
V220-540-601-00	S02	26
	S03	25
V220-540-802-00	S02	15
	S03	14
V230-360-601-20	617	2
V230-360-601-60	618	13
V230-360-606-50	406	7

Part Code	Fig.	Key
V231-360-801-20	618	16
V231-360-801-60	213	4
	214	4
	P10	34
V231-360-802-50	201	16
	201	20
	305	13
V231-361-201-60	213	6
V251-260-802-0D	506	11
	P08	9
V251-261-205-50	304	6
V251-340-802-00	109	4
V251-340-804-00	109	5
V251-341-002-50	402	4
V251-341-003-00	201	2
V251-361-202-5D	201	8
V252-341-003-00	201	4
	201	11
V252-341-003-50	201	5
V252-341-005-50	201	9
V252-341-202-50	609	6
	610	4
V252-341-205-00	201	10
V301-260-006-00	106	6
V304-260-008-00	110	5
	110	10
	206	6
	207	5
	306	20
	306	32
	306	41
	306	47
	504	3
V304-260-010-00	108	6
	301	29
	504	11
	701	14
	P10	15
V304-260-012-00	304	7
	306	49
V304-260-016-00	502	8
V304-460-008-00	109	7
	506	13
	P08	10
V304-460-010-00	109	15

Part Code	Fig.	Key
V304-460-010-00	302	10-A
	402	6
	501	9
V304-460-012-00	208	11
	212	7
	302	5
	609	8
	610	6
	701	17
	P10	18
V305-260-008-00	508	7
	509	7
V305-260-012-00	P12	3
V327-262-110-00	408	8
V328-262-112-00	402	42
V334-460-016-00	508	16
	509	16
V360-260-004-00	105	10
V360-260-006-00	601	18
V361-260-006-00	406	8
V362-260-008-00	105	17
	106	10
	507	11
	604	3
	604	9
	605	3
	605	9
	612	2
	614	6
	615	5
	701	37
	P10	44
V363-260-008-00	611	7
V363-260-010-00	604	14
	605	14
	607	10
	608	15
	701	22
	P10	23
V401-160-006-00	110	19
	306	4
	306	12
	306	38
V401-160-008-00	109	8
	504	5

Numerical Index

Part Code	Fig.	Key
V401-160-008-00	506	14
	507	10
	P08	11
	S02	14
	S03	13
V401-160-010-00	109	17
	301	30
	302	11
	402	5
	408	7
	501	8
	506	7
	P08	6
V401-160-012-00	208	12
	212	8
	302	7
	306	50
	402	41
	501	20
	508	21
	609	7
	610	5
	701	19
	701	28
	P10	20
	P10	29
	P11	3
V401-160-016-00	508	15
	509	15
V402-160-016-00	502	9
V411-260-004-00	614	8
	615	7
V411-260-005-00	503	17
V411-260-006-00	107	3
	110	15
	503	14
	506	21
	P08	18
V411-260-008-00	109	10
	213	5
	214	5
	306	19
	P10	36
V411-260-010-00	109	16
	302	12

Part Code	Fig.	Key
V411-260-010-00	403	7
	501	7
	503	7
	504	10
	508	40
	509	34
	601	19
V411-260-012-00	302	8
	304	8
	306	51
	508	22
	609	5
	610	3
	P11	4
V411-260-016-00	208	13
	212	9
	508	31
	509	25
V500-161-601-50	504	23
V500-162-001-50	107	2
	108	8
	110	16
	503	13
	503	16
V500-162-502-00	408	9
	508	14
	509	14
	601	20
	P10	32
V500-162-502-50	402	43
V522-100-801-80	302	13
	501	10
V523-100-801-60	109	29
	206	3
	301	9
V523-101-002-40	109	18
	201	17
	201	19
V530-240-502-40	301	25
V560-160-006-00	506	20
	P08	17
V580-140-302-00	109	25
V580-140-302-50	S02	24
	S03	23
V580-140-403-20	501	23

Part Code	Fig.	Key
V580-140-502-00	504	14
V580-140-502-50	208	3
	209	8
V580-140-601-60	204	6
V600-110-600-90	301	11
V600-110-601-00	301	12
V600-110-620-40	202	3
	203	11
	205	3
	210	4
V600-110-620-50	210	10
V600-110-630-30	210	11
V600-110-630-50	202	4
V600-110-690-70	405	30
V607-110-620-40	202	11
V607-110-620-50	210	6
V682-200-000-60	S02	11
	S03	10
V682-200-001-00	208	9
	209	6
	209	12
	212	5
V682-200-001-90	305	4
	305	8
V704-140-014-00	209	9
V704-140-020-00	111	3
	202	12
V704-140-022-00	204	4
V704-140-025-00	202	5
	210	7
	306	7
V704-140-030-00	210	3
	303	7
V704-140-035-00	502	6
V705-140-024-00	S02	17
	S03	16
V705-140-028-00	206	12
V705-140-047-00	111	4
	203	12
	210	5
V706-140-040-00	502	5
V707-140-080-00	303	8
V720-101-900-70	501	22
	503	20
V720-102-401-00	209	7

Numerical Index

Part Code	Fig.	Key
V720-102-401-00	301	27
	503	23
V720-102-401-60	201	13
	207	2
	208	6
	212	2
	302	15
V720-102-402-20	305	10
V720-103-502-50	109	21
V720-103-502-80	507	3
V720-103-504-20	407	1
V720-105-705-50	503	2
V720-111-900-60	S01	8
V720-111-900-70	S02	25
	S03	24
V720-112-401-10	402	17
	402	21
	402	39
V720-112-401-20	402	13
	501	14
	501	16
	505	2
	506	5
	506	9
	P08	4
	S01	7
	S02	21
	S03	20
V720-112-401-40	506	3
	507	15
	507	17
	S02	28
	S03	27
V720-112-401-80	402	19
	507	7
V720-113-502-90	402	36
V721-103-107-00	407	4
V721-103-111-50	305	12
V721-113-106-00	501	17
V723-102-003-00	206	13
V723-102-003-80	402	37
V742-135-500-60	502	2
V744-120-350-70	202	2
	205	4
V744-135-550-80	211	4

Part Code	Fig.	Key
V760-150-000-00	109	20
	110	3
	306	3
	306	11
	306	37
V780-140-000-10	403	3
V780-140-000-1T	402	15
	S01	6
V782-160-000-2T	506	10
	P08	8
V782-160-000-4B	109	19
V881-005-001-20	P05	4
	P05	9
V883-005-001-20	P06	4
	P06	9
V889-000-081-60	P02	4
	P02	9
V999-200-003-00	P01	5
	P01	10
	P02	5
	P02	10
	P03	5
	P03	10
	P05	5
	P05	10
	P06	5
	P06	10
	P07	5
	P07	10
W201-260-806-50	504	2
W201-261-206-00	P12	2

Alpabetical Index

Description	Fig.	Key
ALTERNATOR ASSY	11	9
	14	27
ARM	4	29
ARM COMPL	4	15
ARMATURE ASSY	15	2
BALL BEARING	1	11
	3	18
	14	3
	14	7
BEARING	6	18
	15	18
	15	19
BEARING COVER	14	8
BOLT	2	5
	2	11
	2	12
	3	12
	3	21
	3	22
	4	25
	4	27
	4	28
	4	36
	4	37
	4	38
	5	14
	5	18
	6	2
	6	3
	6	8
	6	11
	6	14
	6	19
	7	4
	7	13
	7	20
	8	15
	9	11
	9	12
	9	16
	10	6
	10	7
	10	15
	11	6
	11	10

Description	Fig.	Key
BOLT	11	12
	11	16
	14	5
	14	10
	14	18
	14	23
	15	14
	15	15
BOLT BANJO	8	13
BOLT.CONNECTING ROD	2	20
BOLT.CYLINDER HEAD	5	15
	5	16
BRUSH SUB ASSY	14	20
BUSH:STD	1	10
BUSHING	2	19
	15	21
CAMSHAFT ASSY	3	13
CAP	9	8
CAP NUT	9	7
CASE.GEAR	4	1
CASE.THERMOSTAT	10	8
CLAMP	7	12
CLUCH SUB ASSY	15	3
COCK	1	23
COLLAR	3	8
	11	15
	14	24
CONNECTOR	7	24
	10	12
COTTER	5	10
COUPLING	12	3
COVER	4	24
	7	18
COVER END	14	22
COVER.CYLINDER HEAD	9	2
CRANKSHAFT COMPL	2	1
CYLINDER BLOCK	1	1
DOWEL PIN	1	14
	1	15
	1	16
	2	3
	2	6
ELBOW.INTAKE:SB	9	14
EXHAUST MANIFOLD	5	20
EXPANSION PLUG	1	12

Description	Fig.	Key
EYE BOLT	13	3
FAN.COOLING	11	5
FILTER.OIL	11	18
FILTER.SUCTION	6	7
FLYWHEEL COMPL	6	16
GASKET	3	11
	4	3
	4	21
	6	20
	7	8
	7	19
	8	14
	9	6
	10	2
	10	4
	10	9
	12	1
	13	2
GASKET.CYLINDER HEAD	5	17
	5	17
GASKET:AIR INTAKE	9	15
GASKET:EXH	5	21
GASKET:HEAD COVER	9	1
GASKET:M8	8	12
GEAR	3	16
GEAR ASSY.IDLE	3	1
GEAR COMPL.CAMSHAFT	3	14
GEAR.CRANKSHAFT	2	2
GEAR.RING	6	17
GUIDE	6	9
HANGER:NO COLOUR	5	13
HARNESS.WIRE	7	21
HEAD ASSY.CYLINDER	5	1
HOLDER ASSY	14	12
	15	6
HOLDER ASSY. BRUSH	14	19
HOLDER ASSY.BEARING	2	4
	2	7
	2	8
	12	2
HOLDER.FAN	11	19
HOUSING ASSY	15	4
INJECTOR	7	5
	13	5
JOINT	13	4

Alpabetical Index

SB01-097-110-00

Description	Fig.	Key
JOINT.FILTER	11	17
KEY	3	15
	11	3
LEVEL GAUGE COMPL	6	12
LEVER ASSY.GOVERNOR	4	6
LEVER.GOVERNOR	4	7
	4	18
METAL KIT:S.T.D.	2	9
METAL KIT:STD.	2	10
METAL.PIN:STD	2	21
MOTOR ASSY.STARTING	6	15
	15	23
NEEDLE BEARING	1	13
NOZZLE ASSY	13	9
NUT	2	18
	4	22
	4	23
	4	34
	5	19
	7	3
	7	6
	7	14
	7	22
	8	5
	8	16
	9	13
	10	5
	11	2
	11	11
	13	6
	14	11
	14	14
	15	17
OIL PAN	6	1
OIL PUMP COVER	3	5
OIL SEAL	4	4
	6	21
OIL STOPPER	9	4
O-RING	1	21
	4	12
	4	16
	4	31
	6	5
	6	10
	8	8

Description	Fig.	Key
O-RING	9	9
	12	4
	12	5
	15	20
PIN.PISTON	2	16
PINION	15	8
PIPE	6	6
PIPE.INJECTION	7	9
	7	10
	7	11
PIPE.OIL	8	18
PIPE.RETURN	7	17
PISTON KIT:STD	2	13
PLATE	3	20
	4	19
PLATE.ADJUSTING	11	8
PLATE.FRONT	3	10
PLATE.SET	10	3
PLUG	1	5
	1	6
	1	7
	8	9
	10	13
PLUG.GLOW	7	23
PULLEY	14	25
PULLEY.CRANKSHAFT	11	1
PULLEY.FAN	11	4
PUMP ASSY.INJECTION	7	1
	13	1
PUMP ASSY.WATER	10	1
REAR END FRAME	14	9
REAR PLATE	6	13
REGULATOR ASSY	14	15
RETAINER	5	9
	15	10
RETAINER PLATE	14	2
RING KIT.PISTON	2	14
ROCKER ARM	8	2
	8	3
ROCKER ARM ASSY	8	1
ROD ASSY.CONNECTING	2	17
ROD.PUSH	1	24
ROLLER	15	9
ROTOR	3	4
ROTOR ASSY	14	6

Description	Fig.	Key
RUBBER CAP	15	22
SCREW	7	15
	8	4
	9	5
	14	16
	14	17
	15	16
SEAL WASHER	6	4
	7	16
	10	14
SEAL.VALVE GUIDE	5	8
SEALING CAP	1	2
	1	3
	1	4
	5	3
	5	4
SEAT.VALVE:IN	5	2
SERVICE PARTS	14	1
	14	13
	14	26
	15	7
SHAFT.GOVERNOR	4	11
SHAFT.IDLE GEAR	1	8
SHAFT.ROCKER ARM	8	6
SHIM SET	3	6
	7	2
	13	8
SLIDER COMPL	3	19
SNAP PIN	4	10
SNAP RING	1	9
	2	15
	3	9
	4	9
	4	13
	4	17
	4	30
SOLENOID	10	16
SPACER	3	17
SPRING	3	2
	3	7
	4	14
	4	32
	5	11
	8	7
	10	10

Alpabetical Index

Description	Fig.	Key	Description	Fig.	Key	Description	Fig.	Key
SPRING	14	21						
	15	12						
	15	13						
SPRING PIN	1	17						
	4	2						
	8	10						
SPRING:RETURN	4	20						
SPRING:START	4	5						
STAY	4	26						
STEEL BALL	15	11						
STOP LEVER	4	35						
STOPPER.OIL	9	3						
STUD BOLT	1	18						
	1	19						
	1	20						
	5	5						
	5	22						
	8	11						
	8	17						
	14	4						
SWICH ASSY	15	5						
TAPPET	1	25						
	1	26						
THERMOSTAT COMPL	10	11						
VALVE ASSY.RELIEF	1	22						
VALVE CAP	5	12						
VALVE.BREATHER	9	10						
VALVE.EXHAUST	5	7						
VALVE.INTAKE	5	6						
V-BELT:FM29	11	7						
WASHER	4	8						
	4	33						
	7	7						
	11	13						
	11	14						
	13	7						
WASHER.THRUST	3	3						
YOKE ASSY	15	1						

Alpabetical Index

1776-095-110-00

Description	Fig.	Key
ADAPTER	402	40
ADAPTER/G1/2-L20	507	6
ADAPTER/G1/4	402	20
	402	25
ADAPTER/L/G1/4 ASSY	402	18
	402	38
ADAPTER/L/M20 ASSY	507	16
ADAPTER/M20-G1/ ASSY	402	16
ADAPTER/M20-G3/ ASSY	507	14
ARM/1ST COMP	506	18
	P08	15
ARM/BRAKE	306	48
ARM/CLUTCH COMP	109	23
ARM/DIFF COMP	304	1
ARM/DIFFLOCK	301	28
ARM/KNUCKLE/LH/U	405	46
ARM/KNUCKLE/RH	405	47
ARM/LIFT	502	4
ARM/MIRROR ASSY	701	31
	P10	39
ARM/PARKING	306	39
ARM/PARKING COMP	306	36
ARM/POSITION COMP	504	6
	504	13
ARM/SHIFT/4WD COMP	208	5
ARM/SHIFT/MAIN COMP	206	15
ARM/SHIFT/PTO COMP	212	1
ARM/SHIFT/SUB COMP	207	1
BACKLE/TURN COMP	508	11
	508	26
	508	34
	509	11
	509	20
	509	28
BALL	208	9
	209	6
	209	12
	212	5
	305	4
	305	8
	S02	11
	S03	10
BAND	106	13
	618	17
	618	18
BAND	701	7
	P10	8
BAND,WIRE/140	101	27
	402	46
	402	51
	618	11
	618	12
BAND/WIRE/250	618	10
BATTERY/44B19R ASSY	106	5
BEARING	203	3
	206	11
	405	30
BEARING,RB/6009	301	11
BEARING,RB/6010	301	12
BEARING,RB/6204	202	3
	203	11
	205	3
	210	4
BEARING,RB/6204NR	202	11
BEARING,RB/6205	210	10
BEARING,RB/6205NR	210	6
BEARING,RB/6303	210	11
BEARING,RB/6305	202	4
BEARING/6005/KBC	405	24
BEARING/6008/KBC	405	28
BEARING/6010/KBC	405	13
BEARING/6205/KBC	405	39
BEARING/6205HL/KBC	405	2
BEARING/6206/KBC	405	38
BEARING/6305/KBC	405	21
BEARING/BALL	111	2
	211	2
	211	3
	303	6
BEARING/BALL 6305SH2	203	2
BEARING/BALL/6206	301	20
BEARING/BALL/6306	303	5
BEARING/NEEDLE	202	10
	203	9
	204	2
BELT/SEAT SET	608	9
BLUB/12V-21/5W	614	4
	615	4
BOLT	102	4
	302	3
BOLT	302	4
	302	9
	501	18
	501	19
	504	2
	508	20
	510	2
	P09	3
	S02	26
	S03	25
BOLT 7T(SP)	607	9
	608	14
	701	21
	P10	22
BOLT(S) M10X16	618	20
BOLT(S)7	503	6
BOLT(SP)/M6X16	201	22
	601	5
	601	12
	602	3
	701	32
	P10	40
BOLT,BATTERY	106	8
BOLT,SEMS	402	22
	611	5
	617	17
	617	20
BOLT,SEMS (SP)	106	2
	106	12
	402	48
	504	16
	507	19
	601	8
	618	9
	618	22
BOLT,SEMS (S) M8X16	103	5
	109	28
	503	21
BOLT,SEMS/M12X25	303	9
	407	6
BOLT,SEMS/M8X25 7T	301	10
	301	17
	506	12
	P08	22
BOLT,SM/M08X25	206	5

Alpabetical Index

Description	Fig.	Key
BOLT,SM/M08X25	207	4
BOLT.S M8X170	504	4
BOLT/FLANGE/M08X05	405	42
BOLT/KNOB/M06X27	504	22
BOLT/M 8X110	507	9
BOLT/M 8X16	501	25
BOLT/M 8X25	508	6
	509	6
BOLT/M06X16	406	4
	611	13
BOLT/M10X1.25X20	608	10
BOLT/M10X100	501	5
BOLT/M10X20	601	3
BOLT/M10X25	402	3
	403	4
BOLT/M10X30	403	5
	701	30
	P10	31
BOLT/M10X35	201	5
BOLT/M10X80	506	6
	P08	5
BOLT/M12X25	P11	2
BOLT/M12X35	701	27
	P10	28
BOLT/M12X40	701	18
	P10	19
BOLT/M12X60	P12	2
BOLT/M12X70	302	6
BOLT/M16X90	701	2
	P10	3
BOLT/M5X30	618	26
BOLT/M8X20	102	2
	109	3
	206	20
	402	9
BOLT/M8X50	402	23
	503	9
BOLT/S	206	14
	404	2
	406	2
	407	5
	505	3
	506	17
	508	19
	609	4
BOLT/S	610	2
	701	26
	P04	3
	P08	14
	P10	27
BOLT/S/M08X25	405	50
BOLT/S/M10X35	405	45
	405	56
BOLT/SEAL	208	7
	212	3
BOLT/SM/M08X40	110	4
BOLT/SP	101	14
	103	7
	104	6
	105	3
	105	12
	109	2
	109	6
	109	14
	110	18
	201	6
	206	2
	306	28
	402	29
	501	4
	501	6
	604	2
	604	4
	604	8
	604	10
	605	2
	605	4
	605	8
	605	10
	606	3
	606	5
	609	2
	611	6
	611	20
	701	34
	P10	42
BOLT/STUD	109	4
	109	5
	201	2
	201	4
BOLT/STUD	201	9
	201	10
	201	11
	304	6
	402	4
	405	55
	609	6
	610	4
BOLT/STUD/SEAL	201	8
	506	11
	P08	9
BOOT	206	8
	617	23
BOOT,CHANGE	206	17
BOOT/HORN	617	13
BRACKET COMP	213	2
	214	2
	P10	33
BRACKET/AXLE/U ASSY	403	1
BRACKET/BATTERY COMP	106	1
BRACKET/GRILLE	602	2
BRACKET/LAMP COMP	614	5
BRACKET/LEVER COMP	504	1
BRACKET/LH COMP	508	17
BRACKET/MIRROR	701	33
	P10	41
BRACKET/REFLECTOR	604	16
	605	16
BRACKET/RH COMP	508	18
BRACKET/SEAT COMP	606	4
BRACKET/SEAT/F COMP	606	1
BRACKET/STEP/LH COMP	611	18
BRACKET/STEP/RH COMP	611	19
BRACKET/SWITCH COMP	110	17
BRACKET/TANK COMP	105	11-A
BULB/12V/45/40W	613	2-A
BULB/12V/5W	614	11
	615	10
BULB/12V21W	614	2
	615	2
BULB/12V5W	614	3
	615	3
BULB/LAMP/14V60MA	617	8
BUSH,LEVER	106	3
BUSH/10X12X20	506	16

Alpabetical Index

1776-095-110-00

Description	Fig.	Key
BUSH/10X12X20	P08	13
BUSH/19X30X14	601	7
BUSH/35X39X26	403	2
BUSH/35X39X30	501	3
BUSH/40X43X30	501	2
BUSH/62X67X30	407	3
BUTTON	306	26
CABLE/ACCELERATOR	107	1
CABLE/BATTERY ASSY	106	9
CABLE/BATTERY/420	106	11
CABLE/THROTTLE ASSY	108	7
CAM,DIFF-LOCK	301	24
CAM/BRAKE COMP	305	9
CAP	101	17
CAP COMP	103	9
CAP,OIL	407	7
CAP,PTO SHAFT	201	21
CAP,TIRE VALVE	P01	5
	P01	10
	P02	5
	P02	10
	P03	5
	P03	10
	P05	5
	P05	10
	P06	5
	P06	10
	P07	5
	P07	10
CAP/22	609	9
	610	7
CAP/NONLEAK ASSY	105	5
CAP/WHEEL	401	2
CASE/CYLINDER ASSY	501	1
CASE/DIFF	301	2
CASE/DIFFERENTIAL/FR	405	7
CASE/DIFFERENTIAL/RE	301	1
CASE/FINAL/A	405	19
CASE/FINAL/B	405	25
CASE/JOINT	406	3
CASE/TRANSMISSION/FR	201	1
CASE/TRANSMISSION/RE	201	3
CHAIN/CHECK/LH COMP	508	9
	509	9
CHAIN/CHECK/RH COMP	508	10

Description	Fig.	Key
CHAIN/CHECK/RH COMP	509	10
CHIN/CHECK ASSY	508	8
	509	8
CLAMP	101	22
CLAMP COMP	103	10
CLAMP,HARNESS	201	14
	402	7
	403	6
	405	59
	501	11
	618	19
CLAMP/32	102	3
CLAMP/WIRE/24-32	101	3
	101	7
CLAMP/WIRE/30-38	101	4
	101	6
CLAMP/WIRE/47-55	103	3
CLAMP/WORM/12-22	402	50
CLAMP/WORM/20-32	507	5
CLEANER/AIR ASSY	103	1
CLIP(B)	106	15
	611	16
CLIP/HOSE/11-13	104	8
	104	10
CLIP/HOSE/13.8-14.8	109	13
	206	23
CLIP/HOSE/14.7-15.9	101	10
CLIP/HOSE/8.7-9.3	104	12
CLUTCH/DIFF	301	21
COLLAR	S02	7
	S03	6
COLLAR,THRUST	203	10
COLLAR/08X12X15	402	28
COLLAR/12X24X12	608	13
COLLAR/19X28X02	S02	9
	S03	8
COLLAR/22X32X35	306	52
COLLAR/48X52X17	405	3
COLLAR/9X14X8	604	6
	604	12
	605	6
	605	12
	611	10
COLUMN/U COMP	402	1
CONTROLLER/STEERING	402	24

Description	Fig.	Key
COUPLING/18X30X55	210	8
COUPRING/16X27X55	111	5
COVER	506	4
	616	4
	P08	3
	S02	13
	S03	12
COVER,PEDAL	304	2
COVER/CENTER	611	15
COVER/CLUTCH/18 COMP	109	26
COVER/DASH	603	1
COVER/SEAT	611	11
	611	21-A
COVER/SHIELD	213	1
	214	1
COVER/SWITCH	617	6
COVER/WHEEL	405	37
CRANK/LIFT	502	3
CUP	104	2
CUP/FUEL	105	15
CYLINDER ASSY	402	31
DIODE/3A	618	6
DISC/CLUTCH/180 COMP	109	27
ELEMENT	104	3
FENDER/LH	604	1-A
	605	1
FENDER/RH	604	7-A
FENDER/RH/V	605	7
FILTER COMP	103	12
FILTER/FUEL	104	1
FILTER/SUCTION COMP	507	1
FLANGEBOLT	201	16
	201	20
	213	4
	213	6
	214	4
	305	13
	406	7
	607	8
	608	8
	617	2
	618	13
	618	16
	P10	34
FORK	109	22

Alpabetical Index

Description	Fig.	Key
FORK/SHIFT/1-N-R	209	3
FORK/SHIFT/3-N-2	209	4
FORK/SHIFT/4WD	208	1
FORK/SHIFT/DIFFLOCK	301	22
FORK/SHIFT/SUB	209	10
FRAME SET	P10	1
FRAME/CENTER COMP	701	20
	P10	21
FRAME/REAR/LH COMP	701	15
	701	24
	P10	16
	P10	25
FRAME/REAR/RH COMP	701	16
	701	25
	P10	17
	P10	26
FRAME/REAR/UNDE COMP	609	3-A
	610	1-A
FRAME/REAR/UPPE COMP	609	1
FRAME/UPPER	701	1
	P10	2
FUSE(BLADE/32V15A)	618	5
FUSE/BLADE/32V05A	618	3
FUSE/BLADE/32V10A	618	4
FUSE/SLOWBLOW	618	2
GASKET	103	8
GAUGE/FUEL ASSY	105	9
GAUGE/OIL ASSY	201	23
GEAR/07-42 SET	203	1
GEAR/BEVEL/08-2 SET	405	1
GEAR/BEVEL/11	405	20
GEAR/BEVEL/12	301	3
	405	27
GEAR/BEVEL/14	301	4
GEAR/BEVEL/15	405	9
	405	23
GEAR/BEVEL/47	405	40
GEAR/SPUR/11/LH	301	18
GEAR/SPUR/11/RH	301	19
GEAR/SPUR/14-33	202	9
GEAR/SPUR/15	202	1
	210	9
GEAR/SPUR/16-34	203	5
GEAR/SPUR/17-24	203	6
GEAR/SPUR/19-25	202	7
GEAR/SPUR/20	205	1
GEAR/SPUR/20-23	204	1
GEAR/SPUR/26	210	2
GEAR/SPUR/30	203	7
	205	2
	211	1
GEAR/SPUR/32	202	8
GEAR/SPUR/33	203	8
GEAR/SPUR/58	303	2
GLASS	616	2
GRILLE	602	1
GRIP/03X17X97	504	17
GRIP/04X12X50	208	14
	212	10
GRIP/14X55	206	7
GRIP/ASSIST/B	604	13
	605	13
GRIP/ORANGE	306	27
GRIP/SUB	207	6
GRIP/THROTTLE	506	22
	P08	19-A
GRIP/TRAVELING	108	2
GROMMET	105	13
	604	5
	604	11
	605	5
	605	11
	611	8
	611	9
GROMMET/10X40X03	618	25
HARNESS/HEADLAM ASSY	618	27
HARNESS/LAMP	614	12
	615	11
HARNESS/LOOP/CIRCUIT	619	1
HARNESS/MAIN ASSY	618	1
HARNESS/SOCKET ASSY	618	24
HEAD,SYLINDER	501	12
HEAD/SPOOL	S02	2
	S03	1
HITCH/FRONT SET	P04	1
HITCH/REAR SET	P09	1
HOLDER	108	9
HOLDER/12	507	18
HOLDER/2ND ASSY	506	15
	P08	12
HOLDER/JE/9-9	402	47
	618	8
	618	15
	618	21
HOOD COMP	601	1-A
HOOK	110	14
HOOK,SPRING	501	24
HOOK,TOP LINK	508	39
	509	33
HORN ASSY	617	1
HOSE	103	6
	507	4
HOSE/08X13X170	104	7
HOSE/08X13X95	104	9
HOSE/250	101	9
HOSE/285 ASSY	402	44
HOSE/500	104	11
HOSE/700	105	16
	402	49
HOSE/BREATHER	109	12
	206	22
HOSE/CLEANER/OUTLET	103	2
HOSE/LH ASSY	402	45
HOSE/RADIATOR/INLET	101	2
HOSE/RADIATOR/OUTLET	101	5
HOSE/RUBBER	101	19
	101	21
HOUSING/AXLE/LH	302	1
HOUSING/AXLE/RH	302	2
HOUSING/AXLE/U	405	16
HOUSING/CLUTCH	109	1
HUB/SPACER COMP	508	5
	509	5
INSULATOR	101	12
	105	14
	207	8
	306	46
	504	19
	601	13
	603	4
	606	2
	701	9
	P10	10
INSULATOR/1100	603	3
INSULATOR/1140	101	13

Alpabetical Index

1776-095-110-00

Description	Fig.	Key
INSULATOR/15	402	26
INSULATOR/50	105	2
INSULATOR/BATTERY	106	14
JOINT/BALL/LH ASSY	408	3
JOINT/BALL/RH ASSY	408	5
KEY	617	4
KNOB	617	12
LABEL/4WD	902	7
LABEL/BATTERY	903	9
	903	14
LABEL/CAUTION/BATTER	903	3
LABEL/CE	904	1
LABEL/COLUMN/LH	902	10
LABEL/COLUMN/RH	902	11
LABEL/COMBINATION	617	15
LABEL/CONTROL/AUX	506	24
	P08	21-A
LABEL/CONTROL/MAIN	902	1
LABEL/CONTROL/PARKIN	902	6
LABEL/CONTROL/POSITI	902	3
LABEL/CONTROL/PTO	902	4
LABEL/CONTROL/SLOW R	902	8
LABEL/CONTROL/SUB	902	2
LABEL/DIFF	902	5
LABEL/DRIVE	903	1
LABEL/ETHER	903	5
LABEL/FUEL	903	10
LABEL/FUSE	618	7
LABEL/ISEKI/ENGINE	901	7
LABEL/PTO/TRAILER	903	7
LABEL/ROPS	701	36
	P10	37
LABEL/SHIFT	903	12
LABEL/SPEED	903	11
LABEL/SUBCON	506	23
	P08	20
LABEL/SWITCH/COMBINA	617	14
LABEL/SWITCH/MAIN	902	9
LABEL/TRH1776	510	8
	P09	9
LABEL/W/RADIATOR	903	6
LABEL/W/STARTER	903	8
LABEL/WARNING/FAN/BE	903	2
LABEL/WARNING/FUEL	903	13
LABEL/WARNING/HOT	903	4
LAMP/COMBINATIO ASSY	614	1
	615	1
LAMP/HEAD ASSY	613	1-A
LAMP/NUMBERPLAT SET	614	10
	615	9
LEVER	617	11
LEVER COMP	108	1
LEVER/4WD	208	10
LEVER/MAIN COMP	206	4
LEVER/PARKING ASSY	306	23
LEVER/POSITION	504	15
LEVER/PTO	212	6
LEVER/SUB COMP	207	3
LINING/11X30X02	504	8
LINING/11X30X03	108	3
LINK SHIFT ARM	503	22
LINK,CRANK	503	12
LINK/LOWER COMP	508	1
	509	1
LINK/SPOOL COMP	503	11
LINK/SUPPORT COMP	503	18
LINK/TOP ASSY	508	32
	509	26
LINK/TOP/LH COMP	508	33
	509	27
LINK/TOP/RH COMP	508	35
	509	29
LINKPIN	404	5
	508	3
	508	38
	509	3
	509	32
	510	5
	701	6
	P04	6
	P09	6
	P10	7
MAT/FLOOR	611	14
METAL,DIFF-CASE LH	301	13
METAL,DIFF-CASE RH	301	14
METAL/AUX/VALVE	506	8
	P08	7
METAL/BRAKE	305	11
METAL/INPUT	201	15
METAL/PIVOT/REA ASSY	407	2
METAL/PTO	201	18
METAL/SHIFT	206	1
MICAHESSIE	616	3
MIRROR ASSY	701	35
	P10	43
MIRROR SET	P10	38
MUFFLER COMP	102	1
NEEDLE	S01	5
NET	101	8
NIPPLE,GREASE	109	20
	110	3
	306	3
	306	11
	306	37
NIPPLE/GREASE	405	52
NOB/LOCK	701	11
	P10	12
NUT	105	10
	108	6
	110	5
	110	10
	206	6
	207	5
	301	29
	306	20
	306	32
	306	41
	306	47
	406	8
	504	3
	504	11
	508	12
	508	16
	508	28
	509	12
	509	16
	509	22
	617	22
	701	14
	P10	15
NUT/CLIP	103	13
NUT/FLANGE/M08	607	7
	608	7
NUT/FLANGE/M10	108	5
	201	7

Alpabetical Index

Description	Fig.	Key
NUT/FLANGE/M6	618	14
NUT/LH THREAD	408	4
NUT/LOCK COMP	508	36
	509	30
NUT/M 8	508	7
	509	7
NUT/M10	109	15
	302	10-A
	402	6
	501	9
	604	14
	605	14
	607	10
	608	15
	701	22
	P10	23
NUT/M10X1.25	408	8
NUT/M12	208	11
	212	7
	302	5
	304	7
	306	49
	408	6
	609	8
	610	6
	701	17
	P10	18
	P12	3
NUT/M12X1.25	402	42
NUT/M16	502	8
	701	3
	P10	4
NUT/M22	617	10
NUT/M6	106	6
	601	18
NUT/M8	109	7
	110	11
	306	33
	506	13
	P08	10
NUT/M8X30	306	18
	306	42
NUT/RING	617	5
NUT/SM/M10	405	58
NUT/WASHER	105	17

Description	Fig.	Key
NUT/WASHER	106	10
	507	11
	604	3
	604	9
	605	3
	605	9
	611	7
	612	2
	614	6
	615	5
	701	37
	P10	44
O-RING	206	13
	402	37
O-RING G60	501	17
O-RING P6 HS90	S01	8
O-RING/G115	305	12
O-RING/G70	407	4
O-RING/P 7	501	22
	503	20
	S02	25
	S03	24
O-RING/P10A	209	7
	301	27
	503	23
O-RING/P12	402	13
	501	14
	501	16
	505	2
	506	5
	506	9
	P08	4
	S01	7
	S02	21
	S03	20
O-RING/P14	506	3
	507	15
	507	17
	S02	28
	S03	27
O-RING/P16	201	13
	207	2
	208	6
	212	2
	302	15

Description	Fig.	Key
O-RING/P18	402	19
	507	7
O-RING/P22	305	10
O-RING/P25	109	21
O-RING/P28	507	3
O-RING/P55	503	2
ORNAMENT/3185	901	5
ORNAMENT/ISEKI	901	4
ORNAMENT/ISEKI/LH	901	1
ORNAMENT/ISEKI/RH	901	2
ORNAMENT/POWER STEER	901	3
ORNAMENT/STEERING	901	6
PACKING	101	18
	105	7
	201	24
	407	8
	501	15
PACKING/PISTON	402	33
PACKINGA	105	8
PAD	110	6
	306	5
	306	13
	611	3
PAD/50	106	4
	402	2
	601	11
PAD/PS	402	27
PANEL/INSTRUMEN ASSY	616	1
PEDAL/BRAKE/LH COMP	306	2-A
PEDAL/BRAKE/RH COMP	306	9-A
PEDAL/CLUTCH COMP	110	1
PIN	109	18
	109	29
	201	17
	201	19
	206	3
	301	9
	302	13
	501	10
PIN ASSY	404	3
	510	3
	701	4
	P04	4
	P09	4
	P10	5

Alpabetical Index

1776-095-110-00

Description	Fig.	Key
PIN COMP	405	51
PIN SPLIT W 6.0X16	204	6
PIN,ADJ	501	21
PIN,HAIR	606	7
PIN,KNOCK	109	9
PIN,ROD COMP	503	5
PIN,SNAP	306	44
PIN,SPLIT/1.6X15	504	23
PIN,SPLIT/2 X15	107	2
	108	8
	110	16
	503	13
	503	16
PIN,SPLIT/2.5X20	408	9
	508	14
	509	14
	601	20
	P10	32
PIN,SPLIT/2.5X25	402	43
PIN,SPLIT/4X30XSUS	508	30
	509	24
PIN,SPRING/5 X20 W	504	14
PIN,SPRING/5 X25 W	208	3
	209	8
PIN,YOKE A	306	21
PIN/06X31	506	19
	P08	16
PIN/08X19	306	34
PIN/09X47	306	6
PIN/10X154	606	6
PIN/10X32	508	13
	509	13
PIN/12X75	405	10
PIN/16X40	306	17
	306	40
PIN/16X44	508	29
	509	23
PIN/19X92	502	7
PIN/19X94	508	37
	509	31
	701	5
	P10	6
PIN/22X404	508	4
	509	4
PIN/30X116 COMP	404	4
PIN/30X116 COMP	510	4
	P04	5
	P09	5
PIN/47X19	405	48
PIN/5X17	503	15
PIN/B	405	41
	405	54
PIN/PARALLEL/08X32	301	8
PIN/SLITTED	301	25
PIN/SNAP	506	20
	P08	17
PIN/SNAP/B	110	12
	304	4
	306	22
	306	35
PIN/SPRING	109	25
	405	11
	501	23
PIN/SUPPORT COMP	503	19
PINION/BEVEL/11	405	8
PIPE	101	20
PIPE,BREATHER	109	11
	206	21
PIPE/07X11X45	406	5
PIPE/84	303	3
PIPE/DEL/F COMP	507	12
PIPE/DEL/RCOMP	507	13
PIPE/SUCTION/U COMP	507	2
PISTON	503	1
PLATE	105	6
	504	7
	601	2
	701	12
	701	29
	P10	13
	P10	30
	S02	23
	S03	22
PLATE(SAFETY/LH)	601	10
PLATE(SAFETY/RH)	601	9
PLATE/A COMP	601	15
PLATE/B COMP	601	16
PLATE/BUMPER	P11	1
PLATE/CLEANER	103	4
PLATE/CONTROLLER	402	30
PLATE/FRICTION	305	3
	305	7
PLATE/GUIDE/MAIN	206	19
PLATE/HITCH	404	1
	P04	2
PLATE/HITCH COMP	510	1
	P09	2
PLATE/I/68X122	402	8
PLATE/L/28X28	306	54
PLATE/LOCK	306	14
	601	4
PLATE/PRESSURE/LH	305	1
PLATE/PRESSURE/RH	305	5
PLATE/REGISTRATION	612	1
PLATE/SEPARATER	305	2
	305	6
PLATE/STOP COMP	504	20
PLUG	402	12
	S01	4
PLUG(G3/8)	506	2
PLUG,DRAIN	201	12
	302	14
PLUG/7P	618	23
PLUG/M14	S02	18
	S03	17
PLUG/SCREW	403	3
PLUG/SCREW/R1/4	405	43
PLUG/SCREW/SEAL	109	19
	402	15
	506	10
	P08	8
	S01	6
PLUG/SEAL	S02	27
	S03	26
PLUG/SEAL/47	405	34
POPPET	S02	19
	S03	18
PUMP/GEAR/R5 ASSY	507	8
RADIATOR ASSY	101	1
RBB/CLUTCH/RELEASE	109	24
REFLECTOR ASSY	614	7
	615	6
RELAY/5P ASSY	617	18
RELAY/CONTROL/ENGINE	617	19
RELAY/FLASHER/EEC	617	16

Alpabetical Index

Description	Fig.	Key
RESERVETANK ASSY	101	16
RIM/WHEEL COMP	P03	3
	P03	8
RIM/WHEEL/600IX10	P07	2
	P07	7
RING	404	7
	510	7
	701	8
	P04	8
	P09	8
	P10	9
RING, BACKUP	503	3
RING, SNAP	S02	17
	S03	16
RING, SNAP/14 C	209	9
RING, SNAP/20C	111	3
	202	12
RING, SNAP/22 C	204	4
RING, SNAP/25	203	4
RING, SNAP/25 C	202	5
	210	7
	306	7
RING, SNAP/28 C	206	12
RING, SNAP/30 C	210	3
	303	7
RING, SNAP/35 C	502	6
RING, SNAP/47 C	111	4
	203	12
	210	5
RING/O	104	4
	104	5
	402	17
	402	21
	402	36
	402	39
	407	1
RING/O/1A/G90	405	44
RING/O/1A/P41	405	49
RING/SNAP	303	8
	502	5
RING/SNAP/CH47	405	33
RING/SNAP/CH55	405	31
RING/SNAP/CR52	405	5
RING/SNAP/CR62	405	22
RING/SNAP/CS25	405	4
RING/SNAP/CS35	405	32
RING/SNAP/CS40	405	15
RING/SNAP/CS50	405	14
RIVET	603	2
	611	12
	611	17
	701	23
	P10	24
ROD	306	24
	503	4
ROD/188	304	3
ROD/482 COMP	306	16
ROD/70 COMP	306	30
ROD/LIFT/LH COMP	508	23
	509	17
ROD/LIFT/RH ASSY	508	24
	509	18
ROD/LIFT/RH/B COMP	508	25
	509	19
ROD/LIFT/RH/U COMP	508	27
	509	21
ROD/M08X120	110	8
ROD/M8X92	306	29
ROD/PISTON COMP	402	32
ROD/TENSION/08X140	110	7
ROD/TIE	408	2
ROD/TIE ASSY	408	1
RUBBER, CUSHION	110	2
	306	45
SCREW	616	5
SCREW, SEMS	616	6
SCREW/SOCKET	S02	15
	S03	14
SCREW/SP	604	17
	605	17
SEAL, OIL/QLF488011.5	303	4
SEAL, OIL/TC20357	202	2
	205	4
SEAL, OIL/TC35558	211	4
SEAL, OIL/TC4, 14247	S02	6
	S02	16
	S03	5
	S03	15
SEAL, OIL/VC35506	502	2
SEAL/330	601	14-A
SEAL/OIL	405	6
SEAL/OIL ASSY	405	29
SEAL/QLNY35571116	405	36
SEAT/BACK ASSY	607	2
	608	2
SEAT/CUSHION ASSY	607	3
	608	3
SEAT/SLIDE ASSY	607	6
	608	6
SEAT/SLIDE/LEVE ASSY	607	5
	608	5
SEAT/SUSPENSION ASSY	607	4
	608	4
SEAT/W10 SET	607	1
	608	1
SHAFT	405	26
SHAFT COMP	306	1
SHAFT/228	405	17
SHAFT/312	405	18
SHAFT/4WD ASSY	406	1
SHAFT/CHANGE	202	6
SHAFT/DRIVE/PTO	210	1
SHAFT/INPUT	111	1
SHAFT/LIFT	502	1
SHAFT/PINION	301	5
SHAFT/REVERSE	204	5
SHAFT/WHEEL	303	1
	405	35
SHIM, DIFF-CASE A	301	15
SHIM, DIFF-CASE B	301	16
SHROUD COMP	101	11
SLEEVE	S02	8
	S03	7
SLEEVE/DETENT	S02	10
	S03	9
SPOOL/DELECT	S02	22
	S03	21
SPRING	306	25
	508	2
	509	2
	S01	2
	S01	3
	S02	20
	S03	19
SPRING PIN (W)	S02	24

Alpabetical Index

1776-095-110-00

Description	Fig.	Key
SPRING PIN (W)	S03	23
SPRING,DISK	108	4
SPRING,PRESS/40	301	26
SPRING,TENSION/121	304	5
SPRING,TENSION/31	503	10
SPRING,TENSION/53	107	4
SPRING/HC015	S02	12
	S03	11
SPRING/HC023	208	8
	209	5
	209	11
	212	4
SPRING/HC026	402	14
SPRING/HC042	S02	5
	S03	4
SPRING/HC053	601	6
SPRING/HC060	206	16
SPRING/HE053	504	12
SPRING/HE106	110	13
	306	8
	306	10
SPRING/HE110	306	53
SPRING/HT014	601	17
SPRING/WASHER	504	9
STAY COMP	611	4
STAY,SHIFTER	301	23
STAY/CYLINDER	405	53
STAY/SHIFT/4WD COMP	208	2
STAY/SHIFT/MAIN/3-N-	209	1
STAY/SHIFT/MAIN-SUB	209	2
STEP/LH COMP	611	1
STEP/RH COMP	611	2
STOPPER/BATTERY	106	7
STOPPER/CRANK COMP	502	11
STOPPER/SPRING/A	S02	3
	S03	2
STOPPER/SPRING/B	S02	4
	S03	3
SUBCONCOVER	505	1
SWITCH ASSY	617	9
SWITCH/HAZARD ASSY	617	7
SWITCH/MAIN ASSY	617	3
SWITCH/OILPRESSURE	905	1
SWITCH/PUSH ASSY	617	21
	617	24
TANK/FUEL	105	1
TAPE/10X20	614	9
	615	8
THERMOMETER	905	2
TIRE	P02	3
	P02	8
	P03	2
	P03	7
	P05	3
	P05	8
TIRE,F.TURF212-80-15	P01	3
	P01	8
TIRE/4P 500-12	P06	3
	P06	8
TIRE/8-16-4/LH ASSY	P02	1
TIRE/8-16-4/RH ASSY	P02	6
TIRE/9.5-16/LH ASSY	P03	1
TIRE/9.5-16/RH ASSY	P03	6
TIRE/FRONT/LH ASSY	P05	1
TIRE/FRONT/RH ASSY	P05	6
TIRE/LH/5.00-12-4	P06	1
TIRE/RH/5.00-12-4	P06	6
TIRE/TURF	P07	3
	P07	8
TIRE/TURF/LH ASSY	P01	1
	P07	1
TIRE/TURF/RH ASSY	P01	6
	P07	6
TRAY/BOTTLE	604	15
	605	15
TRIM/01X170	101	15
	207	7
TRIM/01X268	504	18
TRIM/250	506	25
	P08	23
TUBE	P01	4
	P01	9
	P03	4
	P03	9
	P07	4
	P07	9
TUBE/ 8-16	P02	4
	P02	9
TUBE/020	701	10
	P10	11
TUBE/500-12	P06	4
	P06	9
TUBE/SHIFT/MAIN COMP	206	10
TUBE/TIRE	P05	4
	P05	9
TURNBUCKLE/M8	110	9
	306	31
U-NUT	213	3
	214	3
	306	15
	P10	35
U-NUT/M10X1.5	701	13
	P10	14
VALVE SET	S01	1
VALVE SET	S02	1
	S03	28
VALVE CONTROL ASSY	503	8
VALVE,RELIEF ASSY	501	13
VALVE/021/U SET	402	10
VALVE/AUXSET	P08	1-A
VALVE/CONTROL ASSY	506	1
	P08	2
VALVE/FLOW PRIORITY/	402	11
VALVE/RELIEF ASSY	S01	9
VALVE/UNLOAD	103	11
WASHER	503	17
WASHER / M16	208	13
	212	9
	508	31
	509	25
WASHER / M6	107	3
	110	15
	503	14
	506	21
	P08	18
WASHER /M12	302	8
	304	8
	306	51
	508	22
	609	5
	610	3
	P11	4
WASHER,PL/M 4	614	8
	615	7
WASHER,PL/M 8	109	10

Alpabetical Index

Description	Fig.	Key
WASHER,PL/M 8	213	5
	214	5
	306	19
	P10	36
WASHER,SP/M 6	110	19
	306	4
	306	12
	306	38
WASHER,SP/M 8	109	8
	504	5
	506	14
	507	10
	P08	11
	S02	14
	S03	13
WASHER,SP/M10	109	17
	301	30
	302	11
	402	5
	408	7
	501	8
	506	7
	P08	6
WASHER,SP/M12	208	12
	212	8
	302	7
	306	50
	402	41
	501	20
	508	21
	609	7
	610	5
	701	19
	701	28
	P10	20
	P10	29
	P11	3
WASHER,SP/M16	502	9
	508	15
	509	15
WASHER,WIRE TENSION	406	6
WASHER/06X33X02	504	21
WASHER/09X15X02	306	43
WASHER/11X22X02	608	12
WASHER/16X28X02	206	9
WASHER/19X30X02	502	10
WASHER/22X38X02	204	3
WASHER/24X9X3.2	105	4
WASHER/32X48X01	301	7
WASHER/LOCK/M10	405	57
WASHER/M10	109	16
	302	12
	403	7
	405	60
	501	7
	503	7
	504	10
	508	40
	509	34
	601	19
WASHER/PINION	301	6
WASHER/SPRING/10	608	11
WEIGHT/15 SET	P12	1
WHEEL/12X3.00D COMP	P05	2
	P05	7
	P06	2
	P06	7
WHEEL/15X7JA COMP	P01	2
	P01	7
WHEEL/16X5JA COMP	P02	2
	P02	7
WHEEL/STEERING/360	401	1
WIRE/02X300	404	6
	510	6
	P04	7
	P09	7