Directions for use of Parts Catalogue

1. Applicable model of machines

All component and option parts used for TM3200,TM3240 tractors are listed in this parts catalogue.

1) MODEL TYPE

F····· FOUR WHEEL DRIVE

H····· HST

S····· POWER STEERING & INDEPENDENT PTO

M····· MID PTO.

U····· POWER STEERING

R····· FRONT/REAR HITCH & ROPS

2) AREA CODE

E4····· EUROPE

2. Explanation for head paragraph

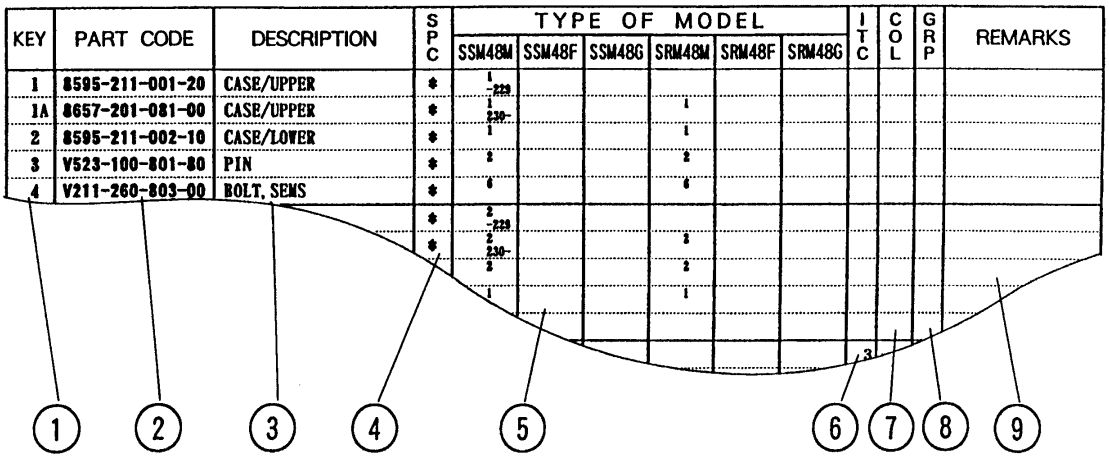

① KEY shows the location of parts diagramed in the illustration.

② Parts numbers begin with `V´ and `W´ are standard parts of the market.

③ `LH´ and `RH´ on the parts name are described against the moving direction of the machine or are described on the condition how to install parts on the machines.

④ SPC : The following symbol classifies parts to be used for machines.

`*´ means standard parts.

`T´ shows that the parts can be installed as optional parts.

`R´ shows that the parts can be used as applicable parts to replace originally equipped parts.

⑤ Upper column : QTY shows the number of parts to be used for one unit of machine.

`M´ is indicated for parts supplied by a meter long.

`l´ is indicated for parts supplied by liter.

`AR´ is indicated for parts need to be adjusted or regulated.

Lower column : serial number

－229 means serial number up to 229.

230－ means serial number 230 and after.

⑥ ITC : Interchangeability

`1´…OLD ← NEW

New parts can be used in place of the old parts.

`2´…OLD → NEW

Old parts can be used in place of the new parts.

`3´…OLD →← NEW

Old parts and new parts can not be replaced each other.

⑦ COL : Color code

Color is signified with color code number for colored parts.

Please see the color list shown in the next page.

⑧ GRP : Parts shown in this column can be replaced by SET parts.

Example : Parts marked Ⓐ can be replaced by parts marked Ⓑ, and Ⓓ for Ⓒ, so the rest follow in the same alphabetical order.

⑨ Remarks

＊ Other maker's part code number is shown in this column.

＊ When Fig. No. is shown in the Remark column of SET parts or ASSY parts, each of their component parts are listed in said Fig. No.

3. Color :

The following colors are used color parts.

COLOR CODE	COLOR	SPRAY TYPE CODE NUMBER	PAINTS 4K DRUM	PAINTS 16K DRUM
4 L	NEO BLUE	1300-985-001-10	1300-985-003-00	————————
5 I	SUNSET GRAY	1300-959-001-10	1300-959-003-00	1300-959-004-00
6 G	SUMMER WHITE	1300-958-001-10	1300-958-003-00	1300-958-004-00
7 F	MIRROR BLACK	1300-954-001-10	1300-954-003-00	1300-954-004-00

NOTE : Color code is signified only for the parts assigned by the maker as color parts.

4. Serial Numbers :

1) For engines serial number is stamped on CYLINDER BLOCK ASSY.
   Please see Fig. No. 5－1.
2) For chassies serial number is shown on the LABEL.
   Please see

5. Parts Order

1) Parts numbers listed in the parts catalogue are all registered in “ISEKI on-line computer”.
2) When you order parts, please make sure of correct numbers.
3) When substitute parts is available, the part number ordered will be automatically turned to a new part number.
4) Please be sure to use “ISEKI GENUINE PARTS”.
   Any other similar parts other than ISEKI parts when used may cause a trouble that makes us unable to repair or guarantee the warrant.

*** Structure Table of Model ***

MODEL / FIG.	TM320	FMUE4	FMUR4E4	TM320H	FHSMER4	FHSMEE4	3FMU4	FMUE4	FMUR4E4	TM320H	FHSMER4	FHSMEE4								
1	*	*	*					*	*	*										
2					*	*					*	*								
3	*	*	*		*	*		*	*	*	*	*								
4	*	*	*		*	*		*	*	*	*	*								
5	*	*	*		*	*		*	*	*	*	*								
6	*	*	*		*	*		*	*	*	*	*								
7	*	*	*		*	*		*	*	*	*	*								
8	*	*	*		*	*		*	*	*	*	*								
9	*	*	*					*	*	*										
10					*	*					*	*								
11	*	*	*					*	*	*										
12	*	*	*					*	*	*										
13					*	*					*	*								
14					*	*					*	*								
15	*	*	*					*	*	*										
16					*	*					*	*								
17	*	*	*					*	*	*										
18	*	*	*					*	*	*										
19	*	*	*					*	*	*										
20					*	*					*	*								
21	*	*	*					*	*	*										
22	*	*	*					*	*	*										
23					*	*					*	*								
24	*	*	*					*	*	*										
25					*	*					*	*								
26					*	*					*	*								
27	*	*	*					*	*	*										
28								*	*	*										
29	*	*	*																	
30					*	*					*	*								
31	*	*	*		*	*		*	*	*	*	*								
32	*	*	*					*	*	*										
33					*	*					*	*								
34	*	*	*		*	*		*	*	*	*	*								
35					*	*					*	*								
36	*	*						*	*											
37			*							*										
38					*	*					*	*								
39					*	*					*	*								
40					*	*					*	*								
41											*	*								
42					*	*														
43					*	*					*	*								
44	*	*	*		*	*		*	*	*	*	*								
45	*	*	*		*	*		*	*	*	*	*								

*** Structure Table of Model ***

MODEL / FIG.	TM320	FMUE4	FURE4	TM320	FHSMER4	FHSMER4	TM320	FMUE4	FURE4	TM320	FHSMER4	FHSMER4								
46		*	*	*	*	*		*	*	*		*	*							
47		*	*	*				*	*	*										
48					*	*						*	*							
49		*	*	*	*	*		*	*	*		*	*							
50		*	*	*				*	*	*										
51					*	*						*	*							
52		*	*	*	*	*		*	*	*		*	*							
53		*	*	*	*	*		*	*	*		*	*							
54		*	*	*	*	*		*	*	*		*	*							
55		*	*	*				*	*	*										
56					*	*						*	*							
57		*	*	*	*	*		*	*	*		*	*							
58		*	*	*				*	*	*										
59					*	*						*	*							
60		*	*	*	*	*		*	*	*		*	*							
61		*	*	*	*	*		*	*	*		*	*							
62		*	*	*	*	*		*	*	*		*	*							
63		*	*	*	*	*		*	*	*		*	*							
64		*	*	*	*	*		*	*	*		*	*							
65		*	*	*	*	*		*	*	*		*	*							
66		*	*	*	*	*		*	*	*		*	*							
67		*	*	*	*	*		*	*	*		*	*							
68		*	*	*				*	*	*										
69					*	*						*	*							
70		*	*	*	*	*		*	*	*		*	*							
71			*	*		*		*		*			*							
72		*	*	*	*	*		*	*	*		*	*							
73		*	*	*	*	*		*	*	*		*	*							
74		*	*	*	*	*		*	*	*		*	*							
75					*	*						*	*							
76		*	*	*	*	*		*	*	*										
77												*	*							
78		*	*	*				*	*	*										
79					*	*						*	*							
80		*	*	*	*	*		*	*	*		*	*							
81		*	*	*				*	*	*										
82					*	*						*	*							
83		*	*	*	*	*		*	*	*		*	*							
84		*	*	*	*	*		*	*	*		*	*							
85		*	*	*				*	*	*										
86					*	*						*	*							
87		*	*	*				*	*	*										
88					*	*						*	*							
89			*	*		*		*		*			*							
90		*	*	*	*	*		*	*	*		*	*							

*** Structure Table of Model ***

MODEL / FIG.	T M 3 2 0 0	F M U E 4	F U R E 4	T M 3 0 H	F H S M E 4	F H S M E R E 4	T M 3 4 0	F M U E 4	F U R E 4	T M F 3 2 0	F U R E 4	F H S M E R E 4	T M F 3 2 4 0	F U R E 4	F H S M E R E 4								
91		*	*	*					*	*	*												
92					*	*								*	*								
93		*	*	*	*	*	*	*	*	*	*			*	*								
94		*	*	*	*	*	*	*	*	*	*			*	*								
95				T									T										
96									T	T	T			T	T								
97		T	T	T	T	T																	
98									T	T	T			T	T								
99		T	T	T	T	T																	
100		T			T			T						T									
101		T	T	T	T	T	T	T	T	T	T			T	T								
102		T	T	T	T	T																	
103									T	T	T			T	T								
104		T	T	T	T	T	T	T	T	T	T			T	T								
105		T			T			T						T									
106		T			T			T						T									
107		T	T	T	T	T	T	T	T	T	T			T	T								
108						*	*							*	*								
109		*	*	*	*	*	*	*	*	*	*			*	*								
110						*	*							*	*								
111						*	*							*	*								

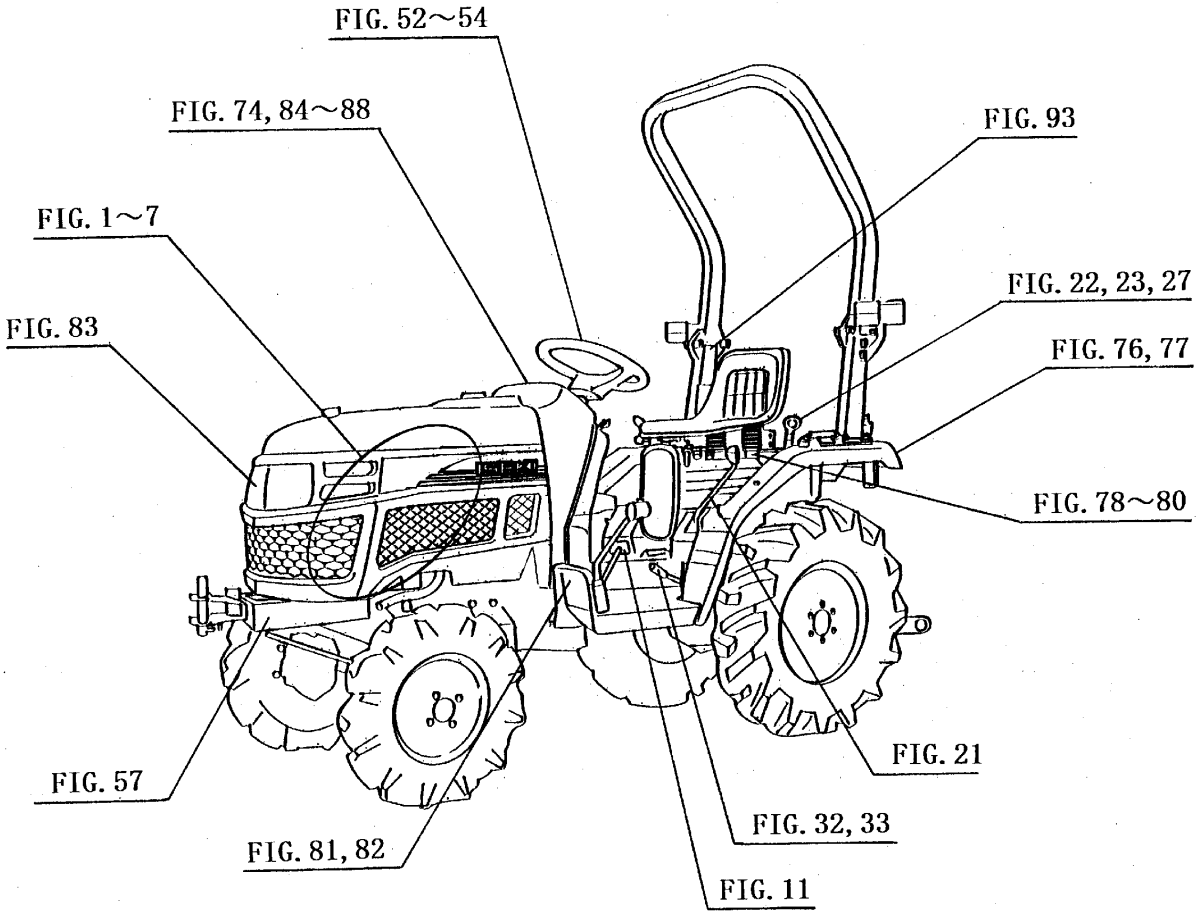
FIG. 52～54
FIG. 74, 84～88
FIG. 93
FIG. 1～7
FIG. 22, 23, 27
FIG. 83
FIG. 76, 77
FIG. 78～80
FIG. 21
FIG. 57
FIG. 32, 33
FIG. 81, 82
FIG. 11

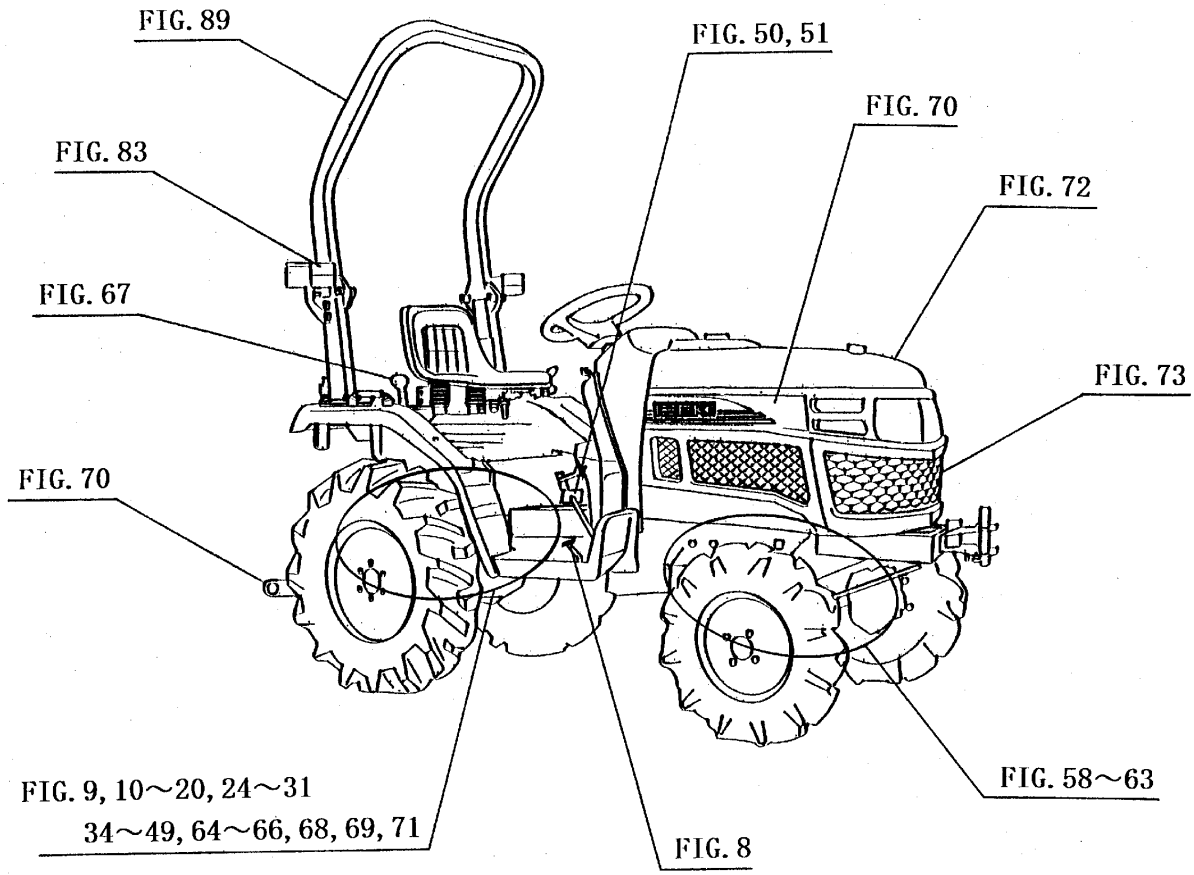
FIG. 89
FIG. 50, 51
FIG. 70
FIG. 83
FIG. 72
FIG. 67
FIG. 73
FIG. 70
FIG. 58～63
FIG. 9, 10～20, 24～31
34～49, 64～66, 68, 69, 71
FIG. 8

Contents

TM3200H

ENGINE(E3112-B13)

CYLINDER HEAD ..... Fig. 1
CYLINDER HEAD COVER ..... Fig. 2
INLET MANIFOLD ..... Fig. 3
EXHAUST MANIFOLD ..... Fig. 4
CYLINDER BLOCK ..... Fig. 5
BEARING/UNDER SIZE (OPTION) ..... Fig. 6
OIL PAN ..... Fig. 7
REAR PLATE ..... Fig. 8
TIMING GEAR CASE ..... Fig. 9
HANGER ..... Fig. 10
VALVE ..... Fig. 11
CAM SHAFT ..... Fig. 12
PISTON ..... Fig. 13
PISTON/OVER SIZE (OPTION) ..... Fig. 14
CRANK SHAFT ..... Fig. 15
OIL PUMP ..... Fig. 16
WATER PUMP ..... Fig. 17
COOLING FAN ..... Fig. 18
INJECTION NOZZLE ..... Fig. 19
INJECTION PUMP ..... Fig. 20
FUEL PIPE ..... Fig. 21
ADAPTER ..... Fig. 22
ELECTRIC (1) ..... Fig. 23
ELECTRIC (2) ..... Fig. 24

REPAIR PARTS (OPTION)····· Fig. 25
COMPONENT PARTS
FOR 6215-300-036-00 ON Fig.19····· Fig. 26
COMPONENT PARTS
FOR 6215-600-103-10 ON Fig.20····· Fig. 27
COMPONENT PARTS
FOR 6281-100-014-00 ON Fig.23····· Fig. 28
COMPONENT PARTS
FOR 6281-200-005-00 ON Fig.23····· Fig. 29

Contents

TM3200

ENGINE(E3112-B14)

CYLINDER HEAD····· Fig. 1
CYLINDER HEAD COVER····· Fig. 2
INLET MANIFOLD····· Fig. 3
EXHAUST MANIFOLD····· Fig. 4
CYLINDER BLOCK····· Fig. 5
BEARING/UNDER SIZE (OPTION)····· Fig. 6
OIL PAN····· Fig. 7
REAR PLATE····· Fig. 8
TIMING GEAR CASE····· Fig. 9
HANGER····· Fig. 10
VALVE····· Fig. 11
CAM SHAFT····· Fig. 12
PISTON····· Fig. 13
PISTON/OVER SIZE (OPTION)····· Fig. 14
CRANK SHAFT····· Fig. 15
OIL PUMP····· Fig. 16
WATER PUMP····· Fig. 17
COOLING FAN····· Fig. 18
INJECTION NOZZLE····· Fig. 19
INJECTION PUMP····· Fig. 20
FUEL PIPE····· Fig. 21
ADAPTER····· Fig. 22
ELECTRIC (1)····· Fig. 23
ELECTRIC (2)····· Fig. 24

REPAIR PARTS (OPTION)····· Fig. 25
COMPONENT PARTS
FOR 6215-300-036-00 ON Fig.19····· Fig. 26
COMPONENT PARTS
FOR 6215-600-103-10 ON Fig.20····· Fig. 27
COMPONENT PARTS
FOR 6281-100-014-00 ON Fig.23····· Fig. 28
COMPONENT PARTS
FOR 6281-200-005-00 ON Fig.23····· Fig. 29

Contents

TM3240H

ENGINE(E3112-B15)

CYLINDER HEAD ..... Fig. 1
CYLINDER HEAD COVER ..... Fig. 2
INLET MANIFOLD ..... Fig. 3
EXHAUST MANIFOLD ..... Fig. 4
CYLINDER BLOCK ..... Fig. 5
BEARING/UNDER SIZE (OPTION) ..... Fig. 6
OIL PAN ..... Fig. 7
REAR PLATE ..... Fig. 8
TIMING GEAR CASE ..... Fig. 9
HANGER ..... Fig. 10
VALVE ..... Fig. 11
CAM SHAFT ..... Fig. 12
PISTON ..... Fig. 13
PISTON/OVER SIZE (OPTION) ..... Fig. 14
CRANK SHAFT ..... Fig. 15
OIL PUMP ..... Fig. 16
WATER PUMP ..... Fig. 17
COOLING FAN ..... Fig. 18
INJECTION NOZZLE ..... Fig. 19
INJECTION PUMP ..... Fig. 20
FUEL PIPE ..... Fig. 21
ADAPTER ..... Fig. 22
ELECTRIC (1) ..... Fig. 23
ELECTRIC (2) ..... Fig. 24

REPAIR PARTS (OPTION)····· Fig. 25
COMPONENT PARTS
FOR 6215-300-036-00 ON Fig.19····· Fig. 26
COMPONENT PARTS
FOR 6215-600-103-10 ON Fig.20····· Fig. 27
COMPONENT PARTS
FOR 6281-100-014-00 ON Fig.23····· Fig. 28
COMPONENT PARTS
FOR 6281-200-005-00 ON Fig.23····· Fig. 29

Contents

TM3240

ENGINE(E3112-B16)

CYLINDER HEAD····· Fig. 1
CYLINDER HEAD COVER····· Fig. 2
INLET MANIFOLD····· Fig. 3
EXHAUST MANIFOLD····· Fig. 4
CYLINDER BLOCK····· Fig. 5
BEARING/UNDER SIZE (OPTION)····· Fig. 6
OIL PAN····· Fig. 7
REAR PLATE····· Fig. 8
TIMING GEAR CASE····· Fig. 9
HANGER····· Fig. 10
VALVE····· Fig. 11
CAM SHAFT····· Fig. 12
PISTON····· Fig. 13
PISTON/OVER SIZE (OPTION)····· Fig. 14
CRANK SHAFT····· Fig. 15
OIL PUMP····· Fig. 16
WATER PUMP····· Fig. 17
COOLING FAN····· Fig. 18
INJECTION NOZZLE····· Fig. 19
INJECTION PUMP····· Fig. 20
FUEL PIPE····· Fig. 21
ADAPTER····· Fig. 22
ELECTRIC (1)····· Fig. 23
ELECTRIC (2)····· Fig. 24

REPAIR PARTS (OPTION)····· Fig. 25
COMPONENT PARTS
FOR 6215-300-036-00 ON Fig.19····· Fig. 26
COMPONENT PARTS
FOR 6215-600-103-10 ON Fig.20····· Fig. 27
COMPONENT PARTS
FOR 6281-100-014-00 ON Fig.23····· Fig. 28
COMPONENT PARTS
FOR 6281-200-005-00 ON Fig.23····· Fig. 29

Contents

CHASSIS

RADIATOR SYSTEM (EXCEPT H TYPE)····· Fig. 1
RADIATOR SYSTEM (H TYPE)····· Fig. 2
MUFFLER SYSTEM····· Fig. 3
AIR CLEANER SYSTEM····· Fig. 4
FILTER SYSTEM····· Fig. 5
FUEL TANK SYSTEM····· Fig. 6
BATTERY SYSTEM····· Fig. 7
ACCELERATOR PEDAL (EXCEPT H TYPE),
ACCELERATOR SYSTEM····· Fig. 8
MAIN CLUTCH,INPUT SHAFT SYSTEM
(EXCEPT H TYPE)····· Fig. 9
CLUTCH HOUSING,INPUT SHAFT SYSTEM
(H TYPE)····· Fig. 10
PEDAL (CLUTCH) SYSTEM (EXCEPT H TYPE)····· Fig. 11
CASE (TRANSMISSION) SYSTEM
(EXCEPT H TYPE)····· Fig. 12
CASE (TRANSMISSION) SYSTEM (H TYPE)····· Fig. 13
HST SYSTEM (H TYPE)····· Fig. 14
GEAR (INPUT) SYSTEM (EXCEPT H TYPE)····· Fig. 15
GEAR (DRIVE) SYSTEM (H TYPE)····· Fig. 16
PINION (DRIVE) SYSYTEM (EXCEPT H TYPE)····· Fig. 17
GEAR (REVERSE) SYSTEM (EXCEPT H TYPE)····· Fig. 18
GEAR (4WD) SYSTEM (EXCEPT H TYPE)····· Fig. 19
GEAR (4WD) SYSTEM (H TYPE)····· Fig. 20
LEVER (MAIN) SYSTEM (EXCEPT H TYPE)····· Fig. 21
LEVER (SUB) SYSTEM (EXCEPT H TYPE)····· Fig. 22
LEVER (SUB) SYSTEM (H TYPE)····· Fig. 23

CHANGE (4WD) SYSTEM (EXCEPT H TYPE)····· Fig. 24
CHANGE (4WD) SYSTEM (H TYPE)····· Fig. 25
CHANGE (SUB) SYSTEM (H TYPE)····· Fig. 26
CHANGE (MAIN/SUB) SYSTEM
(EXCEPT H TYPE)····· Fig. 27
GEAR (PTO) SYSTEM
(TM3240-EXCEPT H TYPE)····· Fig. 28
GEAR (PTO) SYSTEM
(TM3200-EXCEPT H TYPE)····· Fig. 29
GEAR (PTO) SYSTEM (H TYPE)····· Fig. 30
SHAFT (PTO) SYSTEM····· Fig. 31
LEVER (PTO) SYSTEM (EXCEPT H TYPE)····· Fig. 32
LEVER (PTO) SYSTEM (H TYPE)····· Fig. 33
SHIELD COVER SYSTEM····· Fig. 34
MID PTO SYSTEM (H TYPE)····· Fig. 35
MID PTO SYSTEM (M TYPE EXCEPT H)(1/2)(2/2)····· Fig. 36
MID PTO SYSTEM (EXCEPT M,H TYPE)····· Fig. 37
LEVER (MID PTO) SYSTEM (H TYPE)····· Fig. 38
LINK (HST) SYSTEM (H TYPE)····· Fig. 39
PEDAL (HST) SYSTEM (H TYPE)····· Fig. 40
CRUISE SYSTEM (TM3240-H TYPE)····· Fig. 41
SHAFT COVER SYSTEM (TM3200-H TYPE)····· Fig. 42
PIPING SYSTEM (H TYPE)····· Fig. 43
DIFF CASE SYSTEM····· Fig. 44
REAR AXLE HOUSING SYSTEM····· Fig. 45
SHAFT (WHEEL) SYSTEM····· Fig. 46
PEDAL (DIFF-LOCK) SYSTEM
(EXCEPT H TYPE)····· Fig. 47
LEVER (DIFF-LOCK) SYSTEM (H TYPE)····· Fig. 48
BRAKE SYSTEM····· Fig. 49
PEDAL (BRAKE) SYSTEM
(EXCEPT H TYPE)(1/2)(2/2)····· Fig. 50
PEDAL (BRAKE) SYSTEM (H TYPE)(1/2)(2/2)····· Fig. 51

WHEEL (STEERING) SYSTEM ..... Fig. 52
STEERING SYSTEM (1) ..... Fig. 53
STEERING SYSTEM (2) ..... Fig. 54
PIPING SYSTEM (EXCEPT H TYPE) ..... Fig. 55
PIPING SYSTEM (H TYPE) ..... Fig. 56
BRACKET (AXLE),
HITCH (FRONT/R TYPE) SYSTEM ..... Fig. 57
SHAFT (DRIVE) SYSTEM (EXCEPT H TYPE) ..... Fig. 58
SHAFT (DRIVE) SYSTEM (H TYPE) ..... Fig. 59
PINION (DRIVE) SYSYTEM ..... Fig. 60
HOUSING (AXLE) SYSTEM ..... Fig. 61
GEAR (FINAL) SYSTEM ..... Fig. 62
ROD (TIE) SYSTEM ..... Fig. 63
CYLINDER CASE SYSTEM ..... Fig. 64
ARM (LIFT) SYSTEM ..... Fig. 65
CYLINDER SYSTEM ..... Fig. 66
CONTROL SYSTEM ..... Fig. 67
PIPING (MAIN) SYSTEM (EXCEPT H TYPE) ..... Fig. 68
PIPING SYSTEM (H TYPE) ..... Fig. 69
LINK (3P) SYSTEM ..... Fig. 70
HITCH (DRAW BAR) SYSTEM (R TYPE) ..... Fig. 71
HOOD SYSTEM(1/2)(2/2) ..... Fig. 72
GRILLE SYSTEM ..... Fig. 73
STEERING COVER SYSTEM ..... Fig. 74
SEAL (NOISE) SYSTEM (H TYPE) ..... Fig. 75
FENDER SYSTEM
(TM3200/TM3240-EXCEPT H TYPE) ..... Fig. 76
FENDER SYSTEM (TM3240-H TYPE) ..... Fig. 77
SEAT BASE SYSTEM (EXCEPT H TYPE) ..... Fig. 78
SEAT BASE SYSTEM (H TYPE) ..... Fig. 79
FRAME SYSTEM ..... Fig. 80
STEP SYSTEM (EXCEPT H TYPE) ..... Fig. 81
STEP SYSTEM (H TYPE) ..... Fig. 82

LAMP SYSTEM ..... Fig. 83
PANEL SYSTEM ..... Fig. 84
SWITCH SYSTEM (EXCEPT H TYPE) ..... Fig. 85
SWITCH SYSTEM (H TYPE) ..... Fig. 86
HARNESS SYSTEM (EXCEPT H TYPE) ..... Fig. 87
HARNESS SYSTEM (H TYPE) ..... Fig. 88
ROPS SYSTEM (R TYPE) ..... Fig. 89
ORNAMENT ..... Fig. 90
LABEL (CONTROL) (EXCEPT H TYPE) ..... Fig. 91
LABEL (CONTROL) (H TYPE) ..... Fig. 92
LABEL (CAUTION) ..... Fig. 93
TOOLS ..... Fig. 94

OPTIONAL PARTS

MID PTO SET (EXCEPT M TYPE)
(OPTION)(1/2)(2/2) ..... Fig. 95
REAR WHEEL SYSTEM (TM3240) (OPTION) ..... Fig. 96
REAR WHEEL SYSTEM (TM3200) (OPTION) ..... Fig. 97
REAR WHEEL (TURF) SYSTEM (TM3240)
(OPTION) ..... Fig. 98
REAR WHEEL (TURF) SYSTEM (TM3200)
(OPTION) ..... Fig. 99
HITCH (FRONT) SET (EXCEPT R TYPE)
(OPTION) Fig.100
FRONT WHEEL SYSTEM (OPTION) Fig.101
FRONT WHEEL (TURF) SYSTEM (TM3200)
(OPTION) Fig.102
FRONT WHEEL (TURF) SYSTEM (TM3240)
(OPTION) Fig.103
HITCH (CREVICE) SET (R TYPE) (OPTION) Fig.104
HITCH (DRAW BAR) SET (EXCEPT R TYPE)
(OPTION) Fig.105

ROPS SET (EXCEPT R TYPE) (OPTION)····· Fig.106
WEIGHT (BUMPER) SYSTEM (OPTION)····· Fig.107

COMPONENT PARTS

COMPONENT PARTS
FOR K200-053-000-00 ON Fig.56····· Fig.108
COMPONENT PARTS
FOR K211-001-000-00 ON Fig.66····· Fig.109
COMPONENT PARTS
FOR K510-008-000-00 ON Fig.14····· Fig.110
COMPONENT PARTS
FOR 1685-211-500-10 ON Fig.30····· Fig.111

WIRING DIAGRAM
WIRING DIAGRAM (HST)

E N G I N E

E3112B13···TM3200H

6004-097-330-00

FIG. 1 CYLINDER HEAD

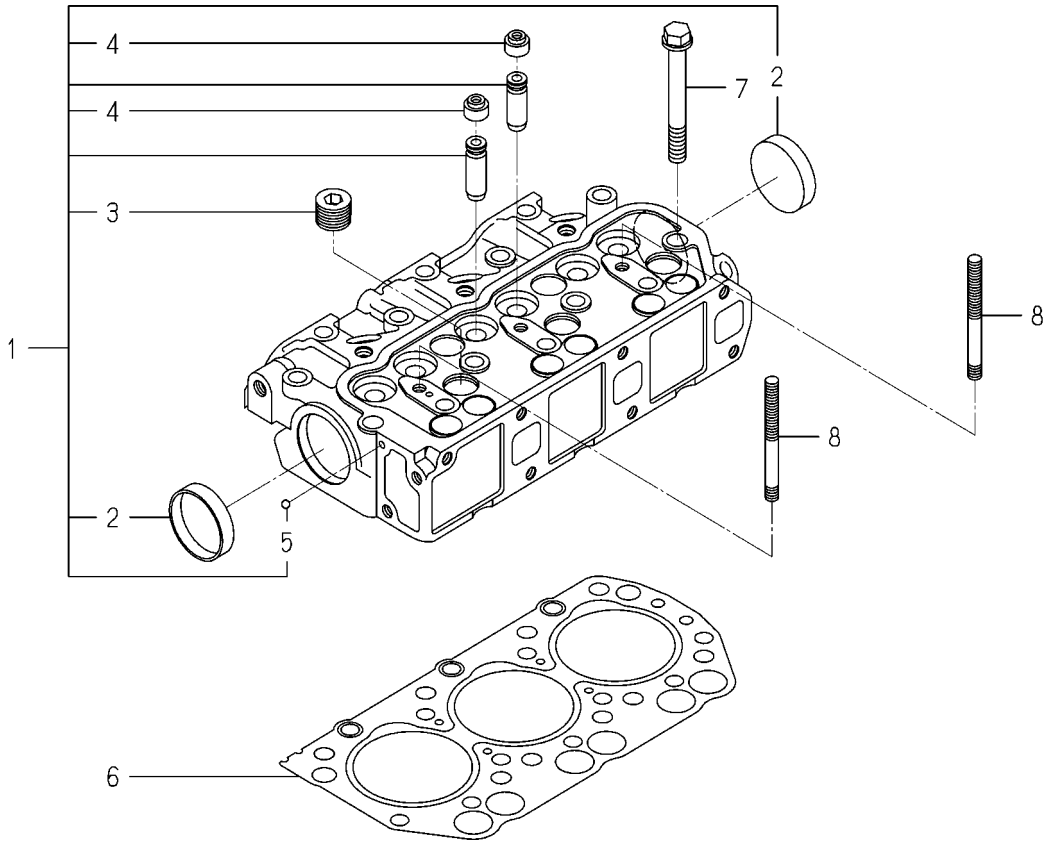

6004-101I-0100,6004-101I-0200

KEY	PART CODE	DESCRIPTION	SPC	TYPE OF MODEL E3112 B13		ITC	COL	GRP	REMARKS
1	6211-110-057-30	CYLINDERHEAD ASSY	*	1					
2	6911-129-006-00	CAP,SEALING	*	2					
3	6209-605-004-10	PLUG/PT1/2	*	5					
4	6212-569-002-00	SEAL,OIL	*	6					
5	V682-200-000-60	BALL	*	1					
6	6211-141-029-20	GASKET/CYLINDERHEAD	*	1					
7	6209-000-003-00	BOLT/M10X1.25X82	*	14					
8	6209-300-014-00	STUD	*	2					

FIG. 2 CYLINDER HEAD COVER

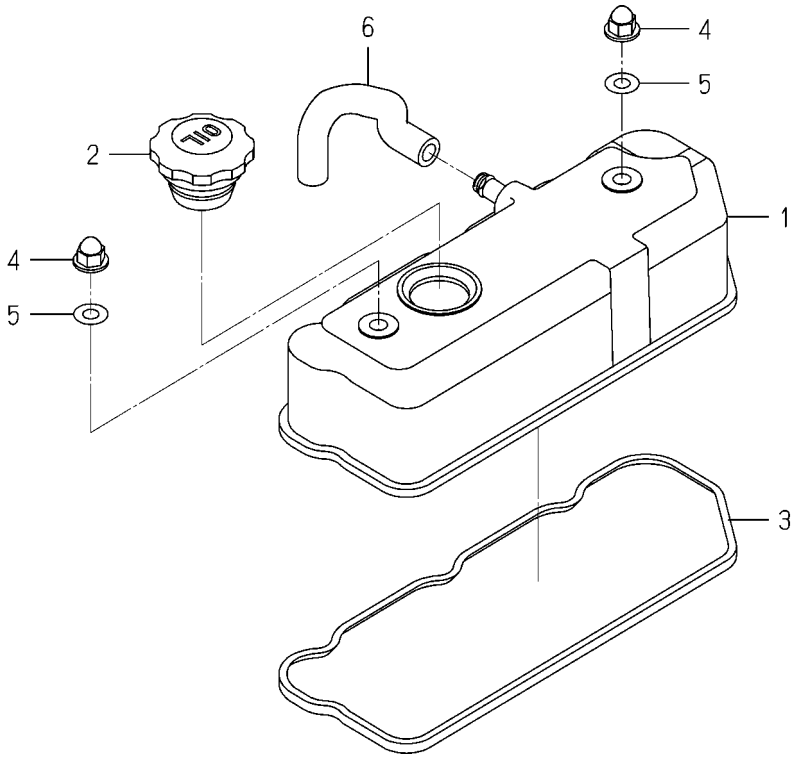

6003-110 -0100

KEY	PART CODE	DESCRIPTION	SPC	TYPE OF MODEL E3112 B13		ITC	COL	GRP	REMARKS
1	6211-170-004-20	COVER/CYLINDER HEAD	*	1					
2	6211-751-001-10	CAP,OIL FILLER	*	1					
3	6211-173-003-00	SEAL,CYL.HEAD COVER	*	1					
4	6209-490-002-10	NUT/CAP	*	2					
5	6209-572-003-00	GASKET	*	2					
6	6209-360-028-10	HOSE/RABBER	*	1					

FIG. 3 INLET MANIFOLD

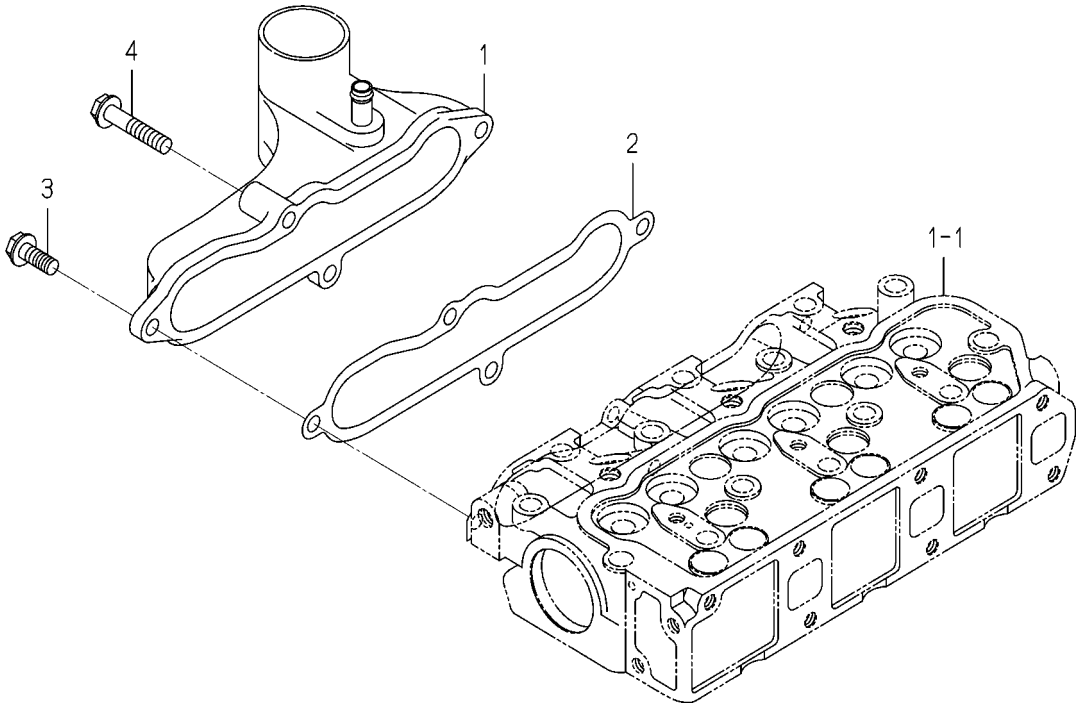

6003-120B-0100

KEY	PART CODE	DESCRIPTION	SPC	TYPE OF MODEL E3112 B13		ITC	COL	GRP	REMARKS
1	6214-111-011-20	MANIFOLD(INLET) ASSY	*	1					
2	6214-115-001-20	GASKET,INLET MANIFOL	*	1					
3	V231-360-802-00	FLANGEBOLT	*	3					
4	V231-360-804-00	FLANGEBOLT	*	1					

FIG. 4 EXHAUST MANIFOLD

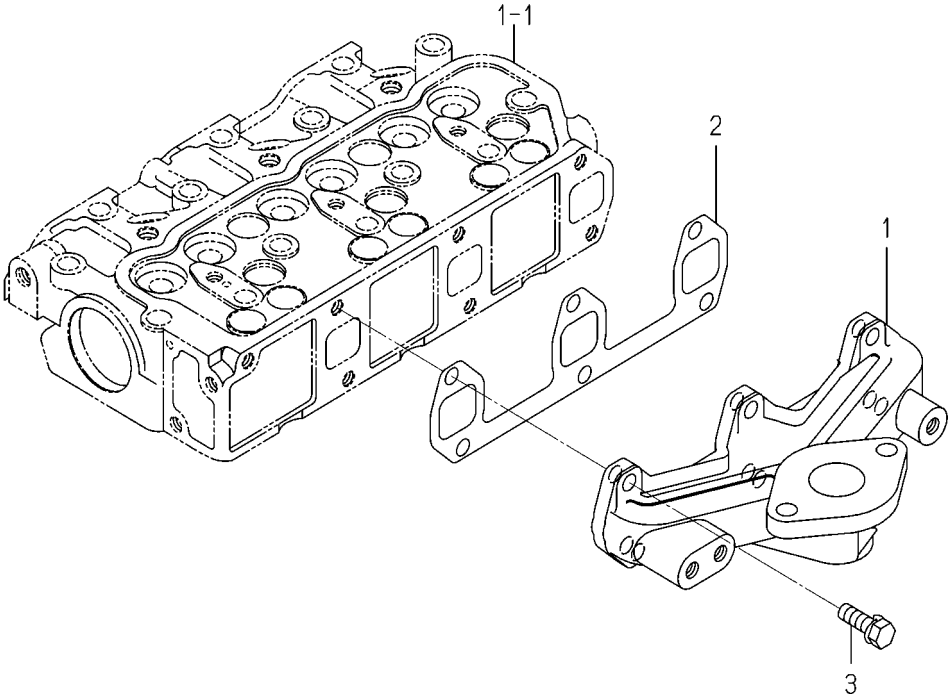

6004-140 -0100

KEY	PART CODE	DESCRIPTION	SPC	TYPE OF MODEL E3112 B13		ITC	COL	GRP	REMARKS
1	6214-141-010-10	MANIFOLD,EXH	*	1					
2	6214-145-001-30	GASKET,EXH.MANIFOLD	*	1					
3	V211-560-802-50	BOLT,SEMS/M8X25 7T	*	6					

FIG. 5 CYLINDER BLOCK

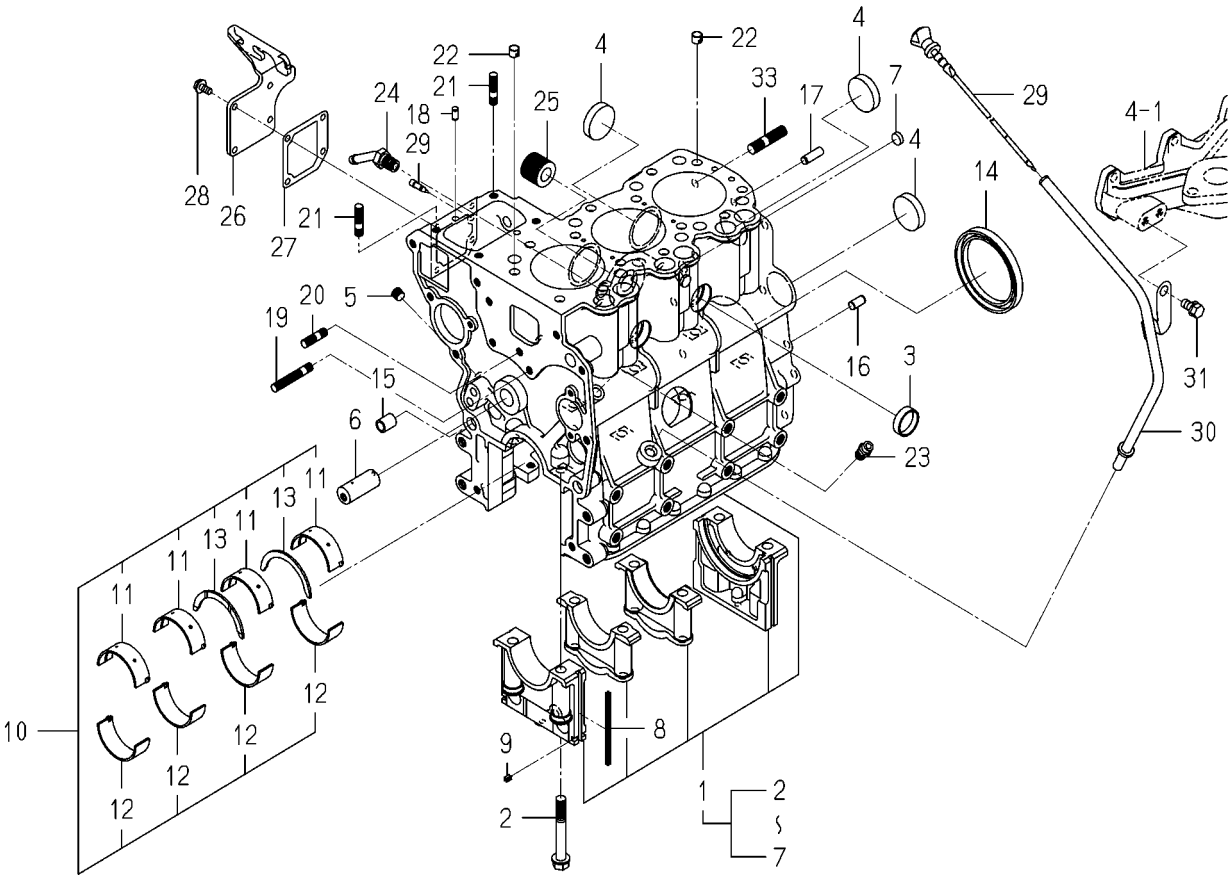

6004-202G-0100

KEY	PART CODE	DESCRIPTION	SPC	TYPE OF MODEL E3112 B13		ITC	COL	GRP	REMARKS
1	6211-210-037-20	CYLINDERBLOCK ASSY	*	1					
2	6209-000-004-10	BOLT	*	8					
3	6209-610-001-10	CUP/SEALING/28	*	2					
4	6209-610-009-00	CUP/SEALING/36	*	4					
5	6509-605-019-10	PLUG	*	3					
6	6212-531-005-10	PIN/IDLEGEAR	*	1					
7	6209-610-008-00	CUP/SEALING/12	*	2					
8	6211-258-001-00	SEAL,BEARING CAP	*	4					
9	6211-258-002-00	SEAL,BEARING CAP/7	*	2					
10	6211-510-001-00	METAL,CRANK SET	*	1					
11	6211-511-003-00	BEARING/CRANK/UPPER	*	4					
12	6211-511-004-00	BEARING/CRANK/LOWER	*	4					
13	6211-599-001-10	BEARING,THRUST CRANK	*	2					
14	6209-625-012-00	OILSEAL	*	1					
15	6209-749-001-20	PIN/TUBE	*	2					
16	6213-129-006-00	PIN/STRAIGHT	*	1					
17	V523-100-802-40	PIN	*	1					
18	6209-740-005-00	PIN	*	2					
19	6904-110-840-00	STUD/M8X40	*	1					
20	6904-110-818-00	STUD	*	1					
21	6904-110-822-00	STUD	*	2					
22	6294-453-002-00	DOWEL	*	2					
23	6909-902-299-00	NIPPLE	*	1					
24	6213-721-007-00	PIPE/WATERDRAIN	*	1					
25	6213-319-001-00	CONNECTOR,OIL FILTER	*	1					
26	6211-291-016-00	COVER/INJECTIONPUMP	*	1					
27	6211-292-001-20	GASKET/COVER	*	1					
28	V230-360-601-20	FLANGEBOLT	*	4					
29	6215-549-013-00	PIN	*	1					
30	6211-760-030-00	LEVELGAGE	*	1					

FIG. 5 CYLINDER BLOCK

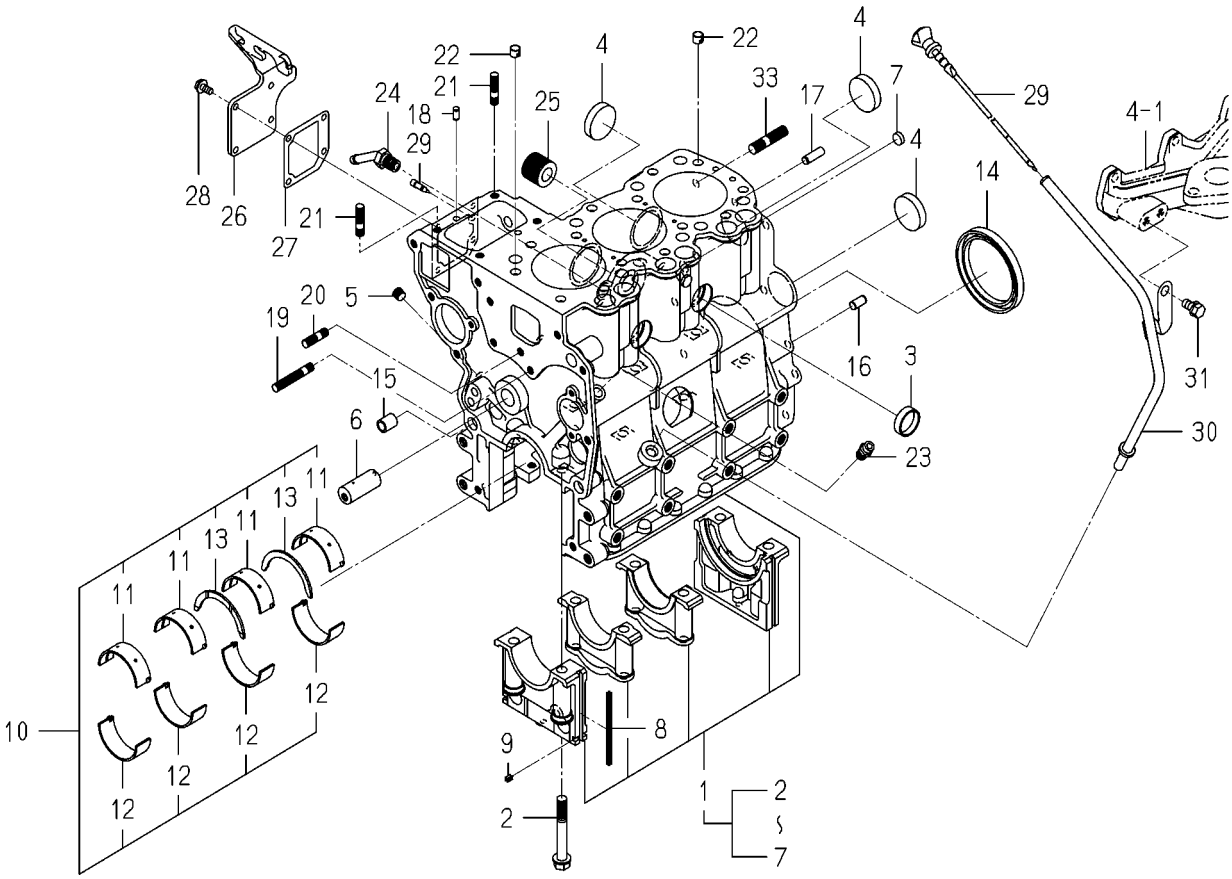

6004-202G-0100

KEY	PART CODE	DESCRIPTION	SPC	TYPE OF MODEL E3112 B13		ITC	COL	GRP	REMARKS
31	6211-766-019-00	GUIDE/LEVELGAGE COMP	*	1					
32	6901-910-816-00	BOLT,SEMS/M8X16	*	1					
33	6209-300-013-00	STUD	*	2					

FIG. 6 BEARING/UNDER SIZE (OPTION)

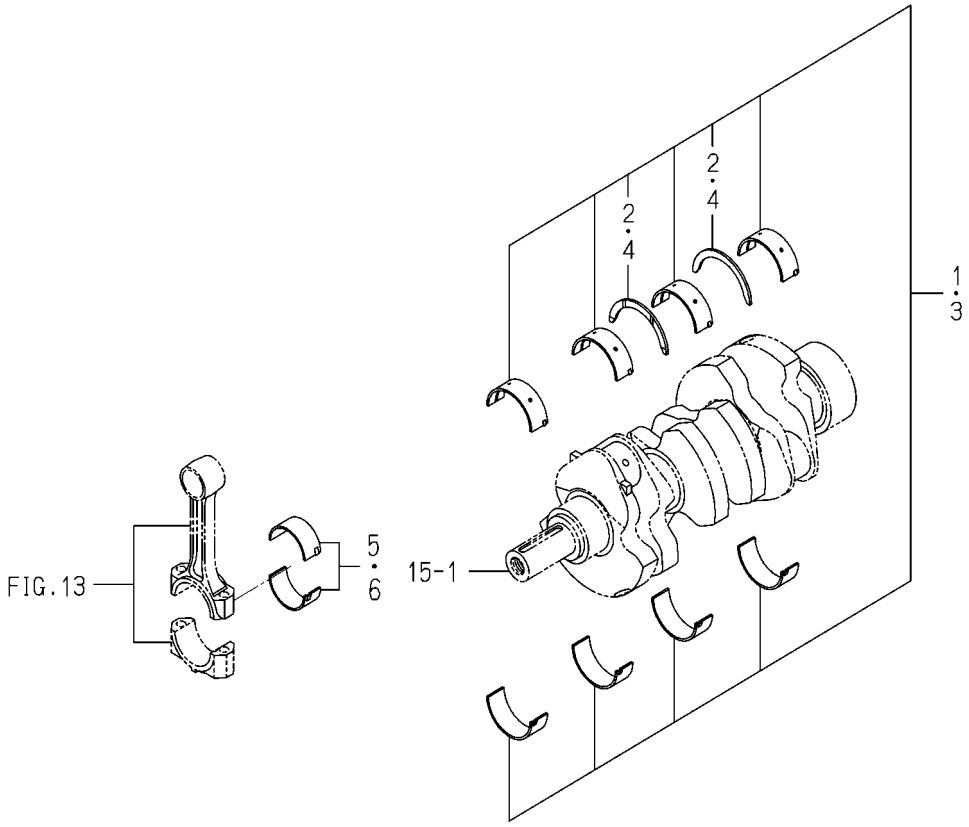

6003-209 -0100

KEY	PART CODE	DESCRIPTION	SPC	TYPE OF MODEL E3112 B13		ITC	COL	GRP	REMARKS
1	6211-540-001-00	METAL,CRANK SET	T	1					
2	6211-599-001-10	BEARING,THRUST CRANK	T	2					
3	6211-560-001-00	METAL,CRANK SET	T	1					
4	6211-599-001-10	BEARING,THRUST CRANK	T	2					
5	6212-274-006-00	BEARING/CONNECTING R	T	3					
6	6212-276-006-00	BEARING/CONNECTING R	T	3					

FIG. 7 OIL PAN

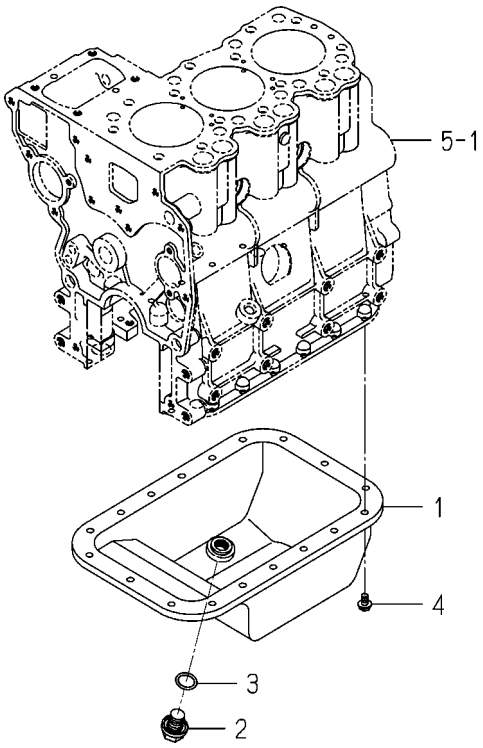

6004-210 -0100

KEY	PART CODE	DESCRIPTION	SPC	TYPE OF MODEL E3112 B13		ITC	COL	GRP	REMARKS
1	6211-361-010-10	PAN,OIL COMP	*	1					
2	6209-600-006-00	PLUG/M14X1.5	*	1					
3	V720-102-401-80	O-RING/P18	*	1					
4	V230-360-601-00	FLANGEBOLT	*	18					

FIG. 8 REAR PLATE

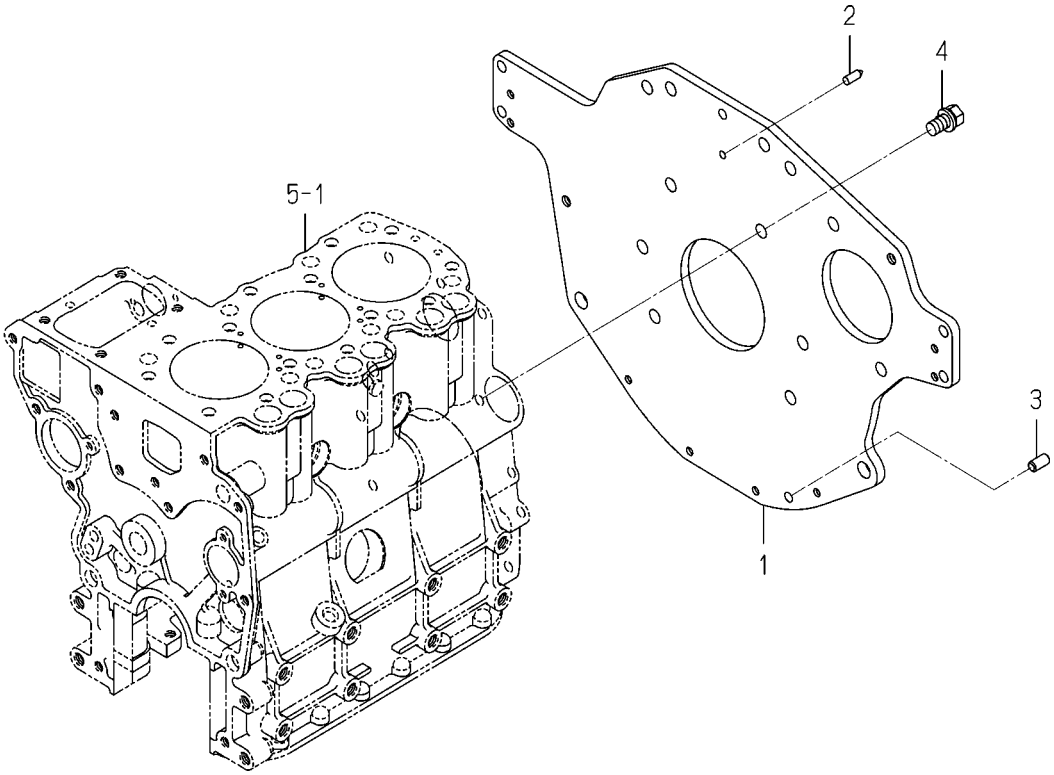

6004-220H-0100

KEY	PART CODE	DESCRIPTION	SPC	TYPE OF MODEL E3112 B13		ITC	COL	GRP	REMARKS
1	6211-341-053-20	PLATE/REAR	*	1					
2	6211-342-002-10	POINTER	*	1					
3	6213-129-006-00	PIN/STRAIGHT	*	1					
4	6901-911-020-00	BOLT,SEMS/M10X20	*	6					

FIG. 9 TIMING GEAR CASE

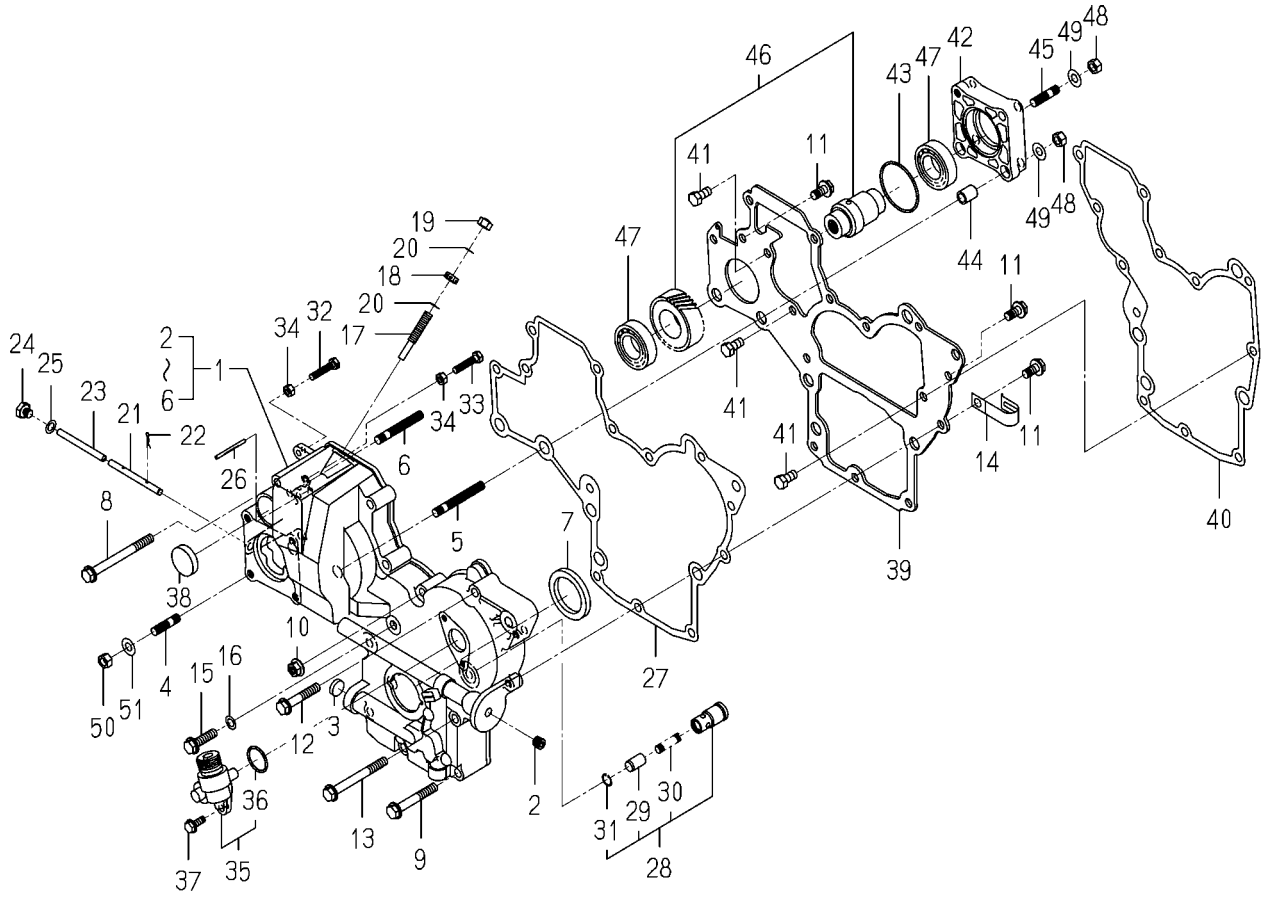

6004-240N-0100,6004-240N-0200

KEY	PART CODE	DESCRIPTION	SPC	TYPE OF MODEL E3112 B13		ITC	COL	GRP	REMARKS
1	6211-310-012-30	GEARCASE ASSY	*	1					
2	6509-605-019-10	PLUG	*	2					
3	6209-610-002-10	CUP/SEALING/16	*	1					
4	6904-110-822-00	STUD	*	4					
5	6904-110-855-00	STUD	*	2					
6	6904-110-850-00	STUD	*	1					
7	6209-625-002-00	SEAL,OIL	*	1					
8	V231-360-808-50	FLANGEBOLT	*	1					
9	V231-360-805-50	FLANGEBOLT	*	2					
10	3817-401-001-00	NUT/M08	*	1					
11	V231-360-801-60	FLANGEBOLT	*	3					
12	V231-360-804-50	FLANGEBOLT	*	5					
13	V231-360-807-50	FLANGEBOLT	*	1					
14	1425-621-004-00	HOLDER/JE/9-9	*	2					
15	V231-360-803-00	FLANGEBOLT	*	1					
16	6209-500-003-00	WASHER/08X14X01	*	1					
17	6215-546-003-10	STOPPER/FULLLOAD	*	1					
18	6209-409-001-00	NUT/M8	*	1					
19	V341-120-008-00	NUT,CAP/M 8	*	1					
20	6209-920-002-00	PACKING	*	2					
21	6215-542-004-20	PIN/ARM	*	1					
22	P117-303-003-00	PIN/SNAP	*	2					
23	6215-542-005-10	PIN	*	1					
24	6209-600-004-00	PLUG/SCREW	*	1					
25	6209-500-003-00	WASHER/08X14X01	*	1					
26	6209-740-001-00	PIN,GROOVE	*	1					
27	6211-312-003-20	GASKET/GEARCASE	*	1					
28	6213-160-002-20	VALVE/RELIEF ASSY	*	1					
29	6213-161-001-20	PISTON/VALVE/RELIEF	*	1					
30	6213-164-001-00	SPRING/RELIEF VALVE	*	1					

FIG. 9 TIMING GEAR CASE

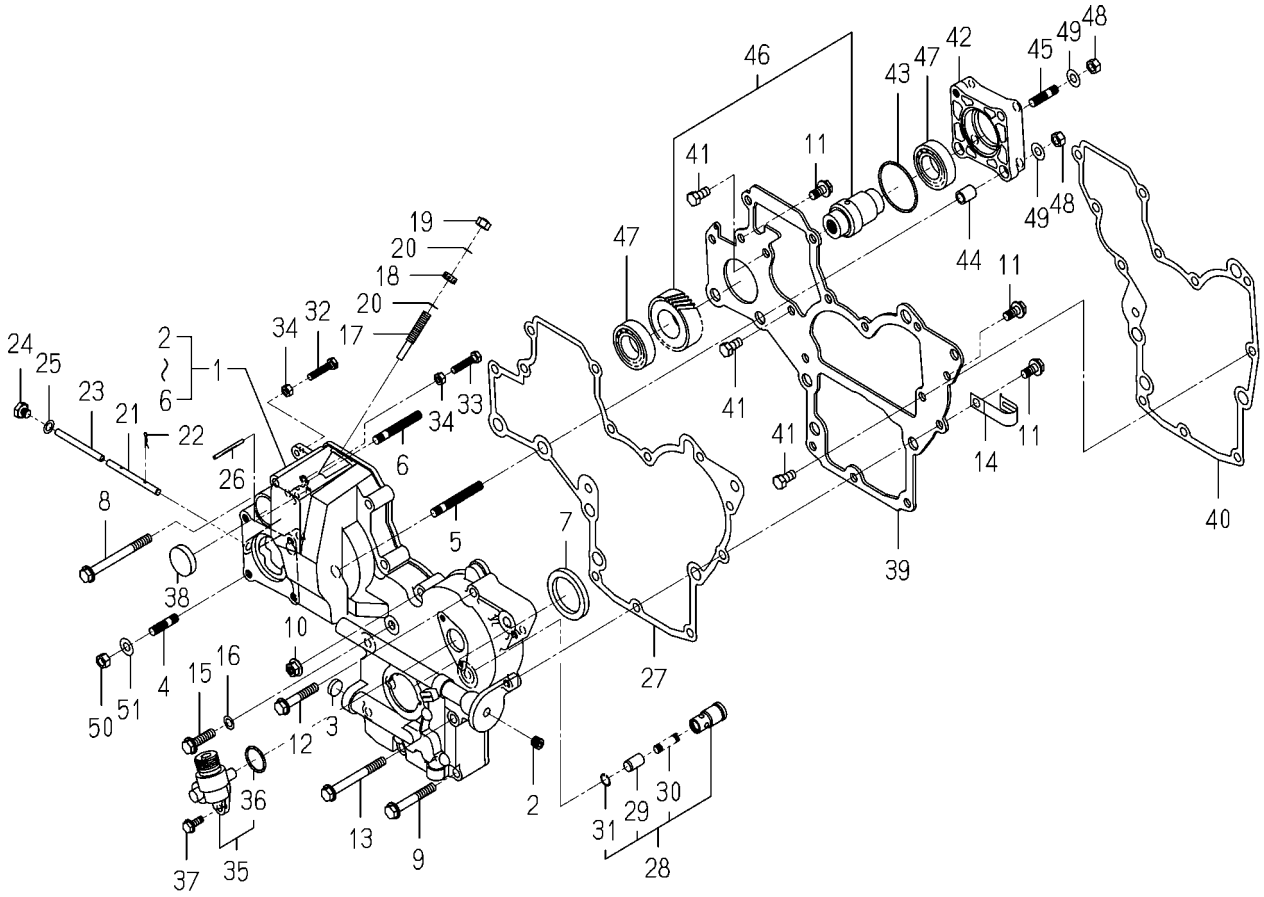

6004-240N-0100,6004-240N-0200

KEY	PART CODE	DESCRIPTION	SPC	TYPE OF MODEL E3112 B13		ITC	COL	GRP	REMARKS
31	V705-140-012-00	RING,SNAP/12 C	*	1					
32	6209-050-001-00	BOLT/M6	*	1					
33	6209-050-002-00	BOLT/M6	*	1					
34	6909-110-406-00	NUT	*	2					
35	6219-310-003-20	DRIVE/TACHOMETE ASSY	*	1					
36	V723-102-002-40	RING/O	*	1					
37	V230-360-601-60	FLANGEBOLT	*	2					
38	3625-540-004-00	CAP,BLANK/30	*	1					
39	6211-311-007-40	PLATE/FRONT	*	1					
40	6211-312-004-20	GASKET/PLATE	*	1					
41	6902-050-816-00	BOLT	*	3					
42	6211-319-003-00	SPACER	*	1					
43	V723-102-005-00	O-RING 1A S50	*	1					
44	6209-749-001-20	PIN/TUBE	*	2					
45	6904-110-822-00	STUD	*	1					
46	6212-530-005-20	SHAFT/HYDRAULIC ASSY	*	1					
47	V600-110-600-50	BEARING,RB/6005	*	2					
48	6909-110-408-00	NUT/M8	*	4					
49	V401-160-008-00	WASHER,SP/M 8	*	4					
50	6909-110-408-00	NUT/M8	*	4					
51	V401-160-008-00	WASHER,SP/M 8	*	4					

FIG. 10 HANGER

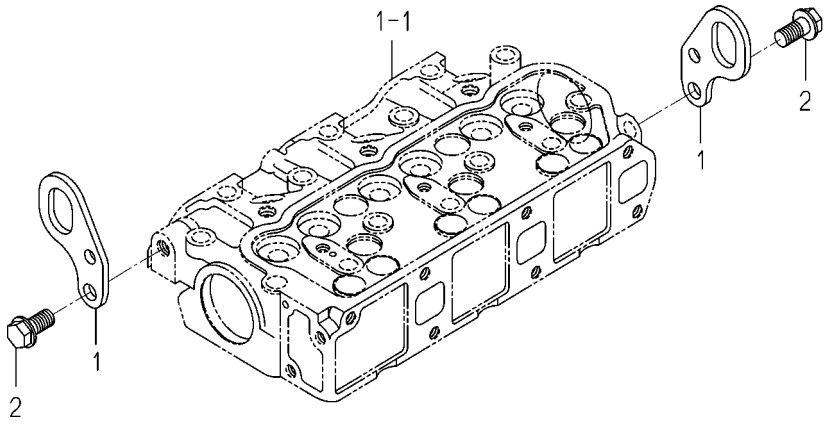

6003-290 -0100

KEY	PART CODE	DESCRIPTION	SPC	TYPE OF MODEL E3112 B13		ITC	COL	GRP	REMARKS
1	6211-777-007-30	HANGER	*	2					
2	V233-361-002-00	FLANGEBOLT	*	2					

FIG. 11 VALVE

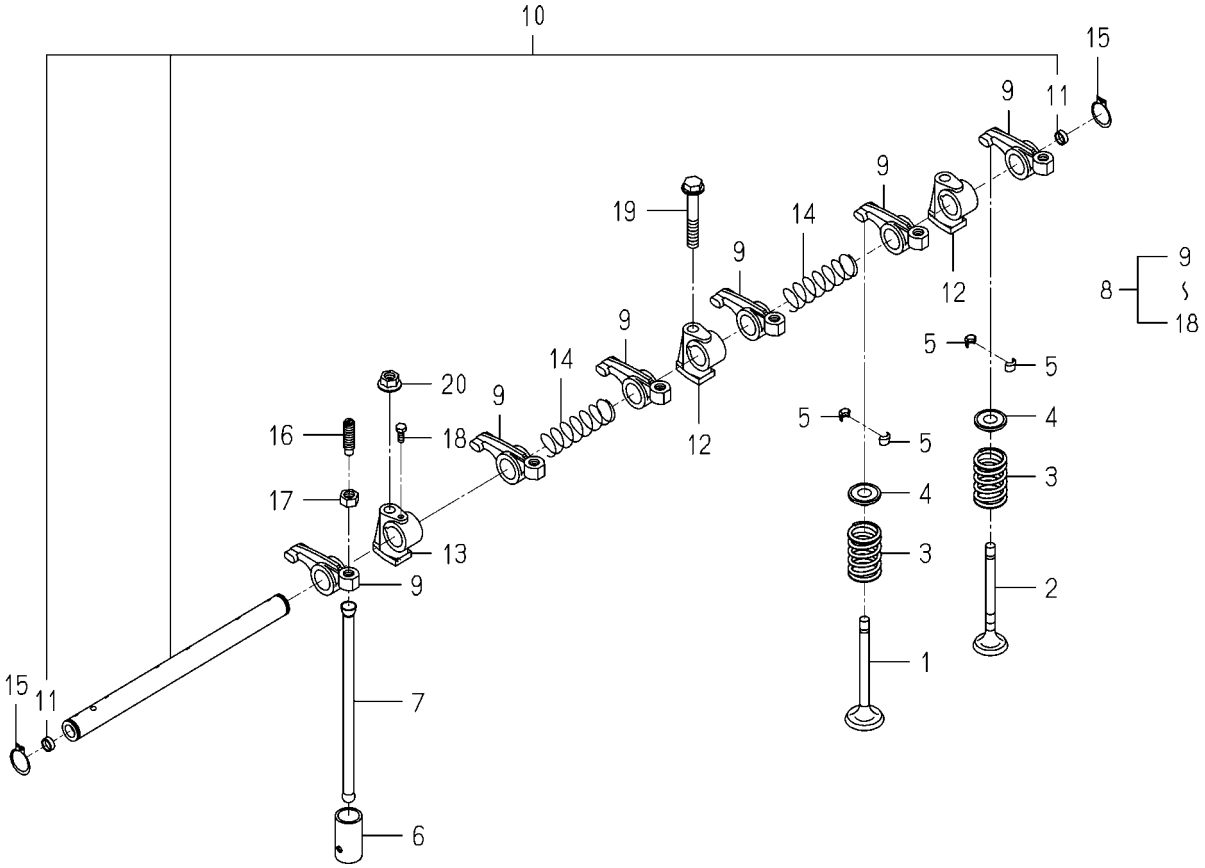

6004-301 -0100

KEY	PART CODE	DESCRIPTION	SPC	TYPE OF MODEL E3112 B13		ITC	COL	GRP	REMARKS
1	6212-551-001-10	VALVE/INTAKE	*	3					
2	6212-552-001-20	VALVE/EXHAUST	*	3					
3	6212-561-001-10	SPRING/VALVE	*	6					
4	6212-563-001-00	SEAT,VALVE SPRING	*	6					
5	6212-565-001-00	CUTTER,VALVE	*	12					
6	6212-571-006-00	TAPPET	*	6					
7	6212-575-002-00	ROD,PUSH	*	6					
8	6212-600-002-10	ROCKERSHAFT ASSY	*	1					
9	6212-611-004-10	ROCKERARM	*	6					
10	6212-620-001-20	SHAFT/ROCKERARM ASSY	*	1					
11	6212-626-002-10	PLUG	*	2					
12	6212-628-004-00	BRACKET ROCKER SHAFT	*	2					
13	6212-628-005-00	BRACKET,ROCKER SHAFT	*	1					
14	6209-940-004-00	SPRING	*	2					
15	V704-140-016-00	RING,SNAP/16 C	*	2					
16	6212-616-002-00	SCREW ADJUST	*	6					
17	6209-409-003-00	NUT	*	6					
18	6209-000-002-00	BOLT	*	1					
19	V231-360-805-00	FLANGEBOLT	*	1					
20	3817-401-001-00	NUT/M08	*	2					

FIG. 12 CAM SHAFT

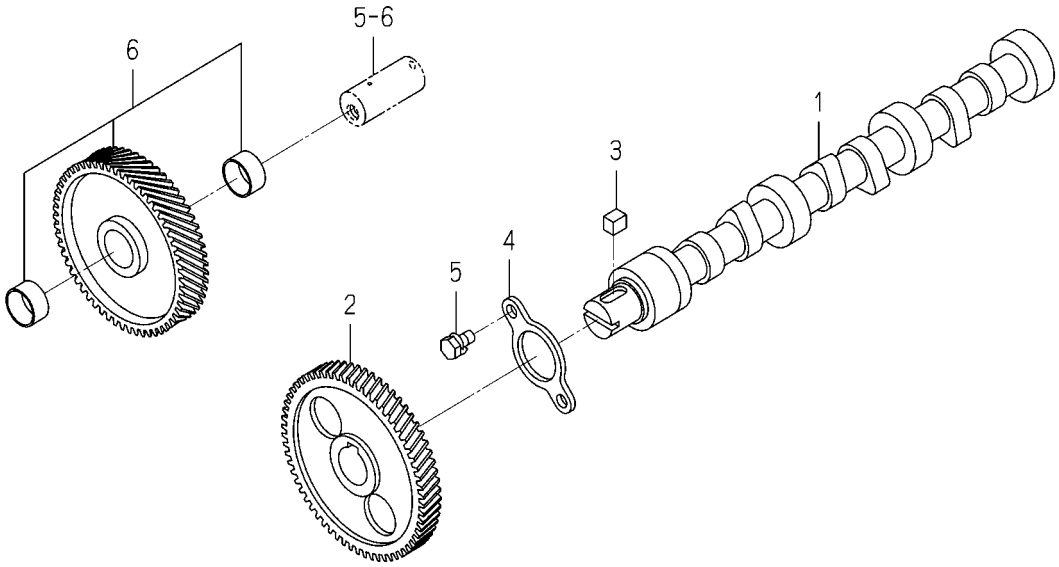

6003-310 -0100

KEY	PART CODE	DESCRIPTION	SPC	TYPE OF MODEL E3112 B13		ITC	COL	GRP	REMARKS
1	6212-511-002-00	SHAFT,CAM	*	1					
2	6212-522-010-00	GEAR/CAMSHAFT	*	1					
3	6209-730-005-00	KEY/07X05X09	*	1					
4	6212-535-001-00	PLATE,THRUST	*	1					
5	6901-910-612-00	BOLT,SEMS/M6X12	*	2					
6	6212-523-023-00	GEAR/IDLE ASSY	*	1					

FIG. 13 PISTON

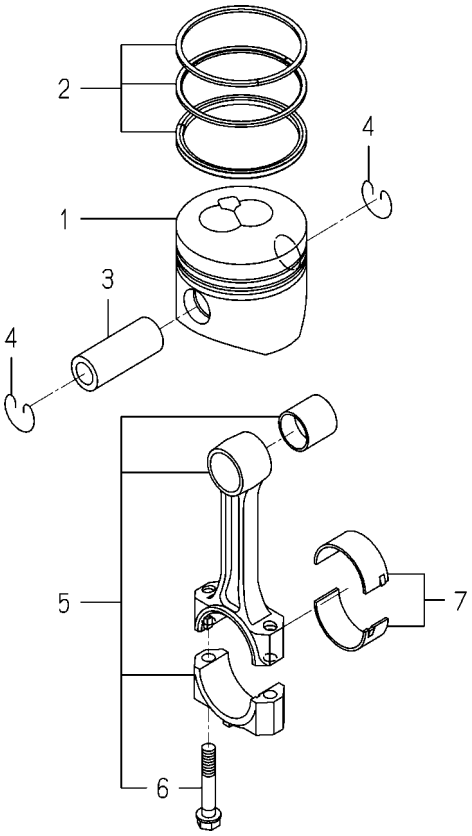

6004-340I-0100

KEY	PART CODE	DESCRIPTION	SPC	TYPE OF MODEL E3112 B13		ITC	COL	GRP	REMARKS
1	6212-111-094-10	PISTON	*	3					
2	6212-121-014-20	RING/PISTON SET	*	3					
3	6212-211-001-10	PIN,PISTON	*	3					
4	6209-587-001-00	RING,SNAP	*	6					
5	6212-230-004-10	CONNECTINGROD ASSY	*	3					
6	6212-235-005-00	BOLT/CONNECTINGROD	*	6					
7	6212-271-006-00	BEARING/CONNECTING R	*	3					

FIG. 14 PISTON/OVER SIZE (OPTION)

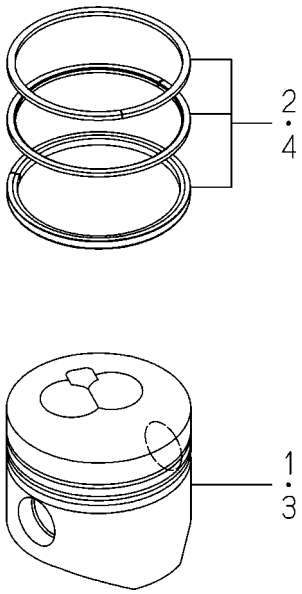

6004-349I-0100

KEY	PART CODE	DESCRIPTION	SPC	TYPE OF MODEL E3112 B13		ITC	COL	GRP	REMARKS
1	6212-114-094-10	PISTON(OV)	T	3					
2	6212-124-014-10	RING/PISTON/OV SET	T	3					
3	6212-116-094-10	PISTON(OV)	T	3					
4	6212-126-014-10	RING/PISTON/OV SET	T	3					

FIG. 15 CRANK SHAFT

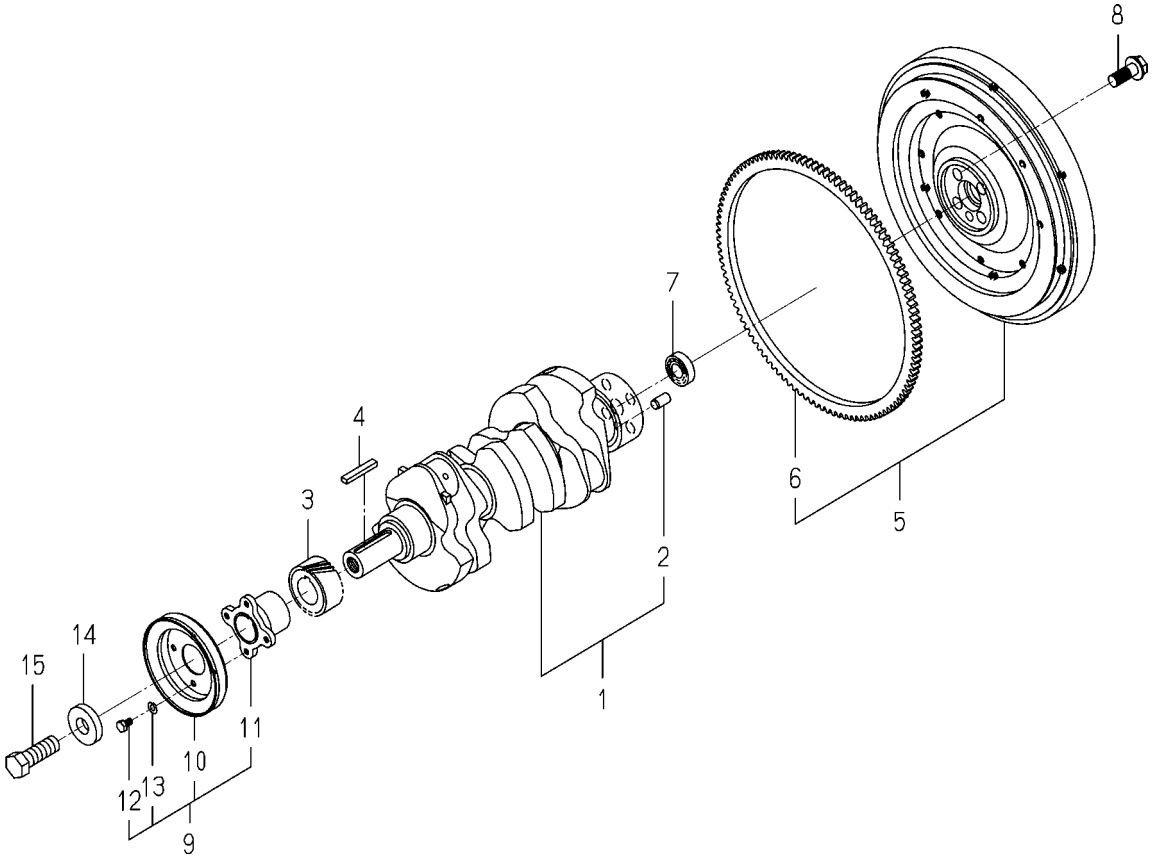

6004-350N-0100

KEY	PART CODE	DESCRIPTION	SPC	TYPE OF MODEL E3112 B13		ITC	COL	GRP	REMARKS
1	6212-310-009-30	CRANKSHAFT ASSY	*	1					
2	V523-101-001-80	PIN	*	1					
3	6212-521-008-00	GEAR/CRANK	*	1					
4	6209-730-006-00	KEY/07X05X43	*	1					
5	6212-330-051-00	FLYWHEEL ASSY	*	1					
6	6212-333-003-00	RINGGEAR	*	1					
7	V600-150-600-20	BEARING,RB/6002SS	*	1					
8	6209-046-015-00	BOLT/FLANGE	*	4					
9	6212-370-011-00	PULLEY ASSY	*	1					
10	6212-371-009-00	PULLEY	*	1					
11	6212-372-002-10	CENTER CRANK PULLEY	*	1					
12	6902-050-610-00	BOLT	*	4					
13	6909-150-506-00	WASHER,SP/M6	*	4					
14	6212-379-001-00	WASHER	*	1					
15	6901-066-645-00	BOLT	*	1					

FIG. 16 OIL PUMP

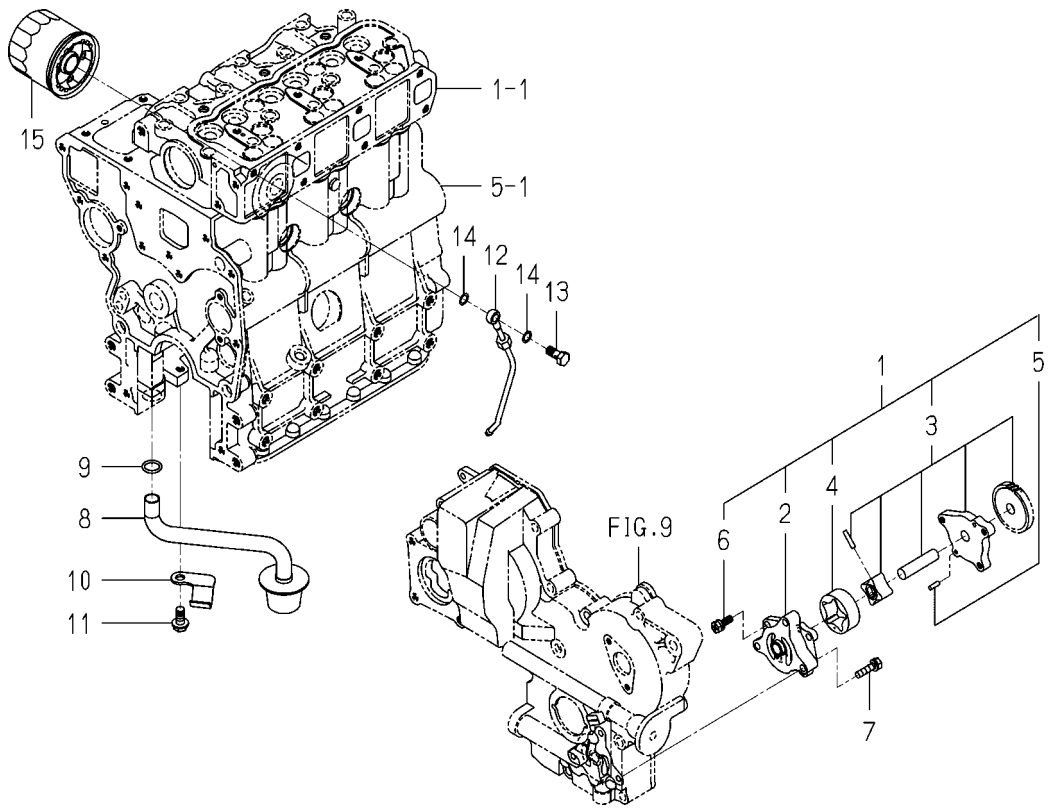

6004-401B-0100

KEY	PART CODE	DESCRIPTION	SPC	TYPE OF MODEL E3112 B13		ITC	COL	GRP	REMARKS
1	6213-100-003-30	OILPUMP ASSY	*	1					
2	6213-111-001-30	BODY/OILPUMP	*	1					
3	6213-120-003-20	GEAR/OILPUMP ASSY	*	1					
4	6213-125-001-00	ROTOR/OUTER	*	1					
5	6213-129-003-00	PIN/STRAIGHT	*	2					
6	6213-119-001-00	BOLT/WS	*	3					
7	6901-910-625-00	BOLT	*	3					
8	6213-140-008-00	STRAINER	*	1					
9	V720-102-401-50	O-RING/P15	*	1					
10	6213-149-002-00	CLAMP,STRAINER	*	1					
11	V231-360-801-60	FLANGEBOLT	*	1					
12	6213-311-006-00	PIPE,OIL	*	1					
13	6909-906-105-10	BOLT,JOINT	*	1					
14	6209-920-002-00	PACKING	*	2					
15	6213-240-002-10	CARTRIDGE/OILFILTER	*	1					

FIG. 17 WATER PUMP

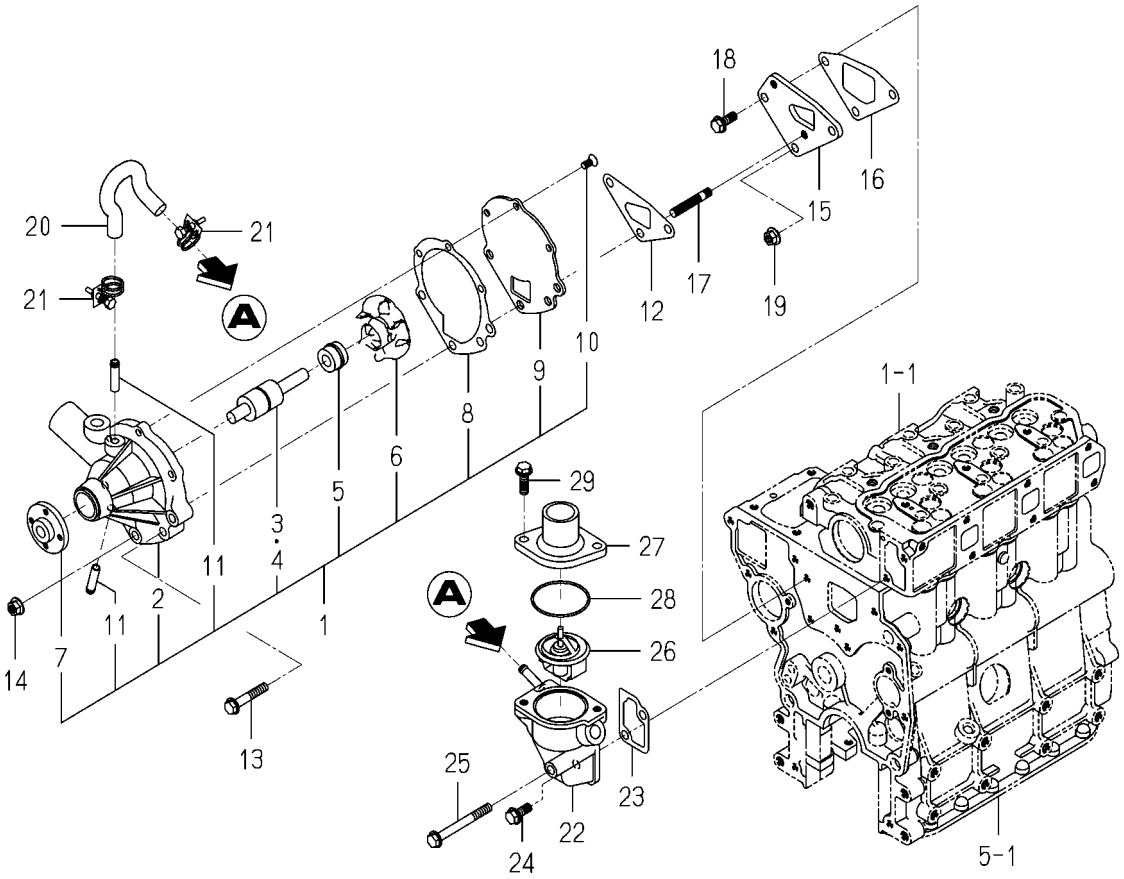

6004-420 -0100

KEY	PART CODE	DESCRIPTION	SPC	TYPE OF MODEL E3112 B13		ITC	COL	GRP	REMARKS
1	6213-610-005-40	WATERPUMP ASSY	*	1					
2	6213-611-003-20	BODY/WATERPUMP	*	1					
3	6213-631-002-00	BEARING/WATER PUMP	*	1					
4	6213-631-005-00	BEARING/WATERPUMP	*	1					
5	6213-622-002-10	SEAL SET/WATER PUMP	*	1					
6	6213-621-003-00	ROTOR/WATERPUMP	*	1					
7	6213-642-002-00	SEAL/WATER PUMPPULLE	*	1					
8	6213-613-002-10	GASKET	*	1					
9	6213-612-004-00	PLATE/WATER PUMP	*	1					
10	6213-619-003-00	SCREW/WATER PUMP	*	3					
11	6213-619-002-00	PIPE/WATER PUMP	*	2					
12	6213-614-003-10	GASKET/WATER PUMP	*	1					
13	V231-360-804-50	FLANGEBOLT	*	1					
14	3817-401-001-00	NUT/M08	*	2					
15	6213-619-001-00	SPACER,PUMP.WATER	*	1					
16	6213-614-004-10	GASKET,SPACER	*	1					
17	6904-110-840-00	STUD/M8X40	*	2					
18	V231-360-802-00	FLANGEBOLT	*	1					
19	3817-401-001-00	NUT/M08	*	1					
20	6213-729-013-10	HOSE/RUBBER	*	1					
21	J061-210-015-00	CLAMP/WIRE/10-15	*	2					
22	6213-716-001-50	HOUSING/THERMOSTAT	*	1					
23	6213-743-002-10	GASKET/HOUSING	*	1					
24	V231-360-802-00	FLANGEBOLT	*	1					
25	V231-360-807-50	FLANGEBOLT	*	1					
26	6513-770-022-10	THERMOSTAT	*	1					
27	6213-711-003-20	PIPE,WATER OUTLET	*	1					
28	V723-102-005-50	O-RING	*	1					
29	V231-360-802-50	FLANGEBOLT	*	2					

FIG. 18 COOLING FAN

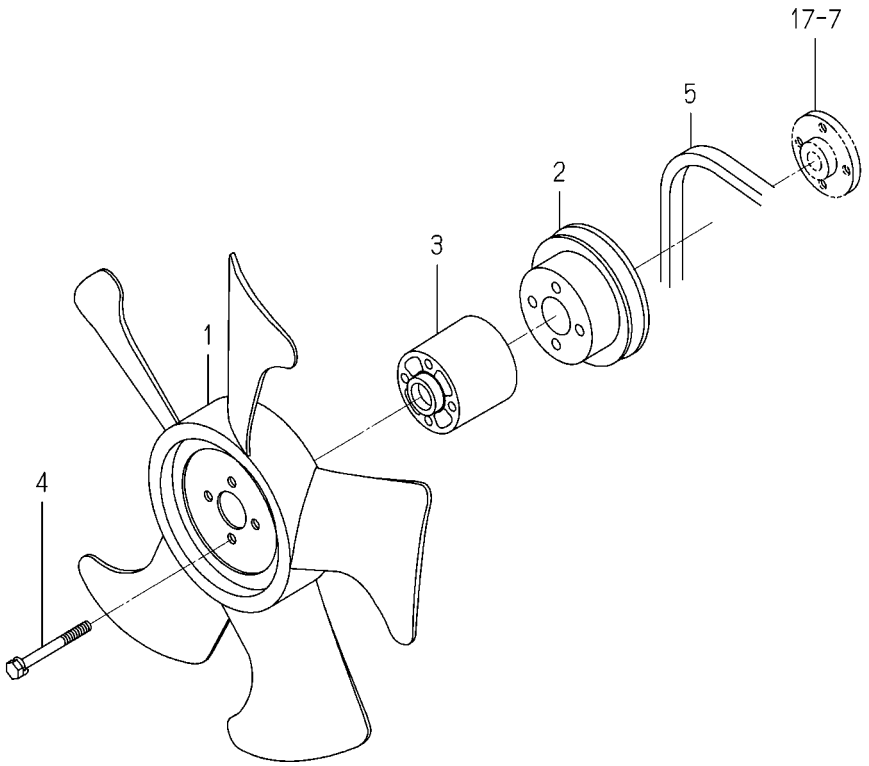

6004-480R-0100

KEY	PART CODE	DESCRIPTION	SPC	TYPE OF MODEL E3112 B13		ITC	COL	GRP	REMARKS
1	6213-660-023-00	FAN/COOLING	*	1					
2	6213-641-002-10	PULLEY,WATER PUMP	*	1					
3	6213-669-008-00	SPACER/FAN/48	*	1					
4	6209-030-044-00	BOLT/WS	*	4					
5	6213-671-012-00	BELT/VHM34.5/FAN	*	1					

FIG. 19 INJECTION NOZZLE

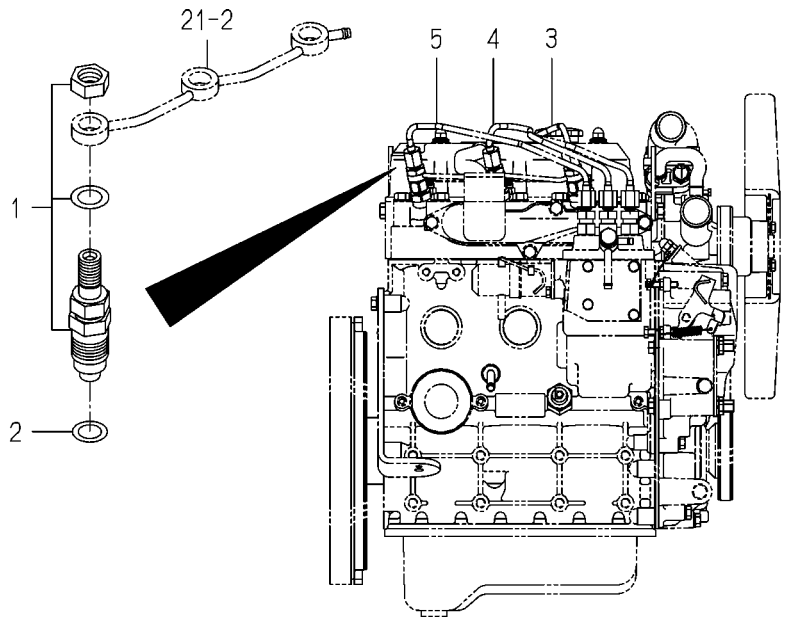

6004-501C-0100

KEY	PART CODE	DESCRIPTION	SPC	TYPE OF MODEL E3112 B13		ITC	COL	GRP	REMARKS
1	6215-300-036-00	INJECTIONNOZZLE ASSY	*	3					FIG 026
2	6215-315-002-00	GASKET,NOZZLE	*	3					
3	6215-411-126-10	PIPE/INJECTION ASSY	*	1					
4	6215-411-127-00	PIPE/INJECTION ASSY	*	1					
5	6215-411-128-00	PIPE/INJECTION ASSY	*	1					

FIG. 20 INJECTION PUMP

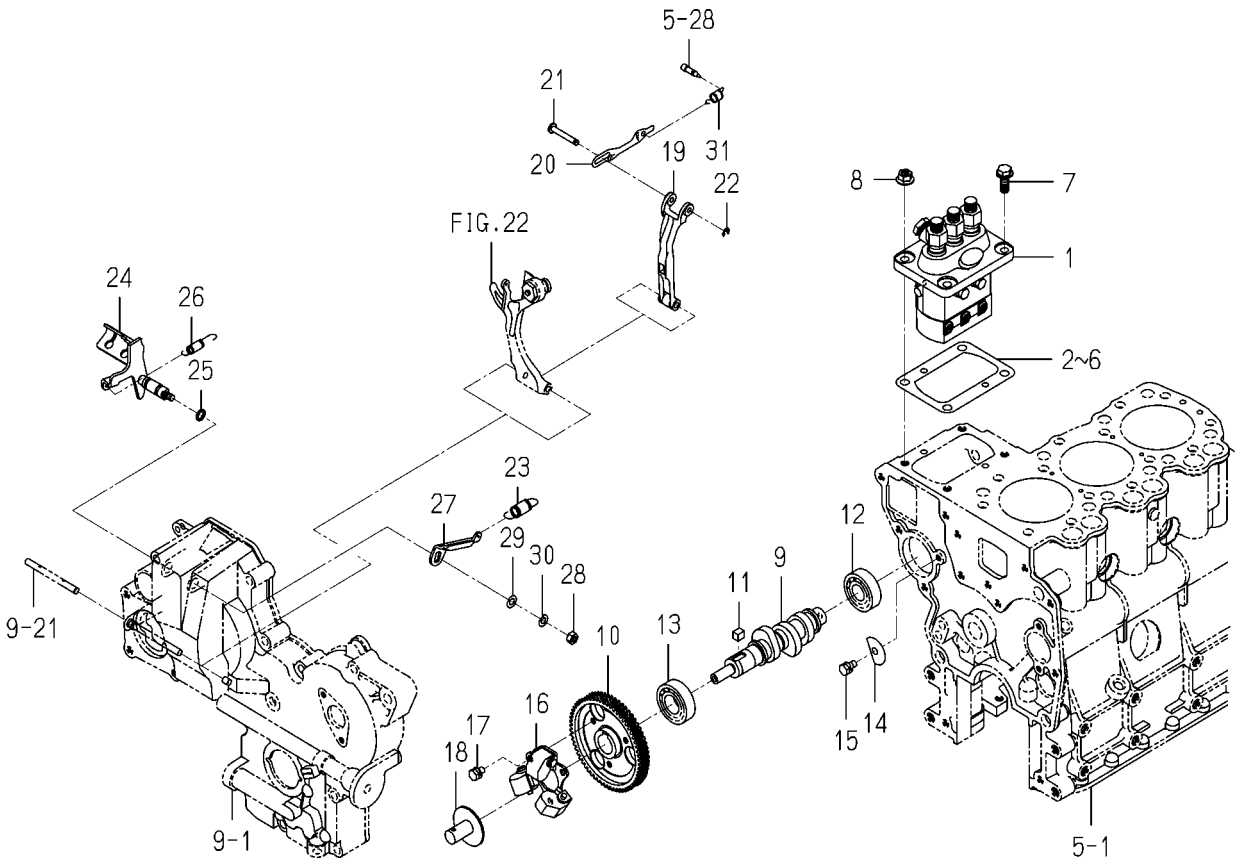

6004-511A-0100

KEY	PART CODE	DESCRIPTION	SPC	TYPE OF MODEL E3112 B13		ITC	COL	GRP	REMARKS
1	6215-600-103-10	INJECTIONPUMP ASSY	*	1					FIG 027
2	6219-752-006-00	SHIM/INJECTION P/0.3	*	1					
3	6219-752-007-00	SHIM/INJECTION P/0.1	*	1					
4	6219-752-008-00	SHIM/INJECTION P/0.2	*	1					
5	6219-752-009-00	SHIM/INJECTION P/0.4	*	1					
6	6219-752-010-00	SHIM/INJECTION P/0.5	*	1					
7	V231-360-802-00	FLANGEBOLT	*	2					
8	3817-401-001-00	NUT/M08	*	2					
9	6215-621-016-20	CAMSHAFT/INJECTION P	*	1					
10	6212-524-002-20	GEAR/INJECTIONPUMP	*	1					
11	6209-730-005-00	KEY/07X05X09	*	1					
12	V600-110-620-30	BEARING,RB/6203	*	1					
13	V600-110-600-40	BEARING,RB/6004	*	1					
14	6212-535-002-00	PLATE,THRUST INJPUMP	*	1					
15	6901-910-612-00	BOLT,SEMS/M6X12	*	1					
16	6215-520-001-00	FLYWEIGHT	*	1					
17	6209-030-043-00	BOLT/M6X10	*	3					
18	6215-526-004-00	THRUSTPIECE	*	1					
19	6215-541-001-10	ARM/FLOATING COMP	*	1					
20	6215-543-002-10	RINK/CONTROL	*	1					
21	6215-542-006-00	PIN,CONTROL	*	1					
22	V710-140-004-00	RING,SNAP/ 4 E	*	1					
23	6215-531-019-00	SPRING/GOVERNOR	*	1					
24	6215-541-024-30	LEVER/CONTROL COMP	*	1					
25	V720-101-900-80	O-RING/P 8	*	1					
26	6209-580-002-10	SPRING,RETURN	*	1					
27	6215-549-007-10	ARM/CONTROL	*	1					
28	6909-110-406-00	NUT	*	1					
29	V411-260-006-00	WASHER / M6	*	1					
30	V401-160-006-00	WASHER,SP/M 6	*	1					

FIG. 20 INJECTION PUMP

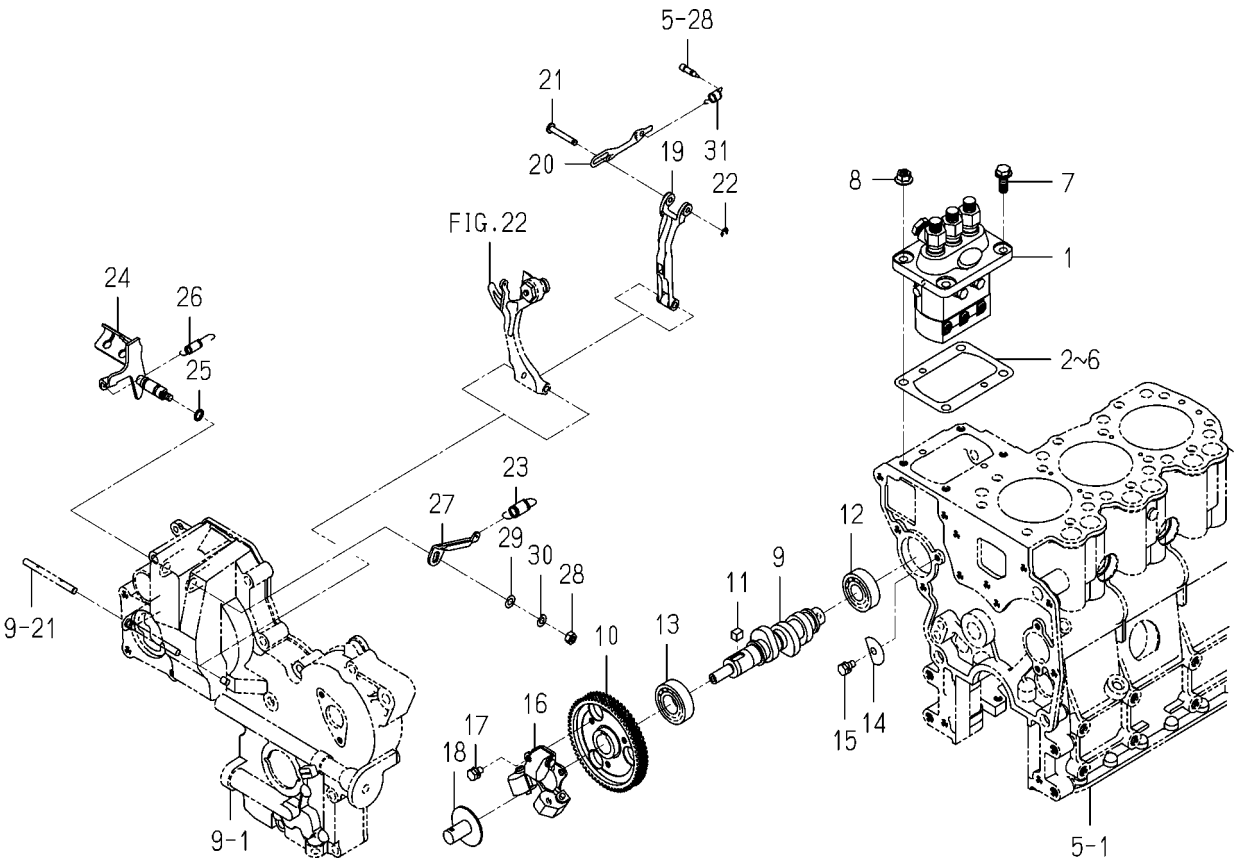

6004-511A-0100

KEY	PART CODE	DESCRIPTION	SPC	TYPE OF MODEL E3112 B13		ITC	COL	GRP	REMARKS
31	6215-549-012-00	SPRING,STARTING	*	1					

FIG. 21 FUEL PIPE

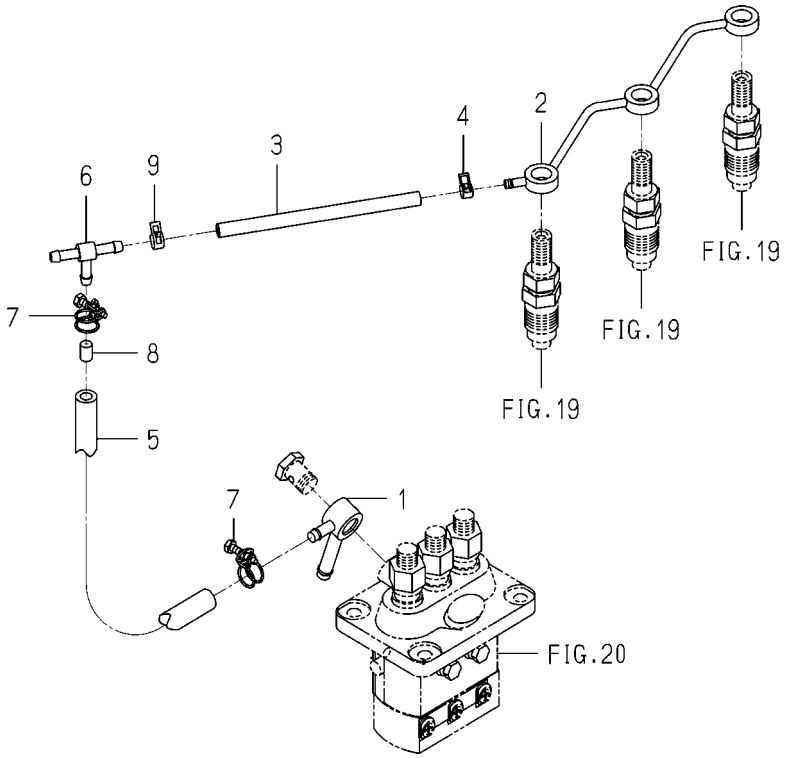

6004-550I-0100

KEY	PART CODE	DESCRIPTION	SPC	TYPE OF MODEL E3112 B13		ITC	COL	GRP	REMARKS
1	6215-412-002-10	CONNECTOR	*	1					
2	6215-411-125-00	PIPE/FUEL	*	1					
3	6209-360-005-00	HOSE,RUBBER	*	1					
4	J062-076-082-00	CLIP/HOSE/7.6-8.2	*	1					
5	6209-360-021-00	HOSE/RUBBER	*	1					
6	3632-360-036-00	JOINTT-TYPE 2	*	1					
7	6209-704-009-00	CLAMP/WIRE/10-12	*	2					
8	6215-419-001-00	TUBE,ORIFICE	*	1					
9	J062-087-093-00	CLIP/HOSE/8.7-9.3	*	1					

FIG. 22 ADAPTER

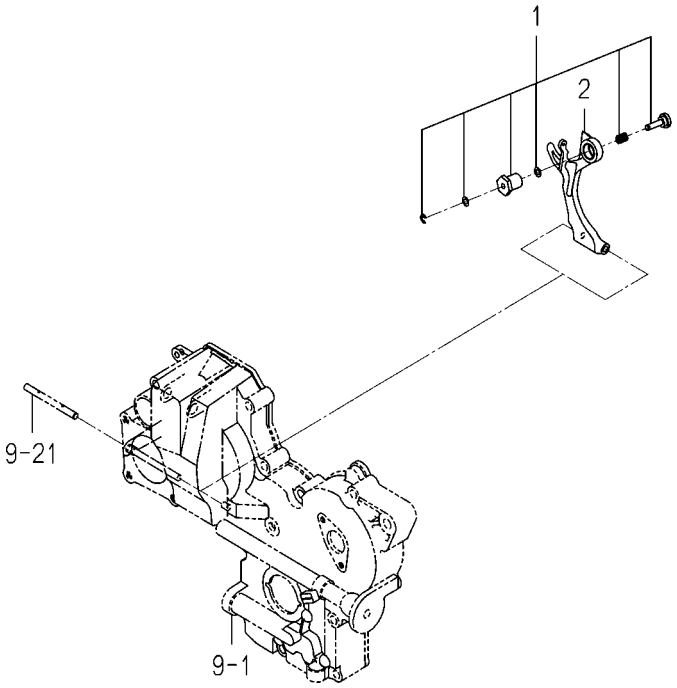

6004-560K-0100

KEY	PART CODE	DESCRIPTION	SPC	TYPE OF MODEL E3112 B13		ITC	COL	GRP	REMARKS
1	6215-548-026-00	ADAPTER/220X125 ASSY	*	1					
2	6215-541-016-30	ARM/TENSION	*	1					

FIG. 23 ELECTRIC (1)

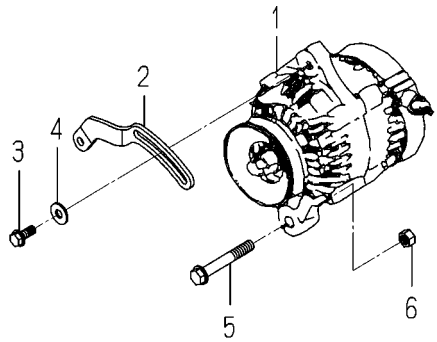

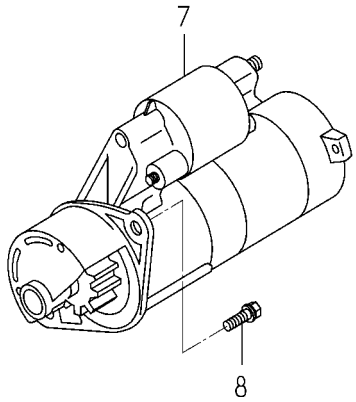

6004-801K-0100,6004-801K-0200

KEY	PART CODE	DESCRIPTION	SPC	TYPE OF MODEL E3112 B13		ITC	COL	GRP	REMARKS
1	6281-200-005-00	GENERATOR ASSY	*	1					FIG 029
2	6213-674-006-20	PLATE/ADJUST	*	1					
3	V231-360-802-00	FLANGEBOLT	*	1					
4	1373-121-001-00	WASHER/9X22X2	*	1					
5	V233-361-007-00	FLANGEBOLT	*	1					
6	6909-110-410-00	NUT/M10	*	1					
7	6281-100-014-00	STARTER ASSY	*	1					FIG 028
8	6209-030-085-00	BOLT/WS	*	2					

FIG. 24 ELECTRIC (2)

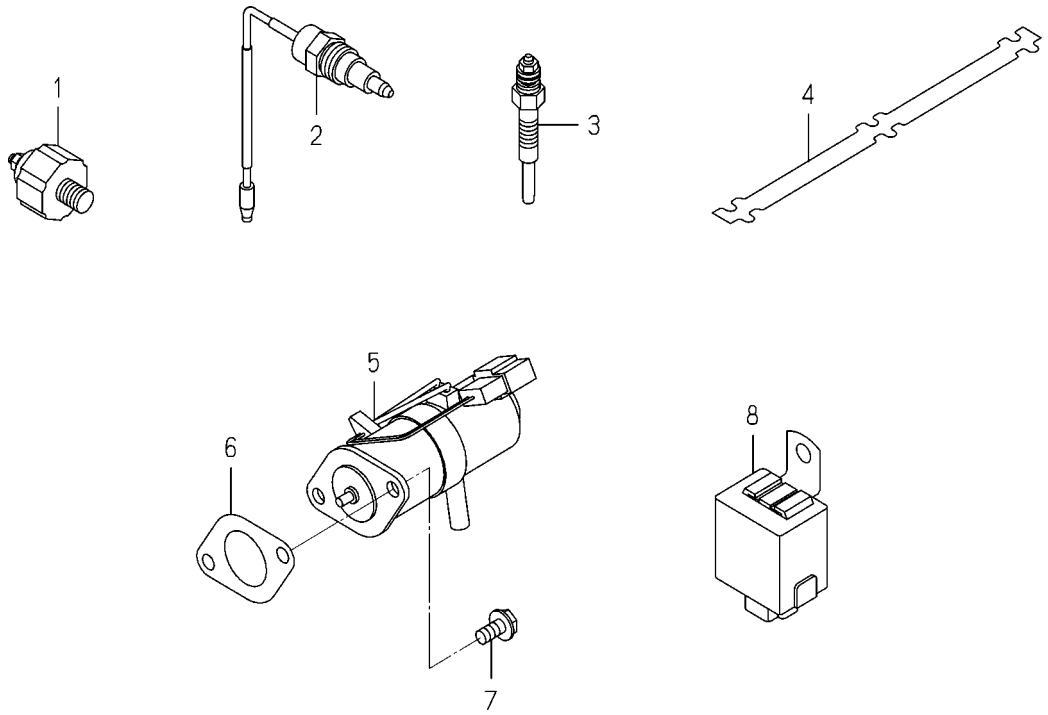

6004-820J-0100,6004-820J-0200

KEY	PART CODE	DESCRIPTION	SPC	TYPE OF MODEL E3112 B13		ITC	COL	GRP	REMARKS
1	6281-971-003-00	SWITCH/OILPRESSURE	*	1					
2	6282-450-002-00	SWITCH/OVERHEAT	*	1					
3	6281-410-010-00	GLOWPLUG	*	3					
4	6219-732-016-00	CONNECTOR/GLOWPLUG	*	1					
5	6281-910-003-10	SOLENOID	*	1					
6	6209-630-002-10	GASKET	*	1					
7	V230-360-601-20	FLANGEBOLT	*	2					
8	6281-920-001-00	RELAY,SOLENOID	*	1					

FIG. 25 REPAIR PARTS (OPTION)

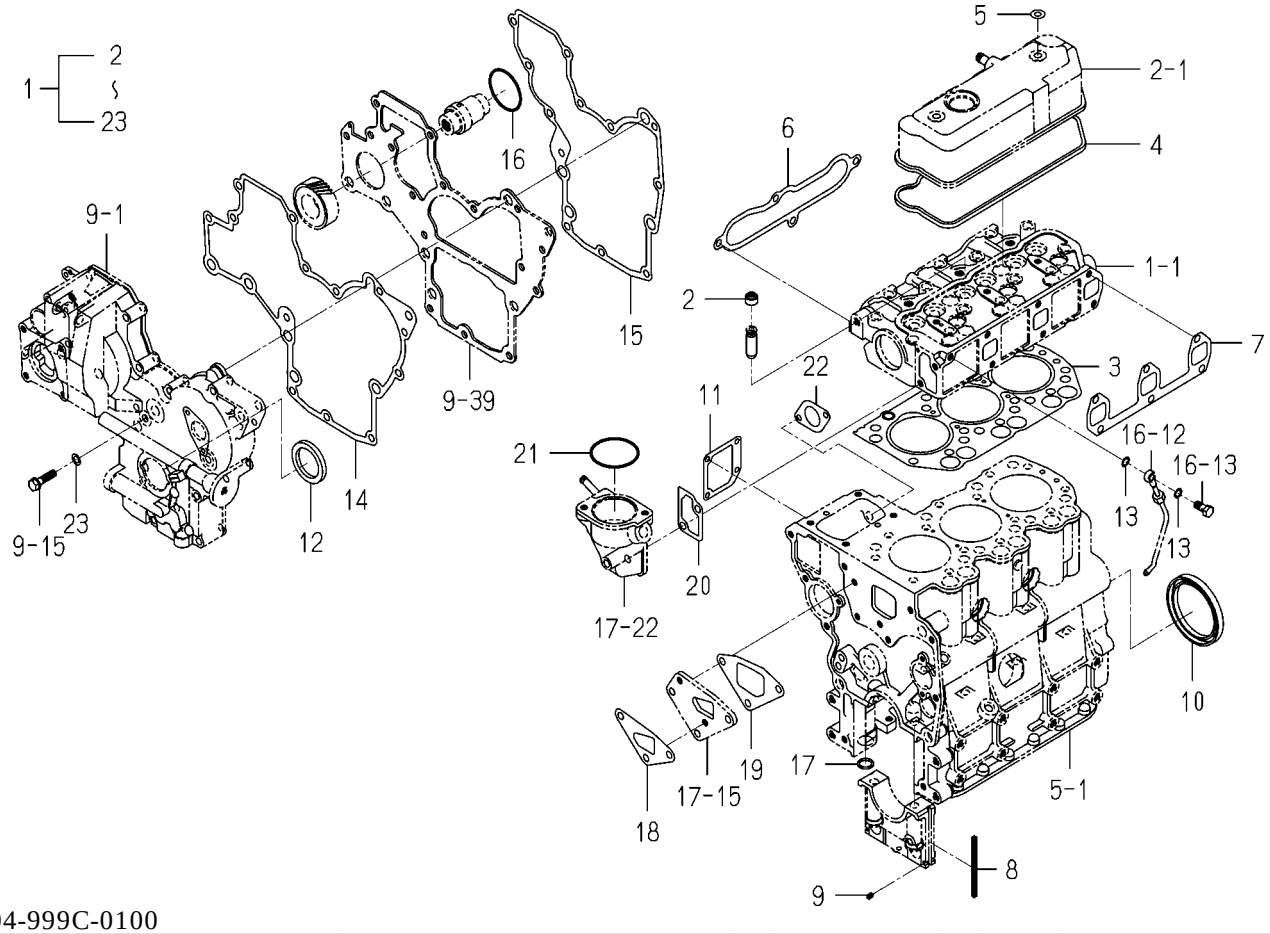

6004-999C-0100

KEY	PART CODE	DESCRIPTION	SPC	TYPE OF MODEL E3112 B13		ITC	COL	GRP	REMARKS
1	6287-810-015-20	REPAIR/ENGINE SET	T	1					
2	6212-569-002-00	SEAL,OIL	T	6					
3	6211-141-029-20	GASKET/CYLINDERHEAD	T	1					
4	6211-173-003-00	SEAL,CYL.HEAD COVER	T	1					
5	6209-572-003-00	GASKET	T	2					
6	6214-115-001-20	GASKET,INLET MANIFOL	T	1					
7	6214-145-001-30	GASKET,EXH.MANIFOLD	T	1					
8	6211-258-001-00	SEAL,BEARING CAP	T	4					
9	6211-258-002-00	SEAL,BEARING CAP/7	T	2					
10	6209-625-012-00	OILSEAL	T	1					
11	6211-292-001-20	GASKET/COVER	T	1					
12	6209-625-002-00	SEAL,OIL	T	1					
13	6209-920-002-00	PACKING	T	2					
14	6211-312-003-20	GASKET/GEARCASE	T	1					
15	6211-312-004-20	GASKET/PLATE	T	1					
16	V723-102-005-00	O-RING 1A S50	T	1					
17	V720-102-401-50	O-RING/P15	T	1					
18	6213-614-003-10	GASKET/WATER PUMP	T	1					
19	6213-614-004-10	GASKET,SPACER	T	1					
20	6213-743-002-10	GASKET/HOUSING	T	1					
21	V723-102-005-50	O-RING	T	1					
22	6209-630-002-10	GASKET	T	1					
23	6209-500-003-00	WASHER/08X14X01	T	2					

FIG. 26 COMPONENT PARTS FOR 6215-300-036-00 ON Fig.19

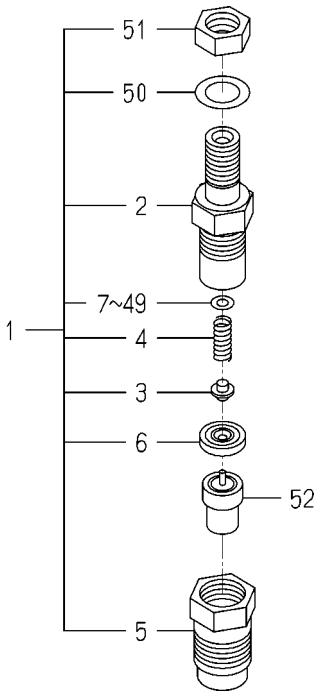

6215-300-036-0A

KEY	PART CODE	DESCRIPTION	SPC	TYPE OF MODEL E3112 B13		ITC	COL	GRP	REMARKS
1	6215-330-024-00	HOLDER/NOZZLE ASSY	*	3					
2	6215-331-008-00	BODY/NOZZLE HOLDER	*	3					
3	6215-342-001-00	PIN,NOZZLE HOLDER	*	3					
4	6215-343-001-00	WASHER	*	3					
5	6215-332-013-00	NUT/NOZZLERETAINING	*	3					
6	6215-339-001-00	PIECE,DISTANCE	*	3					
7	6215-345-001-00	WASHER/0.9	*	3					
8	6215-345-002-00	WASHER/0.925	*	3					
9	6215-345-003-00	WASHER/0.95	*	3					
10	6215-345-004-00	WASHER/0.975	*	3					
11	6215-345-005-00	WASHER/1.0	*	3					
12	6215-345-006-00	WASHER/1.025	*	3					
13	6215-345-007-00	WASHER/1.05	*	3					
14	6215-345-008-00	WASHER/1.075	*	3					
15	6215-345-009-00	WASHER/1.1	*	3					
16	6215-345-010-00	WASHER/1.125	*	3					
17	6215-345-011-00	WASHER/1.15	*	3					
18	6215-345-012-00	WASHER/1.175	*	3					
19	6215-345-013-00	WASHER/1.2	*	3					
20	6215-345-014-00	WASHER/1.225	*	3					
21	6215-345-015-00	WASHER/1.25	*	3					
22	6215-345-016-00	WASHER/1.275	*	3					
23	6215-345-017-00	WASHER/1.3	*	3					
24	6215-345-018-00	WASHER/1.325	*	3					
25	6215-345-019-00	WASHER/1.35	*	3					
26	6215-345-020-00	WASHER/1.375	*	3					
27	6215-345-021-00	WASHER/1.4	*	3					
28	6215-345-022-00	WASHER/1.425	*	3					
29	6215-345-023-00	WASHER/1.45	*	3					
30	6215-345-024-00	WASHER/1.475	*	3					

FIG. 26 COMPONENT PARTS FOR 6215-300-036-00 ON Fig.19

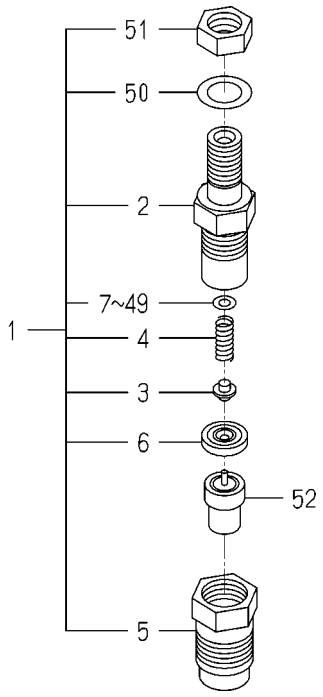

6215-300-036-0A

KEY	PART CODE	DESCRIPTION	SPC	TYPE OF MODEL E3112 B13		ITC	COL	GRP	REMARKS
31	6215-345-025-00	WASHER/1.5	*	3					
32	6215-345-026-00	WASHER/1.525	*	3					
33	6215-345-027-00	WASHER/1.55	*	3					
34	6215-345-028-00	WASHER/1.575	*	3					
35	6215-345-029-00	WASHER/1.6	*	3					
36	6215-345-030-00	WASHER/1.625	*	3					
37	6215-345-031-00	WASHER/1.65	*	3					
38	6215-345-032-00	WASHER/1.675	*	3					
39	6215-345-033-00	WASHER/1.7	*	3					
40	6215-345-034-00	WASHER/1.725	*	3					
41	6215-345-035-00	WASHER/1.75	*	3					
42	6215-345-036-00	WASHER/1.775	*	3					
43	6215-345-037-00	WASHER/1.8	*	3					
44	6215-345-038-00	WASHER/1.825	*	3					
45	6215-345-039-00	WASHER/1.85	*	3					
46	6215-345-040-00	WASHER/1.875	*	3					
47	6215-345-041-00	WASHER/1.9	*	3					
48	6215-345-042-00	WASHER/1.925	*	3					
49	6215-345-043-00	WASHER/1.95	*	3					
50	6215-359-001-00	WASHER	*	3					
51	6215-359-002-00	NUT	*	3					
52	6215-311-027-00	NOZZLE ASSY	*	3					

FIG. 27 COMPONENT PARTS FOR 6215-600-103-10 ON Fig.20

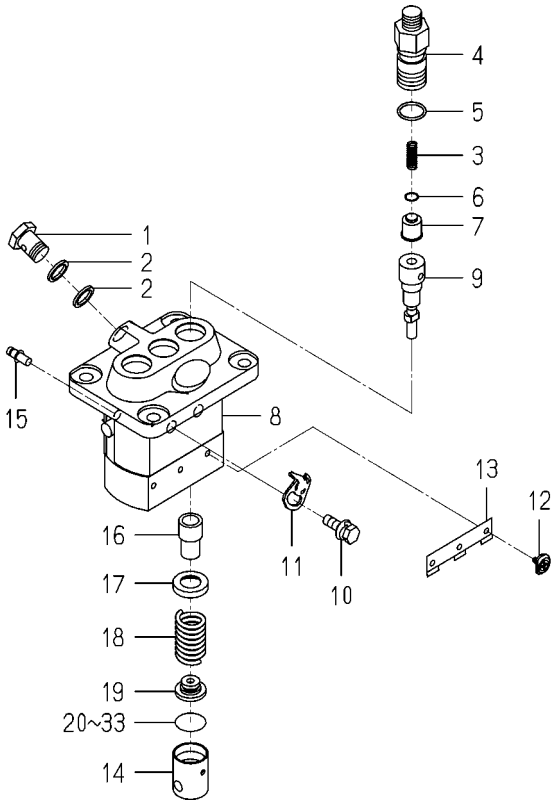

6215-600-103-1C

KEY	PART CODE	DESCRIPTION	SPC	TYPE OF MODEL E3112 B13		ITC	COL	GRP	REMARKS
1	6215-619-009-00	SCREW/HOLLOW	*	1					
2	6215-619-010-00	WASHER/AIR BLEEDER	*	2					
3	6215-643-006-00	SPRING/DELIVERYVALVE	*	3					
4	6215-644-007-00	HOLDER/DELIVERYVALVE	*	3					
5	6215-649-001-00	ORING	*	3					
6	6215-649-002-00	GASKET/DELIVERYVALVE	*	3					
7	6215-641-006-00	VALVE ASSY	*	3					
8	6215-611-001-00	HOUSING ASSY	*	1					
9	6215-631-019-00	ELEMENT ASSY	*	3					
10	6215-619-022-00	BOLT/WASHERHEAD	*	2					
11	6215-612-001-00	PLATE/ADJUSTING	*	2					
12	6215-629-001-00	PIN/INJECTIONPUMP	*	3					
13	6215-629-002-00	PLATE	*	1					
14	6215-622-001-00	TAPPET/INJECTIO ASSY	*	3					
15	6215-637-001-00	RACK/CONTROL ASSY	*	1					
16	6215-635-001-00	SLEEVE/PLUNGER	*	3					
17	6215-639-004-00	SEAT/SPRING/UPPER	*	3					
18	6215-634-001-00	SPRING/PUMPPLUNGER	*	3					
19	6215-639-005-00	SEAT/SPRING/LOWER	*	3					
20	6215-629-003-00	PLATE/TAPPET/AD 0.6	*	1					
21	6215-629-004-00	PLATE/TAPPET/AD 0.7	*	1					
22	6215-629-005-00	PLATE/TAPPET/AD 0.8	*	1					
23	6215-629-006-00	PLATE/TAPPET/AD 0.9	*	1					
24	6215-629-007-00	PLATE/TAPPET/AD 1.0	*	1					
25	6215-629-008-00	PLATE/TAPPET/AD 0.2	*	1					
26	6215-629-009-00	PLATE/TAPPET/AD 0.3	*	1					
27	6215-629-010-00	PLATE/TAPPET/AD 0.4	*	1					
28	6215-629-011-00	PLATE/TAPPET/AD 0.5	*	3					
29	6215-629-012-00	PLATE/TAPPET/AD 0.25	*	1					
30	6215-629-013-00	PLATE/TAPPET/AD 0.35	*	1					

FIG. 27 COMPONENT PARTS FOR 6215-600-103-10 ON Fig.20

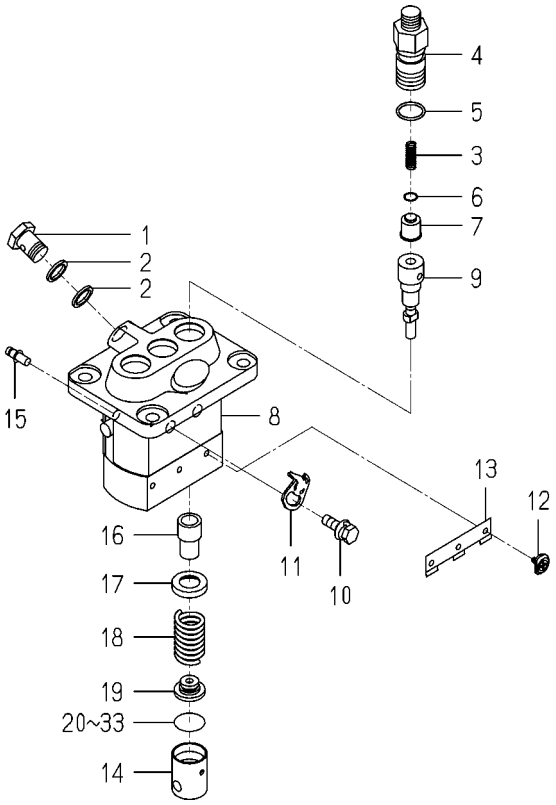

6215-600-103-1C

KEY	PART CODE	DESCRIPTION	SPC	TYPE OF MODEL E3112 B13		ITC	COL	GRP	REMARKS
31	6215-629-014-00	PLATE/TAPPET/AD 0.45	*	1					
32	6215-629-015-00	PLATE/TAPPET/AD 0.55	*	1					
33	6215-629-016-00	PLATE/TAPPET/AD 0.65	*	1					

FIG. 28 COMPONENT PARTS FOR 6281-100-014-00 ON Fig.23

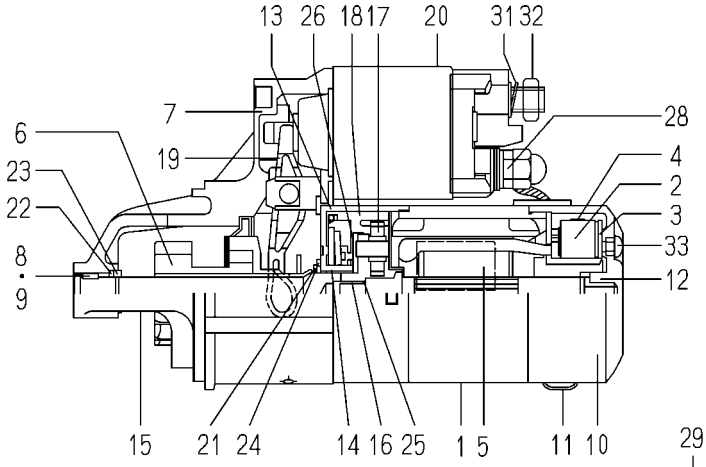

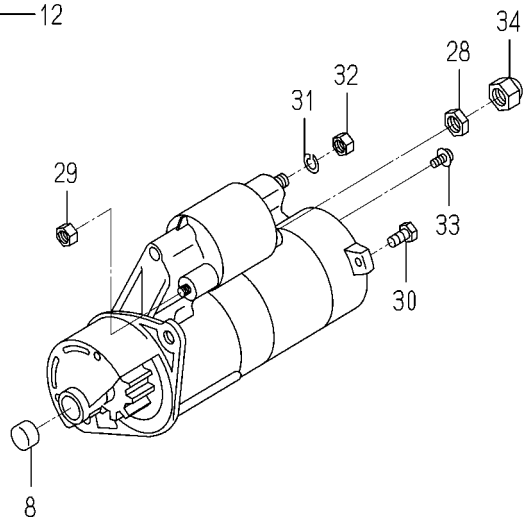

6281-100-014-0A

KEY	PART CODE	DESCRIPTION	SPC	TYPE OF MODEL E3112 B13		ITC	COL	GRP	REMARKS
1	6281-111-009-00	YOKE/STARTER ASSY	*	1					
2	6281-119-009-00	BRUSH/STARTER	*	2					
3	6281-118-007-00	HOLDER/STARTER ASSY	*	1					
4	6281-117-003-00	SPRING/STARTERBRUSH	*	4					
5	6281-121-010-00	ARMATURE/STARTE ASSY	*	1					
6	6281-124-011-00	CLUTCH/STARTER ASSY	*	1					
7	6281-129-064-00	HOUSING/STARTER ASSY	*	1					
8	6281-129-080-00	BEARING/NEEDLE	*	1					
9	6281-129-058-00	BEARING/NEEDLE	*	1					
10	6281-115-017-00	FRAME/COMMUTATOR END	*	1					
11	6281-115-018-00	COVER	*	1					
12	6281-129-065-00	BEARING/OILLESS	*	1					
13	6281-129-066-00	BEARING/WITH SHOCKAB	*	1					
14	6281-129-067-00	BEARING/OILLESS	*	1					
15	6281-129-068-00	SHAFT/STARTER PLANET	*	1					
16	6281-129-069-00	BEARING/OILLESS	*	1					
17	6281-129-070-00	GEAR/STARTER PLANETA	*	3					
18	6281-129-071-00	GEAR/STARTERINTERNAL	*	1					
19	6281-127-003-00	LEVER/PINIONDRIVE	*	1					
20	6281-151-014-00	SWITCH/MAGNETIC ASSY	*	1					
21	6281-129-072-00	RING/SNAP	*	1					
22	6281-129-073-00	RING/SNAP	*	1					
23	6281-129-074-00	NUT/PINIONSTOP	*	1					
24	6281-129-075-00	WASHER/SK	*	1					
25	6281-129-076-00	WASHER/SK	*	1					
26	6281-129-077-00	WASHER/SK	*	1					
27	6281-129-078-00	PLATE	*	1					
28	6281-129-030-00	NUT	*	1					
29	6281-129-029-00	NUT	*	2					
30	6281-129-043-00	BOLT/THROUGH	*	2					

FIG. 28 COMPONENT PARTS FOR 6281-100-014-00 ON Fig.23

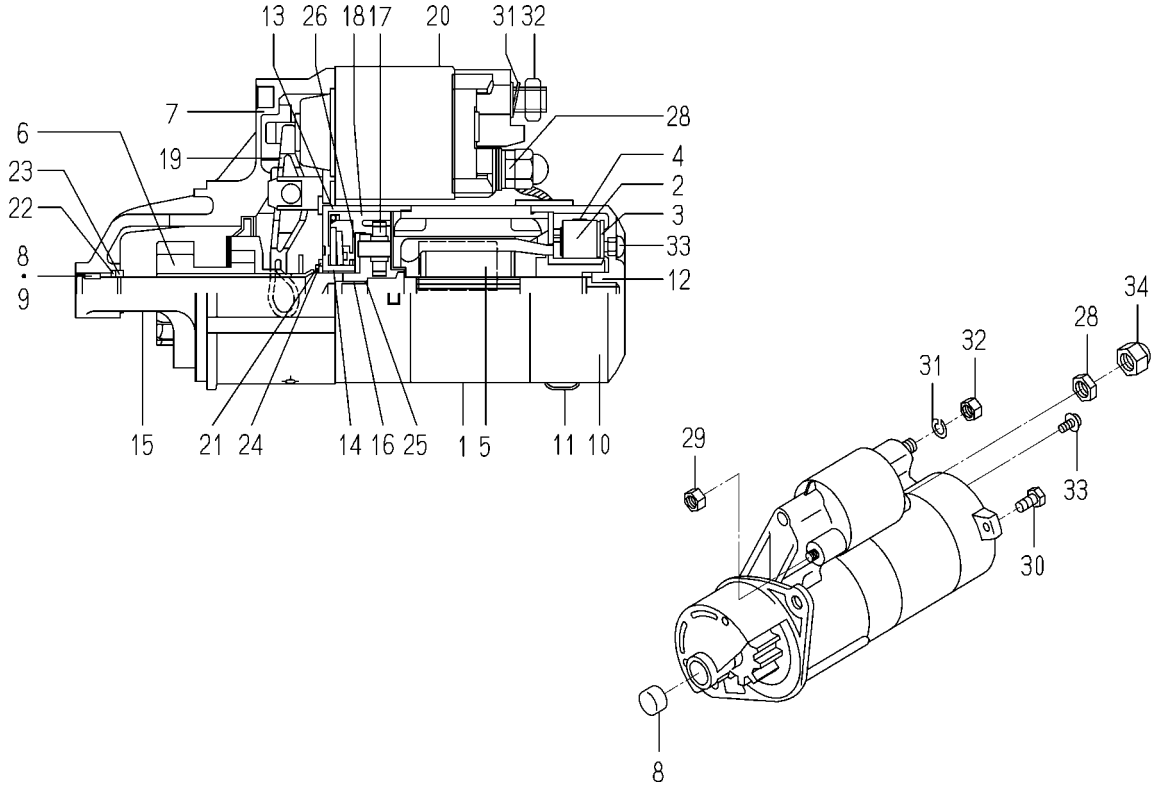

6281-100-014-0A

KEY	PART CODE	DESCRIPTION	SPC	TYPE OF MODEL E3112 B13		ITC	COL	GRP	REMARKS
31	6909-150-508-00	WASHER	*	1					
32	6909-110-408-00	NUT/M8	*	1					
33	6281-129-062-00	SCREW	*	2					
34	6281-129-079-00	NUT	*	1					

FIG. 29 COMPONENT PARTS FOR 6281-200-005-00 ON Fig.23

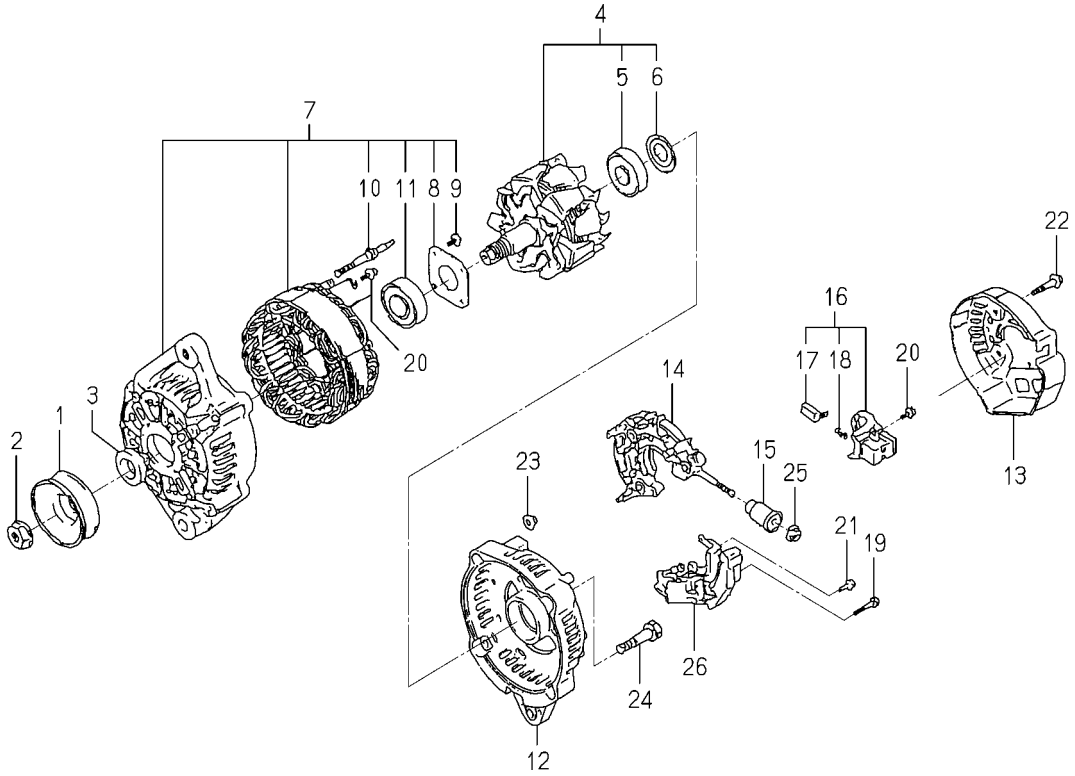

6281-200-005-0B

KEY	PART CODE	DESCRIPTION	SPC	TYPE OF MODEL E3112 B13		ITC	COL	GRP	REMARKS
1	6281-222-004-00	PULLEY	*	1					
2	6281-229-002-00	NUT	*	1					
3	6281-229-003-00	COLLOR	*	1					
4	6281-221-007-00	ROTOR ASSY	*	1					
5	6281-229-004-00	COVER,BEARING	*	1					
6	6281-229-032-00	BEARING/BALL	*	1					
7	6281-213-018-00	FRAME/DRIVEEND ASSY	*	1					
8	6281-229-006-00	PLATE	*	1					
9	6281-229-007-00	BOLT	*	4					
10	6281-229-008-00	BOLT	*	2					
11	6281-229-033-00	BEARING/BALL	*	1					
12	6281-214-003-00	FRAME	*	1					
13	6281-214-004-00	COVER	*	1					
14	6281-229-029-00	HOLDER ASSY	*	1					
15	6281-229-011-00	BUSH	*	1					
16	6281-217-002-00	HOLDER/BRUSH ASSY	*	1					
17	6281-215-001-00	BRUSH	*	2					
18	6281-216-001-00	SPRING	*	2					
19	6281-229-012-00	BOLT	*	2					
20	6281-229-013-00	BOLT	*	6					
21	6281-229-014-00	BOLT	*	1					
22	6281-229-015-00	BOLT	*	3					
23	6281-229-016-00	NUT	*	2					
24	6281-229-017-00	BOLT	*	2					
25	6281-229-018-00	NUT	*	1					
26	6281-271-002-00	REGULATOR ASSY	*	1					

E N G I N E

E3112B14···TM3200

6004-097-340-00

FIG. 1 CYLINDER HEAD

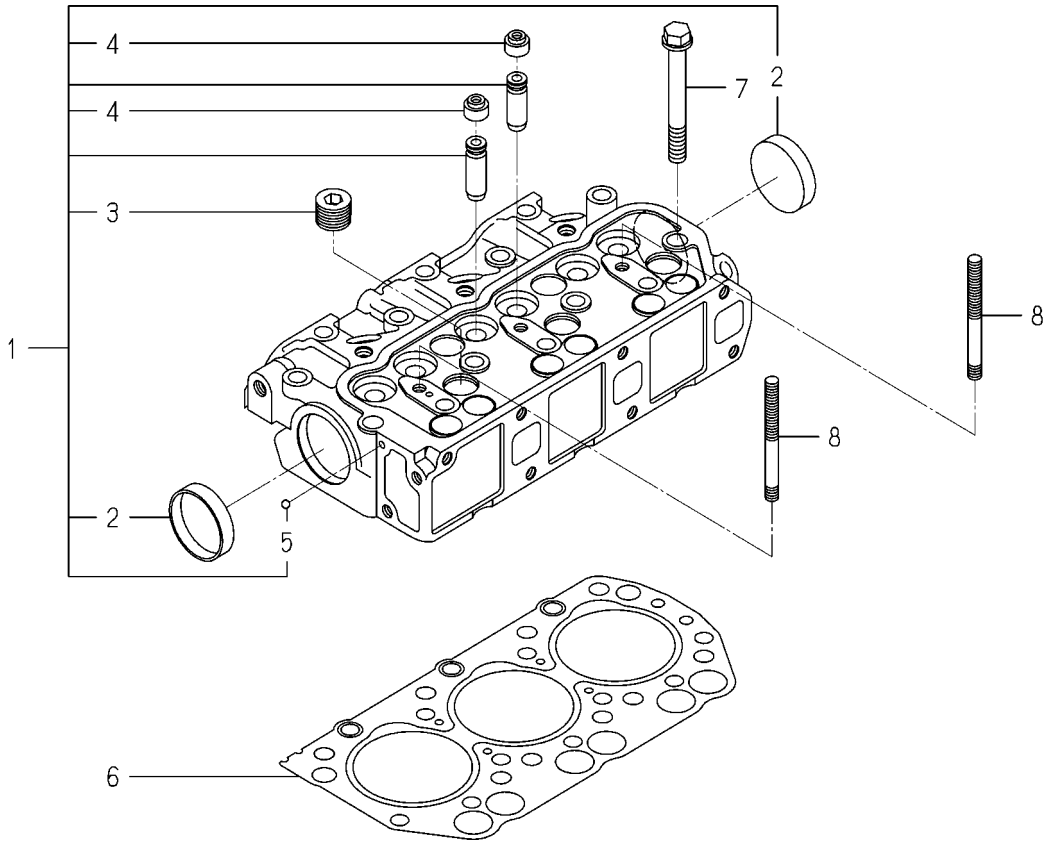

6004-101I-0100,6004-101I-0200

KEY	PART CODE	DESCRIPTION	SPC	TYPE OF MODEL E3112 B14		ITC	COL	GRP	REMARKS
1	6211-110-057-30	CYLINDERHEAD ASSY	*	1					
2	6911-129-006-00	CAP,SEALING	*	2					
3	6209-605-004-10	PLUG/PT1/2	*	5					
4	6212-569-002-00	SEAL,OIL	*	6					
5	V682-200-000-60	BALL	*	1					
6	6211-141-029-20	GASKET/CYLINDERHEAD	*	1					
7	6209-000-003-00	BOLT/M10X1.25X82	*	14					
8	6209-300-014-00	STUD	*	2					

FIG. 2 CYLINDER HEAD COVER

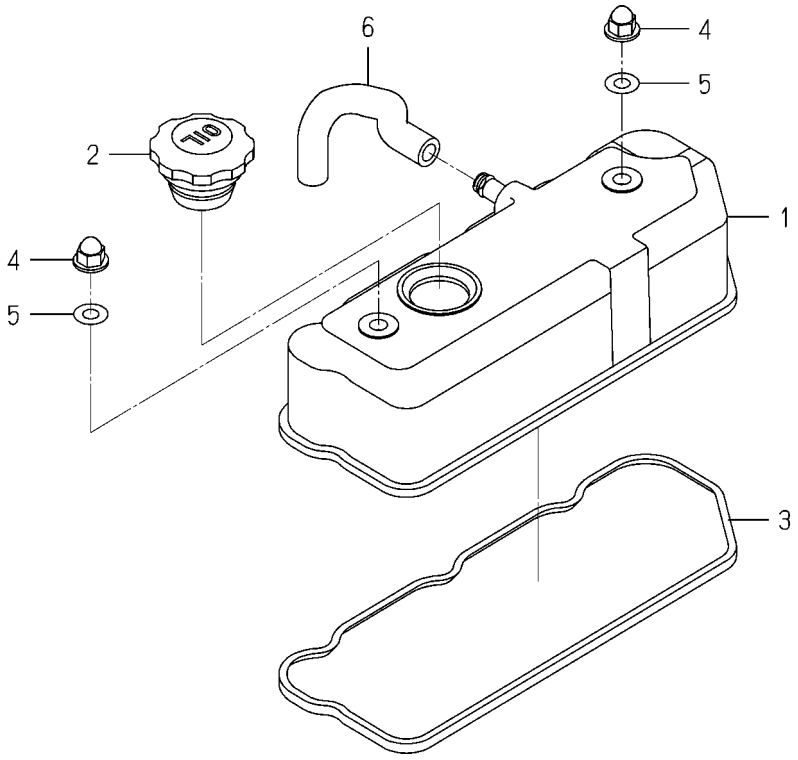

6003-110 -0100

KEY	PART CODE	DESCRIPTION	SPC	TYPE OF MODEL E3112 B14		ITC	COL	GRP	REMARKS
1	6211-170-004-20	COVER/CYLINDER HEAD	*	1					
2	6211-751-001-10	CAP,OIL FILLER	*	1					
3	6211-173-003-00	SEAL,CYL.HEAD COVER	*	1					
4	6209-490-002-10	NUT/CAP	*	2					
5	6209-572-003-00	GASKET	*	2					
6	6209-360-028-10	HOSE/RABBER	*	1					

FIG. 3 INLET MANIFOLD

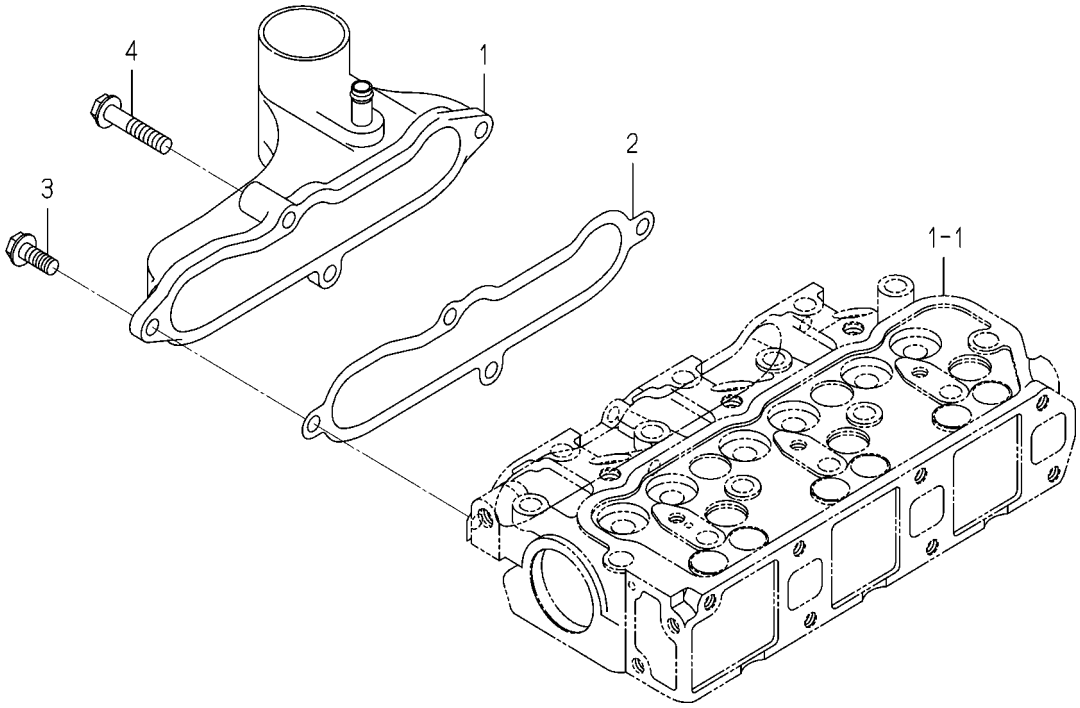

6003-120B-0100

KEY	PART CODE	DESCRIPTION	SPC	TYPE OF MODEL E3112 B14		ITC	COL	GRP	REMARKS
1	6214-111-011-20	MANIFOLD(INLET) ASSY	*	1					
2	6214-115-001-20	GASKET,INLET MANIFOL	*	1					
3	V231-360-802-00	FLANGEBOLT	*	3					
4	V231-360-804-00	FLANGEBOLT	*	1					

FIG. 4 EXHAUST MANIFOLD

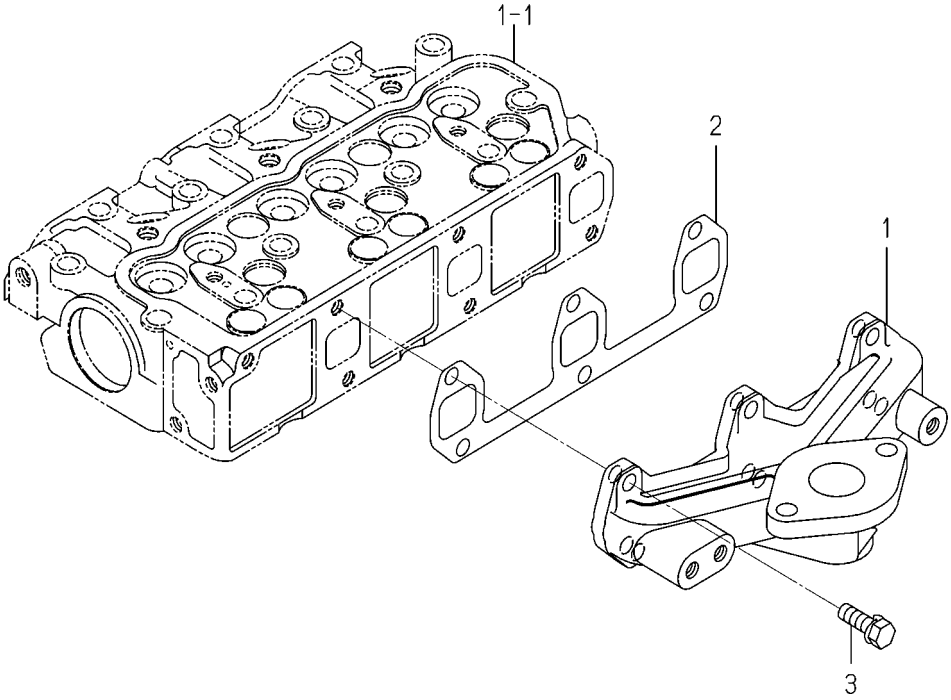

6004-140 -0100

KEY	PART CODE	DESCRIPTION	SPC	TYPE OF MODEL E3112 B14		ITC	COL	GRP	REMARKS
1	6214-141-010-10	MANIFOLD,EXH	*	1					
2	6214-145-001-30	GASKET,EXH.MANIFOLD	*	1					
3	V211-560-802-50	BOLT,SEMS/M8X25 7T	*	6					

FIG. 5 CYLINDER BLOCK

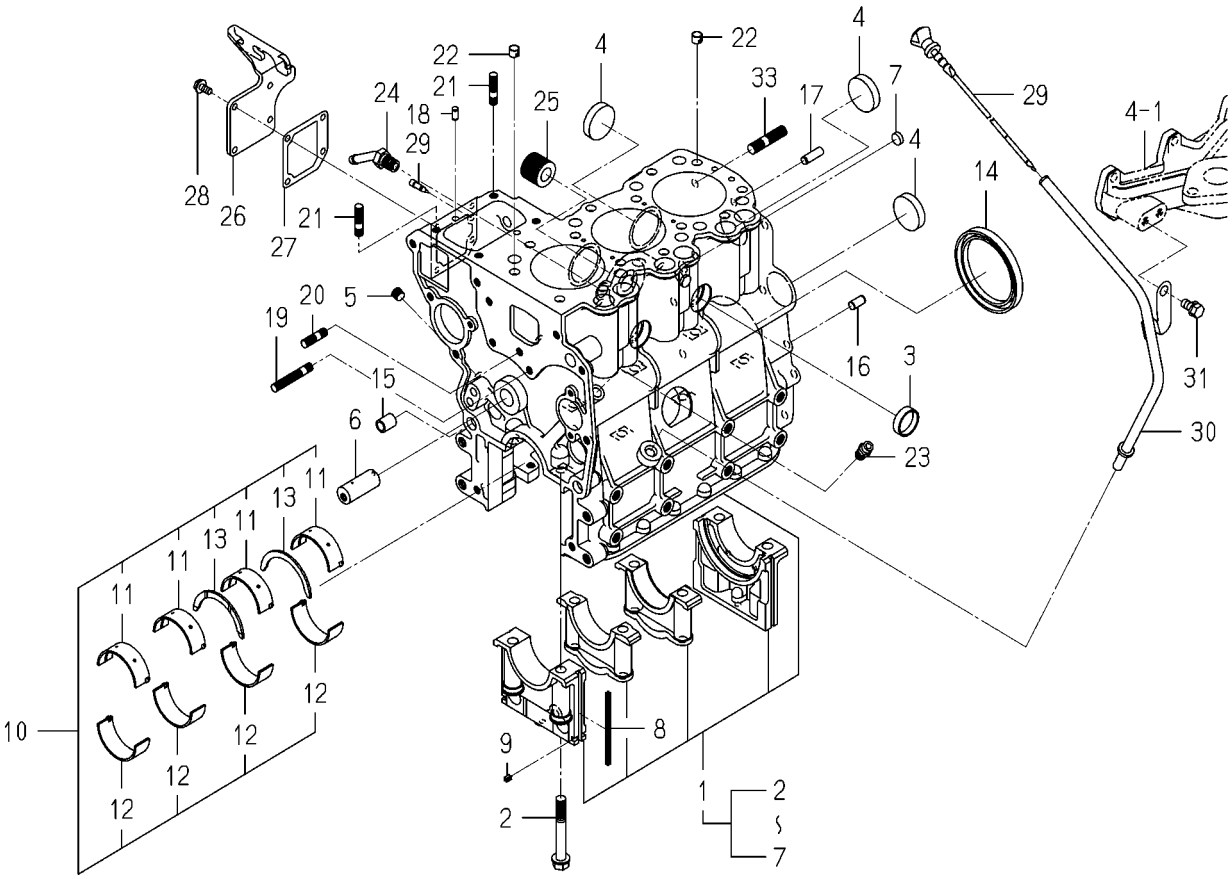

6004-202G-0100

KEY	PART CODE	DESCRIPTION	SPC	TYPE OF MODEL E3112 B14		ITC	COL	GRP	REMARKS
1	6211-210-037-20	CYLINDERBLOCK ASSY	*	1					
2	6209-000-004-10	BOLT	*	8					
3	6209-610-001-10	CUP/SEALING/28	*	2					
4	6209-610-009-00	CUP/SEALING/36	*	4					
5	6509-605-019-10	PLUG	*	3					
6	6212-531-005-10	PIN/IDLEGEAR	*	1					
7	6209-610-008-00	CUP/SEALING/12	*	2					
8	6211-258-001-00	SEAL,BEARING CAP	*	4					
9	6211-258-002-00	SEAL,BEARING CAP/7	*	2					
10	6211-510-001-00	METAL,CRANK SET	*	1					
11	6211-511-003-00	BEARING/CRANK/UPPER	*	4					
12	6211-511-004-00	BEARING/CRANK/LOWER	*	4					
13	6211-599-001-10	BEARING,THRUST CRANK	*	2					
14	6209-625-012-00	OILSEAL	*	1					
15	6209-749-001-20	PIN/TUBE	*	2					
16	6213-129-006-00	PIN/STRAIGHT	*	1					
17	V523-100-802-40	PIN	*	1					
18	6209-740-005-00	PIN	*	2					
19	6904-110-840-00	STUD/M8X40	*	1					
20	6904-110-818-00	STUD	*	1					
21	6904-110-822-00	STUD	*	2					
22	6294-453-002-00	DOWEL	*	2					
23	6909-902-299-00	NIPPLE	*	1					
24	6213-721-007-00	PIPE/WATERDRAIN	*	1					
25	6213-319-001-00	CONNECTOR,OIL FILTER	*	1					
26	6211-291-016-00	COVER/INJECTIONPUMP	*	1					
27	6211-292-001-20	GASKET/COVER	*	1					
28	V230-360-601-20	FLANGEBOLT	*	4					
29	6215-549-013-00	PIN	*	1					
30	6211-760-030-00	LEVELGAGE	*	1					

FIG. 5 CYLINDER BLOCK

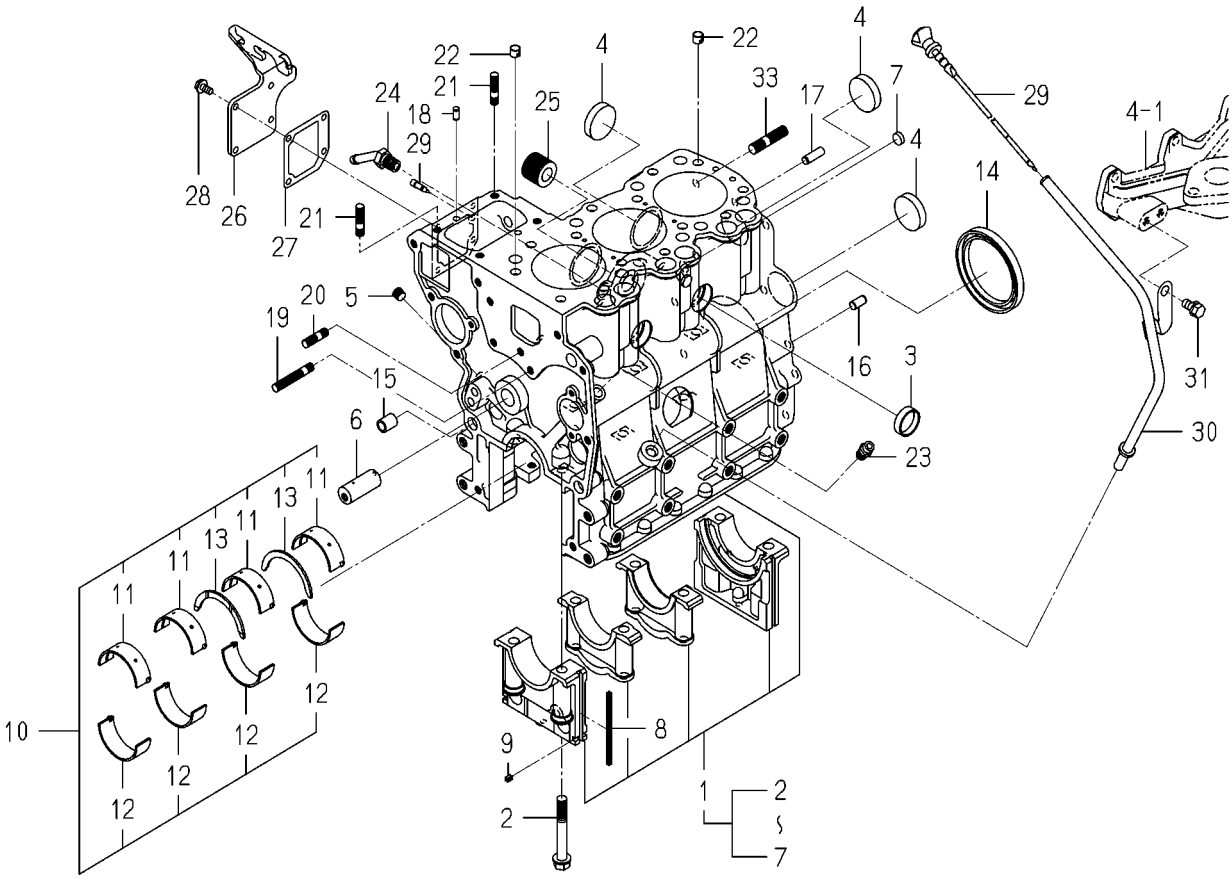

6004-202G-0100

KEY	PART CODE	DESCRIPTION	SPC	TYPE OF MODEL E3112 B14		ITC	COL	GRP	REMARKS
31	6211-766-019-00	GUIDE/LEVELGAGE COMP	*	1					
32	6901-910-816-00	BOLT,SEMS/M8X16	*	1					
33	6209-300-013-00	STUD	*	2					

FIG. 6 BEARING/UNDER SIZE (OPTION)

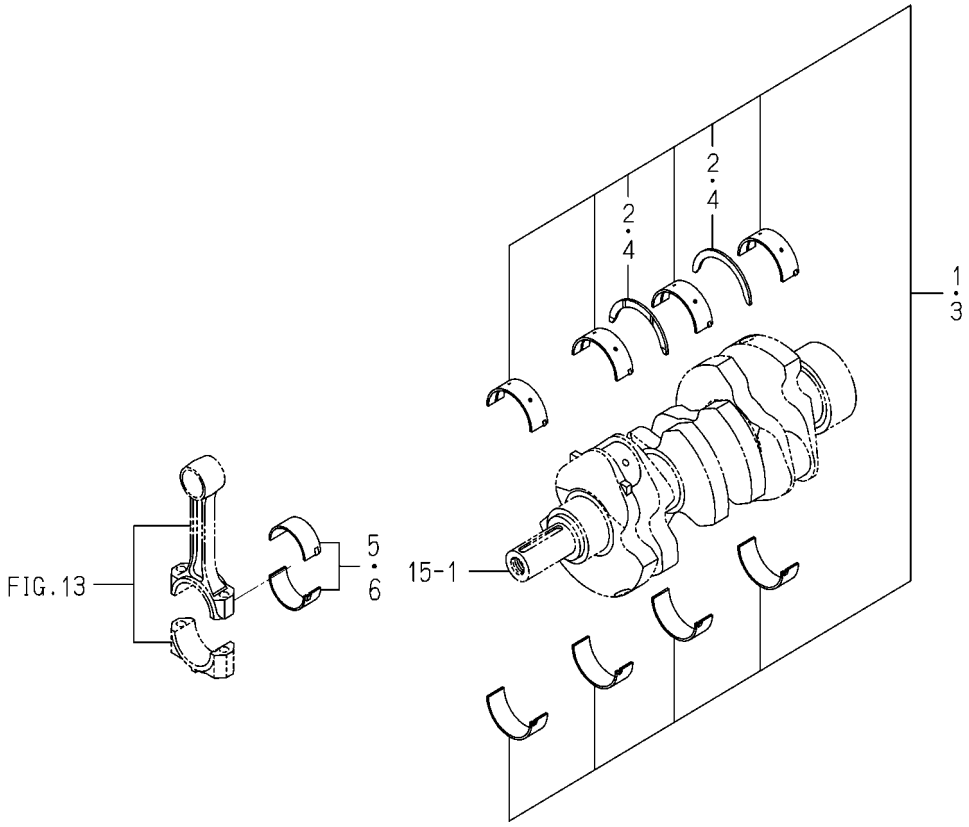

6003-209 -0100

KEY	PART CODE	DESCRIPTION	SPC	TYPE OF MODEL E3112 B14		ITC	COL	GRP	REMARKS
1	6211-540-001-00	METAL,CRANK SET	T	1					
2	6211-599-001-10	BEARING,THRUST CRANK	T	2					
3	6211-560-001-00	METAL,CRANK SET	T	1					
4	6211-599-001-10	BEARING,THRUST CRANK	T	2					
5	6212-274-006-00	BEARING/CONNECTING R	T	3					
6	6212-276-006-00	BEARING/CONNECTING R	T	3					

FIG. 7 OIL PAN

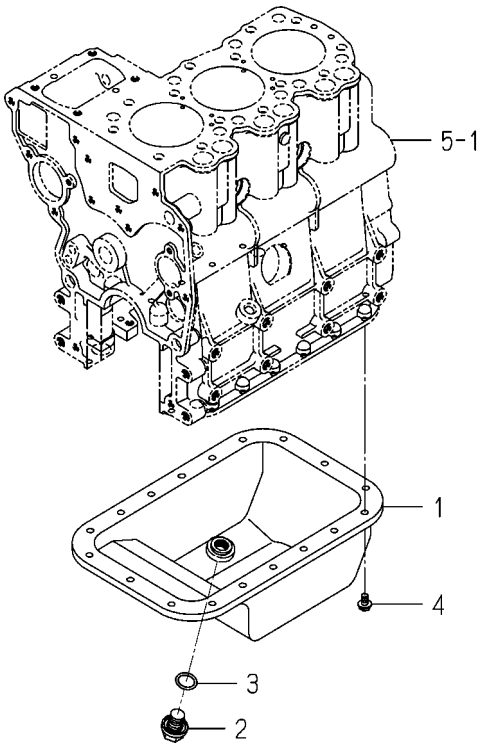

6004-210 -0100

KEY	PART CODE	DESCRIPTION	SPC	TYPE OF MODEL E3112 B14		ITC	COL	GRP	REMARKS
1	6211-361-010-10	PAN,OIL COMP	*	1					
2	6209-600-006-00	PLUG/M14X1.5	*	1					
3	V720-102-401-80	O-RING/P18	*	1					
4	V230-360-601-00	FLANGEBOLT	*	18					

FIG. 8 REAR PLATE

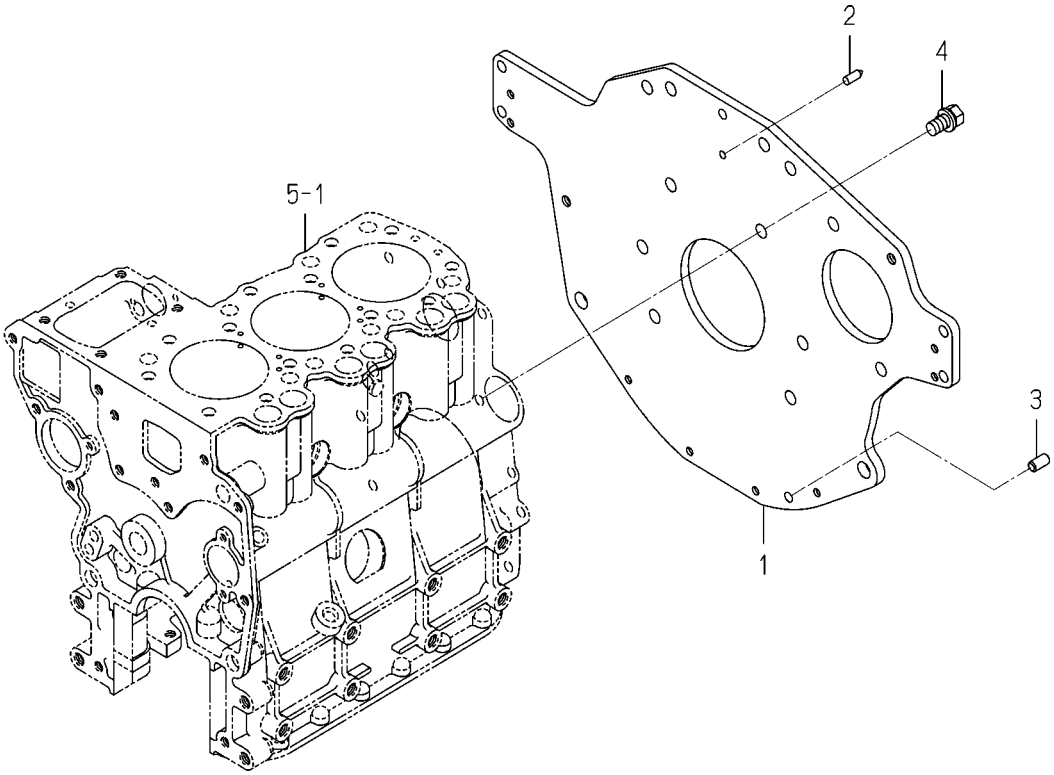

6004-220H-0100

KEY	PART CODE	DESCRIPTION	SPC	TYPE OF MODEL E3112 B14		ITC	COL	GRP	REMARKS
1	6211-341-053-20	PLATE/REAR	*	1					
2	6211-342-002-10	POINTER	*	1					
3	6213-129-006-00	PIN/STRAIGHT	*	1					
4	6901-911-020-00	BOLT,SEMS/M10X20	*	6					

FIG. 9 TIMING GEAR CASE

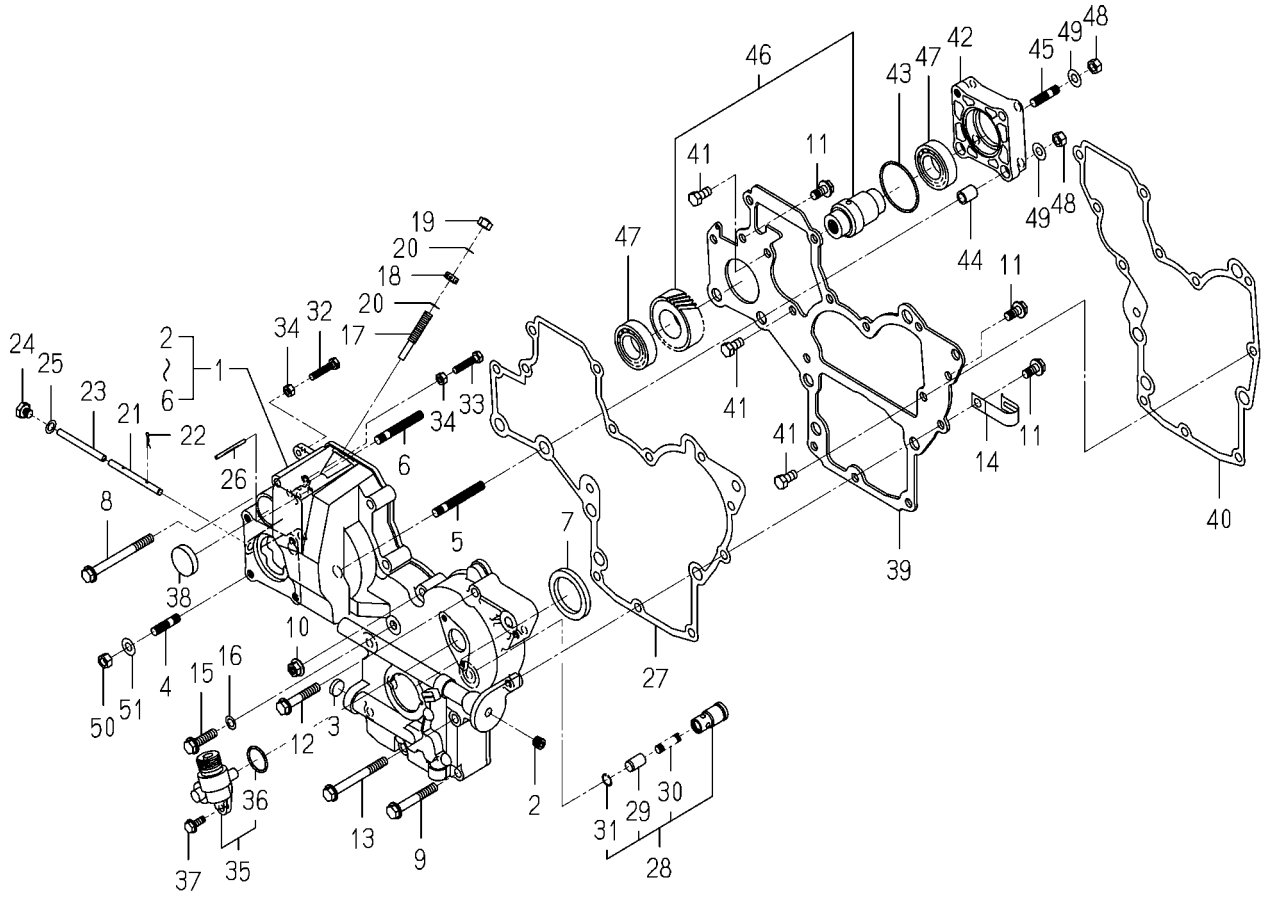

6004-240N-0100,6004-240N-0200

KEY	PART CODE	DESCRIPTION	SPC	TYPE OF MODEL E3112 B14		ITC	COL	GRP	REMARKS
1	6211-310-012-30	GEARCASE ASSY	*	1					
2	6509-605-019-10	PLUG	*	2					
3	6209-610-002-10	CUP/SEALING/16	*	1					
4	6904-110-822-00	STUD	*	4					
5	6904-110-855-00	STUD	*	2					
6	6904-110-850-00	STUD	*	1					
7	6209-625-002-00	SEAL,OIL	*	1					
8	V231-360-808-50	FLANGEBOLT	*	1					
9	V231-360-805-50	FLANGEBOLT	*	2					
10	3817-401-001-00	NUT/M08	*	1					
11	V231-360-801-60	FLANGEBOLT	*	3					
12	V231-360-804-50	FLANGEBOLT	*	5					
13	V231-360-807-50	FLANGEBOLT	*	1					
14	1425-621-004-00	HOLDER/JE/9-9	*	2					
15	V231-360-803-00	FLANGEBOLT	*	1					
16	6209-500-003-00	WASHER/08X14X01	*	1					
17	6215-546-003-10	STOPPER/FULLLOAD	*	1					
18	6209-409-001-00	NUT/M8	*	1					
19	V341-120-008-00	NUT,CAP/M 8	*	1					
20	6209-920-002-00	PACKING	*	2					
21	6215-542-004-20	PIN/ARM	*	1					
22	P117-303-003-00	PIN/SNAP	*	2					
23	6215-542-005-10	PIN	*	1					
24	6209-600-004-00	PLUG/SCREW	*	1					
25	6209-500-003-00	WASHER/08X14X01	*	1					
26	6209-740-001-00	PIN,GROOVE	*	1					
27	6211-312-003-20	GASKET/GEARCASE	*	1					
28	6213-160-002-20	VALVE/RELIEF ASSY	*	1					
29	6213-161-001-20	PISTON/VALVE/RELIEF	*	1					
30	6213-164-001-00	SPRING/RELIEF VALVE	*	1					

FIG. 9 TIMING GEAR CASE

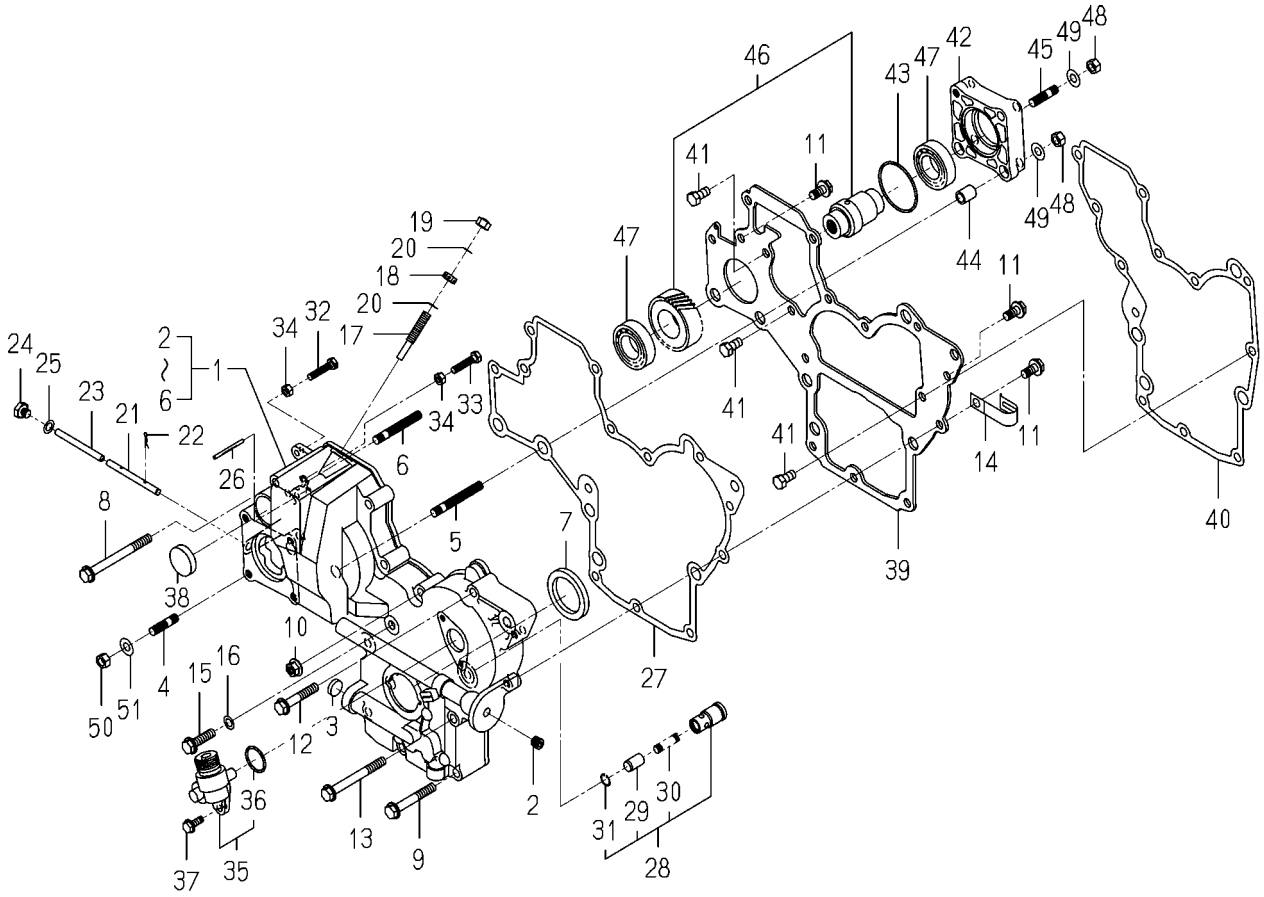

6004-240N-0100,6004-240N-0200

KEY	PART CODE	DESCRIPTION	SPC	TYPE OF MODEL E3112 B14		ITC	COL	GRP	REMARKS
31	V705-140-012-00	RING,SNAP/12 C	*	1					
32	6209-050-001-00	BOLT/M6	*	1					
33	6209-050-002-00	BOLT/M6	*	1					
34	6909-110-406-00	NUT	*	2					
35	6219-310-003-20	DRIVE/TACHOMETE ASSY	*	1					
36	V723-102-002-40	RING/O	*	1					
37	V230-360-601-60	FLANGEBOLT	*	2					
38	3625-540-004-00	CAP,BLANK/30	*	1					
39	6211-311-007-40	PLATE/FRONT	*	1					
40	6211-312-004-20	GASKET/PLATE	*	1					
41	6902-050-816-00	BOLT	*	3					
42	6211-319-003-00	SPACER	*	1					
43	V723-102-005-00	O-RING 1A S50	*	1					
44	6209-749-001-20	PIN/TUBE	*	2					
45	6904-110-822-00	STUD	*	1					
46	6212-530-005-20	SHAFT/HYDRAULIC ASSY	*	1					
47	V600-110-600-50	BEARING,RB/6005	*	2					
48	6909-110-408-00	NUT/M8	*	4					
49	V401-160-008-00	WASHER,SP/M 8	*	4					
50	6909-110-408-00	NUT/M8	*	4					
51	V401-160-008-00	WASHER,SP/M 8	*	4					

FIG. 10 HANGER

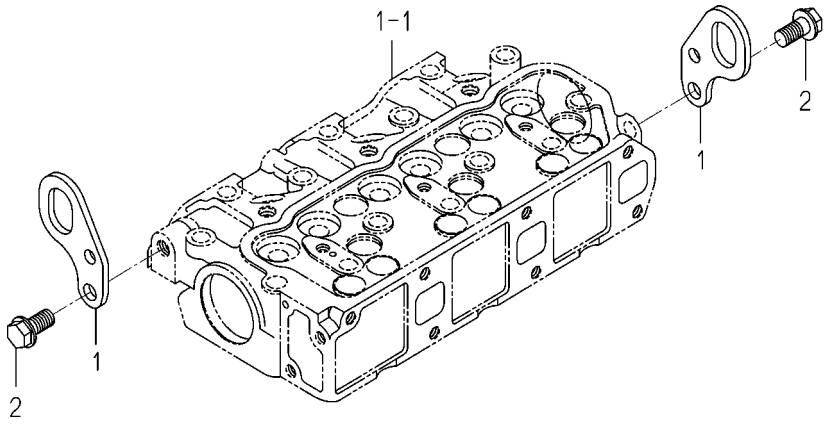

6003-290 -0100

KEY	PART CODE	DESCRIPTION	SPC	TYPE OF MODEL E3112 B14		ITC	COL	GRP	REMARKS
1	6211-777-007-30	HANGER	*	2					
2	V233-361-002-00	FLANGEBOLT	*	2					

FIG. 11 VALVE

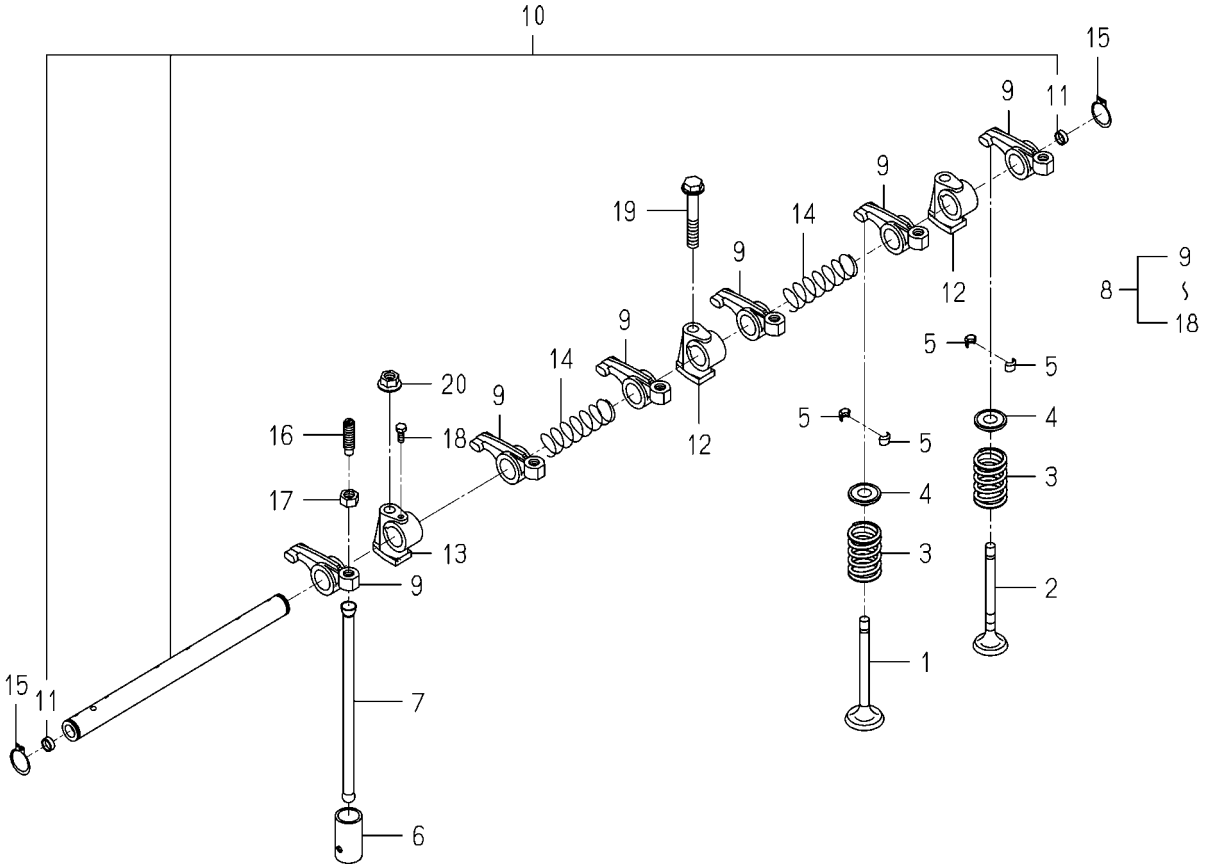

6004-301 -0100

KEY	PART CODE	DESCRIPTION	SPC	TYPE OF MODEL E3112 B14		ITC	COL	GRP	REMARKS
1	6212-551-001-10	VALVE/INTAKE	*	3					
2	6212-552-001-20	VALVE/EXHAUST	*	3					
3	6212-561-001-10	SPRING/VALVE	*	6					
4	6212-563-001-00	SEAT,VALVE SPRING	*	6					
5	6212-565-001-00	CUTTER,VALVE	*	12					
6	6212-571-006-00	TAPPET	*	6					
7	6212-575-002-00	ROD,PUSH	*	6					
8	6212-600-002-10	ROCKERSHAFT ASSY	*	1					
9	6212-611-004-10	ROCKERARM	*	6					
10	6212-620-001-20	SHAFT/ROCKERARM ASSY	*	1					
11	6212-626-002-10	PLUG	*	2					
12	6212-628-004-00	BRACKET ROCKER SHAFT	*	2					
13	6212-628-005-00	BRACKET,ROCKER SHAFT	*	1					
14	6209-940-004-00	SPRING	*	2					
15	V704-140-016-00	RING,SNAP/16 C	*	2					
16	6212-616-002-00	SCREW ADJUST	*	6					
17	6209-409-003-00	NUT	*	6					
18	6209-000-002-00	BOLT	*	1					
19	V231-360-805-00	FLANGEBOLT	*	1					
20	3817-401-001-00	NUT/M08	*	2					

FIG. 12 CAM SHAFT

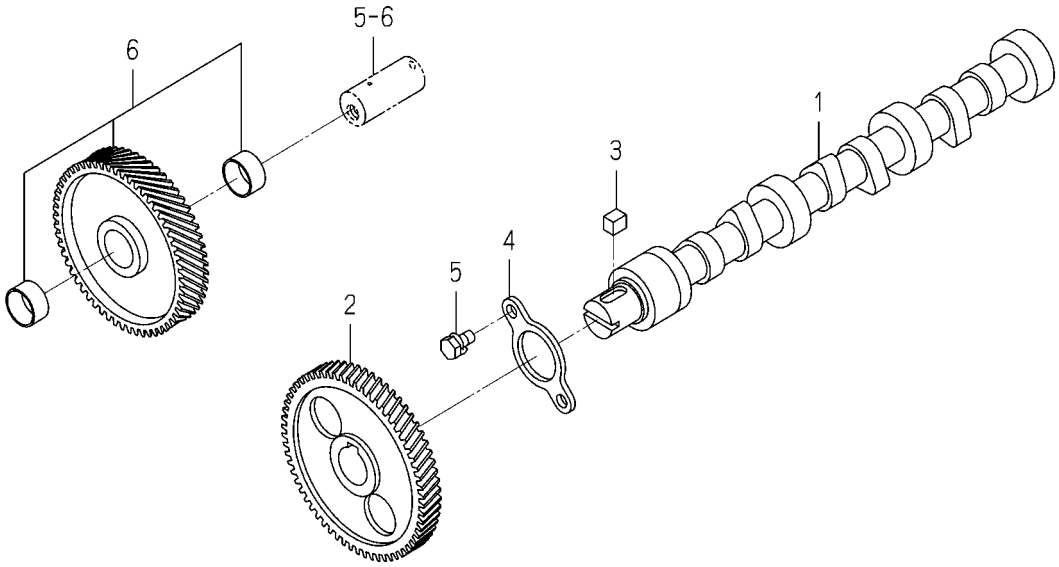

6003-310 -0100

KEY	PART CODE	DESCRIPTION	SPC	TYPE OF MODEL E3112 B14		ITC	COL	GRP	REMARKS
1	6212-511-002-00	SHAFT,CAM	*	1					
2	6212-522-010-00	GEAR/CAMSHAFT	*	1					
3	6209-730-005-00	KEY/07X05X09	*	1					
4	6212-535-001-00	PLATE,THRUST	*	1					
5	6901-910-612-00	BOLT,SEMS/M6X12	*	2					
6	6212-523-023-00	GEAR/IDLE ASSY	*	1					

FIG. 13 PISTON

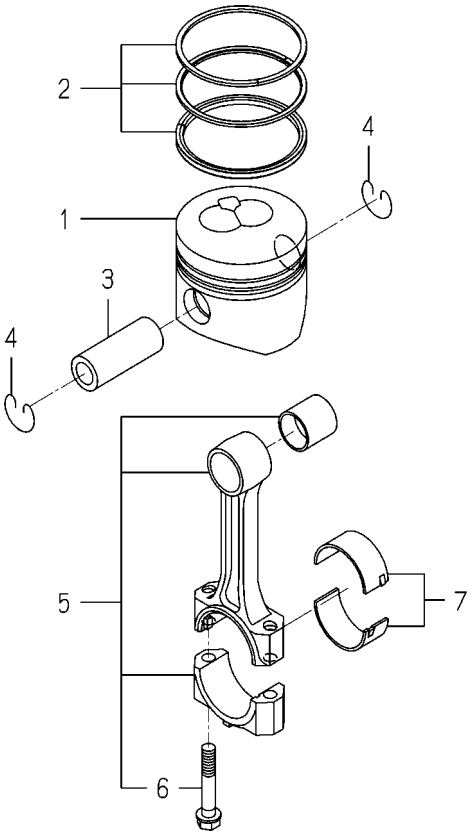

6004-340I-0100

KEY	PART CODE	DESCRIPTION	SPC	TYPE OF MODEL E3112 B14		ITC	COL	GRP	REMARKS
1	6212-111-094-10	PISTON	*	3					
2	6212-121-014-20	RING/PISTON SET	*	3					
3	6212-211-001-10	PIN,PISTON	*	3					
4	6209-587-001-00	RING,SNAP	*	6					
5	6212-230-004-10	CONNECTINGROD ASSY	*	3					
6	6212-235-005-00	BOLT/CONNECTINGROD	*	6					
7	6212-271-006-00	BEARING/CONNECTING R	*	3					

FIG. 14 PISTON/OVER SIZE (OPTION)

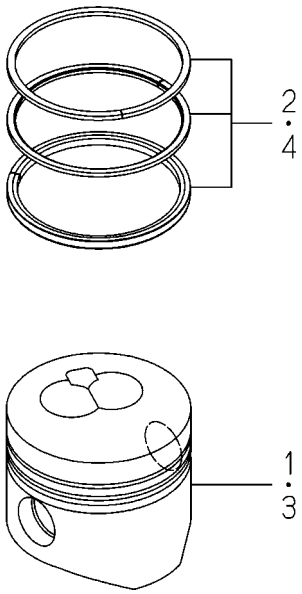

6004-349I-0100

KEY	PART CODE	DESCRIPTION	SPC	TYPE OF MODEL E3112 B14		ITC	COL	GRP	REMARKS
1	6212-114-094-10	PISTON(OV)	T	3					
2	6212-124-014-10	RING/PISTON/OV SET	T	3					
3	6212-116-094-10	PISTON(OV)	T	3					
4	6212-126-014-10	RING/PISTON/OV SET	T	3					

FIG. 15 CRANK SHAFT

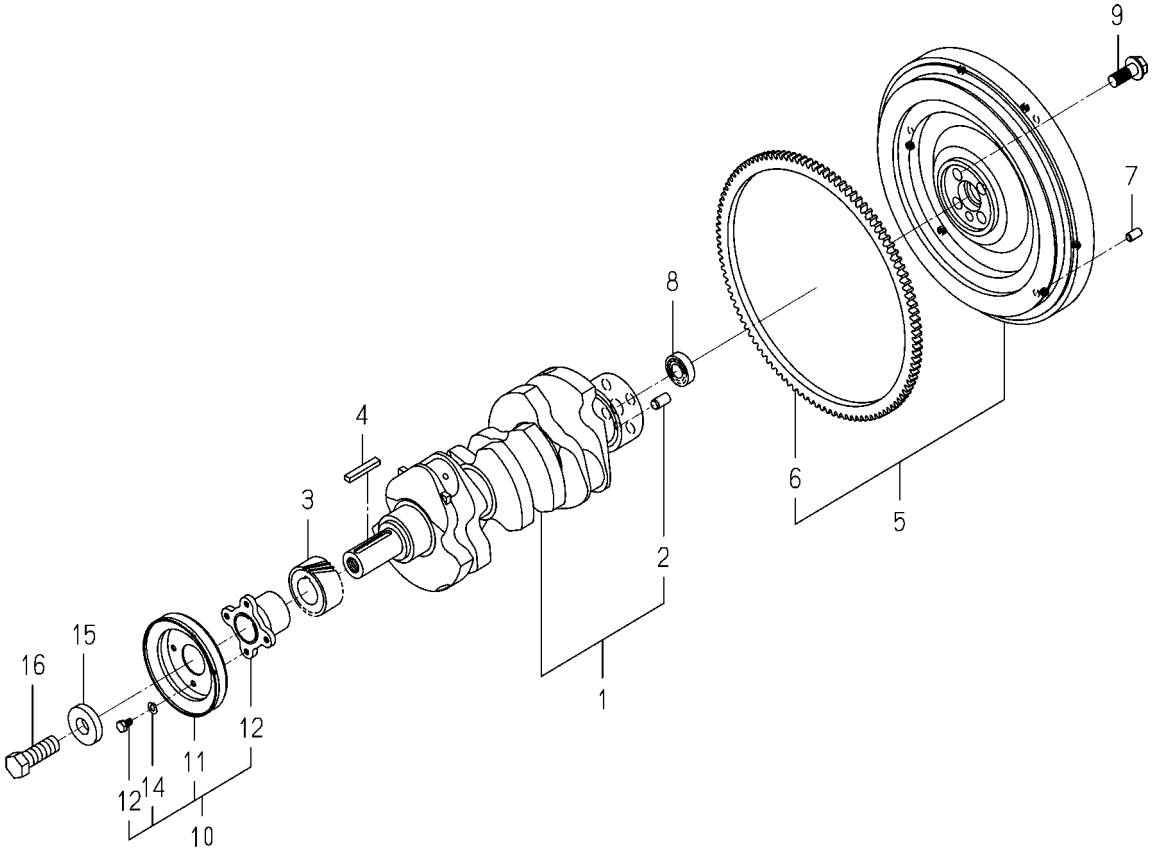

6004-350O-0100

KEY	PART CODE	DESCRIPTION	SPC	TYPE OF MODEL E3112 B14		ITC	COL	GRP	REMARKS
1	6212-310-009-30	CRANKSHAFT ASSY	*	1					
2	V523-101-001-80	PIN	*	1					
3	6212-521-008-00	GEAR/CRANK	*	1					
4	6209-730-006-00	KEY/07X05X43	*	1					
5	6212-330-049-10	FLYWHEEL ASSY	*	1					
6	6212-333-003-00	RINGGEAR	*	1					
7	6213-129-006-00	PIN/STRAIGHT	*	3					
8	V600-150-600-20	BEARING,RB/6002SS	*	1					
9	6209-046-015-00	BOLT/FLANGE	*	4					
10	6212-370-011-00	PULLEY ASSY	*	1					
11	6212-371-009-00	PULLEY	*	1					
12	6212-372-002-10	CENTER CRANK PULLEY	*	1					
13	6902-050-610-00	BOLT	*	4					
14	6909-150-506-00	WASHER,SP/M6	*	4					
15	6212-379-001-00	WASHER	*	1					
16	6901-066-645-00	BOLT	*	1					

FIG. 16 OIL PUMP

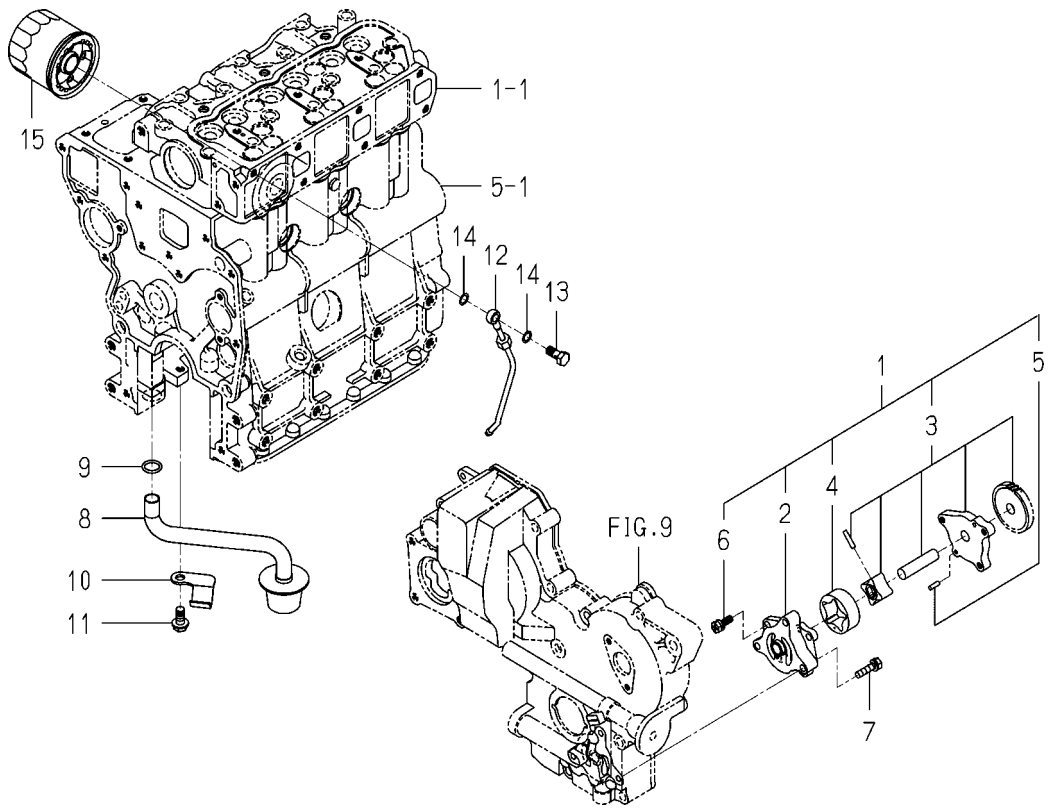

6004-401B-0100

KEY	PART CODE	DESCRIPTION	SPC	TYPE OF MODEL E3112 B14		ITC	COL	GRP	REMARKS
1	6213-100-003-30	OILPUMP ASSY	*	1					
2	6213-111-001-30	BODY/OILPUMP	*	1					
3	6213-120-003-20	GEAR/OILPUMP ASSY	*	1					
4	6213-125-001-00	ROTOR/OUTER	*	1					
5	6213-129-003-00	PIN/STRAIGHT	*	2					
6	6213-119-001-00	BOLT/WS	*	3					
7	6901-910-625-00	BOLT	*	3					
8	6213-140-008-00	STRAINER	*	1					
9	V720-102-401-50	O-RING/P15	*	1					
10	6213-149-002-00	CLAMP,STRAINER	*	1					
11	V231-360-801-60	FLANGEBOLT	*	1					
12	6213-311-006-00	PIPE,OIL	*	1					
13	6909-906-105-10	BOLT,JOINT	*	1					
14	6209-920-002-00	PACKING	*	2					
15	6213-240-002-10	CARTRIDGE/OILFILTER	*	1					

FIG. 17 WATER PUMP

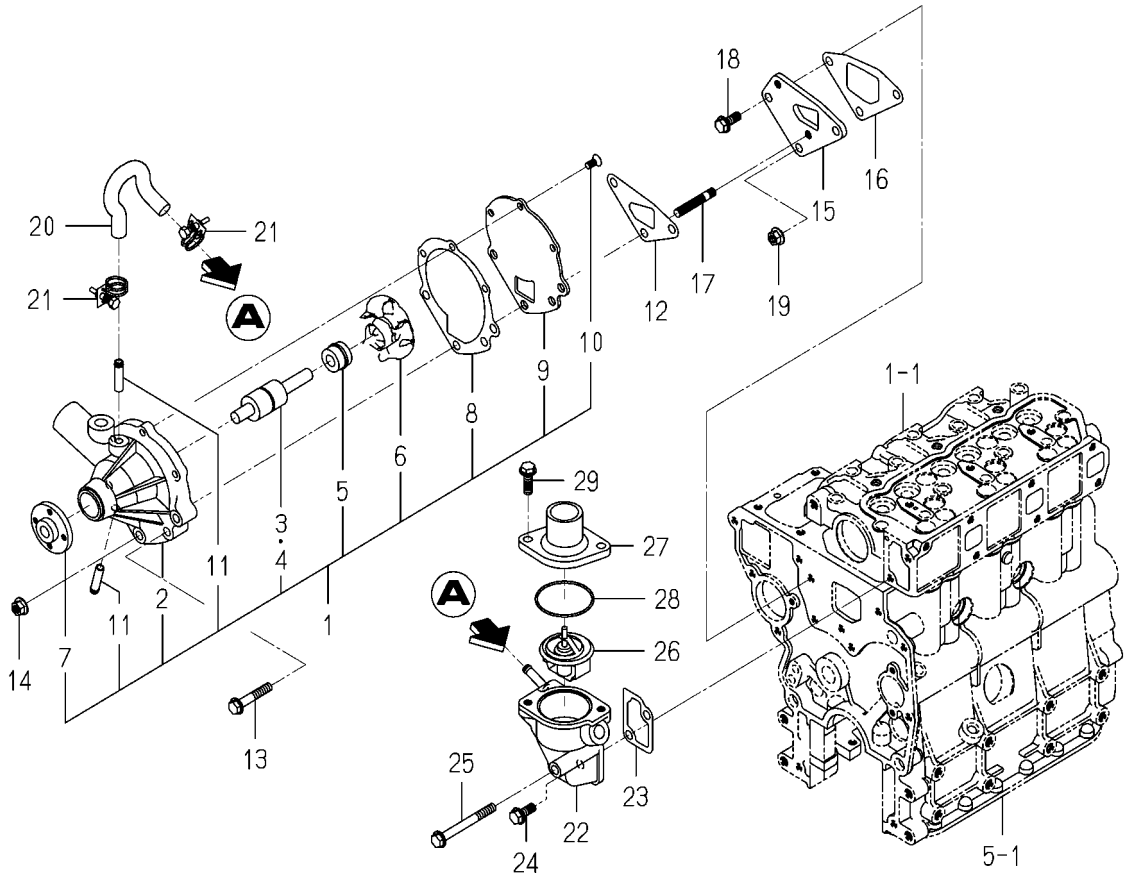

6004-420 -0100

KEY	PART CODE	DESCRIPTION	SPC	TYPE OF MODEL E3112 B14		ITC	COL	GRP	REMARKS
1	6213-610-005-40	WATERPUMP ASSY	*	1					
2	6213-611-003-20	BODY/WATERPUMP	*	1					
3	6213-631-002-00	BEARING/WATER PUMP	*	1					
4	6213-631-005-00	BEARING/WATERPUMP	*	1					
5	6213-622-002-10	SEAL SET/WATER PUMP	*	1					
6	6213-621-003-00	ROTOR/WATERPUMP	*	1					
7	6213-642-002-00	SEAL/WATER PUMPPULLE	*	1					
8	6213-613-002-10	GASKET	*	1					
9	6213-612-004-00	PLATE/WATER PUMP	*	1					
10	6213-619-003-00	SCREW/WATER PUMP	*	3					
11	6213-619-002-00	PIPE/WATER PUMP	*	2					
12	6213-614-003-10	GASKET/WATER PUMP	*	1					
13	V231-360-804-50	FLANGEBOLT	*	1					
14	3817-401-001-00	NUT/M08	*	2					
15	6213-619-001-00	SPACER,PUMP.WATER	*	1					
16	6213-614-004-10	GASKET,SPACER	*	1					
17	6904-110-840-00	STUD/M8X40	*	2					
18	V231-360-802-00	FLANGEBOLT	*	1					
19	3817-401-001-00	NUT/M08	*	1					
20	6213-729-013-10	HOSE/RUBBER	*	1					
21	J061-210-015-00	CLAMP/WIRE/10-15	*	2					
22	6213-716-001-50	HOUSING/THERMOSTAT	*	1					
23	6213-743-002-10	GASKET/HOUSING	*	1					
24	V231-360-802-00	FLANGEBOLT	*	1					
25	V231-360-807-50	FLANGEBOLT	*	1					
26	6513-770-022-10	THERMOSTAT	*	1					
27	6213-711-003-20	PIPE,WATER OUTLET	*	1					
28	V723-102-005-50	O-RING	*	1					
29	V231-360-802-50	FLANGEBOLT	*	2					

FIG. 18 COOLING FAN

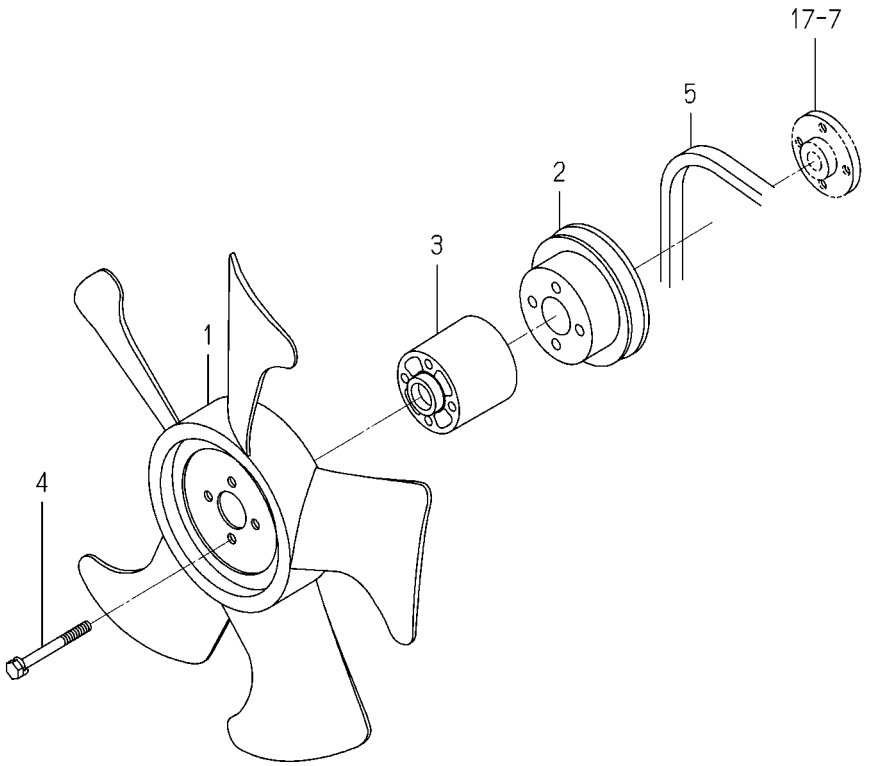

6004-480R-0100

KEY	PART CODE	DESCRIPTION	SPC	TYPE OF MODEL E3112 B14		ITC	COL	GRP	REMARKS
1	6213-660-023-00	FAN/COOLING	*	1					
2	6213-641-002-10	PULLEY,WATER PUMP	*	1					
3	6213-669-008-00	SPACER/FAN/48	*	1					
4	6209-030-044-00	BOLT/WS	*	4					
5	6213-671-012-00	BELT/VHM34.5/FAN	*	1					

FIG. 19 INJECTION NOZZLE

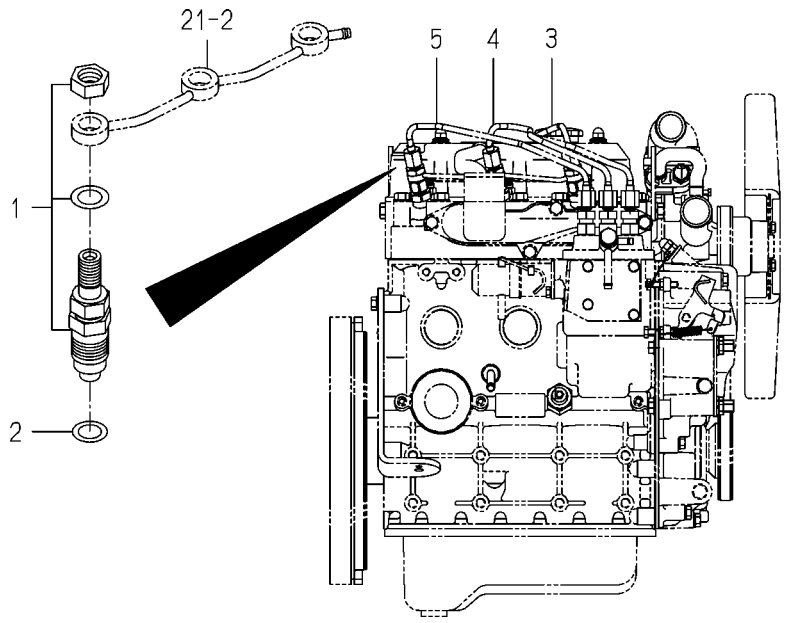

6004-501C-0100

KEY	PART CODE	DESCRIPTION	SPC	TYPE OF MODEL E3112 B14		ITC	COL	GRP	REMARKS
1	6215-300-036-00	INJECTIONNOZZLE ASSY	*	3					FIG 026
2	6215-315-002-00	GASKET,NOZZLE	*	3					
3	6215-411-126-10	PIPE/INJECTION ASSY	*	1					
4	6215-411-127-00	PIPE/INJECTION ASSY	*	1					
5	6215-411-128-00	PIPE/INJECTION ASSY	*	1					

FIG. 20 INJECTION PUMP

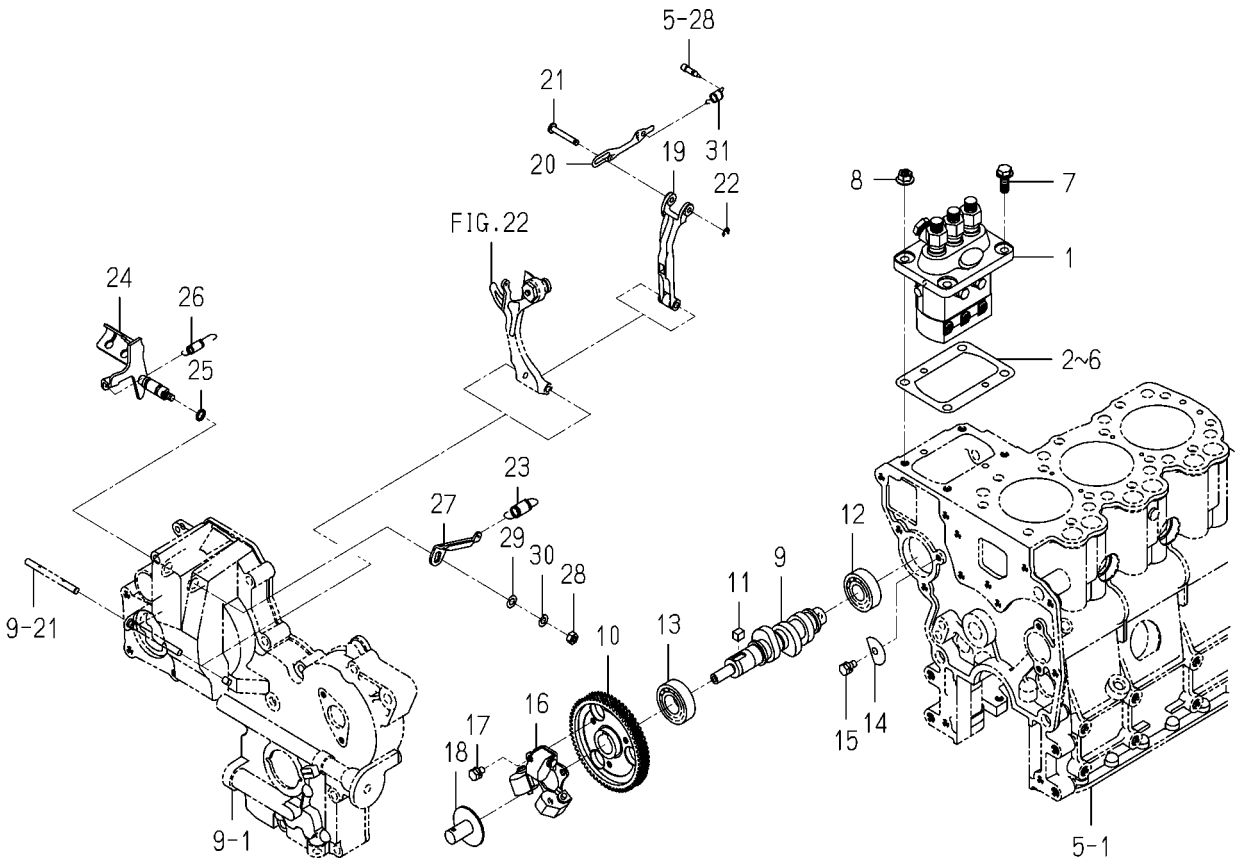

6004-511A-0100

KEY	PART CODE	DESCRIPTION	SPC	TYPE OF MODEL E3112 B14		ITC	COL	GRP	REMARKS
1	6215-600-103-10	INJECTIONPUMP ASSY	*	1					FIG 027
2	6219-752-006-00	SHIM/INJECTION P/0.3	*	1					
3	6219-752-007-00	SHIM/INJECTION P/0.1	*	1					
4	6219-752-008-00	SHIM/INJECTION P/0.2	*	1					
5	6219-752-009-00	SHIM/INJECTION P/0.4	*	1					
6	6219-752-010-00	SHIM/INJECTION P/0.5	*	1					
7	V231-360-802-00	FLANGEBOLT	*	2					
8	3817-401-001-00	NUT/M08	*	2					
9	6215-621-016-20	CAMSHAFT/INJECTION P	*	1					
10	6212-524-002-20	GEAR/INJECTIONPUMP	*	1					
11	6209-730-005-00	KEY/07X05X09	*	1					
12	V600-110-620-30	BEARING,RB/6203	*	1					
13	V600-110-600-40	BEARING,RB/6004	*	1					
14	6212-535-002-00	PLATE,THRUST INJPUMP	*	1					
15	6901-910-612-00	BOLT,SEMS/M6X12	*	1					
16	6215-520-001-00	FLYWEIGHT	*	1					
17	6209-030-043-00	BOLT/M6X10	*	3					
18	6215-526-004-00	THRUSTPIECE	*	1					
19	6215-541-001-10	ARM/FLOATING COMP	*	1					
20	6215-543-002-10	RINK/CONTROL	*	1					
21	6215-542-006-00	PIN,CONTROL	*	1					
22	V710-140-004-00	RING,SNAP/ 4 E	*	1					
23	6215-531-019-00	SPRING/GOVERNOR	*	1					
24	6215-541-024-30	LEVER/CONTROL COMP	*	1					
25	V720-101-900-80	O-RING/P 8	*	1					
26	6209-580-002-10	SPRING,RETURN	*	1					
27	6215-549-007-10	ARM/CONTROL	*	1					
28	6909-110-406-00	NUT	*	1					
29	V411-260-006-00	WASHER / M6	*	1					
30	V401-160-006-00	WASHER,SP/M 6	*	1					

FIG. 20 INJECTION PUMP

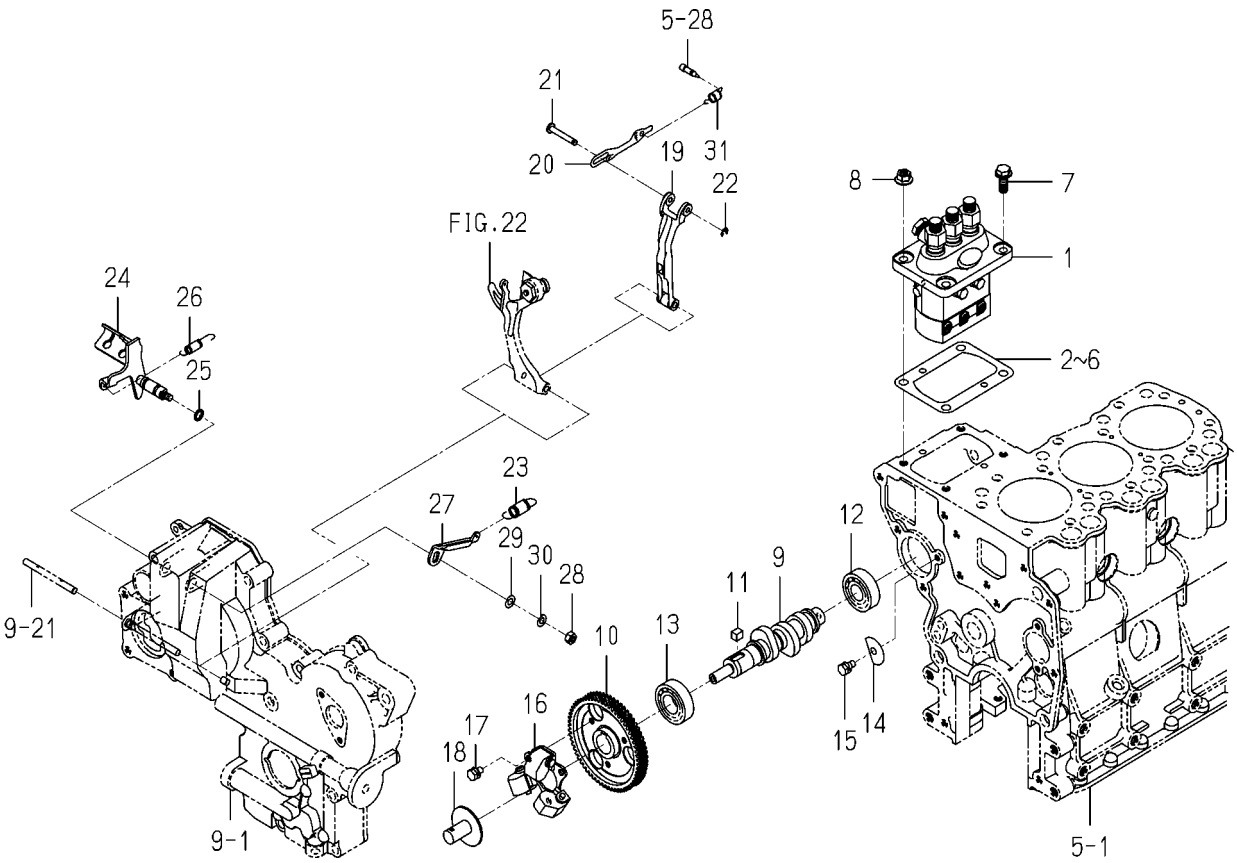

6004-511A-0100

KEY	PART CODE	DESCRIPTION	SPC	TYPE OF MODEL E3112 B14		ITC	COL	GRP	REMARKS
31	6215-549-012-00	SPRING,STARTING	*	1					

FIG. 21 FUEL PIPE

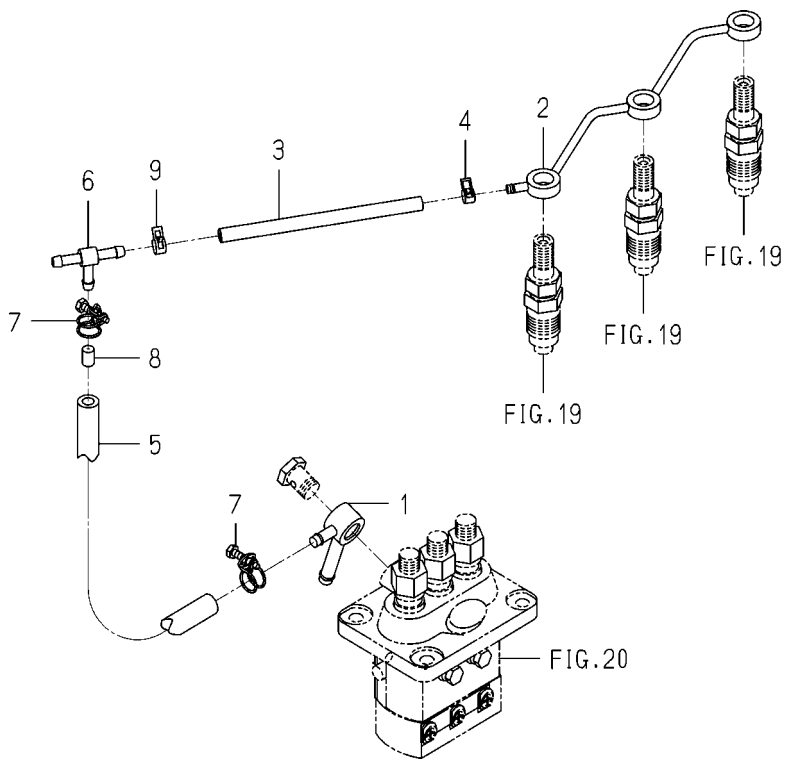

6004-550I-0100

KEY	PART CODE	DESCRIPTION	SPC	TYPE OF MODEL E3112 B14		ITC	COL	GRP	REMARKS
1	6215-412-002-10	CONNECTOR	*	1					
2	6215-411-125-00	PIPE/FUEL	*	1					
3	6209-360-005-00	HOSE,RUBBER	*	1					
4	J062-076-082-00	CLIP/HOSE/7.6-8.2	*	1					
5	6209-360-021-00	HOSE/RUBBER	*	1					
6	3632-360-036-00	JOINTT-TYPE 2	*	1					
7	6209-704-009-00	CLAMP/WIRE/10-12	*	2					
8	6215-419-001-00	TUBE,ORIFICE	*	1					
9	J062-087-093-00	CLIP/HOSE/8.7-9.3	*	1					

FIG. 22 ADAPTER

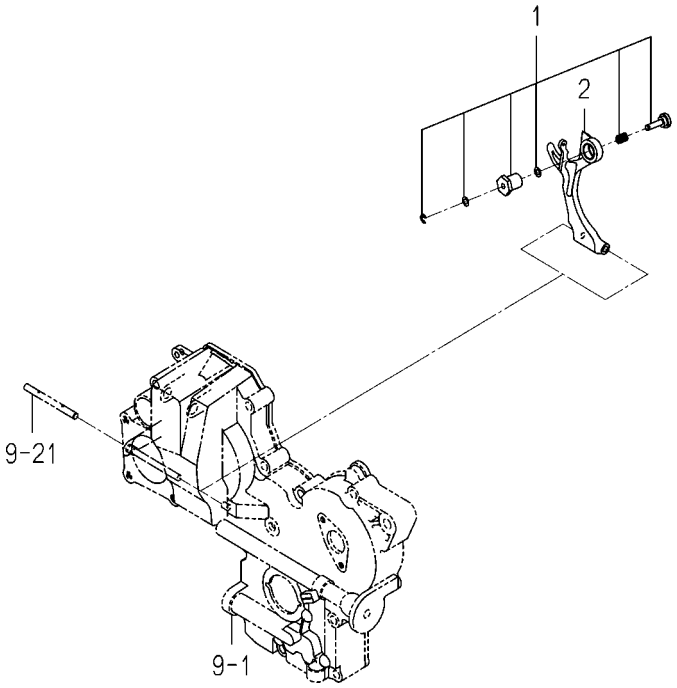

6004-560K-0100

KEY	PART CODE	DESCRIPTION	SPC	TYPE OF MODEL E3112 B14		ITC	COL	GRP	REMARKS
1	6215-548-026-00	ADAPTER/220X125 ASSY	*	1					
2	6215-541-016-30	ARM/TENSION	*	1					

FIG. 23 ELECTRIC (1)

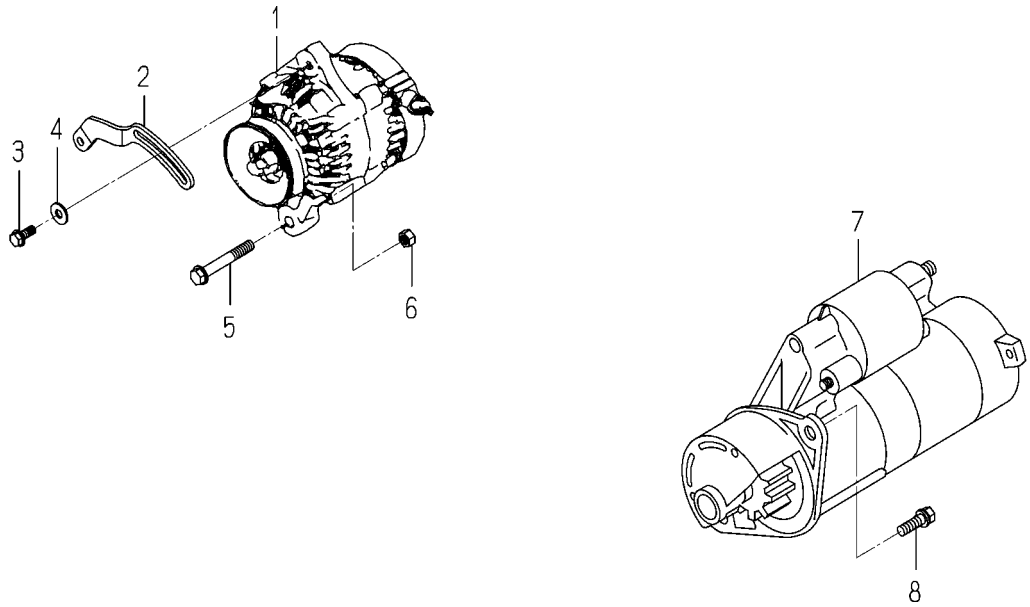

6004-801K-0100,6004-801K-0200

KEY	PART CODE	DESCRIPTION	SPC	TYPE OF MODEL E3112 B14		ITC	COL	GRP	REMARKS
1	6281-200-005-00	GENERATOR ASSY	*	1					FIG 029
2	6213-674-006-20	PLATE/ADJUST	*	1					
3	V231-360-802-00	FLANGEBOLT	*	1					
4	1373-121-001-00	WASHER/9X22X2	*	1					
5	V233-361-007-00	FLANGEBOLT	*	1					
6	6909-110-410-00	NUT/M10	*	1					
7	6281-100-014-00	STARTER ASSY	*	1					FIG 028
8	6209-030-085-00	BOLT/WS	*	2					

FIG. 24 ELECTRIC (2)

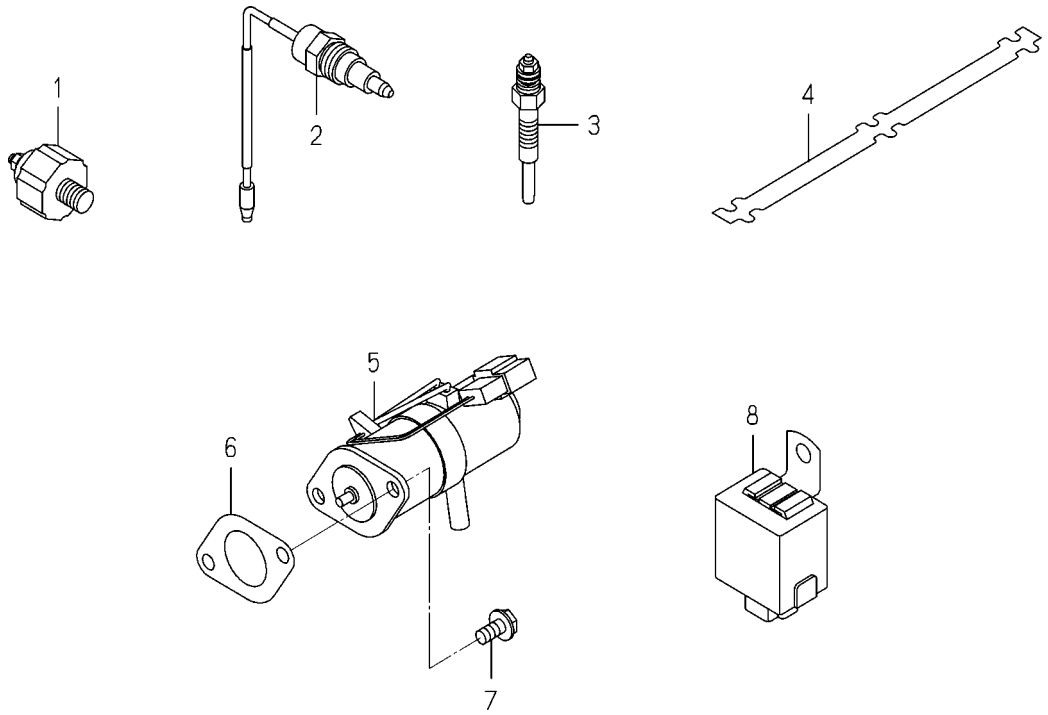

6004-820J-0100,6004-820J-0200

KEY	PART CODE	DESCRIPTION	SPC	TYPE OF MODEL E3112 B14		ITC	COL	GRP	REMARKS
1	6281-971-003-00	SWITCH/OILPRESSURE	*	1					
2	6282-450-002-00	SWITCH/OVERHEAT	*	1					
3	6281-410-010-00	GLOWPLUG	*	3					
4	6219-732-016-00	CONNECTOR/GLOWPLUG	*	1					
5	6281-910-003-10	SOLENOID	*	1					
6	6209-630-002-10	GASKET	*	1					
7	V230-360-601-20	FLANGEBOLT	*	2					
8	6281-920-001-00	RELAY,SOLENOID	*	1					

FIG. 25 REPAIR PARTS (OPTION)

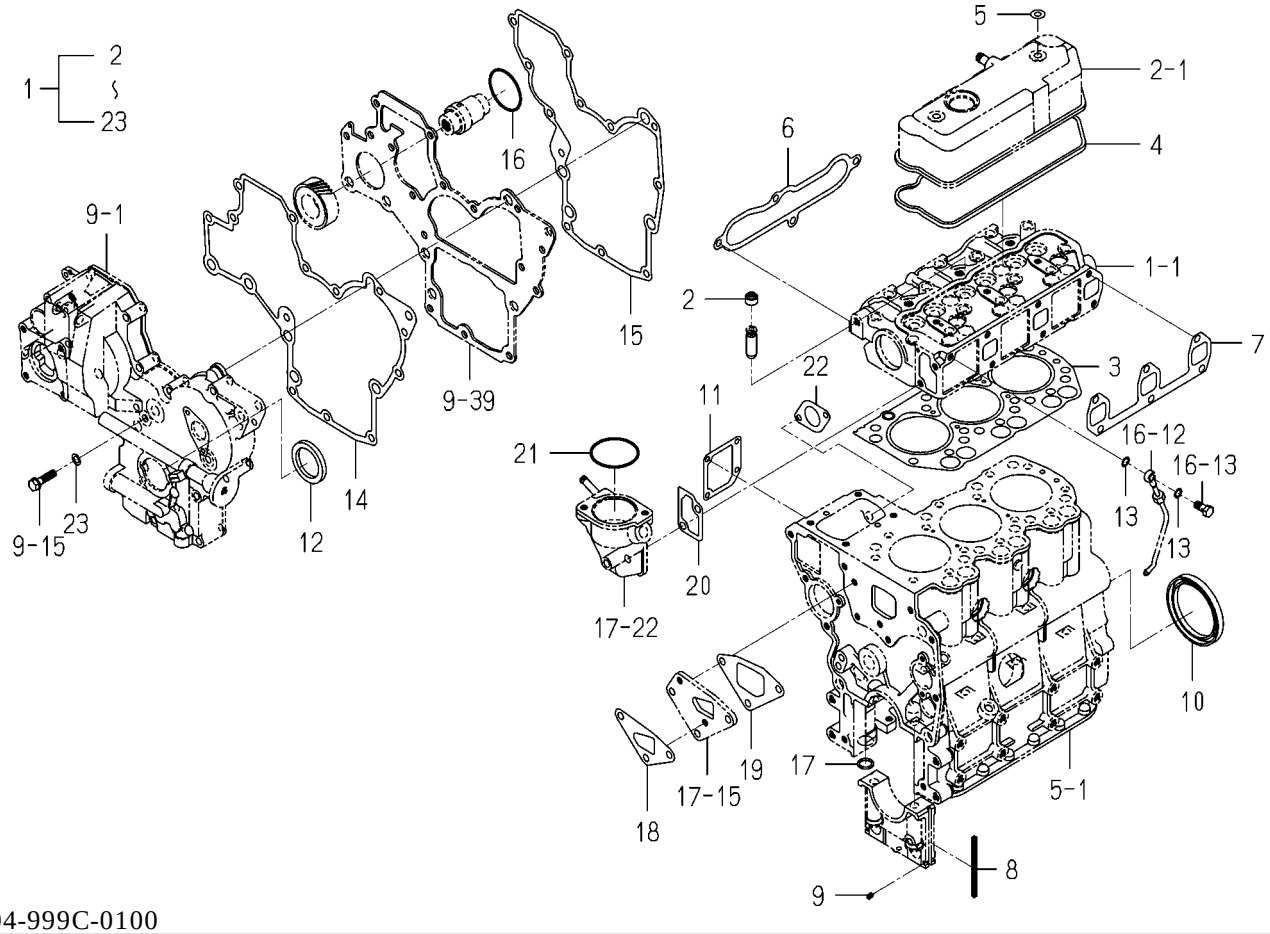

6004-999C-0100

KEY	PART CODE	DESCRIPTION	SPC	TYPE OF MODEL E3112 B14		ITC	COL	GRP	REMARKS
1	6287-810-015-20	REPAIR/ENGINE SET	T	1					
2	6212-569-002-00	SEAL,OIL	T	6					
3	6211-141-029-20	GASKET/CYLINDERHEAD	T	1					
4	6211-173-003-00	SEAL,CYL.HEAD COVER	T	1					
5	6209-572-003-00	GASKET	T	2					
6	6214-115-001-20	GASKET,INLET MANIFOL	T	1					
7	6214-145-001-30	GASKET,EXH.MANIFOLD	T	1					
8	6211-258-001-00	SEAL,BEARING CAP	T	4					
9	6211-258-002-00	SEAL,BEARING CAP/7	T	2					
10	6209-625-012-00	OILSEAL	T	1					
11	6211-292-001-20	GASKET/COVER	T	1					
12	6209-625-002-00	SEAL,OIL	T	1					
13	6209-920-002-00	PACKING	T	2					
14	6211-312-003-20	GASKET/GEARCASE	T	1					
15	6211-312-004-20	GASKET/PLATE	T	1					
16	V723-102-005-00	O-RING 1A S50	T	1					
17	V720-102-401-50	O-RING/P15	T	1					
18	6213-614-003-10	GASKET/WATER PUMP	T	1					
19	6213-614-004-10	GASKET,SPACER	T	1					
20	6213-743-002-10	GASKET/HOUSING	T	1					
21	V723-102-005-50	O-RING	T	1					
22	6209-630-002-10	GASKET	T	1					
23	6209-500-003-00	WASHER/08X14X01	T	2					

FIG. 26 COMPONENT PARTS FOR 6215-300-036-00 ON Fig.19

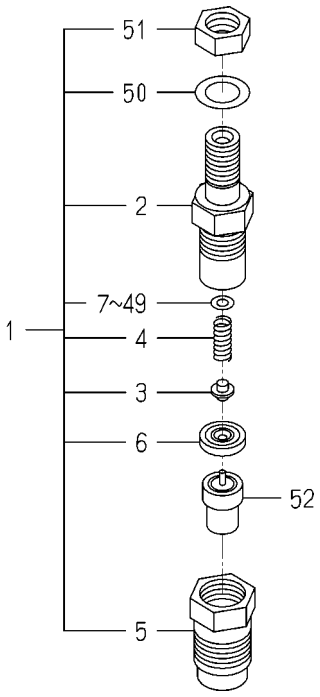

6215-300-036-0A

KEY	PART CODE	DESCRIPTION	SPC	TYPE OF MODEL E3112 B14		ITC	COL	GRP	REMARKS
1	6215-330-024-00	HOLDER/NOZZLE ASSY	*	3					
2	6215-331-008-00	BODY/NOZZLE HOLDER	*	3					
3	6215-342-001-00	PIN,NOZZLE HOLDER	*	3					
4	6215-343-001-00	WASHER	*	3					
5	6215-332-013-00	NUT/NOZZLERETAINING	*	3					
6	6215-339-001-00	PIECE,DISTANCE	*	3					
7	6215-345-001-00	WASHER/0.9	*	3					
8	6215-345-002-00	WASHER/0.925	*	3					
9	6215-345-003-00	WASHER/0.95	*	3					
10	6215-345-004-00	WASHER/0.975	*	3					
11	6215-345-005-00	WASHER/1.0	*	3					
12	6215-345-006-00	WASHER/1.025	*	3					
13	6215-345-007-00	WASHER/1.05	*	3					
14	6215-345-008-00	WASHER/1.075	*	3					
15	6215-345-009-00	WASHER/1.1	*	3					
16	6215-345-010-00	WASHER/1.125	*	3					
17	6215-345-011-00	WASHER/1.15	*	3					
18	6215-345-012-00	WASHER/1.175	*	3					
19	6215-345-013-00	WASHER/1.2	*	3					
20	6215-345-014-00	WASHER/1.225	*	3					
21	6215-345-015-00	WASHER/1.25	*	3					
22	6215-345-016-00	WASHER/1.275	*	3					
23	6215-345-017-00	WASHER/1.3	*	3					
24	6215-345-018-00	WASHER/1.325	*	3					
25	6215-345-019-00	WASHER/1.35	*	3					
26	6215-345-020-00	WASHER/1.375	*	3					
27	6215-345-021-00	WASHER/1.4	*	3					
28	6215-345-022-00	WASHER/1.425	*	3					
29	6215-345-023-00	WASHER/1.45	*	3					
30	6215-345-024-00	WASHER/1.475	*	3					

FIG. 26 COMPONENT PARTS FOR 6215-300-036-00 ON Fig.19

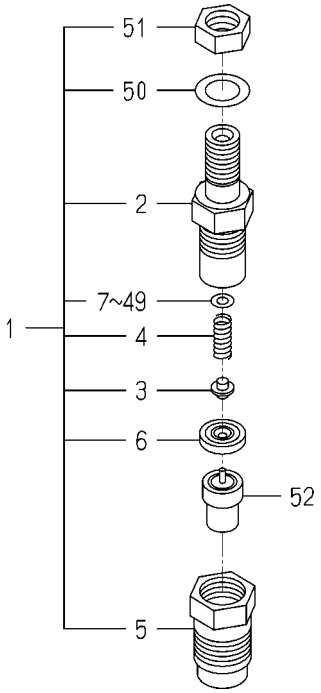

6215-300-036-0A

KEY	PART CODE	DESCRIPTION	SPC	TYPE OF MODEL E3112 B14		ITC	COL	GRP	REMARKS
31	6215-345-025-00	WASHER/1.5	*	3					
32	6215-345-026-00	WASHER/1.525	*	3					
33	6215-345-027-00	WASHER/1.55	*	3					
34	6215-345-028-00	WASHER/1.575	*	3					
35	6215-345-029-00	WASHER/1.6	*	3					
36	6215-345-030-00	WASHER/1.625	*	3					
37	6215-345-031-00	WASHER/1.65	*	3					
38	6215-345-032-00	WASHER/1.675	*	3					
39	6215-345-033-00	WASHER/1.7	*	3					
40	6215-345-034-00	WASHER/1.725	*	3					
41	6215-345-035-00	WASHER/1.75	*	3					
42	6215-345-036-00	WASHER/1.775	*	3					
43	6215-345-037-00	WASHER/1.8	*	3					
44	6215-345-038-00	WASHER/1.825	*	3					
45	6215-345-039-00	WASHER/1.85	*	3					
46	6215-345-040-00	WASHER/1.875	*	3					
47	6215-345-041-00	WASHER/1.9	*	3					
48	6215-345-042-00	WASHER/1.925	*	3					
49	6215-345-043-00	WASHER/1.95	*	3					
50	6215-359-001-00	WASHER	*	3					
51	6215-359-002-00	NUT	*	3					
52	6215-311-027-00	NOZZLE ASSY	*	3					

FIG. 27 COMPONENT PARTS FOR 6215-600-103-10 ON Fig.20

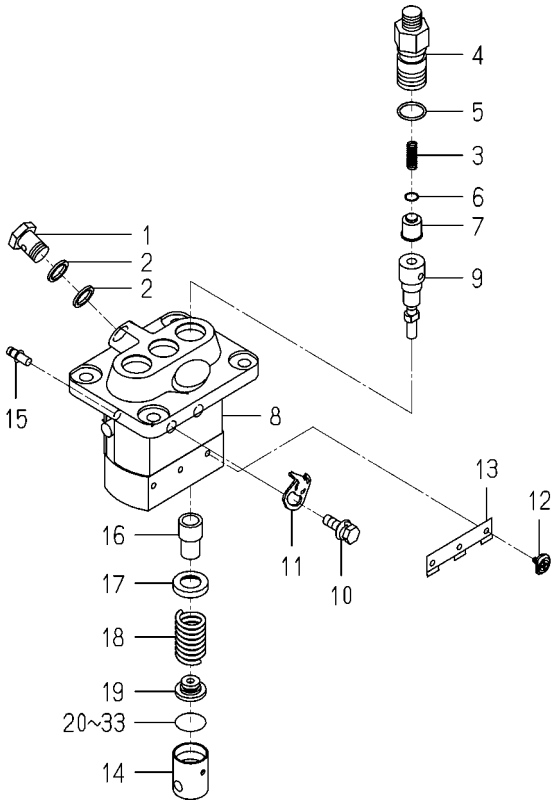

6215-600-103-1C

KEY	PART CODE	DESCRIPTION	SPC	TYPE OF MODEL E3112 B14		ITC	COL	GRP	REMARKS
1	6215-619-009-00	SCREW/HOLLOW	*	1					
2	6215-619-010-00	WASHER/AIR BLEEDER	*	2					
3	6215-643-006-00	SPRING/DELIVERYVALVE	*	3					
4	6215-644-007-00	HOLDER/DELIVERYVALVE	*	3					
5	6215-649-001-00	ORING	*	3					
6	6215-649-002-00	GASKET/DELIVERYVALVE	*	3					
7	6215-641-006-00	VALVE ASSY	*	3					
8	6215-611-001-00	HOUSING ASSY	*	1					
9	6215-631-019-00	ELEMENT ASSY	*	3					
10	6215-619-022-00	BOLT/WASHERHEAD	*	2					
11	6215-612-001-00	PLATE/ADJUSTING	*	2					
12	6215-629-001-00	PIN/INJECTIONPUMP	*	3					
13	6215-629-002-00	PLATE	*	1					
14	6215-622-001-00	TAPPET/INJECTIO ASSY	*	3					
15	6215-637-001-00	RACK/CONTROL ASSY	*	1					
16	6215-635-001-00	SLEEVE/PLUNGER	*	3					
17	6215-639-004-00	SEAT/SPRING/UPPER	*	3					
18	6215-634-001-00	SPRING/PUMPPLUNGER	*	3					
19	6215-639-005-00	SEAT/SPRING/LOWER	*	3					
20	6215-629-003-00	PLATE/TAPPET/AD 0.6	*	1					
21	6215-629-004-00	PLATE/TAPPET/AD 0.7	*	1					
22	6215-629-005-00	PLATE/TAPPET/AD 0.8	*	1					
23	6215-629-006-00	PLATE/TAPPET/AD 0.9	*	1					
24	6215-629-007-00	PLATE/TAPPET/AD 1.0	*	1					
25	6215-629-008-00	PLATE/TAPPET/AD 0.2	*	1					
26	6215-629-009-00	PLATE/TAPPET/AD 0.3	*	1					
27	6215-629-010-00	PLATE/TAPPET/AD 0.4	*	1					
28	6215-629-011-00	PLATE/TAPPET/AD 0.5	*	3					
29	6215-629-012-00	PLATE/TAPPET/AD 0.25	*	1					
30	6215-629-013-00	PLATE/TAPPET/AD 0.35	*	1					

FIG. 27 COMPONENT PARTS FOR 6215-600-103-10 ON Fig.20

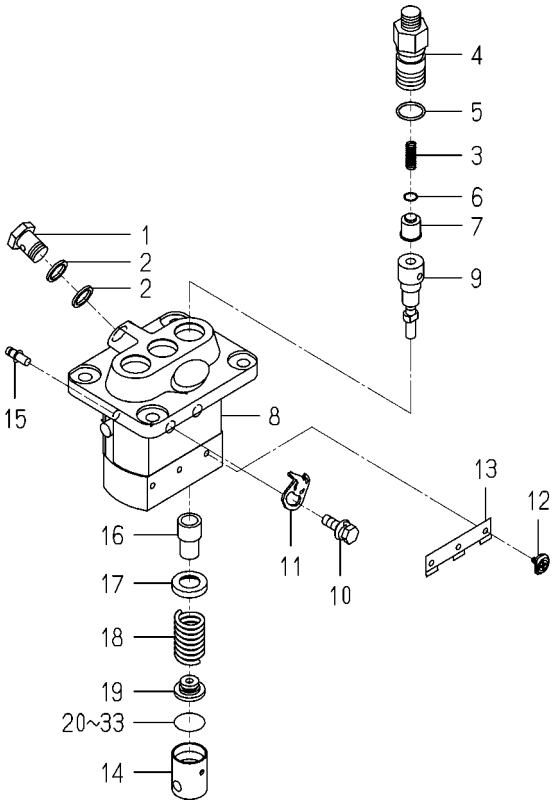

6215-600-103-1C

KEY	PART CODE	DESCRIPTION	SPC	TYPE OF MODEL E3112 B14		ITC	COL	GRP	REMARKS
31	6215-629-014-00	PLATE/TAPPET/AD 0.45	*	1					
32	6215-629-015-00	PLATE/TAPPET/AD 0.55	*	1					
33	6215-629-016-00	PLATE/TAPPET/AD 0.65	*	1					

FIG. 28 COMPONENT PARTS FOR 6281-100-014-00 ON Fig.23

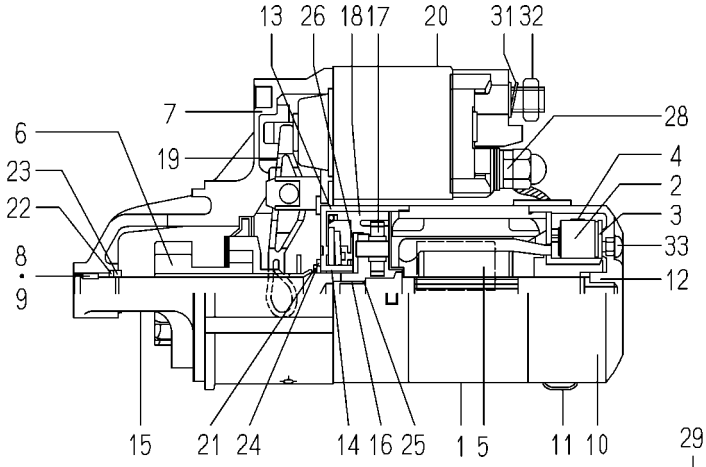

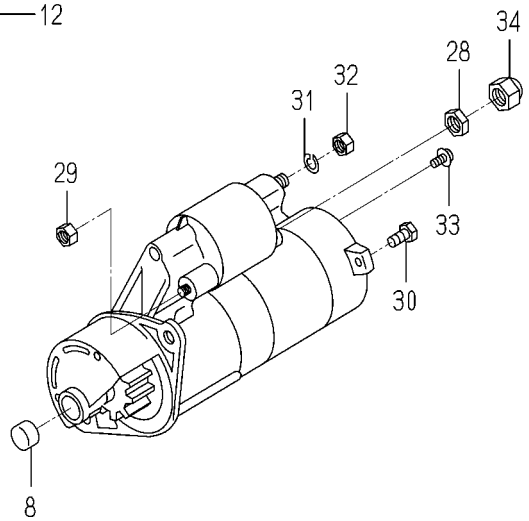

6281-100-014-0A

KEY	PART CODE	DESCRIPTION	SPC	TYPE OF MODEL E3112 B14		ITC	COL	GRP	REMARKS
1	6281-111-009-00	YOKE/STARTER ASSY	*	1					
2	6281-119-009-00	BRUSH/STARTER	*	2					
3	6281-118-007-00	HOLDER/STARTER ASSY	*	1					
4	6281-117-003-00	SPRING/STARTERBRUSH	*	4					
5	6281-121-010-00	ARMATURE/STARTE ASSY	*	1					
6	6281-124-011-00	CLUTCH/STARTER ASSY	*	1					
7	6281-129-064-00	HOUSING/STARTER ASSY	*	1					
8	6281-129-080-00	BEARING/NEEDLE	*	1					
9	6281-129-058-00	BEARING/NEEDLE	*	1					
10	6281-115-017-00	FRAME/COMMUTATOR END	*	1					
11	6281-115-018-00	COVER	*	1					
12	6281-129-065-00	BEARING/OILLESS	*	1					
13	6281-129-066-00	BEARING/WITH SHOCKAB	*	1					
14	6281-129-067-00	BEARING/OILLESS	*	1					
15	6281-129-068-00	SHAFT/STARTER PLANET	*	1					
16	6281-129-069-00	BEARING/OILLESS	*	1					
17	6281-129-070-00	GEAR/STARTER PLANETA	*	3					
18	6281-129-071-00	GEAR/STARTERINTERNAL	*	1					
19	6281-127-003-00	LEVER/PINIONDRIVE	*	1					
20	6281-151-014-00	SWITCH/MAGNETIC ASSY	*	1					
21	6281-129-072-00	RING/SNAP	*	1					
22	6281-129-073-00	RING/SNAP	*	1					
23	6281-129-074-00	NUT/PINIONSTOP	*	1					
24	6281-129-075-00	WASHER/SK	*	1					
25	6281-129-076-00	WASHER/SK	*	1					
26	6281-129-077-00	WASHER/SK	*	1					
27	6281-129-078-00	PLATE	*	1					
28	6281-129-030-00	NUT	*	1					
29	6281-129-029-00	NUT	*	2					
30	6281-129-043-00	BOLT/THROUGH	*	2					

FIG. 28 COMPONENT PARTS FOR 6281-100-014-00 ON Fig.23

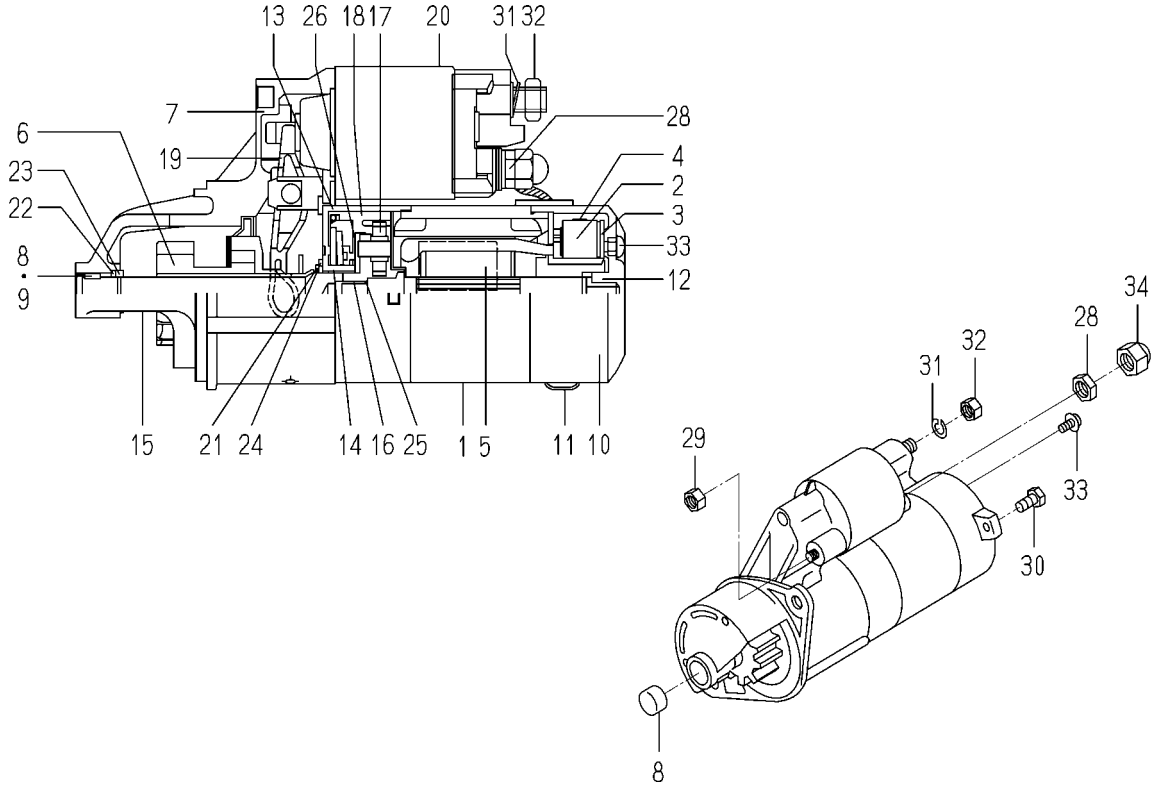

6281-100-014-0A

KEY	PART CODE	DESCRIPTION	SPC	TYPE OF MODEL E3112 B14		ITC	COL	GRP	REMARKS
31	6909-150-508-00	WASHER	*	1					
32	6909-110-408-00	NUT/M8	*	1					
33	6281-129-062-00	SCREW	*	2					
34	6281-129-079-00	NUT	*	1					

FIG. 29 COMPONENT PARTS FOR 6281-200-005-00 ON Fig.23

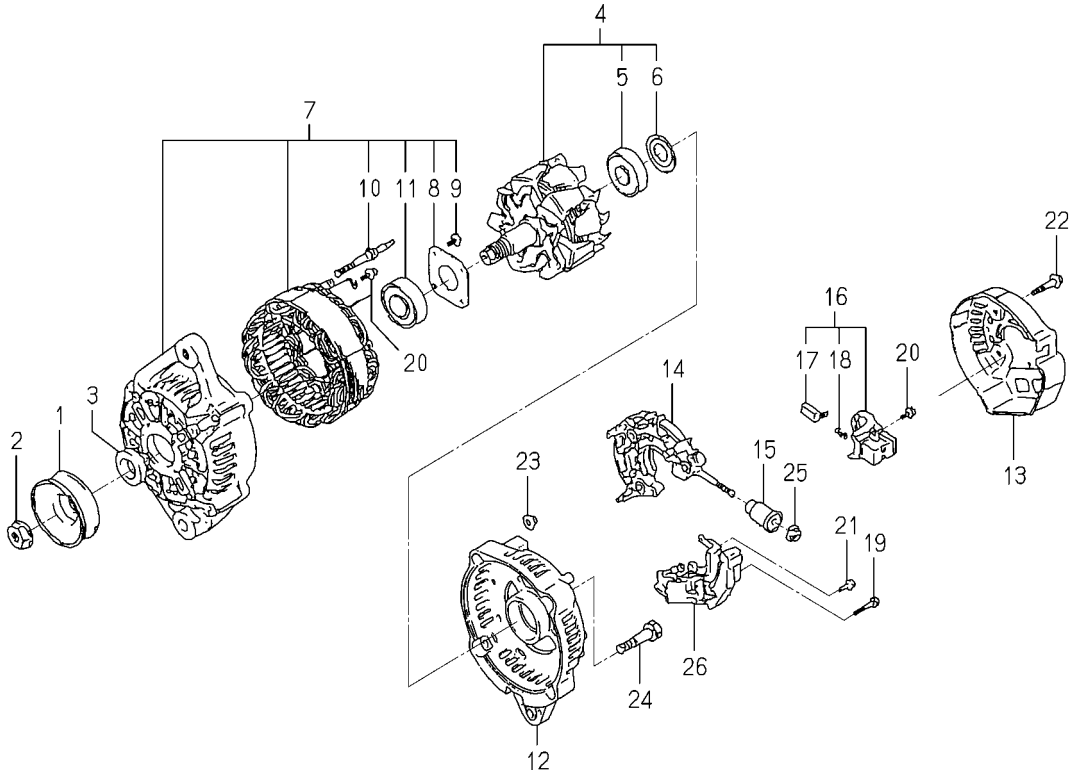

6281-200-005-0B

KEY	PART CODE	DESCRIPTION	SPC	TYPE OF MODEL E3112 B14		ITC	COL	GRP	REMARKS
1	6281-222-004-00	PULLEY	*	1					
2	6281-229-002-00	NUT	*	1					
3	6281-229-003-00	COLLOR	*	1					
4	6281-221-007-00	ROTOR ASSY	*	1					
5	6281-229-004-00	COVER,BEARING	*	1					
6	6281-229-032-00	BEARING/BALL	*	1					
7	6281-213-018-00	FRAME/DRIVEEND ASSY	*	1					
8	6281-229-006-00	PLATE	*	1					
9	6281-229-007-00	BOLT	*	4					
10	6281-229-008-00	BOLT	*	2					
11	6281-229-033-00	BEARING/BALL	*	1					
12	6281-214-003-00	FRAME	*	1					
13	6281-214-004-00	COVER	*	1					
14	6281-229-029-00	HOLDER ASSY	*	1					
15	6281-229-011-00	BUSH	*	1					
16	6281-217-002-00	HOLDER/BRUSH ASSY	*	1					
17	6281-215-001-00	BRUSH	*	2					
18	6281-216-001-00	SPRING	*	2					
19	6281-229-012-00	BOLT	*	2					
20	6281-229-013-00	BOLT	*	6					
21	6281-229-014-00	BOLT	*	1					
22	6281-229-015-00	BOLT	*	3					
23	6281-229-016-00	NUT	*	2					
24	6281-229-017-00	BOLT	*	2					
25	6281-229-018-00	NUT	*	1					
26	6281-271-002-00	REGULATOR ASSY	*	1					

E N G I N E

E3112B15···TM3240H

E
N
G
I
N
E

6004-097-350-00

FIG. 1 CYLINDER HEAD

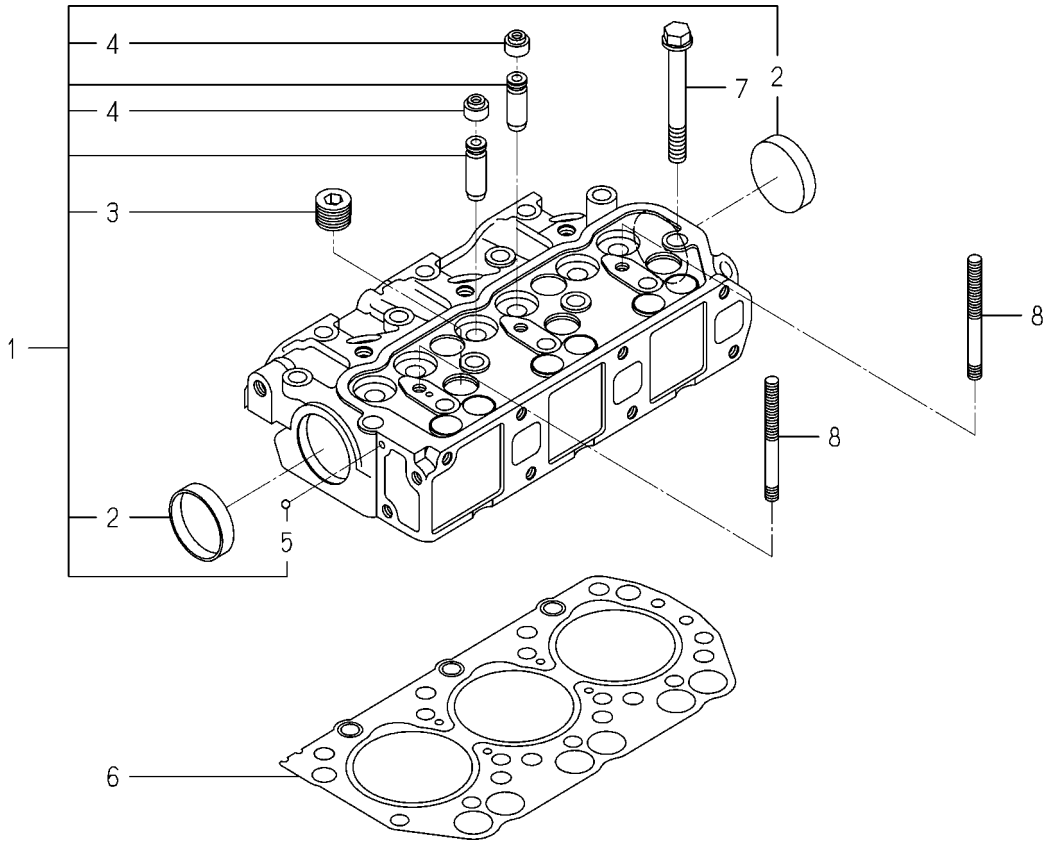

6004-101I-0100,6004-101I-0200

KEY	PART CODE	DESCRIPTION	SPC	TYPE OF MODEL E3112 B15		ITC	COL	GRP	REMARKS
1	6211-110-057-30	CYLINDERHEAD ASSY	*	1					
2	6911-129-006-00	CAP,SEALING	*	2					
3	6209-605-004-10	PLUG/PT1/2	*	5					
4	6212-569-002-00	SEAL,OIL	*	6					
5	V682-200-000-60	BALL	*	1					
6	6211-141-029-20	GASKET/CYLINDERHEAD	*	1					
7	6209-000-003-00	BOLT/M10X1.25X82	*	14					
8	6209-300-014-00	STUD	*	2					

FIG. 2 CYLINDER HEAD COVER

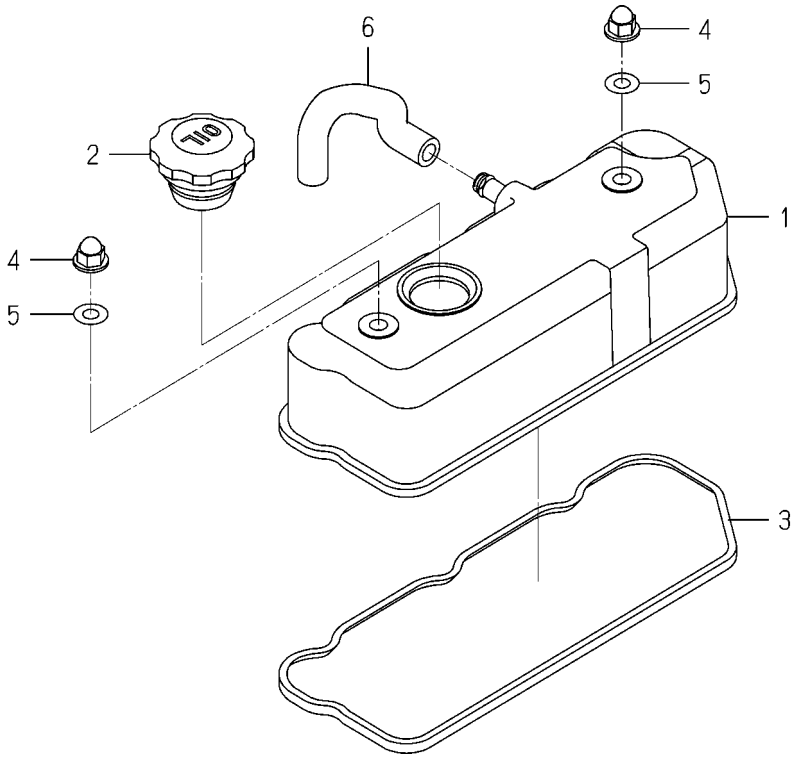

6003-110 -0100

KEY	PART CODE	DESCRIPTION	SPC	TYPE OF MODEL E3112 B15		ITC	COL	GRP	REMARKS
1	6211-170-004-20	COVER/CYLINDER HEAD	*	1					
2	6211-751-001-10	CAP,OIL FILLER	*	1					
3	6211-173-003-00	SEAL,CYL.HEAD COVER	*	1					
4	6209-490-002-10	NUT/CAP	*	2					
5	6209-572-003-00	GASKET	*	2					
6	6209-360-028-10	HOSE/RABBER	*	1					

FIG. 3 INLET MANIFOLD

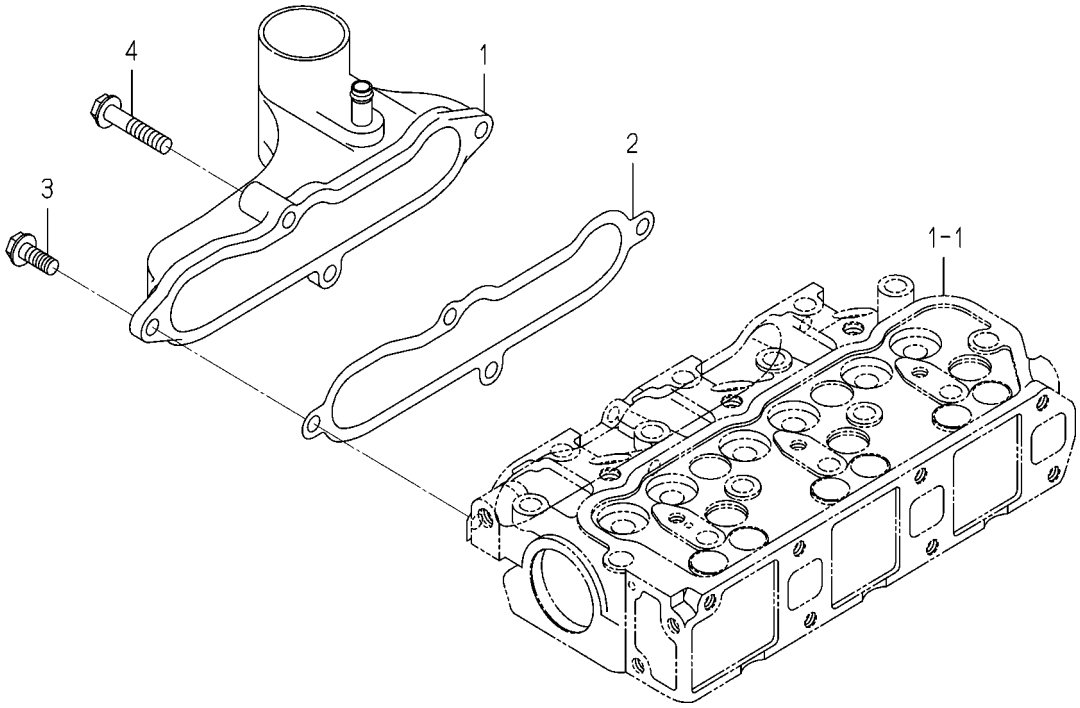

6003-120B-0100

KEY	PART CODE	DESCRIPTION	SPC	TYPE OF MODEL E3112 B15		ITC	COL	GRP	REMARKS
1	6214-111-011-20	MANIFOLD(INLET) ASSY	*	1					
2	6214-115-001-20	GASKET,INLET MANIFOL	*	1					
3	V231-360-802-00	FLANGEBOLT	*	3					
4	V231-360-804-00	FLANGEBOLT	*	1					

FIG. 4 EXHAUST MANIFOLD

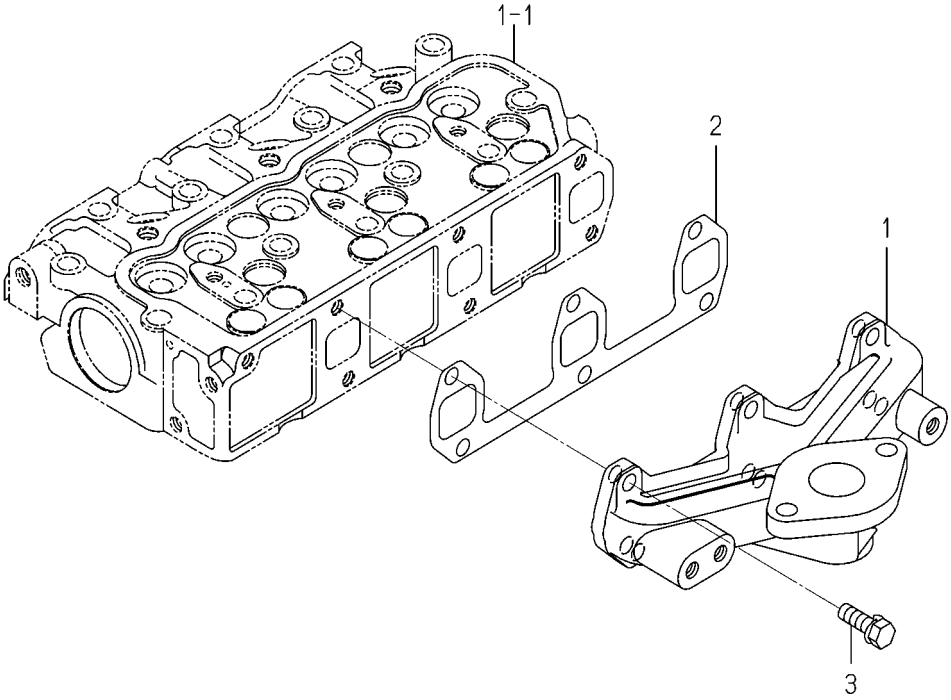

6004-140 -0100

KEY	PART CODE	DESCRIPTION	SPC	TYPE OF MODEL E3112 B15		ITC	COL	GRP	REMARKS
1	6214-141-010-10	MANIFOLD,EXH	*	1					
2	6214-145-001-30	GASKET,EXH.MANIFOLD	*	1					
3	V211-560-802-50	BOLT,SEMS/M8X25 7T	*	6					

FIG. 5 CYLINDER BLOCK

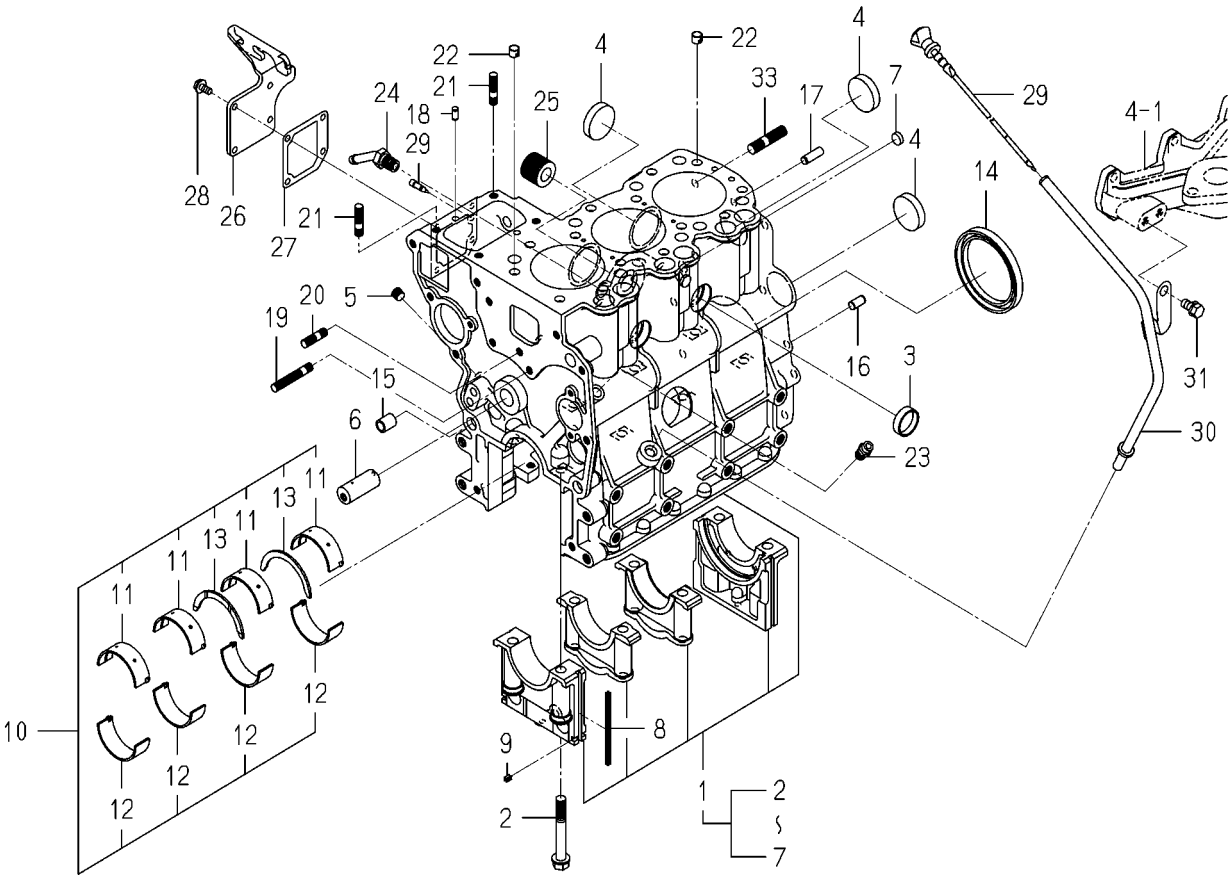

6004-202G-0100

KEY	PART CODE	DESCRIPTION	SPC	TYPE OF MODEL E3112 B15		ITC	COL	GRP	REMARKS
1	6211-210-037-20	CYLINDERBLOCK ASSY	*	1					
2	6209-000-004-10	BOLT	*	8					
3	6209-610-001-10	CUP/SEALING/28	*	2					
4	6209-610-009-00	CUP/SEALING/36	*	4					
5	6509-605-019-10	PLUG	*	3					
6	6212-531-005-10	PIN/IDLEGEAR	*	1					
7	6209-610-008-00	CUP/SEALING/12	*	2					
8	6211-258-001-00	SEAL,BEARING CAP	*	4					
9	6211-258-002-00	SEAL,BEARING CAP/7	*	2					
10	6211-510-001-00	METAL,CRANK SET	*	1					
11	6211-511-003-00	BEARING/CRANK/UPPER	*	4					
12	6211-511-004-00	BEARING/CRANK/LOWER	*	4					
13	6211-599-001-10	BEARING,THRUST CRANK	*	2					
14	6209-625-012-00	OILSEAL	*	1					
15	6209-749-001-20	PIN/TUBE	*	2					
16	6213-129-006-00	PIN/STRAIGHT	*	1					
17	V523-100-802-40	PIN	*	1					
18	6209-740-005-00	PIN	*	2					
19	6904-110-840-00	STUD/M8X40	*	1					
20	6904-110-818-00	STUD	*	1					
21	6904-110-822-00	STUD	*	2					
22	6294-453-002-00	DOWEL	*	2					
23	6909-902-299-00	NIPPLE	*	1					
24	6213-721-007-00	PIPE/WATERDRAIN	*	1					
25	6213-319-001-00	CONNECTOR,OIL FILTER	*	1					
26	6211-291-016-00	COVER/INJECTIONPUMP	*	1					
27	6211-292-001-20	GASKET/COVER	*	1					
28	V230-360-601-20	FLANGEBOLT	*	4					
29	6215-549-013-00	PIN	*	1					
30	6211-760-030-00	LEVELGAGE	*	1					

FIG. 5 CYLINDER BLOCK

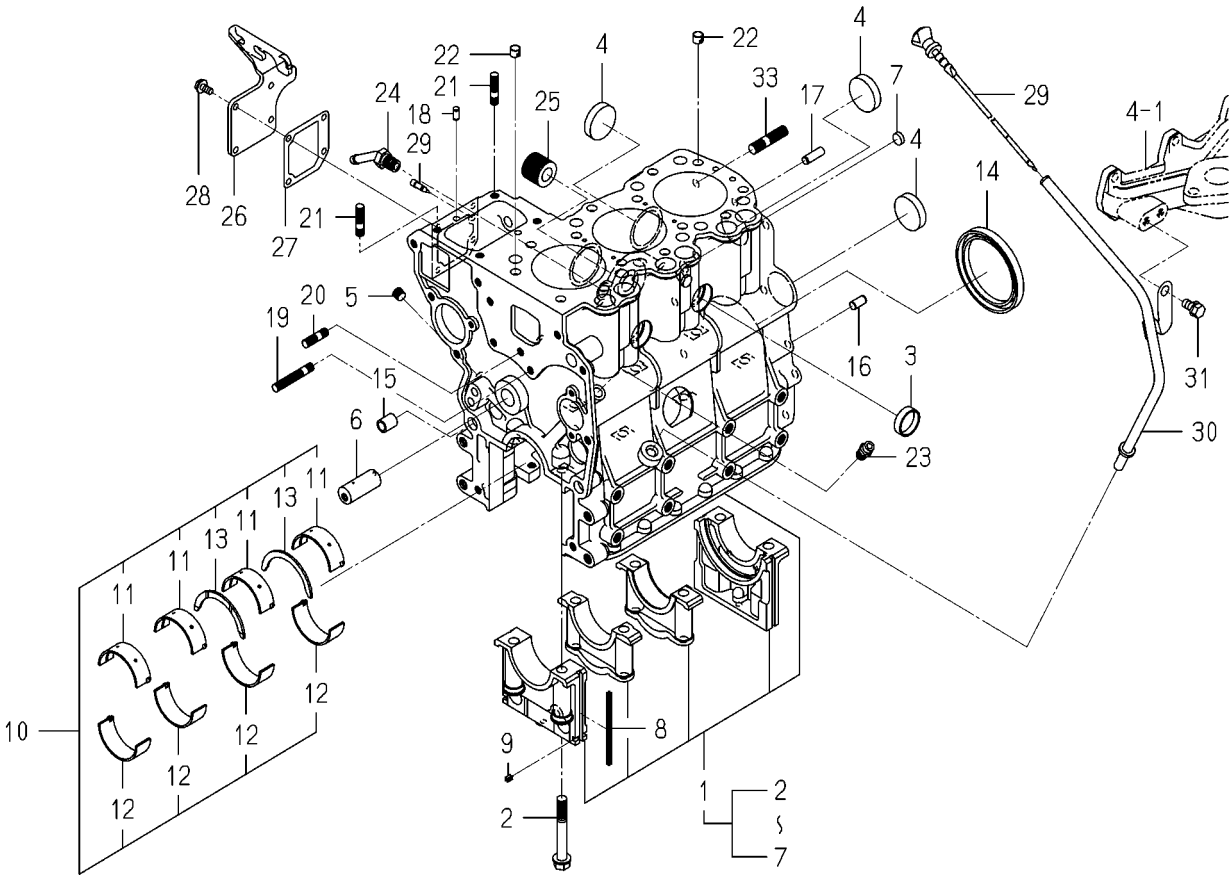

6004-202G-0100

KEY	PART CODE	DESCRIPTION	SPC	TYPE OF MODEL E3112 B15		ITC	COL	GRP	REMARKS
31	6211-766-019-00	GUIDE/LEVELGAGE COMP	*	1					
32	6901-910-816-00	BOLT,SEMS/M8X16	*	1					
33	6209-300-013-00	STUD	*	2					

FIG. 6 BEARING/UNDER SIZE (OPTION)

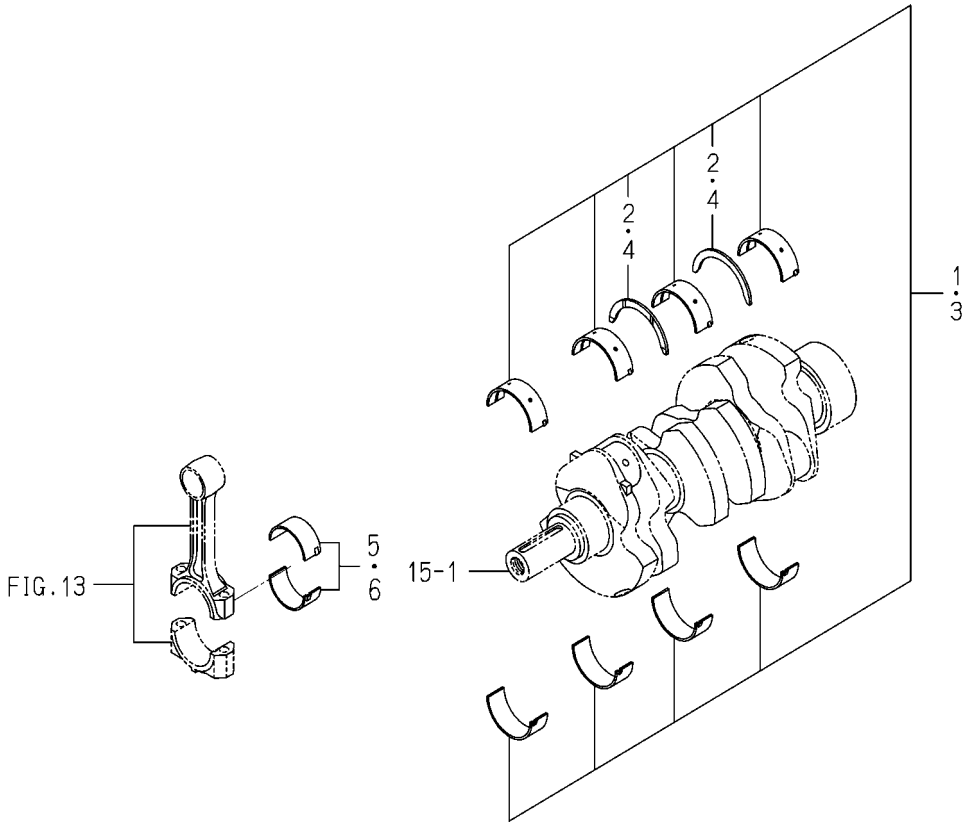

6003-209 -0100

KEY	PART CODE	DESCRIPTION	SPC	TYPE OF MODEL E3112 B15		ITC	COL	GRP	REMARKS
1	6211-540-001-00	METAL,CRANK SET	T	1					
2	6211-599-001-10	BEARING,THRUST CRANK	T	2					
3	6211-560-001-00	METAL,CRANK SET	T	1					
4	6211-599-001-10	BEARING,THRUST CRANK	T	2					
5	6212-274-006-00	BEARING/CONNECTING R	T	3					
6	6212-276-006-00	BEARING/CONNECTING R	T	3					

FIG. 7 OIL PAN

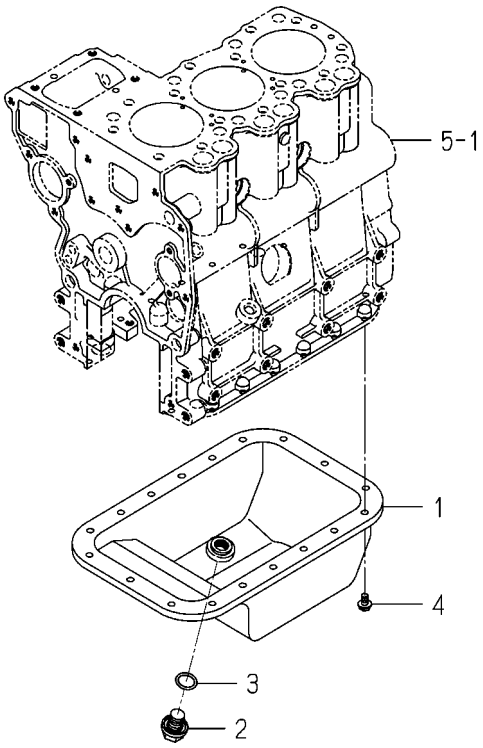

6004-210 -0100

KEY	PART CODE	DESCRIPTION	SPC	TYPE OF MODEL E3112 B15		ITC	COL	GRP	REMARKS
1	6211-361-010-10	PAN,OIL COMP	*	1					
2	6209-600-006-00	PLUG/M14X1.5	*	1					
3	V720-102-401-80	O-RING/P18	*	1					
4	V230-360-601-00	FLANGEBOLT	*	18					

FIG. 8 REAR PLATE

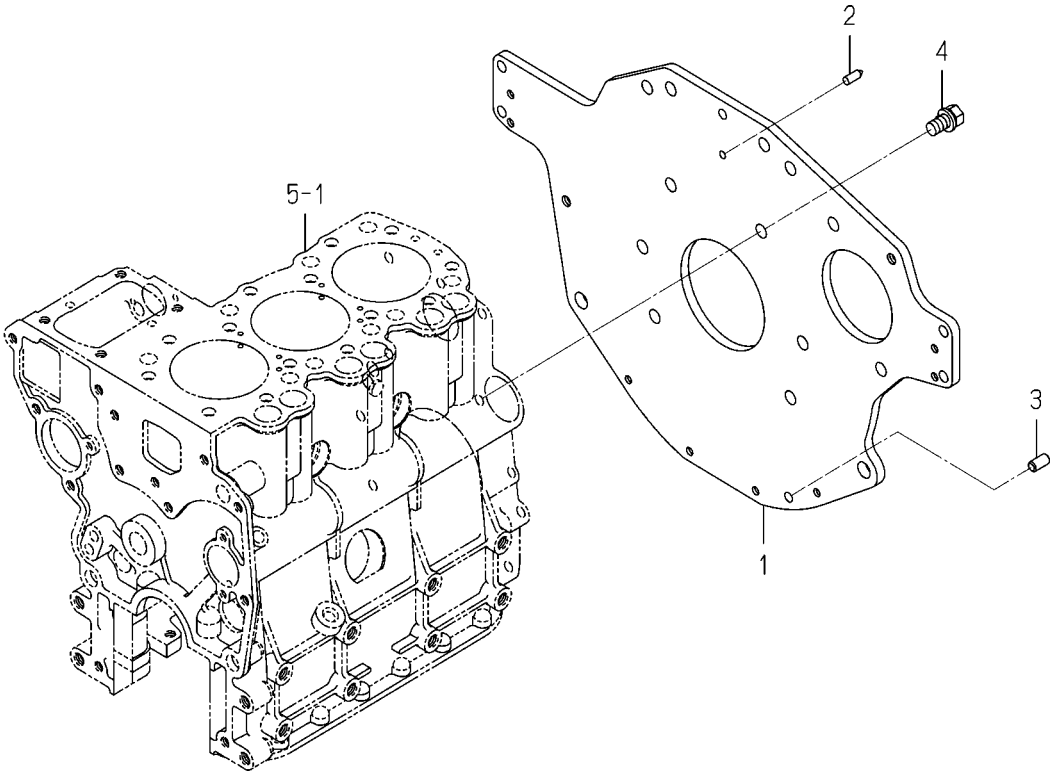

6004-220H-0100

KEY	PART CODE	DESCRIPTION	SPC	TYPE OF MODEL E3112 B15		ITC	COL	GRP	REMARKS
1	6211-341-053-20	PLATE/REAR	*	1					
2	6211-342-002-10	POINTER	*	1					
3	6213-129-006-00	PIN/STRAIGHT	*	1					
4	6901-911-020-00	BOLT,SEMS/M10X20	*	6					

FIG. 9 TIMING GEAR CASE

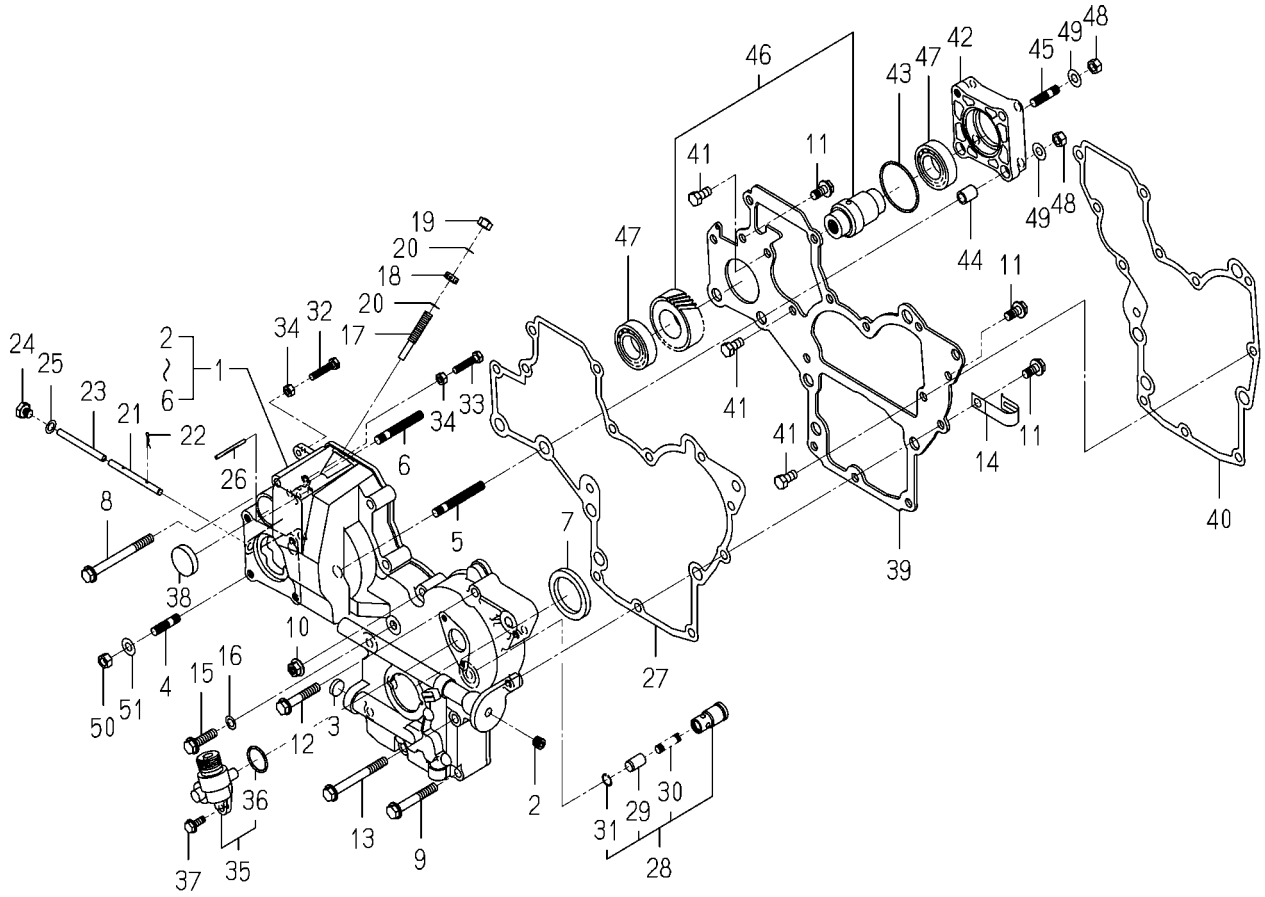

6004-240N-0100,6004-240N-0200

KEY	PART CODE	DESCRIPTION	SPC	TYPE OF MODEL E3112 B15		ITC	COL	GRP	REMARKS
1	6211-310-012-30	GEARCASE ASSY	*	1					
2	6509-605-019-10	PLUG	*	2					
3	6209-610-002-10	CUP/SEALING/16	*	1					
4	6904-110-822-00	STUD	*	4					
5	6904-110-855-00	STUD	*	2					
6	6904-110-850-00	STUD	*	1					
7	6209-625-002-00	SEAL,OIL	*	1					
8	V231-360-808-50	FLANGEBOLT	*	1					
9	V231-360-805-50	FLANGEBOLT	*	2					
10	3817-401-001-00	NUT/M08	*	1					
11	V231-360-801-60	FLANGEBOLT	*	3					
12	V231-360-804-50	FLANGEBOLT	*	5					
13	V231-360-807-50	FLANGEBOLT	*	1					
14	1425-621-004-00	HOLDER/JE/9-9	*	2					
15	V231-360-803-00	FLANGEBOLT	*	1					
16	6209-500-003-00	WASHER/08X14X01	*	1					
17	6215-546-003-10	STOPPER/FULLLOAD	*	1					
18	6209-409-001-00	NUT/M8	*	1					
19	V341-120-008-00	NUT,CAP/M 8	*	1					
20	6209-920-002-00	PACKING	*	2					
21	6215-542-004-20	PIN/ARM	*	1					
22	P117-303-003-00	PIN/SNAP	*	2					
23	6215-542-005-10	PIN	*	1					
24	6209-600-004-00	PLUG/SCREW	*	1					
25	6209-500-003-00	WASHER/08X14X01	*	1					
26	6209-740-001-00	PIN,GROOVE	*	1					
27	6211-312-003-20	GASKET/GEARCASE	*	1					
28	6213-160-002-20	VALVE/RELIEF ASSY	*	1					
29	6213-161-001-20	PISTON/VALVE/RELIEF	*	1					
30	6213-164-001-00	SPRING/RELIEF VALVE	*	1					

FIG. 9 TIMING GEAR CASE

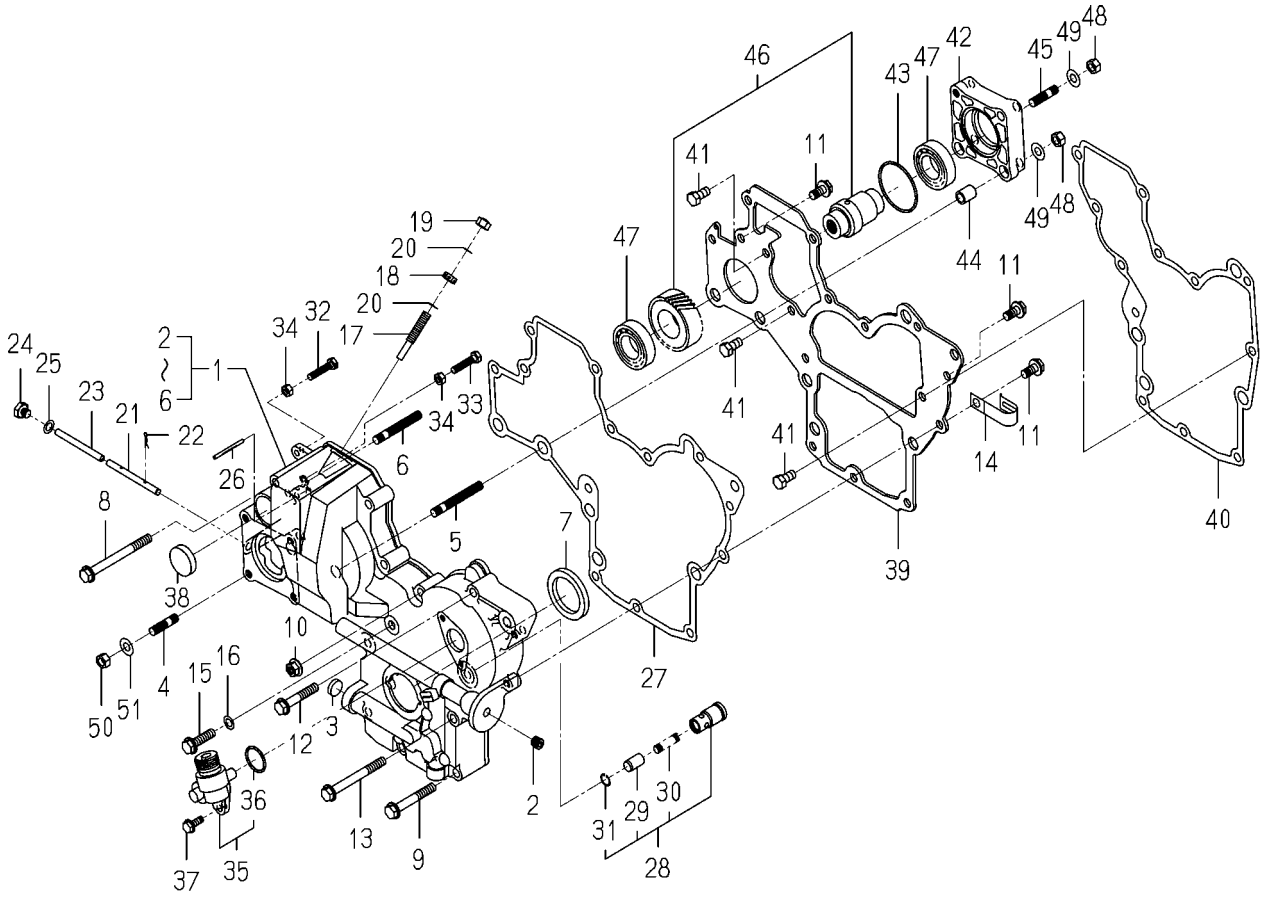

6004-240N-0100,6004-240N-0200

KEY	PART CODE	DESCRIPTION	SPC	TYPE OF MODEL E3112 B15		ITC	COL	GRP	REMARKS
31	V705-140-012-00	RING,SNAP/12 C	*	1					
32	6209-050-001-00	BOLT/M6	*	1					
33	6209-050-002-00	BOLT/M6	*	1					
34	6909-110-406-00	NUT	*	2					
35	6219-310-003-20	DRIVE/TACHOMETE ASSY	*	1					
36	V723-102-002-40	RING/O	*	1					
37	V230-360-601-60	FLANGEBOLT	*	2					
38	3625-540-004-00	CAP,BLANK/30	*	1					
39	6211-311-007-40	PLATE/FRONT	*	1					
40	6211-312-004-20	GASKET/PLATE	*	1					
41	6902-050-816-00	BOLT	*	3					
42	6211-319-003-00	SPACER	*	1					
43	V723-102-005-00	O-RING 1A S50	*	1					
44	6209-749-001-20	PIN/TUBE	*	2					
45	6904-110-822-00	STUD	*	1					
46	6212-530-005-20	SHAFT/HYDRAULIC ASSY	*	1					
47	V600-110-600-50	BEARING,RB/6005	*	2					
48	6909-110-408-00	NUT/M8	*	4					
49	V401-160-008-00	WASHER,SP/M 8	*	4					
50	6909-110-408-00	NUT/M8	*	4					
51	V401-160-008-00	WASHER,SP/M 8	*	4					

FIG. 10 HANGER

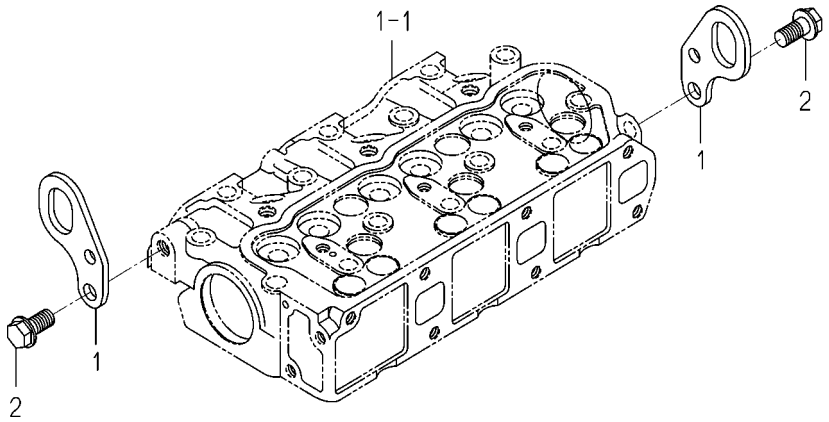

6003-290 -0100

KEY	PART CODE	DESCRIPTION	SPC	TYPE OF MODEL E3112 B15		ITC	COL	GRP	REMARKS
1	6211-777-007-30	HANGER	*	2					
2	V233-361-002-00	FLANGEBOLT	*	2					

FIG. 11 VALVE

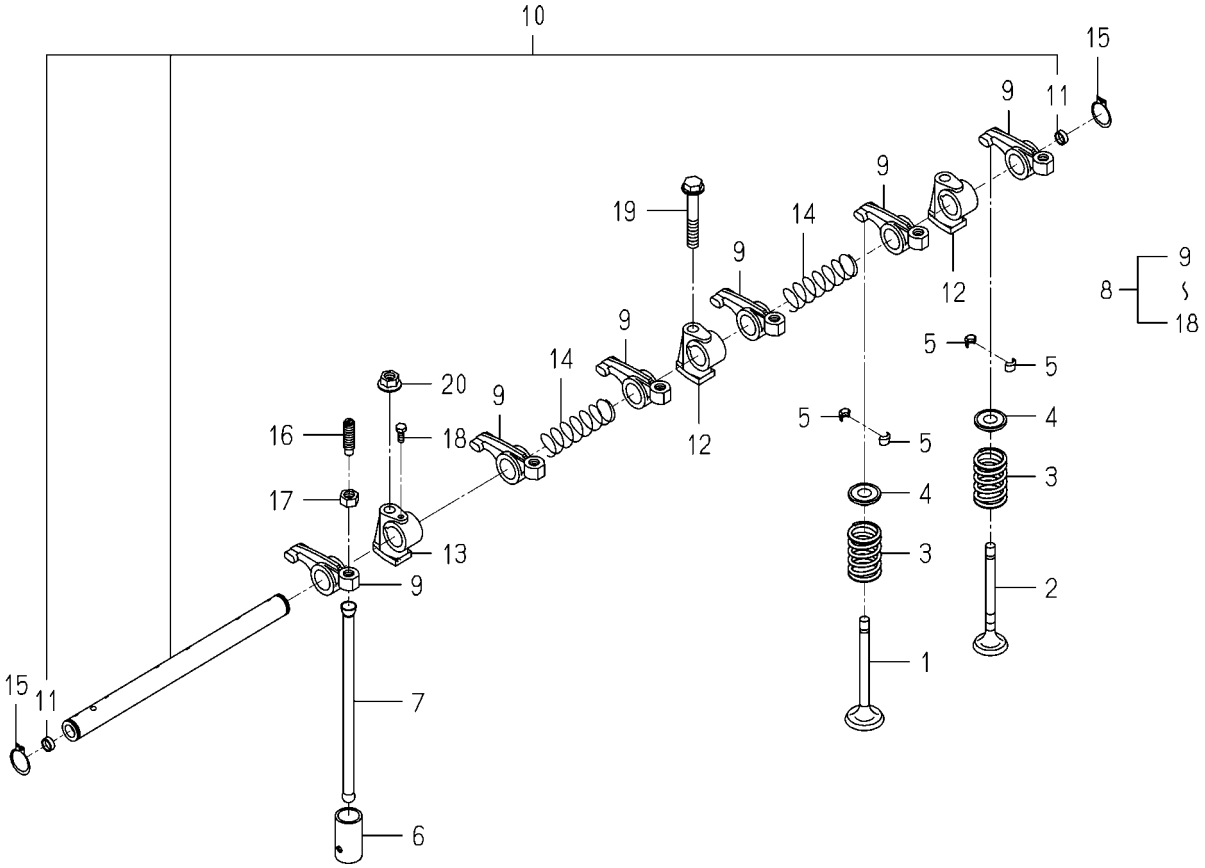

6004-301 -0100

KEY	PART CODE	DESCRIPTION	SPC	TYPE OF MODEL E3112 B15		ITC	COL	GRP	REMARKS
1	6212-551-001-10	VALVE/INTAKE	*	3					
2	6212-552-001-20	VALVE/EXHAUST	*	3					
3	6212-561-001-10	SPRING/VALVE	*	6					
4	6212-563-001-00	SEAT,VALVE SPRING	*	6					
5	6212-565-001-00	CUTTER,VALVE	*	12					
6	6212-571-006-00	TAPPET	*	6					
7	6212-575-002-00	ROD,PUSH	*	6					
8	6212-600-002-10	ROCKERSHAFT ASSY	*	1					
9	6212-611-004-10	ROCKERARM	*	6					
10	6212-620-001-20	SHAFT/ROCKERARM ASSY	*	1					
11	6212-626-002-10	PLUG	*	2					
12	6212-628-004-00	BRACKET ROCKER SHAFT	*	2					
13	6212-628-005-00	BRACKET,ROCKER SHAFT	*	1					
14	6209-940-004-00	SPRING	*	2					
15	V704-140-016-00	RING,SNAP/16 C	*	2					
16	6212-616-002-00	SCREW ADJUST	*	6					
17	6209-409-003-00	NUT	*	6					
18	6209-000-002-00	BOLT	*	1					
19	V231-360-805-00	FLANGEBOLT	*	1					
20	3817-401-001-00	NUT/M08	*	2					

FIG. 12 CAM SHAFT

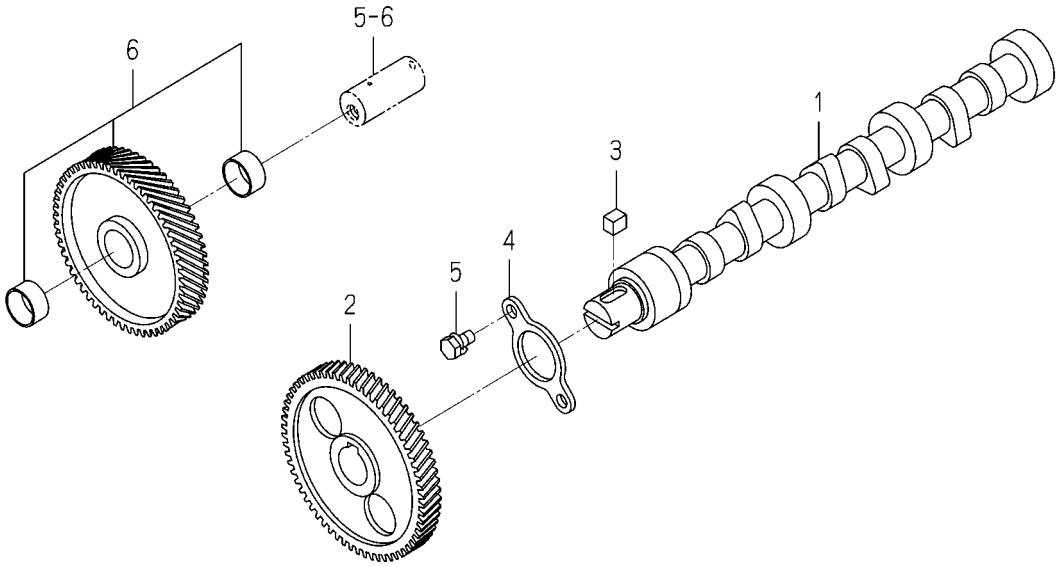

6003-310 -0100

KEY	PART CODE	DESCRIPTION	SPC	TYPE OF MODEL E3112 B15		ITC	COL	GRP	REMARKS
1	6212-511-002-00	SHAFT,CAM	*	1					
2	6212-522-010-00	GEAR/CAMSHAFT	*	1					
3	6209-730-005-00	KEY/07X05X09	*	1					
4	6212-535-001-00	PLATE,THRUST	*	1					
5	6901-910-612-00	BOLT,SEMS/M6X12	*	2					
6	6212-523-023-00	GEAR/IDLE ASSY	*	1					

FIG. 13 PISTON

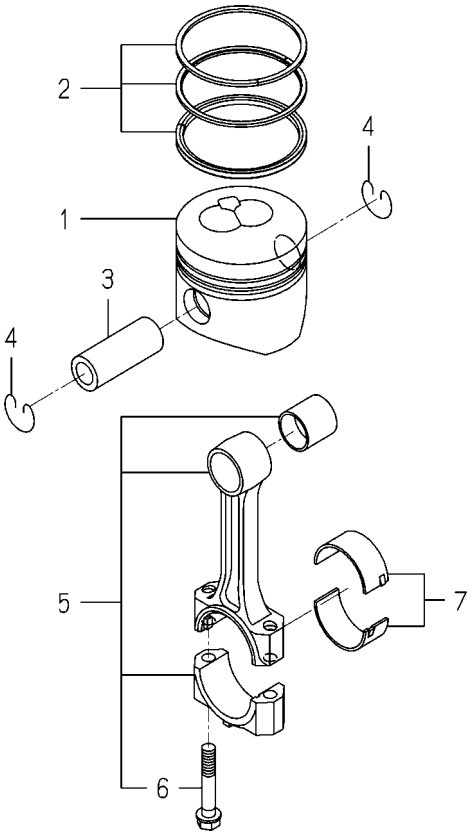

6004-340I-0100

KEY	PART CODE	DESCRIPTION	SPC	TYPE OF MODEL E3112 B15		ITC	COL	GRP	REMARKS
1	6212-111-094-10	PISTON	*	3					
2	6212-121-014-20	RING/PISTON SET	*	3					
3	6212-211-001-10	PIN,PISTON	*	3					
4	6209-587-001-00	RING,SNAP	*	6					
5	6212-230-004-10	CONNECTINGROD ASSY	*	3					
6	6212-235-005-00	BOLT/CONNECTINGROD	*	6					
7	6212-271-006-00	BEARING/CONNECTING R	*	3					

FIG. 14 PISTON/OVER SIZE (OPTION)

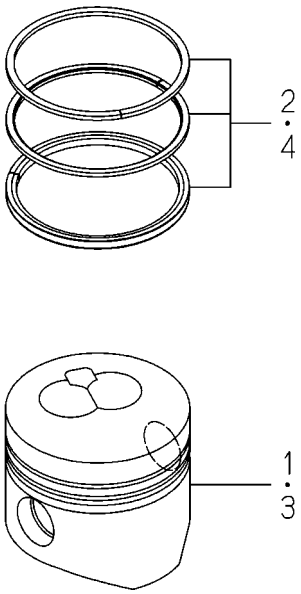

6004-349I-0100

KEY	PART CODE	DESCRIPTION	SPC	TYPE OF MODEL E3112 B15		ITC	COL	GRP	REMARKS
1	6212-114-094-10	PISTON(OV)	T	3					
2	6212-124-014-10	RING/PISTON/OV SET	T	3					
3	6212-116-094-10	PISTON(OV)	T	3					
4	6212-126-014-10	RING/PISTON/OV SET	T	3					

FIG. 15 CRANK SHAFT

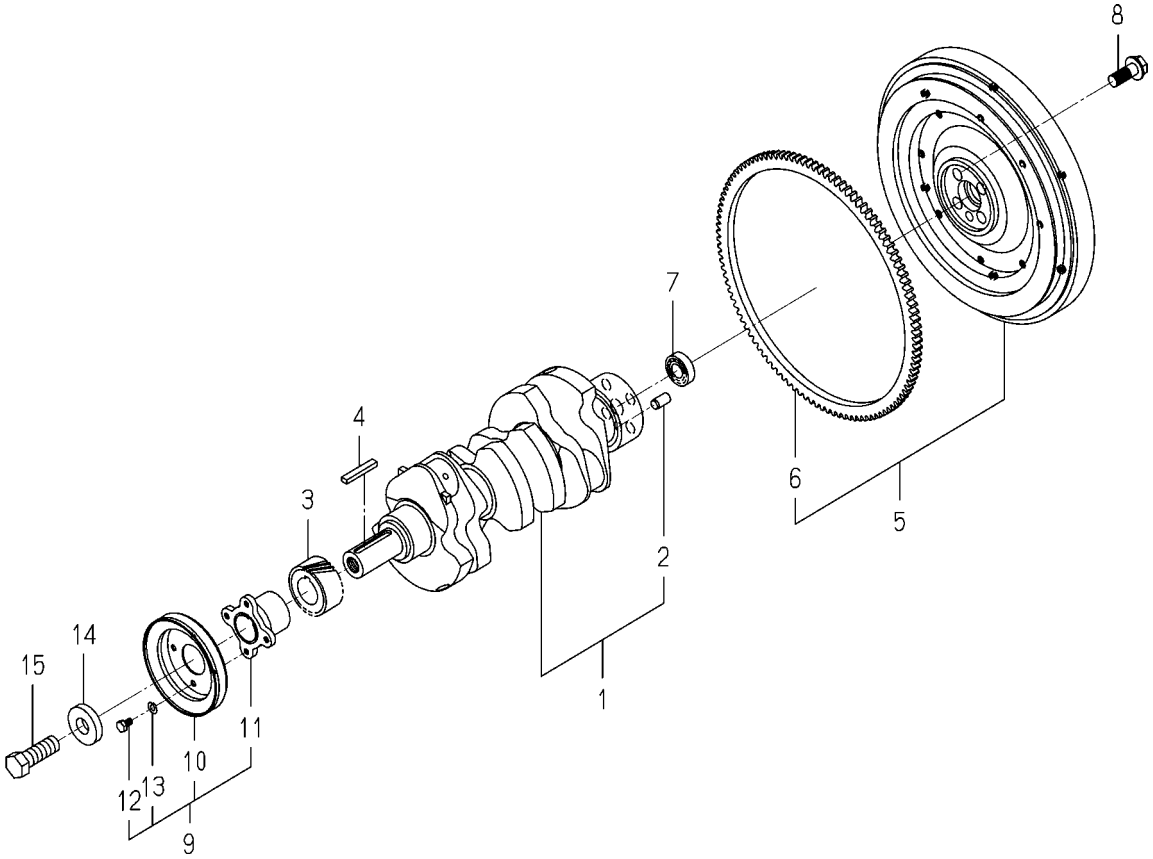

6004-350N-0100

KEY	PART CODE	DESCRIPTION	SPC	TYPE OF MODEL E3112 B15		ITC	COL	GRP	REMARKS
1	6212-310-009-30	CRANKSHAFT ASSY	*	1					
2	V523-101-001-80	PIN	*	1					
3	6212-521-008-00	GEAR/CRANK	*	1					
4	6209-730-006-00	KEY/07X05X43	*	1					
5	6212-330-051-00	FLYWHEEL ASSY	*	1					
6	6212-333-003-00	RINGGEAR	*	1					
7	V600-150-600-20	BEARING,RB/6002SS	*	1					
8	6209-046-015-00	BOLT/FLANGE	*	4					
9	6212-370-011-00	PULLEY ASSY	*	1					
10	6212-371-009-00	PULLEY	*	1					
11	6212-372-002-10	CENTER CRANK PULLEY	*	1					
12	6902-050-610-00	BOLT	*	4					
13	6909-150-506-00	WASHER,SP/M6	*	4					
14	6212-379-001-00	WASHER	*	1					
15	6901-066-645-00	BOLT	*	1					

FIG. 16 OIL PUMP

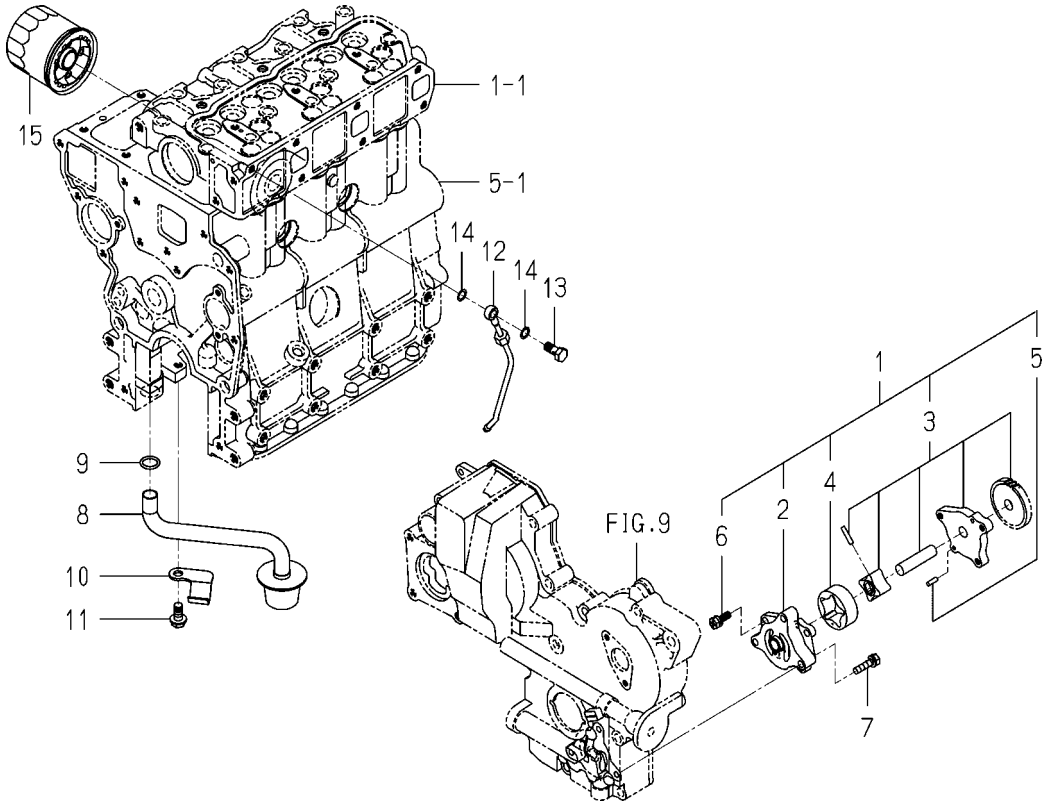

6004-401B-0100

KEY	PART CODE	DESCRIPTION	SPC	TYPE OF MODEL E3112 B15		ITC	COL	GRP	REMARKS
1	6213-100-003-30	OILPUMP ASSY	*	1					
2	6213-111-001-30	BODY/OILPUMP	*	1					
3	6213-120-003-20	GEAR/OILPUMP ASSY	*	1					
4	6213-125-001-00	ROTOR/OUTER	*	1					
5	6213-129-003-00	PIN/STRAIGHT	*	2					
6	6213-119-001-00	BOLT/WS	*	3					
7	6901-910-625-00	BOLT	*	3					
8	6213-140-008-00	STRAINER	*	1					
9	V720-102-401-50	O-RING/P15	*	1					
10	6213-149-002-00	CLAMP,STRAINER	*	1					
11	V231-360-801-60	FLANGEBOLT	*	1					
12	6213-311-006-00	PIPE,OIL	*	1					
13	6909-906-105-10	BOLT,JOINT	*	1					
14	6209-920-002-00	PACKING	*	2					
15	6213-240-002-10	CARTRIDGE/OILFILTER	*	1					

FIG. 17 WATER PUMP

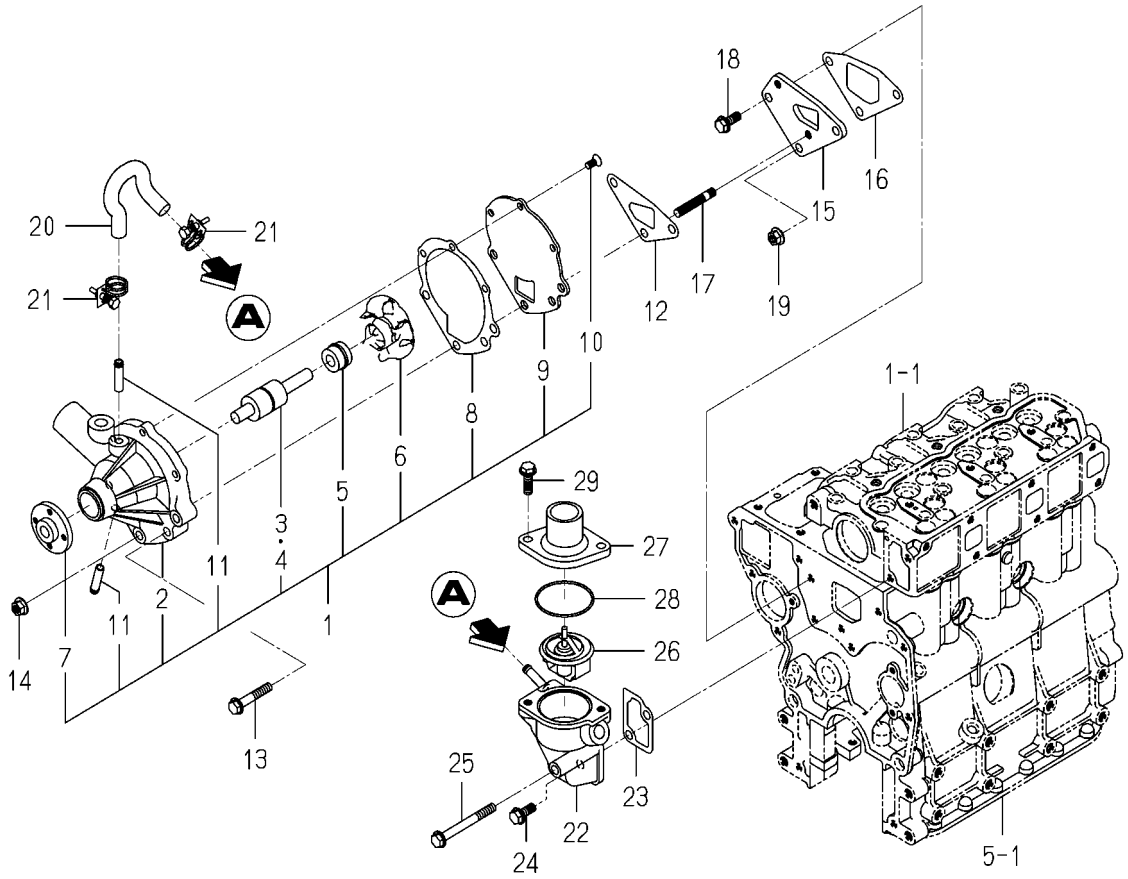

6004-420 -0100

KEY	PART CODE	DESCRIPTION	SPC	TYPE OF MODEL E3112 B15		ITC	COL	GRP	REMARKS
1	6213-610-005-40	WATERPUMP ASSY	*	1					
2	6213-611-003-20	BODY/WATERPUMP	*	1					
3	6213-631-002-00	BEARING/WATER PUMP	*	1					
4	6213-631-005-00	BEARING/WATERPUMP	*	1					
5	6213-622-002-10	SEAL SET/WATER PUMP	*	1					
6	6213-621-003-00	ROTOR/WATERPUMP	*	1					
7	6213-642-002-00	SEAL/WATER PUMPPULLE	*	1					
8	6213-613-002-10	GASKET	*	1					
9	6213-612-004-00	PLATE/WATER PUMP	*	1					
10	6213-619-003-00	SCREW/WATER PUMP	*	3					
11	6213-619-002-00	PIPE/WATER PUMP	*	2					
12	6213-614-003-10	GASKET/WATER PUMP	*	1					
13	V231-360-804-50	FLANGEBOLT	*	1					
14	3817-401-001-00	NUT/M08	*	2					
15	6213-619-001-00	SPACER,PUMP.WATER	*	1					
16	6213-614-004-10	GASKET,SPACER	*	1					
17	6904-110-840-00	STUD/M8X40	*	2					
18	V231-360-802-00	FLANGEBOLT	*	1					
19	3817-401-001-00	NUT/M08	*	1					
20	6213-729-013-10	HOSE/RUBBER	*	1					
21	J061-210-015-00	CLAMP/WIRE/10-15	*	2					
22	6213-716-001-50	HOUSING/THERMOSTAT	*	1					
23	6213-743-002-10	GASKET/HOUSING	*	1					
24	V231-360-802-00	FLANGEBOLT	*	1					
25	V231-360-807-50	FLANGEBOLT	*	1					
26	6513-770-022-10	THERMOSTAT	*	1					
27	6213-711-003-20	PIPE,WATER OUTLET	*	1					
28	V723-102-005-50	O-RING	*	1					
29	V231-360-802-50	FLANGEBOLT	*	2					

FIG. 18 COOLING FAN

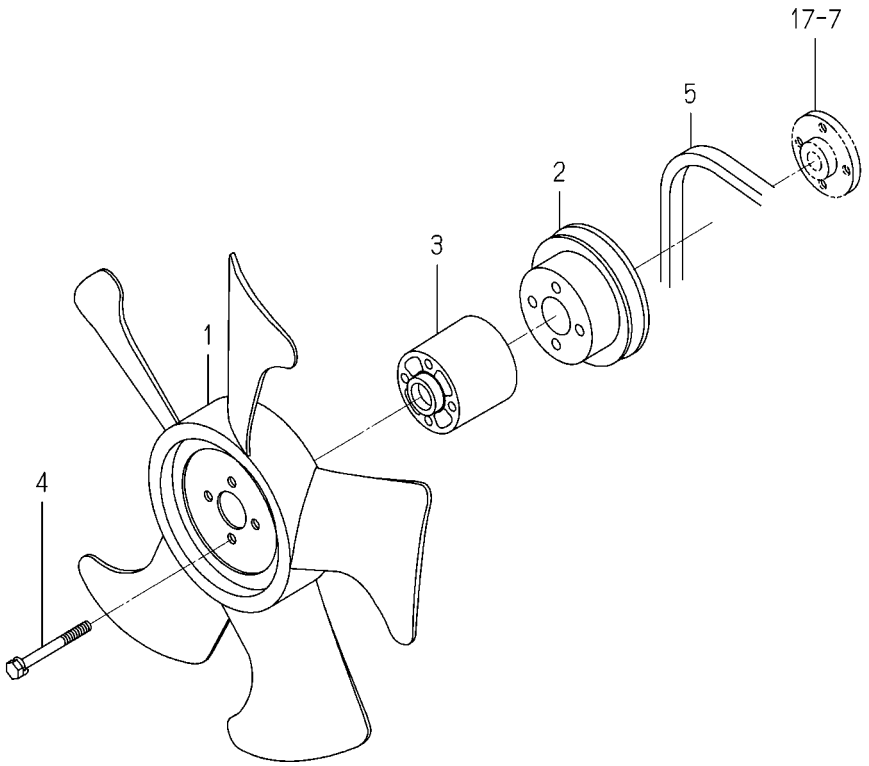

6004-480R-0100

KEY	PART CODE	DESCRIPTION	SPC	TYPE OF MODEL E3112 B15		ITC	COL	GRP	REMARKS
1	6213-660-023-00	FAN/COOLING	*	1					
2	6213-641-002-10	PULLEY,WATER PUMP	*	1					
3	6213-669-008-00	SPACER/FAN/48	*	1					
4	6209-030-044-00	BOLT/WS	*	4					
5	6213-671-012-00	BELT/VHM34.5/FAN	*	1					

FIG. 19 INJECTION NOZZLE

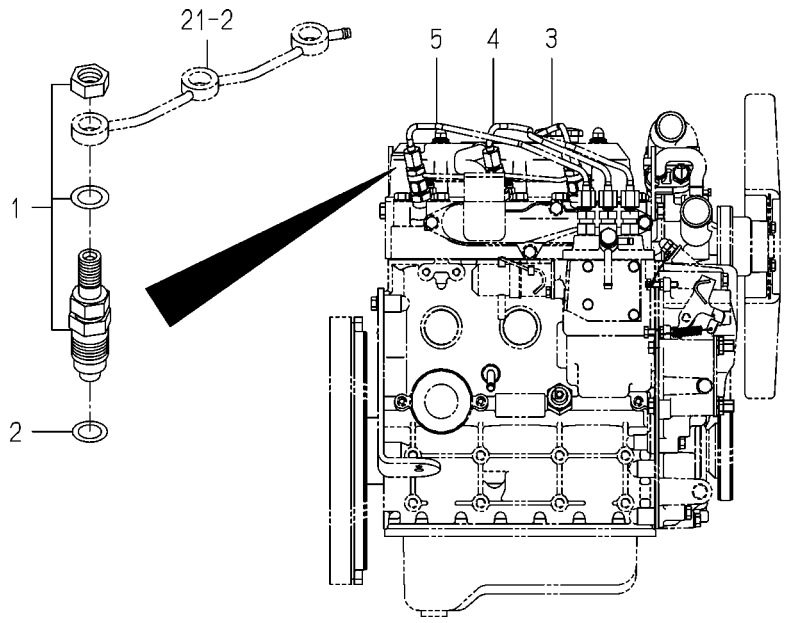

6004-501C-0100

KEY	PART CODE	DESCRIPTION	SPC	TYPE OF MODEL E3112 B15		ITC	COL	GRP	REMARKS
1	6215-300-036-00	INJECTIONNOZZLE ASSY	*	3					FIG 026
2	6215-315-002-00	GASKET,NOZZLE	*	3					
3	6215-411-126-10	PIPE/INJECTION ASSY	*	1					
4	6215-411-127-00	PIPE/INJECTION ASSY	*	1					
5	6215-411-128-00	PIPE/INJECTION ASSY	*	1					

FIG. 20 INJECTION PUMP

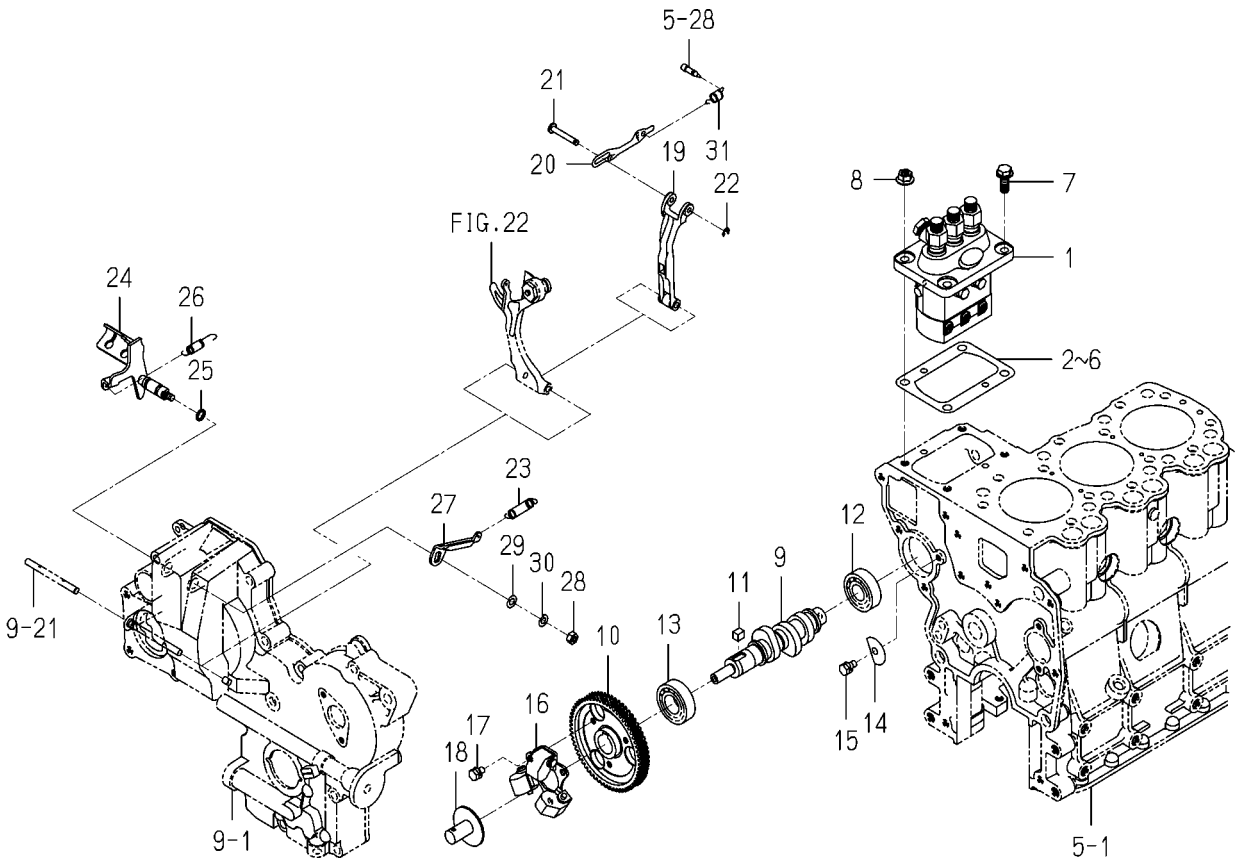

6004-510S-0100

KEY	PART CODE	DESCRIPTION	SPC	TYPE OF MODEL E3112 B15		ITC	COL	GRP	REMARKS
1	6215-600-103-10	INJECTIONPUMP ASSY	*	1					FIG 027
2	6219-752-006-00	SHIM/INJECTION P/0.3	*	1					
3	6219-752-007-00	SHIM/INJECTION P/0.1	*	1					
4	6219-752-008-00	SHIM/INJECTION P/0.2	*	1					
5	6219-752-009-00	SHIM/INJECTION P/0.4	*	1					
6	6219-752-010-00	SHIM/INJECTION P/0.5	*	1					
7	V231-360-802-00	FLANGEBOLT	*	2					
8	3817-401-001-00	NUT/M08	*	2					
9	6215-621-016-20	CAMSHAFT/INJECTION P	*	1					
10	6212-524-002-20	GEAR/INJECTIONPUMP	*	1					
11	6209-730-005-00	KEY/07X05X09	*	1					
12	V600-110-620-30	BEARING,RB/6203	*	1					
13	V600-110-600-40	BEARING,RB/6004	*	1					
14	6212-535-002-00	PLATE,THRUST INJPUMP	*	1					
15	6901-910-612-00	BOLT,SEMS/M6X12	*	1					
16	6215-520-001-00	FLYWEIGHT	*	1					
17	6209-030-043-00	BOLT/M6X10	*	3					
18	6215-526-004-00	THRUSTPIECE	*	1					
19	6215-541-001-10	ARM/FLOATING COMP	*	1					
20	6215-543-002-10	RINK/CONTROL	*	1					
21	6215-542-006-00	PIN,CONTROL	*	1					
22	V710-140-004-00	RING,SNAP/ 4 E	*	1					
23	6215-531-008-00	SPRING/GOVERNOR	*	1					
24	6215-541-024-30	LEVER/CONTROL COMP	*	1					
25	V720-101-900-80	O-RING/P 8	*	1					
26	6209-580-002-10	SPRING,RETURN	*	1					
27	6215-549-007-10	ARM/CONTROL	*	1					
28	6909-110-406-00	NUT	*	1					
29	V411-260-006-00	WASHER / M6	*	1					
30	V401-160-006-00	WASHER,SP/M 6	*	1					

FIG. 20 INJECTION PUMP

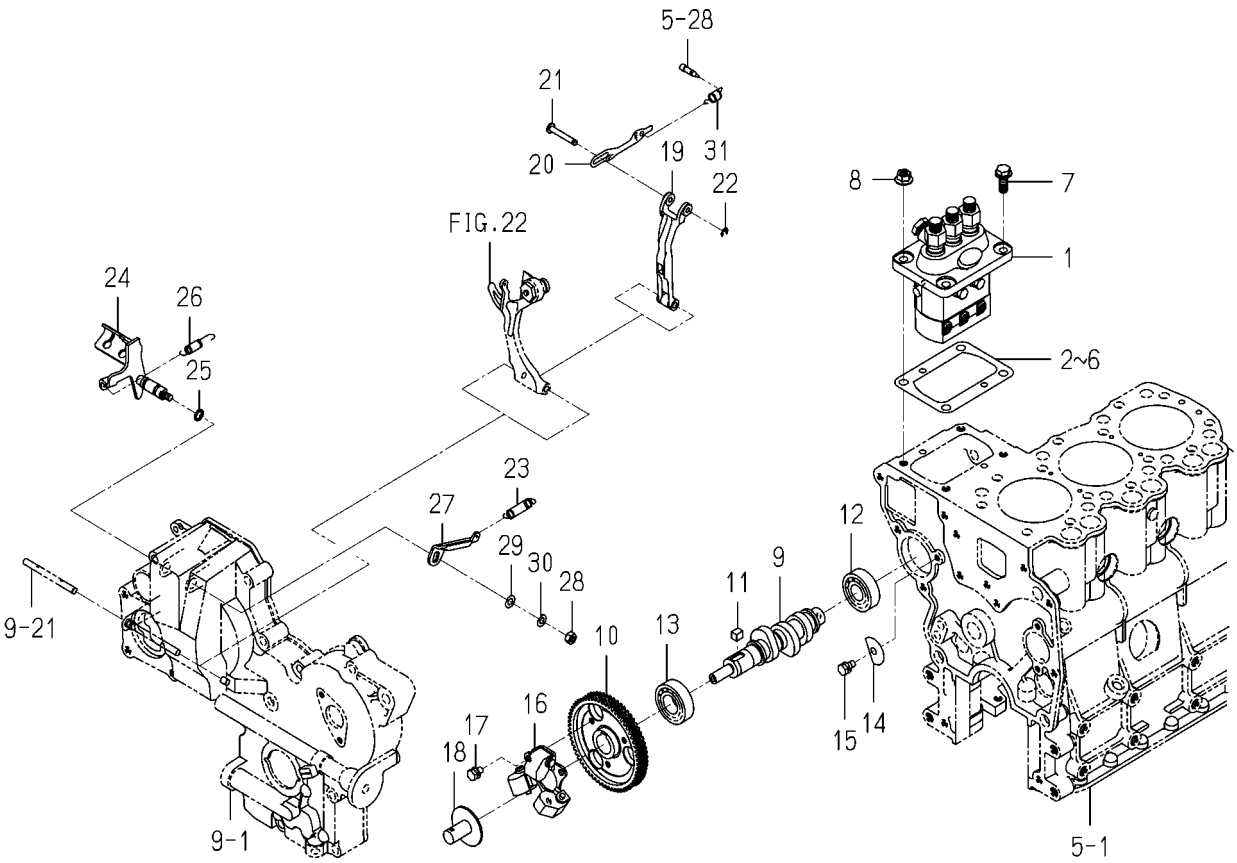

6004-510S-0100

KEY	PART CODE	DESCRIPTION	SPC	TYPE OF MODEL E3112 B15		ITC	COL	GRP	REMARKS
31	6215-549-012-00	SPRING,STARTING	*	1					

FIG. 21 FUEL PIPE

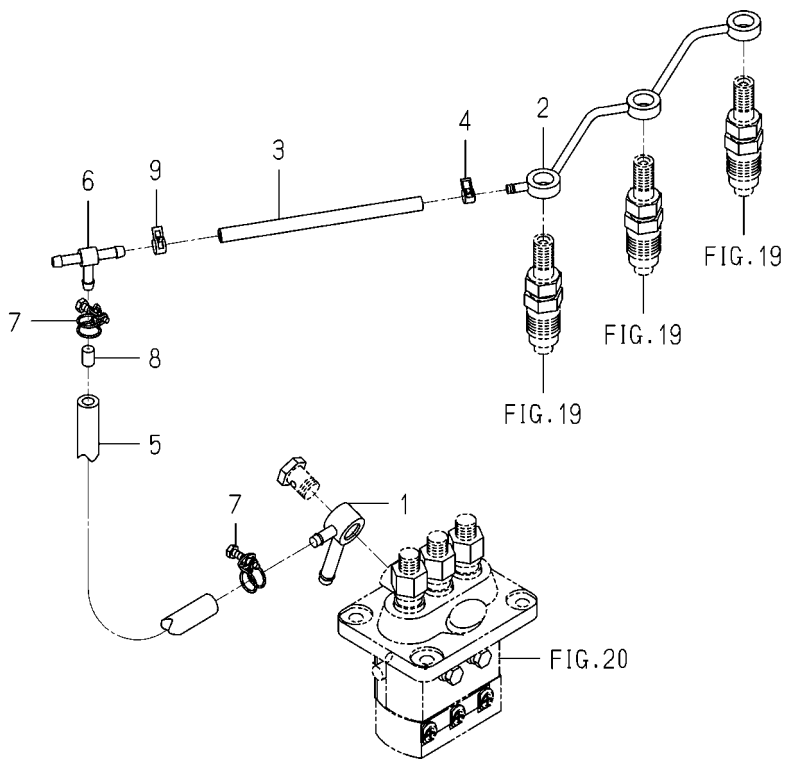

6004-550I-0100

KEY	PART CODE	DESCRIPTION	SPC	TYPE OF MODEL E3112 B15		ITC	COL	GRP	REMARKS
1	6215-412-002-10	CONNECTOR	*	1					
2	6215-411-125-00	PIPE/FUEL	*	1					
3	6209-360-005-00	HOSE,RUBBER	*	1					
4	J062-076-082-00	CLIP/HOSE/7.6-8.2	*	1					
5	6209-360-021-00	HOSE/RUBBER	*	1					
6	3632-360-036-00	JOINTT-TYPE 2	*	1					
7	6209-704-009-00	CLAMP/WIRE/10-12	*	2					
8	6215-419-001-00	TUBE,ORIFICE	*	1					
9	J062-087-093-00	CLIP/HOSE/8.7-9.3	*	1					

FIG. 22 ADAPTER

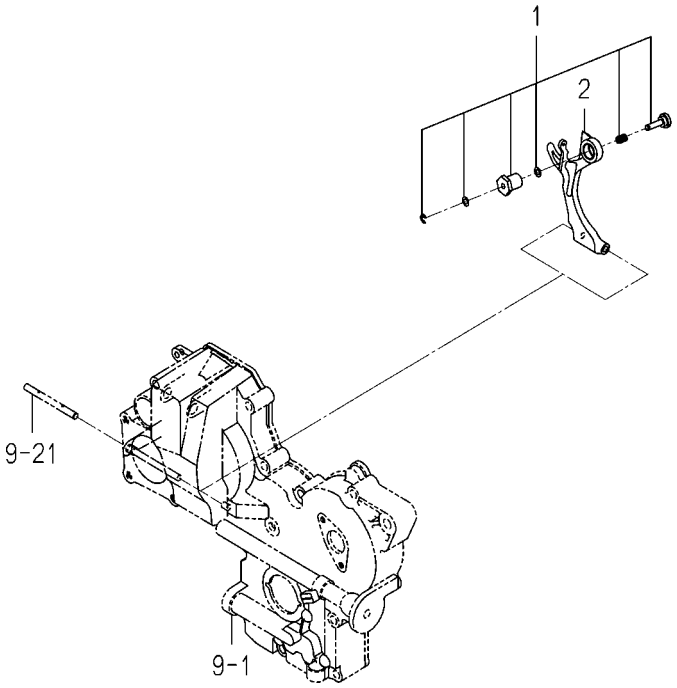

6005-560 -0100

KEY	PART CODE	DESCRIPTION	SPC	TYPE OF MODEL E3112 B15		ITC	COL	GRP	REMARKS
1	6215-548-029-00	ADAPTER/255X065 ASSY	*	1					
2	6215-541-016-30	ARM/TENSION	*	1					

FIG. 23 ELECTRIC (1)

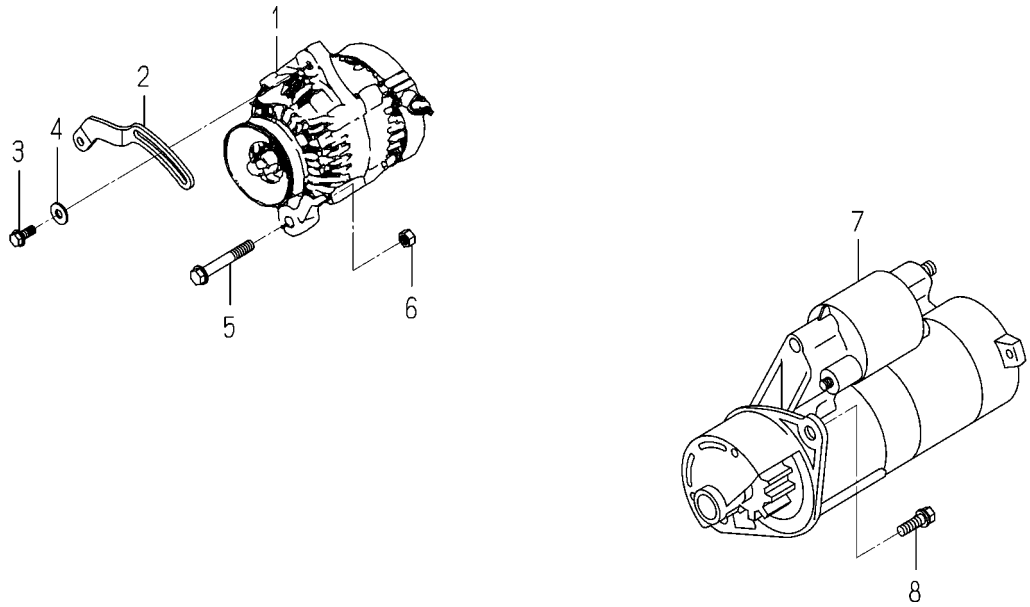

6004-801K-0100,6004-801K-0200

KEY	PART CODE	DESCRIPTION	SPC	TYPE OF MODEL E3112 B15		ITC	COL	GRP	REMARKS
1	6281-200-005-00	GENERATOR ASSY	*	1					FIG 029
2	6213-674-006-20	PLATE/ADJUST	*	1					
3	V231-360-802-00	FLANGEBOLT	*	1					
4	1373-121-001-00	WASHER/9X22X2	*	1					
5	V233-361-007-00	FLANGEBOLT	*	1					
6	6909-110-410-00	NUT/M10	*	1					
7	6281-100-014-00	STARTER ASSY	*	1					FIG 028
8	6209-030-085-00	BOLT/WS	*	2					

FIG. 24 ELECTRIC (2)

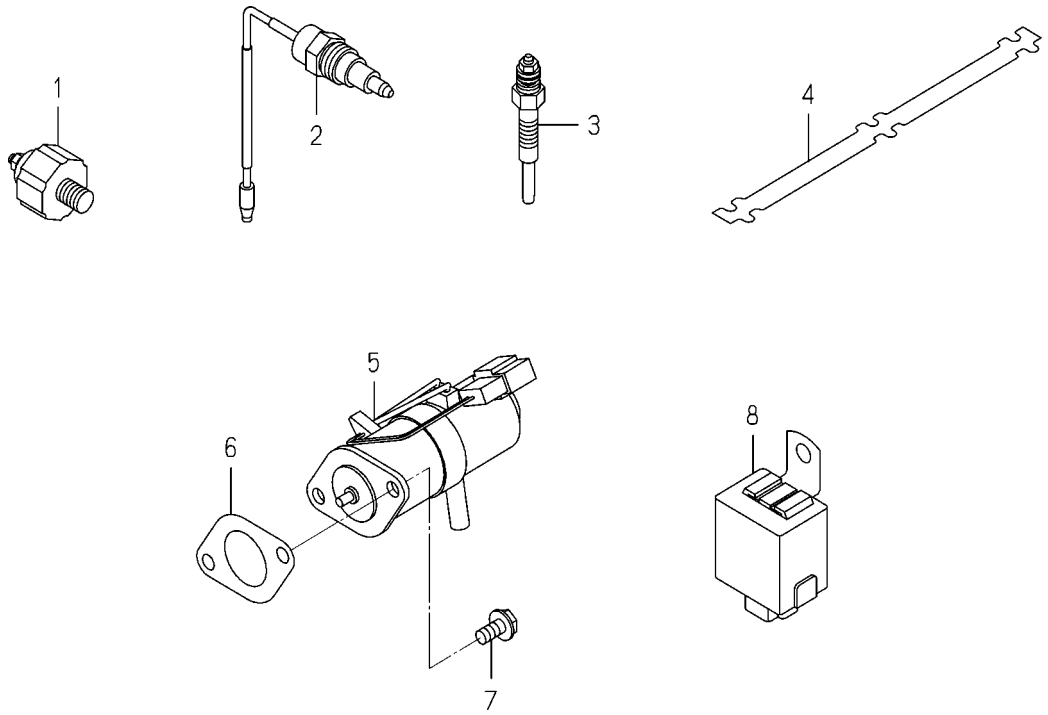

6004-820J-0100,6004-820J-0200

KEY	PART CODE	DESCRIPTION	SPC	TYPE OF MODEL E3112 B15		ITC	COL	GRP	REMARKS
1	6281-971-003-00	SWITCH/OILPRESSURE	*	1					
2	6282-450-002-00	SWITCH/OVERHEAT	*	1					
3	6281-410-010-00	GLOWPLUG	*	3					
4	6219-732-016-00	CONNECTOR/GLOWPLUG	*	1					
5	6281-910-003-10	SOLENOID	*	1					
6	6209-630-002-10	GASKET	*	1					
7	V230-360-601-20	FLANGEBOLT	*	2					
8	6281-920-001-00	RELAY,SOLENOID	*	1					

FIG. 25 REPAIR PARTS (OPTION)

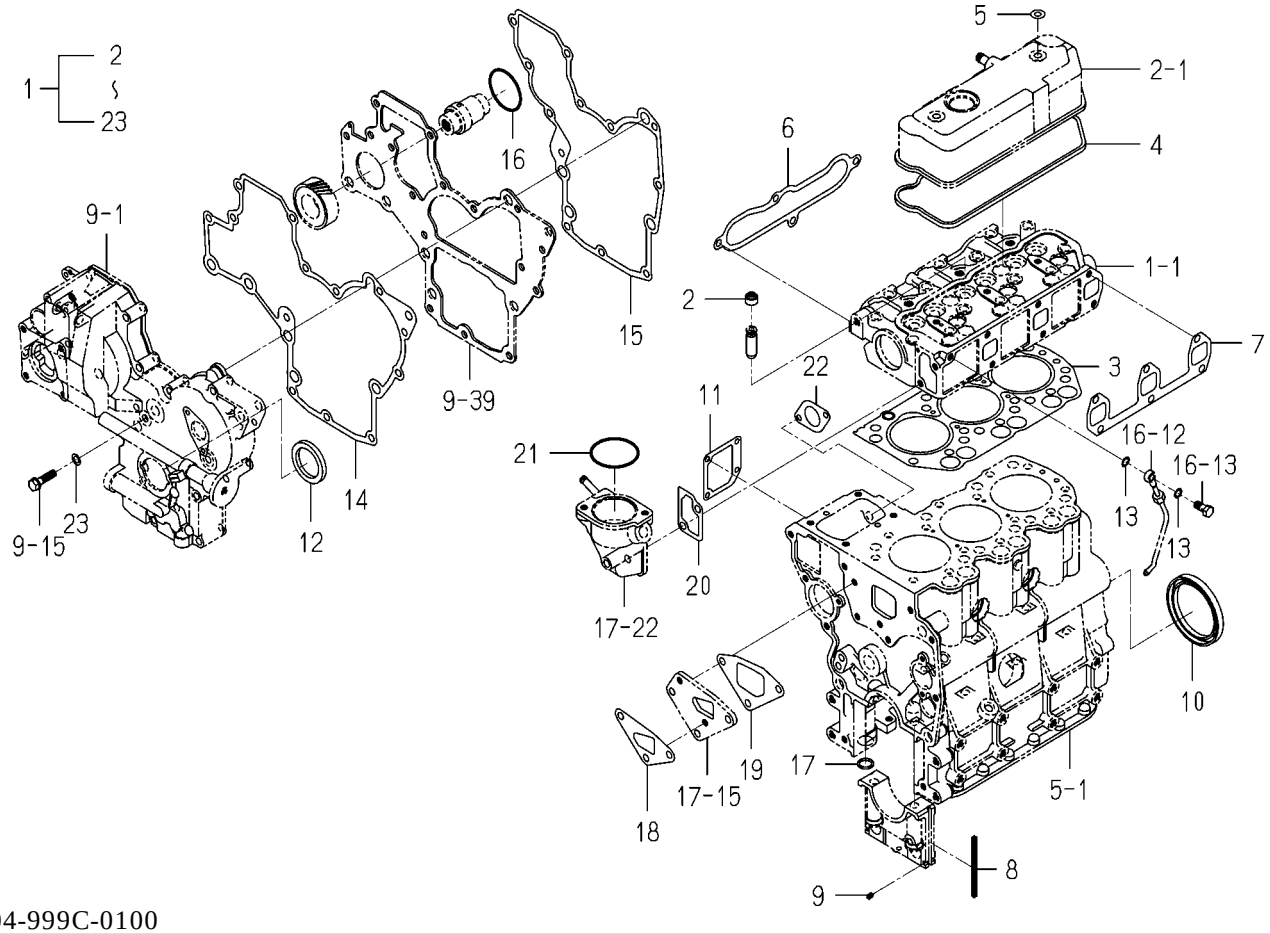

6004-999C-0100

KEY	PART CODE	DESCRIPTION	SPC	TYPE OF MODEL E3112 B15		ITC	COL	GRP	REMARKS
1	6287-810-015-20	REPAIR/ENGINE SET	T	1					
2	6212-569-002-00	SEAL,OIL	T	6					
3	6211-141-029-20	GASKET/CYLINDERHEAD	T	1					
4	6211-173-003-00	SEAL,CYL.HEAD COVER	T	1					
5	6209-572-003-00	GASKET	T	2					
6	6214-115-001-20	GASKET,INLET MANIFOL	T	1					
7	6214-145-001-30	GASKET,EXH.MANIFOLD	T	1					
8	6211-258-001-00	SEAL,BEARING CAP	T	4					
9	6211-258-002-00	SEAL,BEARING CAP/7	T	2					
10	6209-625-012-00	OILSEAL	T	1					
11	6211-292-001-20	GASKET/COVER	T	1					
12	6209-625-002-00	SEAL,OIL	T	1					
13	6209-920-002-00	PACKING	T	2					
14	6211-312-003-20	GASKET/GEARCASE	T	1					
15	6211-312-004-20	GASKET/PLATE	T	1					
16	V723-102-005-00	O-RING 1A S50	T	1					
17	V720-102-401-50	O-RING/P15	T	1					
18	6213-614-003-10	GASKET/WATER PUMP	T	1					
19	6213-614-004-10	GASKET,SPACER	T	1					
20	6213-743-002-10	GASKET/HOUSING	T	1					
21	V723-102-005-50	O-RING	T	1					
22	6209-630-002-10	GASKET	T	1					
23	6209-500-003-00	WASHER/08X14X01	T	2					

FIG. 26 COMPONENT PARTS FOR 6215-300-036-00 ON Fig.19

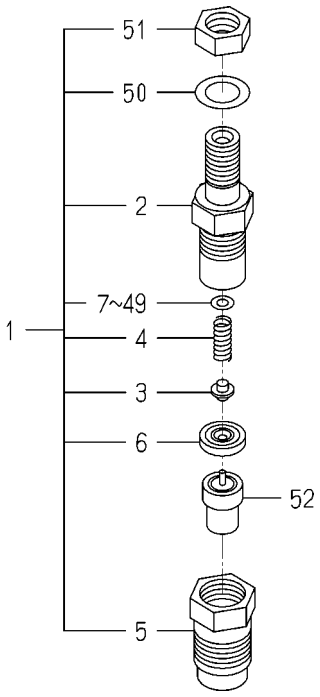

6215-300-036-0A

KEY	PART CODE	DESCRIPTION	SPC	TYPE OF MODEL E3112 B15		ITC	COL	GRP	REMARKS
1	6215-330-024-00	HOLDER/NOZZLE ASSY	*	3					
2	6215-331-008-00	BODY/NOZZLE HOLDER	*	3					
3	6215-342-001-00	PIN,NOZZLE HOLDER	*	3					
4	6215-343-001-00	WASHER	*	3					
5	6215-332-013-00	NUT/NOZZLERETAINING	*	3					
6	6215-339-001-00	PIECE,DISTANCE	*	3					
7	6215-345-001-00	WASHER/0.9	*	3					
8	6215-345-002-00	WASHER/0.925	*	3					
9	6215-345-003-00	WASHER/0.95	*	3					
10	6215-345-004-00	WASHER/0.975	*	3					
11	6215-345-005-00	WASHER/1.0	*	3					
12	6215-345-006-00	WASHER/1.025	*	3					
13	6215-345-007-00	WASHER/1.05	*	3					
14	6215-345-008-00	WASHER/1.075	*	3					
15	6215-345-009-00	WASHER/1.1	*	3					
16	6215-345-010-00	WASHER/1.125	*	3					
17	6215-345-011-00	WASHER/1.15	*	3					
18	6215-345-012-00	WASHER/1.175	*	3					
19	6215-345-013-00	WASHER/1.2	*	3					
20	6215-345-014-00	WASHER/1.225	*	3					
21	6215-345-015-00	WASHER/1.25	*	3					
22	6215-345-016-00	WASHER/1.275	*	3					
23	6215-345-017-00	WASHER/1.3	*	3					
24	6215-345-018-00	WASHER/1.325	*	3					
25	6215-345-019-00	WASHER/1.35	*	3					
26	6215-345-020-00	WASHER/1.375	*	3					
27	6215-345-021-00	WASHER/1.4	*	3					
28	6215-345-022-00	WASHER/1.425	*	3					
29	6215-345-023-00	WASHER/1.45	*	3					
30	6215-345-024-00	WASHER/1.475	*	3					

FIG. 26 COMPONENT PARTS FOR 6215-300-036-00 ON Fig.19

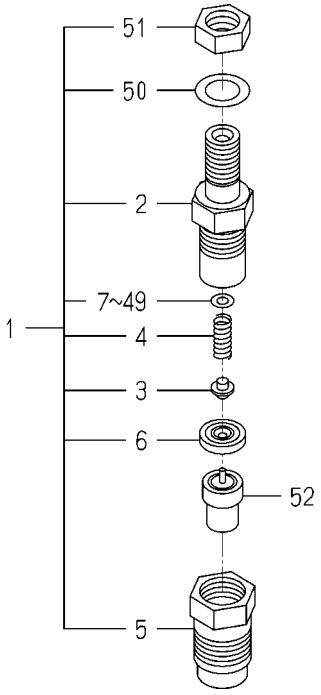

6215-300-036-0A

KEY	PART CODE	DESCRIPTION	SPC	TYPE OF MODEL E3112 B15		ITC	COL	GRP	REMARKS
31	6215-345-025-00	WASHER/1.5	*	3					
32	6215-345-026-00	WASHER/1.525	*	3					
33	6215-345-027-00	WASHER/1.55	*	3					
34	6215-345-028-00	WASHER/1.575	*	3					
35	6215-345-029-00	WASHER/1.6	*	3					
36	6215-345-030-00	WASHER/1.625	*	3					
37	6215-345-031-00	WASHER/1.65	*	3					
38	6215-345-032-00	WASHER/1.675	*	3					
39	6215-345-033-00	WASHER/1.7	*	3					
40	6215-345-034-00	WASHER/1.725	*	3					
41	6215-345-035-00	WASHER/1.75	*	3					
42	6215-345-036-00	WASHER/1.775	*	3					
43	6215-345-037-00	WASHER/1.8	*	3					
44	6215-345-038-00	WASHER/1.825	*	3					
45	6215-345-039-00	WASHER/1.85	*	3					
46	6215-345-040-00	WASHER/1.875	*	3					
47	6215-345-041-00	WASHER/1.9	*	3					
48	6215-345-042-00	WASHER/1.925	*	3					
49	6215-345-043-00	WASHER/1.95	*	3					
50	6215-359-001-00	WASHER	*	3					
51	6215-359-002-00	NUT	*	3					
52	6215-311-027-00	NOZZLE ASSY	*	3					

FIG. 27 COMPONENT PARTS FOR 6215-600-103-10 ON Fig.20

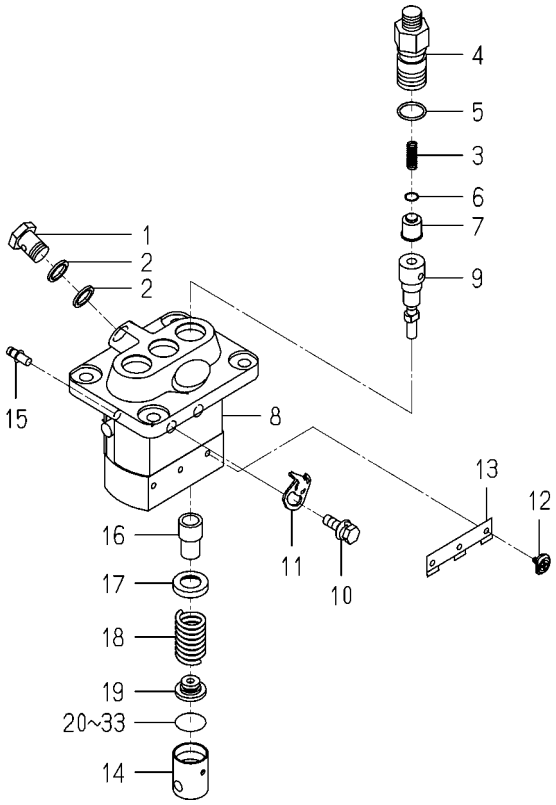

6215-600-103-1C

KEY	PART CODE	DESCRIPTION	SPC	TYPE OF MODEL E3112 B15		ITC	COL	GRP	REMARKS
1	6215-619-009-00	SCREW/HOLLOW	*	1					
2	6215-619-010-00	WASHER/AIR BLEEDER	*	2					
3	6215-643-006-00	SPRING/DELIVERYVALVE	*	3					
4	6215-644-007-00	HOLDER/DELIVERYVALVE	*	3					
5	6215-649-001-00	ORING	*	3					
6	6215-649-002-00	GASKET/DELIVERYVALVE	*	3					
7	6215-641-006-00	VALVE ASSY	*	3					
8	6215-611-001-00	HOUSING ASSY	*	1					
9	6215-631-019-00	ELEMENT ASSY	*	3					
10	6215-619-022-00	BOLT/WASHERHEAD	*	2					
11	6215-612-001-00	PLATE/ADJUSTING	*	2					
12	6215-629-001-00	PIN/INJECTIONPUMP	*	3					
13	6215-629-002-00	PLATE	*	1					
14	6215-622-001-00	TAPPET/INJECTIO ASSY	*	3					
15	6215-637-001-00	RACK/CONTROL ASSY	*	1					
16	6215-635-001-00	SLEEVE/PLUNGER	*	3					
17	6215-639-004-00	SEAT/SPRING/UPPER	*	3					
18	6215-634-001-00	SPRING/PUMPPLUNGER	*	3					
19	6215-639-005-00	SEAT/SPRING/LOWER	*	3					
20	6215-629-003-00	PLATE/TAPPET/AD 0.6	*	1					
21	6215-629-004-00	PLATE/TAPPET/AD 0.7	*	1					
22	6215-629-005-00	PLATE/TAPPET/AD 0.8	*	1					
23	6215-629-006-00	PLATE/TAPPET/AD 0.9	*	1					
24	6215-629-007-00	PLATE/TAPPET/AD 1.0	*	1					
25	6215-629-008-00	PLATE/TAPPET/AD 0.2	*	1					
26	6215-629-009-00	PLATE/TAPPET/AD 0.3	*	1					
27	6215-629-010-00	PLATE/TAPPET/AD 0.4	*	1					
28	6215-629-011-00	PLATE/TAPPET/AD 0.5	*	3					
29	6215-629-012-00	PLATE/TAPPET/AD 0.25	*	1					
30	6215-629-013-00	PLATE/TAPPET/AD 0.35	*	1					

FIG. 27 COMPONENT PARTS FOR 6215-600-103-10 ON Fig.20

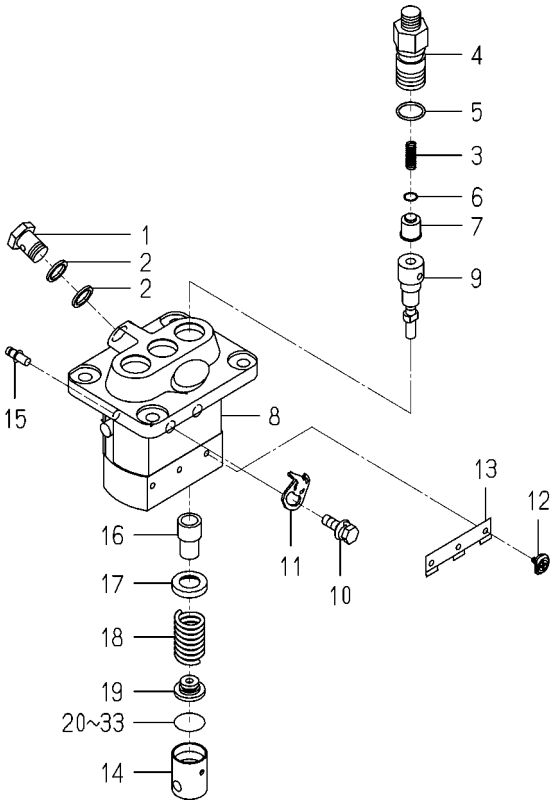

6215-600-103-1C

KEY	PART CODE	DESCRIPTION	SPC	TYPE OF MODEL E3112 B15		ITC	COL	GRP	REMARKS
31	6215-629-014-00	PLATE/TAPPET/AD 0.45	*	1					
32	6215-629-015-00	PLATE/TAPPET/AD 0.55	*	1					
33	6215-629-016-00	PLATE/TAPPET/AD 0.65	*	1					

FIG. 28 COMPONENT PARTS FOR 6281-100-014-00 ON Fig.23

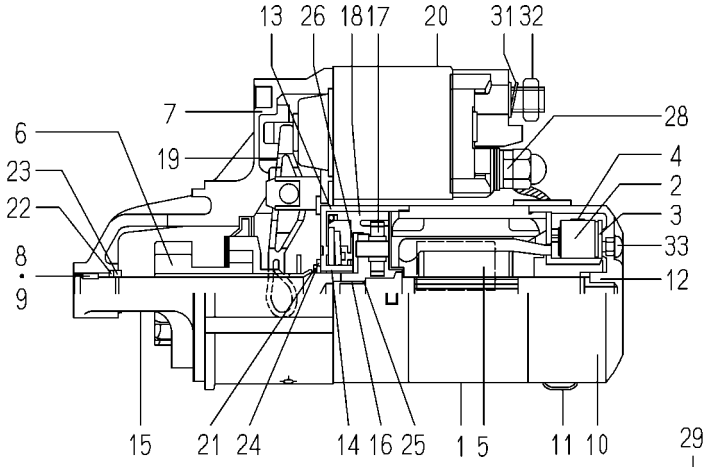

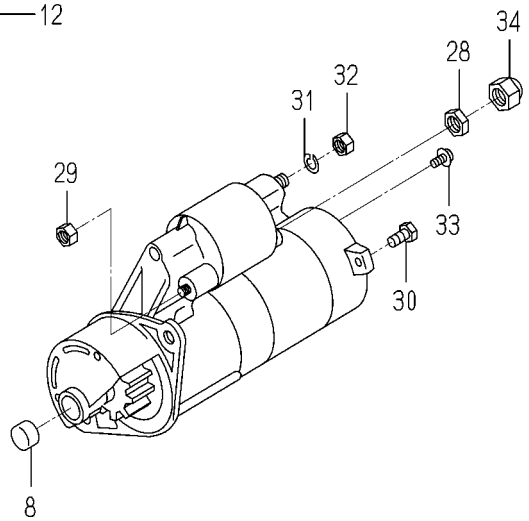

6281-100-014-0A

KEY	PART CODE	DESCRIPTION	SPC	TYPE OF MODEL E3112 B15		ITC	COL	GRP	REMARKS
1	6281-111-009-00	YOKE/STARTER ASSY	*	1					
2	6281-119-009-00	BRUSH/STARTER	*	2					
3	6281-118-007-00	HOLDER/STARTER ASSY	*	1					
4	6281-117-003-00	SPRING/STARTERBRUSH	*	4					
5	6281-121-010-00	ARMATURE/STARTE ASSY	*	1					
6	6281-124-011-00	CLUTCH/STARTER ASSY	*	1					
7	6281-129-064-00	HOUSING/STARTER ASSY	*	1					
8	6281-129-080-00	BEARING/NEEDLE	*	1					
9	6281-129-058-00	BEARING/NEEDLE	*	1					
10	6281-115-017-00	FRAME/COMMUTATOR END	*	1					
11	6281-115-018-00	COVER	*	1					
12	6281-129-065-00	BEARING/OILLESS	*	1					
13	6281-129-066-00	BEARING/WITH SHOCKAB	*	1					
14	6281-129-067-00	BEARING/OILLESS	*	1					
15	6281-129-068-00	SHAFT/STARTER PLANET	*	1					
16	6281-129-069-00	BEARING/OILLESS	*	1					
17	6281-129-070-00	GEAR/STARTER PLANETA	*	3					
18	6281-129-071-00	GEAR/STARTERINTERNAL	*	1					
19	6281-127-003-00	LEVER/PINIONDRIVE	*	1					
20	6281-151-014-00	SWITCH/MAGNETIC ASSY	*	1					
21	6281-129-072-00	RING/SNAP	*	1					
22	6281-129-073-00	RING/SNAP	*	1					
23	6281-129-074-00	NUT/PINIONSTOP	*	1					
24	6281-129-075-00	WASHER/SK	*	1					
25	6281-129-076-00	WASHER/SK	*	1					
26	6281-129-077-00	WASHER/SK	*	1					
27	6281-129-078-00	PLATE	*	1					
28	6281-129-030-00	NUT	*	1					
29	6281-129-029-00	NUT	*	2					
30	6281-129-043-00	BOLT/THROUGH	*	2					

FIG. 28 COMPONENT PARTS FOR 6281-100-014-00 ON Fig.23

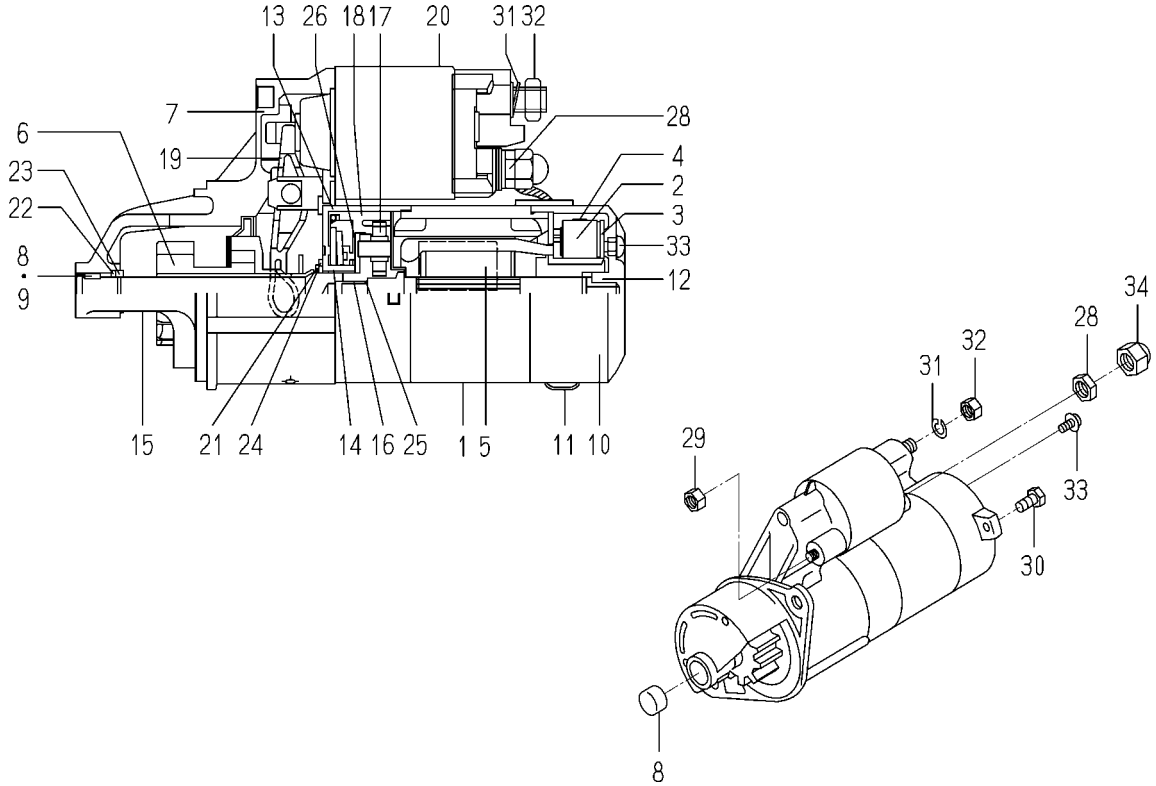

6281-100-014-0A

KEY	PART CODE	DESCRIPTION	SPC	TYPE OF MODEL E3112 B15		ITC	COL	GRP	REMARKS
31	6909-150-508-00	WASHER	*	1					
32	6909-110-408-00	NUT/M8	*	1					
33	6281-129-062-00	SCREW	*	2					
34	6281-129-079-00	NUT	*	1					

FIG. 29 COMPONENT PARTS FOR 6281-200-005-00 ON Fig.23

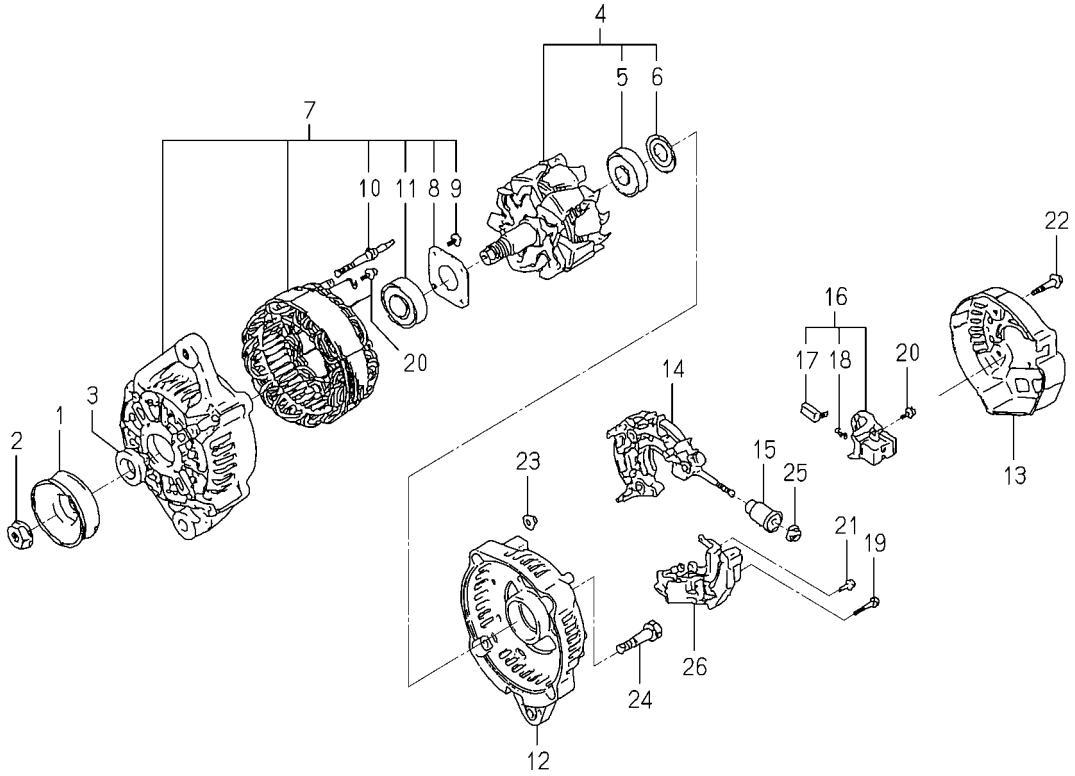

6281-200-005-0B

KEY	PART CODE	DESCRIPTION	SPC	TYPE OF MODEL E3112 B15		ITC	COL	GRP	REMARKS
1	6281-222-004-00	PULLEY	*	1					
2	6281-229-002-00	NUT	*	1					
3	6281-229-003-00	COLLOR	*	1					
4	6281-221-007-00	ROTOR ASSY	*	1					
5	6281-229-004-00	COVER,BEARING	*	1					
6	6281-229-032-00	BEARING/BALL	*	1					
7	6281-213-018-00	FRAME/DRIVEEND ASSY	*	1					
8	6281-229-006-00	PLATE	*	1					
9	6281-229-007-00	BOLT	*	4					
10	6281-229-008-00	BOLT	*	2					
11	6281-229-033-00	BEARING/BALL	*	1					
12	6281-214-003-00	FRAME	*	1					
13	6281-214-004-00	COVER	*	1					
14	6281-229-029-00	HOLDER ASSY	*	1					
15	6281-229-011-00	BUSH	*	1					
16	6281-217-002-00	HOLDER/BRUSH ASSY	*	1					
17	6281-215-001-00	BRUSH	*	2					
18	6281-216-001-00	SPRING	*	2					
19	6281-229-012-00	BOLT	*	2					
20	6281-229-013-00	BOLT	*	6					
21	6281-229-014-00	BOLT	*	1					
22	6281-229-015-00	BOLT	*	3					
23	6281-229-016-00	NUT	*	2					
24	6281-229-017-00	BOLT	*	2					
25	6281-229-018-00	NUT	*	1					
26	6281-271-002-00	REGULATOR ASSY	*	1					

E N G I N E

E3112B16···TM3240

E
N
G
I
N
E

6004-097-360-00

FIG. 1 CYLINDER HEAD

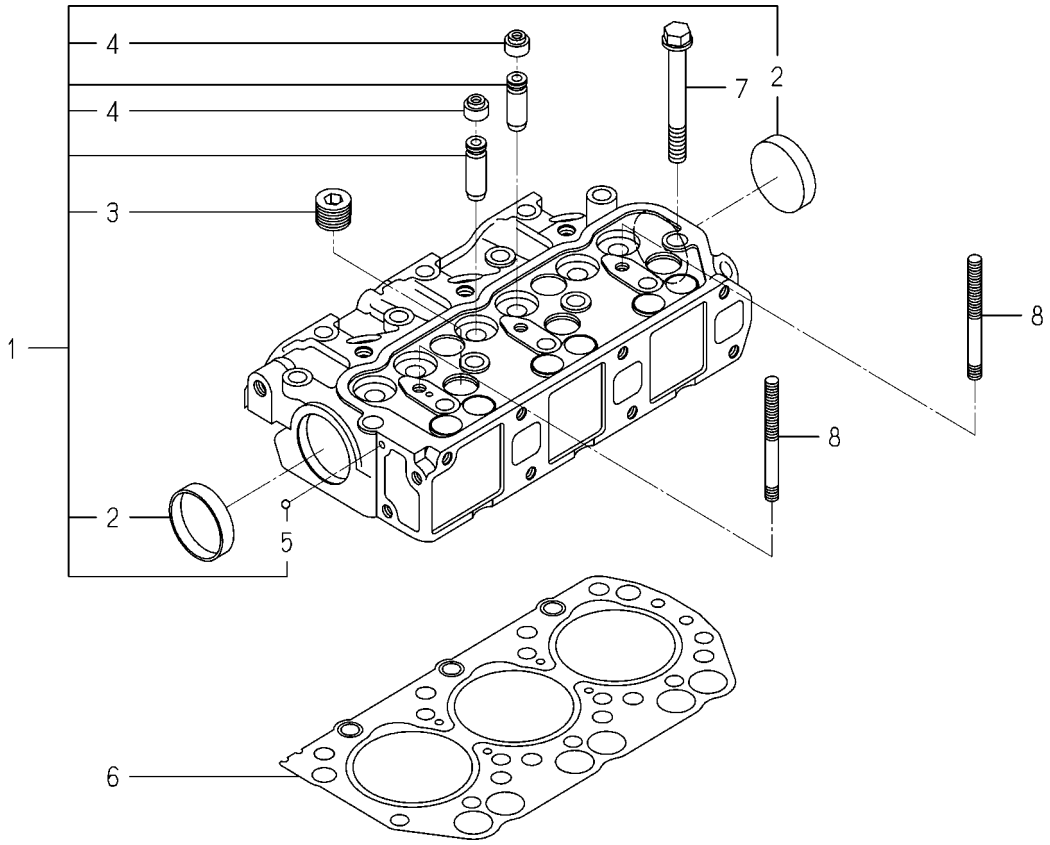

6004-101I-0100,6004-101I-0200

KEY	PART CODE	DESCRIPTION	SPC	TYPE OF MODEL E3112 B16		ITC	COL	GRP	REMARKS
1	6211-110-057-30	CYLINDERHEAD ASSY	*	1					
2	6911-129-006-00	CAP,SEALING	*	2					
3	6209-605-004-10	PLUG/PT1/2	*	5					
4	6212-569-002-00	SEAL,OIL	*	6					
5	V682-200-000-60	BALL	*	1					
6	6211-141-029-20	GASKET/CYLINDERHEAD	*	1					
7	6209-000-003-00	BOLT/M10X1.25X82	*	14					
8	6209-300-014-00	STUD	*	2					

FIG. 2 CYLINDER HEAD COVER

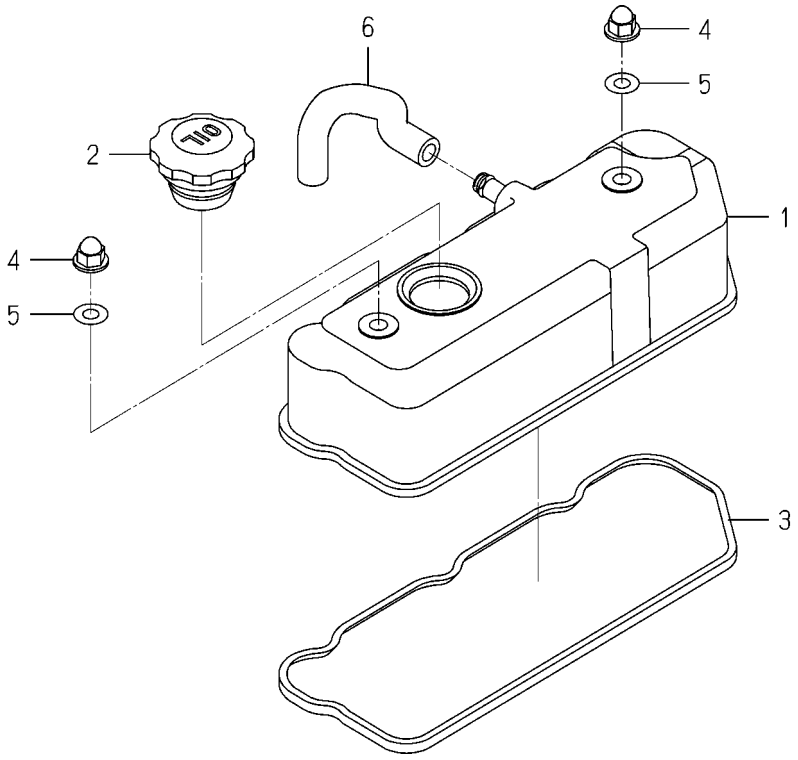

6003-110 -0100

KEY	PART CODE	DESCRIPTION	SPC	TYPE OF MODEL E3112 B16		ITC	COL	GRP	REMARKS
1	6211-170-004-20	COVER/CYLINDER HEAD	*	1					
2	6211-751-001-10	CAP,OIL FILLER	*	1					
3	6211-173-003-00	SEAL,CYL.HEAD COVER	*	1					
4	6209-490-002-10	NUT/CAP	*	2					
5	6209-572-003-00	GASKET	*	2					
6	6209-360-028-10	HOSE/RABBER	*	1					

FIG. 3 INLET MANIFOLD

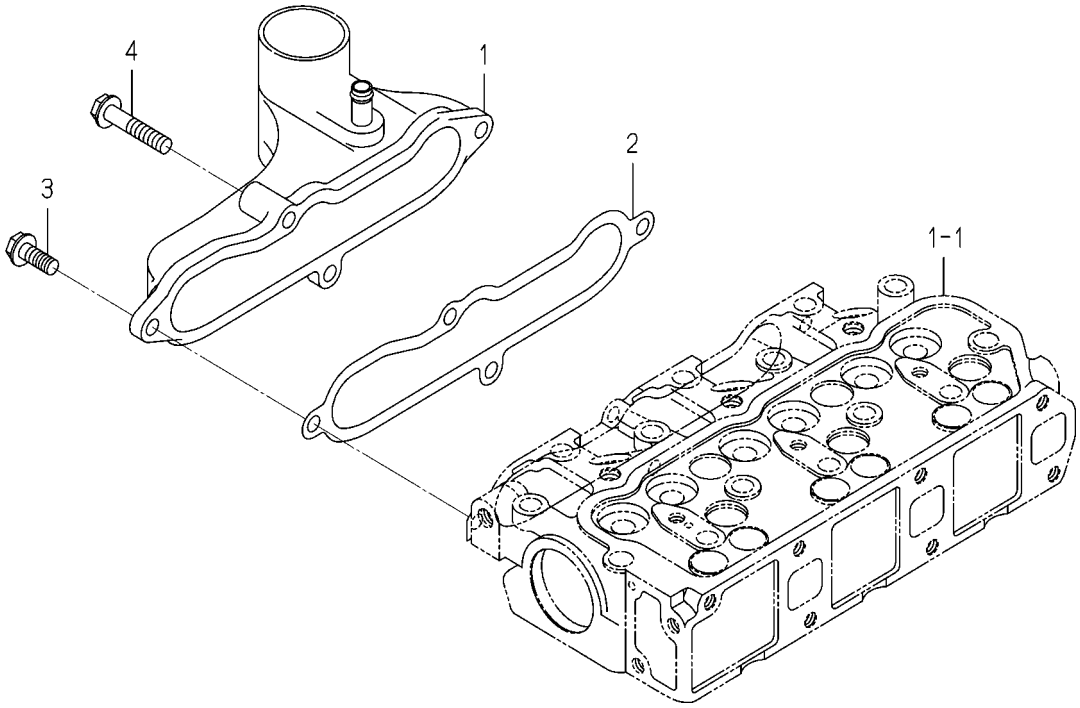

6003-120B-0100

KEY	PART CODE	DESCRIPTION	SPC	TYPE OF MODEL E3112 B16		ITC	COL	GRP	REMARKS
1	6214-111-011-20	MANIFOLD(INLET) ASSY	*	1					
2	6214-115-001-20	GASKET,INLET MANIFOL	*	1					
3	V231-360-802-00	FLANGEBOLT	*	3					
4	V231-360-804-00	FLANGEBOLT	*	1					

FIG. 4 EXHAUST MANIFOLD

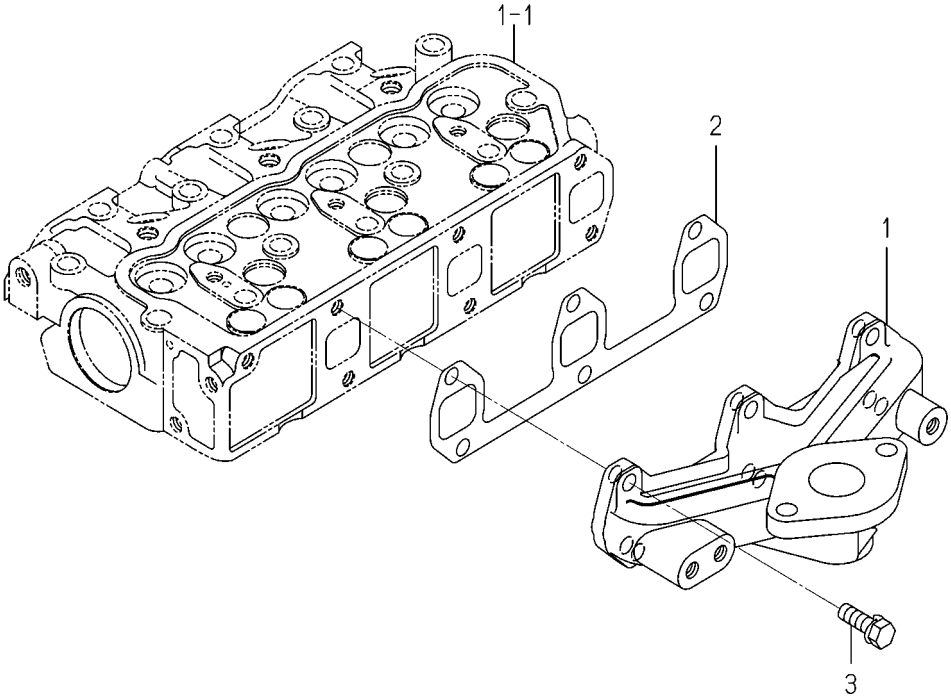

6004-140 -0100

KEY	PART CODE	DESCRIPTION	SPC	TYPE OF MODEL E3112 B16		ITC	COL	GRP	REMARKS
1	6214-141-010-10	MANIFOLD,EXH	*	1					
2	6214-145-001-30	GASKET,EXH.MANIFOLD	*	1					
3	V211-560-802-50	BOLT,SEMS/M8X25 7T	*	6					

FIG. 5 CYLINDER BLOCK

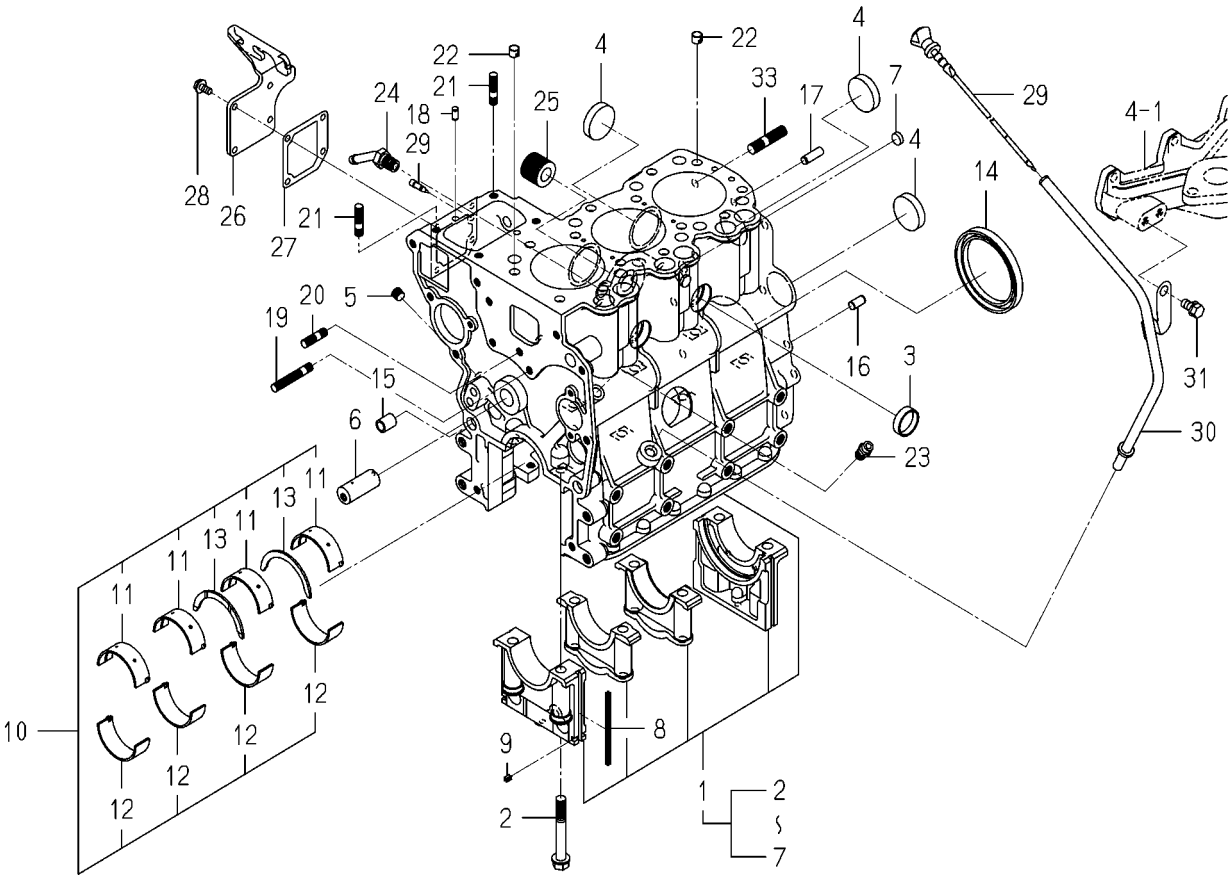

6004-202G-0100

KEY	PART CODE	DESCRIPTION	SPC	TYPE OF MODEL E3112 B16		ITC	COL	GRP	REMARKS
1	6211-210-037-20	CYLINDERBLOCK ASSY	*	1					
2	6209-000-004-10	BOLT	*	8					
3	6209-610-001-10	CUP/SEALING/28	*	2					
4	6209-610-009-00	CUP/SEALING/36	*	4					
5	6509-605-019-10	PLUG	*	3					
6	6212-531-005-10	PIN/IDLEGEAR	*	1					
7	6209-610-008-00	CUP/SEALING/12	*	2					
8	6211-258-001-00	SEAL,BEARING CAP	*	4					
9	6211-258-002-00	SEAL,BEARING CAP/7	*	2					
10	6211-510-001-00	METAL,CRANK SET	*	1					
11	6211-511-003-00	BEARING/CRANK/UPPER	*	4					
12	6211-511-004-00	BEARING/CRANK/LOWER	*	4					
13	6211-599-001-10	BEARING,THRUST CRANK	*	2					
14	6209-625-012-00	OILSEAL	*	1					
15	6209-749-001-20	PIN/TUBE	*	2					
16	6213-129-006-00	PIN/STRAIGHT	*	1					
17	V523-100-802-40	PIN	*	1					
18	6209-740-005-00	PIN	*	2					
19	6904-110-840-00	STUD/M8X40	*	1					
20	6904-110-818-00	STUD	*	1					
21	6904-110-822-00	STUD	*	2					
22	6294-453-002-00	DOWEL	*	2					
23	6909-902-299-00	NIPPLE	*	1					
24	6213-721-007-00	PIPE/WATERDRAIN	*	1					
25	6213-319-001-00	CONNECTOR,OIL FILTER	*	1					
26	6211-291-016-00	COVER/INJECTIONPUMP	*	1					
27	6211-292-001-20	GASKET/COVER	*	1					
28	V230-360-601-20	FLANGEBOLT	*	4					
29	6215-549-013-00	PIN	*	1					
30	6211-760-030-00	LEVELGAGE	*	1					

FIG. 5 CYLINDER BLOCK

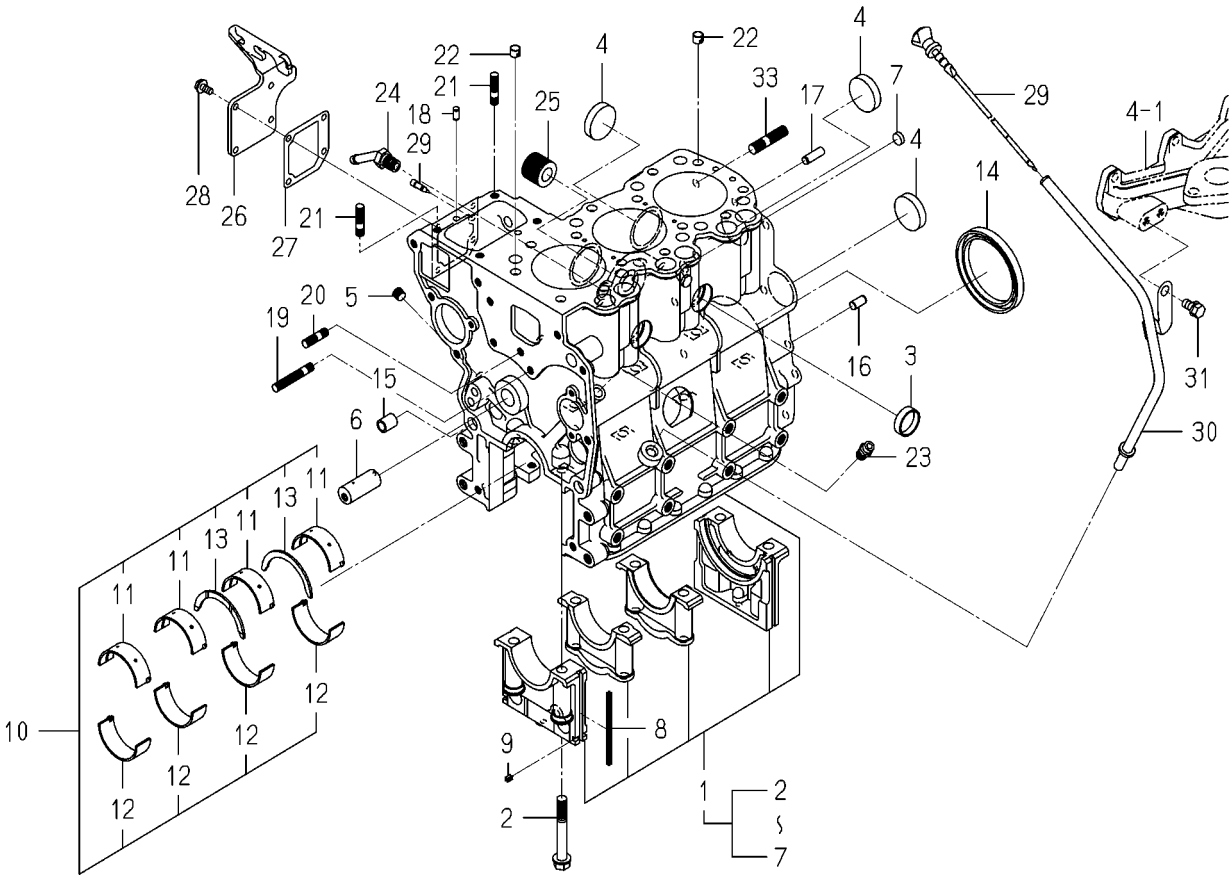

6004-202G-0100

KEY	PART CODE	DESCRIPTION	SPC	TYPE OF MODEL E3112 B16		ITC	COL	GRP	REMARKS
31	6211-766-019-00	GUIDE/LEVELGAGE COMP	*	1					
32	6901-910-816-00	BOLT,SEMS/M8X16	*	1					
33	6209-300-013-00	STUD	*	2					

FIG. 6 BEARING/UNDER SIZE (OPTION)

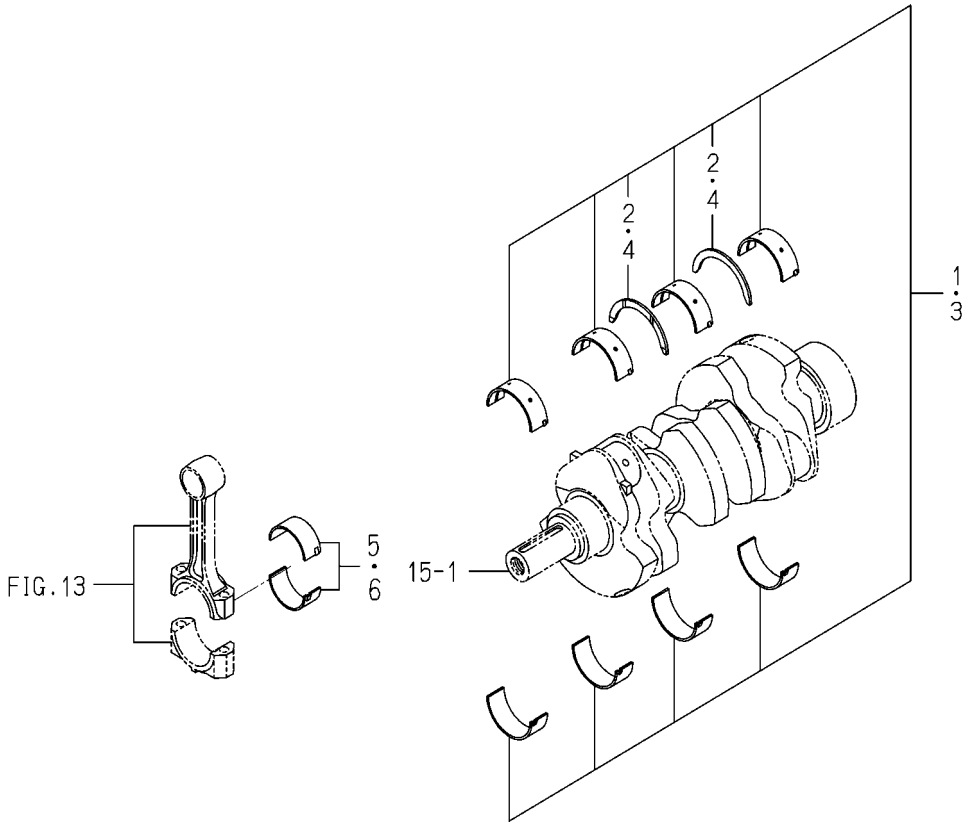

6003-209 -0100

KEY	PART CODE	DESCRIPTION	SPC	TYPE OF MODEL E3112 B16		ITC	COL	GRP	REMARKS
1	6211-540-001-00	METAL,CRANK SET	T	1					
2	6211-599-001-10	BEARING,THRUST CRANK	T	2					
3	6211-560-001-00	METAL,CRANK SET	T	1					
4	6211-599-001-10	BEARING,THRUST CRANK	T	2					
5	6212-274-006-00	BEARING/CONNECTING R	T	3					
6	6212-276-006-00	BEARING/CONNECTING R	T	3					

FIG. 7 OIL PAN

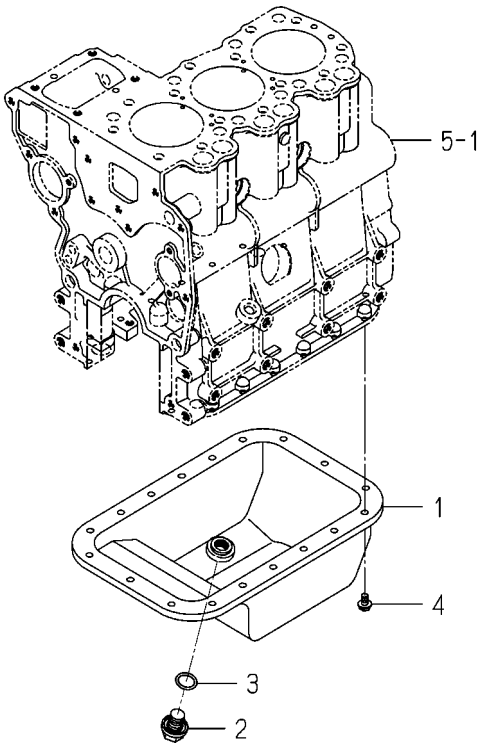

6004-210 -0100

KEY	PART CODE	DESCRIPTION	SPC	TYPE OF MODEL E3112 B16		ITC	COL	GRP	REMARKS
1	6211-361-010-10	PAN,OIL COMP	*	1					
2	6209-600-006-00	PLUG/M14X1.5	*	1					
3	V720-102-401-80	O-RING/P18	*	1					
4	V230-360-601-00	FLANGEBOLT	*	18					

FIG. 8 REAR PLATE

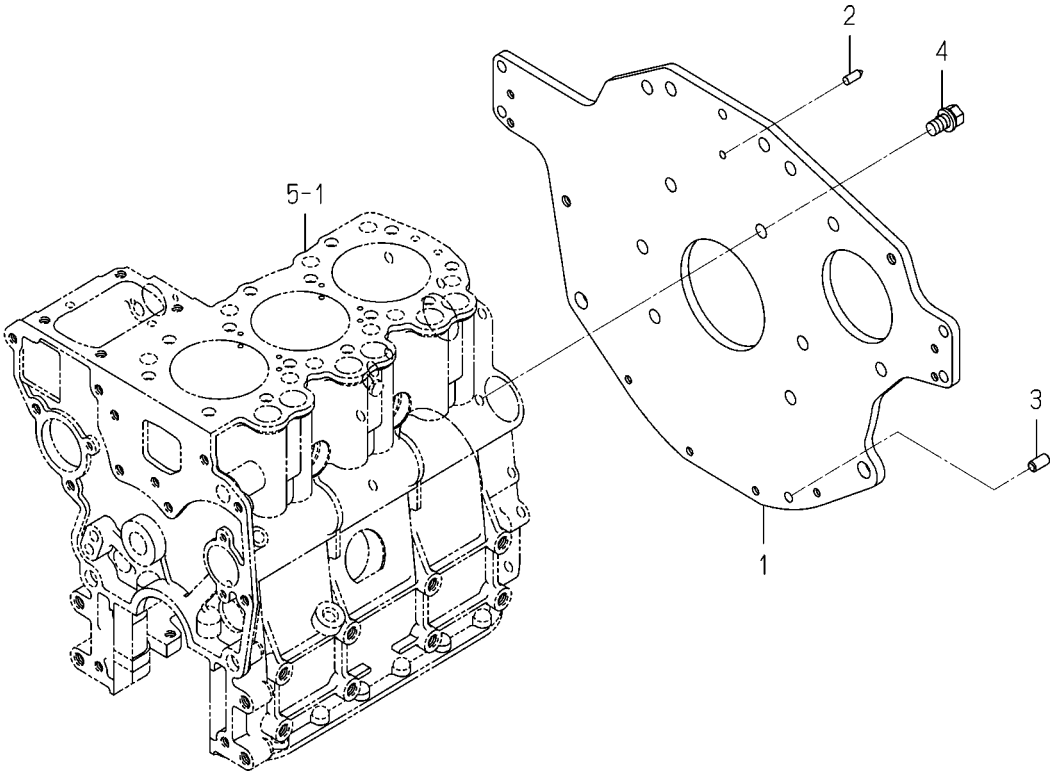

6004-220H-0100

KEY	PART CODE	DESCRIPTION	SPC	TYPE OF MODEL E3112 B16		ITC	COL	GRP	REMARKS
1	6211-341-053-20	PLATE/REAR	*	1					
2	6211-342-002-10	POINTER	*	1					
3	6213-129-006-00	PIN/STRAIGHT	*	1					
4	6901-911-020-00	BOLT,SEMS/M10X20	*	6					

FIG. 9 TIMING GEAR CASE

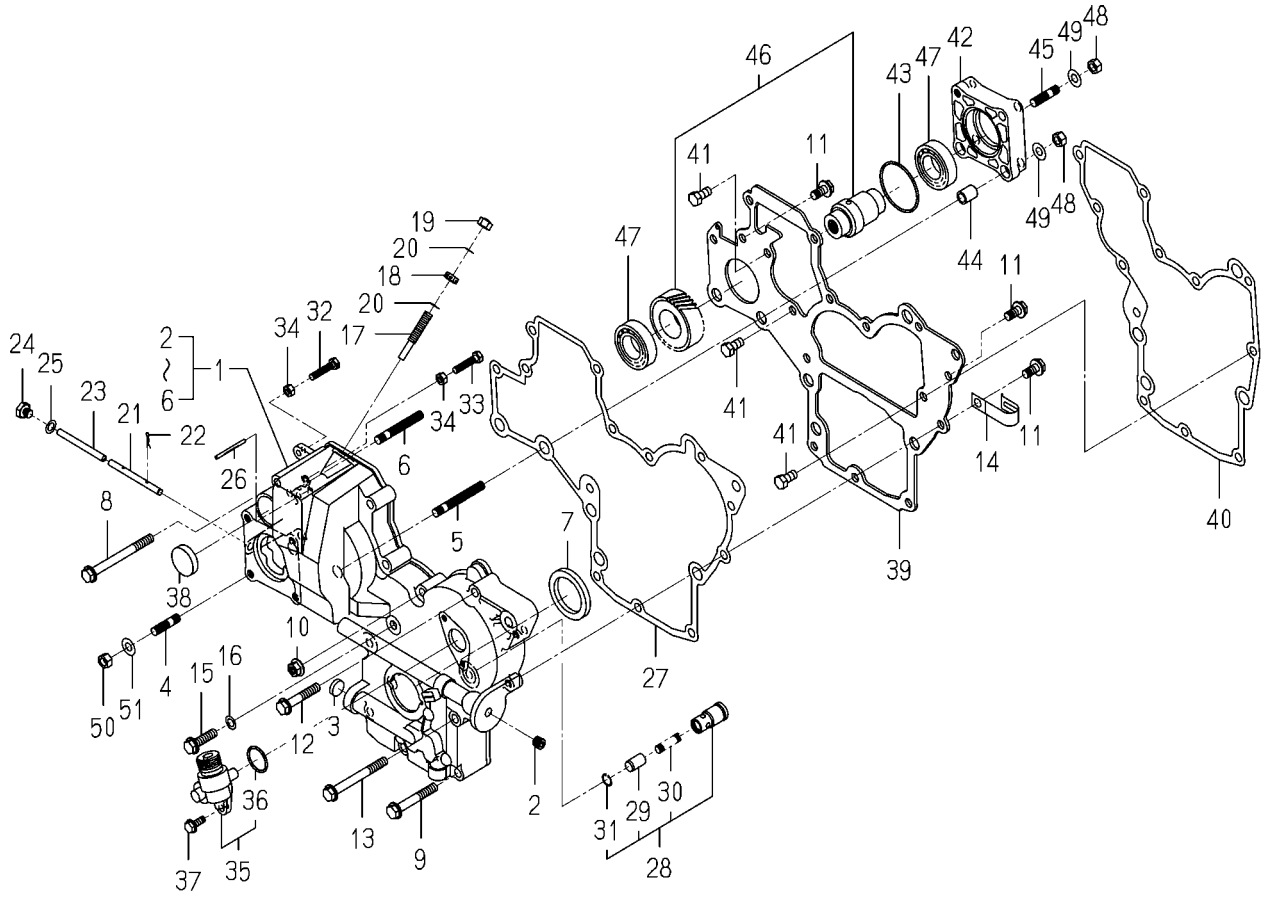

6004-240N-0100,6004-240N-0200

KEY	PART CODE	DESCRIPTION	SPC	TYPE OF MODEL E3112 B16		ITC	COL	GRP	REMARKS
1	6211-310-012-30	GEARCASE ASSY	*	1					
2	6509-605-019-10	PLUG	*	2					
3	6209-610-002-10	CUP/SEALING/16	*	1					
4	6904-110-822-00	STUD	*	4					
5	6904-110-855-00	STUD	*	2					
6	6904-110-850-00	STUD	*	1					
7	6209-625-002-00	SEAL,OIL	*	1					
8	V231-360-808-50	FLANGEBOLT	*	1					
9	V231-360-805-50	FLANGEBOLT	*	2					
10	3817-401-001-00	NUT/M08	*	1					
11	V231-360-801-60	FLANGEBOLT	*	3					
12	V231-360-804-50	FLANGEBOLT	*	5					
13	V231-360-807-50	FLANGEBOLT	*	1					
14	1425-621-004-00	HOLDER/JE/9-9	*	2					
15	V231-360-803-00	FLANGEBOLT	*	1					
16	6209-500-003-00	WASHER/08X14X01	*	1					
17	6215-546-003-10	STOPPER/FULLLOAD	*	1					
18	6209-409-001-00	NUT/M8	*	1					
19	V341-120-008-00	NUT,CAP/M 8	*	1					
20	6209-920-002-00	PACKING	*	2					
21	6215-542-004-20	PIN/ARM	*	1					
22	P117-303-003-00	PIN/SNAP	*	2					
23	6215-542-005-10	PIN	*	1					
24	6209-600-004-00	PLUG/SCREW	*	1					
25	6209-500-003-00	WASHER/08X14X01	*	1					
26	6209-740-001-00	PIN,GROOVE	*	1					
27	6211-312-003-20	GASKET/GEARCASE	*	1					
28	6213-160-002-20	VALVE/RELIEF ASSY	*	1					
29	6213-161-001-20	PISTON/VALVE/RELIEF	*	1					
30	6213-164-001-00	SPRING/RELIEF VALVE	*	1					

FIG. 9 TIMING GEAR CASE

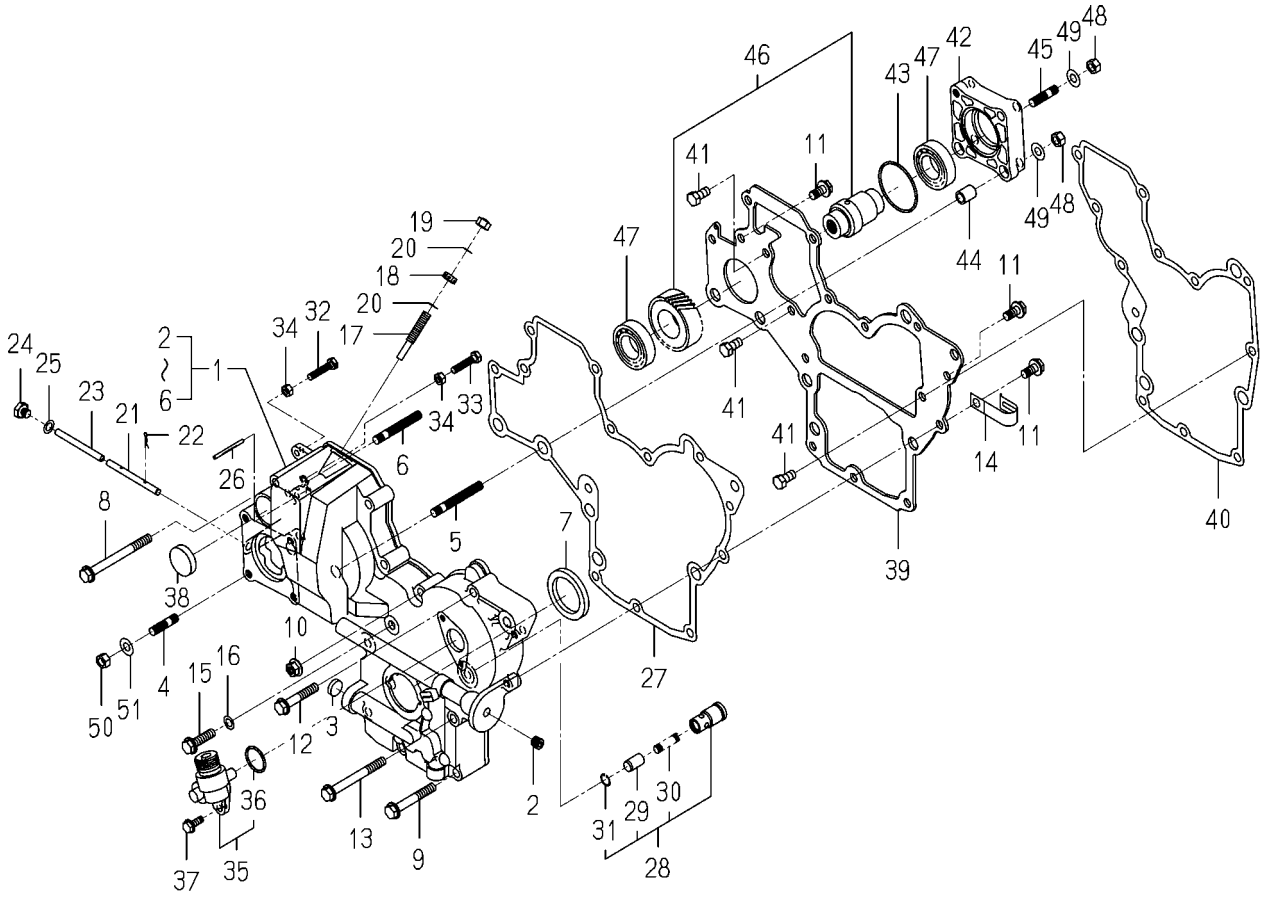

6004-240N-0100,6004-240N-0200

KEY	PART CODE	DESCRIPTION	SPC	TYPE OF MODEL E3112 B16		ITC	COL	GRP	REMARKS
31	V705-140-012-00	RING,SNAP/12 C	*	1					
32	6209-050-001-00	BOLT/M6	*	1					
33	6209-050-002-00	BOLT/M6	*	1					
34	6909-110-406-00	NUT	*	2					
35	6219-310-003-20	DRIVE/TACHOMETE ASSY	*	1					
36	V723-102-002-40	RING/O	*	1					
37	V230-360-601-60	FLANGEBOLT	*	2					
38	3625-540-004-00	CAP,BLANK/30	*	1					
39	6211-311-007-40	PLATE/FRONT	*	1					
40	6211-312-004-20	GASKET/PLATE	*	1					
41	6902-050-816-00	BOLT	*	3					
42	6211-319-003-00	SPACER	*	1					
43	V723-102-005-00	O-RING 1A S50	*	1					
44	6209-749-001-20	PIN/TUBE	*	2					
45	6904-110-822-00	STUD	*	1					
46	6212-530-005-20	SHAFT/HYDRAULIC ASSY	*	1					
47	V600-110-600-50	BEARING,RB/6005	*	2					
48	6909-110-408-00	NUT/M8	*	4					
49	V401-160-008-00	WASHER,SP/M 8	*	4					
50	6909-110-408-00	NUT/M8	*	4					
51	V401-160-008-00	WASHER,SP/M 8	*	4					

FIG. 10 HANGER

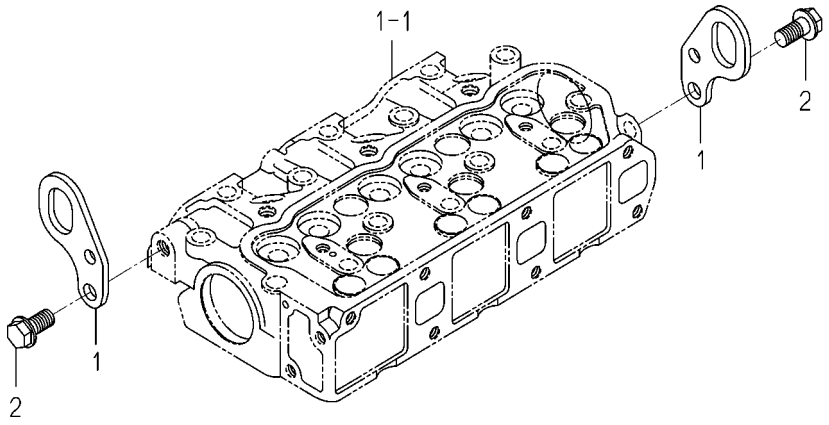

6003-290 -0100

KEY	PART CODE	DESCRIPTION	SPC	TYPE OF MODEL E3112 B16		ITC	COL	GRP	REMARKS
1	6211-777-007-30	HANGER	*	2					
2	V233-361-002-00	FLANGEBOLT	*	2					

FIG. 11 VALVE

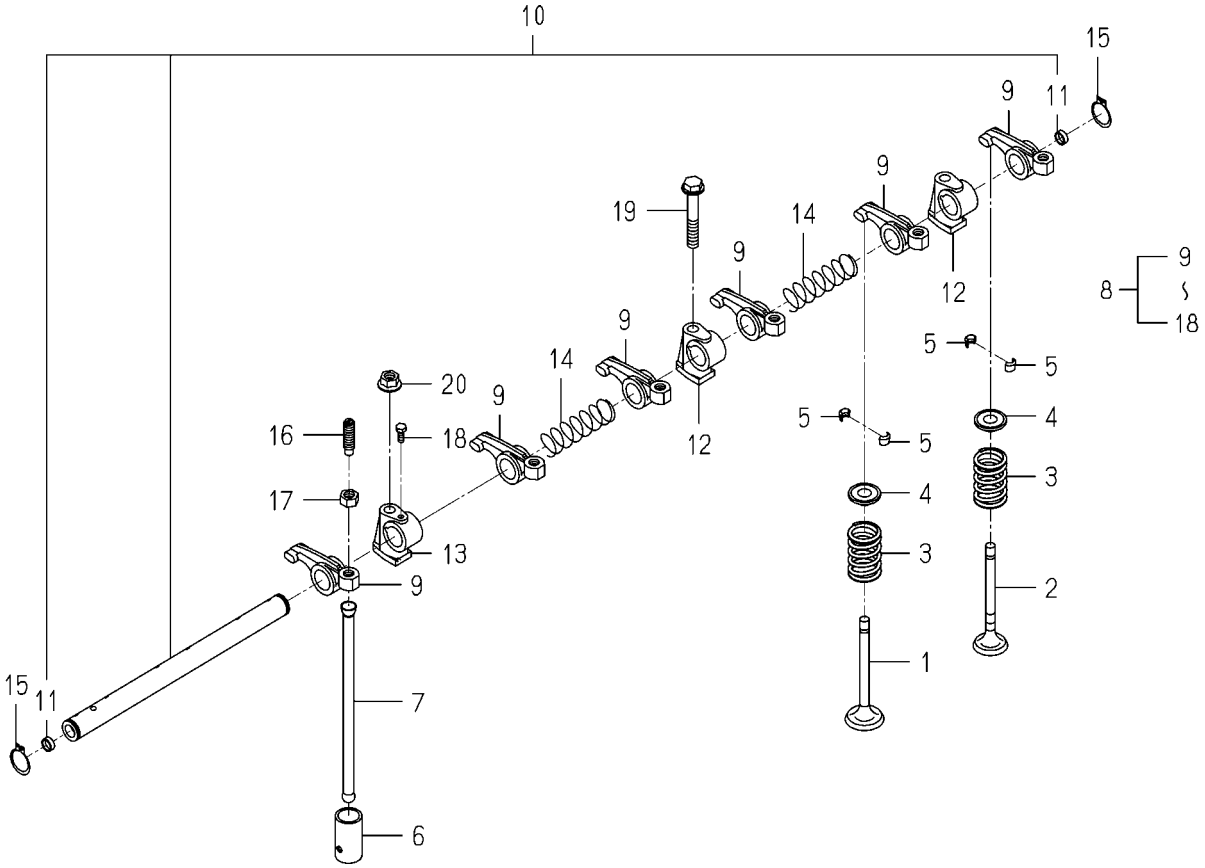

6004-301 -0100

KEY	PART CODE	DESCRIPTION	SPC	TYPE OF MODEL E3112 B16		ITC	COL	GRP	REMARKS
1	6212-551-001-10	VALVE/INTAKE	*	3					
2	6212-552-001-20	VALVE/EXHAUST	*	3					
3	6212-561-001-10	SPRING/VALVE	*	6					
4	6212-563-001-00	SEAT,VALVE SPRING	*	6					
5	6212-565-001-00	CUTTER,VALVE	*	12					
6	6212-571-006-00	TAPPET	*	6					
7	6212-575-002-00	ROD,PUSH	*	6					
8	6212-600-002-10	ROCKERSHAFT ASSY	*	1					
9	6212-611-004-10	ROCKERARM	*	6					
10	6212-620-001-20	SHAFT/ROCKERARM ASSY	*	1					
11	6212-626-002-10	PLUG	*	2					
12	6212-628-004-00	BRACKET ROCKER SHAFT	*	2					
13	6212-628-005-00	BRACKET,ROCKER SHAFT	*	1					
14	6209-940-004-00	SPRING	*	2					
15	V704-140-016-00	RING,SNAP/16 C	*	2					
16	6212-616-002-00	SCREW ADJUST	*	6					
17	6209-409-003-00	NUT	*	6					
18	6209-000-002-00	BOLT	*	1					
19	V231-360-805-00	FLANGEBOLT	*	1					
20	3817-401-001-00	NUT/M08	*	2					

FIG. 12 CAM SHAFT

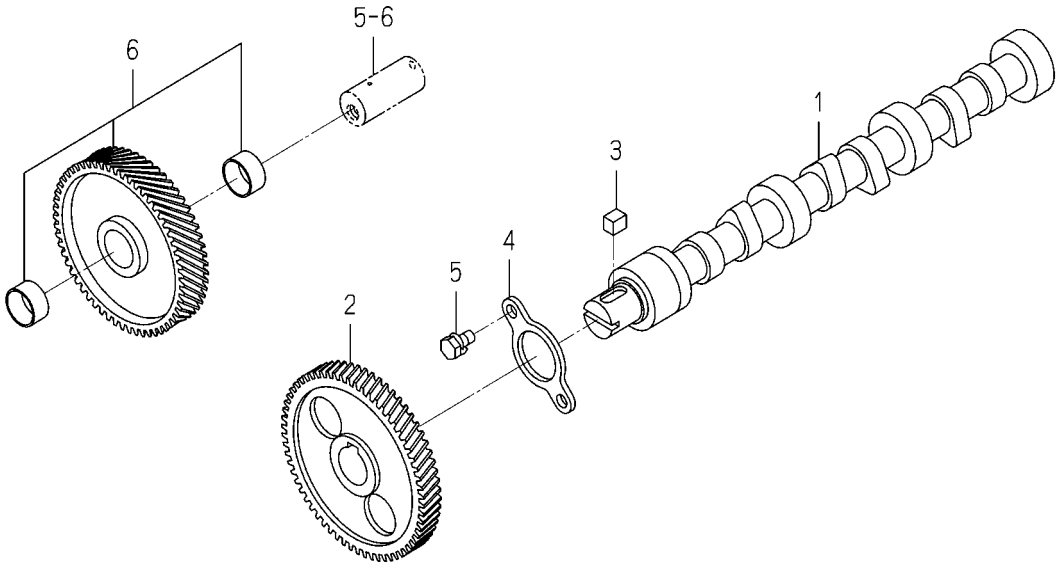

6003-310 -0100

KEY	PART CODE	DESCRIPTION	SPC	TYPE OF MODEL E3112 B16		ITC	COL	GRP	REMARKS
1	6212-511-002-00	SHAFT,CAM	*	1					
2	6212-522-010-00	GEAR/CAMSHAFT	*	1					
3	6209-730-005-00	KEY/07X05X09	*	1					
4	6212-535-001-00	PLATE,THRUST	*	1					
5	6901-910-612-00	BOLT,SEMS/M6X12	*	2					
6	6212-523-023-00	GEAR/IDLE ASSY	*	1					

FIG. 13 PISTON

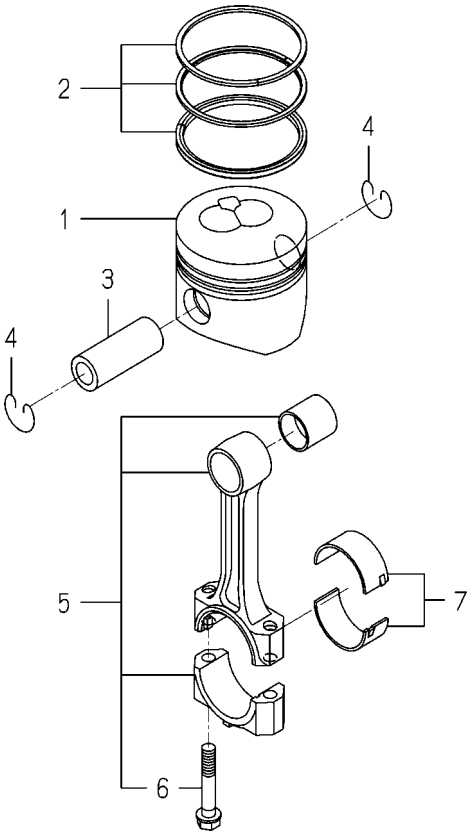

6004-340I-0100

KEY	PART CODE	DESCRIPTION	SPC	TYPE OF MODEL E3112 B16		ITC	COL	GRP	REMARKS
1	6212-111-094-10	PISTON	*	3					
2	6212-121-014-20	RING/PISTON SET	*	3					
3	6212-211-001-10	PIN,PISTON	*	3					
4	6209-587-001-00	RING,SNAP	*	6					
5	6212-230-004-10	CONNECTINGROD ASSY	*	3					
6	6212-235-005-00	BOLT/CONNECTINGROD	*	6					
7	6212-271-006-00	BEARING/CONNECTING R	*	3					

FIG. 14 PISTON/OVER SIZE (OPTION)

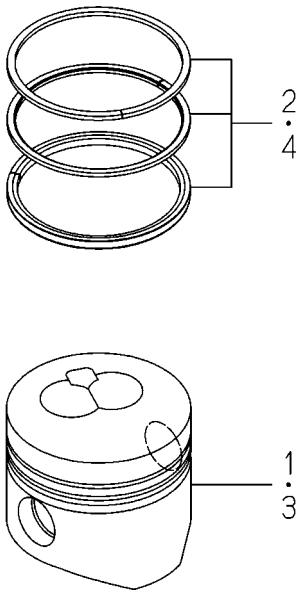

6004-349I-0100

KEY	PART CODE	DESCRIPTION	SPC	TYPE OF MODEL E3112 B16		ITC	COL	GRP	REMARKS
1	6212-114-094-10	PISTON(OV)	T	3					
2	6212-124-014-10	RING/PISTON/OV SET	T	3					
3	6212-116-094-10	PISTON(OV)	T	3					
4	6212-126-014-10	RING/PISTON/OV SET	T	3					

FIG. 15 CRANK SHAFT

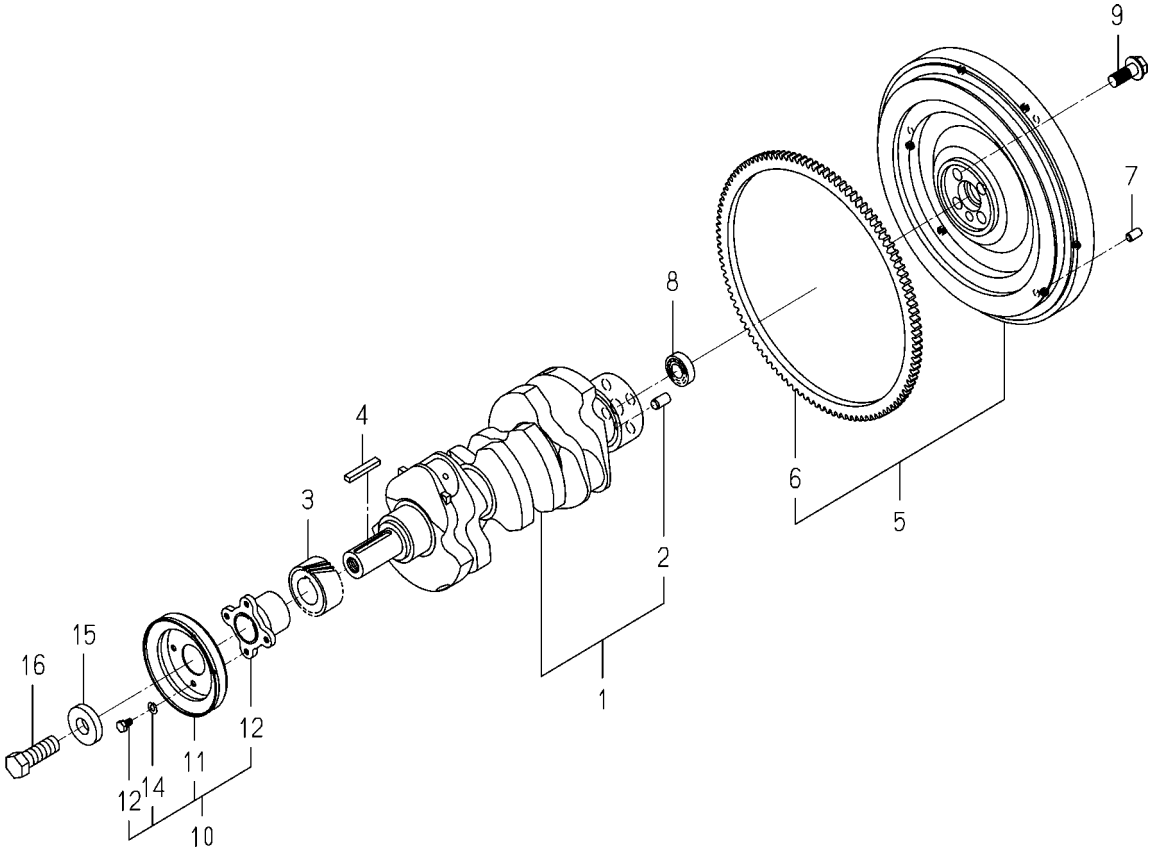

6004-350O-0100

KEY	PART CODE	DESCRIPTION	SPC	TYPE OF MODEL E3112 B16		ITC	COL	GRP	REMARKS
1	6212-310-009-30	CRANKSHAFT ASSY	*	1					
2	V523-101-001-80	PIN	*	1					
3	6212-521-008-00	GEAR/CRANK	*	1					
4	6209-730-006-00	KEY/07X05X43	*	1					
5	6212-330-049-10	FLYWHEEL ASSY	*	1					
6	6212-333-003-00	RINGGEAR	*	1					
7	6213-129-006-00	PIN/STRAIGHT	*	3					
8	V600-150-600-20	BEARING,RB/6002SS	*	1					
9	6209-046-015-00	BOLT/FLANGE	*	4					
10	6212-370-011-00	PULLEY ASSY	*	1					
11	6212-371-009-00	PULLEY	*	1					
12	6212-372-002-10	CENTER CRANK PULLEY	*	1					
13	6902-050-610-00	BOLT	*	4					
14	6909-150-506-00	WASHER,SP/M6	*	4					
15	6212-379-001-00	WASHER	*	1					
16	6901-066-645-00	BOLT	*	1					

FIG. 16 OIL PUMP

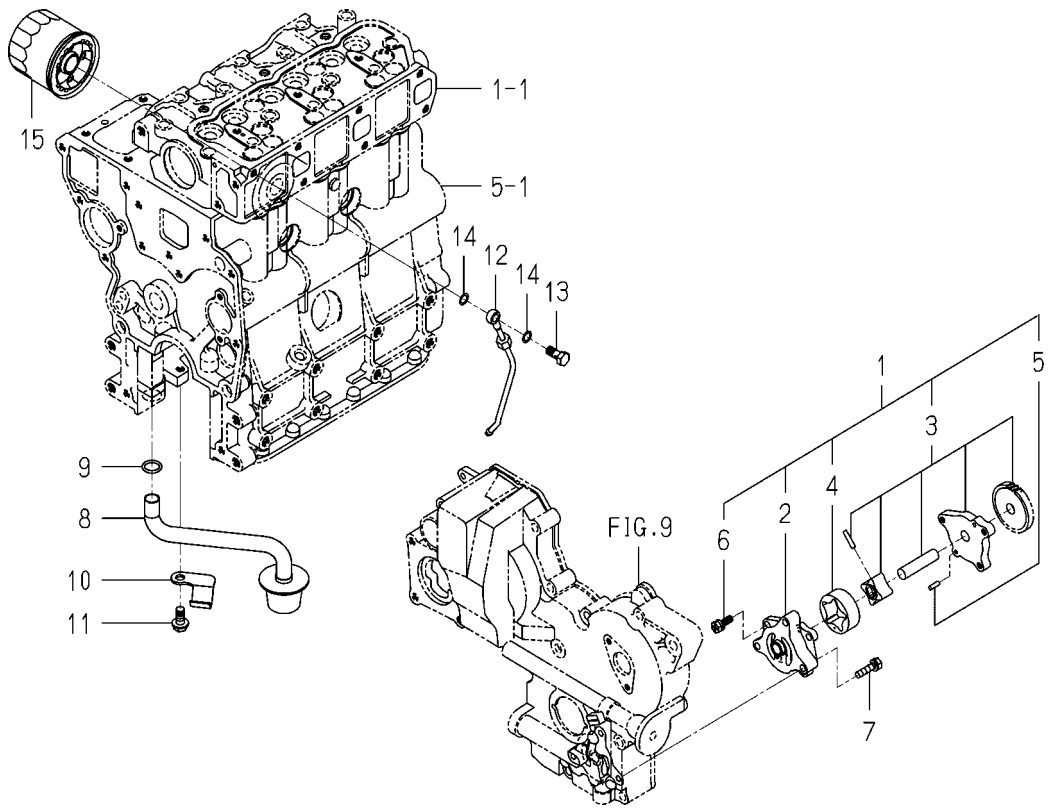

6004-401B-0100

KEY	PART CODE	DESCRIPTION	SPC	TYPE OF MODEL E3112 B16		ITC	COL	GRP	REMARKS
1	6213-100-003-30	OILPUMP ASSY	*	1					
2	6213-111-001-30	BODY/OILPUMP	*	1					
3	6213-120-003-20	GEAR/OILPUMP ASSY	*	1					
4	6213-125-001-00	ROTOR/OUTER	*	1					
5	6213-129-003-00	PIN/STRAIGHT	*	2					
6	6213-119-001-00	BOLT/WS	*	3					
7	6901-910-625-00	BOLT	*	3					
8	6213-140-008-00	STRAINER	*	1					
9	V720-102-401-50	O-RING/P15	*	1					
10	6213-149-002-00	CLAMP,STRAINER	*	1					
11	V231-360-801-60	FLANGEBOLT	*	1					
12	6213-311-006-00	PIPE,OIL	*	1					
13	6909-906-105-10	BOLT,JOINT	*	1					
14	6209-920-002-00	PACKING	*	2					
15	6213-240-002-10	CARTRIDGE/OILFILTER	*	1					

FIG. 17 WATER PUMP

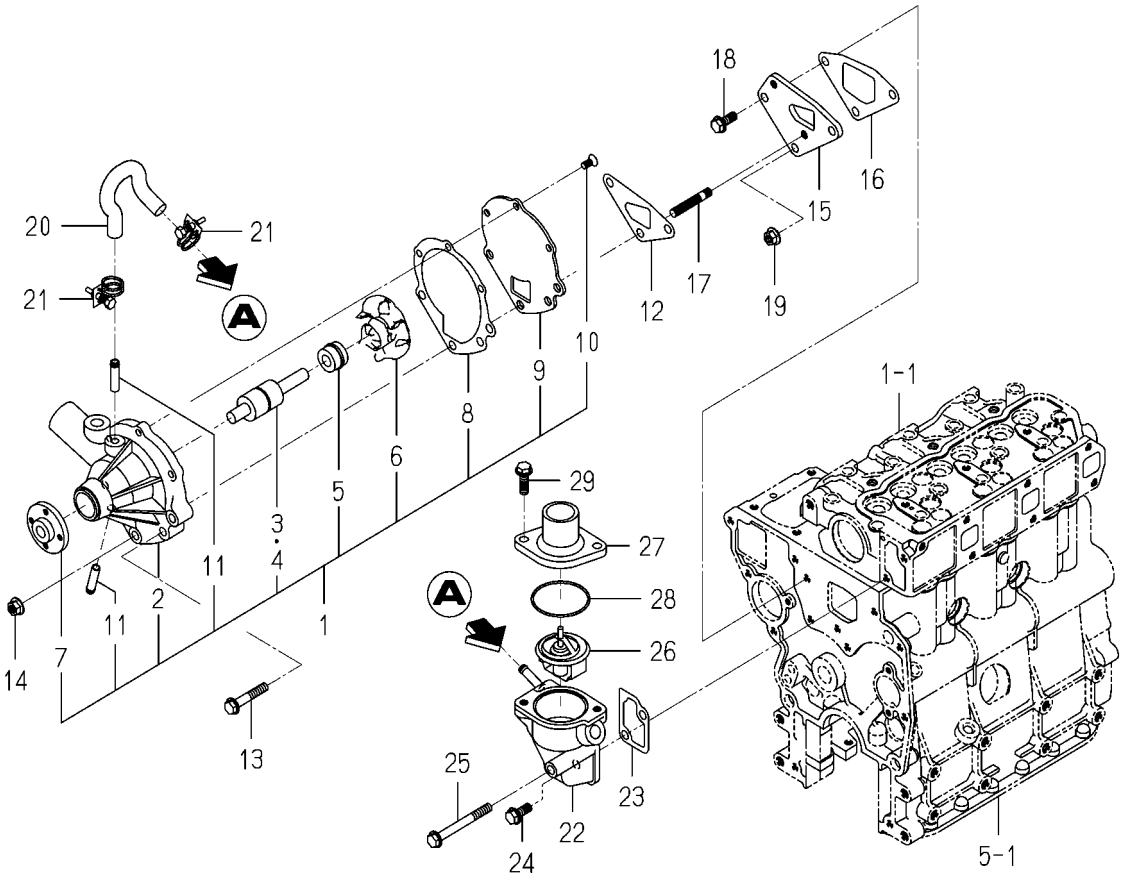

6004-420 -0100

KEY	PART CODE	DESCRIPTION	SPC	TYPE OF MODEL E3112 B16		ITC	COL	GRP	REMARKS
1	6213-610-005-40	WATERPUMP ASSY	*	1					
2	6213-611-003-20	BODY/WATERPUMP	*	1					
3	6213-631-002-00	BEARING/WATER PUMP	*	1					
4	6213-631-005-00	BEARING/WATERPUMP	*	1					
5	6213-622-002-10	SEAL SET/WATER PUMP	*	1					
6	6213-621-003-00	ROTOR/WATERPUMP	*	1					
7	6213-642-002-00	SEAL/WATER PUMPPULLE	*	1					
8	6213-613-002-10	GASKET	*	1					
9	6213-612-004-00	PLATE/WATER PUMP	*	1					
10	6213-619-003-00	SCREW/WATER PUMP	*	3					
11	6213-619-002-00	PIPE/WATER PUMP	*	2					
12	6213-614-003-10	GASKET/WATER PUMP	*	1					
13	V231-360-804-50	FLANGEBOLT	*	1					
14	3817-401-001-00	NUT/M08	*	2					
15	6213-619-001-00	SPACER,PUMP.WATER	*	1					
16	6213-614-004-10	GASKET,SPACER	*	1					
17	6904-110-840-00	STUD/M8X40	*	2					
18	V231-360-802-00	FLANGEBOLT	*	1					
19	3817-401-001-00	NUT/M08	*	1					
20	6213-729-013-10	HOSE/RUBBER	*	1					
21	J061-210-015-00	CLAMP/WIRE/10-15	*	2					
22	6213-716-001-50	HOUSING/THERMOSTAT	*	1					
23	6213-743-002-10	GASKET/HOUSING	*	1					
24	V231-360-802-00	FLANGEBOLT	*	1					
25	V231-360-807-50	FLANGEBOLT	*	1					
26	6513-770-022-10	THERMOSTAT	*	1					
27	6213-711-003-20	PIPE,WATER OUTLET	*	1					
28	V723-102-005-50	O-RING	*	1					
29	V231-360-802-50	FLANGEBOLT	*	2					

FIG. 18 COOLING FAN

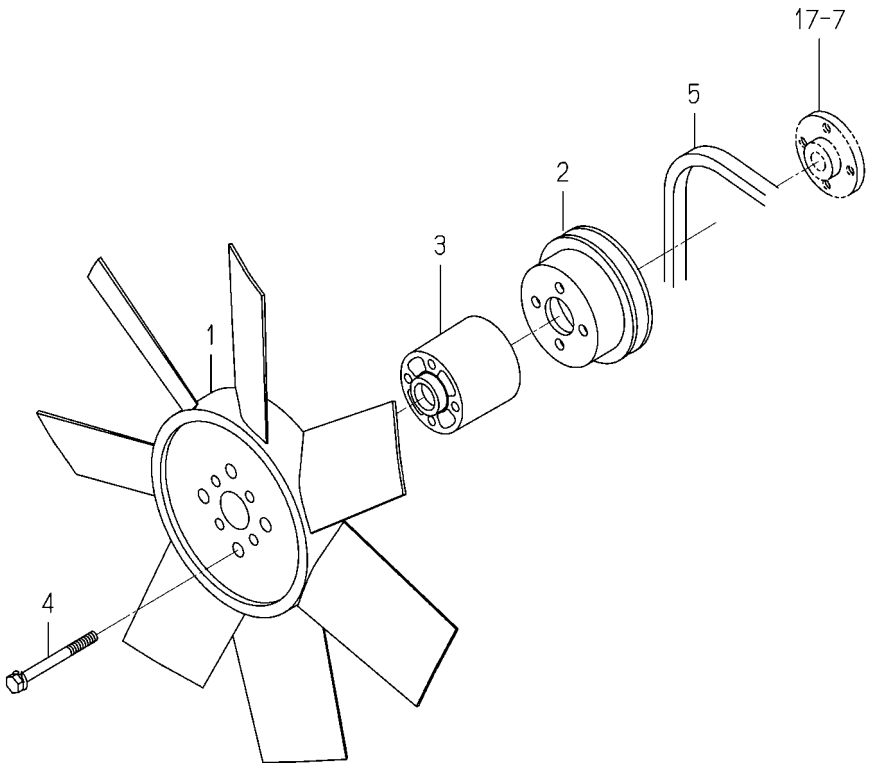

6004-480I-0100

KEY	PART CODE	DESCRIPTION	SPC	TYPE OF MODEL E3112 B16		ITC	COL	GRP	REMARKS
1	6213-660-007-00	FAN/COOLING	*	1					
2	6213-641-006-00	PULLEY,WATER PUMP	*	1					
3	6213-669-008-00	SPACER/FAN/48	*	1					
4	6209-030-092-00	BOLT/WS	*	4					
5	6213-671-003-00	BELT VHM034	*	1					

FIG. 19 INJECTION NOZZLE

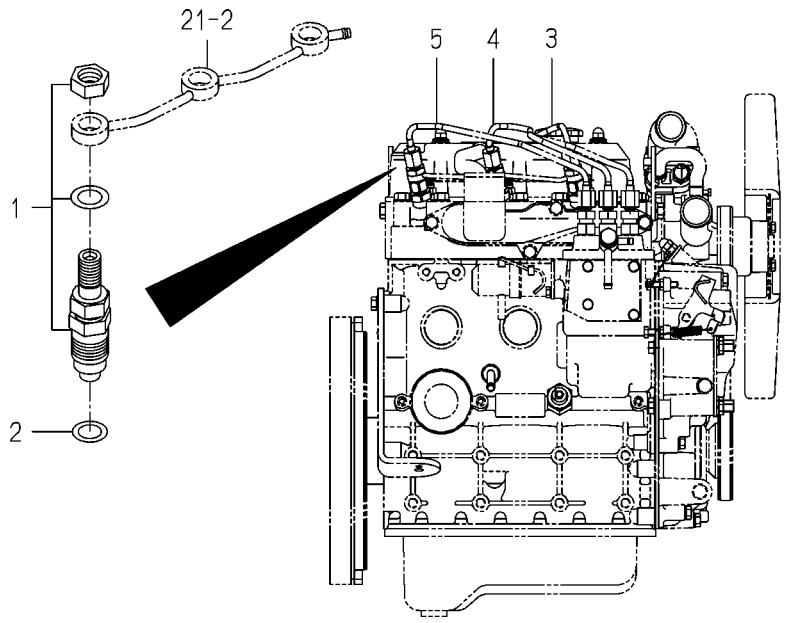

6004-501C-0100

KEY	PART CODE	DESCRIPTION	SPC	TYPE OF MODEL E3112 B16		ITC	COL	GRP	REMARKS
1	6215-300-036-00	INJECTIONNOZZLE ASSY	*	3					FIG 026
2	6215-315-002-00	GASKET,NOZZLE	*	3					
3	6215-411-126-10	PIPE/INJECTION ASSY	*	1					
4	6215-411-127-00	PIPE/INJECTION ASSY	*	1					
5	6215-411-128-00	PIPE/INJECTION ASSY	*	1					

FIG. 20 INJECTION PUMP

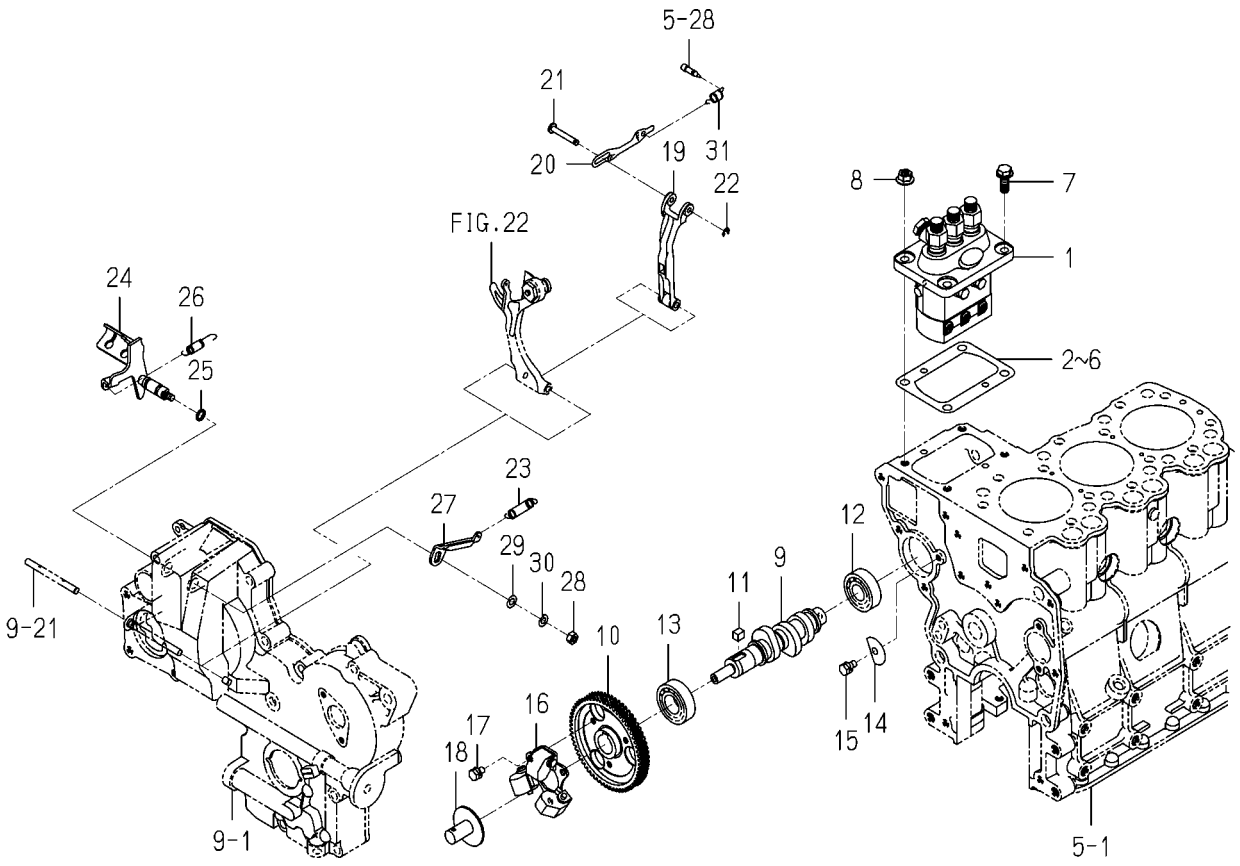

6004-510S-0100

KEY	PART CODE	DESCRIPTION	SPC	TYPE OF MODEL E3112 B16		ITC	COL	GRP	REMARKS
1	6215-600-103-10	INJECTIONPUMP ASSY	*	1					FIG 027
2	6219-752-006-00	SHIM/INJECTION P/0.3	*	1					
3	6219-752-007-00	SHIM/INJECTION P/0.1	*	1					
4	6219-752-008-00	SHIM/INJECTION P/0.2	*	1					
5	6219-752-009-00	SHIM/INJECTION P/0.4	*	1					
6	6219-752-010-00	SHIM/INJECTION P/0.5	*	1					
7	V231-360-802-00	FLANGEBOLT	*	2					
8	3817-401-001-00	NUT/M08	*	2					
9	6215-621-016-20	CAMSHAFT/INJECTION P	*	1					
10	6212-524-002-20	GEAR/INJECTIONPUMP	*	1					
11	6209-730-005-00	KEY/07X05X09	*	1					
12	V600-110-620-30	BEARING,RB/6203	*	1					
13	V600-110-600-40	BEARING,RB/6004	*	1					
14	6212-535-002-00	PLATE,THRUST INJPUMP	*	1					
15	6901-910-612-00	BOLT,SEMS/M6X12	*	1					
16	6215-520-001-00	FLYWEIGHT	*	1					
17	6209-030-043-00	BOLT/M6X10	*	3					
18	6215-526-004-00	THRUSTPIECE	*	1					
19	6215-541-001-10	ARM/FLOATING COMP	*	1					
20	6215-543-002-10	RINK/CONTROL	*	1					
21	6215-542-006-00	PIN,CONTROL	*	1					
22	V710-140-004-00	RING,SNAP/ 4 E	*	1					
23	6215-531-008-00	SPRING/GOVERNOR	*	1					
24	6215-541-024-30	LEVER/CONTROL COMP	*	1					
25	V720-101-900-80	O-RING/P 8	*	1					
26	6209-580-002-10	SPRING,RETURN	*	1					
27	6215-549-007-10	ARM/CONTROL	*	1					
28	6909-110-406-00	NUT	*	1					
29	V411-260-006-00	WASHER / M6	*	1					
30	V401-160-006-00	WASHER,SP/M 6	*	1					

FIG. 20 INJECTION PUMP

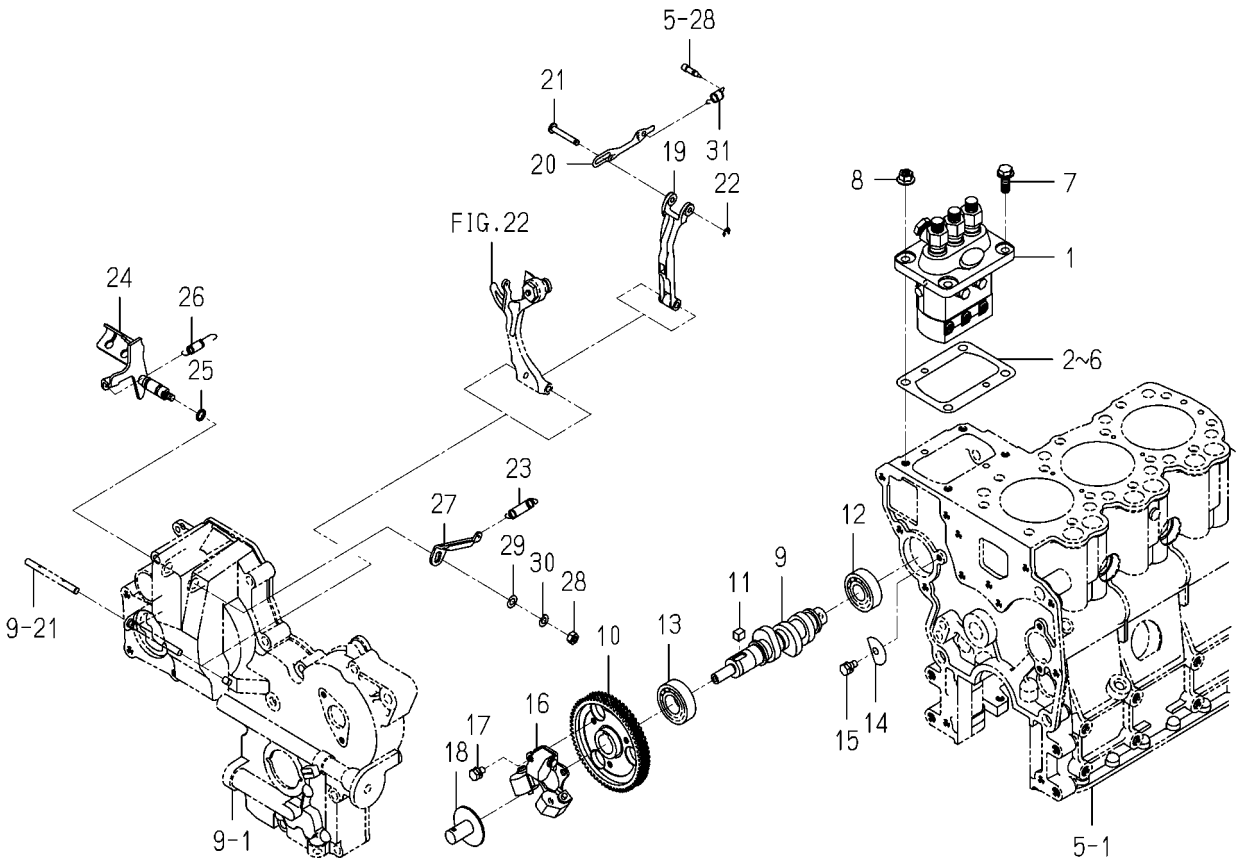

6004-510S-0100

KEY	PART CODE	DESCRIPTION	SPC	TYPE OF MODEL E3112 B16		ITC	COL	GRP	REMARKS
31	6215-549-012-00	SPRING,STARTING	*	1					

FIG. 21 FUEL PIPE

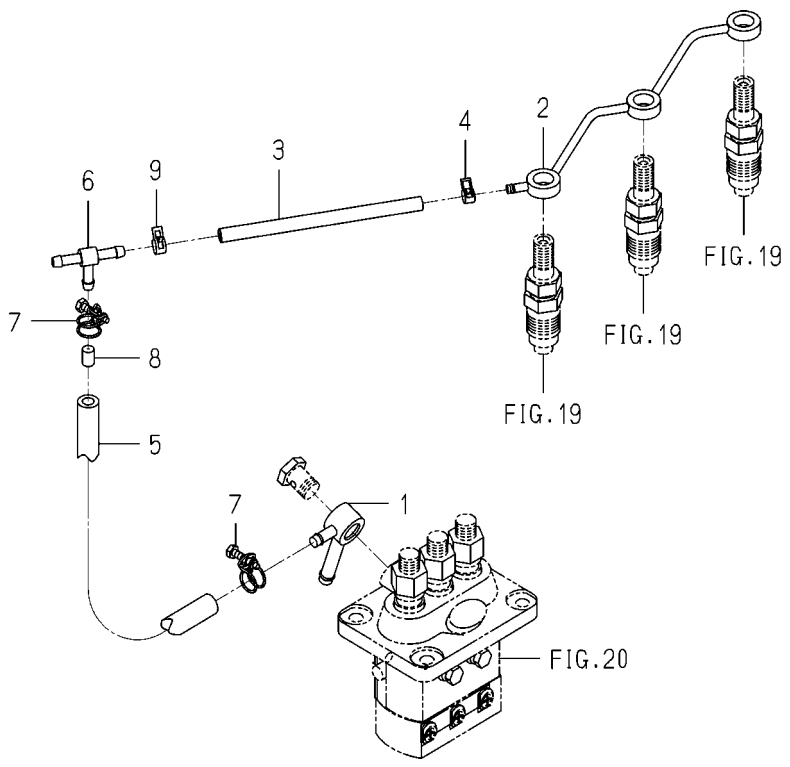

6004-550I-0100

KEY	PART CODE	DESCRIPTION	SPC	TYPE OF MODEL E3112 B16		ITC	COL	GRP	REMARKS
1	6215-412-002-10	CONNECTOR	*	1					
2	6215-411-125-00	PIPE/FUEL	*	1					
3	6209-360-005-00	HOSE,RUBBER	*	1					
4	J062-076-082-00	CLIP/HOSE/7.6-8.2	*	1					
5	6209-360-021-00	HOSE/RUBBER	*	1					
6	3632-360-036-00	JOINTT-TYPE 2	*	1					
7	6209-704-009-00	CLAMP/WIRE/10-12	*	2					
8	6215-419-001-00	TUBE,ORIFICE	*	1					
9	J062-087-093-00	CLIP/HOSE/8.7-9.3	*	1					

FIG. 22 ADAPTER

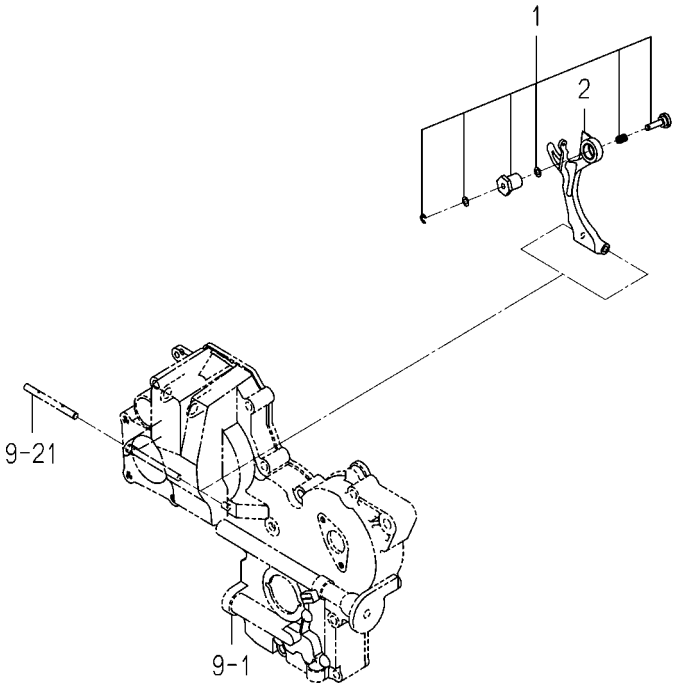

6005-560 -0100

KEY	PART CODE	DESCRIPTION	SPC	TYPE OF MODEL E3112 B16		ITC	COL	GRP	REMARKS
1	6215-548-029-00	ADAPTER/255X065 ASSY	*	1					
2	6215-541-016-30	ARM/TENSION	*	1					

FIG. 23 ELECTRIC (1)

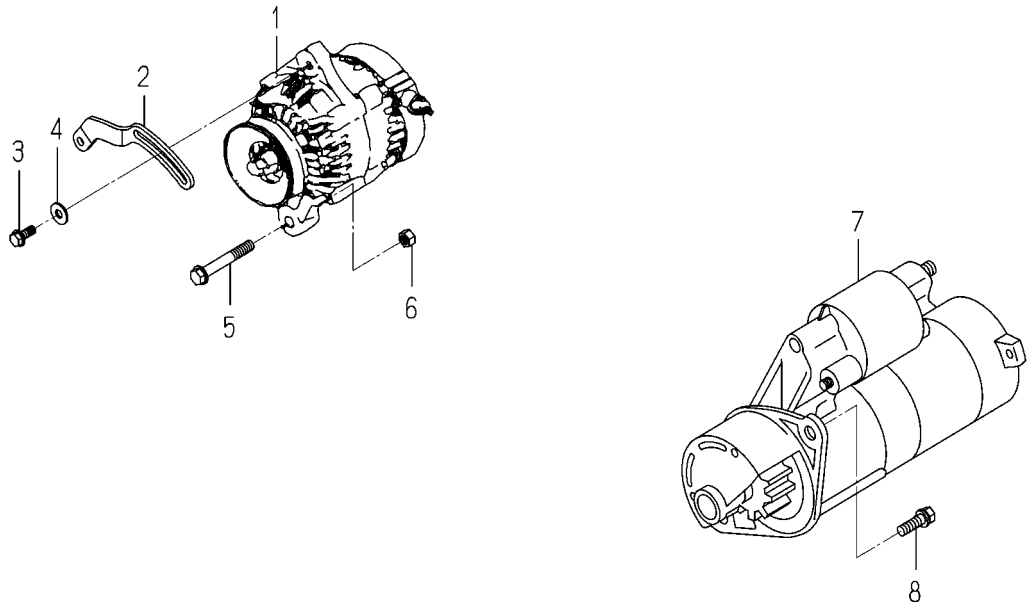

6004-801K-0100,6004-801K-0200

KEY	PART CODE	DESCRIPTION	SPC	TYPE OF MODEL E3112 B16		ITC	COL	GRP	REMARKS
1	6281-200-005-00	GENERATOR ASSY	*	1					FIG 029
2	6213-674-006-20	PLATE/ADJUST	*	1					
3	V231-360-802-00	FLANGEBOLT	*	1					
4	1373-121-001-00	WASHER/9X22X2	*	1					
5	V233-361-007-00	FLANGEBOLT	*	1					
6	6909-110-410-00	NUT/M10	*	1					
7	6281-100-014-00	STARTER ASSY	*	1					FIG 028
8	6209-030-085-00	BOLT/WS	*	2					

FIG. 24 ELECTRIC (2)

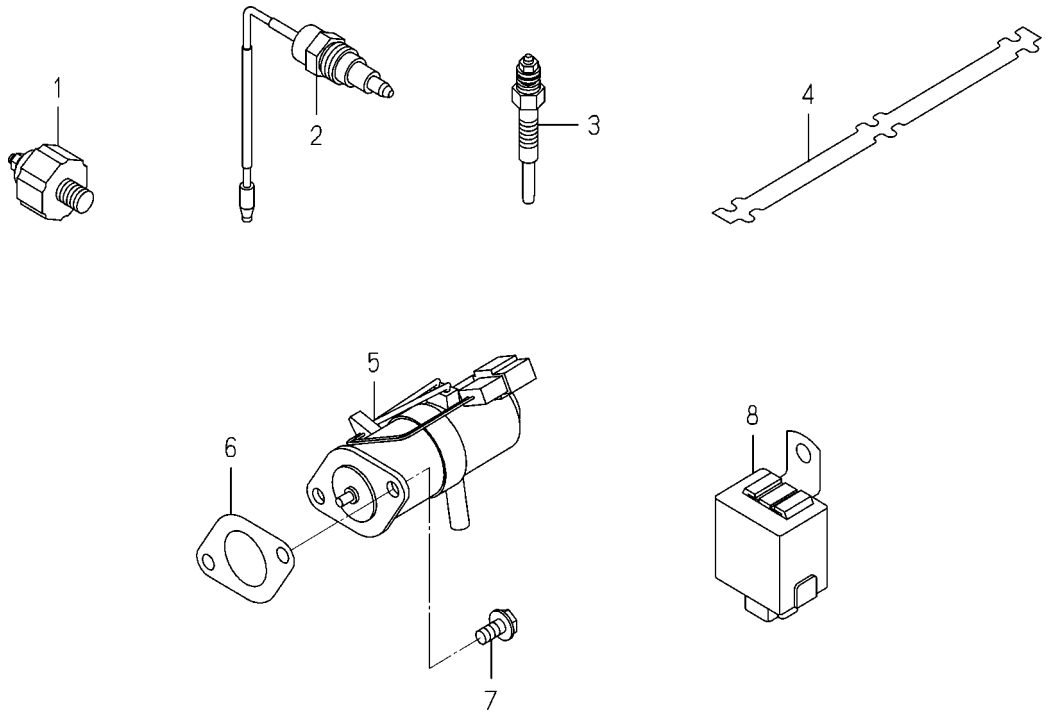

6004-820J-0100,6004-820J-0200

KEY	PART CODE	DESCRIPTION	SPC	TYPE OF MODEL E3112 B16		ITC	COL	GRP	REMARKS
1	6281-971-003-00	SWITCH/OILPRESSURE	*	1					
2	6282-450-002-00	SWITCH/OVERHEAT	*	1					
3	6281-410-010-00	GLOWPLUG	*	3					
4	6219-732-016-00	CONNECTOR/GLOWPLUG	*	1					
5	6281-910-003-10	SOLENOID	*	1					
6	6209-630-002-10	GASKET	*	1					
7	V230-360-601-20	FLANGEBOLT	*	2					
8	6281-920-001-00	RELAY,SOLENOID	*	1					

FIG. 25 REPAIR PARTS (OPTION)

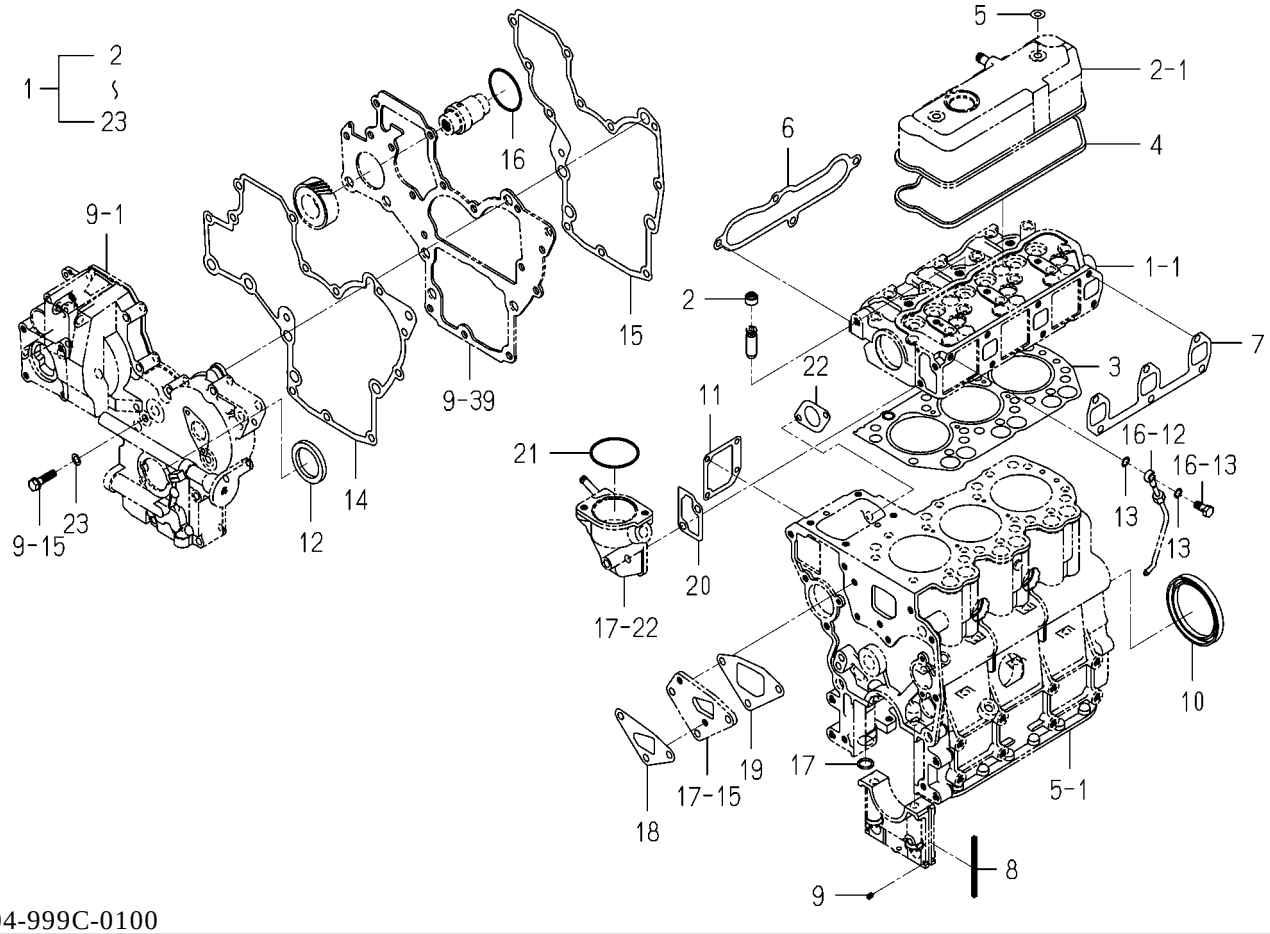

6004-999C-0100

KEY	PART CODE	DESCRIPTION	SPC	TYPE OF MODEL E3112 B16		ITC	COL	GRP	REMARKS
1	6287-810-015-20	REPAIR/ENGINE SET	T	1					
2	6212-569-002-00	SEAL,OIL	T	6					
3	6211-141-029-20	GASKET/CYLINDERHEAD	T	1					
4	6211-173-003-00	SEAL,CYL.HEAD COVER	T	1					
5	6209-572-003-00	GASKET	T	2					
6	6214-115-001-20	GASKET,INLET MANIFOL	T	1					
7	6214-145-001-30	GASKET,EXH.MANIFOLD	T	1					
8	6211-258-001-00	SEAL,BEARING CAP	T	4					
9	6211-258-002-00	SEAL,BEARING CAP/7	T	2					
10	6209-625-012-00	OILSEAL	T	1					
11	6211-292-001-20	GASKET/COVER	T	1					
12	6209-625-002-00	SEAL,OIL	T	1					
13	6209-920-002-00	PACKING	T	2					
14	6211-312-003-20	GASKET/GEARCASE	T	1					
15	6211-312-004-20	GASKET/PLATE	T	1					
16	V723-102-005-00	O-RING 1A S50	T	1					
17	V720-102-401-50	O-RING/P15	T	1					
18	6213-614-003-10	GASKET/WATER PUMP	T	1					
19	6213-614-004-10	GASKET,SPACER	T	1					
20	6213-743-002-10	GASKET/HOUSING	T	1					
21	V723-102-005-50	O-RING	T	1					
22	6209-630-002-10	GASKET	T	1					
23	6209-500-003-00	WASHER/08X14X01	T	2					

FIG. 26 COMPONENT PARTS FOR 6215-300-036-00 ON Fig.19

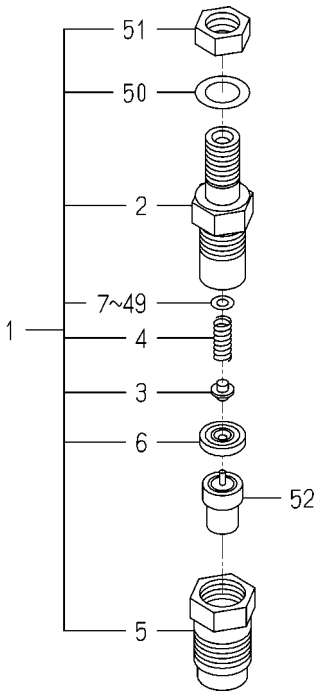

6215-300-036-0A

KEY	PART CODE	DESCRIPTION	SPC	TYPE OF MODEL E3112 B16		ITC	COL	GRP	REMARKS
1	6215-330-024-00	HOLDER/NOZZLE ASSY	*	3					
2	6215-331-008-00	BODY/NOZZLE HOLDER	*	3					
3	6215-342-001-00	PIN,NOZZLE HOLDER	*	3					
4	6215-343-001-00	WASHER	*	3					
5	6215-332-013-00	NUT/NOZZLERETAINING	*	3					
6	6215-339-001-00	PIECE,DISTANCE	*	3					
7	6215-345-001-00	WASHER/0.9	*	3					
8	6215-345-002-00	WASHER/0.925	*	3					
9	6215-345-003-00	WASHER/0.95	*	3					
10	6215-345-004-00	WASHER/0.975	*	3					
11	6215-345-005-00	WASHER/1.0	*	3					
12	6215-345-006-00	WASHER/1.025	*	3					
13	6215-345-007-00	WASHER/1.05	*	3					
14	6215-345-008-00	WASHER/1.075	*	3					
15	6215-345-009-00	WASHER/1.1	*	3					
16	6215-345-010-00	WASHER/1.125	*	3					
17	6215-345-011-00	WASHER/1.15	*	3					
18	6215-345-012-00	WASHER/1.175	*	3					
19	6215-345-013-00	WASHER/1.2	*	3					
20	6215-345-014-00	WASHER/1.225	*	3					
21	6215-345-015-00	WASHER/1.25	*	3					
22	6215-345-016-00	WASHER/1.275	*	3					
23	6215-345-017-00	WASHER/1.3	*	3					
24	6215-345-018-00	WASHER/1.325	*	3					
25	6215-345-019-00	WASHER/1.35	*	3					
26	6215-345-020-00	WASHER/1.375	*	3					
27	6215-345-021-00	WASHER/1.4	*	3					
28	6215-345-022-00	WASHER/1.425	*	3					
29	6215-345-023-00	WASHER/1.45	*	3					
30	6215-345-024-00	WASHER/1.475	*	3					

FIG. 26 COMPONENT PARTS FOR 6215-300-036-00 ON Fig.19

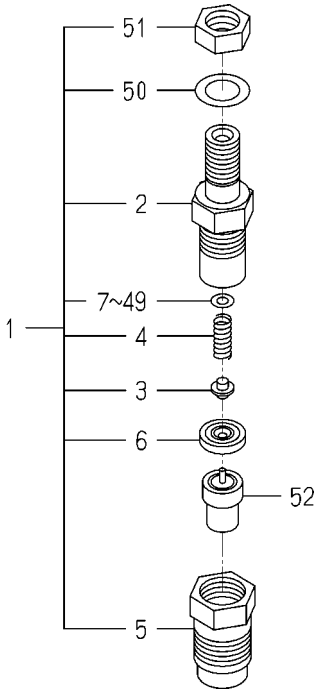

6215-300-036-0A

KEY	PART CODE	DESCRIPTION	SPC	TYPE OF MODEL E3112 B16		ITC	COL	GRP	REMARKS
31	6215-345-025-00	WASHER/1.5	*	3					
32	6215-345-026-00	WASHER/1.525	*	3					
33	6215-345-027-00	WASHER/1.55	*	3					
34	6215-345-028-00	WASHER/1.575	*	3					
35	6215-345-029-00	WASHER/1.6	*	3					
36	6215-345-030-00	WASHER/1.625	*	3					
37	6215-345-031-00	WASHER/1.65	*	3					
38	6215-345-032-00	WASHER/1.675	*	3					
39	6215-345-033-00	WASHER/1.7	*	3					
40	6215-345-034-00	WASHER/1.725	*	3					
41	6215-345-035-00	WASHER/1.75	*	3					
42	6215-345-036-00	WASHER/1.775	*	3					
43	6215-345-037-00	WASHER/1.8	*	3					
44	6215-345-038-00	WASHER/1.825	*	3					
45	6215-345-039-00	WASHER/1.85	*	3					
46	6215-345-040-00	WASHER/1.875	*	3					
47	6215-345-041-00	WASHER/1.9	*	3					
48	6215-345-042-00	WASHER/1.925	*	3					
49	6215-345-043-00	WASHER/1.95	*	3					
50	6215-359-001-00	WASHER	*	3					
51	6215-359-002-00	NUT	*	3					
52	6215-311-027-00	NOZZLE ASSY	*	3					

FIG. 27 COMPONENT PARTS FOR 6215-600-103-10 ON Fig.20

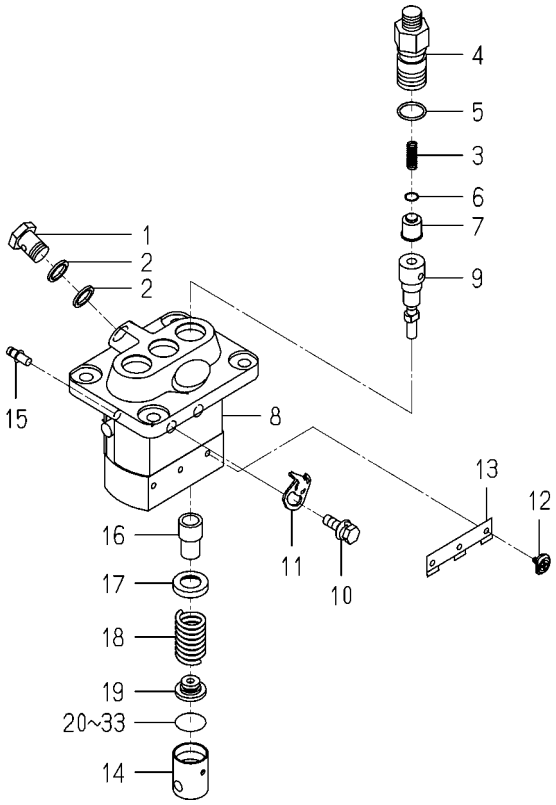

6215-600-103-1C

KEY	PART CODE	DESCRIPTION	SPC	TYPE OF MODEL E3112 B16		ITC	COL	GRP	REMARKS
1	6215-619-009-00	SCREW/HOLLOW	*	1					
2	6215-619-010-00	WASHER/AIR BLEEDER	*	2					
3	6215-643-006-00	SPRING/DELIVERYVALVE	*	3					
4	6215-644-007-00	HOLDER/DELIVERYVALVE	*	3					
5	6215-649-001-00	ORING	*	3					
6	6215-649-002-00	GASKET/DELIVERYVALVE	*	3					
7	6215-641-006-00	VALVE ASSY	*	3					
8	6215-611-001-00	HOUSING ASSY	*	1					
9	6215-631-019-00	ELEMENT ASSY	*	3					
10	6215-619-022-00	BOLT/WASHERHEAD	*	2					
11	6215-612-001-00	PLATE/ADJUSTING	*	2					
12	6215-629-001-00	PIN/INJECTIONPUMP	*	3					
13	6215-629-002-00	PLATE	*	1					
14	6215-622-001-00	TAPPET/INJECTIO ASSY	*	3					
15	6215-637-001-00	RACK/CONTROL ASSY	*	1					
16	6215-635-001-00	SLEEVE/PLUNGER	*	3					
17	6215-639-004-00	SEAT/SPRING/UPPER	*	3					
18	6215-634-001-00	SPRING/PUMPPLUNGER	*	3					
19	6215-639-005-00	SEAT/SPRING/LOWER	*	3					
20	6215-629-003-00	PLATE/TAPPET/AD 0.6	*	1					
21	6215-629-004-00	PLATE/TAPPET/AD 0.7	*	1					
22	6215-629-005-00	PLATE/TAPPET/AD 0.8	*	1					
23	6215-629-006-00	PLATE/TAPPET/AD 0.9	*	1					
24	6215-629-007-00	PLATE/TAPPET/AD 1.0	*	1					
25	6215-629-008-00	PLATE/TAPPET/AD 0.2	*	1					
26	6215-629-009-00	PLATE/TAPPET/AD 0.3	*	1					
27	6215-629-010-00	PLATE/TAPPET/AD 0.4	*	1					
28	6215-629-011-00	PLATE/TAPPET/AD 0.5	*	3					
29	6215-629-012-00	PLATE/TAPPET/AD 0.25	*	1					
30	6215-629-013-00	PLATE/TAPPET/AD 0.35	*	1					

FIG. 27 COMPONENT PARTS FOR 6215-600-103-10 ON Fig.20

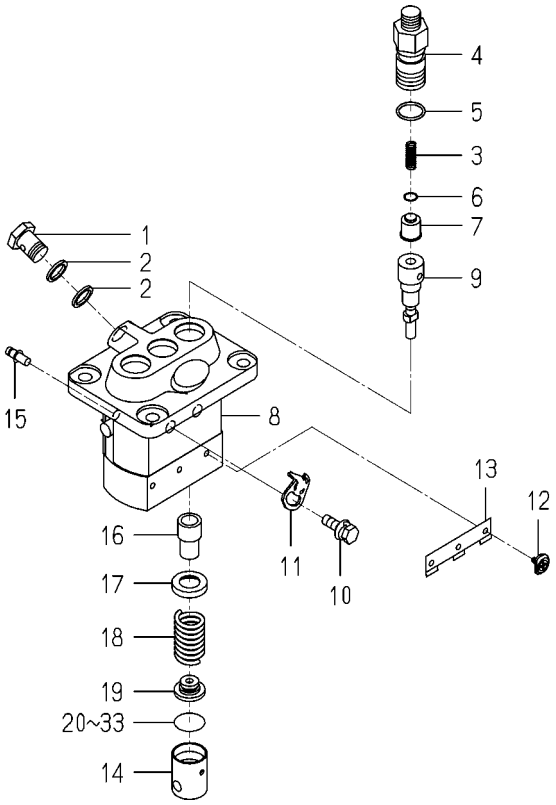

6215-600-103-1C

KEY	PART CODE	DESCRIPTION	SPC	TYPE OF MODEL E3112 B16		ITC	COL	GRP	REMARKS
31	6215-629-014-00	PLATE/TAPPET/AD 0.45	*	1					
32	6215-629-015-00	PLATE/TAPPET/AD 0.55	*	1					
33	6215-629-016-00	PLATE/TAPPET/AD 0.65	*	1					

FIG. 28 COMPONENT PARTS FOR 6281-100-014-00 ON Fig.23

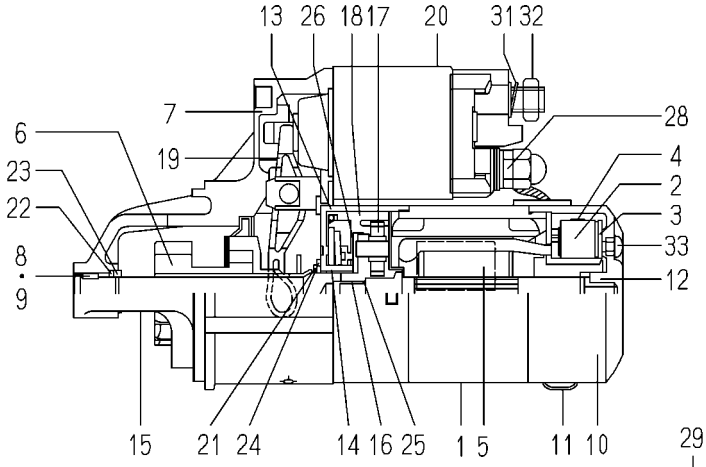

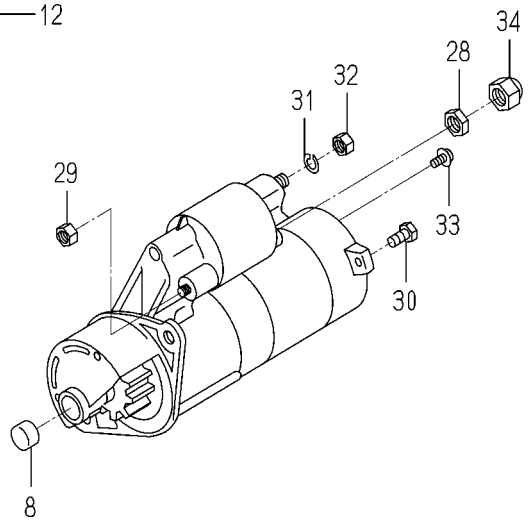

6281-100-014-0A

KEY	PART CODE	DESCRIPTION	SPC	TYPE OF MODEL E3112 B16		ITC	COL	GRP	REMARKS
1	6281-111-009-00	YOKE/STARTER ASSY	*	1					
2	6281-119-009-00	BRUSH/STARTER	*	2					
3	6281-118-007-00	HOLDER/STARTER ASSY	*	1					
4	6281-117-003-00	SPRING/STARTERBRUSH	*	4					
5	6281-121-010-00	ARMATURE/STARTE ASSY	*	1					
6	6281-124-011-00	CLUTCH/STARTER ASSY	*	1					
7	6281-129-064-00	HOUSING/STARTER ASSY	*	1					
8	6281-129-080-00	BEARING/NEEDLE	*	1					
9	6281-129-058-00	BEARING/NEEDLE	*	1					
10	6281-115-017-00	FRAME/COMMUTATOR END	*	1					
11	6281-115-018-00	COVER	*	1					
12	6281-129-065-00	BEARING/OILLESS	*	1					
13	6281-129-066-00	BEARING/WITH SHOCKAB	*	1					
14	6281-129-067-00	BEARING/OILLESS	*	1					
15	6281-129-068-00	SHAFT/STARTER PLANET	*	1					
16	6281-129-069-00	BEARING/OILLESS	*	1					
17	6281-129-070-00	GEAR/STARTER PLANETA	*	3					
18	6281-129-071-00	GEAR/STARTERINTERNAL	*	1					
19	6281-127-003-00	LEVER/PINIONDRIVE	*	1					
20	6281-151-014-00	SWITCH/MAGNETIC ASSY	*	1					
21	6281-129-072-00	RING/SNAP	*	1					
22	6281-129-073-00	RING/SNAP	*	1					
23	6281-129-074-00	NUT/PINIONSTOP	*	1					
24	6281-129-075-00	WASHER/SK	*	1					
25	6281-129-076-00	WASHER/SK	*	1					
26	6281-129-077-00	WASHER/SK	*	1					
27	6281-129-078-00	PLATE	*	1					
28	6281-129-030-00	NUT	*	1					
29	6281-129-029-00	NUT	*	2					
30	6281-129-043-00	BOLT/THROUGH	*	2					

FIG. 28 COMPONENT PARTS FOR 6281-100-014-00 ON Fig.23

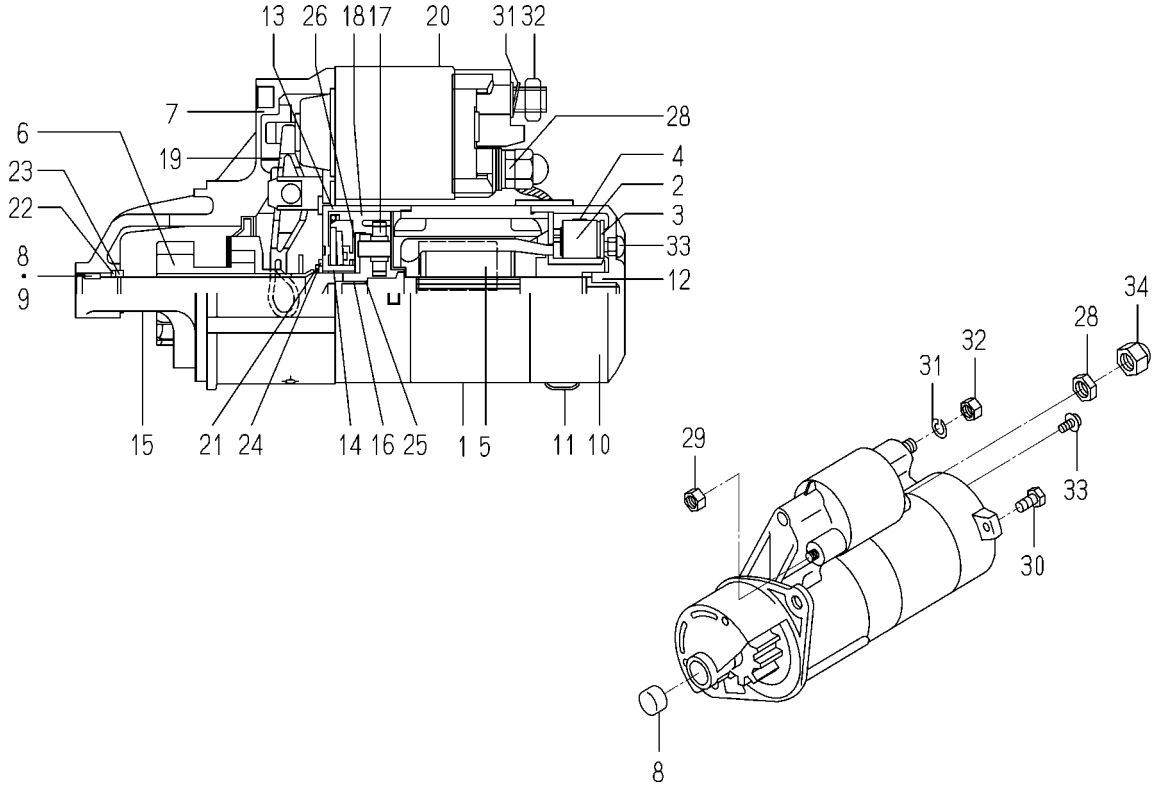

6281-100-014-0A

KEY	PART CODE	DESCRIPTION	SPC	TYPE OF MODEL E3112 B16		ITC	COL	GRP	REMARKS
31	6909-150-508-00	WASHER	*	1					
32	6909-110-408-00	NUT/M8	*	1					
33	6281-129-062-00	SCREW	*	2					
34	6281-129-079-00	NUT	*	1					

FIG. 29 COMPONENT PARTS FOR 6281-200-005-00 ON Fig.23

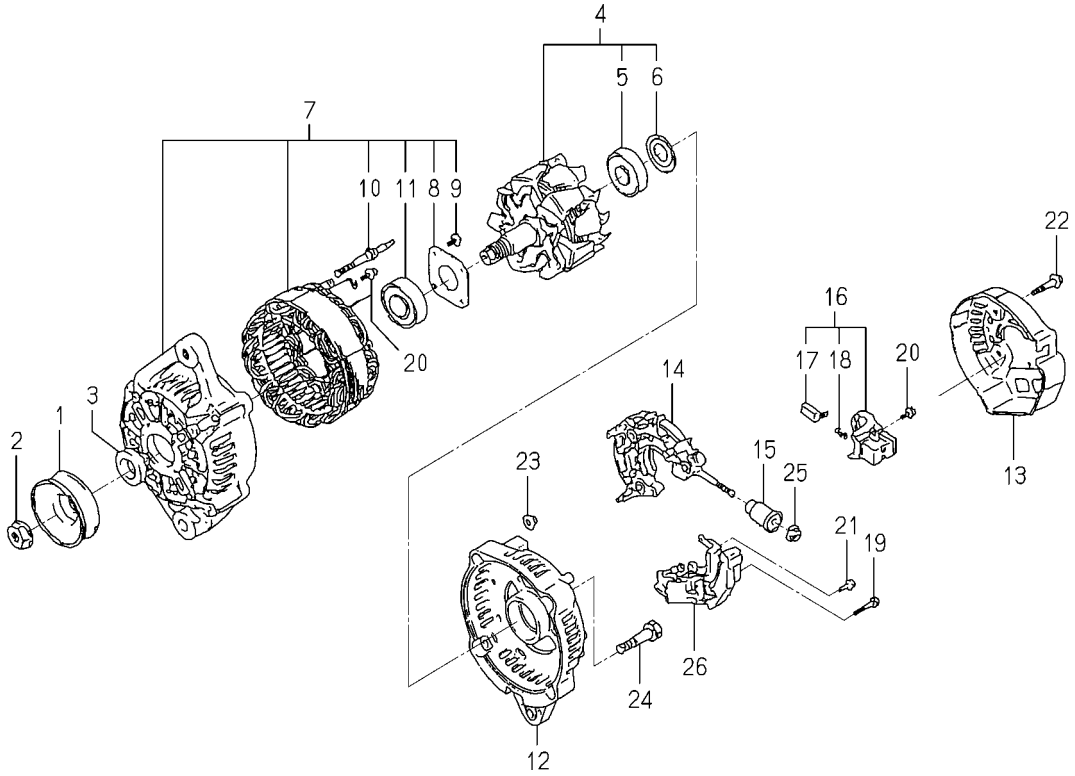

6281-200-005-0B

KEY	PART CODE	DESCRIPTION	SPC	TYPE OF MODEL E3112 B16		ITC	COL	GRP	REMARKS
1	6281-222-004-00	PULLEY	*	1					
2	6281-229-002-00	NUT	*	1					
3	6281-229-003-00	COLLOR	*	1					
4	6281-221-007-00	ROTOR ASSY	*	1					
5	6281-229-004-00	COVER,BEARING	*	1					
6	6281-229-032-00	BEARING/BALL	*	1					
7	6281-213-018-00	FRAME/DRIVEEND ASSY	*	1					
8	6281-229-006-00	PLATE	*	1					
9	6281-229-007-00	BOLT	*	4					
10	6281-229-008-00	BOLT	*	2					
11	6281-229-033-00	BEARING/BALL	*	1					
12	6281-214-003-00	FRAME	*	1					
13	6281-214-004-00	COVER	*	1					
14	6281-229-029-00	HOLDER ASSY	*	1					
15	6281-229-011-00	BUSH	*	1					
16	6281-217-002-00	HOLDER/BRUSH ASSY	*	1					
17	6281-215-001-00	BRUSH	*	2					
18	6281-216-001-00	SPRING	*	2					
19	6281-229-012-00	BOLT	*	2					
20	6281-229-013-00	BOLT	*	6					
21	6281-229-014-00	BOLT	*	1					
22	6281-229-015-00	BOLT	*	3					
23	6281-229-016-00	NUT	*	2					
24	6281-229-017-00	BOLT	*	2					
25	6281-229-018-00	NUT	*	1					
26	6281-271-002-00	REGULATOR ASSY	*	1					

C H A S S I S

FIG. 1 RADIATOR SYSTEM (EXCEPT H TYPE)

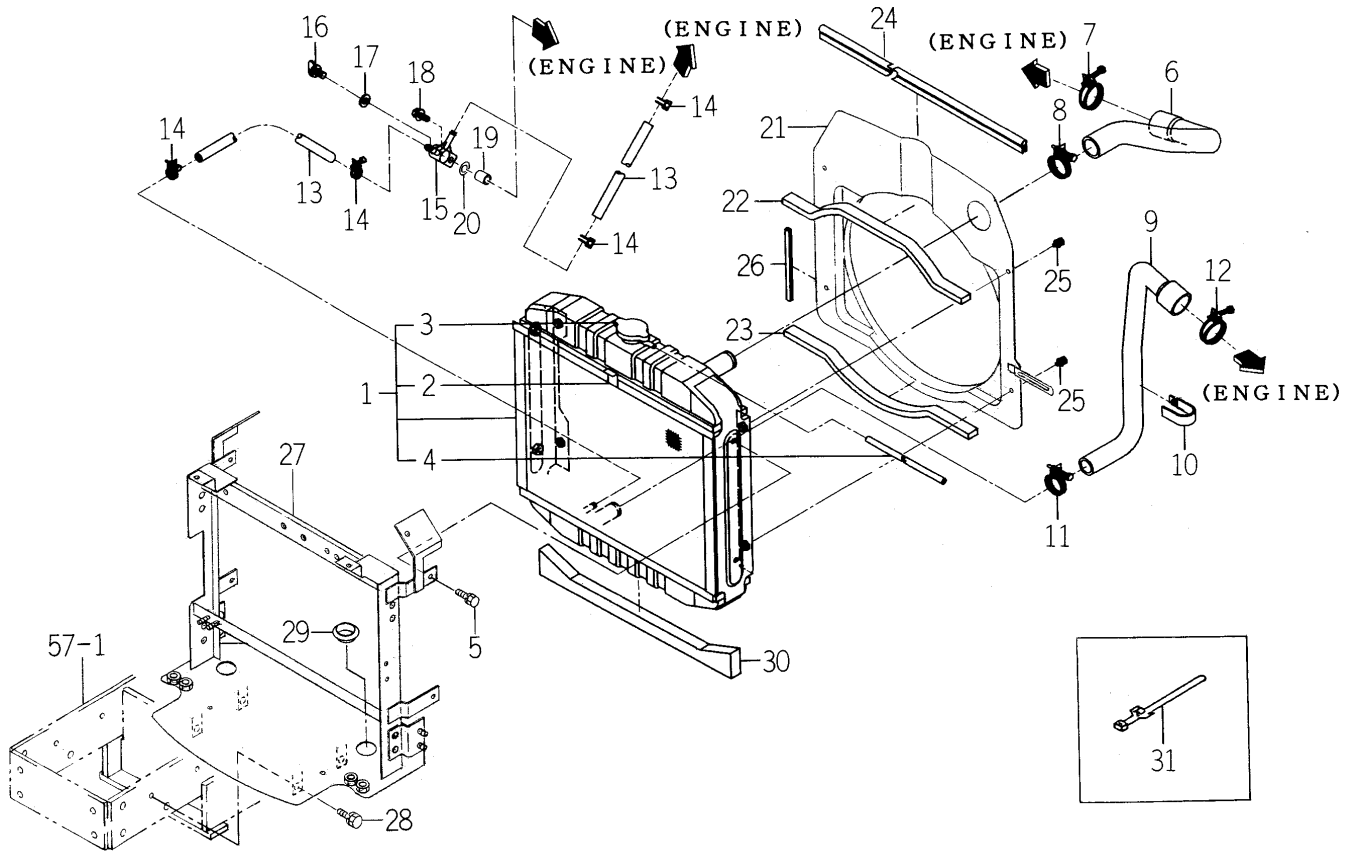

1750-102 -0100

KEY	PART CODE	DESCRIPTION	SPC	TYPE OF MODEL				ITC	COL	GRP	REMARKS
				TM3200	TM3200H	TM3240	TM3240H				
1	1716-102-230-10	RADIATOR ASSY	*	1		1					
2	1622-102-520-00	NET/WIRE COMP	*	1		1					
3	1614-102-213-00	CAP	*	1		1					
4	1614-102-214-00	HOSE	*	1		1					
5	V211-260-801-60	BOLT,SEMS (S) M8X16	*	4		4					
6	1675-102-004-00	HOSE/RADIATOR/INLET	*	1		1					
7	J061-236-044-00	CLAMP/WIRE/36-44	*	1		1					
8	J061-230-038-00	CLAMP/WIRE/30-38	*	1		1					
9	1614-102-002-00	HOSE/RADIATOR/OUTLET	*	1		1					
10	1425-621-004-00	HOLDER/JE/9-9	*	1		1					
11	J061-224-032-00	CLAMP/WIRE/24-32	*	1		1					
12	J061-236-044-00	CLAMP/WIRE/36-44	*	1		1					
13	1682-102-004-00	HOSE/250	*	2		2					
14	J061-210-015-00	CLAMP/WIRE/10-15	*	4		4					
15	1560-104-010-40	CONNECTOR	*	1		1					
16	1424-101-203-00	PLUG	*	1		1					
17	1424-101-204-00	PACKING	*	1		1					
18	V211-360-804-00	BOLT	*	1		1					
19	1617-102-006-00	HUB/09X14X20	*	1		1					
20	V411-260-008-00	WASHER,PL/M 8	*	1		1					
21	1750-102-220-10	SHROUD COMP	*	1		1					
22	1675-102-002-00	INSULATOR	*	1		1					
23	1650-102-006-00	INSULATOR	*	1		1					
24	1716-102-003-00	INSULATOR/550	*	1		1					
25	V210-360-601-20	BOLT,SEMS	*	4		4					
26	1705-102-014-00	TRIM/130	*	1		1					
27	1750-102-210-40	BRACKET/RADIATO COMP	*	1		1					
28	V211-260-801-60	BOLT,SEMS (S) M8X16	*	4		4					
29	1560-630-029-00	CAP/30	*	2		2					
30	1716-410-004-10	INSULATOR	*	1		1					

FIG. 1 RADIATOR SYSTEM (EXCEPT H TYPE)

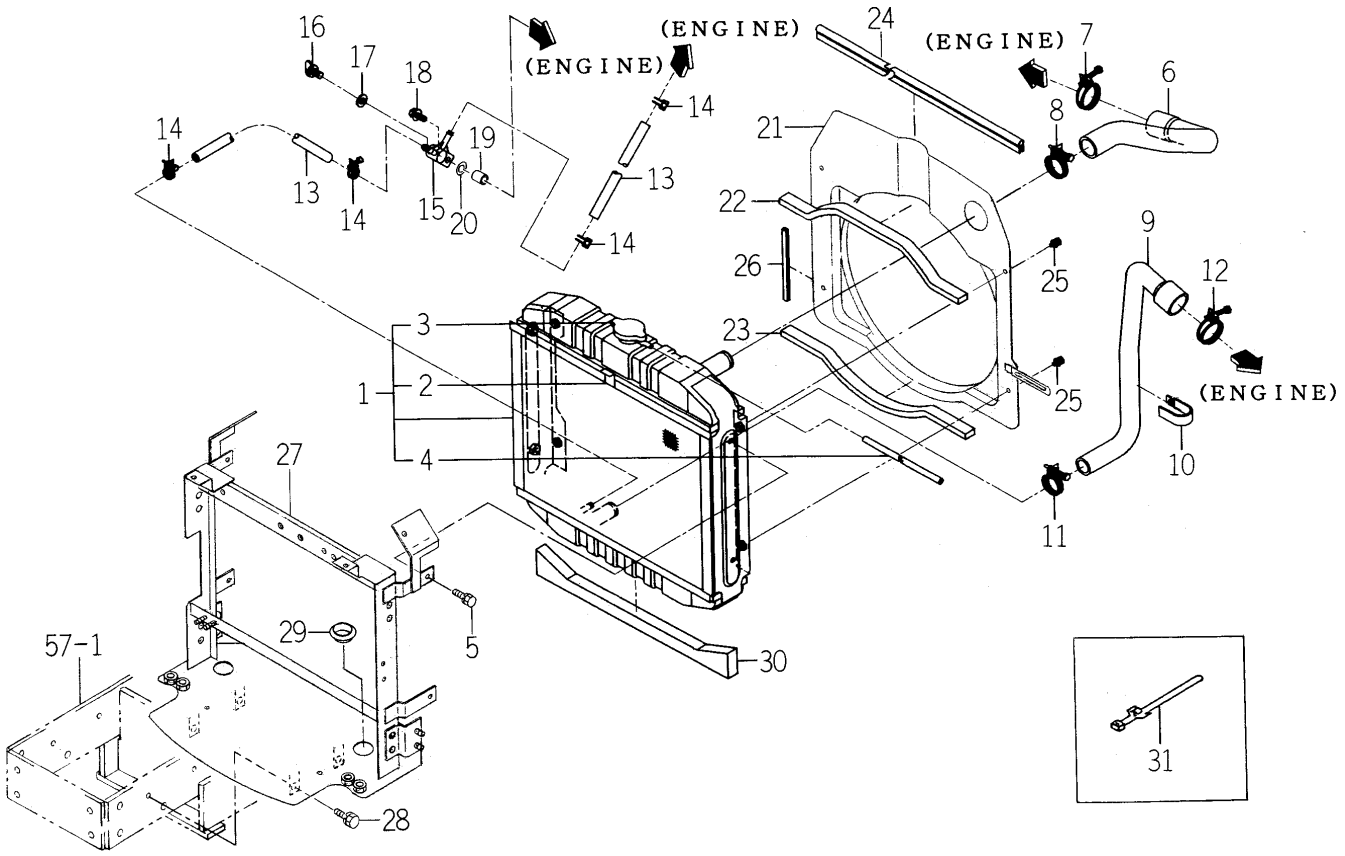

1750-102 -0100

KEY	PART CODE	DESCRIPTION	SPC	TYPE OF MODEL				ITC	COL	GRP	REMARKS
				TM3200	TM3200H	TM3240	TM3240H				
31	1560-666-004-00	BAND	*	1		1					

FIG. 2 RADIATOR SYSTEM (H TYPE)

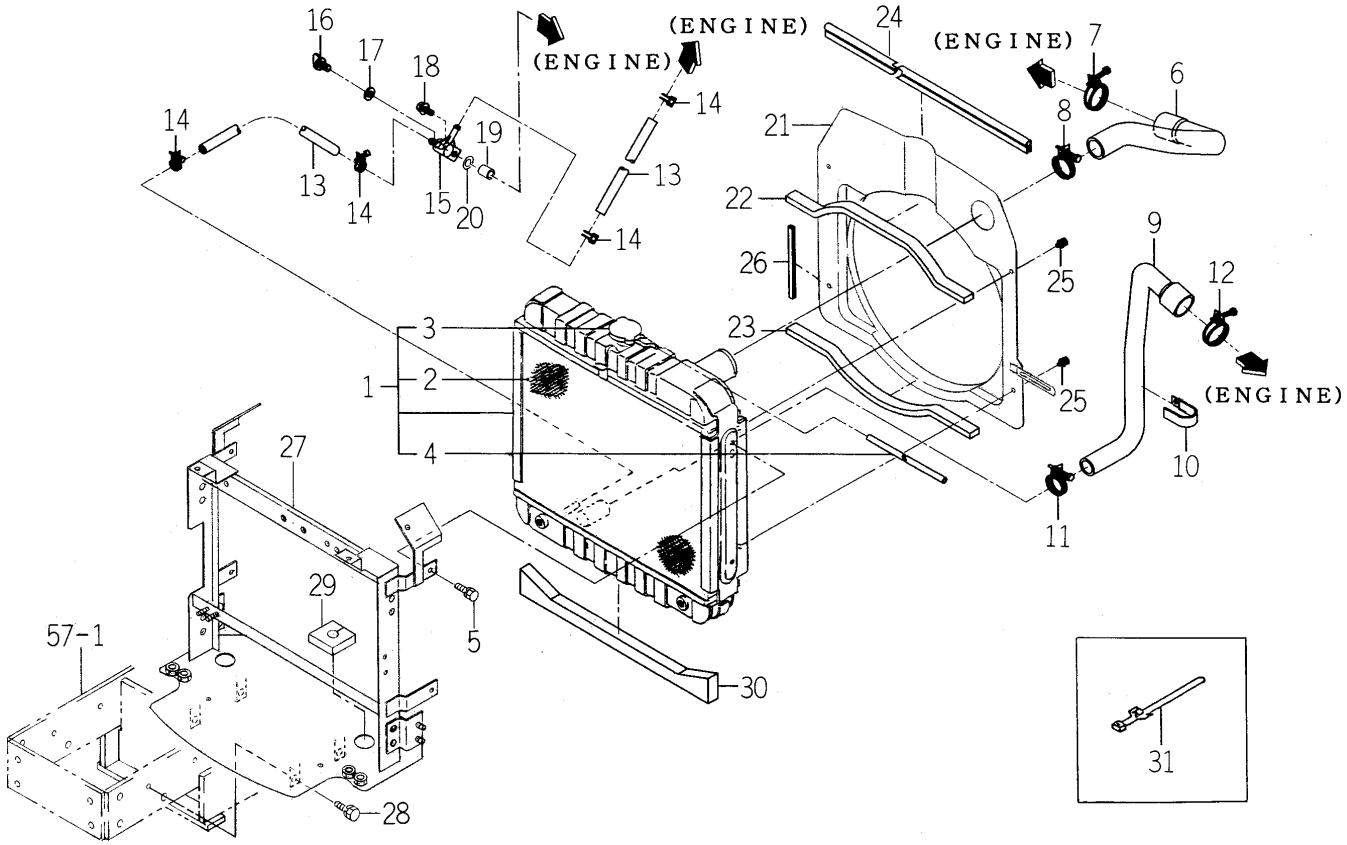

1750-102A-0100

KEY	PART CODE	DESCRIPTION	SPC	TYPE OF MODEL				ITC	COL	GRP	REMARKS
				TM3200	TM3200H	TM3240	TM3240H				
1	1750-102-230-00	RADIATOR ASSY	*		1		1				
2	1639-102-202-00	NET/WIRE COMP	*		1		1				
3	1614-102-213-00	CAP	*		1		1				
4	1614-102-214-00	HOSE	*		1		1				
5	V211-260-801-60	BOLT,SEMS (S) M8X16	*		4		4				
6	1675-102-004-00	HOSE/RADIATOR/INLET	*		1		1				
7	J061-236-044-00	CLAMP/WIRE/36-44	*		1		1				
8	J061-230-038-00	CLAMP/WIRE/30-38	*		1		1				
9	1614-102-002-00	HOSE/RADIATOR/OUTLET	*		1		1				
10	1425-621-004-00	HOLDER/JE/9-9	*		1		1				
11	J061-224-032-00	CLAMP/WIRE/24-32	*		1		1				
12	J061-236-044-00	CLAMP/WIRE/36-44	*		1		1				
13	1682-102-004-00	HOSE/250	*		2		2				
14	J061-210-015-00	CLAMP/WIRE/10-15	*		4		4				
15	1560-104-010-40	CONNECTOR	*		1		1				
16	1424-101-203-00	PLUG	*		1		1				
17	1424-101-204-00	PACKING	*		1		1				
18	V211-360-804-00	BOLT	*		1		1				
19	1617-102-006-00	HUB/09X14X20	*		1		1				
20	V411-260-008-00	WASHER,PL/M 8	*		1		1				
21	1750-102-220-10	SHROUD COMP	*		1		1				
22	1675-102-002-00	INSULATOR	*		1		1				
23	1650-102-006-00	INSULATOR	*		1		1				
24	1716-102-003-00	INSULATOR/550	*		1		1				
25	V210-360-601-20	BOLT,SEMS	*		4		4				
26	1705-102-014-00	TRIM/130	*		1		1				
27	1750-102-210-40	BRACKET/RADIATO COMP	*		1		1				
28	V211-260-801-60	BOLT,SEMS (S) M8X16	*		4		4				
29	1741-112-053-10	INSULATOR/50X50X15	*		2		2				
30	1716-410-004-10	INSULATOR	*		1		1				

FIG. 2 RADIATOR SYSTEM (H TYPE)

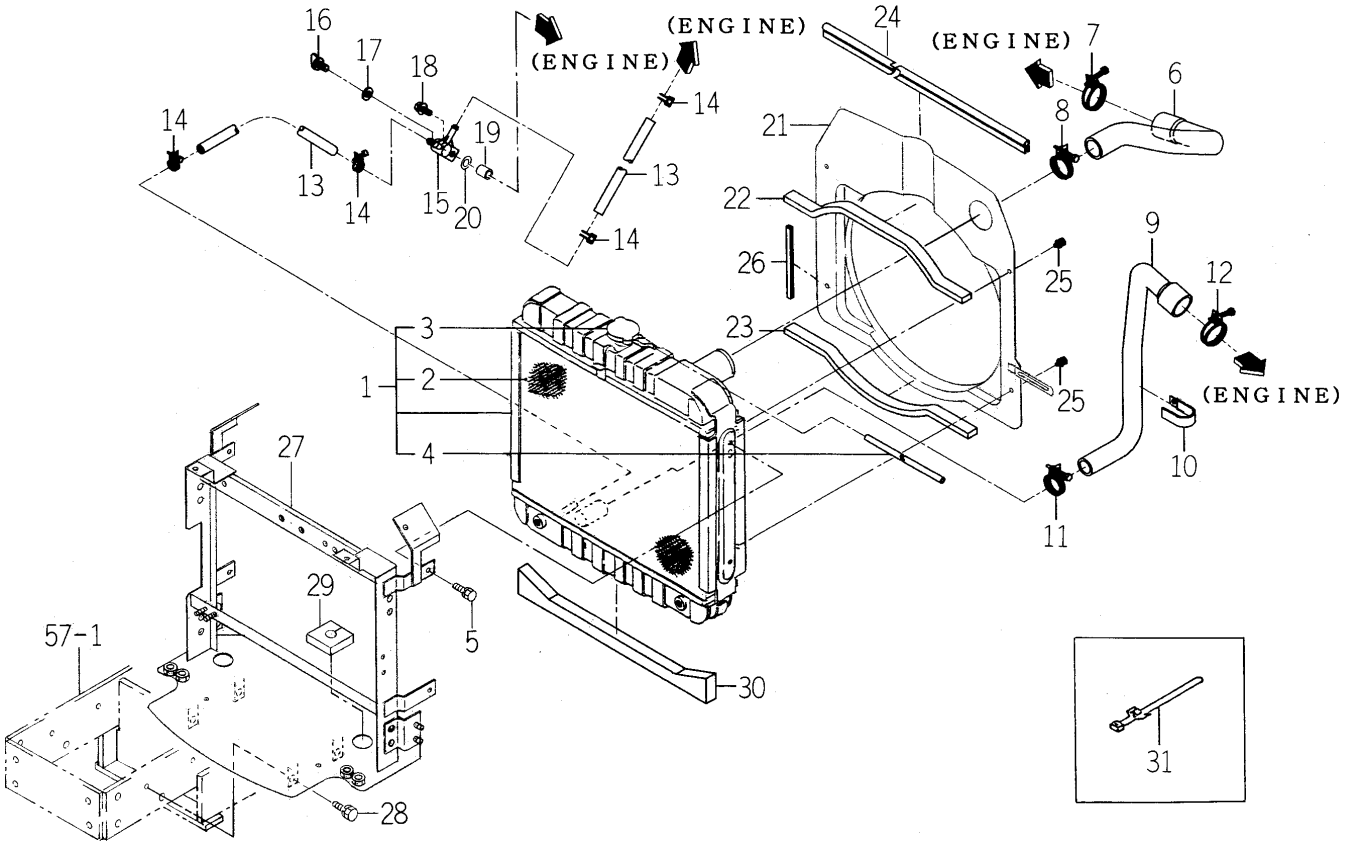

1750-102A-0100

KEY	PART CODE	DESCRIPTION	SPC	TYPE OF MODEL				ITC	COL	GRP	REMARKS
				TM3200	TM3200H	TM3240	TM3240H				
31	1560-666-004-00	BAND	*		1		1				

FIG. 3 MUFFLER SYSTEM

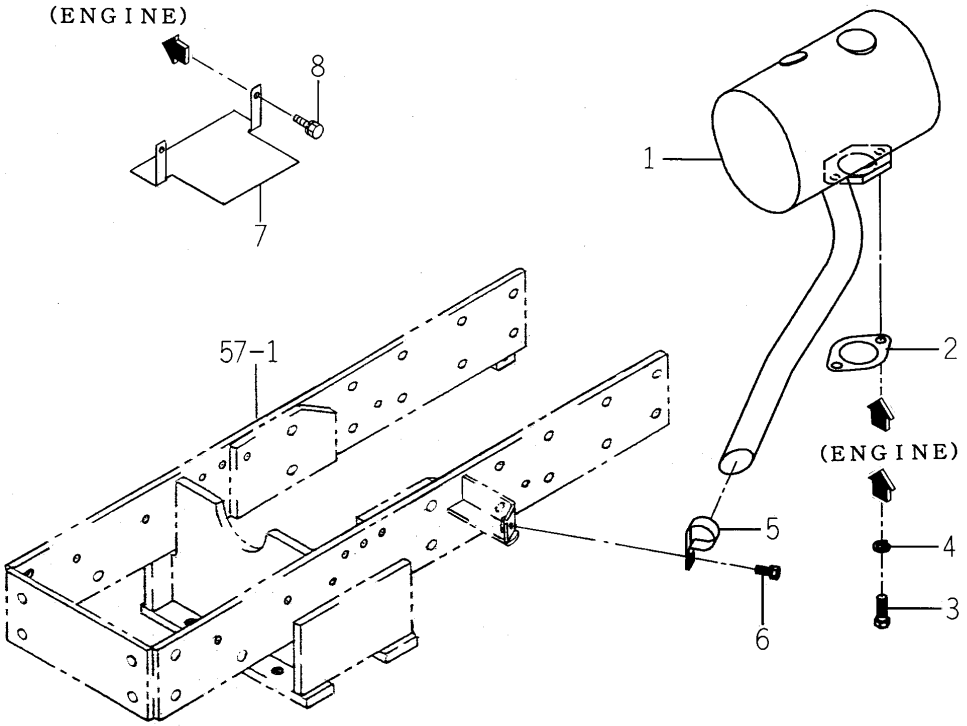

1716-103 -0100

KEY	PART CODE	DESCRIPTION	SPC	TYPE OF MODEL				ITC	COL	GRP	REMARKS
				TM3200	TM3200H	TM3240	TM3240H				
1	1716-103-200-20	MUFFLER COMP	*	1	1	1	1				
2	1594-105-001-00	GASKET	*	1	1	1	1				
3	V203-361-003-00	BOLT	*	2	2	2	2				
4	V401-160-010-00	WASHER,SP/M10	*	2	2	2	2				
5	1672-103-001-00	CLAMP/32	*	1	1	1	1				
6	V211-360-802-00	BOLT/SP	*	1	1	1	1				
7	1717-103-001-00	COVER	*	1	1	1	1				
8	V211-260-801-60	BOLT,SEMS (S) M8X16	*	2	2	2	2				

FIG. 4 AIR CLEANER SYSTEM

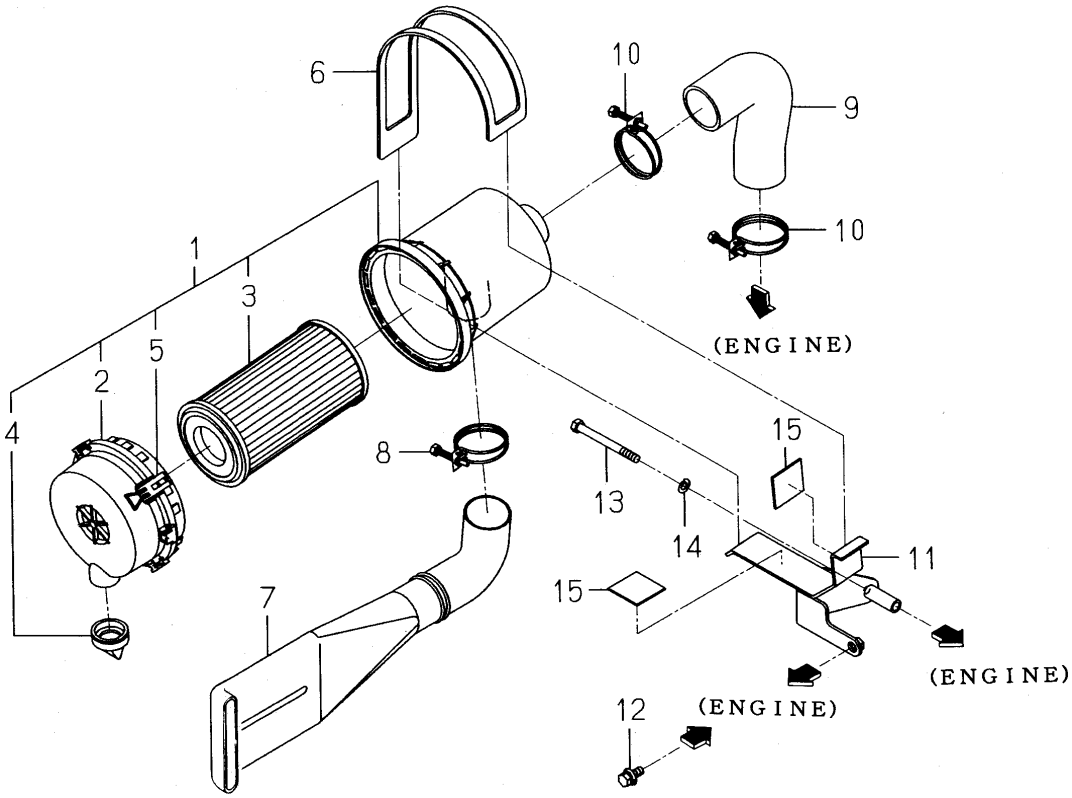

1750-104 -0100

KEY	PART CODE	DESCRIPTION	SPC	TYPE OF MODEL				ITC	COL	GRP	REMARKS
				TM3200	TM3200H	TM3240	TM3240H				
1	1675-104-210-10	CLEANER/AIR ASSY	*	1	1	1	1				
2	1675-104-211-00	COVER ASSY	*	1	1	1	1				
3	1675-104-213-00	ELEMENT ASSY	*	1	1	1	1				
4	1544-104-205-00	VALVE	*	1	1	1	1				
5	1650-104-201-00	CLIP	*	2	2	2	2				
6	1703-104-003-00	BAND/CLEANER	*	1	1	1	1				
7	1675-104-001-00	PIPE/CLEANER/INLET	*	1	1	1	1				
8	J061-242-050-00	CLAMP/WIRE/42-50	*	1	1	1	1				
9	1675-104-002-00	HOSE/CLEANER/OUTLET	*	1	1	1	1				
10	J061-247-055-00	CLAMP/WIRE/47-55	*	2	2	2	2				
11	1726-104-200-00	BRACKET/CLEANER COMP	*	1	1	1	1				
12	V211-360-802-00	BOLT/SP	*	1	1	1	1				
13	V201-260-808-00	BOLT/M 8X80	*	1	1	1	1				
14	V401-160-008-00	WASHER,SP/M 8	*	1	1	1	1				
15	1427-111-229-00	CUSHION,RUBBER	*	2	2	2	2				

FIG. 5 FILTER SYSTEM

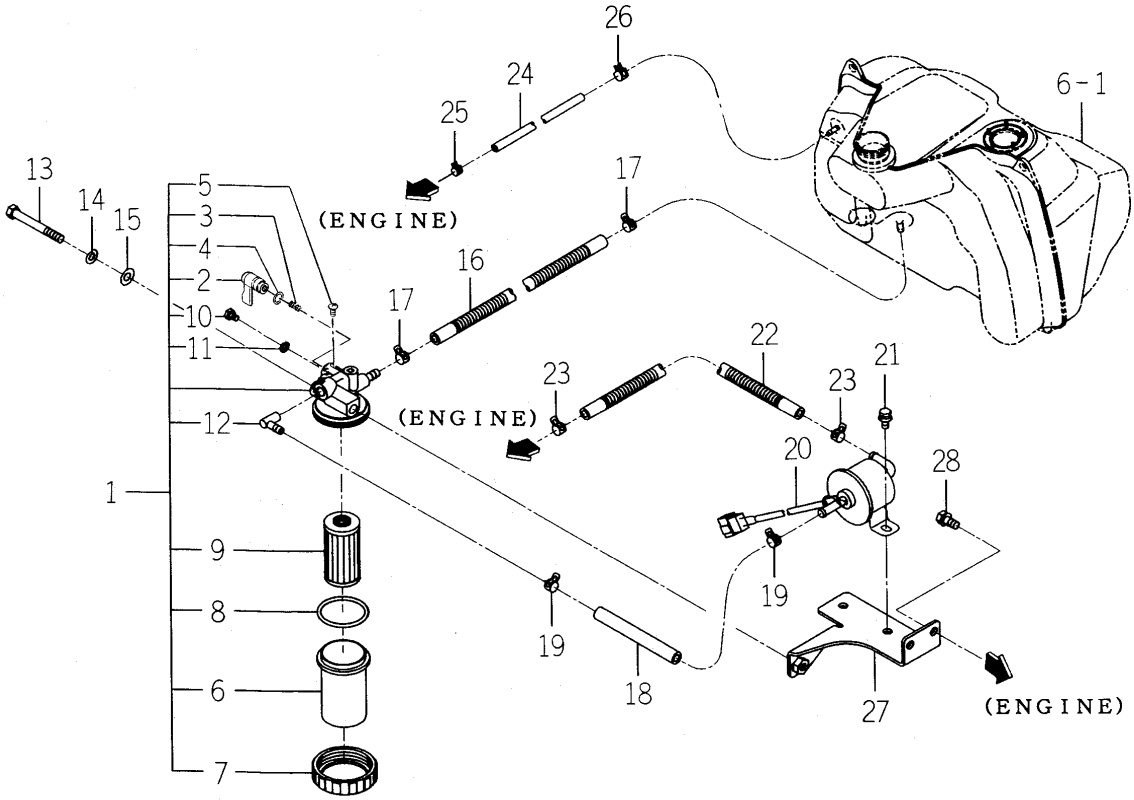

1716-105 -0100

KEY	PART CODE	DESCRIPTION	SPC	TYPE OF MODEL				ITC	COL	GRP	REMARKS
				TM3200	TM3200H	TM3240	TM3240H				
1	1716-105-200-00	FILTER/FUEL ASSY	*	1	1	1	1				
2	1444-102-202-00	LEVER	*	1	1	1	1				
3	1415-102-007-00	SPRING,VALVE	*	1	1	1	1				
4	V720-102-401-00	O-RING/P10A	*	1	1	1	1				
5	1415-102-008-00	VIS	*	1	1	1	1				
6	1440-103-201-00	CAP	*	1	1	1	1				
7	1444-102-204-00	NUT,RING	*	1	1	1	1				
8	V720-103-504-40	O-RING/P44	*	1	1	1	1				
9	1672-105-211-00	ELEMENT	*	1	1	1	1				
10	1572-102-003-00	BOLT/M06X08/APSET	*	2	2	2	2				
11	1415-102-013-00	PACKING	*	2	2	2	2				
12	1444-102-206-00	JOINT,L TYPE	*	1	1	1	1				
13	V201-260-806-50	BOLT/M 8X65	*	1	1	1	1				
14	V401-160-008-00	WASHER,SP/M 8	*	1	1	1	1				
15	V411-260-008-00	WASHER,PL/M 8	*	1	1	1	1				
16	1716-105-001-00	HOSE/08X13X300	*	1	1	1	1				
17	J062-119-126-00	CLIP/HOSE/11.9-12.6	*	2	2	2	2				
18	1560-102-003-20	HOSE/110	*	1	1	1	1				
19	J062-119-126-00	CLIP/HOSE/11.9-12.6	*	2	2	2	2				
20	1703-105-210-00	PUMP/FUEL ASSY	*	1	1	1	1				
21	V210-360-601-60	BOLT(SP)/M6X16	*	2	2	2	2				
22	1716-105-001-00	HOSE/08X13X300	*	1	1	1	1				
23	J062-119-126-00	CLIP/HOSE/11.9-12.6	*	2	2	2	2				
24	1614-105-004-00	HOSE/04X08X400	*	1	1	1	1				
25	J062-081-087-00	CLIP/HOSE/8.1-8.7	*	1	1	1	1				
26	J062-104-111-00	CLIP/HOSE/10.4-11.1	*	1	1	1	1				
27	1716-105-210-00	BRACKET/FILTER COMP	*	1	1	1	1				
28	V211-260-801-60	BOLT,SEMS (S) M8X16	*	2	2	2	2				

FIG. 6 FUEL TANK SYSTEM

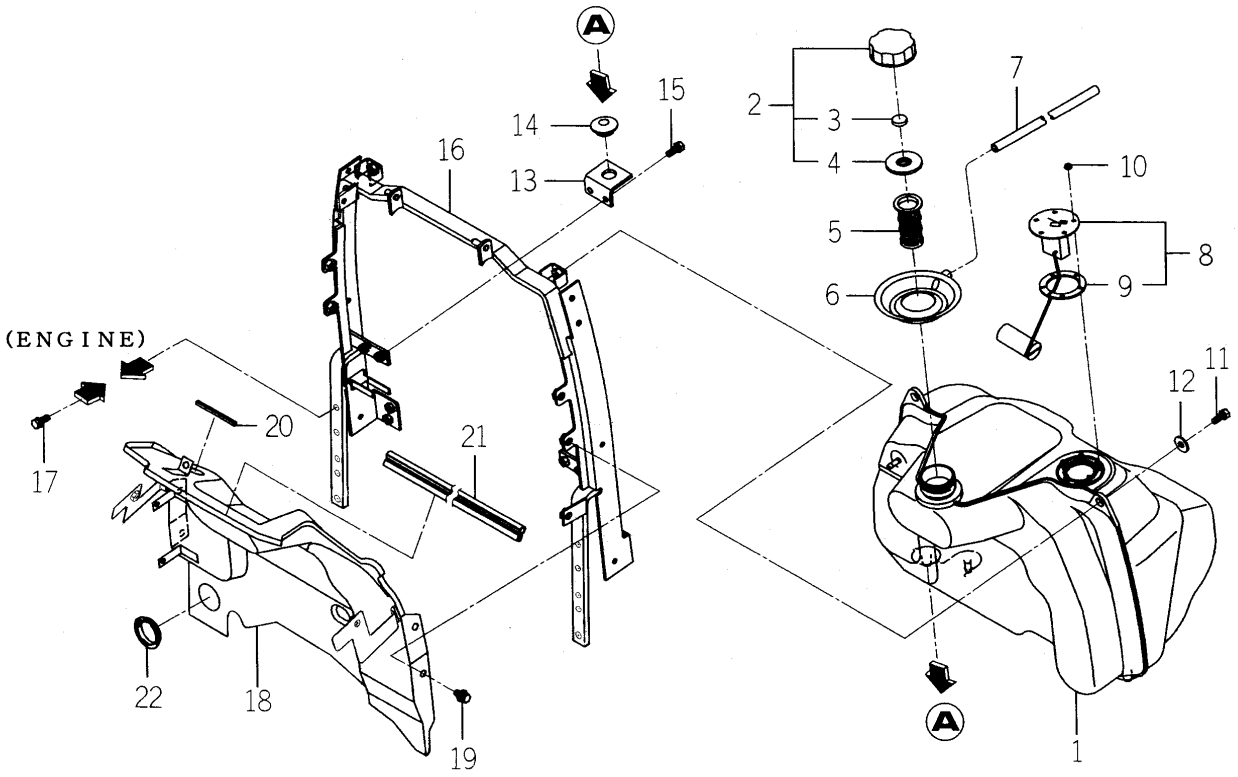

1750-111 -0100

KEY	PART CODE	DESCRIPTION	SPC	TYPE OF MODEL				ITC	COL	GRP	REMARKS
				TM3200	TM3200H	TM3240	TM3240H				
1	1716-111-001-00	TANK/FUEL	*	1	1	1	1				
2	1593-612-220-10	CAP,TANK	*	1	1	1	1				
3	2706-501-003-00	BREATHER,TANK CAP	*	1	1	1	1				
4	2706-501-004-00	GASKET	*	1	1	1	1				
5	1716-111-004-00	FILTER/FUEL	*	1	1	1	1				
6	2161-111-004-00	CUP/FUEL	*	1	1	1	1				
7	P103-112-003-20	HOSE/700	*	1	1	1	1				
8	1703-680-200-10	GAUGE/FUEL ASSY	*	1	1	1	1				
9	1416-621-037-00	PACKING/RUBBER	*	1	1	1	1				
10	1617-730-005-00	NUT/WASHER	*	5	5	5	5				
11	V211-260-802-00	BOLT/S	*	2	2	2	2				
12	4101-102-038-00	WASHER/24X9X3.2	*	2	2	2	2				
13	1716-111-005-00	PLATE/L/50X45	*	2	2	2	2				
14	1421-603-004-00	BUSH,LEVER	*	2	2	2	2				
15	V211-260-802-00	BOLT/S	*	4	4	4	4				
16	1750-111-200-20	BRACKET/TANK COMP	*	1	1	1	1				
17	V211-260-802-00	BOLT/S	*	4	4	4	4				
18	1750-111-210-00	COVER/TANK COMP	*	1	1	1	1				
19	V211-360-801-60	BOLT,SEMS (SP)	*	4	4	4	4				
20	1717-111-001-00	INSULATOR	*	1	1	1	1				
21	1600-616-006-00	INSULATOR/75	*	1	1	1	1				
22	3817-335-021-00	GROMMET	*	1	1	1	1				

FIG. 7 BATTERY SYSTEM

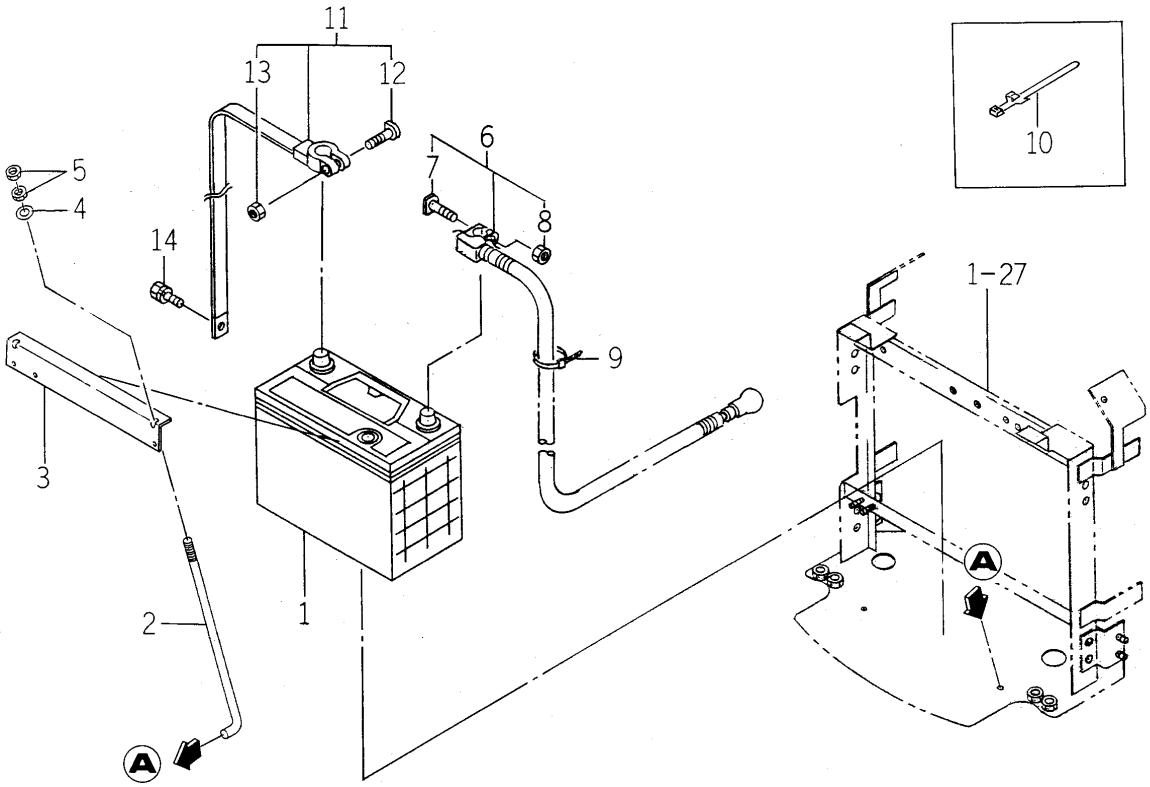

1750-112 -0100

KEY	PART CODE	DESCRIPTION	SPC	TYPE OF MODEL				ITC	COL	GRP	REMARKS
				TM3200	TM3200H	TM3240	TM3240H				
1	1684-112-300-10	BATTERY/55B24R/ ASSY	*	1	1	1	1				
2	1675-112-002-00	BOLT/BATTERY	*	2	2	2	2				
3	1682-112-006-10	PLATE/BATTERY	*	1	1	1	1				
4	V411-260-006-00	WASHER / M6	*	2	2	2	2				
5	V301-260-006-00	NUT/M 6	*	4	4	4	4				
6	1716-112-210-00	CABLE/BATTERY ASSY	*	1	1	1	1				
7	1600-112-231-00	BOLT/M06X32	*	1	1	1	1				
8	1600-112-232-00	NUT/M06	*	1	1	1	1				
9	1376-402-003-00	BAND,WIRE/140	*	1	1	1	1				
10	1560-666-004-00	BAND	*	1	1	1	1				
11	1634-650-200-00	STRAP/GROUND ASSY	*	1	1	1	1				
12	1568-650-004-10	BOLT/M08X32	*	1	1	1	1				
13	1568-650-005-10	NUT/M08	*	1	1	1	1				
14	V211-260-802-00	BOLT/S	*	1	1	1	1				

FIG. 8 ACCELERATOR PEDAL (EXCEPT H TYPE), ACCELERATOR SYSTEM

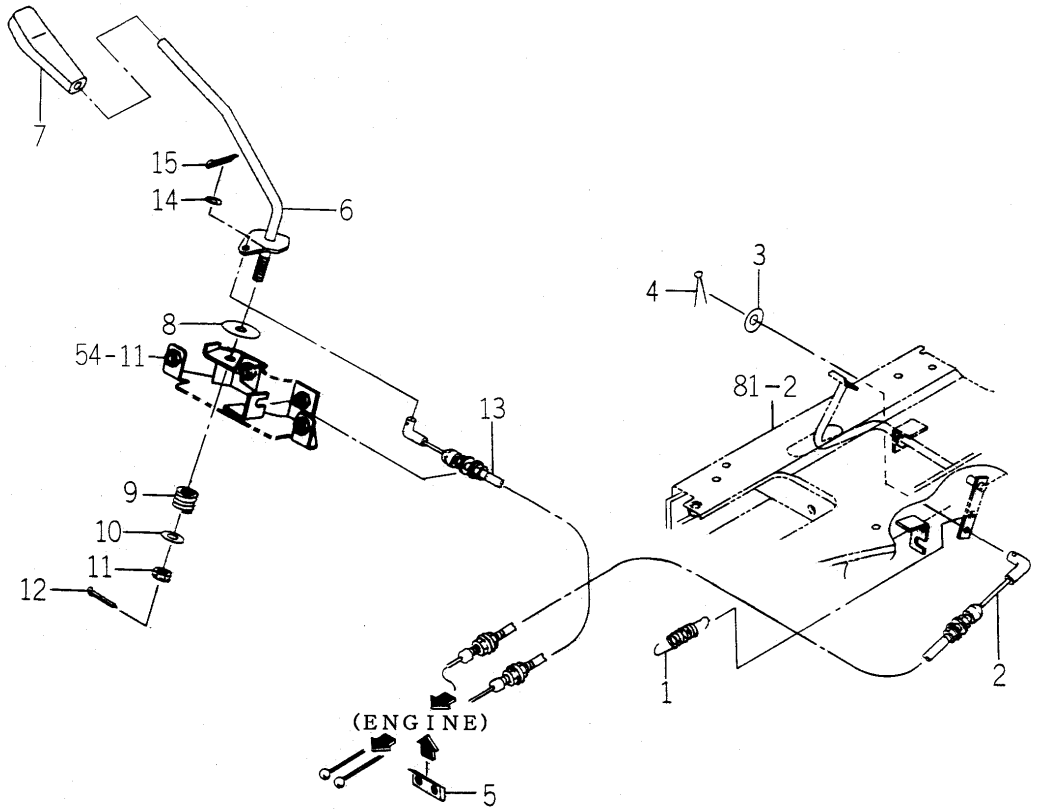

1716-116A-0100,1738-117 -0100

KEY	PART CODE	DESCRIPTION	SPC	TYPE OF MODEL				ITC	COL	GRP	REMARKS
				TM3200	TM3200H	TM3240	TM3240H				
1	1414-312-002-00	SPRING,TENSION/53	*	1		1					
2	1716-116-200-00	CABLE/PEDAL ASSY	*	1		1					
3	V411-260-006-00	WASHER / M6	*	1		1					
4	V500-162-002-00	PIN,SPLIT/2 X20	*	1		1					
5	1675-116-001-00	HOLDER	*	1		1					
6	1612-117-200-20	LEVER COMP	*	1	1	1	1				
7	1646-116-051-00	GRIP/THROTTLE	*	1	1	1	1				
8	1600-117-002-00	LINING/11X40X03	*	1	1	1	1				
9	1404-117-008-00	SPRING,PRESS/22	*	1	1	1	1				
10	2130-713-002-10	WASHER	*	1	1	1	1				
11	V328-262-110-00	NUT	*	1	1	1	1				
12	V500-162-502-50	PIN,SPLIT/2.5X25	*	1	1	1	1				
13	1675-117-210-20	CABLE/ACCELERATOR	*	1	1	1	1				
14	V411-260-006-00	WASHER / M6	*	1	1	1	1				
15	V500-162-002-00	PIN,SPLIT/2 X20	*	1	1	1	1				

FIG. 9 MAIN CLUTCH,INPUT SHAFT SYSTEM (EXCEPT H TYPE)

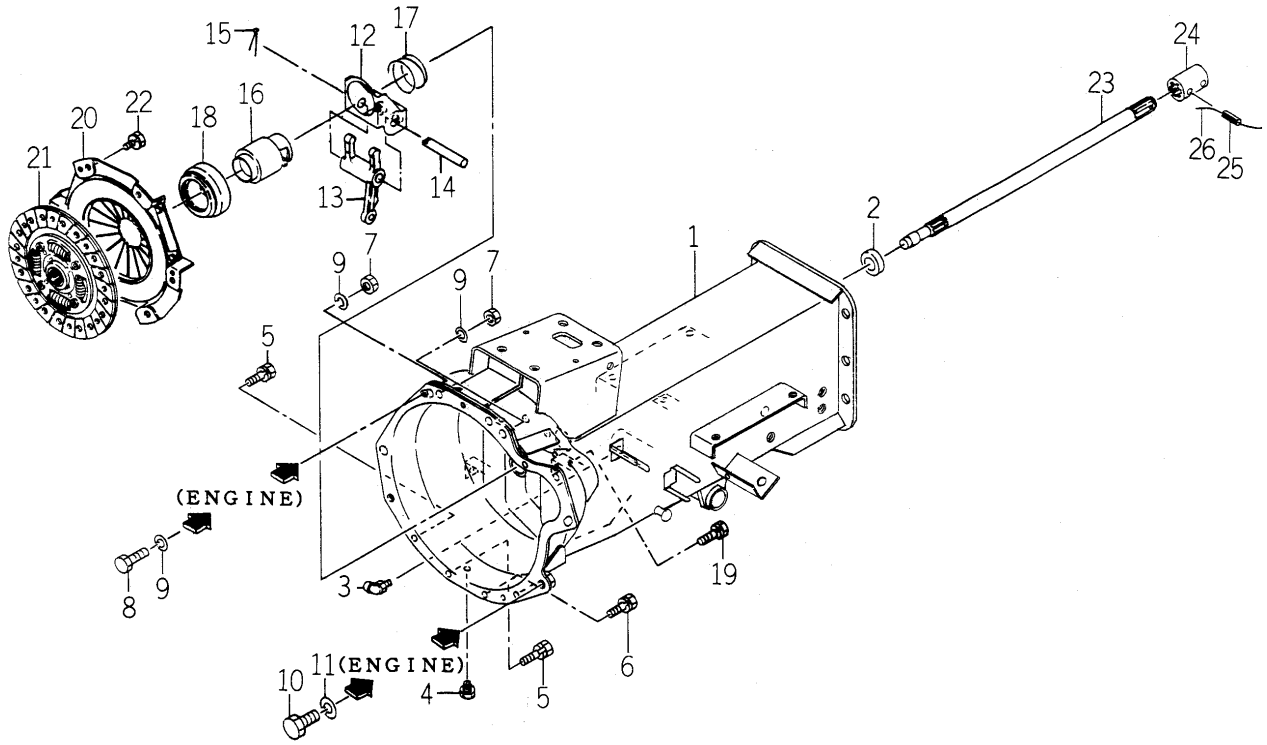

1750-120 -0100,1750-125 -0100

KEY	PART CODE	DESCRIPTION	SPC	TYPE OF MODEL				ITC	COL	GRP	REMARKS
				TM3200	TM3200H	TM3240	TM3240H				
1	1750-120-210-30	HOUSING/CLUTCH COMP	*	1		1					
2	V744-120-350-70	SEAL,OIL/TC20357	*	1		1					
3	V763-150-000-00	NIPPLE,GREASE/PT1/8	*	1		1					
4	V782-160-000-2T	PLUG/SCREW/SEAL	*	1		1					
5	V211-260-801-60	BOLT,SEMS (S) M8X16	*	3		3					
6	V211-260-803-00	BOLT,SEMS	*	1		1					
7	V334-460-010-00	NUT/M10 7T P=1.25	*	2		2					
8	V203-361-002-00	BOLT/M10X1.25X20	*	2		2					
9	V401-160-010-00	WASHER,SP/M10	*	4		4					
10	V201-361-202-50	BOLT/M12X25	*	2		2					
11	V401-160-012-00	WASHER,SP/M12	*	2		2					
12	1434-122-230-10	BRACKET COMP	*	1		1					
13	1435-122-002-00	FORK/RELEASE	*	1		1					
14	1672-120-006-00	PIN/12X75	*	1		1					
15	V500-163-002-00	PIN,SPLIT/3 X20	*	1		1					
16	1672-120-007-00	SLEEVE	*	1		1					
17	1434-120-005-00	SPRING/HC50	*	1		1					
18	1491-120-001-00	BEARING,CLUTCH RS	*	1		1					
19	V211-260-801-60	BOLT,SEMS (S) M8X16	*	2		2					
20	1684-120-210-00	COVER/CLUTCH ASSY	*	1		1					
21	1684-120-220-00	DISK/CLUTCHCONP	*	1		1					
22	V211-260-802-00	BOLT/S	*	6		6					
23	1684-120-001-10	SHAFT/INPUT	*	1		1					
24	1435-120-002-30	COUPLING/16X27X62	*	1		1					
25	V580-140-602-80	PIN,SPRING/6 X28 W	*	2		2					
26		WIRE	*	1		1					

FIG. 10 CLUTCH HOUSING,INPUT SHAFT SYSTEM (H TYPE)

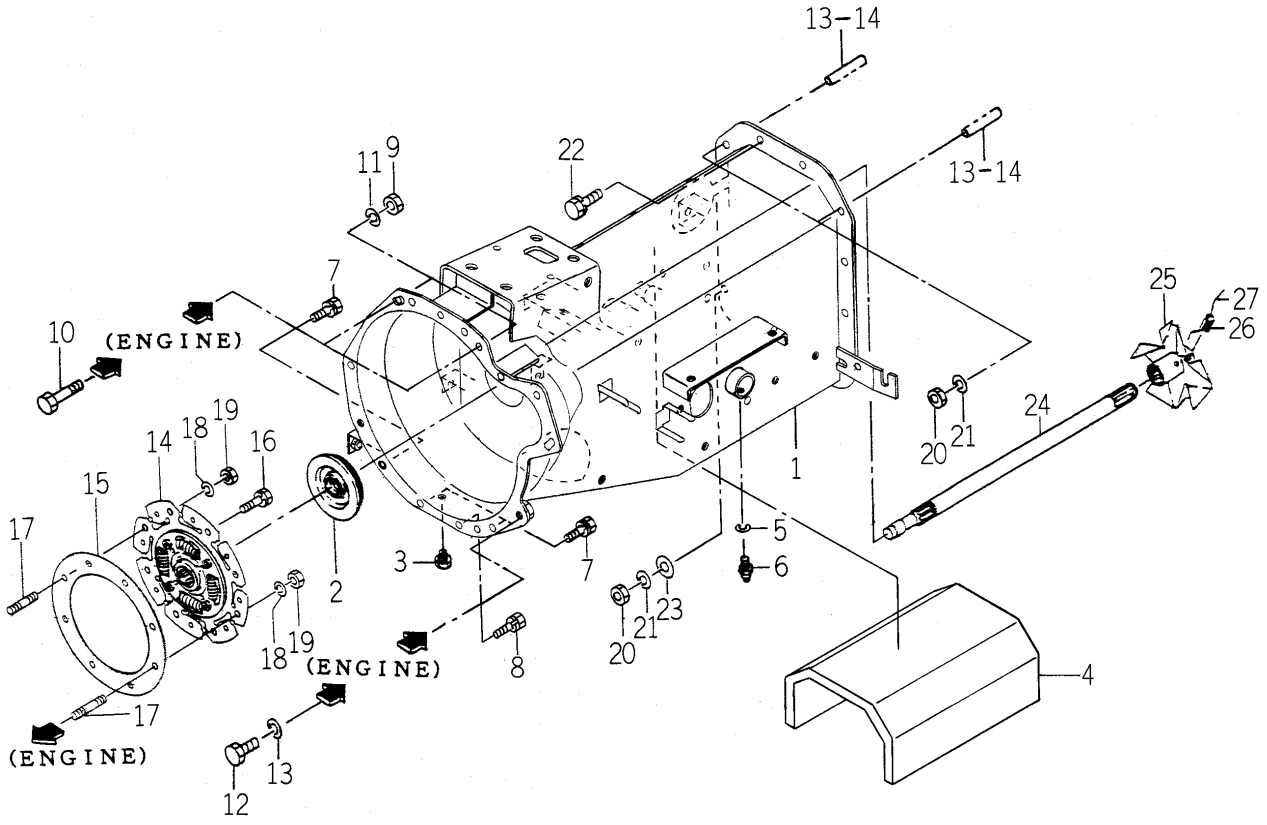

1750-120A-0100,1750-125A-0100

KEY	PART CODE	DESCRIPTION	SPC	TYPE OF MODEL				ITC	COL	GRP	REMARKS
				TM3200	TM3200H	TM3240	TM3240H				
1	1750-120-510-30	HOUSING/CLUTCH COMP	*		1		1				
2	1688-120-052-00	GROMMET/25X70X03	*		1		1				
3	V782-160-000-2T	PLUG/SCREW/SEAL	*		1		1				
4	1750-120-051-20	INSULATOR	*		1		1				
5	V401-160-006-00	WASHER,SP/M 6	*		2		2				
6	V760-150-000-00	NIPPLE,GREASE	*		2		2				
7	V211-260-801-60	BOLT,SEMS (S) M8X16	*		3		3				
8	V211-260-803-00	BOLT,SEMS	*		1		1				
9	V334-460-010-00	NUT/M10 7T P=1.25	*		2		2				
10	V203-361-002-00	BOLT/M10X1.25X20	*		2		2				
11	V401-160-010-00	WASHER,SP/M10	*		4		4				
12	V201-361-202-50	BOLT/M12X25	*		2		2				
13	V401-160-012-00	WASHER,SP/M12	*		2		2				
14	1685-120-310-00	DISC/DAMPER ASSY	*		1		1				
15	1685-120-062-00	PLATE/DAMPER	*		1		1				
16	V211-260-802-00	BOLT/S	*		6		6				
17	V251-340-802-5D	BOLT/STUD/SEAL	*		2		2				
18	V401-160-008-00	WASHER,SP/M 8	*		2		2				
19	V304-460-008-00	NUT/M8	*		2		2				
20	V304-460-010-00	NUT/M10	*		3		3				
21	V401-160-010-00	WASHER,SP/M10	*		3		3				
22	V211-561-003-50	BOLT/S	*		10		10				
23	V411-260-010-00	WASHER/M10	*		1		1				
24	1685-120-061-00	SHAFT/INPUT	*		1		1				
25	1683-120-530-20	FAN/HST COMP	*		1		1				
26	V580-140-603-20	PIN,SPRING/6 X32 W	*		2		2				
27		WIRE	*		2		2				

FIG. 11 PEDAL (CLUTCH) SYSTEM (EXCEPT H TYPE)

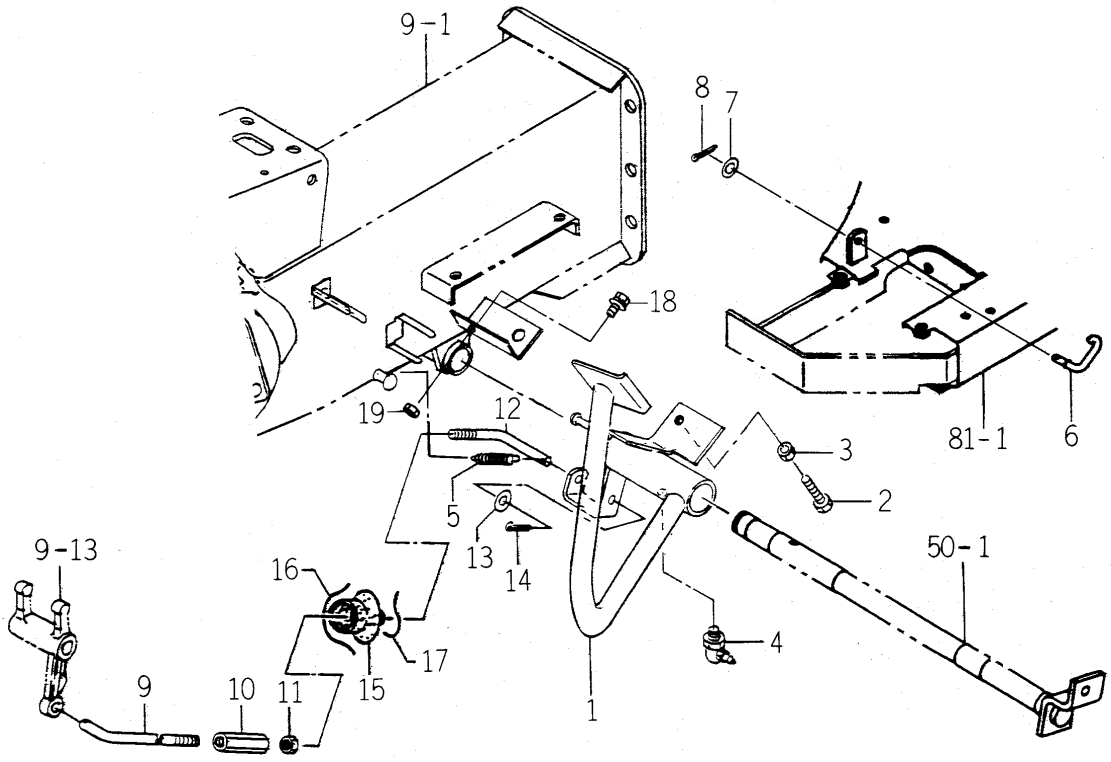

1750-122 -0100

KEY	PART CODE	DESCRIPTION	SPC	TYPE OF MODEL				ITC	COL	GRP	REMARKS
				TM3200	TM3200H	TM3240	TM3240H				
1	1738-122-200-20	PEDAL/CLUTCH COMP	*	1		1					
2	V201-260-803-50	BOLT/M 8X35	*	1		1					
3	V304-260-008-00	NUT	*	1		1					
4	V763-150-000-00	NIPPLE,GREASE/PT1/8	*	1		1					
5	1105-106-001-00	SPRING/HC094	*	1		1					
6	1675-135-001-00	HOOK	*	1		1					
7	V411-260-006-00	WASHER / M6	*	1		1					
8	V500-162-002-00	PIN,SPLIT/2 X20	*	1		1					
9	1750-122-001-00	ROD/CLUTCH/A	*	1		1					
10	1421-122-003-00	TURNBUCKLE	*	1		1					
11	V304-260-008-00	NUT	*	1		1					
12	1672-122-001-20	ROD/CLUTCH/B	*	1		1					
13	V411-260-008-00	WASHER,PL/M 8	*	2		2					
14	V500-163-001-50	PIN,SPLIT/3 X15	*	2		2					
15	1434-122-005-00	BOOT	*	1		1					
16		WIRE	*	1		1					
17		WIRE	*	1		1					
18	V211-360-802-00	BOLT/SP M8X20	*	1		1					
19	V304-260-008-00	NUT/M8	*	1		1					

FIG. 12 CASE (TRANSMISSION) SYSTEM (EXCEPT H TYPE)

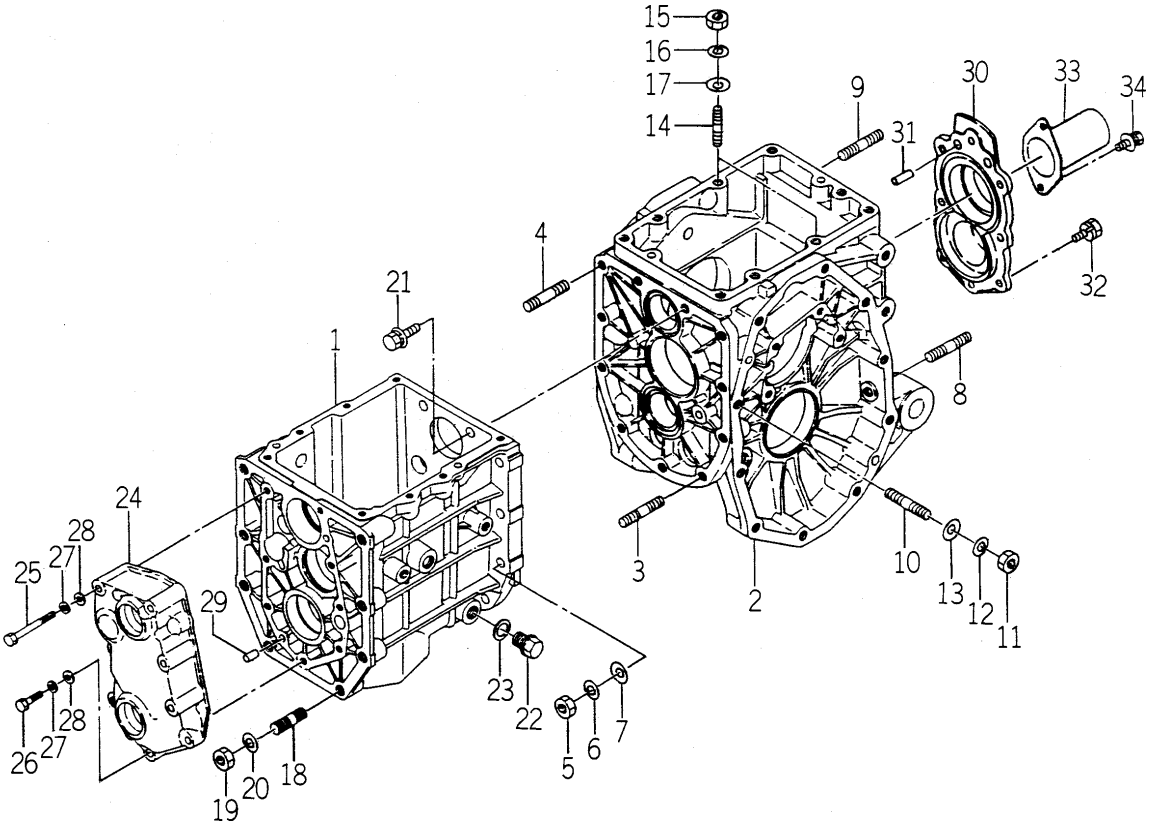

1738-201 -0100

KEY	PART CODE	DESCRIPTION	SPC	TYPE OF MODEL				ITC	COL	GRP	REMARKS
				TM3200	TM3200H	TM3240	TM3240H				
1	1682-201-001-10	CASE/TRANSMISSION/F	*	1		1					
2	1688-201-055-10	CASE/TRANSMISSION/RE	*	1		1					
3	V252-341-003-00	BOLT/STUD	*	2		2					
4	V252-341-003-50	BOLT/M10X35	*	7		7					
5	V304-260-010-00	NUT	*	9		9					
6	V401-160-010-00	WASHER,SP/M10	*	9		9					
7	V411-260-010-00	WASHER/M10	*	9		9					
8	V251-261-202-5D	BOLT/STUD/SEAL	*	2		2					
9	V252-341-202-50	BOLT/STUD	*	4		4					
10	V252-261-005-50	BOLT/M10X55	*	4		4					
11	V304-260-010-00	NUT	*	4		4					
12	V401-160-010-00	WASHER,SP/M10	*	4		4					
13	V411-260-010-00	WASHER/M10	*	4		4					
14	V252-341-003-00	BOLT/STUD	*	2		2					
15	V304-260-010-00	NUT	*	2		2					
16	V401-160-010-00	WASHER,SP/M10	*	2		2					
17	V411-260-010-00	WASHER/M10	*	2		2					
18	V252-341-203-00	BOLT/M12X30	*	8		8					
19	V304-460-012-00	NUT/M12	*	8		8					
20	V401-160-012-00	WASHER,SP/M12	*	8		8					
21	V211-361-003-50	BOLT/M10X35	*	2		2					
22	1427-201-007-00	PLUG,DRAIN	*	1		1					
23	1427-201-008-00	WASHER,SEAL/16	*	1		1					
24	1427-201-005-00	METAL/INPUT	*	1		1					
25	V201-260-806-00	BOLT/M 8X60	*	4		4					
26	V201-260-803-50	BOLT/M 8X35	*	4		4					
27	V401-160-008-00	WASHER,SP/M 8	*	8		8					
28	V411-260-008-00	WASHER,PL/M 8	*	8		8					
29	V522-100-801-80	PIN	*	2		2					
30	1688-201-056-00	METAL/PTO	*	1		1					

FIG. 12 CASE (TRANSMISSION) SYSTEM (EXCEPT H TYPE)

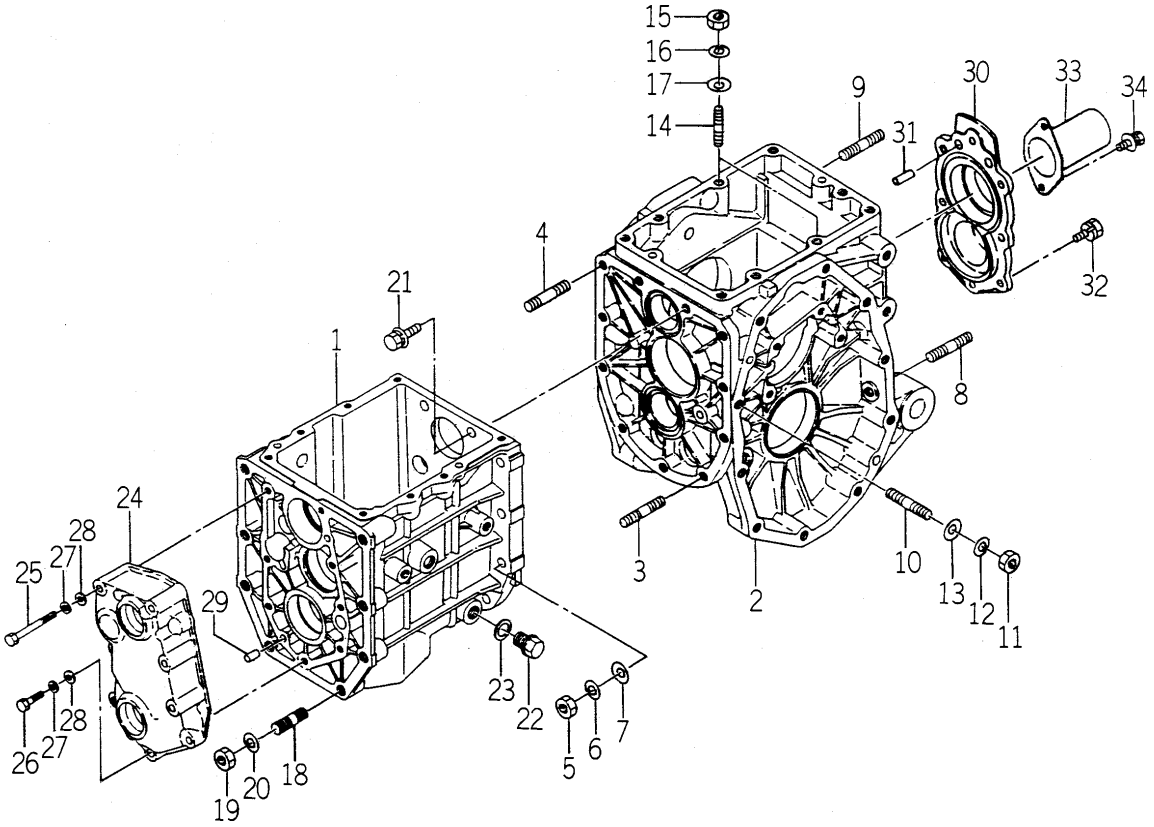

1738-201 -0100

KEY	PART CODE	DESCRIPTION	SPC	TYPE OF MODEL				ITC	COL	GRP	REMARKS
				TM3200	TM3200H	TM3240	TM3240H				
31	V523-101-002-40	PIN	*	2		2					
32	V211-260-802-50	BOLT/S	*	8		8					
33	1444-314-009-10	CAP,PTO SHAFT	*	1		1					
34	V210-360-601-60	BOLT(SP)/M6X16	*	2		2					

FIG. 13 CASE (TRANSMISSION) SYSTEM (H TYPE)

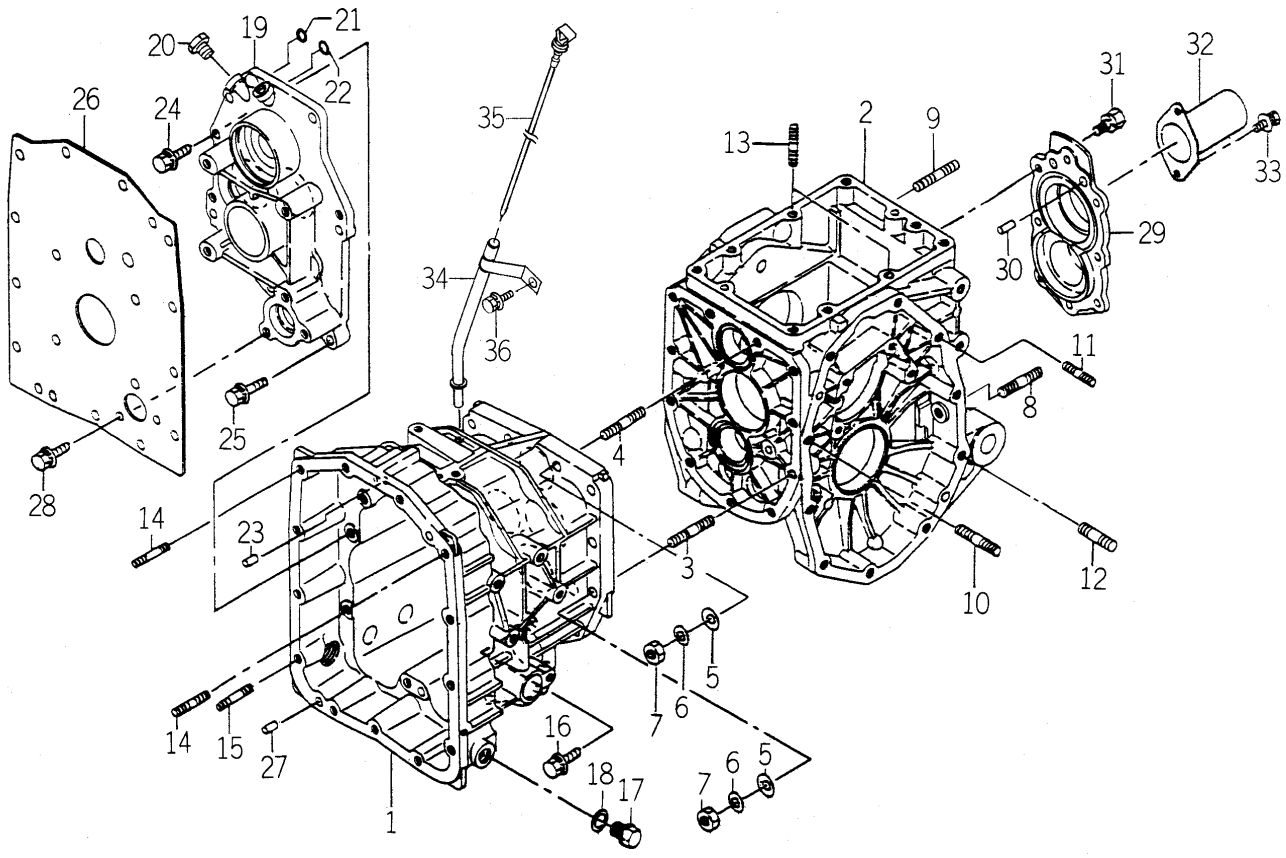

1750-201 -0100

KEY	PART CODE	DESCRIPTION	SPC	TYPE OF MODEL				ITC	COL	GRP	REMARKS
				TM3200	TM3200H	TM3240	TM3240H				
1	1688-201-051-20	CASE/TRANSMISSION/HS	*		1		1				
2	1688-201-055-10	CASE/TRANSMISSION/RE	*		1		1				
3	V252-341-003-50	BOLT/M10X35	*		8		8				
4	V251-341-003-5D	BOLT/STUD/SEAL	*		2		2				
5	V411-260-010-00	WASHER/M10	*		10		10				
6	V401-160-010-00	WASHER,SP/M10	*		10		10				
7	V304-260-010-00	NUT	*		10		10				
8	V251-261-202-5D	BOLT/STUD/SEAL	*		2		2				
9	V252-341-202-50	BOLT/STUD	*		4		4				
10	V252-261-004-00	BOLT/STUD	*		2		2				
11	V252-261-005-50	BOLT/M10X55	*		2		2				
12	V252-341-204-50	BOLT/STUD	*		2		2				
13	V252-341-003-00	BOLT/STUD	*		2		2				
14	V252-341-002-00	BOLT/STUD	*		2		2				
15	V251-341-002-50	BOLT/STUD	*		1		1				
16	V211-661-005-00	BOLT/SP	*		1		1				
17	1427-201-007-00	PLUG,DRAIN	*		2		2				
18	1427-201-008-00	WASHER,SEAL/16	*		2		2				
19	1688-201-052-00	METAL/HST	*		1		1				
20	V782-160-000-2T	PLUG/SCREW/SEAL	*		2		2				
21	V720-111-900-70	O-RING/P 7	*		1		1				
22	V720-111-900-50	O-RING/P5 HS90	*		1		1				
23	V523-101-002-40	PIN	*		2		2				
24	V211-661-003-50	BOLT/SP	*		6		6				
25	V211-661-004-00	BOLT/SP	*		1		1				
26	1683-201-053-10	PLATE/COVER	*		1		1				
27	1421-433-004-00	PIN,KNOCK	*		2		2				
28	V211-660-802-00	BOLT/8X20	*		2		2				
29	1688-201-056-00	METAL/PTO	*		1		1				
30	V523-101-002-40	PIN	*		2		2				

FIG. 13 CASE (TRANSMISSION) SYSTEM (H TYPE)

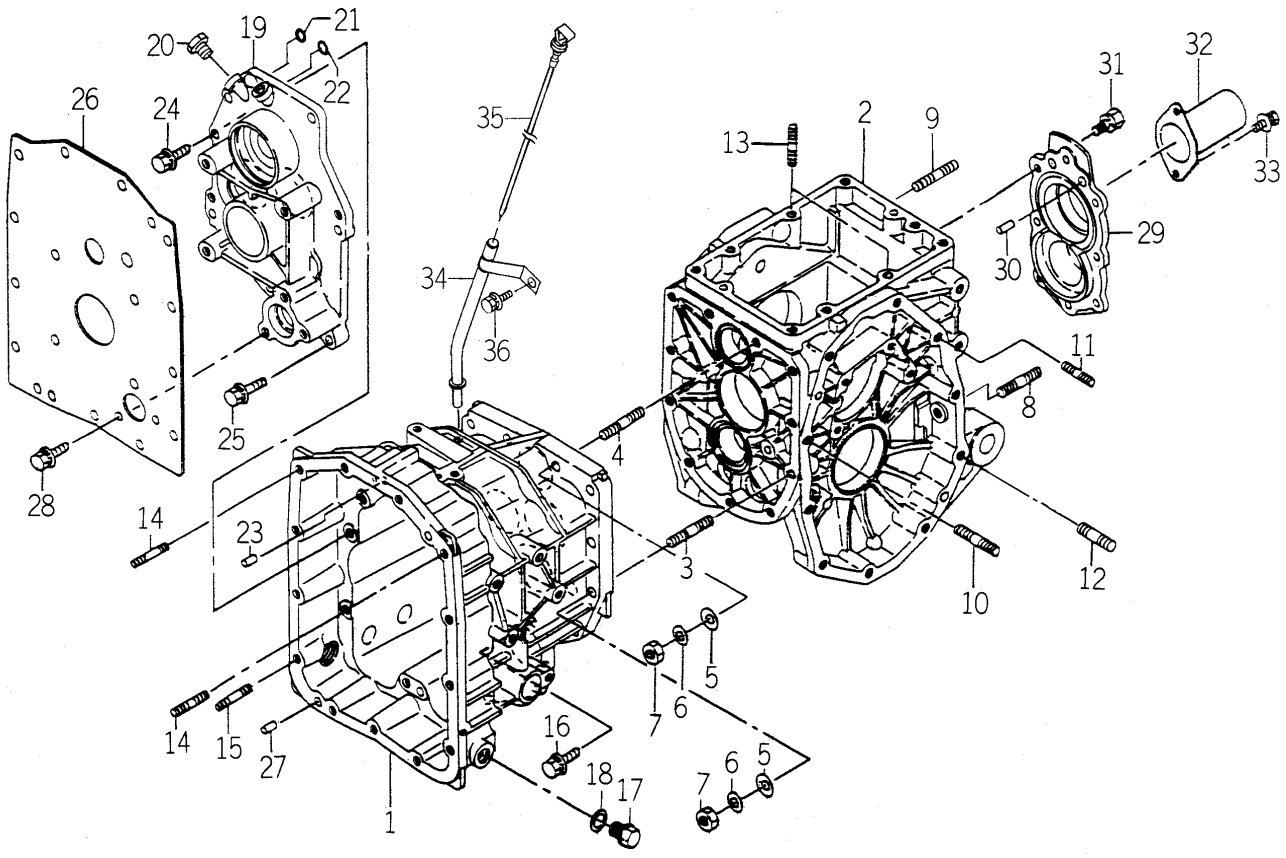

1750-201 -0100

KEY	PART CODE	DESCRIPTION	SPC	TYPE OF MODEL				ITC	COL	GRP	REMARKS
				TM3200	TM3200H	TM3240	TM3240H				
31	V211-260-803-00	BOLT,SEMS	*		8		8				
32	1444-314-009-10	CAP,PTO SHAFT	*		1		1				
33	V210-360-602-00	BOLT/SP	*		2		2				
34	1750-201-051-00	LEVELGAGE	*		1		1				
35	1750-201-500-00	GUIDE/LEVELGAUG COMP	*		1		1				
36	V211-360-802-00	BOLT/SP	*		1		1				

FIG. 14 HST SYSTEM (H TYPE)

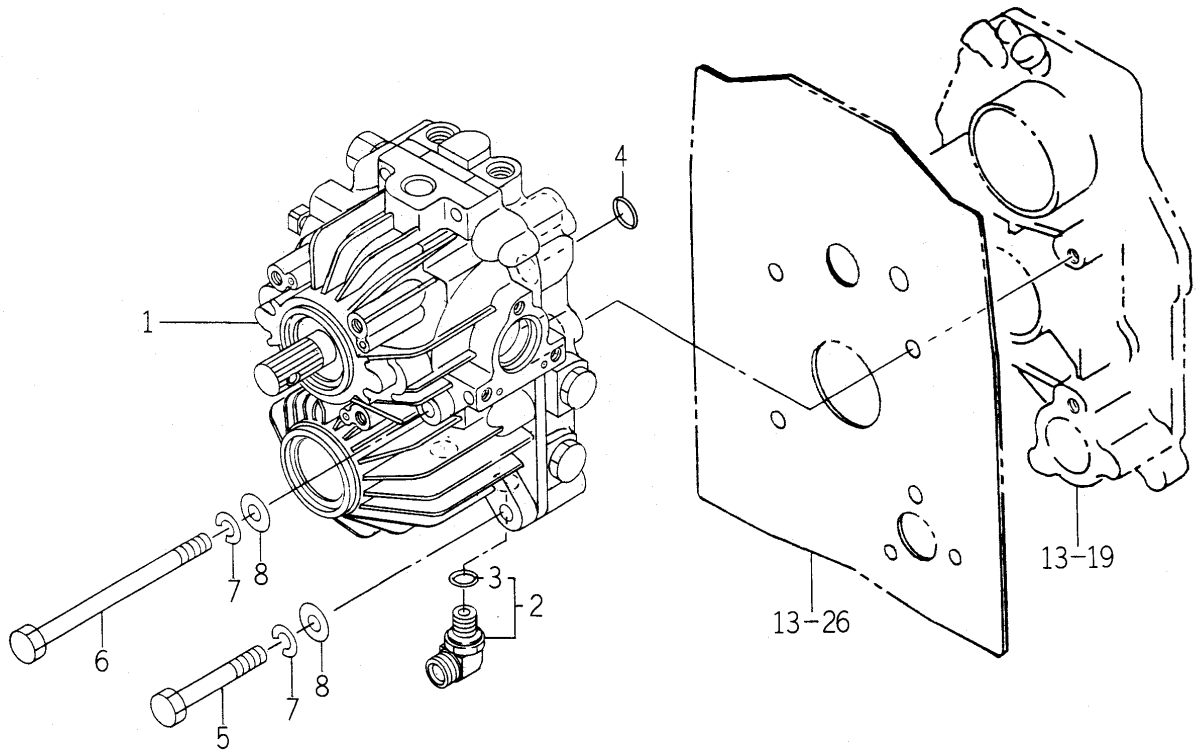

1750-202 -0100

KEY	PART CODE	DESCRIPTION	SPC	TYPE OF MODEL				ITC	COL	GRP	REMARKS
				TM3200	TM3200H	TM3240	TM3240H				
1	K510-008-000-00	HST(TM/21) ASSY	*		1		1				FIG 110
2	1650-509-310-00	ADAPTER/L/PF3/8 ASSY	*		1		1				
3	V720-112-401-40	O-RING/P14	*		1		1				
4	V720-102-401-50	O-RING/P15	*		1		1				
5	V201-361-007-50	BOLT	*		2		2				
6	1108-311-005-00	BOLT	*		2		2				
7	V401-160-010-00	WASHER,SP/M10	*		4		4				
8	V411-260-010-00	WASHER/M10	*		4		4				

FIG. 15 GEAR (INPUT) SYSTEM (EXCEPT H TYPE)

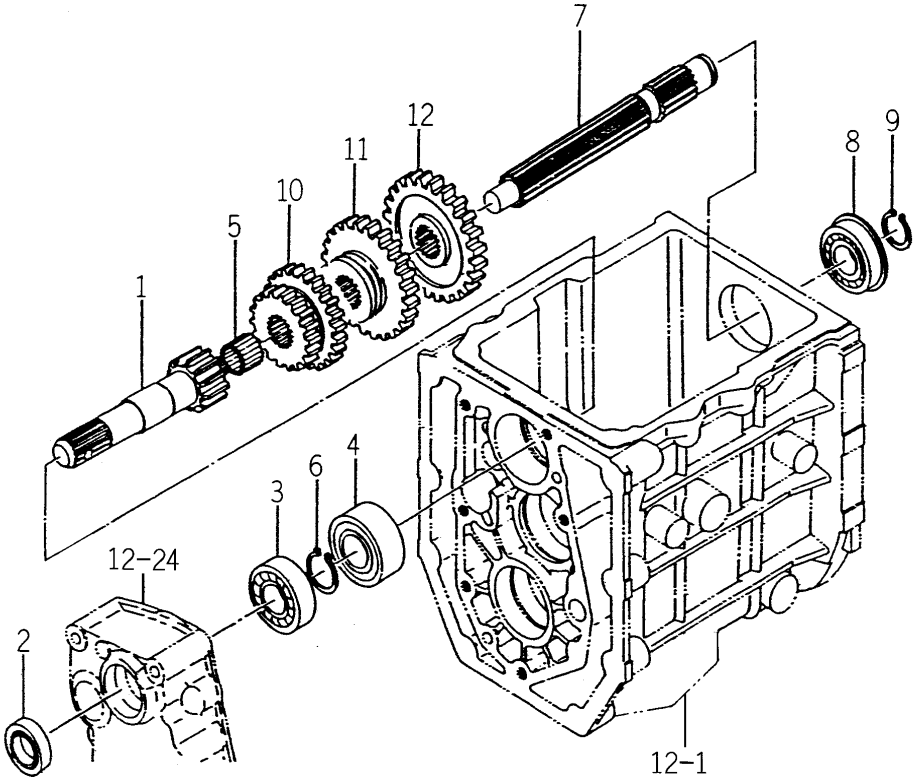

1750-202A-0100

KEY	PART CODE	DESCRIPTION	SPC	TYPE OF MODEL				ITC	COL	GRP	REMARKS
				TM3200	TM3200H	TM3240	TM3240H				
1	1682-202-001-00	GEAR/SPUR/15	*	1		1					
2	V744-120-350-70	SEAL,OIL/TC20357	*	1		1					
3	V600-110-620-40	BEARING,RB/6204	*	1		1					
4	1600-202-005-00	BEARING/BALL	*	1		1					
5	V654-416-201-70	BEARING,NR/KT162017	*	1		1					
6	V704-140-025-00	RING,SNAP/25 C	*	1		1					
7	1672-202-002-20	SHAFT/CHANGE	*	1		1					
8	V607-110-620-40	BEARING,RB/6204NR	*	1		1					
9	V704-140-020-00	RING,SNAP/20C	*	1		1					
10	1684-202-002-00	GEAR/SPUR/19-25	*	1		1					
11	1684-202-003-00	GEAR/SPUR/32	*	1		1					
12	1684-202-004-00	GEAR/SPUR/14-33	*	1		1					

FIG. 16 GEAR (DRIVE) SYSTEM (H TYPE)

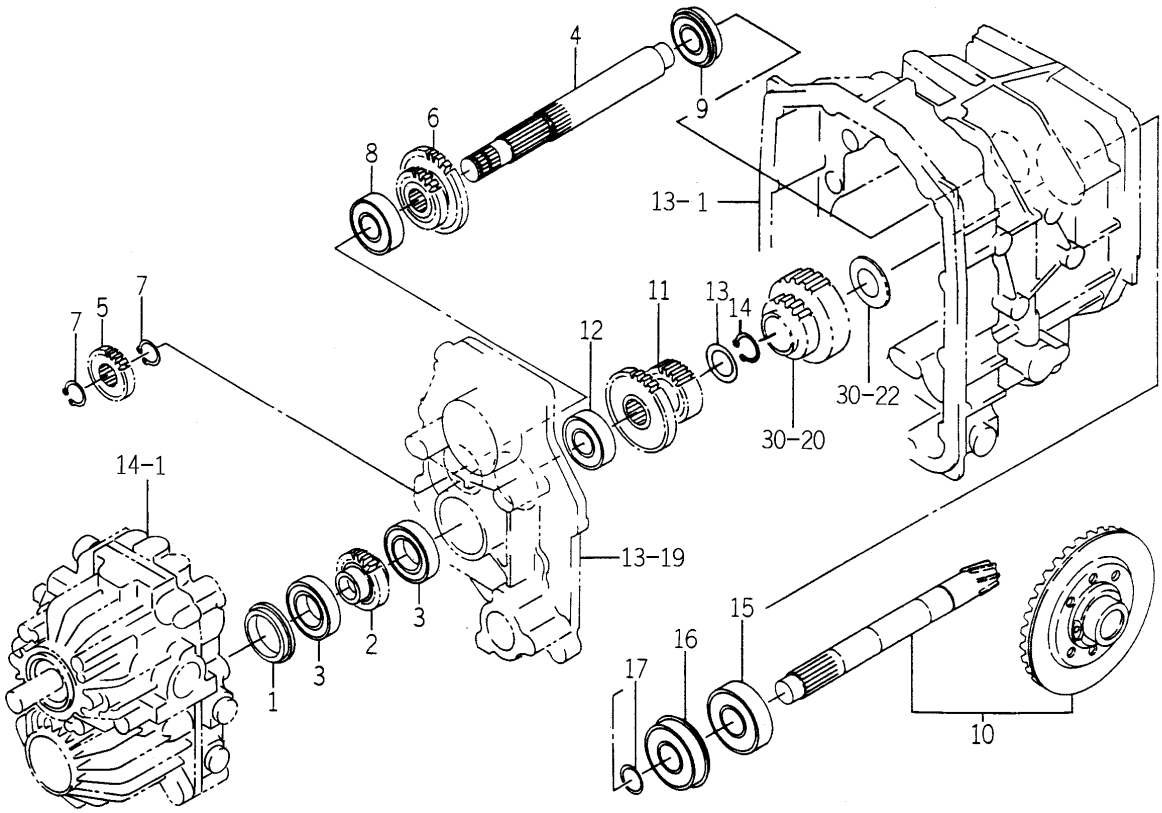

1688-203 -0100

KEY	PART CODE	DESCRIPTION	SPC	TYPE OF MODEL				ITC	COL	GRP	REMARKS
				TM3200	TM3200H	TM3240	TM3240H				
1	1683-202-051-00	COLLAR/41X55X10	*		1		1				
2	1683-203-051-00	GEAR/SPUR/19	*		1		1				
3	V600-111-600-60	BEARING,RB	*		2		2				
4	1683-203-052-00	SHAFT/SUB	*		1		1				
5	1683-203-053-00	GEAR/SPUR/17	*		1		1				
6	1683-203-054-00	GEAR/SPUR/19-29	*		1		1				
7	V704-140-020-00	RING,SNAP/20C	*		2		2				
8	V600-110-630-40	BEARING,RB/6304	*		1		1				
9	V607-110-620-40	BEARING,RB/6204NR	*		1		1				
10	1688-203-500-10	PINION/BEVEL/07 SET	*		1		1				
11	1688-203-055-00	GEAR/SPUR/19-29	*		1		1				
12	V600-110-630-40	BEARING,RB/6304	*		1		1				
13	1593-203-058-20	COLLAR/25X35X02	*		1		1				
14	V704-140-025-00	RING,SNAP/25 C	*		1		1				
15	1594-218-001-00	BEARING/BALL 6305SH2	*		1		1				
16	1491-203-006-10	BEARING	*		1		1				
17	1427-203-002-00	RING,SNAP/25	*		1		1				

FIG. 17 PINION (DRIVE) SYSYTEM (EXCEPT H TYPE)

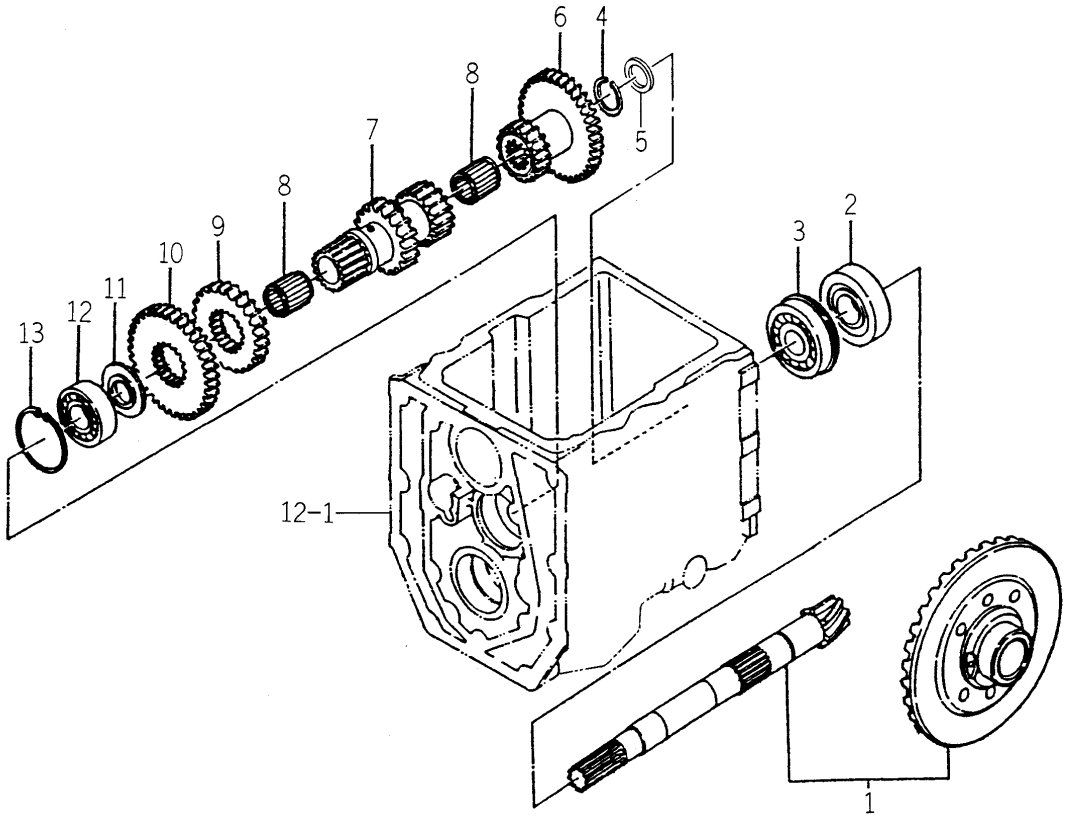

1750-203 -0100

KEY	PART CODE	DESCRIPTION	SPC	TYPE OF MODEL				ITC	COL	GRP	REMARKS
				TM3200	TM3200H	TM3240	TM3240H				
1	1684-203-200-40	PINION/BEVEL SET	*	1		1					
2	1594-218-001-00	BEARING/BALL 6305SH2	*	1		1					
3	1491-203-006-10	BEARING	*	1		1					
4	1427-203-002-00	RING,SNAP/25	*	1		1					
5	1507-216-004-10	COLLAR/25X32X3	*	1		1					
6	1684-203-003-10	GEAR/SPUR/16-34	*	1		1					
7	1684-203-001-00	GEAR/SPUR/17-24	*	1		1					
8	1600-203-006-00	BEARING,NEEDLE	*	2		2					
9	1684-203-002-00	GEAR/SPUR/30	*	1		1					
10	1682-203-004-00	GEAR/SPUR/33	*	1		1					
11	1434-203-002-00	COLLAR,THRUST	*	1		1					
12	V600-110-630-40	BEARING,RB/6304	*	1		1					
13	V705-140-052-00	RING,SNAP/52 C	*	1		1					

FIG. 18 GEAR (REVERSE) SYSTEM (EXCEPT H TYPE)

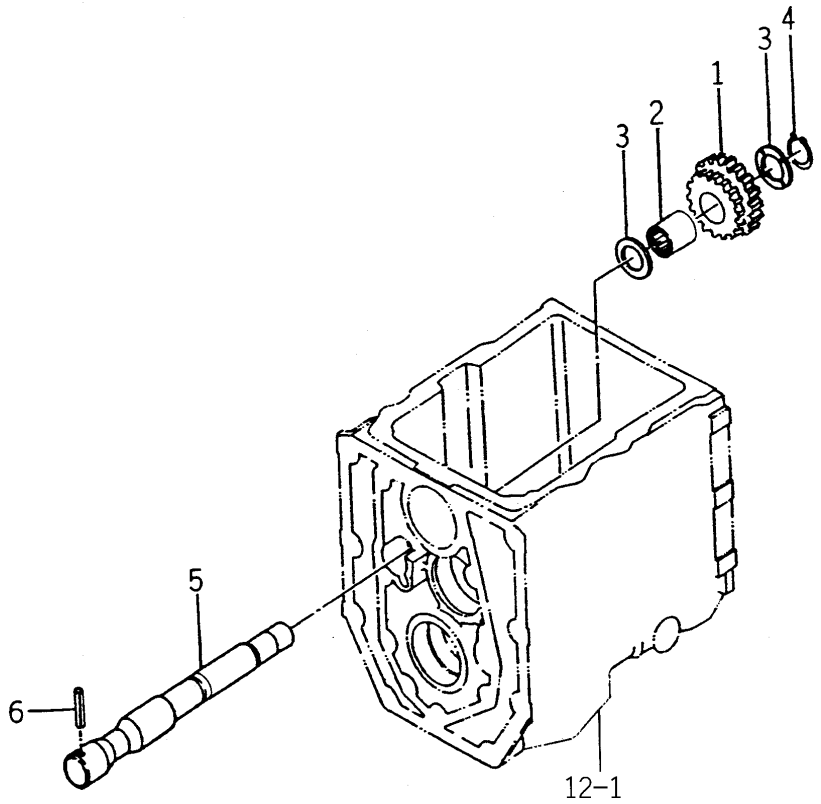

1684-204 -0100

KEY	PART CODE	DESCRIPTION	SPC	TYPE OF MODEL				ITC	COL	GRP	REMARKS
				TM3200	TM3200H	TM3240	TM3240H				
1	1684-204-001-00	GEAR/SPUR/20-23	*	1		1					
2	1684-204-004-00	BEARING/NEEDLE	*	1		1					
3	1684-204-003-00	COLLAR/22X36X02	*	2		2					
4	V704-140-022-00	RING,SNAP/22 C	*	1		1					
5	1684-204-002-00	SHAFT/REVERSE	*	1		1					
6	V580-140-601-60	PIN SPLIT W 6.0X16	*	1		1					

FIG. 19 GEAR (4WD) SYSTEM (EXCEPT H TYPE)

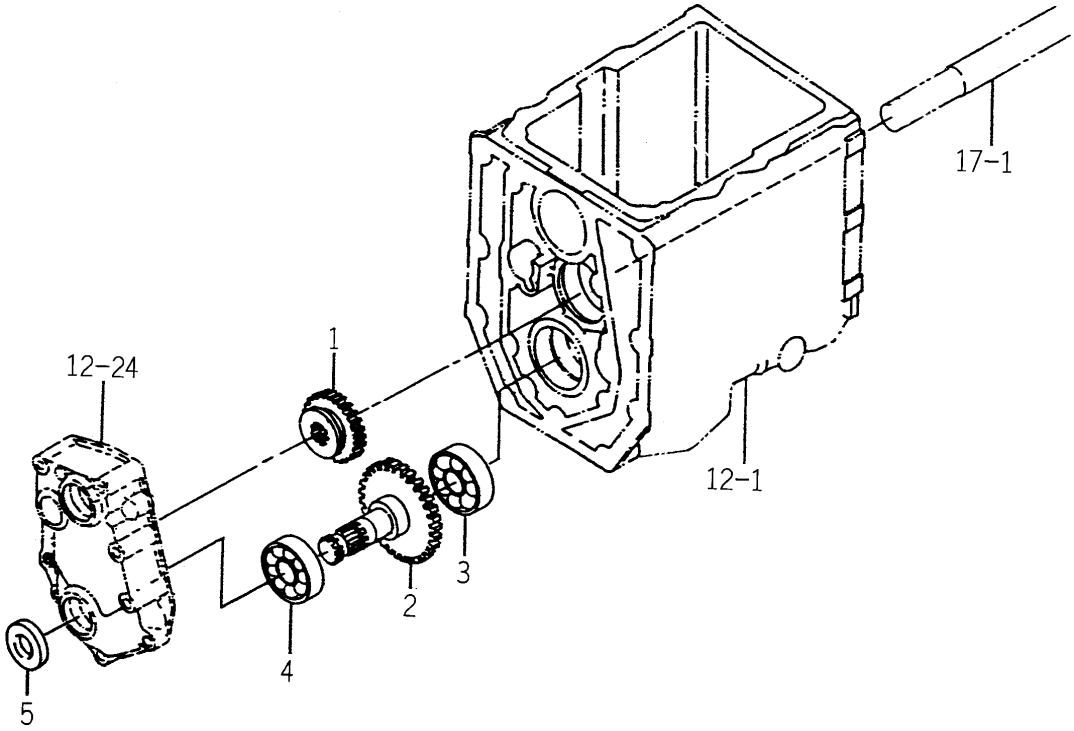

1738-205 -0100

KEY	PART CODE	DESCRIPTION	SPC	TYPE OF MODEL				ITC	COL	GRP	REMARKS
				TM3200	TM3200H	TM3240	TM3240H				
1	1682-205-001-00	GEAR/SPUR/20	*	1		1					
2	1738-205-200-00	SHAFT/FRONT COMP	*	1		1					
3	V600-110-630-40	BEARING,RB/6304	*	1		1					
4	V600-110-620-40	BEARING,RB/6204	*	1		1					
5	V744-120-350-70	SEAL,OIL/TC20357	*	1		1					

FIG. 20 GEAR (4WD) SYSTEM (H TYPE)

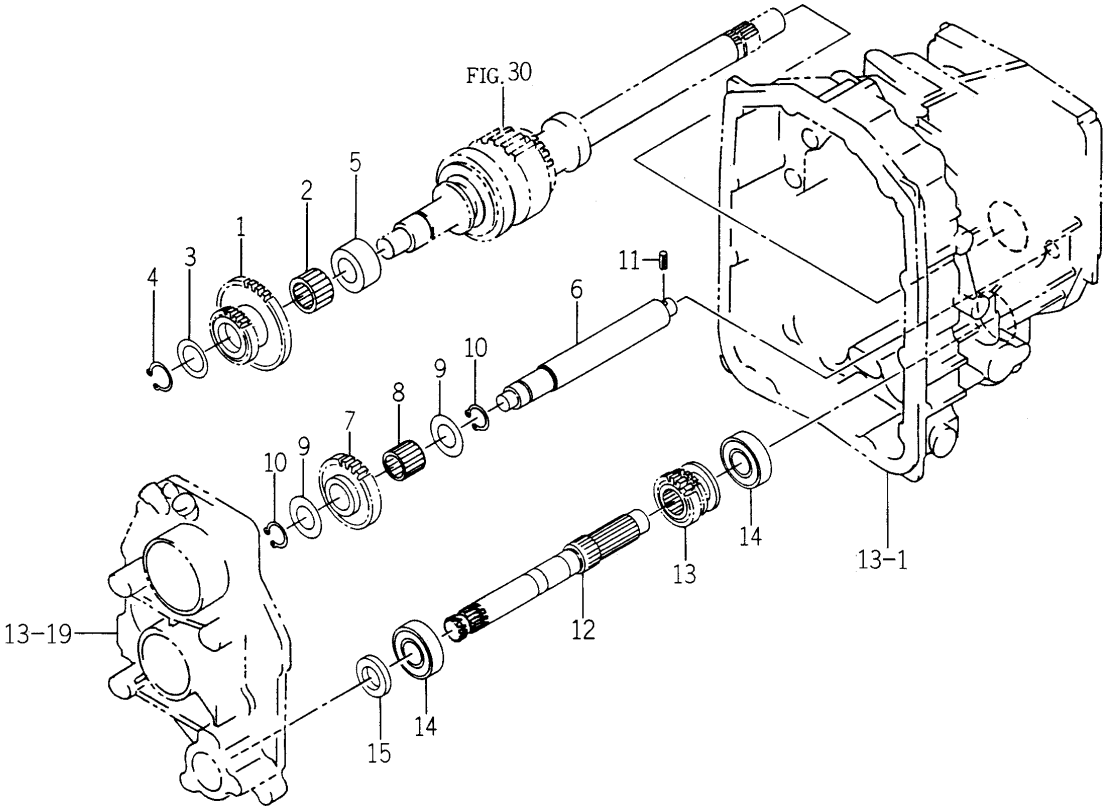

1750-205 -0100

KEY	PART CODE	DESCRIPTION	SPC	TYPE OF MODEL				ITC	COL	GRP	REMARKS
				TM3200	TM3200H	TM3240	TM3240H				
1	1683-205-051-00	GEAR/SPUR/18-30	*		1		1				
2	V654-425-322-40	BEARING KT253224	*		1		1				
3	1593-203-058-20	COLLAR/25X35X02	*		1		1				
4	V704-140-025-00	RING,SNAP/25 C	*		1		1				
5	1685-205-001-00	COLLAR/25X40X25	*		1		1				
6	1683-205-052-00	SHAFT/4WD	*		1		1				
7	1683-205-053-00	GEAR/SPUR/25	*		1		1				
8	1682-255-002-20	BEARING/NEEDLE	*		1		1				
9	3656-107-004-00	WASHER/21X38X02	*		2		2				
10	V704-140-020-00	RING,SNAP/20C	*		2		2				
11	V580-140-601-60	PIN SPLIT W 6.0X16	*		1		1				
12	1750-205-051-00	SHAFT/FRONT	*		1		1				
13	1683-205-055-10	GEAR/SPUR/17	*		1		1				
14	V600-110-620-40	BEARING,RB/6204	*		2		2				
15	V744-120-350-70	SEAL,OIL/TC20357	*		1		1				

FIG. 21 LEVER (MAIN) SYSTEM (EXCEPT H TYPE)

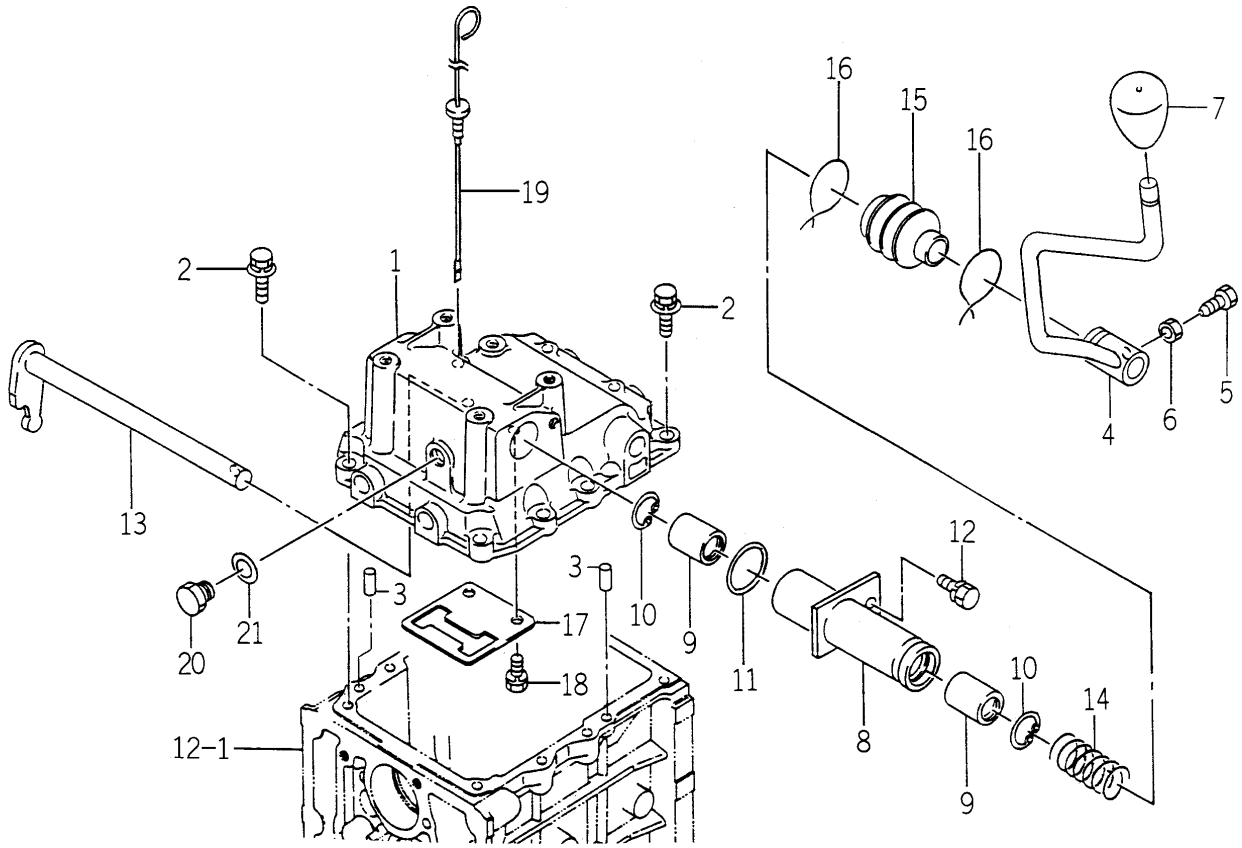

1750-207 -0100,1672-207A-0100

KEY	PART CODE	DESCRIPTION	SPC	TYPE OF MODEL				ITC	COL	GRP	REMARKS
				TM3200	TM3200H	TM3240	TM3240H				
1	1672-207-001-10	METAL/SHIFT	*	1		1					
2	V211-360-803-00	BOLT/SP	*	8		8					
3	V522-100-801-80	PIN	*	2		2					
4	1750-207-200-10	LEVER/MAIN COMP	*	1		1					
5	1600-502-003-00	BOLT,SM/M08X25	*	1		1					
6	V304-260-008-00	NUT	*	1		1					
7	1636-271-013-00	GRIP/12X50	*	1		1					
8	1672-207-240-00	TUBE/SHIFT/MAIN COMP	*	1		1					
9	1544-215-015-00	BEARING	*	2		2					
10	V705-140-028-00	RING,SNAP/28 C	*	2		2					
11	V723-102-003-00	O-RING	*	1		1					
12	V211-260-802-00	BOLT/S	*	1		1					
13	1672-207-230-00	ARM/SHIFT/MAIN COMP	*	1		1					
14	1614-215-006-00	SPRING/HC060	*	1		1					
15	1544-215-016-00	BOOT,CHANGE	*	1		1					
16		WIRE	*	2		2					
17	1672-207-002-10	PLATE/GUIDE	*	1		1					
18	V211-560-802-00	BOLT/M8X20	*	2		2					
19	1614-501-006-00	GAUGE/OIL	*	1		1					
20	1564-667-002-00	BLOT/M14X10	*	1		1					
21	1488-541-021-00	SHIM/T=0.7	*	1		1					

FIG. 22 LEVER (SUB) SYSTEM (EXCEPT H TYPE)

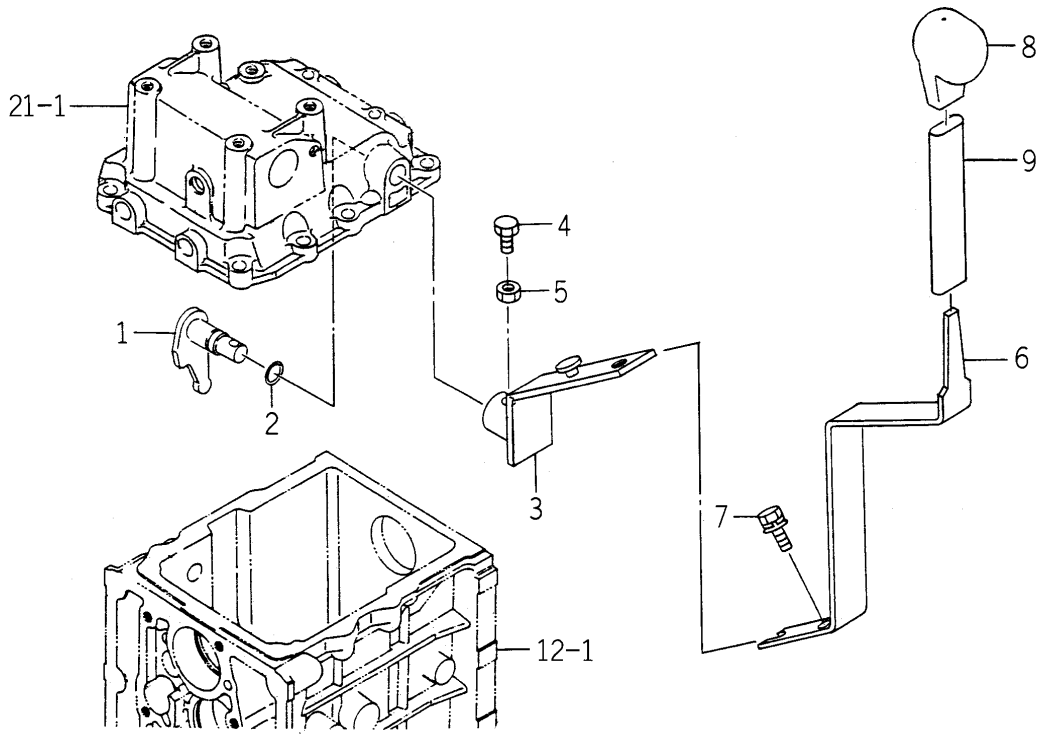

1750-208 -0100

KEY	PART CODE	DESCRIPTION	SPC	TYPE OF MODEL				ITC	COL	GRP	REMARKS
				TM3200	TM3200H	TM3240	TM3240H				
1	1672-208-200-20	ARM/SHIFT/SUB COMP	*	1		1					
2	V723-101-501-40	RING/O	*	1		1					
3	1750-208-200-00	ARM/SUB COMP	*	1		1					
4	1600-502-003-00	BOLT,SM/M08X25	*	1		1					
5	V304-260-008-00	NUT	*	1		1					
6	1750-208-001-10	LEVER/SUB	*	1		1					
7	V211-361-002-00	BOLT,SEMS	*	1		1					
8	1703-261-002-00	GRIP/MAIN	*	1		1					
9	1725-266-001-00	INSULATOR/120	*	1		1					

FIG. 23 LEVER (SUB) SYSTEM (H TYPE)

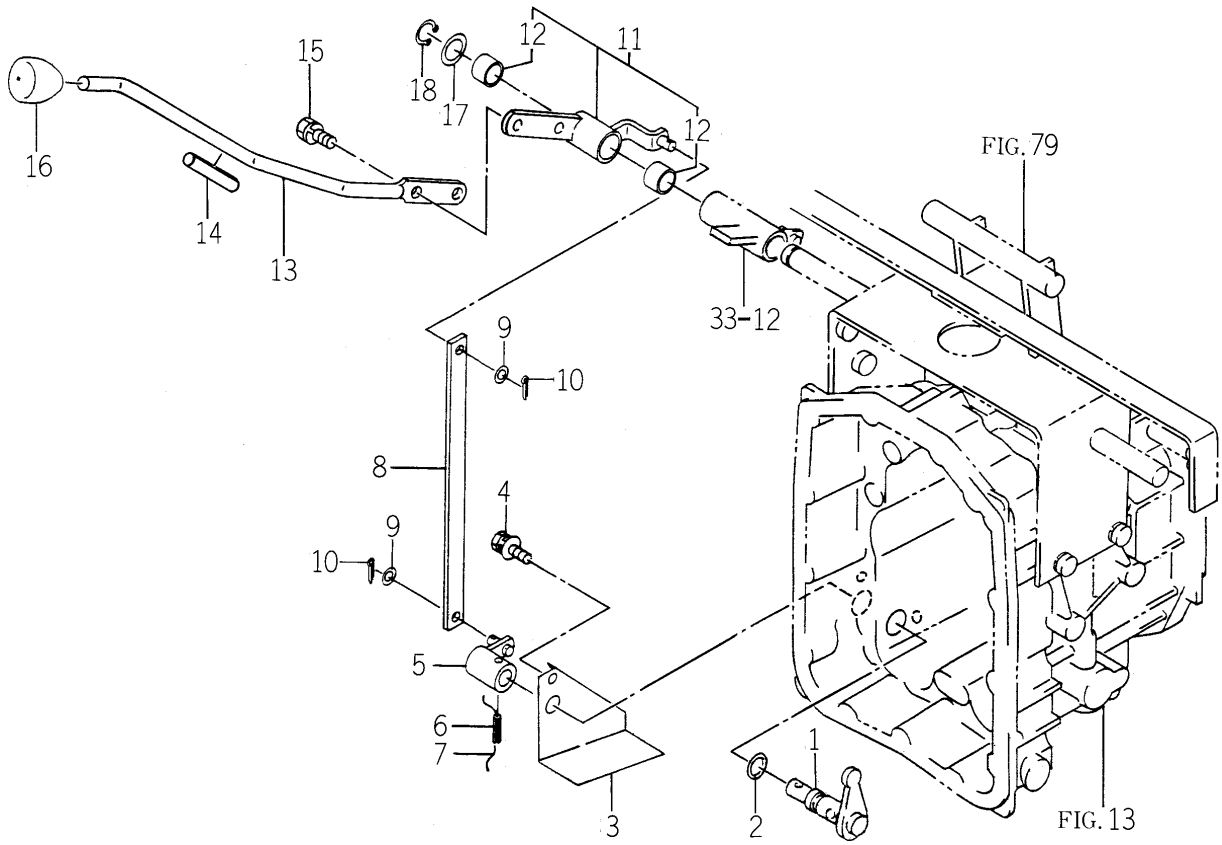

1750-208A-0100

KEY	PART CODE	DESCRIPTION	SPC	TYPE OF MODEL				ITC	COL	GRP	REMARKS
				TM3200	TM3200H	TM3240	TM3240H				
1	1683-208-500-00	PIN/SHIFT COMP	*		1		1				
2	V720-102-401-40	O-RING/P14	*		2		2				
3	1682-208-001-00	COVER/SWITCH/SUB	*		1		1				
4	V211-360-801-60	BOLT,SEMS (SP)	*		1		1				
5	1683-208-510-00	ARM/SHIFT/SUB COMP	*		1		1				
6	V580-140-602-50	PIN,SPRING/6 X25 W	*		1		1				
7		WIRE	*		1		1				
8	1685-208-051-00	PLATE/I/19X295	*		1		1				
9	V411-260-008-00	WASHER,PL/M 8	*		2		2				
10	V500-163-002-00	PIN,SPLIT/3 X20	*		2		2				
11	1750-208-500-10	ARM/SUB ASSY	*		1		1				
12	3668-612-001-00	BUSH	*		2		2				
13	1750-208-051-10	LEVER/SUB	*		1		1				
14	1750-208-052-00	TUBE/12X15X80	*		1		1				
15	V211-261-002-00	BOLT,SEMS	*		2		2				
16	1544-219-005-00	KNOB,LEVER/12	*		1		1				
17	2144-419-022-00	WASHER/18X26X02	*		1		1				
18	V704-140-018-00	RING,SNAP/18 C	*		1		1				

FIG. 24 CHANGE (4WD) SYSTEM (EXCEPT H TYPE)

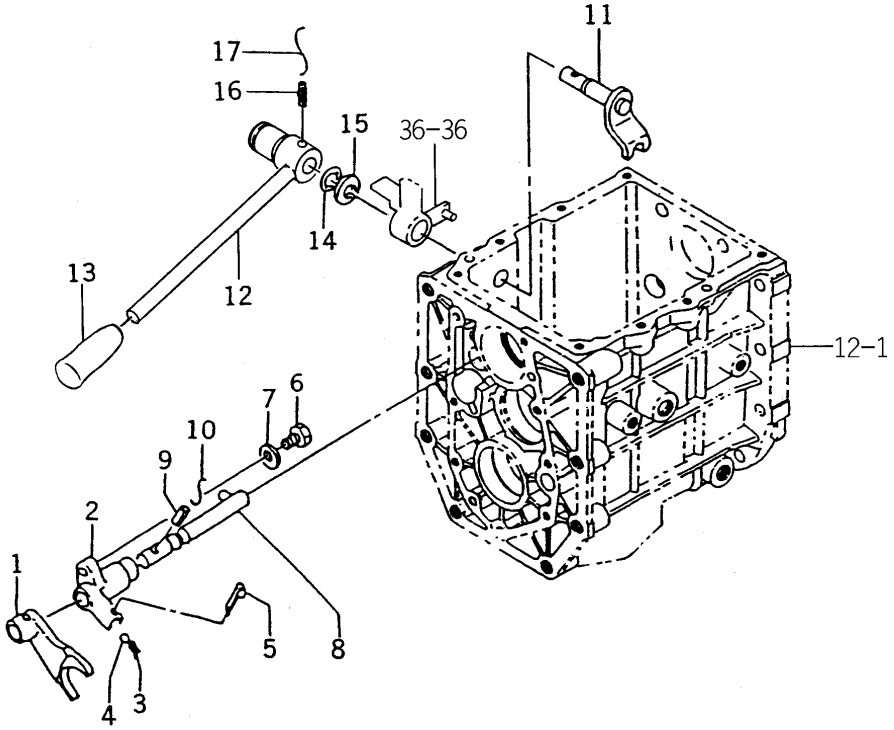

1750-209 -0100

KEY	PART CODE	DESCRIPTION	SPC	TYPE OF MODEL				ITC	COL	GRP	REMARKS
				TM3200	TM3200H	TM3240	TM3240H				
1	1427-210-008-10	FORK/SHIFT/FRONT	*	1		1					
2	1427-210-009-00	CASE,SPRING	*	1		1					
3	1302-225-003-00	SPRING,SHIFTER	*	1		1					
4	V682-200-001-00	BALL	*	1		1					
5	V500-162-002-00	PIN,SPLIT/2 X20	*	1		1					
6	1427-210-011-00	BOLT/M8X30	*	1		1					
7	V411-260-008-00	WASHER,PL/M 8	*	1		1					
8	1427-210-200-00	STAY,SHIFTER	*	1		1					
9	V580-140-502-00	PIN,SPRING/5 X20 W	*	1		1					
10		WIRE	*	1		1					
11	1427-209-200-00	ARM,SHIFT	*	1		1					
12	1750-209-200-00	LEVER/4WD COMP	*	1		1					
13	2173-820-003-00	GRIP/ORANGE/10.5	*	1		1					
14	V720-102-401-40	O-RING/P14	*	1		1					
15	1427-601-003-00	WASHER/15X24X2	*	1		1					
16	V580-140-503-20	PIN,SPRING/5 X32 W	*	1		1					
17		WIRE	*	1		1					

FIG. 25 CHANGE (4WD) SYSTEM (H TYPE)

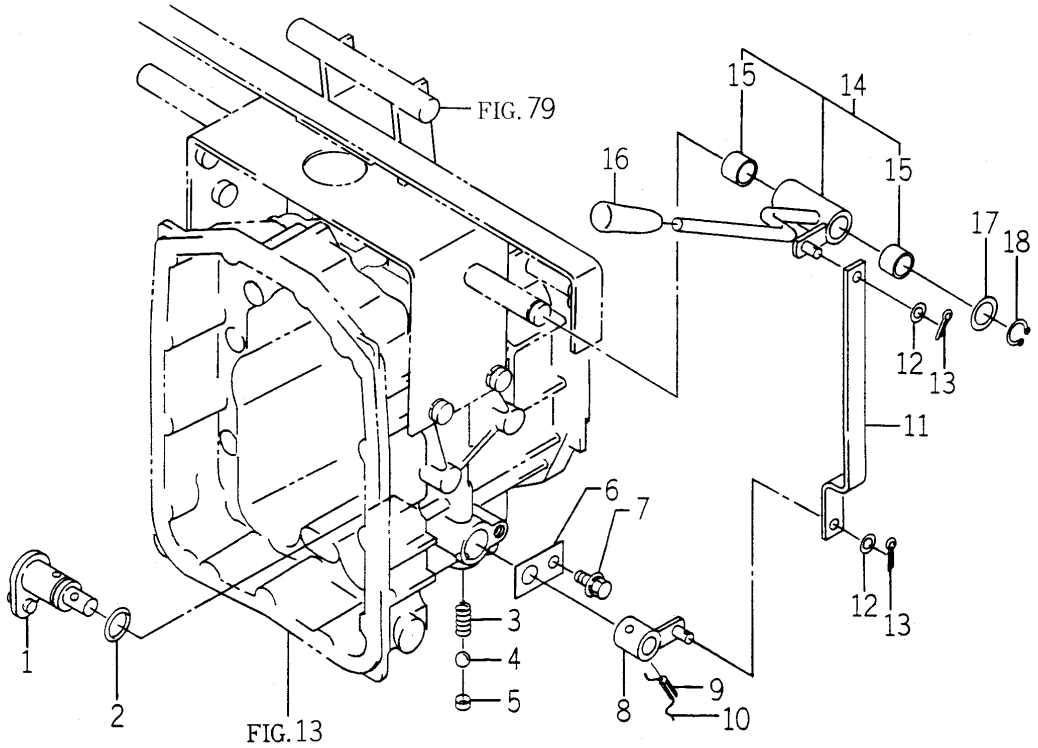

1750-209A-0100

KEY	PART CODE	DESCRIPTION	SPC	TYPE OF MODEL				ITC	COL	GRP	REMARKS
				TM3200	TM3200H	TM3240	TM3240H				
1	1683-209-500-10	PIN/SHIFT/FRONT COMP	*		1		1				
2	V720-102-402-10	O-RING/P21	*		1		1				
3	1650-253-003-00	SPRING/HC022	*		1		1				
4	V682-200-001-00	BALL	*		1		1				
5	1427-251-004-00	CAP,BLANK/M10	*		1		1				
6	1620-255-208-00	PLATE/I/30X50	*		1		1				
7	V211-360-801-60	BOLT,SEMS (SP)	*		1		1				
8	1683-209-520-00	ARM/SHIFT COMP	*		1		1				
9	V580-140-602-50	PIN,SPRING/6 X25 W	*		1		1				
10		WIRE	*		1		1				
11	1685-209-051-00	PLATE/Z/19X261	*		1		1				
12	V411-260-008-00	WASHER,PL/M 8	*		2		2				
13	V500-163-002-00	PIN,SPLIT/3 X20	*		2		2				
14	1750-209-500-00	LEVER/4WD ASSY	*		1		1				
15	3668-612-001-00	BUSH	*		2		2				
16	2173-820-003-00	GRIP/ORANGE/10.5	*		1		1				
17	2144-419-022-00	WASHER/18X26X02	*		1		1				
18	V704-140-018-00	RING,SNAP/18 C	*		1		1				

FIG. 26 CHANGE (SUB) SYSTEM (H TYPE)

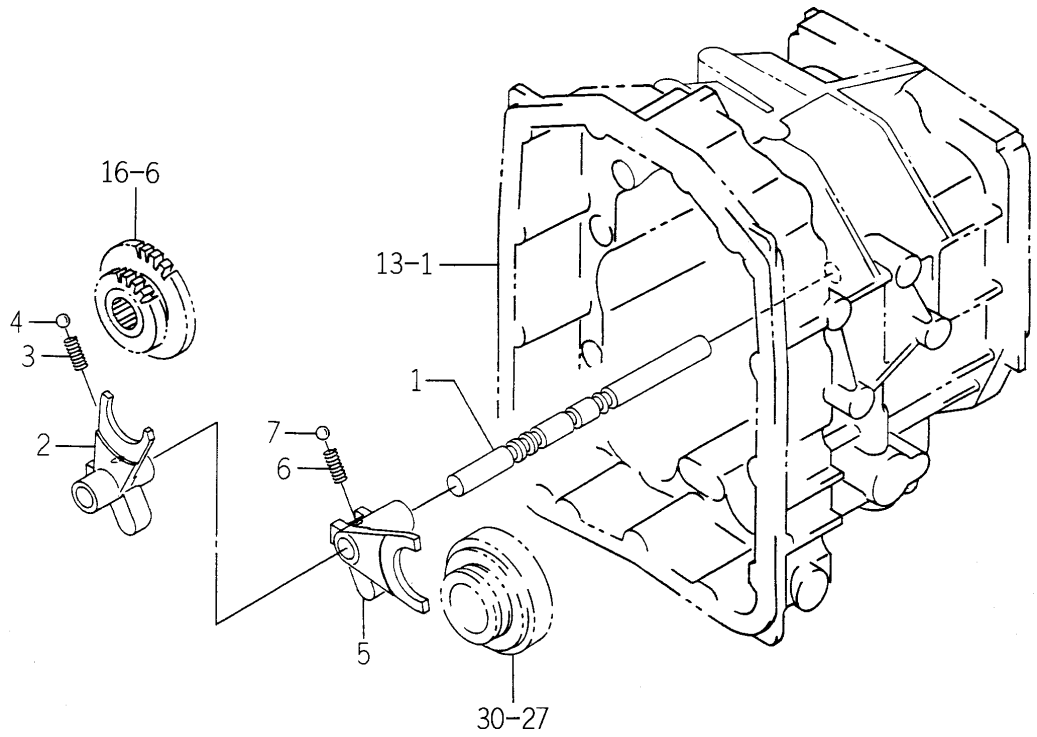

1683-210 -0100

KEY	PART CODE	DESCRIPTION	SPC	TYPE OF MODEL				ITC	COL	GRP	REMARKS
				TM3200	TM3200H	TM3240	TM3240H				
1	1683-210-051-00	STAY/SHIFT/HST	*		1		1				
2	1683-210-052-00	FORK/SHIFT/SUB	*		1		1				
3	1650-253-003-00	SPRING/HC022	*		1		1				
4	V682-200-001-00	BALL	*		1		1				
5	1683-210-053-00	FORK/SHIFT/PTO	*		1		1				
6	1650-253-003-00	SPRING/HC022	*		1		1				
7	V682-200-001-00	BALL	*		1		1				

FIG. 27 CHANGE (MAIN/SUB) SYSTEM (EXCEPT H TYPE)

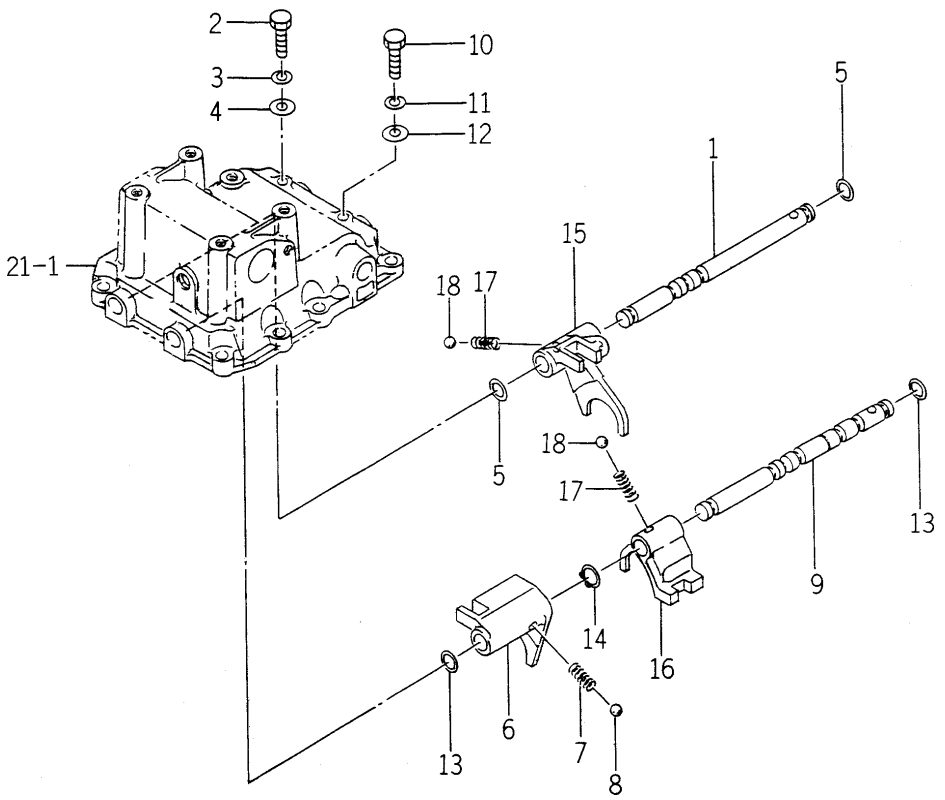

1684-210 -0100

KEY	PART CODE	DESCRIPTION	SPC	TYPE OF MODEL				ITC	COL	GRP	REMARKS
				TM3200	TM3200H	TM3240	TM3240H				
1	1684-210-001-00	STAY/SHIFT/1ST	*	1		1					
2	1427-210-003-00	BOLT/M8X25	*	1		1					
3	V401-160-008-00	WASHER,SP/M 8	*	1		1					
4	V411-260-008-00	WASHER,PL/M 8	*	1		1					
5	V720-102-401-00	O-RING/P10A	*	2		2					
6	1672-210-002-00	FORK/SHIFT/1ST	*	1		1					
7	1650-259-010-00	SPRING/HC023	*	1		1					
8	V682-200-001-00	BALL	*	1		1					
9	1684-210-002-00	STAY/SHIFT/2ND	*	1		1					
10	1427-210-003-00	BOLT/M8X25	*	1		1					
11	V401-160-008-00	WASHER,SP/M 8	*	1		1					
12	V411-260-008-00	WASHER,PL/M 8	*	1		1					
13	V720-102-401-00	O-RING/P10A	*	2		2					
14	V704-140-014-00	RING,SNAP/14 C	*	1		1					
15	1672-210-004-00	FORK/SHIFT/2ND	*	1		1					
16	1672-210-005-00	FORK/SHIFT/SUB	*	1		1					
17	1650-259-010-00	SPRING/HC023	*	2		2					
18	V682-200-001-00	BALL	*	2		2					

FIG. 28 GEAR (PTO) SYSTEM (TM3240-EXCEPT H TYPE)

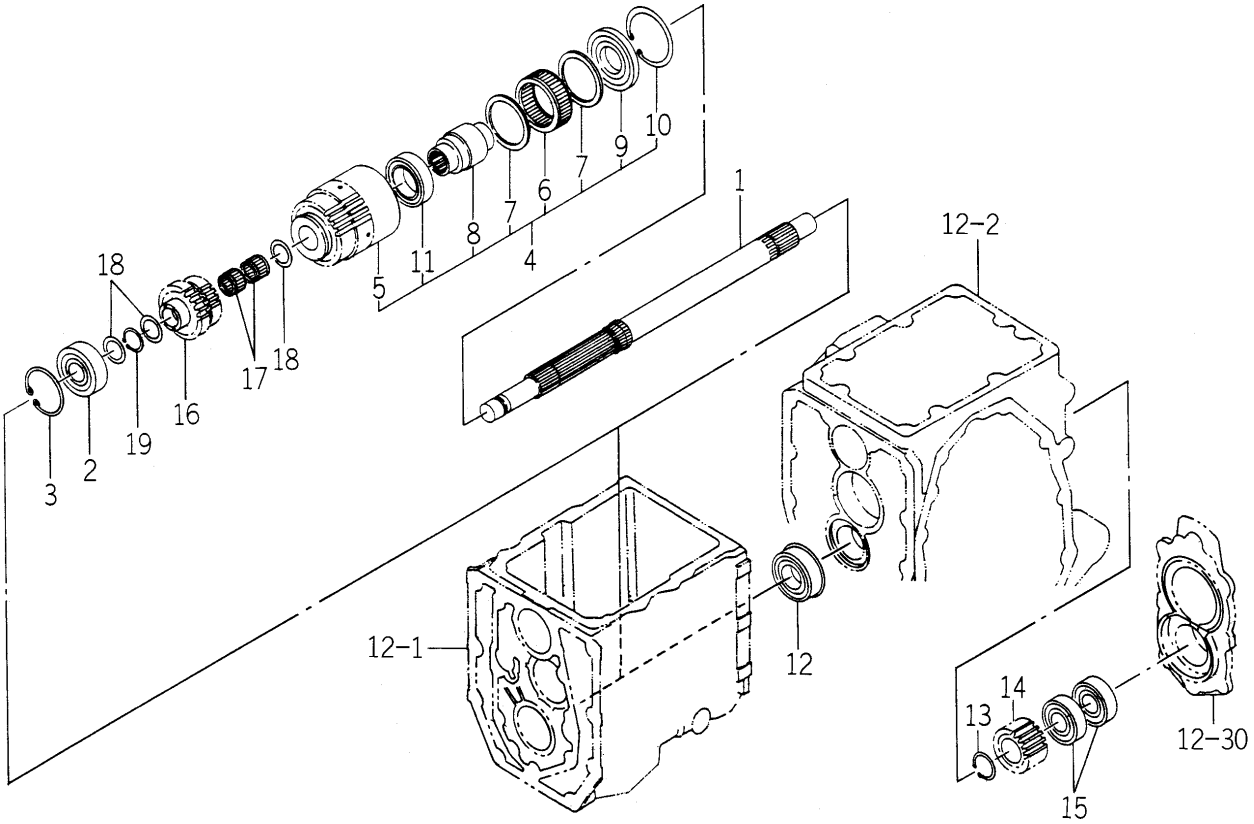

1684-211 -0100

KEY	PART CODE	DESCRIPTION	SPC	TYPE OF MODEL				ITC	COL	GRP	REMARKS
				TM3200	TM3200H	TM3240	TM3240H				
1	1684-211-001-00	SHAFT/DRIVE/PTO	*			1					
2	V600-110-630-40	BEARING,RB/6304	*			1					
3	V705-140-052-00	RING,SNAP/52 C	*			1					
4	1684-211-200-00	GEAR/SPUR/26 SET	*			1					
5	1684-211-201-00	GEAR/SPUR/26	*			1					
6	1593-341-006-00	CLUTCH,ONE-WAY	*			1					
7	1593-341-014-00	COLLAR/48X57X3	*			2					
8	1681-211-002-00	HUB	*			1					
9	V600-111-600-70	BEARING,RB	*			1					
10	V707-140-062-00	RING/SNAP	*			1					
11	2146-310-005-00	BEARING	*			1					
12	V607-110-620-50	BEARING,RB/6205NR	*			1					
13	V704-140-025-00	RING,SNAP/25 C	*			1					
14	1688-211-061-10	GEAR/SPUR/13	*			1					
15	V600-110-620-40	BEARING,RB/6204	*			2					
16	1684-211-003-10	GEAR/SPUR/18-20	*			1					
17	1682-211-007-00	BEARING/NEEDLE	*			2					
18	1682-211-002-20	WASHER/20X32X02	*			3					
19	V704-140-020-00	RING,SNAP/20C	*			1					

FIG. 29 GEAR (PTO) SYSTEM (TM3200-EXCEPT H TYPE)

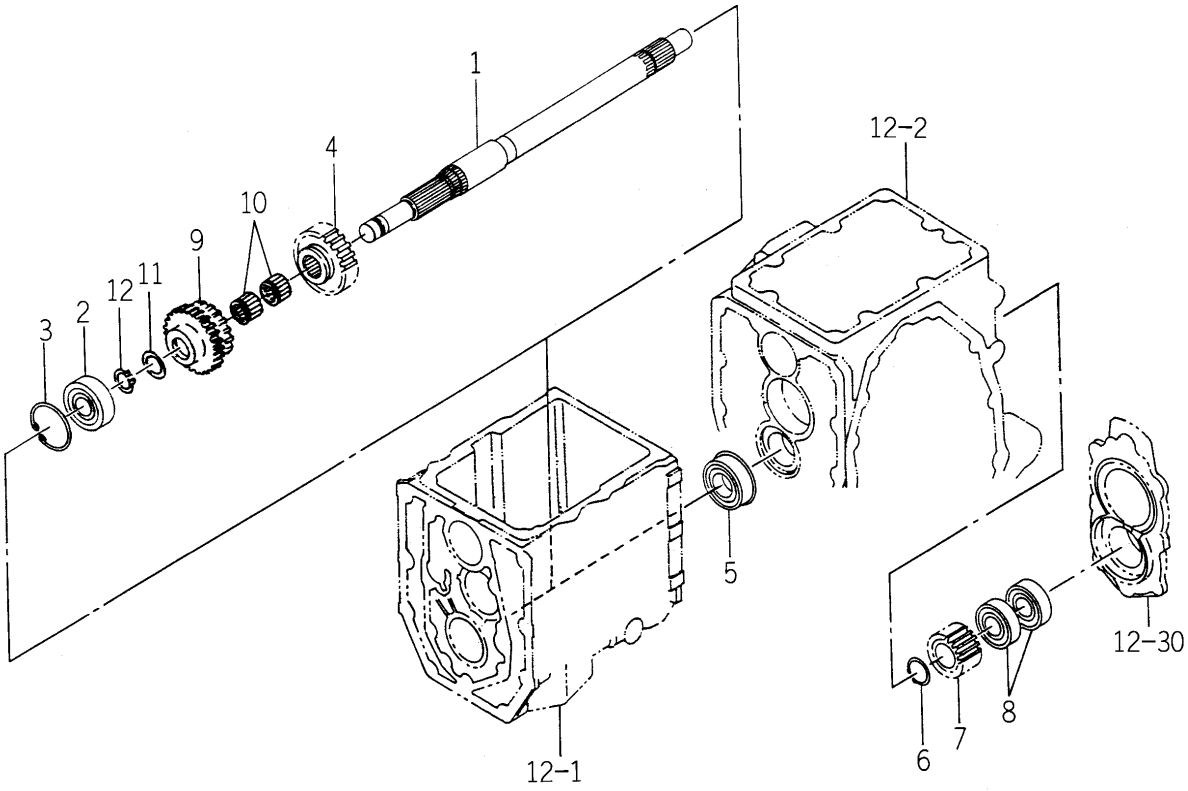

1750-211 -0100

KEY	PART CODE	DESCRIPTION	SPC	TYPE OF MODEL				ITC	COL	GRP	REMARKS
				TM3200	TM3200H	TM3240	TM3240H				
1	1684-211-004-20	SHAFT/DRIVE/PTO	*	1							
2	V600-110-630-40	BEARING,RB/6304	*	1							
3	V705-140-052-00	RING,SNAP/52 C	*	1							
4	1684-211-002-00	GEAR/SPUR/26	*	1							
5	V607-110-620-50	BEARING,RB/6205NR	*	1							
6	V704-140-025-00	RING,SNAP/25 C	*	1							
7	1688-211-061-10	GEAR/SPUR/13	*	1							
8	V600-110-620-40	BEARING,RB/6204	*	2							
9	1684-211-003-10	GEAR/SPUR/18-20	*	1							
10	1682-211-007-00	BEARING/NEEDLE	*	2							
11	1682-211-002-20	WASHER/20X32X02	*	3							
12	V704-140-020-00	RING,SNAP/20C	*	1							

FIG. 30 GEAR (PTO) SYSTEM (H TYPE)

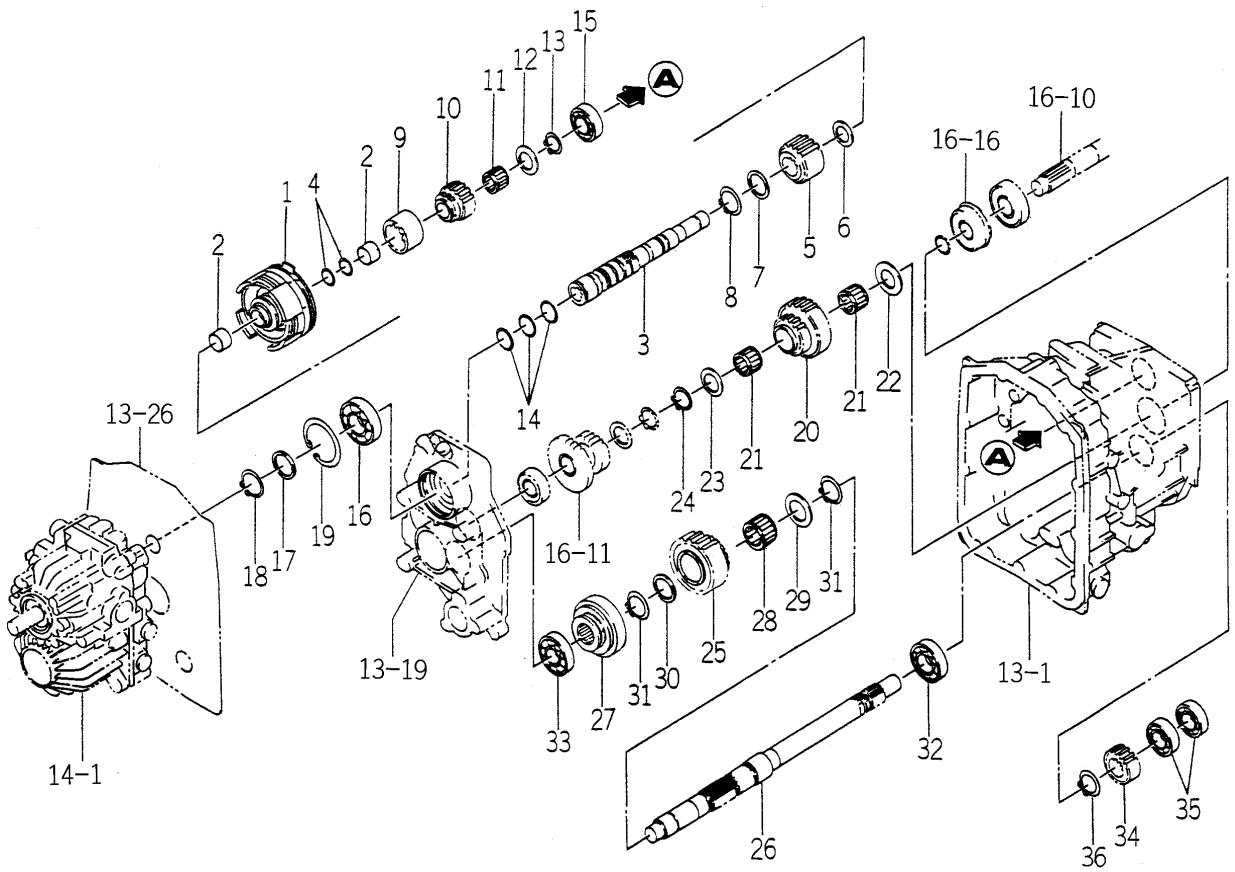

1750-211A-0100

KEY	PART CODE	DESCRIPTION	SPC	TYPE OF MODEL				ITC	COL	GRP	REMARKS
				TM3200	TM3200H	TM3240	TM3240H				
1	1685-211-500-10	CLUTCH/PTO/3 ASSY	*		1		1				FIG 111
2	1688-211-058-00	BUSH/22X25X15	*		2		2				
3	1688-211-510-20	SHAFT/PTO COMP	*		1		1				
4	1688-211-057-00	RING/22	*		2		2				
5	1688-211-051-10	GEAR/SPUR/33	*		1		1				
6	1480-207-012-00	COLLAR 23X34X2	*		1		1				
7	1544-322-002-00	WASHER/30X40X2	*		1		1				
8	V704-140-030-00	RING,SNAP/30 C	*		1		1				
9	1688-211-053-00	COUPLING/37X50X35	*		1		1				
10	1688-211-052-00	GEAR/SPUR/18	*		1		1				
11	1682-255-002-20	BEARING/NEEDLE	*		1		1				
12	3656-107-004-00	WASHER/21X38X02	*		1		1				
13	V704-140-020-00	RING,SNAP/20C	*		1		1				
14	1650-203-008-00	RING/30	*		3		3				
15	V600-110-620-40	BEARING,RB/6204	*		1		1				
16	V600-110-620-60	BEARING,RB/6206	*		1		1				
17	1544-322-002-00	WASHER/30X40X2	*		1		1				
18	V704-140-030-00	RING,SNAP/30 C	*		1		1				
19	V707-140-062-00	RING/SNAP	*		1		1				
20	1688-211-054-00	GEAR/SPUR/31-20	*		1		1				
21	V654-425-322-40	BEARING KT253224	*		2		2				
22	1435-203-001-00	COLLAR/25X46X3	*		1		1				
23	1415-205-013-00	COLLAR/25X42X4	*		1		1				
24	V704-140-025-00	RING,SNAP/25 C	*		1		1				
25	1688-211-055-10	GEAR/SPUR/30	*		1		1				
26	1688-211-056-20	SHAFT/DRIVE/PTO	*		1		1				
27	1688-211-310-00	HUB/CLUTCH COMP	*		1		1				
28	V654-430-382-40	BEARING,NR/KT303824	*		1		1				
29	1560-208-018-40	WASHER/30X46X2	*		1		1				
30	1544-322-002-00	WASHER/30X40X2	*		1		1				

FIG. 30 GEAR (PTO) SYSTEM (H TYPE)

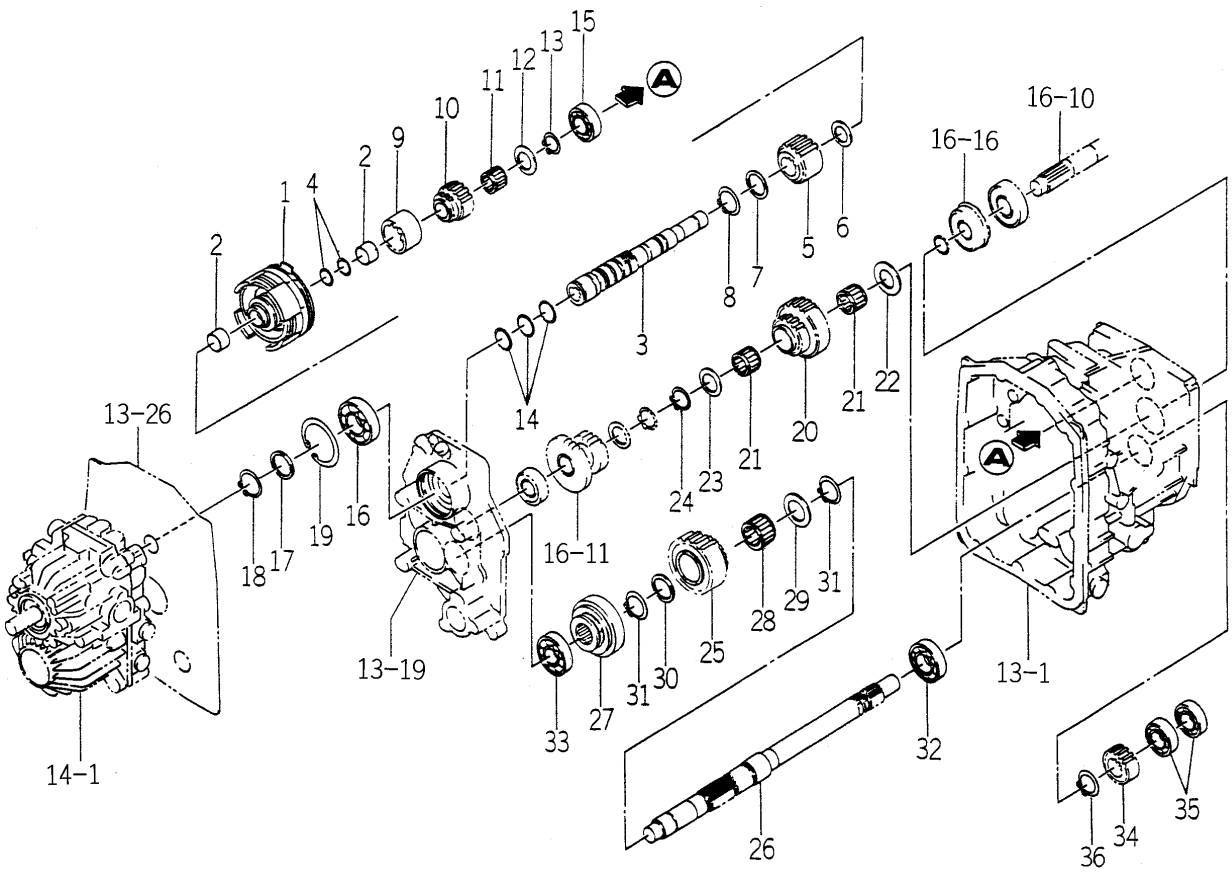

1750-211A-0100

KEY	PART CODE	DESCRIPTION	SPC	TYPE OF MODEL				ITC	COL	GRP	REMARKS
				TM3200	TM3200H	TM3240	TM3240H				
31	V704-140-030-00	RING,SNAP/30 C	*		2		2				
32	V600-110-620-50	BEARING,RB/6205	*		1		1				
33	V600-110-630-40	BEARING,RB/6304	*		1		1				
34	1750-211-003-00	GEAR/SPUR/14	*		1		1				
35	V600-110-620-40	BEARING,RB/6204	*		2		2				
36	V704-140-025-00	RING,SNAP/25 C	*		1		1				

FIG. 31 SHAFT (PTO) SYSTEM

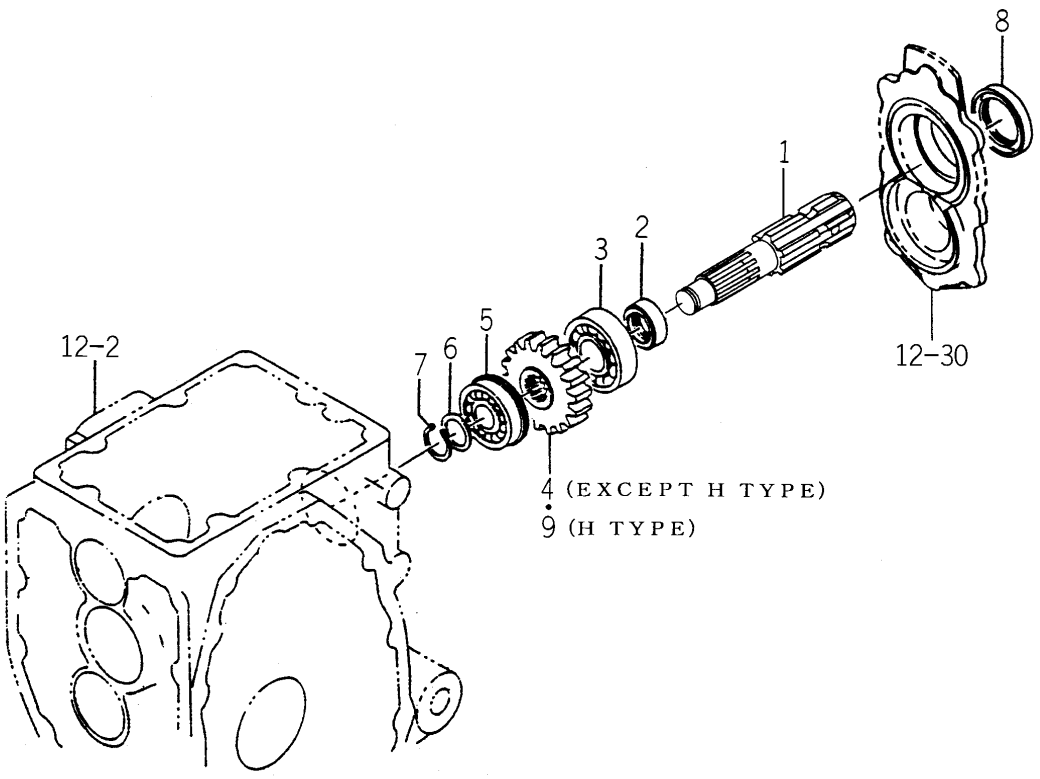

1750-212 -0100,1750-212A-0100

KEY	PART CODE	DESCRIPTION	SPC	TYPE OF MODEL				ITC	COL	GRP	REMARKS
				TM3200	TM3200H	TM3240	TM3240H				
1	1738-212-002-00	SHAFT/PTO	*	1	1	1	1				
2	1427-212-003-20	SLEEVE	*	1	1	1	1				
3	1594-218-001-00	BEARING/BALL 6305SH2	*	1	1	1	1				
4	1688-212-001-20	GEAR/SPUR/25	*	1		1					
5	V607-110-630-40	BEARING,RB/6304NR	*	1	1	1	1				
6	1427-212-002-00	WASHER/20X28X2	*	1	1	1	1				
7	V704-140-020-00	RING,SNAP/20C	*	1	1	1	1				
8	V744-135-550-80	SEAL,OIL/TC35558	*	1	1	1	1				
9	1750-212-001-00	GEAR/SPUR/24	*		1		1				

FIG. 32 LEVER (PTO) SYSTEM (EXCEPT H TYPE)

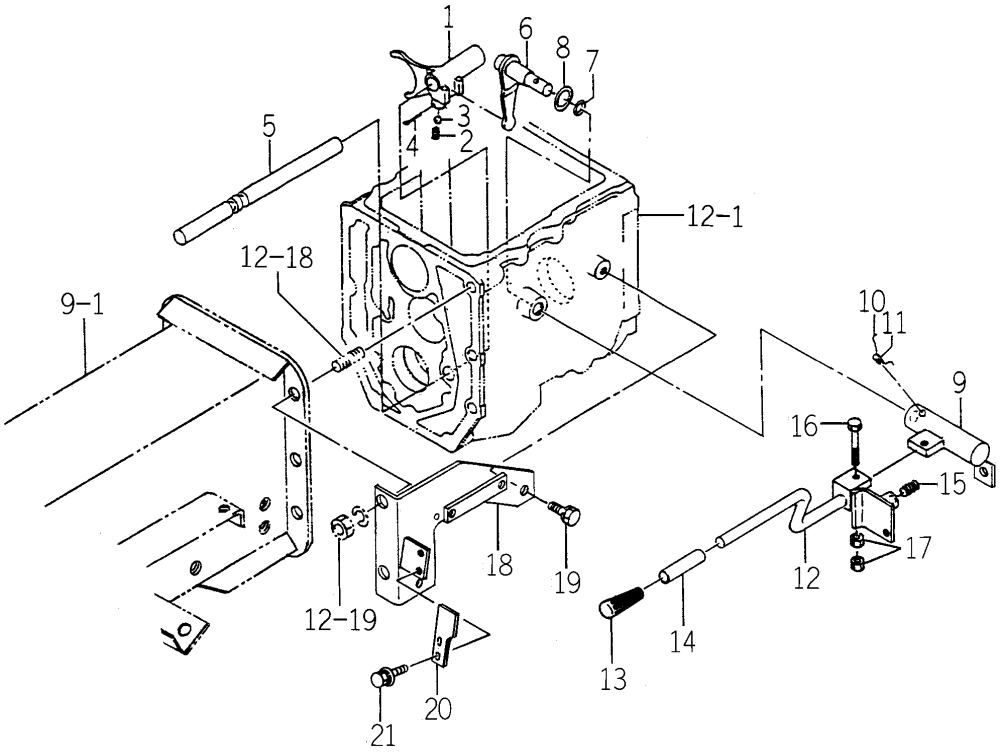

1750-216 -0100

KEY	PART CODE	DESCRIPTION	SPC	TYPE OF MODEL				ITC	COL	GRP	REMARKS
				TM3200	TM3200H	TM3240	TM3240H				
1	1682-216-006-00	SHIFTER/PTO	*	1		1					
2	1302-225-003-00	SPRING,SHIFTER	*	1		1					
3	V682-200-001-00	BALL	*	1		1					
4	V500-162-502-50	PIN,SPLIT/2.5X25	*	1		1					
5	1682-216-001-10	STAY/SHIFT/PTO	*	1		1					
6	1672-216-310-00	ARM/SHIFT/PTO COMP	*	1		1					
7	V720-102-401-40	O-RING/P14	*	1		1					
8	1427-601-003-00	WASHER/15X24X2	*	1		1					
9	1682-216-270-10	ARM/PTO COMP	*	1		1					
10		WIRE	*	1		1					
11	V580-140-502-50	PIN,SPRING/5 X25 W	*	1		1					
12	1750-216-210-00	LEVER/PTO COMP	*	1		1					
13	3640-585-001-00	GLIP/YELLOW	*	1		1					
14	1682-255-303-00	TUBE/10X12X50	*	1		1					
15	2149-601-031-00	SPRING/HC024	*	1		1					
16	1682-216-007-10	BOLT/M8X45	*	1		1					
17	V304-460-008-00	NUT/M8	*	2		2					
18	1738-216-220-00	STAY/PTO/PARKIN COMP	*	1		1					
19	V211-261-002-00	BOLT,SEMS	*	1		1					
20	1750-216-001-10	GUIDE/CHANGE	*	1		1					
21	V210-360-601-60	BOLT(SP)/M6X16	*	2		2					

FIG. 33 LEVER (PTO) SYSTEM (H TYPE)

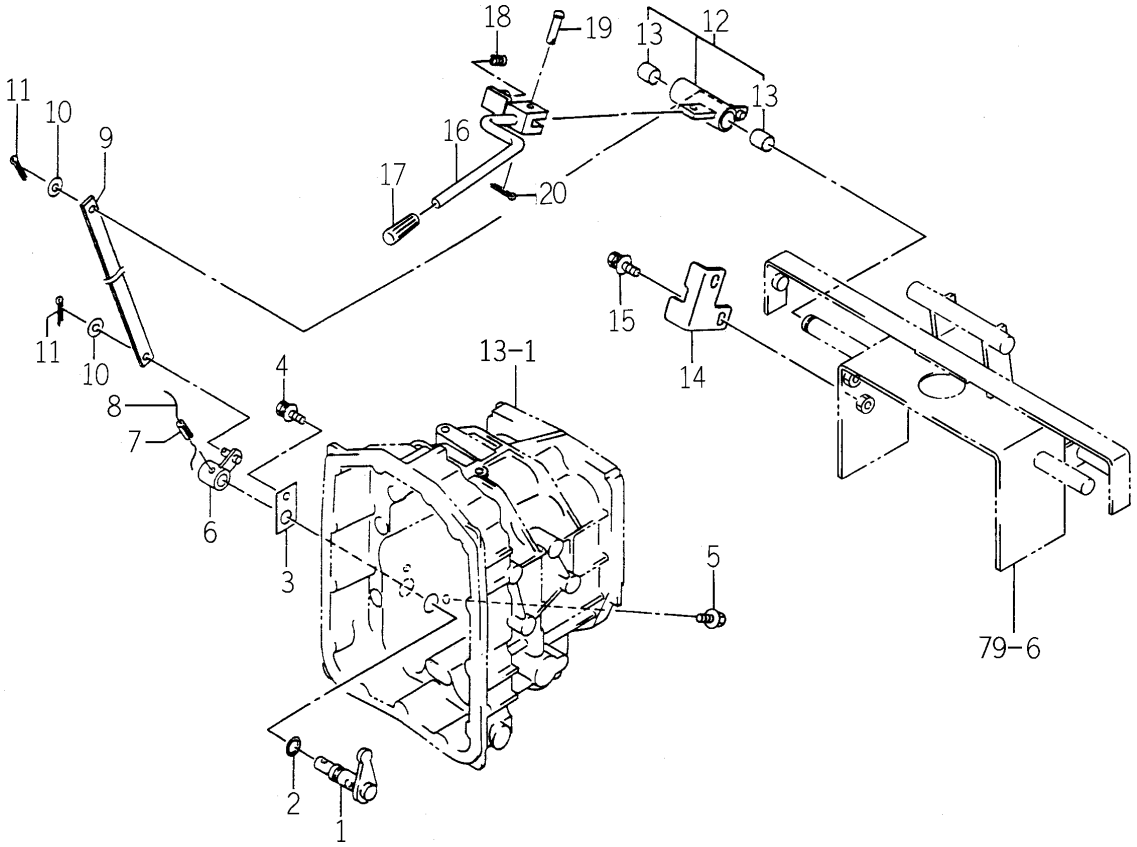

1750-216A-0100

KEY	PART CODE	DESCRIPTION	SPC	TYPE OF MODEL				ITC	COL	GRP	REMARKS
				TM3200	TM3200H	TM3240	TM3240H				
1	1683-208-500-00	PIN/SHIFT COMP	*		1		1				
2	V720-102-401-40	O-RING/P14	*		2		2				
3	1620-255-208-00	PLATE/I/30X50	*		1		1				
4	V211-360-801-60	BOLT,SEMS (SP)	*		1		1				
5	V233-361-201-60	FLANGEBOLT	*		1		1				
6	1683-265-510-00	ARM/SHIFT/MID COMP	*		1		1				
7	V580-140-602-50	PIN,SPRING/6 X25 W	*		1		1				
8		WIRE	*		1		1				
9	1685-208-051-00	PLATE/I/19X295	*		1		1				
10	V411-260-008-00	WASHER,PL/M 8	*		2		2				
11	V500-163-002-00	PIN,SPLIT/3 X20	*		2		2				
12	1688-216-500-00	ARM/PTO ASSY	*		1		1				
13	3668-612-001-00	BUSH	*		2		2				
14	1750-216-051-20	GUIDE/CHENGE	*		1		1				
15	V211-360-802-00	BOLT/SP	*		2		2				
16	1750-216-500-00	LEVER/PTO COMP	*		1		1				
17	3640-585-001-00	GLIP/YELLOW	*		1		1				
18	2149-601-031-00	SPRING/HC024	*		1		1				
19	2144-519-007-00	PIN/06X31	*		1		1				
20	V500-162-502-00	PIN,SPLIT/2.5X20	*		1		1				

FIG. 34 SHIELD COVER SYSTEM

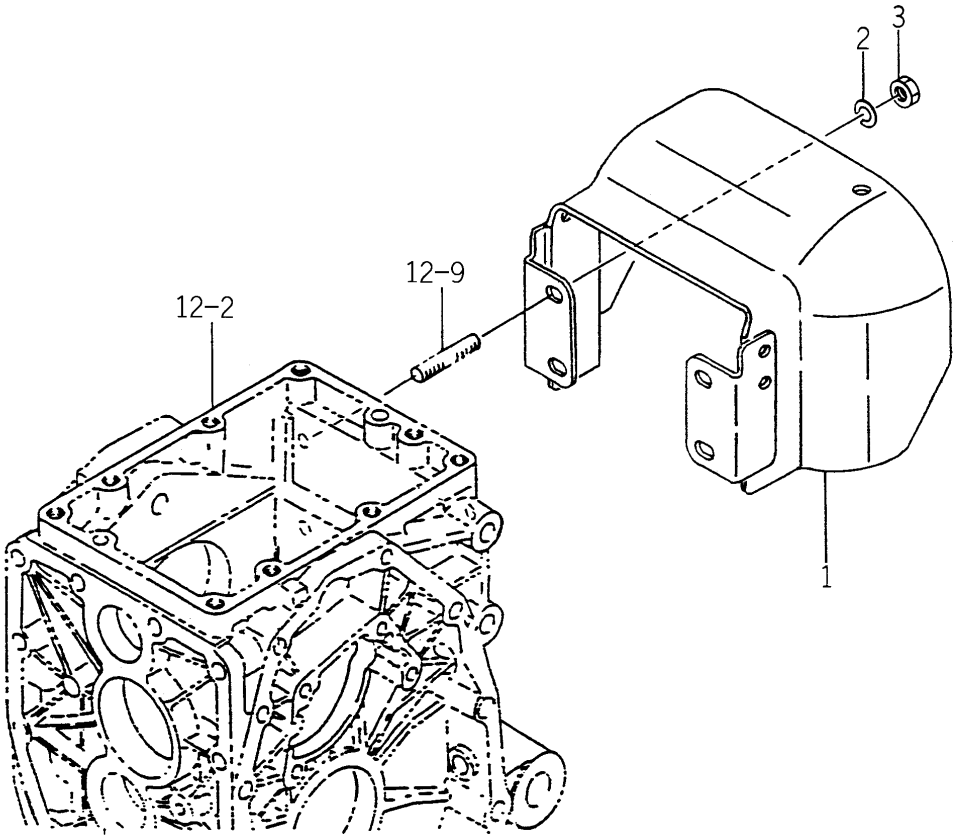

1738-218 -0100

KEY	PART CODE	DESCRIPTION	SPC	TYPE OF MODEL				ITC	COL	GRP	REMARKS
				TM3200	TM3200H	TM3240	TM3240H				
1	1738-218-200-00	COVER/SHIELD COMP	*	1	1	1	1				
2	V401-160-012-00	WASHER,SP/M12	*	4	4	4	4				
3	V304-460-012-00	NUT/M12	*	4	4	4	4				

FIG. 35 MID PTO SYSTEM (H TYPE)

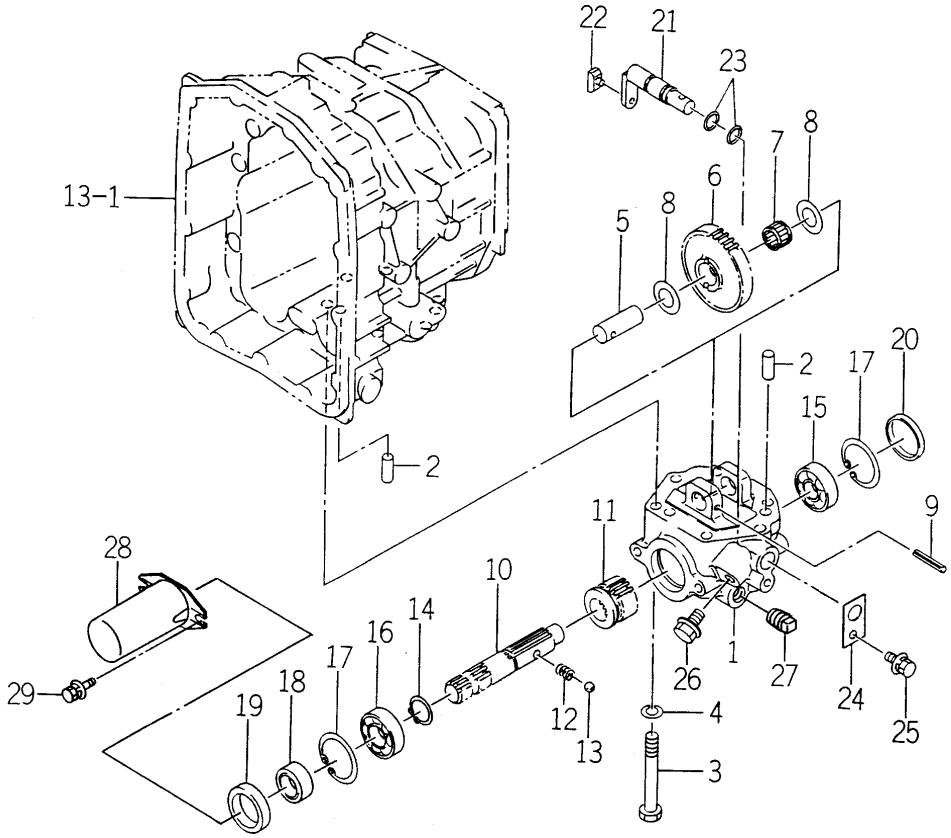

1683-255 -0100

KEY	PART CODE	DESCRIPTION	SPC	TYPE OF MODEL				ITC	COL	GRP	REMARKS
				TM3200	TM3200H	TM3240	TM3240H				
1	1682-255-201-10	CASE/PTO/MID	*		1		1				
2	V523-101-002-40	PIN	*		2		2				
3	V201-361-009-00	BOLT/M10X90	*		6		6				
4	V401-160-010-00	WASHER,SP/M10	*		6		6				
5	1682-255-203-00	PIN/20X51	*		1		1				
6	1682-255-202-00	GEAR/SPUR/34	*		1		1				
7	1682-255-002-20	BEARING/NEEDLE	*		1		1				
8	1480-212-003-00	COLLAR/21X36X1	*		2		2				
9	V580-140-604-00	PIN,SPRING/6 X40 W	*		1		1				
10	1682-255-204-00	SHAFT/PTO/MID	*		1		1				
11	1682-255-205-10	GEAR/SPUR/15	*		1		1				
12	1302-225-003-00	SPRING,SHIFTER	*		1		1				
13	V682-200-001-00	BALL	*		1		1				
14	V704-140-025-00	RING,SNAP/25 C	*		1		1				
15	V600-110-630-40	BEARING,RB/6304	*		1		1				
16	V600-110-620-50	BEARING,RB/6205	*		1		1				
17	V705-140-052-00	RING,SNAP/52 C	*		2		2				
18	1427-212-003-20	SLEEVE	*		1		1				
19	V744-135-520-80	SEAL,OIL/TC35528	*		1		1				
20	3625-701-003-00	CAP,BLANK/52	*		1		1				
21	1682-255-210-40	ARM/SHIFT/MID COMP	*		1		1				
22	2703-101-020-00	COLLAR,SHIFTER	*		1		1				
23	V720-102-401-40	O-RING/P14	*		2		2				
24	1620-255-208-00	PLATE/I/30X50	*		1		1				
25	V211-360-801-60	BOLT,SEMS (SP)	*		1		1				
26	V233-361-201-60	FLANGEBOLT	*		1		1				
27	V781-160-000-6B	PLUG/SCREW/SEAL	*		1		1				
28	1444-314-009-10	CAP,PTO SHAFT	*		1		1				
29	V210-360-602-00	BOLT/SP	*		1		1				

FIG. 36 MID PTO SYSTEM (M TYPE EXCEPT H)(1/2)

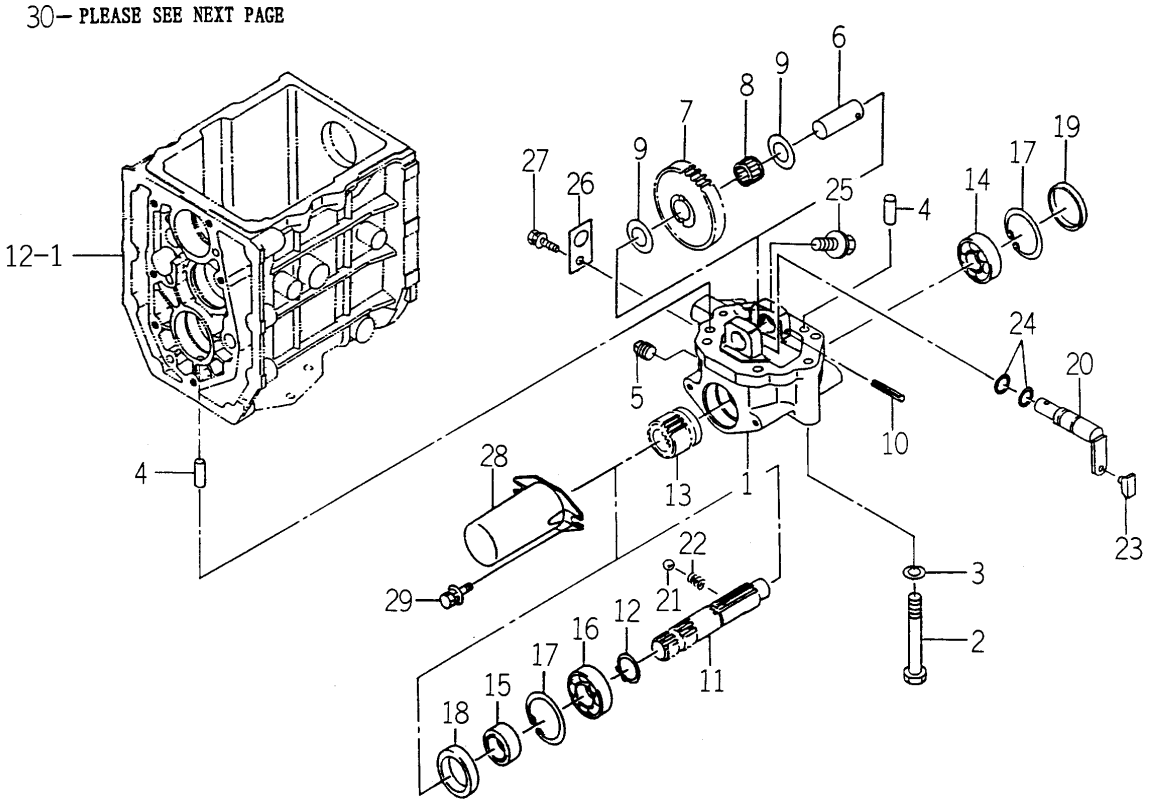

1738-255 -0100

KEY	PART CODE	DESCRIPTION	SPC	TYPE OF MODEL				ITC	COL	GRP	REMARKS
				TM3200	TM3200H	TM3240	TM3240H				
1	1682-255-201-10	CASE/PTO/MID	*	1		1					
2	V201-361-009-00	BOLT/M10X90	*	6		6					
3	V401-160-010-00	WASHER,SP/M10	*	6		6					
4	V523-101-002-40	PIN	*	2		2					
5	V781-160-000-6B	PLUG/SCREW/SEAL	*	1		1					
6	1682-255-203-00	PIN/20X51	*	1		1					
7	1682-255-202-00	GEAR/SPUR/34	*	1		1					
8	1682-255-002-20	BEARING/NEEDLE	*	1		1					
9	1480-212-003-00	COLLAR/21X36X1	*	2		2					
10	V580-140-604-00	PIN,SPRING/6 X40 W	*	1		1					
11	1682-255-204-00	SHAFT/PTO/MID	*	1		1					
12	V704-140-025-00	RING,SNAP/25 C	*	1		1					
13	1682-255-205-10	GEAR/SPUR/15	*	1		1					
14	V600-110-630-40	BEARING,RB/6304	*	1		1					
15	1427-212-003-20	SLEEVE	*	1		1					
16	V600-110-620-50	BEARING,RB/6205	*	1		1					
17	V705-140-052-00	RING,SNAP/52 C	*	2		2					
18	V744-135-520-80	SEAL,OIL/TC35528	*	1		1					
19	3625-701-003-00	CAP,BLANK/52	*	1		1					
20	1682-255-210-40	ARM/SHIFT/MID COMP	*	1		1					
21	V682-200-001-00	BALL	*	1		1					
22	1302-225-003-00	SPRING,SHIFTER	*	1		1					
23	2703-101-020-00	COLLAR,SHIFTER	*	1		1					
24	V720-102-401-40	O-RING/P14	*	2		2					
25	V233-361-201-60	FLANGEBOLT	*	1		1					
26	1620-255-208-00	PLATE/I/30X50	*	1		1					
27	V211-360-801-60	BOLT,SEMS (SP)	*	1		1					
28	1444-314-009-10	CAP,PTO SHAFT	*	1		1					
29	V210-360-602-00	BOLT/SP	*	2		2					
30	1738-255-310-20	LEVER/PTO/MID COMP	*	1		1					

FIG. 36 MID PTO SYSTEM (M TYPE EXCEPT H)(2/2)

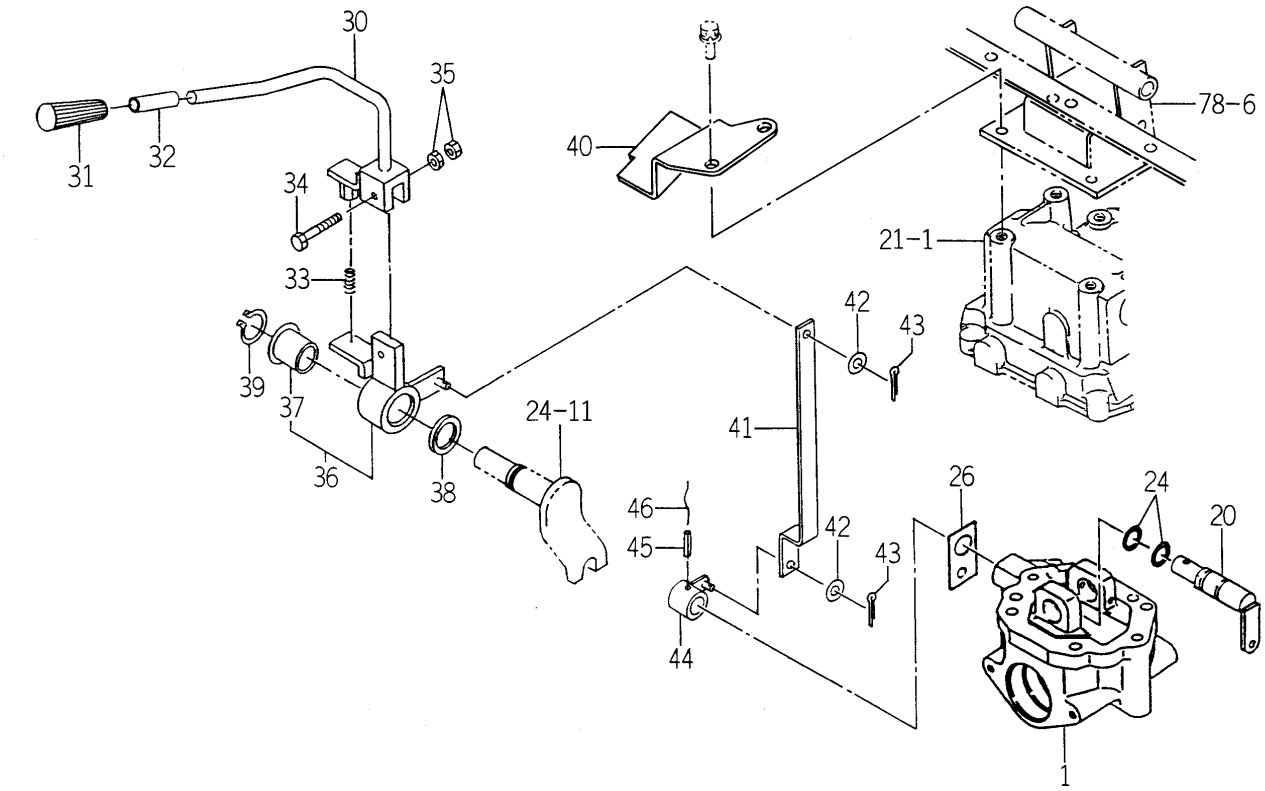

1738-255 -0100

KEY	PART CODE	DESCRIPTION	SPC	TYPE OF MODEL				ITC	COL	GRP	REMARKS
				TM3200	TM3200H	TM3240	TM3240H				
31	3640-585-001-00	GLIP/YELLOW	*	1		1					
32	1682-255-303-00	TUBE/10X12X50	*	1		1					
33	2149-601-031-00	SPRING/HC024	*	1		1					
34	V200-360-604-00	BOLT	*	1		1					
35	V300-460-006-00	NUT/M 6	*	2		2					
36	1738-255-330-00	ARM/PTO/MID ASSY	*	1		1					
37	1581-521-642-00	BUSH/25X28X27	*	1		1					
38	3670-520-008-00	WASHER/25X34X02	*	1		1					
39	V704-140-025-00	RING,SNAP/25 C	*	1		1					
40	1738-255-002-00	GUIDE/PTO/MID	*	1		1					
41	1738-255-001-00	ROD/TIE/MID	*	1		1					
42	V411-260-008-00	WASHER,PL/M 8	*	2		2					
43	V500-162-001-50	PIN,SPLIT/2 X15	*	2		2					
44	1683-265-510-00	ARM/SHIFT/MID COMP	*	1		1					
45	V580-140-602-50	PIN,SPRING/6 X25 W	*	1		1					
46		WIRE	*	1		1					

FIG. 37 MID PTO SYSTEM (EXCEPT M,H TYPE)

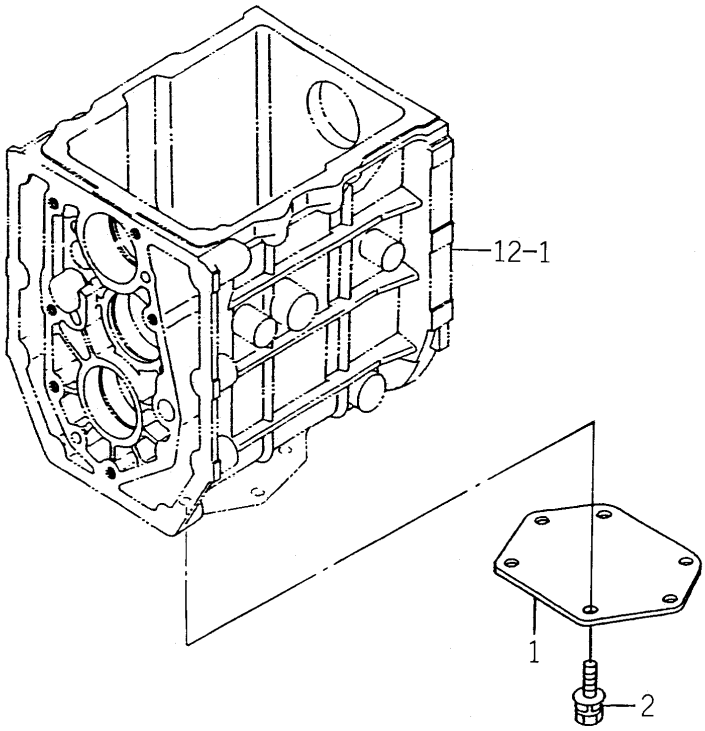

1682-255A-0100

KEY	PART CODE	DESCRIPTION	SPC	TYPE OF MODEL				ITC	COL	GRP	REMARKS
				TM3200	TM3200H	TM3240	TM3240H				
1	1682-255-001-00	COVER/PLATE	*	1		1					
2	V211-361-002-50	BOLT/SP	*	6		6					

FIG. 38 LEVER (MID PTO) SYSTEM (H TYPE)

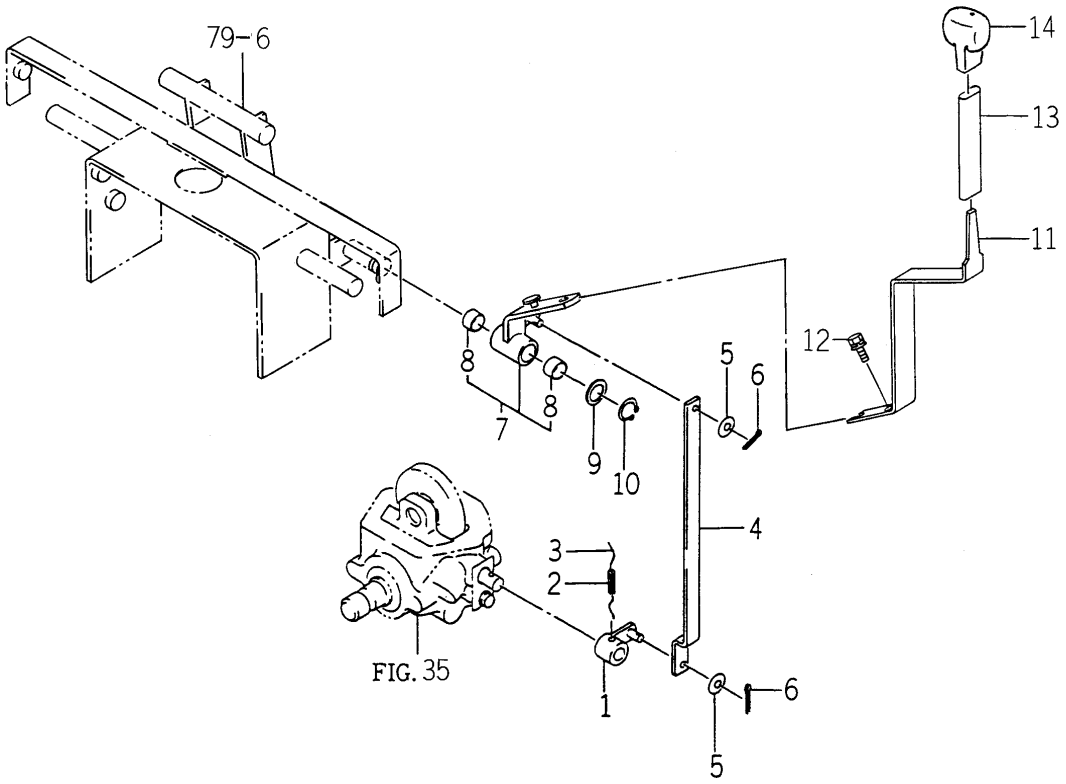

1750-265 -0100

KEY	PART CODE	DESCRIPTION	SPC	TYPE OF MODEL				ITC	COL	GRP	REMARKS
				TM3200	TM3200H	TM3240	TM3240H				
1	1683-265-510-00	ARM/SHIFT/MID COMP	*		1		1				
2	V580-140-602-50	PIN,SPRING/6 X25 W	*		1		1				
3		WIRE	*		1		1				
4	1685-265-051-00	PLATE/Z/19X334	*		1		1				
5	V411-260-008-00	WASHER,PL/M 8	*		2		2				
6	V500-163-002-00	PIN,SPLIT/3 X20	*		2		2				
7	1750-265-500-00	ARM/MID ASSY	*		1		1				
8	3668-612-001-00	BUSH	*		2		2				
9	2144-419-022-00	WASHER/18X26X02	*		1		1				
10	V704-140-018-00	RING,SNAP/18 C	*		1		1				
11	1750-208-001-10	LEVER/SUB	*		1		1				
12	V211-361-002-00	BOLT,SEMS	*		1		1				
13	1725-266-001-00	INSULATOR/120	*		1		1				
14	1688-265-001-00	GRIP/MID/PTO	*		1		1				

FIG. 39 LINK (HST) SYSTEM (H TYPE)

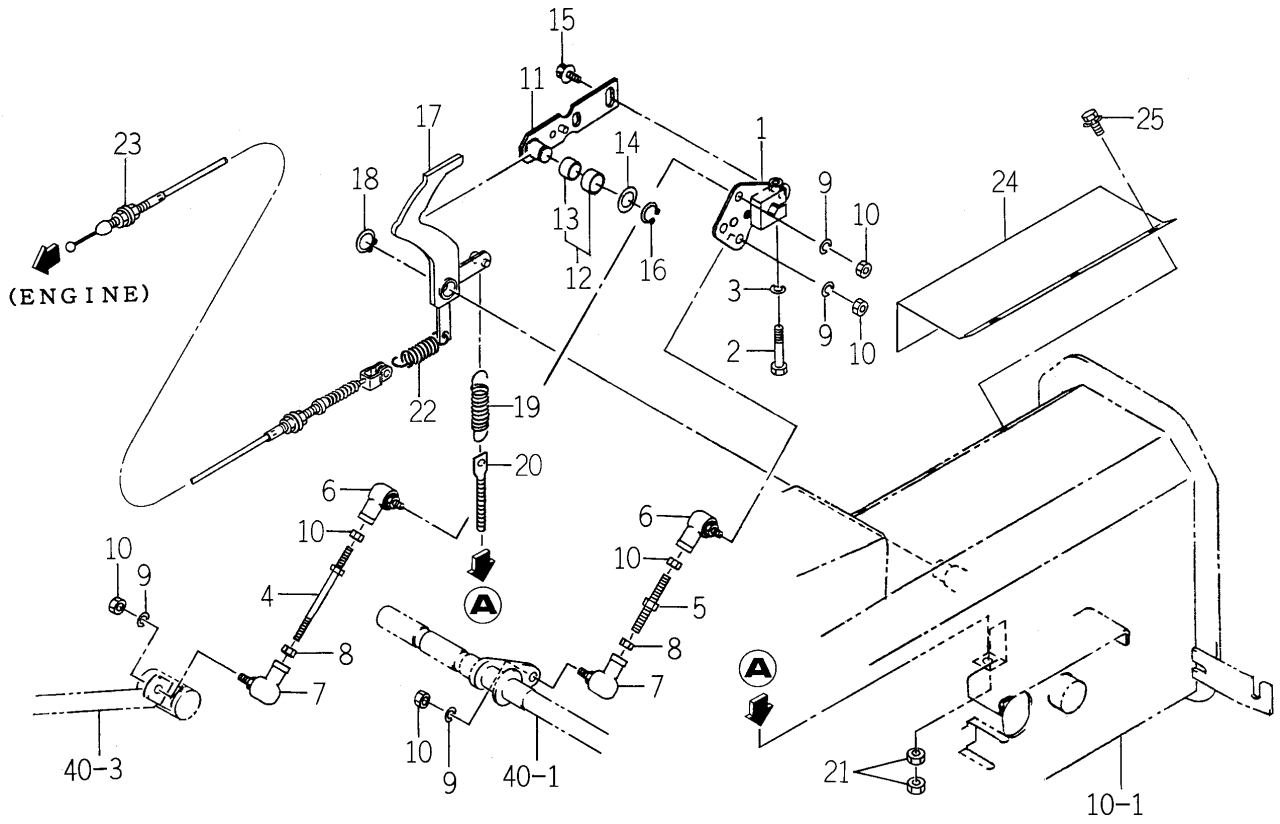

1750-271 -0100

KEY	PART CODE	DESCRIPTION	SPC	TYPE OF MODEL				ITC	COL	GRP	REMARKS
				TM3200	TM3200H	TM3240	TM3240H				
1	1688-271-510-10	PIVOT/TRUNNION COMP	*		1		1				
2	V201-360-804-50	BOLT/M8X45/7T	*		1		1				
3	V401-160-008-00	WASHER,SP/M 8	*		1		1				
4	1683-271-560-00	ROD/M08X110 COMP	*		1		1				
5	1750-271-220-00	ROD/M8X65 COMP	*		1		1				
6	1560-695-021-00	JOINT BALL M08RH	*		2		2				
7	1560-695-022-00	JOINT BALL M08LH	*		2		2				
8	1560-132-007-30	NUT/M8	*		2		2				
9	V401-160-008-00	WASHER,SP/M 8	*		4		4				
10	V304-260-008-00	NUT	*		6		6				
11	1683-271-500-40	ARM/NEUTRAL COMP	*		1		1				
12	1683-271-520-10	COLLAR/17X21X11 ASSY	*		1		1				
13	3643-420-004-00	BUSH/15X17X10	*		1		1				
14	3747-342-002-00	WASHER	*		1		1				
15	V211-360-801-60	BOLT,SEMS (SP)	*		2		2				
16	V704-140-015-00	RING,SNAP/15 C	*		1		1				
17	1750-271-210-20	ARM COMP	*		1		1				
18	V704-140-015-00	RING,SNAP/15 C	*		1		1				
19	3650-703-004-00	SPRING/HE85	*		1		1				
20	3814-114-001-00	ROD/M8X92	*		1		1				
21	V304-260-008-00	NUT	*		2		2				
22	2149-312-015-60	SPRING/HE068	*		1		1				
23	1750-271-300-00	CABLE/PEDAL ASSY	*		1		1				
24	1750-271-001-00	COVER/TRUNNION	*		1		1				
25	V210-360-601-60	BOLT(SP)/M6X16	*		3		3				

FIG. 40 PEDAL (HST) SYSTEM (H TYPE)

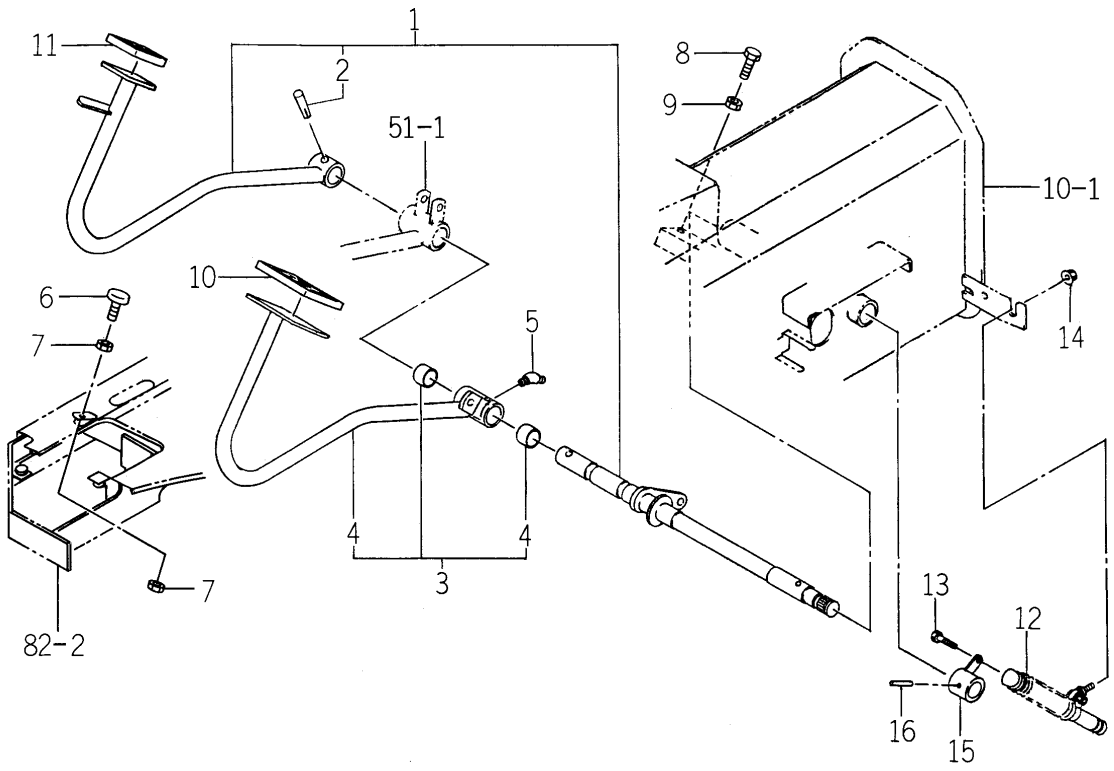

1750-272 -0100

KEY	PART CODE	DESCRIPTION	SPC	TYPE OF MODEL				ITC	COL	GRP	REMARKS
				TM3200	TM3200H	TM3240	TM3240H				
1	1750-272-220-20	PEDAL/HST/R SET	*		1		1				
2	V511-100-805-00	PIN,TAPER/8X50	*		1		1				
3	1750-272-200-10	PEDAL/HST/F ASSY	*		1		1				
4	3664-540-001-00	BUSH/22X25X20	*		2		2				
5	V763-150-000-00	NIPPLE,GREASE/PT1/8	*		1		1				
6	1421-602-005-10	CUSHION,B/ RUBBER	*		1		1				
7	V304-260-008-00	NUT	*		2		2				
8	V201-260-802-50	BOLT/M 8X25	*		1		1				
9	V304-260-008-00	NUT	*		1		1				
10	1740-272-061-00	PAD/HST/OR	*		1		1				
11	1740-272-062-00	PAD/OR	*		1		1				
12	1683-272-560-00	DAMPER(OIL) ASSY	*		1		1				
13	V201-260-803-00	BOLT/M 8X30	*		1		1				
14	V362-260-008-00	NUT/WASHER	*		2		2				
15	1683-272-550-00	ARM/DANPER COMP	*		1		1				
16	1683-272-054-10	PIN	*		1		1				

FIG. 41 CRUISE SYSTEM (TM3240-H TYPE)

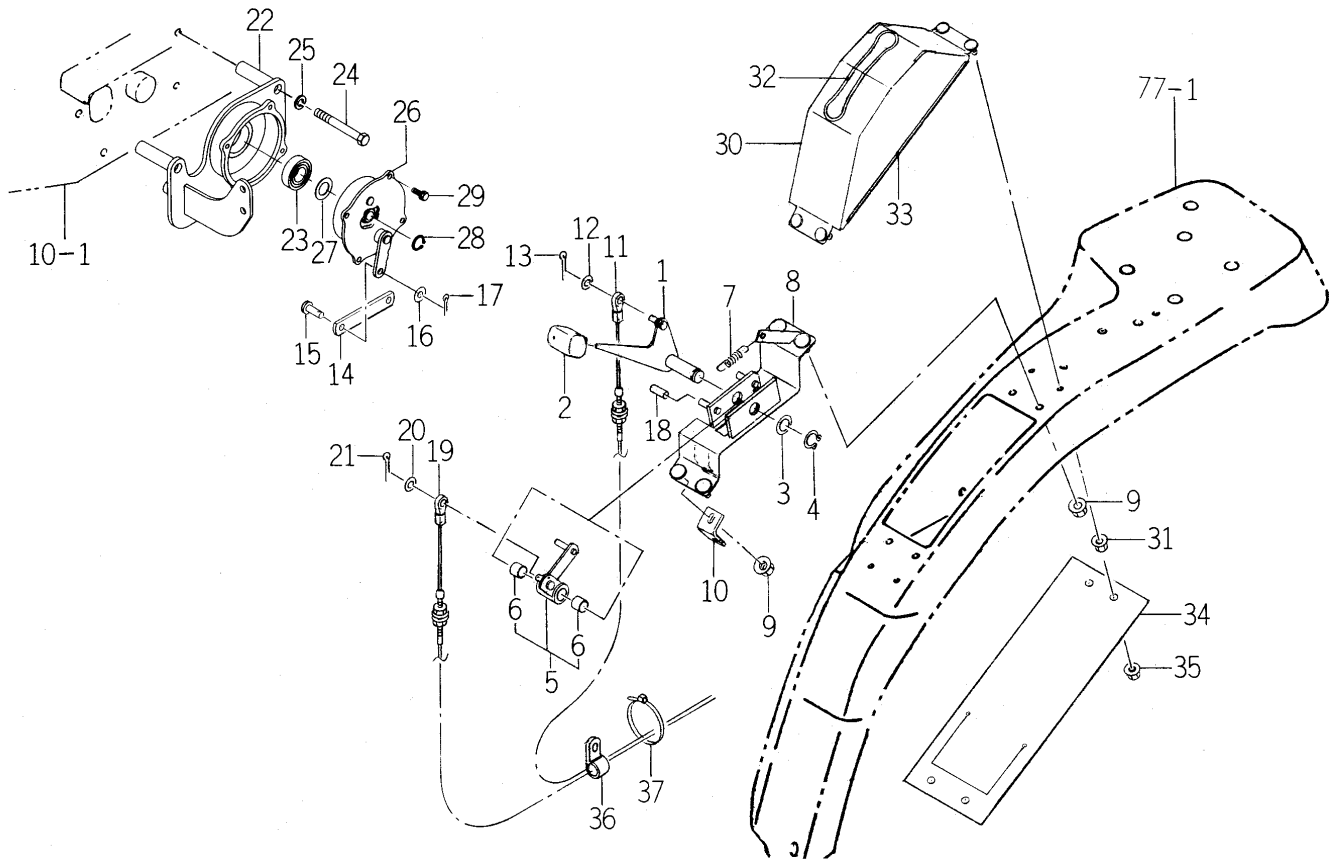

1750-272A-0100

KEY	PART CODE	DESCRIPTION	SPC	TYPE OF MODEL				ITC	COL	GRP	REMARKS
				TM3200	TM3200H	TM3240	TM3240H				
1	1750-272-520-00	LEVER/CRUISE COMP	*				1				
2	1703-261-002-00	GRIP/MAIN	*				1				
3	V411-260-014-00	WASHER,PL/M14	*				1				
4	V704-140-015-00	RING,SNAP/15 C	*				1				
5	1750-272-530-00	ARM/CRUISE ASSY	*				1				
6	3650-106-006-00	BUSH/15X17X15	*				2				
7	1414-312-002-00	SPRING,TENSION/53	*				1				
8	1750-272-550-20	PLATE/CRUISE COMP	*				1				
9	V362-260-008-00	NUT/WASHER	*				4				
10	1750-272-580-00	PLATE COMP	*				1				
11	1750-272-610-10	CABLE/CRUISE/A ASSY	*				1				
12	V411-260-008-00	WASHER,PL/M 8	*				1				
13	V500-162-002-00	PIN,SPLIT/2 X20	*				1				
14	1726-505-003-00	PLATE/IR/16X105	*				1				
15	1432-242-001-00	PIN	*				2				
16	V411-260-008-00	WASHER,PL/M 8	*				2				
17	V500-162-002-00	PIN,SPLIT/2 X20	*				2				
18	1750-272-054-00	HOSE/07X11X20	*				3				
19	1750-272-620-00	CABLE/CRUISE/B ASSY	*				1				
20	V411-260-008-00	WASHER,PL/M 8	*				1				
21	V500-162-002-00	PIN,SPLIT/2 X20	*				1				
22	1750-272-510-10	BRACKET/BRAKE/FILTER	*				1				
23	V600-150-600-40	BEARING,RB/6004SS	*				1				
24	V201-261-008-00	BOLT/M10X80	*				4				
25	V401-160-010-00	WASHER,SP/M10	*				4				
26	1750-272-570-00	BRAKE ASSY	*				1				
27	3824-222-006-00	COLLAR/18X30X1	*				1				
28	V704-140-018-00	RING,SNAP/18 C	*				1				
29	V210-560-601-60	BOLT/S	*				4				
30	1750-272-560-10	GUIDE/CRUISE COMP	*				1				

FIG. 41 CRUISE SYSTEM (TM3240-H TYPE)

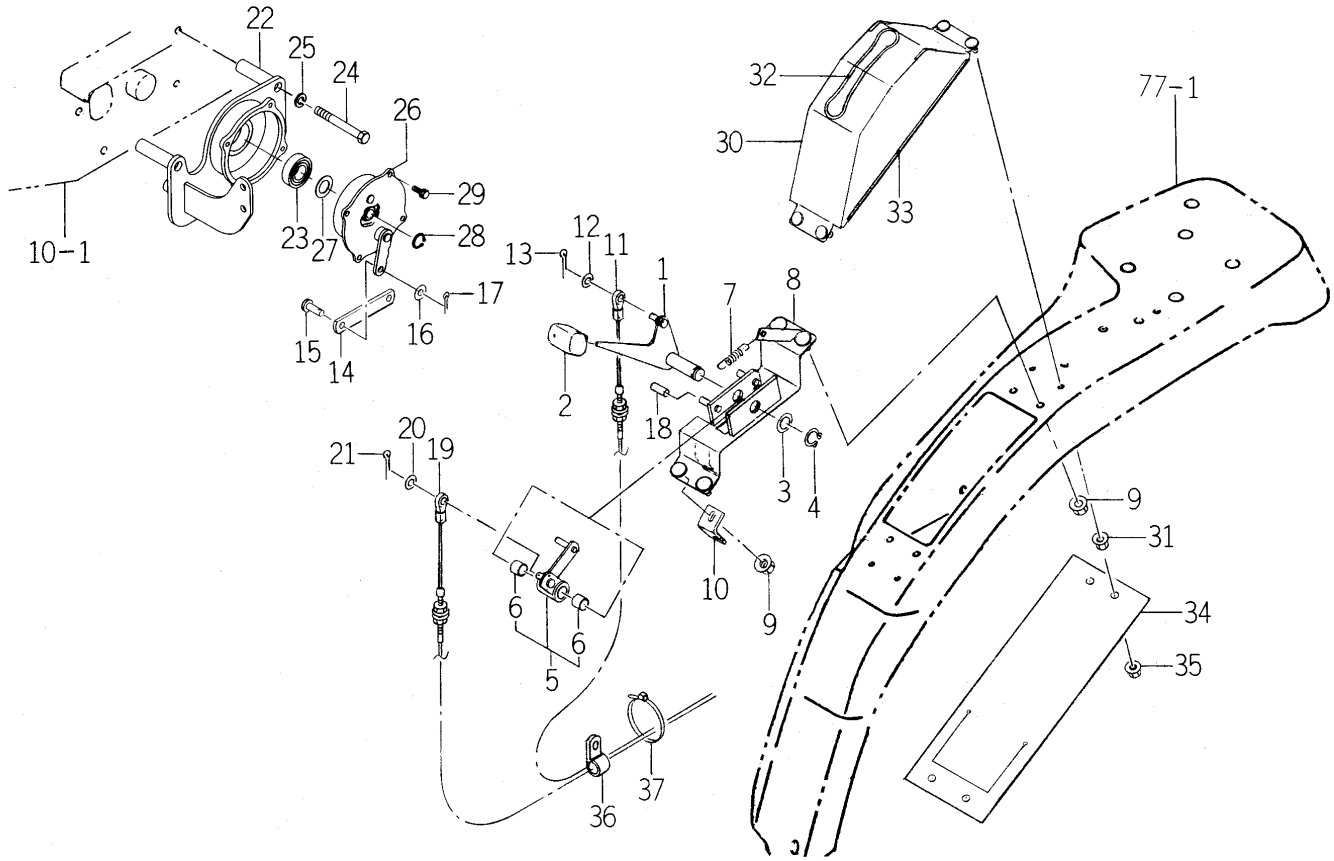

1750-272A-0100

KEY	PART CODE	DESCRIPTION	SPC	TYPE OF MODEL				ITC	COL	GRP	REMARKS
				TM3200	TM3200H	TM3240	TM3240H				
31	V360-260-006-00	NUT/M6	*				3				
32	1750-272-051-10	TRIM/295	*				1				
33	1750-272-052-00	TRIM/260	*				2				
34	1750-272-053-10	COVER	*				1				
35	V361-260-006-00	NUT	*				3				
36	3656-212-011-20	HOLDER/2X09	*				1				
37	1376-402-003-00	BAND,WIRE/140	*				1				

FIG. 42 SHAFT COVER SYSTEM (TM3200-H TYPE)

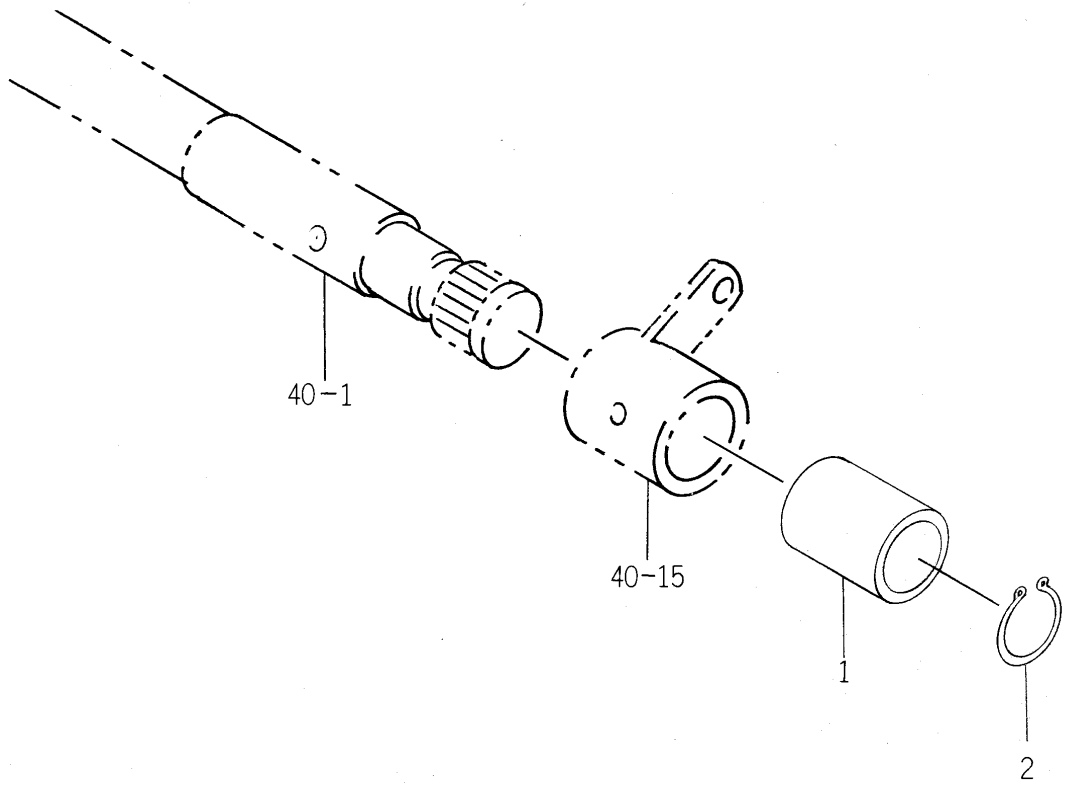

1750-272B-0100

KEY	PART CODE	DESCRIPTION	SPC	TYPE OF MODEL				ITC	COL	GRP	REMARKS
				TM3200	TM3200H	TM3240	TM3240H				
1	2504-307-273-00	HUB/21X27X33	*		1						
2	V704-140-018-00	RING,SNAP/18 C	*		1						

FIG. 43 PIPING SYSTEM (H TYPE)

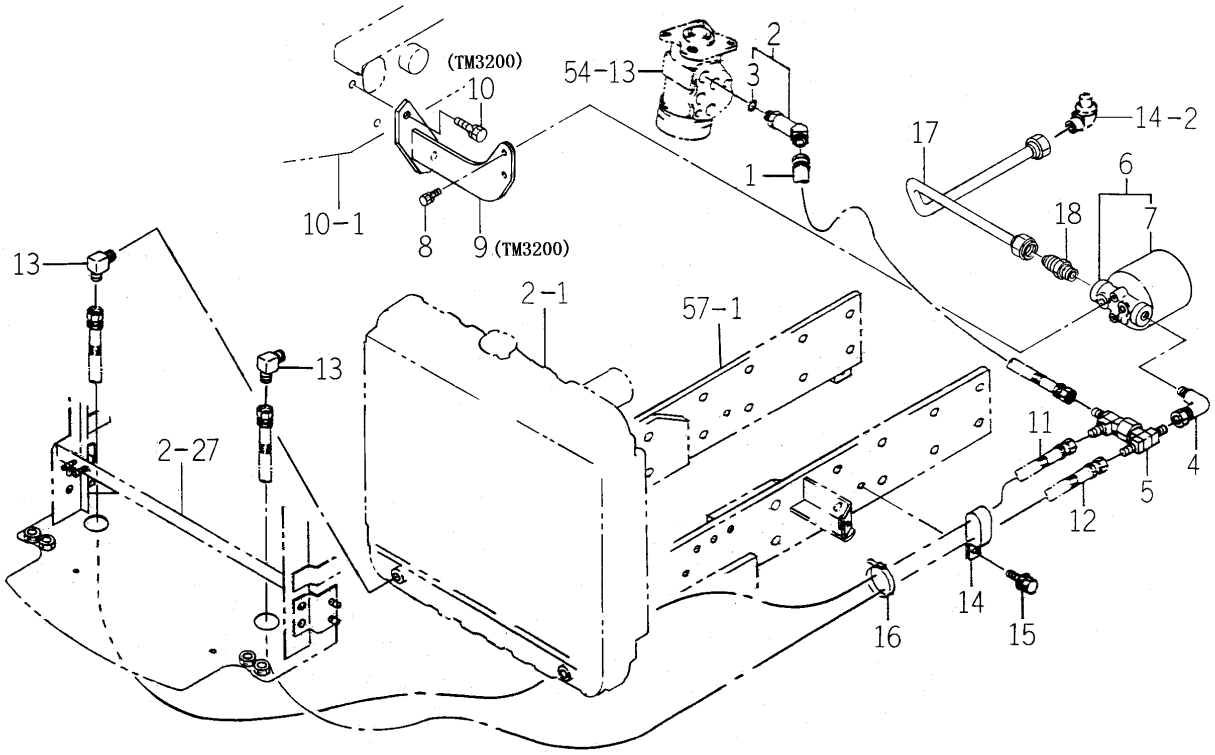

1750-273A-,1750-273 -0100

KEY	PART CODE	DESCRIPTION	SPC	TYPE OF MODEL				ITC	COL	GRP	REMARKS
				TM3200	TM3200H	TM3240	TM3240H				
1	1683-273-580-10	HOSE/650 ASSY	*		1		1				
2	P113-211-300-00	ELBOW/45ß ASSY	*		1		1				
3	V720-112-401-10	RING/O	*		1		1				
4	1683-273-055-00	ADAPTER/L/PT3/8	*		1		1				
5	1683-273-610-20	CONNECTOR/CHECK/2.5	*		1		1				
6	1608-206-250-00	OIL/FILTER ASSY	*		1		1				
7	1608-206-260-00	CARTRIDGE ASSY	*		1		1				
8	V211-260-801-60	BOLT,SEMS (S) M8X16	*		2		2				
9	1750-273-220-00	BRACKET/FILTER COMP	*		1						
10	V211-261-002-50	BOLT(S) M10X25	*		2						
11	1683-273-570-10	HOSE/1350 ASSY	*		1		1				
12	1685-273-520-00	HOSE/1100 ASSY	*		1		1				
13	3768-185-022-10	ADAPTER(90ß/PUMP)	*		2		2				
14	1444-101-016-10	CLAMP,RADIATOR HOSE	*		1		1				
15	V211-360-801-60	BOLT,SEMS (SP)	*		1		1				
16	1342-402-006-00	BAND,WIRE/250	*		1		1				
17	1750-273-210-00	PIPE/HST COMP	*		1		1				
18	1750-273-001-00	ADAPTER/M20-R3/8	*		1		1				

FIG. 44 DIFF CASE SYSTEM

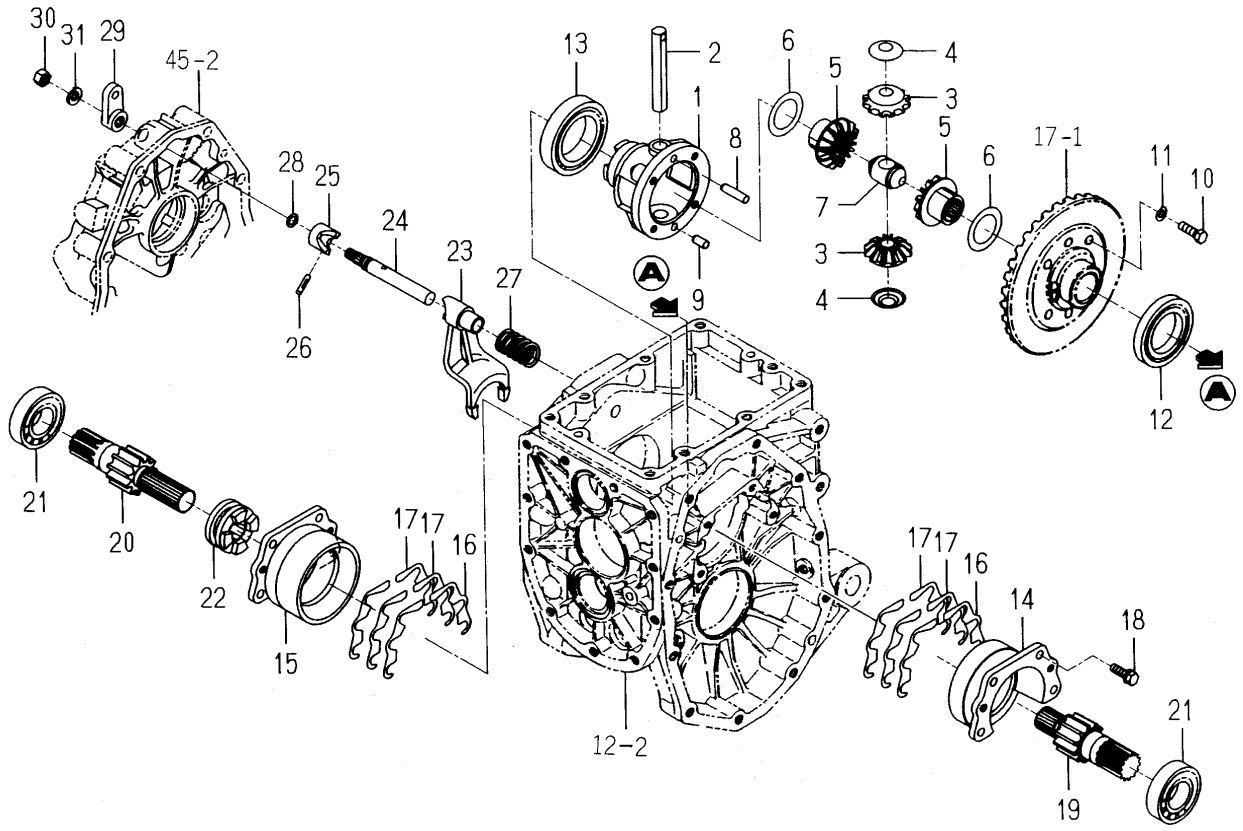

1750-304 -0100

KEY	PART CODE	DESCRIPTION	SPC	TYPE OF MODEL				ITC	COL	GRP	REMARKS
				TM3200	TM3200H	TM3240	TM3240H				
1	1427-301-002-20	CASE,DIFF	*	1	1	1	1				
2	1444-411-006-00	SHAFT,DIFF. PINION	*	1	1	1	1				
3	1672-301-003-00	PINION/BEVEL/12	*	2	2	2	2				
4	1427-301-005-00	COLLAR,PINION THRUST	*	2	2	2	2				
5	1672-301-004-00	GEAR/BEVEL/14	*	2	2	2	2				
6	1427-301-007-00	COLLAR,THRUST	*	2	2	2	2				
7	1427-301-009-00	HOLDER,PINION SHAFT	*	1	1	1	1				
8	1672-301-002-00	PIN	*	1	1	1	1				
9	V523-100-801-60	PIN	*	1	1	1	1				
10	1544-304-006-10	BOLT/M8X25	*	4	4	4	4				
11	V401-160-008-00	WASHER,SP/M 8	*	4	4	4	4				
12	1600-301-004-00	BEARING/BALL	*	1	1	1	1				
13	V600-110-601-00	BEARING,RB/6010	*	1	1	1	1				
14	1427-201-012-00	METAL,DIFF-CASE LH	*	1	1	1	1				
15	1427-201-013-00	METAL,DIFF-CASE RH	*	1	1	1	1				
16	1427-201-014-10	SHIM,DIFF-CASE A	*	8	8	8	8				
17	1427-201-015-10	SHIM,DIFF-CASE B	*	4	4	4	4				
18	V211-560-802-50	BOLT,SEMS/M8X25 7T	*	8	8	8	8				
19	1717-304-001-00	GEAR/SPUR/11/LH	*	1	1	1	1				
20	1717-304-002-00	GEAR/SPUR/11/RH	*	1	1	1	1				
21	V600-110-620-60	BEARING,RB/6206	*	2	2	2	2				
22	1427-301-013-20	CLUTCH/DIFFLOCK	*	1	1	1	1				
23	1427-301-014-10	FORK/SHIFT/DIFFLOCK	*	1	1	1	1				
24	1427-301-015-10	STAY,SHIFTER	*	1	1	1	1				
25	1427-301-016-00	CAM,DIFF-LOCK	*	1	1	1	1				
26	V530-240-502-40	PIN/SLITTED	*	1	1	1	1				
27	1427-301-018-00	SPRING,PRESS/40	*	1	1	1	1				
28	V720-102-401-00	O-RING/P10A	*	1	1	1	1				
29	1427-301-019-00	ARM/DIFFLOCK	*	1	1	1	1				
30	V304-260-010-00	NUT	*	1	1	1	1				

FIG. 44 DIFF CASE SYSTEM

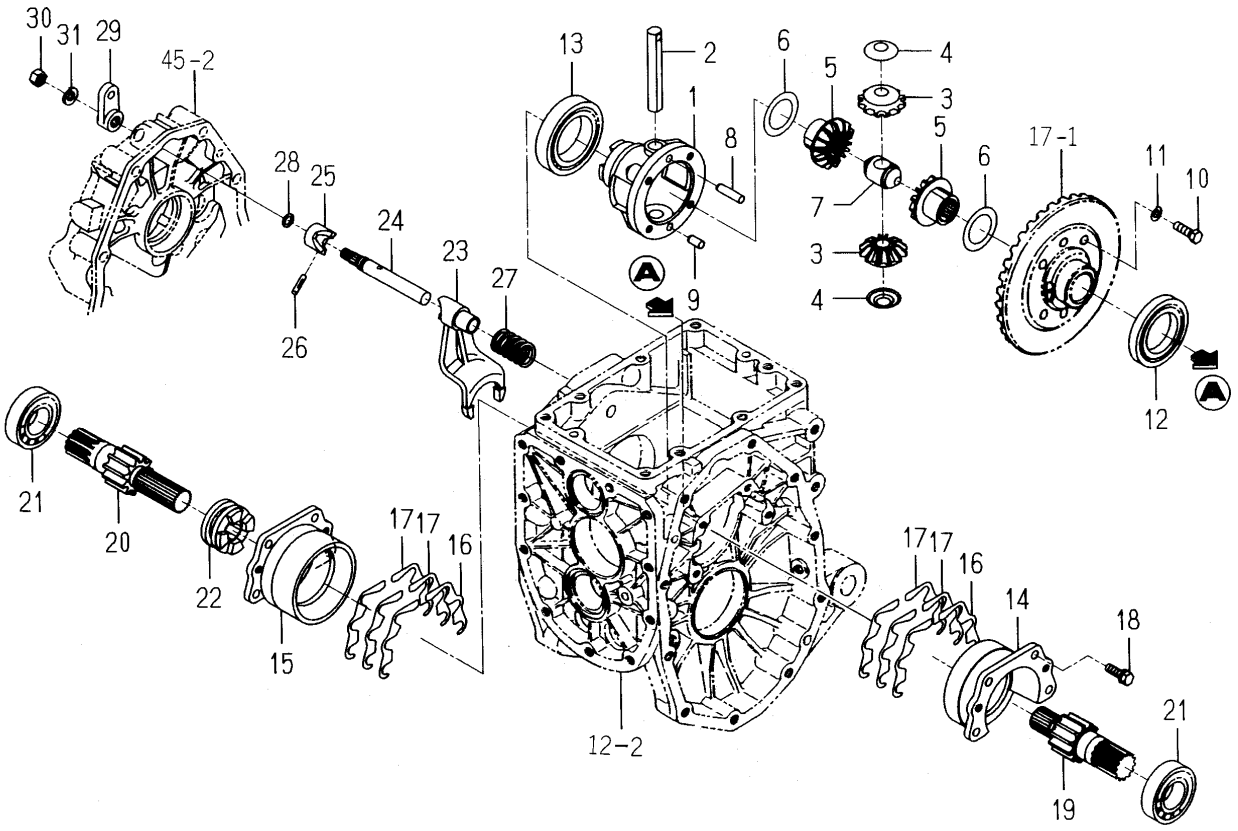

1750-304 -0100

KEY	PART CODE	DESCRIPTION	SPC	TYPE OF MODEL				ITC	COL	GRP	REMARKS
				TM3200	TM3200H	TM3240	TM3240H				
31	V401-160-010-00	WASHER,SP/M10	*	1	1	1	1				

FIG. 45 REAR AXLE HOUSING SYSTEM

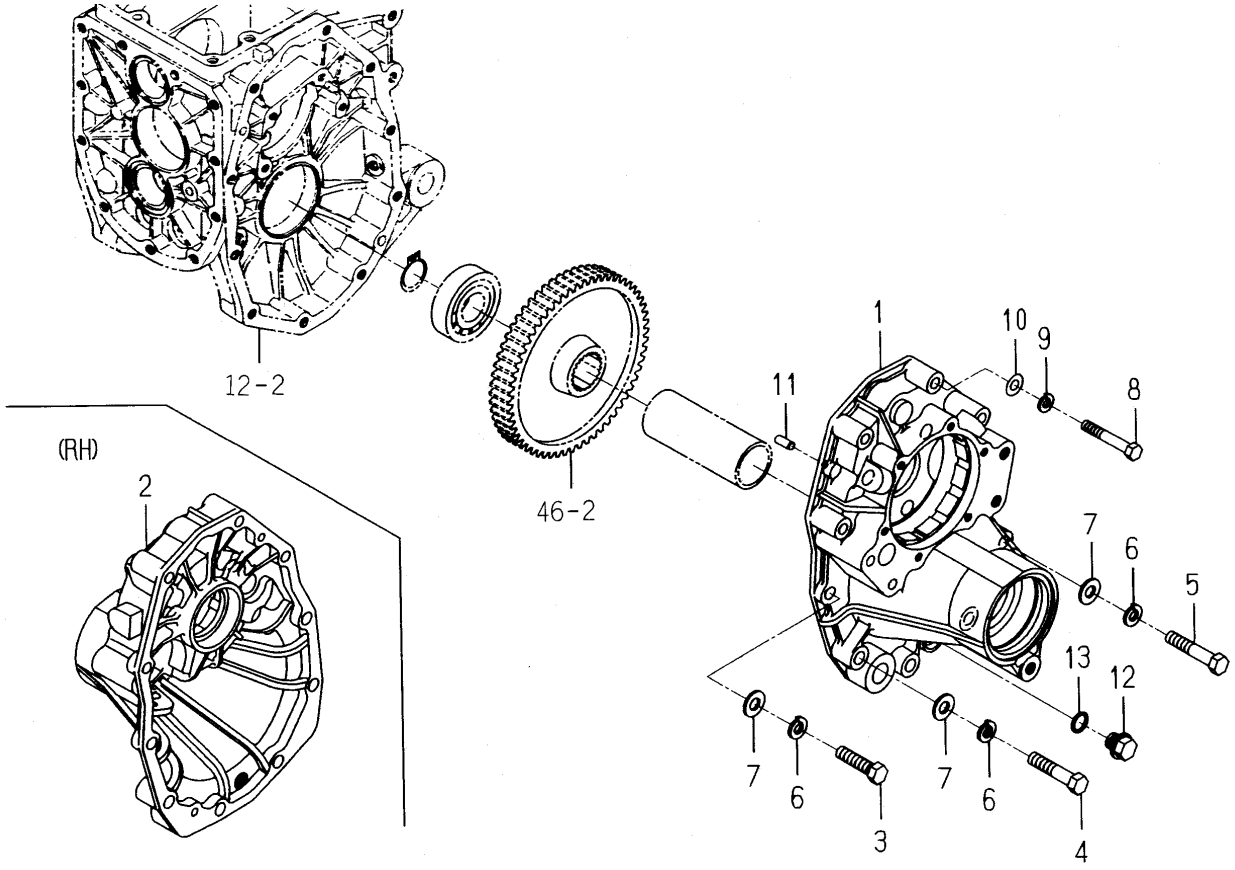

1738-306 -0100

KEY	PART CODE	DESCRIPTION	SPC	TYPE OF MODEL				ITC	COL	GRP	REMARKS
				TM3200	TM3200H	TM3240	TM3240H				
1	1717-306-001-30	HOUSING/AXLE/LH	*	1	1	1	1				
2	1717-306-002-30	HOUSING/AXLE/RH	*	1	1	1	1				
3	V201-261-204-00	BOLT/M12X40	*	4	4	4	4				
4	V201-261-205-50	BOLT/M12X55	*	6	6	6	6				
5	V201-261-206-00	BOLT/M12X60	*	2	2	2	2				
6	V401-160-012-00	WASHER,SP/M12	*	12	12	12	12				
7	V411-260-012-00	WASHER /M12	*	10	10	10	10				
8	V201-261-006-00	BOLT/M10X60	*	4	4	4	4				
9	V401-160-010-00	WASHER,SP/M10	*	4	4	4	4				
10	V411-260-010-00	WASHER/M10	*	4	4	4	4				
11	V522-100-801-80	PIN	*	4	4	4	4				
12	1427-201-007-00	PLUG,DRAIN	*	2	2	2	2				
13	V720-102-401-60	O-RING/P16	*	2	2	2	2				

FIG. 46 SHAFT (WHEEL) SYSTEM

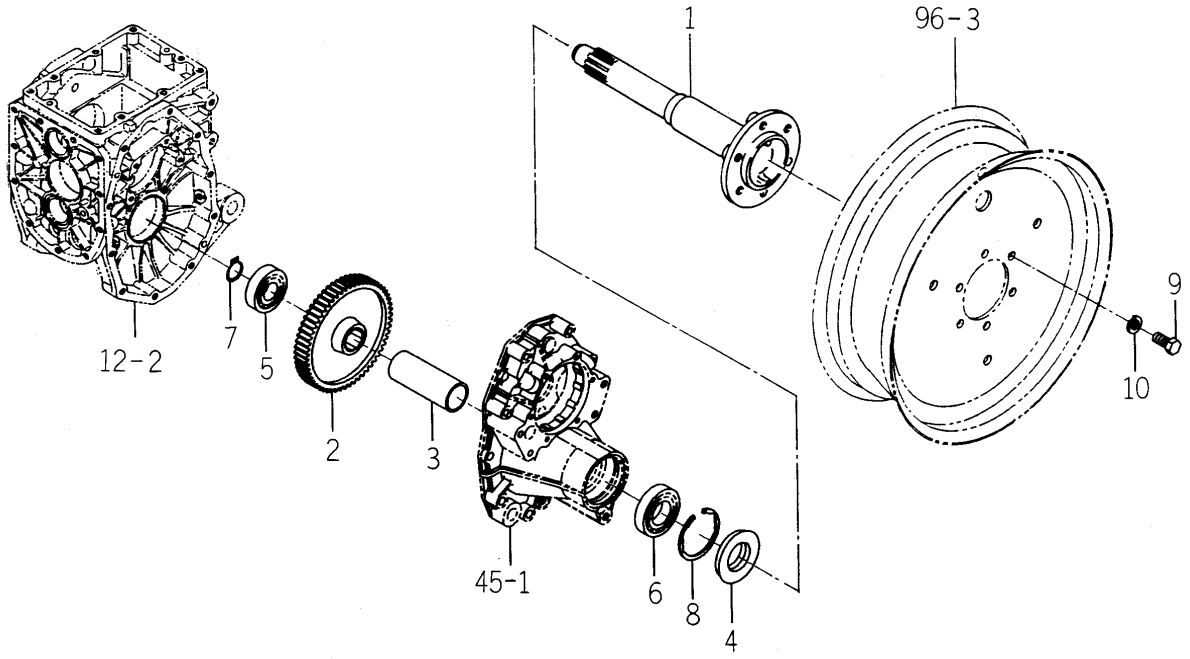

1672-307A-0100

KEY	PART CODE	DESCRIPTION	SPC	TYPE OF MODEL				ITC	COL	GRP	REMARKS
				TM3200	TM3200H	TM3240	TM3240H				
1	1672-307-001-10	SHAFT/WHEEL	*	2	2	2	2				
2	1427-307-002-10	GEAR,WHEEL/58	*	2	2	2	2				
3	1427-307-003-00	PIPE/123	*	2	2	2	2				
4	1491-307-201-00	SEAL,OIL/QLF488011.5	*	2	2	2	2				
5	V600-110-630-60	BEARING,RB/6306	*	2	2	2	2				
6	V600-110-620-80	BEARING,RB/6208	*	2	2	2	2				
7	V704-140-030-00	RING,SNAP/30 C	*	2	2	2	2				
8	V707-140-080-00	RING/SNAP	*	2	2	2	2				
9	V201-361-202-50	BOLT/M12X25	*	12	12	12	12				
10	V401-160-012-00	WASHER,SP/M12	*	12	12	12	12				

FIG. 47 PEDAL (DIFF-LOCK) SYSTEM (EXCEPT H TYPE)

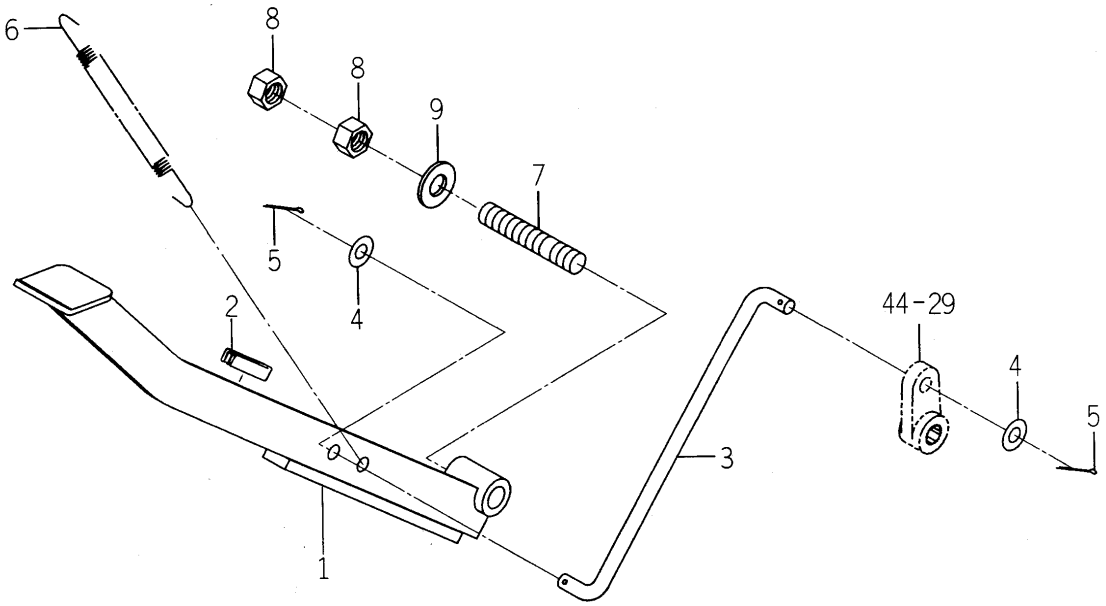

1738-309 -0100

KEY	PART CODE	DESCRIPTION	SPC	TYPE OF MODEL				ITC	COL	GRP	REMARKS
				TM3200	TM3200H	TM3240	TM3240H				
1	1717-309-200-10	ARM/DIEF COMP	*	1		1					
2	1560-314-001-00	INSULATOR	*	1		1					
3	1738-309-001-10	ROD/193	*	1		1					
4	V411-260-008-00	WASHER,PL/M 8	*	2		2					
5	V500-162-002-00	PIN,SPLIT/2 X20	*	2		2					
6	1427-301-021-00	SPRING,TENSION/121	*	1		1					
7	V251-261-205-50	BOLT/STUD	*	1		1					
8	V304-260-012-00	NUT/M12	*	2		2					
9	V411-260-012-00	WASHER /M12	*	1		1					

FIG. 48 LEVER (DIFF-LOCK) SYSTEM (H TYPE)

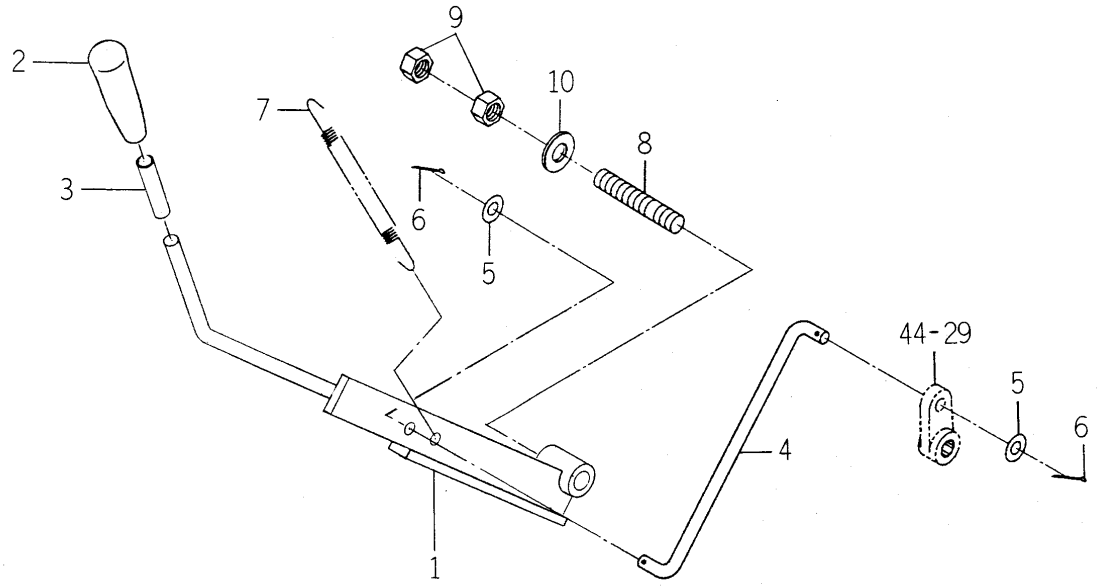

1750-309 -0100

KEY	PART CODE	DESCRIPTION	SPC	TYPE OF MODEL				ITC	COL	GRP	REMARKS
				TM3200	TM3200H	TM3240	TM3240H				
1	1750-309-500-10	ARM/DIEF COMP	*		1		1				
2	2173-820-003-00	GRIP/ORANGE/10.5	*		1		1				
3	1682-255-303-00	TUBE/10X12X50	*		1		1				
4	1717-309-002-00	ROD/175	*		1		1				
5	V411-260-008-00	WASHER,PL/M 8	*		2		2				
6	V500-162-002-00	PIN,SPLIT/2 X20	*		2		2				
7	1427-301-021-00	SPRING,TENSION/121	*		1		1				
8	V251-261-205-50	BOLT/STUD	*		1		1				
9	V304-260-012-00	NUT/M12	*		2		2				
10	V411-260-012-00	WASHER /M12	*		1		1				

FIG. 49 BRAKE SYSTEM

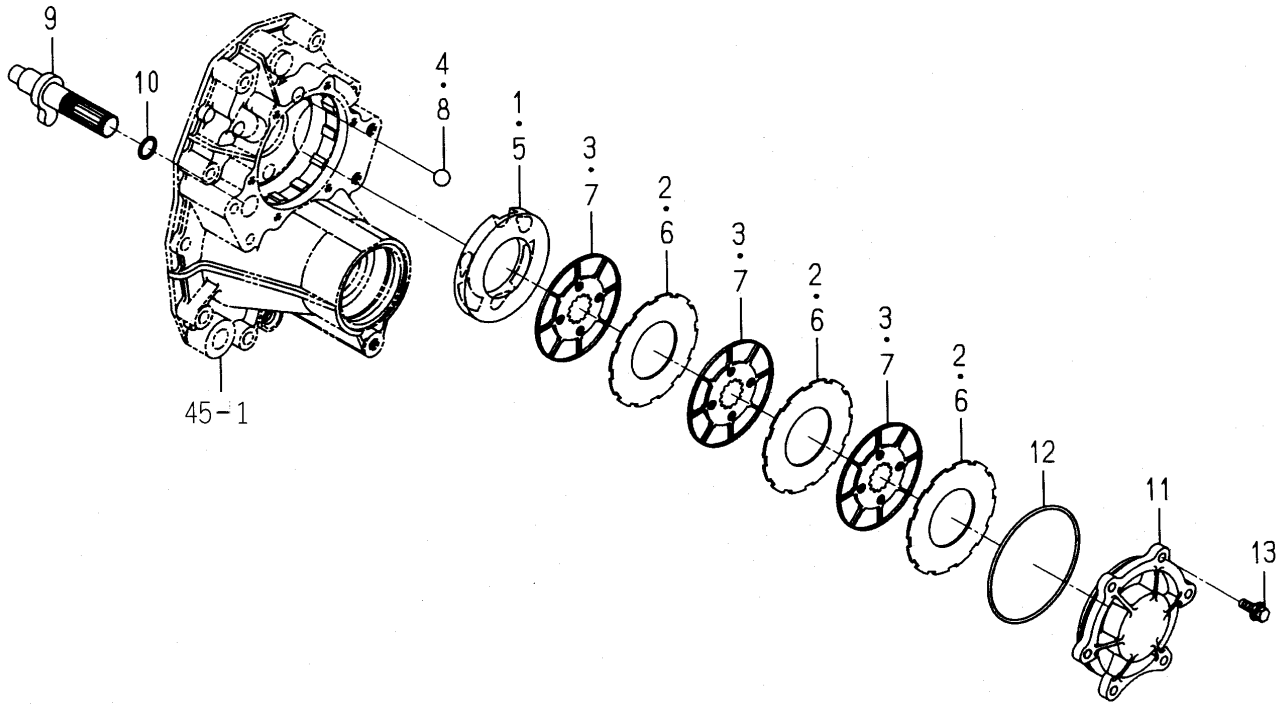

1717-310 -0100

KEY	PART CODE	DESCRIPTION	SPC	TYPE OF MODEL				ITC	COL	GRP	REMARKS
				TM3200	TM3200H	TM3240	TM3240H				
1	1717-310-002-10	PLATE/PRESSURE/LH	*	1	1	1	1				
2	1703-310-202-00	PLATE/SEPARATER	*	3	3	3	3				
3	1717-310-004-00	PLATE/FRICTION	*	3	3	3	3				
4	V682-200-001-90	BALL	*	3	3	3	3				
5	1717-310-003-10	PLATE/PRESSURE/RH	*	1	1	1	1				
6	1703-310-202-00	PLATE/SEPARATER	*	3	3	3	3				
7	1717-310-004-00	PLATE/FRICTION	*	3	3	3	3				
8	V682-200-001-90	BALL	*	3	3	3	3				
9	1717-310-200-00	CUM/BRAKE COMP	*	2	2	2	2				
10	V720-102-401-80	O-RING/P18	*	2	2	2	2				
11	1717-310-001-00	METAL/BRAKE	*	2	2	2	2				
12	V721-103-111-50	O-RING/G115	*	2	2	2	2				
13	V211-660-802-50	BOLT/M8X25	*	12	12	12	12				

FIG. 50 PEDAL (BRAKE) SYSTEM(1/2) (EXCEPT H TYPE)

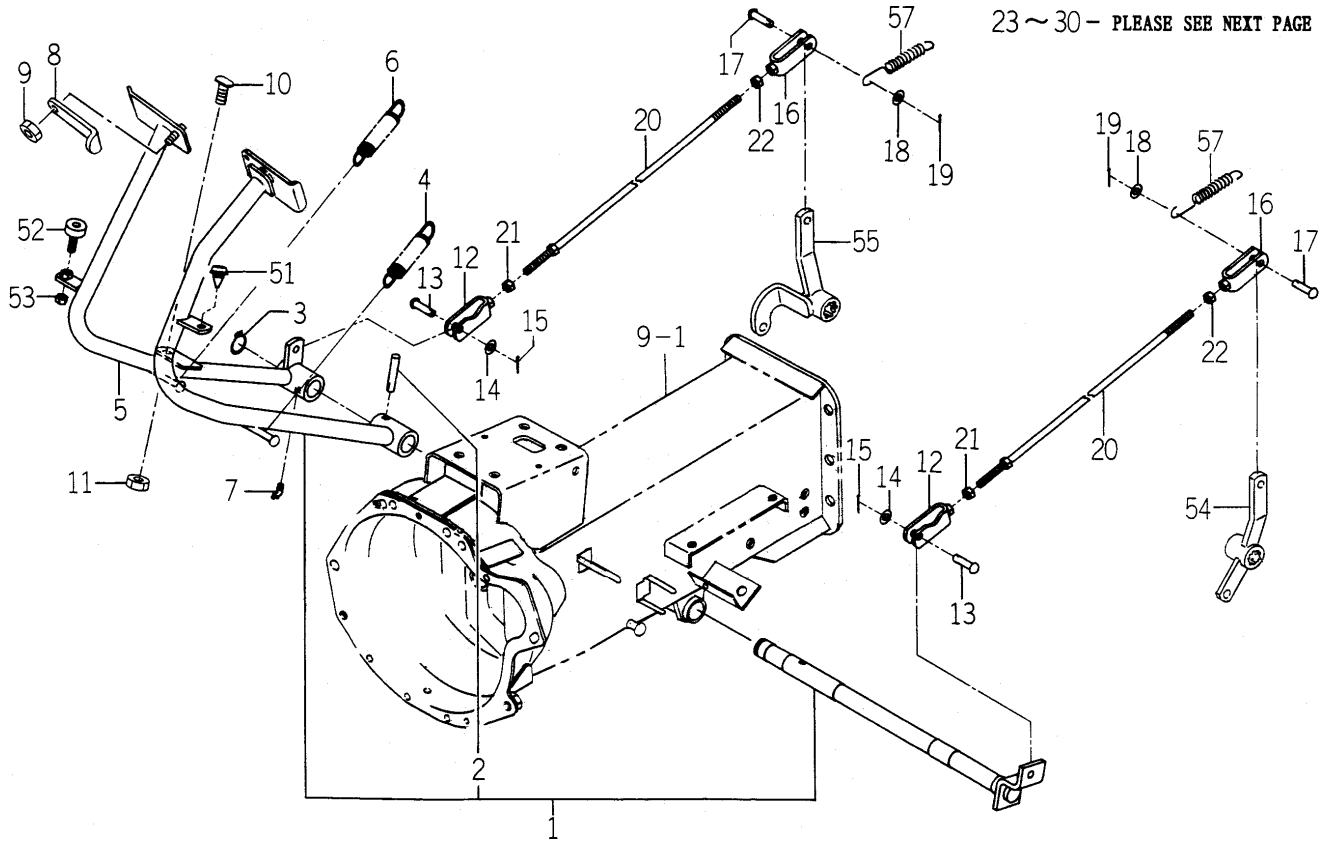

1750-312 -0100

KEY	PART CODE	DESCRIPTION	SPC	TYPE OF MODEL				ITC	COL	GRP	REMARKS
				TM3200	TM3200H	TM3240	TM3240H				
1	1738-312-320-20	PEDAL/BRAKE/LH SET	*	1		1					
2	V511-100-805-00	PIN,TAPER/8X50	*	1		1					
3	V704-140-022-00	RING,SNAP/22 C	*	1		1					
4	1673-314-001-00	SPRING/HE106	*	1		1					
5	1738-312-220-10	PEDAL/BRAKE/RH COMP	*	1		1					
6	1673-314-001-00	SPRING/HE106	*	1		1					
7	V763-150-000-00	NIPPLE,GREASE/PT1/8	*	1		1					
8	1675-312-051-00	LOCKPLATE	*	1		1					
9	P120-605-031-00	U-NUT	*	1		1					
10	1688-312-001-10	BOLT/ADJUST	*	1		1					
11	V304-260-008-00	NUT	*	1		1					
12	1415-312-500-00	YOKE,LH	*	2		2					
13	1404-312-006-00	PIN,YOKE A	*	2		2					
14	V411-260-008-00	WASHER,PL/M 8	*	2		2					
15	V500-162-002-00	PIN,SPLIT/2 X20	*	2		2					
16	1510-328-260-00	YOKE COMP	*	2		2					
17	1404-312-006-00	PIN,YOKE A	*	2		2					
18	V411-260-008-00	WASHER,PL/M 8	*	2		2					
19	V500-162-002-00	PIN,SPLIT/2 X20	*	2		2					
20	1750-312-310-00	ROD/390 COMP	*	2		2					
21	1560-132-007-30	NUT/M8	*	2		2					
22	V304-260-008-00	NUT	*	2		2					
23	1740-313-300-00	LEVER/PARKING ASSY	*	1		1					
24	1442-313-202-00	ROD	*	1		1					
25	1444-328-273-00	SPRING	*	1		1					
26	1444-328-272-00	BUTTON	*	1		1					
27	1740-313-301-00	GRIP/ORANGE	*	1		1					
28	V211-360-802-50	BOLT/SP	*	2		2					
29	1738-312-280-00	ROD/115 COMP	*	1		1					
30	1738-312-290-00	ROD/70 COMP	*	1		1					

FIG. 50 PEDAL (BRAKE) SYSTEM(2/2) (EXCEPT H TYPE)

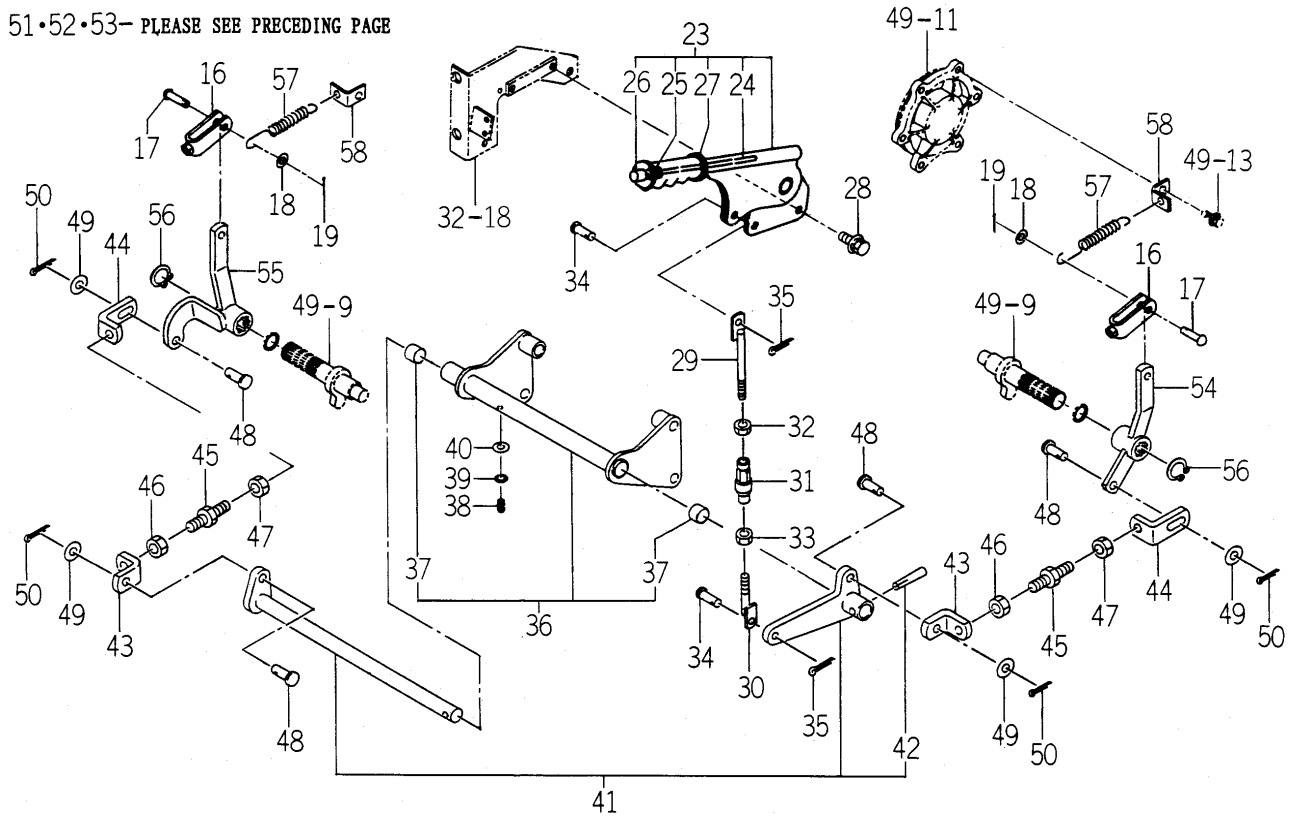

1750-312 -0100

KEY	PART CODE	DESCRIPTION	SPC	TYPE OF MODEL				ITC	COL	GRP	REMARKS
				TM3200	TM3200H	TM3240	TM3240H				
31	1444-122-002-00	TURNBUCKLE/M8	*	1		1					
32	V304-260-008-00	NUT	*	1		1					
33	1560-132-007-30	NUT/M8	*	1		1					
34	1673-730-008-00	PIN/08X19	*	2		2					
35	V500-162-002-00	PIN,SPLIT/2 X20	*	2		2					
36	1738-312-300-10	HOLDER/SHAFT ASSY	*	1		1					
37	3668-612-001-00	BUSH	*	2		2					
38	V760-150-000-00	NIPPLE,GREASE	*	1		1					
39	V401-160-006-00	WASHER,SP/M 6	*	1		1					
40	V411-260-006-00	WASHER / M6	*	1		1					
41	1738-312-200-00	SHAFT/BRAKE SET	*	1		1					
42	V511-100-805-00	PIN,TAPER/8X50	*	1		1					
43	1738-312-005-00	PLATE/PARKING/A	*	2		2					
44	1738-312-006-00	PLATE/PARKING/B	*	2		2					
45	1738-312-007-00	ROD/M12X66	*	2		2					
46	V304-260-012-00	NUT/M12	*	2		2					
47	3640-432-006-00	NUT/M12/LH	*	2		2					
48	1627-122-008-00	PIN/10X25	*	4		4					
49	V411-260-010-00	WASHER/M10	*	4		4					
50	V500-162-502-00	PIN,SPLIT/2.5X20	*	4		4					
51	1432-616-002-00	RUBBER,CUSHION	*	1		1					
52	1560-630-024-00	INSULATOR	*	1		1					
53	V304-260-008-00	NUT	*	1		1					
54	1738-312-240-00	ARM/BRAKE/LH COMP	*	1		1					
55	1738-312-260-00	ARM/BRAKE/RH COMP	*	1		1					
56	V704-140-022-00	RING,SNAP/22 C	*	2		2					
57	3659-480-003-00	SPRING/HE110	*	2		2					
58	1738-312-009-00	PLATE/L/28X28	*	2		2					

FIG. 51 PEDAL (BRAKE) SYSTEM (H TYPE)(1/2)

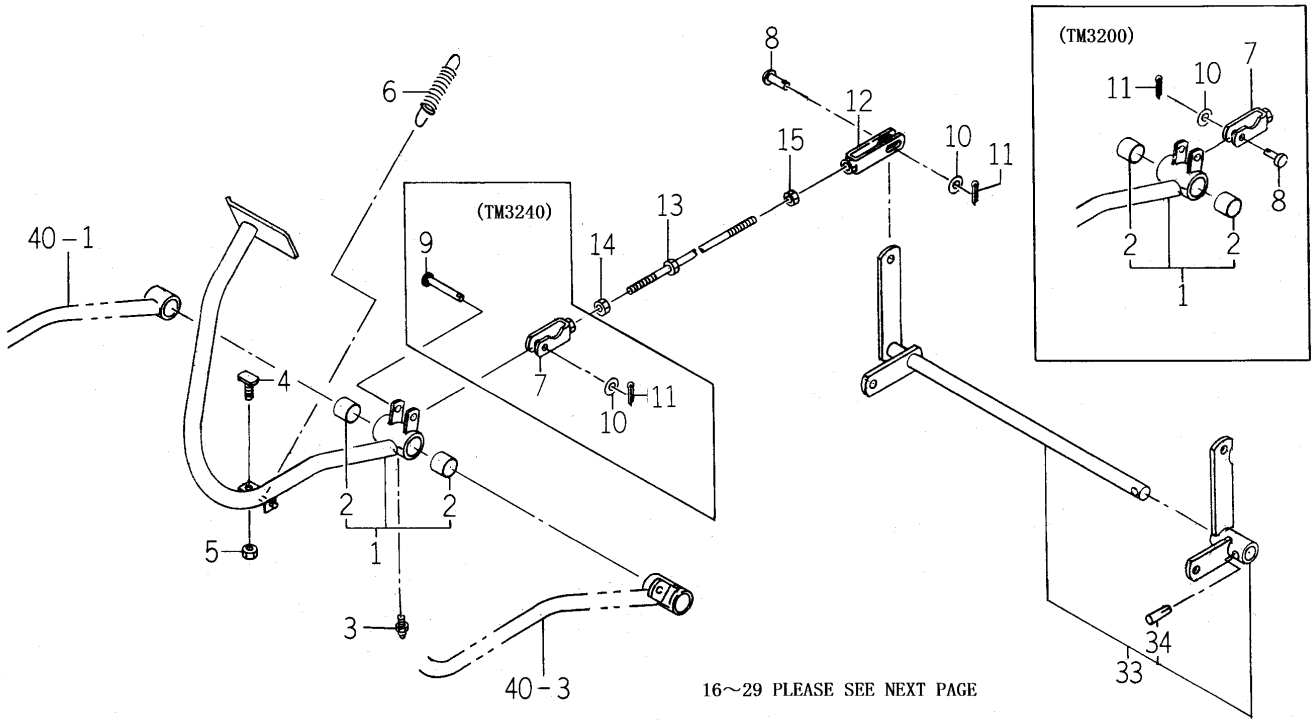

1750-312A-0100

KEY	PART CODE	DESCRIPTION	SPC	TYPE OF MODEL				ITC	COL	GRP	REMARKS
				TM3200	TM3200H	TM3240	TM3240H				
1	1750-312-620-00	PEDAL/BRAKE ASSY	*		1		1				
2	3664-540-001-00	BUSH/22X25X20	*		2		2				
3	V763-150-000-00	NIPPLE,GREASE/PT1/8	*		1		1				
4	1688-312-001-10	BOLT/ADJUST	*		1		1				
5	V304-260-008-00	NUT	*		1		1				
6	1673-314-001-00	SPRING/HE106	*		1		1				
7	1415-312-500-00	YOKE,LH	*		1		1				
8	1404-312-006-00	PIN,YOKE A	*				1				
8	1404-312-006-00	PIN,YOKE A	*		2						
9	1750-312-054-00	PIN/08X57	*				1				
10	V411-260-008-00	WASHER,PL/M 8	*		2		2				
11	V500-162-002-00	PIN,SPLIT/2 X20	*		2		2				
12	1510-328-260-00	YOKE COMP	*		1		1				
13	1683-312-570-00	ROD/BRAKE COMP	*		1		1				
14	1560-132-007-30	NUT/M8	*		1		1				
15	V304-260-008-00	NUT	*		1		1				
16	1738-312-330-00	LEVER/PARKING COMP	*		1		1				
17	V211-360-802-50	BOLT/SP	*		2		2				
18	V211-360-802-00	BOLT/SP	*		2		2				
19	1750-312-590-00	PLATE COMP	*		1		1				
20	1425-621-004-00	HOLDER/JE/9-9	*		1		1				
21	1750-312-056-00	ROD/42	*		1		1				
22	V411-260-008-00	WASHER,PL/M 8	*		2		2				
23	V500-162-002-00	PIN,SPLIT/2 X20	*		2		2				
24	1404-312-006-00	PIN,YOKE A	*		1		1				
25	1750-312-540-00	ROD COMP	*		1		1				
26	1560-132-007-30	NUT/M8	*		1		1				
27	1444-122-002-00	TURNBUCKLE/M8	*		1		1				
28	1750-312-500-10	HOLDER/SHAFT ASSY	*		1		1				
29	3668-612-001-00	BUSH	*		2		2				

FIG. 51 PEDAL (BRAKE) SYSTEM (H TYPE)(2/2)

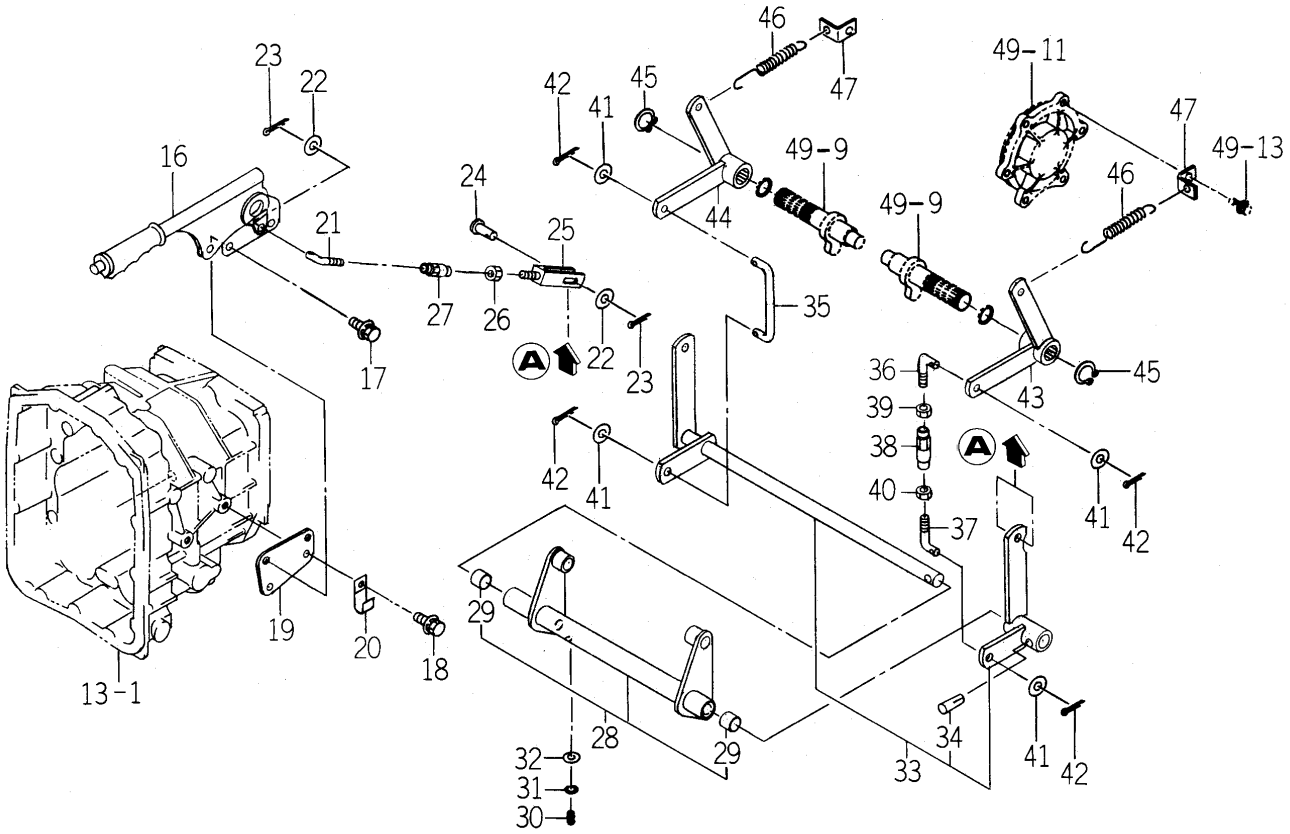

1750-312A-0100

KEY	PART CODE	DESCRIPTION	SPC	TYPE OF MODEL				ITC	COL	GRP	REMARKS
				TM3200	TM3200H	TM3240	TM3240H				
30	V760-150-000-00	NIPPLE,GREASE	*		1		1				
31	V401-160-006-00	WASHER,SP/M 6	*		1		1				
32	V411-260-006-00	WASHER / M6	*		1		1				
33	1750-312-570-00	SHAFT/BRAKE SET	*		1		1				
34	V511-100-805-00	PIN,TAPER/8X50	*		1		1				
35	1750-312-051-00	ROD/111	*		1		1				
36	1750-312-052-00	ROD/41	*		1		1				
37	1750-312-053-00	ROD/41/LH	*		1		1				
38	1444-122-002-00	TURNBUCKLE/M8	*		1		1				
39	V304-260-008-00	NUT	*		1		1				
40	1560-132-007-30	NUT/M8	*		1		1				
41	V411-260-008-00	WASHER,PL/M 8	*		4		4				
42	V500-162-002-00	PIN,SPLIT/2 X20	*		4		4				
43	1750-312-550-10	ARM/BRAKE/LH COMP	*		1		1				
44	1750-312-560-10	ARM/BRAKE/RH COMP	*		1		1				
45	V704-140-022-00	RING,SNAP/22 C	*		2		2				
46	3659-480-003-00	SPRING/HE110	*		2		2				
47	1738-312-009-00	PLATE/L/28X28	*		2		2				

FIG. 52 WHEEL (STEERING) SYSTEM

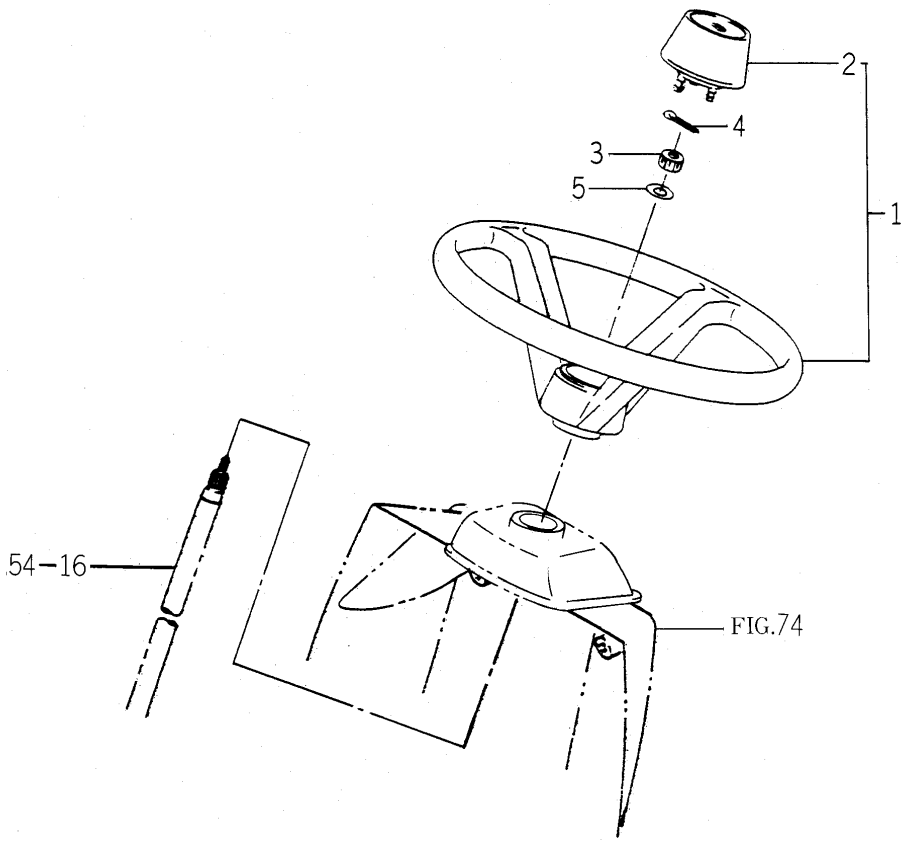

1613-401 -0100

KEY	PART CODE	DESCRIPTION	SPC	TYPE OF MODEL				ITC	COL	GRP	REMARKS
				TM3200	TM3200H	TM3240	TM3240H				
1	1656-401-220-00	WHEEL/STEERING ASSY	*	1	1	1	1				
2	1656-401-222-00	CAP	*	1	1	1	1				
3	V328-262-110-00	NUT	*	1	1	1	1				
4	V500-162-002-00	PIN,SPLIT/2 X20	*	1	1	1	1				
5	V411-260-010-00	WASHER/M10	*	1	1	1	1				

FIG. 53 STEERING SYSTEM (1)

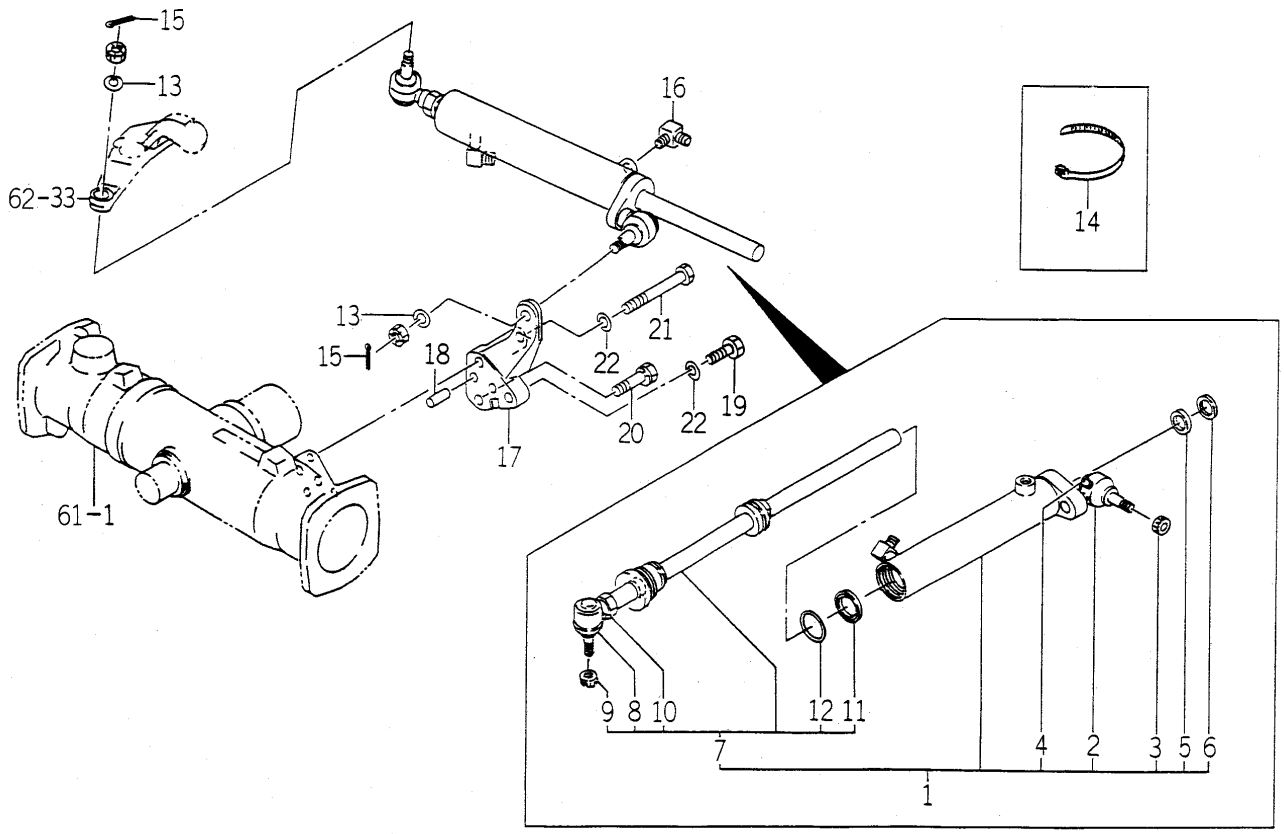

1684-403 -0100

KEY	PART CODE	DESCRIPTION	SPC	TYPE OF MODEL				ITC	COL	GRP	REMARKS
				TM3200	TM3200H	TM3240	TM3240H				
1	1684-403-200-00	CYLINDER ASSY	*	1	1	1	1				
2	1404-402-001-00	COVER,DUST	*	1	1	1	1				
3	1404-402-002-00	NUT,SLOTTED	*	1	1	1	1				
4	1404-402-005-00	NIPPLE,GREASE	*	1	1	1	1				
5	K185-012-003-00	PACKING,ROD	*	1	1	1	1				
6	K185-012-004-00	SEAL,DUST	*	1	1	1	1				
7	1684-403-300-00	ROD/PISTON SET	*	1	1	1	1				
8	1404-402-001-00	COVER,DUST	*	1	1	1	1				
9	1404-402-002-00	NUT,SLOTTED	*	1	1	1	1				
10	1404-402-005-00	NIPPLE,GREASE	*	1	1	1	1				
11	K177-006-203-00	SEAL/PISTON	*	1	1	1	1				
12	V720-113-503-40	RING/O	*	1	1	1	1				
13	V401-160-012-00	WASHER,SP/M12	*	2	2	2	2				
14	1342-402-006-00	BAND,WIRE/250	*	1	1	1	1				
15	V500-162-002-50	PIN,SPLIT/2 X25	*	2	2	2	2				
16	3768-185-022-10	ADAPTER(90ß/PUMP)	*	1	1	1	1				
17	1682-403-001-40	STAY/CYLINDER	*	1	1	1	1				
18	V523-101-002-40	PIN	*	2	2	2	2				
19	1682-434-011-00	BOLT/REAMER/M10X35	*	1	1	1	1				
20	V211-561-003-50	BOLT/S	*	1	1	1	1				
21	V201-361-008-50	BOLT	*	1	1	1	1				
22	V401-160-010-00	WASHER,SP/M10	*	2	2	2	2				

FIG. 54 STEERING SYSTEM (2)

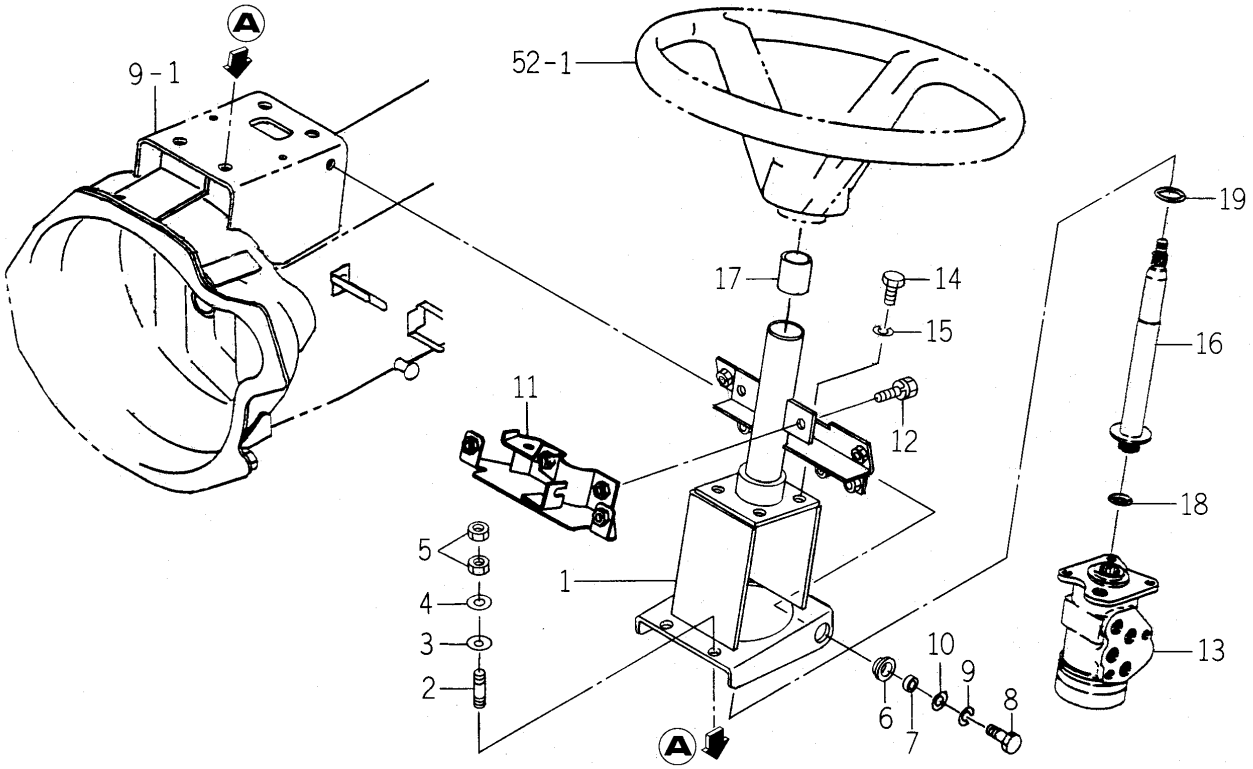

1750-407 -0100

KEY	PART CODE	DESCRIPTION	SPC	TYPE OF MODEL				ITC	COL	GRP	REMARKS
				TM3200	TM3200H	TM3240	TM3240H				
1	1750-407-210-10	COLUMN/STEERING COMP	*	1	1	1	1				
2	1672-406-005-00	BOLT/STUD/M10X35	*	2	2	2	2				
3	1646-640-059-00	WASHER/12X26X06	*	2	2	2	2				
4	V411-260-010-00	WASHER/M10	*	2	2	2	2				
5	V334-460-010-00	NUT/M10 7T P=1.25	*	4	4	4	4				
6	1750-407-001-00	GROMMET/14X18X06	*	2	2	2	2				
7	3814-835-035-00	COLLAR/10X15X07	*	2	2	2	2				
8	V203-361-002-50	BOLT	*	2	2	2	2				
9	V401-160-010-00	WASHER,SP/M10	*	2	2	2	2				
10	V411-260-010-00	WASHER/M10	*	2	2	2	2				
11	1717-406-200-00	BRACKET/FRONT COMP	*	1	1	1	1				
12	V211-260-802-00	BOLT/S	*	2	2	2	2				
13	1682-407-220-00	CONTROLLER/STEERING	*	1	1	1	1				
14	V203-261-002-00	BOLT/M10X20	*	3	3	3	3				
15	V401-160-010-00	WASHER,SP/M10	*	3	3	3	3				
16	1682-407-210-10	SHAFT/STEERING/ COMP	*	1	1	1	1				
17	1429-406-205-00	BUSH	*	1	1	1	1				
18	V720-102-402-00	O-RING/P20	*	1	1	1	1				
19	V720-103-503-60	O-RING/P36	*	1	1	1	1				

FIG. 55 PIPING SYSTEM (EXCEPT H TYPE)

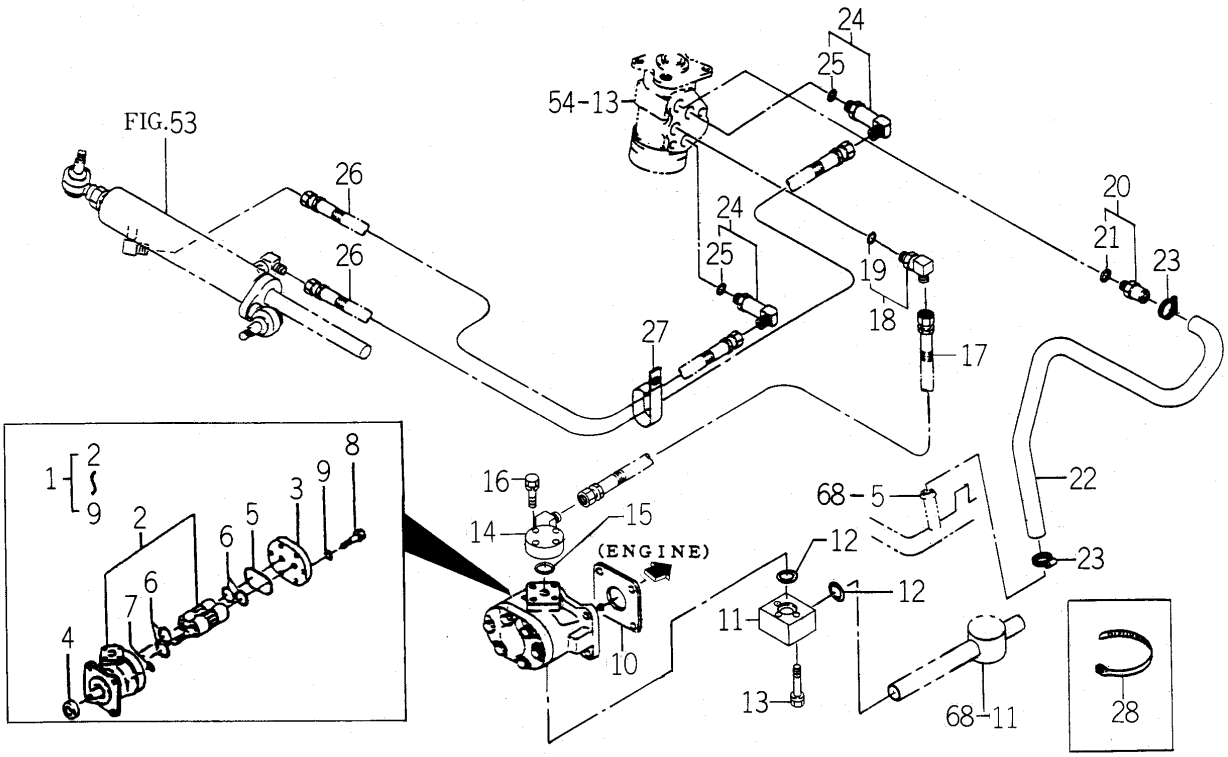

1750-408 -0100

KEY	PART CODE	DESCRIPTION	SPC	TYPE OF MODEL				ITC	COL	GRP	REMARKS
				TM3200	TM3200H	TM3240	TM3240H				
1	K135-020-000-00	PUMP,GEAR ASSY	*	1		1					
2	K135-020-100-10	PUMP SET	*	1		1					
3	K135-015-002-00	COVER,PUMP	*	1		1					
4	V744-114-280-70	SEAL,OIL	*	1		1					
5	V721-113-105-00	O-RING HS90 G50	*	1		1					
6	V720-112-402-20	O-RING/P22	*	4		4					
7	V720-111-900-60	O-RING P6 HS90	*	1		1					
8	K135-002-009-00	BOLT/M8X28 11T	*	6		6					
9	V401-170-008-00	S.W	*	6		6					
10	1404-503-006-00	PACKING,OIL PUMP	*	1		1					
11	1709-407-002-00	FLANGE	*	1		1					
12	V720-112-402-00	O-RING/P20	*	2		2					
13	V210-560-604-50	BOLT/S	*	3		3					
14	1709-407-310-20	FLANGE/DELIVERY COMP	*	1		1					
15	V720-112-402-00	O-RING/P20	*	1		1					
16	V210-560-603-00	BOLT/S	*	4		4					
17	8664-555-330-00	HOSE/HYDRO/750 ASSY	*	1		1					
18	1705-408-230-00	ADAPTER/L/G1/4 ASSY	*	1		1					
19	V720-112-401-10	RING/O	*	1		1					
20	1682-408-230-00	ADAPTER/PF1/4 ASSY	*	1		1					
21	V720-112-401-10	RING/O	*	1		1					
22	1672-408-002-00	HOSE/TANK	*	1		1					
23	J061-116-025-00	CLAMP/WORM/16-25	*	2		2					
24	P113-211-330-00	ELBOW/90ß/L ASSY	*	2		2					
25	V720-112-401-10	RING/O	*	2		2					
26	1682-408-220-00	HOSE/DERIVERY ASSY	*	2		2					
27	1444-101-016-10	CLAMP,RADIATOR HOSE	*	1		1					
28	1342-402-006-00	BAND,WIRE/250	*	1		1					

FIG. 56 PIPING SYSTEM (H TYPE)

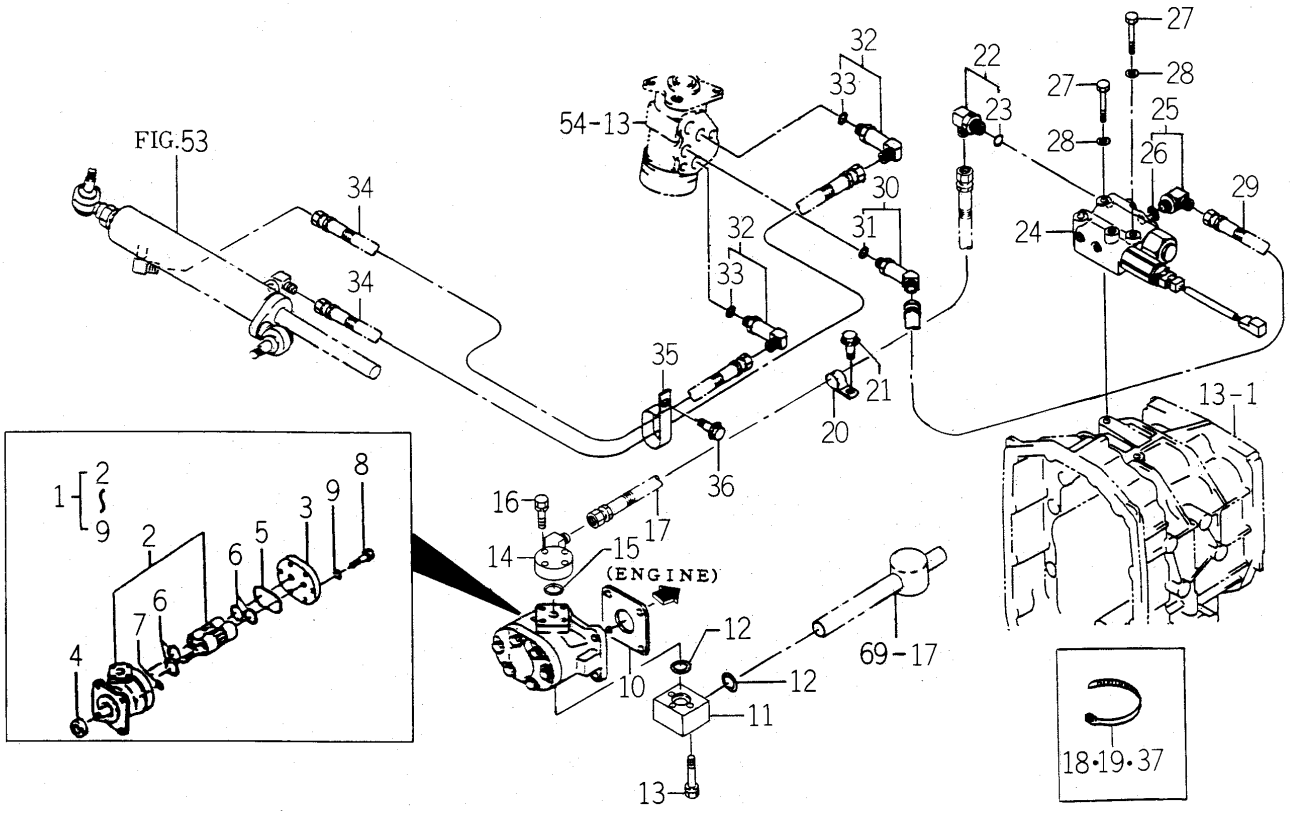

1750-408B-0100

KEY	PART CODE	DESCRIPTION	SPC	TYPE OF MODEL				ITC	COL	GRP	REMARKS
				TM3200	TM3200H	TM3240	TM3240H				
1	K135-020-000-00	PUMP,GEAR ASSY	*		1		1				
2	K135-020-100-10	PUMP SET	*		1		1				
3	K135-015-002-00	COVER,PUMP	*		1		1				
4	V744-114-280-70	SEAL,OIL	*		1		1				
5	V721-113-105-00	O-RING HS90 G50	*		1		1				
6	V720-112-402-20	O-RING/P22	*		4		4				
7	V720-111-900-60	O-RING P6 HS90	*		1		1				
8	K135-002-009-00	BOLT/M8X28 11T	*		6		6				
9	V401-170-008-00	S.W	*		6		6				
10	1404-503-006-00	PACKING,OIL PUMP	*		1		1				
11	1709-407-002-00	FLANGE	*		1		1				
12	V720-112-402-00	O-RING/P20	*		2		2				
13	V210-560-604-50	BOLT/S	*		3		3				
14	1709-407-310-20	FLANGE/DELIVERY COMP	*		1		1				
15	V720-112-402-00	O-RING/P20	*		1		1				
16	V210-560-603-00	BOLT/S	*		4		4				
17	3676-374-003-00	HOSE/HYDRO/1700 ASSY	*		1		1				
18	1376-402-003-00	BAND,WIRE/140	*		1		1				
19	1376-402-003-00	BAND,WIRE/140	*		2		2				
20	1675-407-003-00	HOLDER/19	*		1		1				
21	V211-360-801-60	BOLT,SEMS (SP)	*		1		1				
22	1705-408-230-00	ADAPTER/L/G1/4 ASSY	*		1		1				
23	V720-112-401-10	RING/O	*		1		1				
24	K200-053-000-00	VALVE ASSY	*		1		1				FIG 108
25	1705-408-230-00	ADAPTER/L/G1/4 ASSY	*		1		1				
26	V720-112-401-10	ORING	*		1		1				
27	V201-260-805-50	BOLT/M 8X55	*		3		3				
28	V401-160-008-00	WASHER,SP/M 8	*		3		3				
29	1683-273-570-10	HOSE/1350 ASSY	*		1		1				
30	P113-211-300-00	ELBOW/45ß ASSY	*		1		1				

FIG. 56 PIPING SYSTEM (H TYPE)

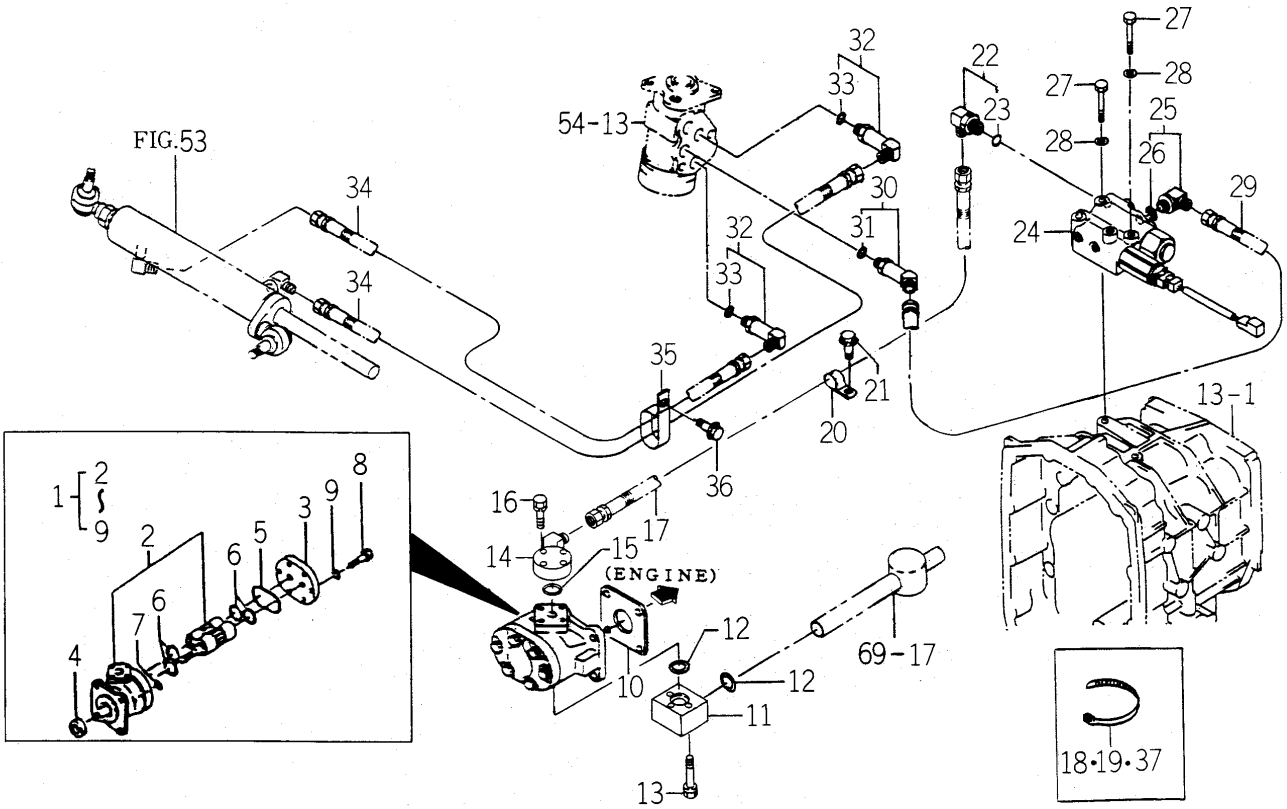

1750-408B-0100

KEY	PART CODE	DESCRIPTION	SPC	TYPE OF MODEL				ITC	COL	GRP	REMARKS
				TM3200	TM3200H	TM3240	TM3240H				
31	V720-112-401-10	RING/O	*		1		1				
32	P113-211-330-00	ELBOW/90ß/L ASSY	*		2		2				
33	V720-112-401-10	RING/O	*		2		2				
34	1682-408-220-00	HOSE/DERIVERY ASSY	*		2		2				
35	1444-101-016-10	CLAMP,RADIATOR HOSE	*		1		1				
36	V211-360-801-60	BOLT,SEMS (SP)	*		1		1				
37	1342-402-006-00	BAND,WIRE/250	*		1		1				

FIG. 57 BRACKET (AXLE), HITCH (FRONT/R TYPE) SYSTEM

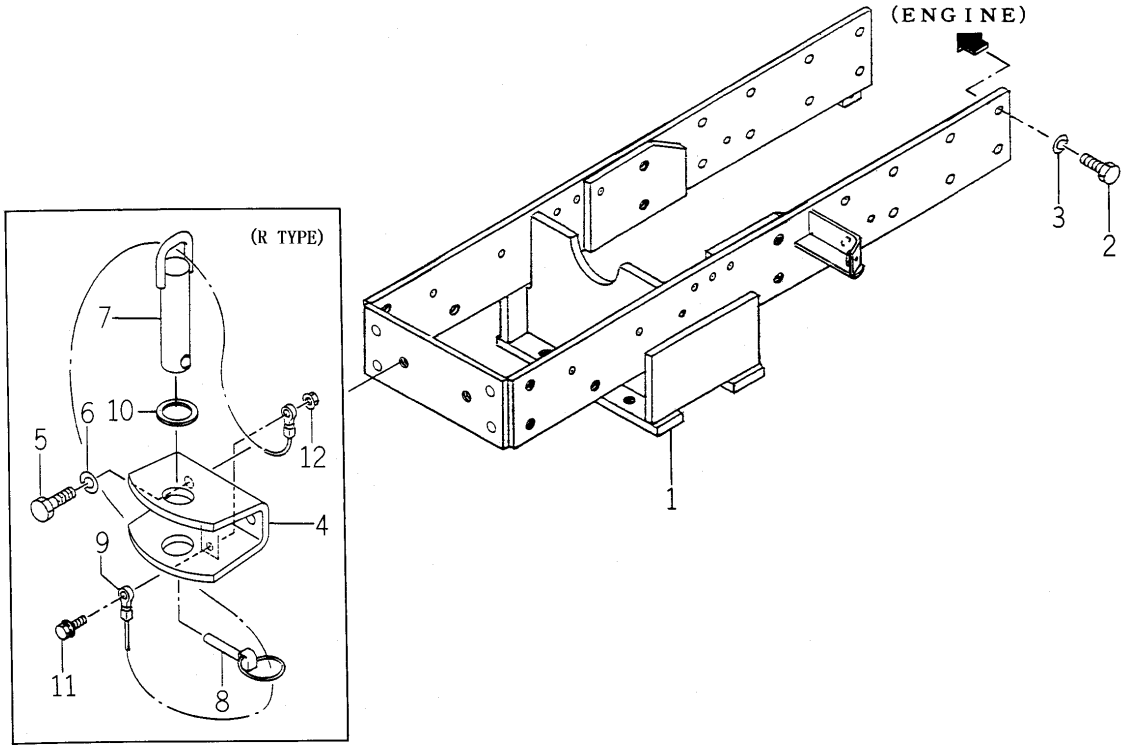

1750-410 -0100,1738-411 -0100

KEY	PART CODE	DESCRIPTION	SPC	TYPE OF MODEL				ITC	COL	GRP	REMARKS
				TM3200	TM3200H	TM3240	TM3240H				
1	1750-410-200-00	BRACKET/AXLE COMP	*	1	1	1	1				
2	V203-361-002-50	BOLT	*	16	16	16	16				
3	V401-160-010-00	WASHER,SP/M10	*	16	16	16	16				
4	1738-411-210-00	HITCH/FRONT COMP	*	1	1	1	1				
5	V201-361-202-50	BOLT/M12X25	*	2	2	2	2				
6	V401-160-012-00	WASHER,SP/M12	*	2	2	2	2				
7	1674-410-320-00	PIN/30X120 COMP	*	1	1	1	1				
8	1673-525-002-20	LINKPIN	*	1	1	1	1				
9	1674-410-301-00	CABLE	*	1	1	1	1				
10	1674-520-004-00	INSULATOR	*	1	1	1	1				
11	V211-360-803-00	BOLT/SP	*	1	1	1	1				
12	V363-260-008-00	NUT/WASHER	*	1	1	1	1				

FIG. 58 SHAFT (DRIVE) SYSTEM (EXCEPT H TYPE)

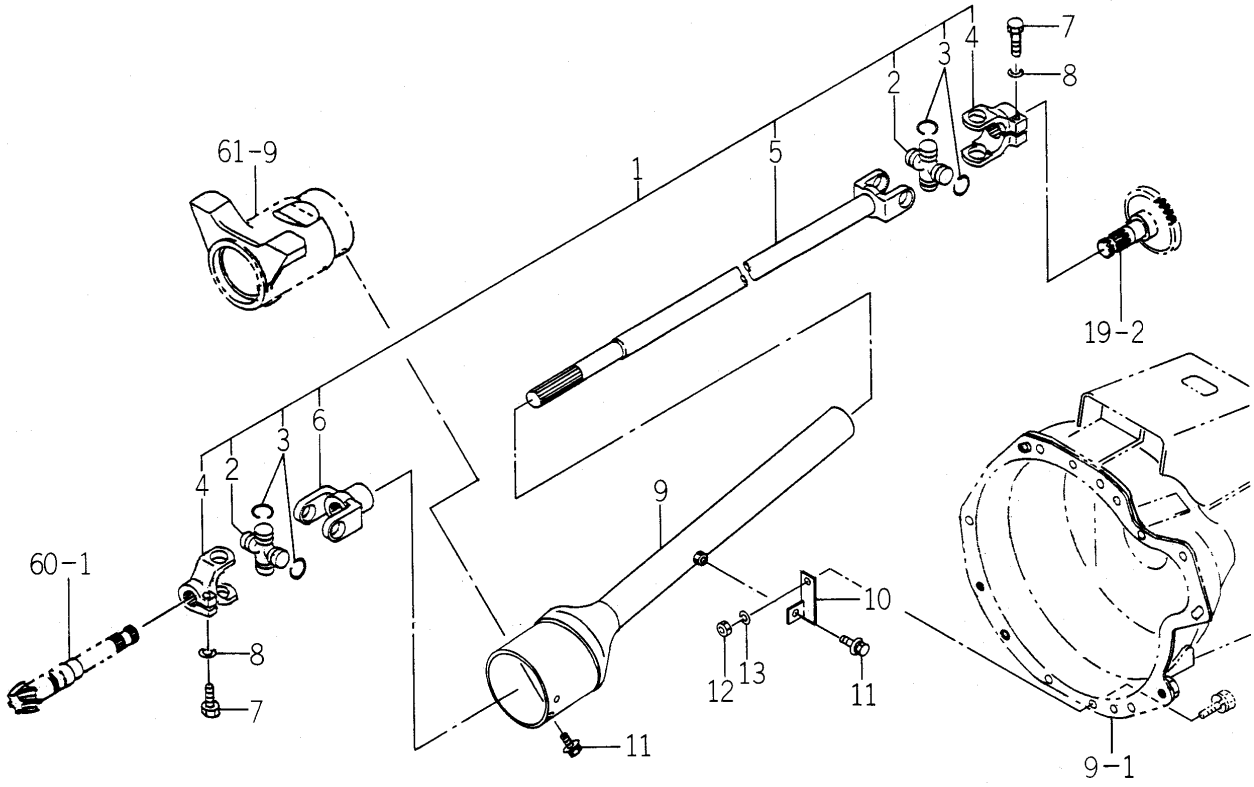

1750-431 -0100

KEY	PART CODE	DESCRIPTION	SPC	TYPE OF MODEL				ITC	COL	GRP	REMARKS
				TM3200	TM3200H	TM3240	TM3240H				
1	1750-431-200-00	SHAFT/4WD ASSY	*	1		1					
2	1725-120-211-00	KIT/JOINT	*	2		2					
3	1725-120-212-00	RING/SNAP	*	8		8					
4	1725-120-213-00	YOKE/CLAMP	*	2		2					
5	1750-431-201-00	YOKE/SHAFT	*	1		1					
6	1725-120-216-00	YOKE/SLEEVE	*	1		1					
7	1575-261-203-00	BOLT/SM/M8X1.25X30	*	2		2					
8	V401-160-008-00	WASHER,SP/M 8	*	2		2					
9	1738-431-200-20	CASE/JOINT COMP	*	1		1					
10	1750-431-220-00	BRACKET COMP	*	1		1					
11	V211-360-801-60	BOLT,SEMS (SP)	*	2		2					
12	V304-260-008-00	NUT	*	1		1					
13	V401-160-008-00	WASHER,SP/M 8	*	1		1					

FIG. 59 SHAFT (DRIVE) SYSTEM (H TYPE)

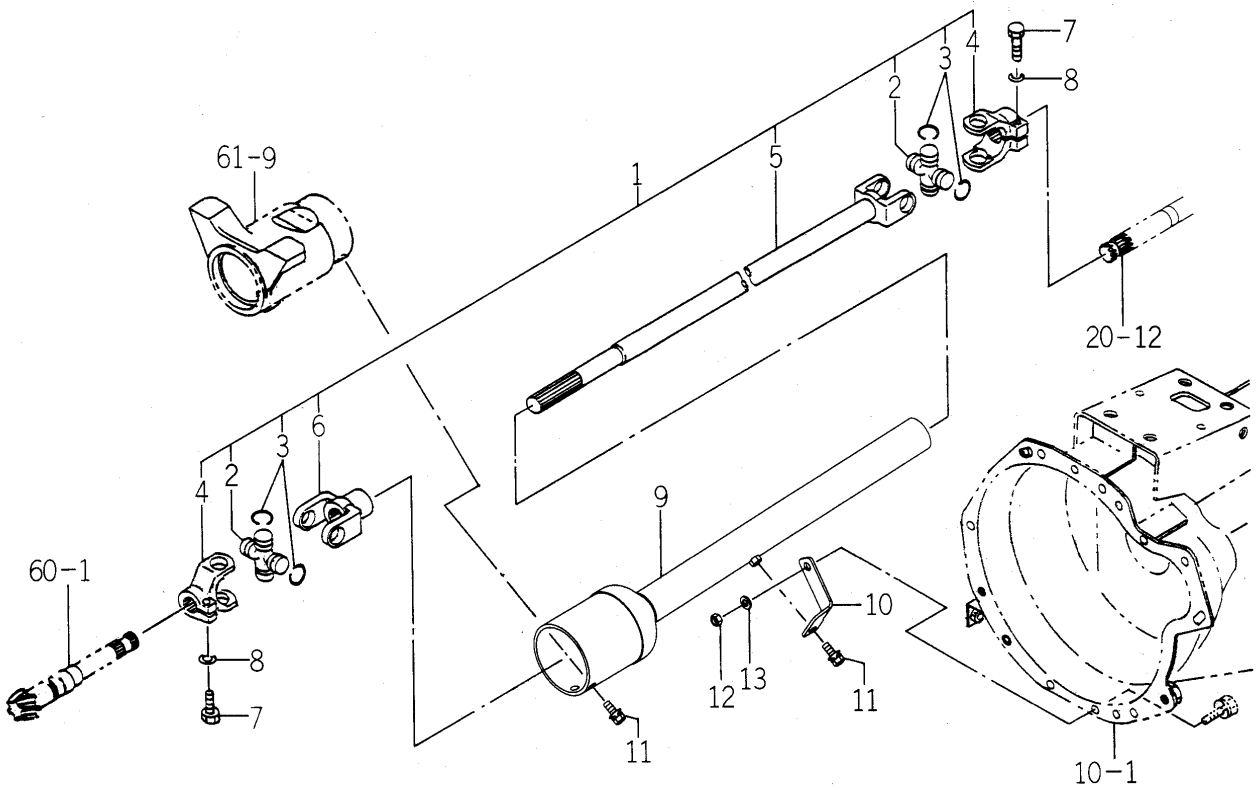

1750-431A-0100

KEY	PART CODE	DESCRIPTION	SPC	TYPE OF MODEL				ITC	COL	GRP	REMARKS
				TM3200	TM3200H	TM3240	TM3240H				
1	1750-431-500-00	SHAFT/4WD ASSY	*		1		1				
2	1725-120-211-00	KIT/JOINT	*		2		2				
3	1725-120-212-00	RING/SNAP	*		8		8				
4	1725-120-213-00	YOKE/CLAMP	*		2		2				
5	1750-431-501-00	YOKE/SHAFT	*		1		1				
6	1725-120-216-00	YOKE/SLEEVE	*		1		1				
7	1575-261-203-00	BOLT/SM/M8X1.25X30	*		2		2				
8	V401-160-008-00	WASHER,SP/M 8	*		2		2				
9	1738-431-200-20	CASE/JOINT COMP	*		1		1				
10	1750-431-051-00	STAY/PLATE	*		1		1				
11	V211-360-801-60	BOLT,SEMS (SP)	*		2		2				
12	V304-260-008-00	NUT	*		1		1				
13	V401-160-008-00	WASHER,SP/M 8	*		1		1				

FIG. 60 PINION (DRIVE) SYSYTEM

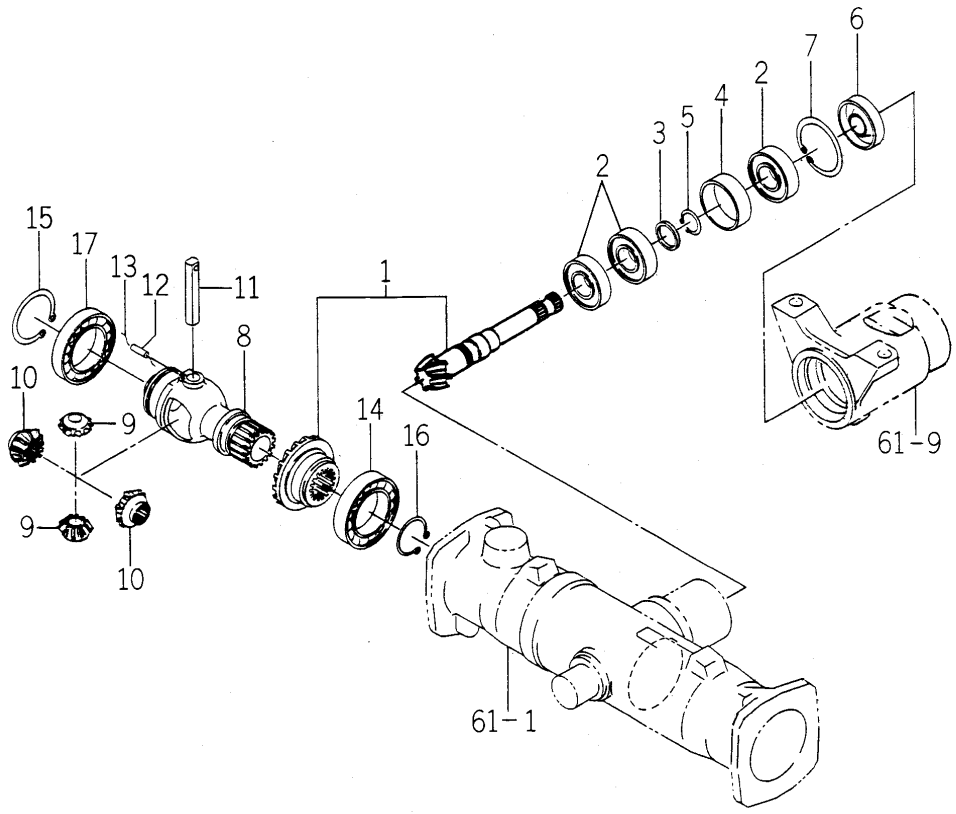

1750-432 -0100

KEY	PART CODE	DESCRIPTION	SPC	TYPE OF MODEL				ITC	COL	GRP	REMARKS
				TM3200	TM3200H	TM3240	TM3240H				
1	1738-432-200-00	PINION/BEVEL SET	*	1	1	1	1				
2	1594-221-001-00	BEARING/BALL 6205SH2	*	3	3	3	3				
3	1507-216-004-10	COLLAR/25X32X3	*	1	1	1	1				
4	1650-432-001-00	COLLAR/48X52X17	*	1	1	1	1				
5	V704-140-025-00	RING,SNAP/25 C	*	1	1	1	1				
6	1427-432-016-00	SEAL,OIL/21	*	1	1	1	1				
7	V705-140-052-00	RING,SNAP/52 C	*	1	1	1	1				
8	1614-432-002-00	CASE/DIFF	*	1	1	1	1				
9	1672-432-001-00	PINION/BEVEL/11	*	2	2	2	2				
10	1672-432-002-10	GEAR/BEVEL/15	*	2	2	2	2				
11	1614-432-006-00	PIN/12X75	*	1	1	1	1				
12	V580-140-502-50	PIN,SPRING/5 X25 W	*	1	1	1	1				
13		WIRE	*	1	1	1	1				
14	V600-110-601-00	BEARING,RB/6010	*	1	1	1	1				
15	V706-140-055-00	RING/SNAP	*	1	1	1	1				
16	V706-140-040-00	RING/SNAP	*	1	1	1	1				
17	V600-110-691-10	BEARING	*	1	1	1	1				

FIG. 61 HOUSING (AXLE) SYSTEM

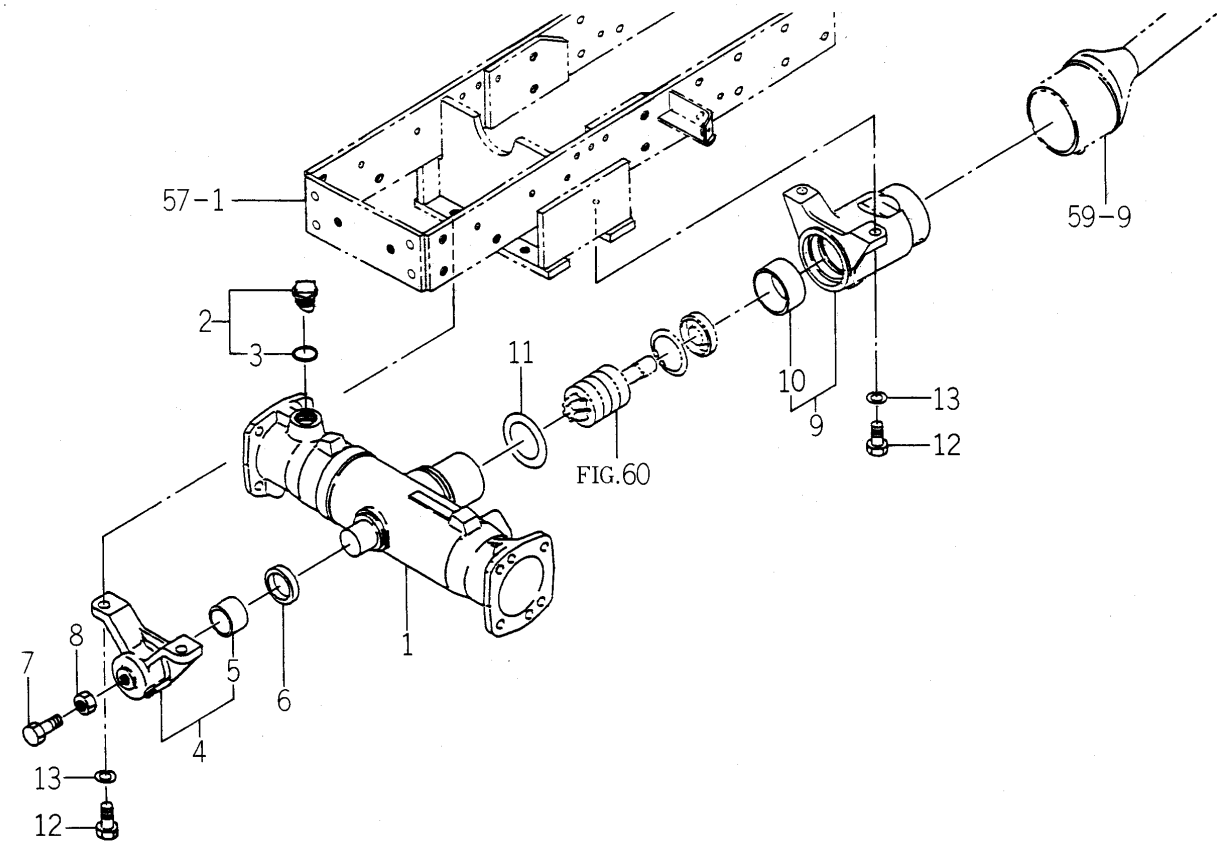

1750-433 -0100

KEY	PART CODE	DESCRIPTION	SPC	TYPE OF MODEL				ITC	COL	GRP	REMARKS
				TM3200	TM3200H	TM3240	TM3240H				
1	1682-433-001-30	HOUSING/AXLE	*	1	1	1	1				
2	1518-432-250-00	CAP,OIL ASSY	*	1	1	1	1				
3	1518-306-203-00	PACKING	*	1	1	1	1				
4	1672-433-210-10	METAL/PIVOT/FRONT	*	1	1	1	1				
5	1564-434-222-10	BUSH/35X39X26	*	1	1	1	1				
6	1612-433-002-00	SEAL/OIL	*	1	1	1	1				
7	V201-261-203-50	BOLT/M12X35	*	1	1	1	1				
8	V304-260-012-00	NUT/M12	*	1	1	1	1				
9	1738-433-200-10	METAL/PIVOT/REA ASSY	*	1	1	1	1				
10	1614-433-212-00	BUSH/62X67X30	*	1	1	1	1				
11	V721-103-107-00	O-RING/G70	*	1	1	1	1				
12	V201-361-203-00	BOLT/M12X30	*	4	4	4	4				
13	V401-160-012-00	WASHER,SP/M12	*	4	4	4	4				

FIG. 62 GEAR (FINAL) SYSTEM

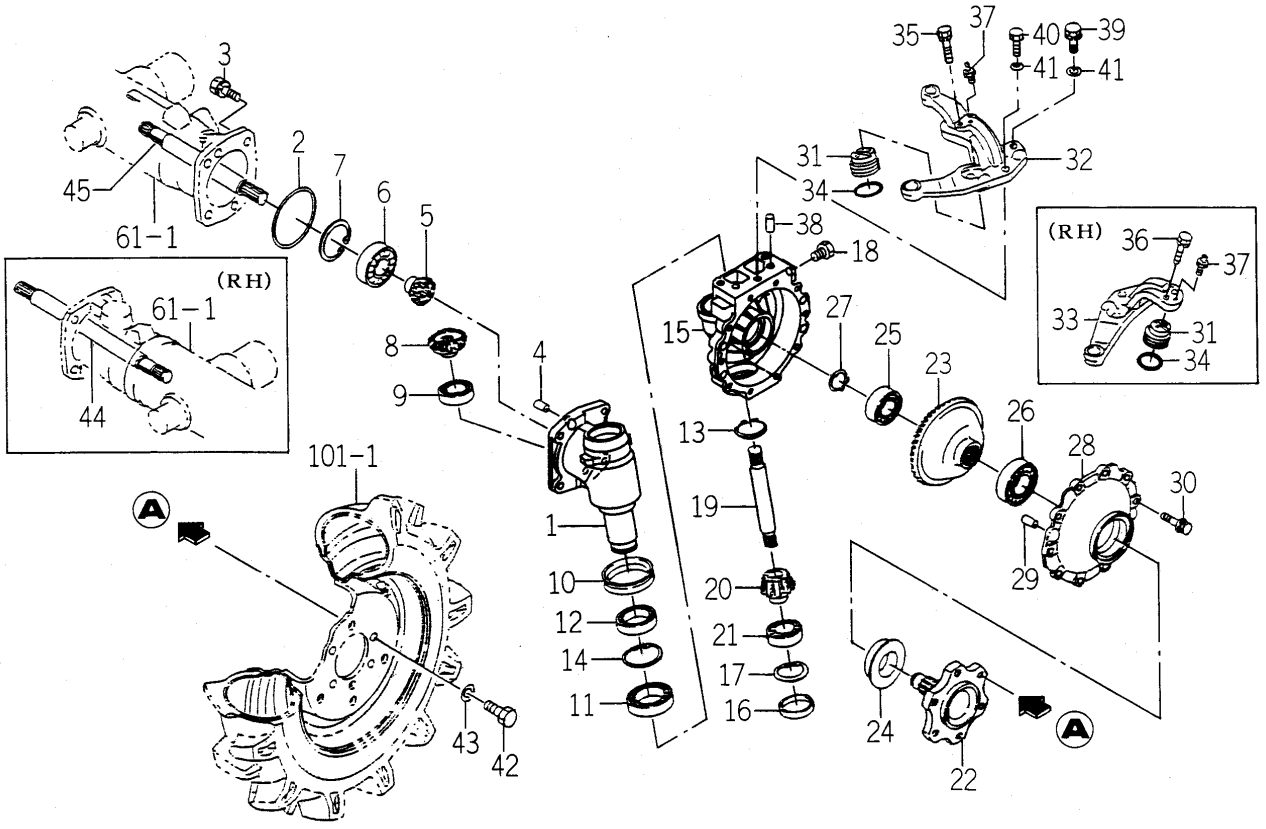

1684-434A-0100,1614-435A-0100

KEY	PART CODE	DESCRIPTION	SPC	TYPE OF MODEL				ITC	COL	GRP	REMARKS
				TM3200	TM3200H	TM3240	TM3240H				
1	1689-434-001-20	CASE/FINAL	*	2	2	2	2				
2	V721-103-109-00	O-RING/G90	*	2	2	2	2				
3	V211-561-003-00	BOLT/M10X30	*	8	8	8	8				
4	V523-101-002-40	PIN	*	4	4	4	4				
5	1672-434-002-00	GEAR/BEVEL/11	*	2	2	2	2				
6	V600-110-630-50	BEARING,RB/6305	*	2	2	2	2				
7	V707-140-062-00	RING/SNAP	*	2	2	2	2				
8	1672-434-003-00	GEAR/BEVEL/15	*	2	2	2	2				
9	V600-110-600-50	BEARING,RB/6005	*	2	2	2	2				
10	1685-434-001-00	SEAL/OIL ASSY	*	2	2	2	2				
11	V600-110-690-70	BEARING	*	2	2	2	2				
12	V600-110-600-80	BEARING,RB/6008	*	2	2	2	2				
13	V704-140-035-00	RING,SNAP/35 C	*	2	2	2	2				
14	V707-140-055-00	RING/SNAP	*	2	2	2	2				
15	1672-434-011-10	CASE/FINAL	*	2	2	2	2				
16	1564-201-003-00	CAP/SEAL/47	*	2	2	2	2				
17	V705-140-047-00	RING,SNAP/47 C	*	2	2	2	2				
18	7955-201-026-00	PLUG,DRAIN (1/4)	*	4	4	4	4				
19	1612-434-006-00	SHAFT	*	2	2	2	2				
20	1672-434-007-00	GEAR/BEVEL/12	*	2	2	2	2				
21	V600-110-600-50	BEARING,RB/6005	*	2	2	2	2				
22	1682-434-007-00	SHAFT/WHEEL	*	2	2	2	2				
23	1672-434-008-00	GEAR/BEVEL/47	*	2	2	2	2				
24	1491-434-017-00	SEAL/QLNY35571116	*	2	2	2	2				
25	V600-110-620-50	BEARING,RB/6205	*	2	2	2	2				
26	V600-110-620-60	BEARING,RB/6206	*	2	2	2	2				
27	V704-140-025-00	RING,SNAP/25 C	*	2	2	2	2				
28	1612-434-009-00	COVER/WHEEL	*	2	2	2	2				
29	V523-101-002-40	PIN	*	4	4	4	4				
30	V211-360-802-50	BOLT/SP	*	20	20	20	20				

FIG. 62 GEAR (FINAL) SYSTEM

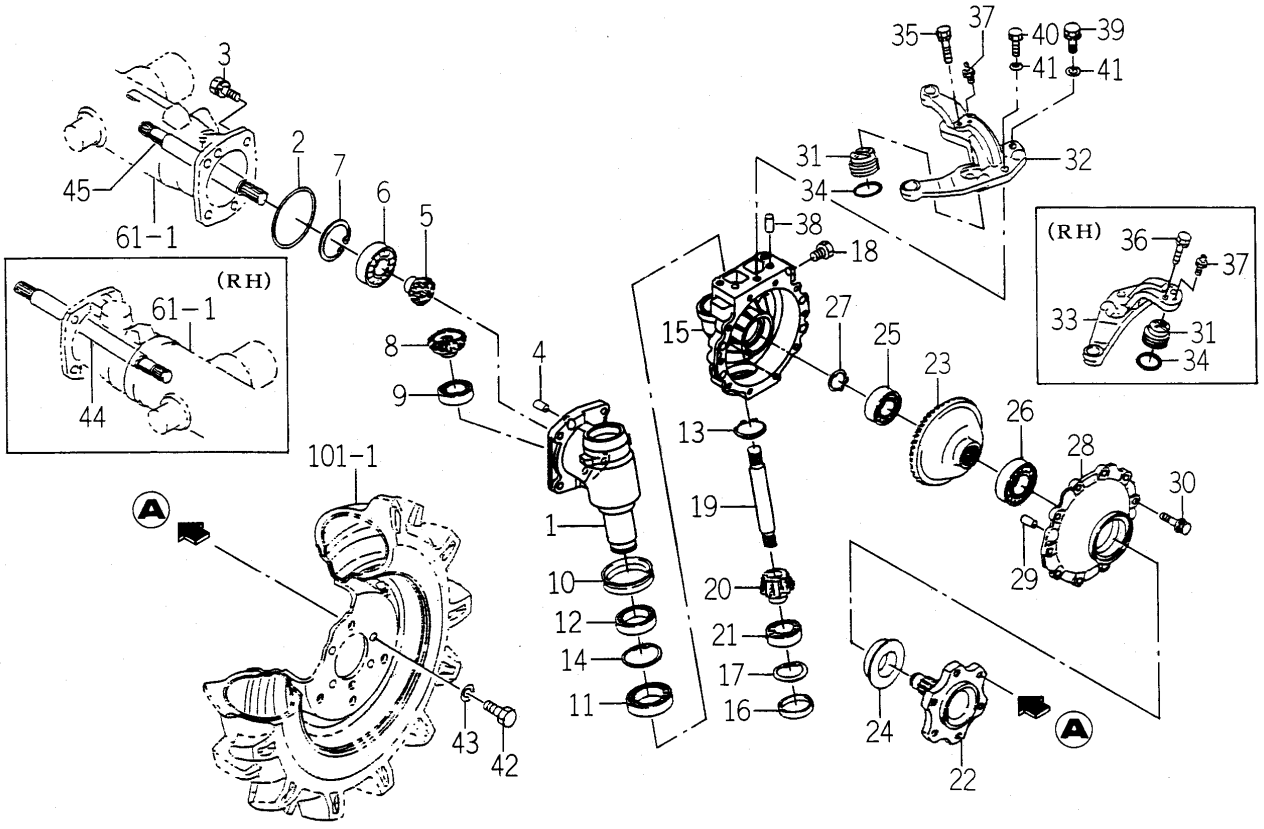

1684-434A-0100,1614-435A-0100

KEY	PART CODE	DESCRIPTION	SPC	TYPE OF MODEL				ITC	COL	GRP	REMARKS
				TM3200	TM3200H	TM3240	TM3240H				
31	1682-434-006-30	PIN/47X19	*	2	2	2	2				
32	1684-434-011-00	ARM/KNUCKLE/LH	*	1	1	1	1				
33	1684-434-012-00	ARM/KNUCKLE/RH	*	1	1	1	1				
34	V720-103-504-10	O-RING /P41	*	2	2	2	2				
35	V211-560-802-50	BOLT,SEMS/M8X25 7T	*	2	2	2	2				
36	V211-560-802-00	BOLT/M8X20	*	2	2	2	2				
37	V760-150-000-00	NIPPLE,GREASE	*	2	2	2	2				
38	V523-101-002-40	PIN	*	4	4	4	4				
39	V211-561-003-50	BOLT/S	*	4	4	4	4				
40	V201-361-003-5B	BOLT/SEAL	*	2	2	2	2				
41	V401-160-010-00	WASHER,SP/M10	*	2	2	2	2				
42	V201-361-202-50	BOLT/M12X25	*	12	12	12	12				
43	V401-160-012-00	WASHER,SP/M12	*	12	12	12	12				
44	1617-435-002-00	SHAFT	*	1	1	1	1				
45	1614-435-004-00	SHAFT	*	1	1	1	1				

FIG. 63 ROD (TIE) SYSTEM

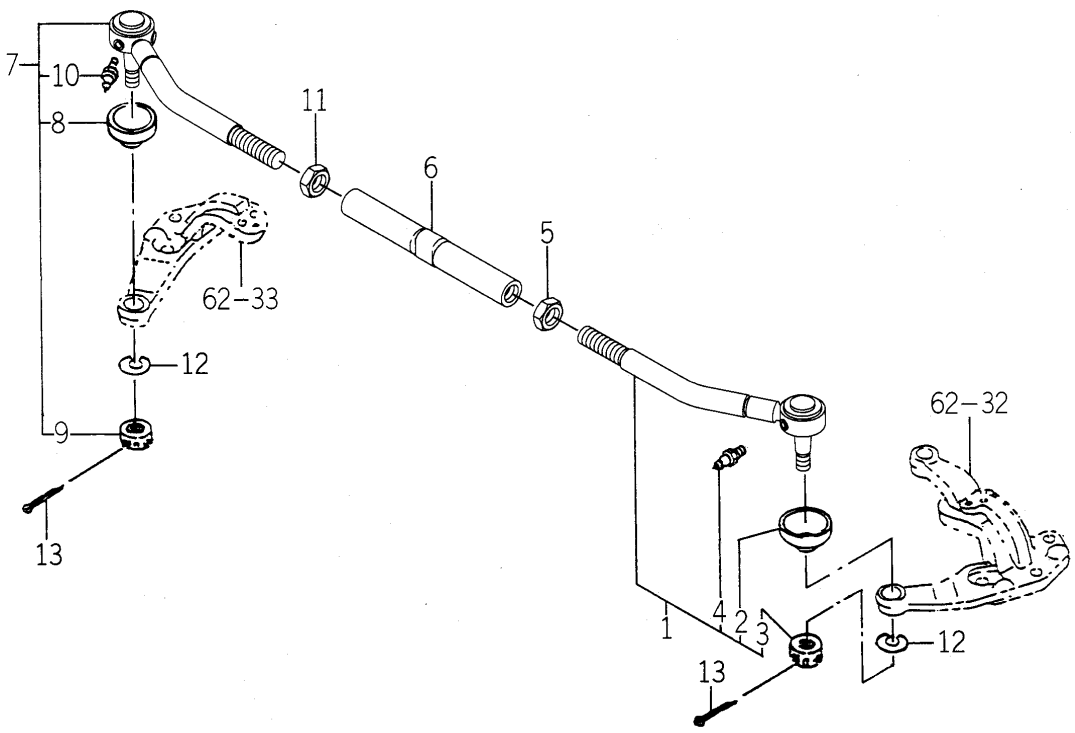

1750-436 -0100

KEY	PART CODE	DESCRIPTION	SPC	TYPE OF MODEL				ITC	COL	GRP	REMARKS
				TM3200	TM3200H	TM3240	TM3240H				
1	1750-436-210-00	ROD/TIE/LH ASSY	*	1	1	1	1				
2	1404-402-001-00	COVER,DUST	*	1	1	1	1				
3	1404-402-002-00	NUT,SLOTTED	*	1	1	1	1				
4	1404-402-005-00	NIPPLE,GREASE	*	1	1	1	1				
5	1421-403-001-00	NUT	*	1	1	1	1				
6	1750-436-201-00	ROD/TIE	*	1	1	1	1				
7	1750-436-220-00	ROD/TIE/RH ASSY	*	1	1	1	1				
8	1404-402-001-00	COVER,DUST	*	1	1	1	1				
9	1404-402-002-00	NUT,SLOTTED	*	1	1	1	1				
10	1404-402-005-00	NIPPLE,GREASE	*	1	1	1	1				
11	1421-403-002-00	NUT,LH THREAD/M17	*	1	1	1	1				
12	V401-160-012-00	WASHER,SP/M12	*	2	2	2	2				
13	V500-163-002-00	PIN,SPLIT/3 X20	*	2	2	2	2				

FIG. 64 CYLINDER CASE SYSTEM

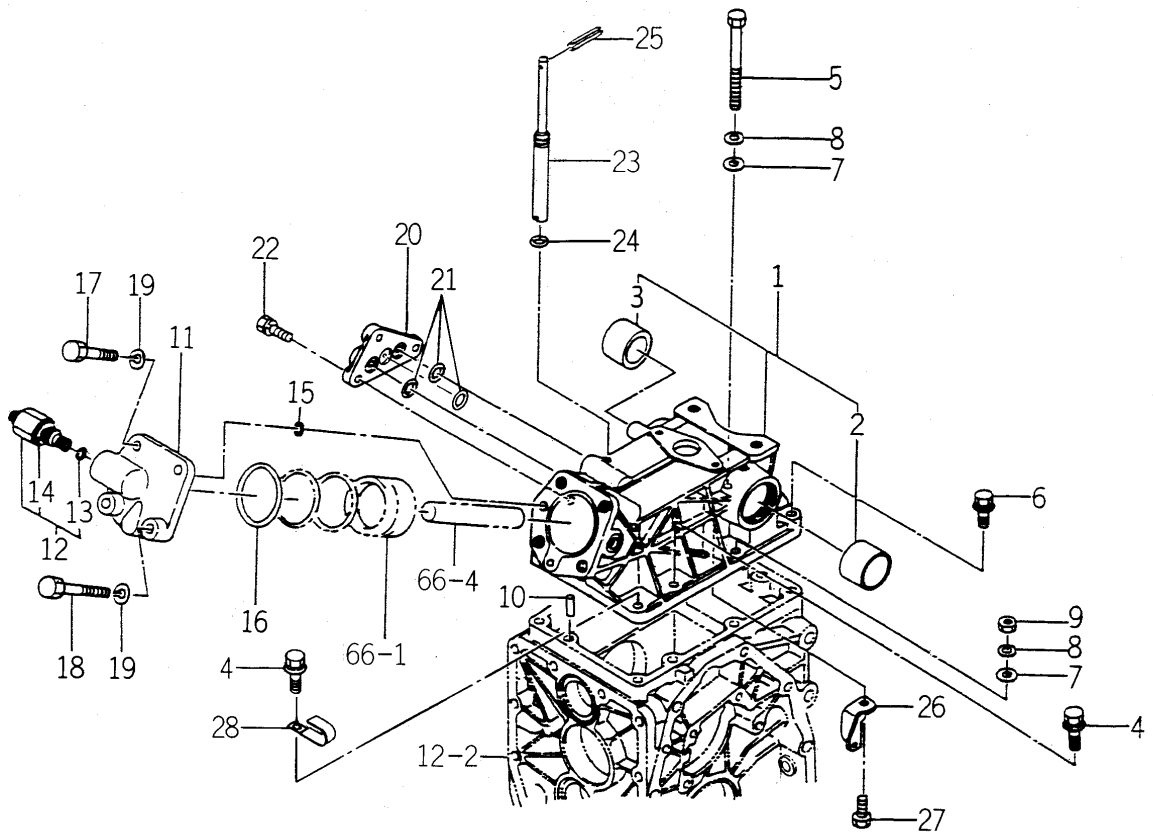

1750-501 -0100

KEY	PART CODE	DESCRIPTION	SPC	TYPE OF MODEL				ITC	COL	GRP	REMARKS
				TM3200	TM3200H	TM3240	TM3240H				
1	1579-501-200-00	CASE,SYLINDER	*	1	1	1	1				
2	1480-501-003-00	BUSH/40X43X30	*	1	1	1	1				
3	1427-501-003-00	BUSH/35X39X30	*	1	1	1	1				
4	V211-661-004-00	BOLT/SP	*	4	4	4	4				
5	V201-361-010-00	BOLT/M10X100	*	1	1	1	1				
6	V211-661-004-50	BOLT/SP	*	2	2	2	2				
7	V411-260-010-00	WASHER/M10	*	3	3	3	3				
8	V401-160-010-00	WASHER,SP/M10	*	3	3	3	3				
9	V304-460-010-00	NUT/M10	*	2	2	2	2				
10	V522-100-801-80	PIN	*	2	2	2	2				
11	1579-501-002-00	HEAD,SYLINDER	*	1	1	1	1				
12	K250-001-000-00	VALVE,RELIEF ASSY	*	1	1	1	1				
13	V720-112-401-20	O-RING/P12	*	1	1	1	1				
14	K250-001-009-00	PACKING	*	1	1	1	1				
15	V720-112-401-20	O-RING/P12	*	2	2	2	2				
16	V721-113-106-00	O-RING G60	*	1	1	1	1				
17	V201-361-204-00	BOLT/M12X40	*	2	2	2	2				
18	V201-361-206-00	BOLT	*	2	2	2	2				
19	V401-160-012-00	WASHER,SP/M12	*	4	4	4	4				
20	1434-501-003-10	SUBCONCOVER	*	1	1	1	1				
21	V720-112-401-20	O-RING/P12	*	3	3	3	3				
22	V211-260-802-50	BOLT/S	*	3	3	3	3				
23	1738-501-001-00	PIN/ADJUST	*	1	1	1	1				
24	V720-101-900-70	O-RING/P 7	*	1	1	1	1				
25	V580-140-403-60	PIN,SPRING 3X32	*	1	1	1	1				
26	1434-501-005-00	HOOK,SPRING	*	1	1	1	1				
27	V201-260-801-60	BOLT/M 8X16	*	1	1	1	1				
28	3737-172-011-00	CLAMP,HARNESS	*	1	1	1	1				

FIG. 65 ARM (LIFT) SYSTEM

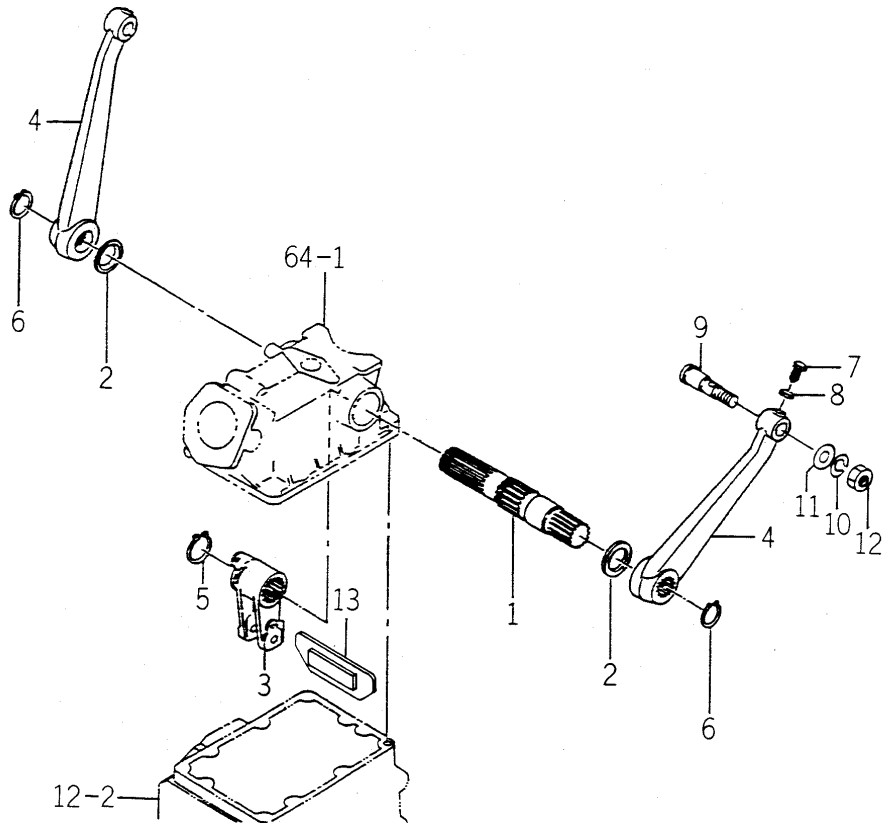

1685-502 -0100

KEY	PART CODE	DESCRIPTION	SPC	TYPE OF MODEL				ITC	COL	GRP	REMARKS
				TM3200	TM3200H	TM3240	TM3240H				
1	1672-502-003-00	SHAFT/LIFT	*	1	1	1	1				
2	V742-135-500-60	SEAL,OIL/VC35506	*	2	2	2	2				
3	1579-502-001-00	CRANK,LIFT	*	1	1	1	1				
4	1672-502-004-00	ARM/LIFT	*	2	2	2	2				
5	V706-140-040-00	RING/SNAP	*	1	1	1	1				
6	V704-140-035-00	RING,SNAP/35 C	*	2	2	2	2				
7	1600-502-003-00	BOLT,SM/M08X25	*	2	2	2	2				
8	V305-260-008-00	NUT/M 8	*	2	2	2	2				
9	1575-511-001-20	PIN/22X86	*	2	2	2	2				
10	V401-160-016-00	WASHER,SP/M16	*	2	2	2	2				
11	V411-260-016-00	WASHER / M16	*	2	2	2	2				
12	V304-260-016-00	NUT/M16	*	2	2	2	2				
13	1688-502-210-00	PLATE/STOPPER COMP	*	1	1	1	1				

FIG. 66 CYLINDER SYSTEM

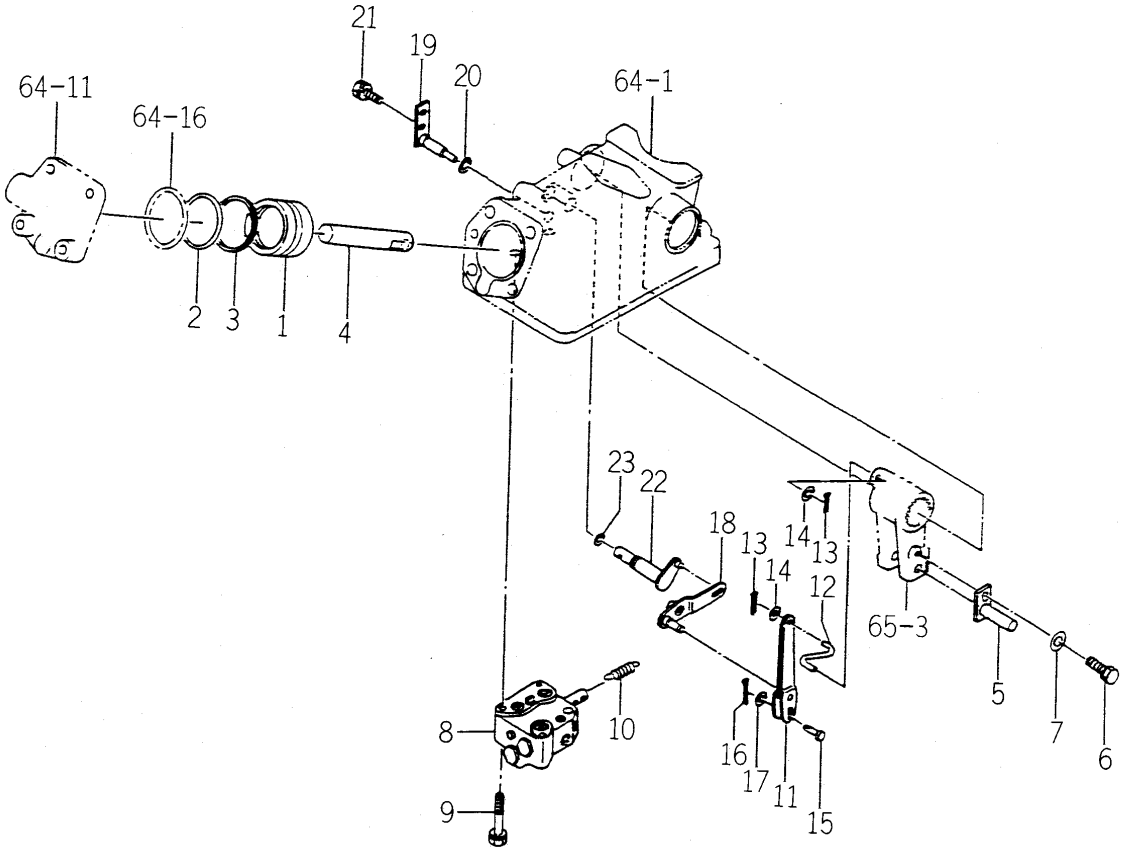

1672-503 -0100

KEY	PART CODE	DESCRIPTION	SPC	TYPE OF MODEL				ITC	COL	GRP	REMARKS
				TM3200	TM3200H	TM3240	TM3240H				
1	1421-507-002-10	PISTON	*	1	1	1	1				
2	V720-105-705-50	O-RING/P55	*	1	1	1	1				
3	1416-501-011-00	RING,BACKUP	*	1	1	1	1				
4	1544-503-001-20	ROD	*	1	1	1	1				
5	1544-503-200-20	PIN,ROD COMP	*	1	1	1	1				
6	V211-561-001-60	BOLT(S)7	*	1	1	1	1				
7	V411-260-010-00	WASHER/M10	*	1	1	1	1				
8	K211-001-000-00	VALVE CONTROL ASSY	*	1	1	1	1				FIG 109
9	V211-260-805-00	BOLT/M8X50	*	3	3	3	3				
10	1434-501-006-00	SPRING,TENSION/31	*	1	1	1	1				
11	1717-503-200-10	LINK/SPOOL COMP	*	1	1	1	1				
12	1434-503-001-00	LINK,CRANK	*	1	1	1	1				
13	V500-162-001-50	PIN,SPLIT/2 X15	*	2	2	2	2				
14	V411-260-006-00	WASHER / M6	*	2	2	2	2				
15	1434-503-002-00	PIN/5X17	*	1	1	1	1				
16	V500-162-001-50	PIN,SPLIT/2 X15	*	1	1	1	1				
17	V411-260-005-00	WASHER	*	1	1	1	1				
18	1672-503-210-00	LINK/SUPPORT COMP	*	1	1	1	1				
19	1434-503-250-10	PIN/SUPPORT COMP	*	1	1	1	1				
20	V720-101-900-70	O-RING/P 7	*	1	1	1	1				
21	V211-260-801-60	BOLT,SEMS (S) M8X16	*	1	1	1	1				
22	1434-503-260-20	LINK SHIFT ARM	*	1	1	1	1				
23	V720-102-401-00	O-RING/P10A	*	1	1	1	1				

FIG. 67 CONTROL SYSTEM

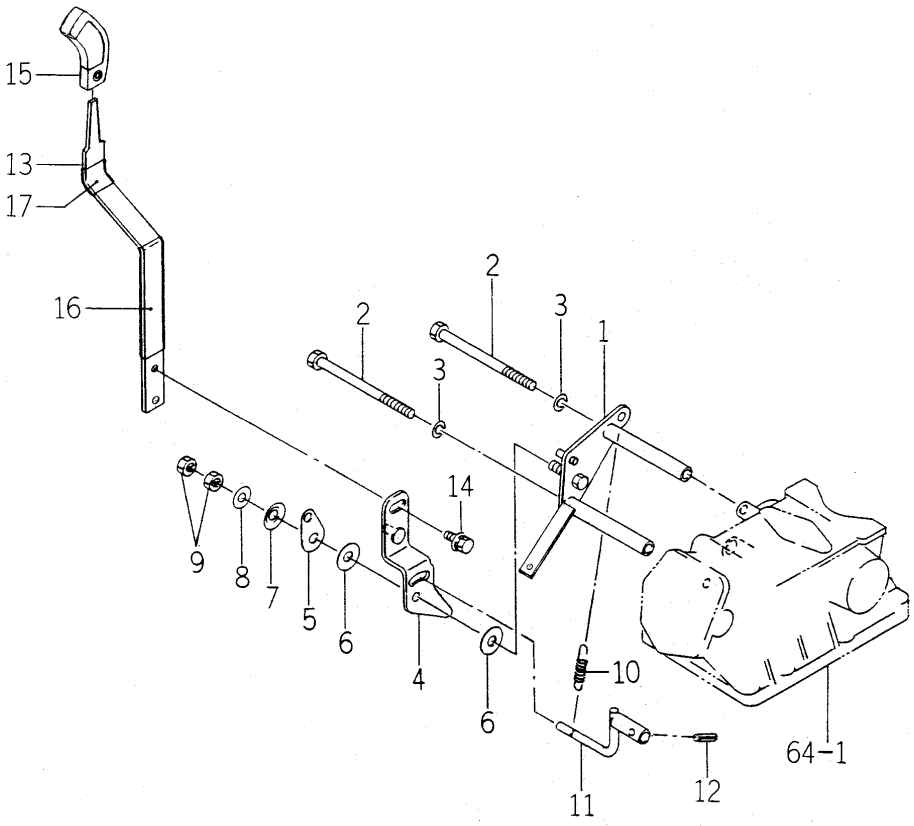

1750-505 -0100

KEY	PART CODE	DESCRIPTION	SPC	TYPE OF MODEL				ITC	COL	GRP	REMARKS
				TM3200	TM3200H	TM3240	TM3240H				
1	1738-505-200-00	BRACKET/LEVER COMP	*	1	1	1	1				
2	V201-260-813-00	BOLT/M 8X130	*	2	2	2	2				
3	V401-160-008-00	WASHER,SP/M 8	*	2	2	2	2				
4	1672-505-210-10	ARM/POSITION COMP	*	1	1	1	1				
5	1614-505-002-00	PLATE	*	1	1	1	1				
6	1614-505-003-00	LINING/11X30X02	*	2	2	2	2				
7	1614-505-004-00	SPRING/WASHER	*	1	1	1	1				
8	V411-260-010-00	WASHER/M10	*	1	1	1	1				
9	V304-260-010-00	NUT	*	2	2	2	2				
10	1414-312-002-00	SPRING,TENSION/53	*	1	1	1	1				
11	1612-505-220-00	ARM/POSITION COMP	*	1	1	1	1				
12	V580-140-502-00	PIN,SPRING/5 X20 W	*	1	1	1	1				
13	1738-505-002-10	LEVER/POSITION	*	1	1	1	1				
14	V211-360-801-60	BOLT,SEMS (SP)	*	1	1	1	1				
15	1614-505-007-00	GRIP/03X17X97	*	1	1	1	1				
16	1725-266-001-00	INSULATOR/120	*	1	1	1	1				
17	1560-511-101-00	PROTECTER	*	1	1	1	1				

FIG. 68 PIPING (MAIN) SYSTEM (EXCEPT H TYPE)

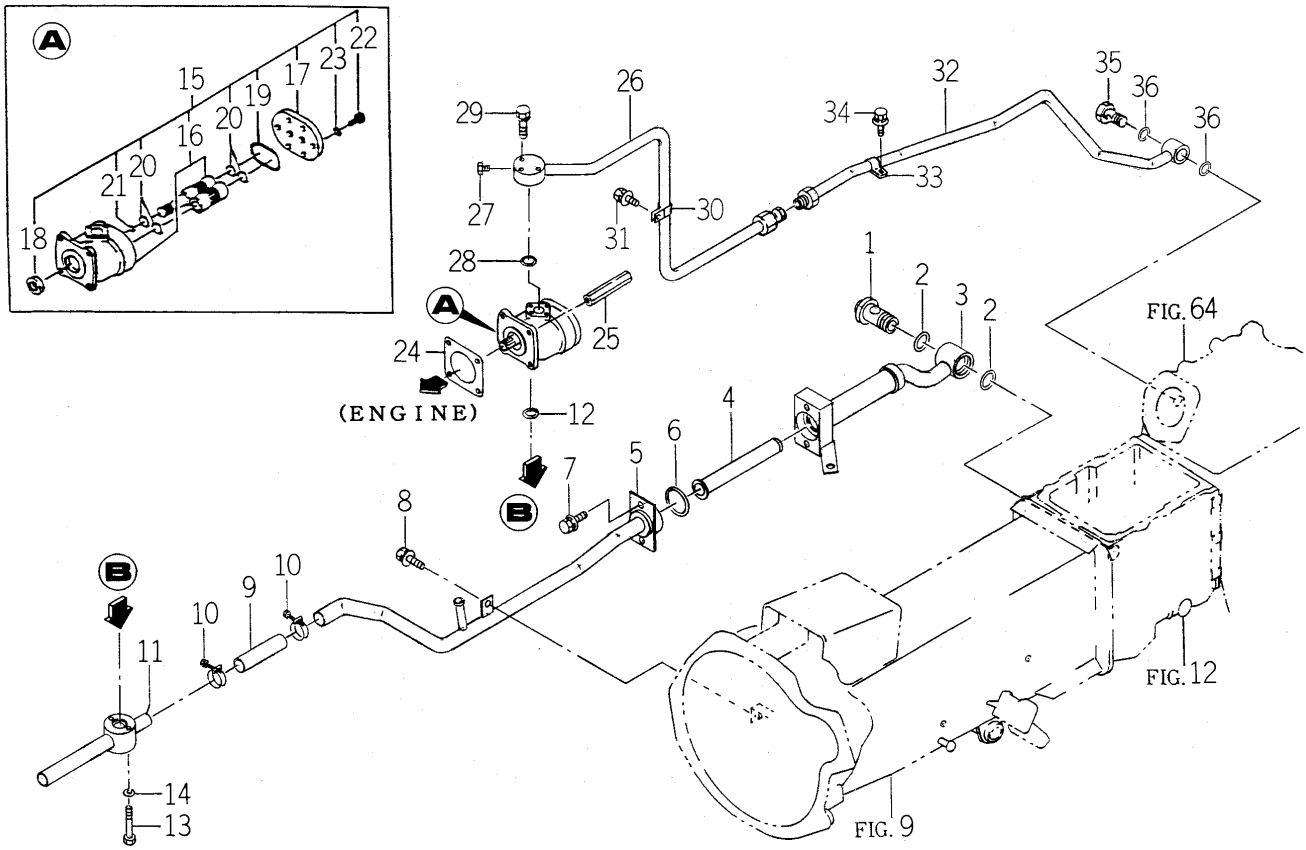

1750-508 -0100

KEY	PART CODE	DESCRIPTION	SPC	TYPE OF MODEL				ITC	COL	GRP	REMARKS
				TM3200	TM3200H	TM3240	TM3240H				
1	1750-508-001-00	ADAPTER/BOLT/M28X2.0	*	1		1					
2	V720-113-502-80	RING/O	*	2		2					
3	1750-508-210-10	PIPE/SUCTION/REAR	*	1		1					
4	1685-508-220-00	FILTER COMP	*	1		1					
5	1750-508-220-00	PIPE/SUCTION/MI COMP	*	1		1					
6	V721-103-104-50	O-RING/G45	*	1		1					
7	V211-360-802-00	BOLT/SP	*	2		2					
8	V211-360-802-00	BOLT/SP	*	1		1					
9	1550-508-001-10	HOSE/90	*	1		1					
10	J061-228-036-00	CLAMP/WIRE/28-36	*	2		2					
11	1750-508-230-10	PIPE/SUC/FRONT COMP	*	1		1					
12	V720-112-402-00	O-RING/P20	*	1		1					
13	V210-260-605-00	BOLT/S	*	2		2					
14	V401-160-006-00	WASHER,SP/M 6	*	2		2					
15	K135-012-000-00	PUMP,GEAR ASSY	*	1		1					
16	K135-012-100-00	PUMP,GEAR ASSY	*	1		1					
17	K135-017-006-00	COVER,PUMP	*	1		1					
18	V744-114-280-70	SEAL,OIL	*	1		1					
19	V721-113-105-00	O-RING HS90 G50	*	1		1					
20	V720-112-402-20	O-RING/P22	*	4		4					
21	V720-111-900-60	O-RING P6 HS90	*	1		1					
22	K135-002-009-00	BOLT/M8X28 11T	*	6		6					
23	V401-170-008-00	S.W	*	6		6					
24	1404-503-006-00	PACKING,OIL PUMP	*	1		1					
25	1560-515-004-50	NUT/M08	*	2		2					
26	1750-508-240-10	PIPE/DEL/FRONT COMP	*	1		1					
27	V782-160-000-2T	PLUG/SCREW/SEAL	*	1		1					
28	V720-112-402-00	O-RING/P20	*	1		1					
29	V210-560-603-00	BOLT/S	*	4		4					
30	1675-508-003-00	HOLDER/15	*	1		1					

FIG. 68 PIPING (MAIN) SYSTEM (EXCEPT H TYPE)

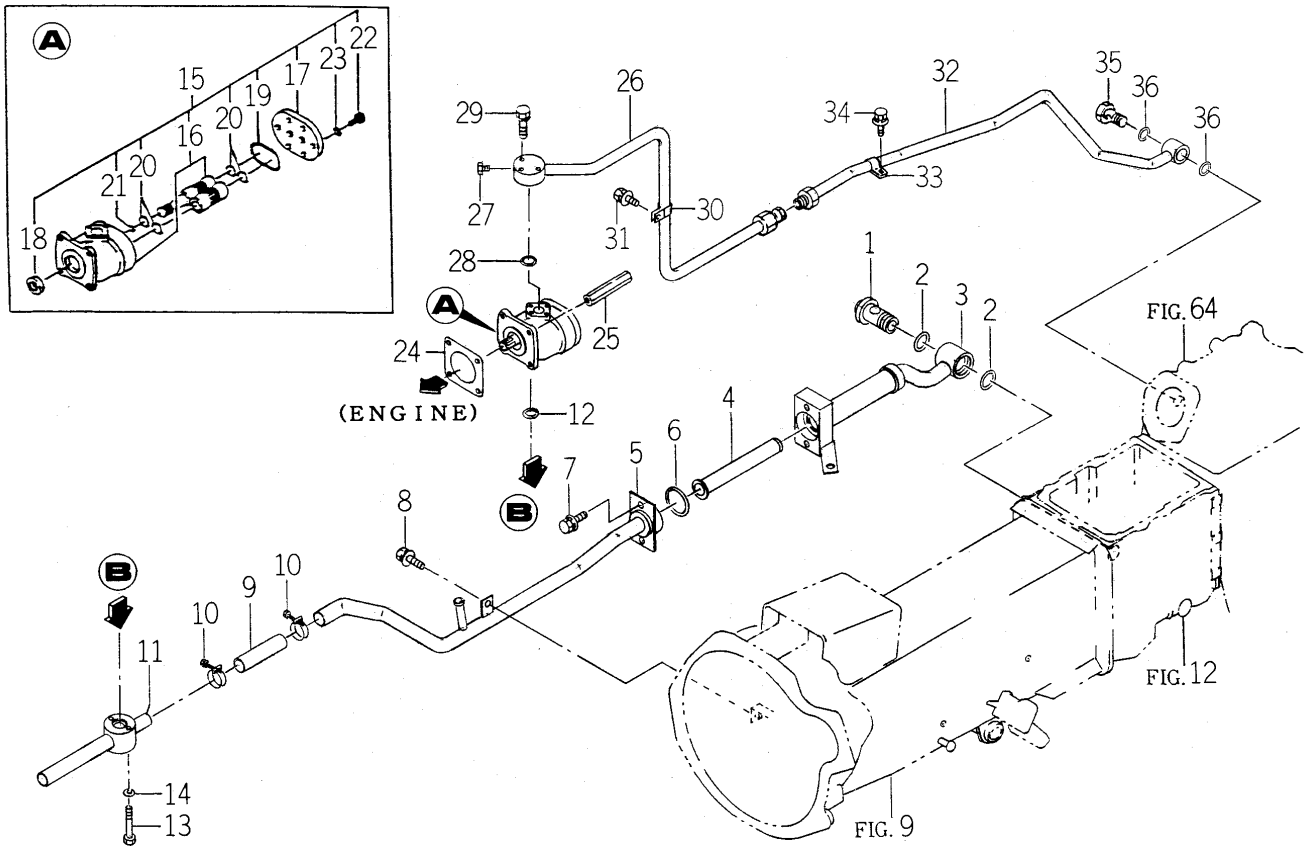

1750-508 -0100

KEY	PART CODE	DESCRIPTION	SPC	TYPE OF MODEL				ITC	COL	GRP	REMARKS
				TM3200	TM3200H	TM3240	TM3240H				
31	V211-360-801-60	BOLT,SEMS (SP)	*	1		1					
32	1750-508-250-10	PIPE/DEL/REAR COMP	*	1		1					
33	1675-508-003-00	HOLDER/15	*	1		1					
34	V211-360-801-60	BOLT,SEMS (SP)	*	1		1					
35	1738-508-001-00	ADAPTER/BOLT/G3/8	*	1		1					
36	V720-112-401-80	O-RING/P18	*	2		2					

FIG. 69 PIPING SYSTEM (H TYPE)

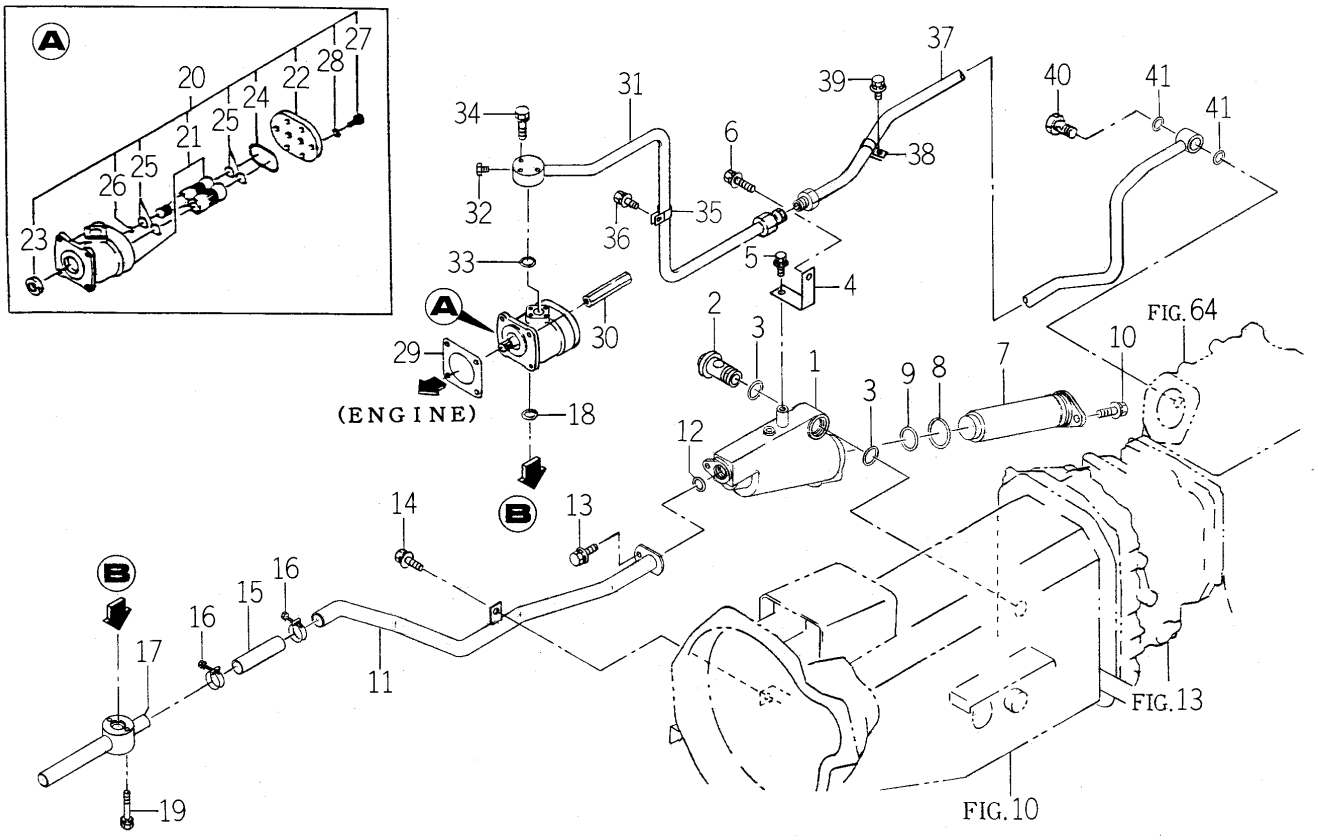

1750-508A-0100

KEY	PART CODE	DESCRIPTION	SPC	TYPE OF MODEL				ITC	COL	GRP	REMARKS
				TM3200	TM3200H	TM3240	TM3240H				
1	1750-508-051-00	CASE/FILTER/400	*		1		1				
2	1434-503-330-00	BOLT,SET COMP	*		1		1				
3	V720-113-502-80	RING/O	*		2		2				
4	1750-508-052-00	PLATE/L/25X68	*		1		1				
5	V211-360-801-60	BOLT,SEMS (SP)	*		1		1				
6	V211-361-002-50	BOLT/SP	*		1		1				
7	1675-508-500-00	FILTER/SUCTION/400	*		1		1				
8	V721-103-104-50	O-RING/G45	*		1		1				
9	V720-103-503-50	O-RING/P35	*		1		1				
10	V211-361-002-50	BOLT/SP	*		1		1				
11	1750-508-510-00	PIPE/SUC/REAR COMP	*		1		1				
12	V720-113-502-40	O-RING/P24	*		1		1				
13	V211-360-801-60	BOLT,SEMS (SP)	*		1		1				
14	V211-360-802-00	BOLT/SP	*		1		1				
15	1550-508-001-10	HOSE/90	*		1		1				
16	J061-228-036-00	CLAMP/WIRE/28-36	*		2		2				
17	1750-508-230-10	PIPE/SUC/FRONT COMP	*		1		1				
18	V720-112-402-00	O-RING/P20	*		1		1				
19	V210-560-605-00	BOLT/S	*		2		2				
20	K135-012-000-00	PUMP,GEAR ASSY	*		1		1				
21	K135-012-100-00	PUMP,GEAR ASSY	*		1		1				
22	K135-017-006-00	COVER,PUMP	*		1		1				
23	V744-114-280-70	SEAL,OIL	*		1		1				
24	V721-113-105-00	O-RING HS90 G50	*		1		1				
25	V720-112-402-20	O-RING/P22	*		4		4				
26	V720-111-900-60	O-RING P6 HS90	*		1		1				
27	K135-002-009-00	BOLT/M8X28 11T	*		6		6				
28	V401-170-008-00	S.W	*		6		6				
29	1404-503-006-00	PACKING,OIL PUMP	*		1		1				
30	1560-515-004-50	NUT/M08	*		2		2				

FIG. 69 PIPING SYSTEM (H TYPE)

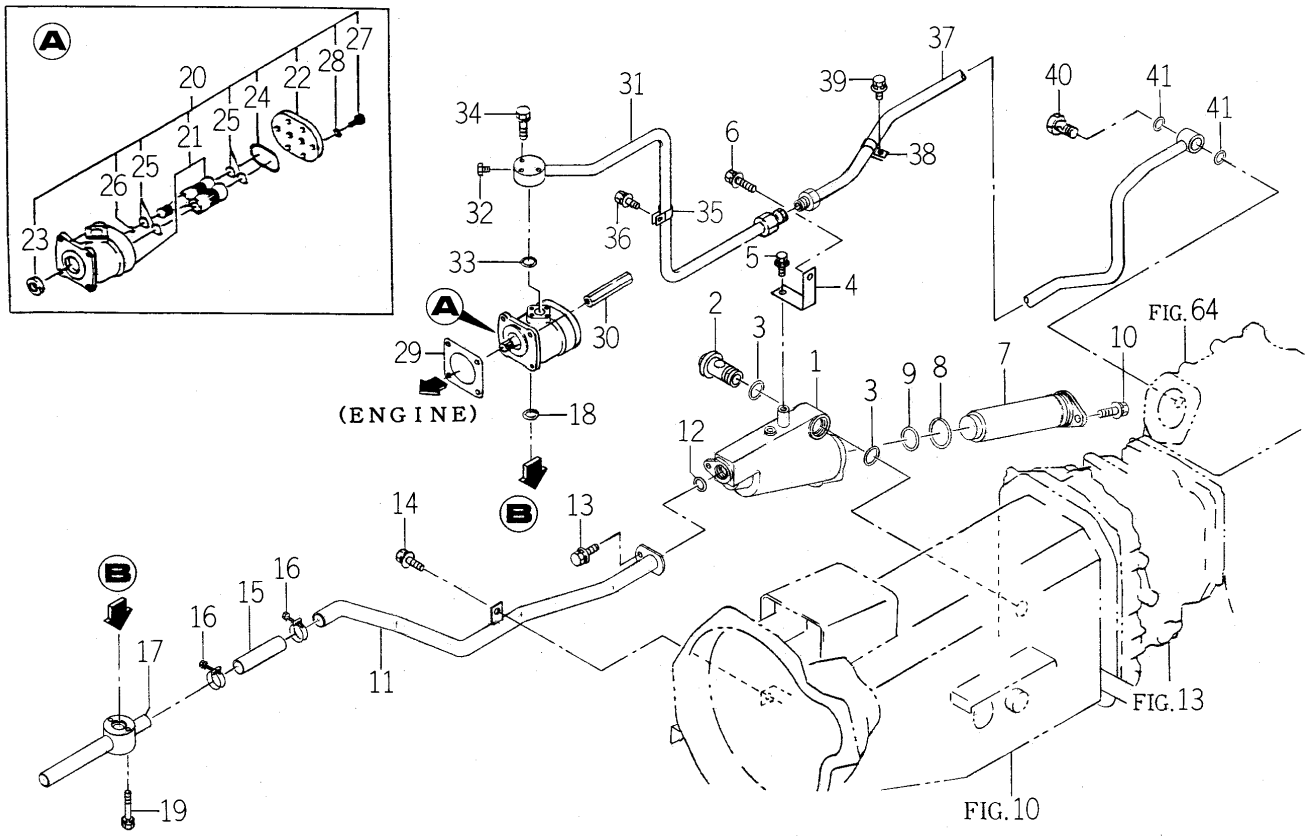

1750-508A-0100

KEY	PART CODE	DESCRIPTION	SPC	TYPE OF MODEL				ITC	COL	GRP	REMARKS
				TM3200	TM3200H	TM3240	TM3240H				
31	1750-508-240-10	PIPE/DEL/FRONT COMP	*		1		1				
32	V782-160-000-2T	PLUG/SCREW/SEAL	*		1		1				
33	V720-112-402-00	O-RING/P20	*		1		1				
34	V210-560-603-00	BOLT/S	*		4		4				
35	1675-508-003-00	HOLDER/15	*		1		1				
36	V211-360-801-60	BOLT,SEMS (SP)	*		1		1				
37	1750-508-520-00	PIPE/DEL/REAR COMP	*		1		1				
38	1675-508-003-00	HOLDER/15	*		1		1				
39	V211-360-801-60	BOLT,SEMS (SP)	*		1		1				
40	1738-508-001-00	ADAPTER/BOLT/G3/8	*		1		1				
41	V720-112-401-80	O-RING/P18	*		2		2				

FIG. 70 LINK (3P) SYSTEM

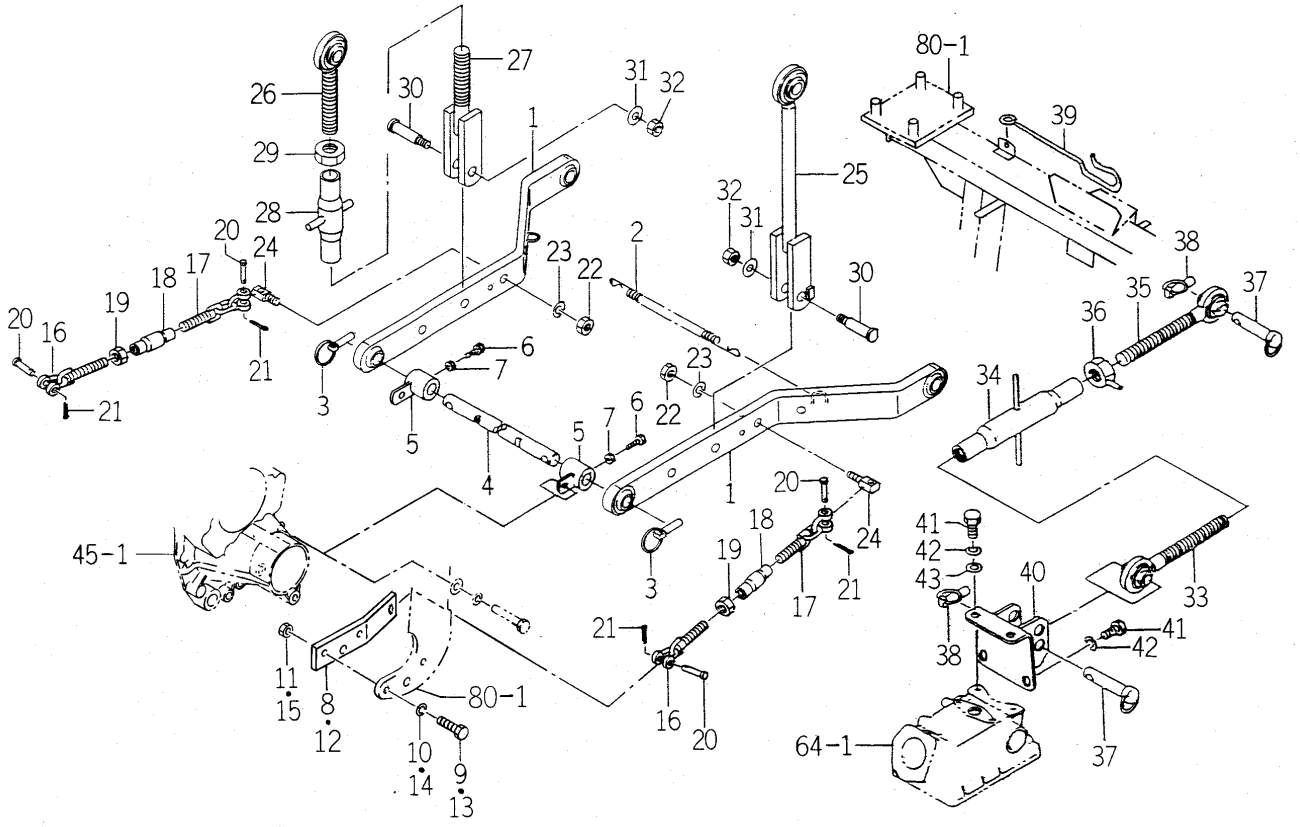

1750-514 -0100

KEY	PART CODE	DESCRIPTION	SPC	TYPE OF MODEL				ITC	COL	GRP	REMARKS
				TM3200	TM3200H	TM3240	TM3240H				
1	1685-511-210-00	LINK/LOWER COMP	*	2	2	2	2				
2	1560-525-001-40	SPRING	*	1	1	1	1				
3	1673-525-002-20	LINKPIN	*	2	2	2	2				
4	1738-514-001-00	PIN/22X404	*	1	1	1	1				
5	1738-514-210-00	HUB/SPACER COMP	*	2	2	2	2				
6	V201-360-802-50	BOLT/M 8X25	*	2	2	2	2				
7	V305-260-008-00	NUT/M 8	*	2	2	2	2				
8	1750-514-001-10	PLATE/CHAIN/LH	*	1	1	1	1				
9	V201-361-203-50	BOLT/M12X35	*	2	2	2	2				
10	V401-160-012-00	WASHER,SP/M12	*	2	2	2	2				
11	V304-460-012-00	NUT/M12	*	2	2	2	2				
12	1750-514-002-10	PLATE/CHAIN/RH	*	1	1	1	1				
13	V201-361-203-50	BOLT/M12X35	*	2	2	2	2				
14	V401-160-012-00	WASHER,SP/M12	*	2	2	2	2				
15	V304-460-012-00	NUT/M12	*	2	2	2	2				
16	7963-611-230-00	CHAIN,CHECK/A	*	2	2	2	2				
17	7963-611-240-00	CHAIN,CHECK,B COMP	*	2	2	2	2				
18	7963-611-002-00	TURNBUCKLE	*	2	2	2	2				
19	V304-260-016-00	NUT/M16	*	2	2	2	2				
20	7963-611-003-00	PIN/12X48	*	4	4	4	4				
21	V500-163-002-50	PIN,SPLIT/3 X25	*	4	4	4	4				
22	V304-260-016-00	NUT/M16	*	2	2	2	2				
23	V401-160-016-00	WASHER,SP/M16	*	2	2	2	2				
24	7963-611-001-00	PIN,CHAIN	*	2	2	2	2				
25	1685-511-230-00	ROD/LIFT/LH COMP	*	1	1	1	1				
26	1600-515-210-10	SCREW,RH/M24 COMP	*	1	1	1	1				
27	1685-511-220-00	LIFTROD/L COMP	*	1	1	1	1				
28	1600-515-240-00	BUCKLE,TURN/M24 COMP	*	1	1	1	1				
29	V304-460-024-00	NUT	*	1	1	1	1				
30	1600-515-001-00	PIN/16X73	*	2	2	2	2				

FIG. 70 LINK (3P) SYSTEM

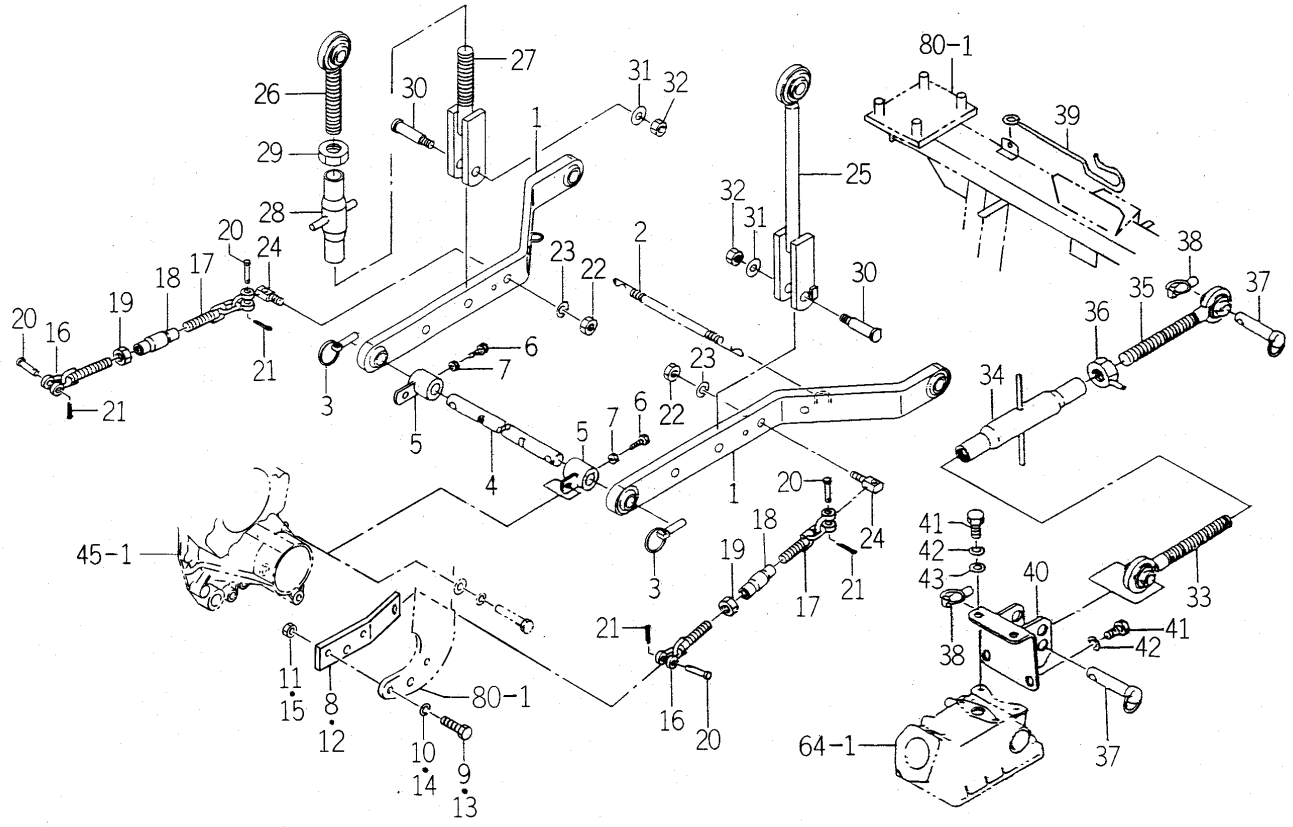

1750-514 -0100

KEY	PART CODE	DESCRIPTION	SPC	TYPE OF MODEL				ITC	COL	GRP	REMARKS
				TM3200	TM3200H	TM3240	TM3240H				
31	1427-431-003-00	WASHER/13X32X3	*	2	2	2	2				
32	V304-460-012-00	NUT/M12	*	2	2	2	2				
33	1427-511-250-10	LINK,TOP LH COMP	*	1	1	1	1				
34	1550-514-290-00	TURNBUCLE COMP	*	1	1	1	1				
35	1568-525-300-10	LINK/TOP/RH COMP	*	1	1	1	1				
36	1402-511-600-00	NUT,TOP LINK LOCK	*	1	1	1	1				
37	1434-511-210-00	PIN,TOP LINK	*	2	2	2	2				
38	1673-525-002-20	LINKPIN	*	2	2	2	2				
39	1566-525-101-00	HOOK,TOP LINK	*	1	1	1	1				
40	1434-511-200-20	LINK BRACKET	*	1	1	1	1				
41	V201-261-202-50	BOLT/M12X25	*	4	4	4	4				
42	V401-160-012-00	WASHER,SP/M12	*	4	4	4	4				
43	V411-260-012-00	WASHER /M12	*	2	2	2	2				

FIG. 71 HITCH (DRAW BAR) SYSTEM (R TYPE)

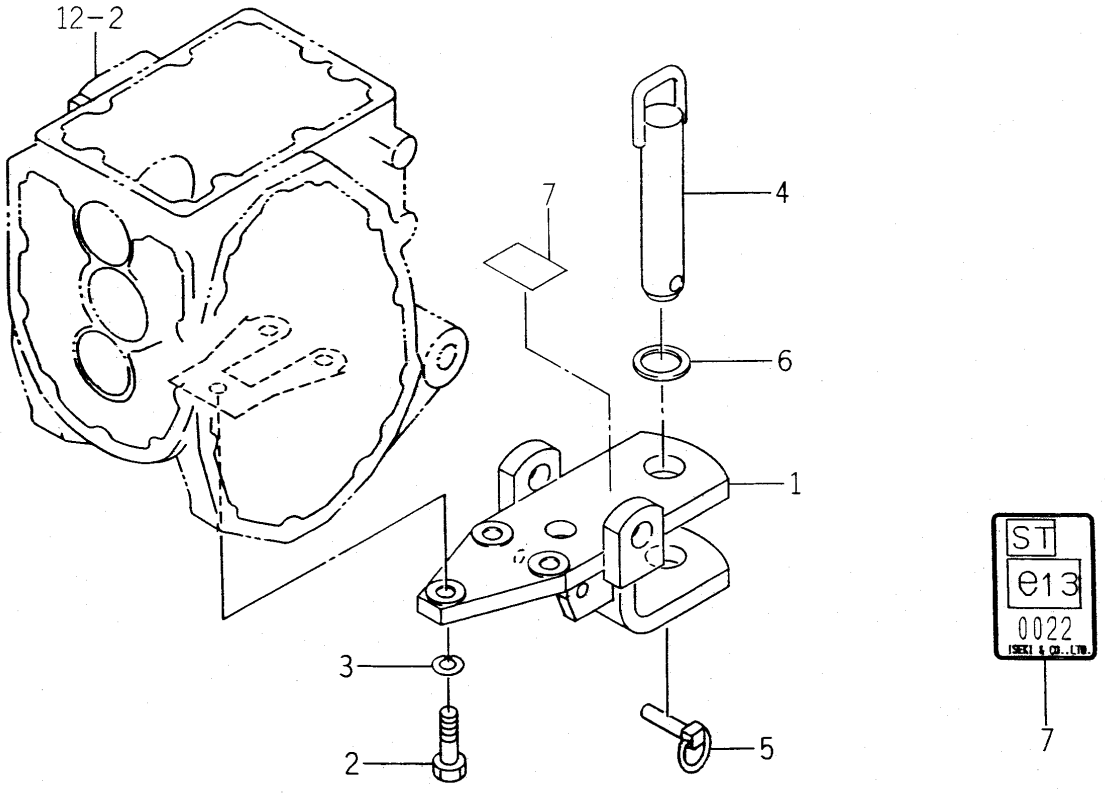

1738-520 -0100

KEY	PART CODE	DESCRIPTION	SPC	TYPE OF MODEL				ITC	COL	GRP	REMARKS
				TM3200	TM3200H	TM3240	TM3240H				
1	1682-924-220-10	PLATE/HITCH COMP	*	1	1	1	1				
2	V201-361-204-00	BOLT/M12X40	*	3	3	3	3				
3	V401-160-012-00	WASHER,SP/M12	*	3	3	3	3				
4	1674-520-210-00	PIN/30X162 COMP	*	1	1	1	1				
5	1673-525-002-20	LINKPIN	*	1	1	1	1				
6	1674-520-004-00	INSULATOR	*	1	1	1	1				
7	1738-520-001-00	LABEL/DRAWBAR	*	1	1	1	1				

FIG. 72 HOOD SYSTEM(1/2)

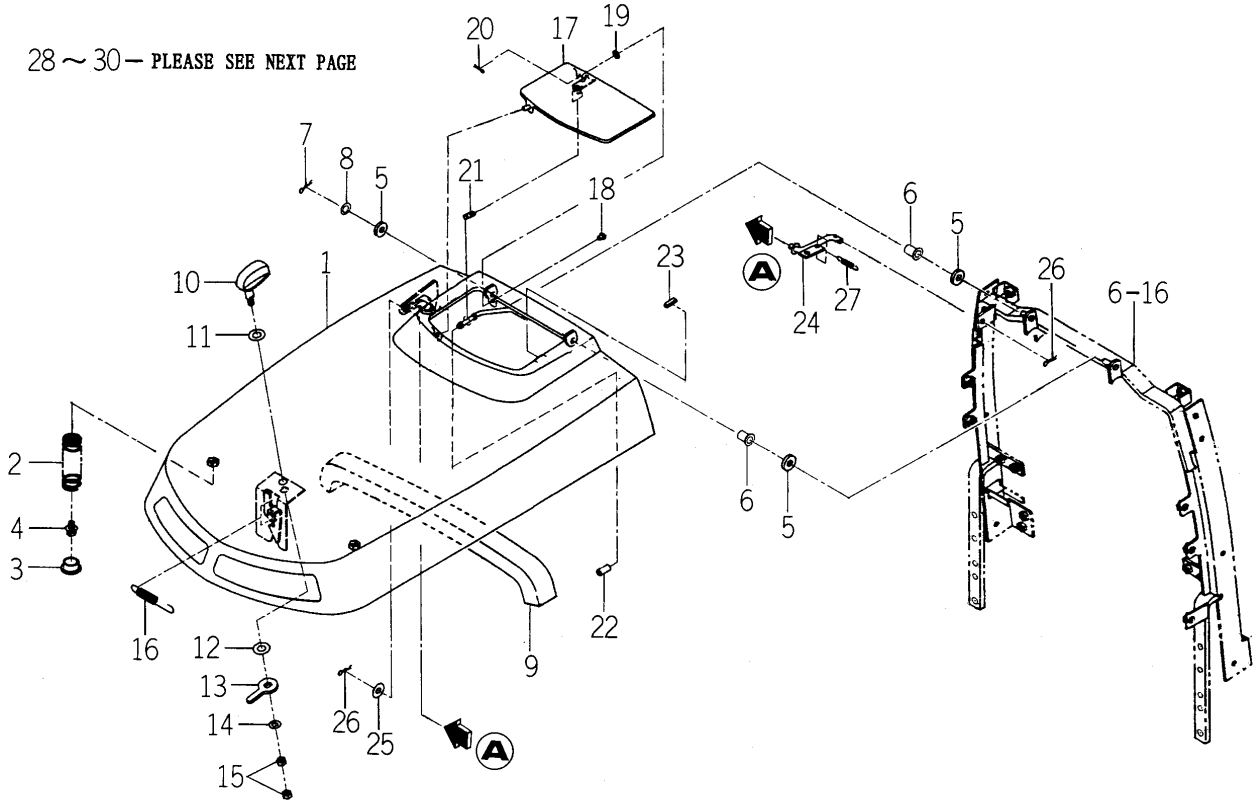

1750-601 -0100

KEY	PART CODE	DESCRIPTION	SPC	TYPE OF MODEL				ITC	COL	GRP	REMARKS
				TM3200	TM3200H	TM3240	TM3240H				
1	1750-601-250-10	HOOD COMP	*	1	1	1	1		4L		
2	1716-601-001-00	SPRING/HC090	*	2	2	2	2				
3	7821-501-005-00	BUSH/19X30X14	*	2	2	2	2				
4	V211-360-801-60	BOLT,SEMS (SP)	*	2	2	2	2				
5	1423-616-004-00	CUSHION/RUBBER/10X25	*	3	3	3	3				
6	2150-420-008-00	BUSH/08X15X11	*	2	2	2	2				
7	V560-160-008-00	PIN/SNAP	*	1	1	1	1				
8	V411-260-010-00	WASHER/M10	*	1	1	1	1				
9	1726-601-007-00	INSULATOR	*	1	1	1	1				
10	1675-601-002-00	HANDLE	*	1	1	1	1				
11	1650-601-007-00	WASHER/12X25X02	*	1	1	1	1				
12	3610-440-018-00	WASHER	*	1	1	1	1				
13	1716-601-002-00	ARM/PLATE	*	1	1	1	1				
14	V411-260-008-00	WASHER,PL/M 8	*	1	1	1	1				
15	V304-260-008-00	NUT	*	2	2	2	2				
16	1588-117-001-00	SPRING/HE089	*	1	1	1	1				
17	1716-601-260-10	COVER COMP	*	1	1	1	1		4L		
18	1716-601-021-00	PIN/06X07	*	1	1	1	1				
19	V411-260-006-00	WASHER / M6	*	1	1	1	1				
20	V560-160-006-00	PIN/SNAP	*	1	1	1	1				
21	1716-601-018-00	SPRING/HE036	*	1	1	1	1				
22	1716-601-019-00	TUBE/06X10X20	*	1	1	1	1				
23	1672-601-002-00	TRIM/20	*	1	1	1	1				
24	1716-601-280-20	ROD/70 COMP	*	1	1	1	1				
25	1444-601-011-00	WASHER (9X24X1.6)	*	1	1	1	1				
26	V560-160-008-00	PIN/SNAP	*	2	2	2	2				
27	1588-218-003-00	SPRING/HE044	*	1	1	1	1				
28	1750-601-210-10	COVER/SIDE/LH COMP	*	1	1	1	1		4L		
29	1716-601-006-00	INSULATOR/LH	*	1	1	1	1				
30	1740-601-054-00	NET/SIDE	*	1	1	1	1				

FIG. 72 HOOD SYSTEM(2/2)

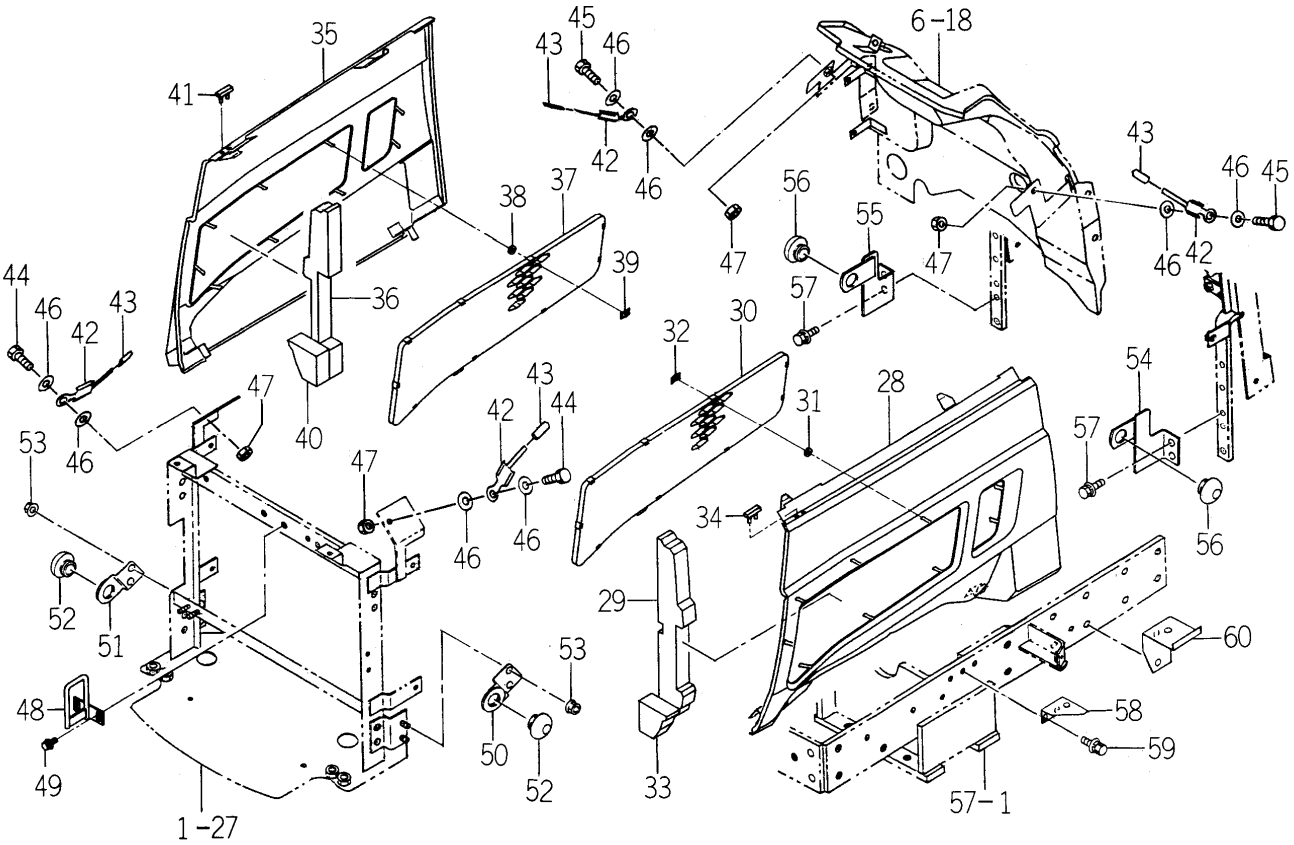

1750-601 -0100

KEY	PART CODE	DESCRIPTION	SPC	TYPE OF MODEL				ITC	COL	GRP	REMARKS
				TM3200	TM3200H	TM3240	TM3240H				
31	1444-601-015-00	WASHER/6X14X3	*	9	9	9	9				
32	V350-160-006-00	NUT,SPEED/P6	*	9	9	9	9				
33	1716-601-013-00	INSULATOR	*	1	1	1	1				
34	1716-601-017-00	INSULATOR	*	1	1	1	1				
35	1750-601-220-10	COVER/SIDE/RH COMP	*	1	1	1	1		4L		
36	1716-601-007-00	INSULATOR/RH	*	1	1	1	1				
37	1740-601-054-00	NET/SIDE	*	1	1	1	1				
38	1444-601-015-00	WASHER/6X14X3	*	9	9	9	9				
39	V350-160-006-00	NUT,SPEED/P6	*	9	9	9	9				
40	1716-601-013-00	INSULATOR	*	1	1	1	1				
41	1716-601-017-00	INSULATOR	*	1	1	1	1				
42	1726-601-006-10	HOLDER/COVER	*	4	4	4	4				
43	1703-313-001-10	CAP/PARKING	*	4	4	4	4				
44	V201-260-802-00	BOLT/M 8X20	*	2	2	2	2				
45	V201-260-801-60	BOLT/M 8X16	*	2	2	2	2				
46	V411-260-008-00	WASHER,PL/M 8	*	8	8	8	8				
47	V304-260-008-00	NUT	*	4	4	4	4				
48	1716-601-270-10	PIN COMP	*	1	1	1	1				
49	V211-360-802-00	BOLT/SP	*	2	2	2	2				
50	1750-601-270-00	PLATE/HOLDER/LH/F	*	1	1	1	1				
51	1750-601-280-00	PLATE/HOLDER/RH/F	*	1	1	1	1				
52	1421-603-004-00	BUSH,LEVER	*	2	2	2	2				
53	V362-260-008-00	NUT/WASHER	*	4	4	4	4				
54	1750-601-260-20	PLATE/REAR/LH COMP	*	1	1	1	1				
55	1750-601-290-10	PLATE/REAR/RH COMP	*	1	1	1	1				
56	1421-603-004-00	BUSH,LEVER	*	2	2	2	2				
57	V211-360-801-60	BOLT,SEMS (SP)	*	4	4	4	4				
58	1738-601-002-10	COVER/SAFETY/LH/F	*	1	1	1	1				
59	V211-360-801-60	BOLT,SEMS (SP)	*	2	2	2	2				
60	1738-601-003-20	COVER/SAFETY/LH/R	*	1	1	1	1				

FIG. 73 GRILLE SYSTEM

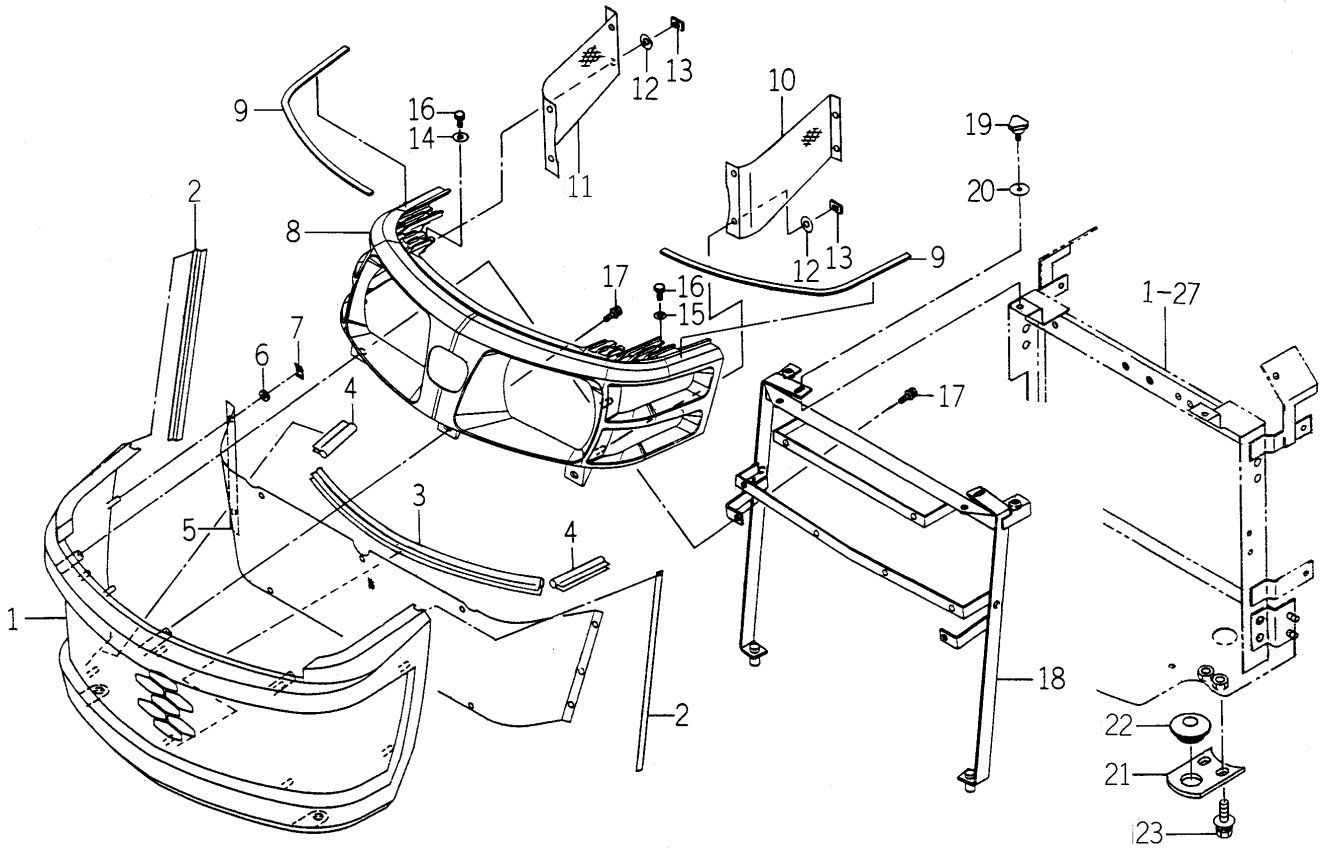

1740-602 -0100

KEY	PART CODE	DESCRIPTION	SPC	TYPE OF MODEL				ITC	COL	GRP	REMARKS
				TM3200	TM3200H	TM3240	TM3240H				
1	1740-602-056-00	GRILLE	*	1	1	1	1				
2	1716-602-002-10	TRIM/265	*	2	2	2	2				
3	1740-602-057-00	INSULATOR/380	*	1	1	1	1				
4	1675-601-003-00	TRIM/70	*	2	2	2	2				
5	1740-602-051-00	NET/GURILLE	*	1	1	1	1		7F		
6	1444-601-015-00	WASHER/6X14X3	*	10	10	10	10				
7	V350-160-006-00	NUT,SPEED/P6	*	10	10	10	10				
8	1740-602-052-00	HOOD/LAMP	*	1	1	1	1				
9	1614-630-002-00	INSULATOR	*	2	2	2	2				
10	1740-602-053-00	NET/SIDE/LH	*	1	1	1	1				
11	1740-602-054-00	NET/SIDE/RH	*	1	1	1	1				
12	1444-601-015-00	WASHER/6X14X3	*	8	8	8	8				
13	V350-160-006-00	NUT,SPEED/P6	*	8	8	8	8				
14	3740-162-005-00	WASHER	*	2	2	2	2				
15	V411-260-006-00	WASHER/M6	*	2	2	2	2				
16	V200-260-602-00	BOLT/M 6X20	*	4	4	4	4				
17	V210-360-602-00	BOLT/SP	*	3	3	3	3				
18	1740-602-500-00	BRACKET/GRILLE COMP	*	1	1	1	1				
19	1716-601-003-00	BOLT/KNOB/M06X13	*	2	2	2	2				
20	1421-507-014-00	WASHER/6X24X2	*	2	2	2	2				
21	1716-410-003-00	PLATE/IR/44X60	*	2	2	2	2				
22	1421-603-004-00	BUSH,LEVER	*	2	2	2	2				
23	V211-360-802-00	BOLT/SP	*	4	4	4	4				

FIG. 74 STEERING COVER SYSTEM

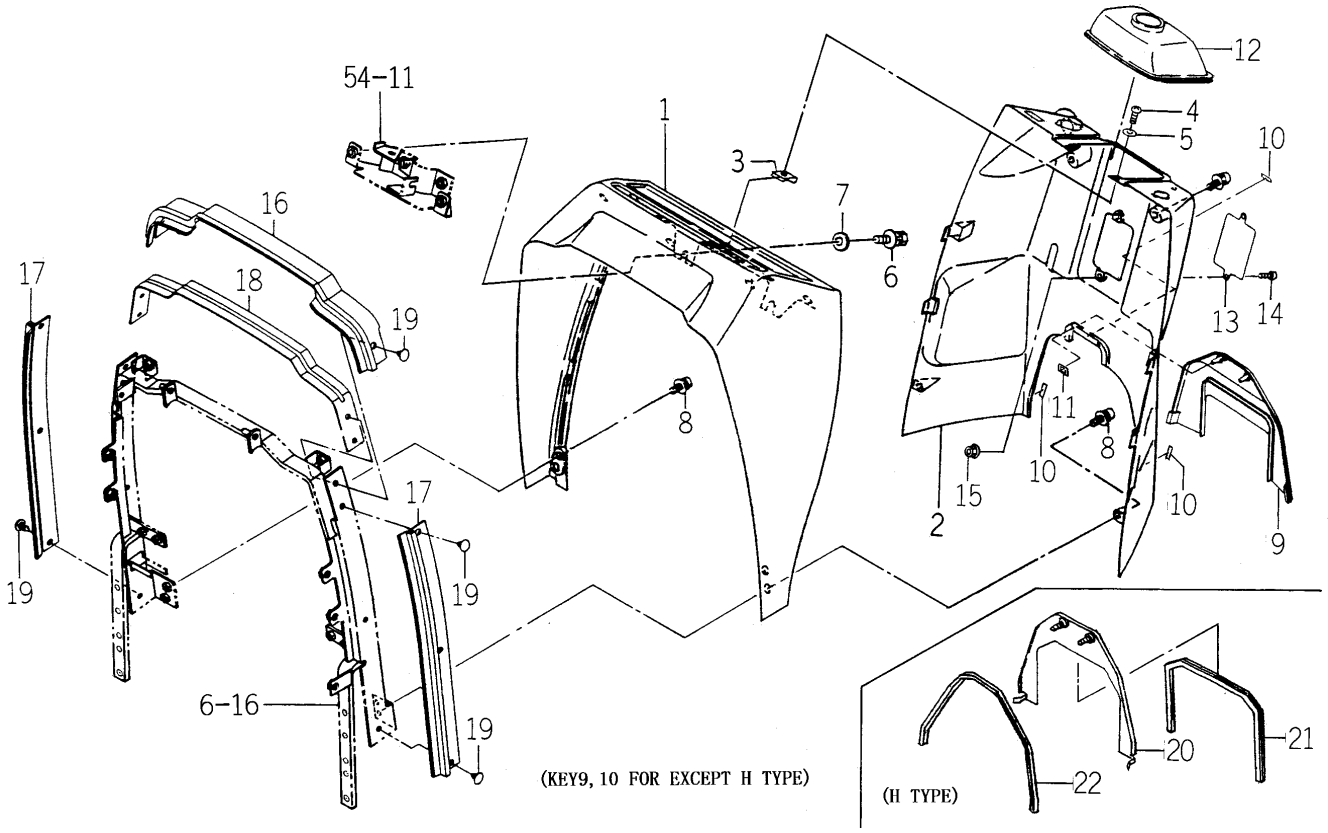

1750-603 -0100,1750-603A-0100

KEY	PART CODE	DESCRIPTION	SPC	TYPE OF MODEL				ITC	COL	GRP	REMARKS
				TM3200	TM3200H	TM3240	TM3240H				
1	1716-603-004-00	COVER/DUSH/F	*	1	1	1	1				
2	1738-603-001-00	COVER/DUSH/R	*	1	1	1	1				
3	1716-603-005-00	NUT/SPRING	*	2	2	2	2				
4	1560-401-004-40	BOLT/M5X16	*	2	2	2	2				
5	V411-260-006-00	WASHER / M6	*	2	2	2	2				
6	V211-360-801-60	BOLT,SEMS (SP)	*	2	2	2	2				
7	4101-102-038-00	WASHER/24X9X3.2	*	2	2	2	2				
8	V120-376-002-00	SCREW/SP	*	6	6	6	6				
9	1717-603-002-00	COVER/DUSH/REAR	*	1		1					
10	1672-601-001-00	INSULATOR	*	3		3					
11	V350-160-006-00	NUT,SPEED/P6	*	2	2	2	2				
12	1612-603-002-00	BOOT/STEERING	*	1	1	1	1				
13	1709-603-001-00	COVER/PLATE	*	1	1	1	1		5I		
14	V120-376-001-60	SCREW/SP	*	2	2	2	2				
15	V360-260-006-00	NUT/M6	*	2	2	2	2				
16	1716-603-003-10	INSULATOR	*	1	1	1	1				
17	1614-603-202-00	INSULATOR	*	2	2	2	2				
18	1614-603-008-00	STAY/INSULATOR	*	1	1	1	1				
19	1527-604-002-00	CLIP(B)	*	8	8	8	8				
20	1685-603-510-00	COVER/DUSH/REAR COMP	*		1		1				
21	1685-603-001-00	TRIM/470	*		1		1				
22	1682-603-006-00	TRIM/570	*		1		1				

FIG. 75 SEAL (NOISE) SYSTEM (H TYPE)

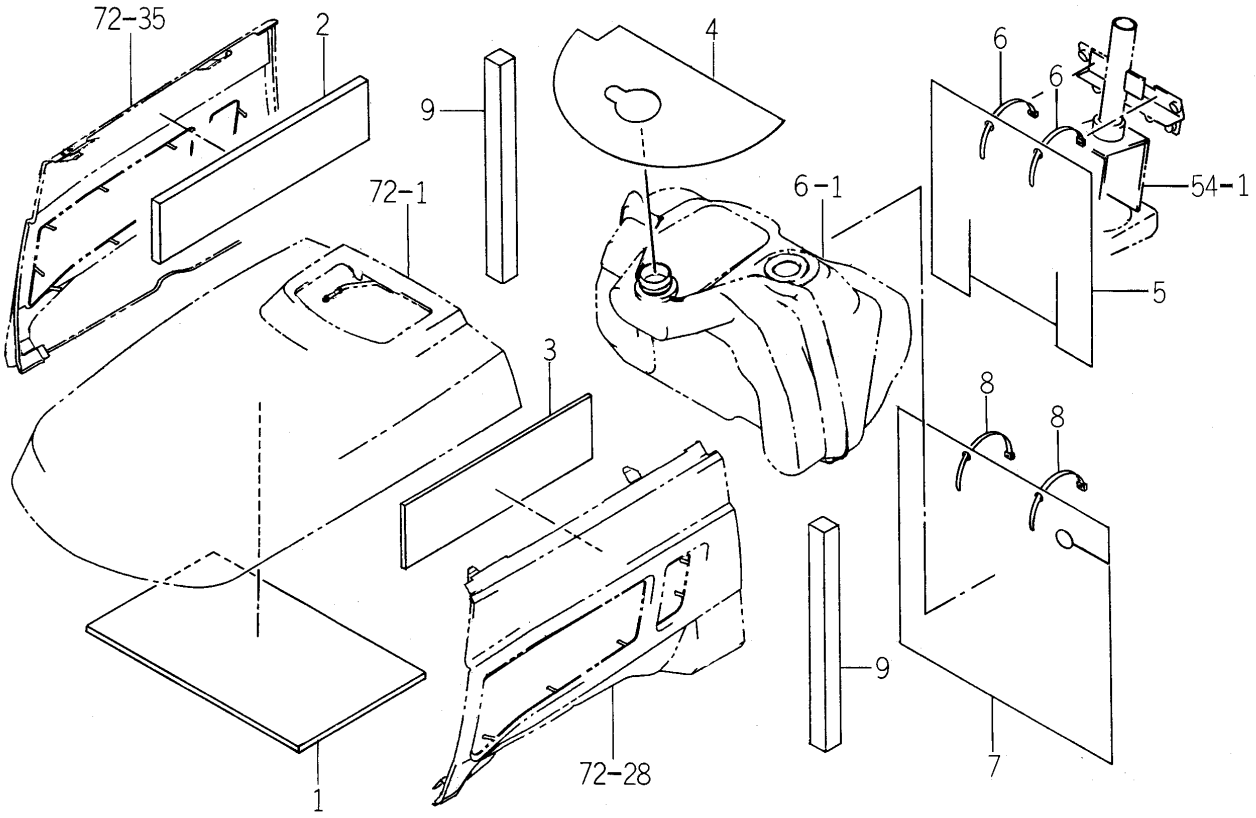

1750-605 -0100

KEY	PART CODE	DESCRIPTION	SPC	TYPE OF MODEL				ITC	COL	GRP	REMARKS
				TM3200	TM3200H	TM3240	TM3240H				
1	1750-605-001-10	INSULATOR/HOOD	*		1		1				
2	1750-605-002-00	INSULATOR	*		1		1				
3	1750-605-003-00	INSULATOR	*		1		1				
4	1750-605-004-10	COVER/TANK	*		1		1				
5	1750-605-005-10	INSULATOR/DASH	*		1		1				
6	1342-402-006-00	BAND,WIRE/250	*		2		2				
7	1750-605-006-10	INSULATOR/TANK	*		1		1				
8	1342-402-006-00	BAND,WIRE/250	*		2		2				
9	1750-605-007-00	INSULATOR	*		2		2				

FIG. 76 FENDER SYSTEM (TM3200/TM3240-EXCEPT H TYPE)

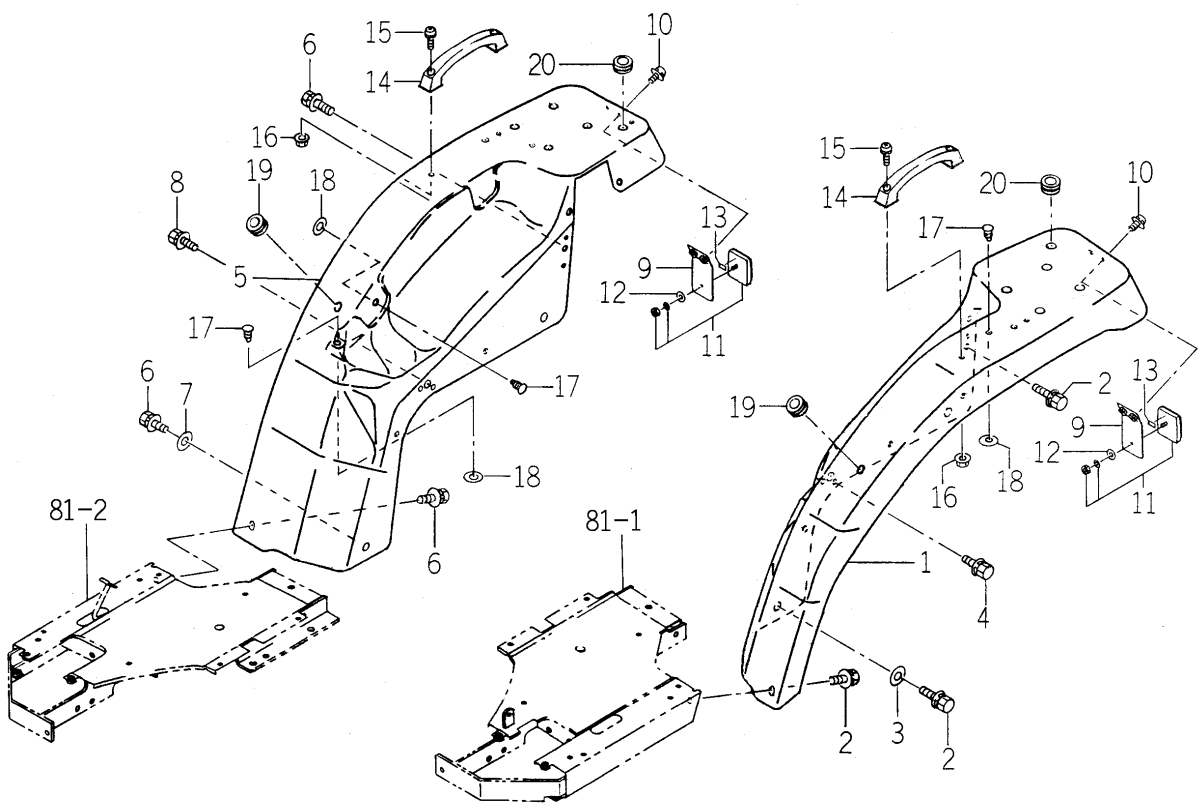

1738-606 -0100

KEY	PART CODE	DESCRIPTION	SPC	TYPE OF MODEL TM3200	TM3200H	TM3240	TM3240H	ITC	COL	GRP	REMARKS
1	1738-606-230-00	FENDER/LH COMP	*	1	1	1			4L		
2	V211-360-802-00	BOLT/SP	*	3	3	3					
3	4101-102-038-00	WASHER/24X9X3.2	*	1	1	1					
4	V211-360-801-60	BOLT,SEMS (SP)	*	1	1	1					
5	1738-606-240-00	FENDER/RH COMP	*	1	1	1			4L		
6	V211-360-802-00	BOLT/SP	*	4	4	4					
7	4101-102-038-00	WASHER/24X9X3.2	*	1	1	1					
8	V211-360-801-60	BOLT,SEMS (SP)	*	1	1	1					
9	1738-606-250-00	BRACKET/REFLECTOR	*	2	2	2			4L		
10	V120-376-001-60	SCREW/SP	*	4	4	4					
11	1674-654-400-00	REFLECTOR ASSY	*	2	2	2					
12	V411-260-004-00	WASHER,PL/M 4	*	2	2	2					
13	1674-654-004-00	TAPE/10X20	*	2	2	2					
14	3670-236-003-00	GRIP	*	2	2	2					
15	V120-266-002-00	SCREW,SEMS	*	4	4	4					
16	V361-260-006-00	NUT	*	4	4	4					
17	1527-604-002-00	CLIP(B)	*	7	7	7					
18	V411-260-008-00	WASHER,PL/M 8	*	7	7	7					
19	1432-665-014-00	GROMMET/13X17X5	*	2	2	2					
20	2142-581-002-00	GROMMET/15	*	2	2	2					

FIG. 77 FENDER SYSTEM (TM3240-H TYPE)

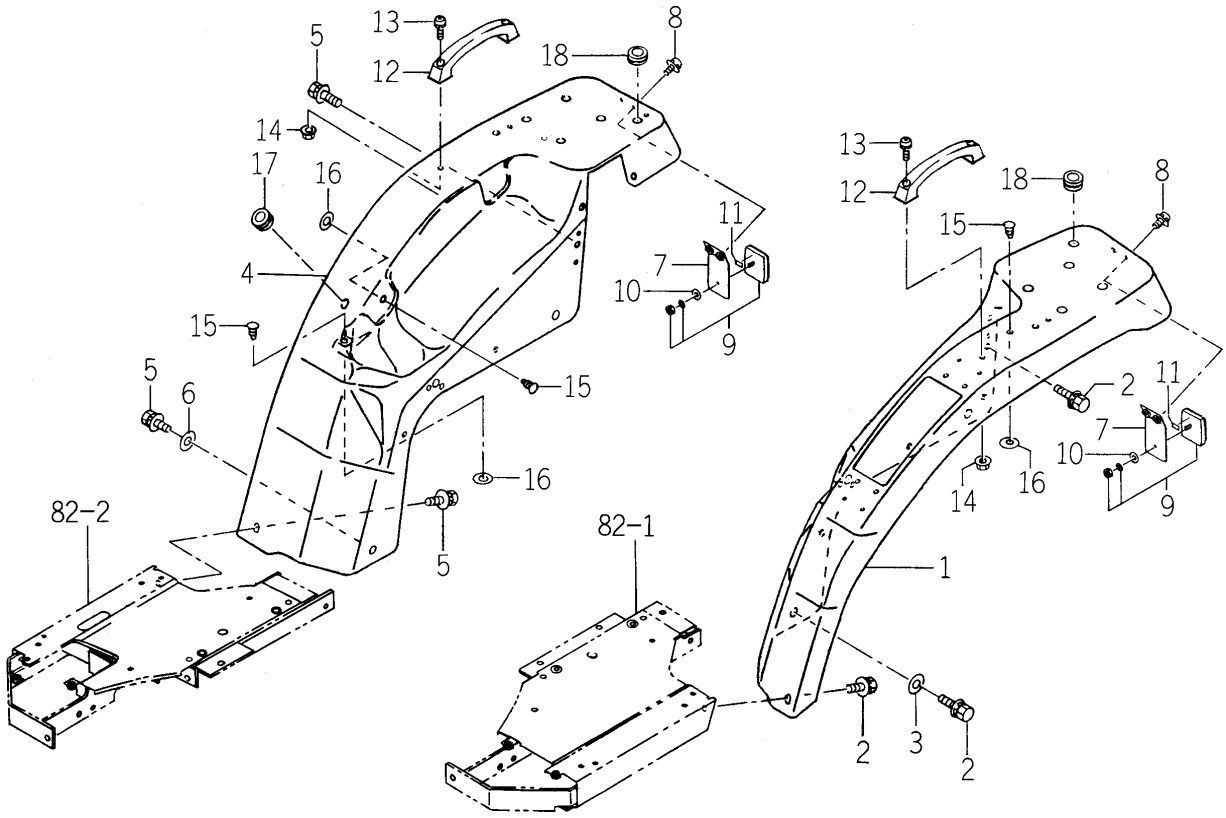

1750-606B-0100

KEY	PART CODE	DESCRIPTION	SPC	TYPE OF MODEL				ITC	COL	GRP	REMARKS
				TM3200	TM3200H	TM3240	TM3240H				
1	1750-606-210-00	FENDER/LH COMP	*				1		4L		
2	V211-360-802-00	BOLT/SP	*				4				
3	4101-102-038-00	WASHER/24X9X3.2	*				1				
4	1738-606-240-00	FENDER/RH COMP	*				1		4L		
5	V211-360-802-00	BOLT/SP	*				4				
6	4101-102-038-00	WASHER/24X9X3.2	*				1				
7	1738-606-250-00	BRACKET/REFLECTOR	*				2		4L		
8	V120-366-001-60	SCREW	*				4				
9	1674-654-400-00	REFLECTOR ASSY	*				2				
10	V411-260-004-00	WASHER,PL/M 4	*				2				
11	1674-654-004-00	TAPE/10X20	*				2				
12	3670-236-003-00	GRIP	*				2				
13	V120-266-002-00	SCREW,SEMS	*				4				
14	V361-260-006-00	NUT	*				4				
15	1527-604-002-00	CLIP(B)	*				7				
16	V411-260-008-00	WASHER,PL/M 8	*				7				
17	1432-665-014-00	GROMMET/13X17X5	*				1				
18	2142-581-002-00	GROMMET/15	*				2				

FIG. 78 SEAT BASE SYSTEM (EXCEPT H TYPE)

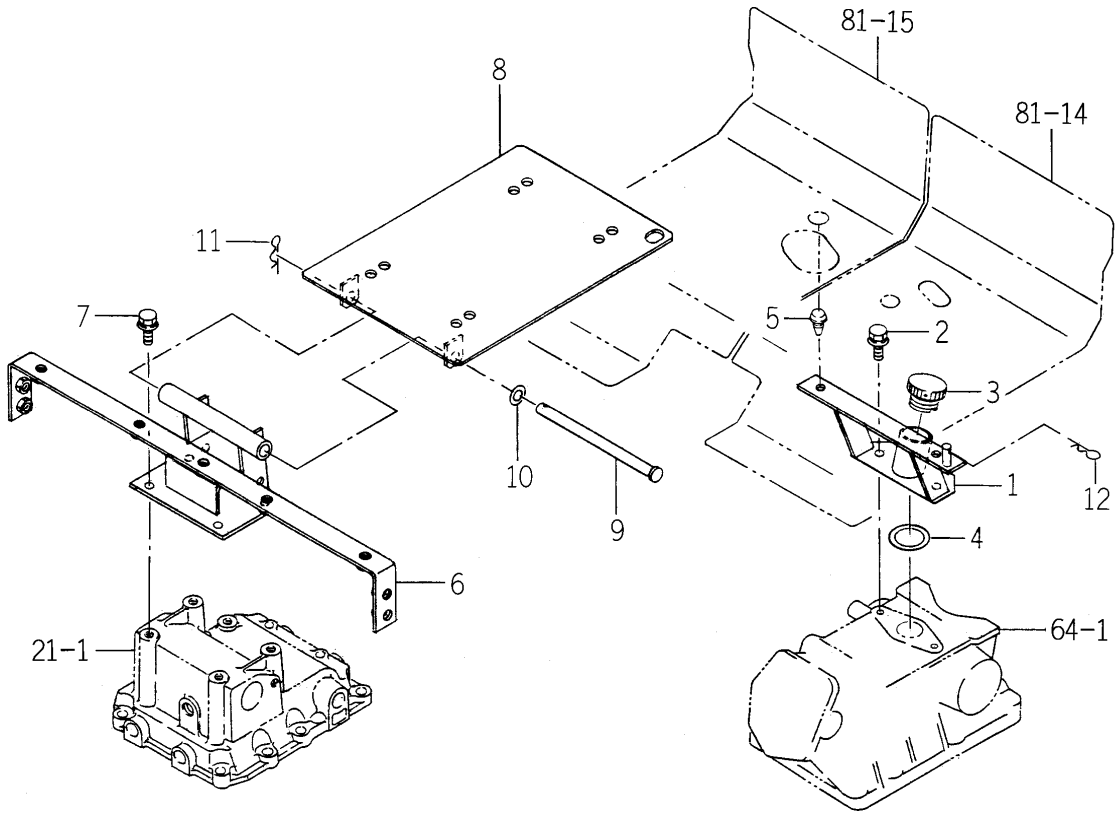

1738-611 -0100

KEY	PART CODE	DESCRIPTION	SPC	TYPE OF MODEL				ITC	COL	GRP	REMARKS
				TM3200	TM3200H	TM3240	TM3240H				
1	1738-611-200-00	BRACKET/SEAT/R COMP	*	1		1					
2	V211-360-802-00	BOLT/SP	*	2		2					
3	1614-501-015-10	CAP/OIL/30	*	1		1					
4	1427-611-001-00	PACKING/RUBBER	*	1		1					
5	1432-616-002-00	RUBBER,CUSHIN	*	2		2					
6	1738-611-210-10	BRACKET/SEAT/F COMP	*	1		1					
7	V211-360-802-00	BOLT/SP	*	4		4					
8	1738-611-220-10	BRACKET/SEAT COMP	*	1		1					
9	3801-493-003-00	PIN/10X154	*	1		1					
10	V411-260-010-00	WASHER/M10	*	1		1					
11	1305-241-001-00	PIN,HAIR	*	1		1					
12	7957-501-004-00	PIN,HAIR	*	1		1					

FIG. 79 SEAT BASE SYSTEM (H TYPE)

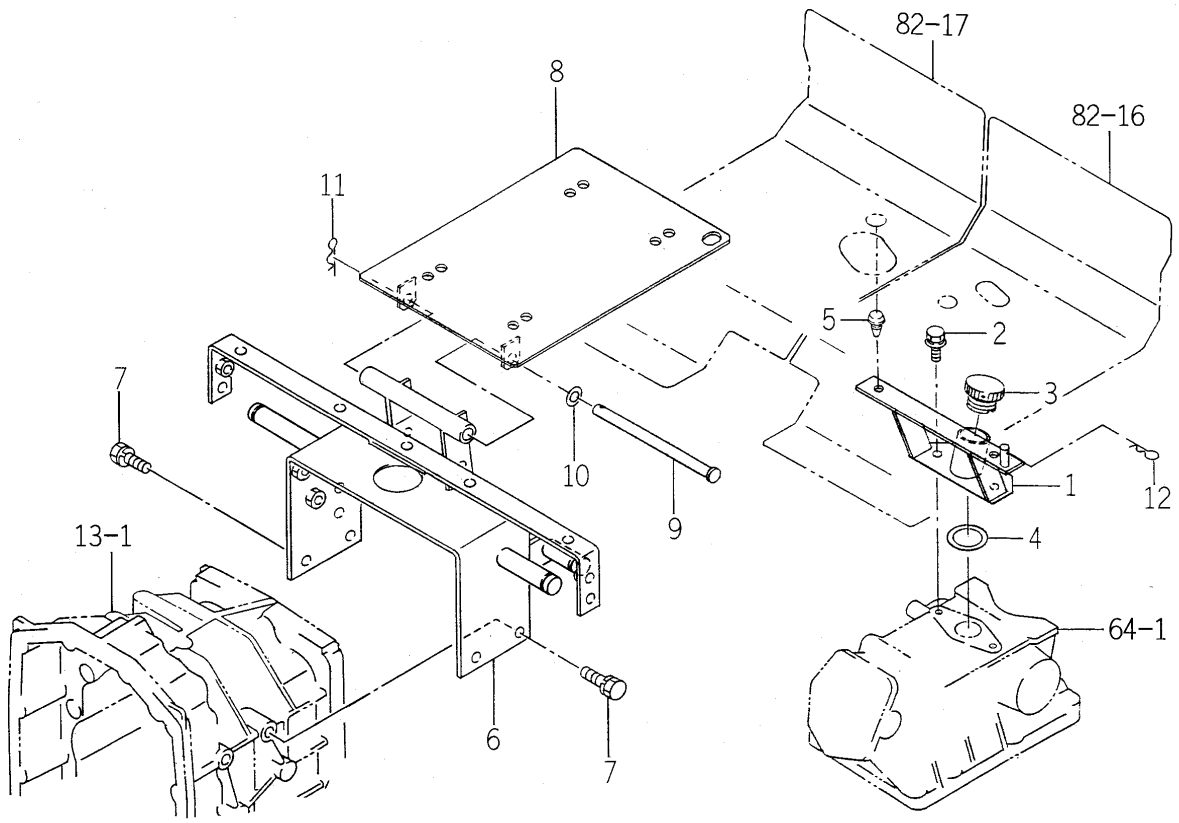

1750-611 -0100

KEY	PART CODE	DESCRIPTION	SPC	TYPE OF MODEL				ITC	COL	GRP	REMARKS
				TM3200	TM3200H	TM3240	TM3240H				
1	1738-611-200-00	BRACKET/SEAT/R COMP	*		1		1				
2	V211-360-802-00	BOLT/SP	*		2		2				
3	1614-501-015-10	CAP/OIL/30	*		1		1				
4	1427-611-001-00	PACKING/RUBBER	*		1		1				
5	1432-616-002-00	RUBBER,CUSHIN	*		2		2				
6	1750-611-500-20	BRACKET/SEAT COMP	*		1		1				
7	V211-261-002-00	BOLT,SEMS	*		4		4				
8	1738-611-220-10	BRACKET/SEAT COMP	*		1		1				
9	3801-493-003-00	PIN/10X154	*		1		1				
10	V411-260-010-00	WASHER/M10	*		1		1				
11	1305-241-001-00	PIN,HAIR	*		1		1				
12	7957-501-004-00	PIN,HAIR	*		1		1				

FIG. 80 FRAME SYSTEM

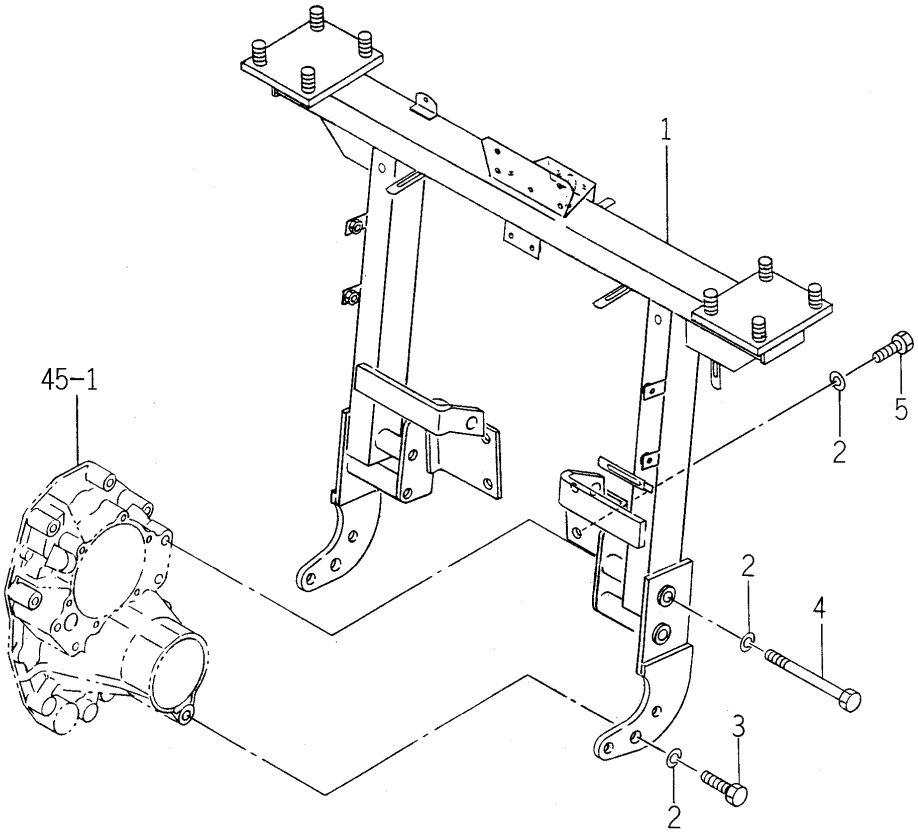

1750-626 -0100

KEY	PART CODE	DESCRIPTION	SPC	TYPE OF MODEL				ITC	COL	GRP	REMARKS
				TM3200	TM3200H	TM3240	TM3240H				
1	1750-626-200-10	FRAME/REAR COMP	*	1	1	1	1				
2	V401-160-012-00	WASHER,SP/M12	*	8	8	8	8				
3	V201-361-203-50	BOLT/M12X35	*	2	2	2	2				
4	V201-361-213-00	BOLT	*	4	4	4	4				
5	V201-361-203-00	BOLT/M12X30	*	2	2	2	2				

FIG. 81 STEP SYSTEM (EXCEPT H TYPE)

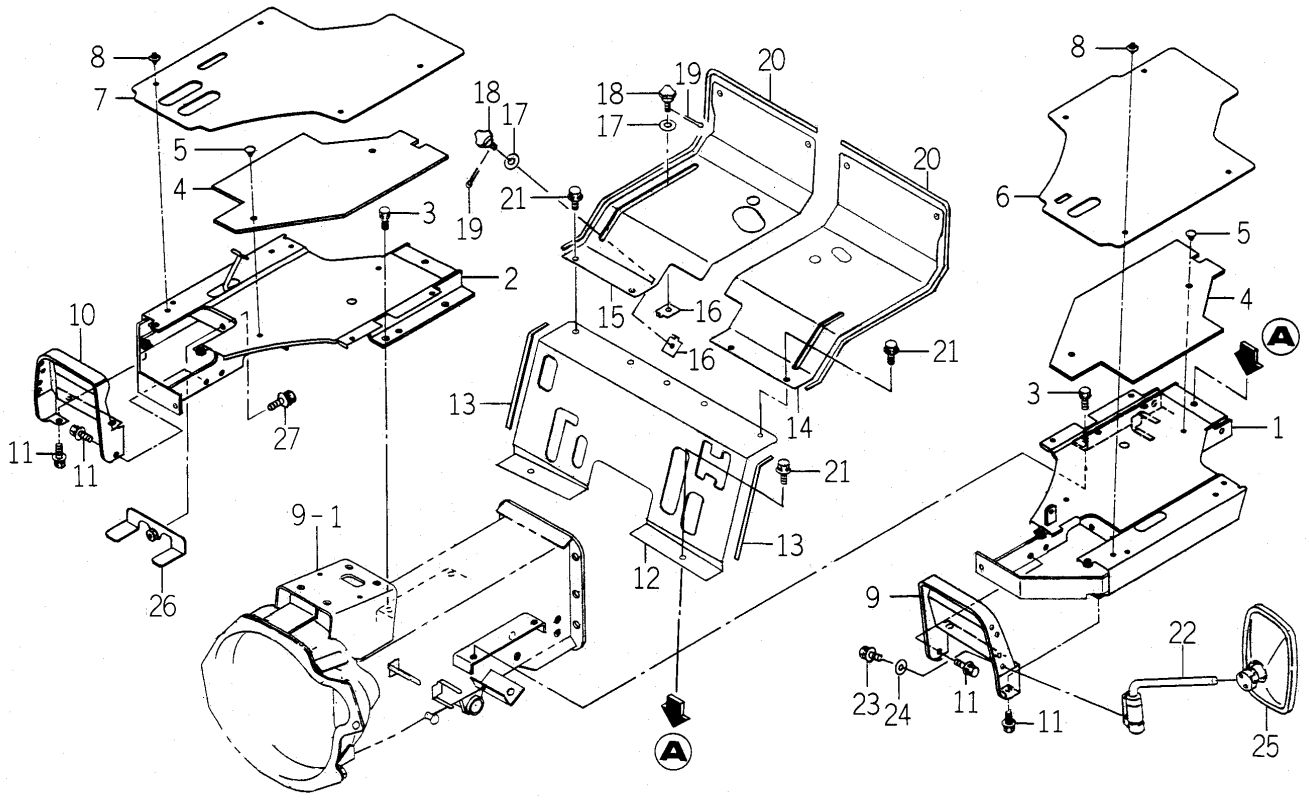

1750-630 -0100

KEY	PART CODE	DESCRIPTION	SPC	TYPE OF MODEL				ITC	COL	GRP	REMARKS
				TM3200	TM3200H	TM3240	TM3240H				
1	1750-630-200-20	STEP/LH COMP	*	1		1			5I		
2	1750-630-210-00	STEP/RH COMP	*	1		1			5I		
3	V211-261-002-50	BOLT(S) M10X25	*	6		6					
4	1717-630-004-00	INSULATOR	*	2		2					
5	1527-604-002-00	CLIP(B)	*	4		4					
6	1717-630-001-30	MAT/FLOOR/LH	*	1		1					
7	1717-630-002-10	MAT/FLOOR/RH	*	1		1					
8	1704-705-003-00	RIVET	*	8		8					
9	1740-630-054-00	HOOD/LH	*	1		1			5I		
10	1740-630-055-00	HOOD/RH	*	1		1			5I		
11	V211-360-802-00	BOLT/SP	*	8		8					
12	1750-630-001-10	COVER/CHANGE	*	1		1			5I		
13	1738-630-012-00	TRIM/290	*	2		2					
14	1750-630-002-10	COVER/LH	*	1		1			5I		
15	1750-630-003-10	COVER/RH	*	1		1			5I		
16	1614-608-220-10	PLATE/STOP COMP	*	2		2					
17	1421-507-014-00	WASHER/6X24X2	*	2		2					
18	1690-608-003-00	BOLT/KNOB/M06X27	*	2		2					
19	V500-161-601-50	PIN,SPLIT/1.6X15	*	2		2					
20	1738-630-011-00	TRIM/715	*	2		2					
21	V211-360-801-60	BOLT,SEMS (SP)	*	11		11					
22	1674-619-310-00	ARM/MIRROR ASSY	*	1		1					
23	V210-360-601-60	BOLT(SP)/M6X16	*	2		2					
24	V411-260-008-00	WASHER,PL/M 8	*	2		2					
25	1674-619-300-10	MIRROR ASSY	*	1		1					
26	1750-630-300-00	PLATE COMP	*	1		1					
27	V211-260-802-00	BOLT/S	*	1		1					

FIG. 82 STEP SYSTEM (H TYPE)

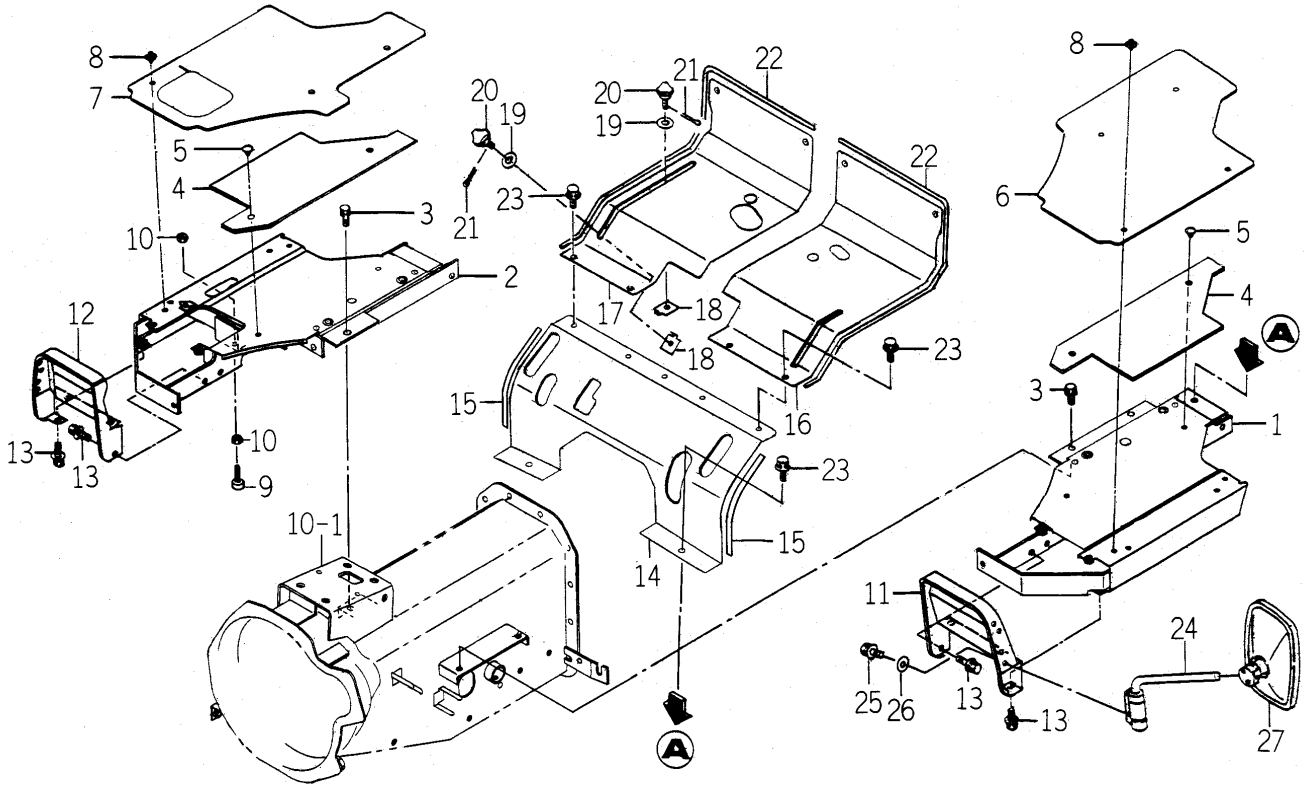

1750-630A-0100

KEY	PART CODE	DESCRIPTION	SPC	TYPE OF MODEL				ITC	COL	GRP	REMARKS
				TM3200	TM3200H	TM3240	TM3240H				
1	1750-630-500-20	STEP/LH COMP	*		1		1		5I		
2	1750-630-510-10	STEP/RH COMP	*		1		1		5I		
3	V211-261-002-50	BOLT(S) M10X25	*		6		6				
4	1750-630-054-00	INSULATOR	*		2		2				
5	1527-604-002-00	CLIP(B)	*		4		4				
6	1750-630-052-10	MAT/LH	*		1		1				
7	1750-630-053-10	MAT/RH	*		1		1				
8	1704-705-003-00	RIVET	*		8		8				
9	1421-602-005-10	CUSHION,B/ RUBBER	*		1		1				
10	V304-260-008-00	NUT	*		2		2				
11	1740-630-054-00	HOOD/LH	*		1		1		5I		
12	1740-630-055-00	HOOD/RH	*		1		1		5I		
13	V211-360-802-00	BOLT/SP	*		8		8				
14	1750-630-051-10	COVER/CHANGE	*		1		1		5I		
15	1738-630-012-00	TRIM/290	*		2		2				
16	1750-630-002-10	COVER/LH	*		1		1		5I		
17	1750-630-003-10	COVER/RH	*		1		1		5I		
18	1614-608-220-10	PLATE/STOP COMP	*		2		2				
19	1421-507-014-00	WASHER/6X24X2	*		2		2				
20	1690-608-003-00	BOLT/KNOB/M06X27	*		2		2				
21	V500-161-601-50	PIN,SPLIT/1.6X15	*		2		2				
22	1738-630-011-00	TRIM/715	*		2		2				
23	V211-360-802-00	BOLT/SP	*		11		11				
24	1674-619-310-00	ARM/MIRROR ASSY	*		1		1				
25	V210-360-601-60	BOLT(SP)/M6X16	*		2		2				
26	V411-260-008-00	WASHER,PL/M 8	*		2		2				
27	1674-619-300-10	MIRROR ASSY	*		1		1				

FIG. 83 LAMP SYSTEM

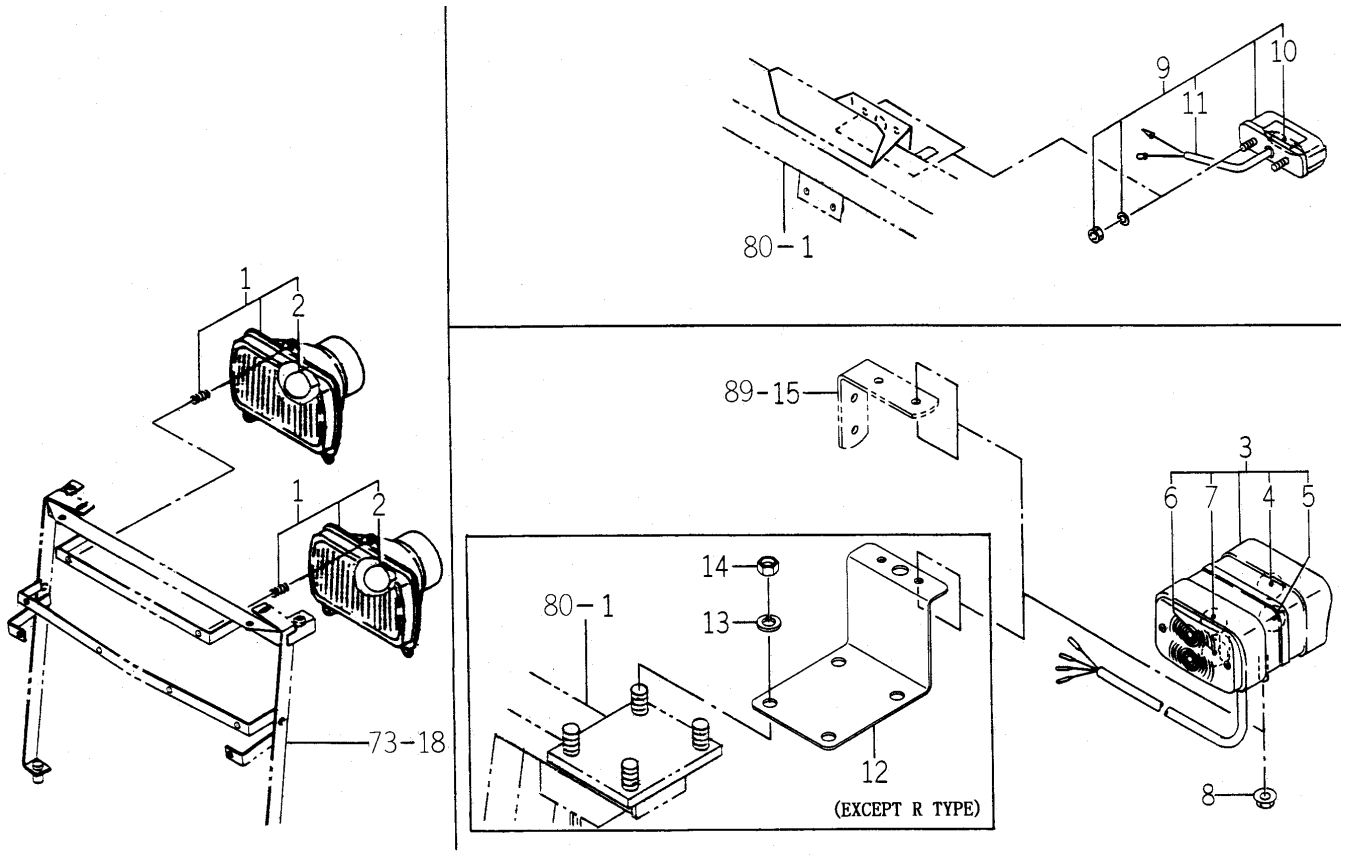

1682-650 -0100,1738-660 -0100,1738-660A-0100

KEY	PART CODE	DESCRIPTION	SPC	TYPE OF MODEL				ITC	COL	GRP	REMARKS
				TM3200	TM3200H	TM3240	TM3240H				
1	1674-652-200-00	LAMP/HEAD ASSY	*	2	2	2	2				**********
2	1674-652-202-00	BULB/12V/45/40W	*	2	2	2	2				
3	1739-660-200-10	LAMP/COMBINATIO SET	*	2	2	2	2				
4	1674-654-211-00	BULB/12V21W	*	2	2	2	2				
5	1674-654-212-00	BULB/12V5W	*	2	2	2	2				
6	1674-654-211-00	BULB/12V21W	*	2	2	2	2				
7	1739-660-212-00	BLUB/12V-21/5W	*	2	2	2	2				
8	V362-260-008-00	NUT/WASHER	*	4	4	4	4				
9	1674-654-270-00	LAMP/NUMBERPLAT SET	*	1	1	1	1				
10	1674-654-271-00	BULB/12V/5W	*	1	1	1	1				
11	1674-654-272-00	HARNESS/LAMP	*	1	1	1	1				
12	1738-660-001-00	BRACKET/LAMP	*	2	2	2	2				
13	V401-160-014-00	WASHER,SP/M14	*	8	8	8	8				
14	V304-460-014-00	NUT/M14	*	8	8	8	8				

FIG. 84 PANEL SYSTEM

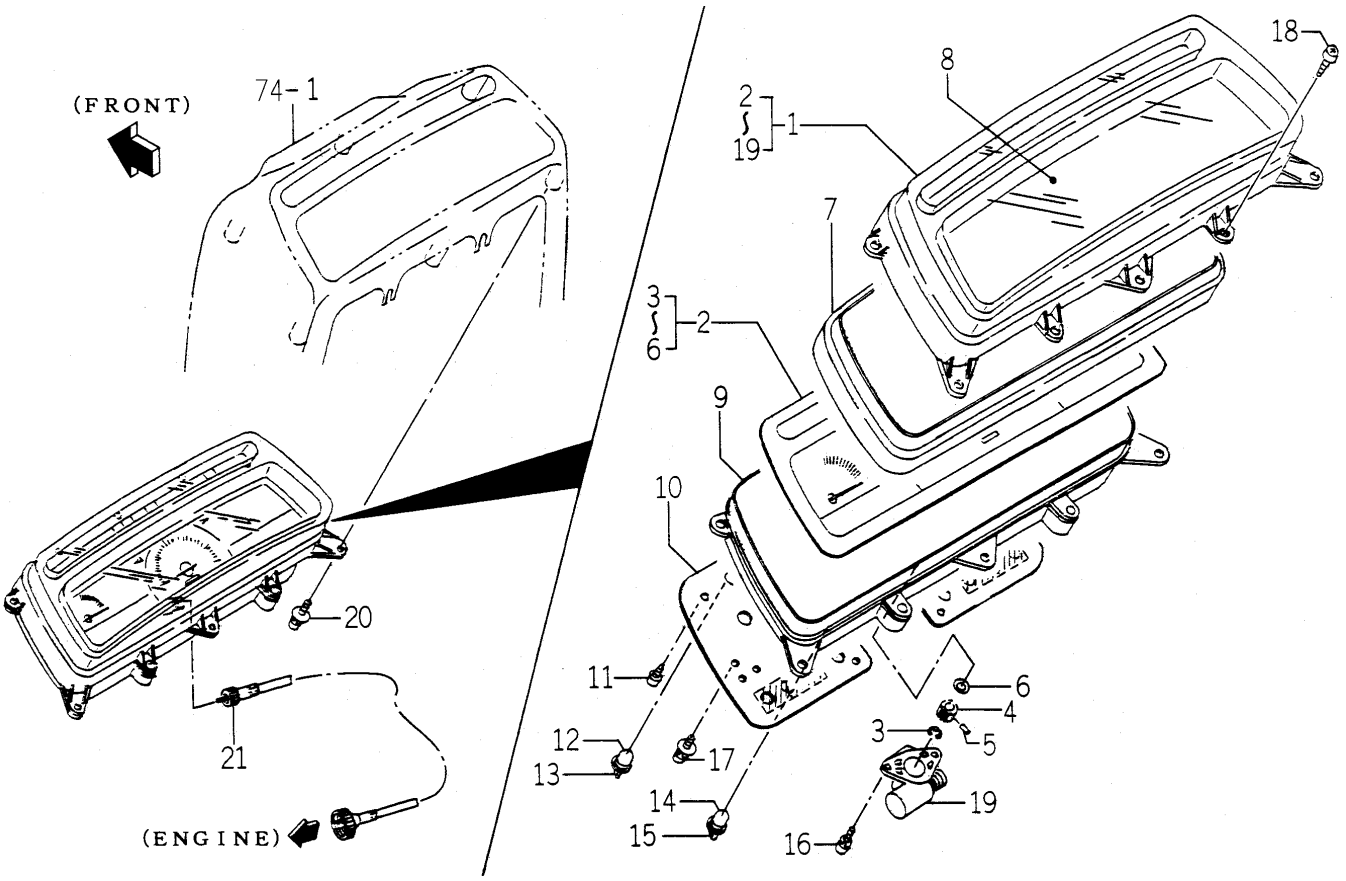

1738-670 -0100

KEY	PART CODE	DESCRIPTION	SPC	TYPE OF MODEL				ITC	COL	GRP	REMARKS
				TM3200	TM3200H	TM3240	TM3240H				
1	1738-670-210-00	PANEL/INSTRUMEN ASSY	*	1	1	1	1				
2	1738-670-220-00	METER ASSY	*	1	1	1	1				
3	1640-658-322-00	RING/E	*	1	1	1	1				
4	1673-658-214-00	GEAR	*	1	1	1	1				
5	1640-658-324-00	PIN	*	1	1	1	1				
6	1640-658-325-00	WASHER	*	2	2	2	2				
7	1614-670-240-00	ESCUTCHEON	*	1	1	1	1				
8	1614-670-201-00	GLASS	*	1	1	1	1				
9	1614-670-250-00	HOUSING ASSY	*	1	1	1	1				
10	1675-670-220-00	BOARD/WIREING ASSY	*	1	1	1	1				
11	V195-163-010-40	SCREW/TAPPING	*	5	5	5	5				
12	3650-270-214-00	BULB	*	10	10	10	10				
13	1560-658-282-40	SOCKET	*	10	10	10	10				
14	1614-670-281-00	BULB/LAMP/12V/1.7W	*	4	4	4	4				
15	1560-658-282-40	SOCKET	*	4	4	4	4				
16	V120-264-001-20	BOLT/M4X12	*	2	2	2	2				
17	1560-658-202-00	SCREW	*	3	3	3	3				
18	V195-164-016-40	SCREW/4X16	*	4	4	4	4				
19	1675-670-230-00	CASE ASSY	*	1	1	1	1				
20	V120-366-001-60	SCREW	*	4	4	4	4				
21	1614-670-001-10	CABLE ASSY	*	1	1	1	1				

FIG. 85 SWITCH SYSTEM (EXCEPT H TYPE)

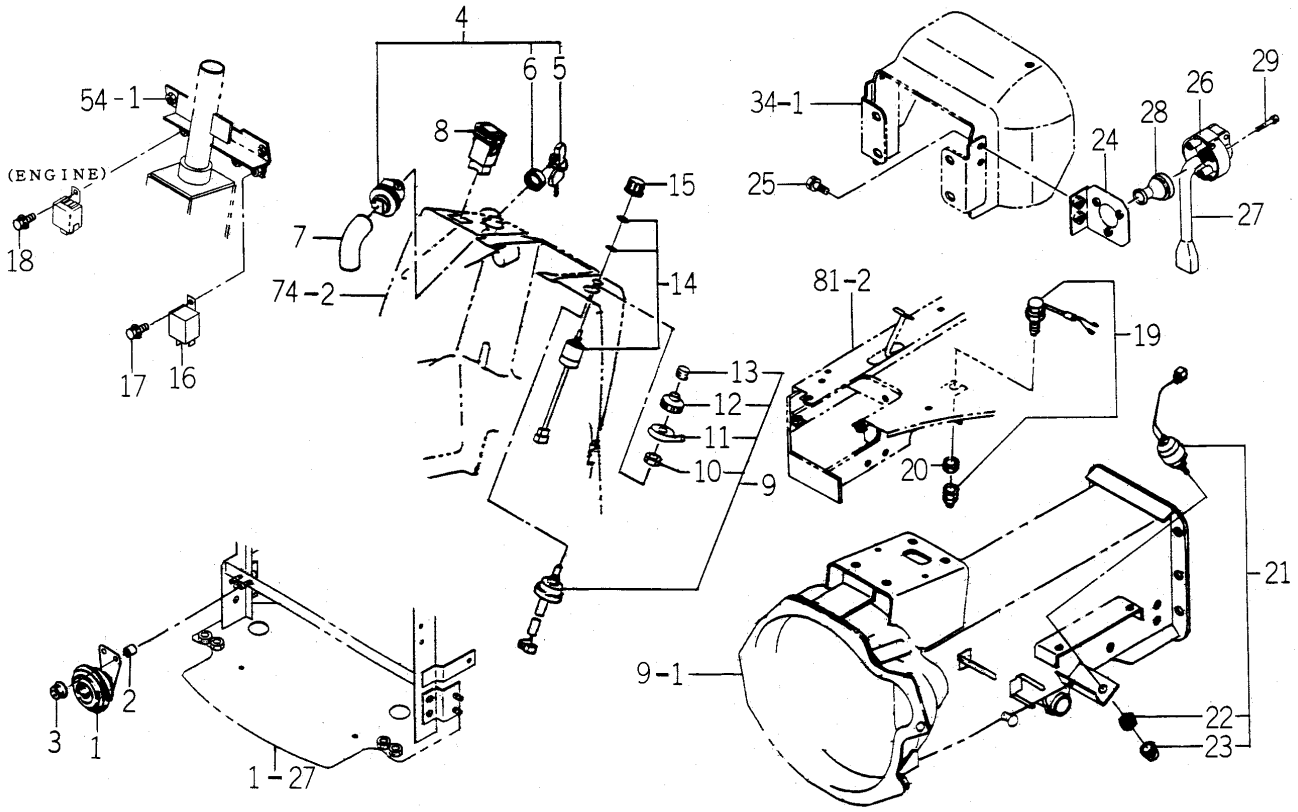

1750-680 -0100

KEY	PART CODE	DESCRIPTION	SPC	TYPE OF MODEL				ITC	COL	GRP	REMARKS
				TM3200	TM3200H	TM3240	TM3240H				
1	1740-680-530-00	HORN ASSY	*	1		1					
2	2150-661-002-00	COLLAR	*	2		2					
3	V360-260-006-00	NUT/M6	*	2		2					
4	1716-680-200-10	SWITCH/MAIN ASSY	*	1		1					
5	2186-536-211-00	KEY	*	2		2					
6	2186-536-212-00	NUT/RING	*	1		1					
7	1716-680-006-00	COVER/SWITCH	*	1		1					
8	1740-680-550-00	SWITCH/HAZARD ASSY	*	1		1					
9	1544-623-001-00	SWITCH ASSY	*	1		1					
10	1544-623-232-00	NUT/M22	*	1		1					
11	1544-623-233-00	LEVER	*	1		1					
12	1544-623-234-00	KNOB	*	1		1					
13	1544-623-235-00	BOOT/HORN	*	1		1					
14	1614-680-220-00	SWITCH/ROTARY/2 ASSY	*	1		1					
15	1588-651-205-00	KNOB	*	1		1					
16	1600-623-002-00	FLASHER ASSY	*	1		1					4DM0-033-600-01
17	V210-360-601-60	BOLT(SP)/M6X16	*	1		1					
18	V210-360-601-60	BOLT(SP)/M6X16	*	1		1					
19	1518-621-320-00	SWITCH,STOP	*	1		1					
20	V335-260-012-00	NUT	*	1		1					
21	1560-664-250-00	SWITCH/PUSH SET	*	1		1					
22	1560-664-252-00	NUT	*	1		1					
23	1560-664-253-00	BOOT	*	1		1					
24	1682-690-370-10	BRACKET/COUPLER/7P	*	1		1					
25	V211-261-003-50	BOLT,SEMS	*	2		2					
26	1600-624-201-00	PLUG/7P	*	1		1					8JB0-019-430-01
27	1682-690-380-00	HARNESS/SOCKET ASSY	*	1		1					
28	1650-654-036-00	GROMMET/10X40X03	*	1		1					
29	V120-265-003-00	BOLT/M5X30	*	3		3					

FIG. 86 SWITCH SYSTEM (H TYPE)

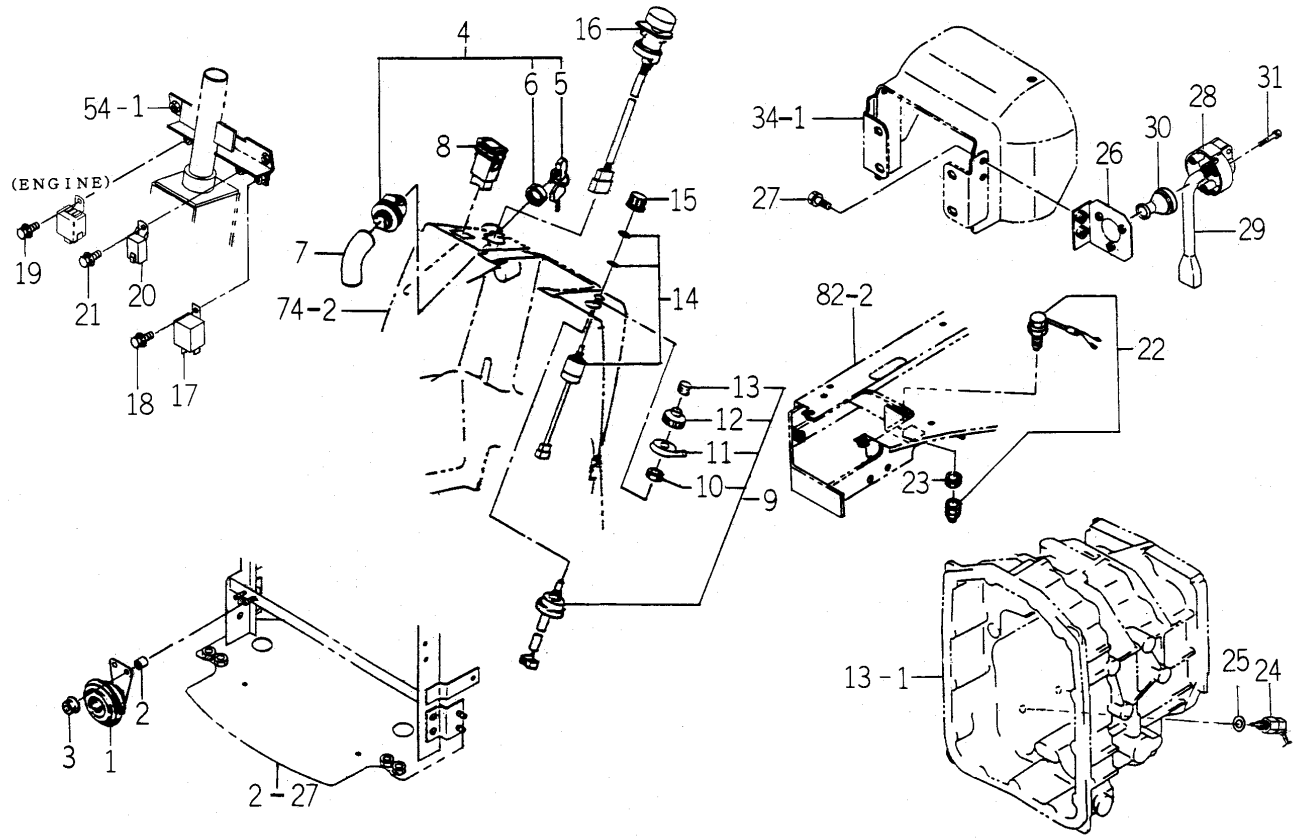

1750-680A-0100

KEY	PART CODE	DESCRIPTION	SPC	TYPE OF MODEL				ITC	COL	GRP	REMARKS
				TM3200	TM3200H	TM3240	TM3240H				
1	1740-680-530-00	HORN ASSY	*		1		1				
2	2150-661-002-00	COLLAR	*		2		2				
3	V360-260-006-00	NUT/M6	*		2		2				
4	1716-680-200-10	SWITCH/MAIN ASSY	*		1		1				
5	2186-536-211-00	KEY	*		2		2				
6	2186-536-212-00	NUT/RING	*		1		1				
7	1716-680-006-00	COVER/SWITCH	*		1		1				
8	1740-680-550-00	SWITCH/HAZARD ASSY	*		1		1				
9	1544-623-001-00	SWITCH ASSY	*		1		1				
10	1544-623-232-00	NUT/M22	*		1		1				
11	1544-623-233-00	LEVER	*		1		1				
12	1544-623-234-00	KNOB	*		1		1				
13	1544-623-235-00	BOOT/HORN	*		1		1				
14	1614-680-220-00	SWITCH/ROTARY/2 ASSY	*		1		1				
15	1588-651-205-00	KNOB	*		1		1				
16	1640-664-320-00	SWITCH/PTO ASSY	*		1		1				
17	1600-623-002-00	FLASHER ASSY	*		1		1				4DM0-033-600-01
18	V210-360-601-60	BOLT(SP)/M6X16	*		1		1				
19	V210-360-601-60	BOLT(SP)/M6X16	*		1		1				
20	1650-658-270-00	RELAY/4P ASSY	*		1		1				
21	V210-360-601-60	BOLT(SP)/M6X16	*		1		1				
22	1518-621-320-00	SWITCH,STOP	*		1		1				
23	V335-260-012-00	NUT	*		1		1				
24	1518-621-320-00	SWITCH,STOP	*		1		1				
25	2137-304-005-00	WASHER/13X24X01	*		2		2				
26	1682-690-370-10	BRACKET/COUPLER/7P	*		1		1				
27	V211-261-003-50	BOLT,SEMS	*		2		2				
28	1600-624-201-00	PLUG/7P	*		1		1				8JB0-019-430-01
29	1682-690-380-00	HARNESS/SOCKET ASSY	*		1		1				
30	1650-654-036-00	GROMMET/10X40X03	*		1		1				

FIG. 86 SWITCH SYSTEM (H TYPE)

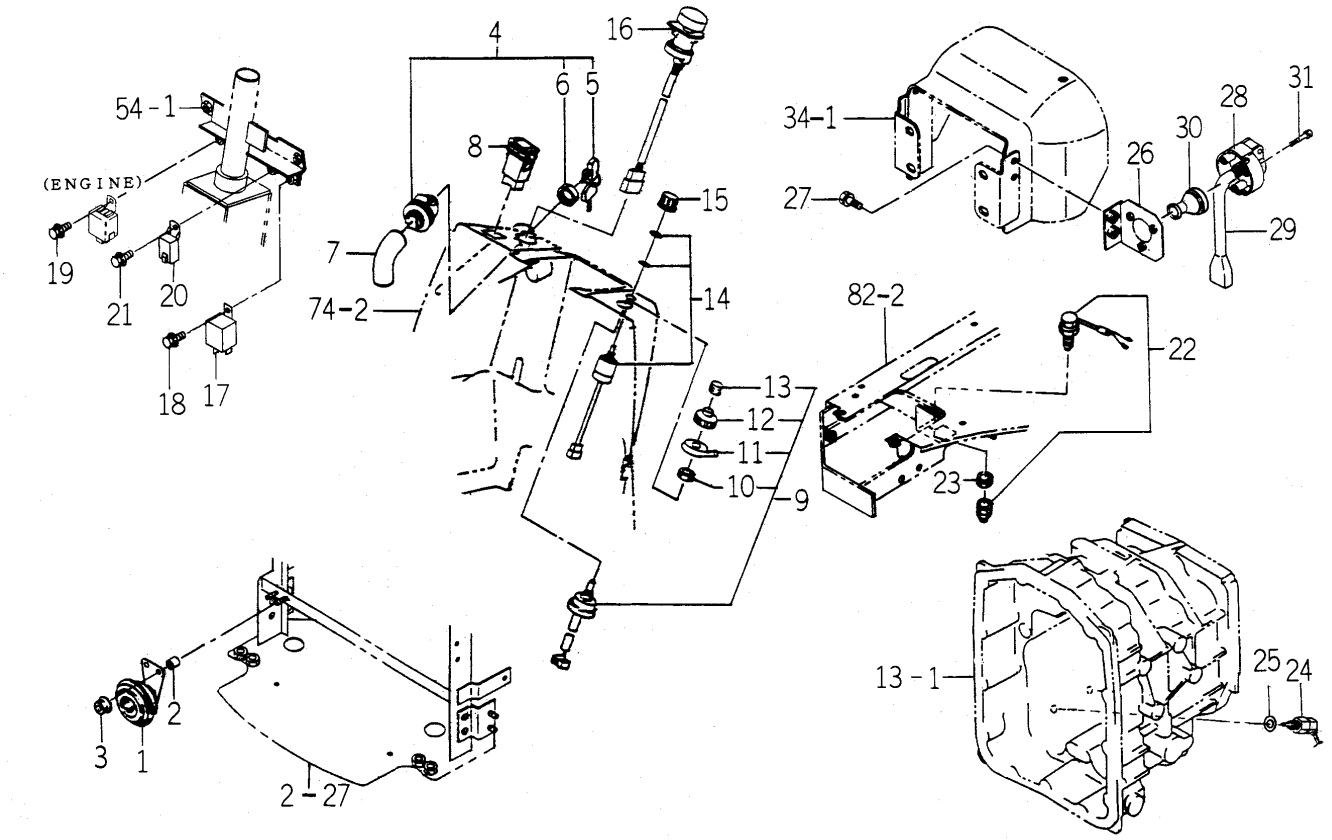

1750-680A-0100

KEY	PART CODE	DESCRIPTION	SPC	TYPE OF MODEL				ITC	COL	GRP	REMARKS
				TM3200	TM3200H	TM3240	TM3240H				
31	V120-265-003-00	BOLT/M5X30	*		3		3				

FIG. 87 HARNESS SYSTEM (EXCEPT H TYPE)

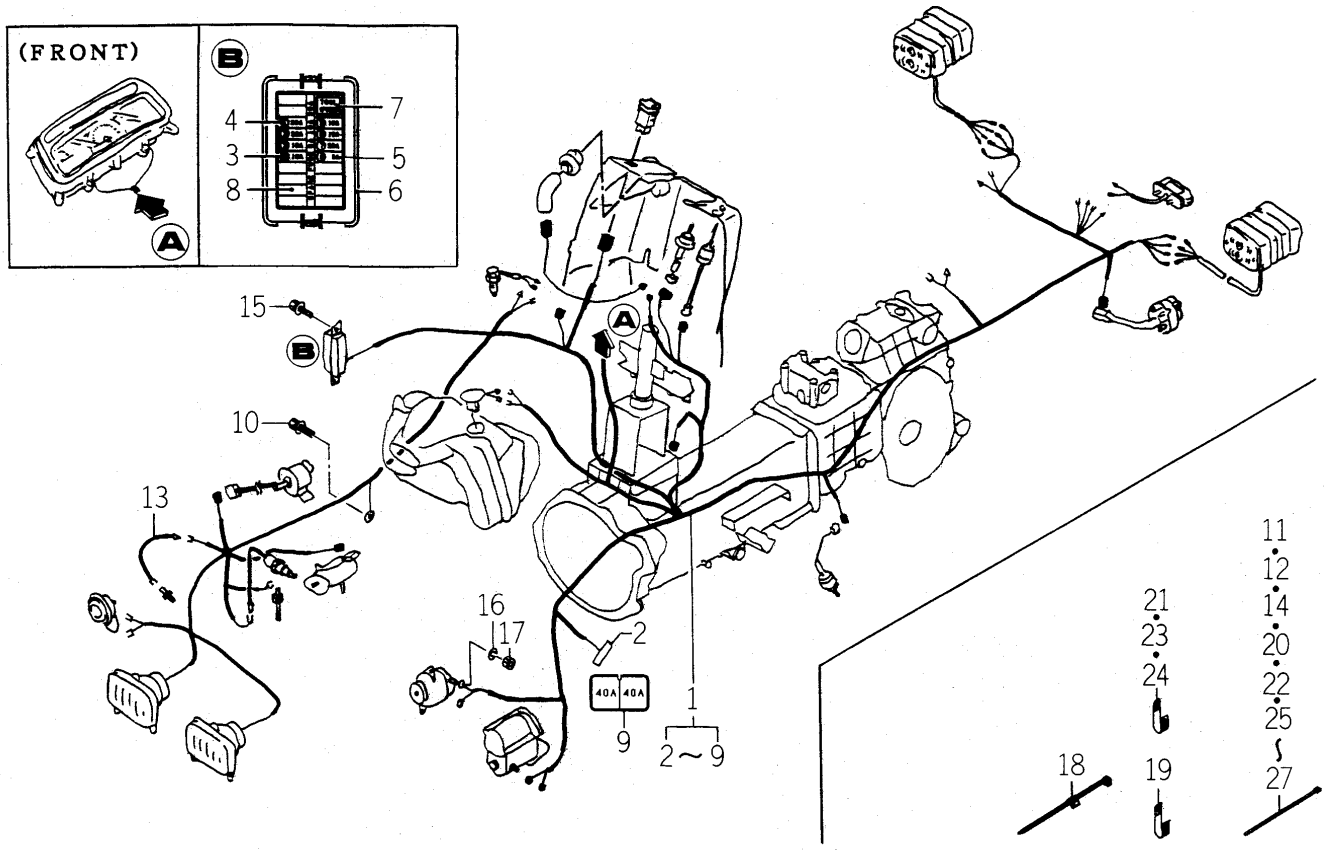

1750-690 -0100

KEY	PART CODE	DESCRIPTION	SPC	TYPE OF MODEL TM3200	TM3200H	TM3240	TM3240H	ITC	COL	GRP	REMARKS
1	1750-690-210-10	HARNESS/MAIN/E4 ASSY	*	1		1					
2	1650-650-222-00	FUSE/SLOWBLOW	*	2		2					
3	3821-262-202-00	FUSE/BLADE/32V10A	*	5		5					
4	3821-262-204-00	FUSE/BLADE/32V20A	*	4		4					
5	1740-690-202-00	FUSE/BLADE/32V05A	*	2		2					
6	3827-270-001-00	COVER/FUSE	*	1		1					
7	3827-270-002-00	TOOL/FUSE	*	1		1					
8	1738-690-203-00	LABEL/FUSE/E4	*	1		1					
9	1750-690-212-00	LABEL/FUSE/SLOWBLOW	*	1		1					
10	V211-360-802-00	BOLT/SP	*	1		1					
11	1342-402-006-00	BAND,WIRE/250	*	1		1					
12	1376-402-003-00	BAND,WIRE/140	*	1		1					
13	1600-624-004-00	HARNESS,OIL PRESSURE	*	1		1					
14	1342-402-006-00	BAND,WIRE/250	*	1		1					
15	V210-360-601-60	BOLT(SP)/M6X16	*	2		2					
16	V401-160-006-00	WASHER,SP/M 6	*	1		1					
17	V301-260-006-00	NUT/M 6	*	1		1					
18	1560-666-004-00	BAND	*	1		1					
19	1425-621-004-00	HOLDER/JE/9-9	*	1		1					
20	1342-402-006-00	BAND,WIRE/250	*	1		1					
21	3737-172-011-00	CLAMP,HARNESS	*	2		2					
22	1376-402-003-00	BAND,WIRE/140	*	1		1					
23	3737-172-011-00	CLAMP,HARNESS	*	1		1					
24	3737-172-011-00	CLAMP,HARNESS	*	1		1					
25	1376-402-003-00	BAND,WIRE/140	*	2		2					
26	1342-402-006-00	BAND,WIRE/250	*	2		2					
27	1376-402-003-00	BAND,WIRE/140	*	1		1					

FIG. 88 HARNESS SYSTEM (H TYPE)

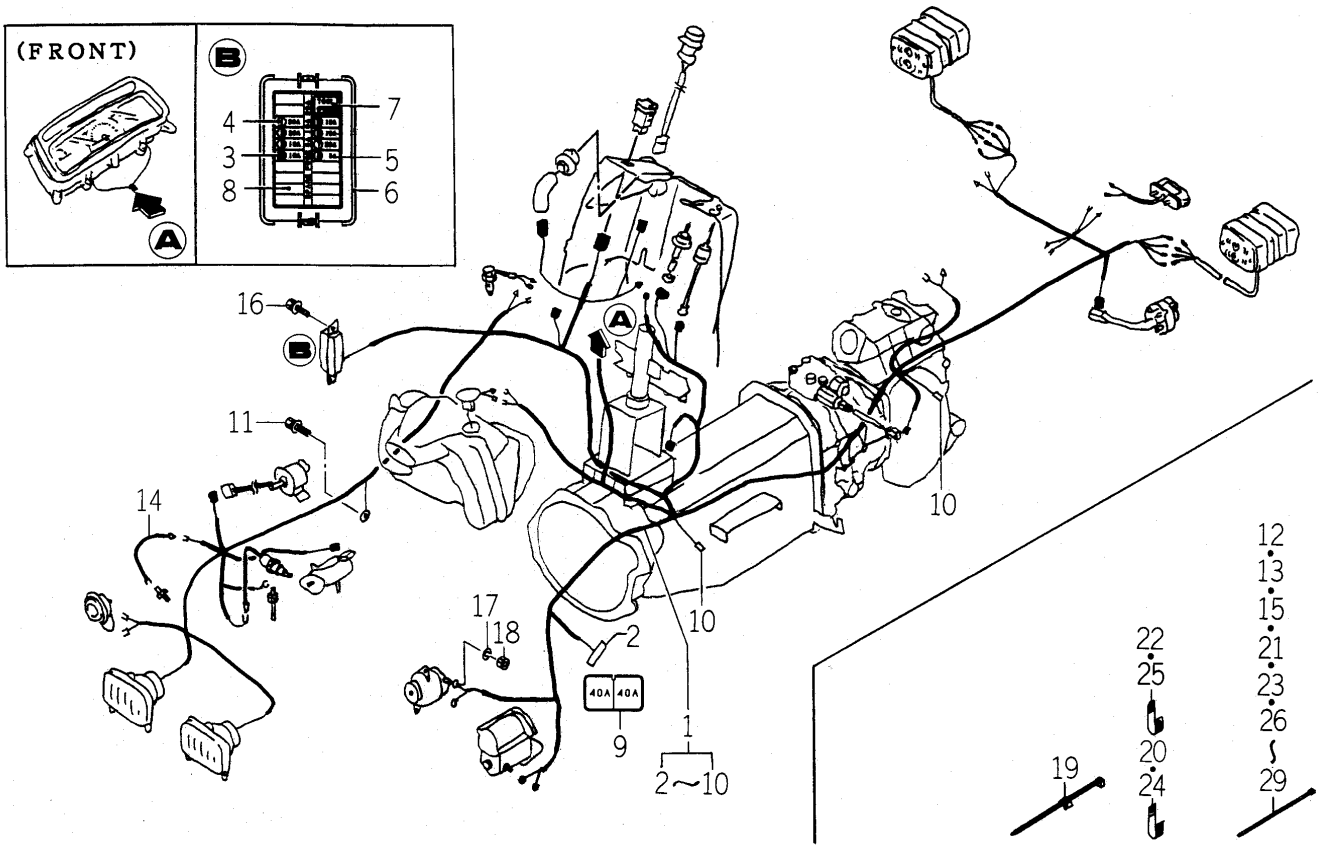

1750-690A-0100

KEY	PART CODE	DESCRIPTION	SPC	TYPE OF MODEL				ITC	COL	GRP	REMARKS
				TM3200	TM3200H	TM3240	TM3240H				
1	1750-690-510-00	HARNESS/MAIN/HE ASSY	*		1		1				
2	1650-650-222-00	FUSE/SLOWBLOW	*		2		2				
3	3821-262-202-00	FUSE/BLADE/32V10A	*		5		5				
4	3821-262-204-00	FUSE/BLADE/32V20A	*		4		4				
5	1740-690-202-00	FUSE/BLADE/32V05A	*		2		2				
6	3827-270-001-00	COVER/FUSE	*		1		1				
7	3827-270-002-00	TOOL/FUSE	*		1		1				
8	1738-690-203-00	LABEL/FUSE/E4	*		1		1				
9	1750-690-212-00	LABEL/FUSE/SLOWBLOW	*		1		1				
10	1560-666-212-00	DIODE	*		2		2				
11	V211-360-802-00	BOLT/SP	*		1		1				
12	1342-402-006-00	BAND,WIRE/250	*		1		1				
13	1376-402-003-00	BAND,WIRE/140	*		1		1				
14	1600-624-004-00	HARNESS,OIL PRESSURE	*		1		1				
15	1342-402-006-00	BAND,WIRE/250	*		1		1				
16	V210-360-601-60	BOLT(SP)/M6X16	*		2		2				
17	V401-160-006-00	WASHER,SP/M 6	*		1		1				
18	V301-260-006-00	NUT/M 6	*		1		1				
19	1560-666-004-00	BAND	*		1		1				
20	1425-621-004-00	HOLDER/JE/9-9	*		1		1				
21	1342-402-006-00	BAND,WIRE/250	*		1		1				
22	3737-172-011-00	CLAMP,HARNESS	*		2		2				
23	1342-402-006-00	BAND,WIRE/250	*		1		1				
24	1425-621-004-00	HOLDER/JE/9-9	*		1		1				
25	3737-172-011-00	CLAMP,HARNESS	*		1		1				
26	1376-402-003-00	BAND,WIRE/140	*		1		1				
27	1376-402-003-00	BAND,WIRE/140	*		2		2				
28	1342-402-006-00	BAND,WIRE/250	*		2		2				
29	1376-402-003-00	BAND,WIRE/140	*		1		1				

FIG. 89 ROPS SYSTEM (R TYPE)

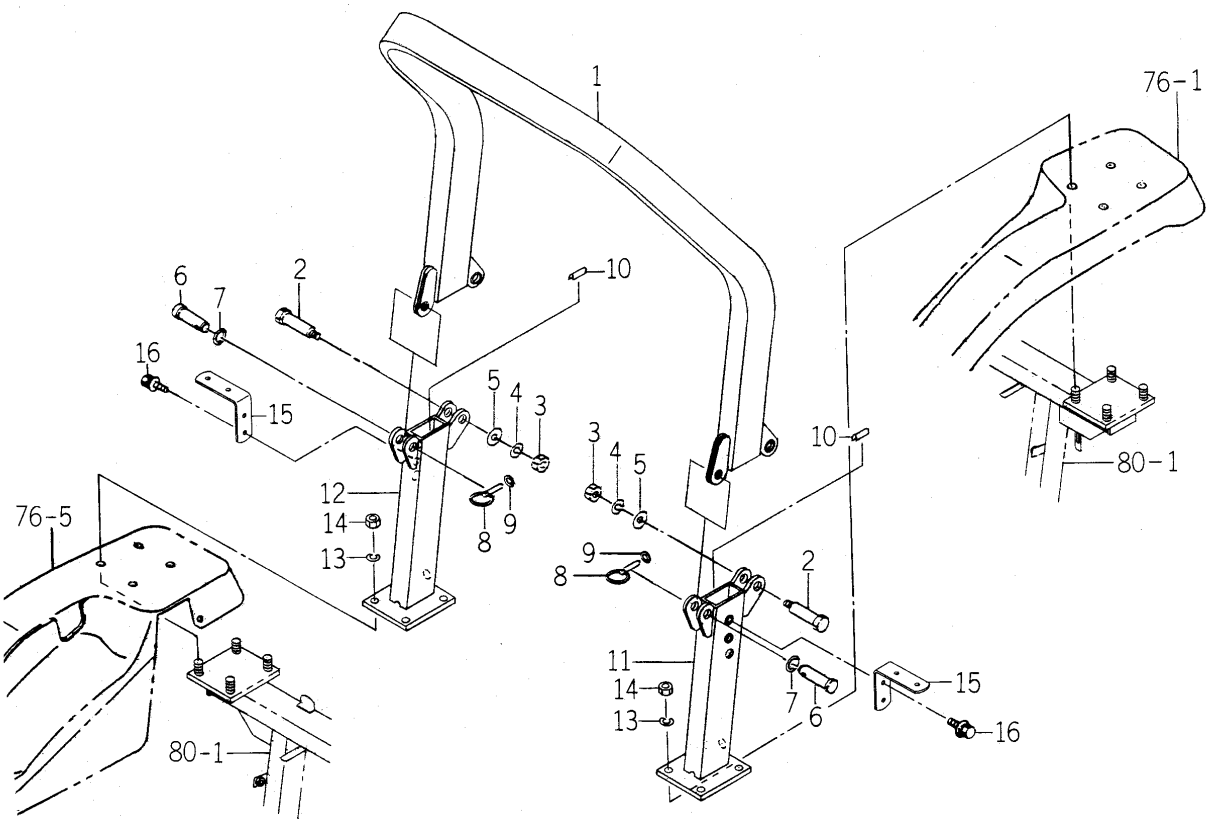

1738-702 -0100

KEY	PART CODE	DESCRIPTION	SPC	TYPE OF MODEL				ITC	COL	GRP	REMARKS
				TM3200	TM3200H	TM3240	TM3240H				
1	1738-702-300-00	FRAME/UPPER COMP	*	1	1	1	1		7F		
2	1640-702-003-00	BOLT/SET/M16X60	*	2	2	2	2				
3	V304-260-016-00	NUT/M16	*	2	2	2	2				
4	V401-160-016-00	WASHER,SP/M16	*	2	2	2	2				
5	V411-260-016-00	WASHER / M16	*	2	2	2	2				
6	1640-702-004-00	PIN/20X58	*	2	2	2	2				
7	V720-112-401-80	O-RING/P18	*	2	2	2	2				
8	1673-525-002-20	LINKPIN	*	2	2	2	2				
9	V720-101-900-90	O-RING/P 9	*	2	2	2	2				
10	1560-314-001-00	INSULATOR	*	2	2	2	2				
11	1738-702-310-00	FRAME/LH COMP	*	1	1	1	1		7F		
12	1738-702-320-00	FRAME/RH COMP	*	1	1	1	1		7F		
13	V401-160-014-00	WASHER,SP/M14	*	8	8	8	8				
14	V304-460-014-00	NUT/M14	*	8	8	8	8				
15	1739-702-001-00	PLATE/L/38X114	*	2	2	2	2				
16	V211-360-802-00	BOLT/SP	*	4	4	4	4				

FIG. 90 ORNAMENT

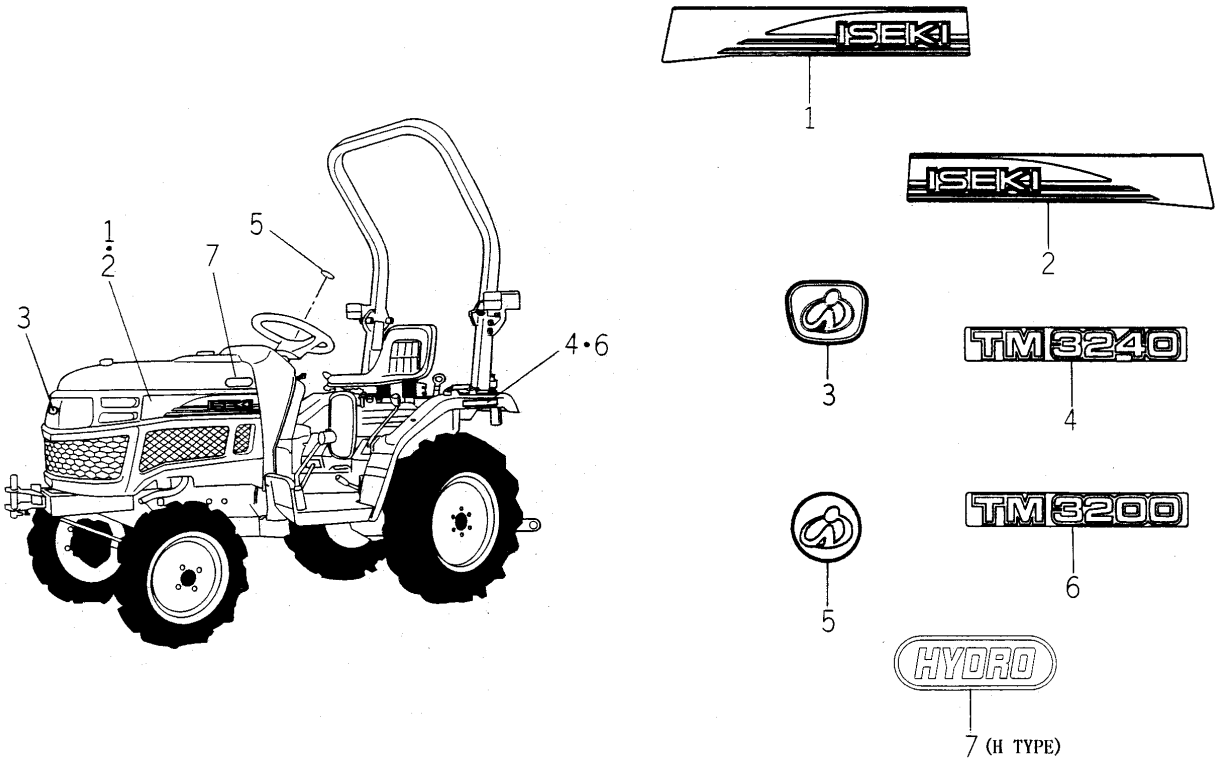

1750-901C-,1750-901 -0100,1750-901A-0100,1750-901B-0100

KEY	PART CODE	DESCRIPTION	SPC	TYPE OF MODEL				ITC	COL	GRP	REMARKS
				TM3200	TM3200H	TM3240	TM3240H				
1	1750-901-001-00	ORNAMENT/ISEKI/LH	*	1	1	1	1				
2	1750-901-002-00	ORNAMENT/ISEKI/RH	*	1	1	1	1				
3	1118-901-002-00	ORNAMENT/I	*	1	1	1	1				
4	1750-901-004-00	ORNAMENT/3240	*			2	2				
5	1696-901-006-00	ORNAMENT/STEERING	*	1	1	1	1				
6	1750-901-003-00	ORNAMENT/3200	*	2	2						
7	1646-901-061-00	ORNAMENT/HYDRO	*		2		2				

FIG. 91 LABEL (CONTROL) (EXCEPT H TYPE)

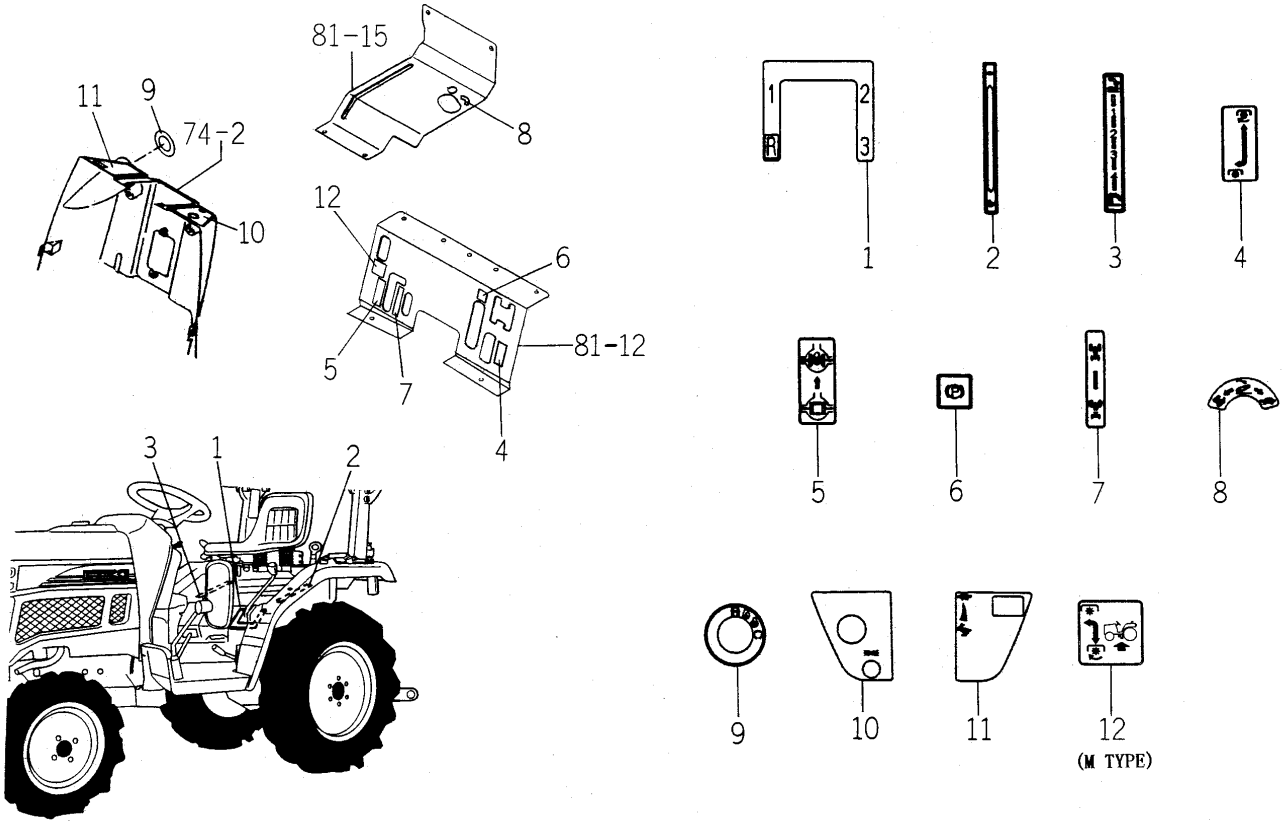

1750-902 -0100,1750-902C-0100,1709-903B-0100

KEY	PART CODE	DESCRIPTION	SPC	TYPE OF MODEL				ITC	COL	GRP	REMARKS
				TM3200	TM3200H	TM3240	TM3240H				
1	1682-902-005-00	LABEL/CONTROL/MAIN	*	1		1					
2	1738-902-003-00	LABEL/CONTROL/SUB	*	1		1					
3	1600-902-002-10	LABEL,CONTROL	*	1		1					
4	1684-902-003-00	LABEL/CONTROL/PTO	*	1		1					
5	1683-902-004-00	LABEL/DIFF	*	1		1					
6	1682-902-014-00	LABEL/CONTROL/PARKIN	*	1		1					
7	1600-904-051-00	LABEL/4WD	*	1		1					
8	1682-902-013-00	LABEL/CONTROL/ADJUST	*	1		1					
9	1740-903-055-10	LABEL/SWITCH/MAIN	*	1		1					
10	1740-903-053-00	LABEL/COLUMN/LH	*	1		1					
11	1738-902-006-00	LABEL/COLUMN/RH	*	1		1					
12	1738-902-007-00	LABEL/PTO/MID	*	1		1					

FIG. 92 LABEL (CONTROL) (H TYPE)

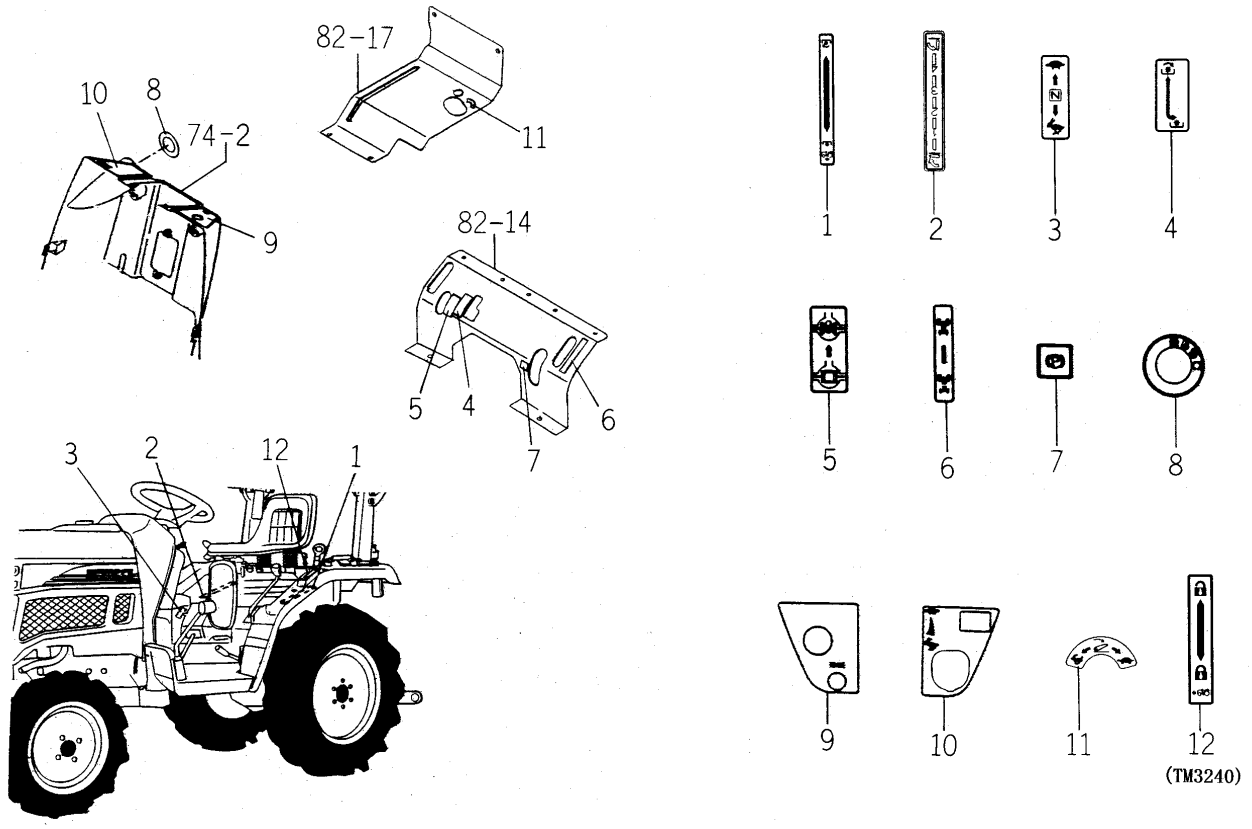

1750-902A-0100,1750-902B-0100

KEY	PART CODE	DESCRIPTION	SPC	TYPE OF MODEL				ITC	COL	GRP	REMARKS
				TM3200	TM3200H	TM3240	TM3240H				
1	1750-902-051-00	LABEL/PTO/MID	*		1		1				
2	1600-902-002-10	LABEL,CONTROL	*		1		1				
3	1683-902-001-00	LABEL/CONTROL/SUB	*		1		1				
4	1682-902-009-00	LABEL/CONTROL/PTO	*		1		1				
5	1683-902-004-00	LABEL/DIFF	*		1		1				
6	1600-904-051-00	LABEL/4WD	*		1		1				
7	1682-902-014-00	LABEL/CONTROL/PARKIN	*		1		1				
8	1740-903-055-10	LABEL/SWITCH/MAIN	*		1		1				
9	1740-903-053-00	LABEL/COLUMN/LH	*		1		1				
10	1740-903-054-10	LABEL/COLUMN/RH	*		1		1				
11	1682-902-013-00	LABEL/CONTROL/ADJUST	*		1		1				
12	1750-902-052-00	LABEL/CONTROL/CRUISE	*				1				

FIG. 93 LABEL (CAUTION)

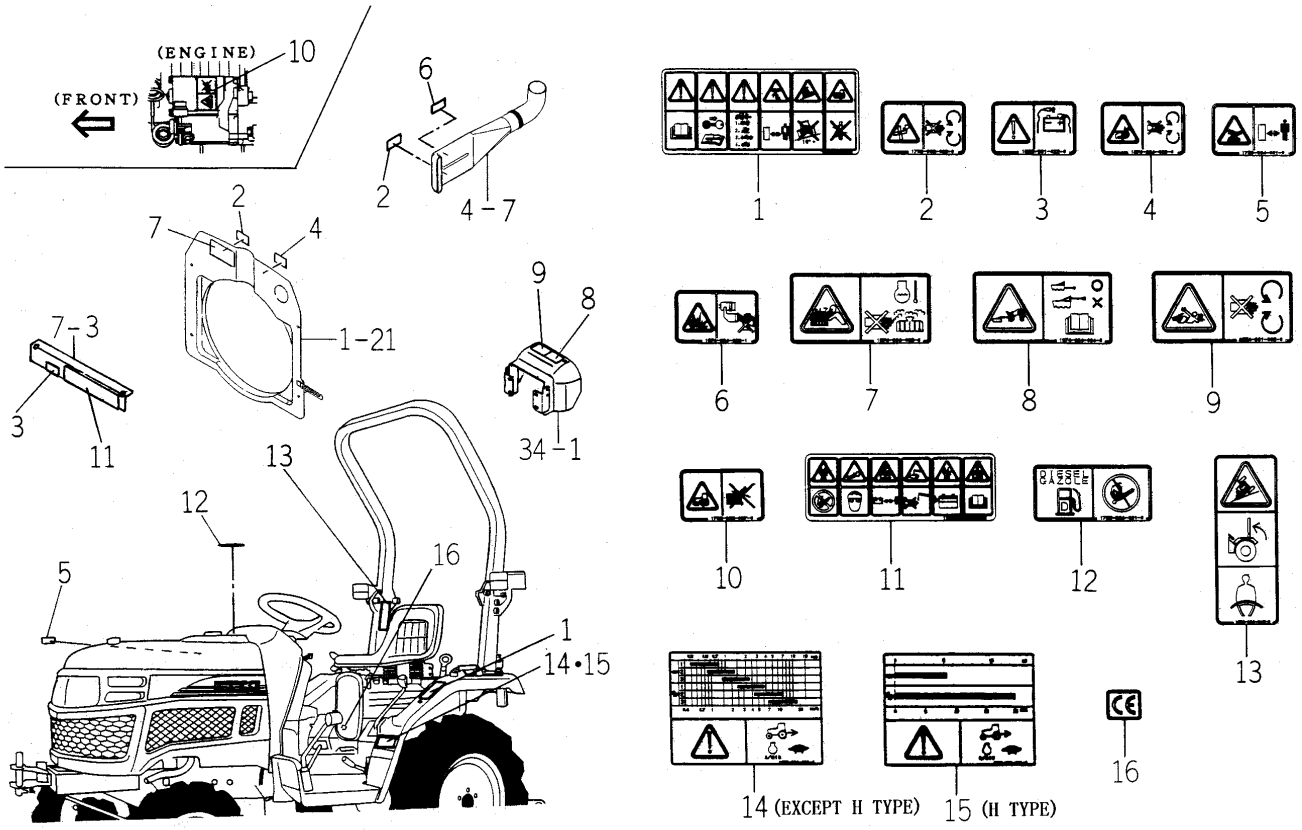

1738-904 -0100,1750-904 -0100,1709-905 -0100

KEY	PART CODE	DESCRIPTION	SPC	TYPE OF MODEL				ITC	COL	GRP	REMARKS
				TM3200	TM3200H	TM3240	TM3240H				
1	1674-904-001-00	LABEL/DRIVE	*	1	1	1	1				
2	1705-902-006-00	LABEL/W/FAN	*	2	2	2	2				
3	1636-901-022-00	LABEL/CAUTION/BATTER	*	1	1	1	1				
4	1674-904-008-00	LABEL/WARNING/BELT	*	2	2	2	2				
5	1739-904-001-00	LABEL/WARNING/HOT	*	1	1	1	1				
6	1674-904-002-10	LABEL/ETHER	*	1	1	1	1				
7	1674-904-003-00	LABEL/RADIATOR	*	1	1	1	1				
8	1674-904-004-00	LABEL/TRAILER	*	1	1	1	1				
9	8654-901-002-00	LABEL/PTO	*	1	1	1	1				
10	1705-902-007-00	LABEL/W/STARTER	*	1	1	1	1				
11	1705-904-002-00	LABEL/BATTERY	*	1	1	1	1				
12	1705-904-001-00	LABEL/FUEL	*	1	1	1	1				
13	1674-904-005-00	LABEL/ROPS	*	1	1	1	1				
14	1738-904-001-00	LABEL/SPEED	*	1		1					
15	1750-904-051-00	LABEL/SPEED/HST	*		1		1				
16	2500-901-027-00	LABEL/CE	*	1	1	1	1				

FIG. 94 TOOLS

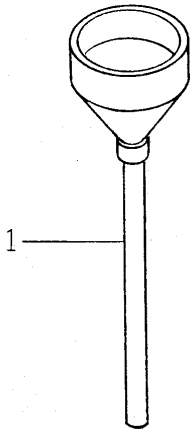

1738-910 -0100

KEY	PART CODE	DESCRIPTION	SPC	TYPE OF MODEL				ITC	COL	GRP	REMARKS
				TM3200	TM3200H	TM3240	TM3240H				
1	2188-973-200-00	FUNNEL ASSY	*	1	1	1	1				

FIG. 95 MID PTO SET (EXCEPT M TYPE)(1/2) (OPTION)

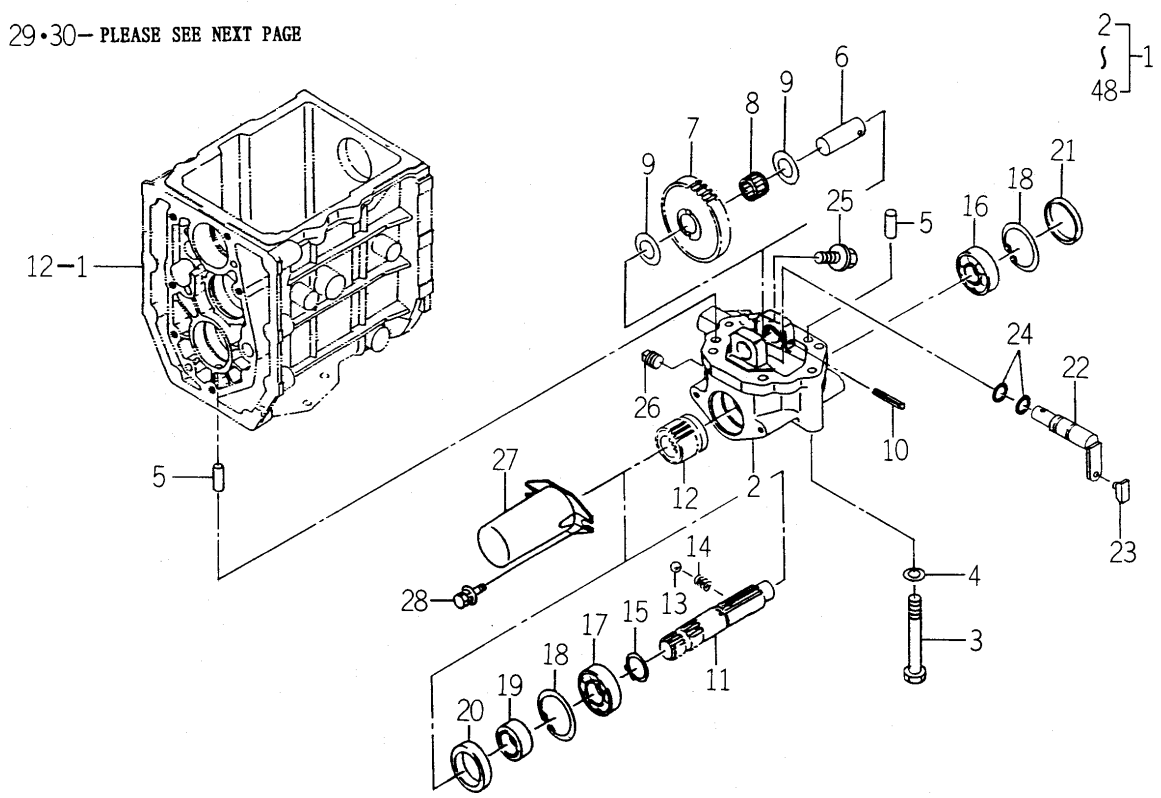

1738-255A-0100

KEY	PART CODE	DESCRIPTION	SPC	TYPE OF MODEL				ITC	COL	GRP	REMARKS
				TM3200	TM3200H	TM3240	TM3240H				
1	1738-255-200-20	PTO/MID SET	T	1		1					
2	1682-255-201-10	CASE/PTO/MID	T	1		1					
3	V201-361-009-00	BOLT/M10X90	T	6		6					
4	V401-160-010-00	WASHER,SP/M10	T	6		6					
5	V523-101-002-40	PIN	T	2		2					
6	1682-255-203-00	PIN/20X51	T	1		1					
7	1682-255-202-00	GEAR/SPUR/34	T	1		1					
8	1682-255-002-20	BEARING/NEEDLE	T	1		1					
9	1480-212-003-00	COLLAR/21X36X1	T	2		2					
10	V580-140-604-00	PIN,SPRING/6 X40 W	T	1		1					
11	1682-255-204-00	SHAFT/PTO/MID	T	1		1					
12	1682-255-205-10	GEAR/SPUR/15	T	1		1					
13	V682-200-001-00	BALL	T	1		1					
14	1302-225-003-00	SPRING,SHIFTER	T	1		1					
15	V704-140-025-00	RING,SNAP/25 C	T	1		1					
16	V600-110-630-40	BEARING,RB/6304	T	1		1					
17	V600-110-620-50	BEARING,RB/6205	T	1		1					
18	V705-140-052-00	RING,SNAP/52 C	T	2		2					
19	1427-212-003-20	SLEEVE	T	1		1					
20	V744-135-520-80	SEAL,OIL/TC35528	T	1		1					
21	3625-701-003-00	CAP,BLANK/52	T	1		1					
22	1682-255-210-40	ARM/SHIFT/MID COMP	T	1		1					
23	2703-101-020-00	COLLAR,SHIFTER	T	1		1					
24	V720-102-401-40	O-RING/P14	T	2		2					
25	V233-361-201-60	FLANGEBOLT	T	1		1					
26	V781-160-000-6B	PLUG/SCREW/SEAL	T	1		1					
27	1444-314-009-10	CAP,PTO SHAFT	T	1		1					
28	V210-360-602-00	BOLT/SP	T	2		2					
29	1738-255-310-20	LEVER/PTO/MID COMP	T	1		1					
30	3640-585-001-00	GLIP/YELLOW	T	1		1					

FIG. 95 MID PTO SET (EXCEPT M TYPE)(2/2) (OPTION)

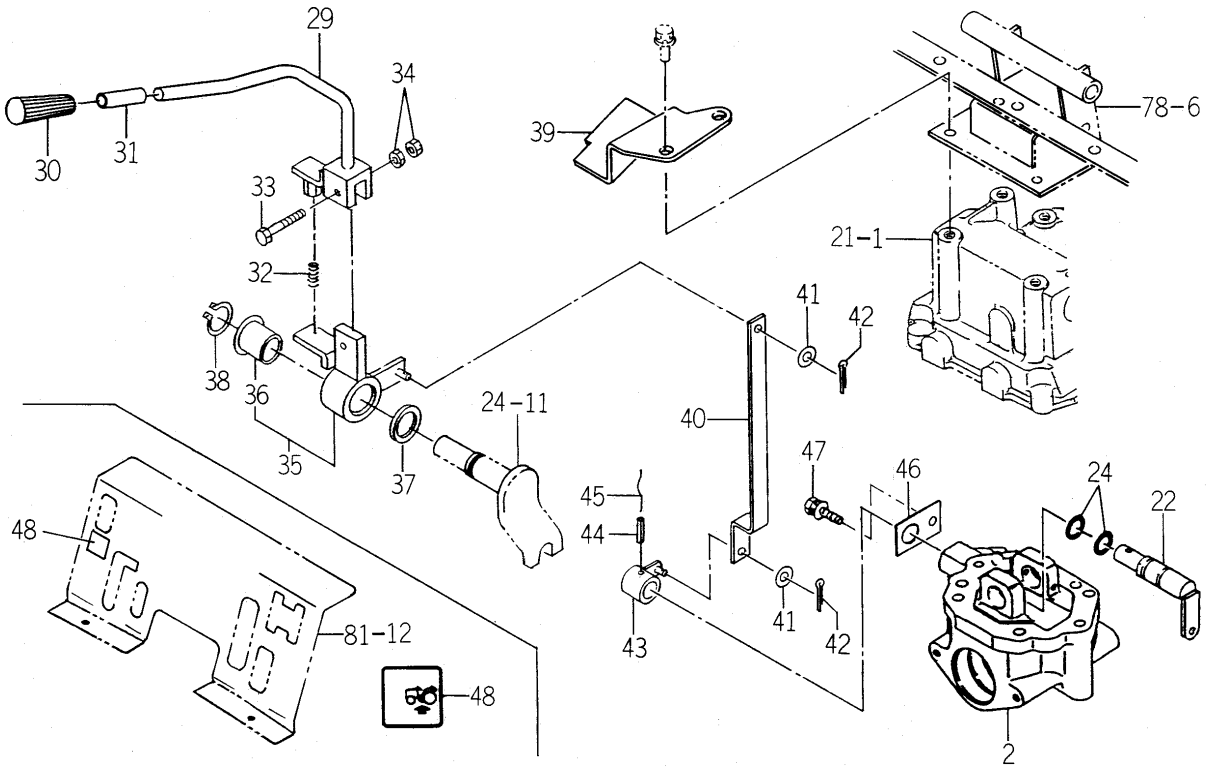

1738-255A-0100

KEY	PART CODE	DESCRIPTION	SPC	TYPE OF MODEL				ITC	COL	GRP	REMARKS
				TM3200	TM3200H	TM3240	TM3240H				
31	1682-255-303-00	TUBE/10X12X50	T	1		1					
32	2149-601-031-00	SPRING/HC024	T	1		1					
33	V200-360-604-00	BOLT	T	1		1					
34	V300-460-006-00	NUT/M 6	T	1		1					
35	1738-255-330-00	ARM/PTO/MID ASSY	T	1		1					
36	1581-521-642-00	BUSH/25X28X27	T	1		1					
37	3670-520-008-00	WASHER/25X34X02	T	1		1					
38	V704-140-025-00	RING,SNAP/25 C	T	1		1					
39	1738-255-002-00	GUIDE/PTO/MID	T	1		1					
40	1738-255-001-00	ROD/TIE/MID	T	1		1					
41	V411-260-008-00	WASHER,PL/M 8	T	2		2					
42	V500-162-001-50	PIN,SPLIT/2 X15	T	2		2					
43	1683-265-510-00	ARM/SHIFT/MID COMP	T	1		1					
44	V580-140-602-50	PIN,SPRING/6 X25 W	T	1		1					
45		WIRE	T	1		1					
46	1620-255-208-00	PLATE/30X50	T	1		1					
47	V211-360-802-00	BOLT,SEMS(SP)	T	1		1					
48	1738-902-007-00	LABEL/PTO/MID	T	1		1					

FIG. 96 REAR WHEEL SYSTEM (TM3240) (OPTION)

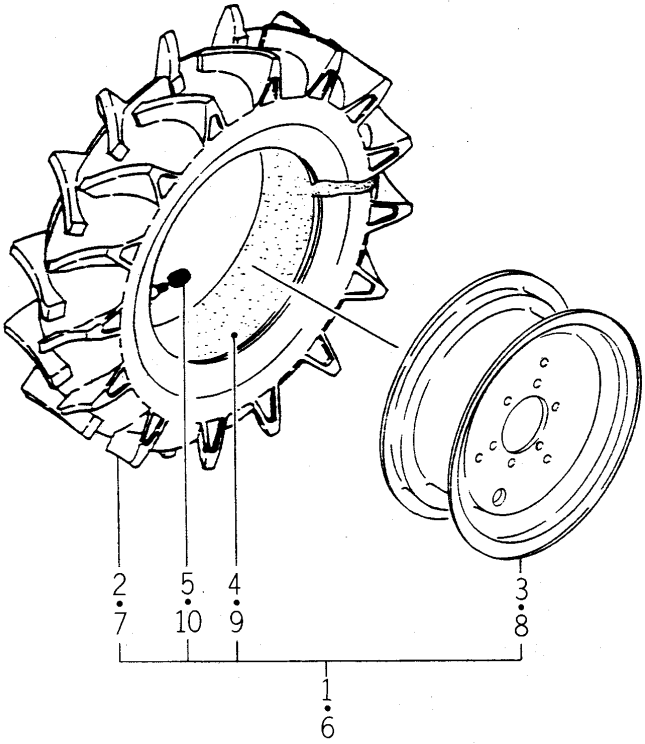

1685-317 -0100

KEY	PART CODE	DESCRIPTION	SPC	TYPE OF MODEL				ITC	COL	GRP	REMARKS
				TM3200	TM3200H	TM3240	TM3240H				
1	1685-317-210-00	TIRE/9.5-16/LH ASSY	T			1	1		6G		
2	1621-317-220-00	TIRE/9.5-16-4	T			1	1				
3	1685-317-230-00	RIM/WHEEL COMP	T			1	1		6G		
4	V889-000-081-60	TUBE/ 8-16	T			1	1				
5	V999-200-003-00	CAP,TIRE VALVE	T			1	1				
6	1685-317-220-00	TIRE/9.5-16/RH ASSY	T			1	1		6G		
7	1621-317-220-00	TIRE/9.5-16-4	T			1	1				
8	1685-317-230-00	RIM/WHEEL COMP	T			1	1		6G		
9	V889-000-081-60	TUBE/ 8-16	T			1	1				
10	V999-200-003-00	CAP,TIRE VALVE	T			1	1				

FIG. 97 REAR WHEEL SYSTEM (TM3200) (OPTION)

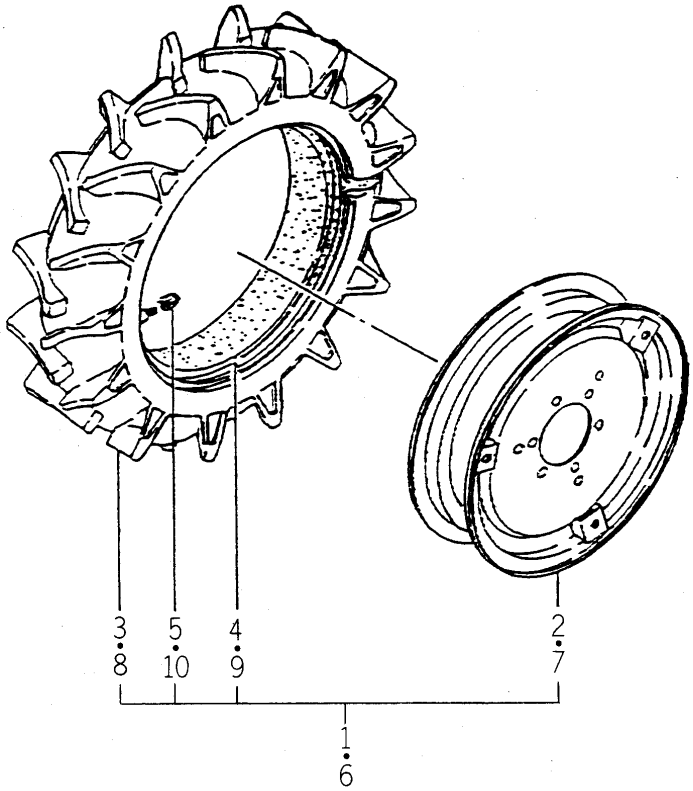

1435-317A-0100

KEY	PART CODE	DESCRIPTION	SPC	TYPE OF MODEL				ITC	COL	GRP	REMARKS
				TM3200	TM3200H	TM3240	TM3240H				
1	1435-317-230-01	TIRE,LW-LUG/L ASSY	T	1	1				6G		
2	1435-317-201-20	WHEEL/18XW6 COMP	T	1	1				6G		
3	V888-240-081-80	TIRE/4P 8-18	T	1	1						
4	V889-000-081-80	TUBE/ 8-18	T	1	1						
5	V999-200-003-00	CAP,TIRE VALVE	T	1	1						
6	1435-317-240-01	TIRE,LW-LUG/R ASSY	T	1	1				6G		
7	1435-317-201-20	WHEEL/18XW6 COMP	T	1	1				6G		
8	V888-240-081-80	TIRE/4P 8-18	T	1	1						
9	V889-000-081-80	TUBE/ 8-18	T	1	1						
10	V999-200-003-00	CAP,TIRE VALVE	T	1	1						

FIG. 98 REAR WHEEL (TURF) SYSTEM (TM3240) (OPTION)

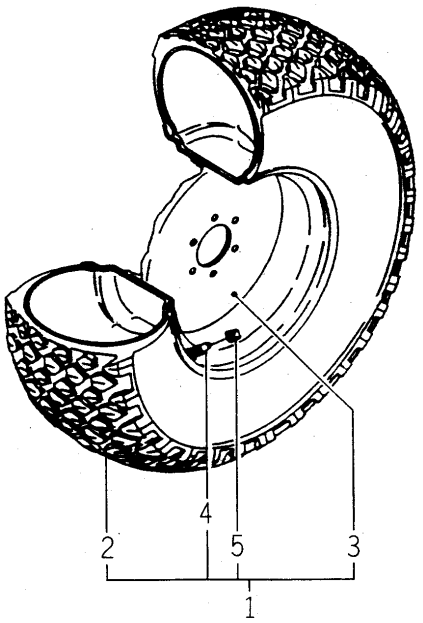

1685-317A-0100

KEY	PART CODE	DESCRIPTION	SPC	TYPE OF MODEL				ITC	COL	GRP	REMARKS
				TM3200	TM3200H	TM3240	TM3240H				
1	1685-317-510-00	TIRE/315/75D-15 ASSY	T			2	2		6G		
2	1600-317-281-00	TIRE,315/750-15-4	T			2	2				
3	1434-317-290-01	WHEEL/15X10LB COMP	T			2	2		6G		
4	1386-241-002-00	VALVE/RIM	T			2	2				
5	V999-200-003-00	CAP,TIRE VALVE	T			2	2				

FIG. 99 REAR WHEEL (TURF) SYSTEM (TM3200) (OPTION)

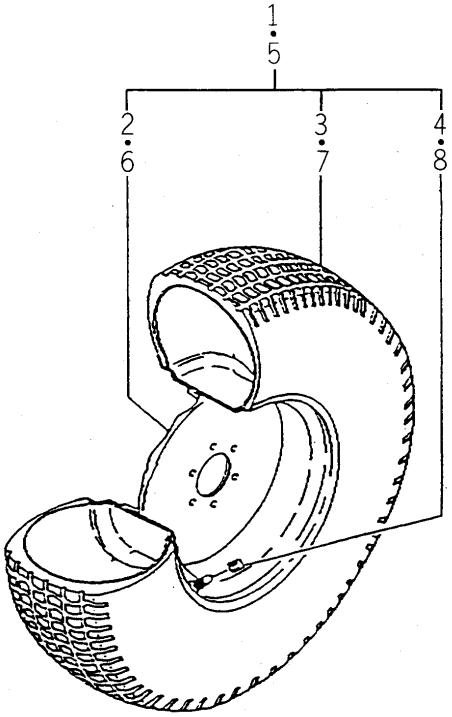

1434-317D-0100

KEY	PART CODE	DESCRIPTION	SPC	TYPE OF MODEL				ITC	COL	GRP	REMARKS
				TM3200	TM3200H	TM3240	TM3240H				
1	1434-317-280-01	TIRE,TURF/L ASSY	T	1	1				6G		
2	1434-317-290-01	WHEEL/15X10LB COMP	T	1	1				6G		
3	1434-317-281-00	TIRE,TURF29X12.00X15	T	1	1						
4	V999-200-003-00	CAP,TIRE VALVE	T	1	1						
5	1434-317-300-01	TIRE,TURF/R ASSY	T	1	1				6G		
6	1434-317-290-01	WHEEL/15X10LB COMP	T	1	1				6G		
7	1434-317-281-00	TIRE,TURF29X12.00X15	T	1	1						
8	V999-200-003-00	CAP,TIRE VALVE	T	1	1						

FIG.100 HITCH (FRONT) SET (EXCEPT R TYPE) (OPTION)

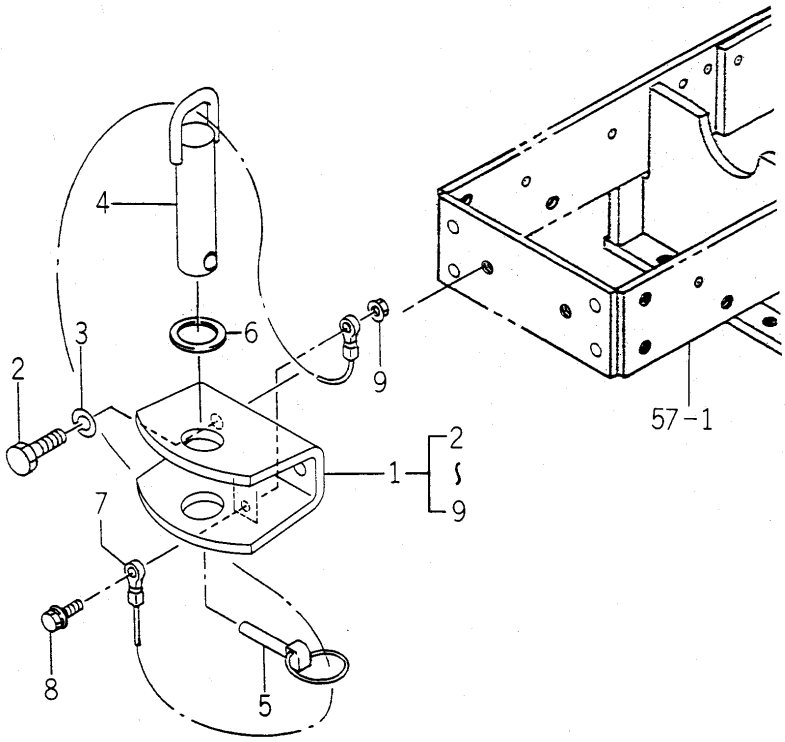

1738-411A-0100

KEY	PART CODE	DESCRIPTION	SPC	TYPE OF MODEL				ITC	COL	GRP	REMARKS
				TM3200	TM3200H	TM3240	TM3240H				
1	1738-411-300-10	HITCH/FRONT SET	T	1	1	1	1				
2	V201-361-203-00	BOLT/M12X30	T	2	2	2	2				
3	V401-160-012-00	WASHER,SP/M12	T	2	2	2	2				
4	1674-410-320-00	PIN/30X120 COMP	T	1	1	1	1				
5	1673-525-002-20	LINKPIN	T	1	1	1	1				
6	1674-520-004-00	INSULATOR	T	1	1	1	1				
7	1674-410-301-00	CABLE	T	1	1	1	1				
8	V211-360-803-00	BOLT/SP	T	1	1	1	1				
9	V363-260-008-00	NUT/WASHER	T	1	1	1	1				

FIG.101 FRONT WHEEL SYSTEM (OPTION)

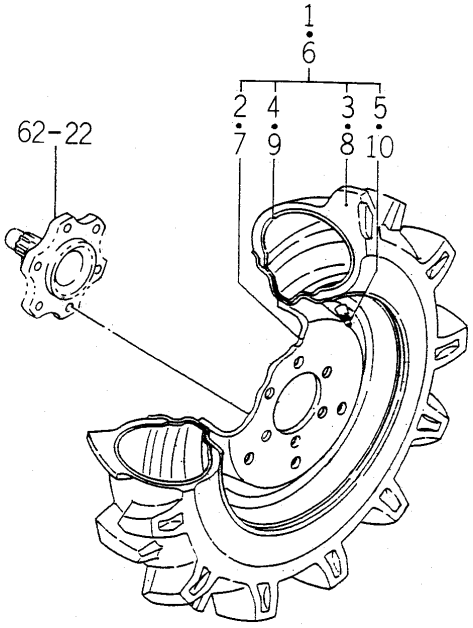

1620-437 -0100

KEY	PART CODE	DESCRIPTION	SPC	TYPE OF MODEL				ITC	COL	GRP	REMARKS
				TM3200	TM3200H	TM3240	TM3240H				
1	1620-437-210-00	WHEEL/FRONT/LH ASSY	T	1	1	1	1		6G		
2	1614-437-211-00	WHEEL COMP	T	1	1	1	1		6G		
3	1434-441-201-10	TIRE/4P 500-12	T	1	1	1	1				
4	V883-005-001-20	TUBE/500-12	T	1	1	1	1				
5	V999-200-003-00	CAP,TIRE VALVE	T	1	1	1	1				
6	1620-437-220-00	WHEEL/FRONT/RH ASSY	T	1	1	1	1		6G		
7	1614-437-211-00	WHEEL COMP	T	1	1	1	1		6G		
8	1434-441-201-10	TIRE/4P 500-12	T	1	1	1	1				
9	V883-005-001-20	TUBE/500-12	T	1	1	1	1				
10	V999-200-003-00	CAP,TIRE VALVE	T	1	1	1	1				

FIG.102 FRONT WHEEL (TURF) SYSTEM (TM3200) (OPTION)

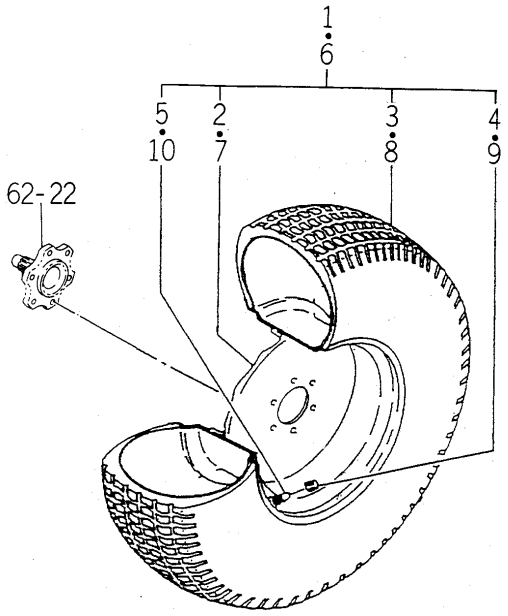

1682-441 -0100

KEY	PART CODE	DESCRIPTION	SPC	TYPE OF MODEL				ITC	COL	GRP	REMARKS
				TM3200	TM3200H	TM3240	TM3240H				
1	1682-441-210-00	TIRE/TURF/LH ASSY	T	1	1				6G		
2	1636-437-210-00	RIM/WHEEL COMP	T	1	1				6G		
3	1434-441-231-00	TIRE,TURF20.5X800-10	T	1	1						
4	V999-200-003-00	CAP,TIRE VALVE	T	1	1						
5	1386-241-002-00	VALVE/RIM	T	1	1						
6	1682-441-220-00	TIRE/TURF/RH ASSY	T	1	1				6G		
7	1636-437-210-00	RIM/WHEEL COMP	T	1	1				6G		
8	1434-441-231-00	TIRE,TURF20.5X800-10	T	1	1						
9	V999-200-003-00	CAP,TIRE VALVE	T	1	1						
10	1386-241-002-00	VALVE/RIM	T	1	1						

FIG.103 FRONT WHEEL (TURF) SYSTEM (TM3240) (OPTION)

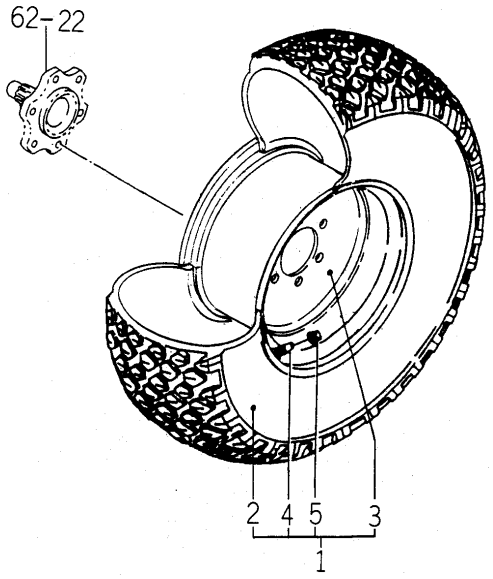

1685-441 -0100

KEY	PART CODE	DESCRIPTION	SPC	TYPE OF MODEL				ITC	COL	GRP	REMARKS
				TM3200	TM3200H	TM3240	TM3240H				
1	1685-441-510-00	TIRE/23X10.50-12ASSY	T			2	2		6G		
2	1636-317-201-00	TIRE/TURF/23-12	T			2	2				
3	1685-441-520-00	RIM/WHEEL COMP	T			2	2		6G		
4	1386-241-002-00	VALVE/RIM	T			2	2				
5	V999-200-003-00	CAP,TIRE VALVE	T			2	2				

FIG.104 HITCH (CREVICE) SET (R TYPE) (OPTION)

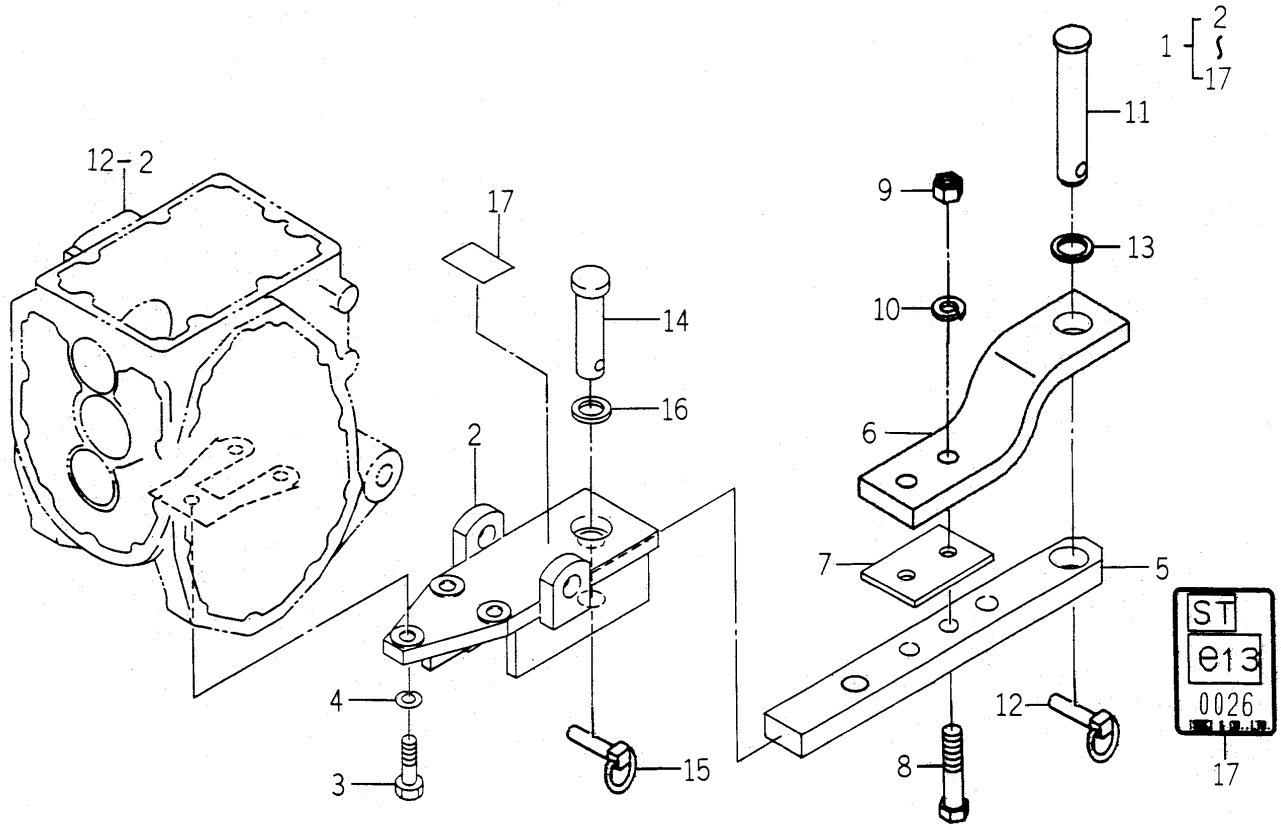

1750-520 -0100

KEY	PART CODE	DESCRIPTION	SPC	TYPE OF MODEL				ITC	COL	GRP	REMARKS
				TM3200	TM3200H	TM3240	TM3240H				
1	1750-520-200-00	DRAWBAR/CLEVIS SET	T	1	1	1	1				
2	1750-520-210-00	BRACKET/DRAWBAR COMP	T	1	1	1	1				
3	V201-361-204-00	BOLT/M12X40	T	3	3	3	3				
4	V401-160-012-00	WASHER,SP/M12	T	3	3	3	3				
5	1750-520-001-00	DRAWBAR	T	1	1	1	1				
6	1674-520-002-00	LINK/DRAWBAR	T	1	1	1	1				
7	1674-520-003-00	PLATE	T	1	1	1	1				
8	V201-261-608-50	BOLT/M16X85	T	2	2	2	2				
9	1518-924-001-00	NUT,U/M16	T	2	2	2	2				
10	V401-160-016-00	WASHER,SP/M16	T	2	2	2	2				
11	1640-520-005-00	PIN/25X91	T	1	1	1	1				
12	1673-525-002-20	LINKPIN	T	1	1	1	1				
13	1640-520-004-00	INSULATOR	T	1	1	1	1				
14	1674-520-210-00	PIN/30X162 COMP	T	1	1	1	1				
15	1673-525-002-20	LINKPIN	T	1	1	1	1				
16	1674-520-004-00	INSULATOR	T	1	1	1	1				
17	1750-520-002-00	LABEL/TRH1738A	T	1	1	1	1				

FIG.105 HITCH (DRAW BAR) SET (EXCEPT R TYPE) (OPTION)

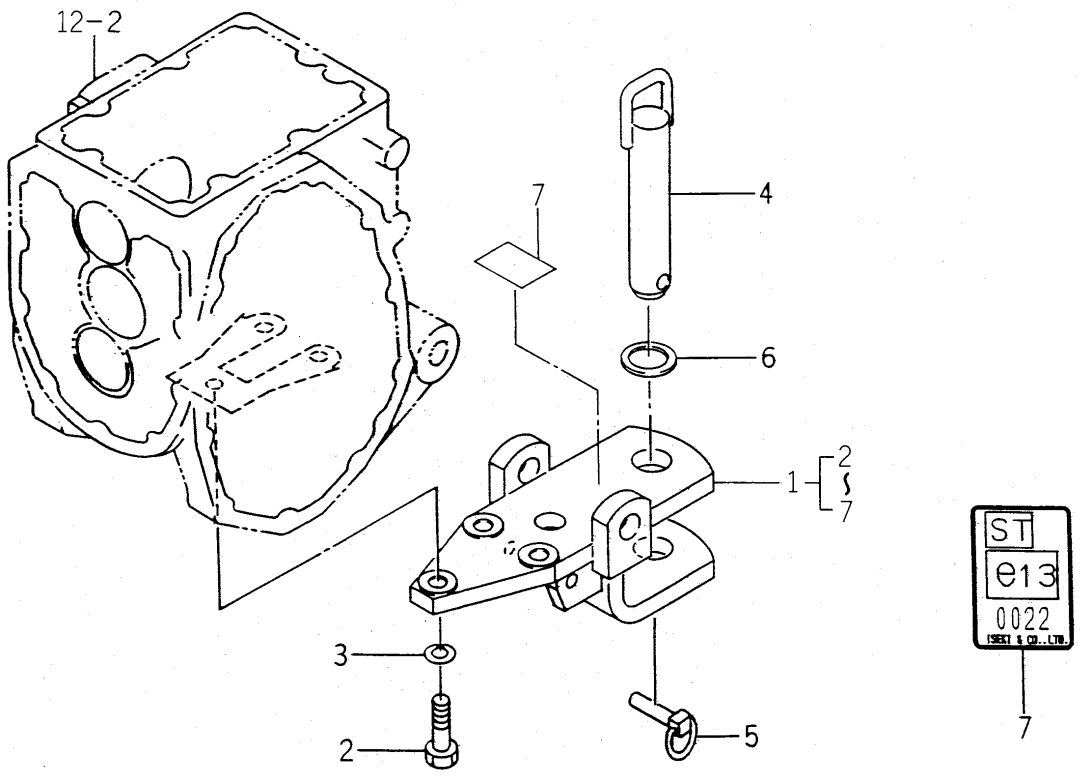

1738-520Z-0100

KEY	PART CODE	DESCRIPTION	SPC	TYPE OF MODEL				ITC	COL	GRP	REMARKS
				TM3200	TM3200H	TM3240	TM3240H				
1	1738-520-200-00	HITCHI/DRAWBARSET	T	1	1	1	1				
2	V201-361-204-00	BOLT/M12X40	T	3	3	3	3				
3	V401-160-012-00	WASHER,SP/M12	T	3	3	3	3				
4	1674-520-210-00	PIN/30X162 COMP	T	1	1	1	1				
5	1673-525-002-20	LINKPIN	T	1	1	1	1				
6	1674-520-004-00	INSULATOR	T	1	1	1	1				
7	1738-520-001-00	LABEL/DRAWBAR	T	1	1	1	1				

FIG.106 ROPS SET (EXCEPT R TYPE) (OPTION)

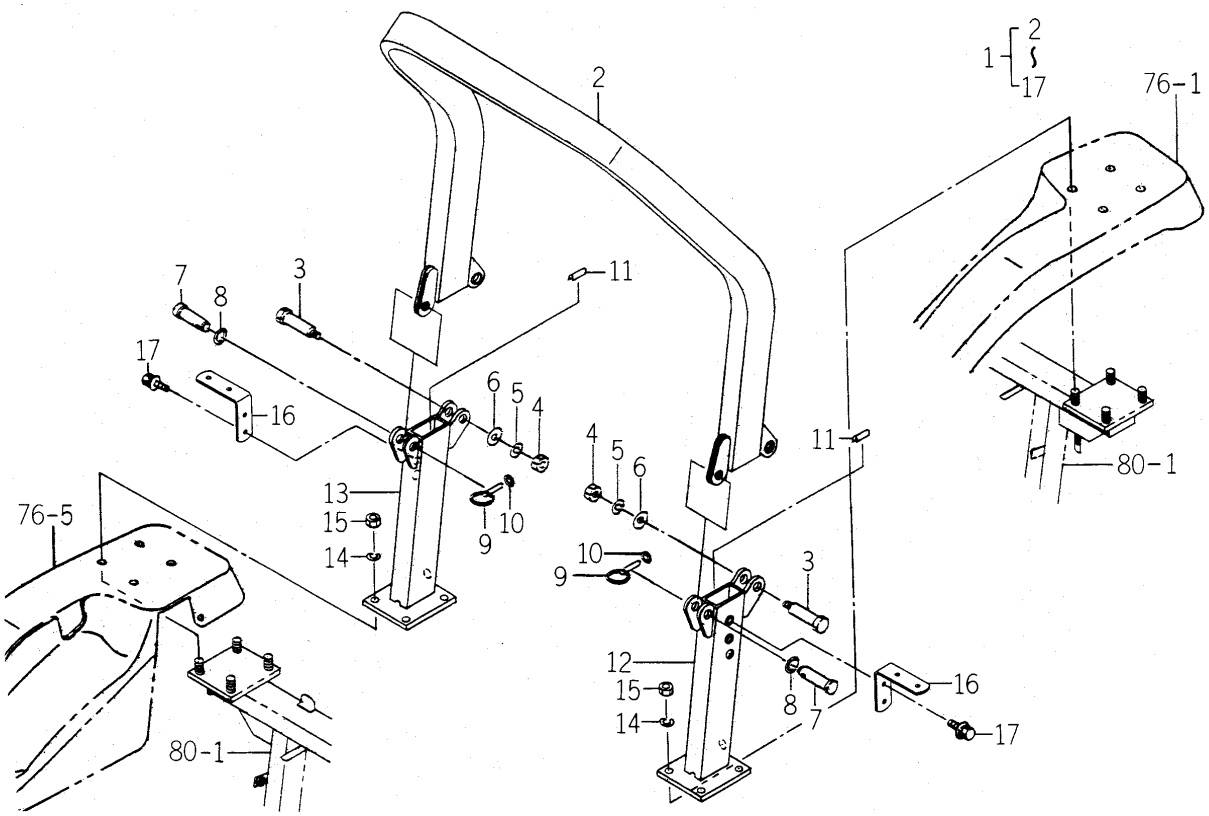

1750-702A-0100

KEY	PART CODE	DESCRIPTION	SPC	TYPE OF MODEL				ITC	COL	GRP	REMARKS
				TM3200	TM3200H	TM3240	TM3240H				
1	1750-702-200-00	FRAME/SF-184 SET	T	1	1	1	1				
2	1738-702-300-00	FRAME/UPPER COMP	T	1	1	1	1		7F		
3	1640-702-003-00	BOLT/SET/M16X60	T	2	2	2	2				
4	V304-260-016-00	NUT/M16	T	2	2	2	2				
5	V401-160-016-00	WASHER,SP/M16	T	2	2	2	2				
6	V411-260-016-00	WASHER / M16	T	2	2	2	2				
7	1640-702-004-00	PIN/20X58	T	2	2	2	2				
8	V720-112-401-80	O-RING/P18	T	2	2	2	2				
9	1673-525-002-20	LINKPIN	T	2	2	2	2				
10	V720-101-900-90	O-RING/P 9	T	2	2	2	2				
11	1560-314-001-00	INSULATOR	T	2	2	2	2				
12	1738-702-310-00	FRAME/LH COMP	T	1	1	1	1		7F		
13	1738-702-320-00	FRAME/RH COMP	T	1	1	1	1		7F		
14	V401-160-014-00	WASHER,SP/M14	T	8	8	8	8				
15	V304-460-014-00	NUT/M14	T	8	8	8	8				
16	1739-702-001-00	PLATE/L/38X114	T	2	2	2	2				
17	V211-360-802-00	BOLT/SP	T	4	4	4	4				

FIG.107 WEIGHT (BUMPER) SYSTEM (OPTION)

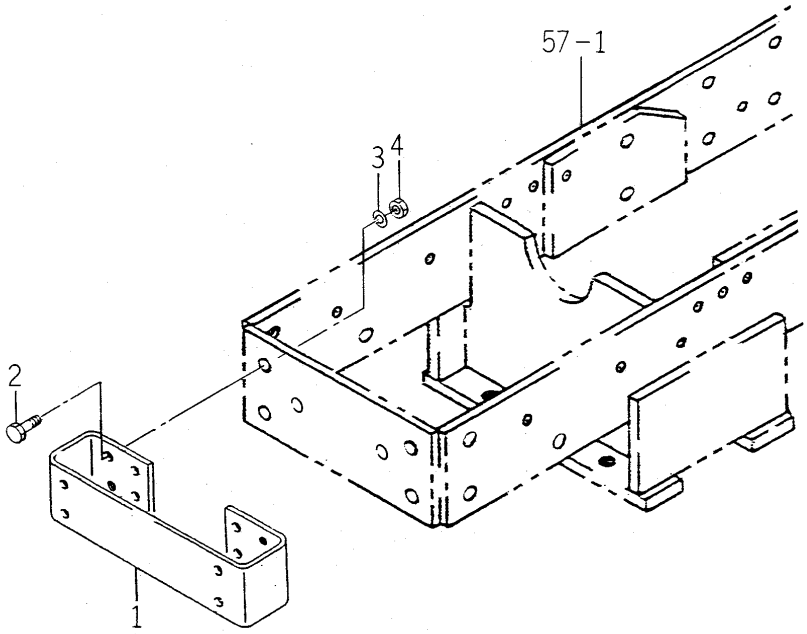

1672-922 -0100

KEY	PART CODE	DESCRIPTION	SPC	TYPE OF MODEL				ITC	COL	GRP	REMARKS
				TM3200	TM3200H	TM3240	TM3240H				
1	1620-410-001-10	PLATE/BUMPER	T	1	1	1	1				
2	V201-361-203-50	BOLT/M12X35	T	4	4	4	4				
3	V401-160-012-00	WASHER,SP/M12	T	4	4	4	4				
4	V304-260-012-00	NUT/M12	T	4	4	4	4				

FIG.108 COMPONENT PARTS FOR K200-053-000-00 ON Fig.56

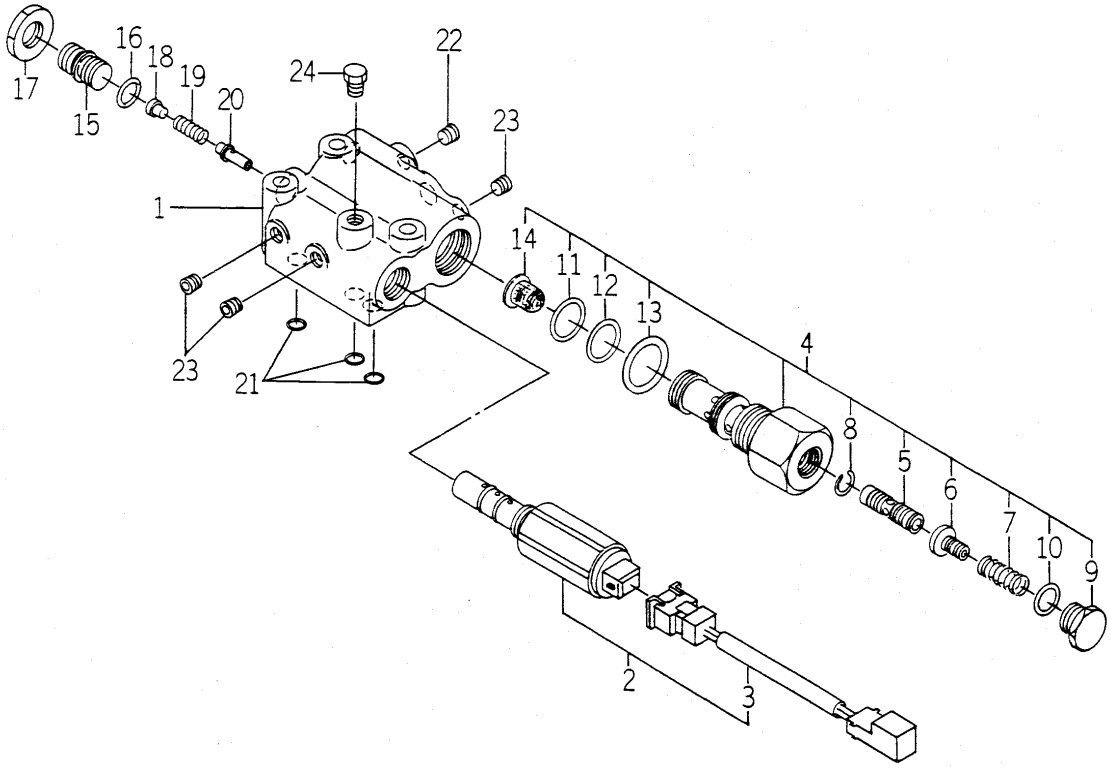

K200-053-000-0C

KEY	PART CODE	DESCRIPTION	SPC	TYPE OF MODEL				ITC	COL	GRP	REMARKS
				TM3200	TM3200H	TM3240	TM3240H				
1	K200-053-001-00	BODY/HVA1/053	*		1		1				
2	K200-059-100-00	VALUVE,SOLENOID SET	*		1		1				
3	K200-053-102-00	HARNESS/PA/BLUE	*		1		1				
4	K233-005-000-00	VALVE/FLOCON ASSY	*		1		1				
5	K233-005-001-00	SPOOL/FLOCON/1.15	*		1		1				
6	K233-002-003-00	SPRING/GUIDE	*		1		1				
7	K233-002-004-00	SPRING/HC027	*		1		1				
8	K233-002-005-00	SPOOL/STOPPER	*		1		1				
9	K211-008-011-00	PLUG	*		1		1				
10	V720-112-401-40	O-RING/P14	*		1		1				
11	V720-112-401-80	O-RING/P18	*		1		1				
12	V720-112-402-00	O-RING/P20	*		1		1				
13	V720-113-502-50	RING/O	*		1		1				
14	1650-508-002-00	FILTER/LINE/12X18X15	*		1		1				
15	K250-031-005-00	SCREW/F	*		1		1				
16	V720-102-401-20	O-RING/P12	*		1		1				
17	K250-001-007-00	NUT	*		1		1				
18	K200-053-002-00	PLATE/SPRING	*		1		1				
19	K200-035-006-00	SPRING/HC020	*		1		1				
20	K190-001-202-10	POPPET	*		1		1				
21	V720-111-900-70	O-RING/P 7	*		3		3				
22	V780-140-000-2T	PLUG/SCREW/SEAL	*		1		1				
23	V780-140-000-1T	PLUG/SCREW/SEAL	*		3		3				
24	V782-160-000-2T	PLUG/SCREW/SEAL	*		1		1				

FIG.109 COMPONENT PARTS FOR K211-001-000-00 ON Fig.66

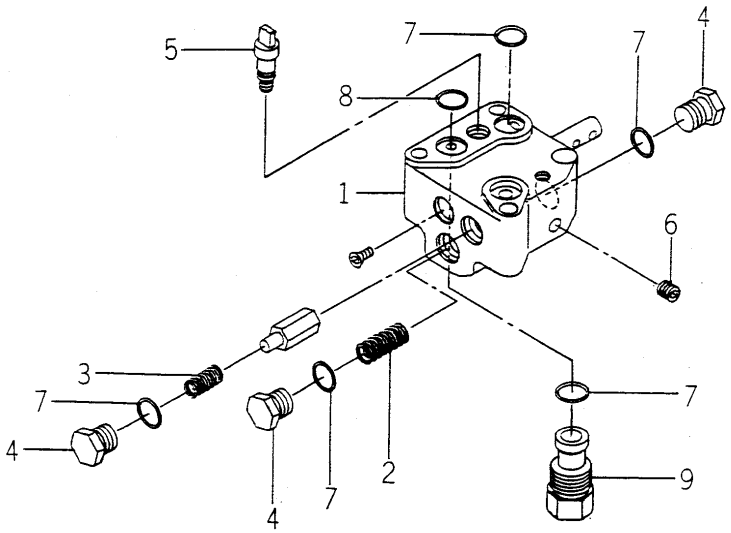

K211-001-000-0L

KEY	PART CODE	DESCRIPTION	SPC	TYPE OF MODEL				ITC	COL	GRP	REMARKS
				TM3200	TM3200H	TM3240	TM3240H				
1	K211-001-100-10	VALVE SET	*	1	1	1	1				
2	K211-001-006-20	SPRING	*	1	1	1	1				
3	K211-001-007-00	SPRING	*	1	1	1	1				
4	K211-001-008-00	PLUG	*	3	3	3	3				
5	K211-001-009-00	NEEDLE	*	1	1	1	1				
6	V780-140-000-1T	PLUG/SCREW/SEAL	*	4	4	4	4				
7	V720-112-401-20	O-RING/P12	*	7	7	7	7				
8	V720-111-900-60	O-RING P6 HS90	*	1	1	1	1				
9	K250-019-000-10	VALVE/RELIEF ASSY	*	1	1	1	1				

FIG.110 COMPONENT PARTS FOR K510-008-000-00 ON Fig.14

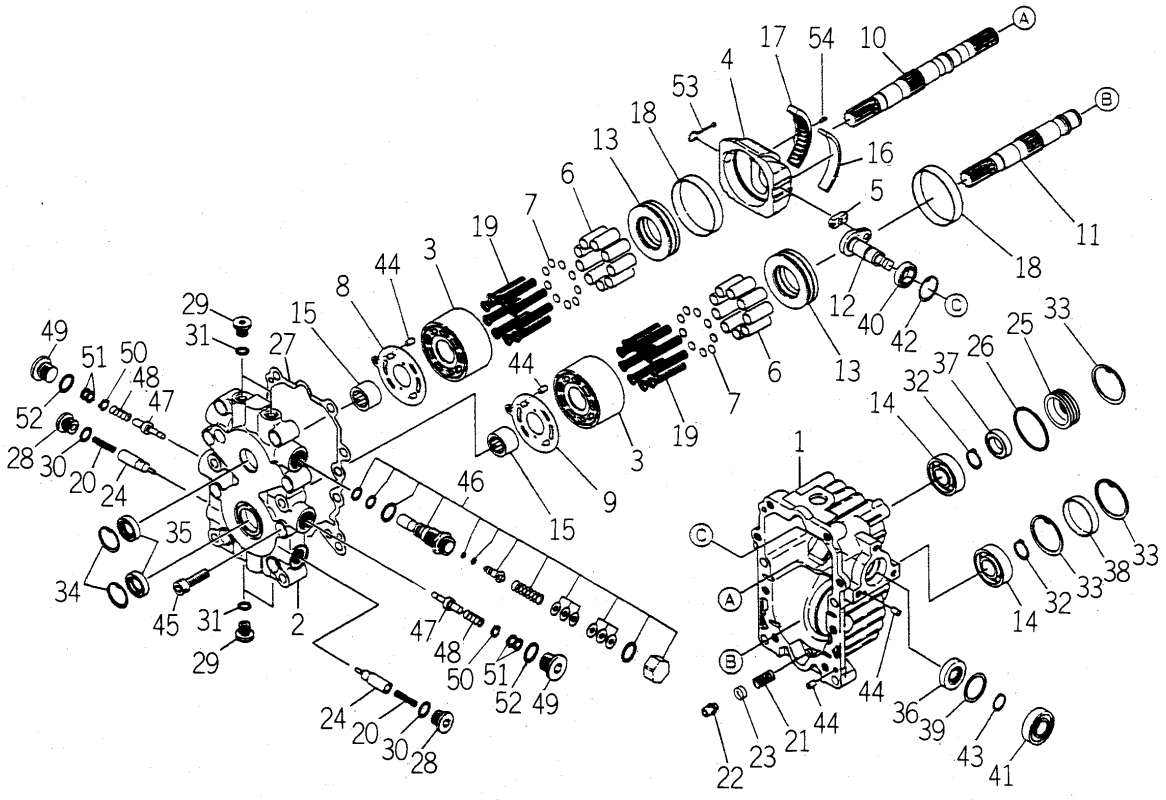

K510-008-000-0A

KEY	PART CODE	DESCRIPTION	SPC	TYPE OF MODEL				ITC	COL	GRP	REMARKS
				TM3200	TM3200H	TM3240	TM3240H				
1	K510-008-001-00	CASE	*		1		1				
2	K510-008-004-00	BLOCK/PORT	*		1		1				
3	K510-001-005-00	BLOCK/CYLINDER	*		2		2				
4	K510-003-006-00	PLATE/SWASH	*		1		1				
5	K510-001-007-00	METAL/SLIDE	*		1		1				
6	K510-001-008-00	PISTON	*		18		18				
7	K510-001-009-00	SHIM/0.9	*		18		18				
8	K510-008-010-00	PLATE/VALVE/PUMP	*		1		1				
9	K510-001-011-00	PLATE/VALVE/MOTOR	*		1		1				
10	K510-003-012-00	SHAFT/PUMP	*		1		1				
11	K510-008-013-00	SHAFT/MOTOR	*		1		1				
12	K510-008-014-00	ARM/TRUNION	*		1		1				
13	K510-003-015-00	BEARING/THRUST	*		2		2				
14	V600-110-620-40	BEARING,RB/6204	*		2		2				
15	K510-001-016-00	NEEDLE	*		2		2				
16	K510-001-017-00	BUSH/95X100X22	*		1		1				
17	K510-003-017-00	BEARING/NEEDLE	*		1		1				
18	K510-001-018-00	BUSH/68X71X14	*		2		2				
19	K510-001-019-00	SPRING/HC053	*		18		18				
20	K510-001-020-00	SPRING/HC030	*		2		2				
21	K510-003-021-00	SPRING/HC021	*		1		1				
22	K510-003-022-00	POPPET/RELIEF	*		1		1				
23	K510-003-037-00	PLATE/SPRING	*		1		1				
24	K510-003-023-00	POPPET/CHECK	*		2		2				
25	K510-001-025-00	COLLAR/23X47X12	*		1		1				
26	V720-103-504-10	O-RING /P41	*		1		1				
27	K510-001-026-00	GASKET	*		1		1				
28	K510-001-029-00	PLUG(G3/8)	*		2		2				
29	K275-001-003-00	PLUG(PF1/4)	*		4		4				
30	V720-112-401-40	O-RING/P14	*		2		2				

FIG.110 COMPONENT PARTS FOR K510-008-000-00 ON Fig.14

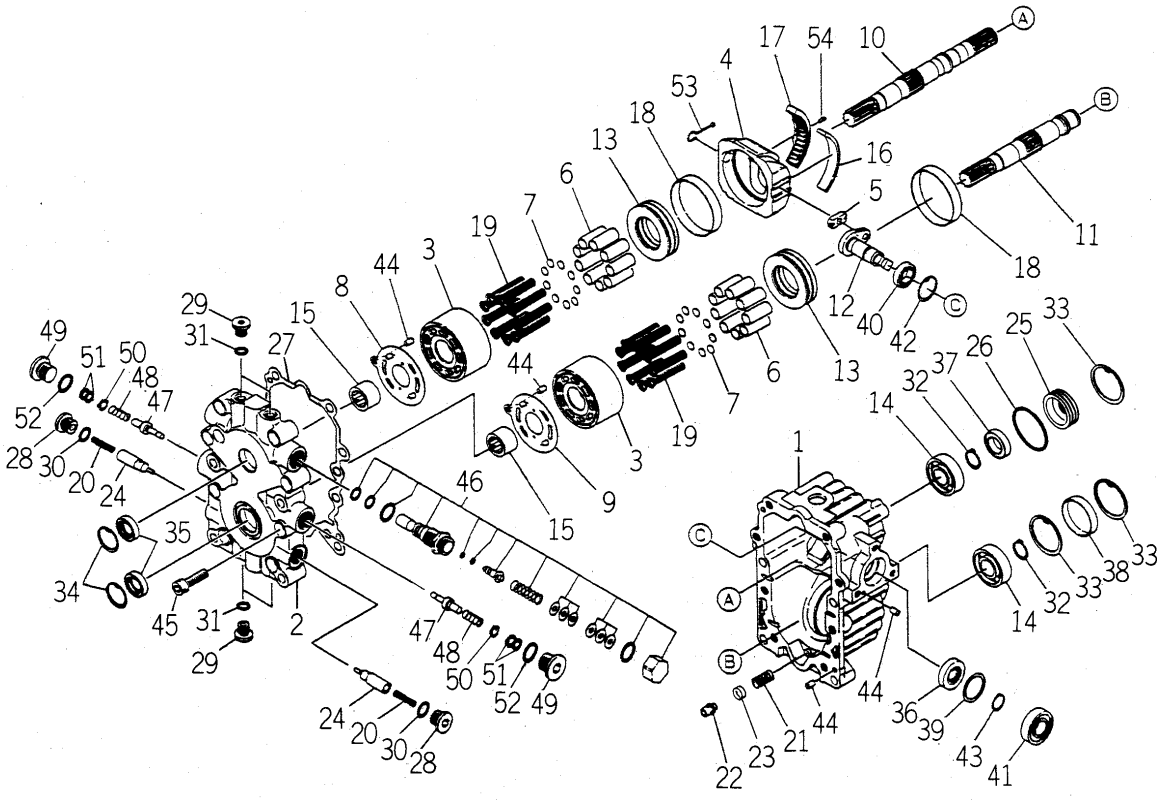

K510-008-000-0A

KEY	PART CODE	DESCRIPTION	SPC	TYPE OF MODEL				ITC	COL	GRP	REMARKS
				TM3200	TM3200H	TM3240	TM3240H				
31	V720-112-401-10	RING/O	*		4		4				
32	V704-140-020-00	RING,SNAP/20C	*		2		2				
33	V705-140-047-00	RING,SNAP/47 C	*		3		3				
34	V705-140-032-00	RING,SNAP/32 C	*		2		2				
35	K510-001-030-00	SEAL/OIL	*		2		2				
36	K510-001-031-00	SEAL/OIL	*		1		1				
37	K510-001-032-00	SEAL/OIL	*		1		1				
38	1421-201-002-00	SEAL/47	*		1		1				
39	K510-001-034-00	WASHER/25X30X1	*		1		1				
40	V600-110-690-30	BEARING	*		1		1				
41	V600-150-600-30	BEARING,RB/6003SS	*		1		1				
42	V705-140-030-00	RING,SNAP/30 C	*		1		1				
43	V704-140-017-00	RING,SNAP/17 C	*		1		1				
44	K510-001-036-00	PIN,ST	*		4		4				
45	V220-541-003-50	SCREW/SOCKET	*		8		8				
46	K510-003-100-00	VALVE/RELIEF SET	*		1		1				
47	K510-003-200-00	POPPET	*		2		2				
48	K510-003-204-00	SPRING/HC024	*		2		2				
49	K510-003-205-00	PLUG/M18	*		2		2				
50	K510-003-206-00	SHIM/0.5	*		2		2				
51	K510-003-207-00	SHIM/0.1	*		4		4				
52	V720-112-401-60	O-RING/P16	*		2		2				
53	K510-003-500-00	PIN	*		1		1				
54	V523-100-301-00	PIN	*		1		1				

FIG.111 COMPONENT PARTS FOR 1685-211-500-10 ON Fig.30

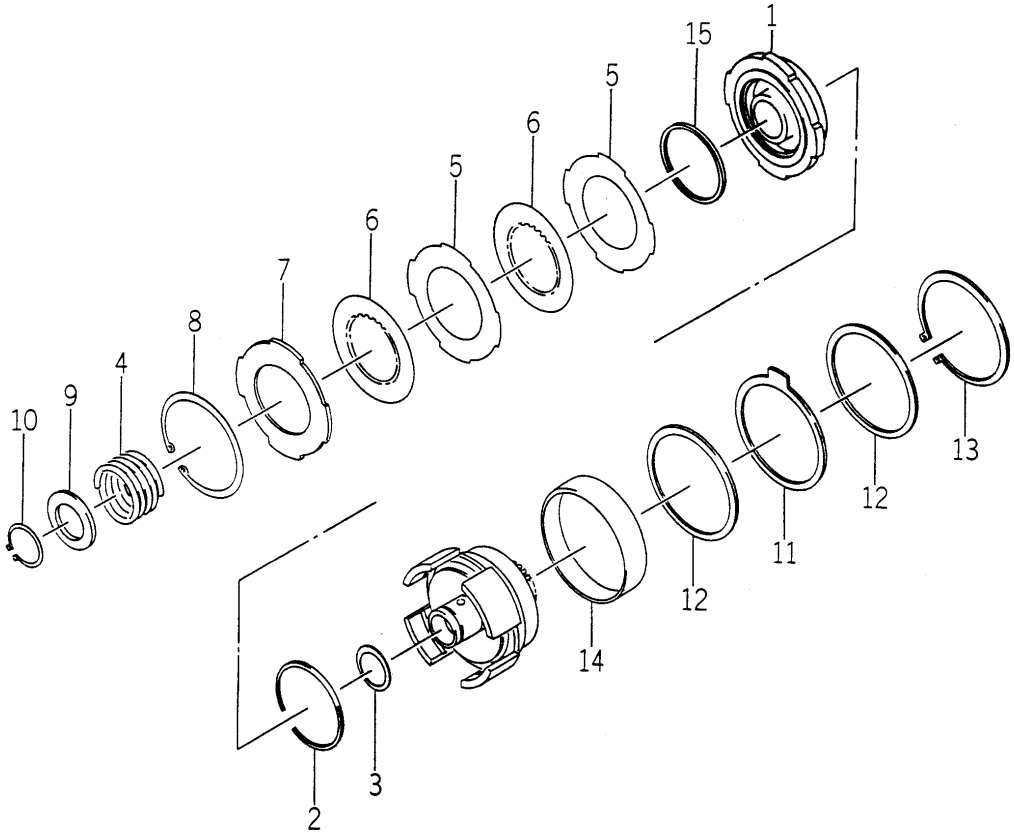

1685-211-500-1C

KEY	PART CODE	DESCRIPTION	SPC	TYPE OF MODEL				ITC	COL	GRP	REMARKS
				TM3200	TM3200H	TM3240	TM3240H				
1	1688-211-502-10	PISTON	*		1		1				
2	1688-211-503-00	SEALRING/77	*		1		1				
3	1688-211-504-00	SEALRING/32	*		1		1				
4	1688-211-505-00	SPRING	*		1		1				
5	1575-261-017-00	SEPARATERPLATE	*		2		2				
6	1575-261-016-00	DISKPLATE	*		2		2				
7	1575-261-025-00	BACKPLATE	*		1		1				
8	1688-211-506-00	SNAPRING	*		1		1				
9	1688-211-507-00	WASHER	*		1		1				
10	1688-211-508-00	SNAPRING/32	*		1		1				
11	1688-211-509-00	DISK/BRAKE	*		1		1				
12	1688-211-521-00	PRESSURE/BRAKE	*		2		2				
13	1688-211-522-00	SNAPRING/85	*		1		1				
14	1688-211-523-00	CONECTERRING	*		1		1				
15	1688-211-524-00	SPRING/WAVE	*		1		1				

WIRING DIAGRAM

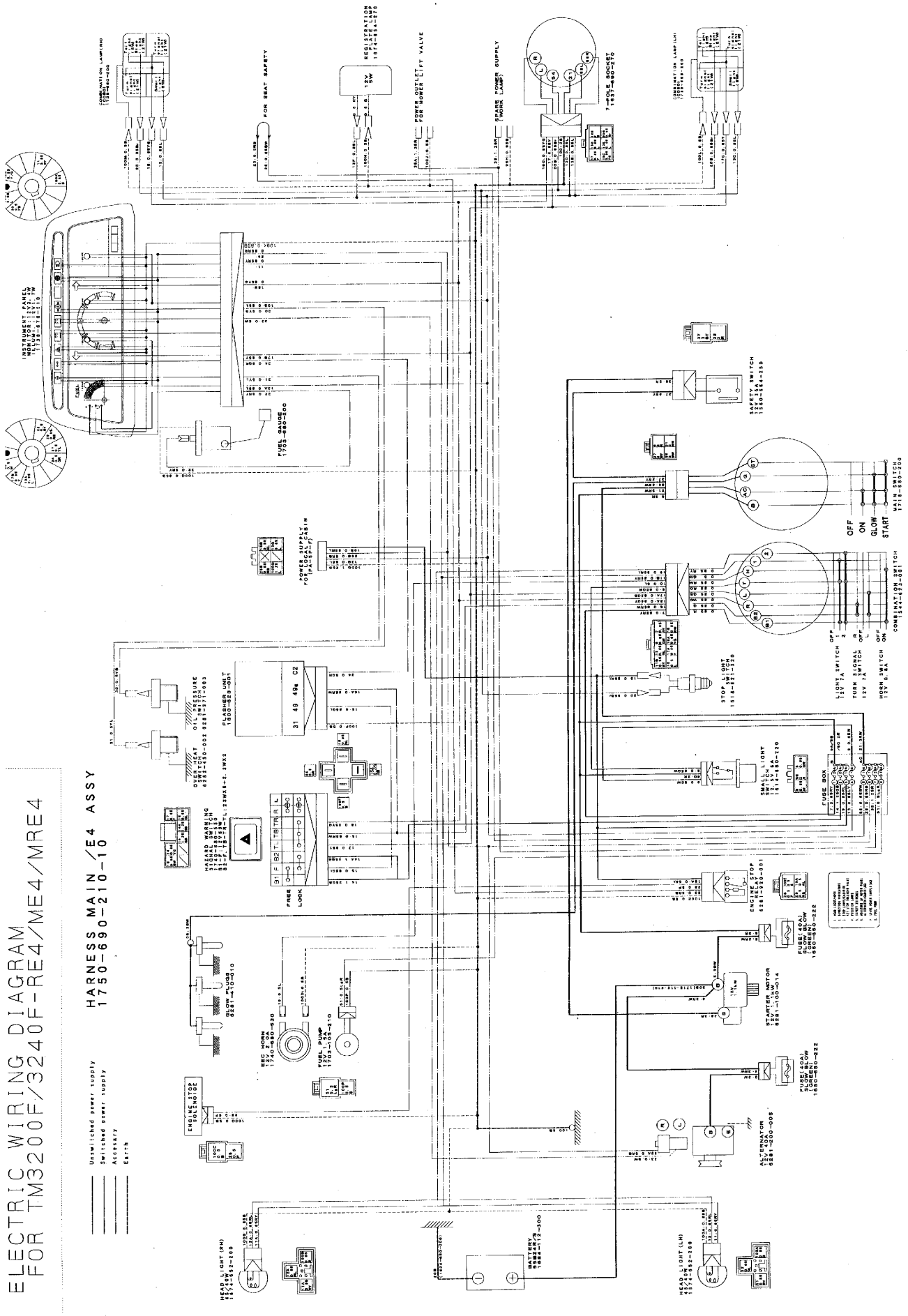

WIRING DIAGRAM (HST)

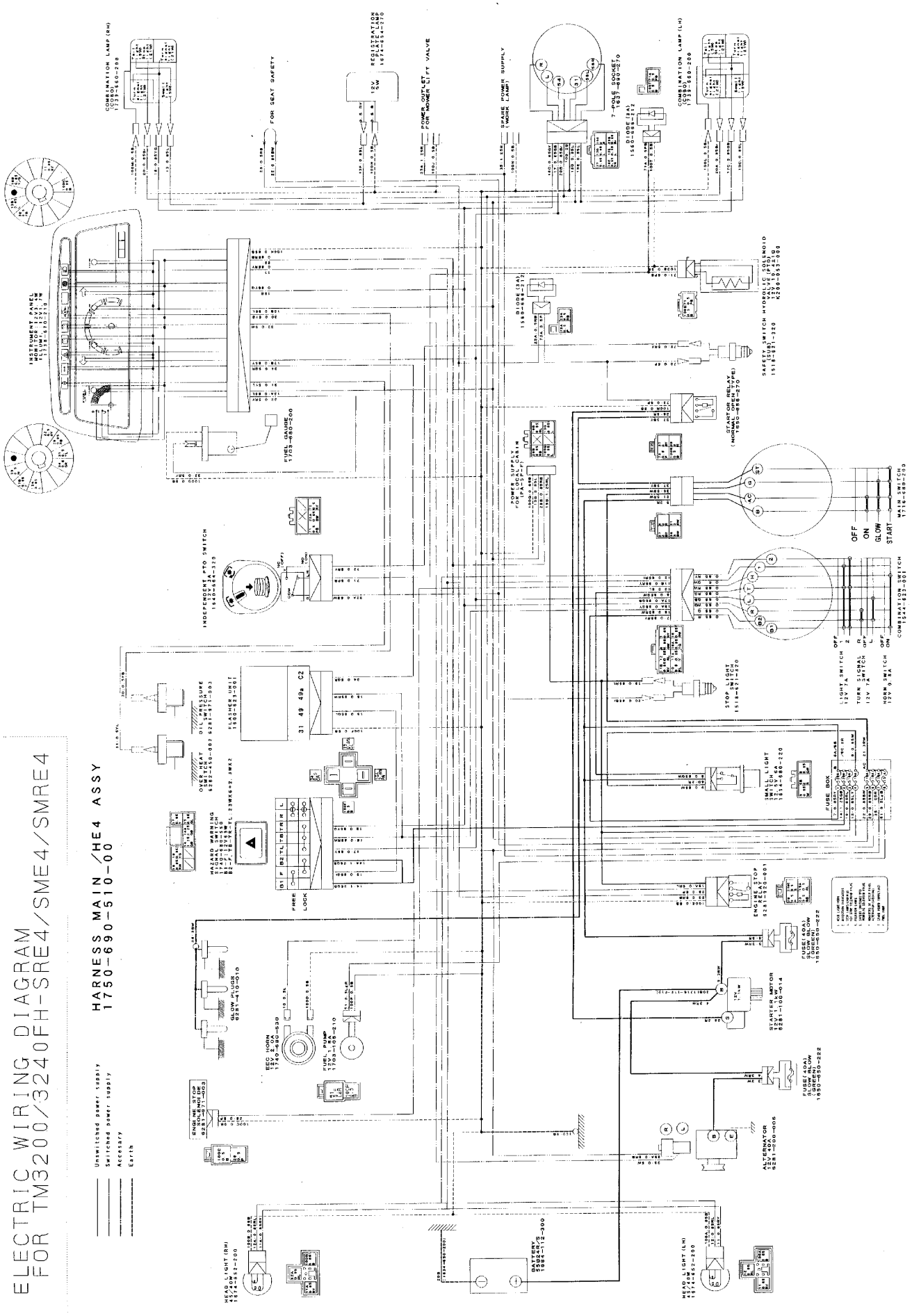

Numerical Index

Part Code	Fig.	Key	Part Code	Fig.	Key	Part Code	Fig.	Key
1373-121-001-00	23	4	6209-630-002-10	25	22	6211-751-001-10	2	2
1425-621-004-00	9	14	6209-704-009-00	21	7	6211-760-030-00	5	30
3625-540-004-00	9	38	6209-730-005-00	12	3	6211-766-019-00	5	31
3632-360-036-00	21	6		20	11	6211-777-007-30	10	1
3817-401-001-00	9	10	6209-730-006-00	15	4	6212-111-094-10	13	1
	11	20	6209-740-001-00	9	26	6212-114-094-10	14	1
	17	14	6209-740-005-00	5	18	6212-116-094-10	14	3
	17	19	6209-749-001-20	5	15	6212-121-014-20	13	2
	20	8		9	44	6212-124-014-10	14	2
6209-000-002-00	11	18	6209-920-002-00	9	20	6212-126-014-10	14	4
6209-000-003-00	1	7		16	14	6212-211-001-10	13	3
6209-000-004-10	5	2		25	13	6212-230-004-10	13	5
6209-030-043-00	20	17	6209-940-004-00	11	14	6212-235-005-00	13	6
6209-030-044-00	18	4	6211-110-057-30	1	1	6212-271-006-00	13	7
6209-030-085-00	23	8	6211-141-029-20	1	6	6212-274-006-00	6	5
6209-046-015-00	15	8		25	3	6212-276-006-00	6	6
6209-050-001-00	9	32	6211-170-004-20	2	1	6212-310-009-30	15	1
6209-050-002-00	9	33	6211-173-003-00	2	3	6212-330-051-00	15	5
6209-300-013-00	5	33		25	4	6212-333-003-00	15	6
6209-300-014-00	1	8	6211-210-037-20	5	1	6212-370-011-00	15	9
6209-360-005-00	21	3	6211-258-001-00	5	8	6212-371-009-00	15	10
6209-360-021-00	21	5		25	8	6212-372-002-10	15	11
6209-360-028-10	2	6	6211-258-002-00	5	9	6212-379-001-00	15	14
6209-409-001-00	9	18		25	9	6212-511-002-00	12	1
6209-409-003-00	11	17	6211-291-016-00	5	26	6212-521-008-00	15	3
6209-490-002-10	2	4	6211-292-001-20	5	27	6212-522-010-00	12	2
6209-500-003-00	9	16		25	11	6212-523-023-00	12	6
	9	25	6211-310-012-30	9	1	6212-524-002-20	20	10
	25	23	6211-311-007-40	9	39	6212-530-005-20	9	46
6209-572-003-00	2	5	6211-312-003-20	9	27	6212-531-005-10	5	6
	25	5		25	14	6212-535-001-00	12	4
6209-580-002-10	20	26	6211-312-004-20	9	40	6212-535-002-00	20	14
6209-587-001-00	13	4		25	15	6212-551-001-10	11	1
6209-600-004-00	9	24	6211-319-003-00	9	42	6212-552-001-20	11	2
6209-600-006-00	7	2	6211-341-053-20	8	1	6212-561-001-10	11	3
6209-605-004-10	1	3	6211-342-002-10	8	2	6212-563-001-00	11	4
6209-610-001-10	5	3	6211-361-010-10	7	1	6212-565-001-00	11	5
6209-610-002-10	9	3	6211-510-001-00	5	10	6212-569-002-00	1	4
6209-610-008-00	5	7	6211-511-003-00	5	11		25	2
6209-610-009-00	5	4	6211-511-004-00	5	12	6212-571-006-00	11	6
6209-625-002-00	9	7	6211-540-001-00	6	1	6212-575-002-00	11	7
	25	12	6211-560-001-00	6	3	6212-600-002-10	11	8
6209-625-012-00	5	14	6211-599-001-10	5	13	6212-611-004-10	11	9
	25	10		6	2	6212-616-002-00	11	16
6209-630-002-10	24	6		6	4	6212-620-001-20	11	10

Numerical Index

Part Code	Fig.Key		Part Code	Fig.Key		Part Code	Fig.Key	
6212-626-002-10	11	11	6213-743-002-10	25	20	6215-345-030-00	26	36
6212-628-004-00	11	12	6214-111-011-20	3	1	6215-345-031-00	26	37
6212-628-005-00	11	13	6214-115-001-20	3	2	6215-345-032-00	26	38
6213-100-003-30	16	1		25	6	6215-345-033-00	26	39
6213-111-001-30	16	2	6214-141-010-10	4	1	6215-345-034-00	26	40
6213-119-001-00	16	6	6214-145-001-30	4	2	6215-345-035-00	26	41
6213-120-003-20	16	3		25	7	6215-345-036-00	26	42
6213-125-001-00	16	4	6215-300-036-00	19	1	6215-345-037-00	26	43
6213-129-003-00	16	5	6215-311-027-00	26	52	6215-345-038-00	26	44
6213-129-006-00	5	16	6215-315-002-00	19	2	6215-345-039-00	26	45
	8	3	6215-330-024-00	26	1	6215-345-040-00	26	46
6213-140-008-00	16	8	6215-331-008-00	26	2	6215-345-041-00	26	47
6213-149-002-00	16	10	6215-332-013-00	26	5	6215-345-042-00	26	48
6213-160-002-20	9	28	6215-339-001-00	26	6	6215-345-043-00	26	49
6213-161-001-20	9	29	6215-342-001-00	26	3	6215-359-001-00	26	50
6213-164-001-00	9	30	6215-343-001-00	26	4	6215-359-002-00	26	51
6213-240-002-10	16	15	6215-345-001-00	26	7	6215-411-125-00	21	2
6213-311-006-00	16	12	6215-345-002-00	26	8	6215-411-126-10	19	3
6213-319-001-00	5	25	6215-345-003-00	26	9	6215-411-127-00	19	4
6213-610-005-40	17	1	6215-345-004-00	26	10	6215-411-128-00	19	5
6213-611-003-20	17	2	6215-345-005-00	26	11	6215-412-002-10	21	1
6213-612-004-00	17	9	6215-345-006-00	26	12	6215-419-001-00	21	8
6213-613-002-10	17	8	6215-345-007-00	26	13	6215-520-001-00	20	16
6213-614-003-10	17	12	6215-345-008-00	26	14	6215-526-004-00	20	18
	25	18	6215-345-009-00	26	15	6215-531-019-00	20	23
6213-614-004-10	17	16	6215-345-010-00	26	16	6215-541-001-10	20	19
	25	19	6215-345-011-00	26	17	6215-541-016-30	22	2
6213-619-001-00	17	15	6215-345-012-00	26	18	6215-541-024-30	20	24
6213-619-002-00	17	11	6215-345-013-00	26	19	6215-542-004-20	9	21
6213-619-003-00	17	10	6215-345-014-00	26	20	6215-542-005-10	9	23
6213-621-003-00	17	6	6215-345-015-00	26	21	6215-542-006-00	20	21
6213-622-002-10	17	5	6215-345-016-00	26	22	6215-543-002-10	20	20
6213-631-002-00	17	3	6215-345-017-00	26	23	6215-546-003-10	9	17
6213-631-005-00	17	4	6215-345-018-00	26	24	6215-548-026-00	22	1
6213-641-002-10	18	2	6215-345-019-00	26	25	6215-549-007-10	20	27
6213-642-002-00	17	7	6215-345-020-00	26	26	6215-549-012-00	20	31
6213-660-023-00	18	1	6215-345-021-00	26	27	6215-549-013-00	5	29
6213-669-008-00	18	3	6215-345-022-00	26	28	6215-600-103-10	20	1
6213-671-012-00	18	5	6215-345-023-00	26	29	6215-611-001-00	27	8
6213-674-006-20	23	2	6215-345-024-00	26	30	6215-612-001-00	27	11
6213-711-003-20	17	27	6215-345-025-00	26	31	6215-619-009-00	27	1
6213-716-001-50	17	22	6215-345-026-00	26	32	6215-619-010-00	27	2
6213-721-007-00	5	24	6215-345-027-00	26	33	6215-619-022-00	27	10
6213-729-013-10	17	20	6215-345-028-00	26	34	6215-621-016-20	20	9
6213-743-002-10	17	23	6215-345-029-00	26	35	6215-622-001-00	27	14

Numerical Index

Part Code	Fig.	Key	Part Code	Fig.	Key	Part Code	Fig.	Key
6215-629-001-00	27	12	6281-129-030-00	28	28	6281-229-029-00	29	14
6215-629-002-00	27	13	6281-129-043-00	28	30	6281-229-032-00	29	6
6215-629-003-00	27	20	6281-129-058-00	28	9	6281-229-033-00	29	11
6215-629-004-00	27	21	6281-129-062-00	28	33	6281-271-002-00	29	26
6215-629-005-00	27	22	6281-129-064-00	28	7	6281-410-010-00	24	3
6215-629-006-00	27	23	6281-129-065-00	28	12	6281-910-003-10	24	5
6215-629-007-00	27	24	6281-129-066-00	28	13	6281-920-001-00	24	8
6215-629-008-00	27	25	6281-129-067-00	28	14	6281-971-003-00	24	1
6215-629-009-00	27	26	6281-129-068-00	28	15	6282-450-002-00	24	2
6215-629-010-00	27	27	6281-129-069-00	28	16	6287-810-015-20	25	1
6215-629-011-00	27	28	6281-129-070-00	28	17	6294-453-002-00	5	22
6215-629-012-00	27	29	6281-129-071-00	28	18	6509-605-019-10	5	5
6215-629-013-00	27	30	6281-129-072-00	28	21		9	2
6215-629-014-00	27	31	6281-129-073-00	28	22	6513-770-022-10	17	26
6215-629-015-00	27	32	6281-129-074-00	28	23	6901-066-645-00	15	15
6215-629-016-00	27	33	6281-129-075-00	28	24	6901-910-612-00	12	5
6215-631-019-00	27	9	6281-129-076-00	28	25		20	15
6215-634-001-00	27	18	6281-129-077-00	28	26	6901-910-625-00	16	7
6215-635-001-00	27	16	6281-129-078-00	28	27	6901-910-816-00	5	32
6215-637-001-00	27	15	6281-129-079-00	28	34	6901-911-020-00	8	4
6215-639-004-00	27	17	6281-129-080-00	28	8	6902-050-610-00	15	12
6215-639-005-00	27	19	6281-151-014-00	28	20	6902-050-816-00	9	41
6215-641-006-00	27	7	6281-200-005-00	23	1	6904-110-818-00	5	20
6215-643-006-00	27	3	6281-213-018-00	29	7	6904-110-822-00	5	21
6215-644-007-00	27	4	6281-214-003-00	29	12		9	4
6215-649-001-00	27	5	6281-214-004-00	29	13		9	45
6215-649-002-00	27	6	6281-215-001-00	29	17	6904-110-840-00	5	19
6219-310-003-20	9	35	6281-216-001-00	29	18		17	17
6219-732-016-00	24	4	6281-217-002-00	29	16	6904-110-850-00	9	6
6219-752-006-00	20	2	6281-221-007-00	29	4	6904-110-855-00	9	5
6219-752-007-00	20	3	6281-222-004-00	29	1	6909-110-406-00	9	34
6219-752-008-00	20	4	6281-229-002-00	29	2		20	28
6219-752-009-00	20	5	6281-229-003-00	29	3	6909-110-408-00	9	48
6219-752-010-00	20	6	6281-229-004-00	29	5		9	50
6281-100-014-00	23	7	6281-229-006-00	29	8		28	32
6281-111-009-00	28	1	6281-229-007-00	29	9	6909-110-410-00	23	6
6281-115-017-00	28	10	6281-229-008-00	29	10	6909-150-506-00	15	13
6281-115-018-00	28	11	6281-229-011-00	29	15	6909-150-508-00	28	31
6281-117-003-00	28	4	6281-229-012-00	29	19	6909-902-299-00	5	23
6281-118-007-00	28	3	6281-229-013-00	29	20	6909-906-105-10	16	13
6281-119-009-00	28	2	6281-229-014-00	29	21	6911-129-006-00	1	2
6281-121-010-00	28	5	6281-229-015-00	29	22	J061-210-015-00	17	21
6281-124-011-00	28	6	6281-229-016-00	29	23	J062-076-082-00	21	4
6281-127-003-00	28	19	6281-229-017-00	29	24	J062-087-093-00	21	9
6281-129-029-00	28	29	6281-229-018-00	29	25	P117-303-003-00	9	22

Numerical Index

Part Code	Fig.Key		Part Code	Fig.Key		Part Code	Fig.Key
V211-560-802-50	4	3	V723-102-005-00	25	16		
V230-360-601-00	7	4	V723-102-005-50	17	28		
V230-360-601-20	5	28		25	21		
	24	7					
V230-360-601-60	9	37					
V231-360-801-60	9	11					
	16	11					
V231-360-802-00	3	3					
	17	18					
	17	24					
	20	7					
	23	3					
V231-360-802-50	17	29					
V231-360-803-00	9	15					
V231-360-804-00	3	4					
V231-360-804-50	9	12					
	17	13					
V231-360-805-00	11	19					
V231-360-805-50	9	9					
V231-360-807-50	9	13					
	17	25					
V231-360-808-50	9	8					
V233-361-002-00	10	2					
V233-361-007-00	23	5					
V341-120-008-00	9	19					
V401-160-006-00	20	30					
V401-160-008-00	9	49					
	9	51					
V411-260-006-00	20	29					
V523-100-802-40	5	17					
V523-101-001-80	15	2					
V600-110-600-40	20	13					
V600-110-600-50	9	47					
V600-110-620-30	20	12					
V600-150-600-20	15	7					
V682-200-000-60	1	5					
V704-140-016-00	11	15					
V705-140-012-00	9	31					
V710-140-004-00	20	22					
V720-101-900-80	20	25					
V720-102-401-50	16	9					
	25	17					
V720-102-401-80	7	3					
V723-102-002-40	9	36					
V723-102-005-00	9	43					

Numerical Index

6004-097-340-00

Part Code	Fig.	Key	Part Code	Fig.	Key	Part Code	Fig.	Key
1373-121-001-00	23	4	6209-630-002-10	25	22	6211-751-001-10	2	2
1425-621-004-00	9	14	6209-704-009-00	21	7	6211-760-030-00	5	30
3625-540-004-00	9	38	6209-730-005-00	12	3	6211-766-019-00	5	31
3632-360-036-00	21	6		20	11	6211-777-007-30	10	1
3817-401-001-00	9	10	6209-730-006-00	15	4	6212-111-094-10	13	1
	11	20	6209-740-001-00	9	26	6212-114-094-10	14	1
	17	14	6209-740-005-00	5	18	6212-116-094-10	14	3
	17	19	6209-749-001-20	5	15	6212-121-014-20	13	2
	20	8		9	44	6212-124-014-10	14	2
6209-000-002-00	11	18	6209-920-002-00	9	20	6212-126-014-10	14	4
6209-000-003-00	1	7		16	14	6212-211-001-10	13	3
6209-000-004-10	5	2		25	13	6212-230-004-10	13	5
6209-030-043-00	20	17	6209-940-004-00	11	14	6212-235-005-00	13	6
6209-030-044-00	18	4	6211-110-057-30	1	1	6212-271-006-00	13	7
6209-030-085-00	23	8	6211-141-029-20	1	6	6212-274-006-00	6	5
6209-046-015-00	15	9		25	3	6212-276-006-00	6	6
6209-050-001-00	9	32	6211-170-004-20	2	1	6212-310-009-30	15	1
6209-050-002-00	9	33	6211-173-003-00	2	3	6212-330-049-10	15	5
6209-300-013-00	5	33		25	4	6212-333-003-00	15	6
6209-300-014-00	1	8	6211-210-037-20	5	1	6212-370-011-00	15	10
6209-360-005-00	21	3	6211-258-001-00	5	8	6212-371-009-00	15	11
6209-360-021-00	21	5		25	8	6212-372-002-10	15	12
6209-360-028-10	2	6	6211-258-002-00	5	9	6212-379-001-00	15	15
6209-409-001-00	9	18		25	9	6212-511-002-00	12	1
6209-409-003-00	11	17	6211-291-016-00	5	26	6212-521-008-00	15	3
6209-490-002-10	2	4	6211-292-001-20	5	27	6212-522-010-00	12	2
6209-500-003-00	9	16		25	11	6212-523-023-00	12	6
	9	25	6211-310-012-30	9	1	6212-524-002-20	20	10
	25	23	6211-311-007-40	9	39	6212-530-005-20	9	46
6209-572-003-00	2	5	6211-312-003-20	9	27	6212-531-005-10	5	6
	25	5		25	14	6212-535-001-00	12	4
6209-580-002-10	20	26	6211-312-004-20	9	40	6212-535-002-00	20	14
6209-587-001-00	13	4		25	15	6212-551-001-10	11	1
6209-600-004-00	9	24	6211-319-003-00	9	42	6212-552-001-20	11	2
6209-600-006-00	7	2	6211-341-053-20	8	1	6212-561-001-10	11	3
6209-605-004-10	1	3	6211-342-002-10	8	2	6212-563-001-00	11	4
6209-610-001-10	5	3	6211-361-010-10	7	1	6212-565-001-00	11	5
6209-610-002-10	9	3	6211-510-001-00	5	10	6212-569-002-00	1	4
6209-610-008-00	5	7	6211-511-003-00	5	11		25	2
6209-610-009-00	5	4	6211-511-004-00	5	12	6212-571-006-00	11	6
6209-625-002-00	9	7	6211-540-001-00	6	1	6212-575-002-00	11	7
	25	12	6211-560-001-00	6	3	6212-600-002-10	11	8
6209-625-012-00	5	14	6211-599-001-10	5	13	6212-611-004-10	11	9
	25	10		6	2	6212-616-002-00	11	16
6209-630-002-10	24	6		6	4	6212-620-001-20	11	10

Numerical Index

Part Code	Fig.Key		Part Code	Fig.Key		Part Code	Fig.Key	
6212-626-002-10	11	11	6213-743-002-10	17	23	6215-345-029-00	26	35
6212-628-004-00	11	12		25	20	6215-345-030-00	26	36
6212-628-005-00	11	13	6214-111-011-20	3	1	6215-345-031-00	26	37
6213-100-003-30	16	1	6214-115-001-20	3	2	6215-345-032-00	26	38
6213-111-001-30	16	2		25	6	6215-345-033-00	26	39
6213-119-001-00	16	6	6214-141-010-10	4	1	6215-345-034-00	26	40
6213-120-003-20	16	3	6214-145-001-30	4	2	6215-345-035-00	26	41
6213-125-001-00	16	4		25	7	6215-345-036-00	26	42
6213-129-003-00	16	5	6215-300-036-00	19	1	6215-345-037-00	26	43
6213-129-006-00	5	16	6215-311-027-00	26	52	6215-345-038-00	26	44
	8	3	6215-315-002-00	19	2	6215-345-039-00	26	45
	15	7	6215-330-024-00	26	1	6215-345-040-00	26	46
6213-140-008-00	16	8	6215-331-008-00	26	2	6215-345-041-00	26	47
6213-149-002-00	16	10	6215-332-013-00	26	5	6215-345-042-00	26	48
6213-160-002-20	9	28	6215-339-001-00	26	6	6215-345-043-00	26	49
6213-161-001-20	9	29	6215-342-001-00	26	3	6215-359-001-00	26	50
6213-164-001-00	9	30	6215-343-001-00	26	4	6215-359-002-00	26	51
6213-240-002-10	16	15	6215-345-001-00	26	7	6215-411-125-00	21	2
6213-311-006-00	16	12	6215-345-002-00	26	8	6215-411-126-10	19	3
6213-319-001-00	5	25	6215-345-003-00	26	9	6215-411-127-00	19	4
6213-610-005-40	17	1	6215-345-004-00	26	10	6215-411-128-00	19	5
6213-611-003-20	17	2	6215-345-005-00	26	11	6215-412-002-10	21	1
6213-612-004-00	17	9	6215-345-006-00	26	12	6215-419-001-00	21	8
6213-613-002-10	17	8	6215-345-007-00	26	13	6215-520-001-00	20	16
6213-614-003-10	17	12	6215-345-008-00	26	14	6215-526-004-00	20	18
	25	18	6215-345-009-00	26	15	6215-531-019-00	20	23
6213-614-004-10	17	16	6215-345-010-00	26	16	6215-541-001-10	20	19
	25	19	6215-345-011-00	26	17	6215-541-016-30	22	2
6213-619-001-00	17	15	6215-345-012-00	26	18	6215-541-024-30	20	24
6213-619-002-00	17	11	6215-345-013-00	26	19	6215-542-004-20	9	21
6213-619-003-00	17	10	6215-345-014-00	26	20	6215-542-005-10	9	23
6213-621-003-00	17	6	6215-345-015-00	26	21	6215-542-006-00	20	21
6213-622-002-10	17	5	6215-345-016-00	26	22	6215-543-002-10	20	20
6213-631-002-00	17	3	6215-345-017-00	26	23	6215-546-003-10	9	17
6213-631-005-00	17	4	6215-345-018-00	26	24	6215-548-026-00	22	1
6213-641-002-10	18	2	6215-345-019-00	26	25	6215-549-007-10	20	27
6213-642-002-00	17	7	6215-345-020-00	26	26	6215-549-012-00	20	31
6213-660-023-00	18	1	6215-345-021-00	26	27	6215-549-013-00	5	29
6213-669-008-00	18	3	6215-345-022-00	26	28	6215-600-103-10	20	1
6213-671-012-00	18	5	6215-345-023-00	26	29	6215-611-001-00	27	8
6213-674-006-20	23	2	6215-345-024-00	26	30	6215-612-001-00	27	11
6213-711-003-20	17	27	6215-345-025-00	26	31	6215-619-009-00	27	1
6213-716-001-50	17	22	6215-345-026-00	26	32	6215-619-010-00	27	2
6213-721-007-00	5	24	6215-345-027-00	26	33	6215-619-022-00	27	10
6213-729-013-10	17	20	6215-345-028-00	26	34	6215-621-016-20	20	9

Numerical Index

Part Code	Fig.Key		Part Code	Fig.Key		Part Code	Fig.Key	
6215-622-001-00	27	14	6281-129-029-00	28	29	6281-229-018-00	29	25
6215-629-001-00	27	12	6281-129-030-00	28	28	6281-229-029-00	29	14
6215-629-002-00	27	13	6281-129-043-00	28	30	6281-229-032-00	29	6
6215-629-003-00	27	20	6281-129-058-00	28	9	6281-229-033-00	29	11
6215-629-004-00	27	21	6281-129-062-00	28	33	6281-271-002-00	29	26
6215-629-005-00	27	22	6281-129-064-00	28	7	6281-410-010-00	24	3
6215-629-006-00	27	23	6281-129-065-00	28	12	6281-910-003-10	24	5
6215-629-007-00	27	24	6281-129-066-00	28	13	6281-920-001-00	24	8
6215-629-008-00	27	25	6281-129-067-00	28	14	6281-971-003-00	24	1
6215-629-009-00	27	26	6281-129-068-00	28	15	6282-450-002-00	24	2
6215-629-010-00	27	27	6281-129-069-00	28	16	6287-810-015-20	25	1
6215-629-011-00	27	28	6281-129-070-00	28	17	6294-453-002-00	5	22
6215-629-012-00	27	29	6281-129-071-00	28	18	6509-605-019-10	5	5
6215-629-013-00	27	30	6281-129-072-00	28	21		9	2
6215-629-014-00	27	31	6281-129-073-00	28	22	6513-770-022-10	17	26
6215-629-015-00	27	32	6281-129-074-00	28	23	6901-066-645-00	15	16
6215-629-016-00	27	33	6281-129-075-00	28	24	6901-910-612-00	12	5
6215-631-019-00	27	9	6281-129-076-00	28	25		20	15
6215-634-001-00	27	18	6281-129-077-00	28	26	6901-910-625-00	16	7
6215-635-001-00	27	16	6281-129-078-00	28	27	6901-910-816-00	5	32
6215-637-001-00	27	15	6281-129-079-00	28	34	6901-911-020-00	8	4
6215-639-004-00	27	17	6281-129-080-00	28	8	6902-050-610-00	15	13
6215-639-005-00	27	19	6281-151-014-00	28	20	6902-050-816-00	9	41
6215-641-006-00	27	7	6281-200-005-00	23	1	6904-110-818-00	5	20
6215-643-006-00	27	3	6281-213-018-00	29	7	6904-110-822-00	5	21
6215-644-007-00	27	4	6281-214-003-00	29	12		9	4
6215-649-001-00	27	5	6281-214-004-00	29	13		9	45
6215-649-002-00	27	6	6281-215-001-00	29	17	6904-110-840-00	5	19
6219-310-003-20	9	35	6281-216-001-00	29	18		17	17
6219-732-016-00	24	4	6281-217-002-00	29	16	6904-110-850-00	9	6
6219-752-006-00	20	2	6281-221-007-00	29	4	6904-110-855-00	9	5
6219-752-007-00	20	3	6281-222-004-00	29	1	6909-110-406-00	9	34
6219-752-008-00	20	4	6281-229-002-00	29	2		20	28
6219-752-009-00	20	5	6281-229-003-00	29	3	6909-110-408-00	9	48
6219-752-010-00	20	6	6281-229-004-00	29	5		9	50
6281-100-014-00	23	7	6281-229-006-00	29	8		28	32
6281-111-009-00	28	1	6281-229-007-00	29	9	6909-110-410-00	23	6
6281-115-017-00	28	10	6281-229-008-00	29	10	6909-150-506-00	15	14
6281-115-018-00	28	11	6281-229-011-00	29	15	6909-150-508-00	28	31
6281-117-003-00	28	4	6281-229-012-00	29	19	6909-902-299-00	5	23
6281-118-007-00	28	3	6281-229-013-00	29	20	6909-906-105-10	16	13
6281-119-009-00	28	2	6281-229-014-00	29	21	6911-129-006-00	1	2
6281-121-010-00	28	5	6281-229-015-00	29	22	J061-210-015-00	17	21
6281-124-011-00	28	6	6281-229-016-00	29	23	J062-076-082-00	21	4
6281-127-003-00	28	19	6281-229-017-00	29	24	J062-087-093-00	21	9

Numerical Index

Part Code	Fig.Key		Part Code	Fig.Key		Part Code	Fig.Key
P117-303-003-00	9	22	V723-102-005-00	9	43		
V211-560-802-50	4	3		25	16		
V230-360-601-00	7	4	V723-102-005-50	17	28		
V230-360-601-20	5	28		25	21		
	24	7					
V230-360-601-60	9	37					
V231-360-801-60	9	11					
	16	11					
V231-360-802-00	3	3					
	17	18					
	17	24					
	20	7					
	23	3					
V231-360-802-50	17	29					
V231-360-803-00	9	15					
V231-360-804-00	3	4					
V231-360-804-50	9	12					
	17	13					
V231-360-805-00	11	19					
V231-360-805-50	9	9					
V231-360-807-50	9	13					
	17	25					
V231-360-808-50	9	8					
V233-361-002-00	10	2					
V233-361-007-00	23	5					
V341-120-008-00	9	19					
V401-160-006-00	20	30					
V401-160-008-00	9	49					
	9	51					
V411-260-006-00	20	29					
V523-100-802-40	5	17					
V523-101-001-80	15	2					
V600-110-600-40	20	13					
V600-110-600-50	9	47					
V600-110-620-30	20	12					
V600-150-600-20	15	8					
V682-200-000-60	1	5					
V704-140-016-00	11	15					
V705-140-012-00	9	31					
V710-140-004-00	20	22					
V720-101-900-80	20	25					
V720-102-401-50	16	9					
	25	17					
V720-102-401-80	7	3					
V723-102-002-40	9	36					

Numerical Index

Part Code	Fig.	Key	Part Code	Fig.	Key	Part Code	Fig.	Key
1373-121-001-00	23	4	6209-630-002-10	25	22	6211-751-001-10	2	2
1425-621-004-00	9	14	6209-704-009-00	21	7	6211-760-030-00	5	30
3625-540-004-00	9	38	6209-730-005-00	12	3	6211-766-019-00	5	31
3632-360-036-00	21	6		20	11	6211-777-007-30	10	1
3817-401-001-00	9	10	6209-730-006-00	15	4	6212-111-094-10	13	1
	11	20	6209-740-001-00	9	26	6212-114-094-10	14	1
	17	14	6209-740-005-00	5	18	6212-116-094-10	14	3
	17	19	6209-749-001-20	5	15	6212-121-014-20	13	2
	20	8		9	44	6212-124-014-10	14	2
6209-000-002-00	11	18	6209-920-002-00	9	20	6212-126-014-10	14	4
6209-000-003-00	1	7		16	14	6212-211-001-10	13	3
6209-000-004-10	5	2		25	13	6212-230-004-10	13	5
6209-030-043-00	20	17	6209-940-004-00	11	14	6212-235-005-00	13	6
6209-030-044-00	18	4	6211-110-057-30	1	1	6212-271-006-00	13	7
6209-030-085-00	23	8	6211-141-029-20	1	6	6212-274-006-00	6	5
6209-046-015-00	15	8		25	3	6212-276-006-00	6	6
6209-050-001-00	9	32	6211-170-004-20	2	1	6212-310-009-30	15	1
6209-050-002-00	9	33	6211-173-003-00	2	3	6212-330-051-00	15	5
6209-300-013-00	5	33		25	4	6212-333-003-00	15	6
6209-300-014-00	1	8	6211-210-037-20	5	1	6212-370-011-00	15	9
6209-360-005-00	21	3	6211-258-001-00	5	8	6212-371-009-00	15	10
6209-360-021-00	21	5		25	8	6212-372-002-10	15	11
6209-360-028-10	2	6	6211-258-002-00	5	9	6212-379-001-00	15	14
6209-409-001-00	9	18		25	9	6212-511-002-00	12	1
6209-409-003-00	11	17	6211-291-016-00	5	26	6212-521-008-00	15	3
6209-490-002-10	2	4	6211-292-001-20	5	27	6212-522-010-00	12	2
6209-500-003-00	9	16		25	11	6212-523-023-00	12	6
	9	25	6211-310-012-30	9	1	6212-524-002-20	20	10
	25	23	6211-311-007-40	9	39	6212-530-005-20	9	46
6209-572-003-00	2	5	6211-312-003-20	9	27	6212-531-005-10	5	6
	25	5		25	14	6212-535-001-00	12	4
6209-580-002-10	20	26	6211-312-004-20	9	40	6212-535-002-00	20	14
6209-587-001-00	13	4		25	15	6212-551-001-10	11	1
6209-600-004-00	9	24	6211-319-003-00	9	42	6212-552-001-20	11	2
6209-600-006-00	7	2	6211-341-053-20	8	1	6212-561-001-10	11	3
6209-605-004-10	1	3	6211-342-002-10	8	2	6212-563-001-00	11	4
6209-610-001-10	5	3	6211-361-010-10	7	1	6212-565-001-00	11	5
6209-610-002-10	9	3	6211-510-001-00	5	10	6212-569-002-00	1	4
6209-610-008-00	5	7	6211-511-003-00	5	11		25	2
6209-610-009-00	5	4	6211-511-004-00	5	12	6212-571-006-00	11	6
6209-625-002-00	9	7	6211-540-001-00	6	1	6212-575-002-00	11	7
	25	12	6211-560-001-00	6	3	6212-600-002-10	11	8
6209-625-012-00	5	14	6211-599-001-10	5	13	6212-611-004-10	11	9
	25	10		6	2	6212-616-002-00	11	16
6209-630-002-10	24	6		6	4	6212-620-001-20	11	10

Numerical Index

Part Code	Fig.	Key	Part Code	Fig.	Key	Part Code	Fig.	Key
6212-626-002-10	11	11	6213-743-002-10	25	20	6215-345-030-00	26	36
6212-628-004-00	11	12	6214-111-011-20	3	1	6215-345-031-00	26	37
6212-628-005-00	11	13	6214-115-001-20	3	2	6215-345-032-00	26	38
6213-100-003-30	16	1		25	6	6215-345-033-00	26	39
6213-111-001-30	16	2	6214-141-010-10	4	1	6215-345-034-00	26	40
6213-119-001-00	16	6	6214-145-001-30	4	2	6215-345-035-00	26	41
6213-120-003-20	16	3		25	7	6215-345-036-00	26	42
6213-125-001-00	16	4	6215-300-036-00	19	1	6215-345-037-00	26	43
6213-129-003-00	16	5	6215-311-027-00	26	52	6215-345-038-00	26	44
6213-129-006-00	5	16	6215-315-002-00	19	2	6215-345-039-00	26	45
	8	3	6215-330-024-00	26	1	6215-345-040-00	26	46
6213-140-008-00	16	8	6215-331-008-00	26	2	6215-345-041-00	26	47
6213-149-002-00	16	10	6215-332-013-00	26	5	6215-345-042-00	26	48
6213-160-002-20	9	28	6215-339-001-00	26	6	6215-345-043-00	26	49
6213-161-001-20	9	29	6215-342-001-00	26	3	6215-359-001-00	26	50
6213-164-001-00	9	30	6215-343-001-00	26	4	6215-359-002-00	26	51
6213-240-002-10	16	15	6215-345-001-00	26	7	6215-411-125-00	21	2
6213-311-006-00	16	12	6215-345-002-00	26	8	6215-411-126-10	19	3
6213-319-001-00	5	25	6215-345-003-00	26	9	6215-411-127-00	19	4
6213-610-005-40	17	1	6215-345-004-00	26	10	6215-411-128-00	19	5
6213-611-003-20	17	2	6215-345-005-00	26	11	6215-412-002-10	21	1
6213-612-004-00	17	9	6215-345-006-00	26	12	6215-419-001-00	21	8
6213-613-002-10	17	8	6215-345-007-00	26	13	6215-520-001-00	20	16
6213-614-003-10	17	12	6215-345-008-00	26	14	6215-526-004-00	20	18
	25	18	6215-345-009-00	26	15	6215-531-008-00	20	23
6213-614-004-10	17	16	6215-345-010-00	26	16	6215-541-001-10	20	19
	25	19	6215-345-011-00	26	17	6215-541-016-30	22	2
6213-619-001-00	17	15	6215-345-012-00	26	18	6215-541-024-30	20	24
6213-619-002-00	17	11	6215-345-013-00	26	19	6215-542-004-20	9	21
6213-619-003-00	17	10	6215-345-014-00	26	20	6215-542-005-10	9	23
6213-621-003-00	17	6	6215-345-015-00	26	21	6215-542-006-00	20	21
6213-622-002-10	17	5	6215-345-016-00	26	22	6215-543-002-10	20	20
6213-631-002-00	17	3	6215-345-017-00	26	23	6215-546-003-10	9	17
6213-631-005-00	17	4	6215-345-018-00	26	24	6215-548-029-00	22	1
6213-641-002-10	18	2	6215-345-019-00	26	25	6215-549-007-10	20	27
6213-642-002-00	17	7	6215-345-020-00	26	26	6215-549-012-00	20	31
6213-660-023-00	18	1	6215-345-021-00	26	27	6215-549-013-00	5	29
6213-669-008-00	18	3	6215-345-022-00	26	28	6215-600-103-10	20	1
6213-671-012-00	18	5	6215-345-023-00	26	29	6215-611-001-00	27	8
6213-674-006-20	23	2	6215-345-024-00	26	30	6215-612-001-00	27	11
6213-711-003-20	17	27	6215-345-025-00	26	31	6215-619-009-00	27	1
6213-716-001-50	17	22	6215-345-026-00	26	32	6215-619-010-00	27	2
6213-721-007-00	5	24	6215-345-027-00	26	33	6215-619-022-00	27	10
6213-729-013-10	17	20	6215-345-028-00	26	34	6215-621-016-20	20	9
6213-743-002-10	17	23	6215-345-029-00	26	35	6215-622-001-00	27	14

Numerical Index

6004-097-350-00

Part Code	Fig.	Key	Part Code	Fig.	Key	Part Code	Fig.	Key
6215-629-001-00	27	12	6281-129-030-00	28	28	6281-229-029-00	29	14
6215-629-002-00	27	13	6281-129-043-00	28	30	6281-229-032-00	29	6
6215-629-003-00	27	20	6281-129-058-00	28	9	6281-229-033-00	29	11
6215-629-004-00	27	21	6281-129-062-00	28	33	6281-271-002-00	29	26
6215-629-005-00	27	22	6281-129-064-00	28	7	6281-410-010-00	24	3
6215-629-006-00	27	23	6281-129-065-00	28	12	6281-910-003-10	24	5
6215-629-007-00	27	24	6281-129-066-00	28	13	6281-920-001-00	24	8
6215-629-008-00	27	25	6281-129-067-00	28	14	6281-971-003-00	24	1
6215-629-009-00	27	26	6281-129-068-00	28	15	6282-450-002-00	24	2
6215-629-010-00	27	27	6281-129-069-00	28	16	6287-810-015-20	25	1
6215-629-011-00	27	28	6281-129-070-00	28	17	6294-453-002-00	5	22
6215-629-012-00	27	29	6281-129-071-00	28	18	6509-605-019-10	5	5
6215-629-013-00	27	30	6281-129-072-00	28	21		9	2
6215-629-014-00	27	31	6281-129-073-00	28	22	6513-770-022-10	17	26
6215-629-015-00	27	32	6281-129-074-00	28	23	6901-066-645-00	15	15
6215-629-016-00	27	33	6281-129-075-00	28	24	6901-910-612-00	12	5
6215-631-019-00	27	9	6281-129-076-00	28	25		20	15
6215-634-001-00	27	18	6281-129-077-00	28	26	6901-910-625-00	16	7
6215-635-001-00	27	16	6281-129-078-00	28	27	6901-910-816-00	5	32
6215-637-001-00	27	15	6281-129-079-00	28	34	6901-911-020-00	8	4
6215-639-004-00	27	17	6281-129-080-00	28	8	6902-050-610-00	15	12
6215-639-005-00	27	19	6281-151-014-00	28	20	6902-050-816-00	9	41
6215-641-006-00	27	7	6281-200-005-00	23	1	6904-110-818-00	5	20
6215-643-006-00	27	3	6281-213-018-00	29	7	6904-110-822-00	5	21
6215-644-007-00	27	4	6281-214-003-00	29	12		9	4
6215-649-001-00	27	5	6281-214-004-00	29	13		9	45
6215-649-002-00	27	6	6281-215-001-00	29	17	6904-110-840-00	5	19
6219-310-003-20	9	35	6281-216-001-00	29	18		17	17
6219-732-016-00	24	4	6281-217-002-00	29	16	6904-110-850-00	9	6
6219-752-006-00	20	2	6281-221-007-00	29	4	6904-110-855-00	9	5
6219-752-007-00	20	3	6281-222-004-00	29	1	6909-110-406-00	9	34
6219-752-008-00	20	4	6281-229-002-00	29	2		20	28
6219-752-009-00	20	5	6281-229-003-00	29	3	6909-110-408-00	9	48
6219-752-010-00	20	6	6281-229-004-00	29	5		9	50
6281-100-014-00	23	7	6281-229-006-00	29	8		28	32
6281-111-009-00	28	1	6281-229-007-00	29	9	6909-110-410-00	23	6
6281-115-017-00	28	10	6281-229-008-00	29	10	6909-150-506-00	15	13
6281-115-018-00	28	11	6281-229-011-00	29	15	6909-150-508-00	28	31
6281-117-003-00	28	4	6281-229-012-00	29	19	6909-902-299-00	5	23
6281-118-007-00	28	3	6281-229-013-00	29	20	6909-906-105-10	16	13
6281-119-009-00	28	2	6281-229-014-00	29	21	6911-129-006-00	1	2
6281-121-010-00	28	5	6281-229-015-00	29	22	J061-210-015-00	17	21
6281-124-011-00	28	6	6281-229-016-00	29	23	J062-076-082-00	21	4
6281-127-003-00	28	19	6281-229-017-00	29	24	J062-087-093-00	21	9
6281-129-029-00	28	29	6281-229-018-00	29	25	P117-303-003-00	9	22

Numerical Index

Part Code	Fig.Key		Part Code	Fig.Key		Part Code	Fig.Key
V211-560-802-50	4	3	V723-102-005-00	25	16		
V230-360-601-00	7	4	V723-102-005-50	17	28		
V230-360-601-20	5	28		25	21		
	24	7					
V230-360-601-60	9	37					
V231-360-801-60	9	11					
	16	11					
V231-360-802-00	3	3					
	17	18					
	17	24					
	20	7					
	23	3					
V231-360-802-50	17	29					
V231-360-803-00	9	15					
V231-360-804-00	3	4					
V231-360-804-50	9	12					
	17	13					
V231-360-805-00	11	19					
V231-360-805-50	9	9					
V231-360-807-50	9	13					
	17	25					
V231-360-808-50	9	8					
V233-361-002-00	10	2					
V233-361-007-00	23	5					
V341-120-008-00	9	19					
V401-160-006-00	20	30					
V401-160-008-00	9	49					
	9	51					
V411-260-006-00	20	29					
V523-100-802-40	5	17					
V523-101-001-80	15	2					
V600-110-600-40	20	13					
V600-110-600-50	9	47					
V600-110-620-30	20	12					
V600-150-600-20	15	7					
V682-200-000-60	1	5					
V704-140-016-00	11	15					
V705-140-012-00	9	31					
V710-140-004-00	20	22					
V720-101-900-80	20	25					
V720-102-401-50	16	9					
	25	17					
V720-102-401-80	7	3					
V723-102-002-40	9	36					
V723-102-005-00	9	43					

Numerical Index

6004-097-360-00

Part Code	Fig.	Key	Part Code	Fig.	Key	Part Code	Fig.	Key
1373-121-001-00	23	4	6209-630-002-10	25	22	6211-751-001-10	2	2
1425-621-004-00	9	14	6209-704-009-00	21	7	6211-760-030-00	5	30
3625-540-004-00	9	38	6209-730-005-00	12	3	6211-766-019-00	5	31
3632-360-036-00	21	6		20	11	6211-777-007-30	10	1
3817-401-001-00	9	10	6209-730-006-00	15	4	6212-111-094-10	13	1
	11	20	6209-740-001-00	9	26	6212-114-094-10	14	1
	17	14	6209-740-005-00	5	18	6212-116-094-10	14	3
	17	19	6209-749-001-20	5	15	6212-121-014-20	13	2
	20	8		9	44	6212-124-014-10	14	2
6209-000-002-00	11	18	6209-920-002-00	9	20	6212-126-014-10	14	4
6209-000-003-00	1	7		16	14	6212-211-001-10	13	3
6209-000-004-10	5	2		25	13	6212-230-004-10	13	5
6209-030-043-00	20	17	6209-940-004-00	11	14	6212-235-005-00	13	6
6209-030-085-00	23	8	6211-110-057-30	1	1	6212-271-006-00	13	7
6209-030-092-00	18	4	6211-141-029-20	1	6	6212-274-006-00	6	5
6209-046-015-00	15	9		25	3	6212-276-006-00	6	6
6209-050-001-00	9	32	6211-170-004-20	2	1	6212-310-009-30	15	1
6209-050-002-00	9	33	6211-173-003-00	2	3	6212-330-049-10	15	5
6209-300-013-00	5	33		25	4	6212-333-003-00	15	6
6209-300-014-00	1	8	6211-210-037-20	5	1	6212-370-011-00	15	10
6209-360-005-00	21	3	6211-258-001-00	5	8	6212-371-009-00	15	11
6209-360-021-00	21	5		25	8	6212-372-002-10	15	12
6209-360-028-10	2	6	6211-258-002-00	5	9	6212-379-001-00	15	15
6209-409-001-00	9	18		25	9	6212-511-002-00	12	1
6209-409-003-00	11	17	6211-291-016-00	5	26	6212-521-008-00	15	3
6209-490-002-10	2	4	6211-292-001-20	5	27	6212-522-010-00	12	2
6209-500-003-00	9	16		25	11	6212-523-023-00	12	6
	9	25	6211-310-012-30	9	1	6212-524-002-20	20	10
	25	23	6211-311-007-40	9	39	6212-530-005-20	9	46
6209-572-003-00	2	5	6211-312-003-20	9	27	6212-531-005-10	5	6
	25	5		25	14	6212-535-001-00	12	4
6209-580-002-10	20	26	6211-312-004-20	9	40	6212-535-002-00	20	14
6209-587-001-00	13	4		25	15	6212-551-001-10	11	1
6209-600-004-00	9	24	6211-319-003-00	9	42	6212-552-001-20	11	2
6209-600-006-00	7	2	6211-341-053-20	8	1	6212-561-001-10	11	3
6209-605-004-10	1	3	6211-342-002-10	8	2	6212-563-001-00	11	4
6209-610-001-10	5	3	6211-361-010-10	7	1	6212-565-001-00	11	5
6209-610-002-10	9	3	6211-510-001-00	5	10	6212-569-002-00	1	4
6209-610-008-00	5	7	6211-511-003-00	5	11		25	2
6209-610-009-00	5	4	6211-511-004-00	5	12	6212-571-006-00	11	6
6209-625-002-00	9	7	6211-540-001-00	6	1	6212-575-002-00	11	7
	25	12	6211-560-001-00	6	3	6212-600-002-10	11	8
6209-625-012-00	5	14	6211-599-001-10	5	13	6212-611-004-10	11	9
	25	10		6	2	6212-616-002-00	11	16
6209-630-002-10	24	6		6	4	6212-620-001-20	11	10

Numerical Index

Part Code	Fig.Key		Part Code	Fig.Key		Part Code	Fig.Key	
6212-626-002-10	11	11	6213-743-002-10	17	23	6215-345-029-00	26	35
6212-628-004-00	11	12		25	20	6215-345-030-00	26	36
6212-628-005-00	11	13	6214-111-011-20	3	1	6215-345-031-00	26	37
6213-100-003-30	16	1	6214-115-001-20	3	2	6215-345-032-00	26	38
6213-111-001-30	16	2		25	6	6215-345-033-00	26	39
6213-119-001-00	16	6	6214-141-010-10	4	1	6215-345-034-00	26	40
6213-120-003-20	16	3	6214-145-001-30	4	2	6215-345-035-00	26	41
6213-125-001-00	16	4		25	7	6215-345-036-00	26	42
6213-129-003-00	16	5	6215-300-036-00	19	1	6215-345-037-00	26	43
6213-129-006-00	5	16	6215-311-027-00	26	52	6215-345-038-00	26	44
	8	3	6215-315-002-00	19	2	6215-345-039-00	26	45
	15	7	6215-330-024-00	26	1	6215-345-040-00	26	46
6213-140-008-00	16	8	6215-331-008-00	26	2	6215-345-041-00	26	47
6213-149-002-00	16	10	6215-332-013-00	26	5	6215-345-042-00	26	48
6213-160-002-20	9	28	6215-339-001-00	26	6	6215-345-043-00	26	49
6213-161-001-20	9	29	6215-342-001-00	26	3	6215-359-001-00	26	50
6213-164-001-00	9	30	6215-343-001-00	26	4	6215-359-002-00	26	51
6213-240-002-10	16	15	6215-345-001-00	26	7	6215-411-125-00	21	2
6213-311-006-00	16	12	6215-345-002-00	26	8	6215-411-126-10	19	3
6213-319-001-00	5	25	6215-345-003-00	26	9	6215-411-127-00	19	4
6213-610-005-40	17	1	6215-345-004-00	26	10	6215-411-128-00	19	5
6213-611-003-20	17	2	6215-345-005-00	26	11	6215-412-002-10	21	1
6213-612-004-00	17	9	6215-345-006-00	26	12	6215-419-001-00	21	8
6213-613-002-10	17	8	6215-345-007-00	26	13	6215-520-001-00	20	16
6213-614-003-10	17	12	6215-345-008-00	26	14	6215-526-004-00	20	18
	25	18	6215-345-009-00	26	15	6215-531-008-00	20	23
6213-614-004-10	17	16	6215-345-010-00	26	16	6215-541-001-10	20	19
	25	19	6215-345-011-00	26	17	6215-541-016-30	22	2
6213-619-001-00	17	15	6215-345-012-00	26	18	6215-541-024-30	20	24
6213-619-002-00	17	11	6215-345-013-00	26	19	6215-542-004-20	9	21
6213-619-003-00	17	10	6215-345-014-00	26	20	6215-542-005-10	9	23
6213-621-003-00	17	6	6215-345-015-00	26	21	6215-542-006-00	20	21
6213-622-002-10	17	5	6215-345-016-00	26	22	6215-543-002-10	20	20
6213-631-002-00	17	3	6215-345-017-00	26	23	6215-546-003-10	9	17
6213-631-005-00	17	4	6215-345-018-00	26	24	6215-548-029-00	22	1
6213-641-006-00	18	2	6215-345-019-00	26	25	6215-549-007-10	20	27
6213-642-002-00	17	7	6215-345-020-00	26	26	6215-549-012-00	20	31
6213-660-007-00	18	1	6215-345-021-00	26	27	6215-549-013-00	5	29
6213-669-008-00	18	3	6215-345-022-00	26	28	6215-600-103-10	20	1
6213-671-003-00	18	5	6215-345-023-00	26	29	6215-611-001-00	27	8
6213-674-006-20	23	2	6215-345-024-00	26	30	6215-612-001-00	27	11
6213-711-003-20	17	27	6215-345-025-00	26	31	6215-619-009-00	27	1
6213-716-001-50	17	22	6215-345-026-00	26	32	6215-619-010-00	27	2
6213-721-007-00	5	24	6215-345-027-00	26	33	6215-619-022-00	27	10
6213-729-013-10	17	20	6215-345-028-00	26	34	6215-621-016-20	20	9

Numerical Index

Part Code	Fig.	Key	Part Code	Fig.	Key	Part Code	Fig.	Key
6215-622-001-00	27	14	6281-129-029-00	28	29	6281-229-018-00	29	25
6215-629-001-00	27	12	6281-129-030-00	28	28	6281-229-029-00	29	14
6215-629-002-00	27	13	6281-129-043-00	28	30	6281-229-032-00	29	6
6215-629-003-00	27	20	6281-129-058-00	28	9	6281-229-033-00	29	11
6215-629-004-00	27	21	6281-129-062-00	28	33	6281-271-002-00	29	26
6215-629-005-00	27	22	6281-129-064-00	28	7	6281-410-010-00	24	3
6215-629-006-00	27	23	6281-129-065-00	28	12	6281-910-003-10	24	5
6215-629-007-00	27	24	6281-129-066-00	28	13	6281-920-001-00	24	8
6215-629-008-00	27	25	6281-129-067-00	28	14	6281-971-003-00	24	1
6215-629-009-00	27	26	6281-129-068-00	28	15	6282-450-002-00	24	2
6215-629-010-00	27	27	6281-129-069-00	28	16	6287-810-015-20	25	1
6215-629-011-00	27	28	6281-129-070-00	28	17	6294-453-002-00	5	22
6215-629-012-00	27	29	6281-129-071-00	28	18	6509-605-019-10	5	5
6215-629-013-00	27	30	6281-129-072-00	28	21		9	2
6215-629-014-00	27	31	6281-129-073-00	28	22	6513-770-022-10	17	26
6215-629-015-00	27	32	6281-129-074-00	28	23	6901-066-645-00	15	16
6215-629-016-00	27	33	6281-129-075-00	28	24	6901-910-612-00	12	5
6215-631-019-00	27	9	6281-129-076-00	28	25		20	15
6215-634-001-00	27	18	6281-129-077-00	28	26	6901-910-625-00	16	7
6215-635-001-00	27	16	6281-129-078-00	28	27	6901-910-816-00	5	32
6215-637-001-00	27	15	6281-129-079-00	28	34	6901-911-020-00	8	4
6215-639-004-00	27	17	6281-129-080-00	28	8	6902-050-610-00	15	13
6215-639-005-00	27	19	6281-151-014-00	28	20	6902-050-816-00	9	41
6215-641-006-00	27	7	6281-200-005-00	23	1	6904-110-818-00	5	20
6215-643-006-00	27	3	6281-213-018-00	29	7	6904-110-822-00	5	21
6215-644-007-00	27	4	6281-214-003-00	29	12		9	4
6215-649-001-00	27	5	6281-214-004-00	29	13		9	45
6215-649-002-00	27	6	6281-215-001-00	29	17	6904-110-840-00	5	19
6219-310-003-20	9	35	6281-216-001-00	29	18		17	17
6219-732-016-00	24	4	6281-217-002-00	29	16	6904-110-850-00	9	6
6219-752-006-00	20	2	6281-221-007-00	29	4	6904-110-855-00	9	5
6219-752-007-00	20	3	6281-222-004-00	29	1	6909-110-406-00	9	34
6219-752-008-00	20	4	6281-229-002-00	29	2		20	28
6219-752-009-00	20	5	6281-229-003-00	29	3	6909-110-408-00	9	48
6219-752-010-00	20	6	6281-229-004-00	29	5		9	50
6281-100-014-00	23	7	6281-229-006-00	29	8		28	32
6281-111-009-00	28	1	6281-229-007-00	29	9	6909-110-410-00	23	6
6281-115-017-00	28	10	6281-229-008-00	29	10	6909-150-506-00	15	14
6281-115-018-00	28	11	6281-229-011-00	29	15	6909-150-508-00	28	31
6281-117-003-00	28	4	6281-229-012-00	29	19	6909-902-299-00	5	23
6281-118-007-00	28	3	6281-229-013-00	29	20	6909-906-105-10	16	13
6281-119-009-00	28	2	6281-229-014-00	29	21	6911-129-006-00	1	2
6281-121-010-00	28	5	6281-229-015-00	29	22	J061-210-015-00	17	21
6281-124-011-00	28	6	6281-229-016-00	29	23	J062-076-082-00	21	4
6281-127-003-00	28	19	6281-229-017-00	29	24	J062-087-093-00	21	9

Numerical Index

Part Code	Fig.Key		Part Code	Fig.Key		Part Code	Fig.Key
P117-303-003-00	9	22	V723-102-005-00	9	43		
V211-560-802-50	4	3		25	16		
V230-360-601-00	7	4	V723-102-005-50	17	28		
V230-360-601-20	5	28		25	21		
	24	7					
V230-360-601-60	9	37					
V231-360-801-60	9	11					
	16	11					
V231-360-802-00	3	3					
	17	18					
	17	24					
	20	7					
	23	3					
V231-360-802-50	17	29					
V231-360-803-00	9	15					
V231-360-804-00	3	4					
V231-360-804-50	9	12					
	17	13					
V231-360-805-00	11	19					
V231-360-805-50	9	9					
V231-360-807-50	9	13					
	17	25					
V231-360-808-50	9	8					
V233-361-002-00	10	2					
V233-361-007-00	23	5					
V341-120-008-00	9	19					
V401-160-006-00	20	30					
V401-160-008-00	9	49					
	9	51					
V411-260-006-00	20	29					
V523-100-802-40	5	17					
V523-101-001-80	15	2					
V600-110-600-40	20	13					
V600-110-600-50	9	47					
V600-110-620-30	20	12					
V600-150-600-20	15	8					
V682-200-000-60	1	5					
V704-140-016-00	11	15					
V705-140-012-00	9	31					
V710-140-004-00	20	22					
V720-101-900-80	20	25					
V720-102-401-50	16	9					
	25	17					
V720-102-401-80	7	3					
V723-102-002-40	9	36					

Numerical Index

Part Code	Fig.	Key	Part Code	Fig.	Key	Part Code	Fig.	Key
1105-106-001-00	11	5	1404-312-006-00	51	8	1423-616-004-00	72	5
1108-311-005-00	14	6		51	8	1424-101-203-00	1	16
1118-901-002-00	90	3		51	24		2	16
1302-225-003-00	24	3	1404-402-001-00	53	2	1424-101-204-00	1	17
	32	2		53	8		2	17
	35	12		63	2	1425-621-004-00	1	10
	36	22		63	8		2	10
	95	14	1404-402-002-00	53	3		51	20
1305-241-001-00	78	11		53	9		87	19
	79	11		63	3		88	20
1342-402-006-00	43	16		63	9		88	24
	53	14	1404-402-005-00	53	4	1427-111-229-00	4	15
	55	28		53	10	1427-201-005-00	12	24
	56	37		63	4	1427-201-007-00	12	22
	75	6		63	10		13	17
	75	8	1404-503-006-00	55	10		45	12
	87	11		56	10	1427-201-008-00	12	23
	87	14		68	24		13	18
	87	20		69	29	1427-201-012-00	44	14
	87	26	1414-312-002-00	8	1	1427-201-013-00	44	15
	88	12		41	7	1427-201-014-10	44	16
	88	15		67	10	1427-201-015-10	44	17
	88	21	1415-102-007-00	5	3	1427-203-002-00	16	17
	88	23	1415-102-008-00	5	5		17	4
	88	28	1415-102-013-00	5	11	1427-209-200-00	24	11
1376-402-003-00	7	9	1415-205-013-00	30	23	1427-210-003-00	27	2
	41	37	1415-312-500-00	50	12		27	10
	56	18		51	7	1427-210-008-10	24	1
	56	19	1416-501-011-00	66	3	1427-210-009-00	24	2
	87	12	1416-621-037-00	6	9	1427-210-011-00	24	6
	87	22	1421-122-003-00	11	10	1427-210-200-00	24	8
	87	25	1421-201-002-00	110	38	1427-212-002-00	31	6
	87	27	1421-403-001-00	63	5	1427-212-003-20	31	2
	88	13	1421-403-002-00	63	11		35	18
	88	26	1421-433-004-00	13	27		36	15
	88	27	1421-507-002-10	66	1		95	19
	88	29	1421-507-014-00	73	20	1427-251-004-00	25	5
1386-241-002-00	98	4		81	17	1427-301-002-20	44	1
	102	5		82	19	1427-301-005-00	44	4
	102	10	1421-602-005-10	40	6	1427-301-007-00	44	6
	103	4		82	9	1427-301-009-00	44	7
1402-511-600-00	70	36	1421-603-004-00	6	14	1427-301-013-20	44	22
1404-117-008-00	8	9		72	52	1427-301-014-10	44	23
1404-312-006-00	50	13		72	56	1427-301-015-10	44	24
	50	17		73	22	1427-301-016-00	44	25

Numerical Index

Part Code	Fig.Key		Part Code	Fig.Key		Part Code	Fig.Key	
1427-301-018-00	44	27	1434-511-210-00	70	37	1510-328-260-00	50	16
1427-301-019-00	44	29	1435-120-002-30	9	24		51	12
1427-301-021-00	47	6	1435-122-002-00	9	13	1518-306-203-00	61	3
	48	7	1435-203-001-00	30	22	1518-432-250-00	61	2
1427-307-002-10	46	2	1435-317-201-20	97	2	1518-621-320-00	85	19
1427-307-003-00	46	3		97	7		86	22
1427-431-003-00	70	31	1435-317-230-01	97	1		86	24
1427-432-016-00	60	6	1435-317-240-01	97	6	1518-924-001-00	104	9
1427-501-003-00	64	3	1440-103-201-00	5	6	1527-604-002-00	74	19
1427-511-250-10	70	33	1442-313-202-00	50	24		76	17
1427-601-003-00	24	15	1444-101-016-10	43	14		77	15
	32	8		55	27		81	5
1427-611-001-00	78	4		56	35		82	5
	79	4	1444-102-202-00	5	2	1544-104-205-00	4	4
1429-406-205-00	54	17	1444-102-204-00	5	7	1544-215-015-00	21	9
1432-242-001-00	41	15	1444-102-206-00	5	12	1544-215-016-00	21	15
1432-616-002-00	50	51	1444-122-002-00	50	31	1544-219-005-00	23	16
	78	5		51	27	1544-304-006-10	44	10
	79	5		51	38	1544-322-002-00	30	7
1432-665-014-00	76	19	1444-314-009-10	12	33		30	17
	77	17		13	32		30	30
1434-120-005-00	9	17		35	28	1544-503-001-20	66	4
1434-122-005-00	11	15		36	28	1544-503-200-20	66	5
1434-122-230-10	9	12		95	27	1544-623-001-00	85	9
1434-203-002-00	17	11	1444-328-272-00	50	26		86	9
1434-317-280-01	99	1	1444-328-273-00	50	25	1544-623-232-00	85	10
1434-317-281-00	99	3	1444-411-006-00	44	2		86	10
	99	7	1444-601-011-00	72	25	1544-623-233-00	85	11
1434-317-290-01	98	3	1444-601-015-00	72	31		86	11
	99	2		72	38	1544-623-234-00	85	12
	99	6		73	6		86	12
1434-317-300-01	99	5		73	12	1544-623-235-00	85	13
1434-441-201-10	101	3	1480-207-012-00	30	6		86	13
	101	8	1480-212-003-00	35	8	1550-508-001-10	68	9
1434-441-231-00	102	3		36	9		69	15
	102	8		95	9	1550-514-290-00	70	34
1434-501-003-10	64	20	1480-501-003-00	64	2	1560-102-003-20	5	18
1434-501-005-00	64	26	1488-541-021-00	21	21	1560-104-010-40	1	15
1434-501-006-00	66	10	1491-120-001-00	9	18		2	15
1434-503-001-00	66	12	1491-203-006-10	16	16	1560-132-007-30	39	8
1434-503-002-00	66	15		17	3		50	21
1434-503-250-10	66	19	1491-307-201-00	46	4		50	33
1434-503-260-20	66	22	1491-434-017-00	62	24		51	14
1434-503-330-00	69	2	1507-216-004-10	17	5		51	26
1434-511-200-20	70	40		60	3		51	40

Numerical Index

Part Code	Fig.	Key	Part Code	Fig.	Key	Part Code	Fig.	Key
1560-208-018-40	30	29	1588-218-003-00	72	27	1614-102-002-00	1	9
1560-314-001-00	47	2	1588-651-205-00	85	15		2	9
	89	10		86	15	1614-102-213-00	1	3
	106	11	1593-203-058-20	16	13		2	3
1560-401-004-40	74	4		20	3	1614-102-214-00	1	4
1560-511-101-00	67	17	1593-341-006-00	28	6		2	4
1560-515-004-50	68	25	1593-341-014-00	28	7	1614-105-004-00	5	24
	69	30	1593-612-220-10	6	2	1614-215-006-00	21	14
1560-525-001-40	70	2	1594-105-001-00	3	2	1614-432-002-00	60	8
1560-630-024-00	50	52	1594-218-001-00	16	15	1614-432-006-00	60	11
1560-630-029-00	1	29		17	2	1614-433-212-00	61	10
1560-658-202-00	84	17		31	3	1614-435-004-00	62	45
1560-658-282-40	84	13	1594-221-001-00	60	2	1614-437-211-00	101	2
	84	15	1600-112-231-00	7	7		101	7
1560-664-250-00	85	21	1600-112-232-00	7	8	1614-501-006-00	21	19
1560-664-252-00	85	22	1600-117-002-00	8	8	1614-501-015-10	78	3
1560-664-253-00	85	23	1600-202-005-00	15	4		79	3
1560-666-004-00	1	31	1600-203-006-00	17	8	1614-505-002-00	67	5
	2	31	1600-301-004-00	44	12	1614-505-003-00	67	6
	7	10	1600-317-281-00	98	2	1614-505-004-00	67	7
	87	18	1600-502-003-00	21	5	1614-505-007-00	67	15
	88	19		22	4	1614-603-008-00	74	18
1560-666-212-00	88	10		65	7	1614-603-202-00	74	17
1560-695-021-00	39	6	1600-515-001-00	70	30	1614-608-220-10	81	16
1560-695-022-00	39	7	1600-515-210-10	70	26		82	18
1564-201-003-00	62	16	1600-515-240-00	70	28	1614-630-002-00	73	9
1564-434-222-10	61	5	1600-616-006-00	6	21	1614-670-001-10	84	21
1564-667-002-00	21	20	1600-623-002-00	85	16	1614-670-201-00	84	8
1566-525-101-00	70	39		86	17	1614-670-240-00	84	7
1568-525-300-10	70	35	1600-624-004-00	87	13	1614-670-250-00	84	9
1568-650-004-10	7	12		88	14	1614-670-281-00	84	14
1568-650-005-10	7	13	1600-624-201-00	85	26	1614-680-220-00	85	14
1572-102-003-00	5	10		86	28		86	14
1575-261-016-00	111	6	1600-902-002-10	91	3	1617-102-006-00	1	19
1575-261-017-00	111	5		92	2		2	19
1575-261-025-00	111	7	1600-904-051-00	91	7	1617-435-002-00	62	44
1575-261-203-00	58	7		92	6	1617-730-005-00	6	10
	59	7	1608-206-250-00	43	6	1620-255-208-00	25	6
1575-511-001-20	65	9	1608-206-260-00	43	7		33	3
1579-501-002-00	64	11	1612-117-200-20	8	6		35	24
1579-501-200-00	64	1	1612-433-002-00	61	6		36	26
1579-502-001-00	65	3	1612-434-006-00	62	19		95	46
1581-521-642-00	36	37	1612-434-009-00	62	28	1620-410-001-10	107	1
	95	36	1612-505-220-00	67	11	1620-437-210-00	101	1
1588-117-001-00	72	16	1612-603-002-00	74	12	1620-437-220-00	101	6

Numerical Index

Part Code	Fig.	Key	Part Code	Fig.	Key	Part Code	Fig.	Key
1621-317-220-00	96	2	1672-105-211-00	5	9	1673-525-002-20	105	5
	96	7	1672-120-006-00	9	14		106	9
1622-102-520-00	1	2	1672-120-007-00	9	16	1673-658-214-00	84	4
1627-122-008-00	50	48	1672-122-001-20	11	12	1673-730-008-00	50	34
1634-650-200-00	7	11	1672-202-002-20	15	7	1674-410-301-00	57	9
1636-271-013-00	21	7	1672-207-001-10	21	1		100	7
1636-317-201-00	103	2	1672-207-002-10	21	17	1674-410-320-00	57	7
1636-437-210-00	102	2	1672-207-230-00	21	13		100	4
	102	7	1672-207-240-00	21	8	1674-520-002-00	104	6
1636-901-022-00	93	3	1672-208-200-20	22	1	1674-520-003-00	104	7
1639-102-202-00	2	2	1672-210-002-00	27	6	1674-520-004-00	57	10
1640-520-004-00	104	13	1672-210-004-00	27	15		71	6
1640-520-005-00	104	11	1672-210-005-00	27	16		100	6
1640-658-322-00	84	3	1672-216-310-00	32	6		104	16
1640-658-324-00	84	5	1672-301-002-00	44	8		105	6
1640-658-325-00	84	6	1672-301-003-00	44	3	1674-520-210-00	71	4
1640-664-320-00	86	16	1672-301-004-00	44	5		104	14
1640-702-003-00	89	2	1672-307-001-10	46	1		105	4
	106	3	1672-406-005-00	54	2	1674-619-300-10	81	25
1640-702-004-00	89	6	1672-408-002-00	55	22		82	27
	106	7	1672-432-001-00	60	9	1674-619-310-00	81	22
1646-116-051-00	8	7	1672-432-002-10	60	10		82	24
1646-640-059-00	54	3	1672-433-210-10	61	4	1674-652-200-00	83	1
1646-901-061-00	90	7	1672-434-002-00	62	5	1674-652-202-00	83	2
1650-102-006-00	1	23	1672-434-003-00	62	8	1674-654-004-00	76	13
	2	23	1672-434-007-00	62	20		77	11
1650-104-201-00	4	5	1672-434-008-00	62	23	1674-654-211-00	83	4
1650-203-008-00	30	14	1672-434-011-10	62	15		83	6
1650-253-003-00	25	3	1672-502-003-00	65	1	1674-654-212-00	83	5
	26	3	1672-502-004-00	65	4	1674-654-270-00	83	9
	26	6	1672-503-210-00	66	18	1674-654-271-00	83	10
1650-259-010-00	27	7	1672-505-210-10	67	4	1674-654-272-00	83	11
	27	17	1672-601-001-00	74	10	1674-654-400-00	76	11
1650-432-001-00	60	4	1672-601-002-00	72	23		77	9
1650-508-002-00	108	14	1673-314-001-00	50	4	1674-904-001-00	93	1
1650-509-310-00	14	2		50	6	1674-904-002-10	93	6
1650-601-007-00	72	11		51	6	1674-904-003-00	93	7
1650-650-222-00	87	2	1673-525-002-20	57	8	1674-904-004-00	93	8
	88	2		70	3	1674-904-005-00	93	13
1650-654-036-00	85	28		70	38	1674-904-008-00	93	4
	86	30		71	5	1675-102-002-00	1	22
1650-658-270-00	86	20		89	8		2	22
1656-401-220-00	52	1		100	5	1675-102-004-00	1	6
1656-401-222-00	52	2		104	12		2	6
1672-103-001-00	3	5		104	15	1675-104-001-00	4	7

Numerical Index

Part Code	Fig.	Key	Part Code	Fig.	Key	Part Code	Fig.	Key
1675-104-002-00	4	9	1682-255-202-00	35	6	1683-202-051-00	16	1
1675-104-210-10	4	1		36	7	1683-203-051-00	16	2
1675-104-211-00	4	2		95	7	1683-203-052-00	16	4
1675-104-213-00	4	3	1682-255-203-00	35	5	1683-203-053-00	16	5
1675-112-002-00	7	2		36	6	1683-203-054-00	16	6
1675-116-001-00	8	5		95	6	1683-205-051-00	20	1
1675-117-210-20	8	13	1682-255-204-00	35	10	1683-205-052-00	20	6
1675-135-001-00	11	6		36	11	1683-205-053-00	20	7
1675-312-051-00	50	8		95	11	1683-205-055-10	20	13
1675-407-003-00	56	20	1682-255-205-10	35	11	1683-208-500-00	23	1
1675-508-003-00	68	30		36	13		33	1
	68	33		95	12	1683-208-510-00	23	5
	69	35	1682-255-210-40	35	21	1683-209-500-10	25	1
	69	38		36	20	1683-209-520-00	25	8
1675-508-500-00	69	7		95	22	1683-210-051-00	26	1
1675-601-002-00	72	10	1682-255-303-00	32	14	1683-210-052-00	26	2
1675-601-003-00	73	4		36	32	1683-210-053-00	26	5
1675-670-220-00	84	10		48	3	1683-265-510-00	33	6
1675-670-230-00	84	19		95	31		36	44
1681-211-002-00	28	8	1682-403-001-40	53	17		38	1
1682-102-004-00	1	13	1682-407-210-10	54	16		95	43
	2	13	1682-407-220-00	54	13	1683-271-500-40	39	11
1682-112-006-10	7	3	1682-408-220-00	55	26	1683-271-520-10	39	12
1682-201-001-10	12	1		56	34	1683-271-560-00	39	4
1682-202-001-00	15	1	1682-408-230-00	55	20	1683-272-054-10	40	16
1682-203-004-00	17	10	1682-433-001-30	61	1	1683-272-550-00	40	15
1682-205-001-00	19	1	1682-434-006-30	62	31	1683-272-560-00	40	12
1682-208-001-00	23	3	1682-434-007-00	62	22	1683-273-055-00	43	4
1682-211-002-20	28	18	1682-434-011-00	53	19	1683-273-570-10	43	11
	29	11	1682-441-210-00	102	1		56	29
1682-211-007-00	28	17	1682-441-220-00	102	6	1683-273-580-10	43	1
	29	10	1682-603-006-00	74	22	1683-273-610-20	43	5
1682-216-001-10	32	5	1682-690-370-10	85	24	1683-312-570-00	51	13
1682-216-006-00	32	1		86	26	1683-902-001-00	92	3
1682-216-007-10	32	16	1682-690-380-00	85	27	1683-902-004-00	91	5
1682-216-270-10	32	9		86	29		92	5
1682-255-001-00	37	1	1682-902-005-00	91	1	1684-112-300-10	7	1
1682-255-002-20	20	8	1682-902-009-00	92	4	1684-120-001-10	9	23
	30	11	1682-902-013-00	91	8	1684-120-210-00	9	20
	35	7		92	11	1684-120-220-00	9	21
	36	8	1682-902-014-00	91	6	1684-202-002-00	15	10
	95	8		92	7	1684-202-003-00	15	11
1682-255-201-10	35	1	1682-924-220-10	71	1	1684-202-004-00	15	12
	36	1	1683-120-530-20	10	25	1684-203-001-00	17	7
	95	2	1683-201-053-10	13	26	1684-203-002-00	17	9

Numerical Index

Part Code	Fig.	Key	Part Code	Fig.	Key	Part Code	Fig.	Key
1684-203-003-10	17	6	1688-201-051-20	13	1	1703-261-002-00	22	8
1684-203-200-40	17	1	1688-201-052-00	13	19		41	2
1684-204-001-00	18	1	1688-201-055-10	12	2	1703-310-202-00	49	2
1684-204-002-00	18	5		13	2		49	6
1684-204-003-00	18	3	1688-201-056-00	12	30	1703-313-001-10	72	43
1684-204-004-00	18	2		13	29	1703-680-200-10	6	8
1684-210-001-00	27	1	1688-203-055-00	16	11	1704-705-003-00	81	8
1684-210-002-00	27	9	1688-203-500-10	16	10		82	8
1684-211-001-00	28	1	1688-211-051-10	30	5	1705-102-014-00	1	26
1684-211-002-00	29	4	1688-211-052-00	30	10		2	26
1684-211-003-10	28	16	1688-211-053-00	30	9	1705-408-230-00	55	18
	29	9	1688-211-054-00	30	20		56	22
1684-211-004-20	29	1	1688-211-055-10	30	25		56	25
1684-211-200-00	28	4	1688-211-056-20	30	26	1705-902-006-00	93	2
1684-211-201-00	28	5	1688-211-057-00	30	4	1705-902-007-00	93	10
1684-403-200-00	53	1	1688-211-058-00	30	2	1705-904-001-00	93	12
1684-403-300-00	53	7	1688-211-061-10	28	14	1705-904-002-00	93	11
1684-434-011-00	62	32		29	7	1709-407-002-00	55	11
1684-434-012-00	62	33	1688-211-310-00	30	27		56	11
1684-902-003-00	91	4	1688-211-502-10	111	1	1709-407-310-20	55	14
1685-120-061-00	10	24	1688-211-503-00	111	2		56	14
1685-120-062-00	10	15	1688-211-504-00	111	3	1709-603-001-00	74	13
1685-120-310-00	10	14	1688-211-505-00	111	4	1716-102-003-00	1	24
1685-205-001-00	20	5	1688-211-506-00	111	8		2	24
1685-208-051-00	23	8	1688-211-507-00	111	9	1716-102-230-10	1	1
	33	9	1688-211-508-00	111	10	1716-103-200-20	3	1
1685-209-051-00	25	11	1688-211-509-00	111	11	1716-105-001-00	5	16
1685-211-500-10	30	1	1688-211-510-20	30	3		5	22
1685-265-051-00	38	4	1688-211-521-00	111	12	1716-105-200-00	5	1
1685-273-520-00	43	12	1688-211-522-00	111	13	1716-105-210-00	5	27
1685-317-210-00	96	1	1688-211-523-00	111	14	1716-111-001-00	6	1
1685-317-220-00	96	6	1688-211-524-00	111	15	1716-111-004-00	6	5
1685-317-230-00	96	3	1688-212-001-20	31	4	1716-111-005-00	6	13
	96	8	1688-216-500-00	33	12	1716-112-210-00	7	6
1685-317-510-00	98	1	1688-265-001-00	38	14	1716-116-200-00	8	2
1685-434-001-00	62	10	1688-271-510-10	39	1	1716-410-003-00	73	21
1685-441-510-00	103	1	1688-312-001-10	50	10	1716-410-004-10	1	30
1685-441-520-00	103	3		51	4		2	30
1685-508-220-00	68	4	1688-502-210-00	65	13	1716-601-001-00	72	2
1685-511-210-00	70	1	1689-434-001-20	62	1	1716-601-002-00	72	13
1685-511-220-00	70	27	1690-608-003-00	81	18	1716-601-003-00	73	19
1685-511-230-00	70	25		82	20	1716-601-006-00	72	29
1685-603-001-00	74	21	1696-901-006-00	90	5	1716-601-007-00	72	36
1685-603-510-00	74	20	1703-104-003-00	4	6	1716-601-013-00	72	33
1688-120-052-00	10	2	1703-105-210-00	5	20		72	40

Numerical Index

Part Code	Fig.	Key	Part Code	Fig.	Key	Part Code	Fig.	Key
1716-601-017-00	72	34	1725-266-001-00	38	13	1738-508-001-00	69	40
	72	41		67	16	1738-514-001-00	70	4
1716-601-018-00	72	21	1726-104-200-00	4	11	1738-514-210-00	70	5
1716-601-019-00	72	22	1726-505-003-00	41	14	1738-520-001-00	71	7
1716-601-021-00	72	18	1726-601-006-10	72	42		105	7
1716-601-260-10	72	17	1726-601-007-00	72	9	1738-520-200-00	105	1
1716-601-270-10	72	48	1738-122-200-20	11	1	1738-601-002-10	72	58
1716-601-280-20	72	24	1738-205-200-00	19	2	1738-601-003-20	72	60
1716-602-002-10	73	2	1738-212-002-00	31	1	1738-603-001-00	74	2
1716-603-003-10	74	16	1738-216-220-00	32	18	1738-606-230-00	76	1
1716-603-004-00	74	1	1738-218-200-00	34	1	1738-606-240-00	76	5
1716-603-005-00	74	3	1738-255-001-00	36	41		77	4
1716-680-006-00	85	7		95	40	1738-606-250-00	76	9
	86	7	1738-255-002-00	36	40		77	7
1716-680-200-10	85	4		95	39	1738-611-200-00	78	1
	86	4	1738-255-200-20	95	1		79	1
1717-103-001-00	3	7	1738-255-310-20	36	30	1738-611-210-10	78	6
1717-111-001-00	6	20		95	29	1738-611-220-10	78	8
1717-304-001-00	44	19	1738-255-330-00	36	36		79	8
1717-304-002-00	44	20		95	35	1738-630-011-00	81	20
1717-306-001-30	45	1	1738-309-001-10	47	3		82	22
1717-306-002-30	45	2	1738-312-005-00	50	43	1738-630-012-00	81	13
1717-309-002-00	48	4	1738-312-006-00	50	44		82	15
1717-309-200-10	47	1	1738-312-007-00	50	45	1738-660-001-00	83	12
1717-310-001-00	49	11	1738-312-009-00	50	58	1738-670-210-00	84	1
1717-310-002-10	49	1		51	47	1738-670-220-00	84	2
1717-310-003-10	49	5	1738-312-200-00	50	41	1738-690-203-00	87	8
1717-310-004-00	49	3	1738-312-220-10	50	5		88	8
	49	7	1738-312-240-00	50	54	1738-702-300-00	89	1
1717-310-200-00	49	9	1738-312-260-00	50	55		106	2
1717-406-200-00	54	11	1738-312-280-00	50	29	1738-702-310-00	89	11
1717-503-200-10	66	11	1738-312-290-00	50	30		106	12
1717-603-002-00	74	9	1738-312-300-10	50	36	1738-702-320-00	89	12
1717-630-001-30	81	6	1738-312-320-20	50	1		106	13
1717-630-002-10	81	7	1738-312-330-00	51	16	1738-902-003-00	91	2
1717-630-004-00	81	4	1738-411-210-00	57	4	1738-902-006-00	91	11
1725-120-211-00	58	2	1738-411-300-10	100	1	1738-902-007-00	91	12
	59	2	1738-431-200-20	58	9		95	48
1725-120-212-00	58	3		59	9	1738-904-001-00	93	14
	59	3	1738-432-200-00	60	1	1739-660-200-10	83	3
1725-120-213-00	58	4	1738-433-200-10	61	9	1739-660-212-00	83	7
	59	4	1738-501-001-00	64	23	1739-702-001-00	89	15
1725-120-216-00	58	6	1738-505-002-10	67	13		106	16
	59	6	1738-505-200-00	67	1	1739-904-001-00	93	5
1725-266-001-00	22	9	1738-508-001-00	68	35	1740-272-061-00	40	10

Numerical Index

Part Code	Fig.Key		Part Code	Fig.Key		Part Code	Fig.Key	
1740-272-062-00	40	11	1750-208-051-10	23	13	1750-312-560-10	51	44
1740-313-300-00	50	23	1750-208-052-00	23	14	1750-312-570-00	51	33
1740-313-301-00	50	27	1750-208-200-00	22	3	1750-312-590-00	51	19
1740-601-054-00	72	30	1750-208-500-10	23	11	1750-312-620-00	51	1
	72	37	1750-209-200-00	24	12	1750-407-001-00	54	6
1740-602-051-00	73	5	1750-209-500-00	25	14	1750-407-210-10	54	1
1740-602-052-00	73	8	1750-211-003-00	30	34	1750-410-200-00	57	1
1740-602-053-00	73	10	1750-212-001-00	31	9	1750-431-051-00	59	10
1740-602-054-00	73	11	1750-216-001-10	32	20	1750-431-200-00	58	1
1740-602-056-00	73	1	1750-216-051-20	33	14	1750-431-201-00	58	5
1740-602-057-00	73	3	1750-216-210-00	32	12	1750-431-220-00	58	10
1740-602-500-00	73	18	1750-216-500-00	33	16	1750-431-500-00	59	1
1740-630-054-00	81	9	1750-265-500-00	38	7	1750-431-501-00	59	5
	82	11	1750-271-001-00	39	24	1750-436-201-00	63	6
1740-630-055-00	81	10	1750-271-210-20	39	17	1750-436-210-00	63	1
	82	12	1750-271-220-00	39	5	1750-436-220-00	63	7
1740-680-530-00	85	1	1750-271-300-00	39	23	1750-508-001-00	68	1
	86	1	1750-272-051-10	41	32	1750-508-051-00	69	1
1740-680-550-00	85	8	1750-272-052-00	41	33	1750-508-052-00	69	4
	86	8	1750-272-053-10	41	34	1750-508-210-10	68	3
1740-690-202-00	87	5	1750-272-054-00	41	18	1750-508-220-00	68	5
	88	5	1750-272-200-10	40	3	1750-508-230-10	68	11
1740-903-053-00	91	10	1750-272-220-20	40	1		69	17
	92	9	1750-272-510-10	41	22	1750-508-240-10	68	26
1740-903-054-10	92	10	1750-272-520-00	41	1		69	31
1740-903-055-10	91	9	1750-272-530-00	41	5	1750-508-250-10	68	32
	92	8	1750-272-550-20	41	8	1750-508-510-00	69	11
1741-112-053-10	2	29	1750-272-560-10	41	30	1750-508-520-00	69	37
1750-102-210-40	1	27	1750-272-570-00	41	26	1750-514-001-10	70	8
	2	27	1750-272-580-00	41	10	1750-514-002-10	70	12
1750-102-220-10	1	21	1750-272-610-10	41	11	1750-520-001-00	104	5
	2	21	1750-272-620-00	41	19	1750-520-002-00	104	17
1750-102-230-00	2	1	1750-273-001-00	43	18	1750-520-200-00	104	1
1750-111-200-20	6	16	1750-273-210-00	43	17	1750-520-210-00	104	2
1750-111-210-00	6	18	1750-273-220-00	43	9	1750-601-210-10	72	28
1750-120-051-20	10	4	1750-309-500-10	48	1	1750-601-220-10	72	35
1750-120-210-30	9	1	1750-312-051-00	51	35	1750-601-250-10	72	1
1750-120-510-30	10	1	1750-312-052-00	51	36	1750-601-260-20	72	54
1750-122-001-00	11	9	1750-312-053-00	51	37	1750-601-270-00	72	50
1750-201-051-00	13	34	1750-312-054-00	51	9	1750-601-280-00	72	51
1750-201-500-00	13	35	1750-312-056-00	51	21	1750-601-290-10	72	55
1750-205-051-00	20	12	1750-312-310-00	50	20	1750-605-001-10	75	1
1750-207-200-10	21	4	1750-312-500-10	51	28	1750-605-002-00	75	2
1750-208-001-10	22	6	1750-312-540-00	51	25	1750-605-003-00	75	3
	38	11	1750-312-550-10	51	43	1750-605-004-10	75	4

Numerical Index

Part Code	Fig.	Key	Part Code	Fig.	Key	Part Code	Fig.	Key
1750-605-005-10	75	5	2149-601-031-00	95	32	3668-612-001-00	51	29
1750-605-006-10	75	7	2150-420-008-00	72	6	3670-236-003-00	76	14
1750-605-007-00	75	9	2150-661-002-00	85	2		77	12
1750-606-210-00	77	1		86	2	3670-520-008-00	36	38
1750-611-500-20	79	6	2161-111-004-00	6	6		95	37
1750-626-200-10	80	1	2173-820-003-00	24	13	3676-374-003-00	56	17
1750-630-001-10	81	12		25	16	3737-172-011-00	64	28
1750-630-002-10	81	14		48	2		87	21
	82	16	2186-536-211-00	85	5		87	23
1750-630-003-10	81	15		86	5		87	24
	82	17	2186-536-212-00	85	6		88	22
1750-630-051-10	82	14		86	6		88	25
1750-630-052-10	82	6	2188-973-200-00	94	1	3740-162-005-00	73	14
1750-630-053-10	82	7	2500-901-027-00	93	16	3747-342-002-00	39	14
1750-630-054-00	82	4	2504-307-273-00	42	1	3768-185-022-10	43	13
1750-630-200-20	81	1	2703-101-020-00	35	22		53	16
1750-630-210-00	81	2		36	23	3801-493-003-00	78	9
1750-630-300-00	81	26		95	23		79	9
1750-630-500-20	82	1	2706-501-003-00	6	3	3814-114-001-00	39	20
1750-630-510-10	82	2	2706-501-004-00	6	4	3814-835-035-00	54	7
1750-690-210-10	87	1	3610-440-018-00	72	12	3817-335-021-00	6	22
1750-690-212-00	87	9	3625-701-003-00	35	20	3821-262-202-00	87	3
	88	9		36	19		88	3
1750-690-510-00	88	1		95	21	3821-262-204-00	87	4
1750-702-200-00	106	1	3640-432-006-00	50	47		88	4
1750-901-001-00	90	1	3640-585-001-00	32	13	3824-222-006-00	41	27
1750-901-002-00	90	2		33	17	3827-270-001-00	87	6
1750-901-003-00	90	6		36	31		88	6
1750-901-004-00	90	4		95	30	3827-270-002-00	87	7
1750-902-051-00	92	1	3643-420-004-00	39	13		88	7
1750-902-052-00	92	12	3650-106-006-00	41	6	4101-102-038-00	6	12
1750-904-051-00	93	15	3650-270-214-00	84	12		74	7
2130-713-002-10	8	10	3650-703-004-00	39	19		76	3
2137-304-005-00	86	25	3656-107-004-00	20	9		76	7
2142-581-002-00	76	20		30	12		77	3
	77	18	3656-212-011-20	41	36		77	6
2144-419-022-00	23	17	3659-480-003-00	50	57	7821-501-005-00	72	3
	25	17		51	46	7955-201-026-00	62	18
	38	9	3664-540-001-00	40	4	7957-501-004-00	78	12
2144-519-007-00	33	19		51	2		79	12
2146-310-005-00	28	11	3668-612-001-00	23	12	7963-611-001-00	70	24
2149-312-015-60	39	22		25	15	7963-611-002-00	70	18
2149-601-031-00	32	15		33	13	7963-611-003-00	70	20
	33	18		38	8	7963-611-230-00	70	16
	36	33		50	37	7963-611-240-00	70	17

Numerical Index

Part Code	Fig.	Key	Part Code	Fig.	Key	Part Code	Fig.	Key
8654-901-002-00	93	9	K200-053-002-00	108	18	K510-003-023-00	110	24
8664-555-330-00	55	17	K200-053-102-00	108	3	K510-003-037-00	110	23
J061-116-025-00	55	23	K200-059-100-00	108	2	K510-003-100-00	110	46
J061-210-015-00	1	14	K211-001-000-00	66	8	K510-003-200-00	110	47
	2	14	K211-001-006-20	109	2	K510-003-204-00	110	48
J061-224-032-00	1	11	K211-001-007-00	109	3	K510-003-205-00	110	49
	2	11	K211-001-008-00	109	4	K510-003-206-00	110	50
J061-228-036-00	68	10	K211-001-009-00	109	5	K510-003-207-00	110	51
	69	16	K211-001-100-10	109	1	K510-003-500-00	110	53
J061-230-038-00	1	8	K211-008-011-00	108	9	K510-008-000-00	14	1
	2	8	K233-002-003-00	108	6	K510-008-001-00	110	1
J061-236-044-00	1	7	K233-002-004-00	108	7	K510-008-004-00	110	2
	1	12	K233-002-005-00	108	8	K510-008-010-00	110	8
	2	7	K233-005-000-00	108	4	K510-008-013-00	110	11
	2	12	K233-005-001-00	108	5	K510-008-014-00	110	12
J061-242-050-00	4	8	K250-001-000-00	64	12	P103-112-003-20	6	7
J061-247-055-00	4	10	K250-001-007-00	108	17	P113-211-300-00	43	2
J062-081-087-00	5	25	K250-001-009-00	64	14		56	30
J062-104-111-00	5	26	K250-019-000-10	109	9	P113-211-330-00	55	24
J062-119-126-00	5	17	K250-031-005-00	108	15		56	32
	5	19	K275-001-003-00	110	29	P120-605-031-00	50	9
	5	23	K510-001-005-00	110	3	V120-264-001-20	84	16
K135-002-009-00	55	8	K510-001-007-00	110	5	V120-265-003-00	85	29
	56	8	K510-001-008-00	110	6		86	31
	68	22	K510-001-009-00	110	7	V120-266-002-00	76	15
	69	27	K510-001-011-00	110	9		77	13
K135-012-000-00	68	15	K510-001-016-00	110	15	V120-366-001-60	77	8
	69	20	K510-001-017-00	110	16		84	20
K135-012-100-00	68	16	K510-001-018-00	110	18	V120-376-001-60	74	14
	69	21	K510-001-019-00	110	19		76	10
K135-015-002-00	55	3	K510-001-020-00	110	20	V120-376-002-00	74	8
	56	3	K510-001-025-00	110	25	V195-163-010-40	84	11
K135-017-006-00	68	17	K510-001-026-00	110	27	V195-164-016-40	84	18
	69	22	K510-001-029-00	110	28	V200-260-602-00	73	16
K135-020-000-00	55	1	K510-001-030-00	110	35	V200-360-604-00	36	34
	56	1	K510-001-031-00	110	36		95	33
K135-020-100-10	55	2	K510-001-032-00	110	37	V201-260-801-60	64	27
	56	2	K510-001-034-00	110	39		72	45
K177-006-203-00	53	11	K510-001-036-00	110	44	V201-260-802-00	72	44
K185-012-003-00	53	5	K510-003-006-00	110	4	V201-260-802-50	40	8
K185-012-004-00	53	6	K510-003-012-00	110	10	V201-260-803-00	40	13
K190-001-202-10	108	20	K510-003-015-00	110	13	V201-260-803-50	11	2
K200-035-006-00	108	19	K510-003-017-00	110	17		12	26
K200-053-000-00	56	24	K510-003-021-00	110	21	V201-260-805-50	56	27
K200-053-001-00	108	1	K510-003-022-00	110	22	V201-260-806-00	12	25

Numerical Index

Part Code	Fig.	Key	Part Code	Fig.	Key	Part Code	Fig.	Key
V201-260-806-50	5	13	V210-360-601-20	1	25	V211-260-802-00	21	12
V201-260-808-00	4	13		2	25		54	12
V201-260-813-00	67	2	V210-360-601-60	5	21		81	27
V201-261-006-00	45	8		12	34	V211-260-802-50	12	32
V201-261-008-00	41	24		32	21		64	22
V201-261-202-50	70	41		39	25	V211-260-803-00	9	6
V201-261-203-50	61	7		81	23		10	8
V201-261-204-00	45	3		82	25		13	31
V201-261-205-50	45	4		85	17	V211-260-805-00	66	9
V201-261-206-00	45	5		85	18	V211-261-002-00	23	15
V201-261-608-50	104	8		86	18		32	19
V201-360-802-50	70	6		86	19		79	7
V201-360-804-50	39	2		86	21	V211-261-002-50	43	10
V201-361-003-5B	62	40		87	15		81	3
V201-361-007-50	14	5		88	16		82	3
V201-361-008-50	53	21	V210-360-602-00	13	33	V211-261-003-50	85	25
V201-361-009-00	35	3		35	29		86	27
	36	2		36	29	V211-360-801-60	6	19
	95	3		73	17		23	4
V201-361-010-00	64	5		95	28		25	7
V201-361-202-50	9	10	V210-560-601-60	41	29		33	4
	10	12	V210-560-603-00	55	16		35	25
	46	9		56	16		36	27
	57	5		68	29		39	15
	62	42		69	34		43	15
V201-361-203-00	61	12	V210-560-604-50	55	13		56	21
	80	5		56	13		56	36
	100	2	V210-560-605-00	69	19		58	11
V201-361-203-50	70	9	V211-260-801-60	1	5		59	11
	70	13		1	28		67	14
	80	3		2	5		68	31
	107	2		2	28		68	34
V201-361-204-00	64	17		3	8		69	5
	71	2		5	28		69	13
	104	3		9	5		69	36
	105	2		9	19		69	39
V201-361-206-00	64	18		10	7		72	4
V201-361-213-00	80	4		43	8		72	57
V203-261-002-00	54	14		66	21		72	59
V203-361-002-00	9	8	V211-260-802-00	6	11		74	6
	10	10		6	15		76	4
V203-361-002-50	54	8		6	17		76	8
	57	2		7	14		81	21
V203-361-003-00	3	3		9	22	V211-360-802-00	3	6
V210-260-605-00	68	13		10	16		4	12

Numerical Index

Part Code	Fig.	Key
V211-360-802-00	11	18
	13	36
	33	15
	51	18
	68	7
	68	8
	69	14
	72	49
	73	23
	76	2
	76	6
	77	2
	77	5
	78	2
	78	7
	79	2
	81	11
	82	13
	82	23
	87	10
	88	11
	89	16
	95	47
	106	17
V211-360-802-50	50	28
	51	17
	62	30
V211-360-803-00	21	2
	57	11
	100	8
V211-360-804-00	1	18
	2	18
V211-361-002-00	22	7
	38	12
V211-361-002-50	37	2
	69	6
	69	10
V211-361-003-50	12	21
V211-560-802-00	21	18
	62	36
V211-560-802-50	44	18
	62	35
V211-561-001-60	66	6
V211-561-003-00	62	3
V211-561-003-50	10	22

Part Code	Fig.	Key
V211-561-003-50	53	20
	62	39
V211-660-802-00	13	28
V211-660-802-50	49	13
V211-661-003-50	13	24
V211-661-004-00	13	25
	64	4
V211-661-004-50	64	6
V211-661-005-00	13	16
V220-541-003-50	110	45
V233-361-201-60	33	5
	35	26
	36	25
	95	25
V251-261-202-5D	12	8
	13	8
V251-261-205-50	47	7
	48	8
V251-340-802-5D	10	17
V251-341-002-50	13	15
V251-341-003-5D	13	4
V252-261-004-00	13	10
V252-261-005-50	12	10
	13	11
V252-341-002-00	13	14
V252-341-003-00	12	3
	12	14
	13	13
V252-341-003-50	12	4
	13	3
V252-341-202-50	12	9
	13	9
V252-341-203-00	12	18
V252-341-204-50	13	12
V300-460-006-00	36	35
	95	34
V301-260-006-00	7	5
	87	17
	88	18
V304-260-008-00	11	3
	11	11
	11	19
	21	6
	22	5
	39	10

Part Code	Fig.	Key
V304-260-008-00	39	21
	40	7
	40	9
	50	11
	50	22
	50	32
	50	53
	51	5
	51	15
	51	39
	58	12
	59	12
	72	15
	72	47
	82	10
V304-260-010-00	12	5
	12	11
	12	15
	13	7
	44	30
	67	9
V304-260-012-00	47	8
	48	9
	50	46
	61	8
	107	4
V304-260-016-00	65	12
	70	19
	70	22
	89	3
	106	4
V304-460-008-00	10	19
	32	17
V304-460-010-00	10	20
	64	9
V304-460-012-00	12	19
	34	3
	70	11
	70	15
	70	32
V304-460-014-00	83	14
	89	14
	106	15
V304-460-024-00	70	29
V305-260-008-00	65	8

Numerical Index

Part Code	Fig.	Key
V305-260-008-00	70	7
V328-262-110-00	8	11
	52	3
V334-460-010-00	9	7
	10	9
	54	5
V335-260-012-00	85	20
	86	23
V350-160-006-00	72	32
	72	39
	73	7
	73	13
	74	11
V360-260-006-00	41	31
	74	15
	85	3
	86	3
V361-260-006-00	41	35
	76	16
	77	14
V362-260-008-00	40	14
	41	9
	72	53
	83	8
V363-260-008-00	57	12
	100	9
V401-160-006-00	10	5
	50	39
	51	31
	68	14
	87	16
	88	17
V401-160-008-00	4	14
	5	14
	10	18
	12	27
	27	3
	27	11
	39	3
	39	9
	44	11
	56	28
	58	8
	58	13
	59	8

Part Code	Fig.	Key
V401-160-008-00	59	13
	67	3
V401-160-010-00	3	4
	9	9
	10	11
	10	21
	12	6
	12	12
	12	16
	13	6
	14	7
	35	4
	36	3
	41	25
	44	31
	45	9
	53	22
	54	9
	54	15
	57	3
	62	41
	64	8
	95	4
V401-160-012-00	9	11
	10	13
	12	20
	34	2
	45	6
	46	10
	53	13
	57	6
	61	13
	62	43
	63	12
	64	19
	70	10
	70	14
	70	42
	71	3
	80	2
	100	3
	104	4
	105	3
	107	3
V401-160-014-00	83	13

Part Code	Fig.	Key
V401-160-014-00	89	13
	106	14
V401-160-016-00	65	10
	70	23
	89	4
	104	10
	106	5
V401-170-008-00	55	9
	56	9
	68	23
	69	28
V411-260-004-00	76	12
	77	10
V411-260-005-00	66	17
V411-260-006-00	7	4
	8	3
	8	14
	11	7
	50	40
	51	32
	66	14
	72	19
	73	15
	74	5
V411-260-008-00	1	20
	2	20
	5	15
	11	13
	12	28
	23	9
	24	7
	25	12
	27	4
	27	12
	33	10
	36	42
	38	5
	41	12
	41	16
	41	20
	47	4
	48	5
	50	14
	50	18
	51	10

Numerical Index

Part Code	Fig.	Key	Part Code	Fig.	Key	Part Code	Fig.	Key
V411-260-008-00	51	22	V500-162-002-00	41	17	V560-160-006-00	72	20
	51	41		41	21	V560-160-008-00	72	7
	72	14		47	5		72	26
	72	46		48	6	V580-140-403-60	64	25
	76	18		50	15	V580-140-502-00	24	9
	77	16		50	19		67	12
	81	24		50	35	V580-140-502-50	32	11
	82	26		51	11		60	12
	95	41		51	23	V580-140-503-20	24	16
V411-260-010-00	10	23		51	42	V580-140-601-60	18	6
	12	7		52	4		20	11
	12	13	V500-162-002-50	53	15	V580-140-602-50	23	6
	12	17	V500-162-502-00	33	20		25	9
	13	5		50	50		33	7
	14	8	V500-162-502-50	8	12		36	45
	45	10		32	4		38	2
	50	49	V500-163-001-50	11	14		95	44
	52	5	V500-163-002-00	9	15	V580-140-602-80	9	25
	54	4		23	10	V580-140-603-20	10	26
	54	10		25	13	V580-140-604-00	35	9
	64	7		33	11		36	10
	66	7		38	6		95	10
	67	8		63	13	V600-110-600-50	62	9
	72	8	V500-163-002-50	70	21		62	21
	78	10	V511-100-805-00	40	2	V600-110-600-80	62	12
	79	10		50	2	V600-110-601-00	44	13
V411-260-012-00	45	7		50	42		60	14
	47	9		51	34	V600-110-620-40	15	3
	48	10	V522-100-801-80	12	29		19	4
	70	43		21	3		20	14
V411-260-014-00	41	3		45	11		28	15
V411-260-016-00	65	11		64	10		29	8
	89	5	V523-100-301-00	110	54		30	15
	106	6	V523-100-801-60	44	9		30	35
V500-161-601-50	81	19	V523-101-002-40	12	31		110	14
	82	21		13	23	V600-110-620-50	30	32
V500-162-001-50	36	43		13	30		35	16
	66	13		35	2		36	16
	66	16		36	4		62	25
	95	42		53	18		95	17
V500-162-002-00	8	4		62	4	V600-110-620-60	30	16
	8	15		62	29		44	21
	11	8		62	38		62	26
	24	5		95	5	V600-110-620-80	46	6
	41	13	V530-240-502-40	44	26	V600-110-630-40	16	8

Numerical Index

Part Code	Fig.	Key
V600-110-630-40	16	12
	17	12
	19	3
	28	2
	29	2
	30	33
	35	15
	36	14
	95	16
V600-110-630-50	62	6
V600-110-630-60	46	5
V600-110-690-30	110	40
V600-110-690-70	62	11
V600-110-691-10	60	17
V600-111-600-60	16	3
V600-111-600-70	28	9
V600-150-600-30	110	41
V600-150-600-40	41	23
V607-110-620-40	15	8
	16	9
V607-110-620-50	28	12
	29	5
V607-110-630-40	31	5
V654-416-201-70	15	5
V654-425-322-40	20	2
	30	21
V654-430-382-40	30	28
V682-200-001-00	24	4
	25	4
	26	4
	26	7
	27	8
	27	18
	32	3
	35	13
	36	21
	95	13
V682-200-001-90	49	4
	49	8
V704-140-014-00	27	14
V704-140-015-00	39	16
	39	18
	41	4
V704-140-017-00	110	43
V704-140-018-00	23	18
V704-140-018-00	25	18
	38	10
	41	28
	42	2
V704-140-020-00	15	9
	16	7
	20	10
	28	19
	29	12
	30	13
	31	7
	110	32
V704-140-022-00	18	4
	50	3
	50	56
	51	45
V704-140-025-00	15	6
	16	14
	20	4
	28	13
	29	6
	30	24
	30	36
	35	14
	36	12
	36	39
	60	5
	62	27
	95	15
	95	38
V704-140-030-00	30	8
	30	18
	30	31
	46	7
V704-140-035-00	62	13
	65	6
V705-140-028-00	21	10
V705-140-030-00	110	42
V705-140-032-00	110	34
V705-140-047-00	62	17
	110	33
V705-140-052-00	17	13
	28	3
	29	3
	35	17
V705-140-052-00	36	17
	60	7
	95	18
V706-140-040-00	60	16
	65	5
V706-140-055-00	60	15
V707-140-055-00	62	14
V707-140-062-00	28	10
	30	19
	62	7
V707-140-080-00	46	8
V720-101-900-70	64	24
	66	20
V720-101-900-90	89	9
	106	10
V720-102-401-00	5	4
	27	5
	27	13
	44	28
	66	23
V720-102-401-20	108	16
V720-102-401-40	23	2
	24	14
	32	7
	33	2
	35	23
	36	24
	95	24
V720-102-401-50	14	4
V720-102-401-60	45	13
V720-102-401-80	49	10
V720-102-402-00	54	18
V720-102-402-10	25	2
V720-103-503-50	69	9
V720-103-503-60	54	19
V720-103-504-10	62	34
	110	26
V720-103-504-40	5	8
V720-105-705-50	66	2
V720-111-900-50	13	22
V720-111-900-60	55	7
	56	7
	68	21
	69	26
	109	8

Numerical Index

Part Code	Fig.	Key	Part Code	Fig.	Key	Part Code	Fig.	Key
V720-111-900-70	13	21	V721-103-109-00	62	2	V888-240-081-80	97	3
	108	21	V721-103-111-50	49	12		97	8
V720-112-401-10	43	3	V721-113-105-00	55	5	V889-000-081-60	96	4
	55	19		56	5		96	9
	55	21		68	19	V889-000-081-80	97	4
	55	25		69	24		97	9
	56	23	V721-113-106-00	64	16	V999-200-003-00	96	5
	56	26	V723-101-501-40	22	2		96	10
	56	31	V723-102-003-00	21	11		97	5
	56	33	V742-135-500-60	65	2		97	10
	110	31	V744-114-280-70	55	4		98	5
V720-112-401-20	64	13		56	4		99	4
	64	15		68	18		99	8
	64	21		69	23		101	5
	109	7	V744-120-350-70	9	2		101	10
V720-112-401-40	14	3		15	2		102	4
	108	10		19	5		102	9
	110	30		20	15		103	5
V720-112-401-60	110	52	V744-135-520-80	35	19			
V720-112-401-80	68	36		36	18			
	69	41		95	20			
	89	7	V744-135-550-80	31	8			
	106	8	V760-150-000-00	10	6			
	108	11		50	38			
V720-112-402-00	55	12		51	30			
	55	15		62	37			
	56	12	V763-150-000-00	9	3			
	56	15		11	4			
	68	12		40	5			
	68	28		50	7			
	69	18		51	3			
	69	33	V780-140-000-1T	108	23			
	108	12		109	6			
V720-112-402-20	55	6	V780-140-000-2T	108	22			
	56	6	V781-160-000-6B	35	27			
	68	20		36	5			
	69	25		95	26			
V720-113-502-40	69	12	V782-160-000-2T	9	4			
V720-113-502-50	108	13		10	3			
V720-113-502-80	68	2		13	20			
	69	3		68	27			
V720-113-503-40	53	12		69	32			
V721-103-104-50	68	6		108	24			
	69	8	V883-005-001-20	101	4			
V721-103-107-00	61	11		101	9			

Alpabetical Index

6004-097-330-00

Description	Fig.	Key
ADAPTER/220X125 ASSY	22	1
ARM/CONTROL	20	27
ARM/FLOATING COMP	20	19
ARM/TENSION	22	2
ARMATURE/STARTE ASSY	28	5
BALL	1	5
BEARING,RB/6002SS	15	7
BEARING,RB/6004	20	13
BEARING,RB/6005	9	47
BEARING,RB/6203	20	12
BEARING,THRUST CRANK	5	13
BEARING,THRUST CRANK	6	2
BEARING,THRUST CRANK	6	4
BEARING/BALL	29	6
BEARING/BALL	29	11
BEARING/CONNECTING R	6	5
BEARING/CONNECTING R	6	6
BEARING/CONNECTING R	13	7
BEARING/CRANK/LOWER	5	12
BEARING/CRANK/UPPER	5	11
BEARING/NEEDLE	28	8
BEARING/NEEDLE	28	9
BEARING/OILLESS	28	12
BEARING/OILLESS	28	14
BEARING/OILLESS	28	16
BEARING/WATER PUMP	17	3
BEARING/WATERPUMP	17	4
BEARING/WITH SHOCKAB	28	13
BELT/VHM34.5/FAN	18	5
BODY/NOZZLE HOLDER	26	2
BODY/OILPUMP	16	2
BODY/WATERPUMP	17	2
BOLT	5	2
BOLT	9	41
BOLT	11	18
BOLT	15	12
BOLT	15	15
BOLT	16	7
BOLT	29	9
BOLT	29	10
BOLT	29	19
BOLT	29	20
BOLT	29	21
BOLT	29	22
BOLT	29	24
BOLT,JOINT	16	13
BOLT,SEMS/M10X20	8	4
BOLT,SEMS/M6X12	12	5
BOLT,SEMS/M6X12	20	15
BOLT,SEMS/M8X16	5	32
BOLT,SEMS/M8X25 7T	4	3
BOLT/CONNECTINGROD	13	6
BOLT/FLANGE	15	8
BOLT/M10X1.25X82	1	7
BOLT/M6	9	32
BOLT/M6	9	33
BOLT/M6X10	20	17
BOLT/THROUGH	28	30
BOLT/WASHERHEAD	27	10
BOLT/WS	16	6
BOLT/WS	18	4
BOLT/WS	23	8
BRACKET ROCKER SHAFT	11	12
BRACKET,ROCKER SHAFT	11	13
BRUSH	29	17
BRUSH/STARTER	28	2
BUSH	29	15
CAMSHAFT/INJECTION P	20	9
CAP,BLANK/30	9	38
CAP,OIL FILLER	2	2
CAP,SEALING	1	2
CARTRIDGE/OILFILTER	16	15
CENTER CRANK PULLEY	15	11
CLAMP,STRAINER	16	10
CLAMP/WIRE/10-12	21	7
CLAMP/WIRE/10-15	17	21
CLIP/HOSE/7.6-8.2	21	4
CLIP/HOSE/8.7-9.3	21	9
CLUTCH/STARTER ASSY	28	6
COLLOR	29	3
CONNECTINGROD ASSY	13	5
CONNECTOR	21	1
CONNECTOR,OIL FILTER	5	25
CONNECTOR/GLOWPLUG	24	4
COVER	28	11
COVER	29	13
COVER,BEARING	29	5
COVER/CYLINDER HEAD	2	1
COVER/INJECTIONPUMP	5	26
CRANKSHAFT ASSY	15	1
CUP/SEALING/12	5	7
CUP/SEALING/16	9	3
CUP/SEALING/28	5	3
CUP/SEALING/36	5	4
CUTTER,VALVE	11	5
CYLINDERBLOCK ASSY	5	1
CYLINDERHEAD ASSY	1	1
DOWEL	5	22
DRIVE/TACHOMETE ASSY	9	35
ELEMENT ASSY	27	9
FAN/COOLING	18	1
FLANGEBOLT	3	3
FLANGEBOLT	3	4
FLANGEBOLT	5	28
FLANGEBOLT	7	4
FLANGEBOLT	9	8
FLANGEBOLT	9	9
FLANGEBOLT	9	11
FLANGEBOLT	9	12
FLANGEBOLT	9	13
FLANGEBOLT	9	15
FLANGEBOLT	9	37
FLANGEBOLT	10	2
FLANGEBOLT	11	19
FLANGEBOLT	16	11
FLANGEBOLT	17	13
FLANGEBOLT	17	18
FLANGEBOLT	17	24
FLANGEBOLT	17	25
FLANGEBOLT	17	29
FLANGEBOLT	20	7
FLANGEBOLT	23	3
FLANGEBOLT	23	5
FLANGEBOLT	24	7
FLYWEIGHT	20	16
FLYWHEEL ASSY	15	5
FRAME	29	12
FRAME/COMMUTATOR END	28	10
FRAME/DRIVEEND ASSY	29	7
GASKET	2	5
GASKET	17	8
GASKET	24	6
GASKET	25	5
GASKET	25	22
GASKET,EXH.MANIFOLD	4	2

Alpabetical Index

Description	Fig.	Key	Description	Fig.	Key	Description	Fig.	Key
GASKET,EXH.MANIFOLD	25	7	INJECTIONPUMP ASSY	20	1	O-RING/P15	25	17
GASKET,INLET MANIFOL	3	2	JOINTT-TYPE 2	21	6	O-RING/P18	7	3
GASKET,INLET MANIFOL	25	6	KEY/07X05X09	12	3	OILPUMP ASSY	16	1
GASKET,NOZZLE	19	2	KEY/07X05X09	20	11	OILSEAL	5	14
GASKET,SPACER	17	16	KEY/07X05X43	15	4	OILSEAL	25	10
GASKET,SPACER	25	19	LEVELGAGE	5	30	ORING	27	5
GASKET/COVER	5	27	LEVER/CONTROL COMP	20	24	PACKING	9	20
GASKET/COVER	25	11	LEVER/PINIONDRIVE	28	19	PACKING	16	14
GASKET/CYLINDERHEAD	1	6	MANIFOLD(INLET) ASSY	3	1	PACKING	25	13
GASKET/CYLINDERHEAD	25	3	MANIFOLD,EXH	4	1	PAN,OIL COMP	7	1
GASKET/DELIVERYVALVE	27	6	METAL,CRANK SET	5	10	PIECE,DISTANCE	26	6
GASKET/GEARCASE	9	27	METAL,CRANK SET	6	1	PIN	5	17
GASKET/GEARCASE	25	14	METAL,CRANK SET	6	3	PIN	5	18
GASKET/HOUSING	17	23	NIPPLE	5	23	PIN	5	29
GASKET/HOUSING	25	20	NOZZLE ASSY	26	52	PIN	9	23
GASKET/PLATE	9	40	NUT	9	34	PIN	15	2
GASKET/PLATE	25	15	NUT	11	17	PIN,CONTROL	20	21
GASKET/WATER PUMP	17	12	NUT	20	28	PIN,GROOVE	9	26
GASKET/WATER PUMP	25	18	NUT	26	51	PIN,NOZZLE HOLDER	26	3
GEAR/CAMSHAFT	12	2	NUT	28	28	PIN,PISTON	13	3
GEAR/CRANK	15	3	NUT	28	29	PIN/ARM	9	21
GEAR/IDLE ASSY	12	6	NUT	28	34	PIN/IDLEGEAR	5	6
GEAR/INJECTIONPUMP	20	10	NUT	29	2	PIN/INJECTIONPUMP	27	12
GEAR/OILPUMP ASSY	16	3	NUT	29	23	PIN/SNAP	9	22
GEAR/STARTER PLANETA	28	17	NUT	29	25	PIN/STRAIGHT	5	16
GEAR/STARTERINTERNAL	28	18	NUT,CAP/M 8	9	19	PIN/STRAIGHT	8	3
GEARCASE ASSY	9	1	NUT/CAP	2	4	PIN/STRAIGHT	16	5
GENERATOR ASSY	23	1	NUT/M08	9	10	PIN/TUBE	5	15
GLOWPLUG	24	3	NUT/M08	11	20	PIN/TUBE	9	44
GUIDE/LEVELGAGE COMP	5	31	NUT/M08	17	14	PIPE,OIL	16	12
HANGER	10	1	NUT/M08	17	19	PIPE,WATER OUTLET	17	27
HOLDER ASSY	29	14	NUT/M08	20	8	PIPE/FUEL	21	2
HOLDER/BRUSH ASSY	29	16	NUT/M10	23	6	PIPE/INJECTION ASSY	19	3
HOLDER/DELIVERYVALVE	27	4	NUT/M8	9	18	PIPE/INJECTION ASSY	19	4
HOLDER/JE/9-9	9	14	NUT/M8	9	48	PIPE/INJECTION ASSY	19	5
HOLDER/NOZZLE ASSY	26	1	NUT/M8	9	50	PIPE/WATER PUMP	17	11
HOLDER/STARTER ASSY	28	3	NUT/M8	28	32	PIPE/WATERDRAIN	5	24
HOSE,RUBBER	21	3	NUT/NOZZLERETAINING	26	5	PISTON	13	1
HOSE/RABBER	2	6	NUT/PINIONSTOP	28	23	PISTON(OV)	14	1
HOSE/RUBBER	17	20	O-RING	17	28	PISTON(OV)	14	3
HOSE/RUBBER	21	5	O-RING	25	21	PISTON/VALVE/RELIEF	9	29
HOUSING ASSY	27	8	O-RING 1A S50	9	43	PLATE	27	13
HOUSING/STARTER ASSY	28	7	O-RING 1A S50	25	16	PLATE	28	27
HOUSING/THERMOSTAT	17	22	O-RING/P 8	20	25	PLATE	29	8
INJECTIONNOZZLE ASSY	19	1	O-RING/P15	16	9	PLATE,THRUST	12	4

Alpabetical Index

6004-097-330-00

Description	Fig.	Key
PLATE,THRUST INJPUMP	20	14
PLATE/ADJUST	23	2
PLATE/ADJUSTING	27	11
PLATE/FRONT	9	39
PLATE/REAR	8	1
PLATE/TAPPET/AD 0.2	27	25
PLATE/TAPPET/AD 0.25	27	29
PLATE/TAPPET/AD 0.3	27	26
PLATE/TAPPET/AD 0.35	27	30
PLATE/TAPPET/AD 0.4	27	27
PLATE/TAPPET/AD 0.45	27	31
PLATE/TAPPET/AD 0.5	27	28
PLATE/TAPPET/AD 0.55	27	32
PLATE/TAPPET/AD 0.6	27	20
PLATE/TAPPET/AD 0.65	27	33
PLATE/TAPPET/AD 0.7	27	21
PLATE/TAPPET/AD 0.8	27	22
PLATE/TAPPET/AD 0.9	27	23
PLATE/TAPPET/AD 1.0	27	24
PLATE/WATER PUMP	17	9
PLUG	5	5
PLUG	9	2
PLUG	11	11
PLUG/M14X1.5	7	2
PLUG/PT1/2	1	3
PLUG/SCREW	9	24
POINTER	8	2
PULLEY	15	10
PULLEY	29	1
PULLEY ASSY	15	9
PULLEY,WATER PUMP	18	2
RACK/CONTROL ASSY	27	15
REGULATOR ASSY	29	26
RELAY,SOLENOID	24	8
REPAIR/ENGINE SET	25	1
RING,SNAP	13	4
RING,SNAP/ 4 E	20	22
RING,SNAP/12 C	9	31
RING,SNAP/16 C	11	15
RING/O	9	36
RING/PISTON SET	13	2
RING/PISTON/OV SET	14	2
RING/PISTON/OV SET	14	4
RING/SNAP	28	21
RING/SNAP	28	22
RINGGEAR	15	6
RINK/CONTROL	20	20
ROCKERARM	11	9
ROCKERSHAFT ASSY	11	8
ROD,PUSH	11	7
ROTOR ASSY	29	4
ROTOR/OUTER	16	4
ROTOR/WATERPUMP	17	6
SCREW	28	33
SCREW ADJUST	11	16
SCREW/HOLLOW	27	1
SCREW/WATER PUMP	17	10
SEAL SET/WATER PUMP	17	5
SEAL,BEARING CAP	5	8
SEAL,BEARING CAP	25	8
SEAL,BEARING CAP/7	5	9
SEAL,BEARING CAP/7	25	9
SEAL,CYL.HEAD COVER	2	3
SEAL,CYL.HEAD COVER	25	4
SEAL,OIL	1	4
SEAL,OIL	9	7
SEAL,OIL	25	2
SEAL,OIL	25	12
SEAL/WATER PUMPPULLE	17	7
SEAT,VALVE SPRING	11	4
SEAT/SPRING/LOWER	27	19
SEAT/SPRING/UPPER	27	17
SHAFT,CAM	12	1
SHAFT/HYDRAULIC ASSY	9	46
SHAFT/ROCKERARM ASSY	11	10
SHAFT/STARTER PLANET	28	15
SHIM/INJECTION P/0.1	20	3
SHIM/INJECTION P/0.2	20	4
SHIM/INJECTION P/0.3	20	2
SHIM/INJECTION P/0.4	20	5
SHIM/INJECTION P/0.5	20	6
SLEEVE/PLUNGER	27	16
SOLENOID	24	5
SPACER	9	42
SPACER,PUMP.WATER	17	15
SPACER/FAN/48	18	3
SPRING	11	14
SPRING	29	18
SPRING,RETURN	20	26
SPRING,STARTING	20	31
SPRING/DELIVERYVALVE	27	3
SPRING/GOVERNOR	20	23
SPRING/PUMPPLUNGER	27	18
SPRING/RELIEF VALVE	9	30
SPRING/STARTERBRUSH	28	4
SPRING/VALVE	11	3
STARTER ASSY	23	7
STOPPER/FULLLOAD	9	17
STRAINER	16	8
STUD	1	8
STUD	5	20
STUD	5	21
STUD	5	33
STUD	9	4
STUD	9	5
STUD	9	6
STUD	9	45
STUD/M8X40	5	19
STUD/M8X40	17	17
SWITCH/MAGNETIC ASSY	28	20
SWITCH/OILPRESSURE	24	1
SWITCH/OVERHEAT	24	2
TAPPET	11	6
TAPPET/INJECTIO ASSY	27	14
THERMOSTAT	17	26
THRUSTPIECE	20	18
TUBE,ORIFICE	21	8
VALVE ASSY	27	7
VALVE/EXHAUST	11	2
VALVE/INTAKE	11	1
VALVE/RELIEF ASSY	9	28
WASHER	15	14
WASHER	26	4
WASHER	26	50
WASHER	28	31
WASHER / M6	20	29
WASHER,SP/M 6	20	30
WASHER,SP/M 8	9	49
WASHER,SP/M 8	9	51
WASHER,SP/M6	15	13
WASHER/0.9	26	7
WASHER/0.925	26	8
WASHER/0.95	26	9
WASHER/0.975	26	10
WASHER/08X14X01	9	16

Description	Fig.	Key	Description	Fig.	Key	Description	Fig.	Key
WASHER/08X14X01	9	25	WASHER/SK	28	26			
WASHER/08X14X01	25	23	WATERPUMP ASSY	17	1			
WASHER/1.0	26	11	YOKE/STARTER ASSY	28	1			
WASHER/1.025	26	12						
WASHER/1.05	26	13						
WASHER/1.075	26	14						
WASHER/1.1	26	15						
WASHER/1.125	26	16						
WASHER/1.15	26	17						
WASHER/1.175	26	18						
WASHER/1.2	26	19						
WASHER/1.225	26	20						
WASHER/1.25	26	21						
WASHER/1.275	26	22						
WASHER/1.3	26	23						
WASHER/1.325	26	24						
WASHER/1.35	26	25						
WASHER/1.375	26	26						
WASHER/1.4	26	27						
WASHER/1.425	26	28						
WASHER/1.45	26	29						
WASHER/1.475	26	30						
WASHER/1.5	26	31						
WASHER/1.525	26	32						
WASHER/1.55	26	33						
WASHER/1.575	26	34						
WASHER/1.6	26	35						
WASHER/1.625	26	36						
WASHER/1.65	26	37						
WASHER/1.675	26	38						
WASHER/1.7	26	39						
WASHER/1.725	26	40						
WASHER/1.75	26	41						
WASHER/1.775	26	42						
WASHER/1.8	26	43						
WASHER/1.825	26	44						
WASHER/1.85	26	45						
WASHER/1.875	26	46						
WASHER/1.9	26	47						
WASHER/1.925	26	48						
WASHER/1.95	26	49						
WASHER/9X22X2	23	4						
WASHER/AIR BLEEDER	27	2						
WASHER/SK	28	24						
WASHER/SK	28	25						

Alpabetical Index

6004-097-340-00

Description	Fig.	Key
ADAPTER/220X125 ASSY	22	1
ARM/CONTROL	20	27
ARM/FLOATING COMP	20	19
ARM/TENSION	22	2
ARMATURE/STARTE ASSY	28	5
BALL	1	5
BEARING,RB/6002SS	15	8
BEARING,RB/6004	20	13
BEARING,RB/6005	9	47
BEARING,RB/6203	20	12
BEARING,THRUST CRANK	5	13
BEARING,THRUST CRANK	6	2
BEARING,THRUST CRANK	6	4
BEARING/BALL	29	6
BEARING/BALL	29	11
BEARING/CONNECTING R	6	5
BEARING/CONNECTING R	6	6
BEARING/CONNECTING R	13	7
BEARING/CRANK/LOWER	5	12
BEARING/CRANK/UPPER	5	11
BEARING/NEEDLE	28	8
BEARING/NEEDLE	28	9
BEARING/OILLESS	28	12
BEARING/OILLESS	28	14
BEARING/OILLESS	28	16
BEARING/WATER PUMP	17	3
BEARING/WATERPUMP	17	4
BEARING/WITH SHOCKAB	28	13
BELT/VHM34.5/FAN	18	5
BODY/NOZZLE HOLDER	26	2
BODY/OILPUMP	16	2
BODY/WATERPUMP	17	2
BOLT	5	2
BOLT	9	41
BOLT	11	18
BOLT	15	13
BOLT	15	16
BOLT	16	7
BOLT	29	9
BOLT	29	10
BOLT	29	19
BOLT	29	20
BOLT	29	21
BOLT	29	22
BOLT	29	24
BOLT,JOINT	16	13
BOLT,SEMS/M10X20	8	4
BOLT,SEMS/M6X12	12	5
BOLT,SEMS/M6X12	20	15
BOLT,SEMS/M8X16	5	32
BOLT,SEMS/M8X25 7T	4	3
BOLT/CONNECTINGROD	13	6
BOLT/FLANGE	15	9
BOLT/M10X1.25X82	1	7
BOLT/M6	9	32
BOLT/M6	9	33
BOLT/M6X10	20	17
BOLT/THROUGH	28	30
BOLT/WASHERHEAD	27	10
BOLT/WS	16	6
BOLT/WS	18	4
BOLT/WS	23	8
BRACKET ROCKER SHAFT	11	12
BRACKET,ROCKER SHAFT	11	13
BRUSH	29	17
BRUSH/STARTER	28	2
BUSH	29	15
CAMSHAFT/INJECTION P	20	9
CAP,BLANK/30	9	38
CAP,OIL FILLER	2	2
CAP,SEALING	1	2
CARTRIDGE/OILFILTER	16	15
CENTER CRANK PULLEY	15	12
CLAMP,STRAINER	16	10
CLAMP/WIRE/10-12	21	7
CLAMP/WIRE/10-15	17	21
CLIP/HOSE/7.6-8.2	21	4
CLIP/HOSE/8.7-9.3	21	9
CLUTCH/STARTER ASSY	28	6
COLLOR	29	3
CONNECTINGROD ASSY	13	5
CONNECTOR	21	1
CONNECTOR,OIL FILTER	5	25
CONNECTOR/GLOWPLUG	24	4
COVER	28	11
COVER	29	13
COVER,BEARING	29	5
COVER/CYLINDER HEAD	2	1
COVER/INJECTIONPUMP	5	26
CRANKSHAFT ASSY	15	1
CUP/SEALING/12	5	7
CUP/SEALING/16	9	3
CUP/SEALING/28	5	3
CUP/SEALING/36	5	4
CUTTER,VALVE	11	5
CYLINDERBLOCK ASSY	5	1
CYLINDERHEAD ASSY	1	1
DOWEL	5	22
DRIVE/TACHOMETE ASSY	9	35
ELEMENT ASSY	27	9
FAN/COOLING	18	1
FLANGEBOLT	3	3
FLANGEBOLT	3	4
FLANGEBOLT	5	28
FLANGEBOLT	7	4
FLANGEBOLT	9	8
FLANGEBOLT	9	9
FLANGEBOLT	9	11
FLANGEBOLT	9	12
FLANGEBOLT	9	13
FLANGEBOLT	9	15
FLANGEBOLT	9	37
FLANGEBOLT	10	2
FLANGEBOLT	11	19
FLANGEBOLT	16	11
FLANGEBOLT	17	13
FLANGEBOLT	17	18
FLANGEBOLT	17	24
FLANGEBOLT	17	25
FLANGEBOLT	17	29
FLANGEBOLT	20	7
FLANGEBOLT	23	3
FLANGEBOLT	23	5
FLANGEBOLT	24	7
FLYWEIGHT	20	16
FLYWHEEL ASSY	15	5
FRAME	29	12
FRAME/COMMUTATOR END	28	10
FRAME/DRIVEEND ASSY	29	7
GASKET	2	5
GASKET	17	8
GASKET	24	6
GASKET	25	5
GASKET	25	22
GASKET,EXH.MANIFOLD	4	2

Alpabetical Index

Description	Fig.	Key
GASKET,EXH.MANIFOLD	25	7
GASKET,INLET MANIFOL	3	2
GASKET,INLET MANIFOL	25	6
GASKET,NOZZLE	19	2
GASKET,SPACER	17	16
GASKET,SPACER	25	19
GASKET/COVER	5	27
GASKET/COVER	25	11
GASKET/CYLINDERHEAD	1	6
GASKET/CYLINDERHEAD	25	3
GASKET/DELIVERYVALVE	27	6
GASKET/GEARCASE	9	27
GASKET/GEARCASE	25	14
GASKET/HOUSING	17	23
GASKET/HOUSING	25	20
GASKET/PLATE	9	40
GASKET/PLATE	25	15
GASKET/WATER PUMP	17	12
GASKET/WATER PUMP	25	18
GEAR/CAMSHAFT	12	2
GEAR/CRANK	15	3
GEAR/IDLE ASSY	12	6
GEAR/INJECTIONPUMP	20	10
GEAR/OILPUMP ASSY	16	3
GEAR/STARTER PLANETA	28	17
GEAR/STARTERINTERNAL	28	18
GEARCASE ASSY	9	1
GENERATOR ASSY	23	1
GLOWPLUG	24	3
GUIDE/LEVELGAGE COMP	5	31
HANGER	10	1
HOLDER ASSY	29	14
HOLDER/BRUSH ASSY	29	16
HOLDER/DELIVERYVALVE	27	4
HOLDER/JE/9-9	9	14
HOLDER/NOZZLE ASSY	26	1
HOLDER/STARTER ASSY	28	3
HOSE,RUBBER	21	3
HOSE/RABBER	2	6
HOSE/RUBBER	17	20
HOSE/RUBBER	21	5
HOUSING ASSY	27	8
HOUSING/STARTER ASSY	28	7
HOUSING/THERMOSTAT	17	22
INJECTIONNOZZLE ASSY	19	1
INJECTIONPUMP ASSY	20	1
JOINTT-TYPE 2	21	6
KEY/07X05X09	12	3
KEY/07X05X09	20	11
KEY/07X05X43	15	4
LEVELGAGE	5	30
LEVER/CONTROL COMP	20	24
LEVER/PINIONDRIVE	28	19
MANIFOLD(INLET) ASSY	3	1
MANIFOLD,EXH	4	1
METAL,CRANK SET	5	10
METAL,CRANK SET	6	1
METAL,CRANK SET	6	3
NIPPLE	5	23
NOZZLE ASSY	26	52
NUT	9	34
NUT	11	17
NUT	20	28
NUT	26	51
NUT	28	28
NUT	28	29
NUT	28	34
NUT	29	2
NUT	29	23
NUT	29	25
NUT,CAP/M 8	9	19
NUT/CAP	2	4
NUT/M08	9	10
NUT/M08	11	20
NUT/M08	17	14
NUT/M08	17	19
NUT/M08	20	8
NUT/M10	23	6
NUT/M8	9	18
NUT/M8	9	48
NUT/M8	9	50
NUT/M8	28	32
NUT/NOZZLERETAINING	26	5
NUT/PINIONSTOP	28	23
O-RING	17	28
O-RING	25	21
O-RING 1A S50	9	43
O-RING 1A S50	25	16
O-RING/P 8	20	25
O-RING/P15	16	9
O-RING/P15	25	17
O-RING/P18	7	3
OILPUMP ASSY	16	1
OILSEAL	5	14
OILSEAL	25	10
ORING	27	5
PACKING	9	20
PACKING	16	14
PACKING	25	13
PAN,OIL COMP	7	1
PIECE,DISTANCE	26	6
PIN	5	17
PIN	5	18
PIN	5	29
PIN	9	23
PIN	15	2
PIN,CONTROL	20	21
PIN,GROOVE	9	26
PIN,NOZZLE HOLDER	26	3
PIN,PISTON	13	3
PIN/ARM	9	21
PIN/IDLEGEAR	5	6
PIN/INJECTIONPUMP	27	12
PIN/SNAP	9	22
PIN/STRAIGHT	5	16
PIN/STRAIGHT	8	3
PIN/STRAIGHT	15	7
PIN/STRAIGHT	16	5
PIN/TUBE	5	15
PIN/TUBE	9	44
PIPE,OIL	16	12
PIPE,WATER OUTLET	17	27
PIPE/FUEL	21	2
PIPE/INJECTION ASSY	19	3
PIPE/INJECTION ASSY	19	4
PIPE/INJECTION ASSY	19	5
PIPE/WATER PUMP	17	11
PIPE/WATERDRAIN	5	24
PISTON	13	1
PISTON(OV)	14	1
PISTON(OV)	14	3
PISTON/VALVE/RELIEF	9	29
PLATE	27	13
PLATE	28	27
PLATE	29	8

Alpabetical Index

6004-097-340-00

Description	Fig.	Key
PLATE,THRUST	12	4
PLATE,THRUST INJPUMP	20	14
PLATE/ADJUST	23	2
PLATE/ADJUSTING	27	11
PLATE/FRONT	9	39
PLATE/REAR	8	1
PLATE/TAPPET/AD 0.2	27	25
PLATE/TAPPET/AD 0.25	27	29
PLATE/TAPPET/AD 0.3	27	26
PLATE/TAPPET/AD 0.35	27	30
PLATE/TAPPET/AD 0.4	27	27
PLATE/TAPPET/AD 0.45	27	31
PLATE/TAPPET/AD 0.5	27	28
PLATE/TAPPET/AD 0.55	27	32
PLATE/TAPPET/AD 0.6	27	20
PLATE/TAPPET/AD 0.65	27	33
PLATE/TAPPET/AD 0.7	27	21
PLATE/TAPPET/AD 0.8	27	22
PLATE/TAPPET/AD 0.9	27	23
PLATE/TAPPET/AD 1.0	27	24
PLATE/WATER PUMP	17	9
PLUG	5	5
PLUG	9	2
PLUG	11	11
PLUG/M14X1.5	7	2
PLUG/PT1/2	1	3
PLUG/SCREW	9	24
POINTER	8	2
PULLEY	15	11
PULLEY	29	1
PULLEY ASSY	15	10
PULLEY,WATER PUMP	18	2
RACK/CONTROL ASSY	27	15
REGULATOR ASSY	29	26
RELAY,SOLENOID	24	8
REPAIR/ENGINE SET	25	1
RING,SNAP	13	4
RING,SNAP/ 4 E	20	22
RING,SNAP/12 C	9	31
RING,SNAP/16 C	11	15
RING/O	9	36
RING/PISTON SET	13	2
RING/PISTON/OV SET	14	2
RING/PISTON/OV SET	14	4
RING/SNAP	28	21
RING/SNAP	28	22
RINGGEAR	15	6
RINK/CONTROL	20	20
ROCKERARM	11	9
ROCKERSHAFT ASSY	11	8
ROD,PUSH	11	7
ROTOR ASSY	29	4
ROTOR/OUTER	16	4
ROTOR/WATERPUMP	17	6
SCREW	28	33
SCREW ADJUST	11	16
SCREW/HOLLOW	27	1
SCREW/WATER PUMP	17	10
SEAL SET/WATER PUMP	17	5
SEAL,BEARING CAP	5	8
SEAL,BEARING CAP	25	8
SEAL,BEARING CAP/7	5	9
SEAL,BEARING CAP/7	25	9
SEAL,CYL.HEAD COVER	2	3
SEAL,CYL.HEAD COVER	25	4
SEAL,OIL	1	4
SEAL,OIL	9	7
SEAL,OIL	25	2
SEAL,OIL	25	12
SEAL/WATER PUMPPULLE	17	7
SEAT,VALVE SPRING	11	4
SEAT/SPRING/LOWER	27	19
SEAT/SPRING/UPPER	27	17
SHAFT,CAM	12	1
SHAFT/HYDRAULIC ASSY	9	46
SHAFT/ROCKERARM ASSY	11	10
SHAFT/STARTER PLANET	28	15
SHIM/INJECTION P/0.1	20	3
SHIM/INJECTION P/0.2	20	4
SHIM/INJECTION P/0.3	20	2
SHIM/INJECTION P/0.4	20	5
SHIM/INJECTION P/0.5	20	6
SLEEVE/PLUNGER	27	16
SOLENOID	24	5
SPACER	9	42
SPACER,PUMP.WATER	17	15
SPACER/FAN/48	18	3
SPRING	11	14
SPRING	29	18
SPRING,RETURN	20	26
SPRING,STARTING	20	31
SPRING/DELIVERYVALVE	27	3
SPRING/GOVERNOR	20	23
SPRING/PUMPPLUNGER	27	18
SPRING/RELIEF VALVE	9	30
SPRING/STARTERBRUSH	28	4
SPRING/VALVE	11	3
STARTER ASSY	23	7
STOPPER/FULLLOAD	9	17
STRAINER	16	8
STUD	1	8
STUD	5	20
STUD	5	21
STUD	5	33
STUD	9	4
STUD	9	5
STUD	9	6
STUD	9	45
STUD/M8X40	5	19
STUD/M8X40	17	17
SWITCH/MAGNETIC ASSY	28	20
SWITCH/OILPRESSURE	24	1
SWITCH/OVERHEAT	24	2
TAPPET	11	6
TAPPET/INJECTIO ASSY	27	14
THERMOSTAT	17	26
THRUSTPIECE	20	18
TUBE,ORIFICE	21	8
VALVE ASSY	27	7
VALVE/EXHAUST	11	2
VALVE/INTAKE	11	1
VALVE/RELIEF ASSY	9	28
WASHER	15	15
WASHER	26	4
WASHER	26	50
WASHER	28	31
WASHER / M6	20	29
WASHER,SP/M 6	20	30
WASHER,SP/M 8	9	49
WASHER,SP/M 8	9	51
WASHER,SP/M6	15	14
WASHER/0.9	26	7
WASHER/0.925	26	8
WASHER/0.95	26	9
WASHER/0.975	26	10

Description	Fig.	Key	Description	Fig.	Key	Description	Fig.	Key
WASHER/08X14X01	9	16	WASHER/SK	28	25			
WASHER/08X14X01	9	25	WASHER/SK	28	26			
WASHER/08X14X01	25	23	WATERPUMP ASSY	17	1			
WASHER/1.0	26	11	YOKE/STARTER ASSY	28	1			
WASHER/1.025	26	12						
WASHER/1.05	26	13						
WASHER/1.075	26	14						
WASHER/1.1	26	15						
WASHER/1.125	26	16						
WASHER/1.15	26	17						
WASHER/1.175	26	18						
WASHER/1.2	26	19						
WASHER/1.225	26	20						
WASHER/1.25	26	21						
WASHER/1.275	26	22						
WASHER/1.3	26	23						
WASHER/1.325	26	24						
WASHER/1.35	26	25						
WASHER/1.375	26	26						
WASHER/1.4	26	27						
WASHER/1.425	26	28						
WASHER/1.45	26	29						
WASHER/1.475	26	30						
WASHER/1.5	26	31						
WASHER/1.525	26	32						
WASHER/1.55	26	33						
WASHER/1.575	26	34						
WASHER/1.6	26	35						
WASHER/1.625	26	36						
WASHER/1.65	26	37						
WASHER/1.675	26	38						
WASHER/1.7	26	39						
WASHER/1.725	26	40						
WASHER/1.75	26	41						
WASHER/1.775	26	42						
WASHER/1.8	26	43						
WASHER/1.825	26	44						
WASHER/1.85	26	45						
WASHER/1.875	26	46						
WASHER/1.9	26	47						
WASHER/1.925	26	48						
WASHER/1.95	26	49						
WASHER/9X22X2	23	4						
WASHER/AIR BLEEDER	27	2						
WASHER/SK	28	24						

Alpabetical Index

6004-097-350-00

Description	Fig.	Key
ADAPTER/255X065 ASSY	22	1
ARM/CONTROL	20	27
ARM/FLOATING COMP	20	19
ARM/TENSION	22	2
ARMATURE/STARTE ASSY	28	5
BALL	1	5
BEARING,RB/6002SS	15	7
BEARING,RB/6004	20	13
BEARING,RB/6005	9	47
BEARING,RB/6203	20	12
BEARING,THRUST CRANK	5	13
BEARING,THRUST CRANK	6	2
BEARING,THRUST CRANK	6	4
BEARING/BALL	29	6
BEARING/BALL	29	11
BEARING/CONNECTING R	6	5
BEARING/CONNECTING R	6	6
BEARING/CONNECTING R	13	7
BEARING/CRANK/LOWER	5	12
BEARING/CRANK/UPPER	5	11
BEARING/NEEDLE	28	8
BEARING/NEEDLE	28	9
BEARING/OILLESS	28	12
BEARING/OILLESS	28	14
BEARING/OILLESS	28	16
BEARING/WATER PUMP	17	3
BEARING/WATERPUMP	17	4
BEARING/WITH SHOCKAB	28	13
BELT/VHM34.5/FAN	18	5
BODY/NOZZLE HOLDER	26	2
BODY/OILPUMP	16	2
BODY/WATERPUMP	17	2
BOLT	5	2
BOLT	9	41
BOLT	11	18
BOLT	15	12
BOLT	15	15
BOLT	16	7
BOLT	29	9
BOLT	29	10
BOLT	29	19
BOLT	29	20
BOLT	29	21
BOLT	29	22
BOLT	29	24
BOLT,JOINT	16	13
BOLT,SEMS/M10X20	8	4
BOLT,SEMS/M6X12	12	5
BOLT,SEMS/M6X12	20	15
BOLT,SEMS/M8X16	5	32
BOLT,SEMS/M8X25 7T	4	3
BOLT/CONNECTINGROD	13	6
BOLT/FLANGE	15	8
BOLT/M10X1.25X82	1	7
BOLT/M6	9	32
BOLT/M6	9	33
BOLT/M6X10	20	17
BOLT/THROUGH	28	30
BOLT/WASHERHEAD	27	10
BOLT/WS	16	6
BOLT/WS	18	4
BOLT/WS	23	8
BRACKET ROCKER SHAFT	11	12
BRACKET,ROCKER SHAFT	11	13
BRUSH	29	17
BRUSH/STARTER	28	2
BUSH	29	15
CAMSHAFT/INJECTION P	20	9
CAP,BLANK/30	9	38
CAP,OIL FILLER	2	2
CAP,SEALING	1	2
CARTRIDGE/OILFILTER	16	15
CENTER CRANK PULLEY	15	11
CLAMP,STRAINER	16	10
CLAMP/WIRE/10-12	21	7
CLAMP/WIRE/10-15	17	21
CLIP/HOSE/7.6-8.2	21	4
CLIP/HOSE/8.7-9.3	21	9
CLUTCH/STARTER ASSY	28	6
COLLOR	29	3
CONNECTINGROD ASSY	13	5
CONNECTOR	21	1
CONNECTOR,OIL FILTER	5	25
CONNECTOR/GLOWPLUG	24	4
COVER	28	11
COVER	29	13
COVER,BEARING	29	5
COVER/CYLINDER HEAD	2	1
COVER/INJECTIONPUMP	5	26
CRANKSHAFT ASSY	15	1
CUP/SEALING/12	5	7
CUP/SEALING/16	9	3
CUP/SEALING/28	5	3
CUP/SEALING/36	5	4
CUTTER,VALVE	11	5
CYLINDERBLOCK ASSY	5	1
CYLINDERHEAD ASSY	1	1
DOWEL	5	22
DRIVE/TACHOMETE ASSY	9	35
ELEMENT ASSY	27	9
FAN/COOLING	18	1
FLANGEBOLT	3	3
FLANGEBOLT	3	4
FLANGEBOLT	5	28
FLANGEBOLT	7	4
FLANGEBOLT	9	8
FLANGEBOLT	9	9
FLANGEBOLT	9	11
FLANGEBOLT	9	12
FLANGEBOLT	9	13
FLANGEBOLT	9	15
FLANGEBOLT	9	37
FLANGEBOLT	10	2
FLANGEBOLT	11	19
FLANGEBOLT	16	11
FLANGEBOLT	17	13
FLANGEBOLT	17	18
FLANGEBOLT	17	24
FLANGEBOLT	17	25
FLANGEBOLT	17	29
FLANGEBOLT	20	7
FLANGEBOLT	23	3
FLANGEBOLT	23	5
FLANGEBOLT	24	7
FLYWEIGHT	20	16
FLYWHEEL ASSY	15	5
FRAME	29	12
FRAME/COMMUTATOR END	28	10
FRAME/DRIVEEND ASSY	29	7
GASKET	2	5
GASKET	17	8
GASKET	24	6
GASKET	25	5
GASKET	25	22
GASKET,EXH.MANIFOLD	4	2

Alpabetical Index

Description	Fig.	Key	Description	Fig.	Key	Description	Fig.	Key
GASKET,EXH.MANIFOLD	25	7	INJECTIONPUMP ASSY	20	1	O-RING/P15	25	17
GASKET,INLET MANIFOL	3	2	JOINTT-TYPE 2	21	6	O-RING/P18	7	3
GASKET,INLET MANIFOL	25	6	KEY/07X05X09	12	3	OILPUMP ASSY	16	1
GASKET,NOZZLE	19	2	KEY/07X05X09	20	11	OILSEAL	5	14
GASKET,SPACER	17	16	KEY/07X05X43	15	4	OILSEAL	25	10
GASKET,SPACER	25	19	LEVELGAGE	5	30	ORING	27	5
GASKET/COVER	5	27	LEVER/CONTROL COMP	20	24	PACKING	9	20
GASKET/COVER	25	11	LEVER/PINIONDRIVE	28	19	PACKING	16	14
GASKET/CYLINDERHEAD	1	6	MANIFOLD(INLET) ASSY	3	1	PACKING	25	13
GASKET/CYLINDERHEAD	25	3	MANIFOLD,EXH	4	1	PAN,OIL COMP	7	1
GASKET/DELIVERYVALVE	27	6	METAL,CRANK SET	5	10	PIECE,DISTANCE	26	6
GASKET/GEARCASE	9	27	METAL,CRANK SET	6	1	PIN	5	17
GASKET/GEARCASE	25	14	METAL,CRANK SET	6	3	PIN	5	18
GASKET/HOUSING	17	23	NIPPLE	5	23	PIN	5	29
GASKET/HOUSING	25	20	NOZZLE ASSY	26	52	PIN	9	23
GASKET/PLATE	9	40	NUT	9	34	PIN	15	2
GASKET/PLATE	25	15	NUT	11	17	PIN,CONTROL	20	21
GASKET/WATER PUMP	17	12	NUT	20	28	PIN,GROOVE	9	26
GASKET/WATER PUMP	25	18	NUT	26	51	PIN,NOZZLE HOLDER	26	3
GEAR/CAMSHAFT	12	2	NUT	28	28	PIN,PISTON	13	3
GEAR/CRANK	15	3	NUT	28	29	PIN/ARM	9	21
GEAR/IDLE ASSY	12	6	NUT	28	34	PIN/IDLEGEAR	5	6
GEAR/INJECTIONPUMP	20	10	NUT	29	2	PIN/INJECTIONPUMP	27	12
GEAR/OILPUMP ASSY	16	3	NUT	29	23	PIN/SNAP	9	22
GEAR/STARTER PLANETA	28	17	NUT	29	25	PIN/STRAIGHT	5	16
GEAR/STARTERINTERNAL	28	18	NUT,CAP/M 8	9	19	PIN/STRAIGHT	8	3
GEARCASE ASSY	9	1	NUT/CAP	2	4	PIN/STRAIGHT	16	5
GENERATOR ASSY	23	1	NUT/M08	9	10	PIN/TUBE	5	15
GLOWPLUG	24	3	NUT/M08	11	20	PIN/TUBE	9	44
GUIDE/LEVELGAGE COMP	5	31	NUT/M08	17	14	PIPE,OIL	16	12
HANGER	10	1	NUT/M08	17	19	PIPE,WATER OUTLET	17	27
HOLDER ASSY	29	14	NUT/M08	20	8	PIPE/FUEL	21	2
HOLDER/BRUSH ASSY	29	16	NUT/M10	23	6	PIPE/INJECTION ASSY	19	3
HOLDER/DELIVERYVALVE	27	4	NUT/M8	9	18	PIPE/INJECTION ASSY	19	4
HOLDER/JE/9-9	9	14	NUT/M8	9	48	PIPE/INJECTION ASSY	19	5
HOLDER/NOZZLE ASSY	26	1	NUT/M8	9	50	PIPE/WATER PUMP	17	11
HOLDER/STARTER ASSY	28	3	NUT/M8	28	32	PIPE/WATERDRAIN	5	24
HOSE,RUBBER	21	3	NUT/NOZZLERETAINING	26	5	PISTON	13	1
HOSE/RABBER	2	6	NUT/PINIONSTOP	28	23	PISTON(OV)	14	1
HOSE/RUBBER	17	20	O-RING	17	28	PISTON(OV)	14	3
HOSE/RUBBER	21	5	O-RING	25	21	PISTON/VALVE/RELIEF	9	29
HOUSING ASSY	27	8	O-RING 1A S50	9	43	PLATE	27	13
HOUSING/STARTER ASSY	28	7	O-RING 1A S50	25	16	PLATE	28	27
HOUSING/THERMOSTAT	17	22	O-RING/P 8	20	25	PLATE	29	8
INJECTIONNOZZLE ASSY	19	1	O-RING/P15	16	9	PLATE,THRUST	12	4

Alpabetical Index

6004-097-350-00

Description	Fig.	Key
PLATE,THRUST INJPUMP	20	14
PLATE/ADJUST	23	2
PLATE/ADJUSTING	27	11
PLATE/FRONT	9	39
PLATE/REAR	8	1
PLATE/TAPPET/AD 0.2	27	25
PLATE/TAPPET/AD 0.25	27	29
PLATE/TAPPET/AD 0.3	27	26
PLATE/TAPPET/AD 0.35	27	30
PLATE/TAPPET/AD 0.4	27	27
PLATE/TAPPET/AD 0.45	27	31
PLATE/TAPPET/AD 0.5	27	28
PLATE/TAPPET/AD 0.55	27	32
PLATE/TAPPET/AD 0.6	27	20
PLATE/TAPPET/AD 0.65	27	33
PLATE/TAPPET/AD 0.7	27	21
PLATE/TAPPET/AD 0.8	27	22
PLATE/TAPPET/AD 0.9	27	23
PLATE/TAPPET/AD 1.0	27	24
PLATE/WATER PUMP	17	9
PLUG	5	5
PLUG	9	2
PLUG	11	11
PLUG/M14X1.5	7	2
PLUG/PT1/2	1	3
PLUG/SCREW	9	24
POINTER	8	2
PULLEY	15	10
PULLEY	29	1
PULLEY ASSY	15	9
PULLEY,WATER PUMP	18	2
RACK/CONTROL ASSY	27	15
REGULATOR ASSY	29	26
RELAY,SOLENOID	24	8
REPAIR/ENGINE SET	25	1
RING,SNAP	13	4
RING,SNAP/ 4 E	20	22
RING,SNAP/12 C	9	31
RING,SNAP/16 C	11	15
RING/O	9	36
RING/PISTON SET	13	2
RING/PISTON/OV SET	14	2
RING/PISTON/OV SET	14	4
RING/SNAP	28	21
RING/SNAP	28	22
RINGGEAR	15	6
RINK/CONTROL	20	20
ROCKERARM	11	9
ROCKERSHAFT ASSY	11	8
ROD,PUSH	11	7
ROTOR ASSY	29	4
ROTOR/OUTER	16	4
ROTOR/WATERPUMP	17	6
SCREW	28	33
SCREW ADJUST	11	16
SCREW/HOLLOW	27	1
SCREW/WATER PUMP	17	10
SEAL SET/WATER PUMP	17	5
SEAL,BEARING CAP	5	8
SEAL,BEARING CAP	25	8
SEAL,BEARING CAP/7	5	9
SEAL,BEARING CAP/7	25	9
SEAL,CYL.HEAD COVER	2	3
SEAL,CYL.HEAD COVER	25	4
SEAL,OIL	1	4
SEAL,OIL	9	7
SEAL,OIL	25	2
SEAL,OIL	25	12
SEAL/WATER PUMPPULLE	17	7
SEAT,VALVE SPRING	11	4
SEAT/SPRING/LOWER	27	19
SEAT/SPRING/UPPER	27	17
SHAFT,CAM	12	1
SHAFT/HYDRAULIC ASSY	9	46
SHAFT/ROCKERARM ASSY	11	10
SHAFT/STARTER PLANET	28	15
SHIM/INJECTION P/0.1	20	3
SHIM/INJECTION P/0.2	20	4
SHIM/INJECTION P/0.3	20	2
SHIM/INJECTION P/0.4	20	5
SHIM/INJECTION P/0.5	20	6
SLEEVE/PLUNGER	27	16
SOLENOID	24	5
SPACER	9	42
SPACER,PUMP.WATER	17	15
SPACER/FAN/48	18	3
SPRING	11	14
SPRING	29	18
SPRING,RETURN	20	26
SPRING,STARTING	20	31
SPRING/DELIVERYVALVE	27	3
SPRING/GOVERNOR	20	23
SPRING/PUMPPLUNGER	27	18
SPRING/RELIEF VALVE	9	30
SPRING/STARTERBRUSH	28	4
SPRING/VALVE	11	3
STARTER ASSY	23	7
STOPPER/FULLLOAD	9	17
STRAINER	16	8
STUD	1	8
STUD	5	20
STUD	5	21
STUD	5	33
STUD	9	4
STUD	9	5
STUD	9	6
STUD	9	45
STUD/M8X40	5	19
STUD/M8X40	17	17
SWITCH/MAGNETIC ASSY	28	20
SWITCH/OILPRESSURE	24	1
SWITCH/OVERHEAT	24	2
TAPPET	11	6
TAPPET/INJECTIO ASSY	27	14
THERMOSTAT	17	26
THRUSTPIECE	20	18
TUBE,ORIFICE	21	8
VALVE ASSY	27	7
VALVE/EXHAUST	11	2
VALVE/INTAKE	11	1
VALVE/RELIEF ASSY	9	28
WASHER	15	14
WASHER	26	4
WASHER	26	50
WASHER	28	31
WASHER / M6	20	29
WASHER,SP/M 6	20	30
WASHER,SP/M 8	9	49
WASHER,SP/M 8	9	51
WASHER,SP/M6	15	13
WASHER/0.9	26	7
WASHER/0.925	26	8
WASHER/0.95	26	9
WASHER/0.975	26	10
WASHER/08X14X01	9	16

Alpabetical Index

Description	Fig.	Key	Description	Fig.	Key	Description	Fig.	Key
WASHER/08X14X01	9	25	WASHER/SK	28	26			
WASHER/08X14X01	25	23	WATERPUMP ASSY	17	1			
WASHER/1.0	26	11	YOKE/STARTER ASSY	28	1			
WASHER/1.025	26	12						
WASHER/1.05	26	13						
WASHER/1.075	26	14						
WASHER/1.1	26	15						
WASHER/1.125	26	16						
WASHER/1.15	26	17						
WASHER/1.175	26	18						
WASHER/1.2	26	19						
WASHER/1.225	26	20						
WASHER/1.25	26	21						
WASHER/1.275	26	22						
WASHER/1.3	26	23						
WASHER/1.325	26	24						
WASHER/1.35	26	25						
WASHER/1.375	26	26						
WASHER/1.4	26	27						
WASHER/1.425	26	28						
WASHER/1.45	26	29						
WASHER/1.475	26	30						
WASHER/1.5	26	31						
WASHER/1.525	26	32						
WASHER/1.55	26	33						
WASHER/1.575	26	34						
WASHER/1.6	26	35						
WASHER/1.625	26	36						
WASHER/1.65	26	37						
WASHER/1.675	26	38						
WASHER/1.7	26	39						
WASHER/1.725	26	40						
WASHER/1.75	26	41						
WASHER/1.775	26	42						
WASHER/1.8	26	43						
WASHER/1.825	26	44						
WASHER/1.85	26	45						
WASHER/1.875	26	46						
WASHER/1.9	26	47						
WASHER/1.925	26	48						
WASHER/1.95	26	49						
WASHER/9X22X2	23	4						
WASHER/AIR BLEEDER	27	2						
WASHER/SK	28	24						
WASHER/SK	28	25						

Alpabetical Index

6004-097-360-00

Description	Fig.	Key
ADAPTER/255X065 ASSY	22	1
ARM/CONTROL	20	27
ARM/FLOATING COMP	20	19
ARM/TENSION	22	2
ARMATURE/STARTE ASSY	28	5
BALL	1	5
BEARING,RB/6002SS	15	8
BEARING,RB/6004	20	13
BEARING,RB/6005	9	47
BEARING,RB/6203	20	12
BEARING,THRUST CRANK	5	13
BEARING,THRUST CRANK	6	2
BEARING,THRUST CRANK	6	4
BEARING/BALL	29	6
BEARING/BALL	29	11
BEARING/CONNECTING R	6	5
BEARING/CONNECTING R	6	6
BEARING/CONNECTING R	13	7
BEARING/CRANK/LOWER	5	12
BEARING/CRANK/UPPER	5	11
BEARING/NEEDLE	28	8
BEARING/NEEDLE	28	9
BEARING/OILLESS	28	12
BEARING/OILLESS	28	14
BEARING/OILLESS	28	16
BEARING/WATER PUMP	17	3
BEARING/WATERPUMP	17	4
BEARING/WITH SHOCKAB	28	13
BELT VHM034	18	5
BODY/NOZZLE HOLDER	26	2
BODY/OILPUMP	16	2
BODY/WATERPUMP	17	2
BOLT	5	2
BOLT	9	41
BOLT	11	18
BOLT	15	13
BOLT	15	16
BOLT	16	7
BOLT	29	9
BOLT	29	10
BOLT	29	19
BOLT	29	20
BOLT	29	21
BOLT	29	22
BOLT	29	24
BOLT,JOINT	16	13
BOLT,SEMS/M10X20	8	4
BOLT,SEMS/M6X12	12	5
BOLT,SEMS/M6X12	20	15
BOLT,SEMS/M8X16	5	32
BOLT,SEMS/M8X25 7T	4	3
BOLT/CONNECTINGROD	13	6
BOLT/FLANGE	15	9
BOLT/M10X1.25X82	1	7
BOLT/M6	9	32
BOLT/M6	9	33
BOLT/M6X10	20	17
BOLT/THROUGH	28	30
BOLT/WASHERHEAD	27	10
BOLT/WS	16	6
BOLT/WS	18	4
BOLT/WS	23	8
BRACKET ROCKER SHAFT	11	12
BRACKET,ROCKER SHAFT	11	13
BRUSH	29	17
BRUSH/STARTER	28	2
BUSH	29	15
CAMSHAFT/INJECTION P	20	9
CAP,BLANK/30	9	38
CAP,OIL FILLER	2	2
CAP,SEALING	1	2
CARTRIDGE/OILFILTER	16	15
CENTER CRANK PULLEY	15	12
CLAMP,STRAINER	16	10
CLAMP/WIRE/10-12	21	7
CLAMP/WIRE/10-15	17	21
CLIP/HOSE/7.6-8.2	21	4
CLIP/HOSE/8.7-9.3	21	9
CLUTCH/STARTER ASSY	28	6
COLLOR	29	3
CONNECTINGROD ASSY	13	5
CONNECTOR	21	1
CONNECTOR,OIL FILTER	5	25
CONNECTOR/GLOWPLUG	24	4
COVER	28	11
COVER	29	13
COVER,BEARING	29	5
COVER/CYLINDER HEAD	2	1
COVER/INJECTIONPUMP	5	26
CRANKSHAFT ASSY	15	1
CUP/SEALING/12	5	7
CUP/SEALING/16	9	3
CUP/SEALING/28	5	3
CUP/SEALING/36	5	4
CUTTER,VALVE	11	5
CYLINDERBLOCK ASSY	5	1
CYLINDERHEAD ASSY	1	1
DOWEL	5	22
DRIVE/TACHOMETE ASSY	9	35
ELEMENT ASSY	27	9
FAN/COOLING	18	1
FLANGEBOLT	3	3
FLANGEBOLT	3	4
FLANGEBOLT	5	28
FLANGEBOLT	7	4
FLANGEBOLT	9	8
FLANGEBOLT	9	9
FLANGEBOLT	9	11
FLANGEBOLT	9	12
FLANGEBOLT	9	13
FLANGEBOLT	9	15
FLANGEBOLT	9	37
FLANGEBOLT	10	2
FLANGEBOLT	11	19
FLANGEBOLT	16	11
FLANGEBOLT	17	13
FLANGEBOLT	17	18
FLANGEBOLT	17	24
FLANGEBOLT	17	25
FLANGEBOLT	17	29
FLANGEBOLT	20	7
FLANGEBOLT	23	3
FLANGEBOLT	23	5
FLANGEBOLT	24	7
FLYWEIGHT	20	16
FLYWHEEL ASSY	15	5
FRAME	29	12
FRAME/COMMUTATOR END	28	10
FRAME/DRIVEEND ASSY	29	7
GASKET	2	5
GASKET	17	8
GASKET	24	6
GASKET	25	5
GASKET	25	22
GASKET,EXH.MANIFOLD	4	2

Alpabetical Index

Description	Fig.	Key	Description	Fig.	Key	Description	Fig.	Key
GASKET,EXH.MANIFOLD	25	7	INJECTIONPUMP ASSY	20	1	O-RING/P15	25	17
GASKET,INLET MANIFOL	3	2	JOINTT-TYPE 2	21	6	O-RING/P18	7	3
GASKET,INLET MANIFOL	25	6	KEY/07X05X09	12	3	OILPUMP ASSY	16	1
GASKET,NOZZLE	19	2	KEY/07X05X09	20	11	OILSEAL	5	14
GASKET,SPACER	17	16	KEY/07X05X43	15	4	OILSEAL	25	10
GASKET,SPACER	25	19	LEVELGAGE	5	30	ORING	27	5
GASKET/COVER	5	27	LEVER/CONTROL COMP	20	24	PACKING	9	20
GASKET/COVER	25	11	LEVER/PINIONDRIVE	28	19	PACKING	16	14
GASKET/CYLINDERHEAD	1	6	MANIFOLD(INLET) ASSY	3	1	PACKING	25	13
GASKET/CYLINDERHEAD	25	3	MANIFOLD,EXH	4	1	PAN,OIL COMP	7	1
GASKET/DELIVERYVALVE	27	6	METAL,CRANK SET	5	10	PIECE,DISTANCE	26	6
GASKET/GEARCASE	9	27	METAL,CRANK SET	6	1	PIN	5	17
GASKET/GEARCASE	25	14	METAL,CRANK SET	6	3	PIN	5	18
GASKET/HOUSING	17	23	NIPPLE	5	23	PIN	5	29
GASKET/HOUSING	25	20	NOZZLE ASSY	26	52	PIN	9	23
GASKET/PLATE	9	40	NUT	9	34	PIN	15	2
GASKET/PLATE	25	15	NUT	11	17	PIN,CONTROL	20	21
GASKET/WATER PUMP	17	12	NUT	20	28	PIN,GROOVE	9	26
GASKET/WATER PUMP	25	18	NUT	26	51	PIN,NOZZLE HOLDER	26	3
GEAR/CAMSHAFT	12	2	NUT	28	28	PIN,PISTON	13	3
GEAR/CRANK	15	3	NUT	28	29	PIN/ARM	9	21
GEAR/IDLE ASSY	12	6	NUT	28	34	PIN/IDLEGEAR	5	6
GEAR/INJECTIONPUMP	20	10	NUT	29	2	PIN/INJECTIONPUMP	27	12
GEAR/OILPUMP ASSY	16	3	NUT	29	23	PIN/SNAP	9	22
GEAR/STARTER PLANETA	28	17	NUT	29	25	PIN/STRAIGHT	5	16
GEAR/STARTERINTERNAL	28	18	NUT,CAP/M 8	9	19	PIN/STRAIGHT	8	3
GEARCASE ASSY	9	1	NUT/CAP	2	4	PIN/STRAIGHT	15	7
GENERATOR ASSY	23	1	NUT/M08	9	10	PIN/STRAIGHT	16	5
GLOWPLUG	24	3	NUT/M08	11	20	PIN/TUBE	5	15
GUIDE/LEVELGAGE COMP	5	31	NUT/M08	17	14	PIN/TUBE	9	44
HANGER	10	1	NUT/M08	17	19	PIPE,OIL	16	12
HOLDER ASSY	29	14	NUT/M08	20	8	PIPE,WATER OUTLET	17	27
HOLDER/BRUSH ASSY	29	16	NUT/M10	23	6	PIPE/FUEL	21	2
HOLDER/DELIVERYVALVE	27	4	NUT/M8	9	18	PIPE/INJECTION ASSY	19	3
HOLDER/JE/9-9	9	14	NUT/M8	9	48	PIPE/INJECTION ASSY	19	4
HOLDER/NOZZLE ASSY	26	1	NUT/M8	9	50	PIPE/INJECTION ASSY	19	5
HOLDER/STARTER ASSY	28	3	NUT/M8	28	32	PIPE/WATER PUMP	17	11
HOSE,RUBBER	21	3	NUT/NOZZLERETAINING	26	5	PIPE/WATERDRAIN	5	24
HOSE/RABBER	2	6	NUT/PINIONSTOP	28	23	PISTON	13	1
HOSE/RUBBER	17	20	O-RING	17	28	PISTON(OV)	14	1
HOSE/RUBBER	21	5	O-RING	25	21	PISTON(OV)	14	3
HOUSING ASSY	27	8	O-RING 1A S50	9	43	PISTON/VALVE/RELIEF	9	29
HOUSING/STARTER ASSY	28	7	O-RING 1A S50	25	16	PLATE	27	13
HOUSING/THERMOSTAT	17	22	O-RING/P 8	20	25	PLATE	28	27
INJECTIONNOZZLE ASSY	19	1	O-RING/P15	16	9	PLATE	29	8

Alpabetical Index

6004-097-360-00

Description	Fig.	Key	Description	Fig.	Key	Description	Fig.	Key
PLATE,THRUST	12	4	RING/SNAP	28	22	SPRING,STARTING	20	31
PLATE,THRUST INJPUMP	20	14	RINGGEAR	15	6	SPRING/DELIVERYVALVE	27	3
PLATE/ADJUST	23	2	RINK/CONTROL	20	20	SPRING/GOVERNOR	20	23
PLATE/ADJUSTING	27	11	ROCKERARM	11	9	SPRING/PUMPPLUNGER	27	18
PLATE/FRONT	9	39	ROCKERSHAFT ASSY	11	8	SPRING/RELIEF VALVE	9	30
PLATE/REAR	8	1	ROD,PUSH	11	7	SPRING/STARTERBRUSH	28	4
PLATE/TAPPET/AD 0.2	27	25	ROTOR ASSY	29	4	SPRING/VALVE	11	3
PLATE/TAPPET/AD 0.25	27	29	ROTOR/OUTER	16	4	STARTER ASSY	23	7
PLATE/TAPPET/AD 0.3	27	26	ROTOR/WATERPUMP	17	6	STOPPER/FULLLOAD	9	17
PLATE/TAPPET/AD 0.35	27	30	SCREW	28	33	STRAINER	16	8
PLATE/TAPPET/AD 0.4	27	27	SCREW ADJUST	11	16	STUD	1	8
PLATE/TAPPET/AD 0.45	27	31	SCREW/HOLLOW	27	1	STUD	5	20
PLATE/TAPPET/AD 0.5	27	28	SCREW/WATER PUMP	17	10	STUD	5	21
PLATE/TAPPET/AD 0.55	27	32	SEAL SET/WATER PUMP	17	5	STUD	5	33
PLATE/TAPPET/AD 0.6	27	20	SEAL,BEARING CAP	5	8	STUD	9	4
PLATE/TAPPET/AD 0.65	27	33	SEAL,BEARING CAP	25	8	STUD	9	5
PLATE/TAPPET/AD 0.7	27	21	SEAL,BEARING CAP/7	5	9	STUD	9	6
PLATE/TAPPET/AD 0.8	27	22	SEAL,BEARING CAP/7	25	9	STUD	9	45
PLATE/TAPPET/AD 0.9	27	23	SEAL,CYL.HEAD COVER	2	3	STUD/M8X40	5	19
PLATE/TAPPET/AD 1.0	27	24	SEAL,CYL.HEAD COVER	25	4	STUD/M8X40	17	17
PLATE/WATER PUMP	17	9	SEAL,OIL	1	4	SWITCH/MAGNETIC ASSY	28	20
PLUG	5	5	SEAL,OIL	9	7	SWITCH/OILPRESSURE	24	1
PLUG	9	2	SEAL,OIL	25	2	SWITCH/OVERHEAT	24	2
PLUG	11	11	SEAL,OIL	25	12	TAPPET	11	6
PLUG/M14X1.5	7	2	SEAL/WATER PUMPPULLE	17	7	TAPPET/INJECTIO ASSY	27	14
PLUG/PT1/2	1	3	SEAT,VALVE SPRING	11	4	THERMOSTAT	17	26
PLUG/SCREW	9	24	SEAT/SPRING/LOWER	27	19	THRUSTPIECE	20	18
POINTER	8	2	SEAT/SPRING/UPPER	27	17	TUBE,ORIFICE	21	8
PULLEY	15	11	SHAFT,CAM	12	1	VALVE ASSY	27	7
PULLEY	29	1	SHAFT/HYDRAULIC ASSY	9	46	VALVE/EXHAUST	11	2
PULLEY ASSY	15	10	SHAFT/ROCKERARM ASSY	11	10	VALVE/INTAKE	11	1
PULLEY,WATER PUMP	18	2	SHAFT/STARTER PLANET	28	15	VALVE/RELIEF ASSY	9	28
RACK/CONTROL ASSY	27	15	SHIM/INJECTION P/0.1	20	3	WASHER	15	15
REGULATOR ASSY	29	26	SHIM/INJECTION P/0.2	20	4	WASHER	26	4
RELAY,SOLENOID	24	8	SHIM/INJECTION P/0.3	20	2	WASHER	26	50
REPAIR/ENGINE SET	25	1	SHIM/INJECTION P/0.4	20	5	WASHER	28	31
RING,SNAP	13	4	SHIM/INJECTION P/0.5	20	6	WASHER / M6	20	29
RING,SNAP/ 4 E	20	22	SLEEVE/PLUNGER	27	16	WASHER,SP/M 6	20	30
RING,SNAP/12 C	9	31	SOLENOID	24	5	WASHER,SP/M 8	9	49
RING,SNAP/16 C	11	15	SPACER	9	42	WASHER,SP/M 8	9	51
RING/O	9	36	SPACER,PUMP.WATER	17	15	WASHER,SP/M6	15	14
RING/PISTON SET	13	2	SPACER/FAN/48	18	3	WASHER/0.9	26	7
RING/PISTON/OV SET	14	2	SPRING	11	14	WASHER/0.925	26	8
RING/PISTON/OV SET	14	4	SPRING	29	18	WASHER/0.95	26	9
RING/SNAP	28	21	SPRING,RETURN	20	26	WASHER/0.975	26	10

Description	Fig.	Key	Description	Fig.	Key	Description	Fig.	Key
WASHER/08X14X01	9	16	WASHER/SK	28	25			
WASHER/08X14X01	9	25	WASHER/SK	28	26			
WASHER/08X14X01	25	23	WATERPUMP ASSY	17	1			
WASHER/1.0	26	11	YOKE/STARTER ASSY	28	1			
WASHER/1.025	26	12						
WASHER/1.05	26	13						
WASHER/1.075	26	14						
WASHER/1.1	26	15						
WASHER/1.125	26	16						
WASHER/1.15	26	17						
WASHER/1.175	26	18						
WASHER/1.2	26	19						
WASHER/1.225	26	20						
WASHER/1.25	26	21						
WASHER/1.275	26	22						
WASHER/1.3	26	23						
WASHER/1.325	26	24						
WASHER/1.35	26	25						
WASHER/1.375	26	26						
WASHER/1.4	26	27						
WASHER/1.425	26	28						
WASHER/1.45	26	29						
WASHER/1.475	26	30						
WASHER/1.5	26	31						
WASHER/1.525	26	32						
WASHER/1.55	26	33						
WASHER/1.575	26	34						
WASHER/1.6	26	35						
WASHER/1.625	26	36						
WASHER/1.65	26	37						
WASHER/1.675	26	38						
WASHER/1.7	26	39						
WASHER/1.725	26	40						
WASHER/1.75	26	41						
WASHER/1.775	26	42						
WASHER/1.8	26	43						
WASHER/1.825	26	44						
WASHER/1.85	26	45						
WASHER/1.875	26	46						
WASHER/1.9	26	47						
WASHER/1.925	26	48						
WASHER/1.95	26	49						
WASHER/9X22X2	23	4						
WASHER/AIR BLEEDER	27	2						
WASHER/SK	28	24						

Alpabetical Index

Description	Fig.	Key
ADAPTER(90°/PUMP)	43	13
ADAPTER(90°/PUMP)	53	16
ADAPTER/BOLT/G3/8	68	35
ADAPTER/BOLT/G3/8	69	40
ADAPTER/BOLT/M28X2.0	68	1
ADAPTER/L/G1/4 ASSY	55	18
ADAPTER/L/G1/4 ASSY	56	22
ADAPTER/L/G1/4 ASSY	56	25
ADAPTER/L/PF3/8 ASSY	14	2
ADAPTER/L/PT3/8	43	4
ADAPTER/M20-R3/8	43	18
ADAPTER/PF1/4 ASSY	55	20
ARM COMP	39	17
ARM, SHIFT	24	11
ARM/BRAKE/LH COMP	50	54
ARM/BRAKE/LH COMP	51	43
ARM/BRAKE/RH COMP	50	55
ARM/BRAKE/RH COMP	51	44
ARM/CRUISE ASSY	41	5
ARM/DANPER COMP	40	15
ARM/DIEF COMP	47	1
ARM/DIEF COMP	48	1
ARM/DIFFLOCK	44	29
ARM/KNUCKLE/LH	62	32
ARM/KNUCKLE/RH	62	33
ARM/LIFT	65	4
ARM/MID ASSY	38	7
ARM/MIRROR ASSY	81	22
ARM/MIRROR ASSY	82	24
ARM/NEUTRAL COMP	39	11
ARM/PLATE	72	13
ARM/POSITION COMP	67	4
ARM/POSITION COMP	67	11
ARM/PTO ASSY	33	12
ARM/PTO COMP	32	9
ARM/PTO/MID ASSY	36	36
ARM/PTO/MID ASSY	95	35
ARM/SHIFT COMP	25	8
ARM/SHIFT/MAIN COMP	21	13
ARM/SHIFT/MID COMP	33	6
ARM/SHIFT/MID COMP	35	21
ARM/SHIFT/MID COMP	36	20
ARM/SHIFT/MID COMP	36	44
ARM/SHIFT/MID COMP	38	1
ARM/SHIFT/MID COMP	95	22

Description	Fig.	Key
ARM/SHIFT/MID COMP	95	43
ARM/SHIFT/PTO COMP	32	6
ARM/SHIFT/SUB COMP	22	1
ARM/SHIFT/SUB COMP	23	5
ARM/SUB ASSY	23	11
ARM/SUB COMP	22	3
ARM/TRUNION	110	12
BACKPLATE	111	7
BALL	24	4
BALL	25	4
BALL	26	4
BALL	26	7
BALL	27	8
BALL	27	18
BALL	32	3
BALL	35	13
BALL	36	21
BALL	49	4
BALL	49	8
BALL	95	13
BAND	1	31
BAND	2	31
BAND	7	10
BAND	87	18
BAND	88	19
BAND, WIRE/140	7	9
BAND, WIRE/140	41	37
BAND, WIRE/140	56	18
BAND, WIRE/140	56	19
BAND, WIRE/140	87	12
BAND, WIRE/140	87	22
BAND, WIRE/140	87	25
BAND, WIRE/140	87	27
BAND, WIRE/140	88	13
BAND, WIRE/140	88	26
BAND, WIRE/140	88	27
BAND, WIRE/140	88	29
BAND, WIRE/250	43	16
BAND, WIRE/250	53	14
BAND, WIRE/250	55	28
BAND, WIRE/250	56	37
BAND, WIRE/250	75	6
BAND, WIRE/250	75	8
BAND, WIRE/250	87	11
BAND, WIRE/250	87	14

Description	Fig.	Key
BAND, WIRE/250	87	20
BAND, WIRE/250	87	26
BAND, WIRE/250	88	12
BAND, WIRE/250	88	15
BAND, WIRE/250	88	21
BAND, WIRE/250	88	23
BAND, WIRE/250	88	28
BAND/CLEANER	4	6
BATTERY/55B24R/ ASSY	7	1
BEARING	16	16
BEARING	17	3
BEARING	21	9
BEARING	28	11
BEARING	60	17
BEARING	62	11
BEARING	110	40
BEARING KT253224	20	2
BEARING KT253224	30	21
BEARING, CLUTCH RS	9	18
BEARING, NEEDLE	17	8
BEARING, NR/KT162017	15	5
BEARING, NR/KT303824	30	28
BEARING, RB	16	3
BEARING, RB	28	9
BEARING, RB/6003SS	110	41
BEARING, RB/6004SS	41	23
BEARING, RB/6005	62	9
BEARING, RB/6005	62	21
BEARING, RB/6008	62	12
BEARING, RB/6010	44	13
BEARING, RB/6010	60	14
BEARING, RB/6204	15	3
BEARING, RB/6204	19	4
BEARING, RB/6204	20	14
BEARING, RB/6204	28	15
BEARING, RB/6204	29	8
BEARING, RB/6204	30	15
BEARING, RB/6204	30	35
BEARING, RB/6204	110	14
BEARING, RB/6204NR	15	8
BEARING, RB/6204NR	16	9
BEARING, RB/6205	30	32
BEARING, RB/6205	35	16
BEARING, RB/6205	36	16
BEARING, RB/6205	62	25

Alpabetical Index

Description	Fig.	Key	Description	Fig.	Key	Description	Fig.	Key
BEARING,RB/6205	95	17	BOLT	14	5	BOLT,SEMS (SP)	43	15
BEARING,RB/6205NR	28	12	BOLT	14	6	BOLT,SEMS (SP)	56	21
BEARING,RB/6205NR	29	5	BOLT	36	34	BOLT,SEMS (SP)	56	36
BEARING,RB/6206	30	16	BOLT	53	21	BOLT,SEMS (SP)	58	11
BEARING,RB/6206	44	21	BOLT	54	8	BOLT,SEMS (SP)	59	11
BEARING,RB/6206	62	26	BOLT	57	2	BOLT,SEMS (SP)	67	14
BEARING,RB/6208	46	6	BOLT	64	18	BOLT,SEMS (SP)	68	31
BEARING,RB/6304	16	8	BOLT	80	4	BOLT,SEMS (SP)	68	34
BEARING,RB/6304	16	12	BOLT	95	33	BOLT,SEMS (SP)	69	5
BEARING,RB/6304	17	12	BOLT(S) M10X25	43	10	BOLT,SEMS (SP)	69	13
BEARING,RB/6304	19	3	BOLT(S) M10X25	81	3	BOLT,SEMS (SP)	69	36
BEARING,RB/6304	28	2	BOLT(S) M10X25	82	3	BOLT,SEMS (SP)	69	39
BEARING,RB/6304	29	2	BOLT(S)7	66	6	BOLT,SEMS (SP)	72	4
BEARING,RB/6304	30	33	BOLT(SP)/M6X16	5	21	BOLT,SEMS (SP)	72	57
BEARING,RB/6304	35	15	BOLT(SP)/M6X16	12	34	BOLT,SEMS (SP)	72	59
BEARING,RB/6304	36	14	BOLT(SP)/M6X16	32	21	BOLT,SEMS (SP)	74	6
BEARING,RB/6304	95	16	BOLT(SP)/M6X16	39	25	BOLT,SEMS (SP)	76	4
BEARING,RB/6304NR	31	5	BOLT(SP)/M6X16	81	23	BOLT,SEMS (SP)	76	8
BEARING,RB/6305	62	6	BOLT(SP)/M6X16	82	25	BOLT,SEMS (SP)	81	21
BEARING,RB/6306	46	5	BOLT(SP)/M6X16	85	17	BOLT,SEMS (S) M8X16	1	5
BEARING/BALL	15	4	BOLT(SP)/M6X16	85	18	BOLT,SEMS (S) M8X16	1	28
BEARING/BALL	44	12	BOLT(SP)/M6X16	86	18	BOLT,SEMS (S) M8X16	2	5
BEARING/BALL 6205SH2	60	2	BOLT(SP)/M6X16	86	19	BOLT,SEMS (S) M8X16	2	28
BEARING/BALL 6305SH2	16	15	BOLT(SP)/M6X16	86	21	BOLT,SEMS (S) M8X16	3	8
BEARING/BALL 6305SH2	17	2	BOLT(SP)/M6X16	87	15	BOLT,SEMS (S) M8X16	5	28
BEARING/BALL 6305SH2	31	3	BOLT(SP)/M6X16	88	16	BOLT,SEMS (S) M8X16	9	5
BEARING/NEEDLE	18	2	BOLT,SEMS	1	25	BOLT,SEMS (S) M8X16	9	19
BEARING/NEEDLE	20	8	BOLT,SEMS	2	25	BOLT,SEMS (S) M8X16	10	7
BEARING/NEEDLE	28	17	BOLT,SEMS	9	6	BOLT,SEMS (S) M8X16	43	8
BEARING/NEEDLE	29	10	BOLT,SEMS	10	8	BOLT,SEMS (S) M8X16	66	21
BEARING/NEEDLE	30	11	BOLT,SEMS	13	31	BOLT,SEMS(SP)	95	47
BEARING/NEEDLE	35	7	BOLT,SEMS	22	7	BOLT,SEMS/M8X25 7T	44	18
BEARING/NEEDLE	36	8	BOLT,SEMS	23	15	BOLT,SEMS/M8X25 7T	62	35
BEARING/NEEDLE	95	8	BOLT,SEMS	32	19	BOLT,SET COMP	69	2
BEARING/NEEDLE	110	17	BOLT,SEMS	38	12	BOLT,SM/M08X25	21	5
BEARING/THRUST	110	13	BOLT,SEMS	79	7	BOLT,SM/M08X25	22	4
BLOCK/CYLINDER	110	3	BOLT,SEMS	85	25	BOLT,SM/M08X25	65	7
BLOCK/PORT	110	2	BOLT,SEMS	86	27	BOLT/8X20	13	28
BLOT/M14X10	21	20	BOLT,SEMS (SP)	6	19	BOLT/ADJUST	50	10
BLUB/12V-21/5W	83	7	BOLT,SEMS (SP)	23	4	BOLT/ADJUST	51	4
BOARD/WIREING ASSY	84	10	BOLT,SEMS (SP)	25	7	BOLT/BATTERY	7	2
BODY/HVA1/053	108	1	BOLT,SEMS (SP)	33	4	BOLT/KNOB/M06X13	73	19
BOLT	1	18	BOLT,SEMS (SP)	35	25	BOLT/KNOB/M06X27	81	18
BOLT	2	18	BOLT,SEMS (SP)	36	27	BOLT/KNOB/M06X27	82	20
BOLT	3	3	BOLT,SEMS (SP)	39	15	BOLT/M 6X20	73	16

Alpabetical Index

1750-097-100-00

Description	Fig.	Key	Description	Fig.	Key	Description	Fig.	Key
BOLT/M 8X130	67	2	BOLT/M12X35	107	2	BOLT/S	64	22
BOLT/M 8X16	64	27	BOLT/M12X40	45	3	BOLT/S	68	13
BOLT/M 8X16	72	45	BOLT/M12X40	64	17	BOLT/S	68	29
BOLT/M 8X20	72	44	BOLT/M12X40	71	2	BOLT/S	69	19
BOLT/M 8X25	40	8	BOLT/M12X40	104	3	BOLT/S	69	34
BOLT/M 8X25	70	6	BOLT/M12X40	105	2	BOLT/S	81	27
BOLT/M 8X30	40	13	BOLT/M12X55	45	4	BOLT/SEAL	62	40
BOLT/M 8X35	11	2	BOLT/M12X60	45	5	BOLT/SET/M16X60	89	2
BOLT/M 8X35	12	26	BOLT/M16X85	104	8	BOLT/SET/M16X60	106	3
BOLT/M 8X55	56	27	BOLT/M4X12	84	16	BOLT/SM/M8X1.25X30	58	7
BOLT/M 8X60	12	25	BOLT/M5X16	74	4	BOLT/SM/M8X1.25X30	59	7
BOLT/M 8X65	5	13	BOLT/M5X30	85	29	BOLT/SP	3	6
BOLT/M 8X80	4	13	BOLT/M5X30	86	31	BOLT/SP	4	12
BOLT/M06X08/APSET	5	10	BOLT/M8X20	21	18	BOLT/SP	13	16
BOLT/M06X32	7	7	BOLT/M8X20	62	36	BOLT/SP	13	24
BOLT/M08X32	7	12	BOLT/M8X25	27	2	BOLT/SP	13	25
BOLT/M10X1.25X20	9	8	BOLT/M8X25	27	10	BOLT/SP	13	33
BOLT/M10X1.25X20	10	10	BOLT/M8X25	44	10	BOLT/SP	13	36
BOLT/M10X100	64	5	BOLT/M8X25	49	13	BOLT/SP	21	2
BOLT/M10X20	54	14	BOLT/M8X28 11T	55	8	BOLT/SP	33	15
BOLT/M10X30	62	3	BOLT/M8X28 11T	56	8	BOLT/SP	35	29
BOLT/M10X35	12	4	BOLT/M8X28 11T	68	22	BOLT/SP	36	29
BOLT/M10X35	12	21	BOLT/M8X28 11T	69	27	BOLT/SP	37	2
BOLT/M10X35	13	3	BOLT/M8X30	24	6	BOLT/SP	50	28
BOLT/M10X55	12	10	BOLT/M8X45	32	16	BOLT/SP	51	17
BOLT/M10X55	13	11	BOLT/M8X45/7T	39	2	BOLT/SP	51	18
BOLT/M10X60	45	8	BOLT/M8X50	66	9	BOLT/SP	57	11
BOLT/M10X80	41	24	BOLT/REAMER/M10X35	53	19	BOLT/SP	62	30
BOLT/M10X90	35	3	BOLT/S	6	11	BOLT/SP	64	4
BOLT/M10X90	36	2	BOLT/S	6	15	BOLT/SP	64	6
BOLT/M10X90	95	3	BOLT/S	6	17	BOLT/SP	68	7
BOLT/M12X25	9	10	BOLT/S	7	14	BOLT/SP	68	8
BOLT/M12X25	10	12	BOLT/S	9	22	BOLT/SP	69	6
BOLT/M12X25	46	9	BOLT/S	10	16	BOLT/SP	69	10
BOLT/M12X25	57	5	BOLT/S	10	22	BOLT/SP	69	14
BOLT/M12X25	62	42	BOLT/S	12	32	BOLT/SP	72	49
BOLT/M12X25	70	41	BOLT/S	21	12	BOLT/SP	73	17
BOLT/M12X30	12	18	BOLT/S	41	29	BOLT/SP	73	23
BOLT/M12X30	61	12	BOLT/S	53	20	BOLT/SP	76	2
BOLT/M12X30	80	5	BOLT/S	54	12	BOLT/SP	76	6
BOLT/M12X30	100	2	BOLT/S	55	13	BOLT/SP	77	2
BOLT/M12X35	61	7	BOLT/S	55	16	BOLT/SP	77	5
BOLT/M12X35	70	9	BOLT/S	56	13	BOLT/SP	78	2
BOLT/M12X35	70	13	BOLT/S	56	16	BOLT/SP	78	7
BOLT/M12X35	80	3	BOLT/S	62	39	BOLT/SP	79	2

Alpabetical Index

Description	Fig.	Key
BOLT/SP	81	11
BOLT/SP	82	13
BOLT/SP	82	23
BOLT/SP	87	10
BOLT/SP	88	11
BOLT/SP	89	16
BOLT/SP	95	28
BOLT/SP	100	8
BOLT/SP	106	17
BOLT/SP M8X20	11	18
BOLT/STUD	12	3
BOLT/STUD	12	9
BOLT/STUD	12	14
BOLT/STUD	13	9
BOLT/STUD	13	10
BOLT/STUD	13	12
BOLT/STUD	13	13
BOLT/STUD	13	14
BOLT/STUD	13	15
BOLT/STUD	47	7
BOLT/STUD	48	8
BOLT/STUD/M10X35	54	2
BOLT/STUD/SEAL	10	17
BOLT/STUD/SEAL	12	8
BOLT/STUD/SEAL	13	4
BOLT/STUD/SEAL	13	8
BOOT	11	15
BOOT	85	23
BOOT, CHANGE	21	15
BOOT/HORN	85	13
BOOT/HORN	86	13
BOOT/STEERING	74	12
BRACKET COMP	9	12
BRACKET COMP	58	10
BRACKET/AXLE COMP	57	1
BRACKET/BRAKE/FILTER	41	22
BRACKET/CLEANER COMP	4	11
BRACKET/COUPLER/7P	85	24
BRACKET/COUPLER/7P	86	26
BRACKET/DRAWBAR COMP	104	2
BRACKET/FILTER COMP	5	27
BRACKET/FILTER COMP	43	9
BRACKET/FRONT COMP	54	11
BRACKET/GRILLE COMP	73	18
BRACKET/LAMP	83	12
BRACKET/LEVER COMP	67	1
BRACKET/RADIATO COMP	1	27
BRACKET/RADIATO COMP	2	27
BRACKET/REFLECTOR	76	9
BRACKET/REFLECTOR	77	7
BRACKET/SEAT COMP	78	8
BRACKET/SEAT COMP	79	6
BRACKET/SEAT COMP	79	8
BRACKET/SEAT/F COMP	78	6
BRACKET/SEAT/R COMP	78	1
BRACKET/SEAT/R COMP	79	1
BRACKET/TANK COMP	6	16
BRAKE ASSY	41	26
BREATHER, TANK CAP	6	3
BUCKLE, TURN/M24 COMP	70	28
BULB	84	12
BULB/12V/45/40W	83	2
BULB/12V/5W	83	10
BULB/12V21W	83	4
BULB/12V21W	83	6
BULB/12V5W	83	5
BULB/LAMP/12V/1.7W	84	14
BUSH	23	12
BUSH	25	15
BUSH	33	13
BUSH	38	8
BUSH	50	37
BUSH	51	29
BUSH	54	17
BUSH, LEVER	6	14
BUSH, LEVER	72	52
BUSH, LEVER	72	56
BUSH, LEVER	73	22
BUSH/08X15X11	72	6
BUSH/15X17X10	39	13
BUSH/15X17X15	41	6
BUSH/19X30X14	72	3
BUSH/22X25X15	30	2
BUSH/22X25X20	40	4
BUSH/22X25X20	51	2
BUSH/25X28X27	36	37
BUSH/25X28X27	95	36
BUSH/35X39X26	61	5
BUSH/35X39X30	64	3
BUSH/40X43X30	64	2
BUSH/62X67X30	61	10
BUSH/68X71X14	110	18
BUSH/95X100X22	110	16
BUTTON	50	26
CABLE	57	9
CABLE	100	7
CABLE ASSY	84	21
CABLE/ACCELERATOR	8	13
CABLE/BATTERY ASSY	7	6
CABLE/CRUISE/A ASSY	41	11
CABLE/CRUISE/B ASSY	41	19
CABLE/PEDAL ASSY	8	2
CABLE/PEDAL ASSY	39	23
CAM, DIFF-LOCK	44	25
CAP	1	3
CAP	2	3
CAP	5	6
CAP	52	2
CAP, BLANK/52	35	20
CAP, BLANK/52	36	19
CAP, BLANK/52	95	21
CAP, BLANK/M10	25	5
CAP, OIL ASSY	61	2
CAP, PTO SHAFT	12	33
CAP, PTO SHAFT	13	32
CAP, PTO SHAFT	35	28
CAP, PTO SHAFT	36	28
CAP, PTO SHAFT	95	27
CAP, TANK	6	2
CAP, TIRE VALVE	96	5
CAP, TIRE VALVE	96	10
CAP, TIRE VALVE	97	5
CAP, TIRE VALVE	97	10
CAP, TIRE VALVE	98	5
CAP, TIRE VALVE	99	4
CAP, TIRE VALVE	99	8
CAP, TIRE VALVE	101	5
CAP, TIRE VALVE	101	10
CAP, TIRE VALVE	102	4
CAP, TIRE VALVE	102	9
CAP, TIRE VALVE	103	5
CAP/30	1	29
CAP/OIL/30	78	3
CAP/OIL/30	79	3
CAP/PARKING	72	43

Alpabetical Index

1750-097-100-00

Description	Fig.	Key
CAP/SEAL/47	62	16
CARTRIDGE ASSY	43	7
CASE	110	1
CASE ASSY	84	19
CASE,DIFF	44	1
CASE,SPRING	24	2
CASE,SYLINDER	64	1
CASE/DIFF	60	8
CASE/FILTER/400	69	1
CASE/FINAL	62	1
CASE/FINAL	62	15
CASE/JOINT COMP	58	9
CASE/JOINT COMP	59	9
CASE/PTO/MID	35	1
CASE/PTO/MID	36	1
CASE/PTO/MID	95	2
CASE/TRANSMISSION/F	12	1
CASE/TRANSMISSION/HS	13	1
CASE/TRANSMISSION/RE	12	2
CASE/TRANSMISSION/RE	13	2
CHAIN,CHECK,B COMP	70	17
CHAIN,CHECK/A	70	16
CLAMP,HARNESS	64	28
CLAMP,HARNESS	87	21
CLAMP,HARNESS	87	23
CLAMP,HARNESS	87	24
CLAMP,HARNESS	88	22
CLAMP,HARNESS	88	25
CLAMP,RADIATOR HOSE	43	14
CLAMP,RADIATOR HOSE	55	27
CLAMP,RADIATOR HOSE	56	35
CLAMP/32	3	5
CLAMP/WIRE/10-15	1	14
CLAMP/WIRE/10-15	2	14
CLAMP/WIRE/24-32	1	11
CLAMP/WIRE/24-32	2	11
CLAMP/WIRE/28-36	68	10
CLAMP/WIRE/28-36	69	16
CLAMP/WIRE/30-38	1	8
CLAMP/WIRE/30-38	2	8
CLAMP/WIRE/36-44	1	7
CLAMP/WIRE/36-44	1	12
CLAMP/WIRE/36-44	2	7
CLAMP/WIRE/36-44	2	12
CLAMP/WIRE/42-50	4	8
CLAMP/WIRE/47-55	4	10
CLAMP/WORM/16-25	55	23
CLEANER/AIR ASSY	4	1
CLIP	4	5
CLIP(B)	74	19
CLIP(B)	76	17
CLIP(B)	77	15
CLIP(B)	81	5
CLIP(B)	82	5
CLIP/HOSE/10.4-11.1	5	26
CLIP/HOSE/11.9-12.6	5	17
CLIP/HOSE/11.9-12.6	5	19
CLIP/HOSE/11.9-12.6	5	23
CLIP/HOSE/8.1-8.7	5	25
CLUTCH,ONE-WAY	28	6
CLUTCH/DIFFLOCK	44	22
CLUTCH/PTO/3 ASSY	30	1
COLLAR	85	2
COLLAR	86	2
COLLAR 23X34X2	30	6
COLLAR,PINION THRUST	44	4
COLLAR,SHIFTER	35	22
COLLAR,SHIFTER	36	23
COLLAR,SHIFTER	95	23
COLLAR,THRUST	17	11
COLLAR,THRUST	44	6
COLLAR/10X15X07	54	7
COLLAR/17X21X11 ASSY	39	12
COLLAR/18X30X1	41	27
COLLAR/21X36X1	35	8
COLLAR/21X36X1	36	9
COLLAR/21X36X1	95	9
COLLAR/22X36X02	18	3
COLLAR/23X47X12	110	25
COLLAR/25X32X3	17	5
COLLAR/25X32X3	60	3
COLLAR/25X35X02	16	13
COLLAR/25X35X02	20	3
COLLAR/25X40X25	20	5
COLLAR/25X42X4	30	23
COLLAR/25X46X3	30	22
COLLAR/41X55X10	16	1
COLLAR/48X52X17	60	4
COLLAR/48X57X3	28	7
COLUMN/STEERING COMP	54	1
CONECTERRING	111	14
CONNECTOR	1	15
CONNECTOR	2	15
CONNECTOR/CHECK/2.5	43	5
CONTROLLER/STEERING	54	13
COUPLING/16X27X62	9	24
COUPLING/37X50X35	30	9
COVER	3	7
COVER	41	34
COVER ASSY	4	2
COVER COMP	72	17
COVER,DUST	53	2
COVER,DUST	53	8
COVER,DUST	63	2
COVER,DUST	63	8
COVER,PUMP	55	3
COVER,PUMP	56	3
COVER,PUMP	68	17
COVER,PUMP	69	22
COVER/CHANGE	81	12
COVER/CHANGE	82	14
COVER/CLUTCH ASSY	9	20
COVER/DUSH/F	74	1
COVER/DUSH/R	74	2
COVER/DUSH/REAR	74	9
COVER/DUSH/REAR COMP	74	20
COVER/FUSE	87	6
COVER/FUSE	88	6
COVER/LH	81	14
COVER/LH	82	16
COVER/PLATE	37	1
COVER/PLATE	74	13
COVER/RH	81	15
COVER/RH	82	17
COVER/SAFETY/LH/F	72	58
COVER/SAFETY/LH/R	72	60
COVER/SHIELD COMP	34	1
COVER/SIDE/LH COMP	72	28
COVER/SIDE/RH COMP	72	35
COVER/SWITCH	85	7
COVER/SWITCH	86	7
COVER/SWITCH/SUB	23	3
COVER/TANK	75	4
COVER/TANK COMP	6	18
COVER/TRUNNION	39	24

Alpabetical Index

Description	Fig.	Key
COVER/WHEEL	62	28
CRANK,LIFT	65	3
CUM/BRAKE COMP	49	9
CUP/FUEL	6	6
CUSHION,B/ RUBBER	40	6
CUSHION,B/ RUBBER	82	9
CUSHION,RUBBER	4	15
CUSHION/RUBBER/10X25	72	5
CYLINDER ASSY	53	1
DAMPER(OIL) ASSY	40	12
DIODE	88	10
DISC/DAMPER ASSY	10	14
DISK/BRAKE	111	11
DISK/CLUTCHCONP	9	21
DISKPLATE	111	6
DRAWBAR	104	5
DRAWBAR/CLEVIS SET	104	1
ELBOW/45° ASSY	43	2
ELBOW/45° ASSY	56	30
ELBOW/90°/L ASSY	55	24
ELBOW/90°/L ASSY	56	32
ELEMENT	5	9
ELEMENT ASSY	4	3
ESCUTCHEON	84	7
FAN/HST COMP	10	25
FENDER/LH COMP	76	1
FENDER/LH COMP	77	1
FENDER/RH COMP	76	5
FENDER/RH COMP	77	4
FILTER COMP	68	4
FILTER/FUEL	6	5
FILTER/FUEL ASSY	5	1
FILTER/LINE/12X18X15	108	14
FILTER/SUCTION/400	69	7
FLANGE	55	11
FLANGE	56	11
FLANGE/DELIVERY COMP	55	14
FLANGE/DELIVERY COMP	56	14
FLANGEBOLT	33	5
FLANGEBOLT	35	26
FLANGEBOLT	36	25
FLANGEBOLT	95	25
FLASHER ASSY	85	16
FLASHER ASSY	86	17
FORK/RELEASE	9	13
FORK/SHIFT/1ST	27	6
FORK/SHIFT/2ND	27	15
FORK/SHIFT/DIFFLOCK	44	23
FORK/SHIFT/FRONT	24	1
FORK/SHIFT/PTO	26	5
FORK/SHIFT/SUB	26	2
FORK/SHIFT/SUB	27	16
FRAME/LH COMP	89	11
FRAME/LH COMP	106	12
FRAME/REAR COMP	80	1
FRAME/RH COMP	89	12
FRAME/RH COMP	106	13
FRAME/SF-184 SET	106	1
FRAME/UPPER COMP	89	1
FRAME/UPPER COMP	106	2
FUNNEL ASSY	94	1
FUSE/BLADE/32V05A	87	5
FUSE/BLADE/32V05A	88	5
FUSE/BLADE/32V10A	87	3
FUSE/BLADE/32V10A	88	3
FUSE/BLADE/32V20A	87	4
FUSE/BLADE/32V20A	88	4
FUSE/SLOWBLOW	87	2
FUSE/SLOWBLOW	88	2
GASKET	3	2
GASKET	6	4
GASKET	110	27
GAUGE/FUEL ASSY	6	8
GAUGE/OIL	21	19
GEAR	84	4
GEAR,WHEEL/58	46	2
GEAR/BEVEL/11	62	5
GEAR/BEVEL/12	62	20
GEAR/BEVEL/14	44	5
GEAR/BEVEL/15	60	10
GEAR/BEVEL/15	62	8
GEAR/BEVEL/47	62	23
GEAR/SPUR/11/LH	44	19
GEAR/SPUR/11/RH	44	20
GEAR/SPUR/13	28	14
GEAR/SPUR/13	29	7
GEAR/SPUR/14	30	34
GEAR/SPUR/14-33	15	12
GEAR/SPUR/15	15	1
GEAR/SPUR/15	35	11
GEAR/SPUR/15	36	13
GEAR/SPUR/15	95	12
GEAR/SPUR/16-34	17	6
GEAR/SPUR/17	16	5
GEAR/SPUR/17	20	13
GEAR/SPUR/17-24	17	7
GEAR/SPUR/18	30	10
GEAR/SPUR/18-20	28	16
GEAR/SPUR/18-20	29	9
GEAR/SPUR/18-30	20	1
GEAR/SPUR/19	16	2
GEAR/SPUR/19-25	15	10
GEAR/SPUR/19-29	16	6
GEAR/SPUR/19-29	16	11
GEAR/SPUR/20	19	1
GEAR/SPUR/20-23	18	1
GEAR/SPUR/24	31	9
GEAR/SPUR/25	20	7
GEAR/SPUR/25	31	4
GEAR/SPUR/26	28	5
GEAR/SPUR/26	29	4
GEAR/SPUR/26 SET	28	4
GEAR/SPUR/30	17	9
GEAR/SPUR/30	30	25
GEAR/SPUR/31-20	30	20
GEAR/SPUR/32	15	11
GEAR/SPUR/33	17	10
GEAR/SPUR/33	30	5
GEAR/SPUR/34	35	6
GEAR/SPUR/34	36	7
GEAR/SPUR/34	95	7
GLASS	84	8
GLIP/YELLOW	32	13
GLIP/YELLOW	33	17
GLIP/YELLOW	36	31
GLIP/YELLOW	95	30
GRILLE	73	1
GRIP	76	14
GRIP	77	12
GRIP/03X17X97	67	15
GRIP/12X50	21	7
GRIP/MAIN	22	8
GRIP/MAIN	41	2
GRIP/MID/PTO	38	14
GRIP/ORANGE	50	27

Alpabetical Index

1750-097-100-00

Description	Fig.	Key	Description	Fig.	Key	Description	Fig.	Key
GRIP/ORANGE/10.5	24	13	HOLDER/JE/9-9	88	20	HOUSING/CLUTCH COMP	9	1
GRIP/ORANGE/10.5	25	16	HOLDER/JE/9-9	88	24	HOUSING/CLUTCH COMP	10	1
GRIP/ORANGE/10.5	48	2	HOLDER/SHAFT ASSY	50	36	HST(TM/21) ASSY	14	1
GRIP/THROTTLE	8	7	HOLDER/SHAFT ASSY	51	28	HUB	28	8
GROMMET	6	22	HOOD COMP	72	1	HUB/09X14X20	1	19
GROMMET/10X40X03	85	28	HOOD/LAMP	73	8	HUB/09X14X20	2	19
GROMMET/10X40X03	86	30	HOOD/LH	81	9	HUB/21X27X33	42	1
GROMMET/13X17X5	76	19	HOOD/LH	82	11	HUB/CLUTCH COMP	30	27
GROMMET/13X17X5	77	17	HOOD/RH	81	10	HUB/SPACER COMP	70	5
GROMMET/14X18X06	54	6	HOOD/RH	82	12	INSULATOR	1	22
GROMMET/15	76	20	HOOK	11	6	INSULATOR	1	23
GROMMET/15	77	18	HOOK,SPRING	64	26	INSULATOR	1	30
GROMMET/25X70X03	10	2	HOOK,TOP LINK	70	39	INSULATOR	2	22
GUIDE/CHANGE	32	20	HORN ASSY	85	1	INSULATOR	2	23
GUIDE/CHENGE	33	14	HORN ASSY	86	1	INSULATOR	2	30
GUIDE/CRUISE COMP	41	30	HOSE	1	4	INSULATOR	6	20
GUIDE/LEVELGAUG COMP	13	35	HOSE	2	4	INSULATOR	10	4
GUIDE/PTO/MID	36	40	HOSE/04X08X400	5	24	INSULATOR	47	2
GUIDE/PTO/MID	95	39	HOSE/07X11X20	41	18	INSULATOR	50	52
HANDLE	72	10	HOSE/08X13X300	5	16	INSULATOR	57	10
HARNESS,OIL PRESSURE	87	13	HOSE/08X13X300	5	22	INSULATOR	71	6
HARNESS,OIL PRESSURE	88	14	HOSE/110	5	18	INSULATOR	72	9
HARNESS/LAMP	83	11	HOSE/1100 ASSY	43	12	INSULATOR	72	33
HARNESS/MAIN/E4 ASSY	87	1	HOSE/1350 ASSY	43	11	INSULATOR	72	34
HARNESS/MAIN/HE ASSY	88	1	HOSE/1350 ASSY	56	29	INSULATOR	72	40
HARNESS/PA/BLUE	108	3	HOSE/250	1	13	INSULATOR	72	41
HARNESS/SOCKET ASSY	85	27	HOSE/250	2	13	INSULATOR	73	9
HARNESS/SOCKET ASSY	86	29	HOSE/650 ASSY	43	1	INSULATOR	74	10
HEAD,SYLINDER	64	11	HOSE/700	6	7	INSULATOR	74	16
HITCH/FRONT COMP	57	4	HOSE/90	68	9	INSULATOR	74	17
HITCH/FRONT SET	100	1	HOSE/90	69	15	INSULATOR	75	2
HITCHI/DRAWBARSET	105	1	HOSE/CLEANER/OUTLET	4	9	INSULATOR	75	3
HOLDER	8	5	HOSE/DERIVERY ASSY	55	26	INSULATOR	75	9
HOLDER,PINION SHAFT	44	7	HOSE/DERIVERY ASSY	56	34	INSULATOR	81	4
HOLDER/15	68	30	HOSE/HYDRO/1700 ASSY	56	17	INSULATOR	82	4
HOLDER/15	68	33	HOSE/HYDRO/750 ASSY	55	17	INSULATOR	89	10
HOLDER/15	69	35	HOSE/RADIATOR/INLET	1	6	INSULATOR	100	6
HOLDER/15	69	38	HOSE/RADIATOR/INLET	2	6	INSULATOR	104	13
HOLDER/19	56	20	HOSE/RADIATOR/OUTLET	1	9	INSULATOR	104	16
HOLDER/2X09	41	36	HOSE/RADIATOR/OUTLET	2	9	INSULATOR	105	6
HOLDER/COVER	72	42	HOSE/TANK	55	22	INSULATOR	106	11
HOLDER/JE/9-9	1	10	HOUSING ASSY	84	9	INSULATOR/120	22	9
HOLDER/JE/9-9	2	10	HOUSING/AXLE	61	1	INSULATOR/120	38	13
HOLDER/JE/9-9	51	20	HOUSING/AXLE/LH	45	1	INSULATOR/120	67	16
HOLDER/JE/9-9	87	19	HOUSING/AXLE/RH	45	2	INSULATOR/380	73	3

Alpabetical Index

Description	Fig.	Key
INSULATOR/50X50X15	2	29
INSULATOR/550	1	24
INSULATOR/550	2	24
INSULATOR/75	6	21
INSULATOR/DASH	75	5
INSULATOR/HOOD	75	1
INSULATOR/LH	72	29
INSULATOR/RH	72	36
INSULATOR/TANK	75	7
JOINT BALL M08LH	39	7
JOINT BALL M08RH	39	6
JOINT,L TYPE	5	12
KEY	85	5
KEY	86	5
KIT/JOINT	58	2
KIT/JOINT	59	2
KNOB	85	12
KNOB	85	15
KNOB	86	12
KNOB	86	15
KNOB,LEVER/12	23	16
LABEL,CONTROL	91	3
LABEL,CONTROL	92	2
LABEL/4WD	91	7
LABEL/4WD	92	6
LABEL/BATTERY	93	11
LABEL/CAUTION/BATTER	93	3
LABEL/CE	93	16
LABEL/COLUMN/LH	91	10
LABEL/COLUMN/LH	92	9
LABEL/COLUMN/RH	91	11
LABEL/COLUMN/RH	92	10
LABEL/CONTROL/ADJUST	91	8
LABEL/CONTROL/ADJUST	92	11
LABEL/CONTROL/CRUISE	92	12
LABEL/CONTROL/MAIN	91	1
LABEL/CONTROL/PARKIN	91	6
LABEL/CONTROL/PARKIN	92	7
LABEL/CONTROL/PTO	91	4
LABEL/CONTROL/PTO	92	4
LABEL/CONTROL/SUB	91	2
LABEL/CONTROL/SUB	92	3
LABEL/DIFF	91	5
LABEL/DIFF	92	5
LABEL/DRAWBAR	71	7
LABEL/DRAWBAR	105	7
LABEL/DRIVE	93	1
LABEL/ETHER	93	6
LABEL/FUEL	93	12
LABEL/FUSE/E4	87	8
LABEL/FUSE/E4	88	8
LABEL/FUSE/SLOWBLOW	87	9
LABEL/FUSE/SLOWBLOW	88	9
LABEL/PTO	93	9
LABEL/PTO/MID	91	12
LABEL/PTO/MID	92	1
LABEL/PTO/MID	95	48
LABEL/RADIATOR	93	7
LABEL/ROPS	93	13
LABEL/SPEED	93	14
LABEL/SPEED/HST	93	15
LABEL/SWITCH/MAIN	91	9
LABEL/SWITCH/MAIN	92	8
LABEL/TRAILER	93	8
LABEL/TRH1738A	104	17
LABEL/W/FAN	93	2
LABEL/W/STARTER	93	10
LABEL/WARNING/BELT	93	4
LABEL/WARNING/HOT	93	5
LAMP/COMBINATIO SET	83	3
LAMP/HEAD ASSY	83	1
LAMP/NUMBERPLAT SET	83	9
LEVELGAGE	13	34
LEVER	5	2
LEVER	85	11
LEVER	86	11
LEVER COMP	8	6
LEVER/4WD ASSY	25	14
LEVER/4WD COMP	24	12
LEVER/CRUISE COMP	41	1
LEVER/MAIN COMP	21	4
LEVER/PARKING ASSY	50	23
LEVER/PARKING COMP	51	16
LEVER/POSITION	67	13
LEVER/PTO COMP	32	12
LEVER/PTO COMP	33	16
LEVER/PTO/MID COMP	36	30
LEVER/PTO/MID COMP	95	29
LEVER/SUB	22	6
LEVER/SUB	23	13
LEVER/SUB	38	11
LIFTROD/L COMP	70	27
LINING/11X30X02	67	6
LINING/11X40X03	8	8
LINK BRACKET	70	40
LINK SHIFT ARM	66	22
LINK,CRANK	66	12
LINK,TOP LH COMP	70	33
LINK/DRAWBAR	104	6
LINK/LOWER COMP	70	1
LINK/SPOOL COMP	66	11
LINK/SUPPORT COMP	66	18
LINK/TOP/RH COMP	70	35
LINKPIN	57	8
LINKPIN	70	3
LINKPIN	70	38
LINKPIN	71	5
LINKPIN	89	8
LINKPIN	100	5
LINKPIN	104	12
LINKPIN	104	15
LINKPIN	105	5
LINKPIN	106	9
LOCKPLATE	50	8
MAT/FLOOR/LH	81	6
MAT/FLOOR/RH	81	7
MAT/LH	82	6
MAT/RH	82	7
METAL,DIFF-CASE LH	44	14
METAL,DIFF-CASE RH	44	15
METAL/BRAKE	49	11
METAL/HST	13	19
METAL/INPUT	12	24
METAL/PIVOT/FRONT	61	4
METAL/PIVOT/REA ASSY	61	9
METAL/PTO	12	30
METAL/PTO	13	29
METAL/SHIFT	21	1
METAL/SLIDE	110	5
METER ASSY	84	2
MIRROR ASSY	81	25
MIRROR ASSY	82	27
MUFFLER COMP	3	1
NEEDLE	109	5
NEEDLE	110	15

Alpabetical Index

Description	Fig.	Key	Description	Fig.	Key	Description	Fig.	Key
NET/GURILLE	73	5	NUT	63	5	NUT/M12	50	46
NET/SIDE	72	30	NUT	67	9	NUT/M12	61	8
NET/SIDE	72	37	NUT	70	29	NUT/M12	70	11
NET/SIDE/LH	73	10	NUT	72	15	NUT/M12	70	15
NET/SIDE/RH	73	11	NUT	72	47	NUT/M12	70	32
NET/WIRE COMP	1	2	NUT	76	16	NUT/M12	107	4
NET/WIRE COMP	2	2	NUT	77	14	NUT/M12/LH	50	47
NIPPLE,GREASE	10	6	NUT	82	10	NUT/M14	83	14
NIPPLE,GREASE	50	38	NUT	85	20	NUT/M14	89	14
NIPPLE,GREASE	51	30	NUT	85	22	NUT/M14	106	15
NIPPLE,GREASE	53	4	NUT	86	23	NUT/M16	65	12
NIPPLE,GREASE	53	10	NUT	108	17	NUT/M16	70	19
NIPPLE,GREASE	62	37	NUT,LH THREAD/M17	63	11	NUT/M16	70	22
NIPPLE,GREASE	63	4	NUT,RING	5	7	NUT/M16	89	3
NIPPLE,GREASE	63	10	NUT,SLOTTED	53	3	NUT/M16	106	4
NIPPLE,GREASE/PT1/8	9	3	NUT,SLOTTED	53	9	NUT/M22	85	10
NIPPLE,GREASE/PT1/8	11	4	NUT,SLOTTED	63	3	NUT/M22	86	10
NIPPLE,GREASE/PT1/8	40	5	NUT,SLOTTED	63	9	NUT/M6	41	31
NIPPLE,GREASE/PT1/8	50	7	NUT,SPEED/P6	72	32	NUT/M6	74	15
NIPPLE,GREASE/PT1/8	51	3	NUT,SPEED/P6	72	39	NUT/M6	85	3
NUT	8	11	NUT,SPEED/P6	73	7	NUT/M6	86	3
NUT	11	3	NUT,SPEED/P6	73	13	NUT/M8	10	19
NUT	11	11	NUT,SPEED/P6	74	11	NUT/M8	11	19
NUT	12	5	NUT,TOP LINK LOCK	70	36	NUT/M8	32	17
NUT	12	11	NUT,U/M16	104	9	NUT/M8	39	8
NUT	12	15	NUT/M 6	7	5	NUT/M8	50	21
NUT	13	7	NUT/M 6	36	35	NUT/M8	50	33
NUT	21	6	NUT/M 6	87	17	NUT/M8	51	14
NUT	22	5	NUT/M 6	88	18	NUT/M8	51	26
NUT	39	10	NUT/M 6	95	34	NUT/M8	51	40
NUT	39	21	NUT/M 8	65	8	NUT/RING	85	6
NUT	40	7	NUT/M 8	70	7	NUT/RING	86	6
NUT	40	9	NUT/M06	7	8	NUT/SPRING	74	3
NUT	41	35	NUT/M08	7	13	NUT/WASHER	6	10
NUT	44	30	NUT/M08	68	25	NUT/WASHER	40	14
NUT	50	11	NUT/M08	69	30	NUT/WASHER	41	9
NUT	50	22	NUT/M10	10	20	NUT/WASHER	57	12
NUT	50	32	NUT/M10	64	9	NUT/WASHER	72	53
NUT	50	53	NUT/M10 7T P=1.25	9	7	NUT/WASHER	83	8
NUT	51	5	NUT/M10 7T P=1.25	10	9	NUT/WASHER	100	9
NUT	51	15	NUT/M10 7T P=1.25	54	5	O-RING	21	11
NUT	51	39	NUT/M12	12	19	O-RING G60	64	16
NUT	52	3	NUT/M12	34	3	O-RING /P41	62	34
NUT	58	12	NUT/M12	47	8	O-RING /P41	110	26
NUT	59	12	NUT/M12	48	9	O-RING HS90 G50	55	5

Alpabetical Index

Description	Fig.	Key
O-RING HS90 G50	56	5
O-RING HS90 G50	68	19
O-RING HS90 G50	69	24
O-RING P6 HS90	55	7
O-RING P6 HS90	56	7
O-RING P6 HS90	68	21
O-RING P6 HS90	69	26
O-RING P6 HS90	109	8
O-RING/G115	49	12
O-RING/G45	68	6
O-RING/G45	69	8
O-RING/G70	61	11
O-RING/G90	62	2
O-RING/P 7	13	21
O-RING/P 7	64	24
O-RING/P 7	66	20
O-RING/P 7	108	21
O-RING/P 9	89	9
O-RING/P 9	106	10
O-RING/P10A	5	4
O-RING/P10A	27	5
O-RING/P10A	27	13
O-RING/P10A	44	28
O-RING/P10A	66	23
O-RING/P12	64	13
O-RING/P12	64	15
O-RING/P12	64	21
O-RING/P12	108	16
O-RING/P12	109	7
O-RING/P14	14	3
O-RING/P14	23	2
O-RING/P14	24	14
O-RING/P14	32	7
O-RING/P14	33	2
O-RING/P14	35	23
O-RING/P14	36	24
O-RING/P14	95	24
O-RING/P14	108	10
O-RING/P14	110	30
O-RING/P15	14	4
O-RING/P16	45	13
O-RING/P16	110	52
O-RING/P18	49	10
O-RING/P18	68	36
O-RING/P18	69	41
O-RING/P18	89	7
O-RING/P18	106	8
O-RING/P18	108	11
O-RING/P20	54	18
O-RING/P20	55	12
O-RING/P20	55	15
O-RING/P20	56	12
O-RING/P20	56	15
O-RING/P20	68	12
O-RING/P20	68	28
O-RING/P20	69	18
O-RING/P20	69	33
O-RING/P20	108	12
O-RING/P21	25	2
O-RING/P22	55	6
O-RING/P22	56	6
O-RING/P22	68	20
O-RING/P22	69	25
O-RING/P24	69	12
O-RING/P35	69	9
O-RING/P36	54	19
O-RING/P44	5	8
O-RING/P5 HS90	13	22
O-RING/P55	66	2
OIL/FILTER ASSY	43	6
ORING	56	26
ORNAMENT/3200	90	6
ORNAMENT/3240	90	4
ORNAMENT/HYDRO	90	7
ORNAMENT/I	90	3
ORNAMENT/ISEKI/LH	90	1
ORNAMENT/ISEKI/RH	90	2
ORNAMENT/STEERING	90	5
PACKING	1	17
PACKING	2	17
PACKING	5	11
PACKING	61	3
PACKING	64	14
PACKING,OIL PUMP	55	10
PACKING,OIL PUMP	56	10
PACKING,OIL PUMP	68	24
PACKING,OIL PUMP	69	29
PACKING,ROD	53	5
PACKING/RUBBER	6	9
PACKING/RUBBER	78	4
PACKING/RUBBER	79	4
PAD/HST/OR	40	10
PAD/OR	40	11
PANEL/INSTRUMEN ASSY	84	1
PEDAL/BRAKE ASSY	51	1
PEDAL/BRAKE/LH SET	50	1
PEDAL/BRAKE/RH COMP	50	5
PEDAL/CLUTCH COMP	11	1
PEDAL/HST/F ASSY	40	3
PEDAL/HST/R SET	40	1
PIN	12	29
PIN	12	31
PIN	13	23
PIN	13	30
PIN	21	3
PIN	35	2
PIN	36	4
PIN	40	16
PIN	41	15
PIN	44	8
PIN	44	9
PIN	45	11
PIN	53	18
PIN	62	4
PIN	62	29
PIN	62	38
PIN	64	10
PIN	84	5
PIN	95	5
PIN	110	53
PIN	110	54
PIN COMP	72	48
PIN SPLIT W 6.0X16	18	6
PIN SPLIT W 6.0X16	20	11
PIN,CHAIN	70	24
PIN,HAIR	78	11
PIN,HAIR	78	12
PIN,HAIR	79	11
PIN,HAIR	79	12
PIN,KNOCK	13	27
PIN,ROD COMP	66	5
PIN,SPLIT/1.6X15	81	19
PIN,SPLIT/1.6X15	82	21
PIN,SPLIT/2 X15	36	43
PIN,SPLIT/2 X15	66	13

Alpabetical Index

1750-097-100-00

Description	Fig.	Key	Description	Fig.	Key	Description	Fig.	Key
PIN, SPLIT/2 X15	66	16	PIN, SPRING/6 X40 W	35	9	PIN/SNAP	72	7
PIN, SPLIT/2 X15	95	42	PIN, SPRING/6 X40 W	36	10	PIN/SNAP	72	20
PIN, SPLIT/2 X20	8	4	PIN, SPRING/6 X40 W	95	10	PIN/SNAP	72	26
PIN, SPLIT/2 X20	8	15	PIN, ST	110	44	PIN/SUPPORT COMP	66	19
PIN, SPLIT/2 X20	11	8	PIN, TAPER/8X50	40	2	PINION/BEVEL SET	17	1
PIN, SPLIT/2 X20	24	5	PIN, TAPER/8X50	50	2	PINION/BEVEL SET	60	1
PIN, SPLIT/2 X20	41	13	PIN, TAPER/8X50	50	42	PINION/BEVEL/07 SET	16	10
PIN, SPLIT/2 X20	41	17	PIN, TAPER/8X50	51	34	PINION/BEVEL/11	60	9
PIN, SPLIT/2 X20	41	21	PIN, TOP LINK	70	37	PINION/BEVEL/12	44	3
PIN, SPLIT/2 X20	47	5	PIN, YOKE A	50	13	PIPE/123	46	3
PIN, SPLIT/2 X20	48	6	PIN, YOKE A	50	17	PIPE/CLEANER/INLET	4	7
PIN, SPLIT/2 X20	50	15	PIN, YOKE A	51	8	PIPE/DEL/FRONT COMP	68	26
PIN, SPLIT/2 X20	50	19	PIN, YOKE A	51	8	PIPE/DEL/FRONT COMP	69	31
PIN, SPLIT/2 X20	50	35	PIN, YOKE A	51	24	PIPE/DEL/REAR COMP	68	32
PIN, SPLIT/2 X20	51	11	PIN/06X07	72	18	PIPE/DEL/REAR COMP	69	37
PIN, SPLIT/2 X20	51	23	PIN/06X31	33	19	PIPE/HST COMP	43	17
PIN, SPLIT/2 X20	51	42	PIN/08X19	50	34	PIPE/SUC/FRONT COMP	68	11
PIN, SPLIT/2 X20	52	4	PIN/08X57	51	9	PIPE/SUC/FRONT COMP	69	17
PIN, SPLIT/2 X25	53	15	PIN/10X154	78	9	PIPE/SUC/REAR COMP	69	11
PIN, SPLIT/2.5X20	33	20	PIN/10X154	79	9	PIPE/SUCTION/MI COMP	68	5
PIN, SPLIT/2.5X20	50	50	PIN/10X25	50	48	PIPE/SUCTION/REAR	68	3
PIN, SPLIT/2.5X25	8	12	PIN/12X48	70	20	PISTON	66	1
PIN, SPLIT/2.5X25	32	4	PIN/12X75	9	14	PISTON	110	6
PIN, SPLIT/3 X15	11	14	PIN/12X75	60	11	PISTON	111	1
PIN, SPLIT/3 X20	9	15	PIN/16X73	70	30	PIVOT/TRUNNION COMP	39	1
PIN, SPLIT/3 X20	23	10	PIN/20X51	35	5	PLATE	67	5
PIN, SPLIT/3 X20	25	13	PIN/20X51	36	6	PLATE	104	7
PIN, SPLIT/3 X20	33	11	PIN/20X51	95	6	PLATE COMP	41	10
PIN, SPLIT/3 X20	38	6	PIN/20X58	89	6	PLATE COMP	51	19
PIN, SPLIT/3 X20	63	13	PIN/20X58	106	7	PLATE COMP	81	26
PIN, SPLIT/3 X25	70	21	PIN/22X404	70	4	PLATE/30X50	95	46
PIN, SPRING 3X32	64	25	PIN/22X86	65	9	PLATE/BATTERY	7	3
PIN, SPRING/5 X20 W	24	9	PIN/25X91	104	11	PLATE/BUMPER	107	1
PIN, SPRING/5 X20 W	67	12	PIN/30X120 COMP	57	7	PLATE/CHAIN/LH	70	8
PIN, SPRING/5 X25 W	32	11	PIN/30X120 COMP	100	4	PLATE/CHAIN/RH	70	12
PIN, SPRING/5 X25 W	60	12	PIN/30X162 COMP	71	4	PLATE/COVER	13	26
PIN, SPRING/5 X32 W	24	16	PIN/30X162 COMP	104	14	PLATE/CRUISE COMP	41	8
PIN, SPRING/6 X25 W	23	6	PIN/30X162 COMP	105	4	PLATE/DAMPER	10	15
PIN, SPRING/6 X25 W	25	9	PIN/47X19	62	31	PLATE/FRICTION	49	3
PIN, SPRING/6 X25 W	33	7	PIN/5X17	66	15	PLATE/FRICTION	49	7
PIN, SPRING/6 X25 W	36	45	PIN/ADJUST	64	23	PLATE/GUIDE	21	17
PIN, SPRING/6 X25 W	38	2	PIN/SHIFT COMP	23	1	PLATE/HITCH COMP	71	1
PIN, SPRING/6 X25 W	95	44	PIN/SHIFT COMP	33	1	PLATE/HOLDER/LH/F	72	50
PIN, SPRING/6 X28 W	9	25	PIN/SHIFT/FRONT COMP	25	1	PLATE/HOLDER/RH/F	72	51
PIN, SPRING/6 X32 W	10	26	PIN/SLITTED	44	26	PLATE/I/19X295	23	8

Alpabetical Index

Description	Fig.	Key	Description	Fig.	Key	Description	Fig.	Key
PLATE/I/19X295	33	9	PLUG/SCREW/SEAL	10	3	RING, SNAP/18 C	38	10
PLATE/I/30X50	25	6	PLUG/SCREW/SEAL	13	20	RING, SNAP/18 C	41	28
PLATE/I/30X50	33	3	PLUG/SCREW/SEAL	35	27	RING, SNAP/18 C	42	2
PLATE/I/30X50	35	24	PLUG/SCREW/SEAL	36	5	RING, SNAP/20C	15	9
PLATE/I/30X50	36	26	PLUG/SCREW/SEAL	68	27	RING, SNAP/20C	16	7
PLATE/IR/16X105	41	14	PLUG/SCREW/SEAL	69	32	RING, SNAP/20C	20	10
PLATE/IR/44X60	73	21	PLUG/SCREW/SEAL	95	26	RING, SNAP/20C	28	19
PLATE/L/25X68	69	4	PLUG/SCREW/SEAL	108	22	RING, SNAP/20C	29	12
PLATE/L/28X28	50	58	PLUG/SCREW/SEAL	108	23	RING, SNAP/20C	30	13
PLATE/L/28X28	51	47	PLUG/SCREW/SEAL	108	24	RING, SNAP/20C	31	7
PLATE/L/38X114	89	15	PLUG/SCREW/SEAL	109	6	RING, SNAP/20C	110	32
PLATE/L/38X114	106	16	POPPET	108	20	RING, SNAP/22 C	18	4
PLATE/L/50X45	6	13	POPPET	110	47	RING, SNAP/22 C	50	3
PLATE/PARKING/A	50	43	POPPET/CHECK	110	24	RING, SNAP/22 C	50	56
PLATE/PARKING/B	50	44	POPPET/RELIEF	110	22	RING, SNAP/22 C	51	45
PLATE/PRESSURE/LH	49	1	PRESSURE/BRAKE	111	12	RING, SNAP/25	16	17
PLATE/PRESSURE/RH	49	5	PROTECTER	67	17	RING, SNAP/25	17	4
PLATE/REAR/LH COMP	72	54	PTO/MID SET	95	1	RING, SNAP/25 C	15	6
PLATE/REAR/RH COMP	72	55	PUMP SET	55	2	RING, SNAP/25 C	16	14
PLATE/SEPARATER	49	2	PUMP SET	56	2	RING, SNAP/25 C	20	4
PLATE/SEPARATER	49	6	PUMP, GEAR ASSY	68	16	RING, SNAP/25 C	28	13
PLATE/SPRING	108	18	PUMP, GEAR ASSY	69	21	RING, SNAP/25 C	29	6
PLATE/SPRING	110	23	PUMP, GEAR ASSY	55	1	RING, SNAP/25 C	30	24
PLATE/STOP COMP	81	16	PUMP, GEAR ASSY	56	1	RING, SNAP/25 C	30	36
PLATE/STOP COMP	82	18	PUMP, GEAR ASSY	68	15	RING, SNAP/25 C	35	14
PLATE/STOPPER COMP	65	13	PUMP, GEAR ASSY	69	20	RING, SNAP/25 C	36	12
PLATE/SWASH	110	4	PUMP/FUEL ASSY	5	20	RING, SNAP/25 C	36	39
PLATE/VALVE/MOTOR	110	9	RADIATOR ASSY	1	1	RING, SNAP/25 C	60	5
PLATE/VALVE/PUMP	110	8	RADIATOR ASSY	2	1	RING, SNAP/25 C	62	27
PLATE/Z/19X261	25	11	REFLECTOR ASSY	76	11	RING, SNAP/25 C	95	15
PLATE/Z/19X334	38	4	REFLECTOR ASSY	77	9	RING, SNAP/25 C	95	38
PLUG	1	16	RELAY/4P ASSY	86	20	RING, SNAP/28 C	21	10
PLUG	2	16	RIM/WHEEL COMP	96	3	RING, SNAP/30 C	30	8
PLUG	108	9	RIM/WHEEL COMP	96	8	RING, SNAP/30 C	30	18
PLUG	109	4	RIM/WHEEL COMP	102	2	RING, SNAP/30 C	30	31
PLUG(G3/8)	110	28	RIM/WHEEL COMP	102	7	RING, SNAP/30 C	46	7
PLUG(PF1/4)	110	29	RIM/WHEEL COMP	103	3	RING, SNAP/30 C	110	42
PLUG, DRAIN	12	22	RING, BACKUP	66	3	RING, SNAP/32 C	110	34
PLUG, DRAIN	13	17	RING, SNAP/14 C	27	14	RING, SNAP/35 C	62	13
PLUG, DRAIN	45	12	RING, SNAP/15 C	39	16	RING, SNAP/35 C	65	6
PLUG, DRAIN (1/4)	62	18	RING, SNAP/15 C	39	18	RING, SNAP/47 C	62	17
PLUG/7P	85	26	RING, SNAP/15 C	41	4	RING, SNAP/47 C	110	33
PLUG/7P	86	28	RING, SNAP/17 C	110	43	RING, SNAP/52 C	17	13
PLUG/M18	110	49	RING, SNAP/18 C	23	18	RING, SNAP/52 C	28	3
PLUG/SCREW/SEAL	9	4	RING, SNAP/18 C	25	18	RING, SNAP/52 C	29	3

Alpabetical Index

Description	Fig.	Key
RING, SNAP/52 C	35	17
RING, SNAP/52 C	36	17
RING, SNAP/52 C	60	7
RING, SNAP/52 C	95	18
RING/22	30	4
RING/30	30	14
RING/E	84	3
RING/O	22	2
RING/O	43	3
RING/O	53	12
RING/O	55	19
RING/O	55	21
RING/O	55	25
RING/O	56	23
RING/O	56	31
RING/O	56	33
RING/O	68	2
RING/O	69	3
RING/O	108	13
RING/O	110	31
RING/SNAP	28	10
RING/SNAP	30	19
RING/SNAP	46	8
RING/SNAP	58	3
RING/SNAP	59	3
RING/SNAP	60	15
RING/SNAP	60	16
RING/SNAP	62	7
RING/SNAP	62	14
RING/SNAP	65	5
RIVET	81	8
RIVET	82	8
ROD	50	24
ROD	66	4
ROD COMP	51	25
ROD/111	51	35
ROD/115 COMP	50	29
ROD/175	48	4
ROD/193	47	3
ROD/390 COMP	50	20
ROD/41	51	36
ROD/41/LH	51	37
ROD/42	51	21
ROD/70 COMP	50	30
ROD/70 COMP	72	24
ROD/BRAKE COMP	51	13
ROD/CLUTCH/A	11	9
ROD/CLUTCH/B	11	12
ROD/LIFT/LH COMP	70	25
ROD/M08X110 COMP	39	4
ROD/M12X66	50	45
ROD/M8X65 COMP	39	5
ROD/M8X92	39	20
ROD/PISTON SET	53	7
ROD/TIE	63	6
ROD/TIE/LH ASSY	63	1
ROD/TIE/MID	36	41
ROD/TIE/MID	95	40
ROD/TIE/RH ASSY	63	7
RUBBER, CUSHIN	78	5
RUBBER, CUSHIN	79	5
RUBBER, CUSHION	50	51
S.W	55	9
S.W	56	9
S.W	68	23
S.W	69	28
SCREW	77	8
SCREW	84	17
SCREW	84	20
SCREW, RH/M24 COMP	70	26
SCREW, SEMS	76	15
SCREW, SEMS	77	13
SCREW/4X16	84	18
SCREW/F	108	15
SCREW/SOCKET	110	45
SCREW/SP	74	8
SCREW/SP	74	14
SCREW/SP	76	10
SCREW/TAPPING	84	11
SEAL, DUST	53	6
SEAL, OIL	55	4
SEAL, OIL	56	4
SEAL, OIL	68	18
SEAL, OIL	69	23
SEAL, OIL/21	60	6
SEAL, OIL/QLF488011.5	46	4
SEAL, OIL/TC20357	9	2
SEAL, OIL/TC20357	15	2
SEAL, OIL/TC20357	19	5
SEAL, OIL/TC20357	20	15
SEAL, OIL/TC35528	35	19
SEAL, OIL/TC35528	36	18
SEAL, OIL/TC35528	95	20
SEAL, OIL/TC35558	31	8
SEAL, OIL/VC35506	65	2
SEAL/47	110	38
SEAL/OIL	61	6
SEAL/OIL	110	35
SEAL/OIL	110	36
SEAL/OIL	110	37
SEAL/OIL ASSY	62	10
SEAL/PISTON	53	11
SEAL/QLNY35571116	62	24
SEALRING/32	111	3
SEALRING/77	111	2
SEPARATERPLATE	111	5
SHAFT	62	19
SHAFT	62	44
SHAFT	62	45
SHAFT, DIFF. PINION	44	2
SHAFT/4WD	20	6
SHAFT/4WD ASSY	58	1
SHAFT/4WD ASSY	59	1
SHAFT/BRAKE SET	50	41
SHAFT/BRAKE SET	51	33
SHAFT/CHANGE	15	7
SHAFT/DRIVE/PTO	28	1
SHAFT/DRIVE/PTO	29	1
SHAFT/DRIVE/PTO	30	26
SHAFT/FRONT	20	12
SHAFT/FRONT COMP	19	2
SHAFT/INPUT	9	23
SHAFT/INPUT	10	24
SHAFT/LIFT	65	1
SHAFT/MOTOR	110	11
SHAFT/PTO	31	1
SHAFT/PTO COMP	30	3
SHAFT/PTO/MID	35	10
SHAFT/PTO/MID	36	11
SHAFT/PTO/MID	95	11
SHAFT/PUMP	110	10
SHAFT/REVERSE	18	5
SHAFT/STEERING/ COMP	54	16
SHAFT/SUB	16	4
SHAFT/WHEEL	46	1

Alpabetical Index

Description	Fig.	Key
SHAFT/WHEEL	62	22
SHIFTER/PTO	32	1
SHIM,DIFF-CASE A	44	16
SHIM,DIFF-CASE B	44	17
SHIM/0.1	110	51
SHIM/0.5	110	50
SHIM/0.9	110	7
SHIM/T=0.7	21	21
SHROUD COMP	1	21
SHROUD COMP	2	21
SLEEVE	9	16
SLEEVE	31	2
SLEEVE	35	18
SLEEVE	36	15
SLEEVE	95	19
SNAPRING	111	8
SNAPRING/32	111	10
SNAPRING/85	111	13
SOCKET	84	13
SOCKET	84	15
SPOOL/FLOCON/1.15	108	5
SPOOL/STOPPER	108	8
SPRING	50	25
SPRING	70	2
SPRING	109	2
SPRING	109	3
SPRING	111	4
SPRING,PRESS/22	8	9
SPRING,PRESS/40	44	27
SPRING,SHIFTER	24	3
SPRING,SHIFTER	32	2
SPRING,SHIFTER	35	12
SPRING,SHIFTER	36	22
SPRING,SHIFTER	95	14
SPRING,TENSION/121	47	6
SPRING,TENSION/121	48	7
SPRING,TENSION/31	66	10
SPRING,TENSION/53	8	1
SPRING,TENSION/53	41	7
SPRING,TENSION/53	67	10
SPRING,VALVE	5	3
SPRING/GUIDE	108	6
SPRING/HC020	108	19
SPRING/HC021	110	21
SPRING/HC022	25	3
SPRING/HC022	26	3
SPRING/HC022	26	6
SPRING/HC023	27	7
SPRING/HC023	27	17
SPRING/HC024	32	15
SPRING/HC024	33	18
SPRING/HC024	36	33
SPRING/HC024	95	32
SPRING/HC024	110	48
SPRING/HC027	108	7
SPRING/HC030	110	20
SPRING/HC053	110	19
SPRING/HC060	21	14
SPRING/HC090	72	2
SPRING/HC094	11	5
SPRING/HC50	9	17
SPRING/HE036	72	21
SPRING/HE044	72	27
SPRING/HE068	39	22
SPRING/HE089	72	16
SPRING/HE106	50	4
SPRING/HE106	50	6
SPRING/HE106	51	6
SPRING/HE110	50	57
SPRING/HE110	51	46
SPRING/HE85	39	19
SPRING/WASHER	67	7
SPRING/WAVE	111	15
STAY,SHIFTER	24	8
STAY,SHIFTER	44	24
STAY/CYLINDER	53	17
STAY/INSULATOR	74	18
STAY/PLATE	59	10
STAY/PTO/PARKIN COMP	32	18
STAY/SHIFT/1ST	27	1
STAY/SHIFT/2ND	27	9
STAY/SHIFT/HST	26	1
STAY/SHIFT/PTO	32	5
STEP/LH COMP	81	1
STEP/LH COMP	82	1
STEP/RH COMP	81	2
STEP/RH COMP	82	2
STRAP/GROUND ASSY	7	11
SUBCONCOVER	64	20
SWITCH ASSY	85	9
SWITCH ASSY	86	9
SWITCH,STOP	85	19
SWITCH,STOP	86	22
SWITCH,STOP	86	24
SWITCH/HAZARD ASSY	85	8
SWITCH/HAZARD ASSY	86	8
SWITCH/MAIN ASSY	85	4
SWITCH/MAIN ASSY	86	4
SWITCH/PTO ASSY	86	16
SWITCH/PUSH SET	85	21
SWITCH/ROTARY/2 ASSY	85	14
SWITCH/ROTARY/2 ASSY	86	14
TANK/FUEL	6	1
TAPE/10X20	76	13
TAPE/10X20	77	11
TIRE,315/750-15-4	98	2
TIRE,LW-LUG/L ASSY	97	1
TIRE,LW-LUG/R ASSY	97	6
TIRE,TURF/L ASSY	99	1
TIRE,TURF/R ASSY	99	5
TIRE,TURF20.5X800-10	102	3
TIRE,TURF20.5X800-10	102	8
TIRE,TURF29X12.00X15	99	3
TIRE,TURF29X12.00X15	99	7
TIRE/23X10.50-12ASSY	103	1
TIRE/315/75D-15 ASSY	98	1
TIRE/4P 500-12	101	3
TIRE/4P 500-12	101	8
TIRE/4P 8-18	97	3
TIRE/4P 8-18	97	8
TIRE/9.5-16-4	96	2
TIRE/9.5-16-4	96	7
TIRE/9.5-16/LH ASSY	96	1
TIRE/9.5-16/RH ASSY	96	6
TIRE/TURF/23-12	103	2
TIRE/TURF/LH ASSY	102	1
TIRE/TURF/RH ASSY	102	6
TOOL/FUSE	87	7
TOOL/FUSE	88	7
TRIM/130	1	26
TRIM/130	2	26
TRIM/20	72	23
TRIM/260	41	33
TRIM/265	73	2
TRIM/290	81	13

Alpabetical Index

1750-097-100-00

Description	Fig.	Key	Description	Fig.	Key	Description	Fig.	Key
TRIM/290	82	15	WASHER	73	14	WASHER, PL/M 8	72	14
TRIM/295	41	32	WASHER	84	6	WASHER, PL/M 8	72	46
TRIM/470	74	21	WASHER	111	9	WASHER, PL/M 8	76	18
TRIM/570	74	22	WASHER (9X24X1.6)	72	25	WASHER, PL/M 8	77	16
TRIM/70	73	4	WASHER / M16	65	11	WASHER, PL/M 8	81	24
TRIM/715	81	20	WASHER / M16	89	5	WASHER, PL/M 8	82	26
TRIM/715	82	22	WASHER / M16	106	6	WASHER, PL/M 8	95	41
TUBE/ 8-16	96	4	WASHER / M6	7	4	WASHER, PL/M14	41	3
TUBE/ 8-16	96	9	WASHER / M6	8	3	WASHER, SEAL/16	12	23
TUBE/ 8-18	97	4	WASHER / M6	8	14	WASHER, SEAL/16	13	18
TUBE/ 8-18	97	9	WASHER / M6	11	7	WASHER, SP/M 6	10	5
TUBE/06X10X20	72	22	WASHER / M6	50	40	WASHER, SP/M 6	50	39
TUBE/10X12X50	32	14	WASHER / M6	51	32	WASHER, SP/M 6	51	31
TUBE/10X12X50	36	32	WASHER / M6	66	14	WASHER, SP/M 6	68	14
TUBE/10X12X50	48	3	WASHER / M6	72	19	WASHER, SP/M 6	87	16
TUBE/10X12X50	95	31	WASHER / M6	74	5	WASHER, SP/M 6	88	17
TUBE/12X15X80	23	14	WASHER /M12	45	7	WASHER, SP/M 8	4	14
TUBE/500-12	101	4	WASHER /M12	47	9	WASHER, SP/M 8	5	14
TUBE/500-12	101	9	WASHER /M12	48	10	WASHER, SP/M 8	10	18
TUBE/SHIFT/MAIN COMP	21	8	WASHER /M12	70	43	WASHER, SP/M 8	12	27
TURNBUCKLE	11	10	WASHER, PL/M 4	76	12	WASHER, SP/M 8	27	3
TURNBUCKLE	70	18	WASHER, PL/M 4	77	10	WASHER, SP/M 8	27	11
TURNBUCKLE/M8	50	31	WASHER, PL/M 8	1	20	WASHER, SP/M 8	39	3
TURNBUCKLE/M8	51	27	WASHER, PL/M 8	2	20	WASHER, SP/M 8	39	9
TURNBUCKLE/M8	51	38	WASHER, PL/M 8	5	15	WASHER, SP/M 8	44	11
TURNBUCLE COMP	70	34	WASHER, PL/M 8	11	13	WASHER, SP/M 8	56	28
U-NUT	50	9	WASHER, PL/M 8	12	28	WASHER, SP/M 8	58	8
VALUVE, SOLENOID SET	108	2	WASHER, PL/M 8	23	9	WASHER, SP/M 8	58	13
VALVE	4	4	WASHER, PL/M 8	24	7	WASHER, SP/M 8	59	8
VALVE SET	109	1	WASHER, PL/M 8	25	12	WASHER, SP/M 8	59	13
VALVE ASSY	56	24	WASHER, PL/M 8	27	4	WASHER, SP/M 8	67	3
VALVE CONTROL ASSY	66	8	WASHER, PL/M 8	27	12	WASHER, SP/M10	3	4
VALVE, RELIEF ASSY	64	12	WASHER, PL/M 8	33	10	WASHER, SP/M10	9	9
VALVE/FLOCON ASSY	108	4	WASHER, PL/M 8	36	42	WASHER, SP/M10	10	11
VALVE/RELIEF ASSY	109	9	WASHER, PL/M 8	38	5	WASHER, SP/M10	10	21
VALVE/RELIEF SET	110	46	WASHER, PL/M 8	41	12	WASHER, SP/M10	12	6
VALVE/RIM	98	4	WASHER, PL/M 8	41	16	WASHER, SP/M10	12	12
VALVE/RIM	102	5	WASHER, PL/M 8	41	20	WASHER, SP/M10	12	16
VALVE/RIM	102	10	WASHER, PL/M 8	47	4	WASHER, SP/M10	13	6
VALVE/RIM	103	4	WASHER, PL/M 8	48	5	WASHER, SP/M10	14	7
VIS	5	5	WASHER, PL/M 8	50	14	WASHER, SP/M10	35	4
WASHER	8	10	WASHER, PL/M 8	50	18	WASHER, SP/M10	36	3
WASHER	39	14	WASHER, PL/M 8	51	10	WASHER, SP/M10	41	25
WASHER	66	17	WASHER, PL/M 8	51	22	WASHER, SP/M10	44	31
WASHER	72	12	WASHER, PL/M 8	51	41	WASHER, SP/M10	45	9

Alpabetical Index

Description	Fig.	Key
WASHER, SP/M10	53	22
WASHER, SP/M10	54	9
WASHER, SP/M10	54	15
WASHER, SP/M10	57	3
WASHER, SP/M10	62	41
WASHER, SP/M10	64	8
WASHER, SP/M10	95	4
WASHER, SP/M12	9	11
WASHER, SP/M12	10	13
WASHER, SP/M12	12	20
WASHER, SP/M12	34	2
WASHER, SP/M12	45	6
WASHER, SP/M12	46	10
WASHER, SP/M12	53	13
WASHER, SP/M12	57	6
WASHER, SP/M12	61	13
WASHER, SP/M12	62	43
WASHER, SP/M12	63	12
WASHER, SP/M12	64	19
WASHER, SP/M12	70	10
WASHER, SP/M12	70	14
WASHER, SP/M12	70	42
WASHER, SP/M12	71	3
WASHER, SP/M12	80	2
WASHER, SP/M12	100	3
WASHER, SP/M12	104	4
WASHER, SP/M12	105	3
WASHER, SP/M12	107	3
WASHER, SP/M14	83	13
WASHER, SP/M14	89	13
WASHER, SP/M14	106	14
WASHER, SP/M16	65	10
WASHER, SP/M16	70	23
WASHER, SP/M16	89	4
WASHER, SP/M16	104	10
WASHER, SP/M16	106	5
WASHER/12X25X02	72	11
WASHER/12X26X06	54	3
WASHER/13X24X01	86	25
WASHER/13X32X3	70	31
WASHER/15X24X2	24	15
WASHER/15X24X2	32	8
WASHER/18X26X02	23	17
WASHER/18X26X02	25	17
WASHER/18X26X02	38	9
WASHER/20X28X2	31	6
WASHER/20X32X02	28	18
WASHER/20X32X02	29	11
WASHER/21X38X02	20	9
WASHER/21X38X02	30	12
WASHER/24X9X3.2	6	12
WASHER/24X9X3.2	74	7
WASHER/24X9X3.2	76	3
WASHER/24X9X3.2	76	7
WASHER/24X9X3.2	77	3
WASHER/24X9X3.2	77	6
WASHER/25X30X1	110	39
WASHER/25X34X02	36	38
WASHER/25X34X02	95	37
WASHER/30X40X2	30	7
WASHER/30X40X2	30	17
WASHER/30X40X2	30	30
WASHER/30X46X2	30	29
WASHER/6X14X3	72	31
WASHER/6X14X3	72	38
WASHER/6X14X3	73	6
WASHER/6X14X3	73	12
WASHER/6X24X2	73	20
WASHER/6X24X2	81	17
WASHER/6X24X2	82	19
WASHER/M10	10	23
WASHER/M10	12	7
WASHER/M10	12	13
WASHER/M10	12	17
WASHER/M10	13	5
WASHER/M10	14	8
WASHER/M10	45	10
WASHER/M10	50	49
WASHER/M10	52	5
WASHER/M10	54	4
WASHER/M10	54	10
WASHER/M10	64	7
WASHER/M10	66	7
WASHER/M10	67	8
WASHER/M10	72	8
WASHER/M10	78	10
WASHER/M10	79	10
WASHER/M6	73	15
WHEEL COMP	101	2
WHEEL COMP	101	7
WHEEL/15X10LB COMP	98	3
WHEEL/15X10LB COMP	99	2
WHEEL/15X10LB COMP	99	6
WHEEL/18XW6 COMP	97	2
WHEEL/18XW6 COMP	97	7
WHEEL/FRONT/LH ASSY	101	1
WHEEL/FRONT/RH ASSY	101	6
WHEEL/STEERING ASSY	52	1
YOKE COMP	50	16
YOKE COMP	51	12
YOKE, LH	50	12
YOKE, LH	51	7
YOKE/CLAMP	58	4
YOKE/CLAMP	59	4
YOKE/SHAFT	58	5
YOKE/SHAFT	59	5
YOKE/SLEEVE	58	6
YOKE/SLEEVE	59	6