ISEKI

Parts Catalogue

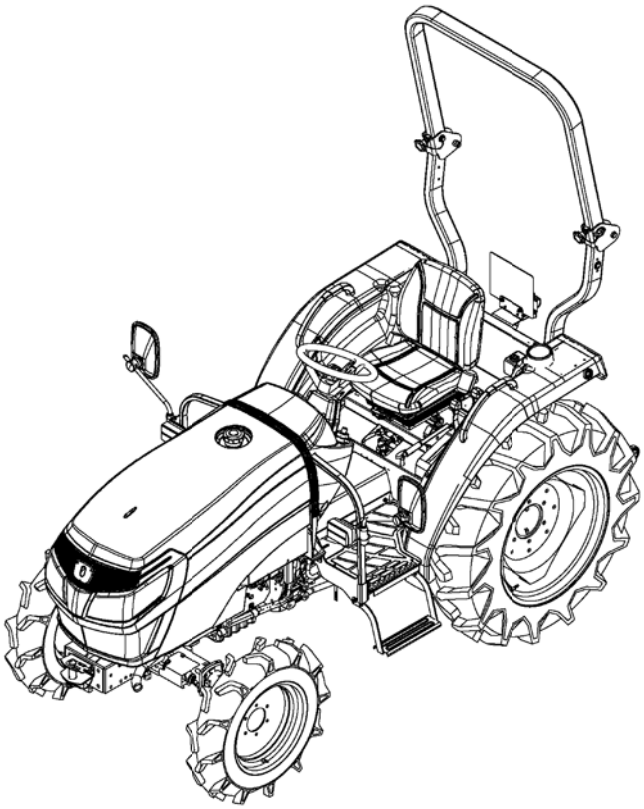

TRACTOR TLE3400H3

TLE3400H3-ZVRE4,ZVRE4G,ZWRE4

1834-097-110-00

Printed in Japan November,2017

Directions for use of Parts Catalogue

1. Applicable model of machines

All component and option parts used for TLE3400H3 tractors are listed in this parts catalogue.

1) MODEL TYPE

G····· HEADLIGHT INSTALLED FOR LEFT-HAND TRAFFIC

H····· HST,FOUR WHEEL DRIVE

R····· REAR ROPS

V····· REMOTE VALVE 1ST

W····· REMOTE VALVE 2ND

Z····· SEAT

2) AREA CODE

E4····· EUROPE

2. Details of the Structure Table of Mode

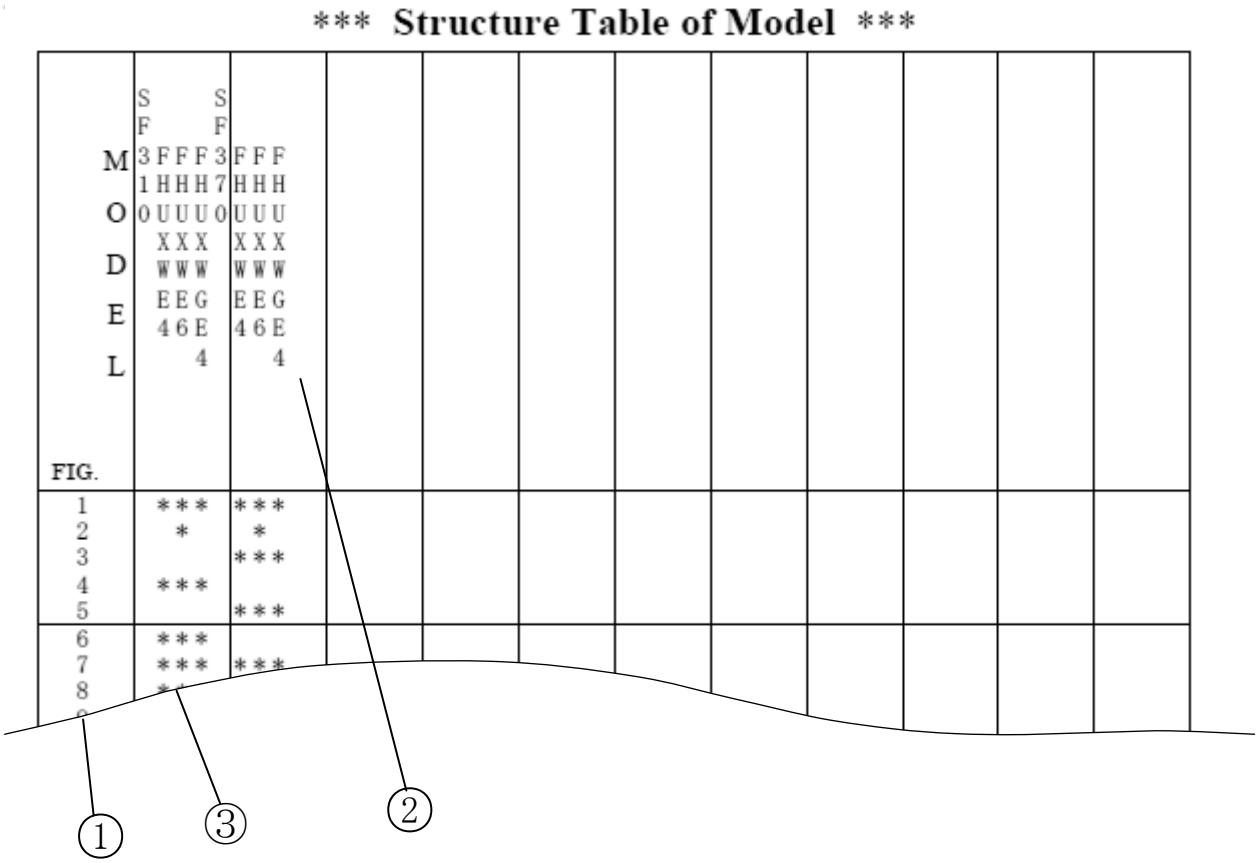

① FIG. : Parts structure of the machine is classified by its functions. FIG. number corresponds to the number written at the top of the parts illustration.

② Model : Shows the name of the model.

③ Structure Table : Shows which functions are originally equipped or can be equip

ped afterwards for each machines

`*´ Standard Parts

`T´ Optional Parts

`R´ Repair Parts (parts which can only be used for repairs)

3. Explanation for head paragraph

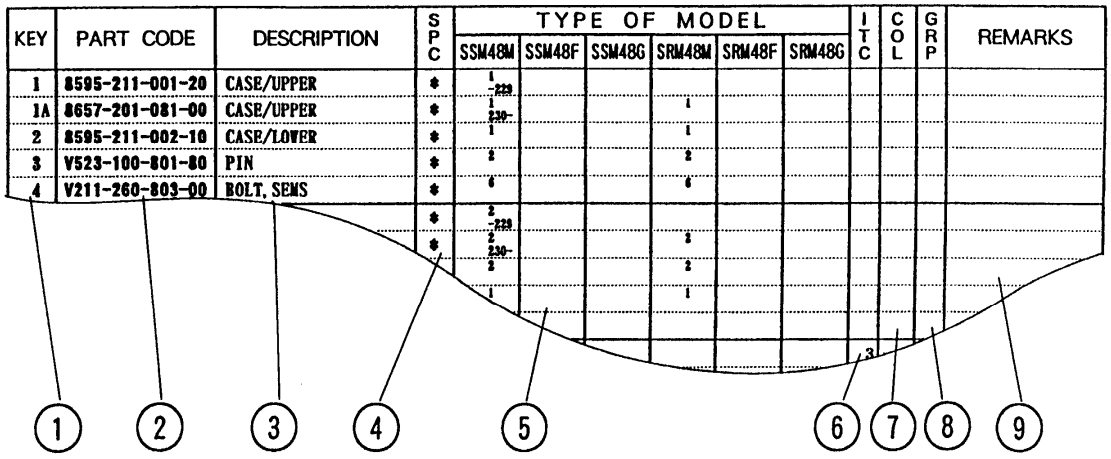

KEY	PART CODE	DESCRIPTION	SPC	TYPE OF MODEL						ITC	COL	GRP	REMARKS
				SSM48M	SSM48F	SSM48G	SRM48M	SRM48F	SRM48G				
1	8595-211-001-20	CASE/UPPER	*	1 -229									
1A	8657-201-081-00	CASE/UPPER	*	1 230-			1						
2	8595-211-002-10	CASE/LOWER	*	1			1						
3	V523-100-801-80	PIN	*	2			2						
4	V211-260-803-00	BOLT, SEMS	*	6			6						
			*	2 -229									
			*	2 230-			2						
				2			2						
				1			1						
										3			

① KEY shows the location of parts diagramed in the illustration.

② Parts numbers begin with `V´ and `W´ are standard parts of the market.

③ `LH´ and `RH´ on the parts name are described against the moving direction of the machine or are described on the condition how to install parts on the machines.

④ SPC : The following symbol classifies parts to be used for machines.

`*´ means standard parts.

`T´ shows that the parts can be installed as optional parts.

`R´ shows that the parts can be used as applicable parts to replace originally equipped parts.

⑤ Upper column : QTY shows the number of parts to be used for one unit of machine.

`M´ is indicated for parts supplied by a meter long.

`l´ is indicated for parts supplied by liter.

`AR´ is indicated for parts need to be adjusted or regulated.

Lower column : serial number

—229 means serial number up to 229.

230— means serial number 230 and after.

⑥ ITC : Interchangeability

`1´…OLD ← NEW

New parts can be used in place of the old parts.

`2´…OLD → NEW

Old parts can be used in place of the new parts.

`3´…OLD →← NEW

Old parts and new parts can not be replaced each other.

⑦ COL : Color code

Color is signified with color code number for colored parts.

Please see the color list shown in the next page.

⑧ GRP : Parts shown in this column can be replaced by SET parts.

Example : Parts marked Ⓐ can be replaced by parts marked Ⓑ, and Ⓓ for Ⓒ, so the rest follow in the same alphabetical order.

⑨ Remarks

＊Other maker's part code number is shown in this column.

＊When Fig. No. is shown in the Remark column of SET parts or ASSY parts, each of their component parts are listed in said Fig. No.

4. Color :

The following colors are used color parts.

COLOR CODE	COLOR	SPRAY TYPE PARTS CODE	PAINTS 4K DRUM PARTS CODE	PAINTS 16K DRUM PARTS CODE
4L	NEO BLUE	1300-985-001-20	1300-985-003-00	1300-985-004-00
7F	MIRROR BLACK	1300-954-001-20	1300-954-003-00	1300-954-004-00

NOTE : Color code is signified only for the parts assigned by the maker as color parts.

5. Serial Numbers :

1) For engines serial number is stamped on CYLINDER BLOCK ASSY.
   Please see Fig. No. 7-1.
2) For chassies serial number is shown on the LABEL.
   Please see

6. Parts Order

1) When you order parts, please make sure of correct numbers.
2) When substitute parts is available, the part number ordered will be automatically turned to a new part number.
3) Please be sure to use "ISEKI GENUINE PARTS".
   Any other similar parts other than ISEKI parts when used may cause a trouble that makes us unable to repair or guarantee the warrant.

*** Structure Table of Model ***

MODEL / FIG.	TLE3400H3	ZVRE4	ZVRE4G	ZWRE4							
1	*	*	*								
2	*	*	*								
3	*	*	*								
4	*	*	*								
5	*	*	*								
6	*	*	*								
7	*	*	*								
8	*	*	*								
9	*	*	*								
10	*	*	*								
11	*	*	*								
12	*	*	*								
13	*	*	*								
14	*	*	*								
15	*	*	*								
16	*	*	*								
17	*	*	*								
18	*	*	*								
19	*	*	*								
20	*	*	*								
21	*	*	*								
22	*	*	*								
23	*	*	*								
24	*	*	*								
25	*	*	*								
26	*	*	*								
27	*	*	*								
28	*	*	*								
29	*	*	*								
30	*	*	*								
31	*	*	*								
32	*	*	*								
33	*	*	*								
34	*	*	*								
35	*	*	*								
36	*	*	*								
37	*	*	*								
38	*	*	*								
39	*	*	*								
40	*	*	*								
41	*	*	*								
42	*	*	*								
43	*	*									
44			*								
45	*	*	*								

*** Structure Table of Model ***

MODEL / FIG.	TLE3400H3	ZVRE4	ZVRE4G	ZWRE4							
46	*	*	*								
47	*	*	*								
48	*	*	*								
49	*	*	*								
50	*	*	*								
51	*	*	*								
52	*	*	*								
53	*	*	*								
54	*	*	*								
55	*	*	*								
56	*	*	*								
57		*									
58	*		*								
59	*	*	*								
60	*	*	*								
61	*	*	*								
62	*	*	*								
63	*	*	*								
64	*	*	*								
65	*	*	*								
66	*	*	*								
67	*	*	*								
68	T	T	T								
69	T	T	T								
70	T	T	T								
71	T	T	T								
72	T	T	T								
73	T	T	T								
74	T	T									
75	T	T	T								
76	T		T								
77	T	T	T								
78	*	*	*								
79	*	*	*								
80	T	T									
81	*	*	*								
82	*	*	*								
83	*	*	*								
84	*	*	*								
85	*	*	*								
86	T	T	T								

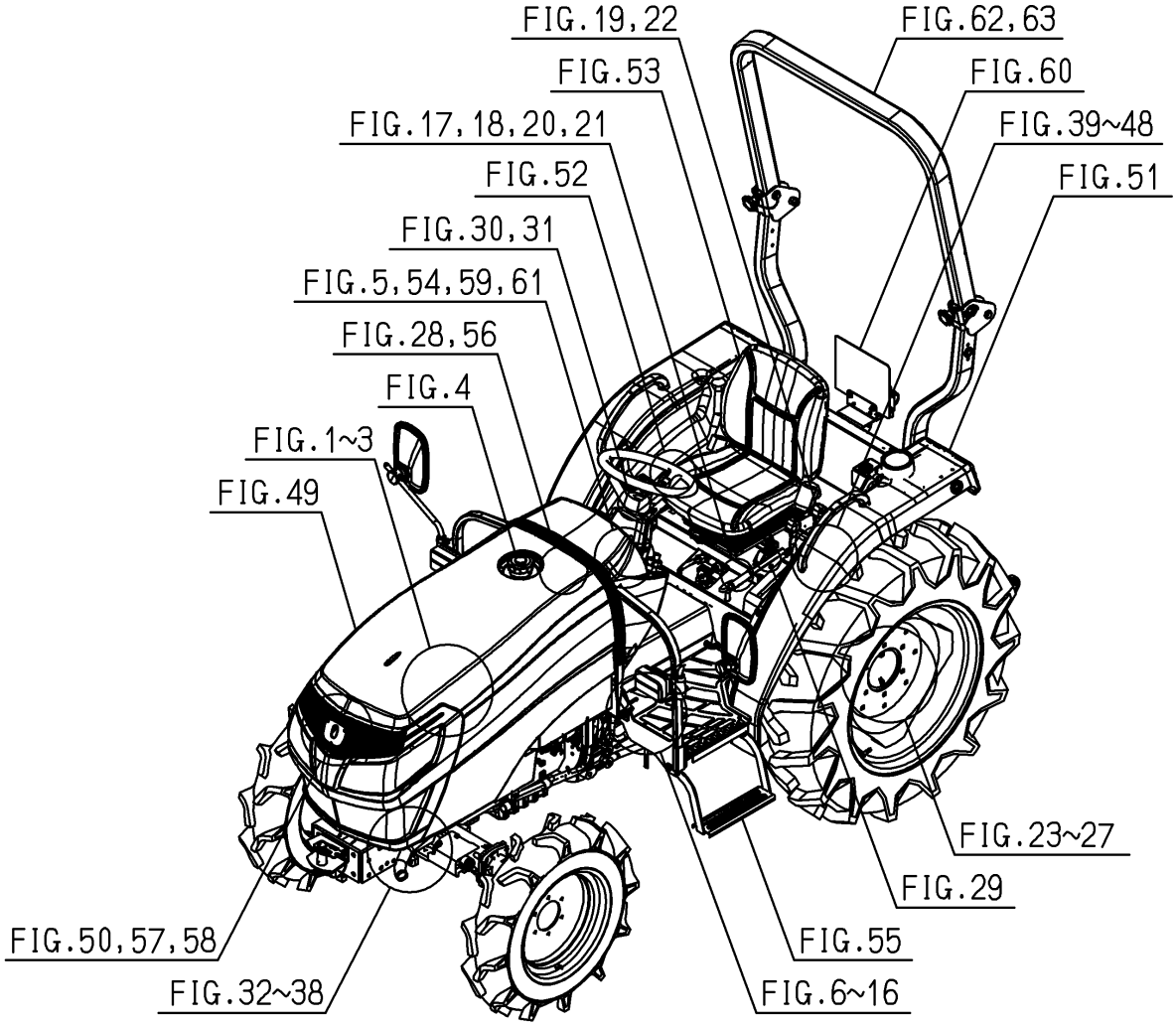
FIG.19,22
FIG.62,63
FIG.53
FIG.60
FIG.17,18,20,21
FIG.39~48
FIG.52
FIG.51
FIG.30,31
FIG.5,54,59,61
FIG.28,56
FIG.4
FIG.1~3
FIG.49
FIG.23~27
FIG.29
FIG.50,57,58
FIG.55
FIG.32~38
FIG.6~16

Contents

TLE3400H3

ENGINE(E3CD-WTB11)

SHORT BLOCK ENGIASSY····· Fig. 1
CYLINDER HEAD····· Fig. 2
CYLINDER HEAD COVER····· Fig. 3
INLET MANIFOLD····· Fig. 4
EXHAUST MANIFOLD····· Fig. 5
TURBO CHARGER····· Fig. 6
CYLINDER BLOCK(1/2)(2/2)····· Fig. 7
BEARING/UNDER SIZE (OPTION)····· Fig. 8
OIL PAN····· Fig. 9
REAR PLATE····· Fig. 10
TIMING GEAR CASE····· Fig. 11
HANGER····· Fig. 12
VALVE····· Fig. 13
CAM SHAFT····· Fig. 14
PISTON····· Fig. 15
PISTON/OVER SIZE (OPTION)····· Fig. 16
CRANK SHAFT····· Fig. 17
OIL PUMP····· Fig. 18
WATER PUMP····· Fig. 19
COOLING FAN····· Fig. 20
INJECTION NOZZLE····· Fig. 21
INJECTION PUMP····· Fig. 22
FUEL PIPE····· Fig. 23
ADAPTER····· Fig. 24

ELECTRIC (1)····· Fig. 25
ELECTRIC (2)····· Fig. 26
REPAIR PARTS(OPTION)·····Fig. 27
COMPONENT PARTS
FOR 6215-300-036-10 ON Fig.021·····Fig. 28
COMPONENT PARTS
FOR 6281-200-021-00 ON Fig.025·····Fig. 29

Contents

CHASSIS

RADIATOR SYSTEM(1/2)(2/2)····· Fig. 1
MUFFLER SYSTEM····· Fig. 2
CLEANER(AIR)SYSTEM····· Fig. 3
TANK(FUEL)SYSTEM····· Fig. 4
ACCELERATOR SYSTEM····· Fig. 5
CASE(TRANSMISSION/FRONT)SYSTEM····· Fig. 6
HST SYSTEM····· Fig. 7
GEAR(PTO/INPUT)SYSTEM····· Fig. 8
SHAFT(DRIVE/PTO)SYSTEM····· Fig. 9
CASE(TRANSMISSION/MID)SYSTEM····· Fig. 10
GEAR(MAIN)SYSTEM····· Fig. 11
GEAR(SUB)SYSTEM····· Fig. 12
GEAR(4WD)SYSTEM····· Fig. 13
GEAR(PTO/REAR)SYSTEM····· Fig. 14
CASE(TRANSMISSION/REAR)SYSTEM····· Fig. 15
METAL(TRUNNION)SYSTEM····· Fig. 16
SHIFT(SUB)SYSTEM····· Fig. 17
SHIFT(4WD)SYSTEM····· Fig. 18
SHIFT(PTO)SYSTEM····· Fig. 19
LEVER(SUB)SYSTEM····· Fig. 20
LEVER(4WD)SYSTEM····· Fig. 21
LEVER(PTO)SYSTEM····· Fig. 22
PINION(DRIVE/REAR)SYSTEM····· Fig. 23
CASE(DIFFERENTIAL GEAR/
REAR)SYSTEM····· Fig. 24
HOUSING(AXLE/REAR)SYSTEM····· Fig. 25
SHIFT(CLUTCH/
DIFFERENTIAL GEAR)SYSTEM····· Fig. 26

BRAKE SYSTEM ..... Fig. 27
PEDAL(BRAKE)SYSTEM ..... Fig. 28
LEVER(BRAKE/PARKING)SYSTEM ..... Fig. 29
WHEEL(STEERING)SYSTEM ..... Fig. 30
CONTROLLER(STEERING)SYSTEM ..... Fig. 31
BRACKET(AXLE)SYSTEM ..... Fig. 32
SHAFT(DRIVE/FRONT)SYSTEM ..... Fig. 33
CASE(DIFFERENTIAL GEAR/
FRONT)SYSTEM ..... Fig. 34
HOUSING(AXLE/FRONT)SYSTEM ..... Fig. 35
CASE(GEAR/FRONT)SYSTEM ..... Fig. 36
ROD(TIE)SYSTEM ..... Fig. 37
COVER(CASE/CYLINDER)SYSTEM ..... Fig. 38
CASE(CYLINDER)SYSTEM ..... Fig. 39
LEVER(POSITION)SYSTEM ..... Fig. 40
PIPING(MAIN)SYSTEM(1/2)(2/2) ..... Fig. 41
PIPING(SUB)SYSTEM(1/2)(2/2) ..... Fig. 42
VALVE(REMOTE/1ST)SYSTEM(V TYPE) ..... Fig. 43
VALVE(REMOTE/1ST)SYSTEM(W TYPE) ..... Fig. 44
LINK(3P)SYSTEM ..... Fig. 45
ROD(LIFT)SYSTEM ..... Fig. 46
BRACKET(LINK/TOP)SYSTEM ..... Fig. 47
BRACKET(DRAW BAR)SYSTEM ..... Fig. 48
HOOD SYSTEM(1/2)(2/2) ..... Fig. 49
GRILLE SYSTEM ..... Fig. 50
FENDER SYSTEM ..... Fig. 51
GUIDE(LEVER)SYSTEM ..... Fig. 52
SEAT SYSTEM ..... Fig. 53
FLOOR(FRONT)SYSTEM ..... Fig. 54
FLOOR(REAR)SYSTEM ..... Fig. 55
PEDAL(HST)SYSTEM ..... Fig. 56
ELC.(FRONT)SYSTEM(G TYPE) ..... Fig. 57
ELC.(FRONT)SYSTEM(EXCEPT G TYPE) ..... Fig. 58

ELC.(MAIN)SYSTEM(1/2)(2/2)……Fig. 59
ELC.(REAR)SYSTEM(1/2)(2/2)……Fig. 60
ELC.(PANEL/INSTRUMENT)SYSTEM…… Fig. 61
FRAME(REAR/UNDER)SYSTEM……Fig. 62
FRAME(REAR/UPPER)SYSTEM……Fig. 63
ORNAMENT……Fig. 64
LABEL(CONTROL)……Fig. 65
LABEL(CAUTION)…… Fig. 66
OTHER PARTS
(ENGINE/STARTER,BRACKET,
BREATHER ETC)SYSTEM…… Fig. 67

OPTIONAL PARTS

WHEEL(REAR/AGR/
11.2-24)SYSTEM(OPTION)…… Fig. 68
WHEEL(REAR/TURF/
355/80D20)SYSTEM(OPTION)……Fig. 69
PLATE(BUMPER)&BOLT SYSTEM
(OPTION)……Fig. 70
WHEEL(FRONT/AGR/
7-16)SYSTEM(OPTION)…… Fig. 71
WHEEL(FRONT/TURF/
212/80D15)SYSTEM(OPTION)……Fig. 72
PLUG(M18)ASSY(OPTION)…… Fig. 73
VALVE(REMOTE/2ND)SET
(V TYPE)(OPTION)…… Fig. 74
GENERATOR(60A)SET(OPTION)…… Fig. 75
LAMP(HEAD/LHT)SYSTEM
(EXCEPT G TYPE)(OPTION)……Fig. 76
WEIGHT(15)SET(OPTION)……Fig. 77

□

COMPONENT PARTS

COMPONENT PARTS
FOR K200-289-000-00 ON Fig.42 ····· Fig. 78
COMPONENT PARTS
FOR K500-007-000-00 ON Fig.7 ····· Fig. 79
COMPONENT PARTS
FOR 1640-530-600-10 ON Fig.74 ····· Fig. 80
COMPONENT PARTS
FOR 1719-511-350-00 ON Fig.43,44 ····· Fig. 81
COMPONENT PARTS
FOR 1772-654-210-00 ON Fig.60 ····· Fig. 82
COMPONENT PARTS
FOR 1773-407-410-00 ON Fig.31 ····· Fig. 83
COMPONENT PARTS
FOR 1824-102-220-00 ON Fig.4 ····· Fig. 84
COMPONENT PARTS
FOR 6281-100-007-40 ON Fig.67 ····· Fig. 85
COMPONENT PARTS
FOR 6281-200-015-00 ON Fig.75 ····· Fig. 86

WIRING DIAGRAM

WIRING DIAGRAM (1/4)
WIRING DIAGRAM (2/4)
WIRING DIAGRAM (3/4)
WIRING DIAGRAM (4/4)

E N G I N E

E3CDWTB11···TLE3400H3

6005-097-216-00

FIG. 1 SHORT BLOCK ENGIASSY

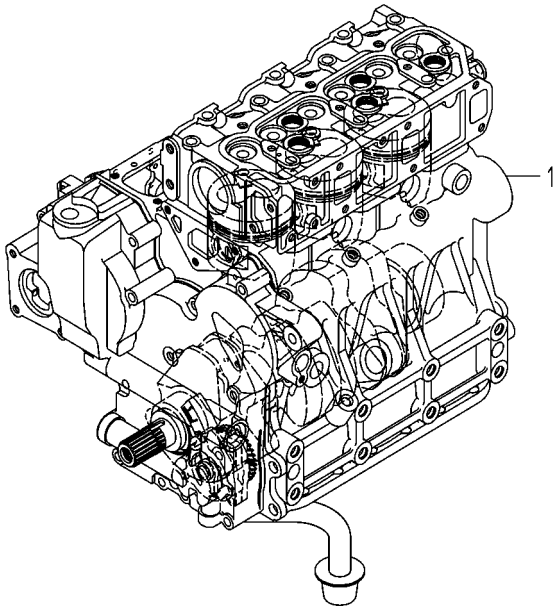

6005-019Z-0100

KEY	PART CODE	DESCRIPTION	SPC	TYPE OF MODEL E3CD WTB11		ITC	COL	GRP	REMARKS
1	6005-010-281-00	SHORTBLOCKENGIN ASSY	T	1					

FIG. 2 CYLINDER HEAD

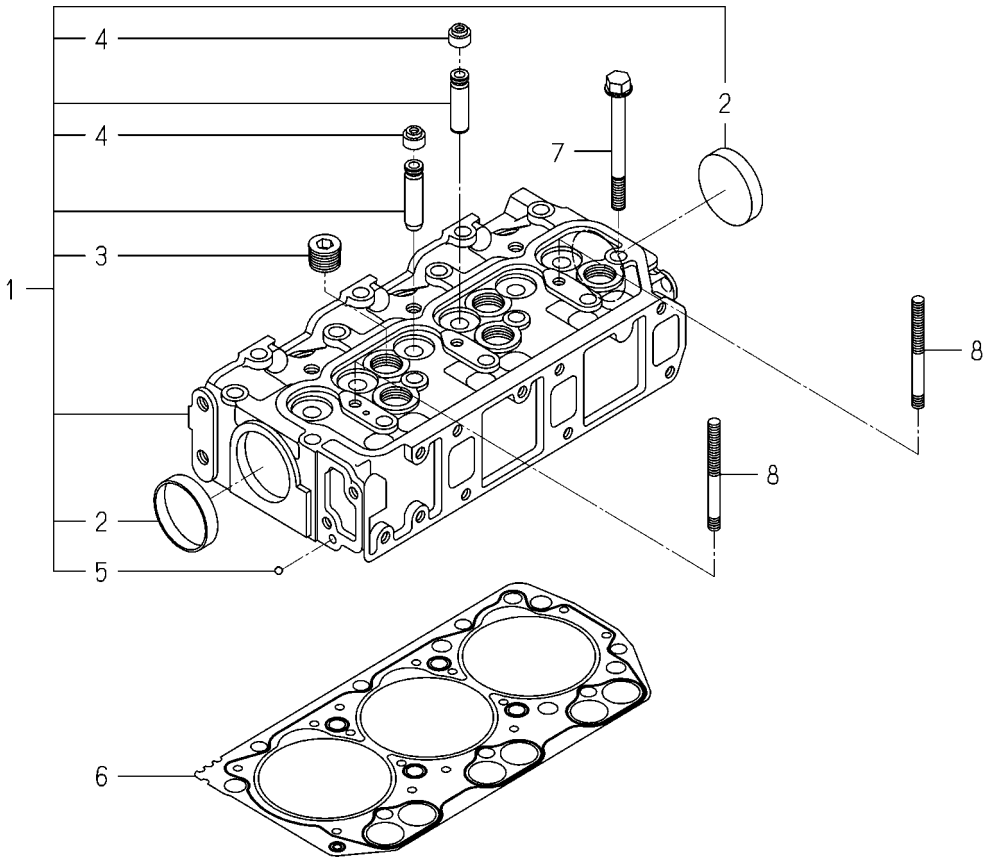

6005-102A-0100,6005-102A-0200

KEY	PART CODE	DESCRIPTION	SPC	TYPE OF MODEL E3CD WTB11		ITC	COL	GRP	REMARKS
1	6211-110-110-30	CYLINDERHEAD ASSY	*	1					
2	6209-610-003-00	CUP/SEALING/50	*	2					
3	6209-605-004-10	PLUG/PT1/2	*	5					
4	6212-569-002-00	SEAL,OIL	*	6					
5	V682-200-000-60	BALL,STEEL	*	1					
6	6211-141-057-10	GASKET/CYLINDERHEAD	*	1					
7	6209-000-005-00	BOLT	*	14					
8	6209-300-014-00	STUD	*	2					

FIG. 3 CYLINDER HEAD COVER

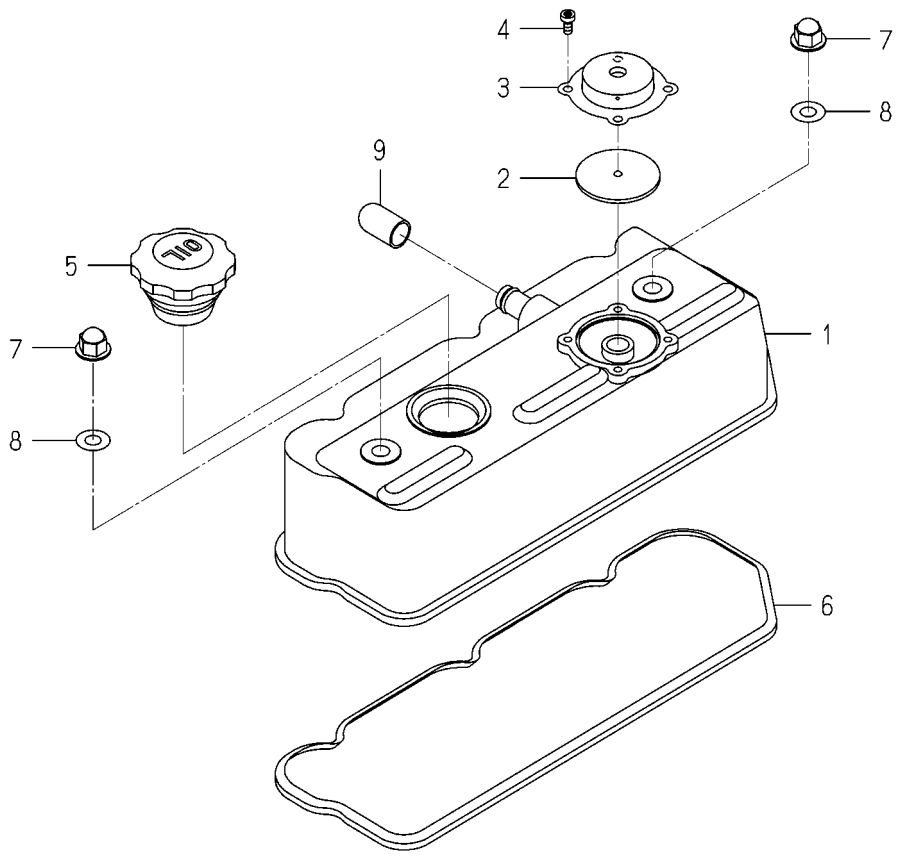

6005-110J-0100

KEY	PART CODE	DESCRIPTION	SPC	TYPE OF MODEL E3CD WTB11		ITC	COL	GRP	REMARKS
1	6211-170-007-30	COVER/CYLINDER HEAD	*	1					
2	6211-179-011-20	RUBBERFLANGE	*	1					
3	6211-291-010-00	COVER/BLOWBY	*	1					
4	V195-164-008-30	SCREW/TAPPING	*	4					
5	6211-751-001-10	CAP,OIL FILLER	*	1					
6	6211-173-005-00	SEAL/CYL HEAD/UNDER	*	1					
7	6209-490-002-10	NUT/CAP	*	2					
8	6209-572-003-00	GASKET	*	2					
9	1792-590-001-00	CAP/12	*	1					

FIG. 4 INLET MANIFOLD

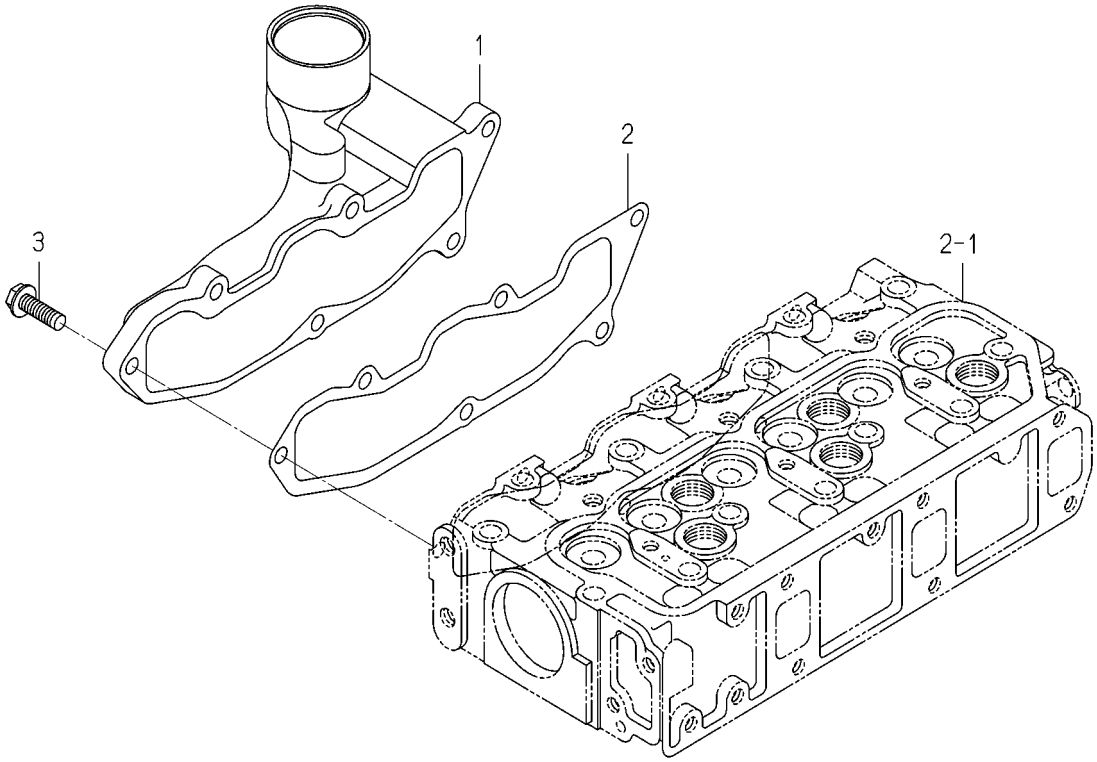

6005-120B-0100

KEY	PART CODE	DESCRIPTION	SPC	TYPE OF MODEL E3CD WTB11		ITC	COL	GRP	REMARKS
1	6214-111-023-00	MANIFOLD/INLET	*	1					
2	6214-115-003-10	GASKET/INLETMANIFOLD	*	1					
3	V231-360-802-50	FLANGEBOLT/M8X25	*	6					

FIG. 5 EXHAUST MANIFOLD

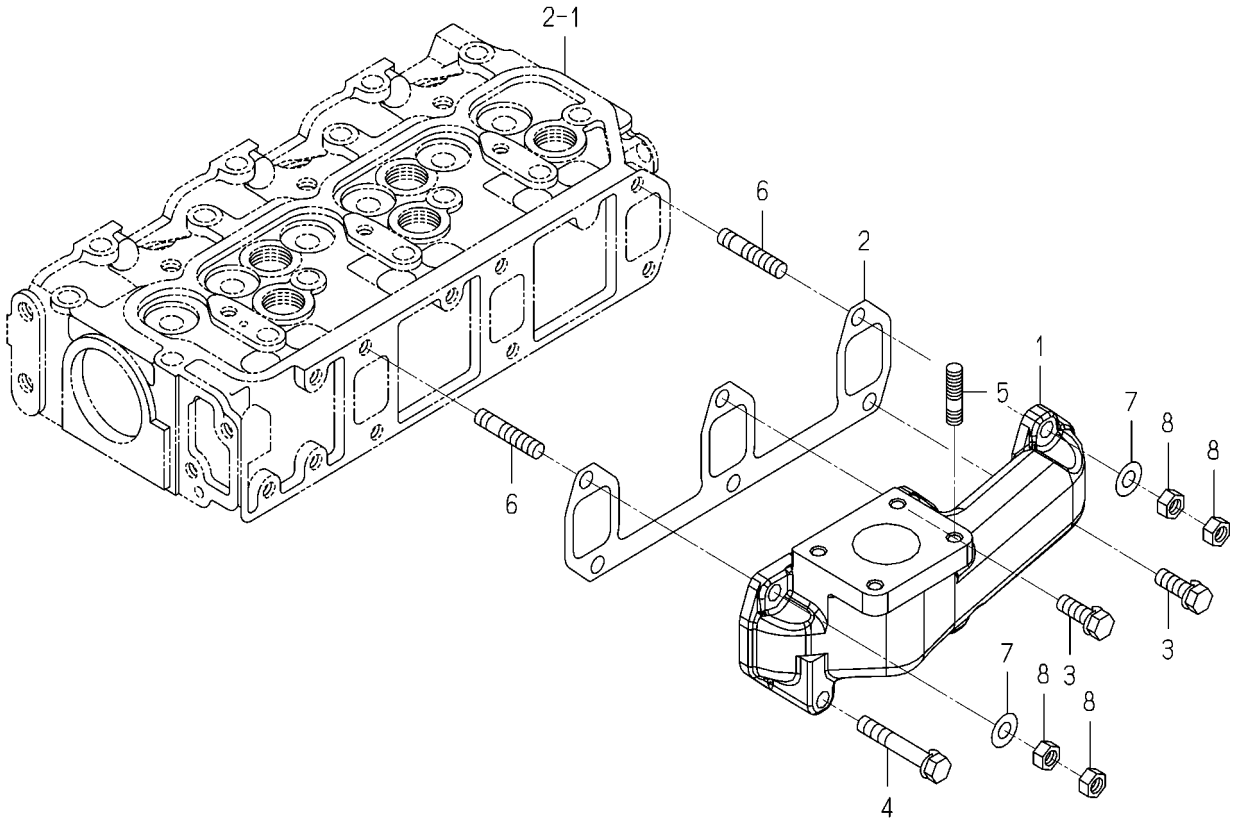

6005-140H-0100

KEY	PART CODE	DESCRIPTION	SPC	TYPE OF MODEL E3CD WTB11		ITC	COL	GRP	REMARKS
1	6214-141-061-10	MANIFOLD/EXHAUST	*	1					
2	6214-145-030-00	GASKET/EXHAUST MANIF	*	1					
3	V211-560-802-50	BOLT,S/M8X25/7T	*	2					
4	6509-030-037-00	BOLT	*	2					
5	6209-300-026-00	STUD	*	4					
6	6209-300-033-10	STUD	*	2					
7	V411-700-008-00	WASHER,PL/M8	*	2					
8	V304-700-008-00	NUT,SUS/M8	*	4					

FIG. 6 TURBO CHARGER

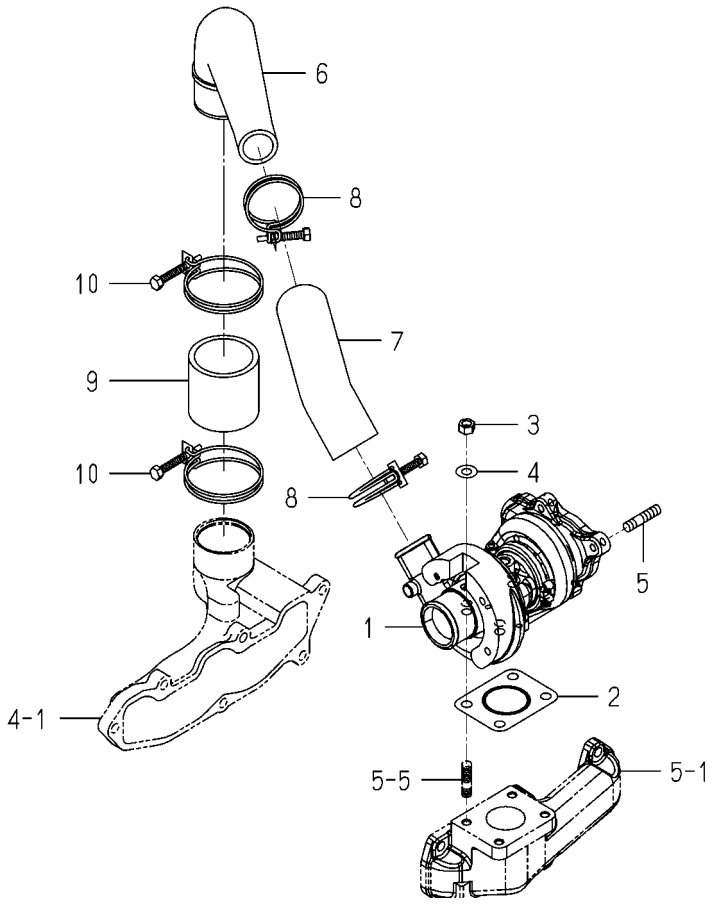

6008-160A-0100

KEY	PART CODE	DESCRIPTION	SPC	TYPE OF MODEL E3CD WTB11		ITC	COL	GRP	REMARKS
1	6214-400-020-00	TURBOCHARGER ASSY	*	1					
2	6214-145-009-00	GASKET	*	1					
3	V304-700-008-00	NUT,SUS/M8	*	4					
4	V411-700-008-00	WASHER,PL/M8	*	4					
5	6904-110-822-00	STUD	*	4					
6	6214-435-026-00	PIPE/INLET	*	1					
7	6209-360-112-00	HOSE/RUBBER	*	1					
8	J061-238-046-00	CLAMP/WIRE/38-46	*	2					
9	6209-360-108-00	HOSE/RUBBER	*	1					
10	J061-252-063-00	CLAMP/WIRE/52-63	*	2					

FIG. 7 CYLINDER BLOCK(1/2)

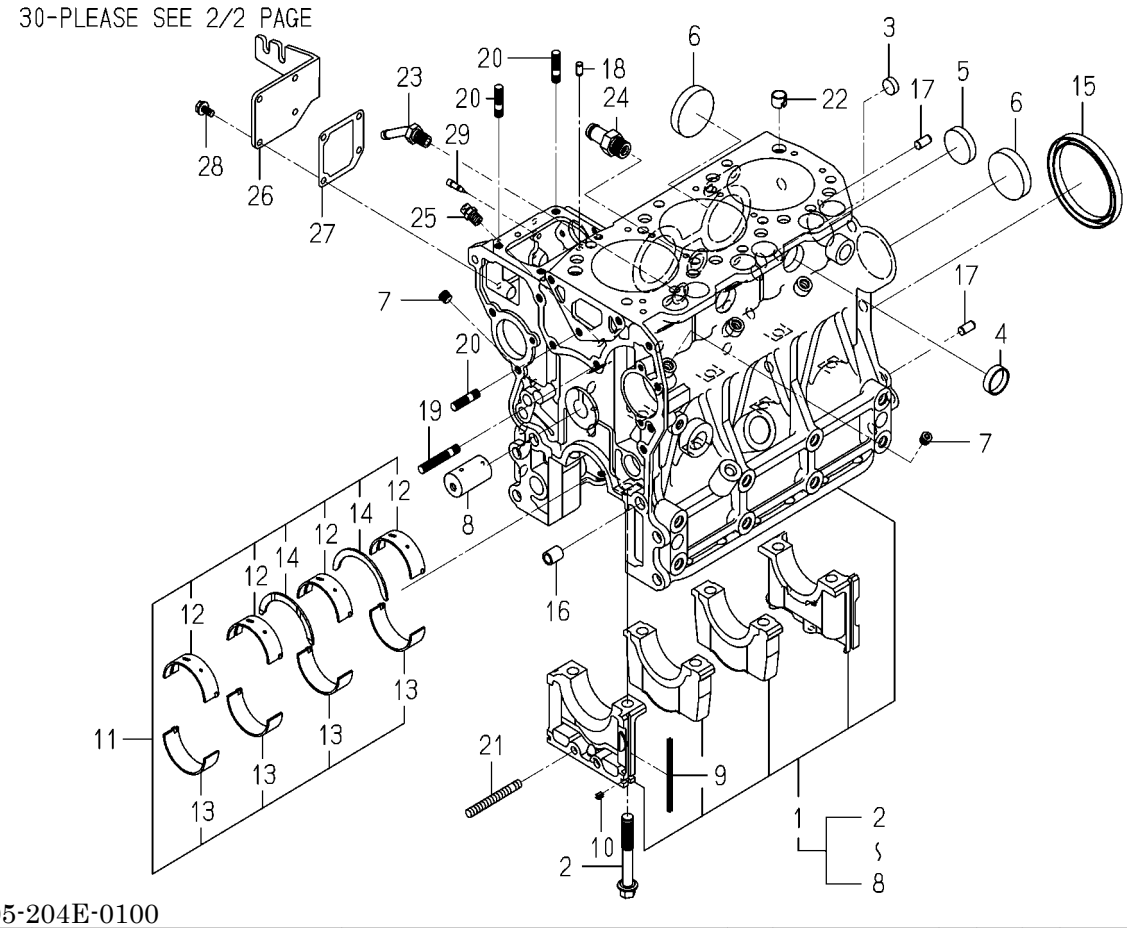

6005-204E-0100

KEY	PART CODE	DESCRIPTION	SPC	TYPE OF MODEL E3CD WTB11		ITC	COL	GRP	REMARKS
1	6211-210-084-40	CYLINDERBLOCK ASSY	*	1					
2	6209-000-006-00	BOLT	*	8					
3	6209-610-007-00	CUP/SEALING/16	*	2					
4	6209-610-001-10	CUP/SEALING/28	*	2					
5	6209-610-009-00	CUP/SEALING/36	*	1					
6	6209-610-003-00	CUP/SEALING/50	*	3					
7	6209-605-007-10	PLUG/PT1/8	*	7					
8	6212-531-008-30	PIN/IDLEGEAR	*	1					
9	6211-258-001-00	SEAL,BEARING CAP	*	4					
10	6211-258-002-00	SEAL,BEARING CAP/7	*	2					
11	6211-510-008-00	BEARING/CRANK SET	*	1					
12	6211-511-007-00	BEARING/CRANK/UPPER	*	4					
13	6211-511-008-00	BEARING/CRANK/LOWER	*	4					
14	6211-599-004-00	BEARING/THRUST/CRANK	*	2					
15	6209-625-003-20	OILSEAL	*	1					
16	6209-749-001-20	PIN/TUBE	*	2					
17	6213-129-006-00	PIN/STRAIGHT	*	2					
18	6209-740-005-00	PIN	*	2					
19	6904-110-840-00	STUD/M8X40	*	1					
20	6904-110-822-00	STUD	*	3					
21	V251-340-806-00	STUD/M8X60/7T	*	1					
22	6294-453-002-00	DOWEL	*	2					
23	V782-160-000-4T	PLUG/SCREW/SEAL	*	1					
24	6213-721-015-00	PIPE/WATER/HOUSING	*	1					
25	6909-902-299-00	NIPPLE	*	1					
26	6211-291-038-00	COVER/INJECTIONPUMP	*	1					
27	6211-292-001-20	GASKET/COVER	*	1					
28	V230-360-601-20	FLANGEBOLT/M6X12	*	4					
29	6215-549-013-00	PIN	*	1					
30	6211-760-081-00	LEVELGAUGE	*	1					

FIG. 7 CYLINDER BLOCK(2/2)

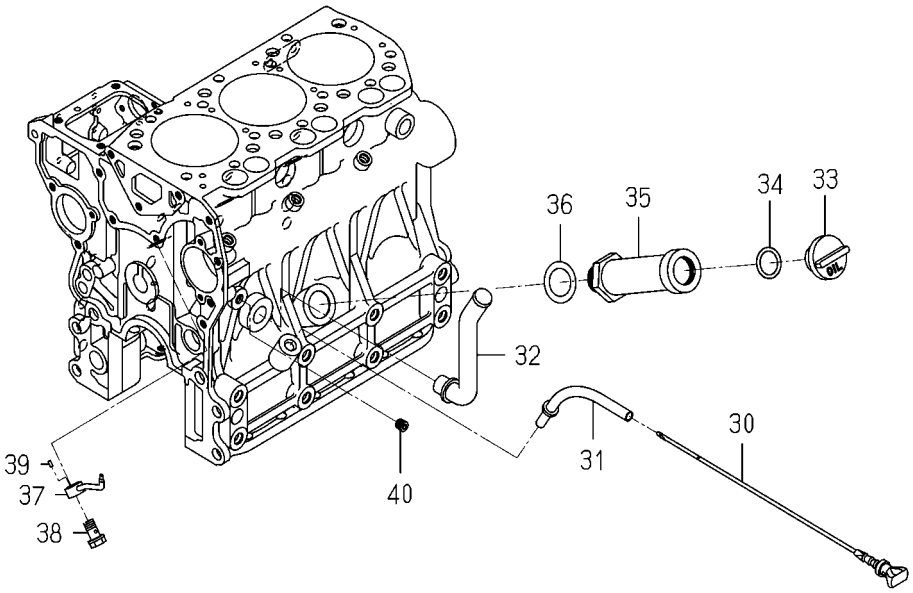

6005-204E-0100

KEY	PART CODE	DESCRIPTION	SPC	TYPE OF MODEL E3CD WTB11		ITC	COL	GRP	REMARKS
31	6211-766-025-00	GUIDE/LEVELGAGE COMP	*	1					
32	6213-311-078-00	PIPE/OIL	*	1					
33	6211-751-002-00	CAP/OILFILLER	*	1					
34	V720-103-502-50	O-RING/1A,P25	*	1					
35	6211-749-020-00	OILFILLER COMP	*	1					
36	6211-759-001-00	GASKET/OILFILLER	*	1					
37	6213-342-013-00	PIPE/OILJET	*	3					
38	6213-342-007-00	EYEBOLT/OILJET ASSY	*	3					
39	6209-740-008-00	PIN/SPRING	*	3					
40	6209-605-007-10	PLUG/PT1/8	*	1					

FIG. 8 BEARING/UNDER SIZE (OPTION)

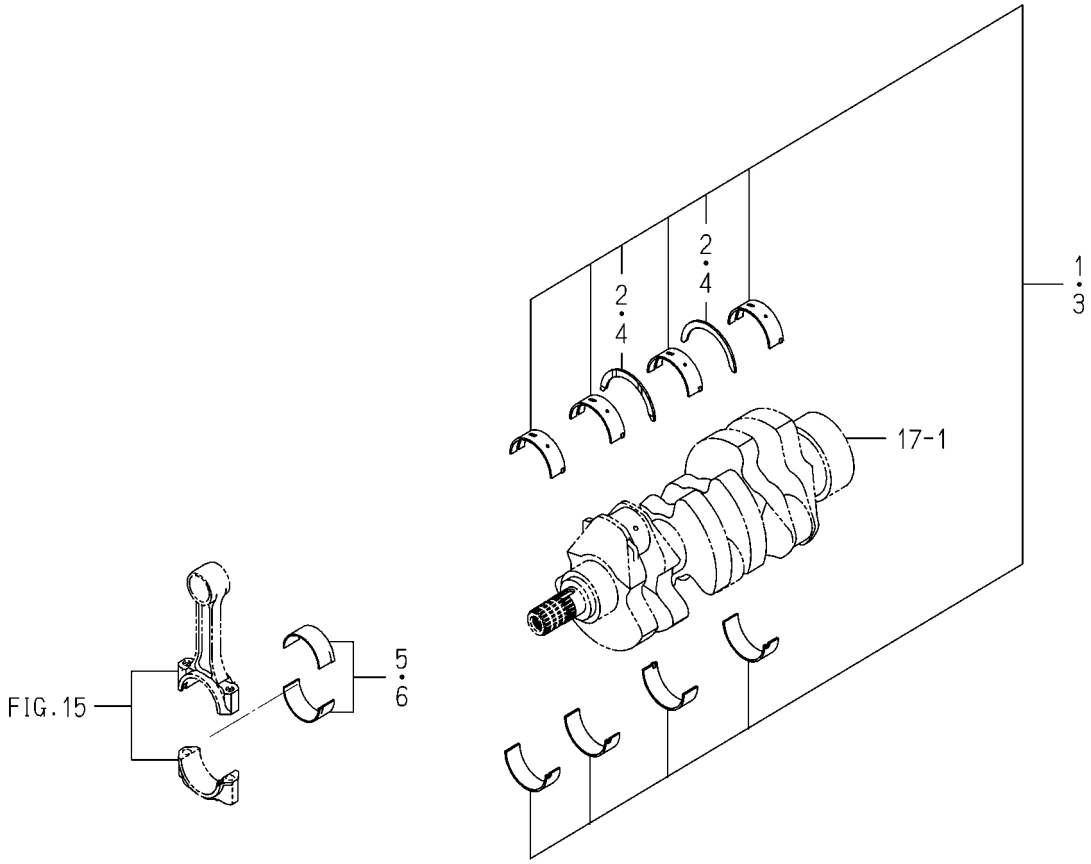

6005-209 -0100

KEY	PART CODE	DESCRIPTION	SPC	TYPE OF MODEL E3CD WTB11		ITC	COL	GRP	REMARKS
1	6211-530-008-00	BRG/CRANK/UN025 SET	T	1					
2	6211-599-004-00	BEARING/THRUST/CRANK	T	2					
3	6211-540-008-00	BRG/CRANK/UN050 SET	T	1					
4	6211-599-004-00	BEARING/THRUST/CRANK	T	2					
5	6212-273-009-00	BRG/CONROD/UN025 SET	T	3					
6	6212-274-009-00	BRG/CONROD/UN050 SET	T	3					

FIG. 9 OIL PAN

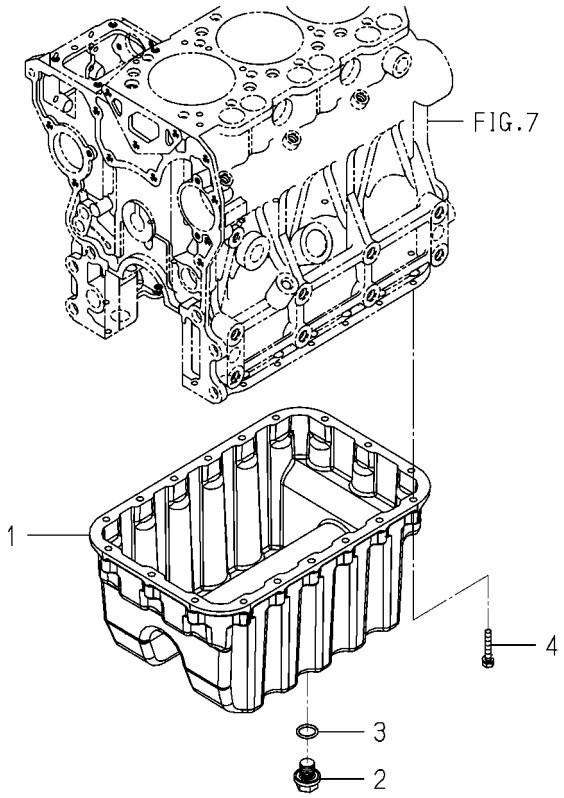

6005-210U-0100

KEY	PART CODE	DESCRIPTION	SPC	TYPE OF MODEL E3CD WTB11		ITC	COL	GRP	REMARKS
1	6211-361-103-00	OILPAN	*	1					
2	3805-355-002-20	PLUG/M14X1.5	*	2					
3	V720-102-401-80	O-RING/1A,P18	*	2					
4	V210-560-603-50	BOLT,S/M6X35/7T	*	18					

FIG. 10 REAR PLATE

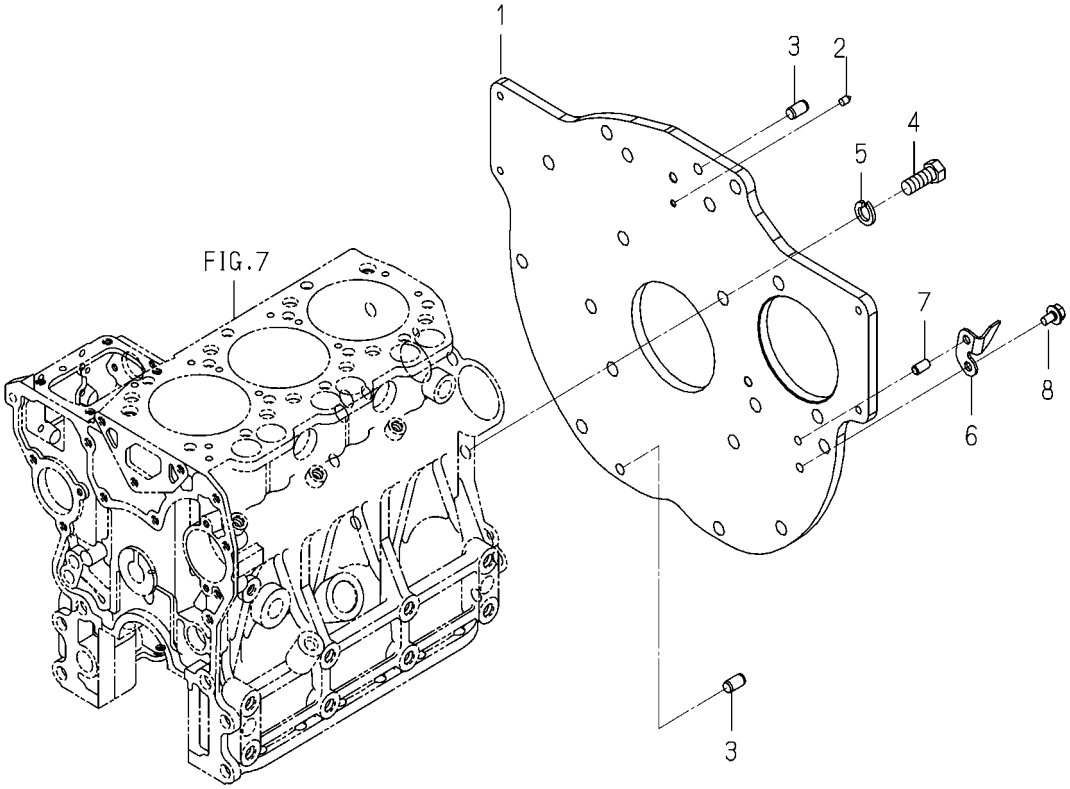

6005-221B-0100

KEY	PART CODE	DESCRIPTION	SPC	TYPE OF MODEL E3CD WTB11		ITC	COL	GRP	REMARKS
1	6211-341-123-00	PLATE/REAR	*	1					
2	6211-342-003-10	POINTER	*	1					
3	V523-101-001-80	PIN,ST,B/10X18	*	2					
4	6209-000-057-00	BOLT	*	8					
5	V401-160-012-00	WASHER,SP/M12	*	8					
6	6211-342-005-00	POINTER	*	1					
7	6213-129-006-00	PIN/STRAIGHT	*	1					
8	V231-360-801-20	FLANGEBOLT/M8X12	*	1					

FIG. 11 TIMING GEAR CASE

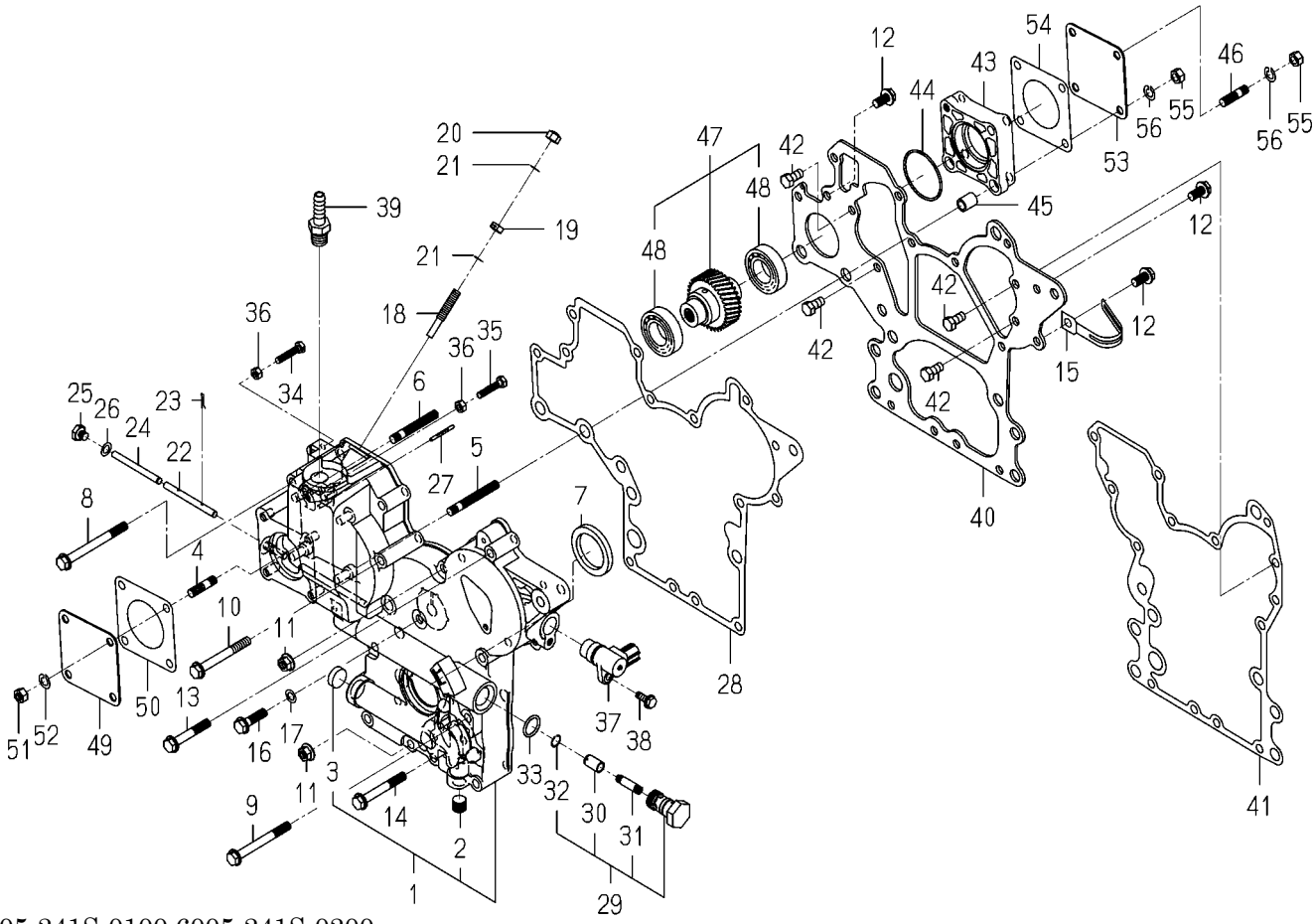

6005-241S-0100,6005-241S-0200

KEY	PART CODE	DESCRIPTION	SPC	TYPE OF MODEL E3CD WTB11		ITC	COL	GRP	REMARKS
1	6211-310-072-00	GEARCASE ASSY	*	1					
2	6209-605-003-20	PLUG/PT1/4	*	1					
3	6209-610-004-00	CUP/SEALING/20	*	1					
4	6904-110-822-00	STUD	*	4					
5	6904-110-855-00	STUD	*	2					
6	6904-110-850-00	STUD	*	1					
7	6209-625-002-00	SEAL,OIL	*	1					
8	V231-360-808-50	FLANGEBOLT/M8X85	*	1					
9	V231-360-807-50	FLANGEBOLT/M8X75	*	1					
10	V231-360-807-00	FLANGEBOLT/M8X70	*	1					
11	3817-401-001-00	NUT/M08	*	2					
12	V231-360-801-60	FLANGEBOLT/M8X16	*	3					
13	V231-360-805-00	FLANGEBOLT/M8X50	*	3					
14	V231-360-806-00	FLANGEBOLT/M8X60	*	4					
15	1650-650-015-00	CLAMP	*	1					
16	V231-360-803-00	FLANGEBOLT/M8X30	*	1					
17	6209-500-003-00	WASHER/08X14X01	*	1					
18	6215-546-003-30	STOPPER/FULLLOAD	*	1					
19	6209-409-001-00	NUT/M8	*	1					
20	V341-120-008-00	NUT,CAP/M8	*	1					
21	6209-920-002-00	PACKING	*	2					
22	6215-542-004-20	PIN/ARM	*	1					
23	P117-303-003-00	PIN/SNAP	*	2					
24	6215-542-005-20	PIN	*	1					
25	6209-600-004-00	PLUG/SCREW	*	1					
26	6209-500-003-00	WASHER/08X14X01	*	1					
27	6209-740-006-00	PIN/GROOVE	*	1					
28	6211-312-005-10	GASKET/GEARCASE	*	1					
29	6213-160-005-00	VALVE/RELIEF ASSY	*	1					
30	6213-161-003-10	PISTON/VALVE/RELIEF	*	1					

FIG. 11 TIMING GEAR CASE

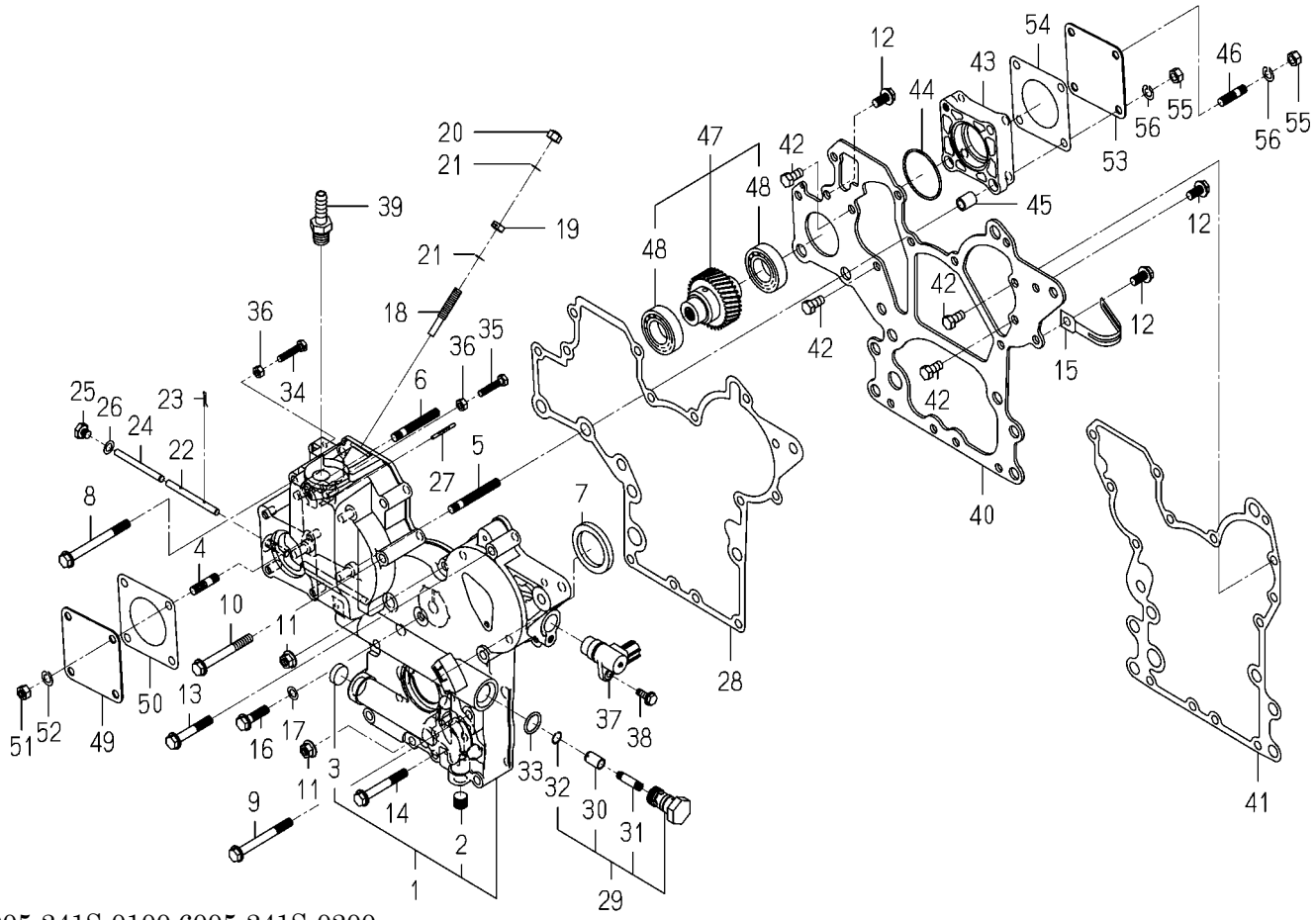

6005-241S-0100,6005-241S-0200

KEY	PART CODE	DESCRIPTION	SPC	TYPE OF MODEL E3CD WTB11		ITC	COL	GRP	REMARKS
31	6213-164-001-00	SPRING/RELIEF VALVE	*	1					
32	V705-140-012-00	RING,SNAP/12 C	*	1					
33	V720-102-401-80	O-RING/1A,P18	*	1					
34	6209-050-001-00	BOLT/M6	*	1					
35	6209-050-002-00	BOLT/M6	*	1					
36	V301-260-006-00	NUT/M6	*	2					
37	1690-654-200-00	SENSOR/REVOLUTION/R	*	1					
38	V230-360-601-60	FLANGEBOLT/M6X16	*	1					
39	6213-721-011-00	PIPE/WATERR	*	1					
40	6211-311-013-20	PLATE/FRONT	*	1					
41	6211-312-006-10	GASKET/PLATE	*	1					
42	6902-050-816-00	BOLT	*	4					
43	6211-319-003-00	SPACER	*	1					
44	V723-102-005-00	O-RING/1A,S50	*	1					
45	6209-749-001-20	PIN/TUBE	*	2					
46	6904-110-822-00	STUD	*	1					
47	6212-530-022-00	SHAFT/HYDRAULIC ASSY	*	1					
48	1729-202-002-00	BEARING/BALL	*	2					
49	6211-321-022-00	COVER/HYDRAULIC	*	1					
50	6211-322-016-00	GASKET/COVER	*	1					
51	V304-260-008-00	NUT/M8	*	4					
52	V401-160-008-00	WASHER,SP/M8	*	4					
53	6211-321-022-00	COVER/HYDRAULIC	*	1					
54	6211-322-016-00	GASKET/COVER	*	1					
55	V304-260-008-00	NUT/M8	*	4					
56	V401-160-008-00	WASHER,SP/M8	*	4					

FIG. 12 HANGER

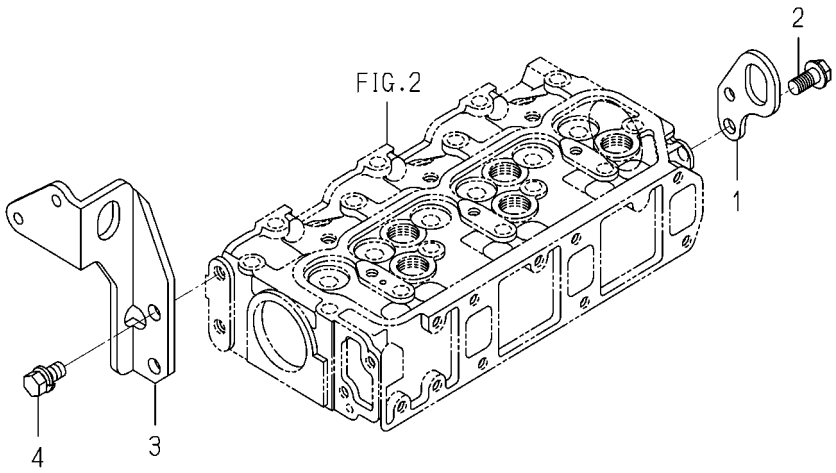

6005-290G-0100

KEY	PART CODE	DESCRIPTION	SPC	TYPE OF MODEL E3CD WTB11		ITC	COL	GRP	REMARKS
1	6211-777-007-30	HANGER	*	1					
2	V233-361-002-00	FLANGEBOLT/M10X20	*	1					
3	6211-777-021-00	HANGER/F	*	1					
4	6901-911-020-00	BOLT,SEMS/M10X20,7T	*	2					

FIG. 13 VALVE

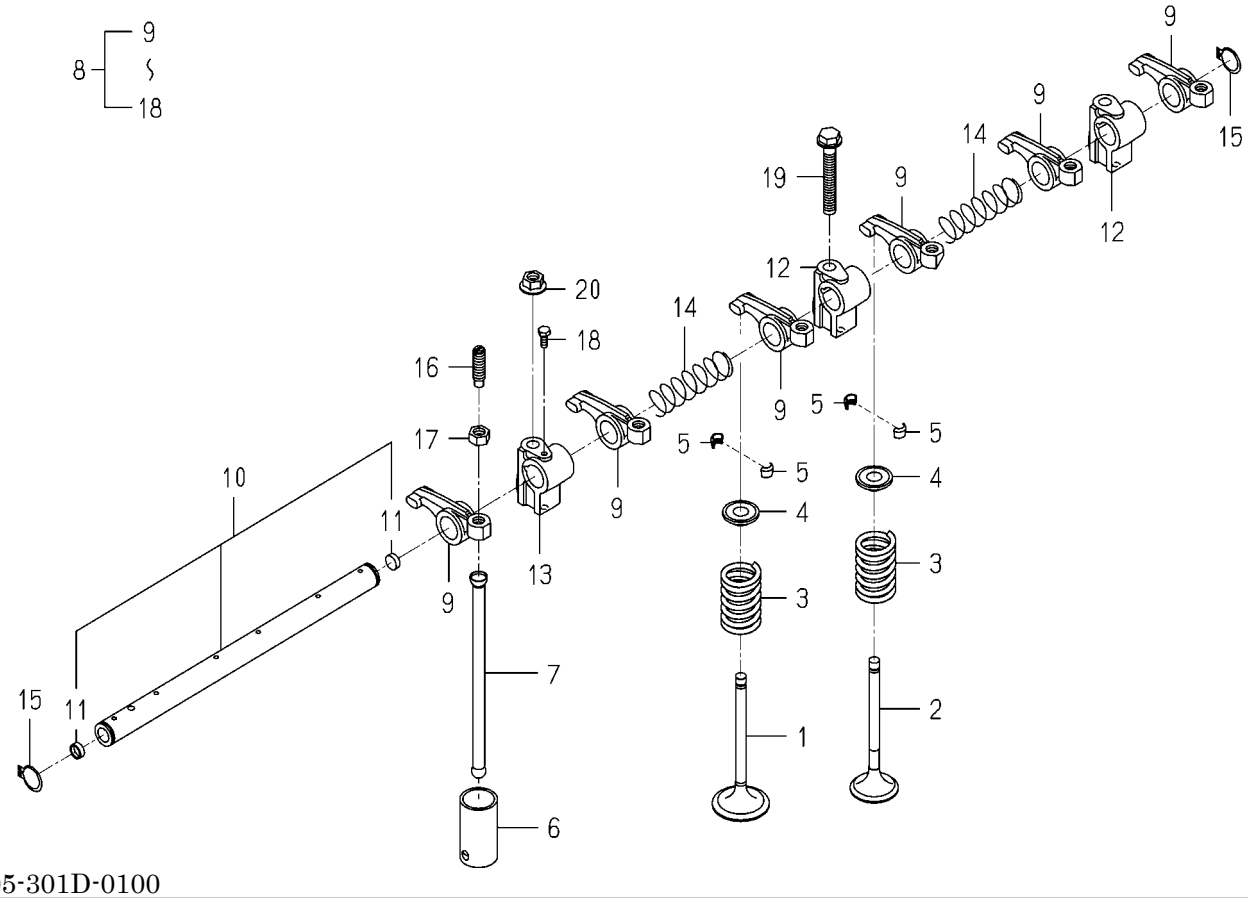

6005-301D-0100

KEY	PART CODE	DESCRIPTION	SPC	TYPE OF MODEL E3CD WTB11		ITC	COL	GRP	REMARKS
1	6212-551-019-00	VALVE/INTAKE	*	3					
2	6212-552-008-00	VALVE/EXHAUST	*	3					
3	6212-561-003-00	SPRING/VALVE	*	6					
4	6212-563-005-00	SEAT/VALVESPRING	*	6					
5	6212-565-001-00	CUTTER,VALVE	*	12					
6	6212-571-002-30	TAPPET	*	6					
7	6212-575-003-00	PUSHROD	*	6					
8	6212-600-019-00	ROCKERSHAFT ASSY	*	1					
9	6212-611-014-00	ROCKERARM	*	6					
10	6212-620-017-00	SHAFT/ROCKERARM ASSY	*	1					
11	6212-626-003-00	PLUG	*	2					
12	6212-628-022-00	BRACKET/ROCKERSHAFT	*	2					
13	6212-628-023-00	BRACKET/ROCKERSHAFT	*	1					
14	6212-629-006-00	SPRING	*	2					
15	6212-629-007-00	RING/SNAP	*	2					
16	6212-629-008-00	SCREW/ADJUST	*	6					
17	6212-629-009-00	NUT	*	6					
18	6212-629-010-00	BOLT	*	1					
19	V231-360-805-50	FLANGEBOLT/M8X55	*	1					
20	3817-401-001-00	NUT/M08	*	2					

FIG. 14 CAM SHAFT

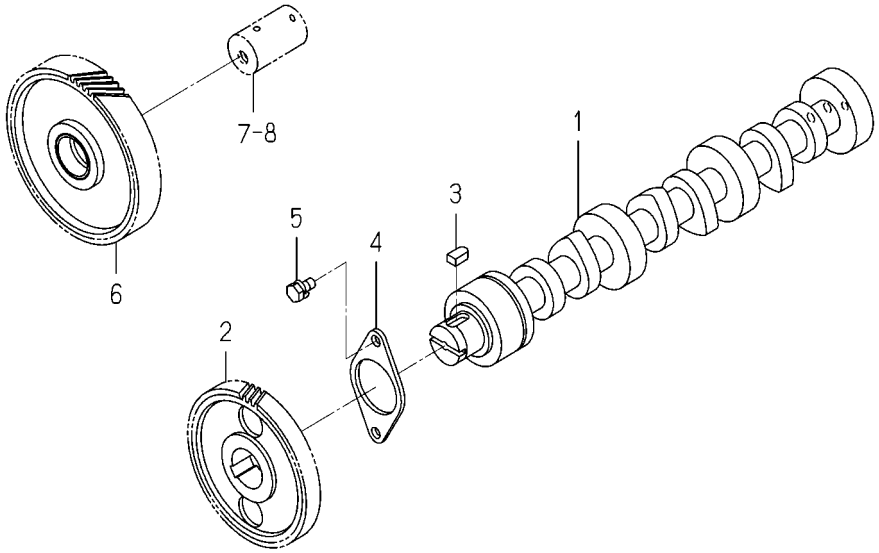

6005-310A-0100

KEY	PART CODE	DESCRIPTION	SPC	TYPE OF MODEL E3CD WTB11		ITC	COL	GRP	REMARKS
1	6212-511-005-10	CAMSHAFT	*	1					
2	6212-522-004-20	GEAR/CAMSHAFT	*	1					
3	6209-730-005-00	KEY/07X05X09	*	1					
4	6212-535-007-00	PLATE/THRUST	*	1					
5	V210-560-601-20	BOLT,S/M6X12/7T	*	2					
6	6212-523-021-00	GEAR/IDLE ASSY	*	1					

FIG. 15 PISTON

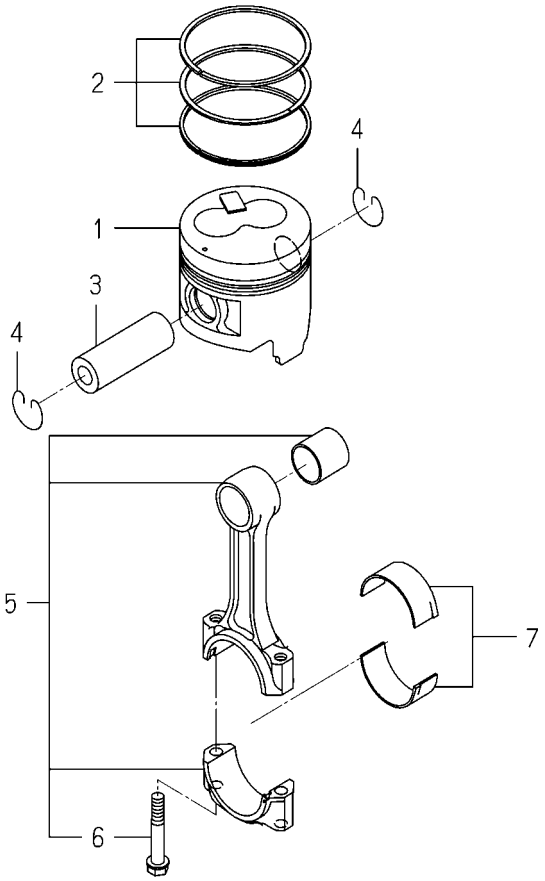

6005-340Q-0100

KEY	PART CODE	DESCRIPTION	SPC	TYPE OF MODEL E3CD WTB11		ITC	COL	GRP	REMARKS
1	6212-111-095-40	PISTON	*	3					
2	6212-121-029-40	RING/PISTONSET	*	3					
3	6212-211-002-00	PIN/PISTON	*	3					
4	6909-950-115-00	RING SNAP	*	6					
5	6212-230-011-30	CONNECTINGROD ASSY	*	3					
6	6212-235-004-10	BOLT/CONNECTINGROD	*	6					
7	6212-271-009-00	BEARING/CONNECTING R	*	3					

FIG. 16 PISTON/OVER SIZE (OPTION)

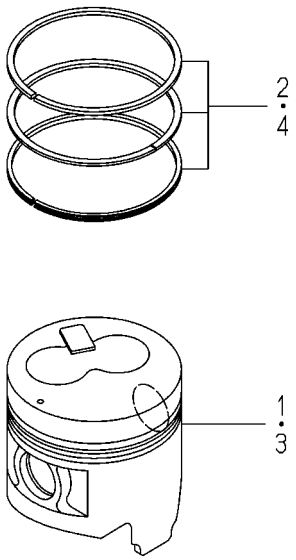

6005-349Q-0100

KEY	PART CODE	DESCRIPTION	SPC	TYPE OF MODEL E3CD WTB11		ITC	COL	GRP	REMARKS
1	6212-114-095-40	PISTON(OV/050)	T	3					
2	6212-124-029-40	RINGPISTON/OV050 SET	T	3					
3	6212-116-095-40	PISTON(OV/100)	T	3					
4	6212-126-029-40	RINGPISTON/OV100 SET	T	3					

FIG. 17 CRANK SHAFT

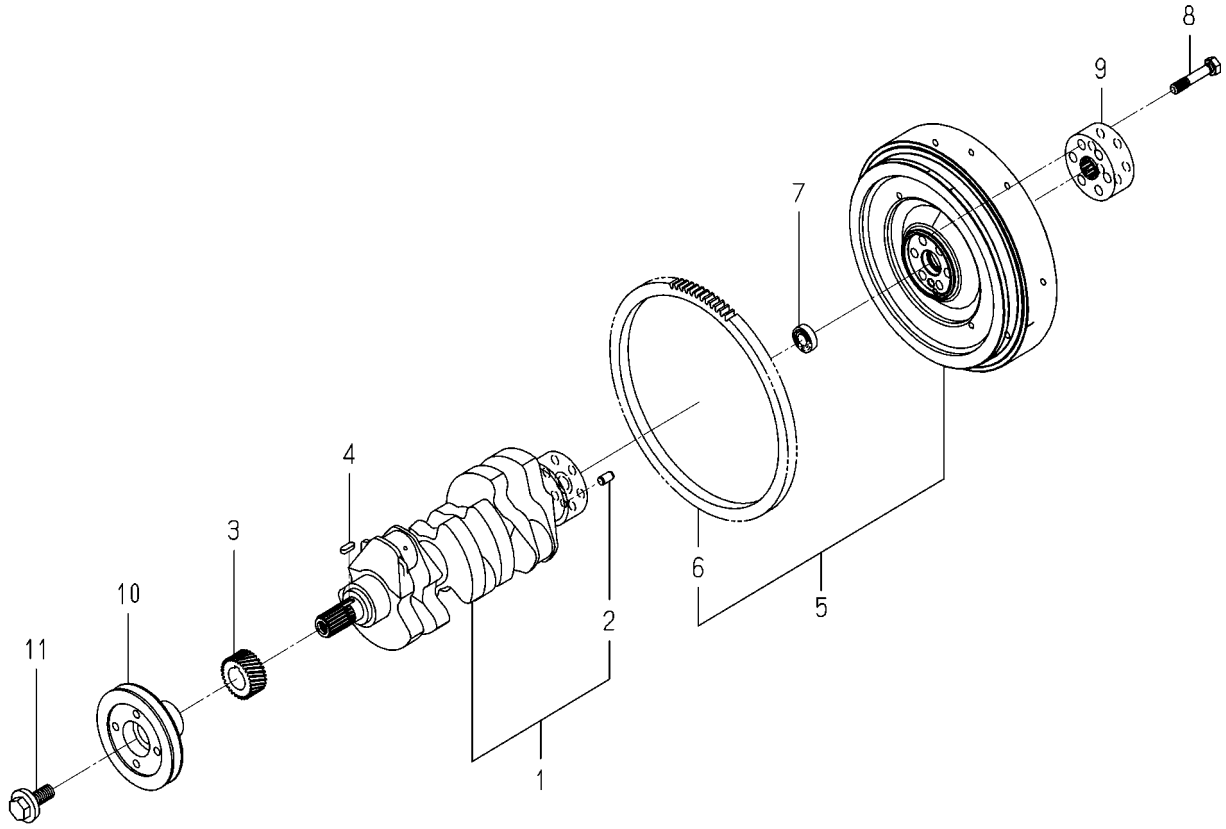

6005-352A-0100

KEY	PART CODE	DESCRIPTION	SPC	TYPE OF MODEL E3CD WTB11		ITC	COL	GRP	REMARKS
1	6212-310-049-00	CRANKSHAFT ASSY	*	1					
2	V523-101-001-80	PIN,ST,B/10X18	*	1					
3	6212-521-008-00	GEAR/CRANK	*	1					
4	6209-730-002-00	KEY/07X05X20	*	1					
5	6212-330-121-00	FLYWHEEL ASSY	*	1					
6	6212-333-002-10	RINGGEAR	*	1					
7	V600-150-600-20	BEARING,RB/6002SS	*	1					
8	6209-000-041-00	BOLT	*	6					
9	6212-339-009-10	BOSS/SPLINE	*	1					
10	6212-371-081-00	PULLEY/CRANK	*	1					
11	6209-000-043-00	BOLT/CRANK	*	1					

FIG. 18 OIL PUMP

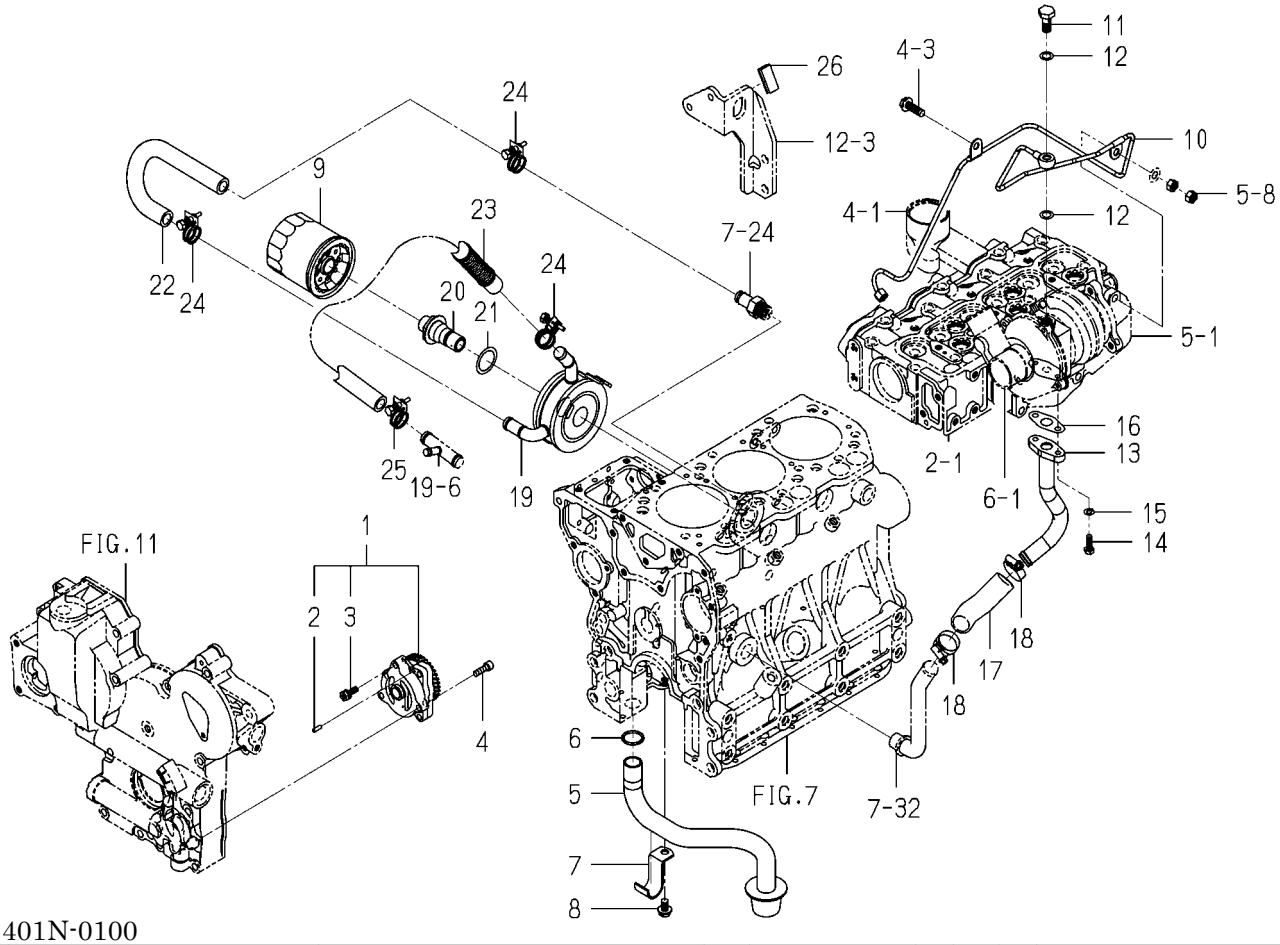

6005-401N-0100

KEY	PART CODE	DESCRIPTION	SPC	TYPE OF MODEL E3CD WTB11		ITC	COL	GRP	REMARKS
1	6213-100-010-00	OILPUMP ASSY	*	1					
2	6213-129-003-00	PIN/STRAIGHT	*	2					
3	6213-119-001-00	BOLT/WS	*	3					
4	V220-540-602-00	SCREW,SOCKET/M6X20	*	3					
5	6213-140-013-10	STRAINER	*	1					
6	V720-103-502-20	O-RING/1A,P22A	*	1					
7	6213-149-003-20	CLAMP/STRAINER	*	1					
8	V231-360-801-60	FLANGEBOLT/M8X16	*	1					
9	6213-240-005-10	CARTRIDGE/OILFILTER	*	1					
10	6213-311-080-00	PIPE/OIL ASSY	*	1					
11	6209-060-001-00	BOLT/EYE	*	1					
12	6209-920-003-00	GASKET	*	2					
13	6213-311-079-00	PIPE/OIL COMP	*	1					
14	6209-030-094-00	BOLT	*	2					
15	V401-160-006-00	WASHER,SP/M6	*	2					
16	6209-630-004-20	GASKET	*	1					
17	6209-360-076-20	HOSE/RUBBER	*	1					
18	J061-116-025-00	CLAMP/WORM/16-25	*	2					
19	6221-700-004-00	OILCOOLER	*	1					
20	6221-726-013-00	CONNECTOR/OILCOOLER	*	1					
21	6221-726-008-00	WASHER/OILCOOLER	*	1					
22	6209-360-071-10	HOSE/OILCOOLER/IN	*	1					
23	6209-360-072-40	HOSE/OILCOOLER/OUT	*	1					
24	J061-216-020-00	CLAMP/WIRE/16-20	*	3					
25	1650-780-011-10	CLIP/HOSE/18-22	*	1					
26	1560-314-001-10	TRIM/30	*	1					

FIG. 19 WATER PUMP

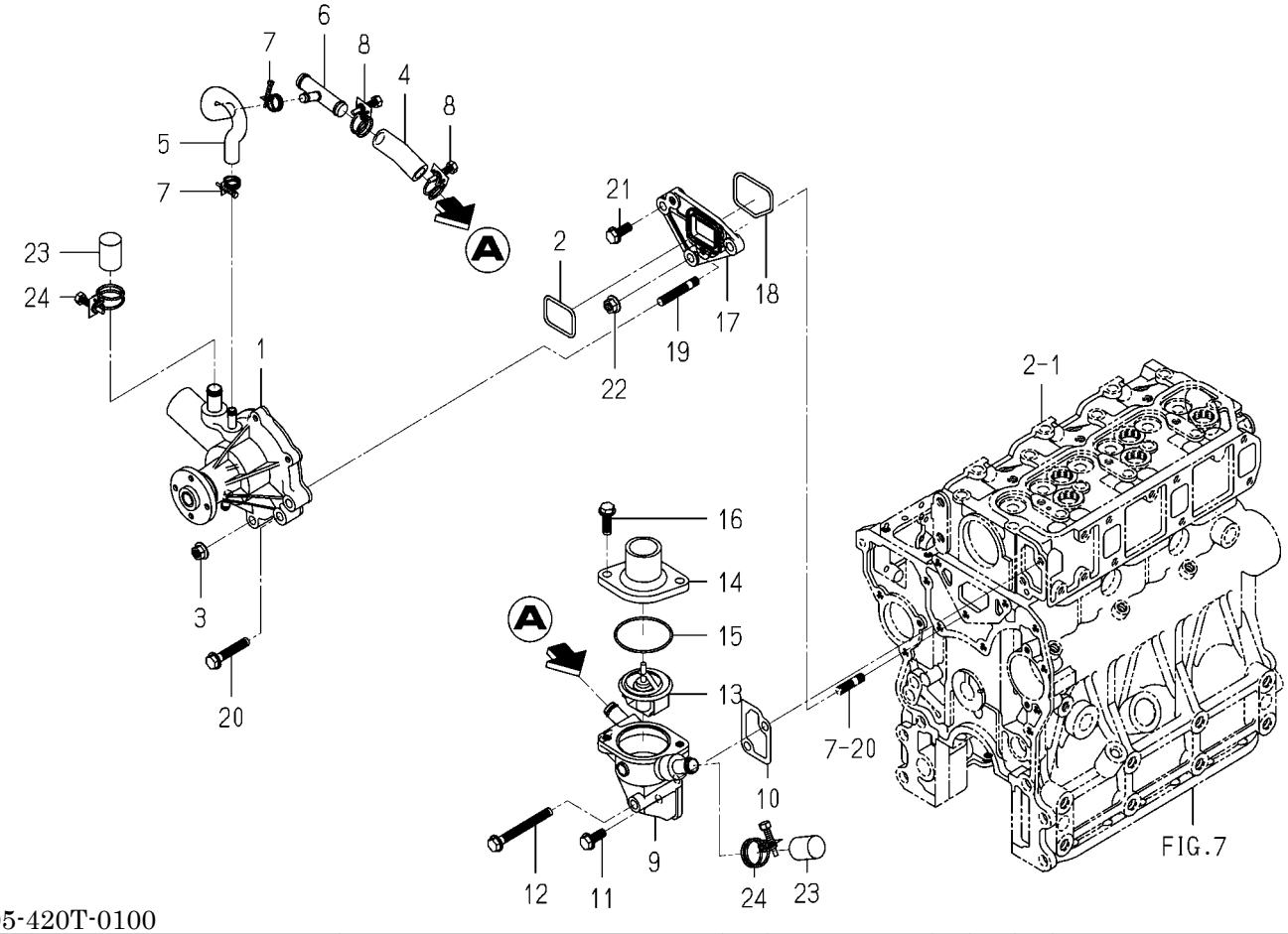

6005-420T-0100

KEY	PART CODE	DESCRIPTION	SPC	TYPE OF MODEL E3CD WTB11		ITC	COL	GRP	REMARKS
1	6213-610-011-20	WATERPUMP ASSY	*	1					
2	6213-614-013-00	GASKET/WATERPUMP	*	1					
3	3817-401-001-00	NUT/M08	*	2					
4	6213-729-004-10	HOSE/RUBBER	*	1					
5	6213-729-013-10	HOSE/RUBBER	*	1					
6	6213-719-002-00	JOINT	*	1					
7	J061-210-015-00	CLAMP/WIRE/10-15	*	2					
8	1650-780-011-10	CLIP/HOSE/18-22	*	2					
9	6213-716-003-20	HOUSING/THERMOSTAT	*	1					
10	6213-743-002-10	GASKET/HOUSING	*	1					
11	V231-360-802-00	FLANGEBOLT/M8X20	*	1					
12	V231-360-807-50	FLANGEBOLT/M8X75	*	1					
13	6513-770-022-10	THERMOSTAT	*	1					
14	6213-711-003-20	PIPE,WATER OUTLET	*	1					
15	V723-102-005-50	O-RING/1A,S55	*	1					
16	V231-360-802-50	FLANGEBOLT/M8X25	*	2					
17	6213-619-006-00	SPACER/WATERPUMP	*	1					
18	6213-614-014-00	GASKET/SPACER	*	1					
19	6904-110-840-00	STUD/M8X40	*	2					
20	V231-360-804-50	FLANGEBOLT/M8X45	*	1					
21	V231-360-802-00	FLANGEBOLT/M8X20	*	1					
22	3817-401-001-00	NUT/M08	*	1					
23	6213-729-011-00	CAP	*	2					
24	J061-220-024-00	CLAMP/WIRE/20-24	*	2					

FIG. 20 COOLING FAN

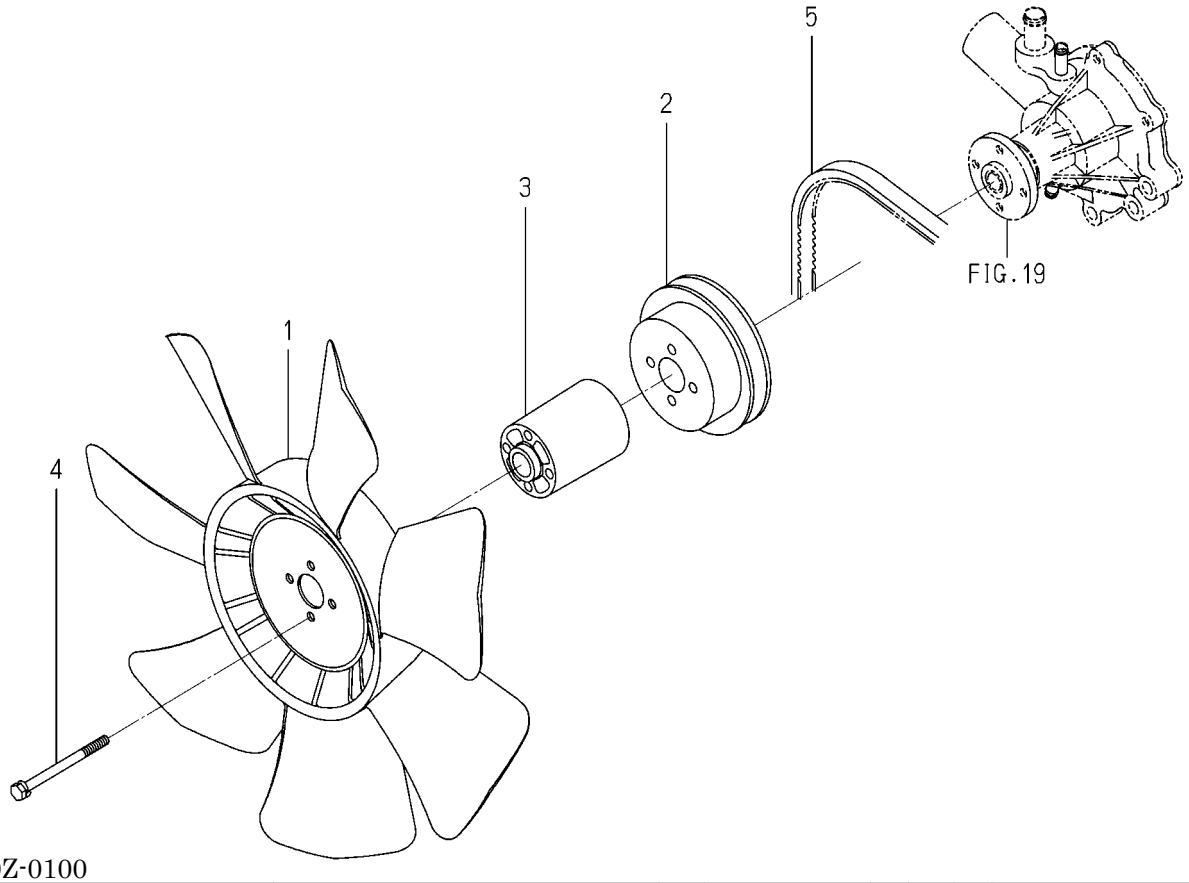

6005-480Z-0100

KEY	PART CODE	DESCRIPTION	SPC	TYPE OF MODEL E3CD WTB11		ITC	COL	GRP	REMARKS
1	6213-660-015-00	FAN/COOLING	*	1					
2	6213-641-022-20	PULLEY/WATERPUMP	*	1					
3	6213-669-009-00	SPACER/FAN/68	*	1					
4	6209-046-007-00	BOLT/FLANGE	*	4					
5	6213-671-057-00	BELT/VNR5A39.5	*	1					

FIG. 21 INJECTION NOZZLE

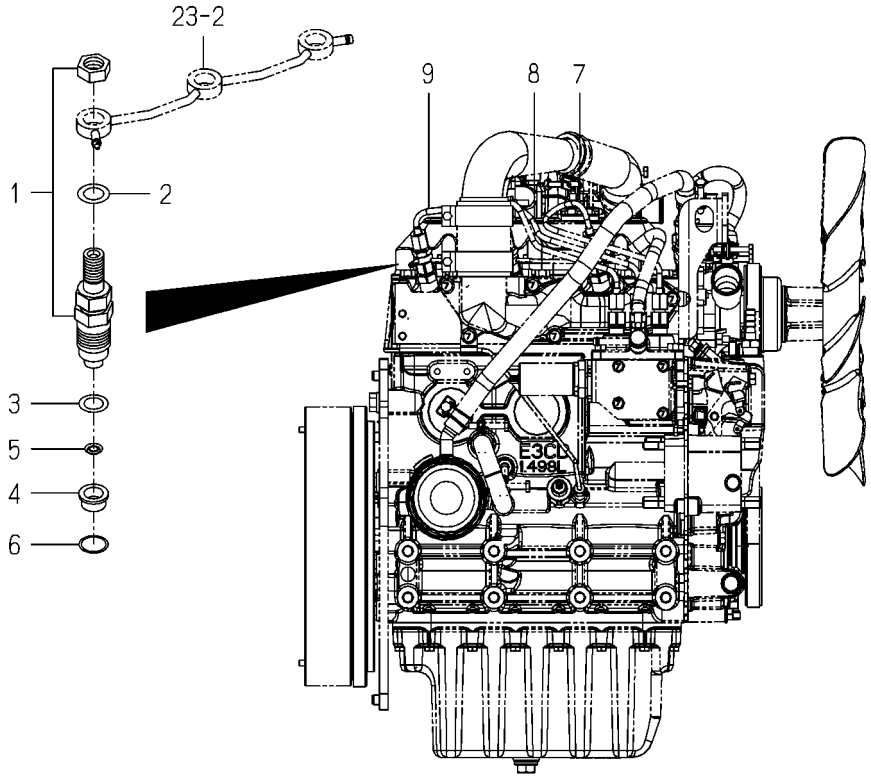

6005-501K-0100

KEY	PART CODE	DESCRIPTION	SPC	TYPE OF MODEL E3CD WTB11		ITC	COL	GRP	REMARKS
1	6215-300-036-10	INJECTIONNOZZLE ASSY	*	3					FIG 028
2	6215-359-001-00	WASHER	*	3					
3	6215-315-002-00	GASKET,NOZZLE	*	3					
4	6215-315-006-00	HEATSHILD/NOZZLE	*	3					
5	6215-315-005-00	WASHER/CORRUGATE	*	3					
6	6215-315-007-00	GASKET	*	3					
7	6215-411-137-00	PIPE/INJECTION ASSY	*	1					
8	6215-411-138-00	PIPE/INJECTION ASSY	*	1					
9	6215-411-139-00	PIPE/INJECTION ASSY	*	1					

FIG. 22 INJECTION PUMP

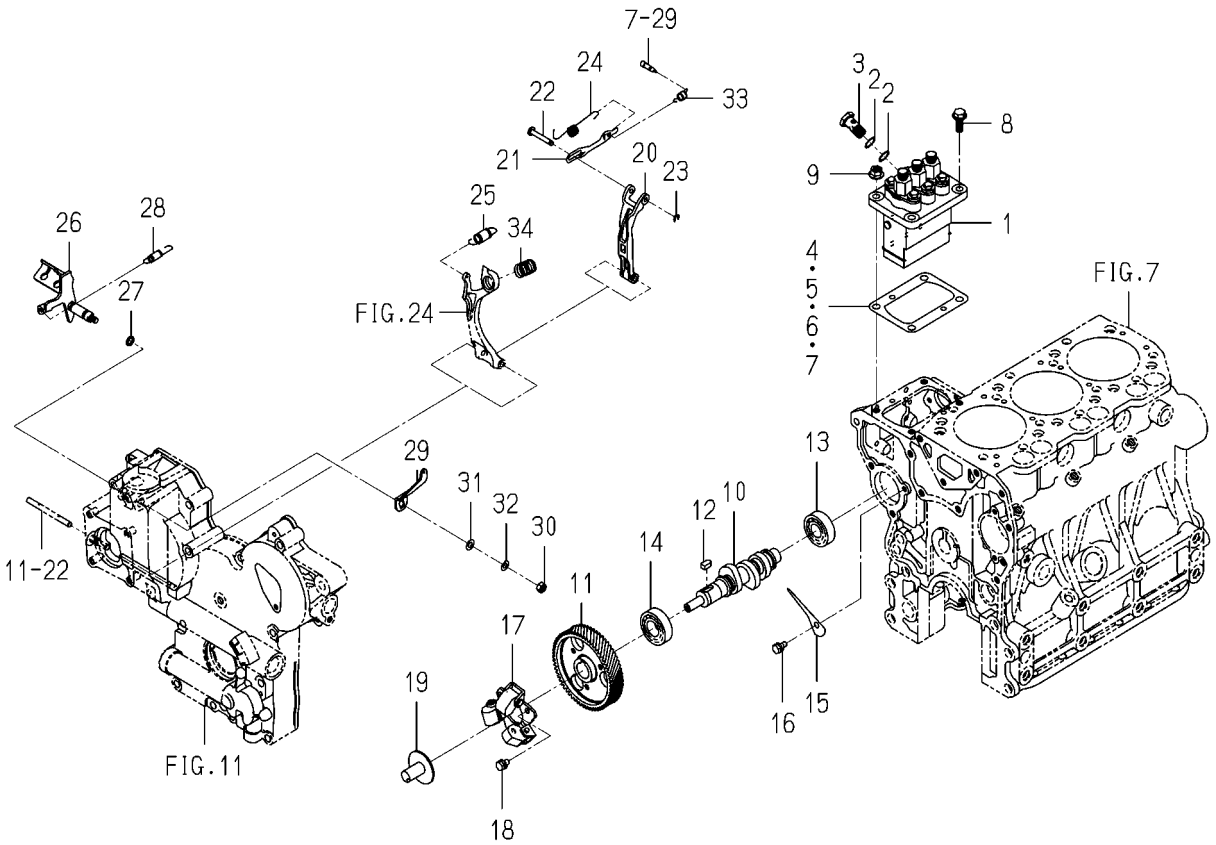

6005-511V-0100

KEY	PART CODE	DESCRIPTION	SPC	TYPE OF MODEL E3CD WTB11		ITC	COL	GRP	REMARKS
1	6215-600-183-00	INJECTIONPUMP ASSY	*	1					
2	6215-619-010-00	WASHER/AIR BLEEDER	*	2					
3	6215-619-009-00	SCREW/HOLLOW	*	1					
4	6219-752-045-00	SHIM/INJECTIONPUMP	*	1					
5	6219-752-044-00	SHIM/INJECTIONPUMP	*	1					
6	6219-752-046-00	SHIM/INJECTIONPUMP	*	1					
7	6219-752-047-00	SHIM/INJECTIONPUMP	*	1					
8	V231-360-802-00	FLANGEBOLT/M8X20	*	2					
9	3817-401-001-00	NUT/M08	*	2					
10	6215-621-052-00	CAMSHAFT/INJECTION P	*	1					
11	6212-524-012-30	GEAR/INJECTIONPUMP	*	1					
12	6209-730-005-00	KEY/07X05X09	*	1					
13	V600-110-620-30	BEARING,RB/6203	*	1					
14	6209-800-010-00	BEARING	*	1					
15	6212-535-009-00	PLATE/THRUST/INJPUMP	*	1					
16	V210-560-601-20	BOLT,S/M6X12/7T	*	1					
17	6215-520-007-10	FLYWEIGHT ASSY	*	1					
18	6209-030-043-00	BOLT/M6X10	*	3					
19	6215-526-004-00	THRUSTPIECE	*	1					
20	6215-541-001-10	ARM/FLOATING COMP	*	1					
21	6215-543-002-10	RINK/CONTROL	*	1					
22	6215-542-006-00	PIN,CONTROL	*	1					
23	V710-140-004-00	RING,SNAP/4 E	*	1					
24	6215-549-031-10	SPRING/SETTING	*	1					
25	6215-531-019-00	SPRING/GOVERNOR	*	1					
26	6215-541-045-10	LEVER/CONTROL COMP	*	1					
27	V720-101-900-80	O-RING/1A,P8	*	1					
28	6209-580-002-10	SPRING,RETURN	*	1					
29	6215-549-076-10	ARM/CONTROL	*	1					
30	V301-260-006-00	NUT/M6	*	1					

FIG. 22 INJECTION PUMP

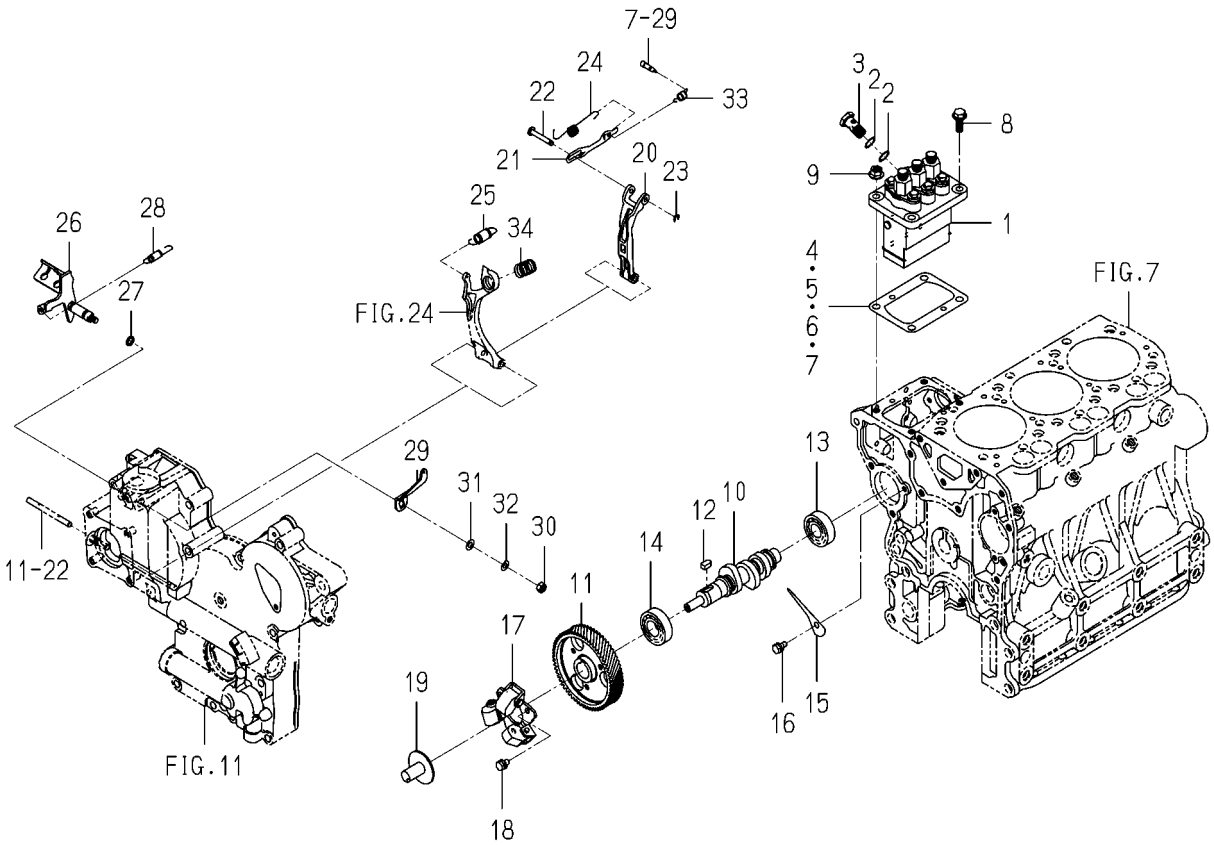

6005-511V-0100

KEY	PART CODE	DESCRIPTION	SPC	TYPE OF MODEL E3CD WTB11		ITC	COL	GRP	REMARKS
31	V411-260-006-00	WASHER,PL/M6	*	1					
32	V401-160-006-00	WASHER,SP/M6	*	1					
33	6215-549-039-00	SPRING/STARTING	*	1					
34	6215-537-002-10	SPRING/IDLE	*	1					

FIG. 23 FUEL PIPE

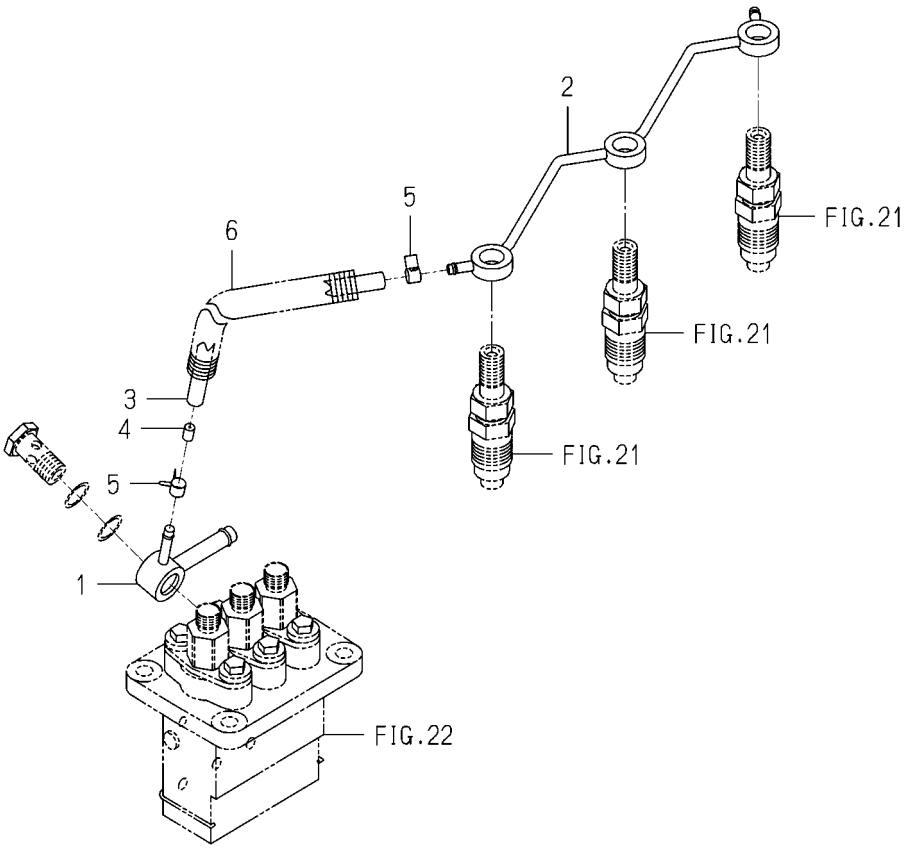

6005-550J-0100

KEY	PART CODE	DESCRIPTION	SPC	TYPE OF MODEL E3CD WTB11		ITC	COL	GRP	REMARKS
1	6215-412-004-00	CONNECTOR/FUEL	*	1					
2	6215-411-136-00	PIPE/FUEL	*	1					
3	6209-360-011-00	HOSE/RUBBER	*	1					
4	3640-586-004-00	RESISTANCE/1.0	*	1					
5	J062-076-082-00	CLIP/HOSE/7.6-8.2	*	2					
6	6209-360-143-00	CORRUGATEDTUBE	*	1					

FIG. 24 ADAPTER

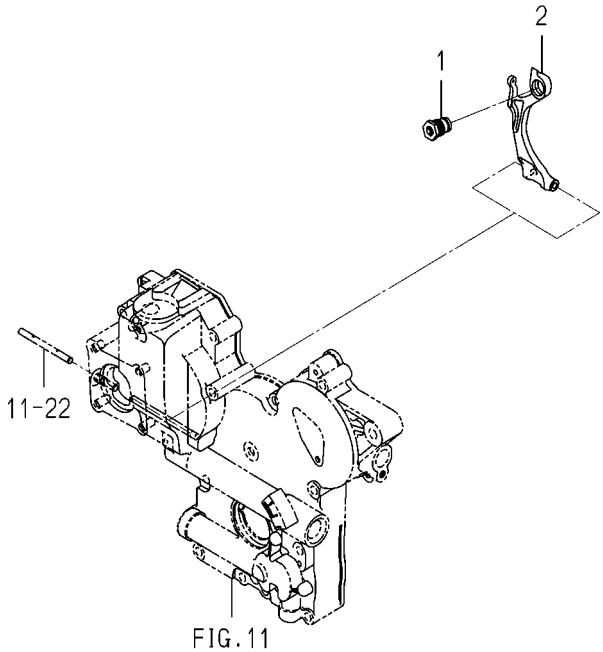

6005-561H-0100

KEY	PART CODE	DESCRIPTION	SPC	TYPE OF MODEL E3CD WTB11		ITC	COL	GRP	REMARKS
1	6215-548-105-30	ADAPTER/200X070 ASSY	*	1					
2	6215-541-016-50	ARM/TENSION	*	1					

FIG. 25 ELECTRIC (1)

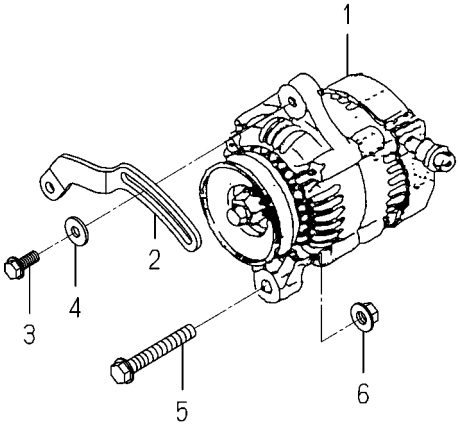

6005-802H-0100

KEY	PART CODE	DESCRIPTION	SPC	TYPE OF MODEL E3CD WTB11		ITC	COL	GRP	REMARKS
1	6281-200-021-00	GENERATOR ASSY	*	1					FIG 029
2	6213-674-006-20	PLATE/ADJUST	*	1					
3	V231-360-802-00	FLANGEBOLT/M8X20	*	1					
4	1373-121-001-00	WASHER/9X22X2	*	1					
5	V233-361-007-00	FLANGEBOLT/M10X70	*	1					
6	6209-440-007-00	NUT/FLANGE/M10	*	1					

FIG. 26 ELECTRIC (2)

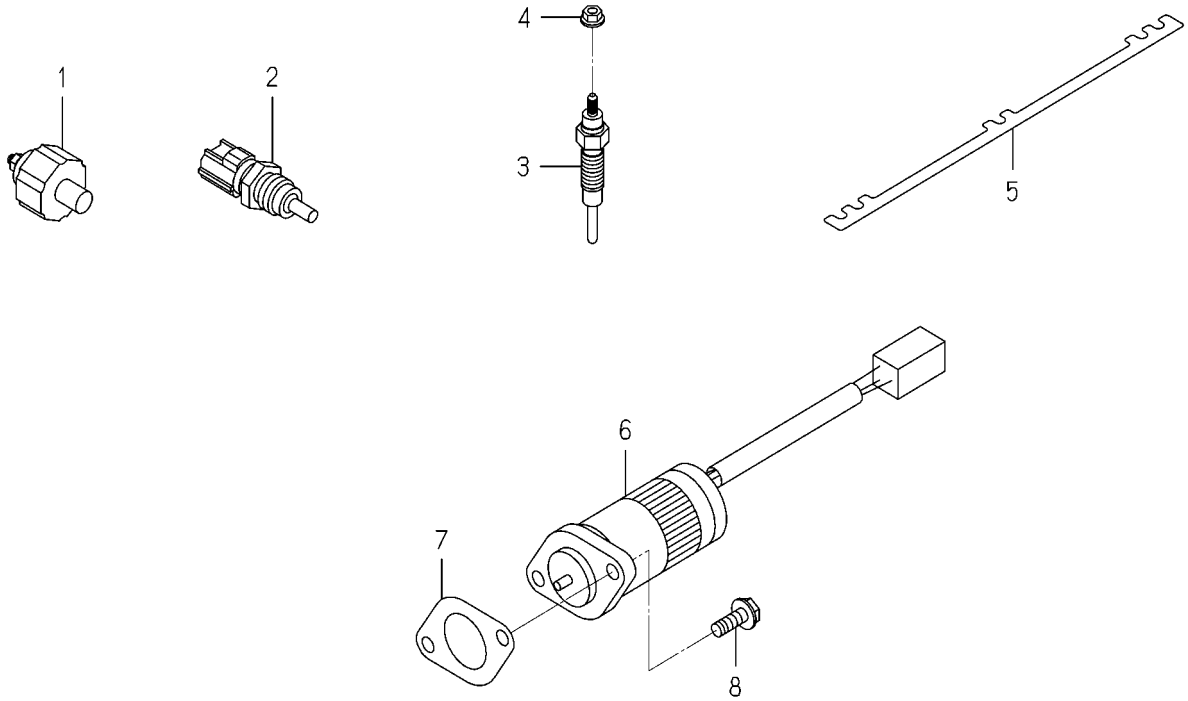

6005-821C-0100,6005-821C-0200

KEY	PART CODE	DESCRIPTION	SPC	TYPE OF MODEL E3CD WTB11		ITC	COL	GRP	REMARKS
1	6281-971-003-00	SWITCH/OILPRESSURE	*	1					
2	6282-450-007-00	THERMOMETER	*	1					
3	6281-410-023-10	GLOWPLUG	*	3					
4	6209-440-005-00	NUT/FLANGE	*	3					
5	6219-732-017-00	CONNECTOR/GLOWPLUG	*	1					
6	6281-910-013-00	SOLENOID	*	1					
7	6209-630-002-10	GASKET	*	1					
8	V230-360-601-60	FLANGEBOLT/M6X16	*	2					

FIG. 27 REPAIR PARTS(OPTION)

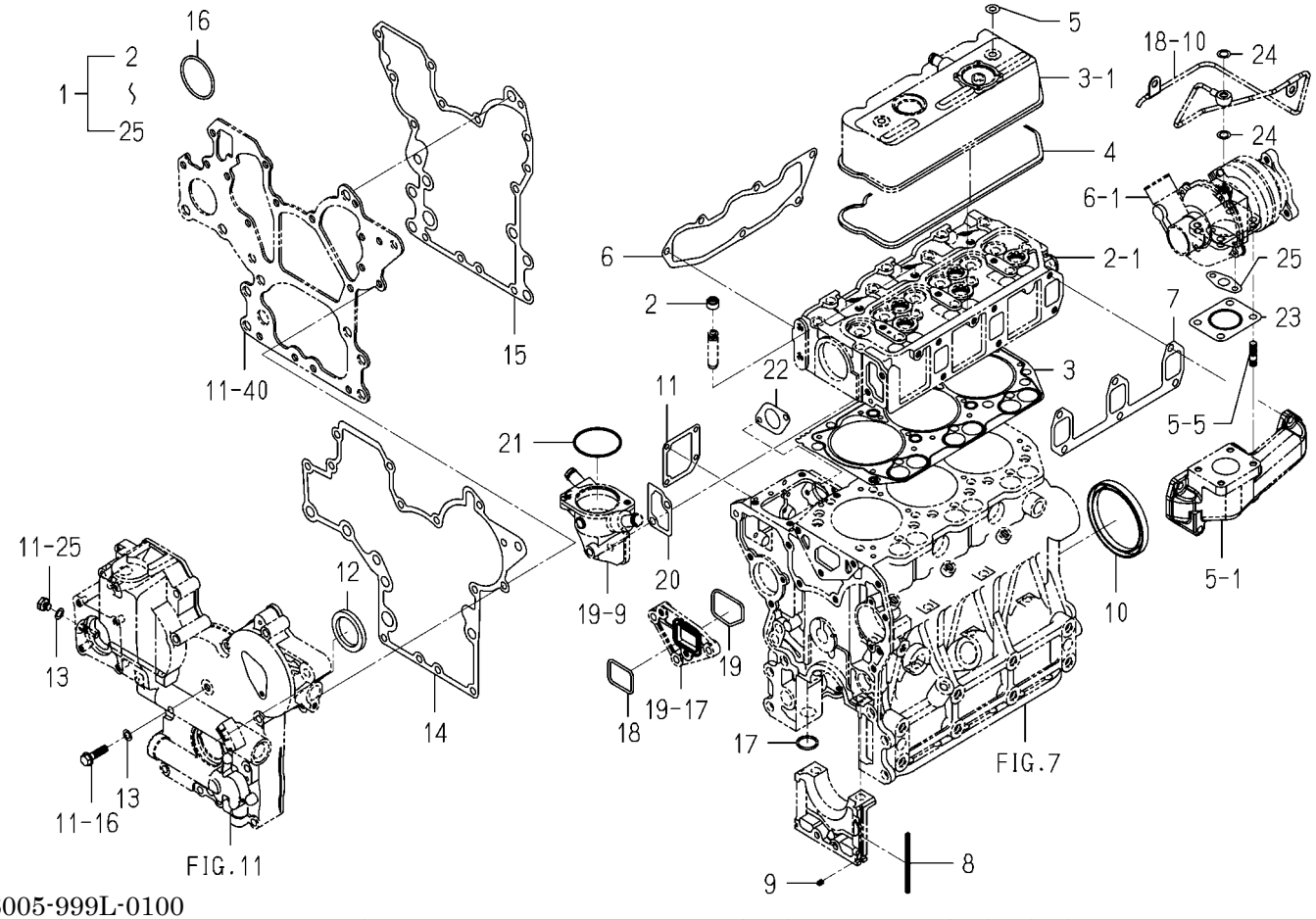

6005-999L-0100

KEY	PART CODE	DESCRIPTION	SPC	TYPE OF MODEL E3CD WTB11		ITC	COL	GRP	REMARKS
1	6287-810-041-10	REPAIR/ENGINESET	T	1					
2	6212-569-002-00	SEAL,OIL	T	6					
3	6211-141-057-10	GASKET/CYLINDERHEAD	T	1					
4	6211-173-005-00	SEAL/CYL HEAD/UNDER	T	1					
5	6209-572-003-00	GASKET	T	2					
6	6214-115-003-10	GASKET/INLETMANIFOLD	T	1					
7	6214-145-030-00	GASKET/EXHAUST MANIF	T	1					
8	6211-258-001-00	SEAL,BEARING CAP	T	4					
9	6211-258-002-00	SEAL,BEARING CAP/7	T	2					
10	6209-625-003-20	OILSEAL	T	1					
11	6211-292-001-20	GASKET/COVER	T	1					
12	6209-625-002-00	SEAL,OIL	T	1					
13	6209-500-003-00	WASHER/08X14X01	T	2					
14	6211-312-005-10	GASKET/GEARCASE	T	1					
15	6211-312-006-10	GASKET/PLATE	T	1					
16	V723-102-005-00	O-RING/1A,S50	T	1					
17	V720-103-502-20	O-RING/1A,P22A	T	1					
18	6213-614-013-00	GASKET/WATERPUMP	T	1					
19	6213-614-014-00	GASKET/SPACER	T	1					
20	6213-743-002-10	GASKET/HOUSING	T	1					
21	V723-102-005-50	O-RING/1A,S55	T	1					
22	6209-630-002-10	GASKET	T	1					
23	6214-145-009-00	GASKET	T	1					
24	6209-920-003-00	GASKET	T	2					
25	6209-630-004-20	GASKET	T	1					

FIG. 28 COMPONENT PARTS FOR 6215-300-036-10 ON Fig.021

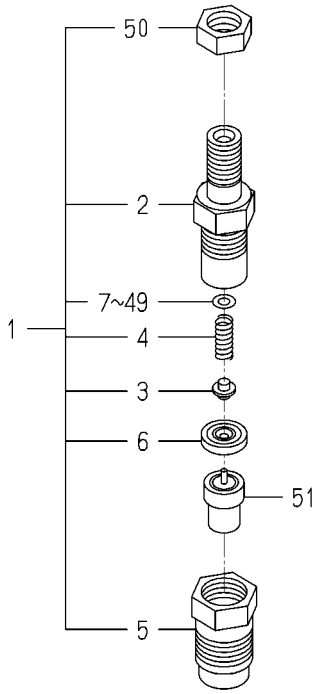

6215-300-036-1B

KEY	PART CODE	DESCRIPTION	SPC	TYPE OF MODEL E3CD WTB11		ITC	COL	GRP	REMARKS
1	6215-330-024-10	HOLDER/NOZZLE ASSY	*	3					
2	6215-331-008-00	BODY/NOZZLE HOLDER	*	3					
3	6215-342-001-00	PIN,NOZZLE HOLDER	*	3					
4	6215-343-001-00	SPRING/NOZZLEHOLDER	*	3					
5	6215-332-013-00	NUT/NOZZLERETAINING	*	3					
6	6215-339-001-00	PIECE,DISTANCE	*	3					
7	6215-345-001-00	WASHER/0.9	*	3					
8	6215-345-002-00	WASHER/0.925	*	3					
9	6215-345-003-00	WASHER/0.95	*	3					
10	6215-345-004-00	WASHER/0.975	*	3					
11	6215-345-005-00	WASHER/1.0	*	3					
12	6215-345-006-00	WASHER/1.025	*	3					
13	6215-345-007-00	WASHER/1.05	*	3					
14	6215-345-008-00	WASHER/1.075	*	3					
15	6215-345-009-00	WASHER/1.1	*	3					
16	6215-345-010-00	WASHER/1.125	*	3					
17	6215-345-011-00	WASHER/1.15	*	3					
18	6215-345-012-00	WASHER/1.175	*	3					
19	6215-345-013-00	WASHER/1.2	*	3					
20	6215-345-014-00	WASHER/1.225	*	3					
21	6215-345-015-00	WASHER/1.25	*	3					
22	6215-345-016-00	WASHER/1.275	*	3					
23	6215-345-017-00	WASHER/1.3	*	3					
24	6215-345-018-00	WASHER/1.325	*	3					
25	6215-345-019-00	WASHER/1.35	*	3					
26	6215-345-020-00	WASHER/1.375	*	3					
27	6215-345-021-00	WASHER/1.4	*	3					
28	6215-345-022-00	WASHER/1.425	*	3					
29	6215-345-023-00	WASHER/1.45	*	3					
30	6215-345-024-00	WASHER/1.475	*	3					

FIG. 28 COMPONENT PARTS FOR 6215-300-036-10 ON Fig.021

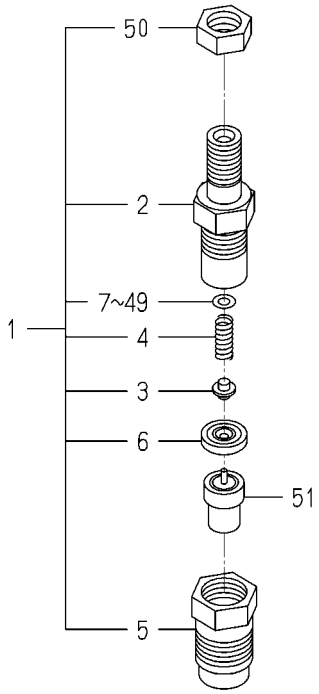

6215-300-036-1B

KEY	PART CODE	DESCRIPTION	SPC	TYPE OF MODEL E3CD WTB11		ITC	COL	GRP	REMARKS
31	6215-345-025-00	WASHER/1.5	*	3					
32	6215-345-026-00	WASHER/1.525	*	3					
33	6215-345-027-00	WASHER/1.55	*	3					
34	6215-345-028-00	WASHER/1.575	*	3					
35	6215-345-029-00	WASHER/1.6	*	3					
36	6215-345-030-00	WASHER/1.625	*	3					
37	6215-345-031-00	WASHER/1.65	*	3					
38	6215-345-032-00	WASHER/1.675	*	3					
39	6215-345-033-00	WASHER/1.7	*	3					
40	6215-345-034-00	WASHER/1.725	*	3					
41	6215-345-035-00	WASHER/1.75	*	3					
42	6215-345-036-00	WASHER/1.775	*	3					
43	6215-345-037-00	WASHER/1.8	*	3					
44	6215-345-038-00	WASHER/1.825	*	3					
45	6215-345-039-00	WASHER/1.85	*	3					
46	6215-345-040-00	WASHER/1.875	*	3					
47	6215-345-041-00	WASHER/1.9	*	3					
48	6215-345-042-00	WASHER/1.925	*	3					
49	6215-345-043-00	WASHER/1.95	*	3					
50	6215-359-002-00	NUT	*	3					
51	6215-311-027-00	NOZZLE ASSY	*	3					

FIG. 29 COMPONENT PARTS FOR 6281-200-021-00 ON Fig.025

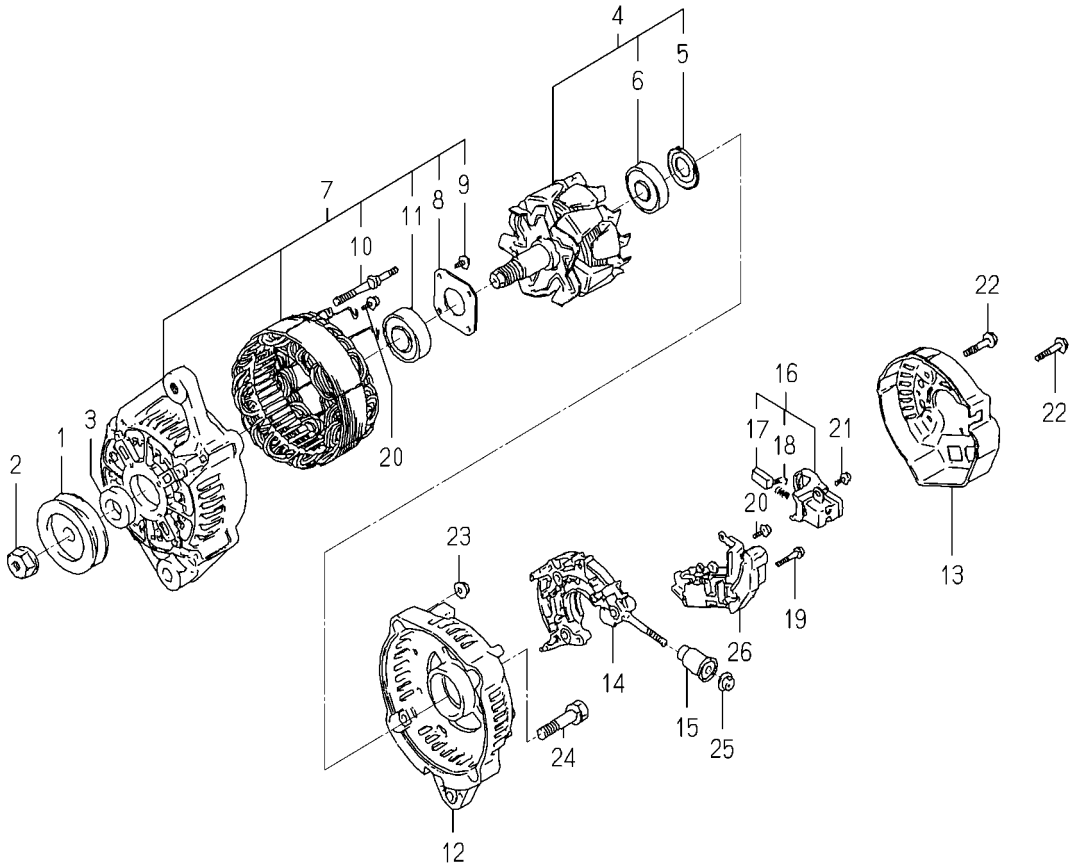

6281-200-021-0B

KEY	PART CODE	DESCRIPTION	SPC	TYPE OF MODEL E3CD WTB11		ITC	COL	GRP	REMARKS
1	6281-222-012-00	PULLEY	*	1					
2	6281-229-002-00	NUT	*	1					
3	6281-229-003-00	COLLOR	*	1					
4	6281-221-007-00	ROTOR ASSY	*	1					
5	6281-229-004-00	COVER,BEARING	*	1					
6	6281-229-032-00	BEARING/BALL	*	1					
7	6281-213-018-00	FRAME/DRIVEEND ASSY	*	1					
8	6281-229-006-00	PLATE	*	1					
9	6281-229-007-00	BOLT	*	4					
10	6281-229-008-00	BOLT	*	2					
11	6281-229-033-00	BEARING/BALL	*	1					
12	6281-214-003-00	FRAME	*	1					
13	6281-214-004-00	COVER	*	1					
14	6281-229-029-00	HOLDER ASSY	*	1					
15	6281-229-011-00	BUSH	*	1					
16	6281-217-002-00	HOLDER/BRUSH ASSY	*	1					
17	6281-215-001-00	BRUSH	*	2					
18	6281-216-001-00	SPRING	*	2					
19	6281-229-012-00	BOLT	*	2					
20	6281-229-013-00	BOLT	*	6					
21	6281-229-014-00	BOLT	*	1					
22	6281-229-015-00	BOLT	*	3					
23	6281-229-016-00	NUT	*	2					
24	6281-229-017-00	BOLT	*	2					
25	6281-229-018-00	NUT	*	1					
26	6281-271-008-00	REGULATOR ASSY	*	1					

C H A S S I S

FIG. 1 RADIATOR SYSTEM(1/2)

30-PLEASE SEE 2/2 PAGE

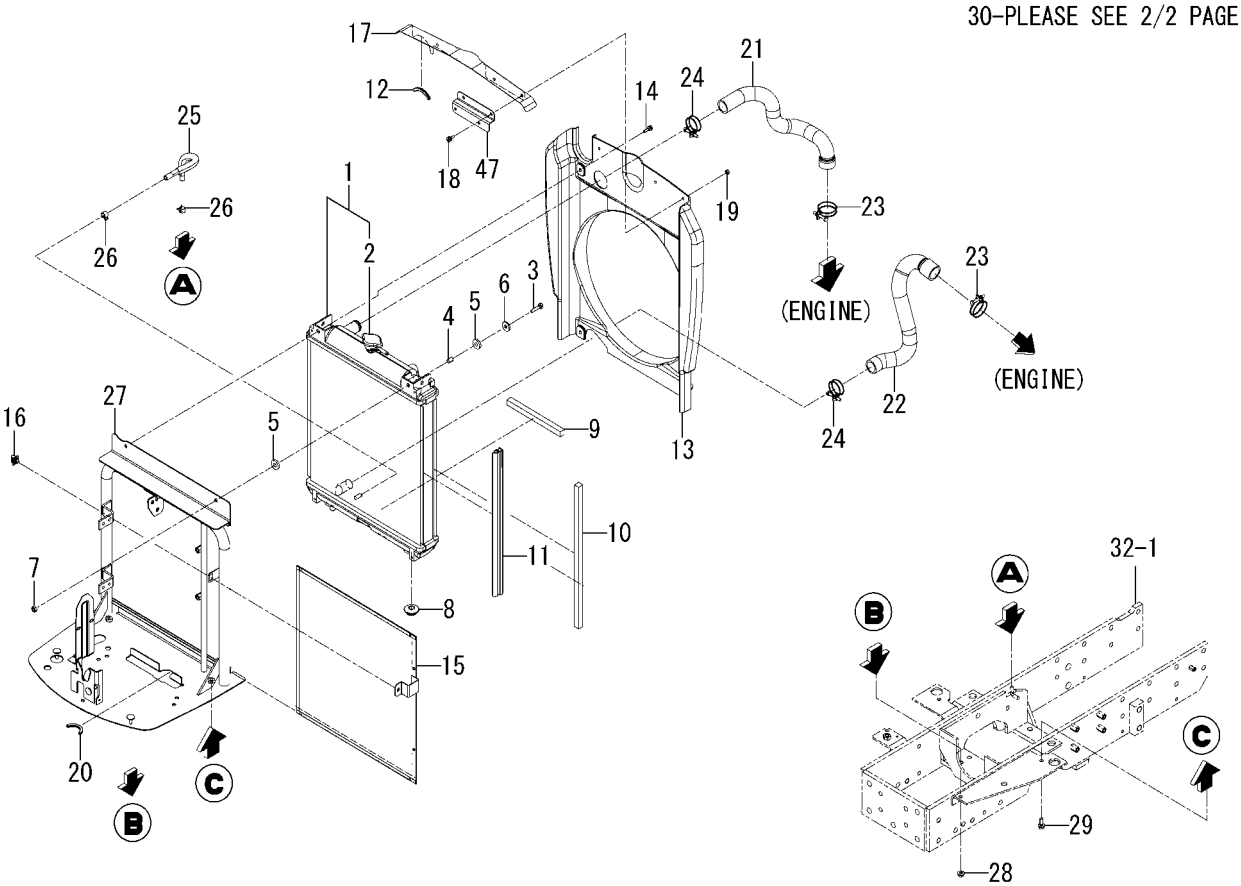

1834-102A-0100

KEY	PART CODE	DESCRIPTION	SPC	TYPE OF MODEL TLE3400 H3		ITC	COL	GRP	REMARKS
1	1792-102-210-00	RADIATOR ASSY	*	1					
2	1650-102-202-10	CAP	*	1					
3	V201-260-803-00	BOLT/M8X30	*	2					
4	1824-102-004-00	COLLAR/08X10X14	*	2					
5	1423-616-004-00	CUSHION/RUBBER/10X25	*	4					
6	4101-102-038-00	WASHER/24X9X3.2	*	2					
7	1746-817-001-00	U-NUT	*	2					
8	1421-603-004-00	BUSH,LEVER	*	2					
9	1729-602-007-00	INSULATOR/15X15X190	*	1					
10	1650-102-006-10	INSULATOR	*	2					
11	1824-102-007-00	INSULATOR/425	*	2					
12	1824-102-008-00	INSULATOR/60	*	1					
13	1824-102-003-00	SHROUD/400	*	1					
14	V210-660-602-00	BOLT,SP/M6X20/7T	*	4					
15	1824-102-280-00	NET/12X425X438 COMP	*	1					
16	1790-780-220-00	LATCH ASSY	*	1					
17	1824-102-005-00	PLATE/SEAL	*	1					
18	1746-802-002-00	BOLT/SP	*	3					
19	V301-260-006-00	NUT/M6	*	3					
20	1824-102-008-00	INSULATOR/60	*	1					
21	1824-102-001-00	HOSE/RADIATOR/INLET	*	1					
22	1824-102-002-00	HOSE/RADIATOR/OUTLET	*	1					
23	J061-236-044-00	CLAMP/WIRE/36-44	*	2					
24	J061-230-038-00	CLAMP/WIRE/30-38	*	2					
25	1834-102-310-10	HOSE/08X15X220 ASSY	*	1					
26	J062-138-148-00	CLIP/HOSE/13.8-14.8	*	2					
27	1834-102-220-00	BRACKET/RADIATO COMP	*	1					
28	1746-816-001-00	NUT/WASHER	*	2					
29	1746-804-004-00	FLANGEBOLT	*	2					
30	1821-630-003-00	INSULATOR/080	*	2					

FIG. 1 RADIATOR SYSTEM(2/2)

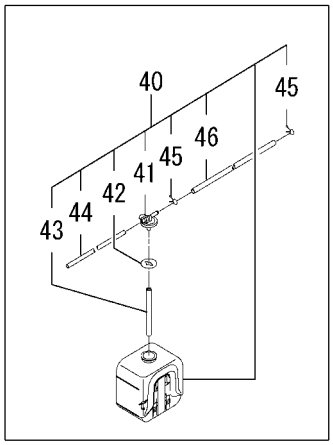

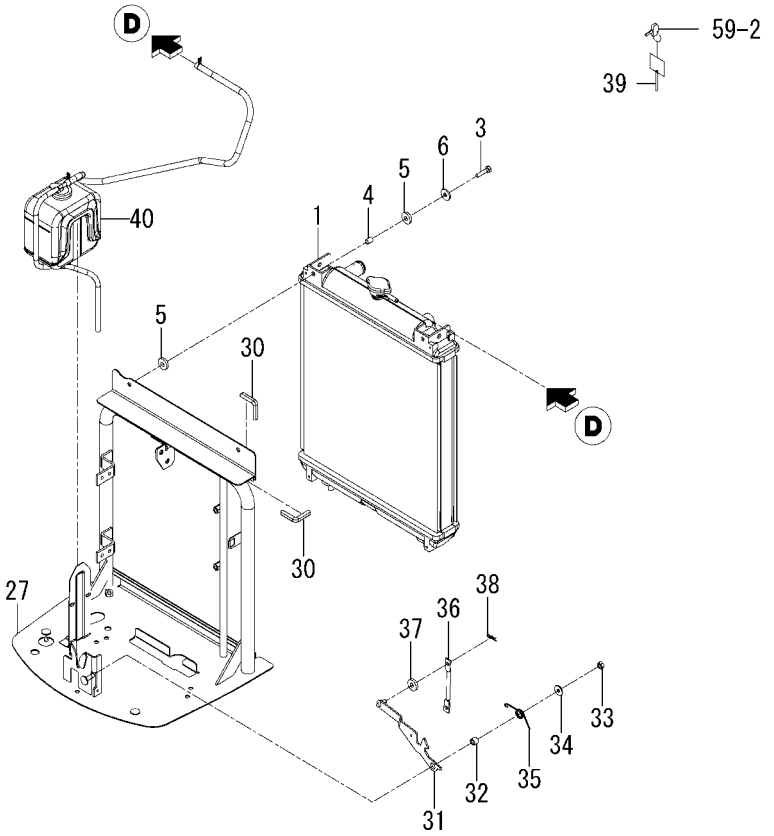

1834-102A-0100

KEY	PART CODE	DESCRIPTION	SPC	TYPE OF MODEL TLE3400 H3		ITC	COL	GRP	REMARKS
31	1834-102-270-00	HOOK COMP	*	1					
32	1837-102-009-00	COLLAR/09X14X11	*	1					
33	1746-817-001-00	U-NUT	*	1					
34	1373-121-001-00	WASHER/9X22X2	*	1					
35	1813-102-005-00	SPRING/HT020	*	1					
36	1833-102-062-00	ROD/LEVER	*	1					
37	1423-616-004-00	CUSHION/RUBBER/10X25	*	1					
38	V560-160-008-00	PIN/SNAP	*	1					
39	1833-102-063-00	KEY	*	1					
40	1690-102-210-00	RESERVETANK ASSY	*	1					
41	1690-102-212-00	CAP	*	1					
42	1690-102-213-00	PACKING	*	1					
43	1690-102-214-00	HOSE/RUBBER	*	1					
44	1690-102-215-00	HOSE/RUBBER	*	1					
45	1690-102-216-00	CLUMP	*	2					
46	1690-102-217-00	HOSE/RUBBER	*	1					
47	1834-102-240-10	PLATE/PV COMP	*	1					

FIG. 2 MUFFLER SYSTEM

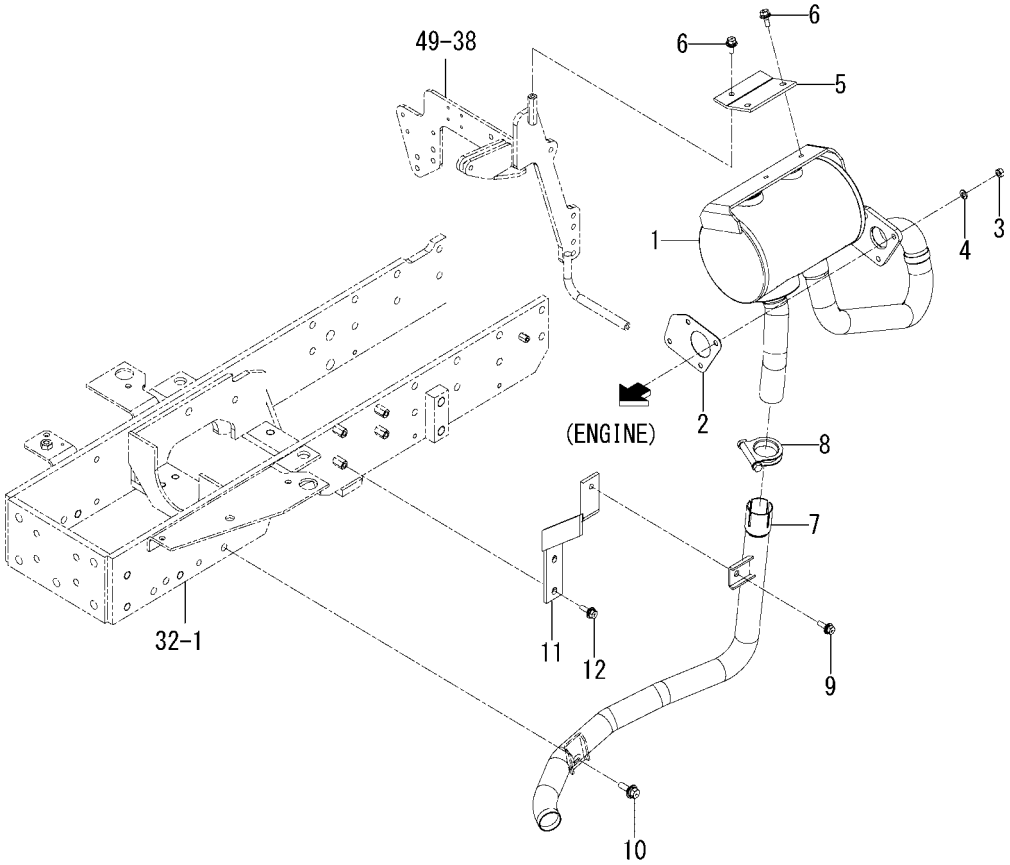

1834-103 -0100

KEY	PART CODE	DESCRIPTION	SPC	TYPE OF MODEL TLE3400 H3		ITC	COL	GRP	REMARKS
1	1834-103-210-10	MUFFLER COMP	*	1					
2	1813-103-006-00	GASKET	*	1					
3	V304-700-008-00	NUT,SUS/M8	*	4					
4	V401-700-008-00	WASHER,SP/M8	*	4					
5	1834-103-004-00	STAY/MUFFLER	*	1					
6	V211-660-802-00	BOLT,SP/M8X20/7T	*	3					
7	1834-103-240-00	PIPE COMP	*	1					
8	1834-103-001-00	CLAMP/PIPE/39-42	*	1					
9	V211-660-802-50	BOLT,SP/M8X25/7T	*	1					
10	V211-661-003-00	BOLT,SP/M10X30/7T	*	1					
11	1834-103-220-00	BRACKET COMP	*	1					
12	V211-660-802-50	BOLT,SP/M8X25/7T	*	2					

FIG. 3 CLEANER(AIR)SYSTEM

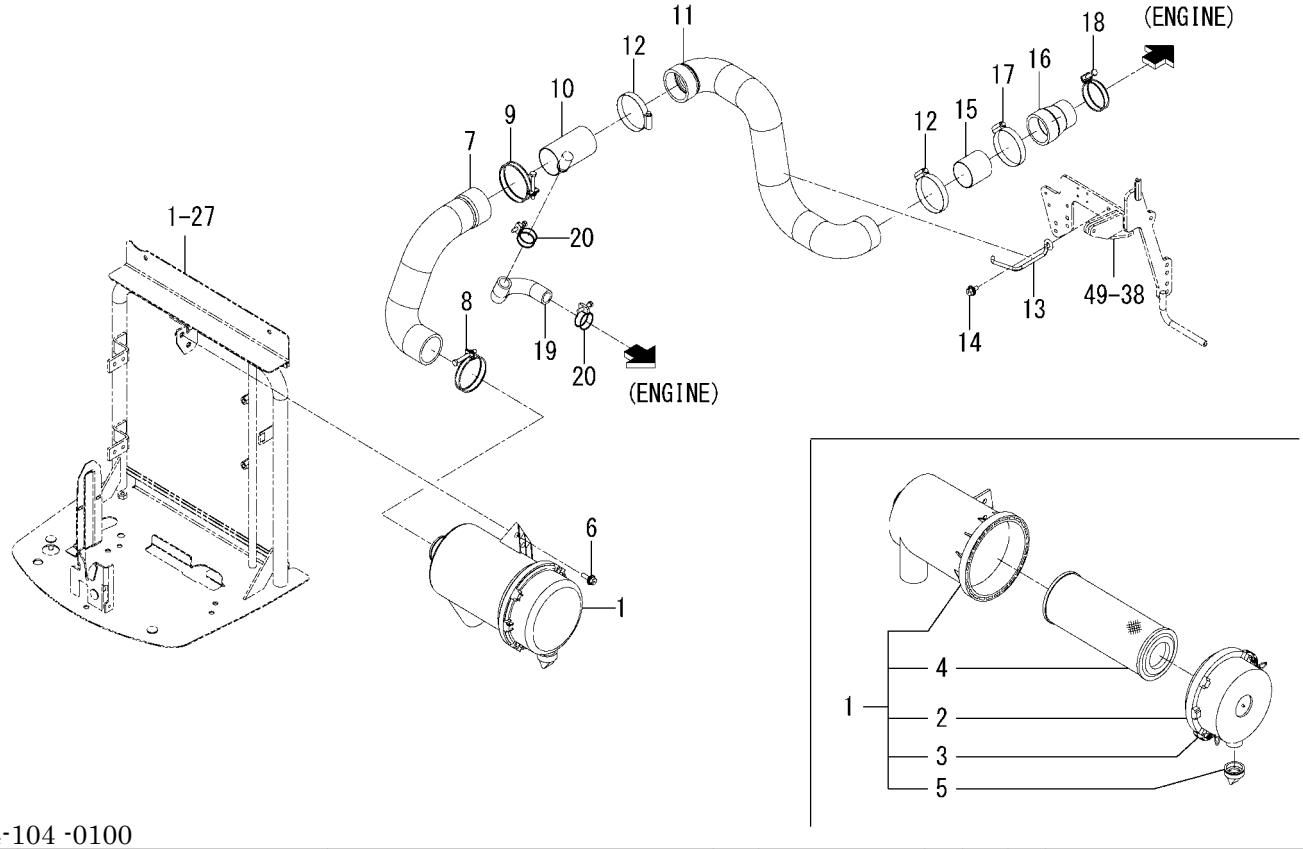

1834-104 -0100

KEY	PART CODE	DESCRIPTION	SPC	TYPE OF MODEL TLE3400 H3		ITC	COL	GRP	REMARKS
1	1650-104-200-10	CLEANER/AIR ASSY	*	1					
2	1650-104-210-00	COVER ASSY	*	1					
3	1650-104-201-00	CLIP	*	2					
4	1650-104-203-10	ELEMENT ASSY	*	1					
5	1544-104-205-00	VALVE	*	1					
6	1746-803-003-00	BOLT/SP	*	2					
7	1824-104-001-00	HOSE/CLEANER	*	1					
8	J061-254-065-00	CLAMP/WIRE/54-65	*	1					
9	J061-259-070-00	CLAMP/WIRE/59-70	*	1					
10	1834-104-220-10	PIPE COMP	*	1					
11	1824-104-002-00	HOSE/CLEANER	*	1					
12	J061-150-070-00	CLAMP/WORM/50-70	*	2					
13	1834-104-002-00	STAY/BAR/HOSE	*	1					
14	V211-660-802-50	BOLT,SP/M8X25/7T	*	1					
15	1824-104-005-20	PIPE	*	1					
16	1824-104-004-00	HOSE/CLEANER	*	1					
17	J061-150-070-00	CLAMP/WORM/50-70	*	1					
18	J061-245-053-00	CLAMP/WIRE/45-53	*	1					
19	1834-104-006-00	HOSE/RUBBER	*	1					
20	J061-226-030-00	CLAMP/WIRE/26-30	*	2					

FIG. 4 TANK(FUEL)SYSTEM

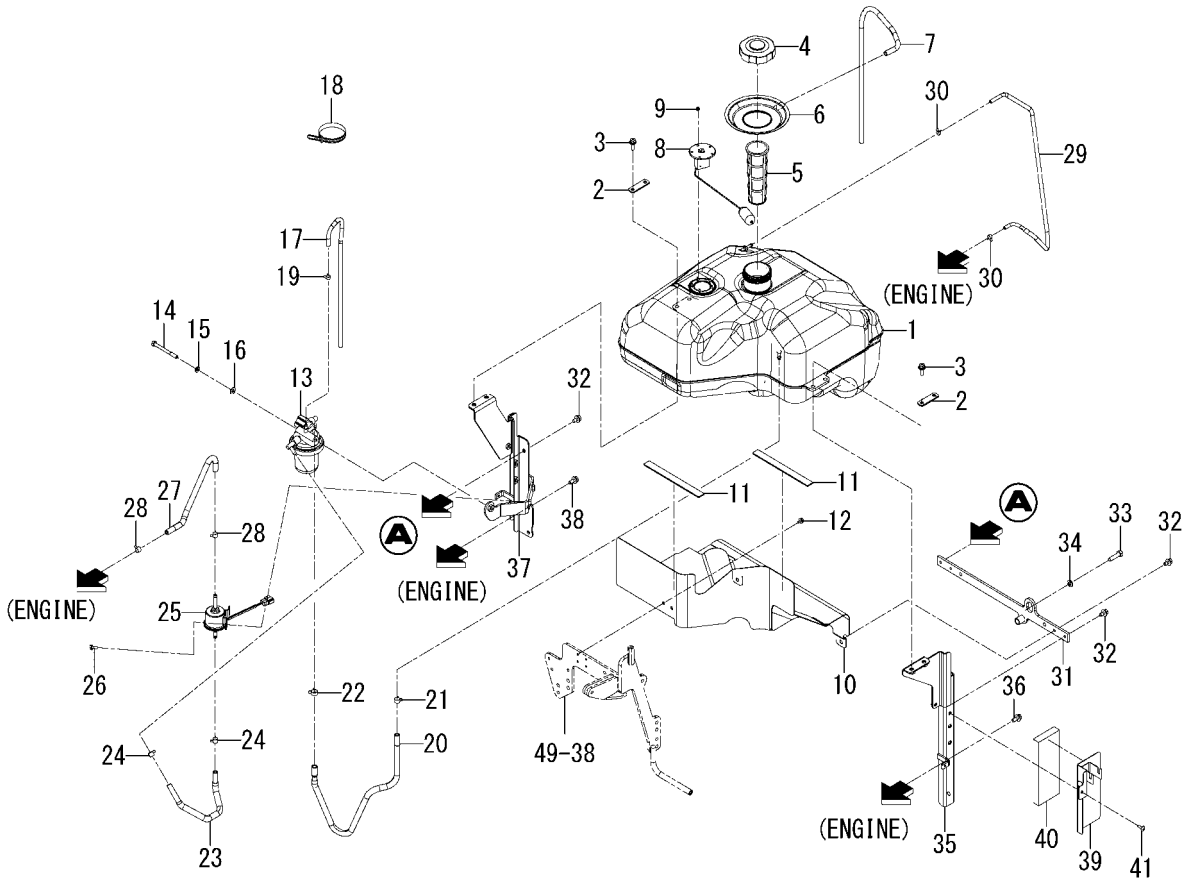

1834-111 -0100

KEY	PART CODE	DESCRIPTION	SPC	TYPE OF MODEL TLE3400 H3		ITC	COL	GRP	REMARKS
1	1824-111-001-00	TANK/FUEL	*	1					
2	1729-111-007-00	PLATE/IR/19X65	*	2					
3	V211-660-802-50	BOLT,SP/M8X25/7T	*	4					
4	1800-111-300-00	CAP/FUEL ASSY	*	1					
5	1807-111-001-00	FILTER/FUEL	*	1					
6	1834-111-005-00	CUP/FUEL	*	1					
7	P103-112-003-20	HOSE/700	*	1					
8	1813-111-220-00	GAUGE/FUEL ASSY	*	1					
9	V360-260-004-00	NUT/WASHER/M4	*	5					
10	1824-111-210-20	COVER/TANK COMP	*	1					
11	1836-111-006-00	INSULATOR/20X200	*	2					
12	V210-660-601-20	BOLT,SP/M6X12/7T	*	2					
13	1824-102-220-00	FILTER/FUEL ASSY	*	1					FIG 084
14	V201-260-808-00	BOLT/M8X80	*	1					
15	V401-160-008-00	WASHER,SP/M8	*	1					
16	V411-260-008-00	WASHER,PL/M8	*	1					
17	6909-913-834-00	PIPE	*	1					
18	1376-402-003-00	BAND,WIRE/140	*	1					
19	J062-087-093-00	CLIP/HOSE/8.7-9.3	*	1					
20	1805-111-260-00	HOSE/FUEL/630 ASSY	*	1					
21	J062-126-134-00	CLIP/HOSE/12.6-13.4	*	1					
22	J062-138-148-00	CLIP/HOSE/13.8-14.8	*	1					
23	1716-105-001-00	HOSE/08X13X300	*	1					
24	1650-111-034-00	CLIP/HOSE/11-13	*	2					
25	2221-111-200-10	PUMP/FUEL ASSY	*	1					
26	V210-660-601-60	BOLT,SP/M6X16/7T	*	2					
27	1716-105-001-00	HOSE/08X13X300	*	1					
28	1650-111-034-00	CLIP/HOSE/11-13	*	2					
29	1792-111-360-00	HOSE/FUEL/900 ASSY	*	1					
30	J062-087-093-00	CLIP/HOSE/8.7-9.3	*	2					

FIG. 4 TANK(FUEL)SYSTEM

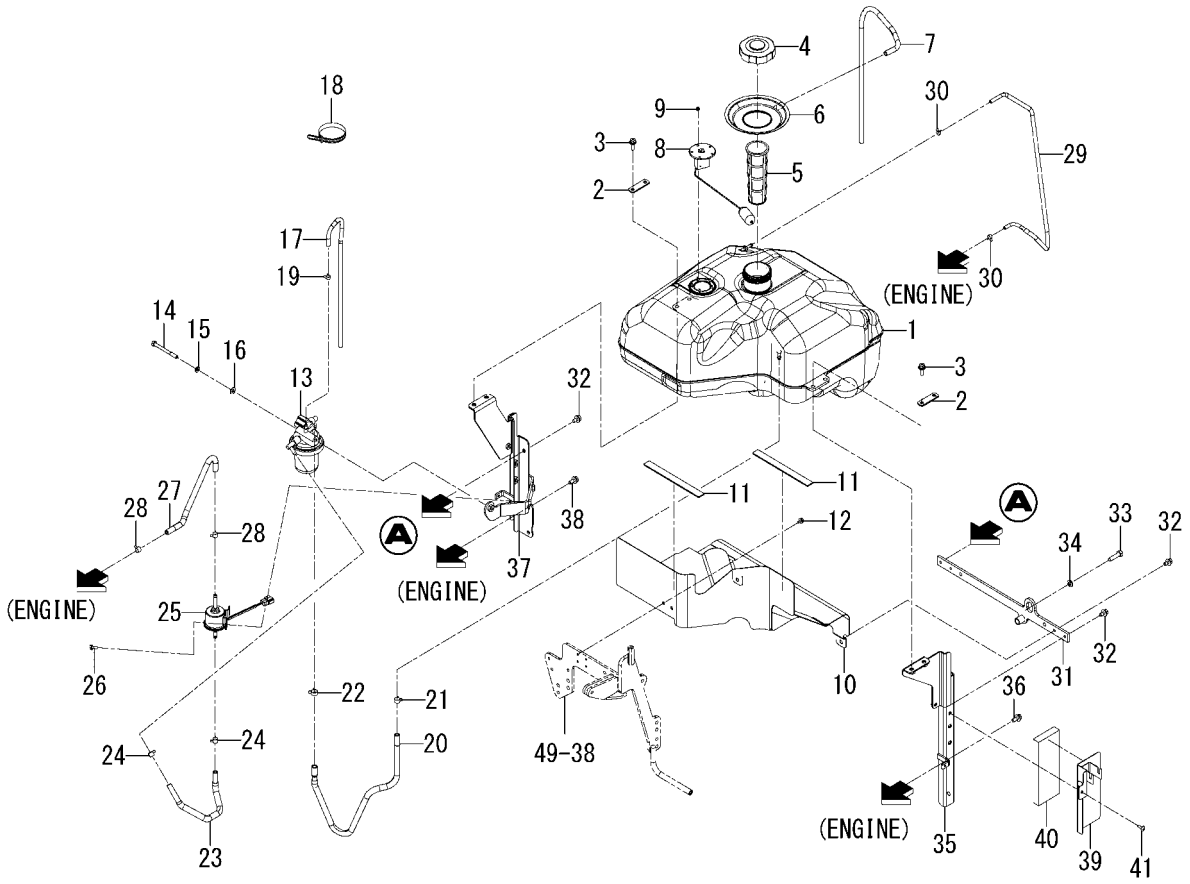

1834-111 -0100

KEY	PART CODE	DESCRIPTION	SPC	TYPE OF MODEL TLE3400 H3		ITC	COL	GRP	REMARKS
31	1834-111-270-00	BRACKET/FRAME COMP	*	1					
32	V211-660-801-60	BOLT,SP/M8X16/7T	*	4					
33	V203-361-003-50	BOLT/M10X35/7T,P1.25	*	1					
34	V401-160-010-00	WASHER,SP/M10	*	1					
35	1834-111-220-00	BRACKET/TANK/LH COMP	*	1					
36	V211-660-802-00	BOLT,SP/M8X20/7T	*	2					
37	1834-111-230-20	BRACKET/TANK/RH COMP	*	1					
38	V211-660-802-00	BOLT,SP/M8X20/7T	*	2					
39	1834-111-210-00	COVER/SIDE/LH COMP	*	1					
40	1834-111-010-00	INSULATOR	*	1					
41	1729-705-009-00	SCREW/TRUSS/M06X16	*	1					

FIG. 5 ACCELERATOR SYSTEM

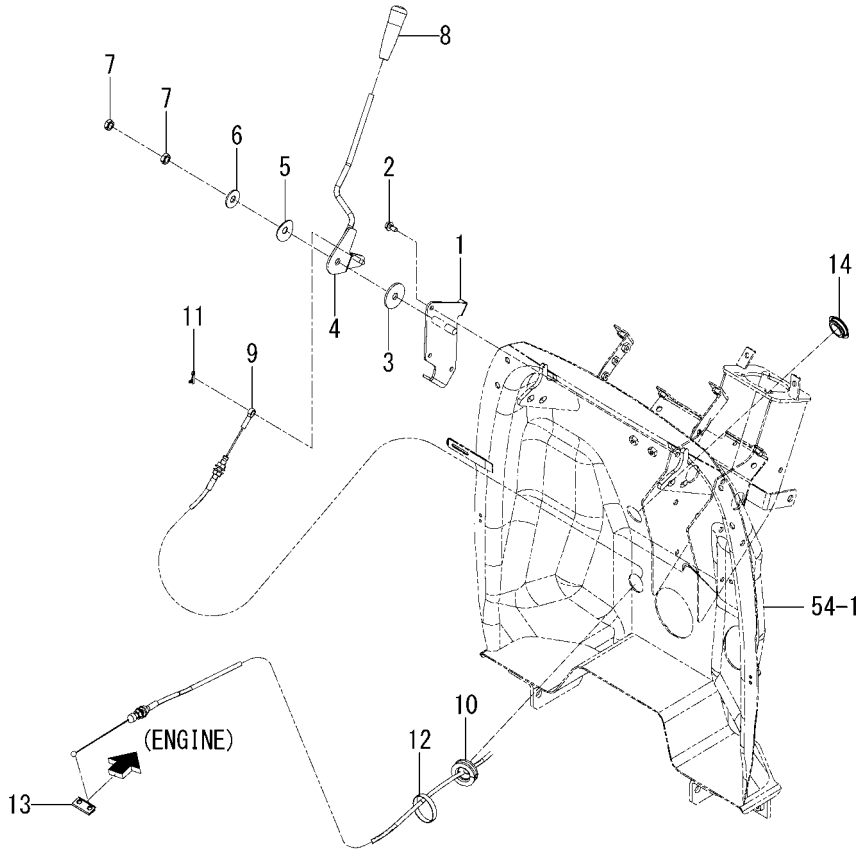

1834-116 -0100

KEY	PART CODE	DESCRIPTION	SPC	TYPE OF MODEL TLE3400 H3		ITC	COL	GRP	REMARKS
1	1834-116-210-00	BRACKET/LEVER COMP	*	1					
2	V230-360-601-20	FLANGEBOLT/M6X12	*	3					
3	1600-117-002-10	LINING/11X40X03	*	1					
4	1834-116-220-00	LEVER/THROTTLE COMP	*	1					
5	1593-117-003-10	SPRING,DISK	*	1					
6	2130-713-002-10	WASHER	*	1					
7	V305-260-010-00	NUT/M10	*	2					
8	1801-116-005-00	GRIP/THROTTLE	*	1					
9	1834-116-230-10	CABLE/ACCELERATOR	*	1					
10	1719-266-053-00	BOOT	*	1					
11	1836-117-001-00	PIN/SNAP/B	*	1					
12	1376-402-003-00	BAND,WIRE/140	*	1					
13	1675-116-001-00	HOLDER	*	1					
14	1560-630-029-00	CAP/30	*	1					

FIG. 6 CASE(TRANSMISSION/FRONT)SYSTEM

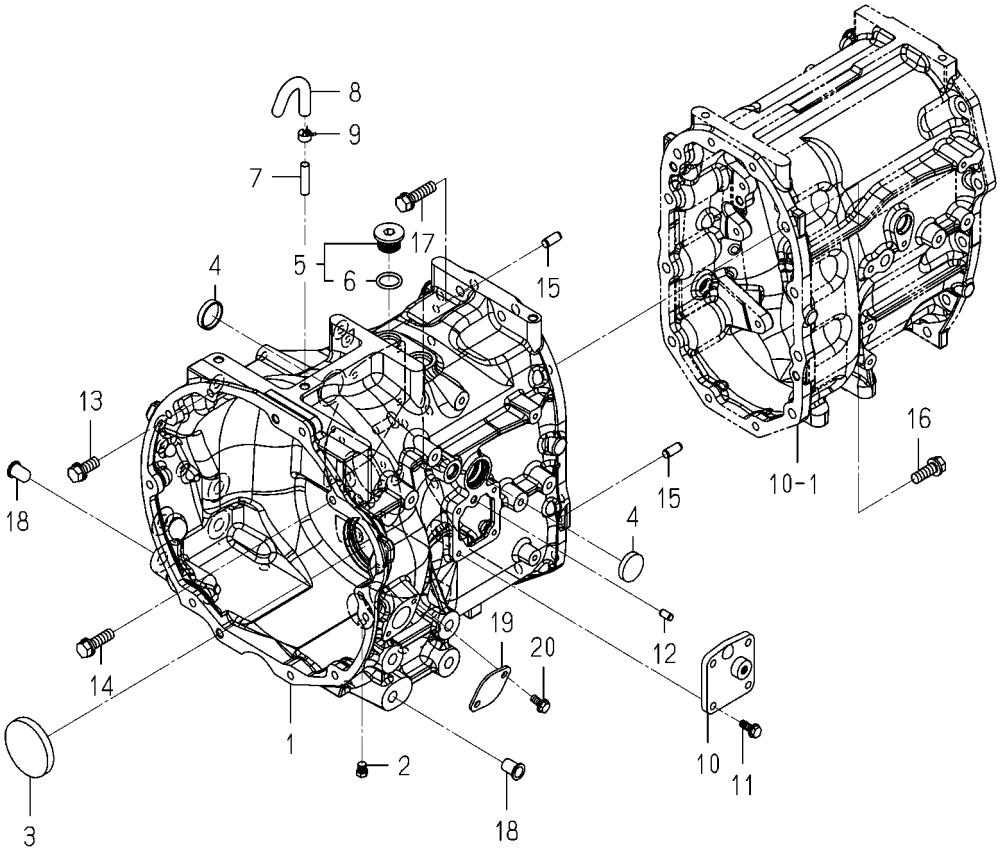

1834-201 -0100

KEY	PART CODE	DESCRIPTION	SPC	TYPE OF MODEL TLE3400 H3		ITC	COL	GRP	REMARKS
1	1834-201-051-10	CASE/TRANSMISSION/F/	*	1					
2	V782-160-000-2B	PLUG/SCREW/SEAL	*	1					
3	1425-433-018-00	CAP,BLANK/72	*	1					
4	3737-211-007-00	CAP/35	*	2					
5	1743-211-510-00	PLUG/G3/4 ASSY	*	2					
6	V720-113-502-40	O-RING/1B,P24	*	2					
7	1544-120-008-10	PIPE,BREATHER	*	1					
8	1824-501-007-00	HOSE/BREATHER	*	1					
9	J062-138-148-00	CLIP/HOSE/13.8-14.8	*	1					
10	1805-201-051-00	COVER/RELIEF/HST	*	1					
11	V231-360-802-00	FLANGEBOLT/M8X20	*	4					
12	V523-100-801-60	PIN,ST,B/8X16	*	1					
13	1725-201-002-00	BOLT/S	*	8					
14	6901-931-240-00	BOLT,SEMS/M12X40/7T	*	2					
15	V523-101-002-40	PIN,ST,B/10X24	*	2					
16	6901-931-235-00	BOLT,SEMS/M12X35/7T	*	10					
17	6901-931-245-00	BOLT,SEMS/M12X45/7T	*	2					
18	1824-201-003-00	CAP/BLANK/M16	*	8					
19	1813-201-001-00	PLATE	*	1					
20	V231-360-801-60	FLANGEBOLT/M8X16	*	2					

FIG. 7 HST SYSTEM

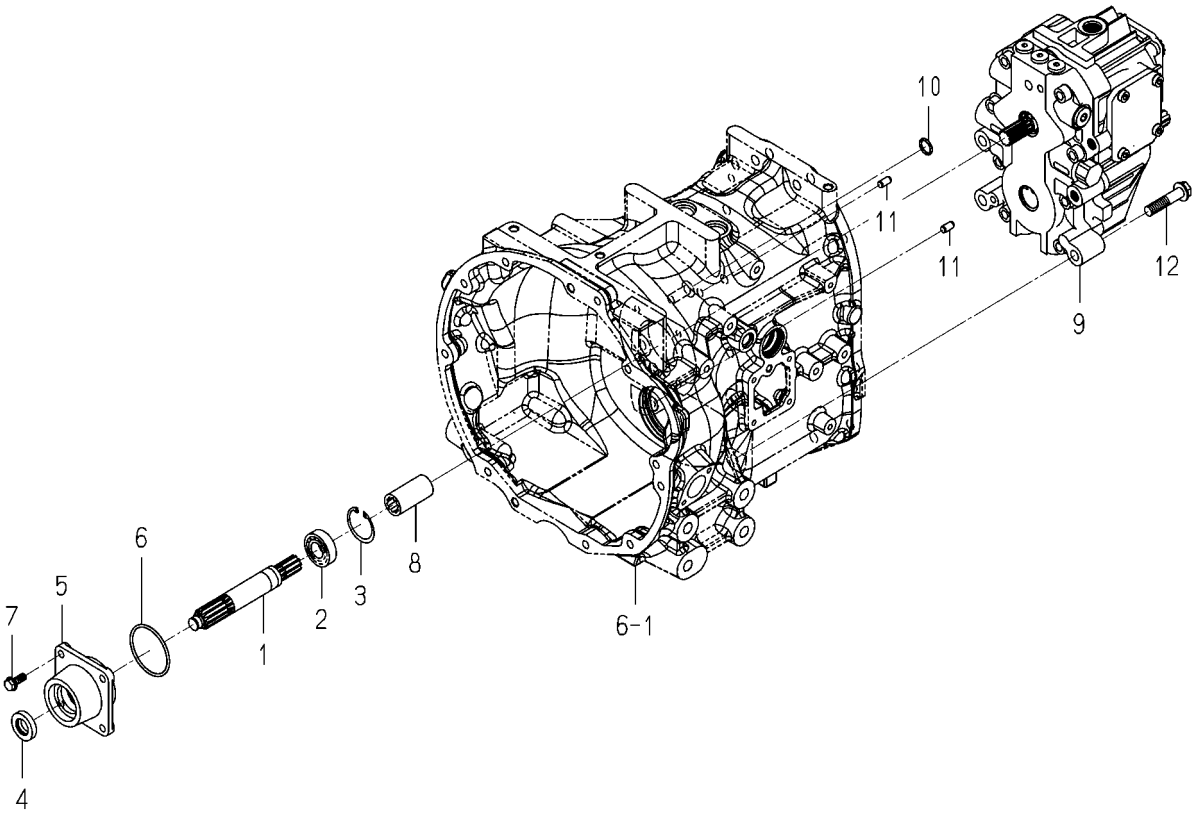

1834-203A-0100

KEY	PART CODE	DESCRIPTION	SPC	TYPE OF MODEL TLE3400 H3		ITC	COL	GRP	REMARKS
1	1999-203-021-00	SHAFT/INPUT/E4	*	1					
2	1805-202-001-00	BEARING/BALL/6004	*	1					
3	V705-140-042-00	RING,SNAP/42 C	*	1					
4	V744-125-470-80	SEAL,OIL/TC25478	*	1					
5	1834-203-052-00	METAL/INPUT/E4	*	1					
6	V721-103-106-00	O-RING/1A,G60	*	1					
7	V231-360-802-00	FLANGEBOLT/M8X20	*	4					
8	1673-431-001-10	COUPRING/16X27X55	*	1					
9	K500-007-000-00	HST/TLE/26 ASSY	*	1					FIG 079
10	V720-102-401-60	O-RING/1A,P16	*	1					
11	V523-100-801-60	PIN,ST,B/8X16	*	2					
12	V231-361-205-50	FLANGEBOLT/M12X55	*	4					

FIG. 8 GEAR(PTO/INPUT)SYSTEM

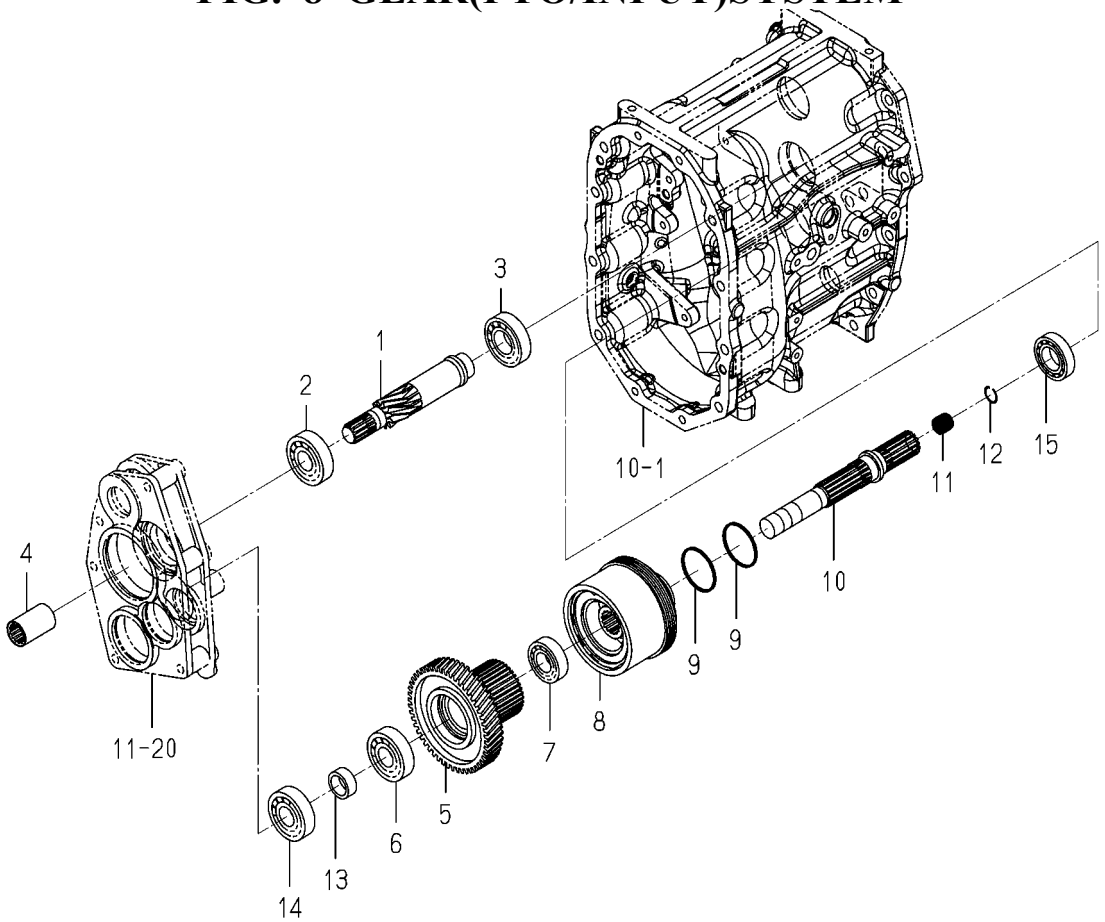

1834-209 -0100

KEY	PART CODE	DESCRIPTION	SPC	TYPE OF MODEL TLE3400 H3		ITC	COL	GRP	REMARKS
1	1999-209-027-00	GEAR/HELICAL/11/E4	*	1					
2	3824-701-011-00	BEARING/BALL	*	1					
3	1805-202-011-00	BEARING/BALL/6206	*	1					
4	1650-218-014-00	COUPLING/21X32X50	*	1					
5	1821-209-007-00	GEAR/HERICAL/50	*	1					
6	V600-110-630-50	BEARING,RB/6305	*	1					
7	1729-202-002-00	BEARING/BALL	*	1					
8	1821-209-210-00	CLUTCH/PTO ASSY	*	1					
9	1805-209-011-00	RING/SEAL/55X03	*	2					
10	1999-209-028-00	SHAFT/CLUTCH/PTO/E4	*	1					
11	1717-205-004-00	BEARING/NEEDLE	*	1					
12	1703-203-005-00	RING/SNAP	*	1					
13	1834-209-053-00	COLLAR/26X34X14	*	1					
14	V600-110-630-50	BEARING,RB/6305	*	1					
15	1805-202-003-00	BEARING/BALL/6006	*	1					

FIG. 9 SHAFT(DRIVE/PTO)SYSTEM

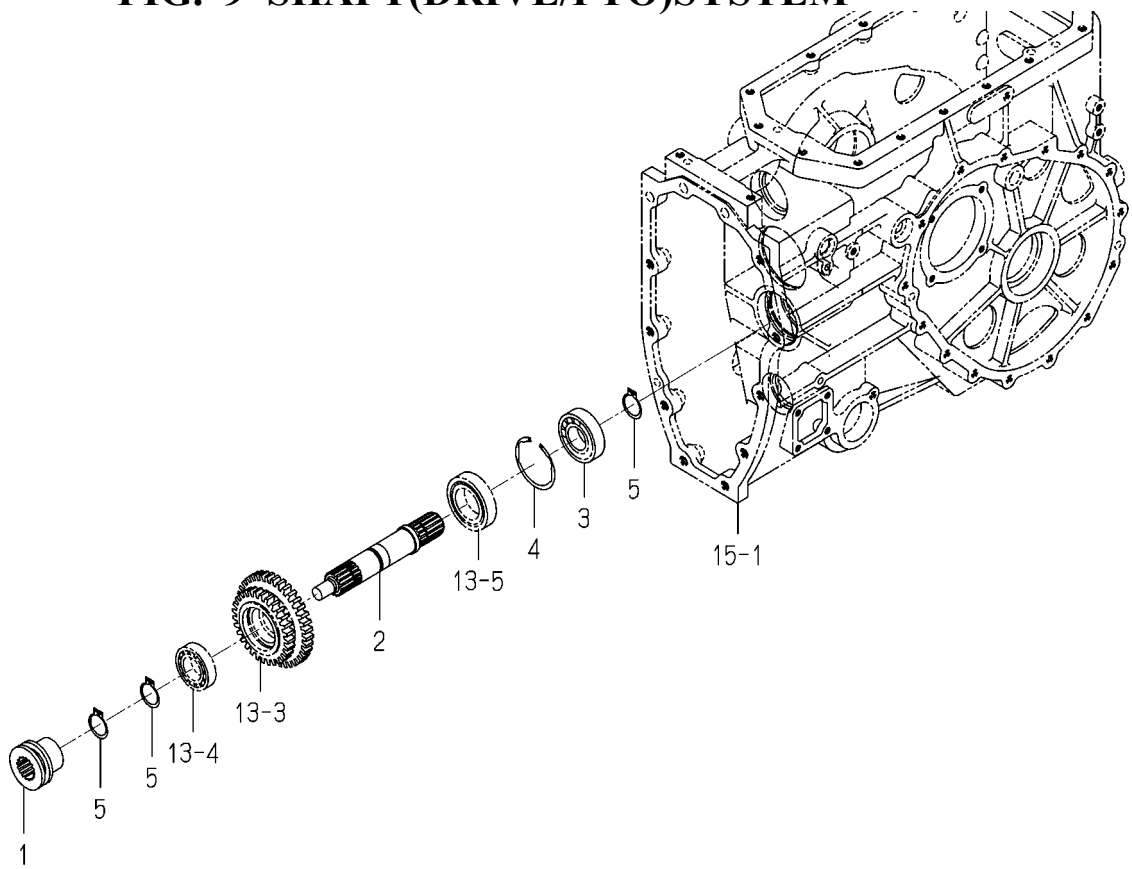

1834-210 -0100

KEY	PART CODE	DESCRIPTION	SPC	TYPE OF MODEL TLE3400 H3		ITC	COL	GRP	REMARKS
1	1999-210-002-00	COUPLING/30X40X43	*	1					
2	1999-210-003-00	SHAFT/DRIVE/PTO/E4	*	1					
3	1805-202-011-00	BEARING/BALL/6206	*	1					
4	V707-140-062-00	RING,SNAP/R62	*	1					
5	V704-140-030-00	RING,SNAP/30 C	*	3					

FIG. 10 CASE(TRANSMISSION/MID)SYSTEM

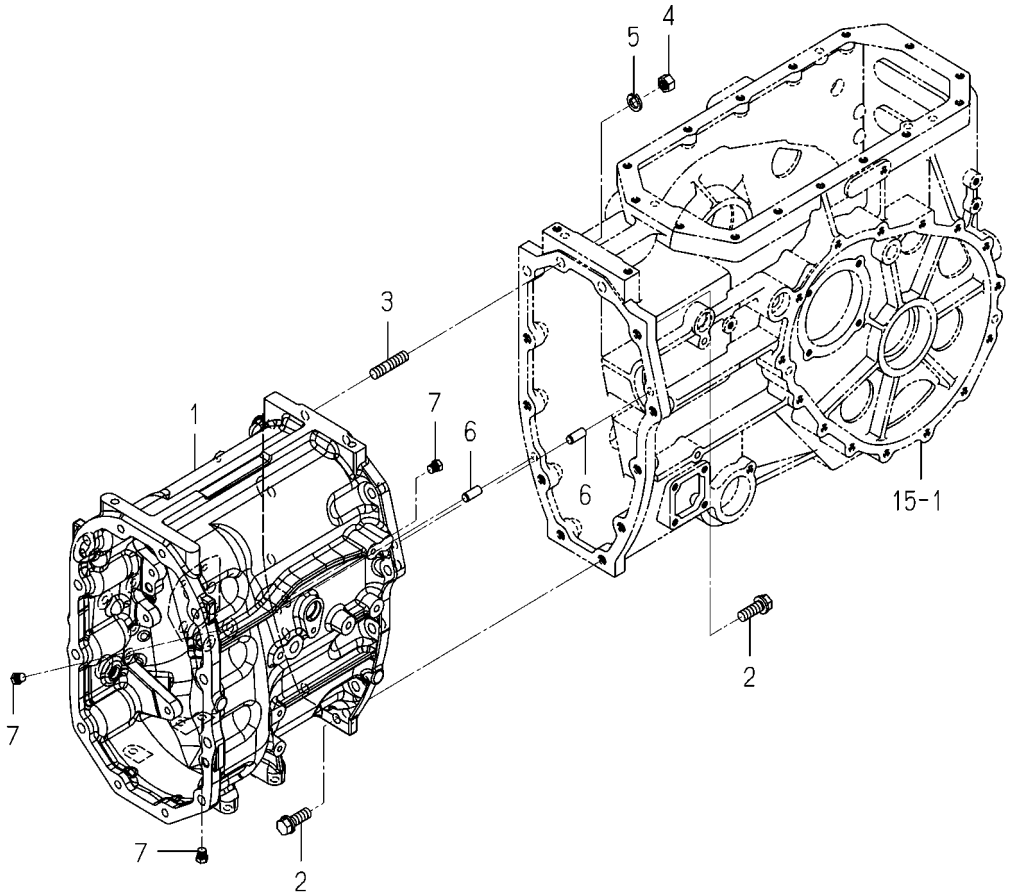

1834-211 -0100

KEY	PART CODE	DESCRIPTION	SPC	TYPE OF MODEL TLE3400 H3		ITC	COL	GRP	REMARKS
1	1834-211-051-10	CASE/TRANSMISSION/M/	*	1					
2	6901-931-235-00	BOLT,SEMS/M12X35/7T	*	10					
3	V251-341-205-00	STUD/M12X50/7T	*	2					
4	V304-460-012-00	NUT/M12/7T	*	2					
5	V402-160-012-00	WASHER,SP/M12	*	2					
6	V523-101-002-40	PIN,ST,B/10X24	*	2					
7	V782-160-000-2T	PLUG/SCREW/SEAL	*	3					

FIG. 11 GEAR(MAIN)SYSTEM

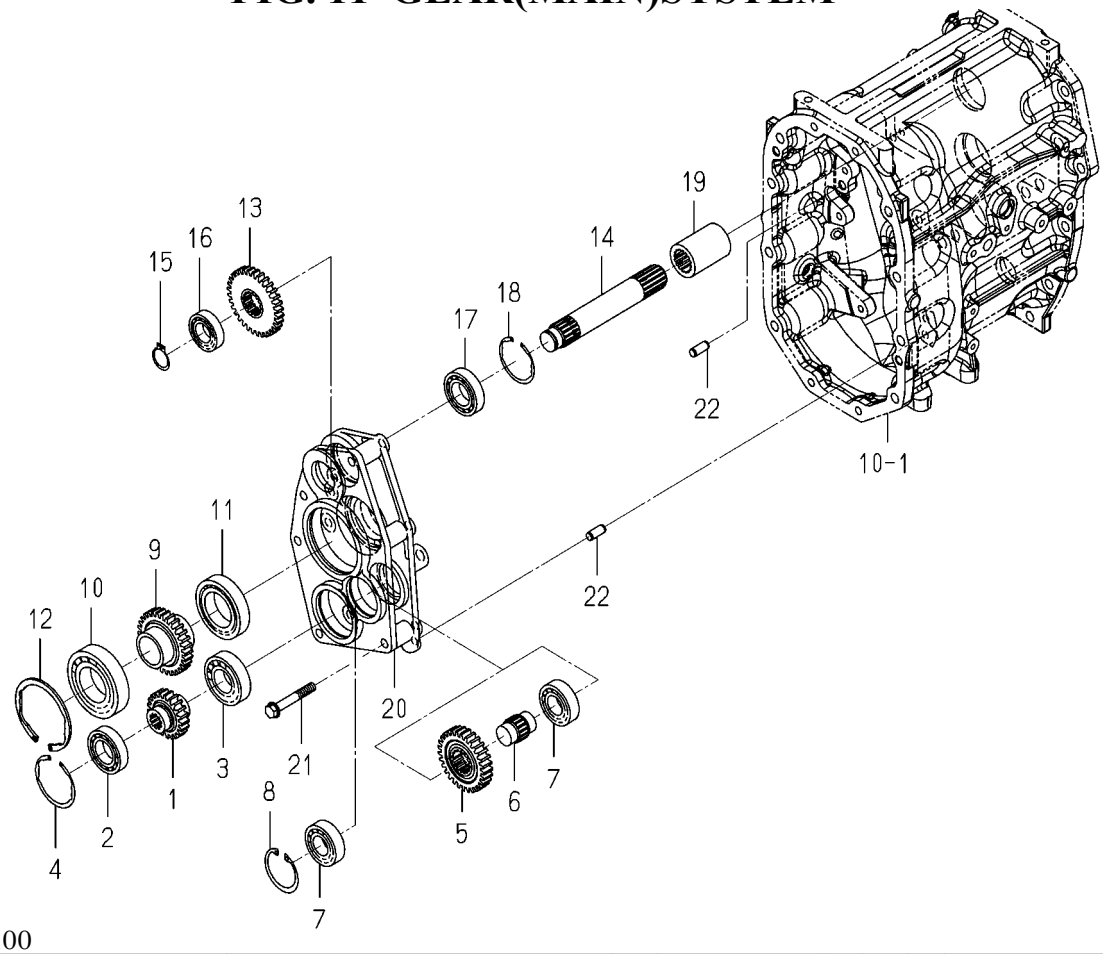

1834-214 -0100

KEY	PART CODE	DESCRIPTION	SPC	TYPE OF MODEL TLE3400 H3		ITC	COL	GRP	REMARKS
1	1821-214-051-00	GEAR/SPUR/21	*	1					
2	1805-202-011-00	BEARING/BALL/6206	*	1					
3	1805-202-003-00	BEARING/BALL/6006	*	1					
4	V707-140-062-00	RING,SNAP/R62	*	1					
5	1821-214-052-00	GEAR/SPUR/29	*	1					
6	1821-214-053-00	SHAFT/IDLER	*	1					
7	1725-216-105-00	BEARING/6205/KBC	*	2					
8	V705-140-052-00	RING,SNAP/52 C	*	1					
9	1821-214-054-00	GEAR/SPUR/30	*	1					
10	1805-202-024-00	BEARING/BALL/6209C	*	1					
11	1725-304-101-00	BEARING/6009/KBC	*	1					
12	V707-140-085-00	RING,SNAP/R85	*	1					
13	1821-214-055-00	GEAR/SPUR/32	*	1					
14	1999-214-036-00	SHAFT/E4	*	1					
15	V704-140-025-00	RING,SNAP/25 C	*	1					
16	1729-202-002-00	BEARING/BALL	*	1					
17	1805-202-003-00	BEARING/BALL/6006	*	1					
18	V707-140-055-00	RING,SNAP/R55	*	1					
19	1824-219-004-00	COUPLING/30X42X60	*	1					
20	1805-214-057-10	METAL/MAIN	*	1					
21	V231-361-006-50	FLANGEBOLT/M10X65	*	6					
22	V523-101-002-40	PIN,ST,B/10X24	*	2					

FIG. 12 GEAR(SUB)SYSTEM

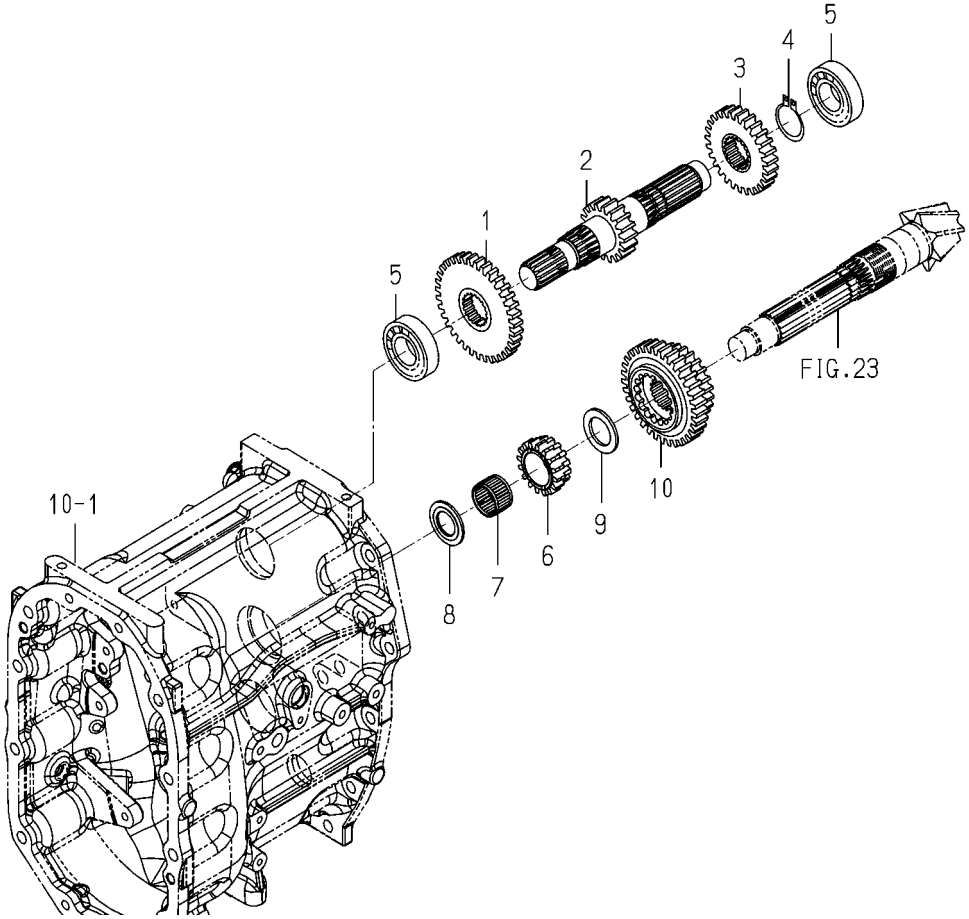

1834-216 -0100

KEY	PART CODE	DESCRIPTION	SPC	TYPE OF MODEL TLE3400 H3		ITC	COL	GRP	REMARKS
1	1821-216-001-00	GEAR/SPUR/35	*	1					
2	1821-216-052-00	GEAR/SPUR/18	*	1					
3	1999-216-026-00	GEAR/SPUR/27/E4	*	1					
4	V704-140-035-00	RING,SNAP/35 C	*	1					
5	1805-202-011-00	BEARING/BALL/6206	*	2					
6	1999-216-024-00	GEAR/SPUR/16/E4	*	1					
7	1746-214-001-00	BEARING/NEEDLE	*	1					
8	1560-216-008-30	WASHER/25X46X3	*	1					
9	1564-216-004-10	WASHER/30X46X03	*	1					
10	1834-216-052-00	GEAR/SPUR/33-24/E4	*	1					

FIG. 13 GEAR(4WD)SYSTEM

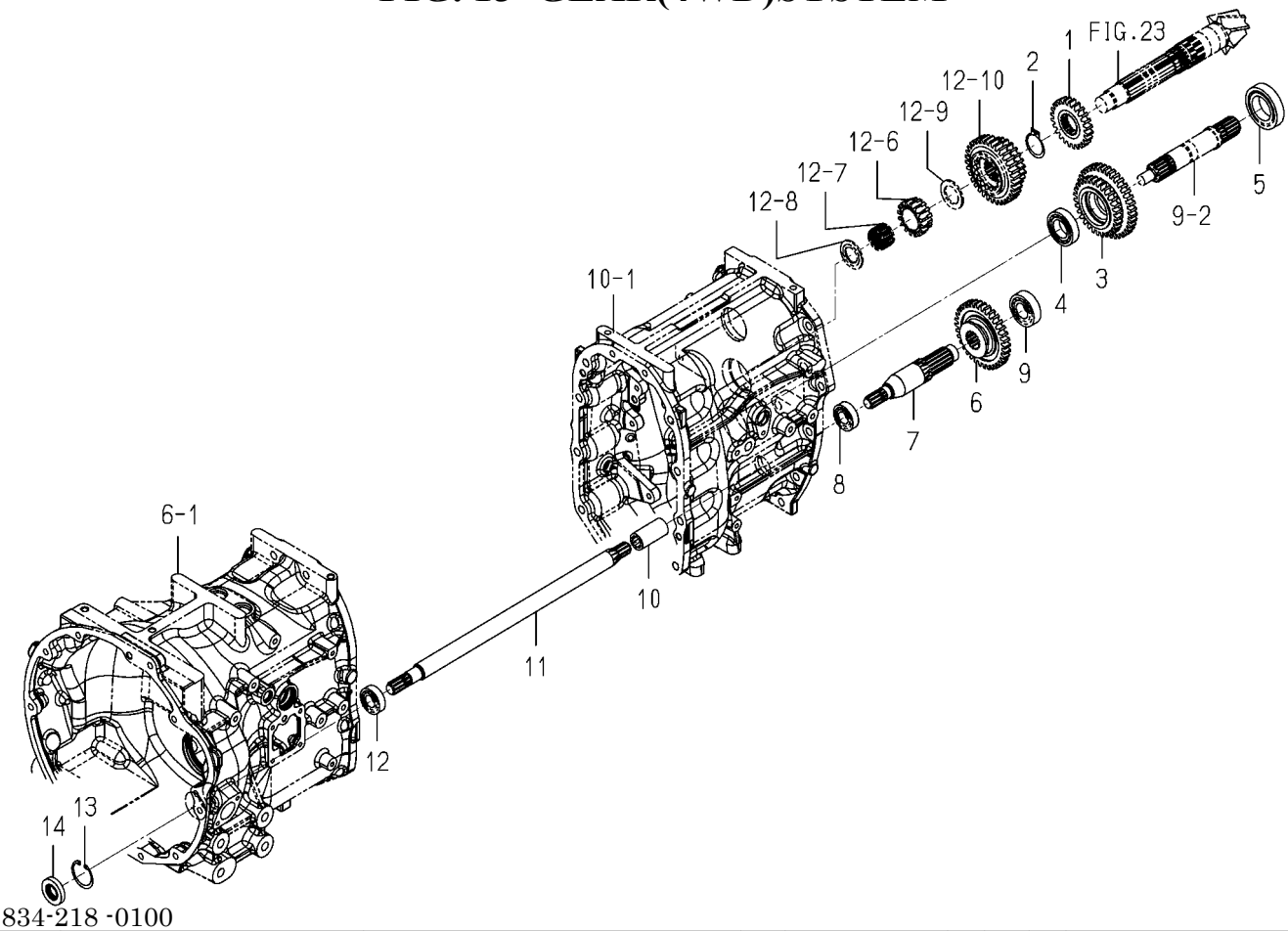

1834-218 -0100

KEY	PART CODE	DESCRIPTION	SPC	TYPE OF MODEL TLE3400 H3		ITC	COL	GRP	REMARKS
1	1805-218-001-00	GEAR/SPUR/24	*	1					
2	V704-140-035-00	RING,SNAP/35 C	*	1					
3	1805-218-002-00	GEAR/SPUR/29-37	*	1					
4	1805-202-003-00	BEARING/BALL/6006	*	1					
5	1805-202-021-00	BEARING/BALL/6008	*	1					
6	1805-218-003-00	GEAR/SPUR/34	*	1					
7	1821-218-051-00	SHAFT/4WD/CHANGE	*	1					
8	1805-202-001-00	BEARING/BALL/6004	*	1					
9	1725-216-105-00	BEARING/6205/KBC	*	1					
10	1821-431-002-00	COUPLING/20X27X52	*	1					
11	1834-218-051-00	SHAFT/4WD/E4	*	1					
12	1805-202-001-00	BEARING/BALL/6004	*	1					
13	V705-140-042-00	RING,SNAP/42 C	*	1					
14	V744-120-420-80	SEAL,OIL/TC20428	*	1					

FIG. 14 GEAR(PTO/REAR)SYSTEM

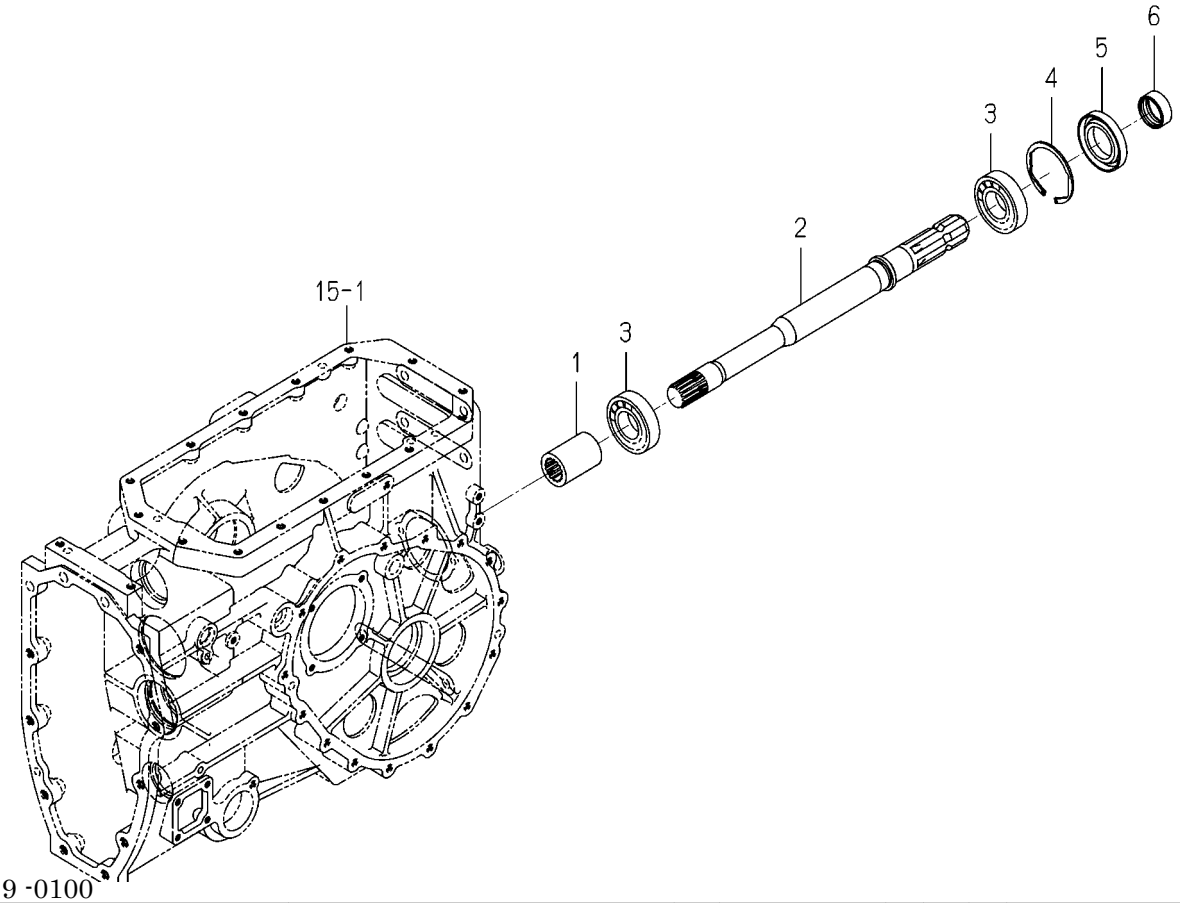

1834-219 -0100

KEY	PART CODE	DESCRIPTION	SPC	TYPE OF MODEL TLE3400 H3		ITC	COL	GRP	REMARKS
1	1824-219-004-00	COUPLING/30X42X60	*	1					
2	1824-219-002-10	SHAFT/PTO	*	1					
3	1805-202-012-00	BEARING/BALL/6207	*	2					
4	V707-140-072-00	RING,SNAP/R72	*	1					
5	1632-273-201-00	SEAL/OIL	*	1					
6	1426-258-202-00	SLEEVE/SI354116	*	1					

FIG. 15 CASE(TRANSMISSION/REAR)SYSTEM

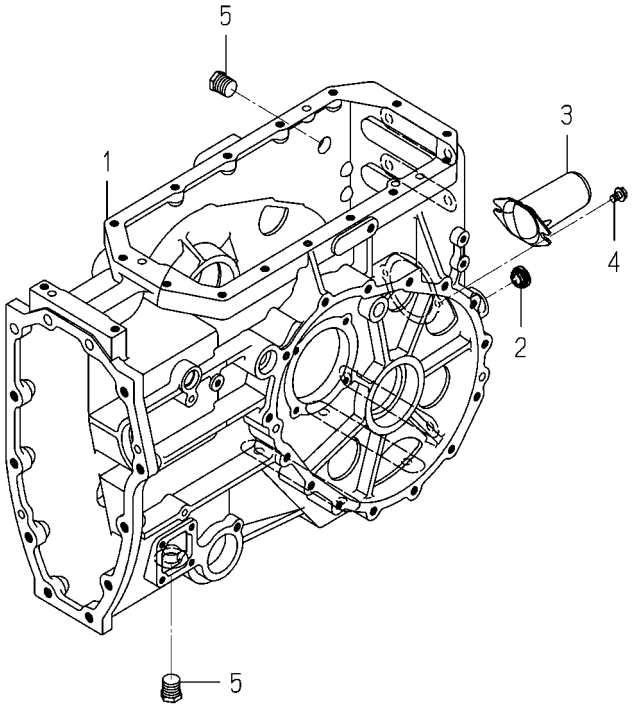

1834-241 -0100

KEY	PART CODE	DESCRIPTION	SPC	TYPE OF MODEL TLE3400 H3		ITC	COL	GRP	REMARKS
1	1824-241-001-20	CASE/TRANSMISSION/RE	*	1					
2	1690-241-003-00	GAUGE/LEBEL	*	1					
3	1836-201-001-00	CAP,PTO SHAFT	*	1					
4	V231-360-801-20	FLANGEBOLT/M8X12	*	2					
5	V782-160-000-8B	PLUG/SCREW/SEAL	*	2					

FIG. 16 METAL(TRUNNION)SYSTEM

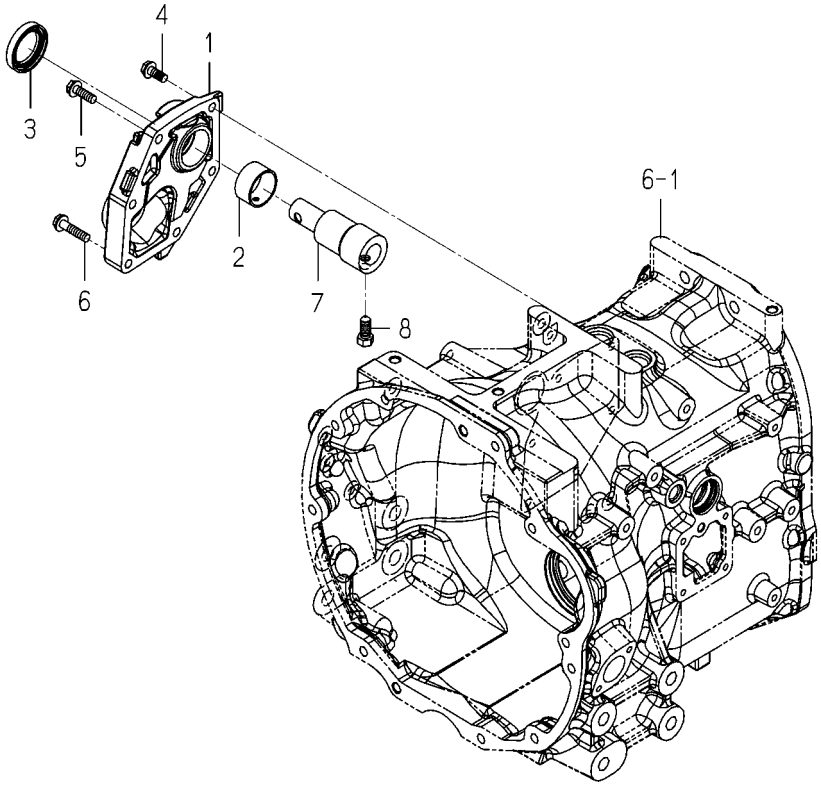

1834-253A-0100

KEY	PART CODE	DESCRIPTION	SPC	TYPE OF MODEL TLE3400 H3		ITC	COL	GRP	REMARKS
1	1813-253-051-00	METAL/TRUNNION	*	1					
2	1646-226-512-00	BUSH/35X39X20	*	1					
3	V744-135-500-80	SEAL,OIL/TC35508	*	1					
4	V231-360-802-00	FLANGEBOLT/M8X20	*	2					
5	V231-360-802-50	FLANGEBOLT/M8X25	*	1					
6	V231-360-803-50	FLANGEBOLT/M8X35	*	3					
7	1805-253-051-00	SHAFT/TRUNNION	*	1					
8	1646-226-053-00	BOLT/SM/M10X23	*	1					

FIG. 17 SHIFT(SUB)SYSTEM

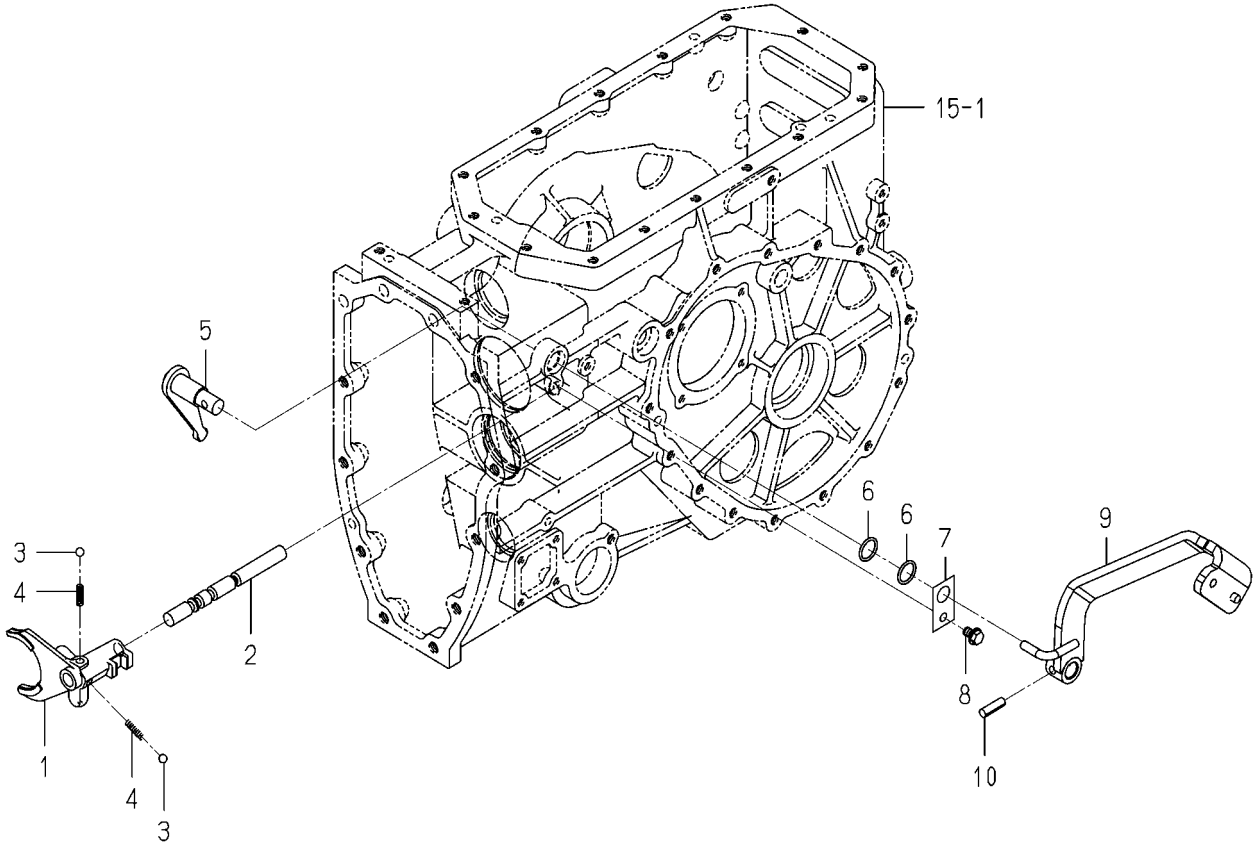

1834-256 -0100

KEY	PART CODE	DESCRIPTION	SPC	TYPE OF MODEL TLE3400 H3		ITC	COL	GRP	REMARKS
1	1834-256-055-00	FORK/SHIFT/SUB/H	*	1					
2	1805-256-052-00	STAY/SHIFT/SUB	*	1					
3	V682-200-001-00	BALL,STEEL	*	2					
4	1650-253-003-00	SPRING/HC022	*	2					
5	1805-256-210-00	ARM/SHIFT/SUB COMP	*	1					
6	V720-102-402-00	O-RING/1A,P20	*	2					
7	1805-256-003-00	PLATE/I/30X52	*	1			7F		
8	V231-360-801-20	FLANGEBOLT/M8X12	*	1					
9	1834-256-220-00	ARM/SUB COMP	*	1					
10	V580-140-802-80	PIN,SPRING/8X28 W	*	1					

FIG. 18 SHIFT(4WD)SYSTEM

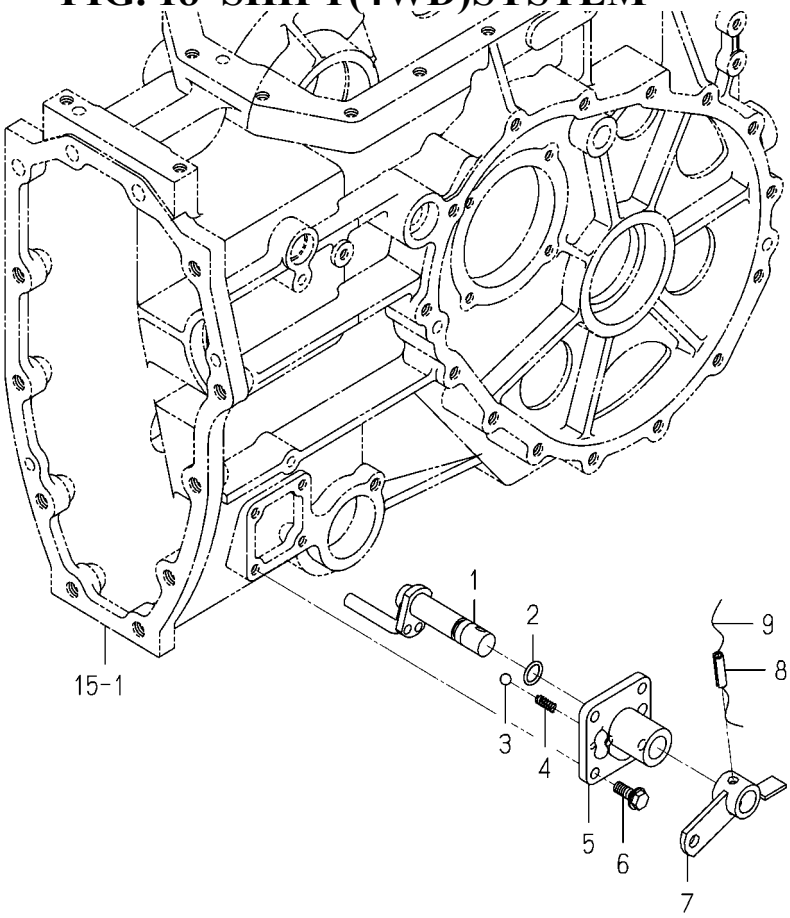

1834-257A-0100

KEY	PART CODE	DESCRIPTION	SPC	TYPE OF MODEL TLE3400 H3		ITC	COL	GRP	REMARKS
1	1805-257-210-00	ARM/SHIFT/4WD COMP	*	1					
2	V720-102-401-40	O-RING/1A,P14	*	1					
3	V682-200-001-00	BALL,STEEL	*	1					
4	1302-225-003-00	SPRING,SHIFTER	*	1					
5	1824-257-001-00	METAL/SHIFT	*	1					
6	V231-360-802-00	FLANGEBOLT/M8X20	*	4					
7	1813-257-610-00	ARM/PLATE/4WD COMP	*	1					
8	V580-140-802-80	PIN,SPRING/8X28 W	*	1					
9		WIRE	*	1					

FIG. 19 SHIFT(PTO)SYSTEM

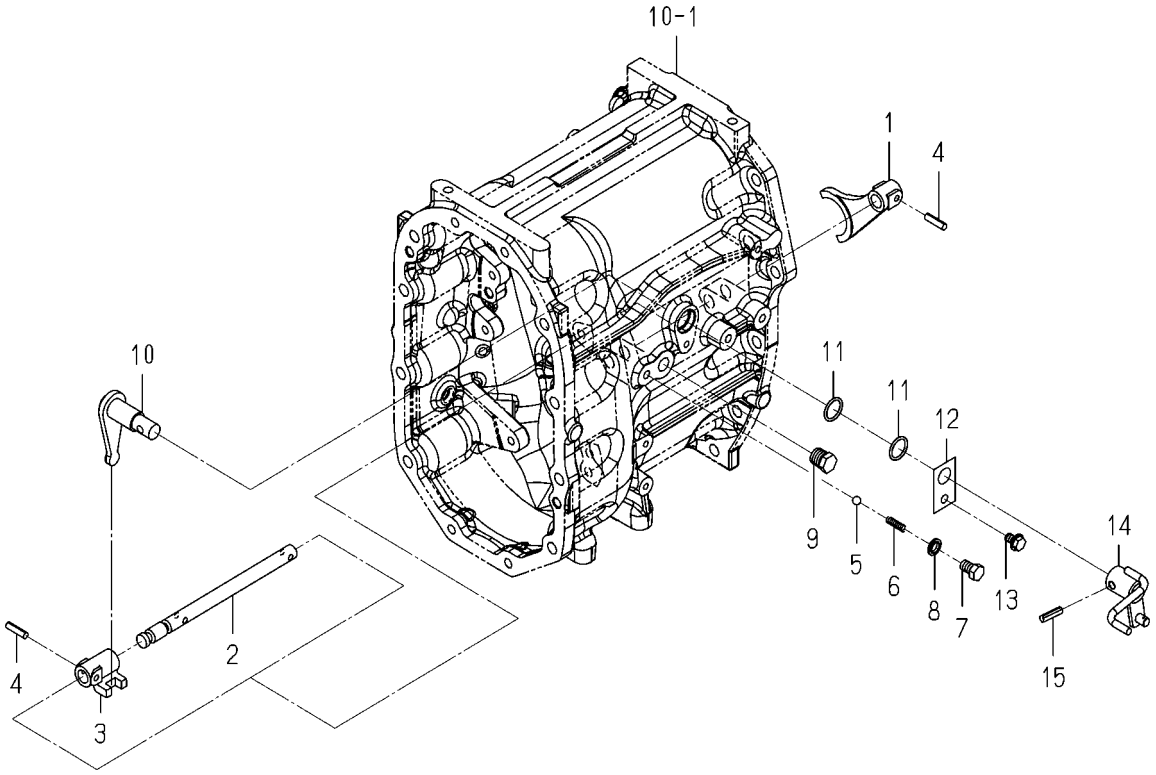

1834-259A-0100

KEY	PART CODE	DESCRIPTION	SPC	TYPE OF MODEL TLE3400 H3		ITC	COL	GRP	REMARKS
1	1834-259-051-00	FORK/SHIFT/PTO/E4	*	1					
2	1834-259-052-00	STAY/SHIFT/PTO/E4	*	1					
3	1834-259-053-00	SHIFTER/PTO/E4	*	1					
4	V580-140-602-50	PIN,SPRING/6X25 W	*	2					
5	V682-200-001-00	BALL,STEEL	*	1					
6	1650-253-003-00	SPRING/HC022	*	1					
7	1734-256-002-00	BOLT/SM/M10X15	*	1					
8	1646-233-033-00	SEAL/WASHER/10	*	1					
9	V782-160-000-6B	PLUG/SCREW/SEAL	*	1					
10	1805-259-210-00	ARM/SHIFT/PTO COMP	*	1					
11	V720-102-402-00	O-RING/1A,P20	*	2					
12	1805-256-003-00	PLATE/I/30X52	*	1			7F		
13	V231-360-801-20	FLANGEBOLT/M8X12	*	1					
14	1834-259-500-00	ARM/PTO/E4 COMP	*	1					
15	V580-140-802-80	PIN,SPRING/8X28 W	*	1					

FIG. 20 LEVER(SUB)SYSTEM

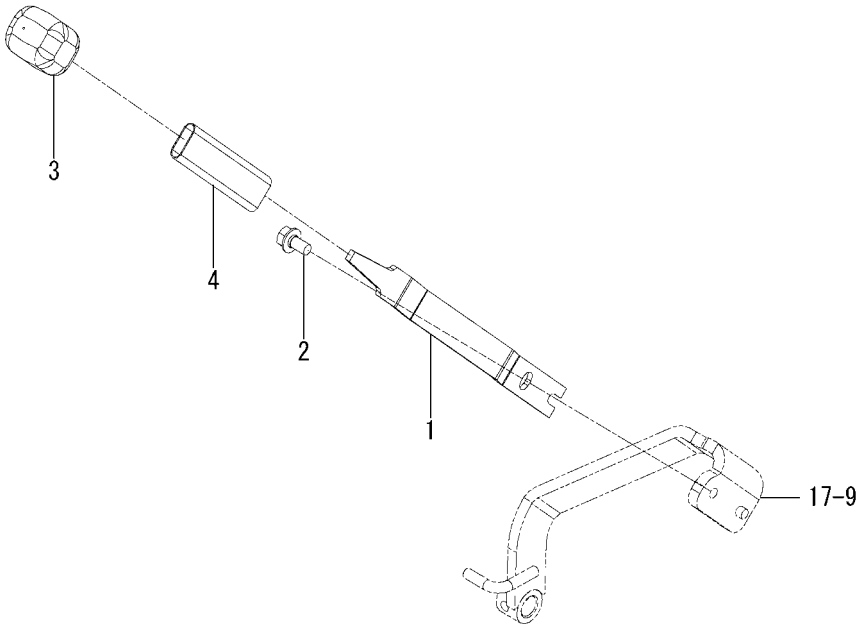

1834-266 -0100

KEY	PART CODE	DESCRIPTION	SPC	TYPE OF MODEL TLE3400 H3		ITC	COL	GRP	REMARKS
1	1834-266-001-00	LEVER/SUB	*	1					
2	V211-661-002-00	BOLT,SP/M10X20/7T	*	1					
3	1703-261-002-00	GRIP/MAIN	*	1					
4	1725-266-001-00	INSULATOR/120	*	1					

FIG. 21 LEVER(4WD)SYSTEM

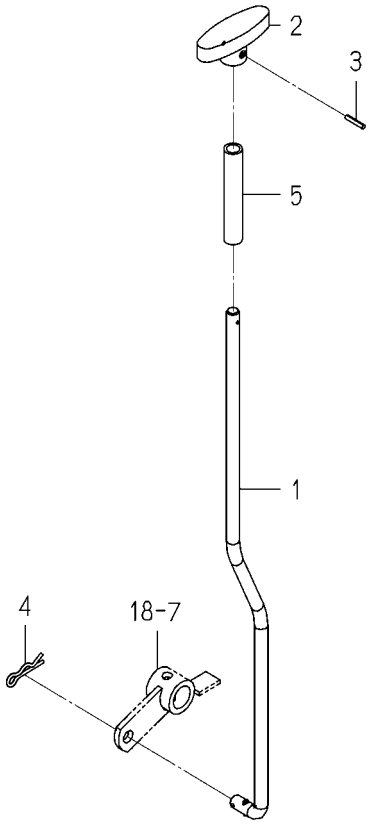

1834-267 -0100

KEY	PART CODE	DESCRIPTION	SPC	TYPE OF MODEL TLE3400 H3		ITC	COL	GRP	REMARKS
1	1834-267-001-00	LEVER/4WD	*	1					
2	1773-267-002-00	GRIP/4WD	*	1					
3	V580-140-301-80	PIN,SPRING/3X18 W	*	1					
4	1305-241-001-00	PIN,HAIR	*	1					
5	3650-580-002-00	HOSE/JOINT	*	1					

FIG. 22 LEVER(PTO)SYSTEM

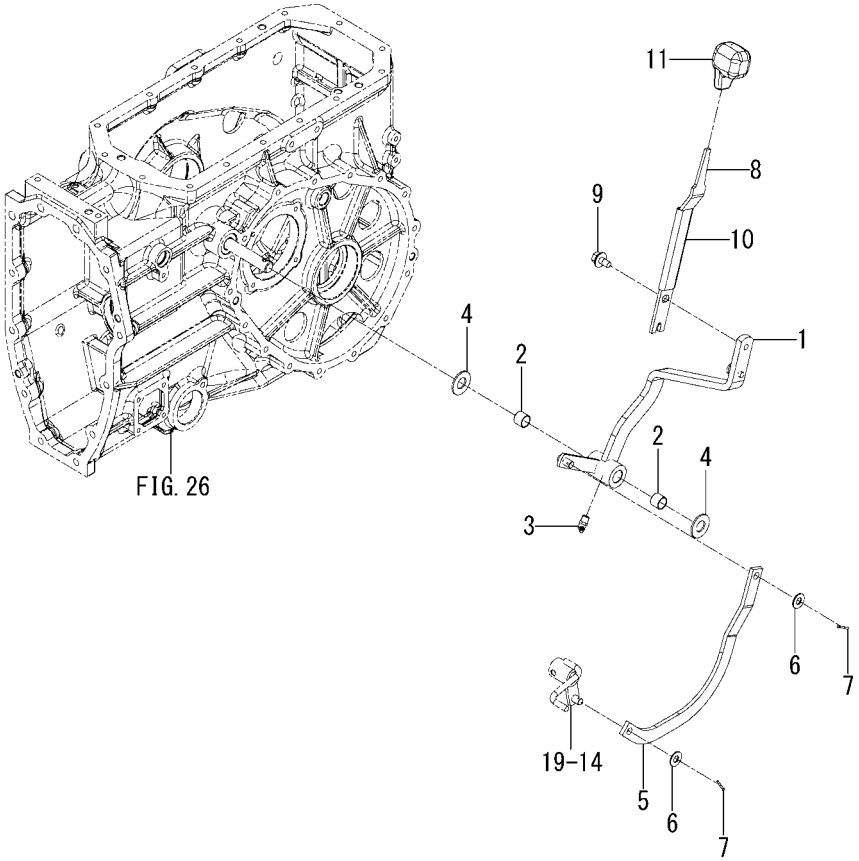

1834-269 -0100

KEY	PART CODE	DESCRIPTION	SPC	TYPE OF MODEL TLE3400 H3		ITC	COL	GRP	REMARKS
1	1834-269-210-00	ARM/PTO/E4 COMP	*	1					
2	1636-271-351-00	BUSH/16X18X15	*	2					
3	V763-150-000-00	NIPPLE,GREASE/PT1/8	*	1					
4	1813-308-001-00	WASHER/17X35X2	*	2					
5	1834-269-001-00	PLATE/PTO	*	1					
6	V411-260-010-00	WASHER,PL/M10	*	2					
7	V500-162-002-00	PIN,SPLIT/2X20	*	2					
8	1834-269-002-00	LEVER/PTO	*	1					
9	V211-661-002-00	BOLT,SP/M10X20/7T	*	1					
10	1725-266-001-00	INSULATOR/120	*	1					
11	1688-265-001-00	GRIP/MID/PTO	*	1					

FIG. 23 PINION(DRIVE/REAR)SYSTEM

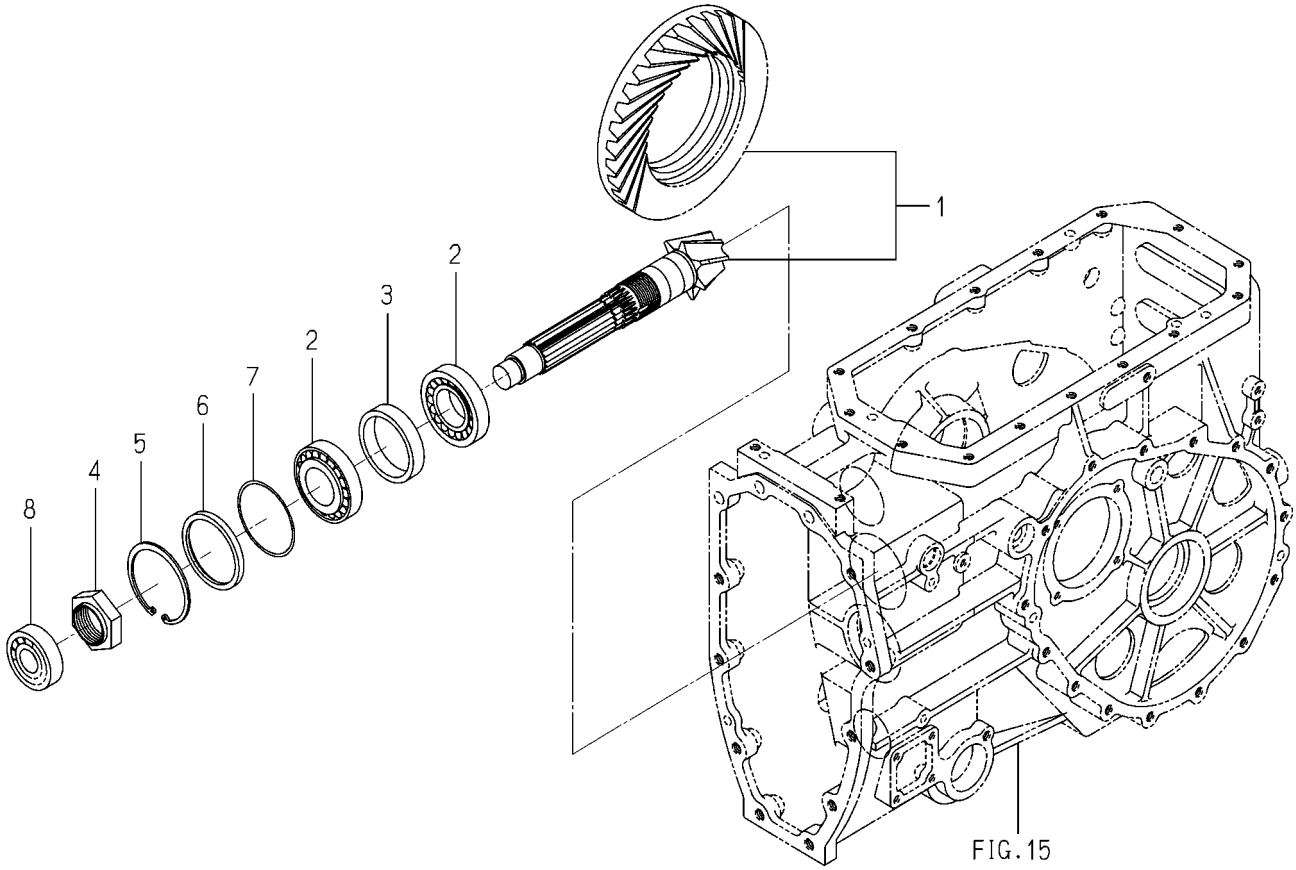

1834-301 -0100

KEY	PART CODE	DESCRIPTION	SPC	TYPE OF MODEL TLE3400 H3		ITC	COL	GRP	REMARKS
1	1805-301-510-20	GEAR/07X33 SET	*	1					
2	1805-301-001-00	BEARING/TAPERROLLER	*	2					
3	1805-301-002-00	COLLAR/64X76X16	*	1					
4	1719-301-004-00	NUT/M40X1.5	*	1					
5	1805-301-003-00	RING/SNAP/CH80	*	1					
6	1805-301-005-00	COLLAR/69X80X07	*	1					
7	1805-301-004-10	SHIM/74X80X0.1	*	2					
8	V600-110-630-50	BEARING,RB/6305	*	1					

FIG. 24 CASE(DIFFERENTIAL GEAR/ REAR)SYSTEM

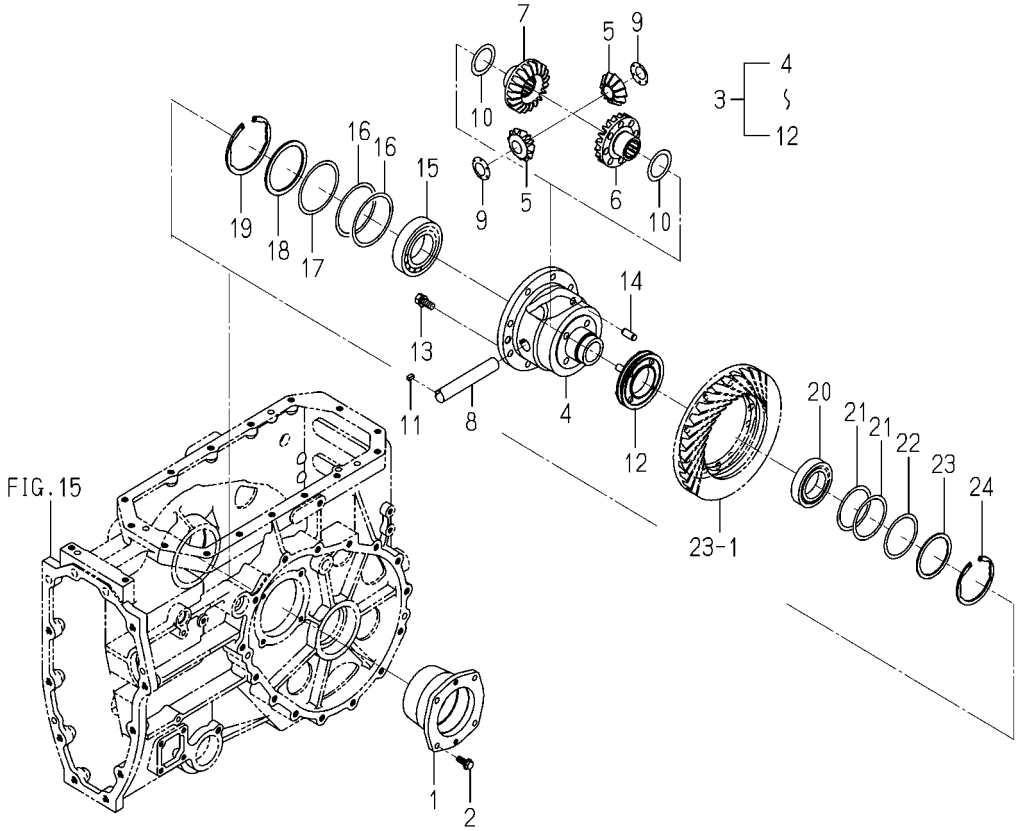

1834-304 -0100

KEY	PART CODE	DESCRIPTION	SPC	TYPE OF MODEL TLE3400	TYPE OF MODEL H3	ITC	COL	GRP	REMARKS
1	1824-304-003-00	METAL/DIFF	*	1					
2	V231-360-802-00	FLANGEBOLT/M8X20	*	4					
3	1824-304-210-00	CASE/DIFF/REAR ASSY	*	1					
4	1824-304-211-00	CASE/DIFF	*	1					
5	1824-304-212-00	PINION/BEVEL/12	*	2					
6	1824-304-213-00	GEAR/BEVEL/20	*	1					
7	1824-304-214-00	GEAR/BEVEL/20	*	1					
8	1824-304-215-00	SHAFT/PINION	*	1					
9	1824-304-216-00	WASHER/PINION	*	2					
10	1824-304-217-00	WASHER/38X52X01	*	2					
11	1824-304-218-00	KEY/05X05X10	*	1					
12	1824-304-220-00	SLEEVE/DIFFLOCK COMP	*	1					
13	6901-911-025-00	BOLT,SEMS/M10X25,7T	*	8					
14	V523-101-002-40	PIN,ST,B/10X24	*	1					
15	1805-202-026-00	BEARING/BALL/6210C	*	1					
16	1617-304-009-00	SHIM/0.1	*	2					
17	1617-304-008-00	SHIM/0.2	*	3					
18	1617-304-011-00	WASHER/75X90X03	*	1					
19	V707-140-090-00	RING,SNAP/R90	*	1					
20	1725-304-101-00	BEARING/6009/KBC	*	1					
21	1703-304-009-00	SHIM/0.1	*	2					
22	1703-304-008-00	SHIM/0.2	*	3					
23	1703-304-011-00	WASHER/63X75X02	*	1					
24	V707-140-075-00	RING,SNAP/R75	*	1					

FIG. 25 HOUSING(AXLE/REAR)SYSTEM

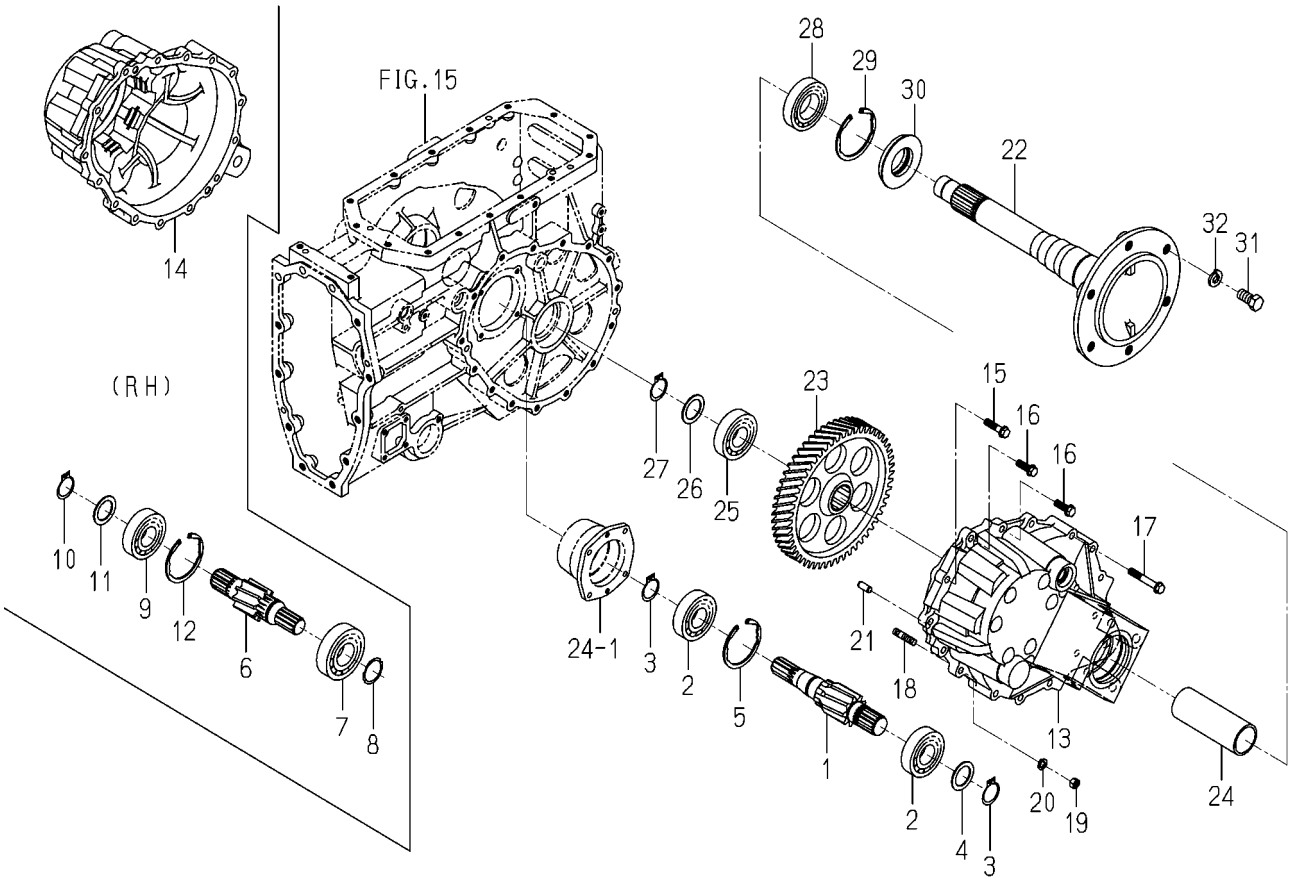

1834-306A-0100

KEY	PART CODE	DESCRIPTION	SPC	TYPE OF MODEL TLE3400 H3		ITC	COL	GRP	REMARKS
1	1805-306-001-20	GEAR/HELICAL/09/LH	*	1					
2	V600-110-630-70	BEARING,RB/6307	*	2					
3	V704-140-035-00	RING,SNAP/35 C	*	2					
4	1444-314-004-10	COLLAR(35X50X2)	*	1					
5	V707-140-080-00	RING,SNAP/R80	*	1					
6	1805-306-002-20	GEAR/HELICAL/09/RH	*	1					
7	1805-202-023-00	BEARING/BALL/6308C	*	1					
8	V706-140-040-00	RING,SNAP/S40	*	1					
9	V600-110-630-70	BEARING,RB/6307	*	1					
10	V704-140-035-00	RING,SNAP/35 C	*	1					
11	1444-314-004-10	COLLAR(35X50X2)	*	1					
12	V707-140-080-00	RING,SNAP/R80	*	1					
13	1821-306-006-00	HOUSING/AXLE/LH	*	1					
14	1821-306-007-00	HOUSING/AXLE/RH	*	1					
15	V231-361-004-00	FLANGEBOLT/M10X40	*	2					
16	V231-361-003-00	FLANGEBOLT/M10X30	*	8					
17	V231-361-006-50	FLANGEBOLT/M10X65	*	16					
18	V251-341-003-00	STUD/M10X30/7T	*	4					
19	V304-460-010-00	NUT/M10/7T	*	4					
20	V401-160-010-00	WASHER,SP/M10	*	4					
21	V523-101-002-40	PIN,ST,B/10X24	*	4					
22	1834-306-001-00	SHAFT/WHEEL/E4	*	2					
23	1805-306-003-20	GEAR/HELICAL/53	*	2					
24	1805-306-005-00	COLLAR/46X54X146	*	2					
25	V600-110-630-70	BEARING,RB/6307	*	2					
26	1444-314-004-10	COLLAR(35X50X2)	*	2					
27	V704-140-035-00	RING,SNAP/35 C	*	2					
28	1805-202-024-00	BEARING/BALL/6209C	*	2					
29	V707-140-085-00	RING,SNAP/R85	*	2					
30	1550-307-005-00	SEAL,OIL	*	2					

FIG. 25 HOUSING(AXLE/REAR)SYSTEM

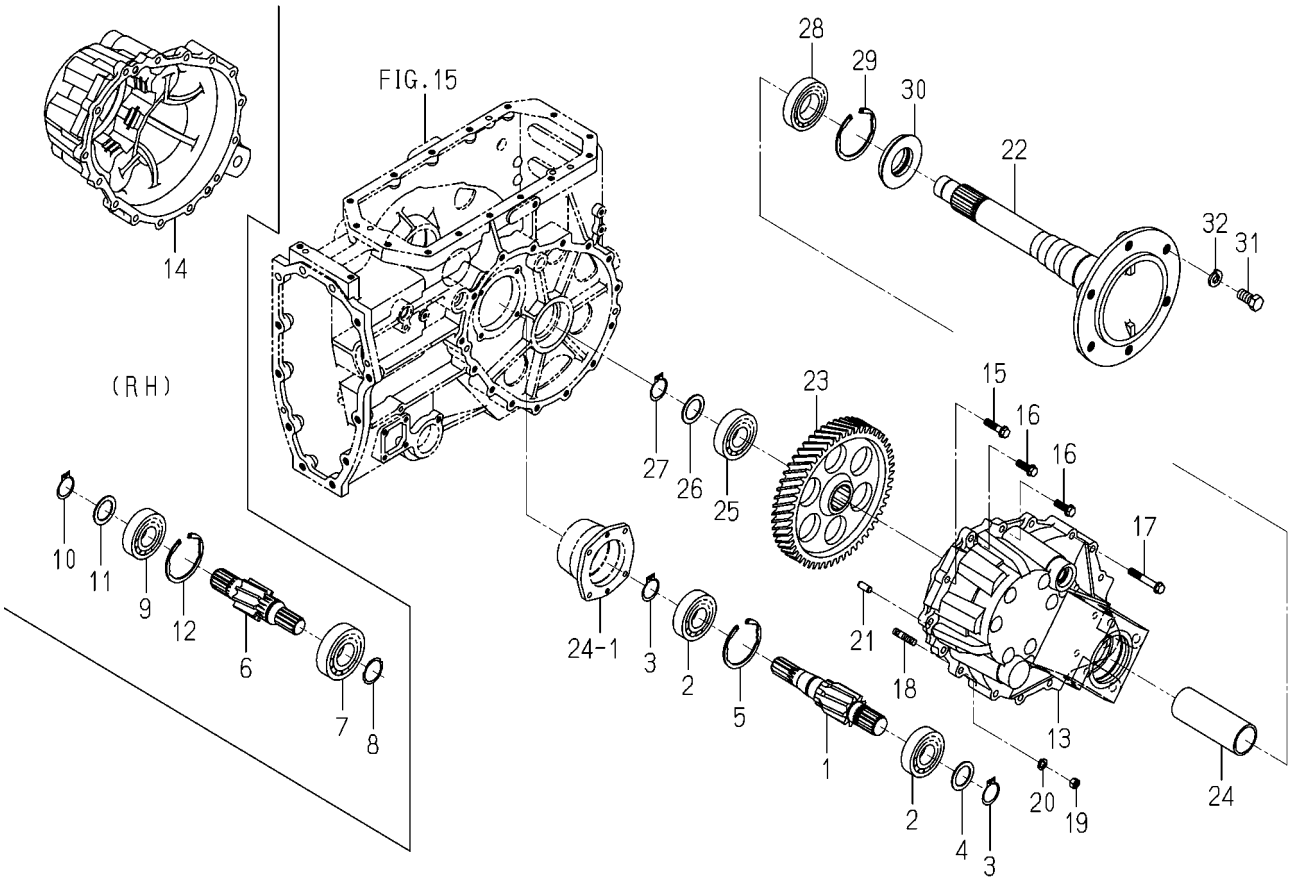

1834-306A-0100

KEY	PART CODE	DESCRIPTION	SPC	TYPE OF MODEL TLE3400 H3		ITC	COL	GRP	REMARKS
31	1748-434-001-00	BOLT/M16X40	*	12					
32	1746-306-002-00	WASHER/SPRING/M16	*	12					

FIG. 26 SHIFT(CLUTCH/ DIFFERENTIAL GEAR)SYSTEM

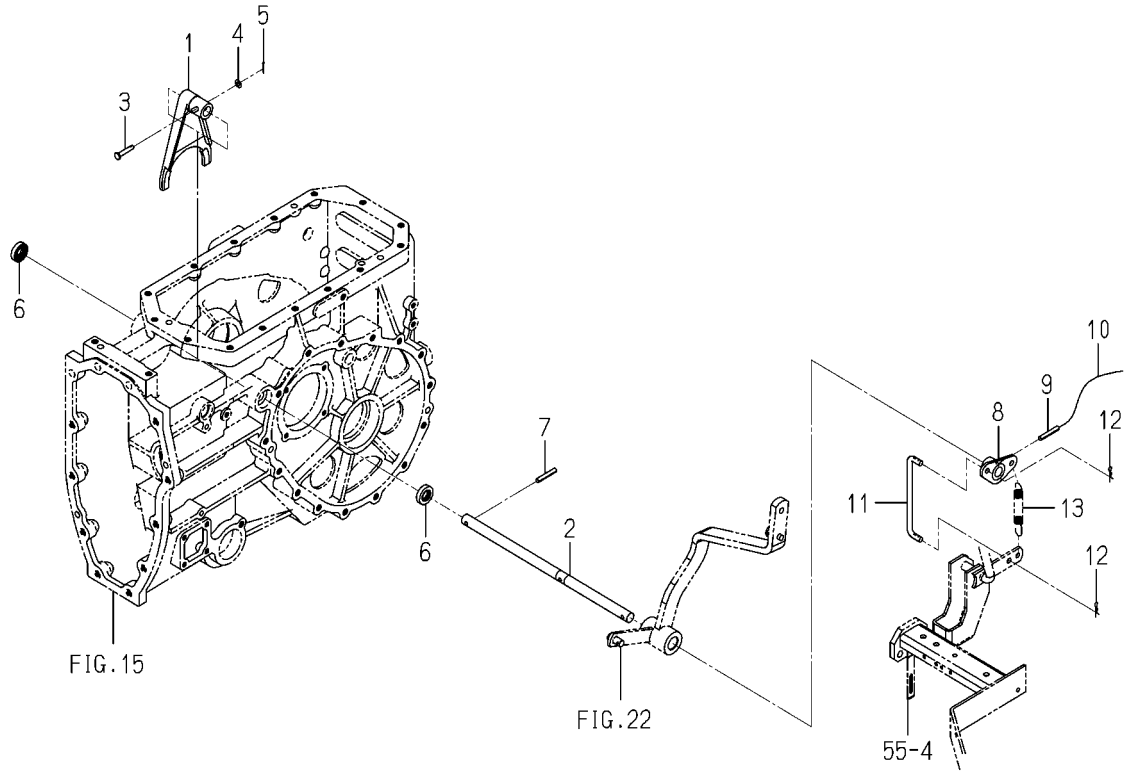

1834-308 -0100

KEY	PART CODE	DESCRIPTION	SPC	TYPE OF MODEL TLE3400 H3		ITC	COL	GRP	REMARKS
1	1824-308-001-00	FORK/SHIFT/DIFFLOCK	*	1					
2	1834-308-051-00	SHAFT/DIFFLOCK	*	1					
3	1725-305-003-00	PIN/06X32	*	1					
4	V411-260-006-00	WASHER,PL/M6	*	1					
5	V500-162-001-50	PIN,SPLIT/2X15	*	1					
6	V744-116-300-70	SEAL,OIL/TC16307	*	2					
7	V580-140-604-00	PIN,SPRING/6X40 W	*	1					
8	1834-308-500-00	ARM/DIFFLOCK COMP	*	1					
9	V580-140-602-80	PIN,SPRING/6X28 W	*	1					
10		WIRE	*	1					
11	1805-308-002-00	ROD/U/142	*	1			7F		
12	V560-160-008-00	PIN/SNAP	*	2					
13	1650-135-002-00	SPRING/HE095	*	1					

FIG. 27 BRAKE SYSTEM

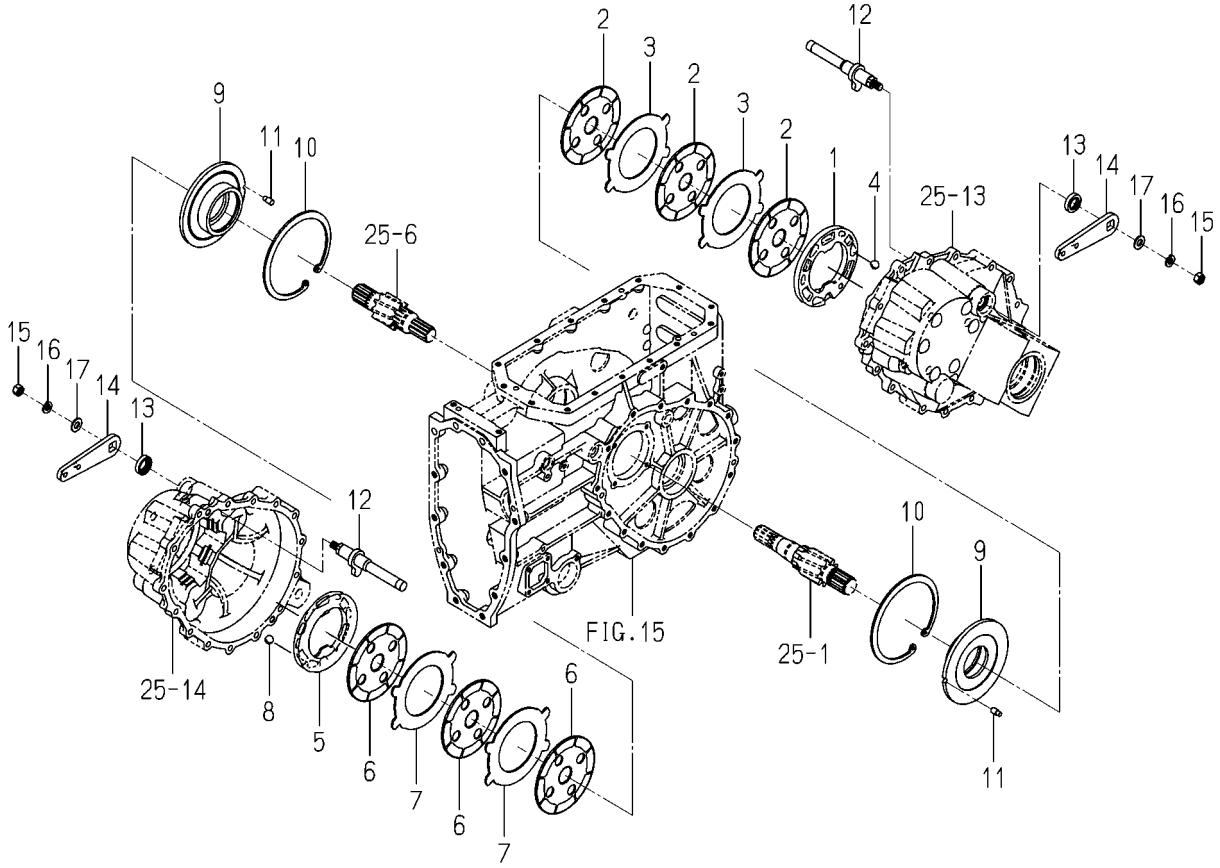

1834-310 -0100

KEY	PART CODE	DESCRIPTION	SPC	TYPE OF MODEL TLE3400 H3		ITC	COL	GRP	REMARKS
1	1824-310-301-00	PLATE/PRESSURE/LH	*	1					
2	1824-310-302-00	PLATE/FRICTION	*	3					
3	1824-310-303-00	PLATE/SEPARATOR	*	2					
4	V682-200-001-90	BALL,STEEL	*	3					
5	1824-310-311-00	PLATE/PRESSURE/RH	*	1					
6	1824-310-302-00	PLATE/FRICTION	*	3					
7	1824-310-303-00	PLATE/SEPARATOR	*	2					
8	V682-200-001-90	BALL,STEEL	*	3					
9	1773-310-051-00	METAL/BRAKE	*	2					
10	1805-310-001-00	RING/SNAP/165	*	2					
11	1421-433-004-00	PIN,KNOCK	*	2					
12	1805-310-200-10	CAM/BRAKE COMP	*	2					
13	V744-122-350-80	SEAL,OIL/TC22358	*	2					
14	1805-312-001-30	ARM/BRAKE	*	2			7F		
15	V304-460-012-00	NUT/M12/7T	*	2					
16	V402-160-012-00	WASHER,SP/M12	*	2					
17	V411-260-012-00	WASHER,PL/M12	*	2					

FIG. 28 PEDAL(BRAKE)SYSTEM

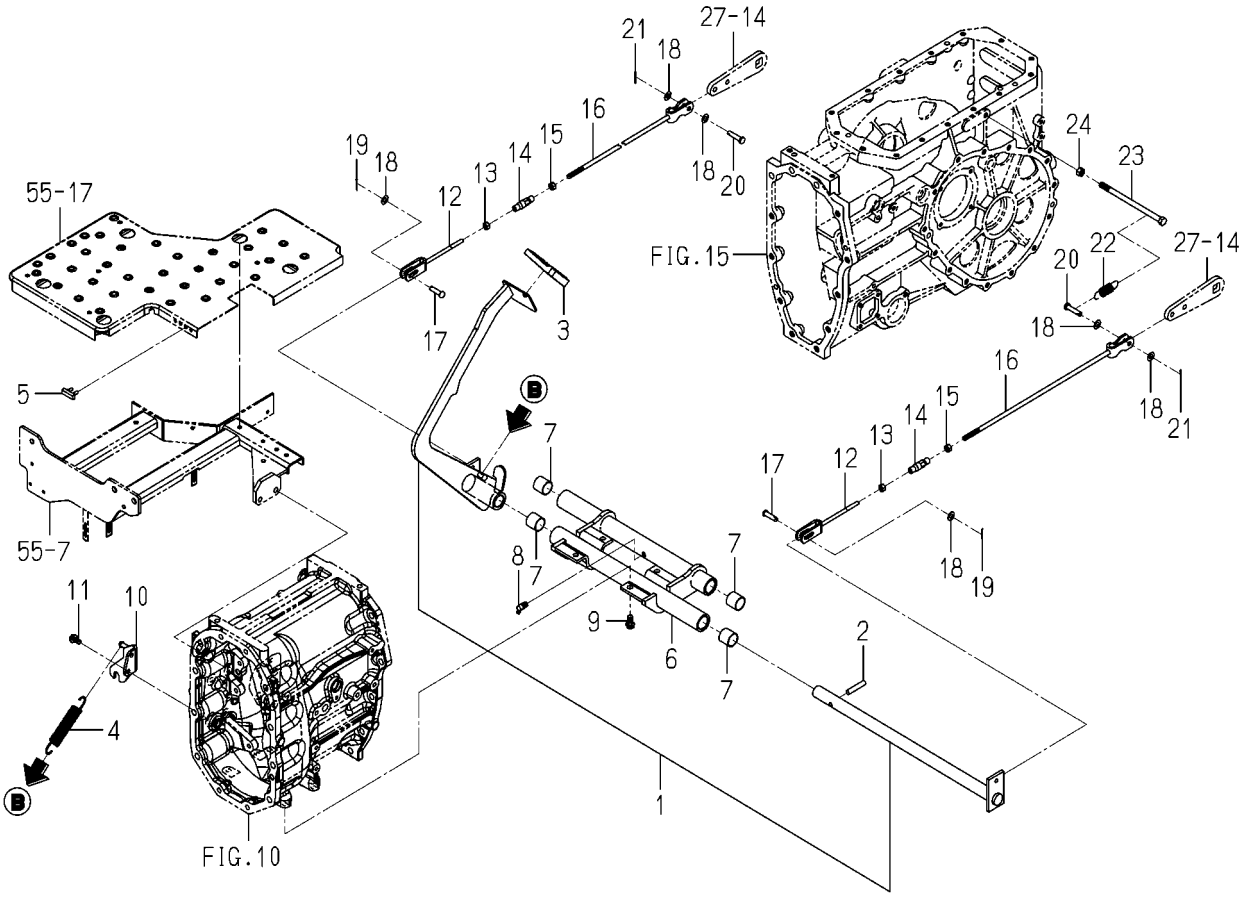

1834-312A-0100

KEY	PART CODE	DESCRIPTION	SPC	TYPE OF MODEL TLE3400 H3		ITC	COL	GRP	REMARKS
1	1834-312-560-00	PEDAL/BRAKE SET	*	1					
2	V511-100-805-00	PIN,TAPER/8X50	*	1					
3	1836-312-002-00	PAD	*	1					
4	2500-210-016-00	SPRING/HE108	*	1					
5	1716-601-017-00	INSULATOR	*	1					
6	1834-312-610-10	HUB/PEDAL COMP	*	1					
7	2157-201-201-00	BUSH/25X28X25	*	4					
8	V763-150-000-00	NIPPLE,GREASE/PT1/8	*	2					
9	V211-561-002-00	BOLT,S/M10X20/7T	*	4					
10	1834-312-600-00	BRACKET/SPRING COMP	*	1					
11	V231-360-801-60	FLANGEBOLT/M8X16	*	2					
12	1813-312-600-00	ROD/FORK COMP	*	2					
13	1560-132-007-30	NUT/LH/M08	*	2					
14	1444-122-002-00	TURNBUCKLE/M8	*	2					
15	V304-260-008-00	NUT/M8	*	2					
16	1773-312-260-10	ROD COMP	*	2					
17	1404-312-006-00	PIN,YOKE A	*	2					
18	V411-260-008-00	WASHER,PL/M8	*	6					
19	V500-162-002-00	PIN,SPLIT/2X20	*	2					
20	1593-606-006-10	PIN/8X36	*	2					
21	V500-162-502-00	PIN,SPLIT/2.5X20	*	2					
22	3656-565-006-00	SPRING/HE066	*	2					
23	V201-261-017-00	BOLT/M10X170	*	2					
24	V304-260-010-00	NUT/M10	*	2					

FIG. 29 LEVER(BRAKE/PARKING)SYSTEM

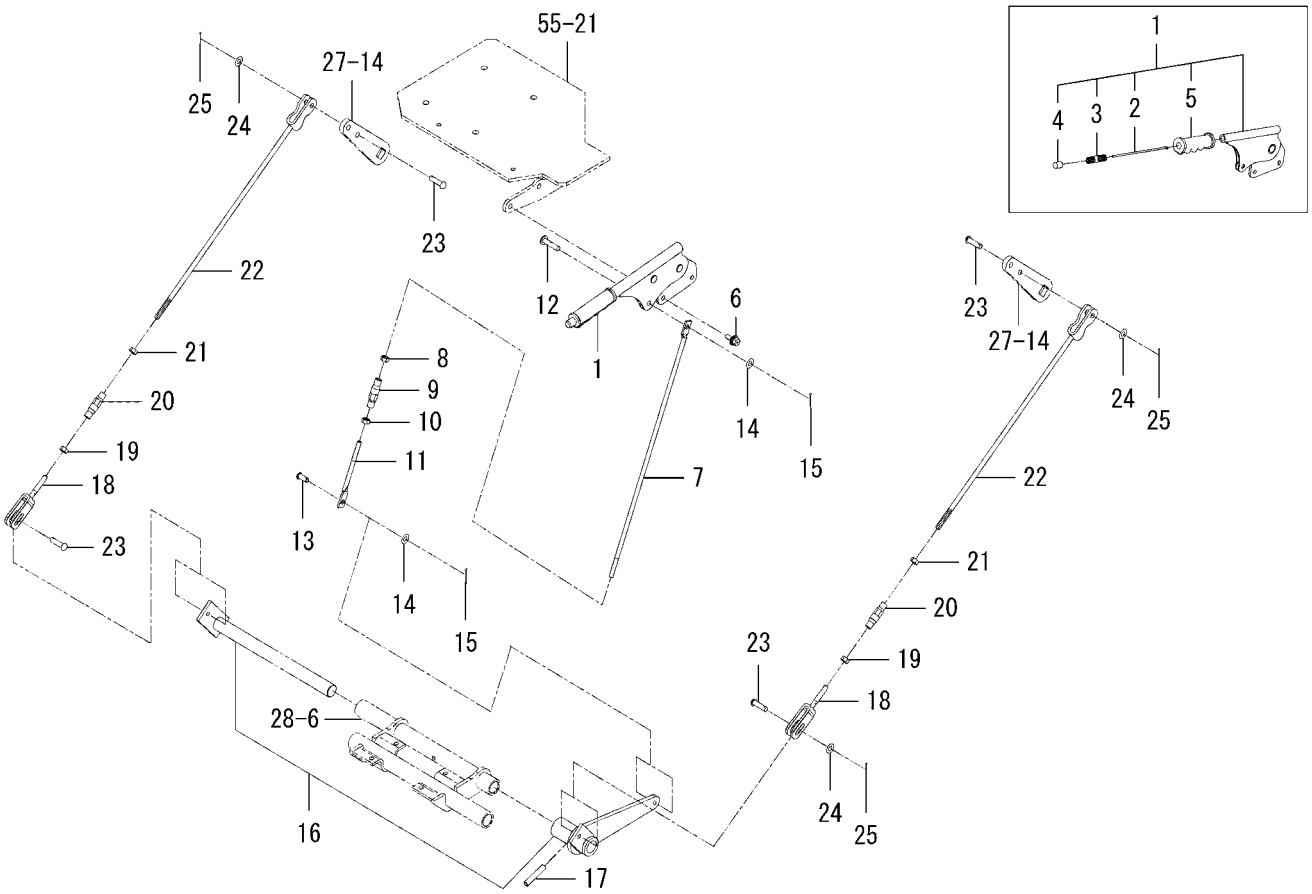

1834-313A-0100

KEY	PART CODE	DESCRIPTION	SPC	TYPE OF MODEL TLE3400 H3		ITC	COL	GRP	REMARKS
1	1740-313-300-10	LEVER/PARKING ASSY	*	1					
2	1442-313-202-00	ROD	*	1					
3	1444-328-273-00	SPRING	*	1					
4	1444-328-272-00	BUTTON	*	1					
5	1740-313-301-00	GRIP/ORANGE	*	1					
6	V211-660-802-00	BOLT,SP/M8X20/7T	*	2					
7	1834-313-054-00	ROD/M08/420	*	1					
8	V304-260-008-00	NUT/M8	*	1					
9	1444-122-002-00	TURNBUCKLE/M8	*	1					
10	1560-132-007-30	NUT/LH/M08	*	1					
11	1834-313-053-00	ROD/M08LX110	*	1					
12	1813-313-062-00	PIN/08X35	*	1					
13	1673-730-008-00	PIN/08X19	*	1					
14	V411-260-008-00	WASHER,PL/M8	*	2					
15	V500-162-002-00	PIN,SPLIT/2X20	*	2					
16	1834-313-300-00	ARM/P/BRAKE SET	*	1					
17	V511-100-805-00	PIN,TAPER/8X50	*	1					
18	1813-313-620-00	ROD/FORK COMP	*	2					
19	1560-132-007-30	NUT/LH/M08	*	2					
20	1444-122-002-00	TURNBUCKLE/M8	*	2					
21	V304-260-008-00	NUT/M8	*	2					
22	1773-312-260-10	ROD COMP	*	2					
23	1404-312-006-00	PIN,YOKE A	*	4					
24	V411-260-008-00	WASHER,PL/M8	*	4					
25	V500-162-002-00	PIN,SPLIT/2X20	*	4					

FIG. 30 WHEEL(STEERING)SYSTEM

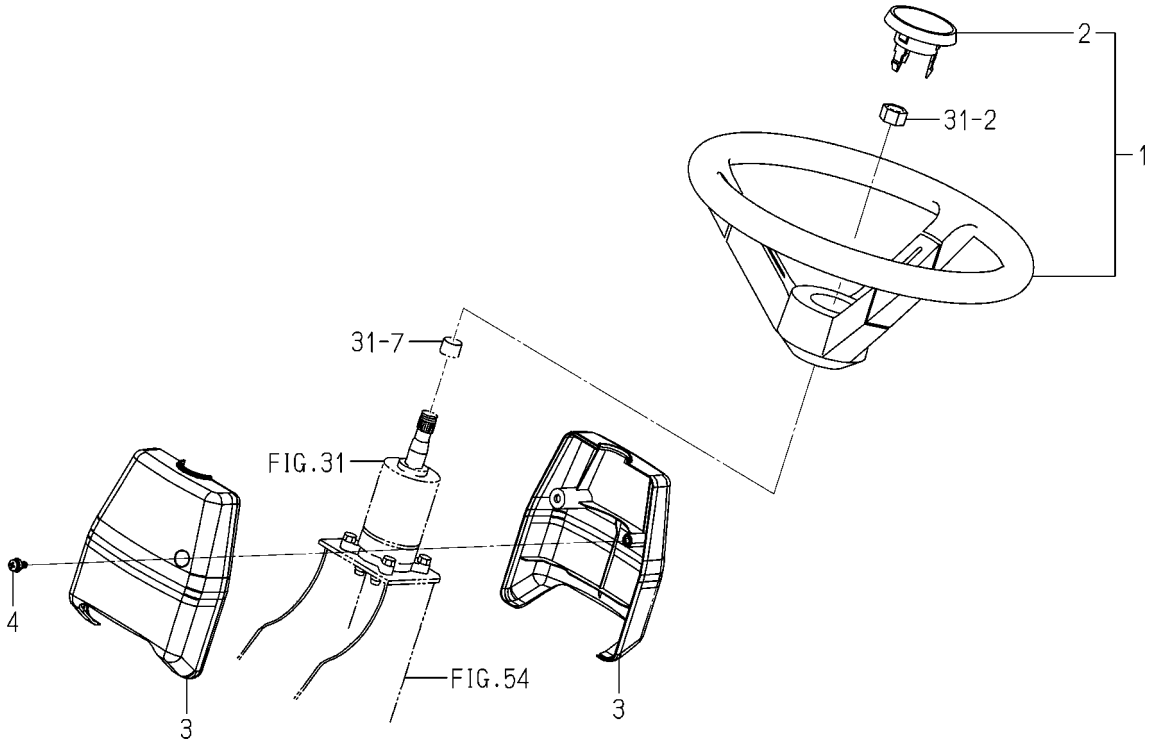

1834-401 -0100

KEY	PART CODE	DESCRIPTION	SPC	TYPE OF MODEL TLE3400 H3		ITC	COL	GRP	REMARKS
1	1821-401-002-00	WHEEL/STEERING/360	*	1					
2	1773-401-202-10	CAP/WHEEL	*	1					
3	1821-401-001-00	COVER/COLUMN	*	2					
4	V120-376-001-60	SCREW,SP/M6X16	*	2					

FIG. 31 CONTROLLER(STEERING)SYSTEM

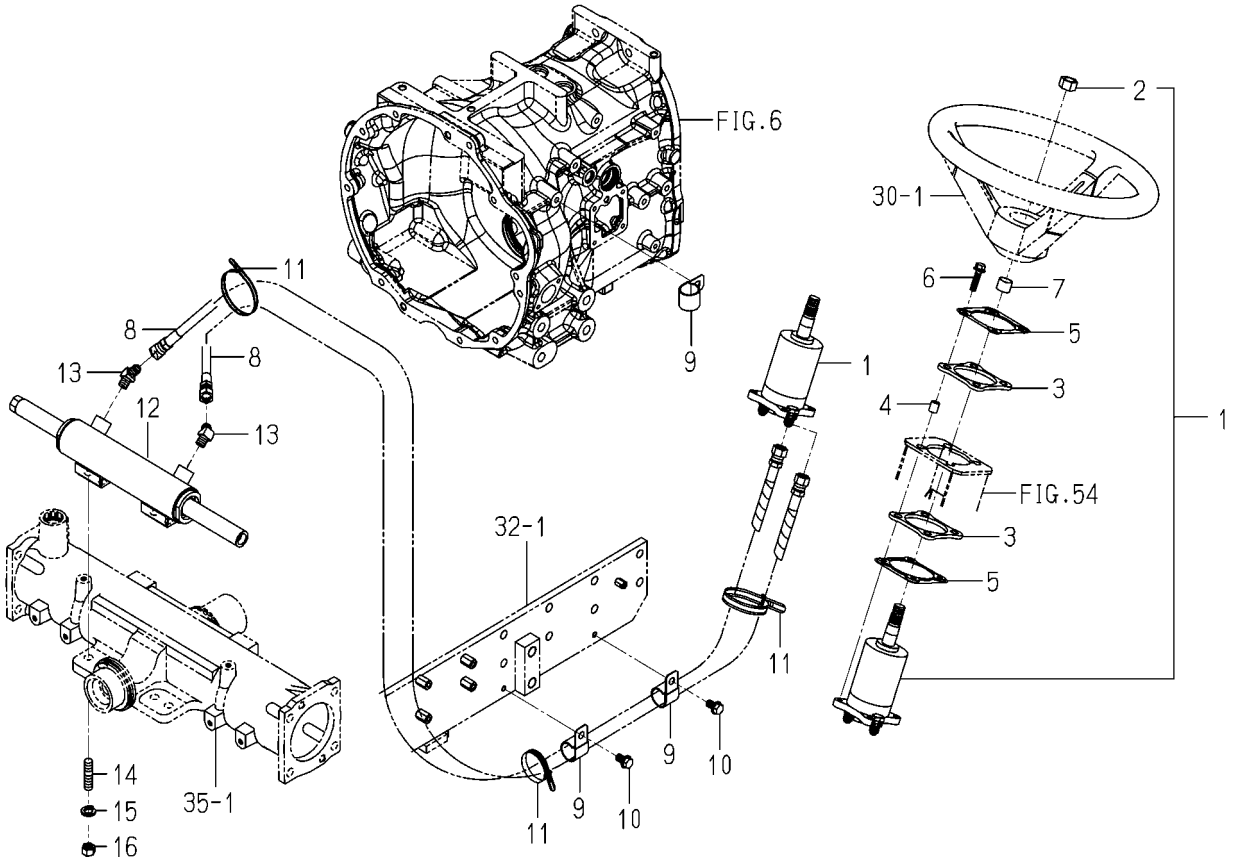

1834-407A-0100

KEY	PART CODE	DESCRIPTION	SPC	TYPE OF MODEL TLE3400 H3		ITC	COL	GRP	REMARKS
1	1821-407-220-00	CONTROLLER/STEERING	*	1					
2	1725-407-201-00	NUT/5/8-18UNF	*	1					
3	1771-407-001-10	PAD/PS	*	2					
4	1739-407-074-00	COLLAR/08X12X15	*	4					
5	1728-407-076-10	PLATE/CONTROLLER	*	2					
6	V211-660-803-50	BOLT,SP/M8X35/7T	*	4					
7	1739-401-001-00	INSULATOR/15	*	1					
8	1805-407-210-30	HOSE/1450 ASSY	*	2					
9	1518-786-508-00	CLIP B	*	3					
10	V231-360-801-60	FLANGEBOLT/M8X16	*	2					
11	1376-402-003-00	BAND,WIRE/140	*	3					
12	1773-407-410-00	CYLINDER ASSY	*	1					FIG 083
13	1725-403-003-00	ADAPTER/45DEG	*	2					
14	1773-407-005-00	BOLT/STUD/M12X30	*	4					
15	V402-160-012-00	WASHER,SP/M12	*	4					
16	1599-303-009-00	NUT/SM/M12X65	*	4					

FIG. 32 BRACKET(AXLE)SYSTEM

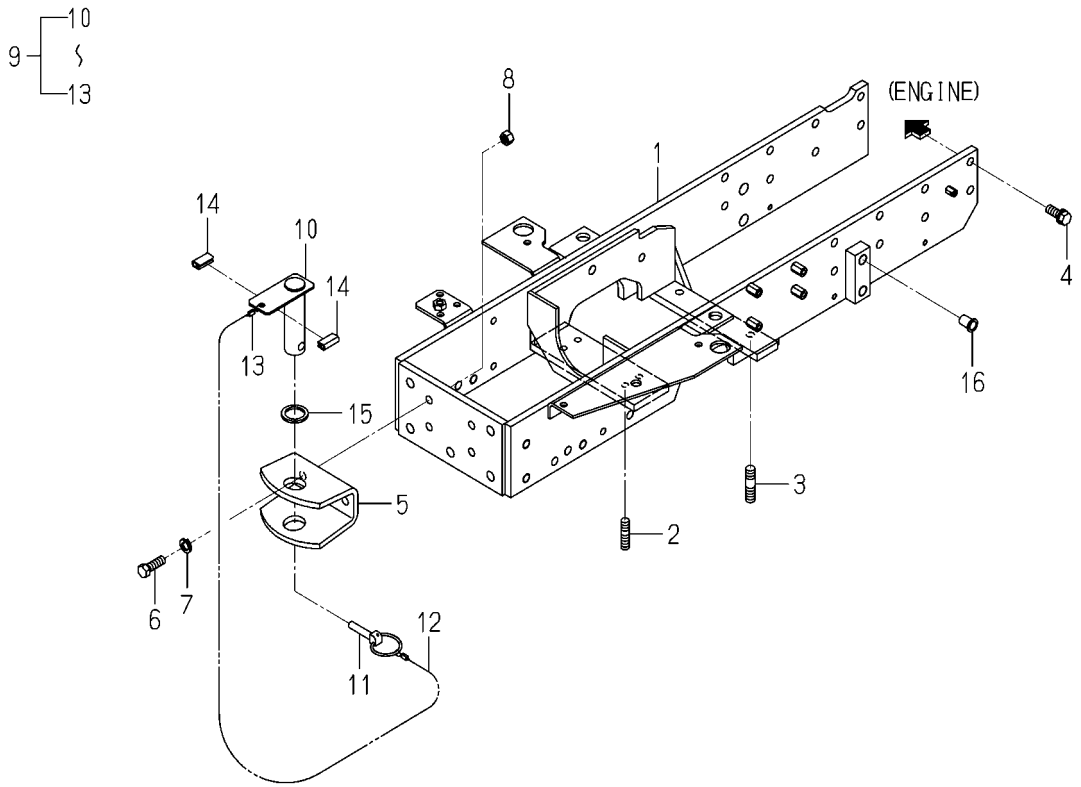

1834-410A-0100

KEY	PART CODE	DESCRIPTION	SPC	TYPE OF MODEL TLE3400 H3		ITC	COL	GRP	REMARKS
1	1834-410-230-00	BRACKET/AXLE COMP	*	1					
2	V251-341-203-20	STUD/M12X32/7T	*	2					
3	V251-441-403-50	STUD/M14X35/9T	*	2					
4	1725-201-002-00	BOLT/S	*	16					
5	1776-411-002-00	PLATE/HITCH	*	1					
6	V201-361-203-50	BOLT/M12X35/7T	*	2					
7	V402-160-012-00	WASHER,SP/M12	*	2					
8	V304-460-012-00	NUT/M12/7T	*	2					
9	1776-411-200-10	PIN ASSY	*	1					
10	1776-411-210-10	PIN/30X116 COMP	*	1					
11	1673-525-002-30	LINKPIN	*	1					
12	1772-521-221-20	WIRE/02X300	*	1					
13	1614-702-552-00	RING	*	2					
14	1560-314-001-10	TRIM/30	*	2					
15	1674-520-004-00	INSULATOR	*	1					
16	1824-201-003-00	CAP/BLANK/M16	*	4					

FIG. 33 SHAFT(DRIVE/FRONT)SYSTEM

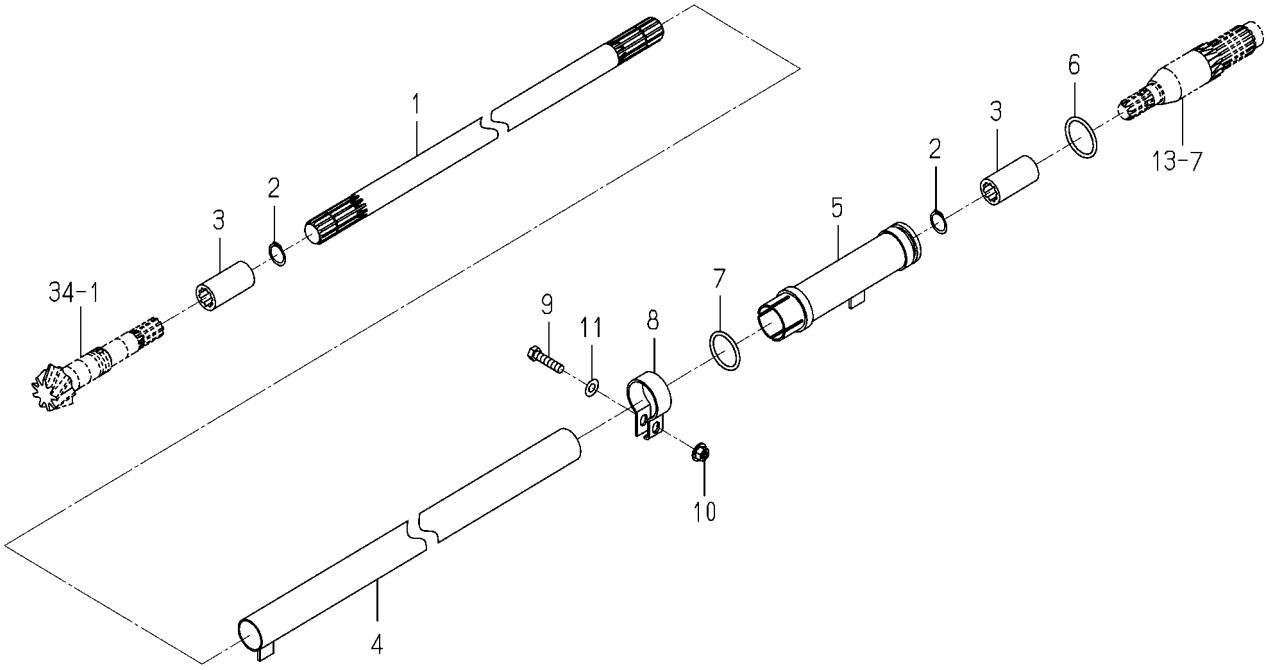

1834-431 -0100

KEY	PART CODE	DESCRIPTION	SPC	TYPE OF MODEL TLE3400 H3		ITC	COL	GRP	REMARKS
1	1834-431-051-00	SHAFT/4WD/496	*	1					
2	8674-202-012-00	RING/SNAP/CS20	*	2					
3	1821-431-002-00	COUPLING/20X27X52	*	2					
4	1834-431-510-00	TUBE/460 COMP	*	1					
5	1821-431-220-00	TUBE/190 COMP	*	1					
6	V720-103-503-60	O-RING/1A,P36	*	1					
7	V720-103-503-40	O-RING/1A,P34	*	1					
8	1444-410-002-10	CLAMP	*	1					
9	V201-260-803-50	BOLT/M8X35	*	1					
10	V362-260-008-00	NUT/WASHER/M8	*	1					
11	V411-260-008-00	WASHER,PL/M8	*	1					

FIG. 34 CASE(DIFFERENTIAL GEAR/ FRONT)SYSTEM

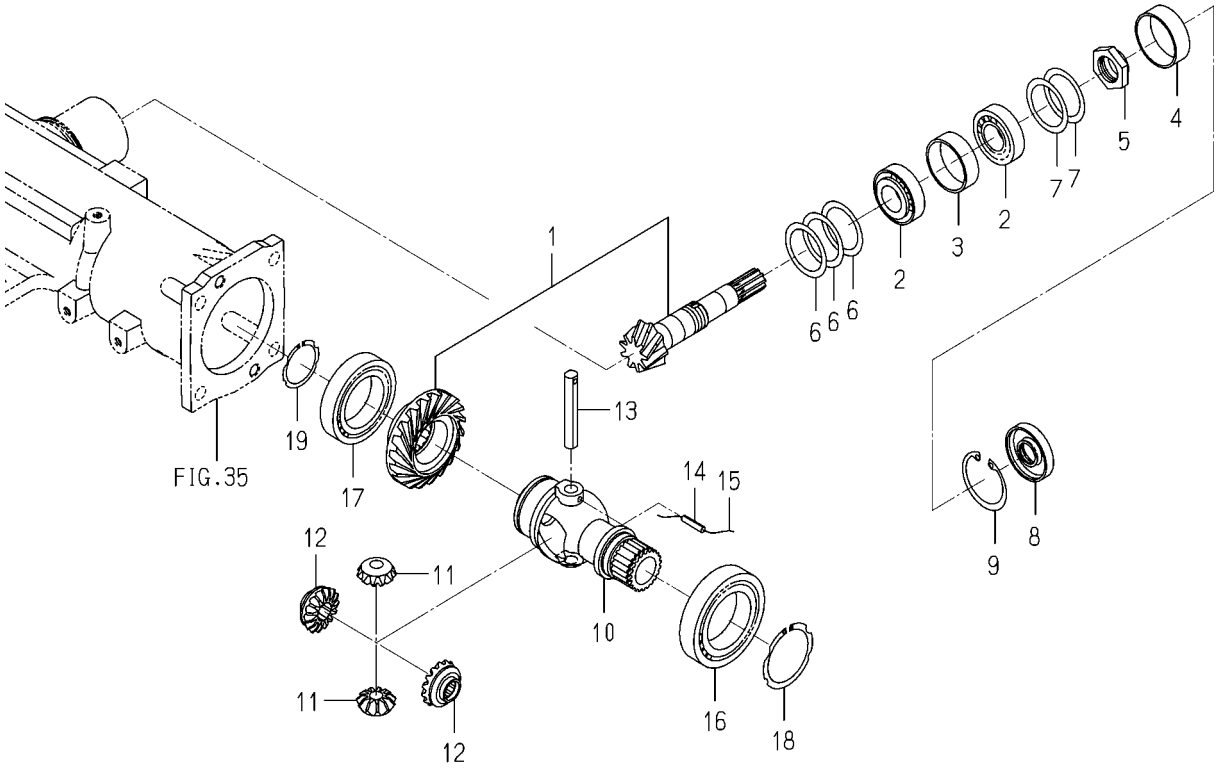

1834-432 -0100

KEY	PART CODE	DESCRIPTION	SPC	TYPE OF MODEL TLE3400 H3		ITC	COL	GRP	REMARKS
1	1805-432-210-00	GEAR/09X20 SET	*	1					
2	1805-432-006-00	BEARING/TAPERROLLER	*	2					
3	1805-432-005-00	COLLAR/46X51X16	*	1					
4	1650-432-001-00	COLLAR/48X52X17	*	1					
5	1614-432-001-00	NUT/M25	*	1					
6	1444-411-012-00	SHIM (C)	*	3					
7	1444-411-013-00	SHIM D T=0.1	*	2					
8	1427-432-016-00	SEAL,OIL/21	*	1					
9	V705-140-052-00	RING,SNAP/52 C	*	1					
10	1614-432-002-00	CASE/DIFF	*	1					
11	1614-432-003-20	PINION/BEVEL/11	*	2					
12	1675-432-001-20	GEAR/BEVEL/15	*	2					
13	1614-432-006-00	PIN/12X75	*	1					
14	V580-140-502-50	PIN,SPRING/5X25 W	*	1					
15		WIRE	*	1					
16	1805-202-027-00	BEARING/BALL/6011C	*	1					
17	1805-202-025-00	BEARING/BALL/6010C	*	1					
18	V706-140-055-00	RING,SNAP/S55	*	1					
19	V706-140-040-00	RING,SNAP/S40	*	1					

FIG. 35 HOUSING(AXLE/FRONT)SYSTEM

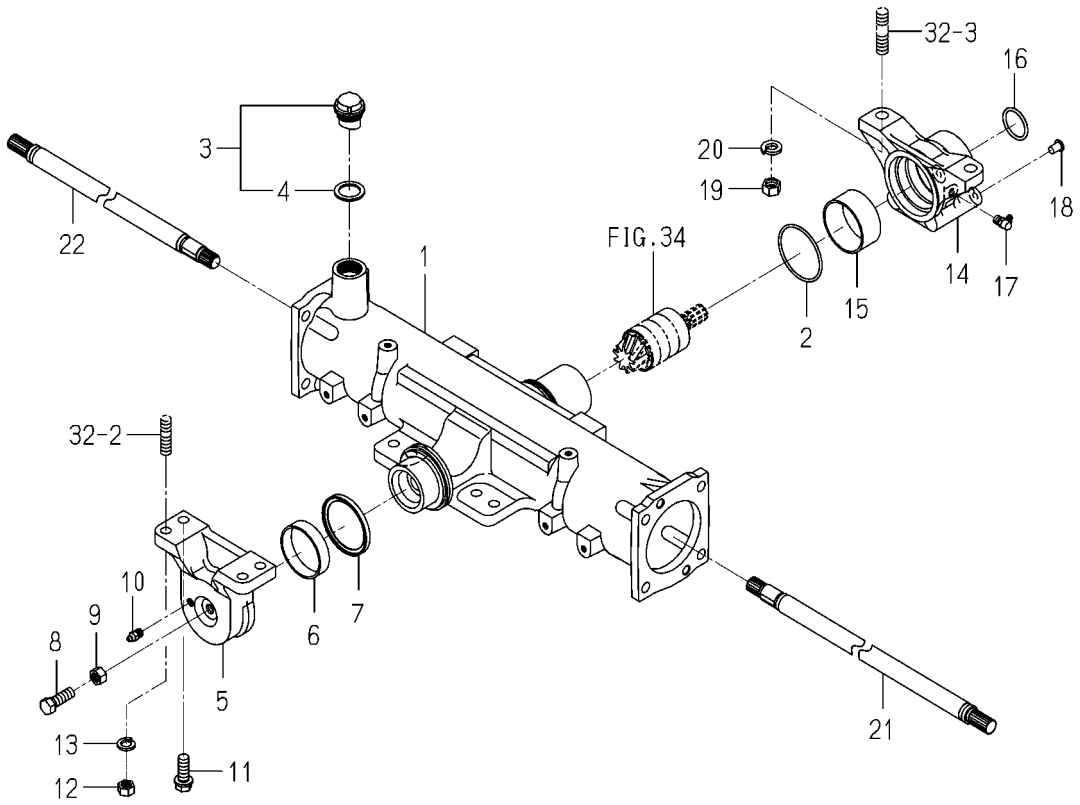

1834-433 -0100

KEY	PART CODE	DESCRIPTION	SPC	TYPE OF MODEL TLE3400 H3		ITC	COL	GRP	REMARKS
1	1821-433-003-00	HOUSING/AXLE	*	1					
2	V721-103-107-00	O-RING/1A,G70	*	1					
3	1518-306-200-10	CAP,OIL/A	*	1					
4	1518-306-203-10	PACKING	*	1					
5	1729-433-201-10	METAL/PIVOT/FRONT	*	1					
6	1650-433-202-00	BUSH/62X67X20	*	1					
7	1614-433-002-00	SEAL/OIL	*	1					
8	V201-361-203-50	BOLT/M12X35/7T	*	1					
9	V304-460-012-00	NUT/M12/7T	*	1					
10	V763-150-000-00	NIPPLE,GREASE/PT1/8	*	1					
11	6901-931-235-00	BOLT,SEMS/M12X35/7T	*	2					
12	V304-460-012-00	NUT/M12/7T	*	2					
13	V402-160-012-00	WASHER,SP/M12	*	2					
14	1740-433-511-00	METAL/PIVOT/REAR	*	1					
15	1614-433-212-00	BUSH/62X67X30	*	1					
16	V720-103-503-40	O-RING/1A,P34	*	1					
17	V761-150-000-00	NIPPLE/GREASE	*	1					
18	1427-120-002-00	CAP,BLANK/M10	*	2					
19	V304-460-014-00	NUT/M14/7T	*	2					
20	V402-160-014-00	WASHER,SP/M14	*	2					
21	1821-433-001-00	SHAFT/396	*	1					
22	1821-433-002-00	SHAFT/312	*	1					

FIG. 36 CASE(GEAR/FRONT)SYSTEM

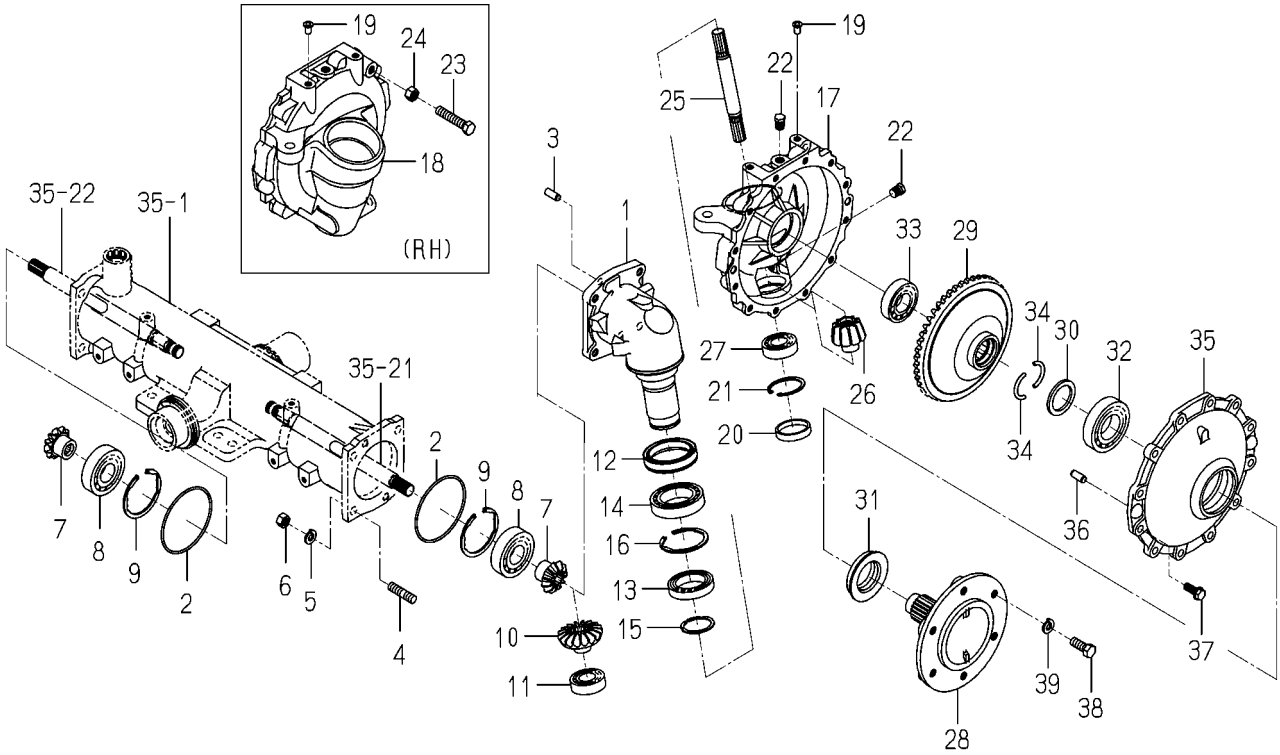

1834-434 -0100

KEY	PART CODE	DESCRIPTION	SPC	TYPE OF MODEL TLE3400 H3		ITC	COL	GRP	REMARKS
1	1821-434-001-00	CASE/FINAL	*	2					
2	V721-103-110-00	O-RING/1A,G100	*	2					
3	V523-101-002-40	PIN,ST,B/10X24	*	4					
4	J932-251-006-10	BOLT/STUD	*	8					
5	V402-160-012-00	WASHER,SP/M12	*	8					
6	V304-460-012-00	NUT/M12/7T	*	8					
7	1821-434-006-00	GEAR/BEVEL/11	*	2					
8	V600-110-630-60	BEARING,RB/6306	*	2					
9	V707-140-072-00	RING,SNAP/R72	*	2					
10	1821-434-007-00	GEAR/BEVEL/17	*	2					
11	1773-434-012-00	BEARING/BALL	*	2					
12	1709-434-001-00	SEAL/OIL ASSY	*	2					
13	1725-434-047-00	BEARING/BALL/6909	*	2					
14	1805-202-025-00	BEARING/BALL/6010C	*	2					
15	V706-140-045-00	RING,SNAP/S45	*	2					
16	V707-140-068-00	RING,SNAP/R68	*	2					
17	1821-434-002-10	CASE/FINAL/LH	*	1					
18	1821-434-003-10	CASE/FINAL/RH	*	1					
19	1824-434-001-00	CAP/BLANK/M10	*	4					
20	1421-201-003-00	SEAL/52	*	2					
21	V705-140-052-00	RING,SNAP/52 C	*	2					
22	V782-160-000-4B	PLUG/SCREW/SEAL	*	4					
23	W201-361-206-00	BOLT	*	2					
24	V304-460-012-00	NUT/M12/7T	*	2					
25	1821-434-004-10	SHAFT/178	*	2					
26	1821-434-008-00	GEAR/BEVEL/10	*	2					
27	1773-434-012-00	BEARING/BALL	*	2					
28	1560-434-007-60	SHAFT/WHEEL	*	2			7F		
29	1821-434-009-00	GEAR/BEVEL/48	*	2					
30	1560-434-011-40	COLLAR/41X55X4	*	2					

FIG. 36 CASE(GEAR/FRONT)SYSTEM

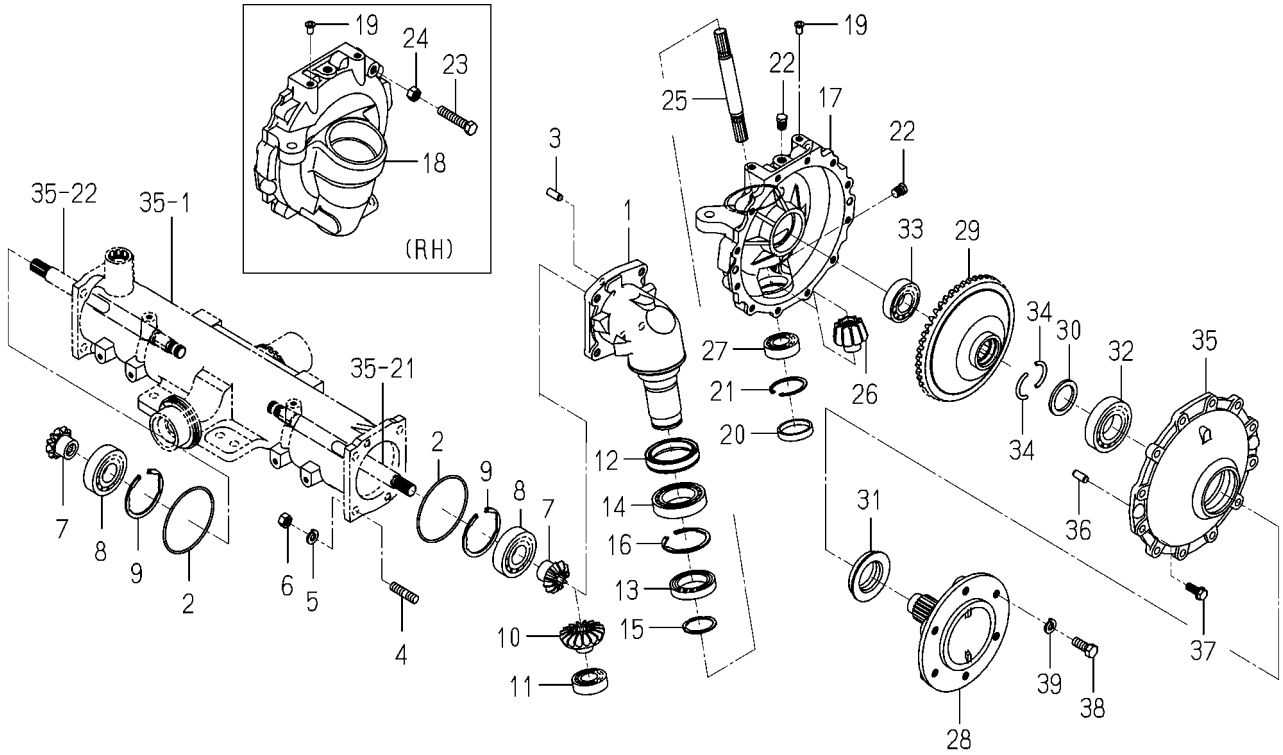

1834-434 -0100

KEY	PART CODE	DESCRIPTION	SPC	TYPE OF MODEL TLE3400	H3	ITC	COL	GRP	REMARKS
31	1560-434-012-30	SEAL,OIL	*	2					
32	1805-202-022-00	BEARING/BALL/6208C	*	2					
33	1805-202-011-00	BEARING/BALL/6206	*	2					
34	1560-434-017-00	RING	*	4					
35	1650-434-013-10	COVER/WHEEL	*	2			7F		
36	V523-101-002-40	PIN,ST,B/10X24	*	4					
37	V231-361-002-50	FLANGEBOLT/M10X25	*	24					
38	1746-434-001-00	BOLT/M12X30	*	12					
39	1746-434-002-00	WASHER/SPRING/M12	*	12					

FIG. 37 ROD(TIE)SYSTEM

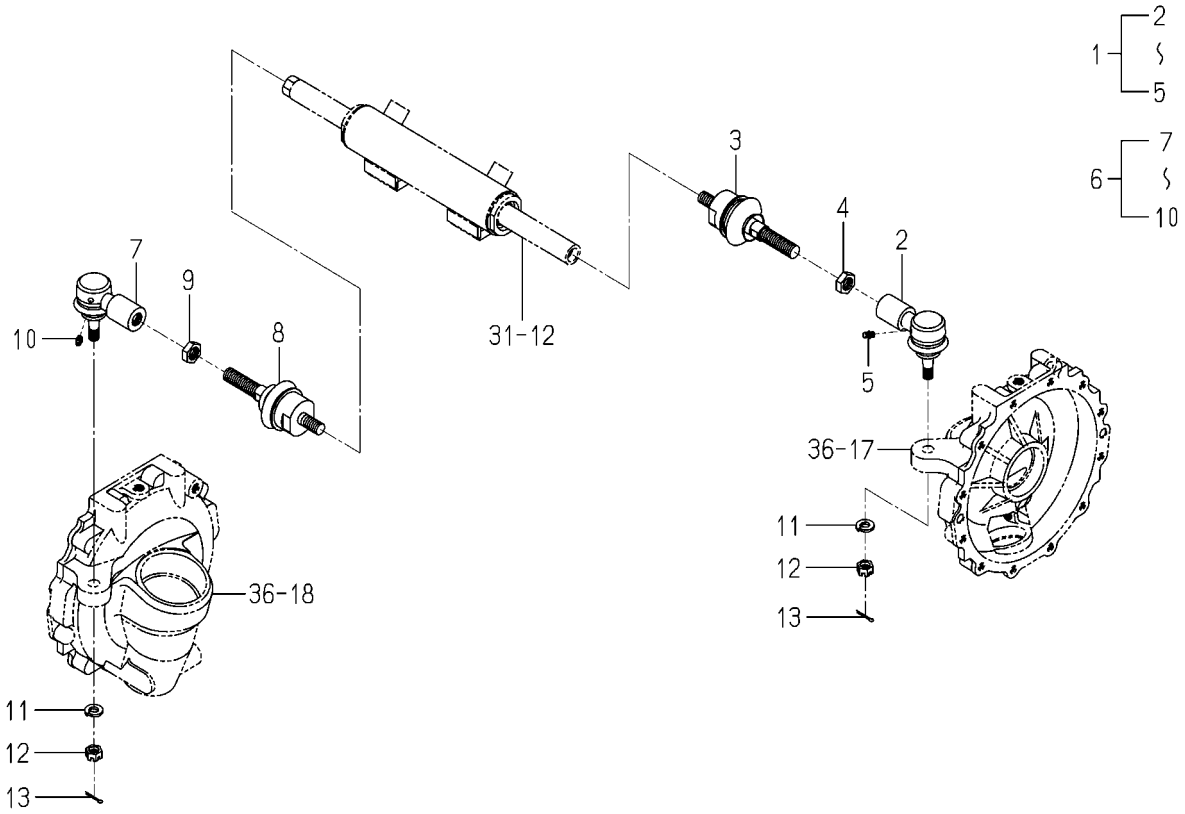

1834-436 -0100

KEY	PART CODE	DESCRIPTION	SPC	TYPE OF MODEL TLE3400 H3		ITC	COL	GRP	REMARKS
1	1821-436-210-00	ROD/TIE/LH SET	*	1					
2	1821-436-220-00	ROD/TIE/LH ASSY	*	1					
3	1821-436-230-00	ROD/TIE/JOINT ASSY	*	1					
4	1821-436-211-00	NUT	*	1					
5	V760-150-000-00	NIPPLE,GREASE	*	1					
6	1821-436-250-00	ROD/TIE/RH SET	*	1					
7	1821-436-260-00	ROD/TIE/RH ASSY	*	1					
8	1821-436-230-00	ROD/TIE/JOINT ASSY	*	1					
9	1821-436-211-00	NUT	*	1					
10	V760-150-000-00	NIPPLE,GREASE	*	1					
11	V402-160-012-00	WASHER,SP/M12	*	2					
12	V327-262-112-00	NUT,CASTLE/M12 P1.25	*	2					
13	V500-163-002-00	PIN,SPLIT/3X20	*	2					

FIG. 38 COVER(CASE/CYLINDER)SYSTEM

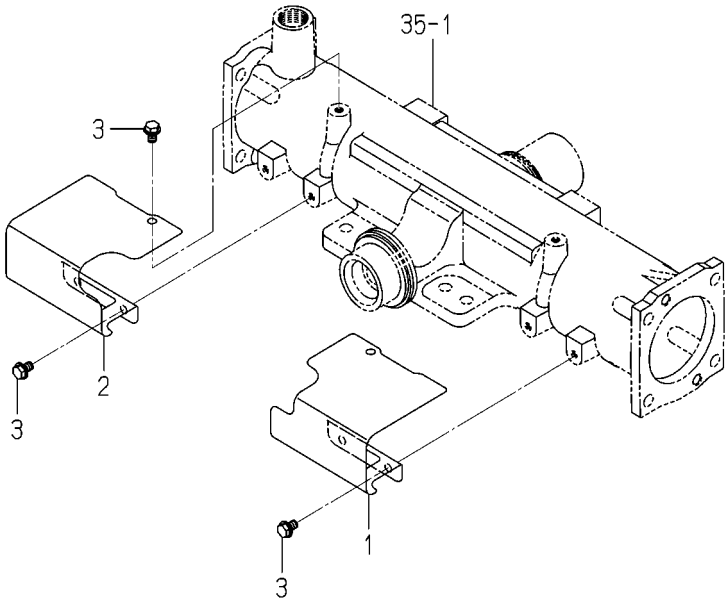

1834-438 -0100

KEY	PART CODE	DESCRIPTION	SPC	TYPE OF MODEL TLE3400 H3		ITC	COL	GRP	REMARKS
1	1834-438-003-00	COVER/CYLINDER/LH	*	1					
2	1834-438-004-00	COVER/CYLINDER/RH	*	1					
3	V231-360-801-20	FLANGEBOLT/M8X12	*	6					

FIG. 39 CASE(CYLINDER)SYSTEM

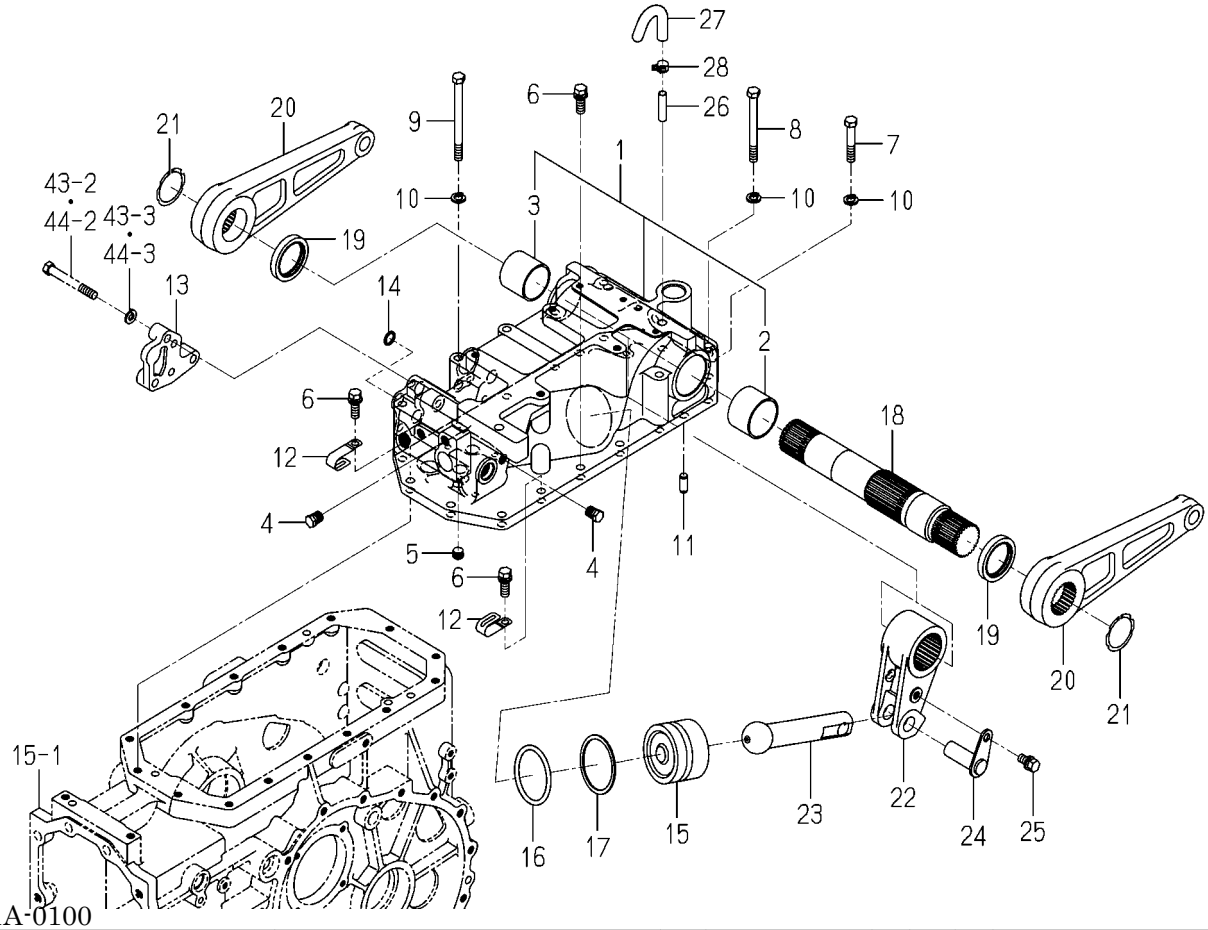

1834-501A-0100

KEY	PART CODE	DESCRIPTION	SPC	TYPE OF MODEL TLE3400 H3		ITC	COL	GRP	REMARKS
1	1805-501-200-20	CASE/CYLINDER ASSY	*	1			7F		
2	1588-501-002-00	BUSH/50X55X37	*	1					
3	1560-501-202-00	BUSH/45X50X42	*	1					
4	V782-160-000-4T	PLUG/SCREW/SEAL	*	3					
5	V780-140-000-4T	PLUG/SCREW/SEAL	*	1					
6	V211-561-003-00	BOLT,S/M10X30/7T	*	6					
7	V201-361-005-50	BOLT/M10X55/7T	*	2					
8	V201-361-010-00	BOLT/M10X100/7T	*	5					
9	V201-361-012-00	BOLT/M10X120/7T	*	2					
10	V401-160-010-00	WASHER,SP/M10	*	9					
11	V523-101-002-40	PIN,ST,B/10X24	*	2					
12	3737-172-011-00	CLAMP,HARNESS	*	4					
13	1824-501-004-00	COVER	*	1					
14	V720-112-401-40	O-RING/1B,P14	*	3					
15	1824-501-002-00	PISTON	*	1					
16	V720-115-706-50	O-RING/1B,P65	*	1					
17	1415-505-006-00	RING,BACK UP	*	1					
18	1805-501-001-00	BAR	*	1					
19	1444-501-004-10	SEAL,OIL/OS45554	*	2					
20	1805-501-004-00	ARM/LIFT	*	2			7F		
21	V706-140-045-00	RING,SNAP/S45	*	2					
22	1805-501-002-00	CRANK/LIFT	*	1					
23	1824-501-003-00	ROD	*	1					
24	1480-503-200-00	PIN,ROD COMP	*	1					
25	V211-561-002-00	BOLT,S/M10X20/7T	*	1					
26	1544-120-008-10	PIPE,BREATHER	*	1					
27	1824-501-007-00	HOSE/BREATHER	*	1					
28	J062-138-148-00	CLIP/HOSE/13.8-14.8	*	1					

FIG. 40 LEVER(POSITION)SYSTEM

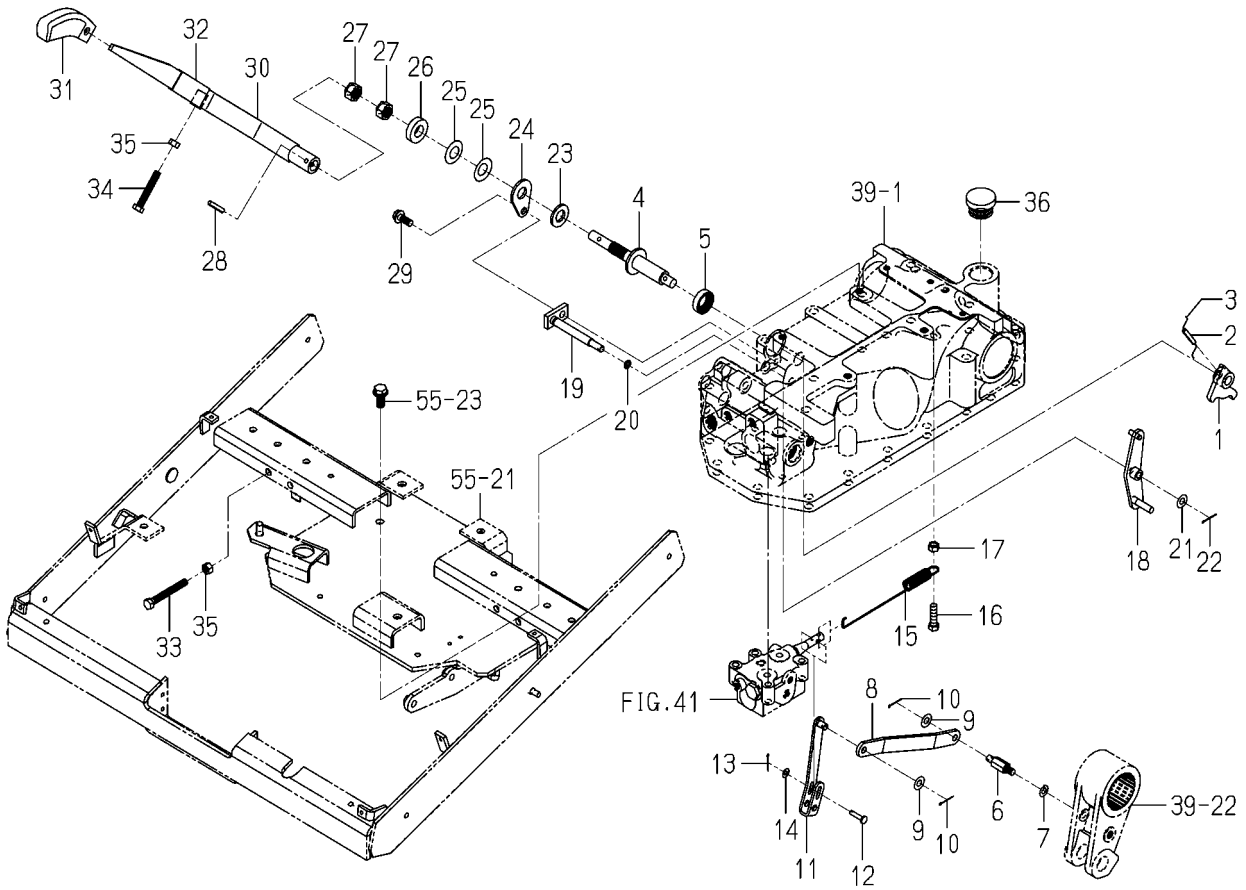

1834-504 -0100

KEY	PART CODE	DESCRIPTION	SPC	TYPE OF MODEL TLE3400 H3		ITC	COL	GRP	REMARKS
1	1805-504-210-00	ARM/POSITION COMP	*	1					
2	V580-140-502-50	PIN,SPRING/5X25 W	*	1					
3		WIRE	*	1					
4	1805-504-240-20	PIN/POSITION COMP	*	1					
5	V744-118-300-80	SEAL,OIL/TC18308	*	1					
6	1805-504-002-00	PIN	*	1					
7	V401-160-008-00	WASHER,SP/M8	*	1					
8	1805-504-001-00	PLATE/Z/19X179	*	1					
9	V411-260-008-00	WASHER,PL/M8	*	2					
10	V500-162-002-00	PIN,SPLIT/2X20	*	2					
11	1617-503-210-00	LINK/SPOOL COMP	*	1					
12	1614-503-005-00	PIN/05X23	*	1					
13	V500-162-002-00	PIN,SPLIT/2X20	*	1					
14	V411-260-005-00	WASHER,PL/M5	*	1					
15	1805-504-006-10	SPRING/HE172	*	1					
16	V231-360-803-00	FLANGEBOLT/M8X30	*	1					
17	V304-260-008-00	NUT/M8	*	1					
18	1805-504-220-00	LINK/SUPPORT COMP	*	1					
19	1805-504-200-00	PIN/SUPPORT COMP	*	1					
20	V720-101-900-70	O-RING/1A,P7	*	1					
21	V411-260-008-00	WASHER,PL/M8	*	1					
22	V500-162-002-00	PIN,SPLIT/2X20	*	1					
23	1763-505-002-20	LINING/16/30/03	*	1					
24	1821-504-012-10	HOLDER/PLATE	*	1					
25	1614-531-004-00	SPRING/WASHER	*	2					
26	1821-504-011-00	COLLAR/16X32X08	*	1					
27	V334-260-014-00	NUT/M14,P=1.5	*	2					
28	V580-140-502-50	PIN,SPRING/5X25 W	*	1					
29	V231-360-802-00	FLANGEBOLT/M8X20	*	1					
30	1821-504-230-10	LEVER/POSITION COMP	*	1					

FIG. 40 LEVER(POSITION)SYSTEM

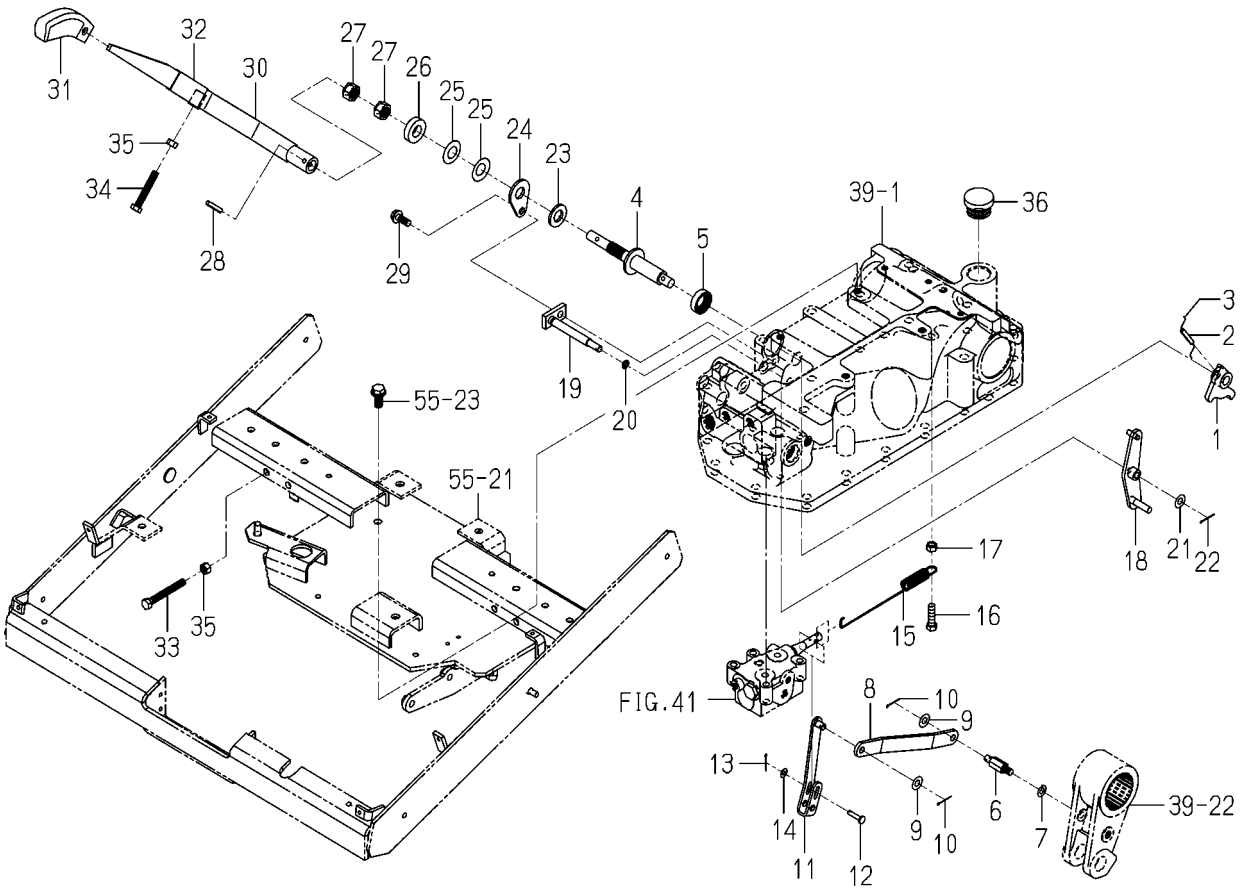

1834-504 -0100

KEY	PART CODE	DESCRIPTION	SPC	TYPE OF MODEL TLE3400 H3		ITC	COL	GRP	REMARKS
31	1824-504-007-00	GRIP/03X17X97	*	1					
32	1614-262-006-00	INSULATOR/LEVER/SUB	*	1					
33	W201-260-806-00	BOLT/M 8X60	*	1					
34	W201-260-805-00	BOLT/M 8X50	*	1					
35	V304-260-008-00	NUT/M8	*	2					
36	3676-356-001-00	CAP/OIL(30)	*	1					

FIG. 41 PIPING(MAIN)SYSTEM(1/2)

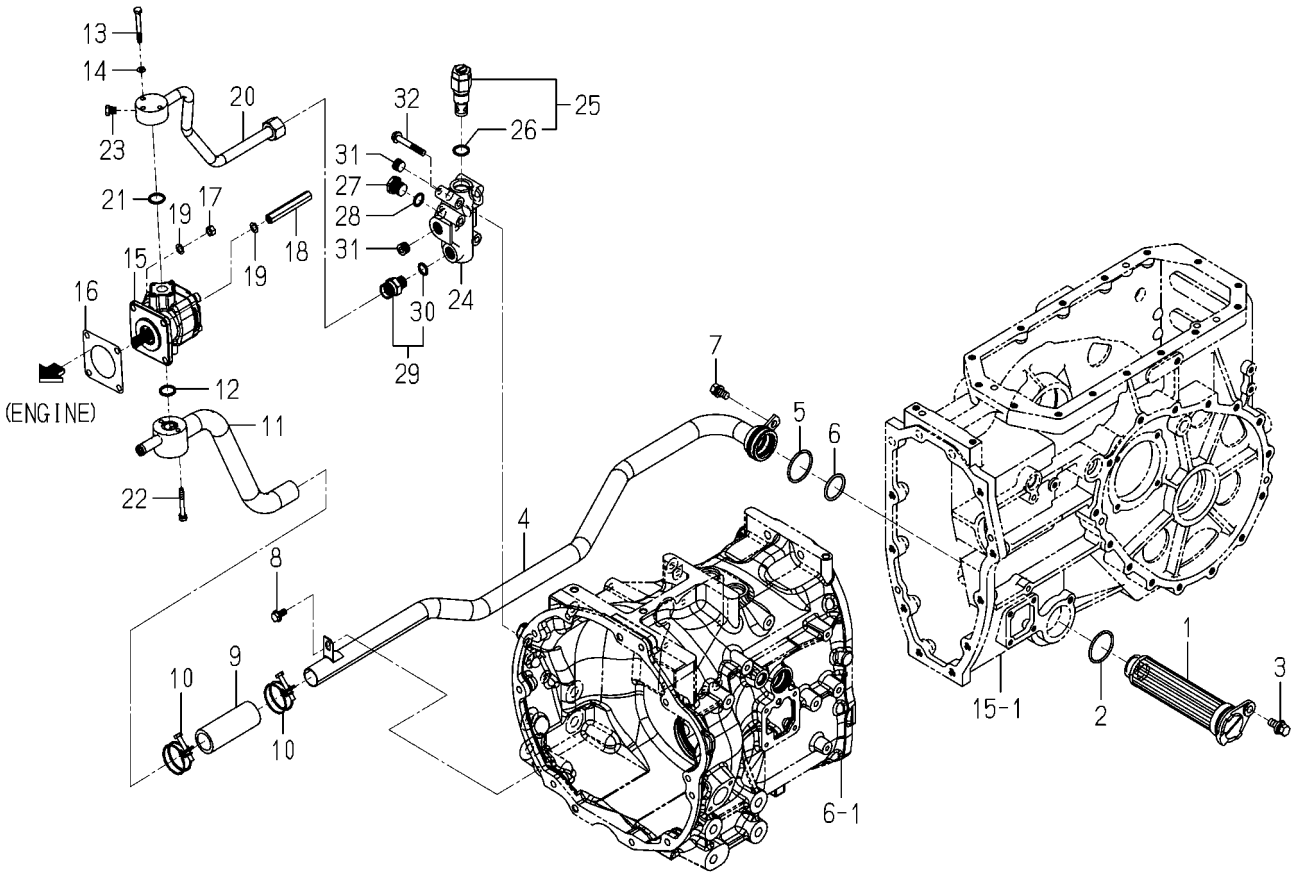

1834-508A-0100

KEY	PART CODE	DESCRIPTION	SPC	TYPE OF MODEL TLE3400 H3		ITC	COL	GRP	REMARKS
1	1805-508-260-00	FILTER/SUCTION/400	*	1					
2	V721-103-104-50	O-RING/1A,G45	*	1					
3	V211-361-002-50	BOLT,SP/M10X25	*	1					
4	1805-508-210-20	PIPE/SUC/REAR COMP	*	1					
5	V721-103-104-50	O-RING/1A,G45	*	1					
6	V721-103-103-50	O-RING/1A,G35	*	1					
7	V211-561-002-00	BOLT,S/M10X20/7T	*	1					
8	V231-360-801-60	FLANGEBOLT/M8X16	*	1					
9	1833-508-061-10	HOSE/100	*	1					
10	J061-232-040-00	CLAMP/WIRE/32-40	*	2					
11	1834-508-610-00	PIPE/SUC/FRONT COMP	*	1					
12	V720-112-402-00	O-RING/1B,P20	*	1					
13	V200-360-605-50	BOLT/M6X55/7T	*	2					
14	V401-160-006-00	WASHER,SP/M6	*	2					
15	1813-508-600-00	PUMP/GEAR/L10 ASSY	*	1					
16	1404-503-006-00	PACKING,OIL PUMP	*	1					
17	V304-260-008-00	NUT/M8	*	3					
18	1560-515-004-50	NUT/M08	*	1					
19	V401-160-008-00	WASHER,SP/M8	*	4					
20	1834-508-620-00	PIPE/DEL/FRONT COMP	*	1					
21	V720-112-402-00	O-RING/1B,P20	*	1					
22	V210-560-603-50	BOLT,S/M6X35/7T	*	3					
23	V782-160-000-2T	PLUG/SCREW/SEAL	*	1					
24	1805-508-311-00	METAL/RELIEF	*	1					
25	K250-078-000-00	VALVE/RELIEF/07 ASSY	*	1					
26	V720-112-402-00	O-RING/1B,P20	*	1					
27	K211-074-002-00	PLUG/M18	*	1					
28	V720-112-401-60	O-RING/1B,P16	*	1					
29	1729-508-290-20	ADAPTER/G3/8 ASSY	*	3					
30	V720-112-401-40	O-RING/1B,P14	*	3					

FIG. 41 PIPING(MAIN)SYSTEM(2/2)

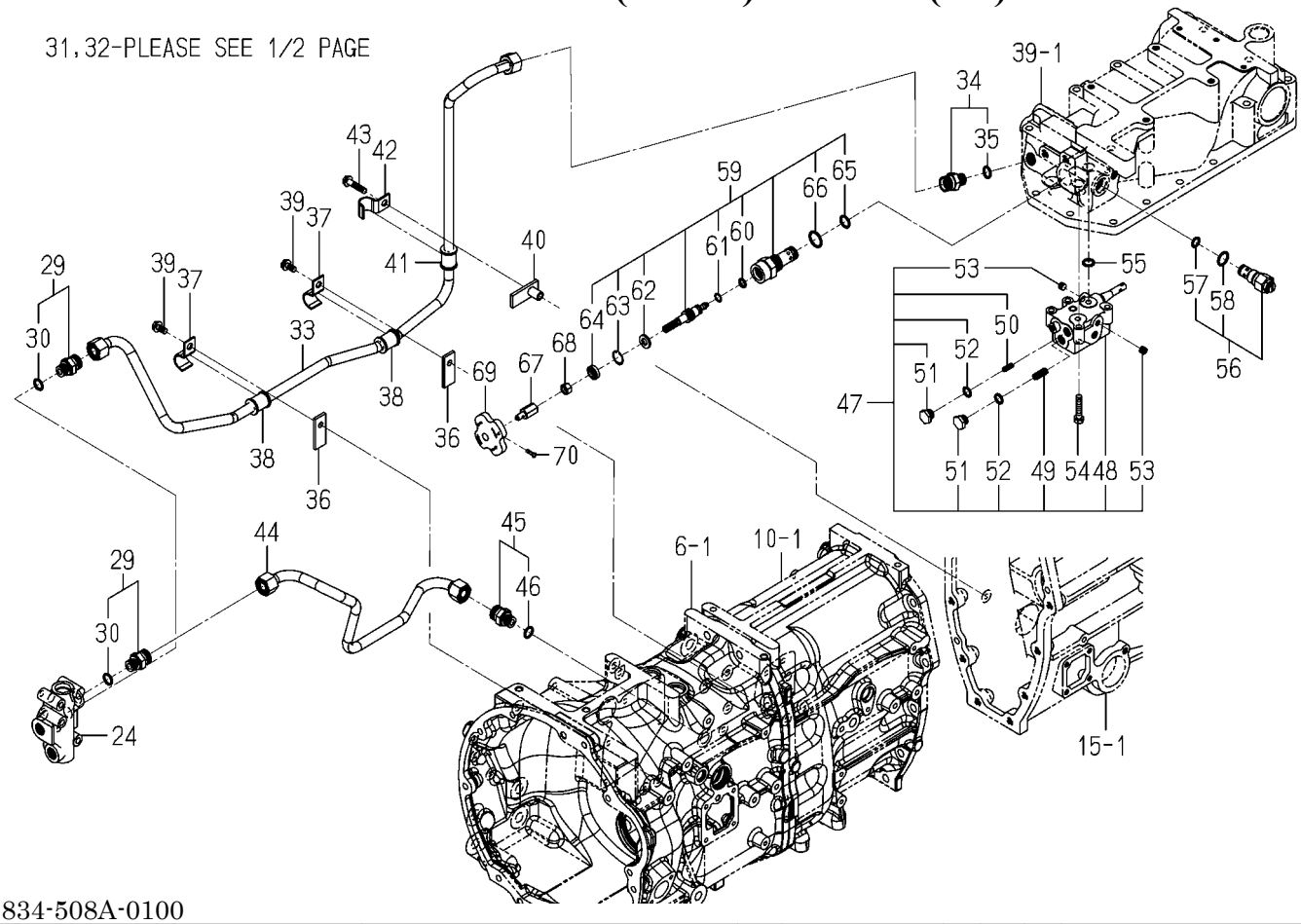

1834-508A-0100

KEY	PART CODE	DESCRIPTION	SPC	TYPE OF MODEL TLE3400 H3		ITC	COL	GRP	REMARKS
31	V780-140-000-6T	PLUG/SCREW/SEAL	*	3					
32	V231-360-805-50	FLANGEBOLT/M8X55	*	3					
33	1834-508-510-00	PIPE/DEL/REAR/H COMP	*	1					
34	1824-508-270-00	ADAPTER/G3/8 ASSY	*	1					
35	V720-112-401-40	O-RING/1B,P14	*	1					
36	1834-508-051-00	HOLDER	*	2					
37	1710-508-551-00	HOLDER/PIPE	*	2			7F		
38	1729-508-013-00	HOLDER/PIPE	*	2					
39	V231-360-801-60	FLANGEBOLT/M8X16	*	2					
40	1999-508-350-00	HOLDER COMP	*	1					
41	1729-508-013-00	HOLDER/PIPE	*	1					
42	1710-508-551-00	HOLDER/PIPE	*	1			7F		
43	V231-360-803-50	FLANGEBOLT/M8X35	*	1					
44	1834-508-520-00	PIPE/RETURN/H COMP	*	1					
45	1824-508-270-00	ADAPTER/G3/8 ASSY	*	1					
46	V720-112-401-40	O-RING/1B,P14	*	1					
47	K211-026-000-00	CONTROL VALVE ASSY	*	1					
48	K211-026-100-00	VALVE SET	*	1					
49	K211-001-006-20	SPRING	*	1					
50	K211-001-007-00	SPRING	*	1					
51	K211-001-008-00	PLUG	*	3					
52	V720-112-401-20	O-RING/1B,P12	*	3					
53	V780-140-000-2T	PLUG/SCREW/SEAL	*	2					
54	V211-260-804-00	BOLT,S/M8X40	*	3					
55	V720-112-401-40	O-RING/1B,P14	*	2					
56	K250-015-000-00	VALVE	*	1					
57	V720-112-401-20	O-RING/1B,P12	*	1					
58	V720-112-401-80	O-RING/1B,P18	*	1					
59	K231-008-000-20	VALVE/SLOW RETURN/00	*	1					
60	V720-112-401-00	O-RING/1B,P10A	*	1					

FIG. 41 PIPING(MAIN)SYSTEM(2/2)

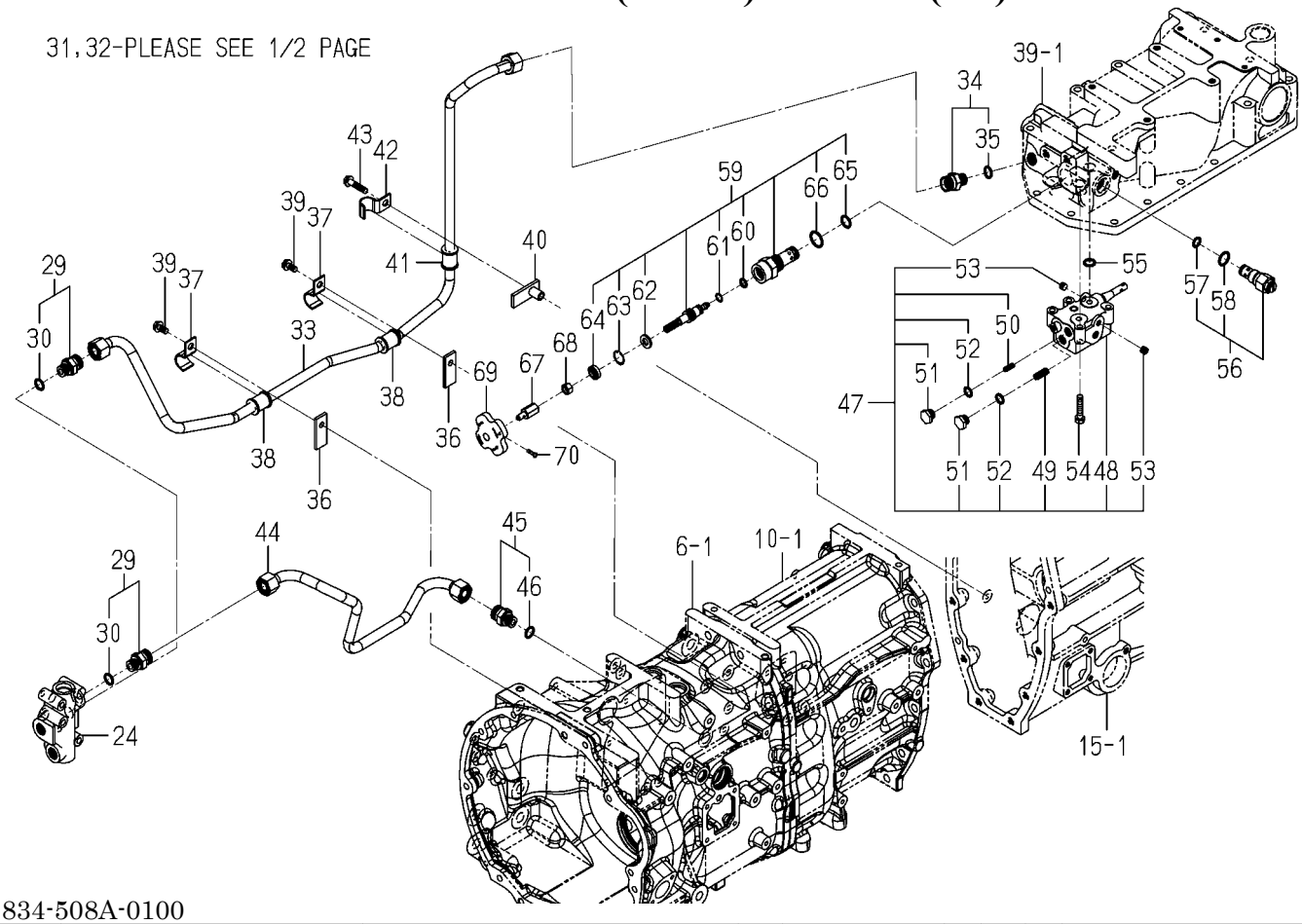

1834-508A-0100

KEY	PART CODE	DESCRIPTION	SPC	TYPE OF MODEL TLE3400 H3		ITC	COL	GRP	REMARKS
61	V730-101-401-00	RING/BACK UP	*	1					
62	K231-007-003-00	COLLAR/11X21X03	*	1					
63	K231-007-004-00	RING/SNAP	*	1					
64	K231-004-007-00	SEAL,DUST	*	1					
65	V720-112-402-20	O-RING/1B,P22	*	1					
66	V720-112-401-60	O-RING/1B,P16	*	1					
67	1821-508-003-00	SHAFT/SLOWRETURN	*	1					
68	V304-260-010-00	NUT/M10	*	1					
69	1444-503-007-00	HANDLE,ADJUST	*	1					
70	V111-164-001-60	SCREW/M4X16	*	1					

FIG. 42 PIPING(SUB)SYSTEM(1/2)

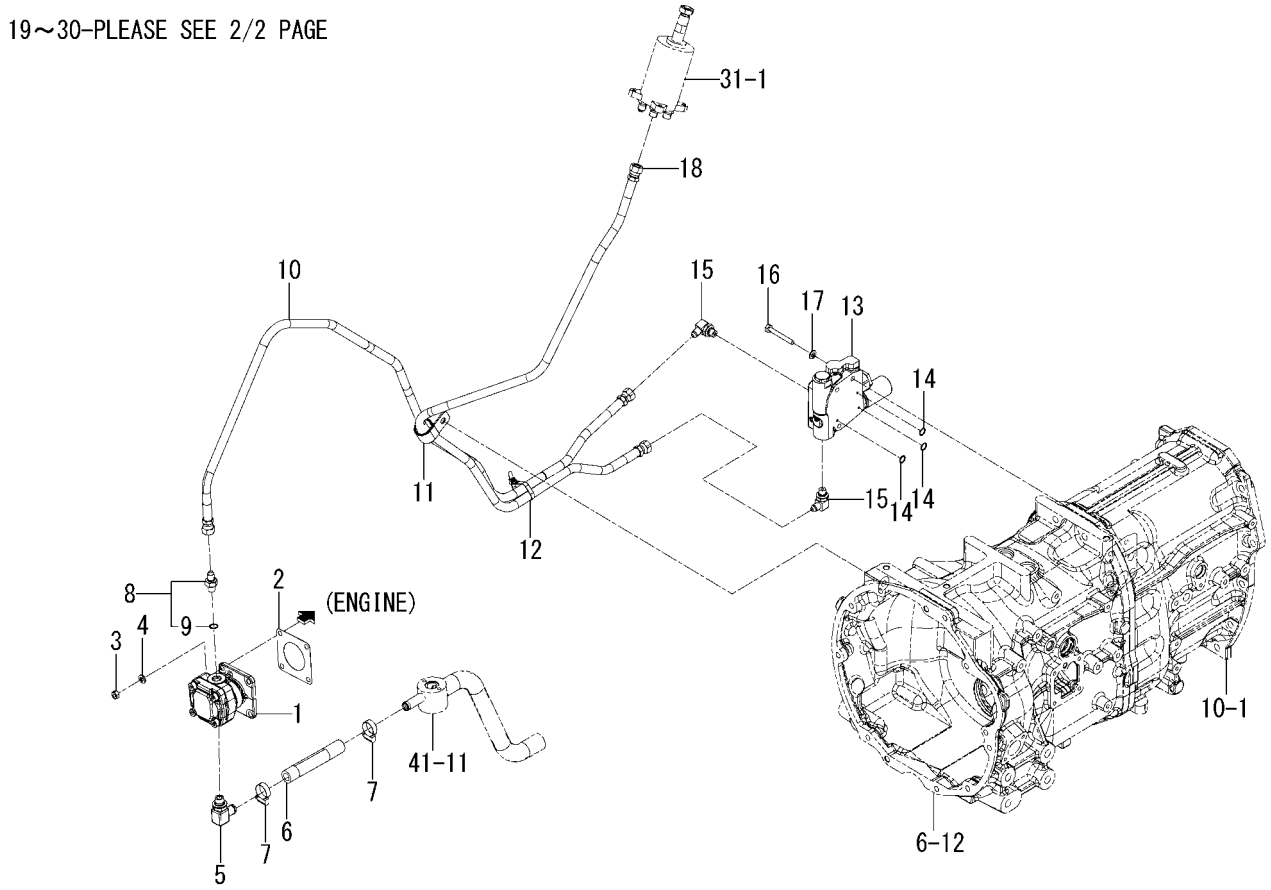

1834-509A-0100

KEY	PART CODE	DESCRIPTION	SPC	TYPE OF MODEL TLE3400 H3		ITC	COL	GRP	REMARKS
1	1773-407-200-00	PUMP/GEAR/5.2/R ASSY	*	1					
2	1404-503-006-00	PACKING,OIL PUMP	*	1					
3	V304-260-008-00	NUT/M8	*	4					
4	V401-160-008-00	WASHER,SP/M8	*	4					
5	1999-509-630-00	ADAPTER/G3/8 ASSY	*	1					
6	1834-509-001-00	HOSE/130	*	1					
7	J061-116-025-00	CLAMP/WORM/16-25	*	2					
8	1725-509-260-00	ADAPTER/G1/4 ASSY	*	1					
9	V720-112-401-10	O-RING/1B,P11	*	1					
10	1805-407-210-30	HOSE/1450 ASSY	*	1					
11	1518-786-508-00	CLIP B	*	1					
12	1376-402-003-00	BAND,WIRE/140	*	1					
13	K200-289-000-00	VALVE/INDEPENDENT	*	1					FIG 078
14	V720-112-401-00	O-RING/1B,P10A	*	3					
15	1999-509-510-00	ADAPTER/L/G1/4 ASSY	*	2					
16	W201-260-805-50	BOLT/M8XX55	*	3					
17	V401-160-008-00	WASHER,SP/M8	*	3					
18	1834-509-210-10	HOSE/1180 ASSY	*	1					
19	1834-509-220-10	HOSE/1750 ASSY	*	1					
20	1444-101-016-10	CLAMP,RADIATOR HOSE	*	1					
21	V231-360-801-60	FLANGEBOLT/M8X16	*	1					
22	1376-402-003-00	BAND,WIRE/140	*	1					
23	1785-509-250-00	COOLER/OIL ASSY	*	1					
24	1746-804-003-00	FLANGEBOLT	*	2					
25	1999-509-610-00	ADAPTER/G3/8 ASSY	*	1					
26	1999-509-580-00	ADAPTER/G3/8-PF1/4	*	1					
27	1725-509-260-00	ADAPTER/G1/4 ASSY	*	1					
28	V720-112-401-10	O-RING/1B,P11	*	1					
29	K220-002-000-00	VALVE/CHECK ASSY	*	1					
30	V720-112-401-40	O-RING/1B,P14	*	1					

FIG. 42 PIPING(SUB)SYSTEM(2/2)

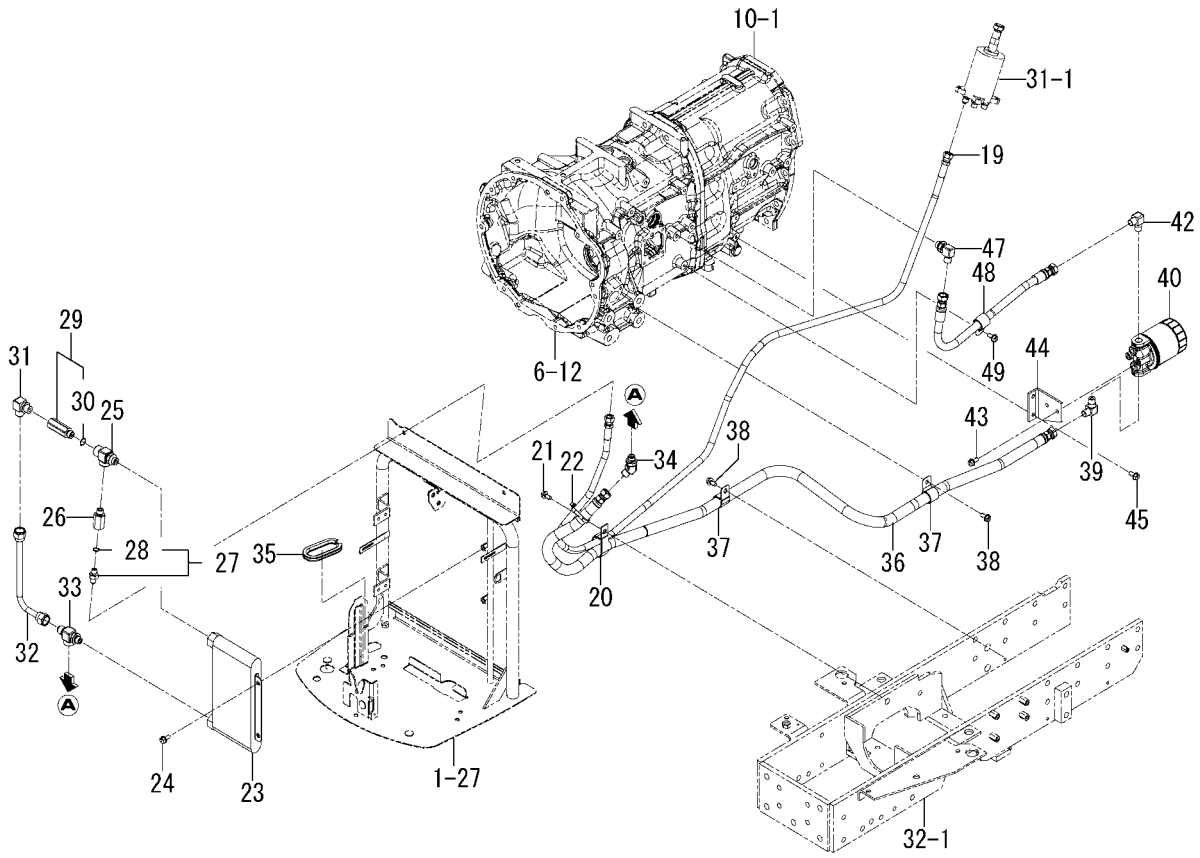

1834-509A-0100

KEY	PART CODE	DESCRIPTION	SPC	TYPE OF MODEL TLE3400 H3		ITC	COL	GRP	REMARKS
31	1999-509-550-00	ADAPTER/L/PF3/8 ASSY	*	1					
32	1641-517-540-00	PIPE/CHECKVALVE COMP	*	1					
33	1999-509-540-00	ADAPTER/G3/8 ASSY	*	1					
34	1999-509-520-00	ADAPTER/G3/8B ASSY	*	1					
35	1821-509-053-00	INSULATOR/180	*	1					
36	1834-509-230-10	HOSE/1700 ASSY	*	1					
37	1440-105-006-00	CLAMP/23	*	2					
38	V231-360-801-60	FLANGEBOLT/M8X16	*	2					
39	1999-509-003-00	ADAPTER/90ß	*	1					
40	1771-510-250-00	FILTER/OIL ASSY	*	1					
41	1771-510-251-00	FILTER/OIL ASSY	*	1					
42	1999-509-003-00	ADAPTER/90ß	*	1					
43	V231-360-801-60	FLANGEBOLT/M8X16	*	2					
44	1805-509-051-00	STAY/FILTER/CHARGE	*	1					
45	V231-360-801-60	FLANGEBOLT/M8X16	*	2					
46	1834-509-510-10	HOSE/500 ASSY	*	1					
47	1999-508-370-00	ADAPTER/L/G3/8 ASSY	*	1					
48	1440-105-006-00	CLAMP/23	*	1					
49	V231-360-801-60	FLANGEBOLT/M8X16	*	1					

FIG. 43 VALVE(REMOTE/1ST)SYSTEM(V TYPE)

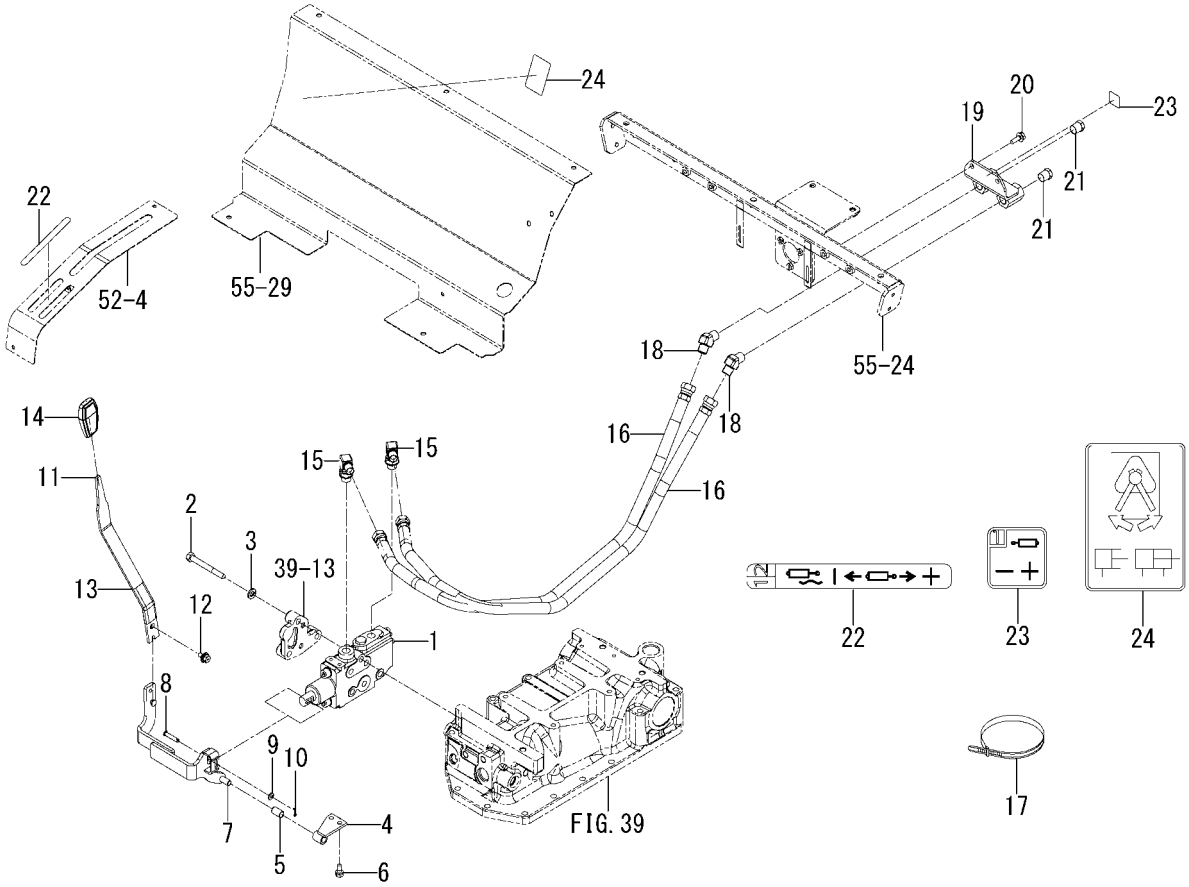

1834-512B-0100

KEY	PART CODE	DESCRIPTION	SPC	TYPE OF MODEL TLE3400 H3		ITC	COL	GRP	REMARKS
1	1719-511-350-00	VALVE/CONTROL ASSY	*	1					FIG 081
2	V201-261-008-00	BOLT/M10X80	*	3					
3	V401-160-010-00	WASHER,SP/M10	*	3					
4	1834-512-260-00	HOLDER COMP	*	1					
5	1560-509-211-00	BUSH/10X12X20	*	1					
6	V211-260-801-60	BOLT,S/M8X16	*	2					
7	1834-512-220-00	ARM/1ST COMP	*	1					
8	2144-519-007-00	PIN/06X31	*	1					
9	V411-260-006-00	WASHER,PL/M6	*	1					
10	2130-601-018-00	PIN,SNAP/6	*	1					
11	1834-512-001-00	LEVER/1ST	*	1					
12	V211-360-801-60	BOLT,SP/M8X16	*	1					
13	1614-262-006-00	INSULATOR/LEVER/SUB	*	1					
14	3659-203-005-00	GRIP/03X17X74	*	1					
15	1999-508-370-00	ADAPTER/L/G3/8 ASSY	*	2					
16	1813-512-600-00	HOSE/950 ASSY	*	2					
17	1342-402-006-00	BAND,WIRE/250	*	2					
18	1999-512-003-00	ADAPTER/45ß/R3/8XG3/	*	2					
19	1834-512-240-00	STAY/AUX COMP	*	1					
20	V231-360-802-00	FLANGEBOLT/M8X20	*	2					
21	V782-160-000-6T	PLUG/SCREW/SEAL	*	2					
22	1834-512-021-00	LABEL/SUB/CONTROL/AU	*	1					
23	1834-512-022-00	LABEL/PORT/1ST	*	1					
24	1831-512-003-00	LABEL/SUB/CONTROL	*	1					

FIG. 44 VALVE(REMOTE/1ST)SYSTEM(W TYPE)

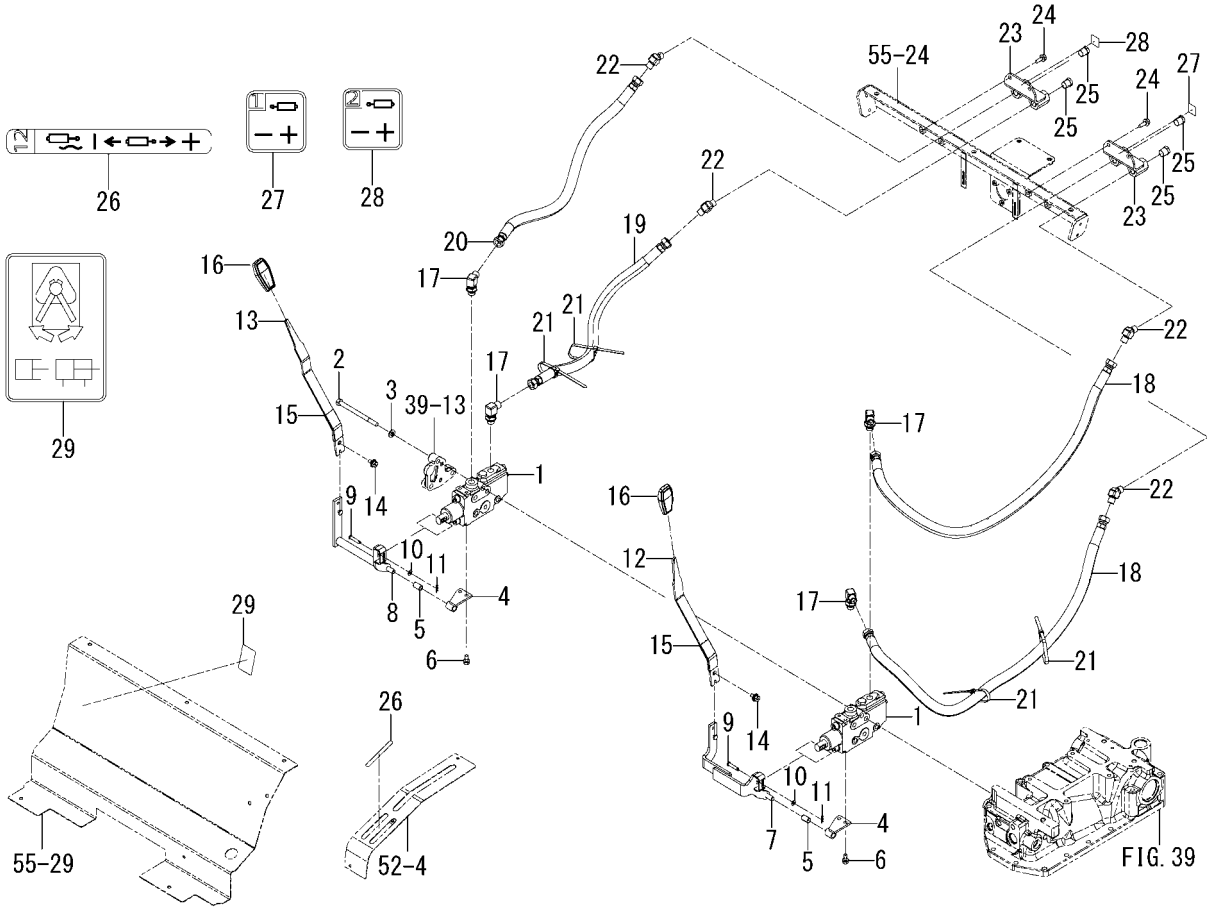

1834-512D-0100

KEY	PART CODE	DESCRIPTION	SPC	TYPE OF MODEL TLE3400 H3		ITC	COL	GRP	REMARKS
1	1719-511-350-00	VALVE/CONTROL ASSY	*	2					FIG 081
2	V201-261-012-00	BOLT/M10X120	*	3					
3	V401-160-010-00	WASHER,SP/M10	*	3					
4	1834-512-260-00	HOLDER COMP	*	2					
5	1560-509-211-00	BUSH/10X12X20	*	2					
6	V211-260-801-60	BOLT,S/M8X16	*	4					
7	1834-512-220-00	ARM/1ST COMP	*	1					
8	1834-512-230-00	ARM/2ND COMP	*	1					
9	2144-519-007-00	PIN/06X31	*	2					
10	V411-260-006-00	WASHER,PL/M6	*	2					
11	2130-601-018-00	PIN,SNAP/6	*	2					
12	1834-512-001-00	LEVER/1ST	*	1					
13	1834-512-002-00	LEVER/2ND	*	1					
14	V211-360-801-60	BOLT,SP/M8X16	*	2					
15	1614-262-006-00	INSULATOR/LEVER/SUB	*	2					
16	3659-203-005-00	GRIP/03X17X74	*	2					
17	1999-508-370-00	ADAPTER/L/G3/8 ASSY	*	4					
18	1813-512-600-00	HOSE/950 ASSY	*	2					
19	1813-512-610-00	HOSE/600 ASSY	*	1					
20	1813-512-620-00	HOSE/640 ASSY	*	1					
21	1342-402-006-00	BAND,WIRE/250	*	4					
22	1999-512-003-00	ADAPTER/45ß/R3/8XG3/	*	4					
23	1834-512-240-00	STAY/AUX COMP	*	2					
24	V231-360-802-00	FLANGEBOLT/M8X20	*	4					
25	V782-160-000-6T	PLUG/SCREW/SEAL	*	4					
26	1834-512-021-00	LABEL/SUB/CONTROL/AU	*	1					
27	1834-512-022-00	LABEL/PORT/1ST	*	1					
28	1834-512-024-00	LABEL/PORT/2ND	*	1					
29	1831-512-003-00	LABEL/SUB/CONTROL	*	1					

FIG. 45 LINK(3P)SYSTEM

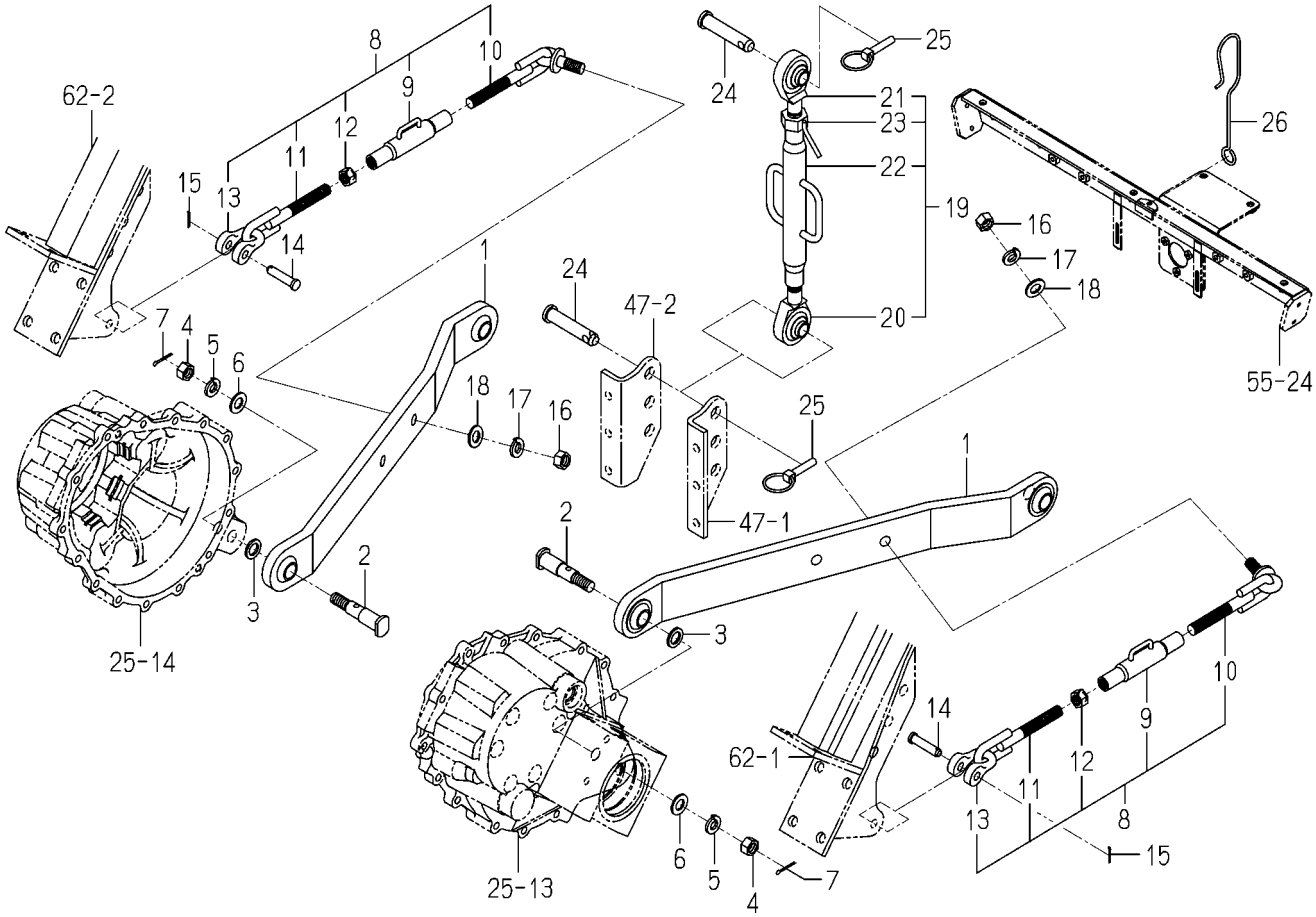

1834-514 -0100

KEY	PART CODE	DESCRIPTION	SPC	TYPE OF MODEL TLE3400 H3		ITC	COL	GRP	REMARKS
1	1824-514-250-00	LINK/LOWER COMP	*	2					
2	1690-514-001-00	PIN/22X99	*	2					
3	1650-514-004-00	WASHER/19X30X03	*	2					
4	V500-164-003-00	PIN,SPLIT/4X30	*	2					
5	V304-460-016-00	NUT/M16/7T	*	2					
6	V402-160-016-00	WASHER,SP/M16	*	2					
7	V411-260-016-00	WASHER,PL/M16	*	2					
8	1834-514-210-00	CHAIN/CHECK/E4 ASSY	*	2					
9	1834-514-203-00	BUCKLE/TURN COMP	*	2					
10	1834-514-202-00	CHAIN/CHECK/B COMP	*	2					
11	1834-514-201-00	CHAIN/CHECK/A COMP	*	2					
12	1834-514-205-00	NUT	*	2					
13	1834-514-204-00	SHUCKLE	*	2					
14	7963-611-003-00	PIN/12X48	*	2					
15	V500-163-002-00	PIN,SPLIT/3X20	*	2					
16	V304-460-016-00	NUT/M16/7T	*	2					
17	V402-160-016-00	WASHER,SP/M16	*	2					
18	V411-260-016-00	WASHER,PL/M16	*	2					
19	1824-514-260-00	LINK/TOP ASSY	*	1					
20	1801-514-231-00	LINK/TOP/LH COMP	*	1					
21	1801-514-232-00	LINK/TOP/RH COMP	*	1					
22	1801-514-233-20	BUCKLE/TURN COMP	*	1					
23	1801-514-234-00	NUT COMP	*	1					
24	1620-514-005-00	PIN/19X94	*	2					
25	1673-525-002-30	LINKPIN	*	2					
26	1742-514-001-10	HOOK/TOPLINK	*	1					

FIG. 46 ROD(LIFT)SYSTEM

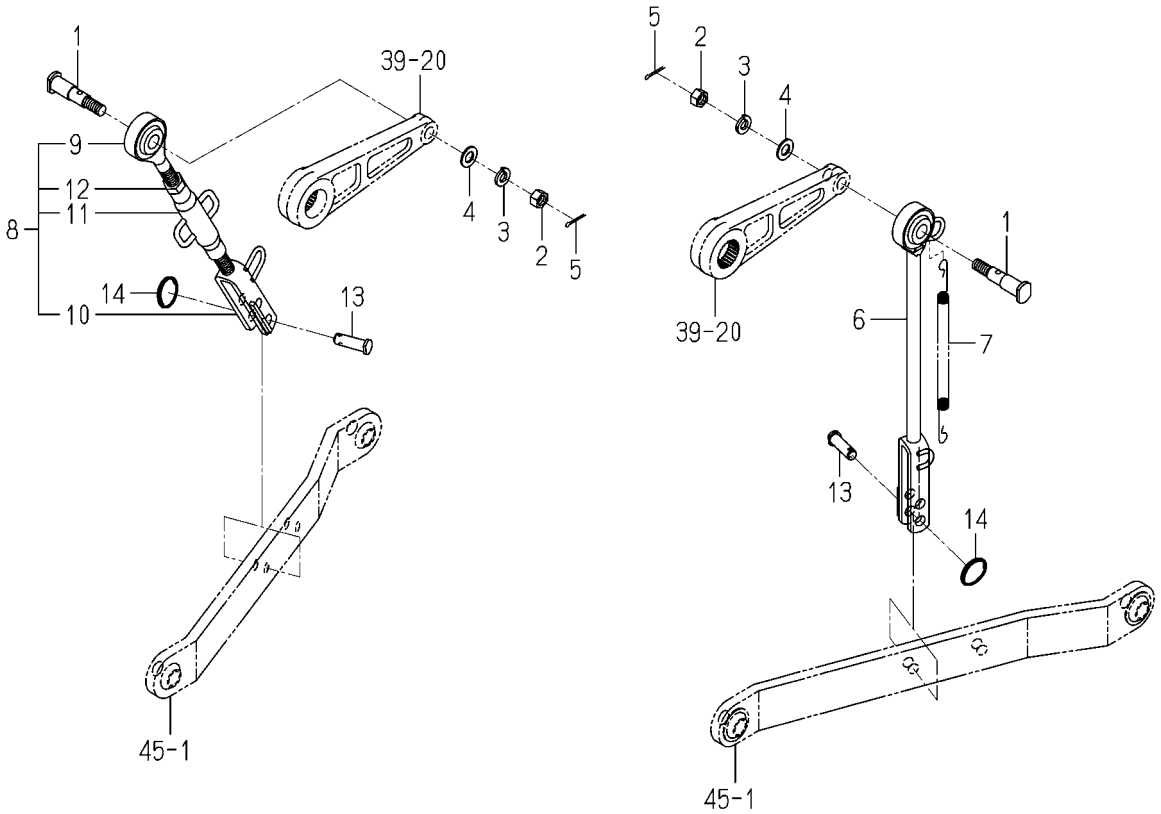

1834-515 -0100

KEY	PART CODE	DESCRIPTION	SPC	TYPE OF MODEL TLE3400 H3		ITC	COL	GRP	REMARKS
1	1690-514-001-00	PIN/22X99	*	2					
2	V304-460-016-00	NUT/M16/7T	*	2					
3	V402-160-016-00	WASHER,SP/M16	*	2					
4	V411-260-016-00	WASHER,PL/M16	*	2					
5	V500-164-003-00	PIN,SPLIT/4X30	*	2					
6	1824-515-250-00	ROD/LIFT/LH COMP	*	1					
7	1560-525-001-40	SPRING	*	1					
8	1824-515-260-00	ROD/FORK/RH ASSY	*	1					
9	1805-515-211-00	ROD/LIFT COMP	*	1					
10	1805-515-213-00	FORK/LIFT COMP	*	1					
11	1805-515-212-00	BUCKLE/TURN COMP	*	1					
12	2183-310-013-00	NUT(M22)	*	1					
13	1759-514-004-10	PIN/16X51	*	2					
14	8654-501-006-10	SPRING/CLIP	*	2					

FIG. 47 BRACKET(LINK/TOP)SYSTEM

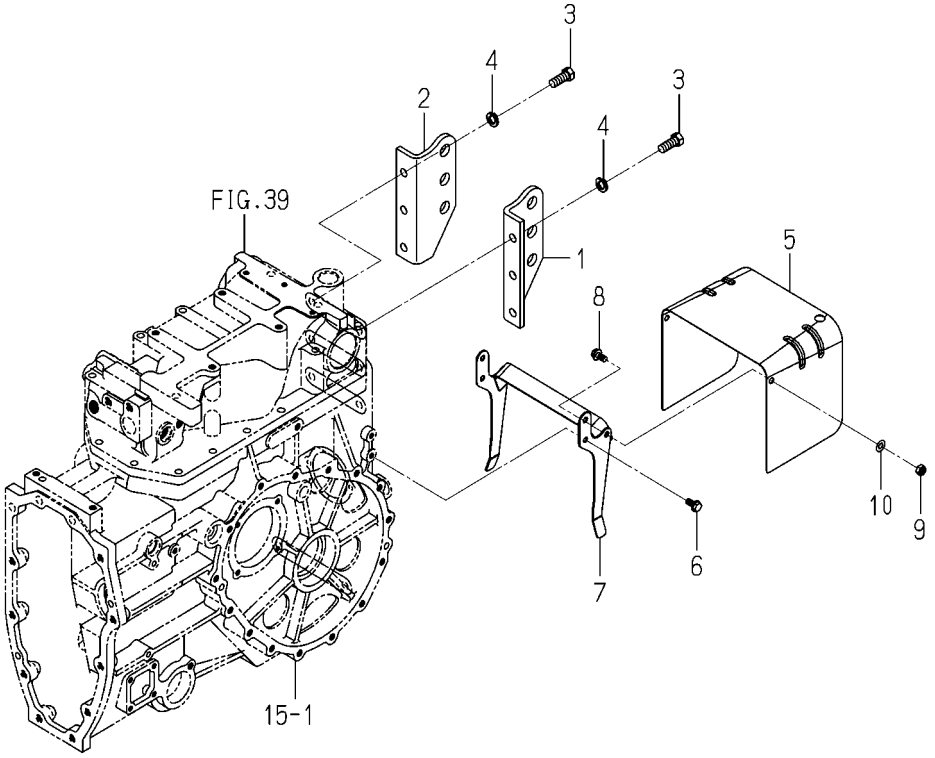

1834-520 -0100

KEY	PART CODE	DESCRIPTION	SPC	TYPE OF MODEL TLE3400 H3		ITC	COL	GRP	REMARKS
1	1805-520-001-00	PLATE/L/187X83	*	1					
2	1805-520-003-00	PLATE/L/187X83	*	1					
3	V201-361-203-00	BOLT/M12X30/7T	*	6					
4	V402-160-012-00	WASHER,SP/M12	*	6					
5	1774-218-001-00	COVER/SHIELD	*	1					
6	V231-360-801-60	FLANGEBOLT/M8X16	*	4					
7	1805-520-210-00	BRACKET/COVER COMP	*	1					
8	V231-360-801-60	FLANGEBOLT/M8X16	*	2					
9	1719-312-001-00	U-NUT	*	2					
10	V411-260-008-00	WASHER,PL/M8	*	2					

FIG. 48 BRACKET(DRAW BAR)SYSTEM

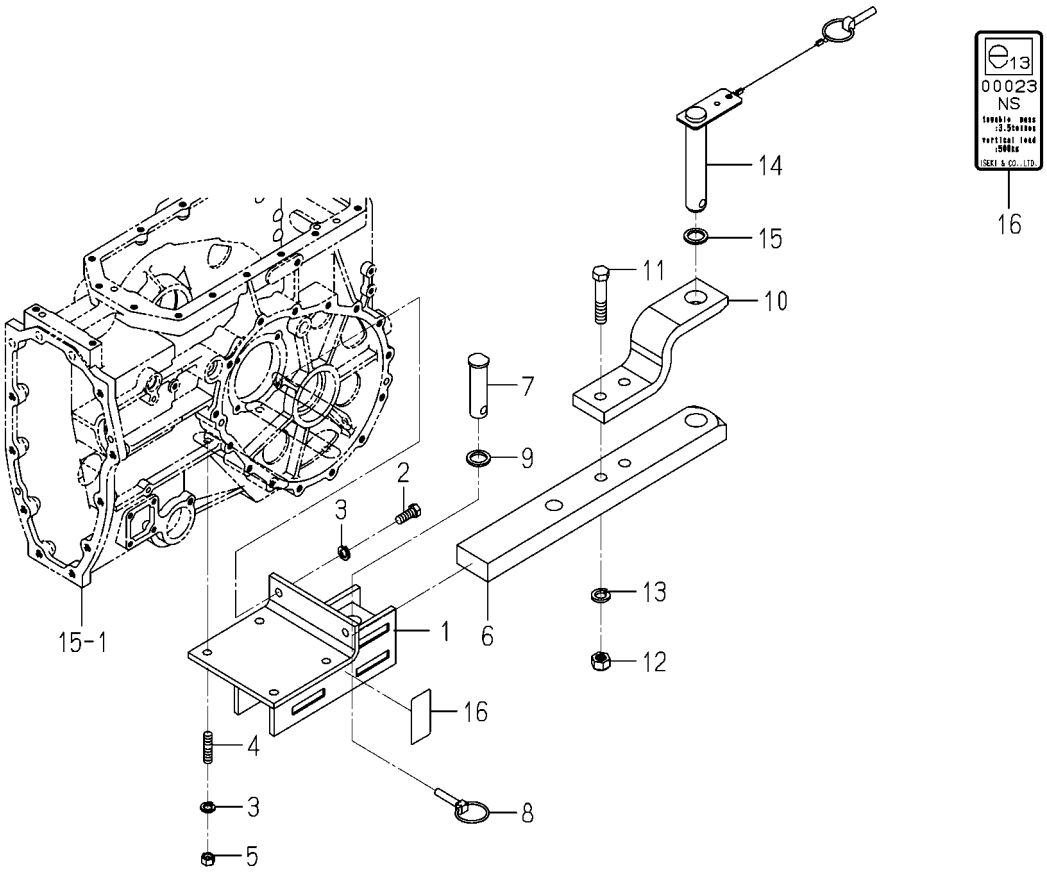

1834-521A-0100

KEY	PART CODE	DESCRIPTION	SPC	TYPE OF MODEL TLE3400 H3		ITC	COL	GRP	REMARKS
1	1834-521-200-10	BRACKET/DRAWBAR COMP	*	1					
2	V201-361-203-00	BOLT/M12X30/7T	*	2					
3	V402-160-012-00	WASHER,SP/M12	*	6					
4	V251-341-202-50	STUD/M12X25/7T	*	4					
5	V304-460-012-00	NUT/M12/7T	*	4					
6	1834-521-006-00	DRAWBAR/E4	*	1					
7	1640-520-005-00	PIN/25X91	*	1					
8	1673-525-002-30	LINKPIN	*	1					
9	1640-520-004-00	INSULATOR	*	1					
10	1837-521-061-00	LINK/DRAWBER	*	1					
11	V201-361-608-00	BOLT/M16X80/7T	*	2					
12	1518-924-001-00	NUT,U/M16	*	2					
13	V402-160-016-00	WASHER,SP/M16	*	2					
14	1772-521-220-10	PIN COMP	*	1					
15	1674-520-004-00	INSULATOR	*	1					
16	1834-521-004-00	LABEL/TRH1833/H3	*	1					

FIG. 49 HOOD SYSTEM(1/2)

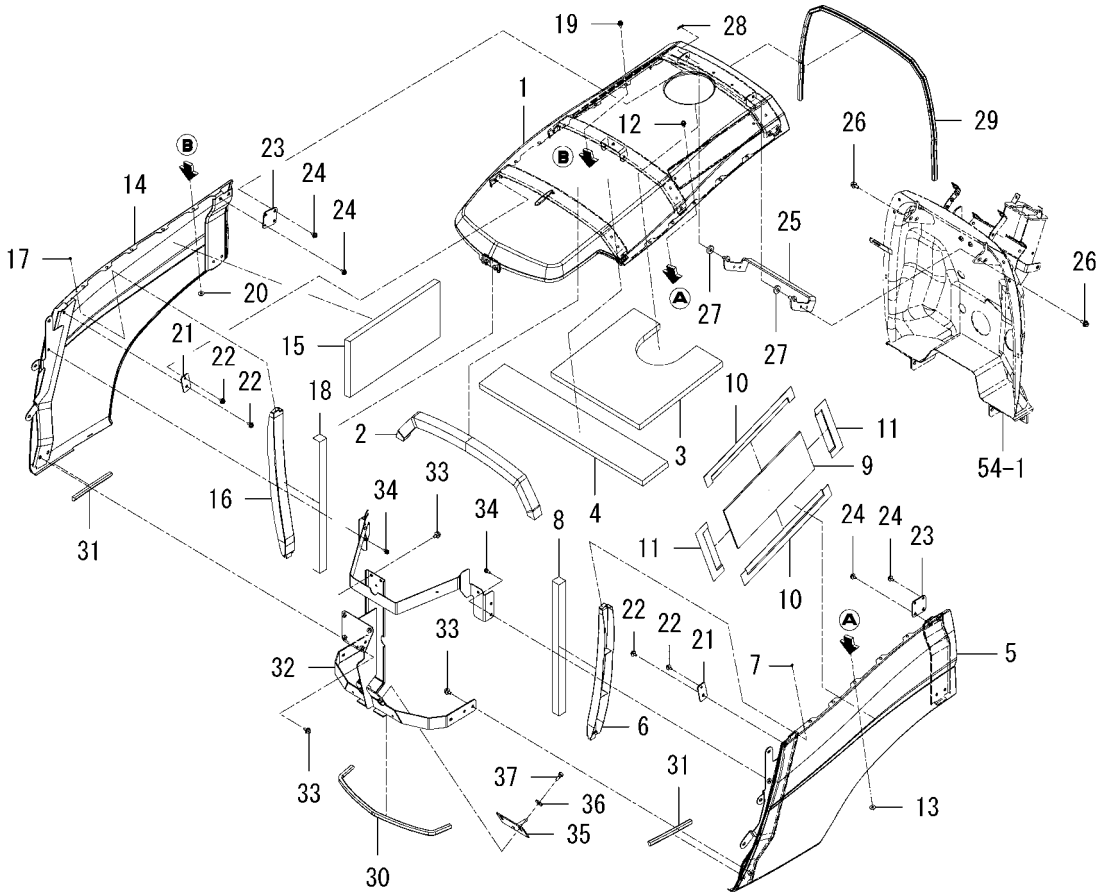

1834-601A-0100

KEY	PART CODE	DESCRIPTION	SPC	TYPE OF MODEL TLE3400 H3		ITC	COL	GRP	REMARKS
1	1824-601-200-20	HOOD/UPPER COMP	*	1			4L		
2	1801-601-001-00	INSULATOR	*	1					
3	1834-601-001-00	INSULATOR/HOOD	*	1					
4	1834-601-002-00	INSULATOR/110X700X20	*	1					
5	1824-601-250-00	HOOD/SIDE/LH COMP	*	1			4L		
6	1824-601-006-00	SHIELD/LH	*	1					
7	1600-431-003-00	SCREW,TAPPING	*	1					
8	1801-601-002-00	INSULATOR	*	1					
9	1813-601-011-00	INSULATOR/MUFFLER	*	1					
10	1789-111-005-00	INSULATOR/HEAT-RESIS	*	2					
11	1809-601-004-00	INSULATOR/HEAT-RESIS	*	2					
12	1824-601-011-00	BOLT/M6X14X16	*	5					
13	V361-260-006-00	NUT,WASHER/M6	*	5					
14	1824-601-260-00	HOOD/SIDE/RH COMP	*	1			4L		
15	1834-601-003-00	INSULATOR/SIDE	*	1					
16	1824-601-007-00	SHIELD/RH	*	1					
17	1600-431-003-00	SCREW,TAPPING	*	1					
18	1801-601-002-00	INSULATOR	*	1					
19	1824-601-011-00	BOLT/M6X14X16	*	5					
20	V361-260-006-00	NUT,WASHER/M6	*	5					
21	1824-601-002-10	PLATE/JOINT/F	*	2			4L		
22	1824-601-011-00	BOLT/M6X14X16	*	4					
23	1824-601-003-00	PLATE/JOINT/R	*	2			4L		
24	1824-601-011-00	BOLT/M6X14X16	*	8					
25	1824-601-230-00	BRACKET/E1 COMP	*	1					
26	V211-660-802-00	BOLT,SP/M8X20/7T	*	4					
27	1423-616-004-00	CUSHION/RUBBER/10X25	*	2					
28	V560-160-008-00	PIN/SNAP	*	1					
29	1805-601-002-00	INSULATOR/HOOD/1220	*	1					
30	1824-601-012-00	TRIM/560	*	1					

FIG. 49 HOOD SYSTEM(2/2)

31～37-PLEASE SEE 1/2 PAGE

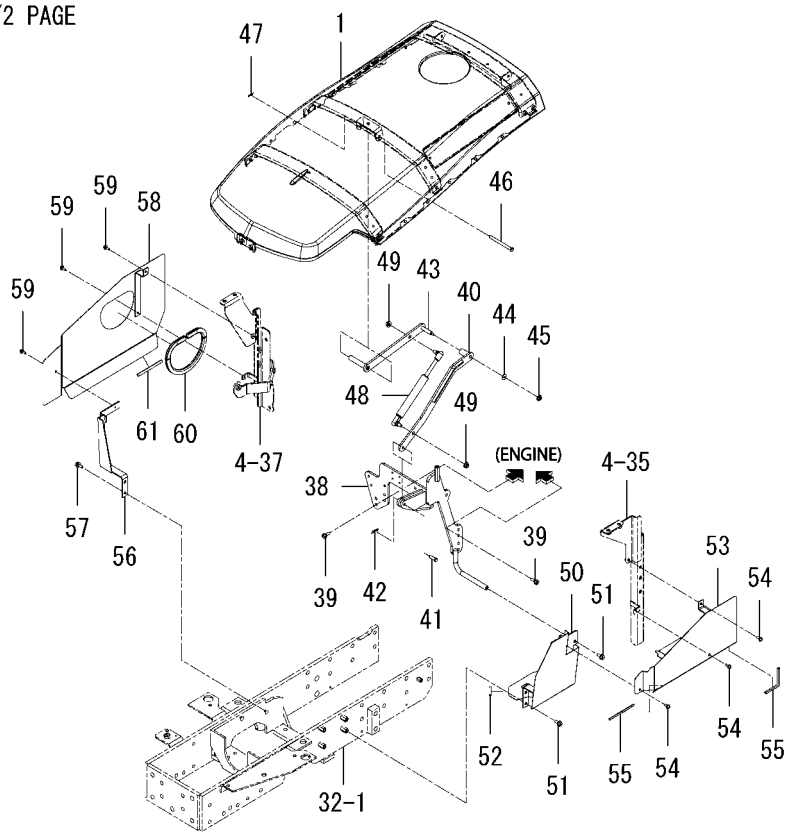

1834-601A-0100

KEY	PART CODE	DESCRIPTION	SPC	TYPE OF MODEL TLE3400 H3		ITC	COL	GRP	REMARKS
31	1824-601-013-00	TRIM/170	*	2					
32	1833-601-600-10	FLAME/FRONT COMP	*	1					
33	V211-660-801-60	BOLT,SP/M8X16/7T	*	6					
34	V210-660-601-60	BOLT,SP/M6X16/7T	*	2					
35	1834-601-310-00	PIN COMP	*	1					
36	4101-102-038-00	WASHER/24X9X3.2	*	2					
37	V211-260-802-00	BOLT,S/M8X20	*	2					
38	1834-601-220-10	BRACKET/LINK/HOOD	*	1					
39	V211-560-802-00	BOLT,S/M8X20/7T	*	4					
40	1834-601-600-20	LINK/HOOD/LOWER COMP	*	1					
41	1824-601-005-00	PIN/08X29	*	1					
42	V560-160-008-00	PIN/SNAP	*	1					
43	1834-601-640-10	LINK/HOOD/UPPER COMP	*	1					
44	1146-601-002-00	WASHER/07X18X02	*	1					
45	V361-260-006-00	NUT,WASHER/M6	*	1					
46	1824-601-004-00	PIN/08X97	*	1					
47	V560-160-008-00	PIN/SNAP	*	1					
48	1813-601-650-00	DAMPER/HOOD ASSY	*	1					
49	V362-260-010-00	NUT/WASHER/M10	*	2					
50	1834-601-210-10	NET/SIDE/LH COMP	*	1			7F		
51	V231-360-801-60	FLANGEBOLT/M8X16	*	3					
52	3661-212-001-00	LINING/50	*	1					
53	1834-601-230-00	PROTECTOR/REAR COMP	*	1					
54	V120-376-001-60	SCREW,SP/M6X16	*	3					
55	1705-102-014-00	TRIM/130	*	2					
56	1834-601-250-00	STAY/SIDE/RH COMP	*	1					
57	V231-360-801-60	FLANGEBOLT/M8X16	*	2					
58	1834-601-260-00	NET/SIDE/RH COMP	*	1			7F		
59	V120-376-001-60	SCREW,SP/M6X16	*	3					
60	1599-104-008-00	TRIM/430	*	1					

FIG. 49 HOOD SYSTEM(2/2)

31～37-PLEASE SEE 1/2 PAGE

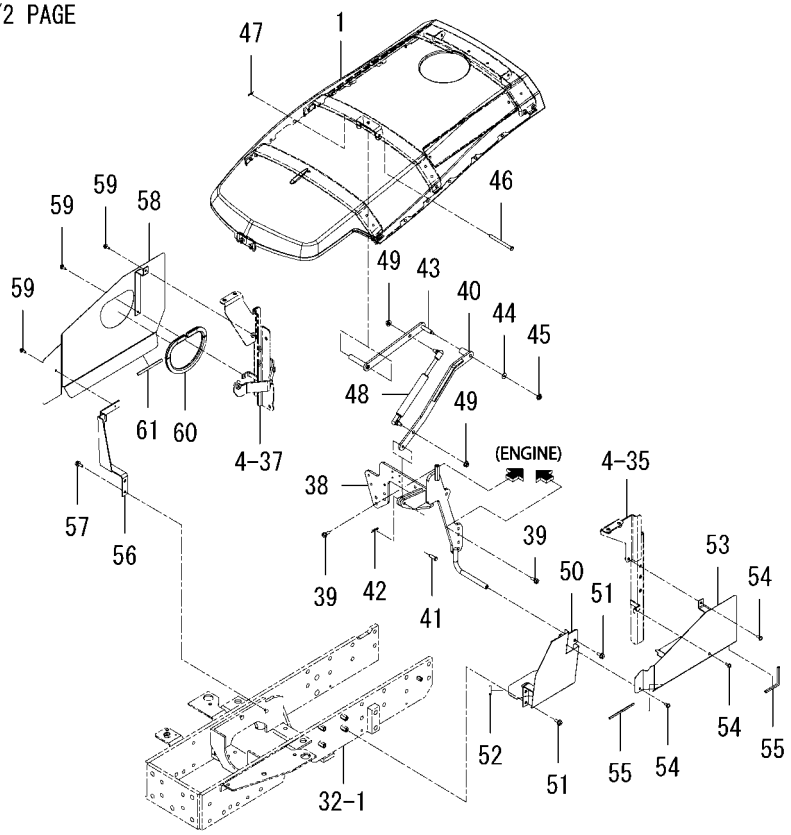

1834-601A-0100

KEY	PART CODE	DESCRIPTION	SPC	TYPE OF MODEL TLE3400 H3		ITC	COL	GRP	REMARKS
61	1705-102-014-00	TRIM/130	*	1					

FIG. 50 GRILLE SYSTEM

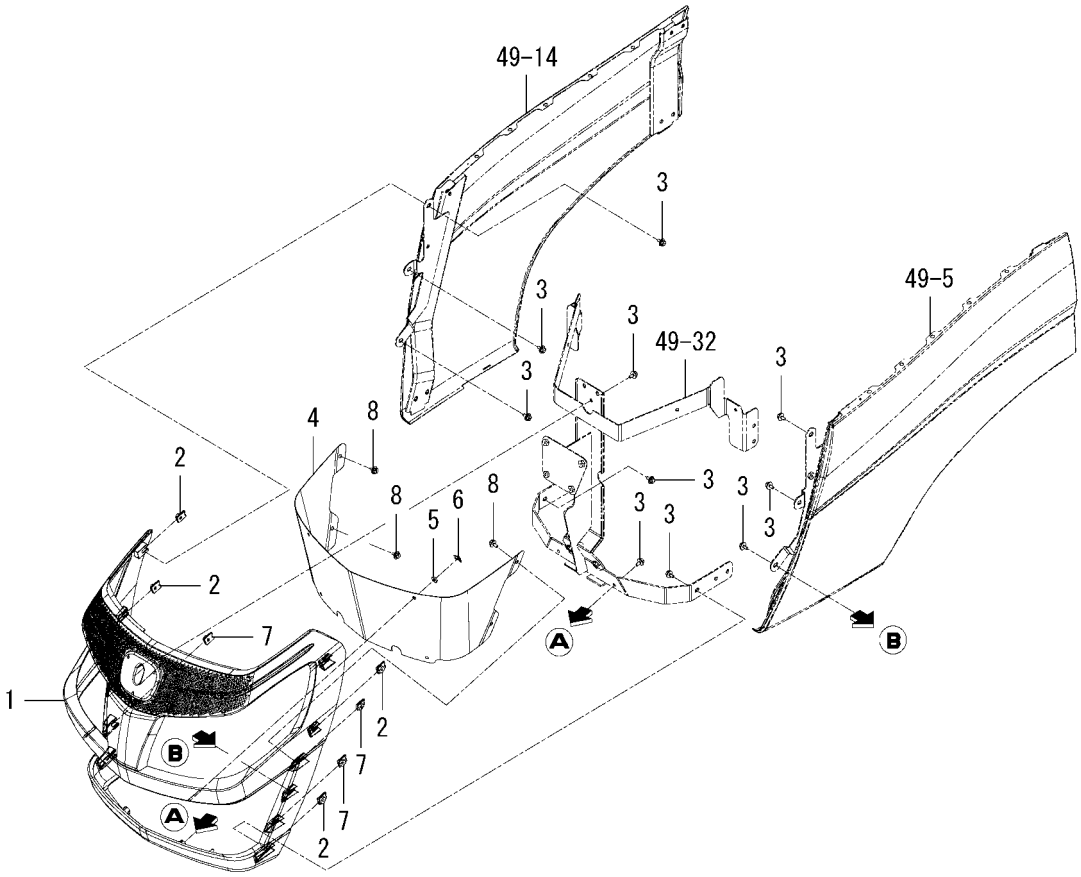

1834-602 -0100

KEY	PART CODE	DESCRIPTION	SPC	TYPE OF MODEL TLE3400 H3		ITC	COL	GRP	REMARKS
1	1833-602-061-00	GRILLE	*	1					
2	1999-602-002-00	NUT/M06	*	8					
3	1824-601-011-00	BOLT/M6X14X16	*	11					
4	1833-602-062-00	NET/GRILLE	*	1			7F		
5	1444-601-015-00	WASHER/6X14X3	*	4					
6	V350-160-006-00	NUT,SPEED/M6	*	4					
7	1999-602-002-00	NUT/M06	*	4					
8	1824-601-011-00	BOLT/M6X14X16	*	4					

FIG. 51 FENDER SYSTEM

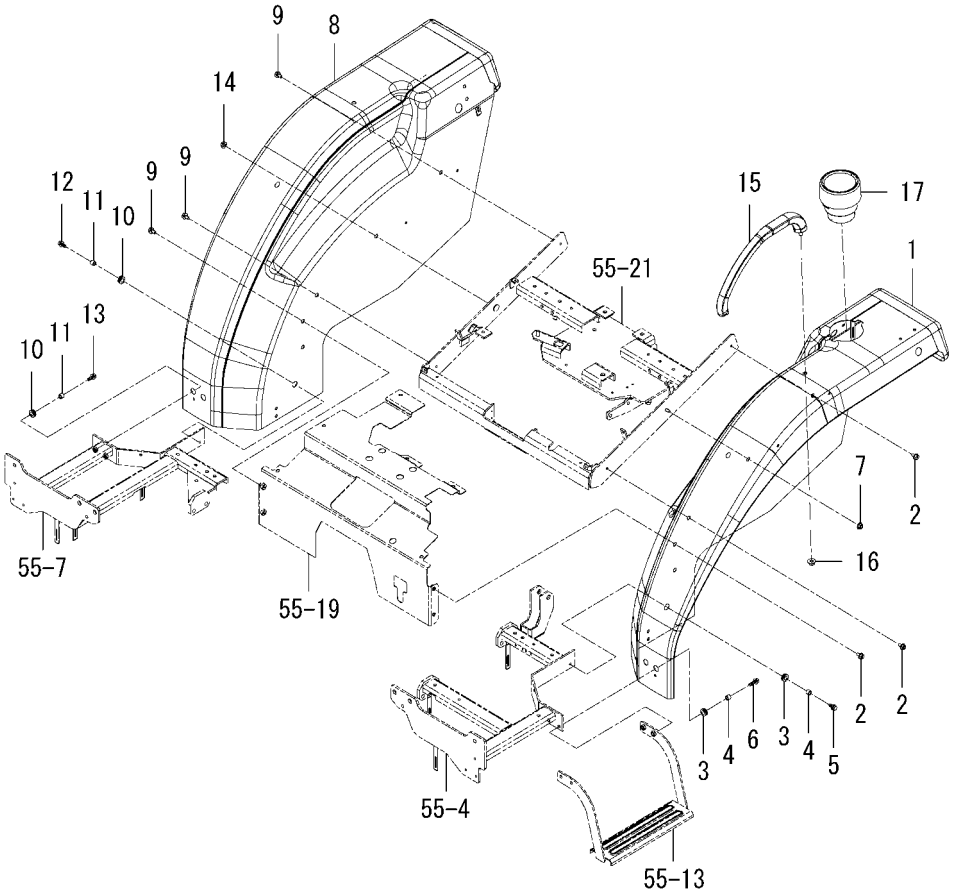

1834-606A-0100

KEY	PART CODE	DESCRIPTION	SPC	TYPE OF MODEL TLE3400 H3		ITC	COL	GRP	REMARKS
1	1834-606-220-00	FENDER/LH COMP	*	1			4L		
2	V231-360-801-20	FLANGEBOLT/M8X12	*	4					
3	2139-505-002-00	GROMMET	*	3					
4	1421-507-017-00	COLLAR/9X14X8	*	3					
5	V211-360-802-00	BOLT,SP/M8X20	*	1					
6	V211-360-803-00	BOLT,SP/M8X30	*	2					
7	V362-260-008-00	NUT/WASHER/M8	*	1					
8	1834-606-210-20	FENDER/RH COMP	*	1			4L		
9	V231-360-801-20	FLANGEBOLT/M8X12	*	4					
10	2139-505-002-00	GROMMET	*	3					
11	1421-507-017-00	COLLAR/9X14X8	*	3					
12	V211-360-802-00	BOLT,SP/M8X20	*	1					
13	V211-360-802-50	BOLT,SP/M8X25	*	2					
14	V362-260-008-00	NUT/WASHER/M8	*	1					
15	1729-606-002-20	GRIP/ASSIST	*	2					
16	V362-260-010-00	NUT/WASHER/M10	*	4					
17	1821-606-001-00	TRAY/BOTTLE	*	1					

FIG. 52 GUIDE(LEVER)SYSTEM

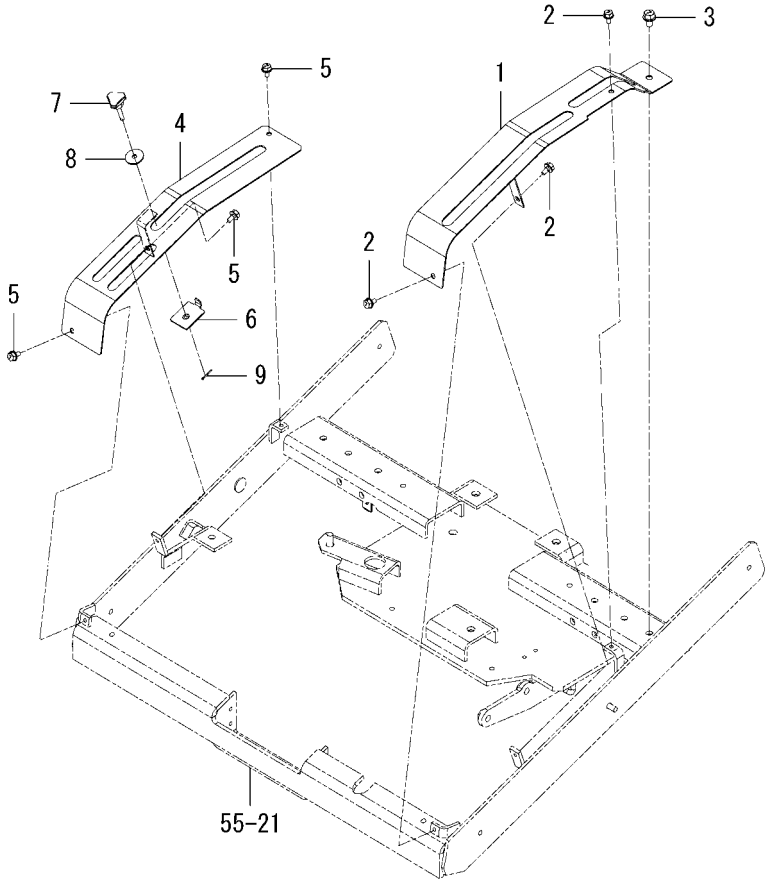

1834-608 -0100

KEY	PART CODE	DESCRIPTION	SPC	TYPE OF MODEL TLE3400 H3		ITC	COL	GRP	REMARKS
1	1834-608-200-00	GUIDE/LEVER/LH COMP	*	1			7F		
2	V230-360-601-00	FLANGEBOLT/M6X10	*	3					
3	V231-360-801-20	FLANGEBOLT/M8X12	*	1					
4	1821-608-210-10	GUIDE/LEVER/RH COMP	*	1			7F		
5	V230-360-601-00	FLANGEBOLT/M6X10	*	3					
6	1999-608-210-00	PLATE/STOP COMP	*	1					
7	1690-608-003-10	BOLT/KNOB/M06X27	*	1					
8	1421-507-014-00	WASHER/6X24X2	*	1					
9	V500-161-601-50	PIN,SPLIT/1.6X15	*	1					

FIG. 53 SEAT SYSTEM

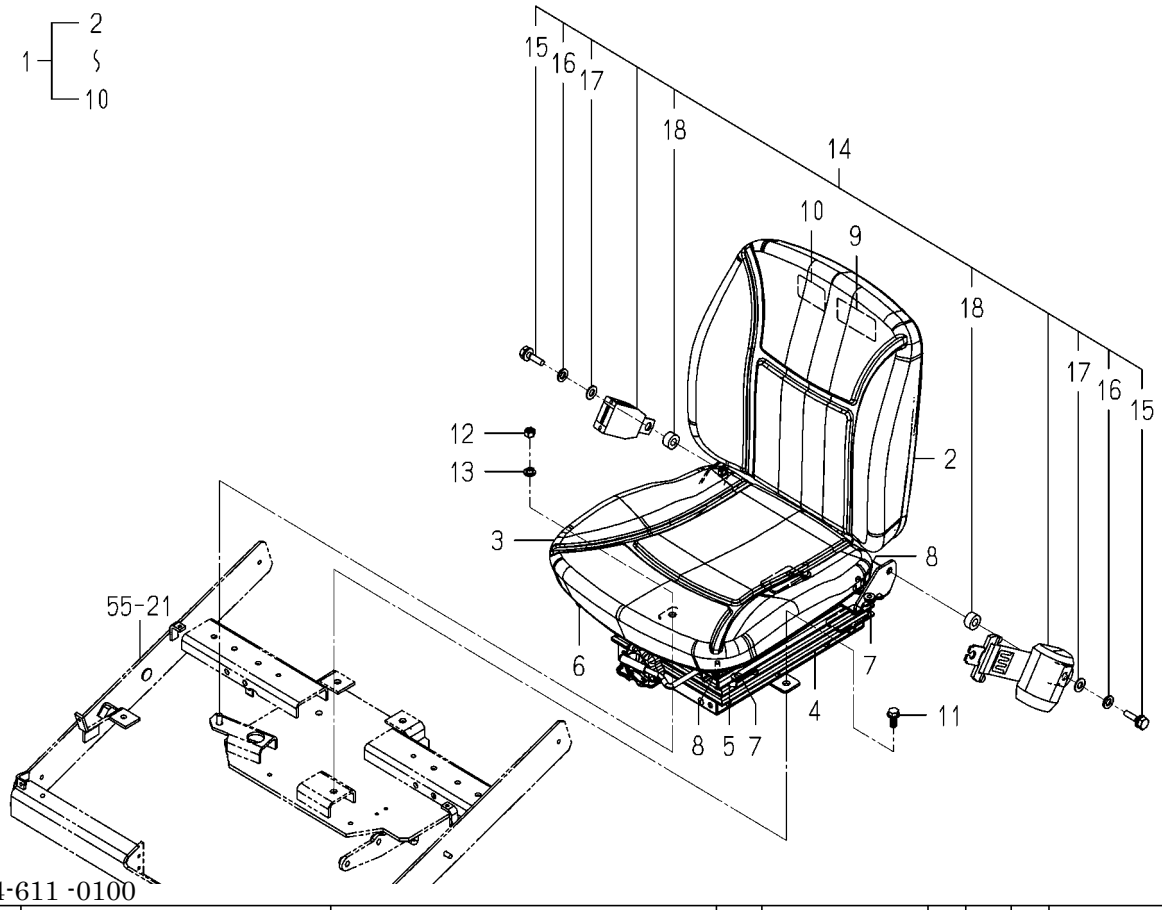

1834-611 -0100

KEY	PART CODE	DESCRIPTION	SPC	TYPE OF MODEL TLE3400 H3		ITC	COL	GRP	REMARKS
1	1833-611-230-00	SEAT/W10 ASSY	*	1					
2	1776-612-211-10	SEAT/BACK ASSY	*	1					
3	1776-612-212-00	SEAT/CUSHION ASSY	*	1					
4	1776-612-213-00	SEAT/SUSPENSION ASSY	*	1					
5	1776-612-214-00	SEAT/SLIDE/LEVE ASSY	*	1					
6	1776-612-215-00	SEAT/SLIDE ASSY	*	1					
7	1776-612-216-00	NUT/FLANGE/M08	*	4					
8	1776-612-217-00	FLANGEBOLT	*	6					
9	1776-612-218-00	LABEL/78/764	*	1					
10	1776-612-219-00	LABEL/1322/2014	*	1					
11	V231-361-002-00	FLANGEBOLT/M10X20	*	3					
12	V304-460-010-00	NUT/M10/7T	*	1					
13	V401-160-010-00	WASHER,SP/M10	*	1					
14	1833-611-240-00	BELT/SEAT SET	*	1					
15	1776-612-252-00	BOLT/M10X1.25X20	*	2					
16	1776-612-253-00	WASHER/SPRING/10	*	2					
17	1776-612-254-00	WASHER/11X22X02	*	2					
18	1776-612-255-00	COLLAR/12X24X12	*	2					

FIG. 54 FLOOR(FRONT)SYSTEM

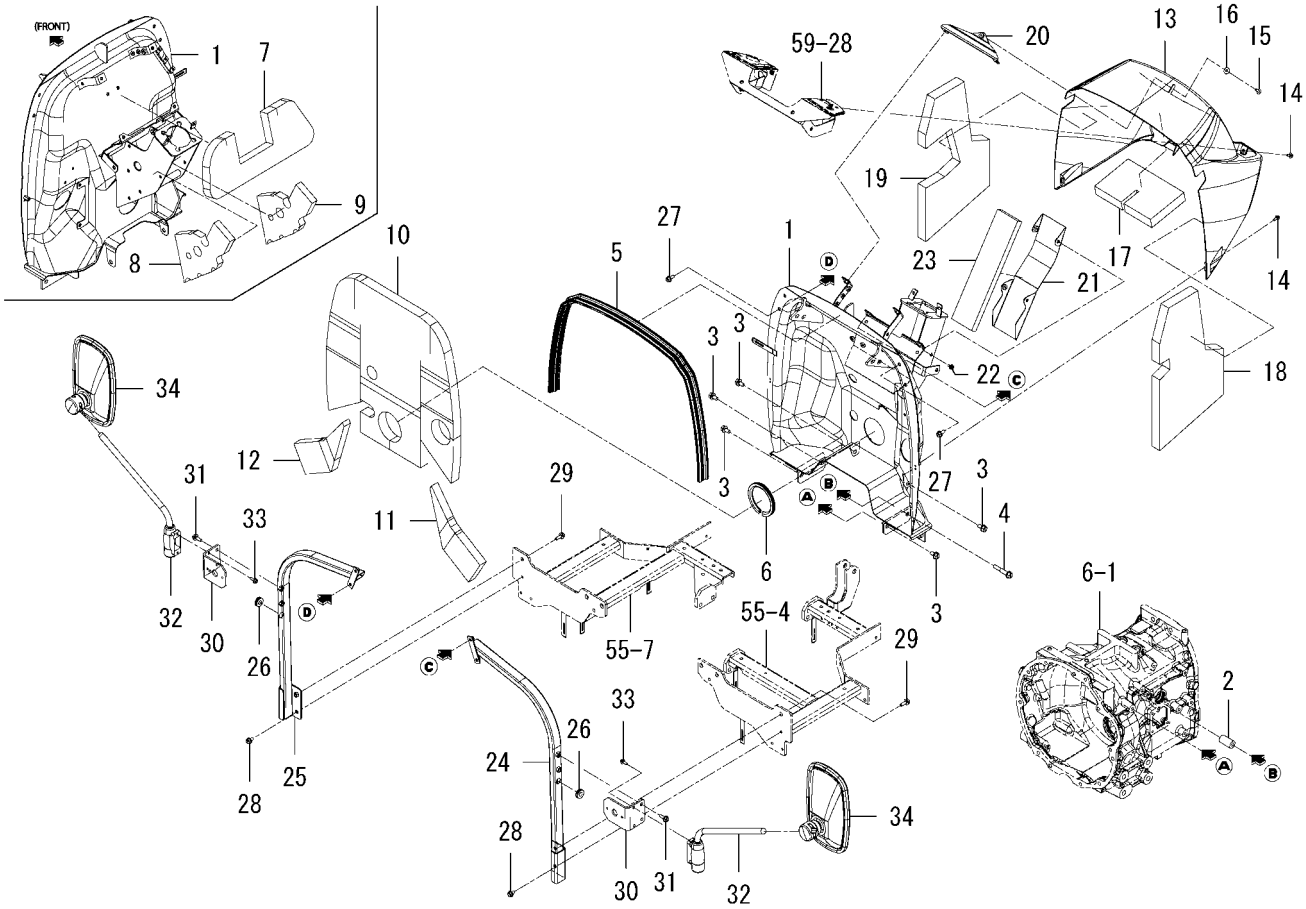

1834-630A-0100

KEY	PART CODE	DESCRIPTION	SPC	TYPE OF MODEL TLE3400	TYPE OF MODEL H3	ITC	COL	GRP	REMARKS
1	1834-630-270-00	PANEL/DASH COMP	*	1					
2	1834-630-001-00	HUB(11X22X41)	*	1					
3	V231-361-001-60	FLANGEBOLT/M10X16	*	5					
4	V231-361-005-50	FLANGEBOLT/M10X55	*	1					
5	1813-630-003-00	INSULATOR/DASH	*	1					
6	1821-630-004-00	INSULATOR/240	*	1					
7	1834-630-021-10	INSULATOR/PANEL	*	1					
8	1834-630-023-00	INSULATOR/COLUMN/LH	*	1					
9	1834-630-024-00	INSULATOR/COLUMN/RH	*	1					
10	1834-630-026-10	INSULATOR/DASH	*	1					
11	1834-630-027-00	INSULATOR/DASH/LH	*	1					
12	1834-630-028-00	INSULATOR/DASH/RH	*	1					
13	1833-630-061-00	COVER/DASH/E4	*	1					
14	V120-376-001-60	SCREW,SP/M6X16	*	4					
15	1729-705-009-00	SCREW/TRUSS/M06X16	*	1					
16	3819-261-005-00	WASHER/07X18X01	*	1					
17	1834-630-022-00	INSULATOR/UPPER	*	1					
18	1834-630-032-10	INSULATOR/LH	*	1					
19	1834-630-033-10	INSULATOR/RH	*	1					
20	1824-630-240-10	PLATE/DASH/E1 COMP	*	1					
21	1805-630-250-10	COVER/HOSE COMP	*	1					
22	V210-360-601-20	BOLT,SP/M6X12	*	4					
23	1834-630-025-00	INSULATOR/COVER	*	1					
24	1834-630-280-00	FRAME/LH COMP	*	1			4L		
25	1834-630-290-00	FRAME/RH COMP	*	1			4L		
26	1564-621-030-00	GROMMET/12X17X04	*	2					
27	V231-360-801-60	FLANGEBOLT/M8X16	*	4					
28	V231-360-801-20	FLANGEBOLT/M8X12	*	2					
29	V231-360-802-00	FLANGEBOLT/M8X20	*	2					
30	1834-630-034-00	STAY/LAMP	*	2					

FIG. 54 FLOOR(FRONT)SYSTEM

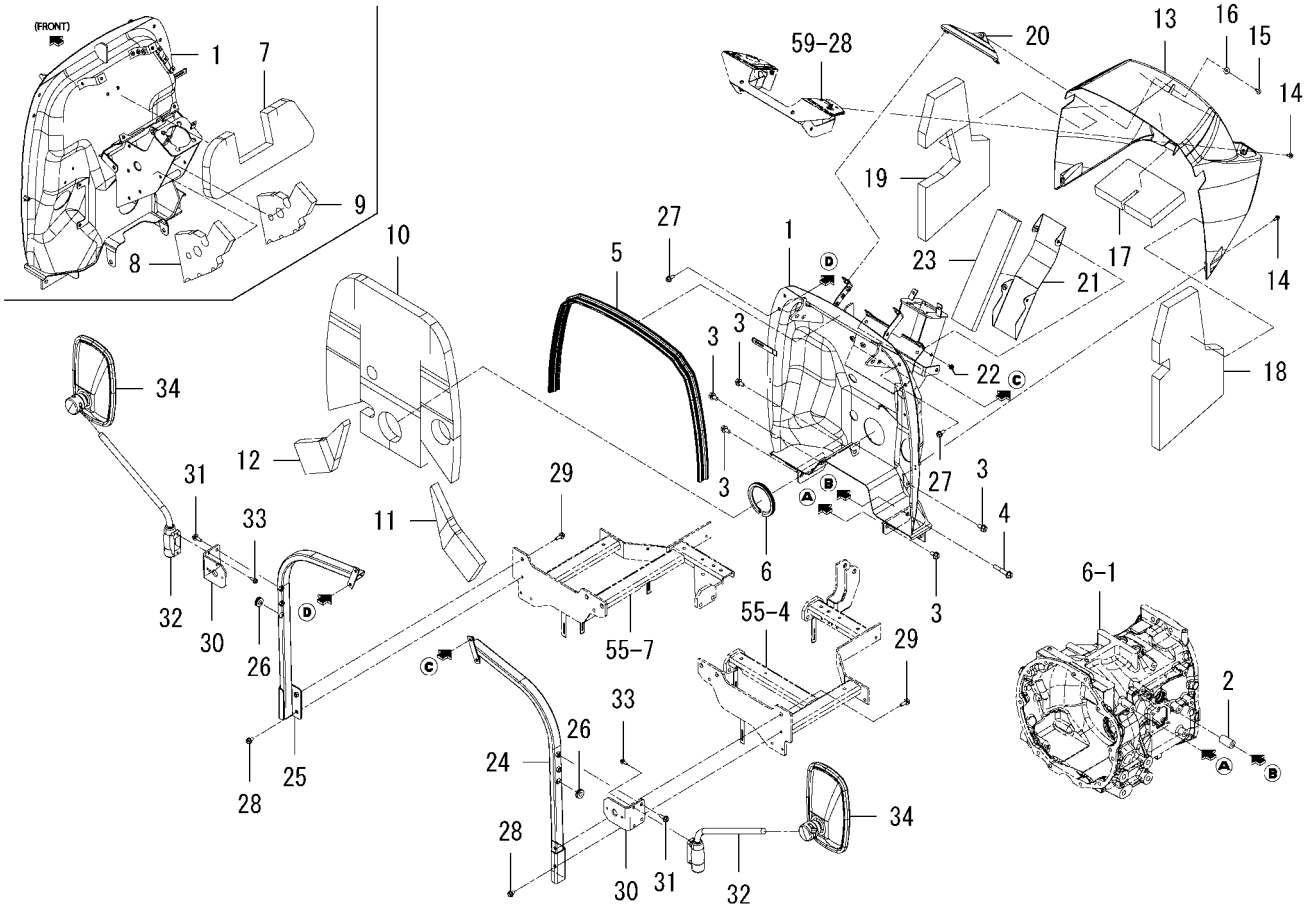

1834-630A-0100

KEY	PART CODE	DESCRIPTION	SPC	TYPE OF MODEL TLE3400 H3		ITC	COL	GRP	REMARKS
31	V231-360-802-00	FLANGEBOLT/M8X20	*	4					
32	1674-619-310-00	ARM/MIRROR ASSY	*	2					
33	V230-360-601-60	FLANGEBOLT/M6X16	*	4					
34	1674-619-300-10	MIRROR ASSY	*	2					

FIG. 55 FLOOR(REAR)SYSTEM

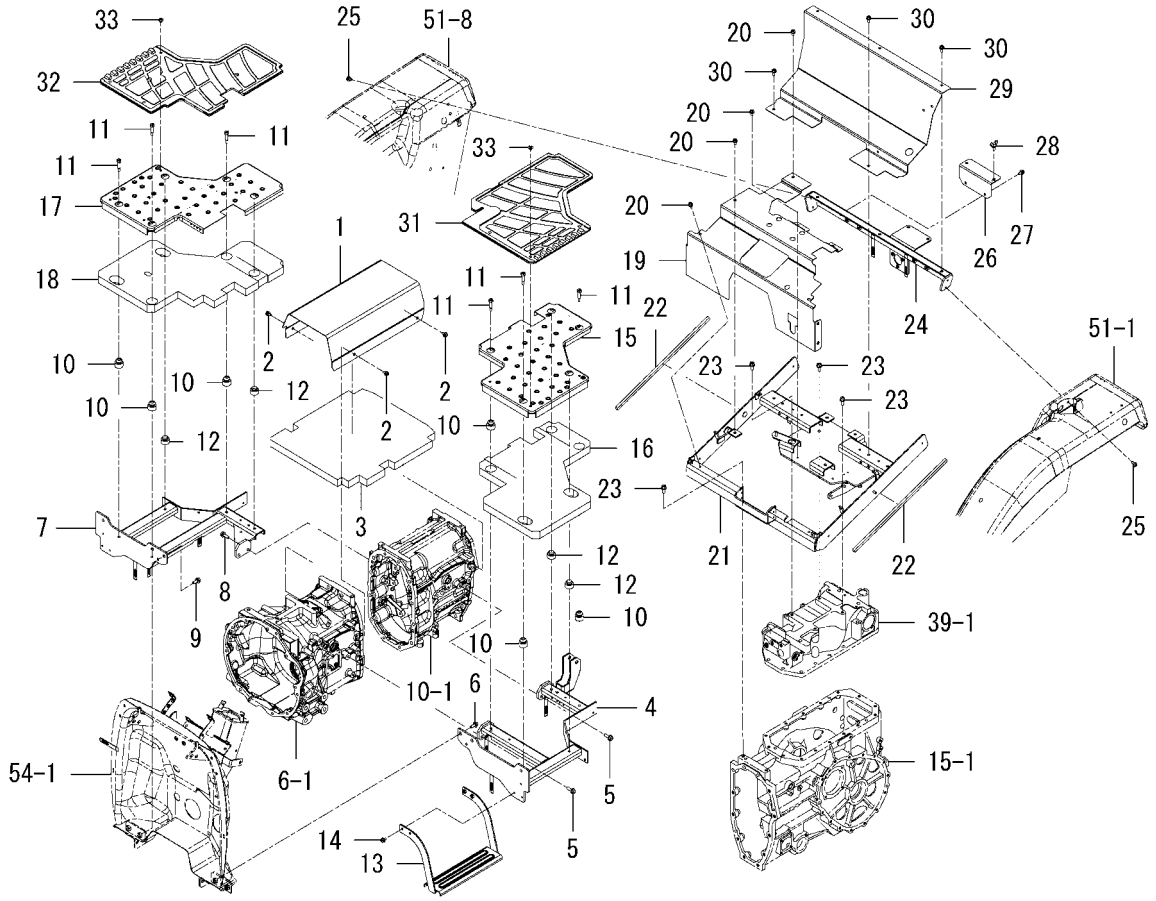

1834-631A-0100

KEY	PART CODE	DESCRIPTION	SPC	TYPE OF MODEL TLE3400 H3		ITC	COL	GRP	REMARKS
1	1834-631-005-00	COVER/CENTER	*	1			7F		
2	V231-360-801-20	FLANGEBOLT/M8X12	*	4					
3	1834-631-014-00	INSULATOR/CENTER	*	1					
4	1834-631-560-00	BRACKET/STEP/LH COMP	*	1					
5	V231-361-002-50	FLANGEBOLT/M10X25	*	4					
6	V231-361-002-00	FLANGEBOLT/M10X20	*	2					
7	1834-631-570-00	BRACKET/STEP/RH COMP	*	1					
8	V231-361-002-50	FLANGEBOLT/M10X25	*	2					
9	V231-361-002-00	FLANGEBOLT/M10X20	*	2					
10	1593-616-004-20	GROMMET/10X30X5	*	6					
11	1831-631-001-00	BOLT/M08X41	*	6					
12	1414-632-005-00	RUBBER,BUFFER.A	*	4					
13	1834-631-240-00	STEP/SUB COMP	*	1					
14	V231-360-801-20	FLANGEBOLT/M8X12	*	2					
15	1834-631-500-00	STEP/LH COMP	*	1			4L		
16	1834-631-011-10	INSULATOR/STEP/LH	*	1					
17	1834-631-510-00	STEP/RH COMP	*	1			4L		
18	1834-631-012-20	INSULATOR/STEP/RH	*	1					
19	1834-631-580-00	PANEL/STEP COMP	*	1			4L		
20	V231-360-801-20	FLANGEBOLT/M8X12	*	6					
21	1834-631-320-10	BRACKET/FENDER/H3	*	1					
22	1805-631-004-00	INSULATOR/10X10X500	*	2					
23	V231-361-002-00	FLANGEBOLT/M10X20	*	6					
24	1834-631-330-00	BRACKET/FENDER/REAR	*	1					
25	V231-360-801-20	FLANGEBOLT/M8X12	*	4					
26	1834-631-300-00	STAY/TOOL COMP	*	1					
27	V231-360-801-60	FLANGEBOLT/M8X16	*	2					
28	V273-360-802-00	BOLT,WING/M8X20	*	2					
29	1834-631-007-00	PANEL/REAR	*	1			4L		
30	V231-360-801-60	FLANGEBOLT/M8X16	*	5					

FIG. 55 FLOOR(REAR)SYSTEM

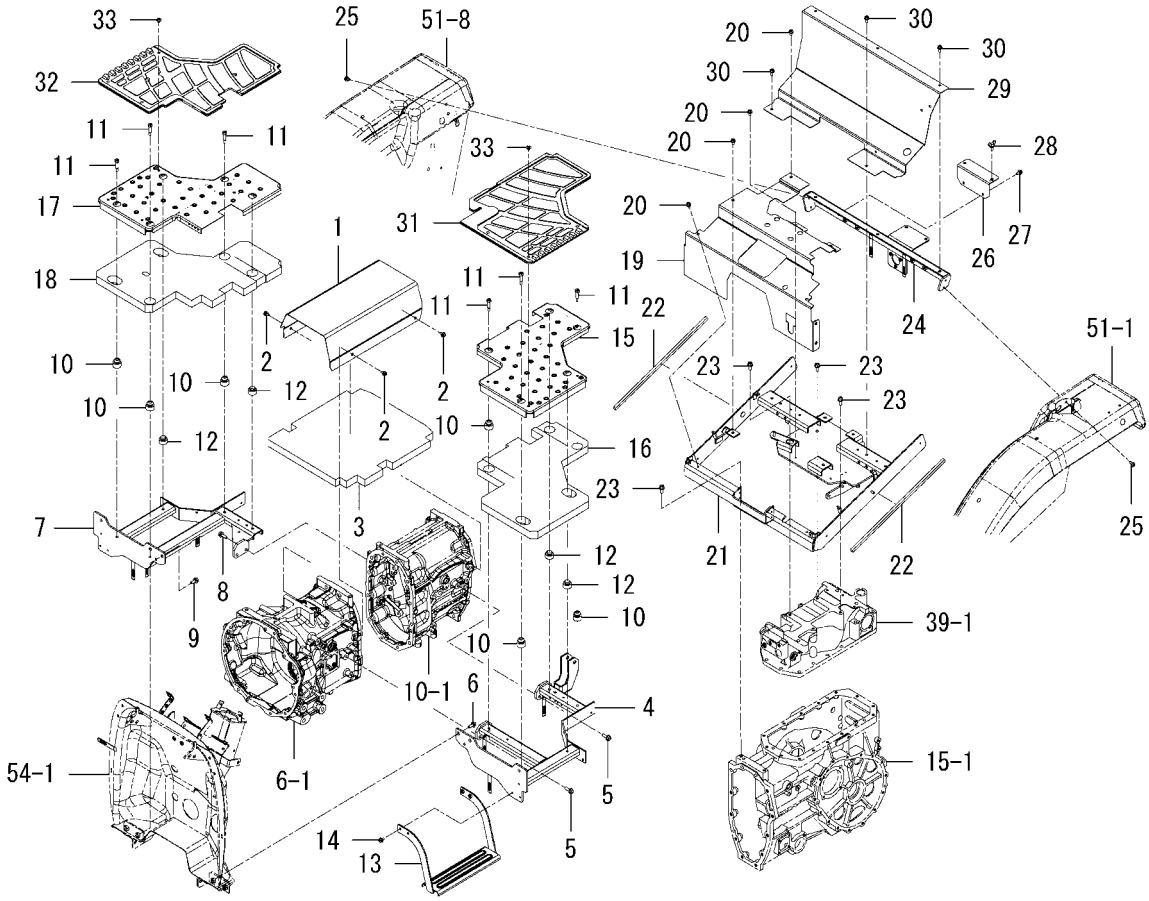

1834-631A-0100

KEY	PART CODE	DESCRIPTION	SPC	TYPE OF MODEL TLE3400 H3		ITC	COL	GRP	REMARKS
31	1834-631-003-00	MAT(LH)	*	1					
32	1834-631-004-00	MAT(RH)	*	1					
33	1560-630-012-00	RIVET	*	6					

FIG. 56 PEDAL(HST)SYSTEM

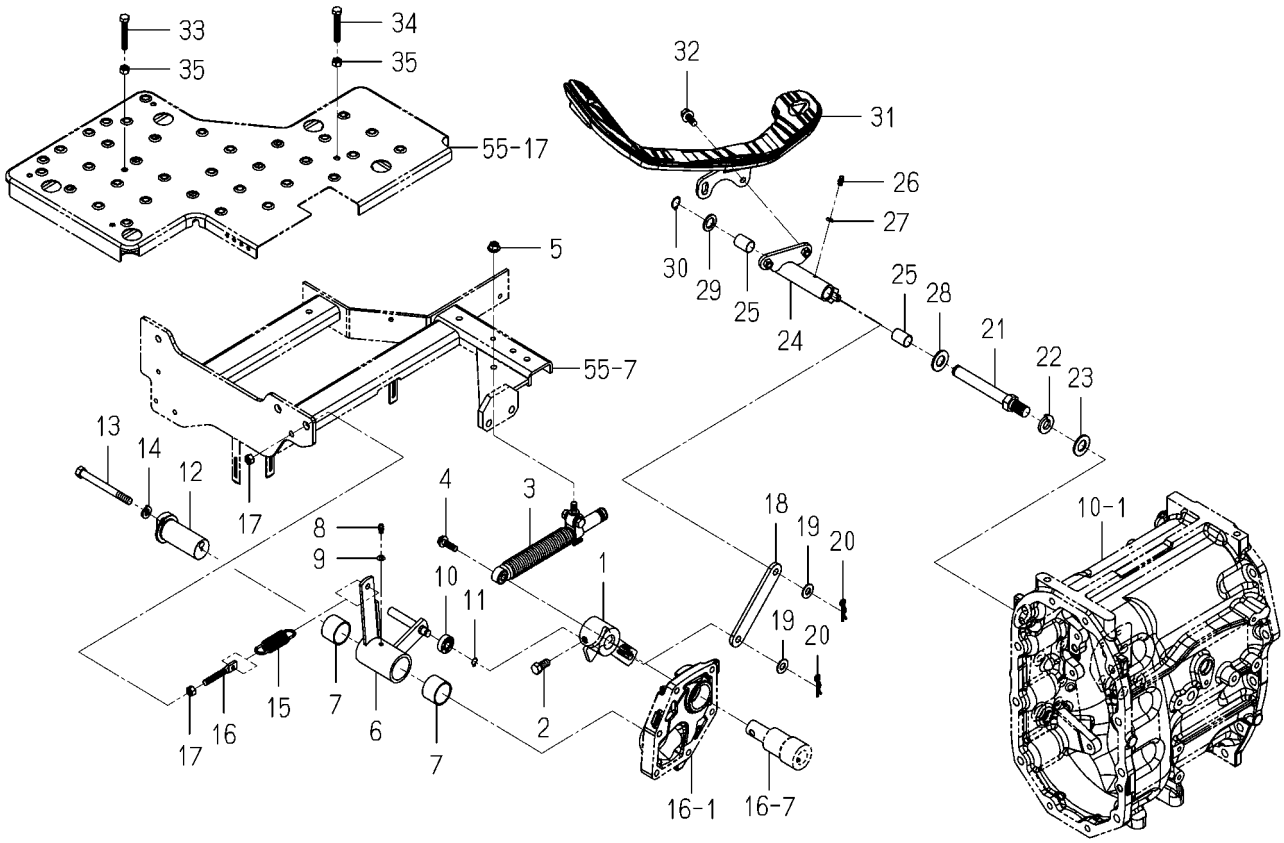

1834-640A-0100

KEY	PART CODE	DESCRIPTION	SPC	TYPE OF MODEL TLE3400 H3		ITC	COL	GRP	REMARKS
1	1834-640-500-00	ARM/TRUNNION COMP	*	1					
2	1646-226-053-00	BOLT/SM/M10X23	*	1					
3	3803-222-890-00	DUMPER/OIL ASSY	*	1					
4	V231-360-802-50	FLANGEBOLT/M8X25	*	1					
5	V362-260-008-00	NUT/WASHER/M8	*	1					
6	1834-640-520-00	ARM/NEUTRAL COMP	*	1					
7	1646-640-221-10	BUSH/32X36X25	*	2					
8	V760-150-000-00	NIPPLE,GREASE	*	1					
9	V401-160-006-00	WASHER,SP/M6	*	1					
10	V600-150-600-00	BEARING,RB/6000SS	*	1					
11	V704-140-010-00	RING,SNAP/10 C	*	1					
12	1821-640-051-10	PIN/ADJUST	*	1					
13	V201-361-010-00	BOLT/M10X100/7T	*	1					
14	V401-160-010-00	WASHER,SP/M10	*	1					
15	1560-404-002-30	SPRING	*	1					
16	3838-203-001-00	ROD/08X057	*	1					
17	V304-260-008-00	NUT/M8	*	2					
18	1834-640-055-00	PLATE/IR/25X138	*	1					
19	V411-260-010-00	WASHER,PL/M10	*	2					
20	1305-241-001-00	PIN,HAIR	*	2					
21	1834-640-053-00	PIN/M16	*	1					
22	V402-160-016-00	WASHER,SP/M16	*	1					
23	V411-260-016-00	WASHER,PL/M16	*	1					
24	1834-640-560-00	ARM/HST COMP	*	1					
25	1656-664-221-10	BUSH/16X18X25	*	2					
26	V760-150-000-00	NIPPLE,GREASE	*	1					
27	V401-160-006-00	WASHER,SP/M6	*	1					
28	V411-260-016-00	WASHER,PL/M16	*	1					
29	1834-640-054-00	WASHER/16X26X02	*	1					
30	V704-140-016-00	RING,SNAP/16 C	*	1					

FIG. 56 PEDAL(HST)SYSTEM

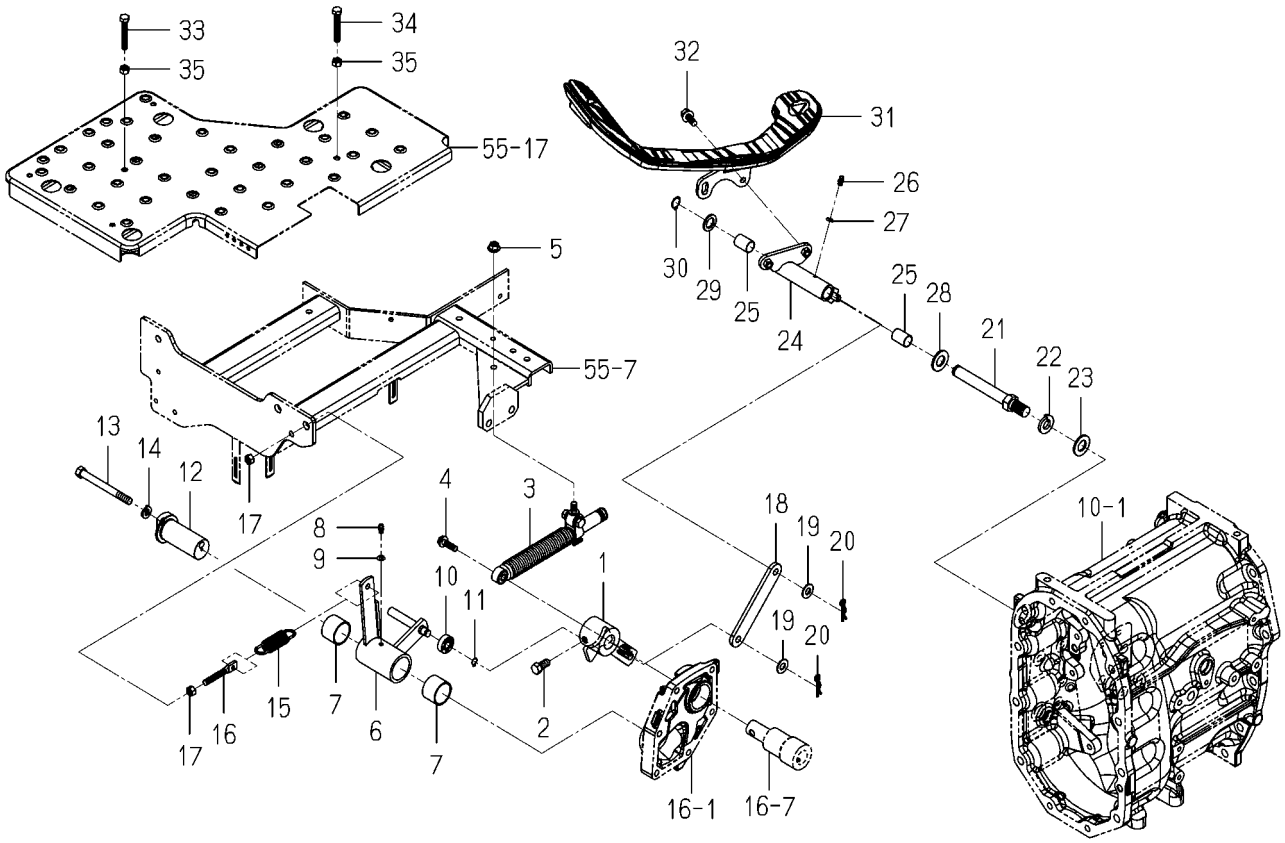

1834-640A-0100

KEY	PART CODE	DESCRIPTION	SPC	TYPE OF MODEL TLE3400	TYPE OF MODEL H3	ITC	COL	GRP	REMARKS
31	1831-640-580-00	PEDAL/HST ASSY	*	1					
32	V211-660-802-50	BOLT,SP/M8X25/7T	*	2					
33	W201-260-805-00	BOLT/M 8X50	*	1					
34	W201-260-805-00	BOLT/M 8X50	*	1					
35	V304-260-008-00	NUT/M8	*	2					

FIG. 57 ELC.(FRONT)SYSTEM(G TYPE)

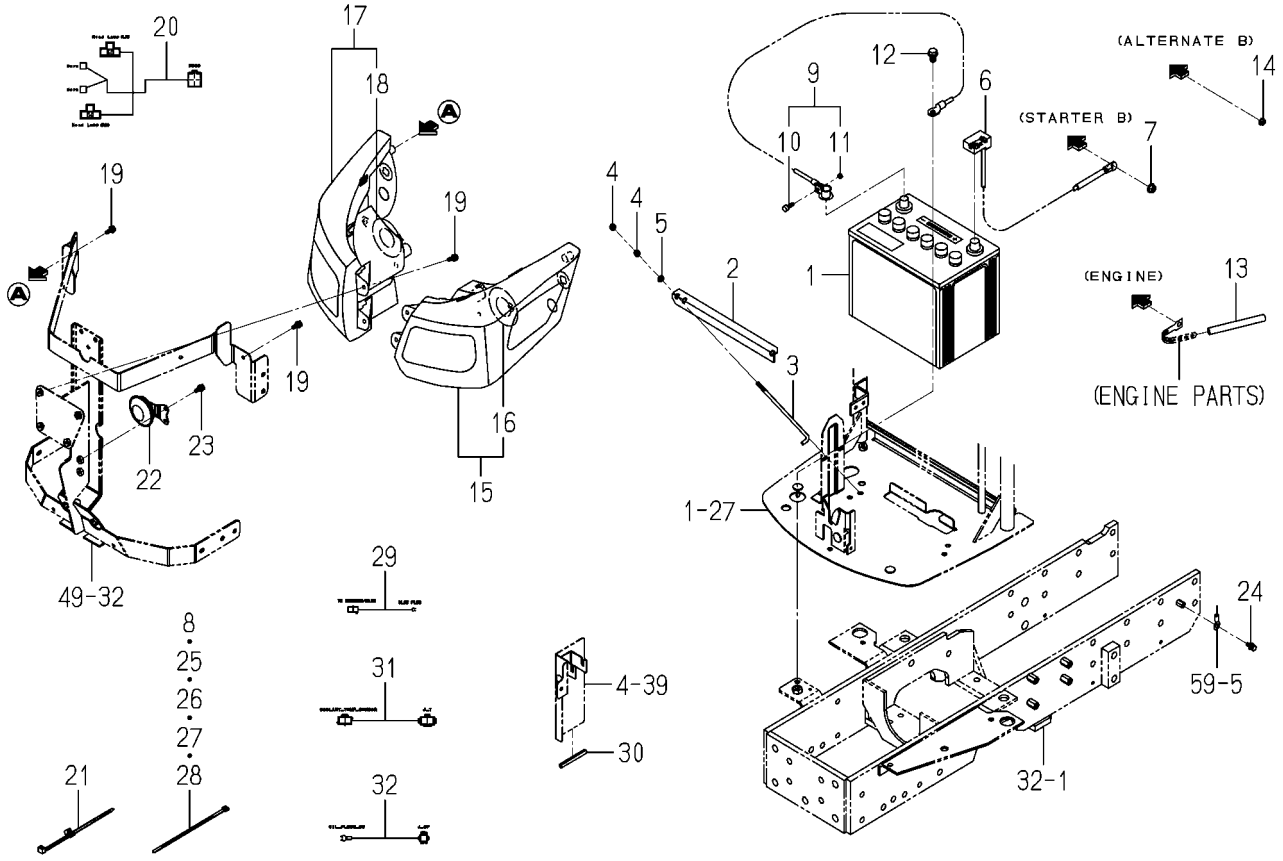

1834-650A-0100

KEY	PART CODE	DESCRIPTION	SPC	TYPE OF MODEL TLE3400 H3		ITC	COL	GRP	REMARKS
1	1659-650-200-20	BATTERY/80D26R ASSY	*	1					
2	1716-112-001-10	PLATE/BATTERY	*	1					
3	1579-112-003-00	BOLT/M6X250	*	2					
4	1746-811-001-00	NUT	*	4					
5	V411-260-006-00	WASHER,PL/M6	*	2					
6	1834-650-210-00	CABLE/BATTERY ASSY	*	1					
7	V362-260-008-00	NUT/WASHER/M8	*	1					
8	1376-402-003-00	BAND,WIRE/140	*	1					
9	1773-650-220-00	CABLE/EARTH ASSY	*	1					
10	1725-112-212-00	BOLT	*	1					
11	1725-112-213-00	NUT	*	1					
12	V231-361-001-60	FLANGEBOLT/M10X16	*	1					
13	1650-650-017-00	TUBE/120	*	1					
14	V360-260-006-00	NUT/WASHER/M6	*	1					
15	1833-650-700-00	LAMP/HEAD/LHT/L ASSY	*	1					
16	1719-650-302-00	BULB/12V60/55W	*	1					
17	1833-650-710-00	LAMP/HEAD/LHT/R ASSY	*	1					
18	1719-650-302-00	BULB/12V60/55W	*	1					
19	1746-802-002-00	BOLT/SP	*	6					
20	1834-650-200-10	HARNESS/HOOD ASSY	*	1					
21	1560-666-004-00	BAND	*	4					
22	1824-650-510-00	HORN ASSY	*	1					
23	1746-802-002-00	BOLT/SP	*	2					
24	V210-660-601-60	BOLT,SP/M6X16/7T	*	1					
25	1376-402-003-00	BAND,WIRE/140	*	1					
26	1342-402-006-00	BAND,WIRE/250	*	1					
27	1342-402-006-00	BAND,WIRE/250	*	1					
28	1342-402-006-00	BAND,WIRE/250	*	2					
29	1568-668-203-00	HARNESS,GLOW	*	1					
30	1837-102-001-00	TRIM/70	*	1					

FIG. 57 ELC.(FRONT)SYSTEM(G TYPE)

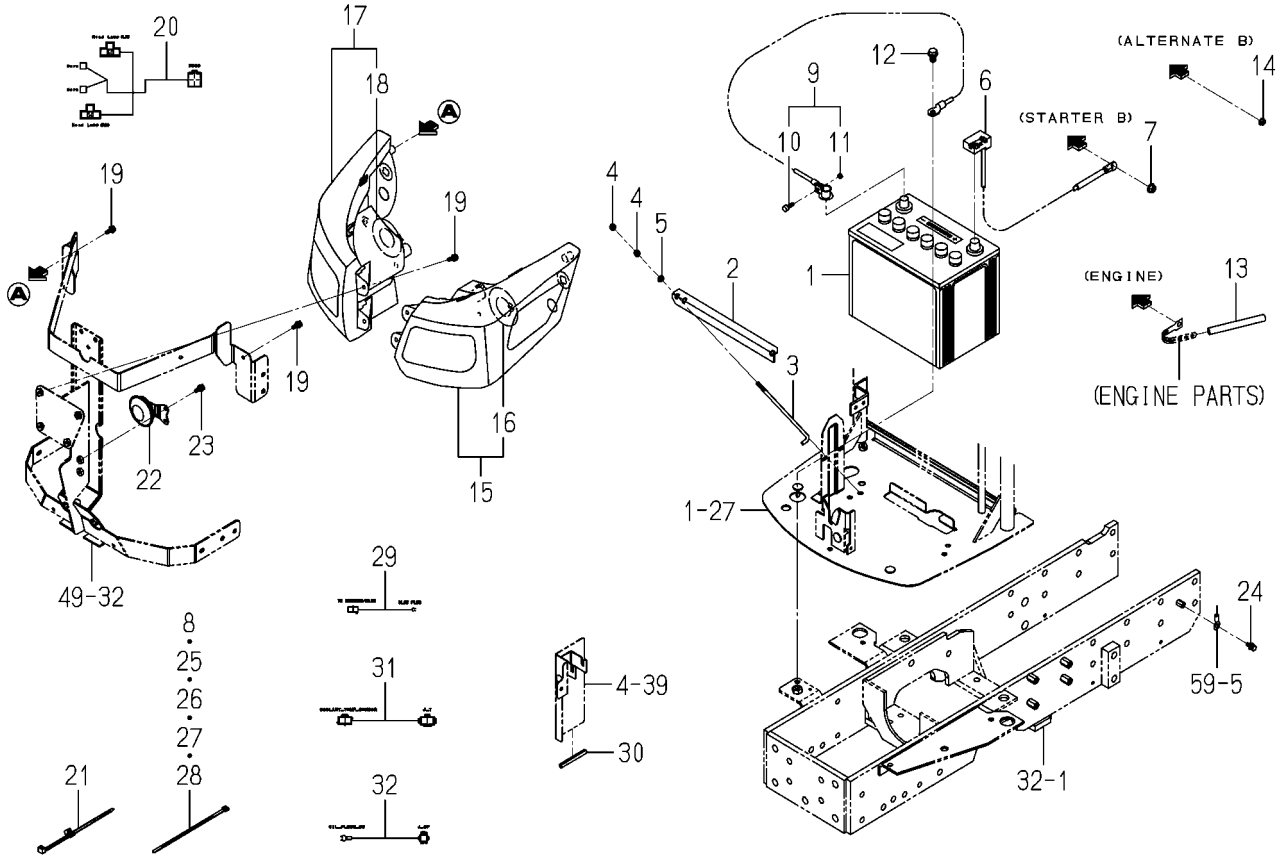

1834-650A-0100

KEY	PART CODE	DESCRIPTION	SPC	TYPE OF MODEL TLE3400 H3		ITC	COL	GRP	REMARKS
31	1833-650-200-00	HARNESS/JOINT/THERMO	*	1					
32	1833-650-210-00	HARNESS/OILPRES ASSY	*	1					

FIG. 58 ELC.(FRONT)SYSTEM(EXCEPT G TYPE)

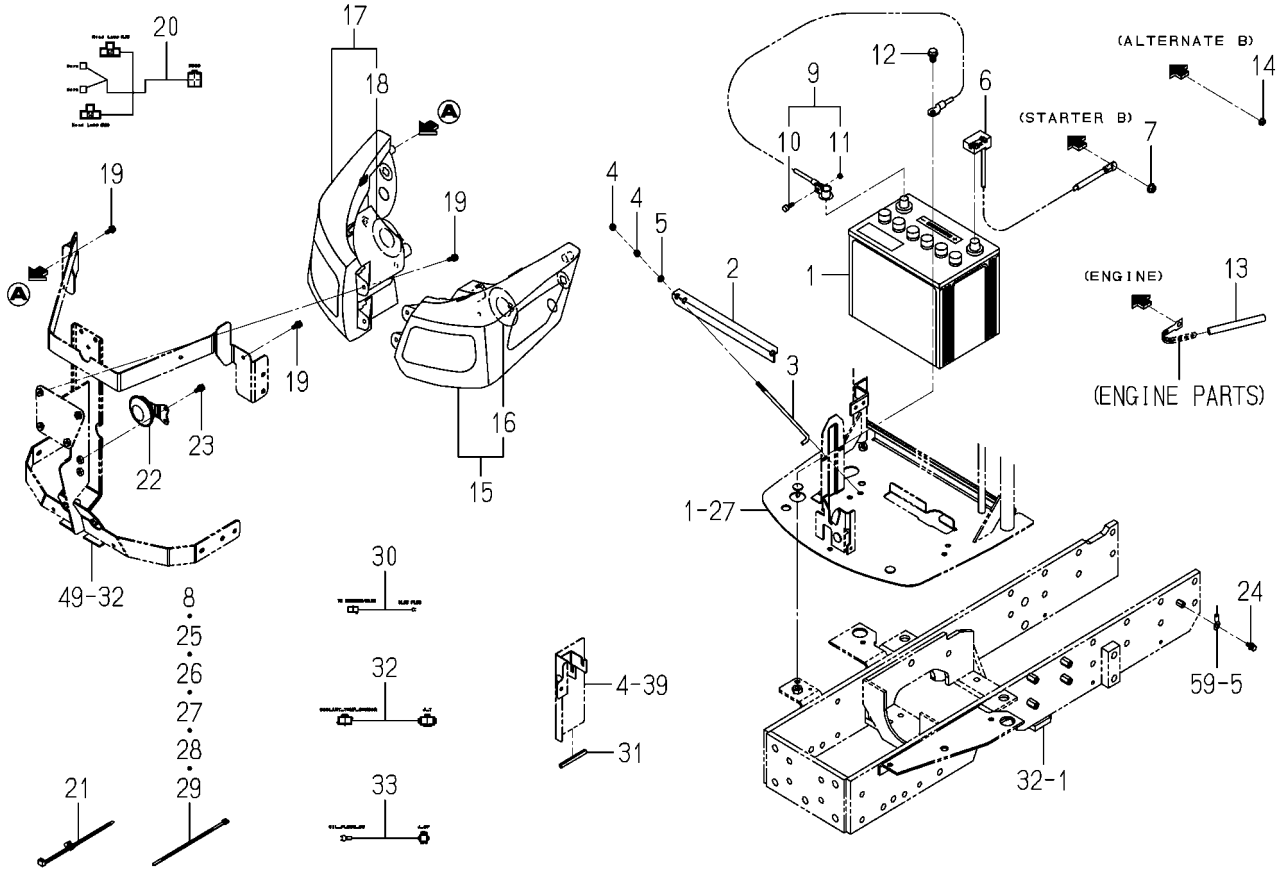

1834-650B-0100

KEY	PART CODE	DESCRIPTION	SPC	TYPE OF MODEL TLE3400 H3		ITC	COL	GRP	REMARKS
1	1659-650-200-20	BATTERY/80D26R ASSY	*	1					
2	1716-112-001-10	PLATE/BATTERY	*	1					
3	1579-112-003-00	BOLT/M6X250	*	2					
4	1746-811-001-00	NUT	*	4					
5	V411-260-006-00	WASHER,PL/M6	*	2					
6	1834-650-210-00	CABLE/BATTERY ASSY	*	1					
7	V362-260-008-00	NUT/WASHER/M8	*	1					
8	1376-402-003-00	BAND,WIRE/140	*	1					
9	1773-650-220-00	CABLE/EARTH ASSY	*	1					
10	1725-112-212-00	BOLT	*	1					
11	1725-112-213-00	NUT	*	1					
12	V231-361-001-60	FLANGEBOLT/M10X16	*	1					
13	1650-650-017-00	TUBE/120	*	1					
14	V360-260-006-00	NUT/WASHER/M6	*	1					
15	1833-650-650-00	LAMP/HEAD/RHT/L ASSY	*	1					
16	1719-650-302-00	BULB/12V60/55W	*	1					
17	1833-650-660-00	LAMP/HEAD/RHT/R ASSY	*	1					
18	1719-650-302-00	BULB/12V60/55W	*	1					
19	1746-802-002-00	BOLT/SP	*	6					
20	1834-650-200-10	HARNESS/HOOD ASSY	*	1					
21	1560-666-004-00	BAND	*	4					
22	1824-650-510-00	HORN ASSY	*	1					
23	1746-802-002-00	BOLT/SP	*	2					
24	V210-660-601-60	BOLT,SP/M6X16/7T	*	1					
25	1376-402-003-00	BAND,WIRE/140	*	1					
26	1342-402-006-00	BAND,WIRE/250	*	1					
27	1342-402-006-00	BAND,WIRE/250	*	1					
28	1342-402-006-00	BAND,WIRE/250	*	2					
29	1376-402-003-00	BAND,WIRE/140	*	1					
30	1568-668-203-00	HARNESS,GLOW	*	1					

FIG. 58 ELC.(FRONT)SYSTEM(EXCEPT G TYPE)

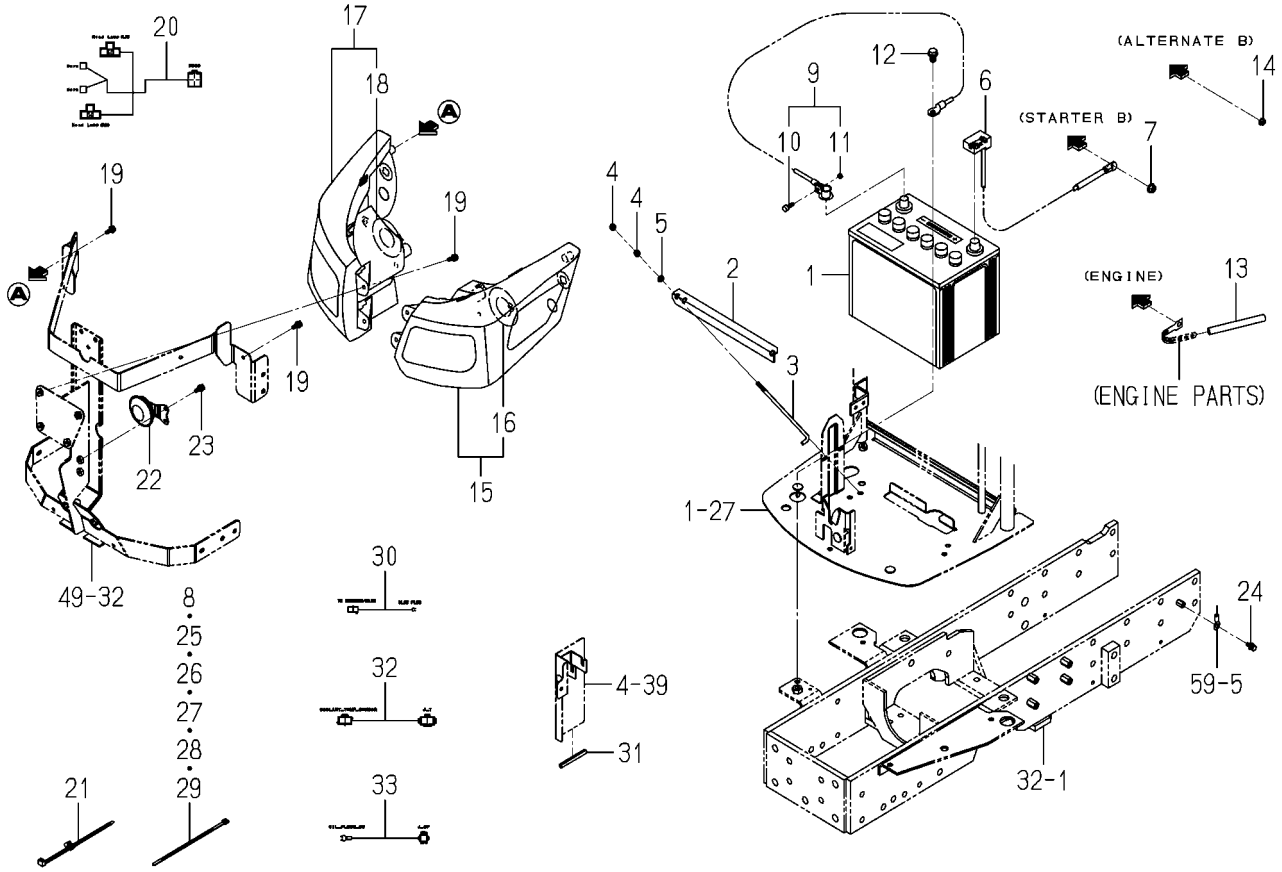

1834-650B-0100

KEY	PART CODE	DESCRIPTION	SPC	TYPE OF MODEL TLE3400 H3		ITC	COL	GRP	REMARKS
31	1837-102-001-00	TRIM/70	*	1					
32	1833-650-200-00	HARNESS/JOINT/THERMO	*	1					
33	1833-650-210-00	HARNESS/OILPRES ASSY	*	1					

FIG. 59 ELC.(MAIN)SYSTEM(1/2)

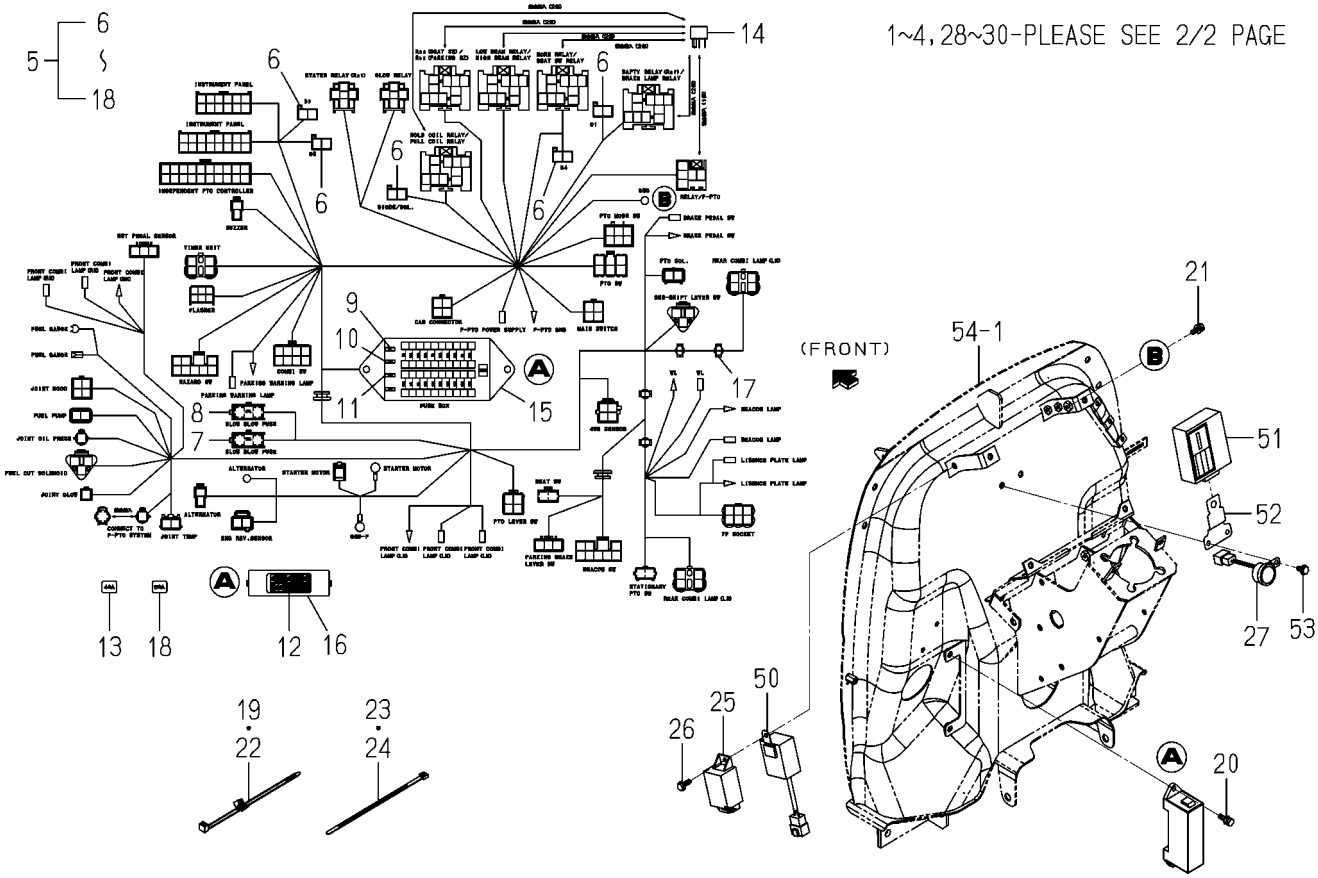

1834-652A-0100

KEY	PART CODE	DESCRIPTION	SPC	TYPE OF MODEL TLE3400 H3		ITC	COL	GRP	REMARKS
1	1716-680-200-20	SWITCH/MAIN ASSY	*	1					
2	2186-536-211-00	KEY	*	2					
3	2186-536-212-00	NUT/RING	*	1					
4	1716-680-006-00	COVER/SWITCH	*	1					
5	1834-652-510-10	HARNESS/MAIN/E4/H3	*	1					
6	1560-666-212-00	DIODE	*	5					
7	1729-652-232-00	FUSE/SLOW BLOW/50A	*	1					
8	1650-650-222-00	FUSE/SLOW BLOW/40A	*	1					
9	3824-247-202-00	FUSE/BLADE/32V05A	*	6					
10	3821-262-202-00	FUSE/BLADE/32V10A	*	10					
11	3821-262-203-00	FUSE(BLADE/32V15A)	*	7					
12	1834-652-511-00	LABEL/FUSE	*	1					
13	1834-652-502-00	LABEL/FUSE/40A	*	1					
14	1800-652-400-00	RELAY/5P ASSY	*	11					
15	3821-262-209-00	TOOL/FUSE	*	1					
16	3821-262-206-00	COVER/FUSE	*	1					
17	1805-652-207-00	CLIP/BAND	*	4					
18	1834-652-503-00	LABEL/FUSE/50A	*	1					
19	1560-666-004-00	BAND	*	1					
20	V210-660-602-00	BOLT,SP/M6X20/7T	*	2					
21	V210-660-601-60	BOLT,SP/M6X16/7T	*	1					
22	1560-666-004-00	BAND	*	2					
23	1376-402-003-00	BAND,WIRE/140	*	1					
24	1342-402-006-00	BAND,WIRE/250	*	1					
25	1739-681-220-20	RELAY/FLASHER/EEC	*	1					
26	V230-360-601-60	FLANGEBOLT/M6X16	*	1					
27	1650-654-590-00	BUZZER ASSY	*	1					
28	1833-652-610-00	PANEL/SWITCH COMP	*	1					
29	V231-360-802-00	FLANGEBOLT/M8X20	*	4					
30	1740-680-550-00	SWITCH/HAZARD ASSY	*	1					

FIG. 59 ELC.(MAIN)SYSTEM(2/2)

50~53-PLEASE SEE 1/2 PAGE

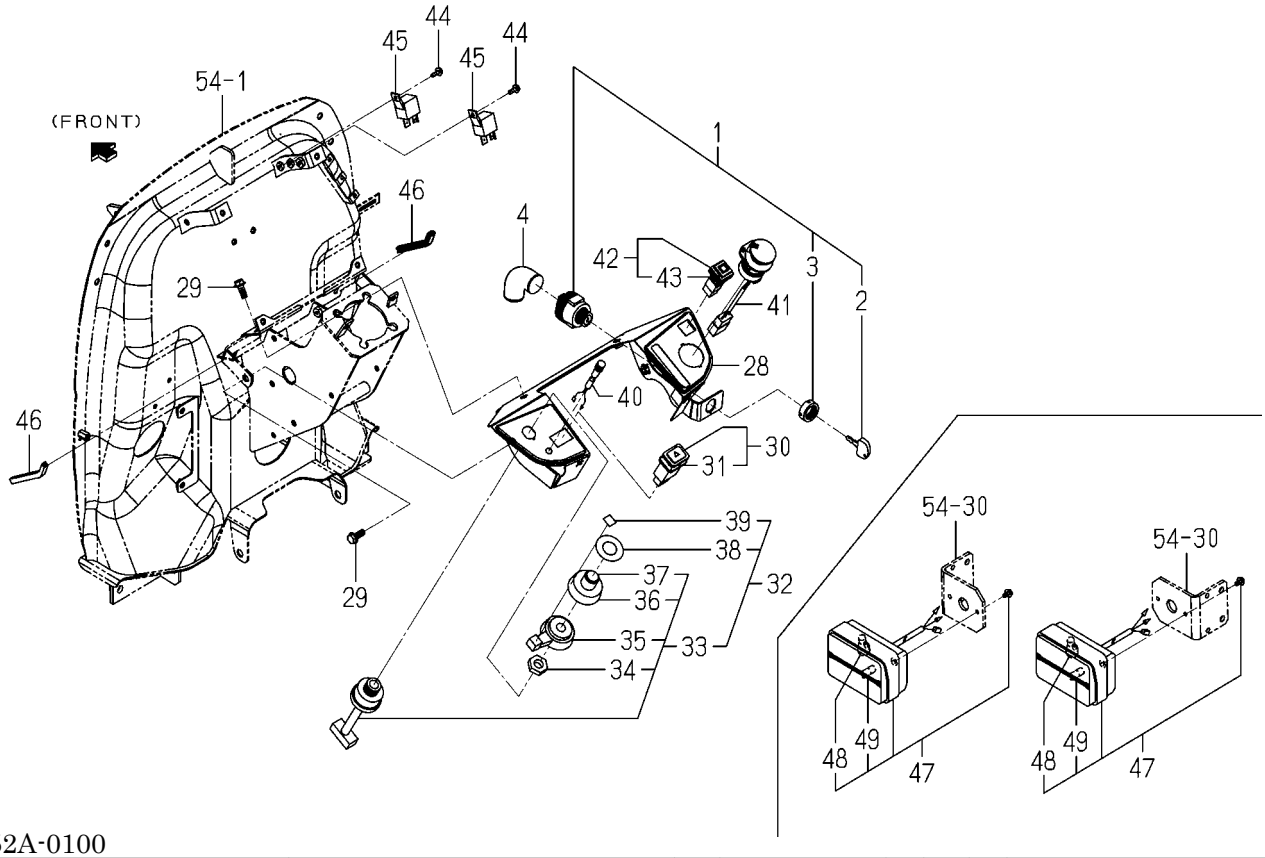

1834-652A-0100

KEY	PART CODE	DESCRIPTION	SPC	TYPE OF MODEL TLE3400 H3		ITC	COL	GRP	REMARKS
31	1740-680-551-00	BULB/LAMP/14V60MA	*	1					
32	1738-680-210-00	SWITCH/COMBINATION/E	*	1					
33	1544-623-001-00	SWITCH ASSY	*	1					
34	1544-623-232-00	NUT/M22	*	1					
35	1544-623-233-00	LEVER	*	1					
36	1544-623-234-00	KNOB	*	1					
37	1544-623-235-00	BOOT/HORN	*	1					
38	1738-680-211-00	LABEL/LIGHTING	*	1					
39	1738-680-212-00	LABEL/TURNSIGNAL	*	1					
40	1837-652-610-00	LAMP/LED ASSY	*	1					
41	1837-652-600-00	SWITCH/PTO ASSY	*	1					
42	1742-652-260-00	SWITCH/ALTERNAT ASSY	*	1					
43	3801-272-302-00	BULB/LAMP/12V1W	*	1					
44	V120-365-001-60	SCREW,SP/M5X16	*	2					
45	1719-650-250-00	RELAY ASSY	*	2					
46	1821-630-003-00	INSULATOR/080	*	2					
47	1674-654-200-10	LAMP/FRONT SET	*	2					
48	1674-654-211-00	BULB/12V21W	*	2					
49	1674-654-212-00	BULB/12V5W	*	2					
50	1774-680-250-00	UNIT/TIMER ASSY	*	1					
51	1837-652-640-30	CONTROLLER/PTO/ST	*	1					
52	1742-662-001-00	STAY/CONTROLLER	*	1					
53	V230-360-601-20	FLANGEBOLT/M6X12	*	2					

FIG. 60 ELC.(REAR)SYSTEM(1/2)

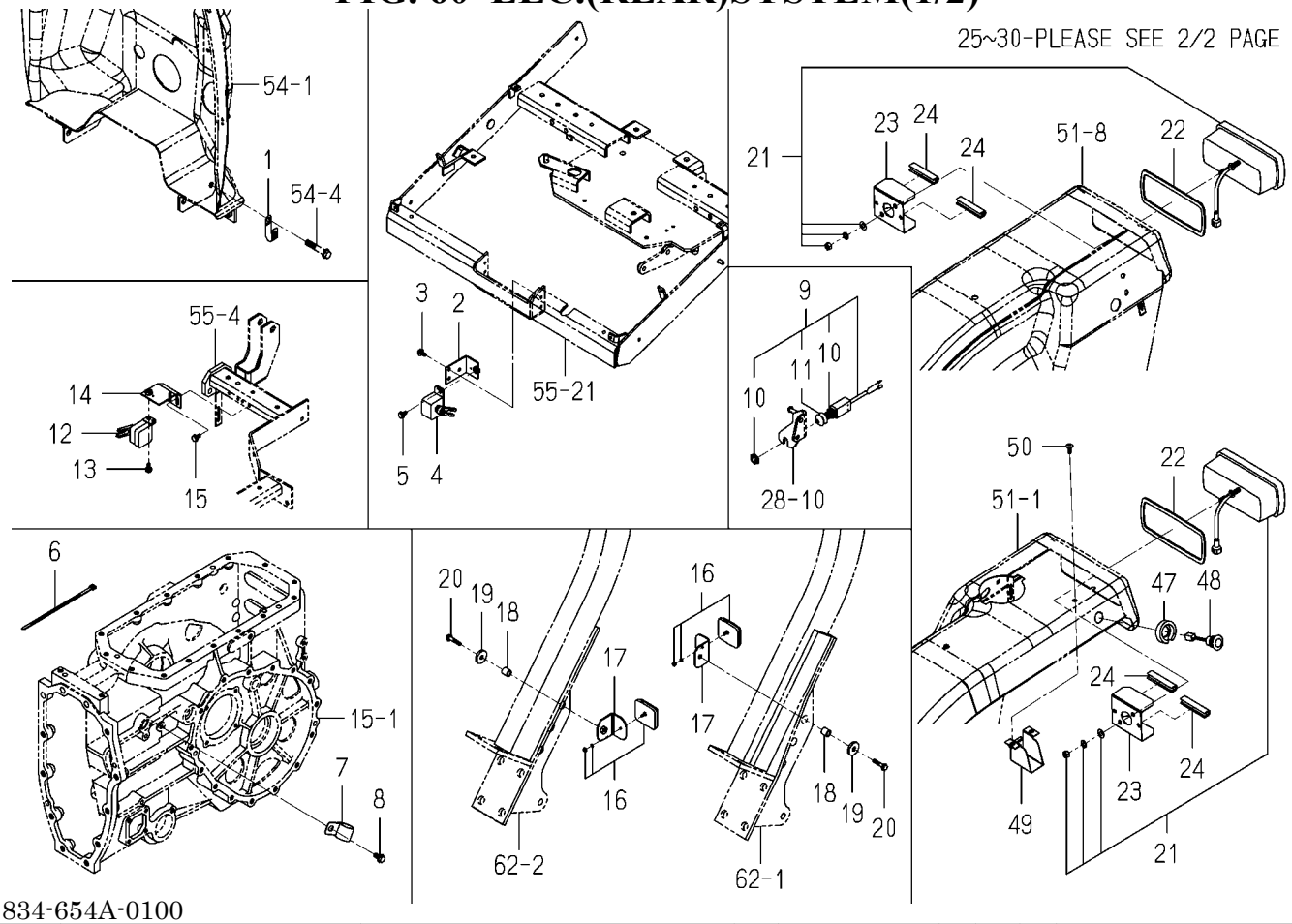

1834-654A-0100

KEY	PART CODE	DESCRIPTION	SPC	TYPE OF MODEL TLE3400 H3		ITC	COL	GRP	REMARKS
1	3737-172-011-00	CLAMP,HARNESS	*	1					
2	1999-654-230-00	STAY/SWITCH/SUB COMP	*	1					
3	V230-360-601-20	FLANGEBOLT/M6X12	*	2					
4	1773-654-240-10	SWITCH/LEVER ASSY	*	1					
5	V230-360-601-20	FLANGEBOLT/M6X12	*	1					
6	1376-402-003-00	BAND,WIRE/140	*	3					
7	1518-786-508-00	CLIP B	*	1					
8	V231-360-801-60	FLANGEBOLT/M8X16	*	1					
9	1772-654-280-10	SWITCH/PUSH ASSY	*	1					
10	1772-654-281-00	NUT	*	2					
11	1772-654-282-00	BOOT	*	1					
12	1740-680-520-10	SWITCH/SENSOR ASSY	*	1					
13	V230-360-601-20	FLANGEBOLT/M6X12	*	1					
14	1805-654-500-10	STAY/SWITCH/PTO COMP	*	1					
15	V230-360-601-20	FLANGEBOLT/M6X12	*	2					
16	1674-654-400-20	REFLECTOR ASSY	*	2					
17	1834-654-220-10	PLATE/REFLECTOR COMP	*	2					
18	3805-632-001-00	COLLAR/09X14X14	*	2					
19	3814-440-006-00	WASHER/09X28X05	*	2					
20	V230-360-603-00	FLANGEBOLT/M6X30	*	2					
21	1772-654-210-00	LAMP/COMBINATION/REA	*	2					FIG 082
22	1772-654-001-00	INSULATOR/LAMP	*	2					
23	1834-654-230-00	STAY/LAMP COMP	*	2					
24	1833-654-064-00	TRIM/70	*	4					
25	1807-652-500-00	HARNESS/TRAILER/E4	*	1					
26	1807-652-510-00	HARNESS/SOCKET/E4	*	1					
27	1650-654-036-00	GROMMET/10X40X03	*	1					
28	V120-265-003-00	SCREW,SEMS/M5X30	*	3					
29	1674-654-270-00	LAMP/NUMBERPLAT SET	*	1					
30	1674-654-271-00	BULB/12V/5W	*	1					

FIG. 60 ELC.(REAR)SYSTEM(2/2)

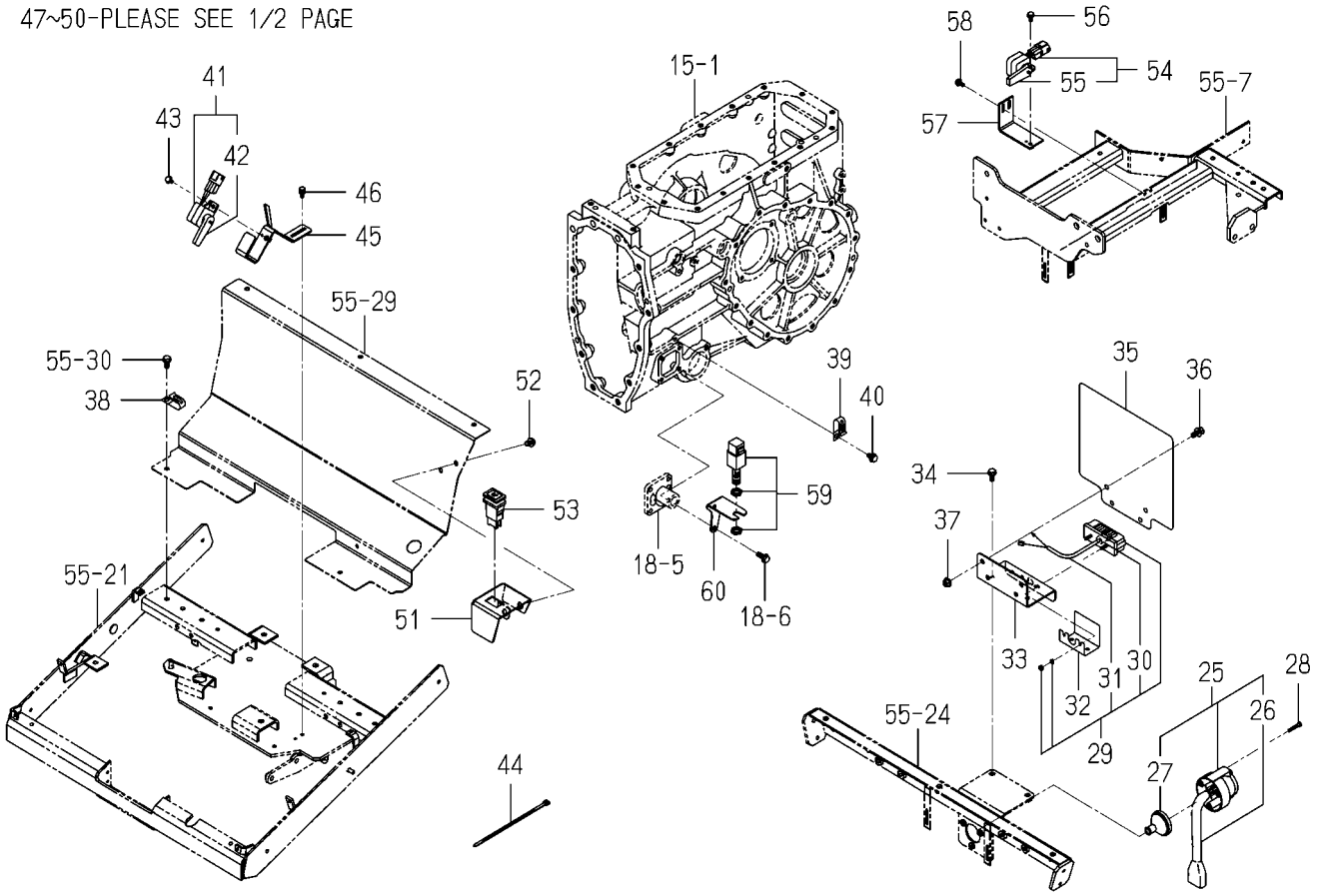

1834-654A-0100

KEY	PART CODE	DESCRIPTION	SPC	TYPE OF MODEL TLE3400 H3		ITC	COL	GRP	REMARKS
31	1674-654-272-00	HARNESS/LAMP	*	1					
32	1774-660-003-10	GUARD/LIGHT	*	1					
33	1746-631-241-30	PLATE	*	1					
34	V231-360-801-60	FLANGEBOLT/M8X16	*	2					
35	1772-635-001-10	PLATE/NUMBER/E4	*	1					
36	V211-360-802-00	BOLT,SP/M8X20	*	2					
37	V362-260-008-00	NUT/WASHER/M8	*	2					
38	1425-621-004-00	HOLDER/JE/9-9	*	1					
39	1425-621-004-00	HOLDER/JE/9-9	*	1					
40	V231-360-801-20	FLANGEBOLT/M8X12	*	1					
41	1716-680-330-10	SWITCH/LEVER ASSY	*	1					
42	1716-680-222-00	ARM	*	1					
43	V230-360-601-20	FLANGEBOLT/M6X12	*	1					
44	1376-402-003-00	BAND,WIRE/140	*	1					
45	1834-654-510-00	STAY/SWITCH COMP	*	1					
46	V210-360-601-60	BOLT,SP/M6X16	*	2					
47	1815-654-002-00	COLLAR	*	1					
48	1801-654-220-20	SWITCH/PTO/STATIONAL	*	1					
49	1801-654-500-10	COVER/SW COMP	*	1					
50	1729-705-009-00	SCREW/TRUSS/M06X16	*	2					
51	1834-654-240-00	STAY/SWITCH COMP	*	1					
52	V231-360-801-20	FLANGEBOLT/M8X12	*	2					
53	1809-670-290-00	SWITCH/BEACON ASSY	*	1					
54	1716-680-330-10	SWITCH/LEVER ASSY	*	1					
55	1716-680-222-00	ARM	*	1					
56	V230-360-601-20	FLANGEBOLT/M6X12	*	1					
57	1834-654-500-00	STAY/SENSOR COMP	*	1					
58	V230-360-601-20	FLANGEBOLT/M6X12	*	2					
59	1826-680-200-00	SWITCH/PUSH ASSY	*	1					
60	1834-654-004-00	STAY/SWITCH	*	1					

FIG. 61 ELC.(PANEL/INSTRUMENT)SYSTEM

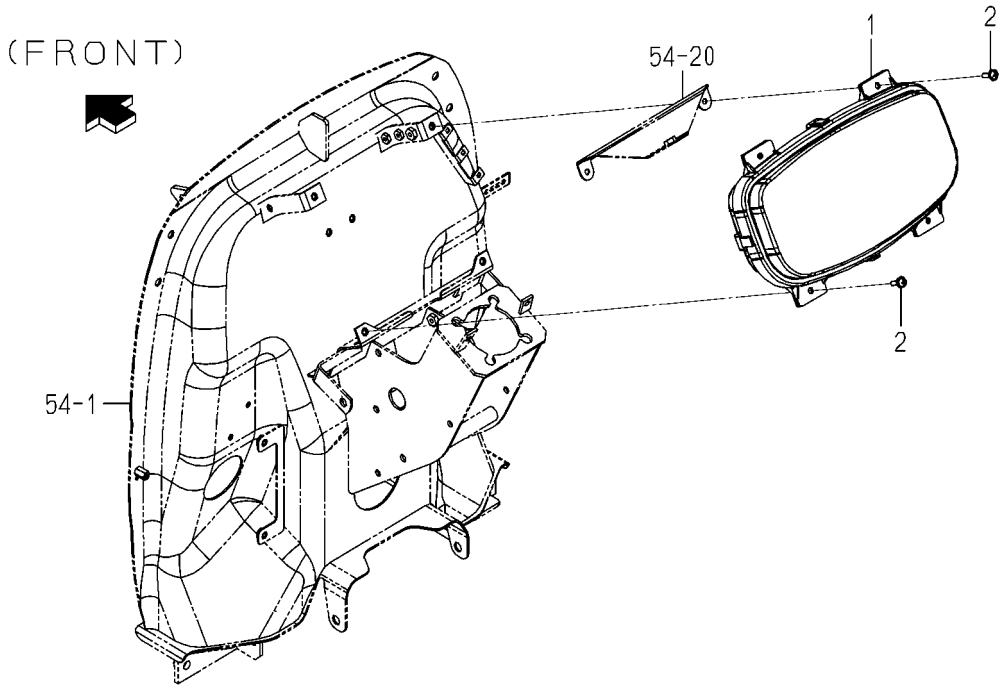

1834-656 -0100

KEY	PART CODE	DESCRIPTION	SPC	TYPE OF MODEL TLE3400 H3		ITC	COL	GRP	REMARKS
1	1824-656-300-10	PANEL/INSTRUMEN ASSY	*	1					
2	V120-376-002-00	SCREW,SP/M6X20	*	4					

FIG. 62 FRAME(REAR/UNDER)SYSTEM

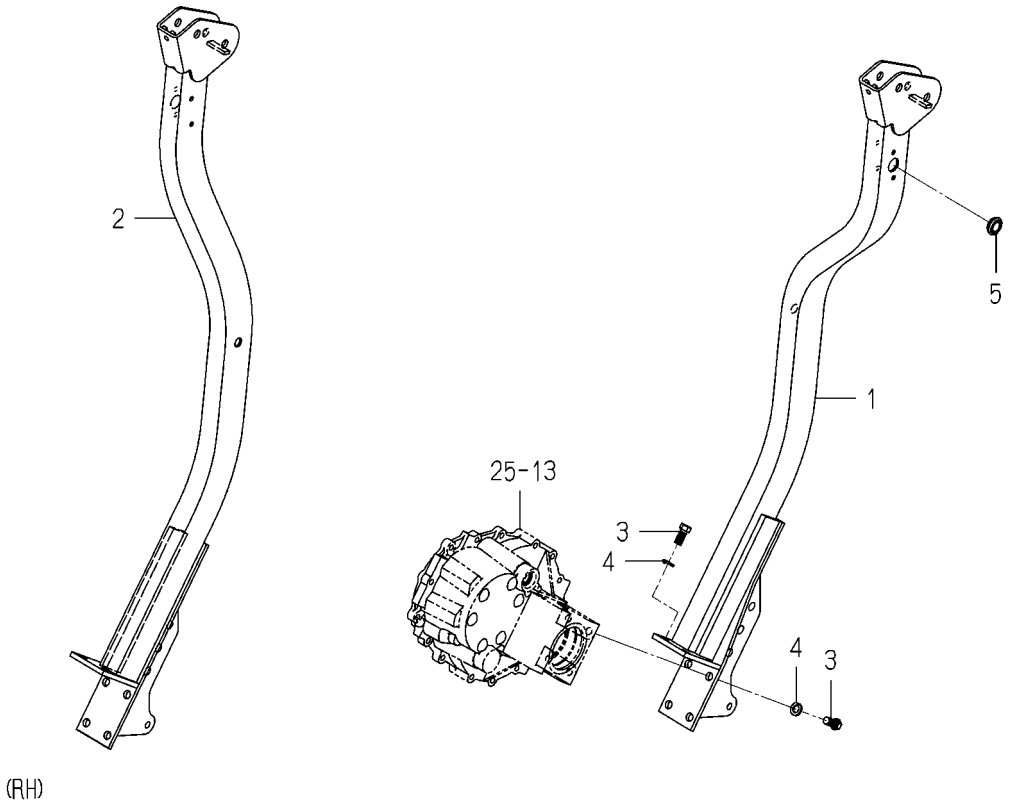

1834-702 -0100

KEY	PART CODE	DESCRIPTION	SPC	TYPE OF MODEL TLE3400 H3		ITC	COL	GRP	REMARKS
1	1821-702-200-00	FRAME/REAR/SAE/LH	*	1					
2	1821-702-210-00	FRAME/REAR/SAE/RH	*	1					
3	V201-461-403-00	BOLT/M14X30/9T	*	12					
4	V402-160-014-00	WASHER,SP/M14	*	12					
5	1784-621-008-00	GROMMET/19X26	*	2					

FIG. 63 FRAME(REAR/UPPER)SYSTEM

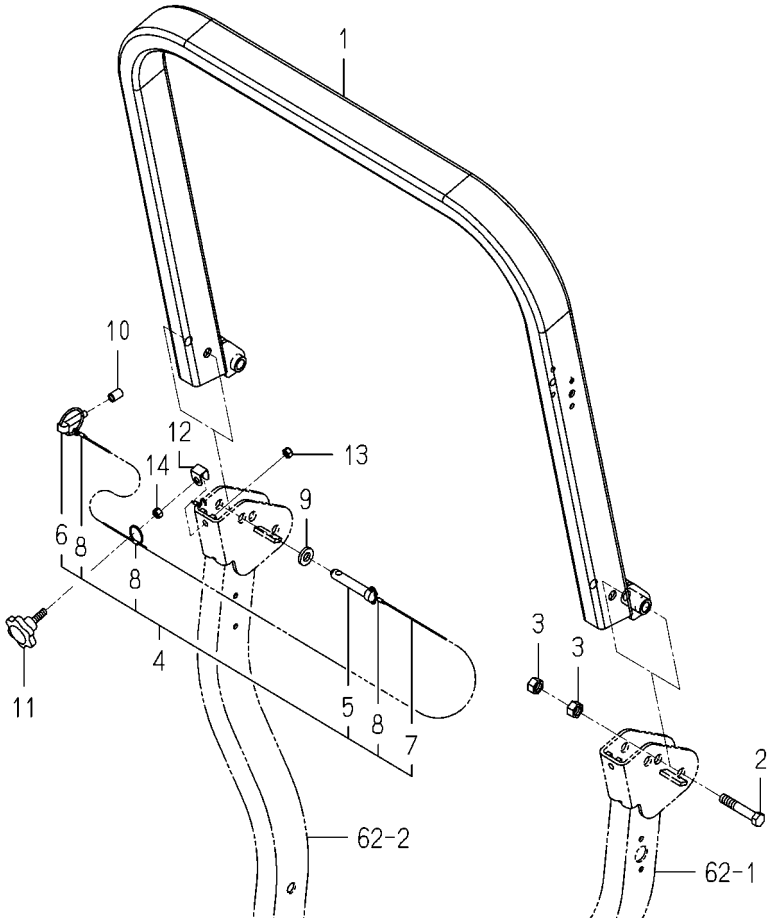

1834-702B-0100

KEY	PART CODE	DESCRIPTION	SPC	TYPE OF MODEL TLE3400 H3		ITC	COL	GRP	REMARKS
1	1834-702-300-00	FRAME/UPPER/EEC COMP	*	1					
2	1757-625-005-00	BOLT/M16X90	*	2					
3	1773-702-001-00	NUT/M16	*	4					
4	1773-702-260-10	PIN ASSY	*	2					
5	1636-701-251-00	PIN/19X94	*	2					
6	1673-525-002-30	LINKPIN	*	2					
7	1614-702-551-20	BAND	*	2					
8	1614-702-552-00	RING	*	6					
9	1773-702-002-00	INSULATOR	*	2					
10	1821-702-001-00	TUBE/020	*	2					
11	1773-702-012-00	NOB/LOCK	*	2					
12	1773-702-011-00	PLATE	*	2					
13	1725-611-087-00	U-NUT/M10X1.5	*	2					
14	V304-260-010-00	NUT/M10	*	2					

FIG. 64 ORNAMENT

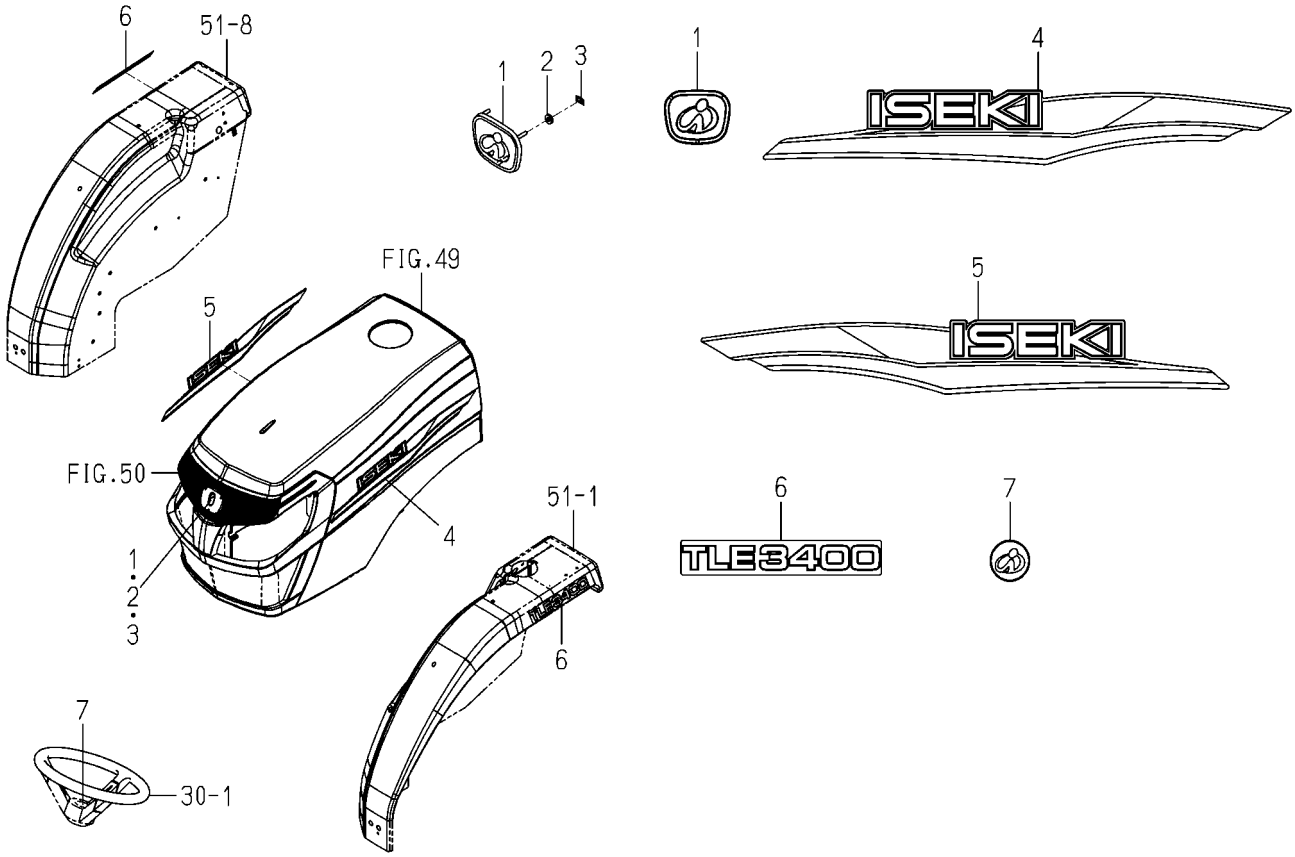

1834-901 -0100

KEY	PART CODE	DESCRIPTION	SPC	TYPE OF MODEL TLE3400 H3		ITC	COL	GRP	REMARKS
1	3689-902-019-00	ORNAMENT/ISEKI	*	1					
2	1444-601-015-00	WASHER/6X14X3	*	3					
3	V350-160-004-00	NUT,SPEED/M4	*	3					
4	1824-901-001-00	ORNAMENT/ISEKI/LH	*	1					
5	1824-901-002-00	ORNAMENT/ISEKI/RH	*	1					
6	1834-901-001-00	ORNAMENT/TLE3400	*	2					
7	1696-901-006-00	ORNAMENT/STEERING	*	1					

FIG. 65 LABEL(CONTROL)

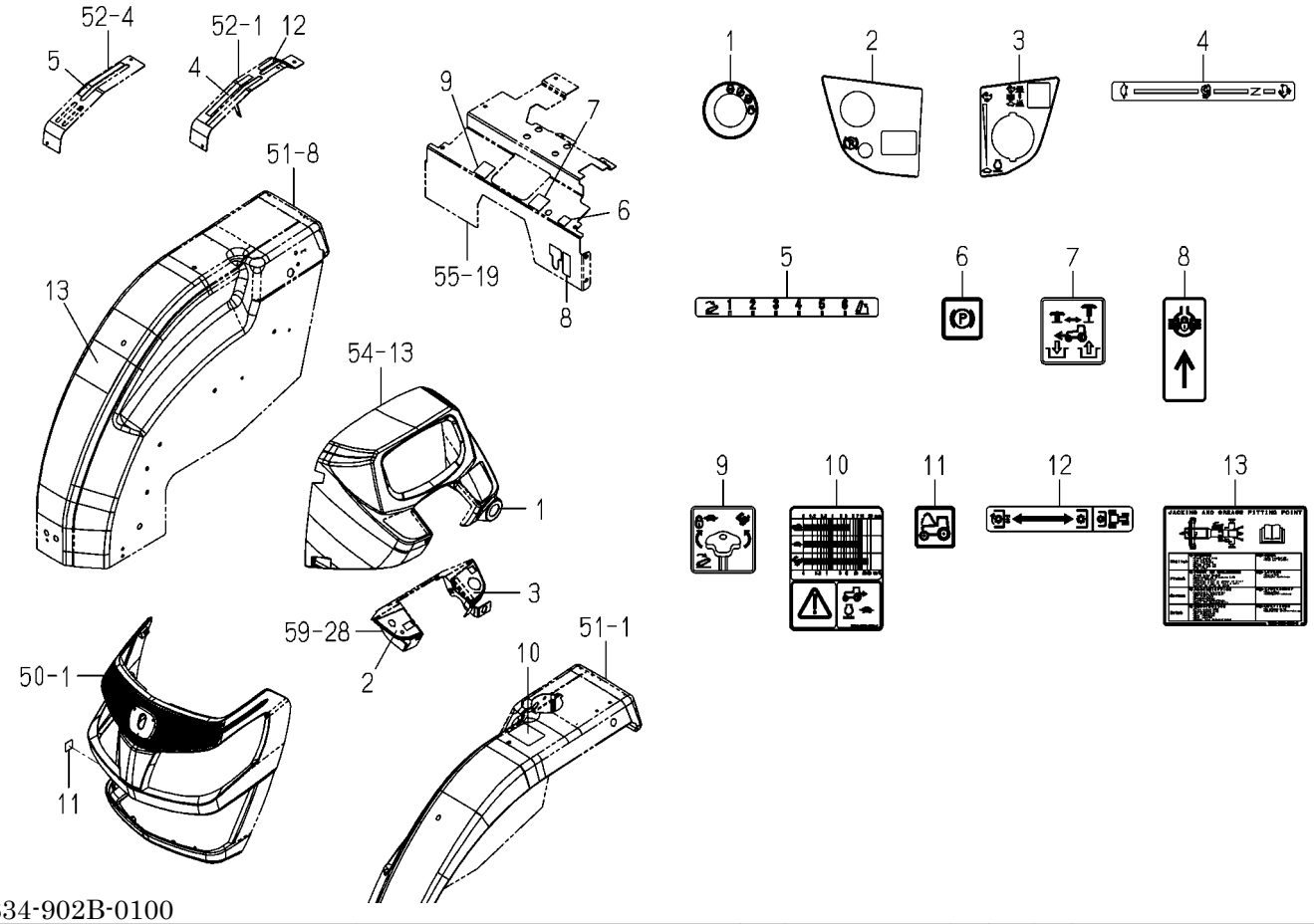

1834-902B-0100

KEY	PART CODE	DESCRIPTION	SPC	TYPE OF MODEL TLE3400 H3		ITC	COL	GRP	REMARKS
1	1834-902-003-10	LABEL/SWITCH/MAIN/E4	*	1					
2	1833-902-062-10	LABEL/CONTROL/LH	*	1					
3	1833-902-064-10	LABEL/CONTROL/RH	*	1					
4	1821-902-005-10	LABEL/CONTROL/SUB	*	1					
5	1821-902-006-00	LABEL/CONTROL/POSITI	*	1					
6	1836-902-014-10	LABEL/PARKING	*	1					
7	1821-902-009-10	LABEL/4WD	*	1					
8	1821-902-012-10	LABEL/DIFF	*	1					
9	1821-902-011-10	LABEL/CONTROL/SLOW R	*	1					
10	1834-902-051-10	LABEL/SPEED/H/E4	*	1					
11	1833-902-067-00	LABEL/CONTROL/FOOD	*	1					
12	1834-902-021-00	LABEL/CONTROL/PTO/E4	*	1					
13	1834-902-022-00	LABEL/MAINTENANCE	*	1					

FIG. 66 LABEL(CAUTION)

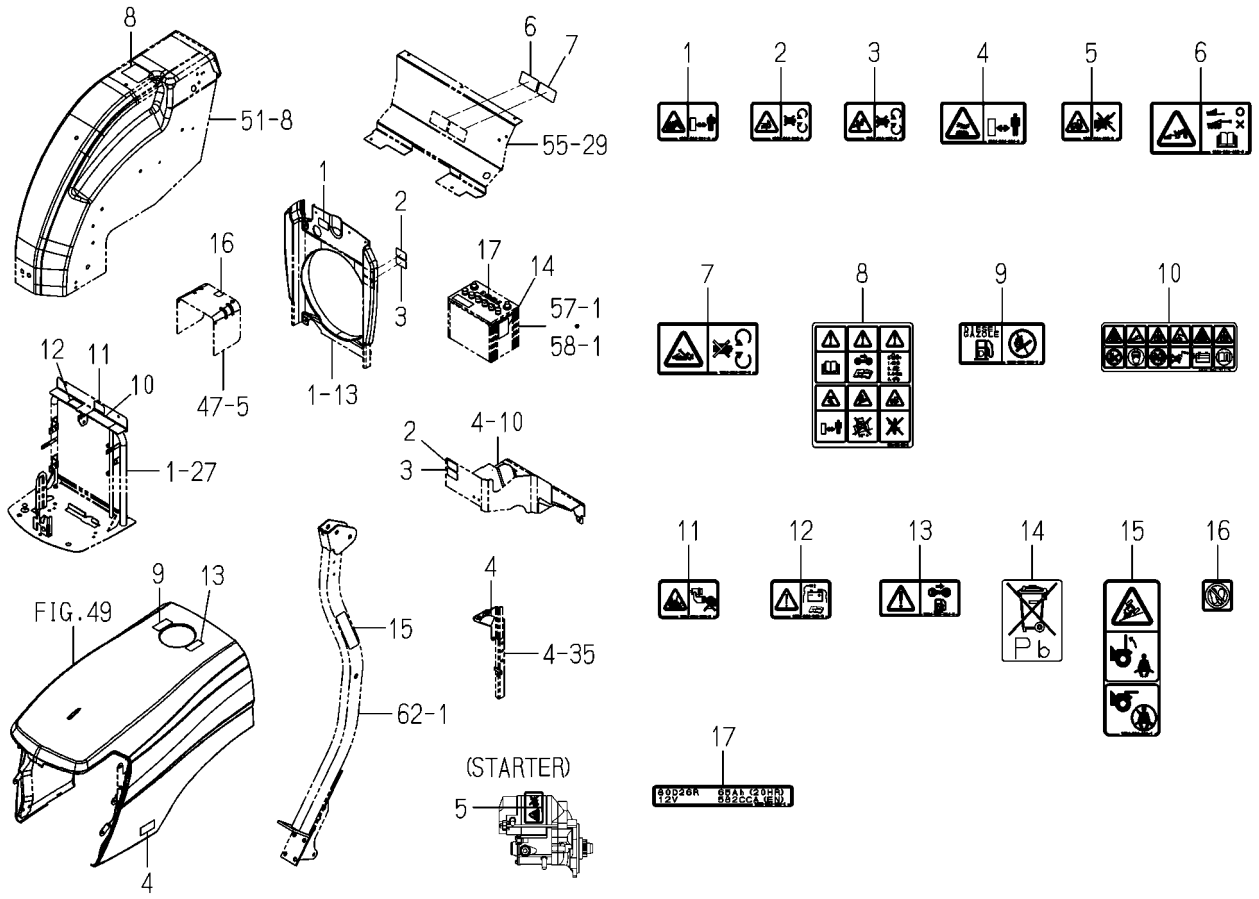

1834-904A-0100

KEY	PART CODE	DESCRIPTION	SPC	TYPE OF MODEL TLE3400 H3		ITC	COL	GRP	REMARKS
1	1824-904-001-00	LABEL/W/RADIATOR	*	1					
2	1824-904-002-00	LABEL/W/BELT	*	2					
3	1824-904-003-00	LABEL/W/FAN	*	2					
4	1824-904-004-00	LABEL/W/HOT	*	2					
5	1824-904-005-00	LABEL/W/STARTER	*	1					
6	1824-904-006-00	LABEL/TRAILER	*	1					
7	1824-904-007-00	LABEL/PTO	*	1					
8	1824-904-008-00	LABEL/C/DRIVE/E4	*	1					
9	1824-904-009-00	LABEL/FUEL	*	1					
10	1824-904-011-00	LABEL/BATTERY	*	1					
11	1824-904-012-00	LABEL/ETHER	*	1					
12	1824-904-013-00	LABEL/C/BATTERY	*	1					
13	1824-904-014-00	LABEL/W/FUEL	*	1					
14	1833-904-063-00	LABEL/BATTERY	*	1					
15	1834-904-001-10	LABEL/ROPS/E4	*	1					
16	1833-904-061-00	LABEL/CAUTION/STEP	*	1					
17	1833-904-064-00	LABEL/BATTERY/80D26R	*	1					

FIG. 67 OTHER PARTS (ENGINE/STARTER,BRACKET, BREATHER ETC)SYSTEM

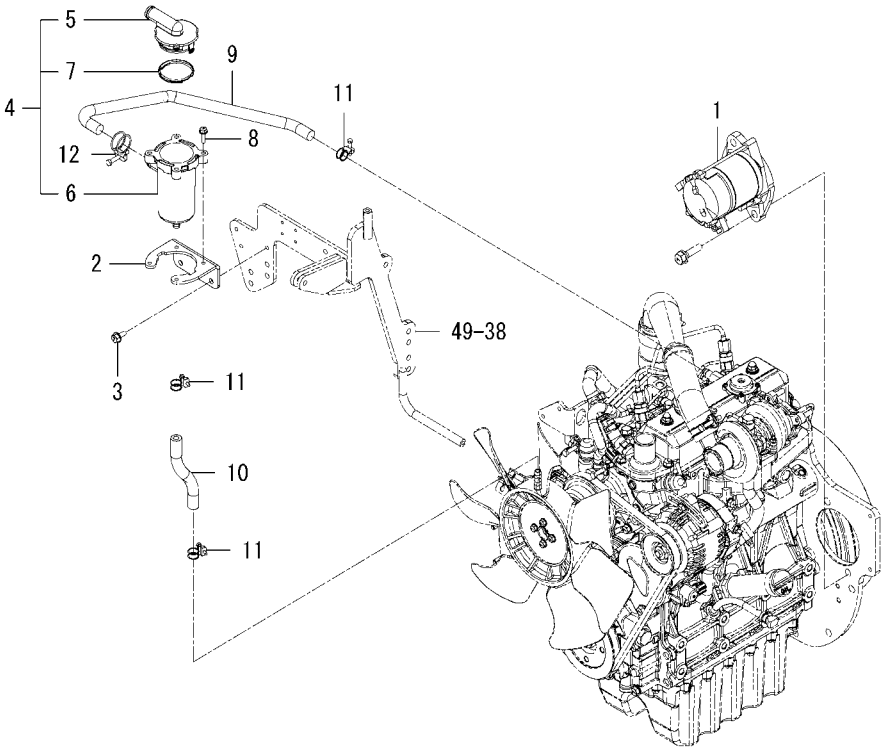

6005-980A-0100

KEY	PART CODE	DESCRIPTION	SPC	TYPE OF MODEL TLE3400 H3		ITC	COL	GRP	REMARKS
1	6281-100-007-40	STARTER ASSY	*	1					FIG 085
2	6211-777-061-00	BRACKET/CCB	*	1					
3	V231-360-801-60	FLANGEBOLT/M8X16	*	2					
4	6211-740-016-00	BREATHER ASSY	*	1					
5	6211-740-017-00	COVER ASSY	*	1					
6	6211-740-018-00	CASE ASSY	*	1					
7	6211-744-003-00	O-RING	*	1					
8	V230-360-602-00	FLANGEBOLT/M6X20	*	4					
9	6209-366-024-10	HOSE/BREATHER	*	1					
10	6209-360-157-00	HOSE/RUBBER	*	1					
11	J061-213-018-00	CLAMP/WIRE/13-18	*	3					
12	J061-222-026-00	CLAMP/WIRE/22-26	*	1					

FIG. 68 WHEEL(REAR/AGR/ 11.2-24)SYSTEM(OPTION)

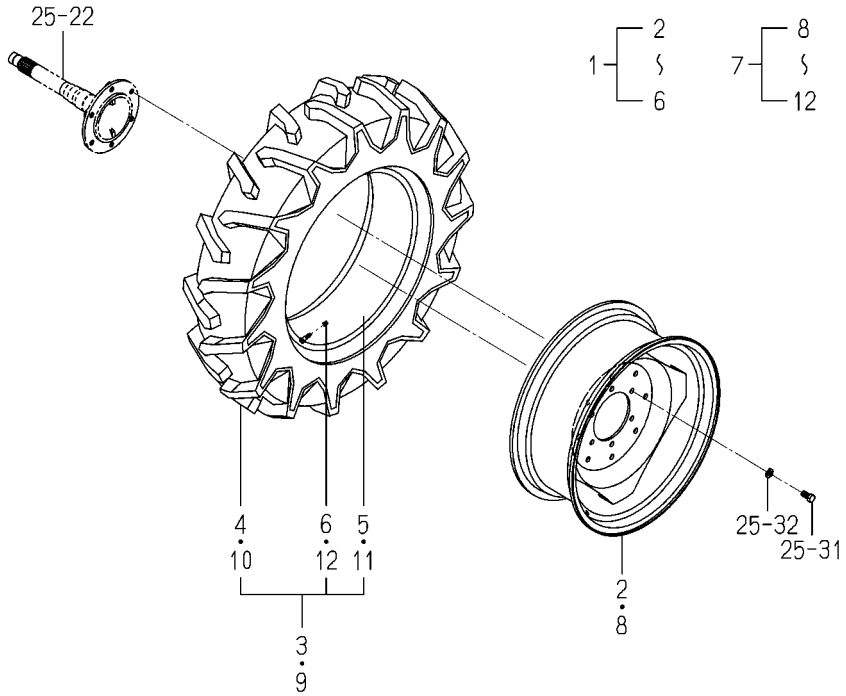

1834-317 -0100

KEY	PART CODE	DESCRIPTION	SPC	TYPE OF MODEL TLE3400 H3		ITC	COL	GRP	REMARKS
1	1834-317-210-10	TIRE/11.2-24/LH ASSY	T	1					
2	1834-317-220-00	WHEEL/24XW10 COMP	T	1					
3	1834-317-230-10	TIRE/11.2-24-4P ASSY	T	1					
4	1834-317-231-10	TIRE/11.2-24-4PR	T	1					
5	1834-317-232-00	TUBE	T	1					
6	1834-317-233-00	CAP/VALVE	T	1					
7	1834-317-240-10	TIRE/11.2-24/RH ASSY	T	1					
8	1834-317-220-00	WHEEL/24XW10 COMP	T	1					
9	1834-317-230-10	TIRE/11.2-24-4P ASSY	T	1					
10	1834-317-231-10	TIRE/11.2-24-4PR	T	1					
11	1834-317-232-00	TUBE	T	1					
12	1834-317-233-00	CAP/VALVE	T	1					

FIG. 69 WHEEL(REAR/TURF/ 355/80D20)SYSTEM(OPTION)

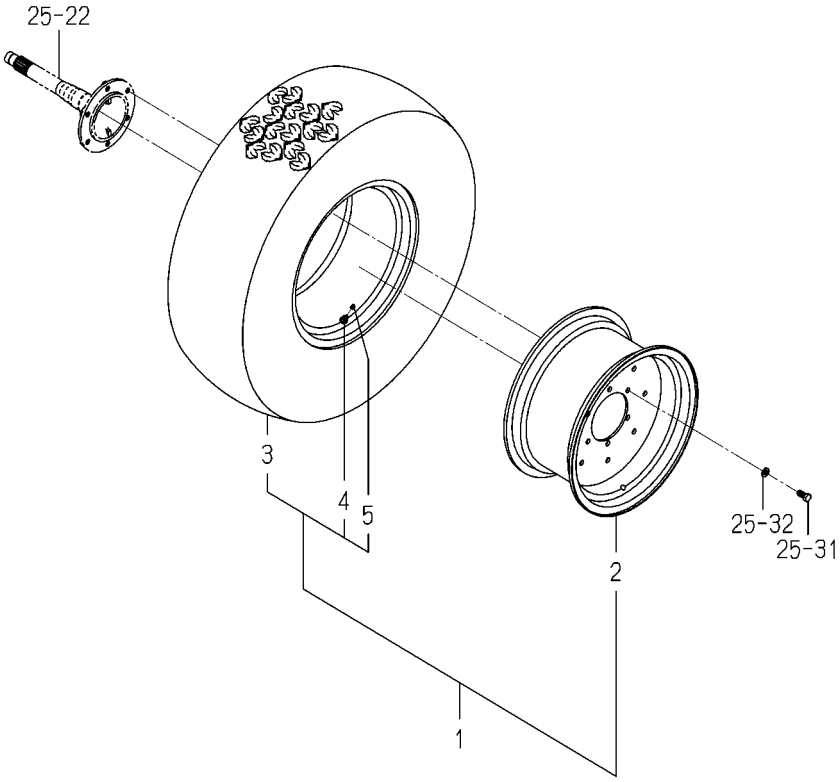

1834-317A-0100

KEY	PART CODE	DESCRIPTION	SPC	TYPE OF MODEL TLE3400 H3		ITC	COL	GRP	REMARKS
1	1834-317-260-00	TIRE/355/80D20 ASSY	T	2					
2	1834-317-270-00	WHEEL/20XW11 COMP	T	2					
3	1833-317-781-10	TIRE/355/80D20	T	2					
4	1834-317-272-00	VALVE	T	2					
5	1834-317-273-00	CAP/VALVE	T	2					

FIG. 70 PLATE(BUMPER)&BOLT SYSTEM (OPTION)

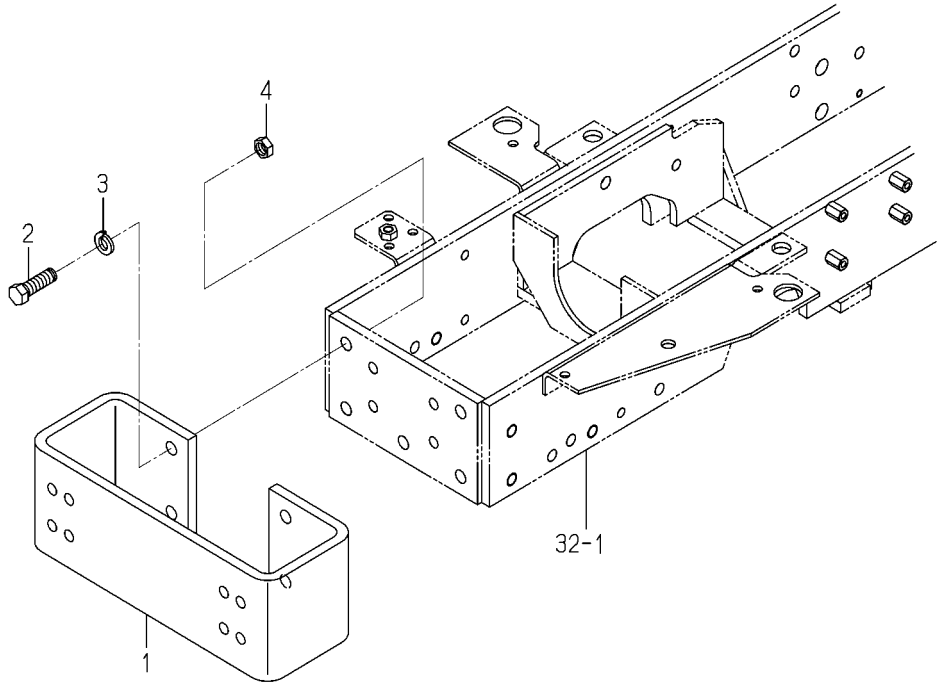

1742-410B-0100

KEY	PART CODE	DESCRIPTION	SPC	TYPE OF MODEL TLE3400 H3		ITC	COL	GRP	REMARKS
1	1742-410-001-10	PLATE/BUMPER	T	1					
2	V201-361-404-50	BOLT/M14X45/7T	T	4					
3	V401-160-014-00	WASHER,SP/M14	T	4					
4	V304-460-014-00	NUT/M14/7T	T	4					

FIG. 71 WHEEL(FRONT/AGR/ 7-16)SYSTEM(OPTION)

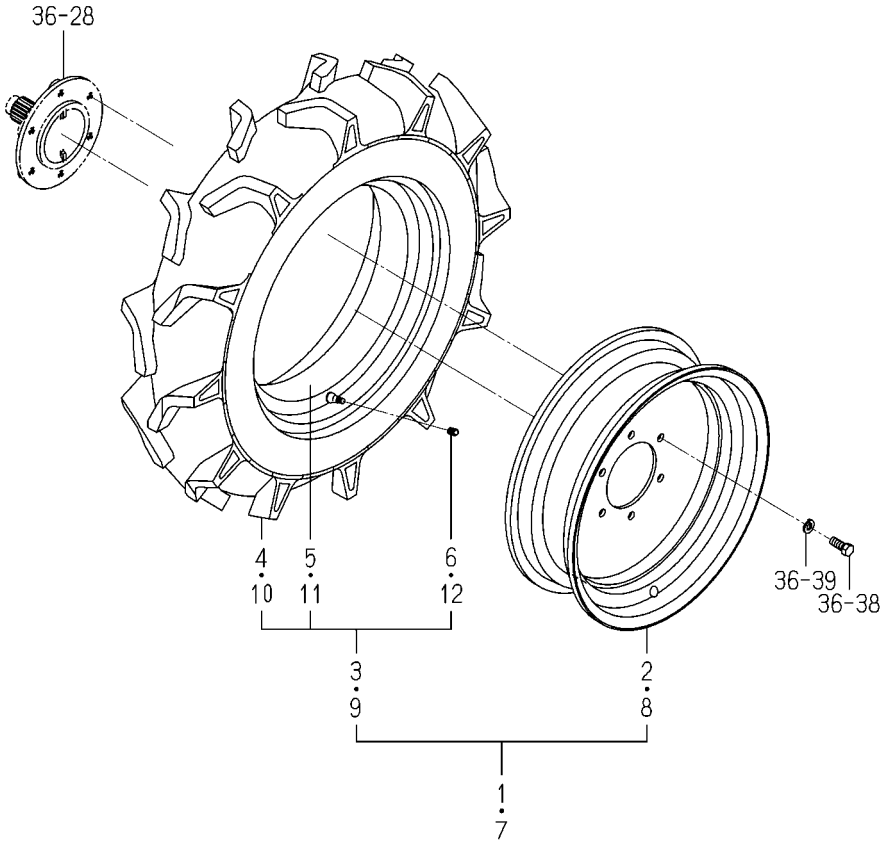

1834-437 -0100

KEY	PART CODE	DESCRIPTION	SPC	TYPE OF MODEL TLE3400 H3		ITC	COL	GRP	REMARKS
1	1834-437-210-10	TIRE/7-16/LH ASSY	T	1					
2	1834-437-220-00	WHEEL/16X5JA COMP	T	1					
3	1834-437-230-10	TIRE/7-16-4PR ASSY	T	1					
4	1834-437-231-10	TIRE/7-16-4PR	T	1					
5	1834-437-232-00	TUBE	T	1					
6	1834-317-233-00	CAP/VALVE	T	1					
7	1834-437-240-10	TIRE/7-16/RH ASSY	T	1					
8	1834-437-220-00	WHEEL/16X5JA COMP	T	1					
9	1834-437-230-10	TIRE/7-16-4PR ASSY	T	1					
10	1834-437-231-10	TIRE/7-16-4PR	T	1					
11	1834-437-232-00	TUBE	T	1					
12	1834-317-233-00	CAP/VALVE	T	1					

FIG. 72 WHEEL(FRONT/TURF/ 212/80D15)SYSTEM(OPTION)

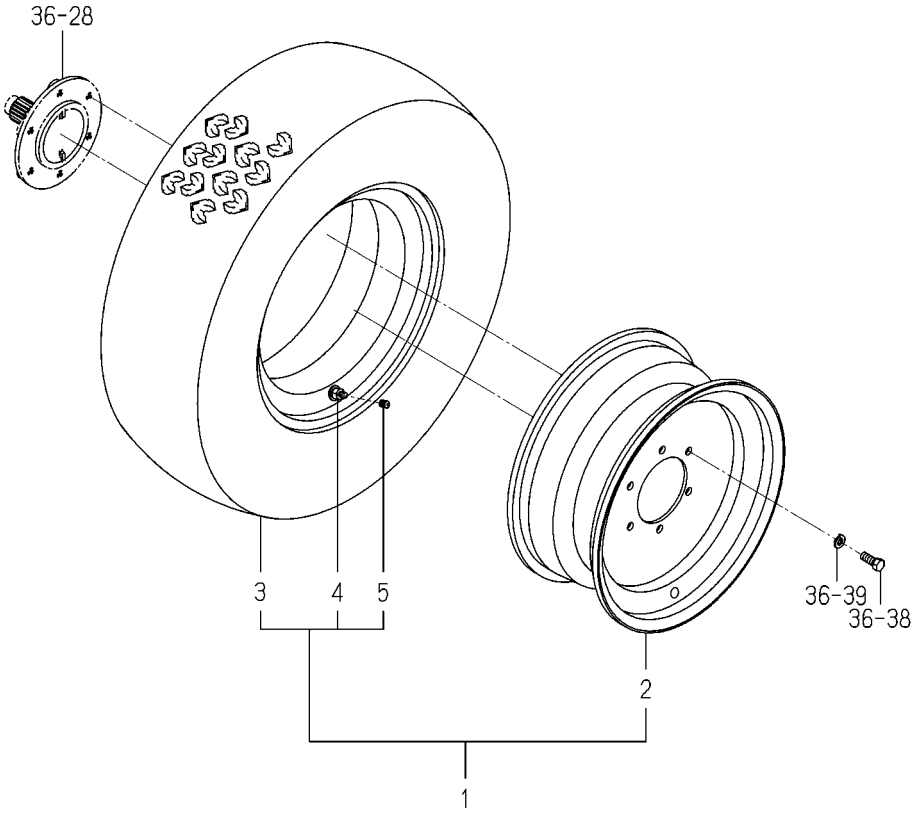

1834-437A-0100

KEY	PART CODE	DESCRIPTION	SPC	TYPE OF MODEL TLE3400 H3		ITC	COL	GRP	REMARKS
1	1834-437-260-00	TIRE/212/80D15 ASSY	T	2					
2	1834-437-270-00	WHEEL/15X7COMP	T	2					
3	1833-437-781-10	TIRE/212/80D15	T	2					
4	1834-317-272-00	VALVE	T	2					
5	1834-317-273-00	CAP/VALVE	T	2					

FIG. 73 PLUG(M18)ASSY(OPTION)

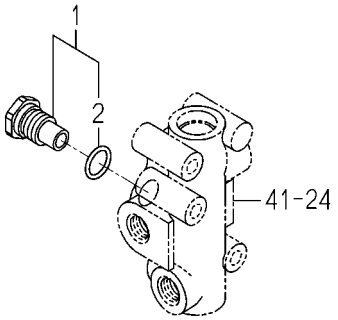

1742-508D-0100

KEY	PART CODE	DESCRIPTION	SPC	TYPE OF MODEL TLE3400 H3		ITC	COL	GRP	REMARKS
1	1742-508-410-00	PLUG/M18 ASSY	T	1					
2	V720-112-401-60	O-RING/1B,P16	T	1					

FIG. 74 VALVE(REMOTE/2ND)SET (V TYPE)(OPTION)

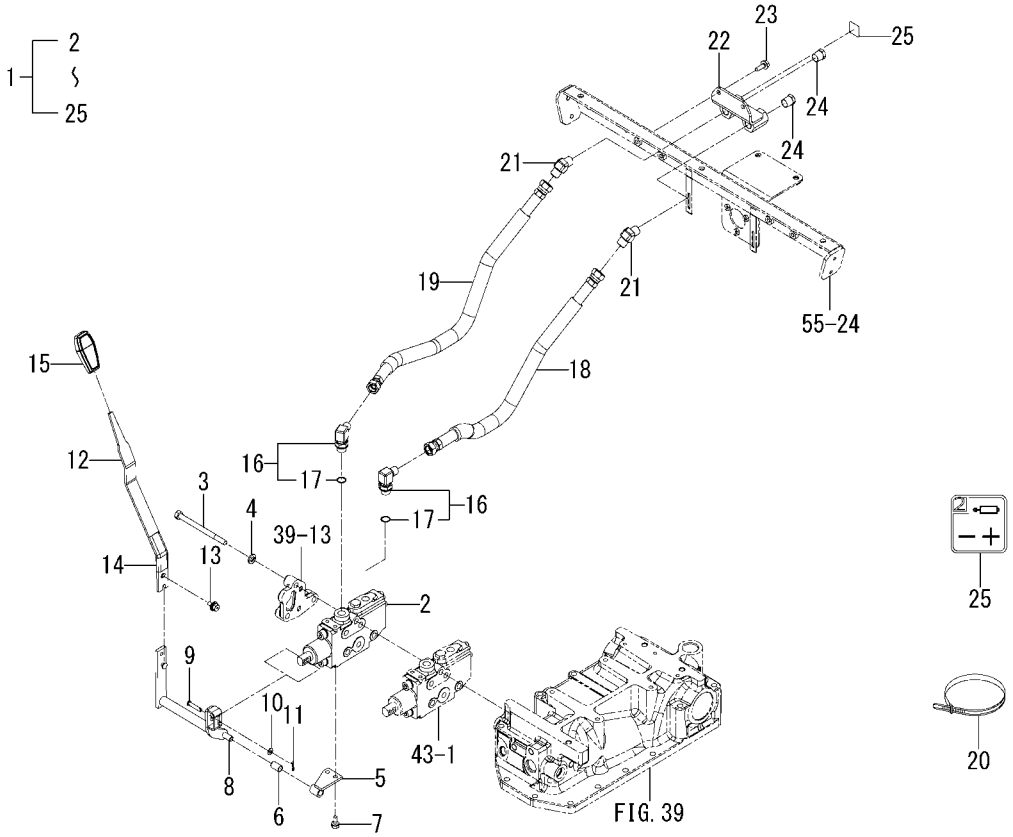

1834-512C-0100

KEY	PART CODE	DESCRIPTION	SPC	TYPE OF MODEL TLE3400 H3		ITC	COL	GRP	REMARKS
1	1813-512-650-10	VALVE/REMOTE/2ND/3	T	1					
2	1640-530-600-10	VALVE/CONTROL ASSY	T	1					FIG 080
3	V201-261-012-00	BOLT/M10X120	T	3					
4	V401-160-010-00	WASHER,SP/M10	T	3					
5	1805-512-250-00	HOLDER ASSY	T	1					
6	1560-509-211-00	BUSH/10X12X20	T	1					
7	V211-260-801-60	BOLT,S/M8X16	T	2					
8	1805-512-230-00	ARM/2ND COMP	T	1					
9	2144-519-007-00	PIN/06X31	T	1					
10	V411-260-006-00	WASHER,PL/M6	T	1					
11	2130-601-018-00	PIN,SNAP/6	T	1					
12	1805-512-002-00	REVER/2ND	T	1					
13	V211-360-801-60	BOLT,SP/M8X16	T	1					
14	1614-262-006-00	INSULATOR/LEVER/SUB	T	1					
15	3659-203-005-00	GRIP/03X17X74	T	1					
16	1689-502-250-00	ADAPTER/L/G3/8 ASSY	T	2					
17	V720-112-401-40	O-RING/1B,P14	T	2					
18	1813-512-610-00	HOSE/600 ASSY	T	1					
19	1813-512-620-00	HOSE/640 ASSY	T	1					
20	1342-402-006-00	BAND,WIRE/250	T	2					
21	1757-501-014-00	ADAPTER/45/R3/8XG3/	T	2					
22	1834-512-240-00	STAY/AUX COMP	T	1					
23	V231-360-802-00	FLANGEBOLT/M8X20	T	2					
24	V782-160-000-6T	PLUG/SCREW/SEAL	T	2					
25	1834-512-024-00	LABEL/PORT/2ND	T	1					

FIG. 75 GENERATOR(60A)SET(OPTION)

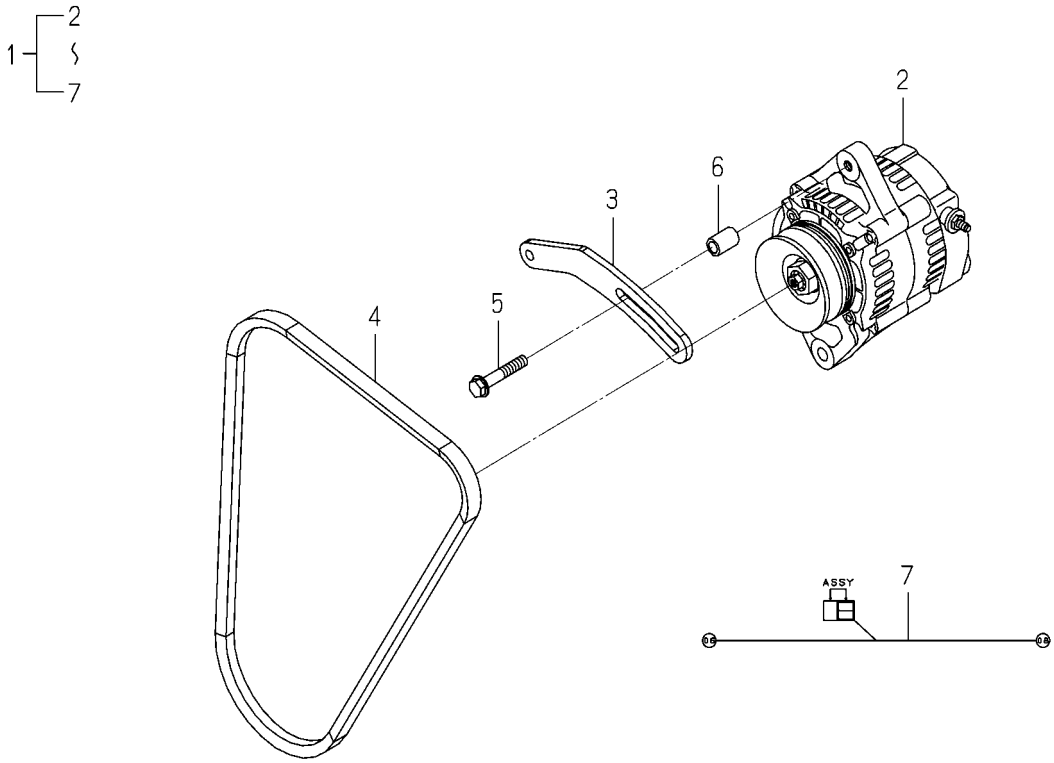

1834-650Y-0100

KEY	PART CODE	DESCRIPTION	SPC	TYPE OF MODEL TLE3400 H3		ITC	COL	GRP	REMARKS
1	1834-650-910-00	GENERATOR/60A SET	T	1					
2	6281-200-015-00	GENERATOR ASSY	T	1					FIG 086
3	6213-674-047-00	PLATE/ADJAST	T	1					
4	6213-671-059-00	BELT/VNR5A40.5	T	1					
5	V231-360-804-50	FLANGEBOLT/M8X45	T	1					
6	1834-650-911-00	COLLAR/09X14X21	T	1					
7	1734-650-240-00	HARNESS/ORTERNATER	T	1					

FIG. 76 LAMP(HEAD/LHT)SYSTEM (EXCEPT G TYPE)(OPTION)

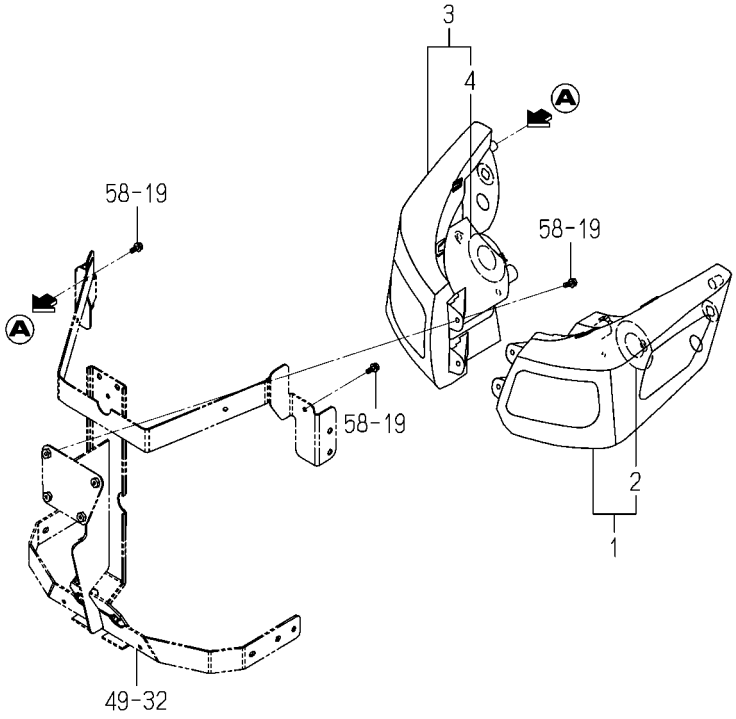

1815-650Z-0100

KEY	PART CODE	DESCRIPTION	SPC	TYPE OF MODEL TLE3400 H3		ITC	COL	GRP	REMARKS
1	1815-650-310-00	LAMP/HEAD/LHT/L ASSY	T	1					
2	1719-650-302-00	BULB/12V60/55W	T	1					
3	1815-650-320-00	LAMP/HEAD/LHT/R ASSY	T	1					
4	1719-650-302-00	BULB/12V60/55W	T	1					

FIG. 77 WEIGHT(15)SET(OPTION)

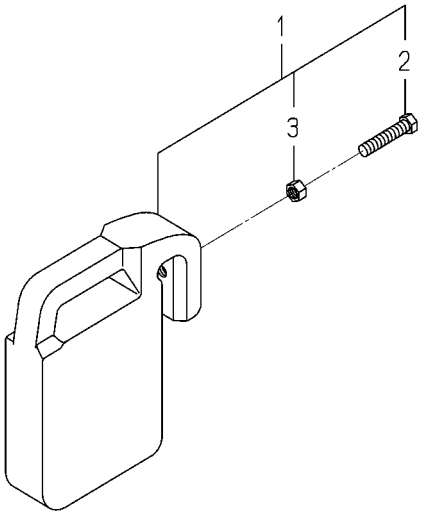

1774-922A-0100

KEY	PART CODE	DESCRIPTION	SPC	TYPE OF MODEL TLE3400 H3		ITC	COL	GRP	REMARKS
1	1774-922-200-10	WEIGHT/15 SET	T	1					
2	W201-261-206-00	BOLT/M12X60	T	1					
3	V305-260-012-00	NUT/M12	T	1					

FIG. 78 COMPONENT PARTS FOR K200-289-000-00 ON Fig.42

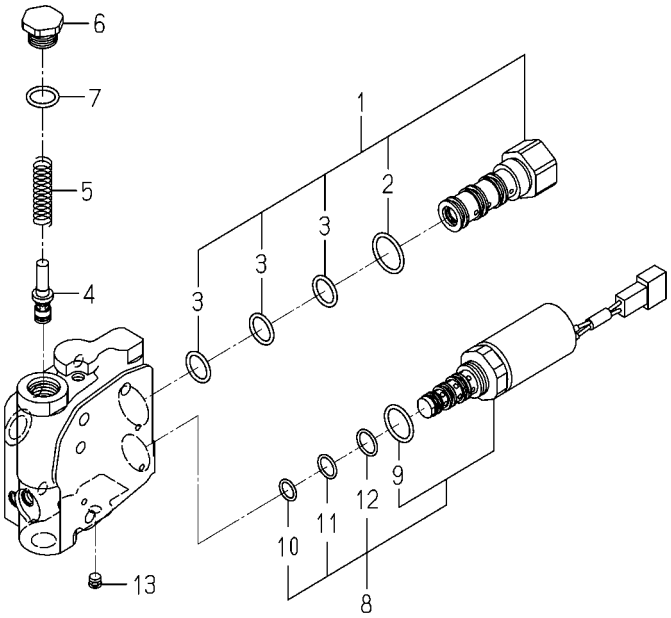

K200-289-000-0

KEY	PART CODE	DESCRIPTION	SPC	TYPE OF MODEL TLE3400 H3		ITC	COL	GRP	REMARKS
1	K200-152-110-20	VALVE/REDUCE/21 SET	*	1					
2	V720-112-402-20	O-RING/1B,P22	*	1					
3	V720-112-401-60	O-RING/1B,P16	*	3					
4	K250-090-003-00	POPPET/1.3	*	1					
5	K250-090-002-00	SPRING/HC045	*	1					
6	K234-001-005-00	PLUG/M18	*	1					
7	V720-112-401-60	O-RING/1B,P16	*	1					
8	K290-003-000-30	VALVE/PRV/B ASSY	*	1					
9	V720-112-402-00	O-RING/1B,P20	*	1					
10	K290-001-001-00	O-RING/AS568/013	*	1					
11	K290-001-002-00	O-RING/AS568/014	*	1					
12	K290-001-003-00	O-RING/AS568/015	*	1					
13	V780-140-000-1T	PLUG/SCREW/SEAL	*	5					

FIG. 79 COMPONENT PARTS FOR K500-007-000-00 ON Fig.7

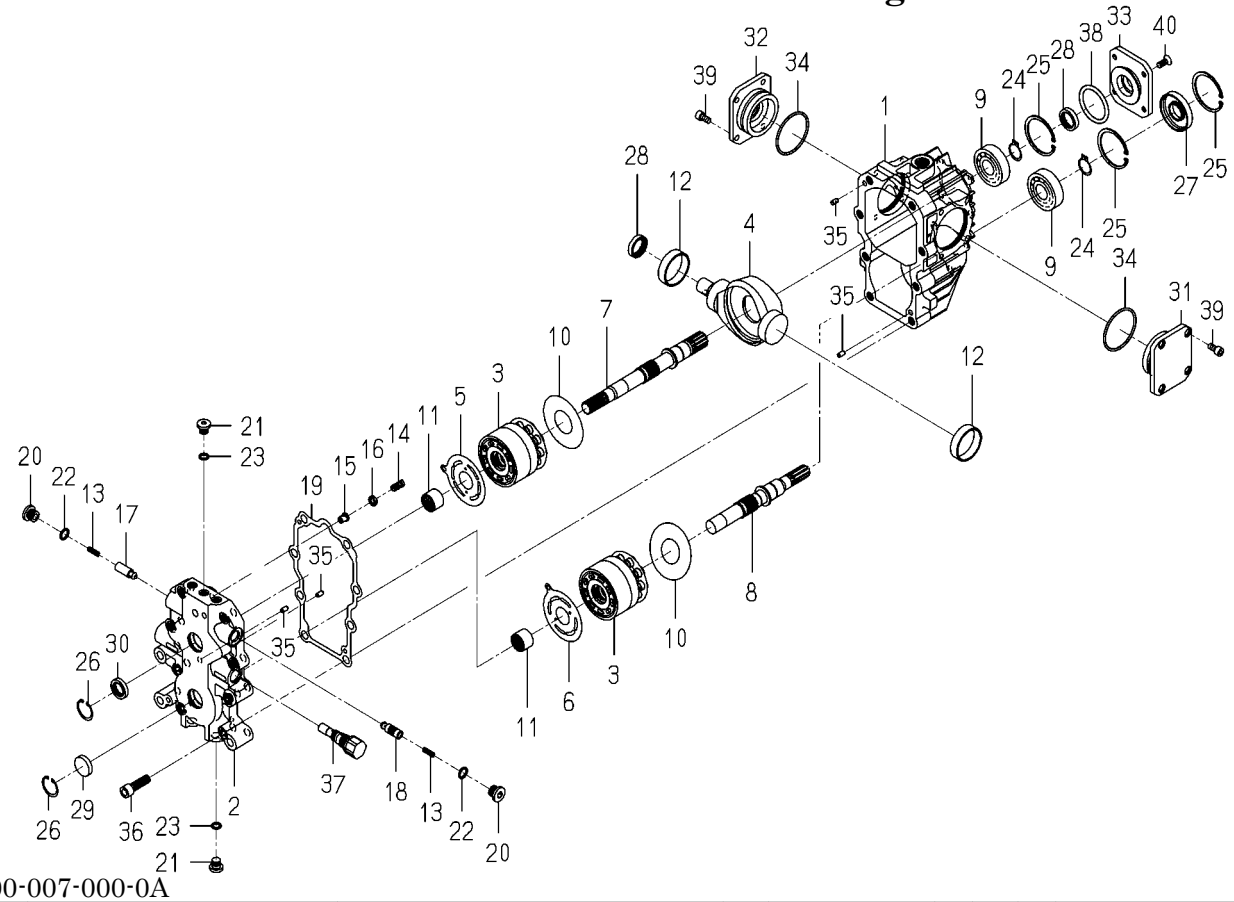

K500-007-000-0A

KEY	PART CODE	DESCRIPTION	SPC	TYPE OF MODEL TLE3400 H3		ITC	COL	GRP	REMARKS
1	K500-007-001-00	CASE/HMP1/007	*	1					
2	K500-007-004-00	BLOCK/PORT/HMP1/007	*	1					
3	K500-003-300-00	BLOCK/CYLINDER/HMP1	*	2					
4	K500-003-006-00	PLATE/SWASH/HMP1/003	*	1					
5	K500-001-010-00	PLATE/VALVE/PUMP	*	1					
6	K500-001-011-00	PLATE/VALVE/MOTOR	*	1					
7	K500-003-012-00	SHAFT/PUMP/HMP1/003	*	1					
8	K500-003-013-00	SHAFT/MOTOR/HMP1/003	*	1					
9	V600-110-630-50	BEARING,RB/6305	*	2					
10	K500-001-015-00	PLATE/THRUST	*	2					
11	K510-001-016-00	NEEDLE	*	2					
12	K500-001-017-00	BUSH/50X55X14	*	2					
13	K510-001-020-00	SPRING/HC030	*	2					
14	K510-003-021-00	SPRING/HC021	*	1					
15	K510-003-022-00	POPPET/RELIEF	*	1					
16	K510-003-037-00	PLATE/SPRING	*	1					
17	K500-001-023-00	POPPET/CHECK	*	1					
18	K500-007-023-00	POPPET/CHECK/0.7X2	*	1					
19	K500-001-026-00	GASKET	*	1					
20	K510-001-029-00	PLUG(G3/8)	*	2					
21	K275-001-003-00	PLUG(PF1/4)	*	5					
22	V720-112-401-40	O-RING/1B,P14	*	2					
23	V720-112-401-10	O-RING/1B,P11	*	5					
24	V704-140-025-00	RING,SNAP/25 C	*	2					
25	1710-241-053-00	RING/SNAP/R62	*	3					
26	V705-140-032-00	RING,SNAP/32 C	*	2					
27	K500-001-030-00	SEAL/OIL	*	1					
28	V744-125-350-70	SEAL,OIL/TC25357	*	2					
29	K510-002-033-00	CAP/32X7	*	1					
30	K510-001-039-00	OIL SEAL	*	1					

FIG. 79 COMPONENT PARTS FOR K500-007-000-00 ON Fig.7

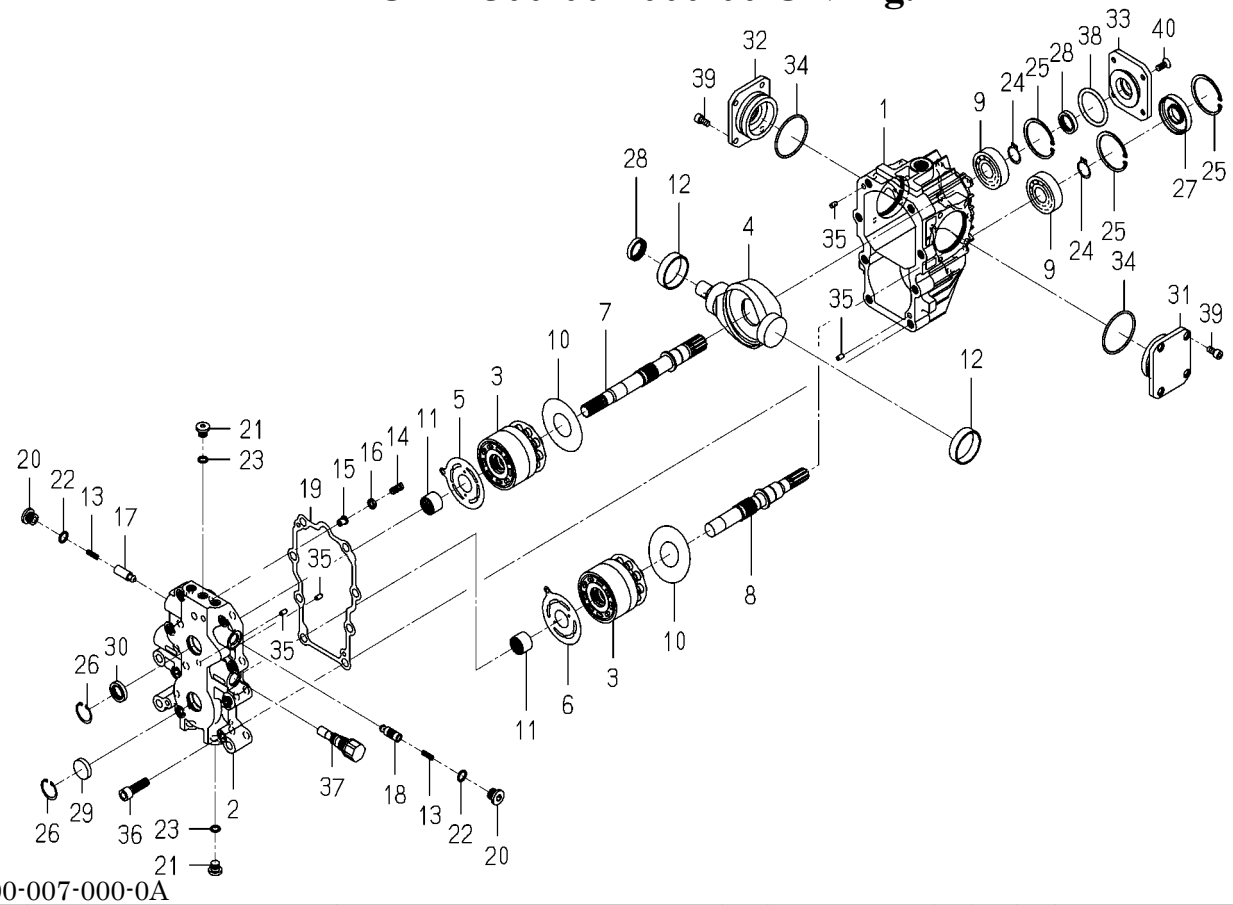

K500-007-000-0A

KEY	PART CODE	DESCRIPTION	SPC	TYPE OF MODEL TLE3400 H3		ITC	COL	GRP	REMARKS
31	K500-007-034-00	COVER/BUSH/HMP1/007	*	1					
32	K500-007-035-00	COVER/TRUNNION/HMP1/	*	1					
33	K500-007-025-00	COVER/PUMP/HMP1/007	*	1					
34	V721-103-106-50	O-RING/1A,G65	*	2					
35	K510-001-036-00	PIN,ST	*	4					
36	K500-001-039-00	BOLT/M12X40	*	8					
37	K500-001-100-00	VALVE/RELIEF SET	*	1					
38	V720-105-705-20	O-RING/1A,P52	*	1					
39	K500-007-039-00	SCREW/SOCKET/M8X16	*	8					
40	K510-003-038-00	SCREW/SOCKET	*	4					

FIG. 80 COMPONENT PARTS FOR 1640-530-600-10 ON Fig.74

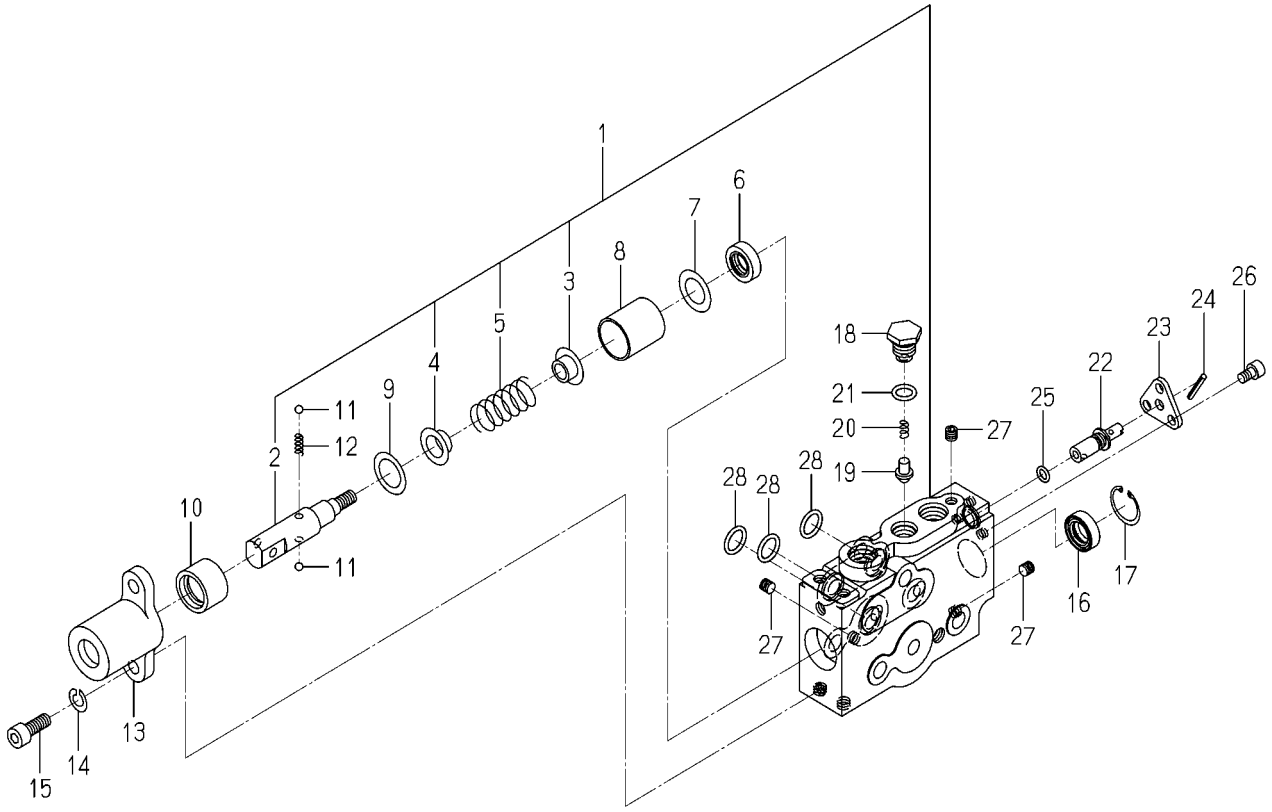

1640-530-600-1D

KEY	PART CODE	DESCRIPTION	SPC	TYPE OF MODEL TLE3400 H3		ITC	COL	GRP	REMARKS
1	1640-530-610-10	VALVE SET	T	1					
2	1640-530-613-00	HEAD/SPOOL	T	1					
3	1640-530-614-00	STOPPER/SPRING/A	T	1					
4	1640-530-615-00	STOPPER/SPRING/B	T	1					
5	K211-012-006-00	SPRING/HC042	T	1					
6	K211-004-007-00	SEAL,OIL/TC4,14247	T	1					
7	K211-004-006-00	COLLAR	T	1					
8	1640-530-622-00	SLEEVE	T	1					
9	1640-530-623-00	COLLAR/19X28X02	T	1					
10	1640-530-624-00	SLEEVE/DETENT	T	1					
11	V682-200-000-60	BALL,STEEL	T	2					
12	1640-530-625-00	SPRING/HC015	T	1					
13	1640-530-626-00	COVER	T	1					
14	V401-160-008-00	WASHER,SP/M8	T	2					
15	V220-540-802-00	SCREW,SOCKET/M8X20	T	2					
16	K211-004-007-00	SEAL,OIL/TC4,14247	T	1					
17	V705-140-024-00	RING,SNAP/24 C	T	1					
18	1640-530-628-00	PLUG/M14	T	1					
19	1640-530-629-00	POPPET	T	1					
20	K110-001-106-00	SPRING	T	1					
21	V720-112-401-20	O-RING/1B,P12	T	1					
22	1640-530-631-00	SPOOL/DELECT	T	1					
23	1640-530-632-00	PLATE	T	1					
24	V580-140-302-50	PIN,SPRING/3X25 W	T	1					
25	V720-111-900-70	O-RING/1B,P7	T	1					
26	V220-540-601-00	SCREW,SOCKET/M6X10	T	3					
27	K200-014-007-00	PLUG/SEAL	T	3					
28	V720-112-401-40	O-RING/1B,P14	T	3					

FIG. 81 COMPONENT PARTS FOR 1719-511-350-00 ON Fig.43,44

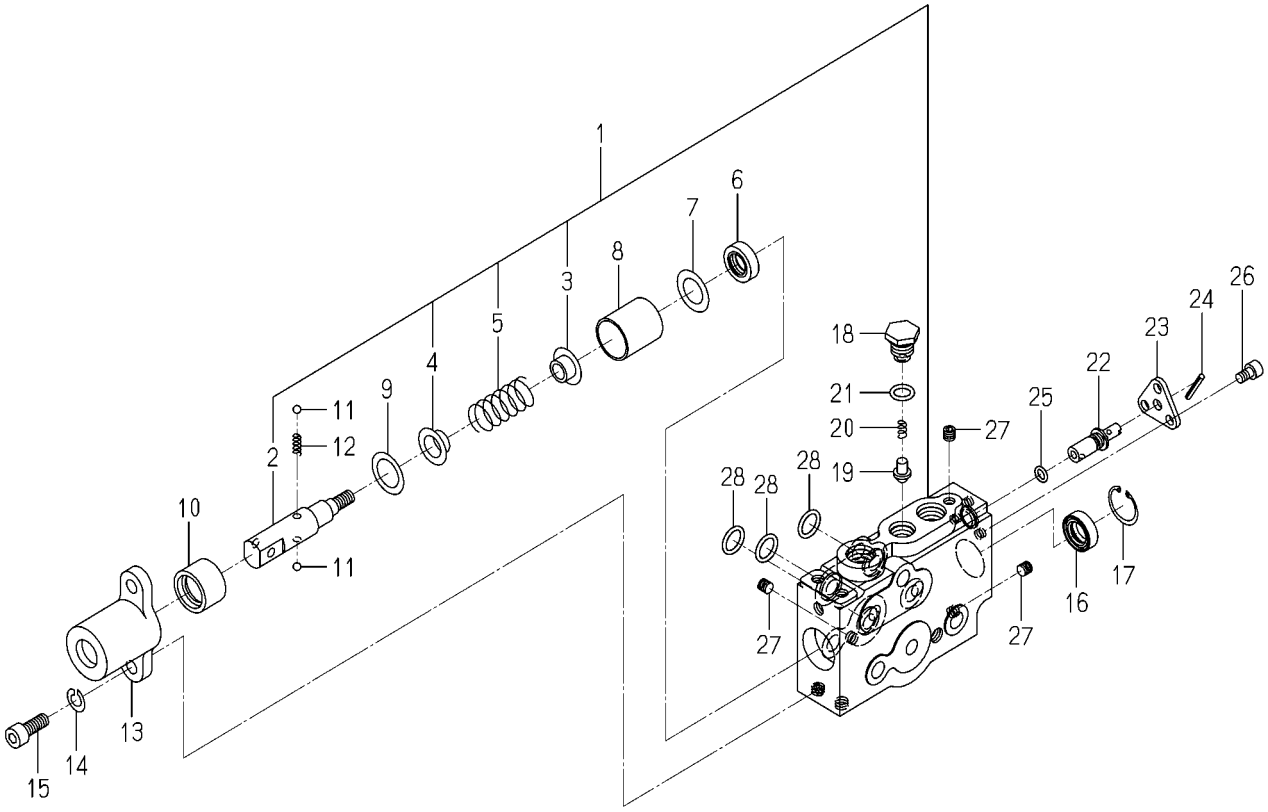

1719-511-350-0

KEY	PART CODE	DESCRIPTION	SPC	TYPE OF MODEL TLE3400 H3		ITC	COL	GRP	REMARKS
1	1640-530-610-10	VALVE SET	*	1					
1	1640-530-610-10	VALVE SET	*	2					
2	1640-530-613-00	HEAD/SPOOL	*	1					
2	1640-530-613-00	HEAD/SPOOL	*	2					
3	1640-530-614-00	STOPPER/SPRING/A	*	1					
3	1640-530-614-00	STOPPER/SPRING/A	*	2					
4	1640-530-615-00	STOPPER/SPRING/B	*	1					
4	1640-530-615-00	STOPPER/SPRING/B	*	2					
5	K211-012-006-00	SPRING/HC042	*	1					
5	K211-012-006-00	SPRING/HC042	*	2					
6	K211-004-007-00	SEAL,OIL/TC4,14247	*	1					
6	K211-004-007-00	SEAL,OIL/TC4,14247	*	2					
7	K211-004-006-00	COLLAR	*	1					
7	K211-004-006-00	COLLAR	*	2					
8	1640-530-622-00	SLEEVE	*	1					
8	1640-530-622-00	SLEEVE	*	2					
9	1640-530-623-00	COLLAR/19X28X02	*	1					
9	1640-530-623-00	COLLAR/19X28X02	*	2					
10	1640-530-624-00	SLEEVE/DETENT	*	1					
10	1640-530-624-00	SLEEVE/DETENT	*	2					
11	V682-200-000-60	BALL,STEEL	*	2					
11	V682-200-000-60	BALL,STEEL	*	4					
12	1640-530-625-00	SPRING/HC015	*	1					
12	1640-530-625-00	SPRING/HC015	*	2					
13	1640-530-626-00	COVER	*	1					
13	1640-530-626-00	COVER	*	2					
14	V401-160-008-00	WASHER,SP/M8	*	2					
14	V401-160-008-00	WASHER,SP/M8	*	4					
15	V220-540-802-00	SCREW,SOCKET/M8X20	*	2					
15	V220-540-802-00	SCREW,SOCKET/M8X20	*	4					

FIG. 81 COMPONENT PARTS FOR 1719-511-350-00 ON Fig.43,44

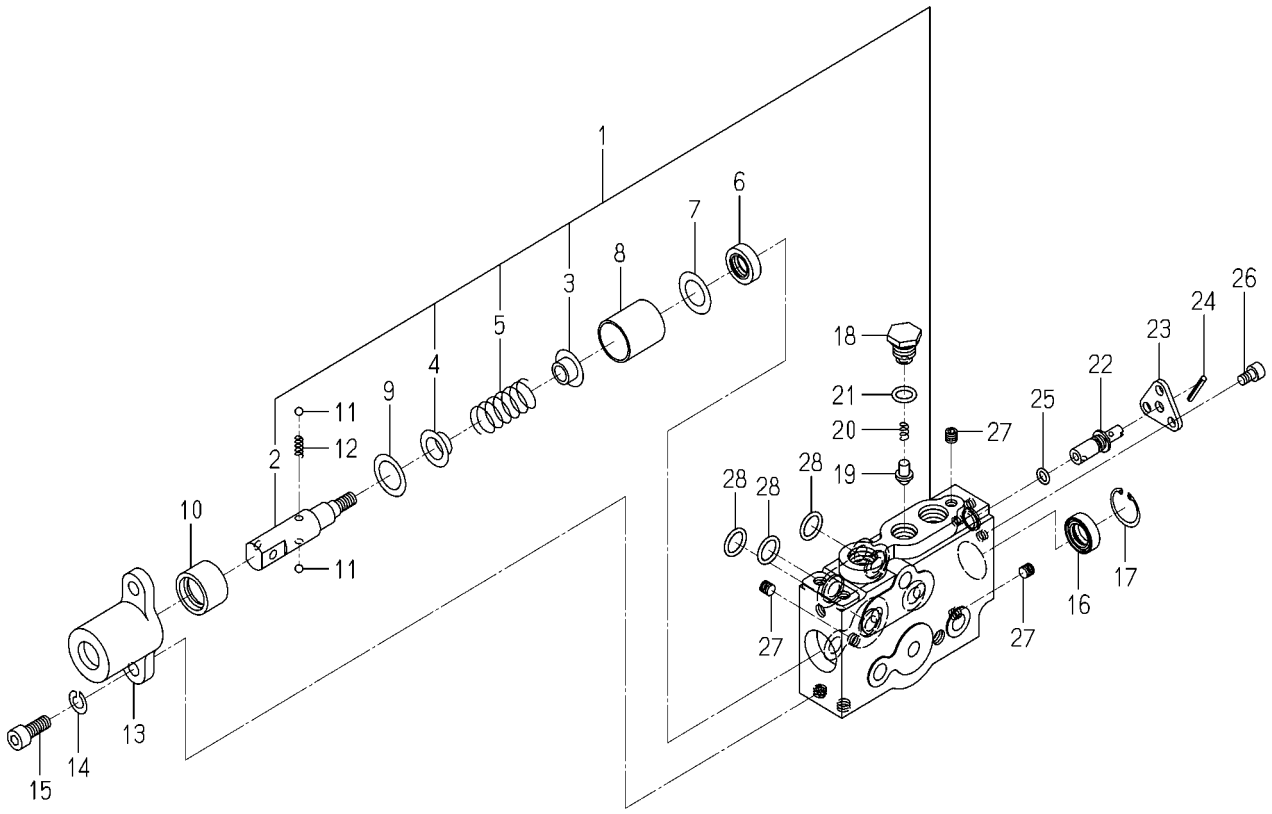

1719-511-350-0

KEY	PART CODE	DESCRIPTION	SPC	TYPE OF MODEL TLE3400 H3		ITC	COL	GRP	REMARKS
16	K211-004-007-00	SEAL,OIL/TC4,14247	*	1					
16	K211-004-007-00	SEAL,OIL/TC4,14247	*	2					
17	V705-140-024-00	RING,SNAP/24 C	*	1					
17	V705-140-024-00	RING,SNAP/24 C	*	2					
18	1640-530-628-00	PLUG/M14	*	1					
18	1640-530-628-00	PLUG/M14	*	2					
19	1640-530-629-00	POPPET	*	1					
19	1640-530-629-00	POPPET	*	2					
20	K110-001-106-00	SPRING	*	1					
20	K110-001-106-00	SPRING	*	2					
21	V720-112-401-20	O-RING/1B,P12	*	1					
21	V720-112-401-20	O-RING/1B,P12	*	2					
22	1640-530-631-00	SPOOL/DELECT	*	1					
22	1640-530-631-00	SPOOL/DELECT	*	2					
23	1640-530-632-00	PLATE	*	1					
23	1640-530-632-00	PLATE	*	2					
24	V580-140-302-50	PIN,SPRING/3X25 W	*	1					
24	V580-140-302-50	PIN,SPRING/3X25 W	*	2					
25	V720-111-900-70	O-RING/1B,P7	*	1					
25	V720-111-900-70	O-RING/1B,P7	*	2					
26	V220-540-601-00	SCREW,SOCKET/M6X10	*	3					
26	V220-540-601-00	SCREW,SOCKET/M6X10	*	6					
27	K200-014-007-00	PLUG/SEAL	*	3					
27	K200-014-007-00	PLUG/SEAL	*	6					
28	V720-112-401-40	O-RING/1B,P14	*	3					
28	V720-112-401-40	O-RING/1B,P14	*	6					

FIG. 82 COMPONENT PARTS FOR 1772-654-210-00 ON Fig.60

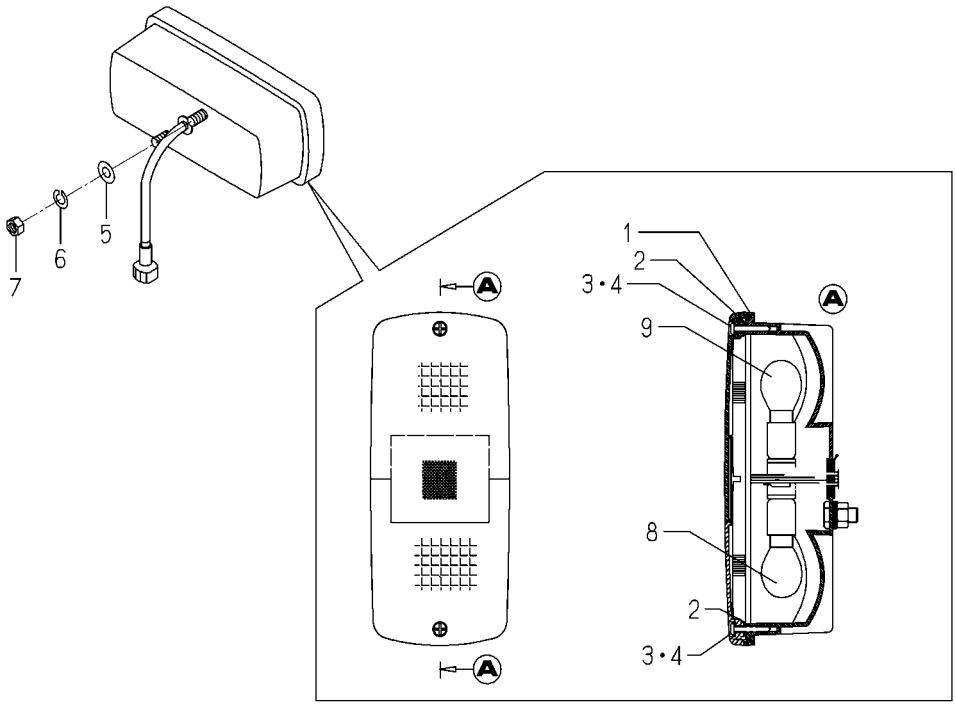

1772-654-210-0B

KEY	PART CODE	DESCRIPTION	SPC	TYPE OF MODEL TLE3400 H3		ITC	COL	GRP	REMARKS
1	1772-654-212-00	GASKET	*	2					
2	1772-654-213-00	WASHER/RUBBER	*	4					
3	1772-654-214-00	SCREW	*	4					
4	1772-654-215-00	WASHER	*	4					
5	V411-260-008-00	WASHER,PL/M8	*	4					
6	V401-160-008-00	WASHER,SP/M8	*	4					
7	V304-260-008-00	NUT/M8	*	4					
8	1772-654-216-00	BULB/12V21W	*	2					
9	1772-654-217-00	BULB/12V21/5W	*	2					

FIG. 83 COMPONENT PARTS FOR 1773-407-410-00 ON Fig.31

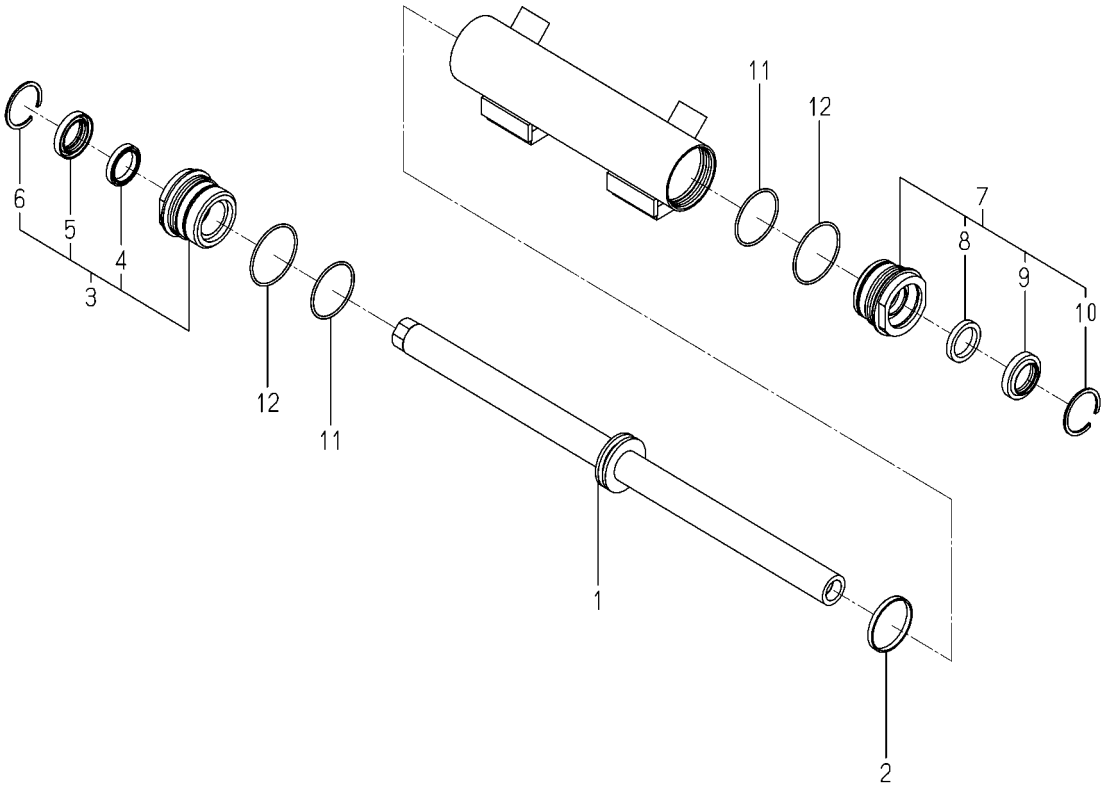

1773-407-410-0A

KEY	PART CODE	DESCRIPTION	SPC	TYPE OF MODEL TLE3400 H3		ITC	COL	GRP	REMARKS
1	1773-407-320-10	ROD/PISTON COMP	*	1					
2	1773-407-002-00	PACKING/PISTON	*	1					
3	1773-407-330-10	COVER/ROD/A SET	*	1					
4	K182-034-002-00	ROD PACKING	*	1					
5	K160-001-012-00	SEAL,DUST	*	1					
6	1773-407-333-00	RING/SNAP/WR37	*	1					
7	1773-407-340-10	COVER/ROD/B SET	*	1					
8	K182-034-002-00	ROD PACKING	*	1					
9	K160-001-012-00	SEAL,DUST	*	1					
10	1773-407-333-00	RING/SNAP/WR37	*	1					
11	V723-112-004-40	O-RING/1B,S44	*	2					
12	V723-112-004-80	O-RING/1B,S48	*	2					

FIG. 84 COMPONENT PARTS FOR 1824-102-220-00 ON Fig.4

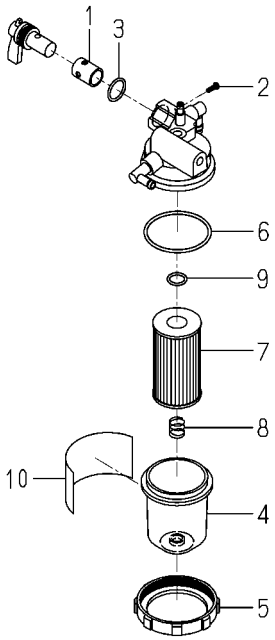

1824-102-220-0

KEY	PART CODE	DESCRIPTION	SPC	TYPE OF MODEL TLE3400 H3		ITC	COL	GRP	REMARKS
1	1560-102-203-50	SEAL	*	1					
2	1560-102-204-40	SCREW	*	1					
3	V720-102-402-10	O-RING/1A,P21	*	1					
4	1560-102-205-40	CUP	*	1					
5	1426-160-207-00	NUT,RING	*	1					
6	V721-103-106-50	O-RING/1A,G65	*	1					
7	1513-102-329-00	ELEMENT	*	1					
8	1426-160-209-00	SPRING	*	1					
9	V720-102-401-60	O-RING/1A,P16	*	1					
10	1513-102-332-00	PLATE/CAUTION	*	1					

FIG. 85 COMPONENT PARTS FOR 6281-100-007-40 ON Fig.67

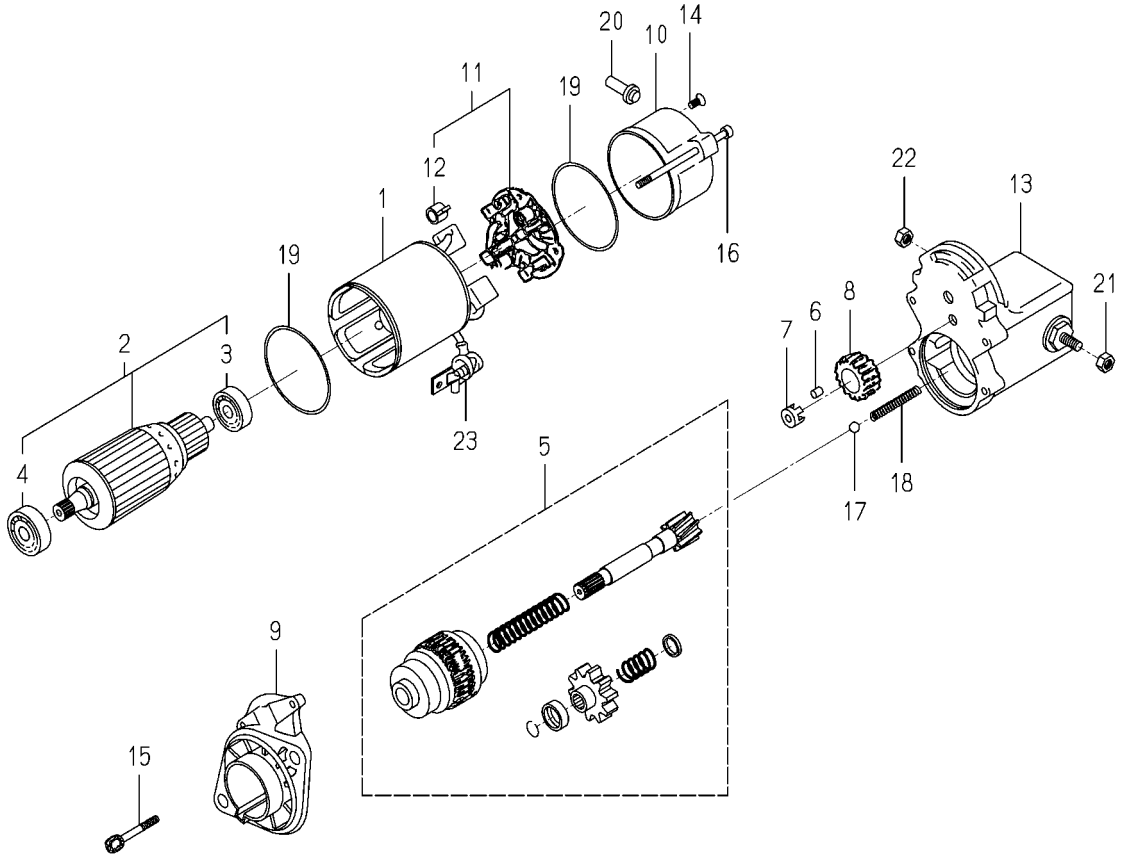

6281-100-007-4J

KEY	PART CODE	DESCRIPTION	SPC	TYPE OF MODEL TLE3400 H3		ITC	COL	GRP	REMARKS
1	6281-111-005-00	YOKE/STARTER ASSY	*	1					
2	6281-121-006-00	ARMATURE/STARTE ASSY	*	1					
3	6281-129-038-00	BEARING	*	1					
4	6281-129-039-00	BEARING	*	1					
5	6281-124-007-10	CLUTCH/STARTER ASSY	*	1					
6	6581-129-099-00	RORA	*	5					
7	6281-129-040-00	RETAINER	*	1					
8	6281-123-005-00	PINION/STARTER	*	1					
9	6281-129-045-10	HOUSING/STARTER ASSY	*	1					
10	6281-115-011-00	FRAME/STARTEREND	*	1					
11	6281-116-004-00	HOLDER/STARTER ASSY	*	1					
12	6581-117-007-00	SPRING,BRUSH	*	4					
13	6281-151-023-00	SWITCH/MAGNETIC ASSY	*	1					
14	6281-129-062-00	SCREW	*	2					
15	6281-129-042-00	BOLT/WS	*	2					
16	6281-129-043-00	BOLT/THROUGH	*	2					
17	6581-129-092-00	BALL	*	1					
18	6281-129-044-00	SPRING/RETURN	*	1					
19	6281-129-003-00	O-RING	*	2					
20	6281-115-016-00	BUSHING/DRAIN	*	1					
21	6909-111-508-00	NUT	*	1					
22	6281-229-041-00	NUT	*	1					
23	6281-115-010-00	COVER	*	1					

FIG. 86 COMPONENT PARTS FOR 6281-200-015-00 ON Fig.75

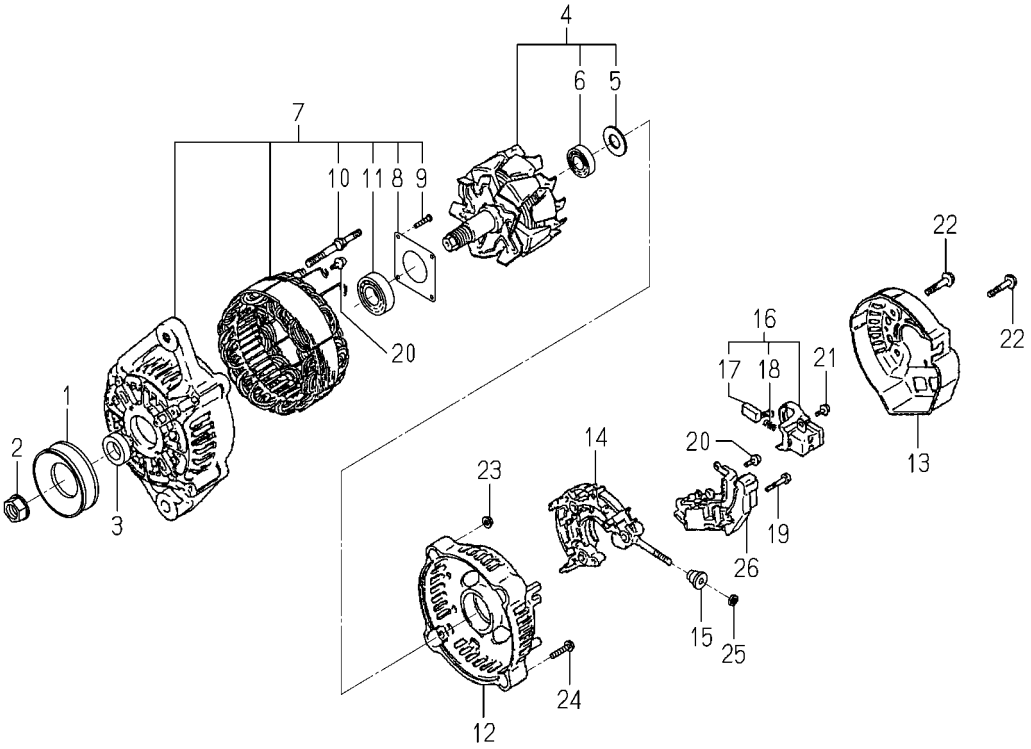

6281-200-015-0C

KEY	PART CODE	DESCRIPTION	SPC	TYPE OF MODEL TLE3400 H3		ITC	COL	GRP	REMARKS
1	6281-222-002-00	PULLEY	T	1					
2	6281-229-002-00	NUT	T	1					
3	6281-229-003-00	COLLOR	T	1					
4	6281-221-004-00	ROTOR ASSY	T	1					
5	6281-229-004-00	COVER,BEARING	T	1					
6	6281-229-032-00	BEARING/BALL	T	1					
7	6281-213-013-00	FRAME/DRIVEEND ASSY	T	1					
8	6281-229-006-00	PLATE	T	1					
9	6281-229-007-00	BOLT	T	4					
10	6281-229-008-00	BOLT	T	2					
11	6281-229-033-00	BEARING/BALL	T	1					
12	6281-214-007-00	FRAME/END/REAR	T	1					
13	6281-214-008-00	COVER/END/REAR	T	1					
14	6281-229-040-00	HOLDER/RECTIFIE ASSY	T	1					
15	6281-229-011-00	BUSH	T	1					
16	6281-217-002-00	HOLDER/BRUSH ASSY	T	1					
17	6281-215-001-00	BRUSH	T	2					
18	6281-216-001-00	SPRING	T	2					
19	6281-229-012-00	BOLT	T	2					
20	6281-229-013-00	BOLT	T	6					
21	6281-229-014-00	BOLT	T	1					
22	6281-229-015-00	BOLT	T	3					
23	6281-229-016-00	NUT	T	2					
24	6281-229-017-00	BOLT	T	2					
25	6281-229-018-00	NUT	T	1					
26	6281-271-008-00	REGULATOR ASSY	T	1					

WIRING DIAGRAM (1/4)

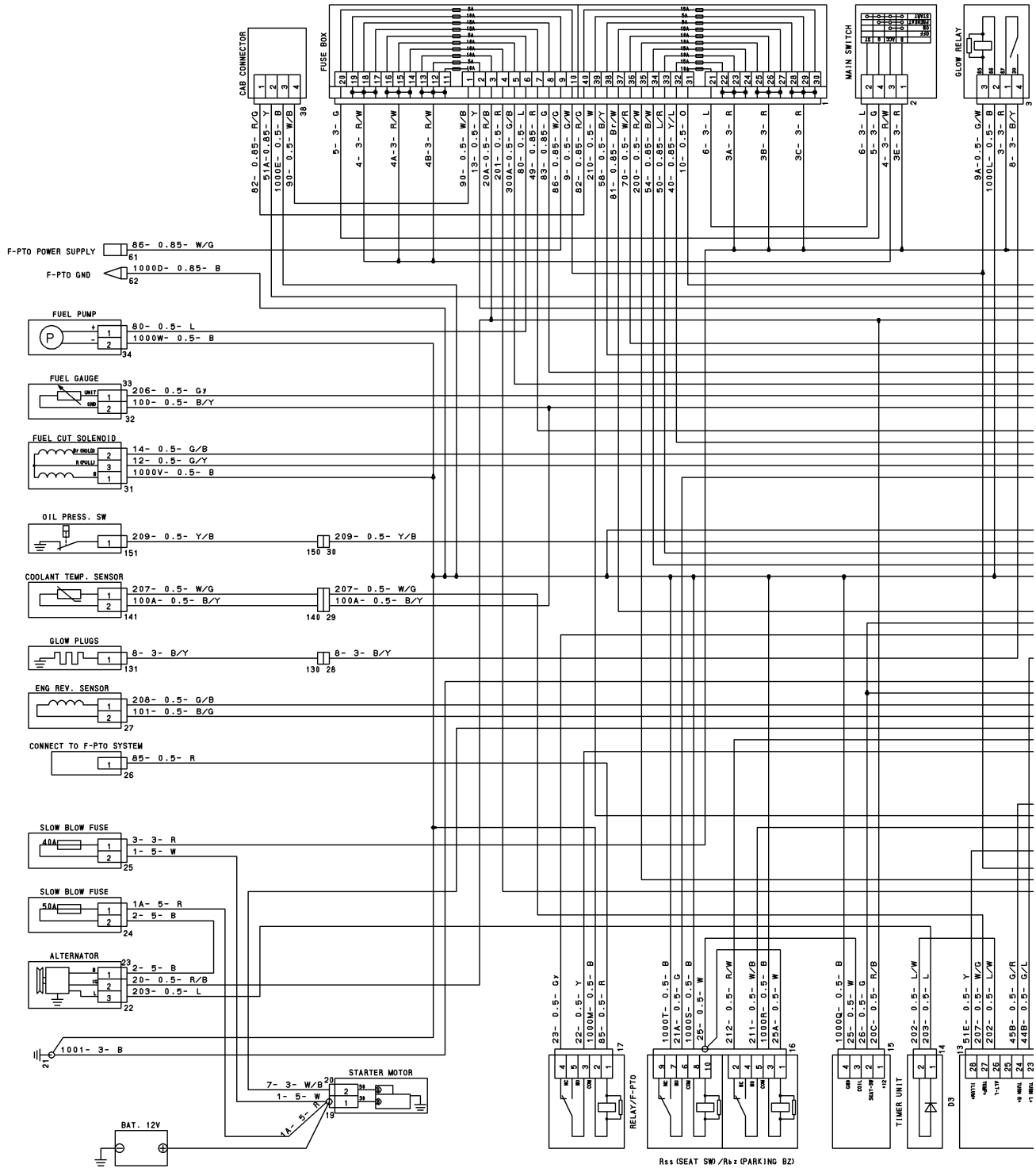

WIRING DIAGRAM (2/4)

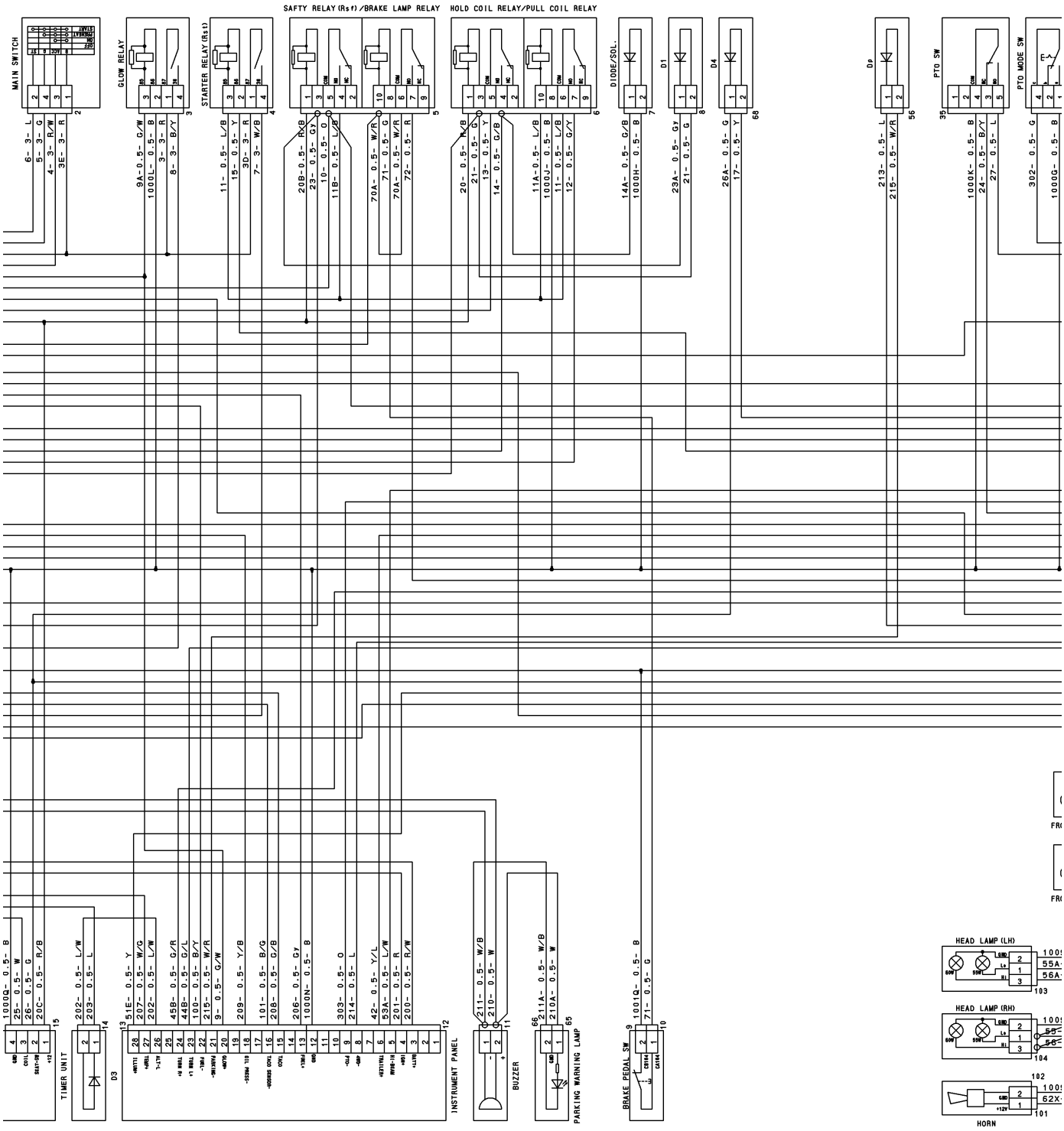

WIRING DIAGRAM (3/4)

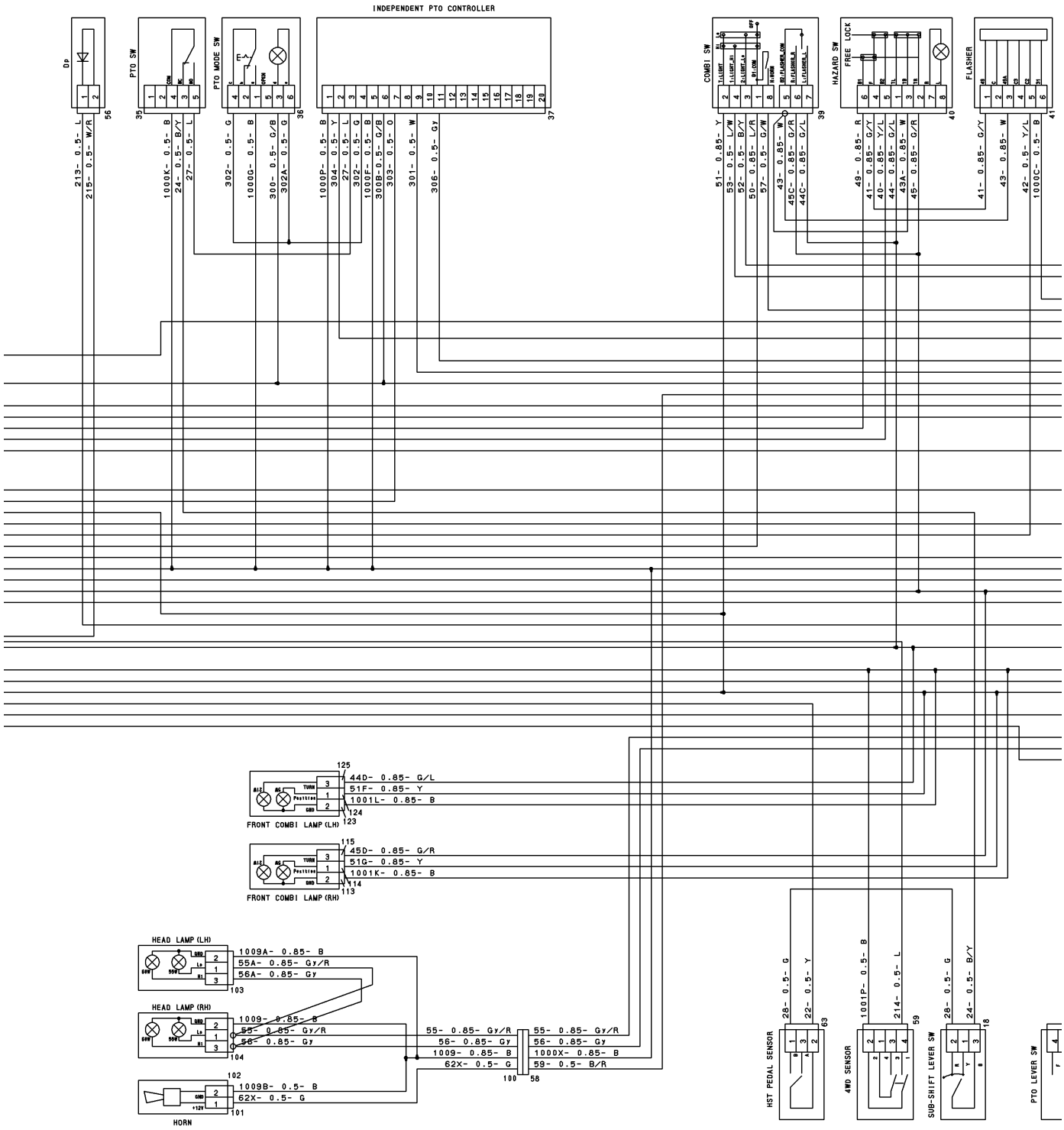

WIRING DIAGRAM (4/4)

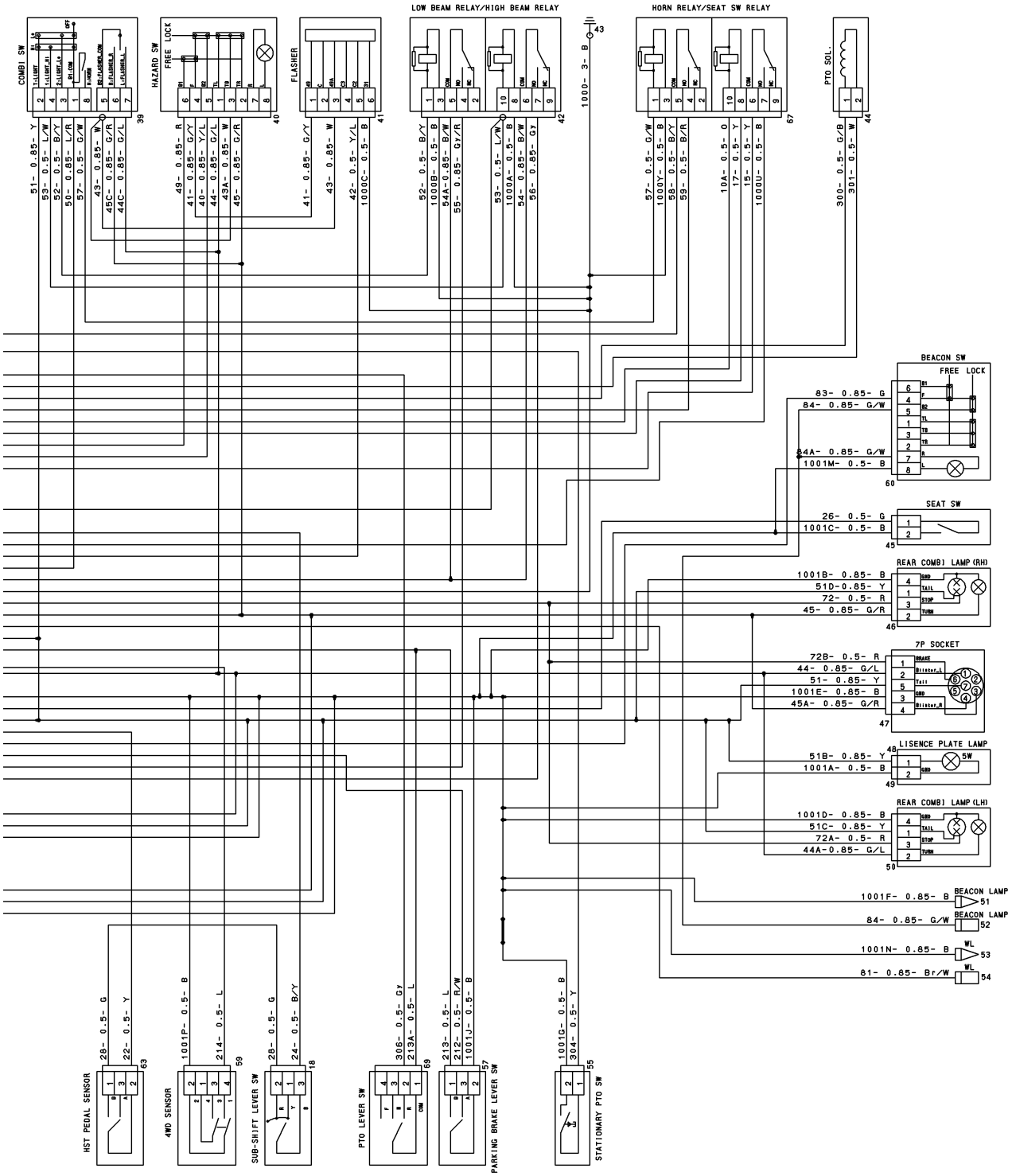

Numerical Index

Part Code	Fig.	Key	Part Code	Fig.	Key	Part Code	Fig.	Key
1373-121-001-00	25	4	6209-572-003-00	27	5	6211-291-010-00	3	3
1560-314-001-10	18	26	6209-580-002-10	22	28	6211-291-038-00	7	26
1650-650-015-00	11	15	6209-600-004-00	11	25	6211-292-001-20	7	27
1650-780-011-10	18	25	6209-605-003-20	11	2		27	11
	19	8	6209-605-004-10	2	3	6211-310-072-00	11	1
1690-654-200-00	11	37	6209-605-007-10	7	7	6211-311-013-20	11	40
1729-202-002-00	11	48		7	40	6211-312-005-10	11	28
1792-590-001-00	3	9	6209-610-001-10	7	4		27	14
3640-586-004-00	23	4	6209-610-003-00	2	2	6211-312-006-10	11	41
3805-355-002-20	9	2		7	6		27	15
3817-401-001-00	11	11	6209-610-004-00	11	3	6211-319-003-00	11	43
	13	20	6209-610-007-00	7	3	6211-321-022-00	11	49
	19	3	6209-610-009-00	7	5		11	53
	19	22	6209-625-002-00	11	7	6211-322-016-00	11	50
	22	9		27	12		11	54
6005-010-281-00	1	1	6209-625-003-20	7	15	6211-341-123-00	10	1
6209-000-005-00	2	7		27	10	6211-342-003-10	10	2
6209-000-006-00	7	2	6209-630-002-10	26	7	6211-342-005-00	10	6
6209-000-041-00	17	8		27	22	6211-361-103-00	9	1
6209-000-043-00	17	11	6209-630-004-20	18	16	6211-510-008-00	7	11
6209-000-057-00	10	4		27	25	6211-511-007-00	7	12
6209-030-043-00	22	18	6209-730-002-00	17	4	6211-511-008-00	7	13
6209-030-094-00	18	14	6209-730-005-00	14	3	6211-530-008-00	8	1
6209-046-007-00	20	4		22	12	6211-540-008-00	8	3
6209-050-001-00	11	34	6209-740-005-00	7	18	6211-599-004-00	7	14
6209-050-002-00	11	35	6209-740-006-00	11	27		8	2
6209-060-001-00	18	11	6209-740-008-00	7	39		8	4
6209-300-014-00	2	8	6209-749-001-20	7	16	6211-749-020-00	7	35
6209-300-026-00	5	5		11	45	6211-751-001-10	3	5
6209-300-033-10	5	6	6209-800-010-00	22	14	6211-751-002-00	7	33
6209-360-011-00	23	3	6209-920-002-00	11	21	6211-759-001-00	7	36
6209-360-071-10	18	22	6209-920-003-00	18	12	6211-760-081-00	7	30
6209-360-072-40	18	23		27	24	6211-766-025-00	7	31
6209-360-076-20	18	17	6211-110-110-30	2	1	6211-777-007-30	12	1
6209-360-108-00	6	9	6211-141-057-10	2	6	6211-777-021-00	12	3
6209-360-112-00	6	7		27	3	6212-111-095-40	15	1
6209-360-143-00	23	6	6211-170-007-30	3	1	6212-114-095-40	16	1
6209-409-001-00	11	19	6211-173-005-00	3	6	6212-116-095-40	16	3
6209-440-005-00	26	4		27	4	6212-121-029-40	15	2
6209-440-007-00	25	6	6211-179-011-20	3	2	6212-124-029-40	16	2
6209-490-002-10	3	7	6211-210-084-40	7	1	6212-126-029-40	16	4
6209-500-003-00	11	17	6211-258-001-00	7	9	6212-211-002-00	15	3
	11	26		27	8	6212-230-011-30	15	5
	27	13	6211-258-002-00	7	10	6212-235-004-10	15	6
6209-572-003-00	3	8		27	9	6212-271-009-00	15	7

Numerical Index

Part Code	Fig.	Key	Part Code	Fig.	Key	Part Code	Fig.	Key
6212-273-009-00	8	5	6213-164-001-00	11	31	6215-331-008-00	28	2
6212-274-009-00	8	6	6213-240-005-10	18	9	6215-332-013-00	28	5
6212-310-049-00	17	1	6213-311-078-00	7	32	6215-339-001-00	28	6
6212-330-121-00	17	5	6213-311-079-00	18	13	6215-342-001-00	28	3
6212-333-002-10	17	6	6213-311-080-00	18	10	6215-343-001-00	28	4
6212-339-009-10	17	9	6213-342-007-00	7	38	6215-345-001-00	28	7
6212-371-081-00	17	10	6213-342-013-00	7	37	6215-345-002-00	28	8
6212-511-005-10	14	1	6213-610-011-20	19	1	6215-345-003-00	28	9
6212-521-008-00	17	3	6213-614-013-00	19	2	6215-345-004-00	28	10
6212-522-004-20	14	2		27	18	6215-345-005-00	28	11
6212-523-021-00	14	6	6213-614-014-00	19	18	6215-345-006-00	28	12
6212-524-012-30	22	11		27	19	6215-345-007-00	28	13
6212-530-022-00	11	47	6213-619-006-00	19	17	6215-345-008-00	28	14
6212-531-008-30	7	8	6213-641-022-20	20	2	6215-345-009-00	28	15
6212-535-007-00	14	4	6213-660-015-00	20	1	6215-345-010-00	28	16
6212-535-009-00	22	15	6213-669-009-00	20	3	6215-345-011-00	28	17
6212-551-019-00	13	1	6213-671-057-00	20	5	6215-345-012-00	28	18
6212-552-008-00	13	2	6213-674-006-20	25	2	6215-345-013-00	28	19
6212-561-003-00	13	3	6213-711-003-20	19	14	6215-345-014-00	28	20
6212-563-005-00	13	4	6213-716-003-20	19	9	6215-345-015-00	28	21
6212-565-001-00	13	5	6213-719-002-00	19	6	6215-345-016-00	28	22
6212-569-002-00	2	4	6213-721-011-00	11	39	6215-345-017-00	28	23
	27	2	6213-721-015-00	7	24	6215-345-018-00	28	24
6212-571-002-30	13	6	6213-729-004-10	19	4	6215-345-019-00	28	25
6212-575-003-00	13	7	6213-729-011-00	19	23	6215-345-020-00	28	26
6212-600-019-00	13	8	6213-729-013-10	19	5	6215-345-021-00	28	27
6212-611-014-00	13	9	6213-743-002-10	19	10	6215-345-022-00	28	28
6212-620-017-00	13	10		27	20	6215-345-023-00	28	29
6212-626-003-00	13	11	6214-111-023-00	4	1	6215-345-024-00	28	30
6212-628-022-00	13	12	6214-115-003-10	4	2	6215-345-025-00	28	31
6212-628-023-00	13	13		27	6	6215-345-026-00	28	32
6212-629-006-00	13	14	6214-141-061-10	5	1	6215-345-027-00	28	33
6212-629-007-00	13	15	6214-145-009-00	6	2	6215-345-028-00	28	34
6212-629-008-00	13	16		27	23	6215-345-029-00	28	35
6212-629-009-00	13	17	6214-145-030-00	5	2	6215-345-030-00	28	36
6212-629-010-00	13	18		27	7	6215-345-031-00	28	37
6213-100-010-00	18	1	6214-400-020-00	6	1	6215-345-032-00	28	38
6213-119-001-00	18	3	6214-435-026-00	6	6	6215-345-033-00	28	39
6213-129-003-00	18	2	6215-300-036-10	21	1	6215-345-034-00	28	40
6213-129-006-00	7	17	6215-311-027-00	28	51	6215-345-035-00	28	41
	10	7	6215-315-002-00	21	3	6215-345-036-00	28	42
6213-140-013-10	18	5	6215-315-005-00	21	5	6215-345-037-00	28	43
6213-149-003-20	18	7	6215-315-006-00	21	4	6215-345-038-00	28	44
6213-160-005-00	11	29	6215-315-007-00	21	6	6215-345-039-00	28	45
6213-161-003-10	11	30	6215-330-024-10	28	1	6215-345-040-00	28	46

Numerical Index

Part Code	Fig.	Key	Part Code	Fig.	Key	Part Code	Fig.	Key
6215-345-041-00	28	47	6281-217-002-00	29	16	J061-238-046-00	6	8
6215-345-042-00	28	48	6281-221-007-00	29	4	J061-252-063-00	6	10
6215-345-043-00	28	49	6281-222-012-00	29	1	J062-076-082-00	23	5
6215-359-001-00	21	2	6281-229-002-00	29	2	P117-303-003-00	11	23
6215-359-002-00	28	50	6281-229-003-00	29	3	V195-164-008-30	3	4
6215-411-136-00	23	2	6281-229-004-00	29	5	V210-560-601-20	14	5
6215-411-137-00	21	7	6281-229-006-00	29	8		22	16
6215-411-138-00	21	8	6281-229-007-00	29	9	V210-560-603-50	9	4
6215-411-139-00	21	9	6281-229-008-00	29	10	V211-560-802-50	5	3
6215-412-004-00	23	1	6281-229-011-00	29	15	V220-540-602-00	18	4
6215-520-007-10	22	17	6281-229-012-00	29	19	V230-360-601-20	7	28
6215-526-004-00	22	19	6281-229-013-00	29	20	V230-360-601-60	11	38
6215-531-019-00	22	25	6281-229-014-00	29	21		26	8
6215-537-002-10	22	34	6281-229-015-00	29	22	V231-360-801-20	10	8
6215-541-001-10	22	20	6281-229-016-00	29	23	V231-360-801-60	11	12
6215-541-016-50	24	2	6281-229-017-00	29	24		18	8
6215-541-045-10	22	26	6281-229-018-00	29	25	V231-360-802-00	19	11
6215-542-004-20	11	22	6281-229-029-00	29	14		19	21
6215-542-005-20	11	24	6281-229-032-00	29	6		22	8
6215-542-006-00	22	22	6281-229-033-00	29	11		25	3
6215-543-002-10	22	21	6281-271-008-00	29	26	V231-360-802-50	4	3
6215-546-003-30	11	18	6281-410-023-10	26	3		19	16
6215-548-105-30	24	1	6281-910-013-00	26	6	V231-360-803-00	11	16
6215-549-013-00	7	29	6281-971-003-00	26	1	V231-360-804-50	19	20
6215-549-031-10	22	24	6282-450-007-00	26	2	V231-360-805-00	11	13
6215-549-039-00	22	33	6287-810-041-10	27	1	V231-360-805-50	13	19
6215-549-076-10	22	29	6294-453-002-00	7	22	V231-360-806-00	11	14
6215-600-183-00	22	1	6509-030-037-00	5	4	V231-360-807-00	11	10
6215-619-009-00	22	3	6513-770-022-10	19	13	V231-360-807-50	11	9
6215-619-010-00	22	2	6901-911-020-00	12	4		19	12
6215-621-052-00	22	10	6902-050-816-00	11	42	V231-360-808-50	11	8
6219-732-017-00	26	5	6904-110-822-00	6	5	V233-361-002-00	12	2
6219-752-044-00	22	5		7	20	V233-361-007-00	25	5
6219-752-045-00	22	4		11	4	V251-340-806-00	7	21
6219-752-046-00	22	6		11	46	V301-260-006-00	11	36
6219-752-047-00	22	7	6904-110-840-00	7	19		22	30
6221-700-004-00	18	19		19	19	V304-260-008-00	11	51
6221-726-008-00	18	21	6904-110-850-00	11	6		11	55
6221-726-013-00	18	20	6904-110-855-00	11	5	V304-700-008-00	5	8
6281-200-021-00	25	1	6909-902-299-00	7	25		6	3
6281-213-018-00	29	7	6909-950-115-00	15	4	V341-120-008-00	11	20
6281-214-003-00	29	12	J061-116-025-00	18	18	V401-160-006-00	18	15
6281-214-004-00	29	13	J061-210-015-00	19	7		22	32
6281-215-001-00	29	17	J061-216-020-00	18	24	V401-160-008-00	11	52
6281-216-001-00	29	18	J061-220-024-00	19	24		11	56

Numerical Index

6005-097-216-00

Part Code	Fig.	Key	Part Code	Fig.	Key	Part Code	Fig.	Key
V401-160-012-00	10	5						
V411-260-006-00	22	31						
V411-700-008-00	5	7						
	6	4						
V523-101-001-80	10	3						
	17	2						
V600-110-620-30	22	13						
V600-150-600-20	17	7						
V682-200-000-60	2	5						
V705-140-012-00	11	32						
V710-140-004-00	22	23						
V720-101-900-80	22	27						
V720-102-401-80	9	3						
	11	33						
V720-103-502-20	18	6						
	27	17						
V720-103-502-50	7	34						
V723-102-005-00	11	44						
	27	16						
V723-102-005-50	19	15						
	27	21						
V782-160-000-4T	7	23						

Numerical Index

Part Code	Fig.	Key	Part Code	Fig.	Key	Part Code	Fig.	Key
1146-601-002-00	49	44	1425-621-004-00	60	39	1560-102-205-40	84	4
1302-225-003-00	18	4	1426-160-207-00	84	5	1560-132-007-30	28	13
1305-241-001-00	21	4	1426-160-209-00	84	8		29	10
	56	20	1426-258-202-00	14	6		29	19
1342-402-006-00	43	17	1427-120-002-00	35	18	1560-216-008-30	12	8
	44	21	1427-432-016-00	34	8	1560-314-001-10	32	14
	57	26	1440-105-006-00	42	37	1560-404-002-30	56	15
	57	27		42	48	1560-434-007-60	36	28
	57	28	1442-313-202-00	29	2	1560-434-011-40	36	30
	58	26	1444-101-016-10	42	20	1560-434-012-30	36	31
	58	27	1444-122-002-00	28	14	1560-434-017-00	36	34
	58	28		29	9	1560-501-202-00	39	3
	59	24		29	20	1560-509-211-00	43	5
	74	20	1444-314-004-10	25	4		44	5
1373-121-001-00	1	34		25	11		74	6
1376-402-003-00	4	18		25	26	1560-515-004-50	41	18
	5	12	1444-328-272-00	29	4	1560-525-001-40	46	7
	31	11	1444-328-273-00	29	3	1560-630-012-00	55	33
	42	12	1444-410-002-10	33	8	1560-630-029-00	5	14
	42	22	1444-411-012-00	34	6	1560-666-004-00	57	21
	57	8	1444-411-013-00	34	7		58	21
	57	25	1444-501-004-10	39	19		59	19
	58	8	1444-503-007-00	41	69		59	22
	58	25	1444-601-015-00	50	5	1560-666-212-00	59	6
	58	29		64	2	1564-216-004-10	12	9
	59	23	1480-503-200-00	39	24	1564-621-030-00	54	26
	60	6	1513-102-329-00	84	7	1568-668-203-00	57	29
	60	44	1513-102-332-00	84	10		58	30
1404-312-006-00	28	17	1518-306-200-10	35	3	1579-112-003-00	57	3
	29	23	1518-306-203-10	35	4		58	3
1404-503-006-00	41	16	1518-786-508-00	31	9	1588-501-002-00	39	2
	42	2		42	11	1593-117-003-10	5	5
1414-632-005-00	55	12		60	7	1593-606-006-10	28	20
1415-505-006-00	39	17	1518-924-001-00	48	12	1593-616-004-20	55	10
1421-201-003-00	36	20	1544-104-205-00	3	5	1599-104-008-00	49	60
1421-433-004-00	27	11	1544-120-008-10	6	7	1599-303-009-00	31	16
1421-507-014-00	52	8		39	26	1600-117-002-10	5	3
1421-507-017-00	51	4	1544-623-001-00	59	33	1600-431-003-00	49	7
	51	11	1544-623-232-00	59	34		49	17
1421-603-004-00	1	8	1544-623-233-00	59	35	1614-262-006-00	40	32
1423-616-004-00	1	5	1544-623-234-00	59	36		43	13
	1	37	1544-623-235-00	59	37		44	15
	49	27	1550-307-005-00	25	30		74	14
1425-433-018-00	6	3	1560-102-203-50	84	1	1614-432-001-00	34	5
1425-621-004-00	60	38	1560-102-204-40	84	2	1614-432-002-00	34	10

Numerical Index

Part Code	Fig.	Key
1614-432-003-20	34	11
1614-432-006-00	34	13
1614-433-002-00	35	7
1614-433-212-00	35	15
1614-503-005-00	40	12
1614-531-004-00	40	25
1614-702-551-20	63	7
1614-702-552-00	32	13
	63	8
1617-304-008-00	24	17
1617-304-009-00	24	16
1617-304-011-00	24	18
1617-503-210-00	40	11
1620-514-005-00	45	24
1632-273-201-00	14	5
1636-271-351-00	22	2
1636-701-251-00	63	5
1640-520-004-00	48	9
1640-520-005-00	48	7
1640-530-600-10	74	2
1640-530-610-10	80	1
	81	1
	81	1
1640-530-613-00	80	2
	81	2
	81	2
1640-530-614-00	80	3
	81	3
	81	3
1640-530-615-00	80	4
	81	4
	81	4
1640-530-622-00	80	8
	81	8
	81	8
1640-530-623-00	80	9
	81	9
	81	9
1640-530-624-00	80	10
	81	10
	81	10
1640-530-625-00	80	12
	81	12
	81	12
1640-530-626-00	80	13
1640-530-626-00	81	13
	81	13
1640-530-628-00	80	18
	81	18
	81	18
1640-530-629-00	80	19
	81	19
	81	19
1640-530-631-00	80	22
	81	22
	81	22
1640-530-632-00	80	23
	81	23
	81	23
1641-517-540-00	42	32
1646-226-053-00	16	8
	56	2
1646-226-512-00	16	2
1646-233-033-00	19	8
1646-640-221-10	56	7
1650-102-006-10	1	10
1650-102-202-10	1	2
1650-104-200-10	3	1
1650-104-201-00	3	3
1650-104-203-10	3	4
1650-104-210-00	3	2
1650-111-034-00	4	24
	4	28
1650-135-002-00	26	13
1650-218-014-00	8	4
1650-253-003-00	17	4
	19	6
1650-432-001-00	34	4
1650-433-202-00	35	6
1650-434-013-10	36	35
1650-514-004-00	45	3
1650-650-017-00	57	13
	58	13
1650-650-222-00	59	8
1650-654-036-00	60	27
1650-654-590-00	59	27
1656-664-221-10	56	25
1659-650-200-20	57	1
	58	1
1673-431-001-10	7	8
1673-525-002-30	32	11
	45	25
	48	8
	63	6
1673-730-008-00	29	13
1674-520-004-00	32	15
	48	15
1674-619-300-10	54	34
1674-619-310-00	54	32
1674-654-200-10	59	47
1674-654-211-00	59	48
1674-654-212-00	59	49
1674-654-270-00	60	29
1674-654-271-00	60	30
1674-654-272-00	60	31
1674-654-400-20	60	16
1675-116-001-00	5	13
1675-432-001-20	34	12
1688-265-001-00	22	11
1689-502-250-00	74	16
1690-102-210-00	1	40
1690-102-212-00	1	41
1690-102-213-00	1	42
1690-102-214-00	1	43
1690-102-215-00	1	44
1690-102-216-00	1	45
1690-102-217-00	1	46
1690-241-003-00	15	2
1690-514-001-00	45	2
	46	1
1690-608-003-10	52	7
1696-901-006-00	64	7
1703-203-005-00	8	12
1703-261-002-00	20	3
1703-304-008-00	24	22
1703-304-009-00	24	21
1703-304-011-00	24	23
1705-102-014-00	49	55
	49	61
1709-434-001-00	36	12
1710-241-053-00	79	25
1710-508-551-00	41	37
	41	42
1716-105-001-00	4	23
	4	27

Numerical Index

Part Code	Fig.	Key
1716-112-001-10	57	2
	58	2
1716-601-017-00	28	5
1716-680-006-00	59	4
1716-680-200-20	59	1
1716-680-222-00	60	42
	60	55
1716-680-330-10	60	41
	60	54
1717-205-004-00	8	11
1719-266-053-00	5	10
1719-301-004-00	23	4
1719-312-001-00	47	9
1719-511-350-00	43	1
	44	1
1719-650-250-00	59	45
1719-650-302-00	57	16
	57	18
	58	16
	58	18
	76	2
	76	4
1725-112-212-00	57	10
	58	10
1725-112-213-00	57	11
	58	11
1725-201-002-00	6	13
	32	4
1725-216-105-00	11	7
	13	9
1725-266-001-00	20	4
	22	10
1725-304-101-00	11	11
	24	20
1725-305-003-00	26	3
1725-403-003-00	31	13
1725-407-201-00	31	2
1725-434-047-00	36	13
1725-509-260-00	42	8
	42	27
1725-611-087-00	63	13
1728-407-076-10	31	5
1729-111-007-00	4	2
1729-202-002-00	8	7
	11	16

Part Code	Fig.	Key
1729-433-201-10	35	5
1729-508-013-00	41	38
	41	41
1729-508-290-20	41	29
1729-602-007-00	1	9
1729-606-002-20	51	15
1729-652-232-00	59	7
1729-705-009-00	4	41
	54	15
	60	50
1734-256-002-00	19	7
1734-650-240-00	75	7
1738-680-210-00	59	32
1738-680-211-00	59	38
1738-680-212-00	59	39
1739-401-001-00	31	7
1739-407-074-00	31	4
1739-681-220-20	59	25
1740-313-300-10	29	1
1740-313-301-00	29	5
1740-433-511-00	35	14
1740-680-520-10	60	12
1740-680-550-00	59	30
1740-680-551-00	59	31
1742-410-001-10	70	1
1742-508-410-00	73	1
1742-514-001-10	45	26
1742-652-260-00	59	42
1742-662-001-00	59	52
1743-211-510-00	6	5
1746-214-001-00	12	7
1746-306-002-00	25	32
1746-434-001-00	36	38
1746-434-002-00	36	39
1746-631-241-30	60	33
1746-802-002-00	1	18
	57	19
	57	23
	58	19
	58	23
1746-803-003-00	3	6
1746-804-003-00	42	24
1746-804-004-00	1	29
1746-811-001-00	57	4
	58	4

Part Code	Fig.	Key
1746-816-001-00	1	28
1746-817-001-00	1	7
	1	33
1748-434-001-00	25	31
1757-501-014-00	74	21
1757-625-005-00	63	2
1759-514-004-10	46	13
1763-505-002-20	40	23
1771-407-001-10	31	3
1771-510-250-00	42	40
1771-510-251-00	42	41
1772-521-220-10	48	14
1772-521-221-20	32	12
1772-635-001-10	60	35
1772-654-001-00	60	22
1772-654-210-00	60	21
1772-654-212-00	82	1
1772-654-213-00	82	2
1772-654-214-00	82	3
1772-654-215-00	82	4
1772-654-216-00	82	8
1772-654-217-00	82	9
1772-654-280-10	60	9
1772-654-281-00	60	10
1772-654-282-00	60	11
1773-267-002-00	21	2
1773-310-051-00	27	9
1773-312-260-10	28	16
	29	22
1773-401-202-10	30	2
1773-407-002-00	83	2
1773-407-005-00	31	14
1773-407-200-00	42	1
1773-407-320-10	83	1
1773-407-330-10	83	3
1773-407-333-00	83	6
	83	10
1773-407-340-10	83	7
1773-407-410-00	31	12
1773-434-012-00	36	11
	36	27
1773-650-220-00	57	9
	58	9
1773-654-240-10	60	4
1773-702-001-00	63	3

Numerical Index

Part Code	Fig.	Key	Part Code	Fig.	Key	Part Code	Fig.	Key
1773-702-002-00	63	9	1805-202-001-00	13	8	1805-310-200-10	27	12
1773-702-011-00	63	12		13	12	1805-312-001-30	27	14
1773-702-012-00	63	11	1805-202-003-00	8	15	1805-407-210-30	31	8
1773-702-260-10	63	4		11	3		42	10
1774-218-001-00	47	5		11	17	1805-432-005-00	34	3
1774-660-003-10	60	32		13	4	1805-432-006-00	34	2
1774-680-250-00	59	50	1805-202-011-00	8	3	1805-432-210-00	34	1
1774-922-200-10	77	1		9	3	1805-501-001-00	39	18
1776-411-002-00	32	5		11	2	1805-501-002-00	39	22
1776-411-200-10	32	9		12	5	1805-501-004-00	39	20
1776-411-210-10	32	10		36	33	1805-501-200-20	39	1
1776-612-211-10	53	2	1805-202-012-00	14	3	1805-504-001-00	40	8
1776-612-212-00	53	3	1805-202-021-00	13	5	1805-504-002-00	40	6
1776-612-213-00	53	4	1805-202-022-00	36	32	1805-504-006-10	40	15
1776-612-214-00	53	5	1805-202-023-00	25	7	1805-504-200-00	40	19
1776-612-215-00	53	6	1805-202-024-00	11	10	1805-504-210-00	40	1
1776-612-216-00	53	7		25	28	1805-504-220-00	40	18
1776-612-217-00	53	8	1805-202-025-00	34	17	1805-504-240-20	40	4
1776-612-218-00	53	9		36	14	1805-508-210-20	41	4
1776-612-219-00	53	10	1805-202-026-00	24	15	1805-508-260-00	41	1
1776-612-252-00	53	15	1805-202-027-00	34	16	1805-508-311-00	41	24
1776-612-253-00	53	16	1805-209-011-00	8	9	1805-509-051-00	42	44
1776-612-254-00	53	17	1805-214-057-10	11	20	1805-512-002-00	74	12
1776-612-255-00	53	18	1805-218-001-00	13	1	1805-512-230-00	74	8
1784-621-008-00	62	5	1805-218-002-00	13	3	1805-512-250-00	74	5
1785-509-250-00	42	23	1805-218-003-00	13	6	1805-515-211-00	46	9
1789-111-005-00	49	10	1805-253-051-00	16	7	1805-515-212-00	46	11
1790-780-220-00	1	16	1805-256-003-00	17	7	1805-515-213-00	46	10
1792-102-210-00	1	1		19	12	1805-520-001-00	47	1
1792-111-360-00	4	29	1805-256-052-00	17	2	1805-520-003-00	47	2
1800-111-300-00	4	4	1805-256-210-00	17	5	1805-520-210-00	47	7
1800-652-400-00	59	14	1805-257-210-00	18	1	1805-601-002-00	49	29
1801-116-005-00	5	8	1805-259-210-00	19	10	1805-630-250-10	54	21
1801-514-231-00	45	20	1805-301-001-00	23	2	1805-631-004-00	55	22
1801-514-232-00	45	21	1805-301-002-00	23	3	1805-652-207-00	59	17
1801-514-233-20	45	22	1805-301-003-00	23	5	1805-654-500-10	60	14
1801-514-234-00	45	23	1805-301-004-10	23	7	1807-111-001-00	4	5
1801-601-001-00	49	2	1805-301-005-00	23	6	1807-652-500-00	60	25
1801-601-002-00	49	8	1805-301-510-20	23	1	1807-652-510-00	60	26
	49	18	1805-306-001-20	25	1	1809-601-004-00	49	11
1801-654-220-20	60	48	1805-306-002-20	25	6	1809-670-290-00	60	53
1801-654-500-10	60	49	1805-306-003-20	25	23	1813-102-005-00	1	35
1805-111-260-00	4	20	1805-306-005-00	25	24	1813-103-006-00	2	2
1805-201-051-00	6	10	1805-308-002-00	26	11	1813-111-220-00	4	8
1805-202-001-00	7	2	1805-310-001-00	27	10	1813-201-001-00	6	19

Numerical Index

Part Code	Fig.	Key	Part Code	Fig.	Key	Part Code	Fig.	Key
1813-253-051-00	16	1	1821-434-006-00	36	7	1824-111-001-00	4	1
1813-257-610-00	18	7	1821-434-007-00	36	10	1824-111-210-20	4	10
1813-308-001-00	22	4	1821-434-008-00	36	26	1824-201-003-00	6	18
1813-312-600-00	28	12	1821-434-009-00	36	29		32	16
1813-313-062-00	29	12	1821-436-210-00	37	1	1824-219-002-10	14	2
1813-313-620-00	29	18	1821-436-211-00	37	4	1824-219-004-00	11	19
1813-508-600-00	41	15		37	9		14	1
1813-512-600-00	43	16	1821-436-220-00	37	2	1824-241-001-20	15	1
	44	18	1821-436-230-00	37	3	1824-257-001-00	18	5
1813-512-610-00	44	19		37	8	1824-304-003-00	24	1
	74	18	1821-436-250-00	37	6	1824-304-210-00	24	3
1813-512-620-00	44	20	1821-436-260-00	37	7	1824-304-211-00	24	4
	74	19	1821-504-011-00	40	26	1824-304-212-00	24	5
1813-512-650-10	74	1	1821-504-012-10	40	24	1824-304-213-00	24	6
1813-601-011-00	49	9	1821-504-230-10	40	30	1824-304-214-00	24	7
1813-601-650-00	49	48	1821-508-003-00	41	67	1824-304-215-00	24	8
1813-630-003-00	54	5	1821-509-053-00	42	35	1824-304-216-00	24	9
1815-650-310-00	76	1	1821-606-001-00	51	17	1824-304-217-00	24	10
1815-650-320-00	76	3	1821-608-210-10	52	4	1824-304-218-00	24	11
1815-654-002-00	60	47	1821-630-003-00	1	30	1824-304-220-00	24	12
1821-209-007-00	8	5		59	46	1824-308-001-00	26	1
1821-209-210-00	8	8	1821-630-004-00	54	6	1824-310-301-00	27	1
1821-214-051-00	11	1	1821-640-051-10	56	12	1824-310-302-00	27	2
1821-214-052-00	11	5	1821-702-001-00	63	10		27	6
1821-214-053-00	11	6	1821-702-200-00	62	1	1824-310-303-00	27	3
1821-214-054-00	11	9	1821-702-210-00	62	2		27	7
1821-214-055-00	11	13	1821-902-005-10	65	4	1824-310-311-00	27	5
1821-216-001-00	12	1	1821-902-006-00	65	5	1824-434-001-00	36	19
1821-216-052-00	12	2	1821-902-009-10	65	7	1824-501-002-00	39	15
1821-218-051-00	13	7	1821-902-011-10	65	9	1824-501-003-00	39	23
1821-306-006-00	25	13	1821-902-012-10	65	8	1824-501-004-00	39	13
1821-306-007-00	25	14	1824-102-001-00	1	21	1824-501-007-00	6	8
1821-401-001-00	30	3	1824-102-002-00	1	22		39	27
1821-401-002-00	30	1	1824-102-003-00	1	13	1824-504-007-00	40	31
1821-407-220-00	31	1	1824-102-004-00	1	4	1824-508-270-00	41	34
1821-431-002-00	13	10	1824-102-005-00	1	17		41	45
	33	3	1824-102-007-00	1	11	1824-514-250-00	45	1
1821-431-220-00	33	5	1824-102-008-00	1	12	1824-514-260-00	45	19
1821-433-001-00	35	21		1	20	1824-515-250-00	46	6
1821-433-002-00	35	22	1824-102-220-00	4	13	1824-515-260-00	46	8
1821-433-003-00	35	1	1824-102-280-00	1	15	1824-601-002-10	49	21
1821-434-001-00	36	1	1824-104-001-00	3	7	1824-601-003-00	49	23
1821-434-002-10	36	17	1824-104-002-00	3	11	1824-601-004-00	49	46
1821-434-003-10	36	18	1824-104-004-00	3	16	1824-601-005-00	49	41
1821-434-004-10	36	25	1824-104-005-20	3	15	1824-601-006-00	49	6

Numerical Index

Part Code	Fig.	Key	Part Code	Fig.	Key	Part Code	Fig.	Key
1824-601-007-00	49	16	1833-611-230-00	53	1	1834-218-051-00	13	11
1824-601-011-00	49	12	1833-611-240-00	53	14	1834-256-055-00	17	1
	49	19	1833-630-061-00	54	13	1834-256-220-00	17	9
	49	22	1833-650-200-00	57	31	1834-259-051-00	19	1
	49	24		58	32	1834-259-052-00	19	2
	50	3	1833-650-210-00	57	32	1834-259-053-00	19	3
	50	8		58	33	1834-259-500-00	19	14
1824-601-012-00	49	30	1833-650-650-00	58	15	1834-266-001-00	20	1
1824-601-013-00	49	31	1833-650-660-00	58	17	1834-267-001-00	21	1
1824-601-200-20	49	1	1833-650-700-00	57	15	1834-269-001-00	22	5
1824-601-230-00	49	25	1833-650-710-00	57	17	1834-269-002-00	22	8
1824-601-250-00	49	5	1833-652-610-00	59	28	1834-269-210-00	22	1
1824-601-260-00	49	14	1833-654-064-00	60	24	1834-306-001-00	25	22
1824-630-240-10	54	20	1833-902-062-10	65	2	1834-308-051-00	26	2
1824-650-510-00	57	22	1833-902-064-10	65	3	1834-308-500-00	26	8
	58	22	1833-902-067-00	65	11	1834-312-560-00	28	1
1824-656-300-10	61	1	1833-904-061-00	66	16	1834-312-600-00	28	10
1824-901-001-00	64	4	1833-904-063-00	66	14	1834-312-610-10	28	6
1824-901-002-00	64	5	1833-904-064-00	66	17	1834-313-053-00	29	11
1824-904-001-00	66	1	1834-102-220-00	1	27	1834-313-054-00	29	7
1824-904-002-00	66	2	1834-102-240-10	1	47	1834-313-300-00	29	16
1824-904-003-00	66	3	1834-102-270-00	1	31	1834-317-210-10	68	1
1824-904-004-00	66	4	1834-102-310-10	1	25	1834-317-220-00	68	2
1824-904-005-00	66	5	1834-103-001-00	2	8		68	8
1824-904-006-00	66	6	1834-103-004-00	2	5	1834-317-230-10	68	3
1824-904-007-00	66	7	1834-103-210-10	2	1		68	9
1824-904-008-00	66	8	1834-103-220-00	2	11	1834-317-231-10	68	4
1824-904-009-00	66	9	1834-103-240-00	2	7		68	10
1824-904-011-00	66	10	1834-104-002-00	3	13	1834-317-232-00	68	5
1824-904-012-00	66	11	1834-104-006-00	3	19		68	11
1824-904-013-00	66	12	1834-104-220-10	3	10	1834-317-233-00	68	6
1824-904-014-00	66	13	1834-111-005-00	4	6		68	12
1826-680-200-00	60	59	1834-111-010-00	4	40		71	6
1831-512-003-00	43	24	1834-111-210-00	4	39		71	12
	44	29	1834-111-220-00	4	35	1834-317-240-10	68	7
1831-631-001-00	55	11	1834-111-230-20	4	37	1834-317-260-00	69	1
1831-640-580-00	56	31	1834-111-270-00	4	31	1834-317-270-00	69	2
1833-102-062-00	1	36	1834-116-210-00	5	1	1834-317-272-00	69	4
1833-102-063-00	1	39	1834-116-220-00	5	4		72	4
1833-317-781-10	69	3	1834-116-230-10	5	9	1834-317-273-00	69	5
1833-437-781-10	72	3	1834-201-051-10	6	1		72	5
1833-508-061-10	41	9	1834-203-052-00	7	5	1834-410-230-00	32	1
1833-601-600-10	49	32	1834-209-053-00	8	13	1834-431-051-00	33	1
1833-602-061-00	50	1	1834-211-051-10	10	1	1834-431-510-00	33	4
1833-602-062-00	50	4	1834-216-052-00	12	10	1834-437-210-10	71	1

Numerical Index

Part Code	Fig.	Key	Part Code	Fig.	Key	Part Code	Fig.	Key
1834-437-220-00	71	2	1834-514-210-00	45	8	1834-631-510-00	55	17
	71	8	1834-521-004-00	48	16	1834-631-560-00	55	4
1834-437-230-10	71	3	1834-521-006-00	48	6	1834-631-570-00	55	7
	71	9	1834-521-200-10	48	1	1834-631-580-00	55	19
1834-437-231-10	71	4	1834-601-001-00	49	3	1834-640-053-00	56	21
	71	10	1834-601-002-00	49	4	1834-640-054-00	56	29
1834-437-232-00	71	5	1834-601-003-00	49	15	1834-640-055-00	56	18
	71	11	1834-601-210-10	49	50	1834-640-500-00	56	1
1834-437-240-10	71	7	1834-601-220-10	49	38	1834-640-520-00	56	6
1834-437-260-00	72	1	1834-601-230-00	49	53	1834-640-560-00	56	24
1834-437-270-00	72	2	1834-601-250-00	49	56	1834-650-200-10	57	20
1834-438-003-00	38	1	1834-601-260-00	49	58		58	20
1834-438-004-00	38	2	1834-601-310-00	49	35	1834-650-210-00	57	6
1834-508-051-00	41	36	1834-601-600-20	49	40		58	6
1834-508-510-00	41	33	1834-601-640-10	49	43	1834-650-910-00	75	1
1834-508-520-00	41	44	1834-606-210-20	51	8	1834-650-911-00	75	6
1834-508-610-00	41	11	1834-606-220-00	51	1	1834-652-502-00	59	13
1834-508-620-00	41	20	1834-608-200-00	52	1	1834-652-503-00	59	18
1834-509-001-00	42	6	1834-630-001-00	54	2	1834-652-510-10	59	5
1834-509-210-10	42	18	1834-630-021-10	54	7	1834-652-511-00	59	12
1834-509-220-10	42	19	1834-630-022-00	54	17	1834-654-004-00	60	60
1834-509-230-10	42	36	1834-630-023-00	54	8	1834-654-220-10	60	17
1834-509-510-10	42	46	1834-630-024-00	54	9	1834-654-230-00	60	23
1834-512-001-00	43	11	1834-630-025-00	54	23	1834-654-240-00	60	51
	44	12	1834-630-026-10	54	10	1834-654-500-00	60	57
1834-512-002-00	44	13	1834-630-027-00	54	11	1834-654-510-00	60	45
1834-512-021-00	43	22	1834-630-028-00	54	12	1834-702-300-00	63	1
	44	26	1834-630-032-10	54	18	1834-901-001-00	64	6
1834-512-022-00	43	23	1834-630-033-10	54	19	1834-902-003-10	65	1
	44	27	1834-630-034-00	54	30	1834-902-021-00	65	12
1834-512-024-00	44	28	1834-630-270-00	54	1	1834-902-022-00	65	13
	74	25	1834-630-280-00	54	24	1834-902-051-10	65	10
1834-512-220-00	43	7	1834-630-290-00	54	25	1834-904-001-10	66	15
	44	7	1834-631-003-00	55	31	1836-111-006-00	4	11
1834-512-230-00	44	8	1834-631-004-00	55	32	1836-117-001-00	5	11
1834-512-240-00	43	19	1834-631-005-00	55	1	1836-201-001-00	15	3
	44	23	1834-631-007-00	55	29	1836-312-002-00	28	3
	74	22	1834-631-011-10	55	16	1836-902-014-10	65	6
1834-512-260-00	43	4	1834-631-012-20	55	18	1837-102-001-00	57	30
	44	4	1834-631-014-00	55	3		58	31
1834-514-201-00	45	11	1834-631-240-00	55	13	1837-102-009-00	1	32
1834-514-202-00	45	10	1834-631-300-00	55	26	1837-521-061-00	48	10
1834-514-203-00	45	9	1834-631-320-10	55	21	1837-652-600-00	59	41
1834-514-204-00	45	13	1834-631-330-00	55	24	1837-652-610-00	59	40
1834-514-205-00	45	12	1834-631-500-00	55	15	1837-652-640-30	59	51

Numerical Index

Part Code	Fig.	Key	Part Code	Fig.	Key	Part Code	Fig.	Key
1999-203-021-00	7	1	3659-203-005-00	44	16	6281-129-043-00	85	16
1999-209-027-00	8	1		74	15	6281-129-044-00	85	18
1999-209-028-00	8	10	3661-212-001-00	49	52	6281-129-045-10	85	9
1999-210-002-00	9	1	3676-356-001-00	40	36	6281-129-062-00	85	14
1999-210-003-00	9	2	3689-902-019-00	64	1	6281-151-023-00	85	13
1999-214-036-00	11	14	3737-172-011-00	39	12	6281-200-015-00	75	2
1999-216-024-00	12	6		60	1	6281-213-013-00	86	7
1999-216-026-00	12	3	3737-211-007-00	6	4	6281-214-007-00	86	12
1999-508-350-00	41	40	3801-272-302-00	59	43	6281-214-008-00	86	13
1999-508-370-00	42	47	3803-222-890-00	56	3	6281-215-001-00	86	17
	43	15	3805-632-001-00	60	18	6281-216-001-00	86	18
	44	17	3814-440-006-00	60	19	6281-217-002-00	86	16
1999-509-003-00	42	39	3819-261-005-00	54	16	6281-221-004-00	86	4
	42	42	3821-262-202-00	59	10	6281-222-002-00	86	1
1999-509-510-00	42	15	3821-262-203-00	59	11	6281-229-002-00	86	2
1999-509-520-00	42	34	3821-262-206-00	59	16	6281-229-003-00	86	3
1999-509-540-00	42	33	3821-262-209-00	59	15	6281-229-004-00	86	5
1999-509-550-00	42	31	3824-247-202-00	59	9	6281-229-006-00	86	8
1999-509-580-00	42	26	3824-701-011-00	8	2	6281-229-007-00	86	9
1999-509-610-00	42	25	3838-203-001-00	56	16	6281-229-008-00	86	10
1999-509-630-00	42	5	4101-102-038-00	1	6	6281-229-011-00	86	15
1999-512-003-00	43	18		49	36	6281-229-012-00	86	19
	44	22	6209-360-157-00	67	10	6281-229-013-00	86	20
1999-602-002-00	50	2	6209-366-024-10	67	9	6281-229-014-00	86	21
	50	7	6211-740-016-00	67	4	6281-229-015-00	86	22
1999-608-210-00	52	6	6211-740-017-00	67	5	6281-229-016-00	86	23
1999-654-230-00	60	2	6211-740-018-00	67	6	6281-229-017-00	86	24
2130-601-018-00	43	10	6211-744-003-00	67	7	6281-229-018-00	86	25
	44	11	6211-777-061-00	67	2	6281-229-032-00	86	6
	74	11	6213-671-059-00	75	4	6281-229-033-00	86	11
2130-713-002-10	5	6	6213-674-047-00	75	3	6281-229-040-00	86	14
2139-505-002-00	51	3	6281-100-007-40	67	1	6281-229-041-00	85	22
	51	10	6281-111-005-00	85	1	6281-271-008-00	86	26
2144-519-007-00	43	8	6281-115-010-00	85	23	6581-117-007-00	85	12
	44	9	6281-115-011-00	85	10	6581-129-092-00	85	17
	74	9	6281-115-016-00	85	20	6581-129-099-00	85	6
2157-201-201-00	28	7	6281-116-004-00	85	11	6901-911-025-00	24	13
2183-310-013-00	46	12	6281-121-006-00	85	2	6901-931-235-00	6	16
2186-536-211-00	59	2	6281-123-005-00	85	8		10	2
2186-536-212-00	59	3	6281-124-007-10	85	5		35	11
2221-111-200-10	4	25	6281-129-003-00	85	19	6901-931-240-00	6	14
2500-210-016-00	28	4	6281-129-038-00	85	3	6901-931-245-00	6	17
3650-580-002-00	21	5	6281-129-039-00	85	4	6909-111-508-00	85	21
3656-565-006-00	28	22	6281-129-040-00	85	7	6909-913-834-00	4	17
3659-203-005-00	43	14	6281-129-042-00	85	15	7963-611-003-00	45	14

Numerical Index

Part Code	Fig.	Key	Part Code	Fig.	Key	Part Code	Fig.	Key
8654-501-006-10	46	14	K211-004-007-00	81	16	K510-001-029-00	79	20
8674-202-012-00	33	2	K211-012-006-00	80	5	K510-001-036-00	79	35
J061-116-025-00	42	7		81	5	K510-001-039-00	79	30
J061-150-070-00	3	12		81	5	K510-002-033-00	79	29
	3	17	K211-026-000-00	41	47	K510-003-021-00	79	14
J061-213-018-00	67	11	K211-026-100-00	41	48	K510-003-022-00	79	15
J061-222-026-00	67	12	K211-074-002-00	41	27	K510-003-037-00	79	16
J061-226-030-00	3	20	K220-002-000-00	42	29	K510-003-038-00	79	40
J061-230-038-00	1	24	K231-004-007-00	41	64	P103-112-003-20	4	7
J061-232-040-00	41	10	K231-007-003-00	41	62	V111-164-001-60	41	70
J061-236-044-00	1	23	K231-007-004-00	41	63	V120-265-003-00	60	28
J061-245-053-00	3	18	K231-008-000-20	41	59	V120-365-001-60	59	44
J061-254-065-00	3	8	K234-001-005-00	78	6	V120-376-001-60	30	4
J061-259-070-00	3	9	K250-015-000-00	41	56		49	54
J062-087-093-00	4	19	K250-078-000-00	41	25		49	59
	4	30	K250-090-002-00	78	5		54	14
J062-126-134-00	4	21	K250-090-003-00	78	4	V120-376-002-00	61	2
J062-138-148-00	1	26	K275-001-003-00	79	21	V200-360-605-50	41	13
	4	22	K290-001-001-00	78	10	V201-260-803-00	1	3
	6	9	K290-001-002-00	78	11	V201-260-803-50	33	9
	39	28	K290-001-003-00	78	12	V201-260-808-00	4	14
J932-251-006-10	36	4	K290-003-000-30	78	8	V201-261-008-00	43	2
K110-001-106-00	80	20	K500-001-010-00	79	5	V201-261-012-00	44	2
	81	20	K500-001-011-00	79	6		74	3
	81	20	K500-001-015-00	79	10	V201-261-017-00	28	23
K160-001-012-00	83	5	K500-001-017-00	79	12	V201-361-005-50	39	7
	83	9	K500-001-023-00	79	17	V201-361-010-00	39	8
K182-034-002-00	83	4	K500-001-026-00	79	19		56	13
	83	8	K500-001-030-00	79	27	V201-361-012-00	39	9
K200-014-007-00	80	27	K500-001-039-00	79	36	V201-361-203-00	47	3
	81	27	K500-001-100-00	79	37		48	2
	81	27	K500-003-006-00	79	4	V201-361-203-50	32	6
K200-152-110-20	78	1	K500-003-012-00	79	7		35	8
K200-289-000-00	42	13	K500-003-013-00	79	8	V201-361-404-50	70	2
K211-001-006-20	41	49	K500-003-300-00	79	3	V201-361-608-00	48	11
K211-001-007-00	41	50	K500-007-000-00	7	9	V201-461-403-00	62	3
K211-001-008-00	41	51	K500-007-001-00	79	1	V203-361-003-50	4	33
K211-004-006-00	80	7	K500-007-004-00	79	2	V210-360-601-20	54	22
	81	7	K500-007-023-00	79	18	V210-360-601-60	60	46
	81	7	K500-007-025-00	79	33	V210-560-603-50	41	22
K211-004-007-00	80	6	K500-007-034-00	79	31	V210-660-601-20	4	12
	80	16	K500-007-035-00	79	32	V210-660-601-60	4	26
	81	6	K500-007-039-00	79	39		49	34
	81	6	K510-001-016-00	79	11		57	24
	81	16	K510-001-020-00	79	13		58	24

Numerical Index

Part Code	Fig.	Key
V210-660-601-60	59	21
V210-660-602-00	1	14
	59	20
V211-260-801-60	43	6
	44	6
	74	7
V211-260-802-00	49	37
V211-260-804-00	41	54
V211-360-801-60	43	12
	44	14
	74	13
V211-360-802-00	51	5
	51	12
	60	36
V211-360-802-50	51	13
V211-360-803-00	51	6
V211-361-002-50	41	3
V211-560-802-00	49	39
V211-561-002-00	28	9
	39	25
	41	7
V211-561-003-00	39	6
V211-660-801-60	4	32
	49	33
V211-660-802-00	2	6
	4	36
	4	38
	29	6
	49	26
V211-660-802-50	2	9
	2	12
	3	14
	4	3
	56	32
V211-660-803-50	31	6
V211-661-002-00	20	2
	22	9
V211-661-003-00	2	10
V220-540-601-00	80	26
	81	26
	81	26
V220-540-802-00	80	15
	81	15
	81	15
V230-360-601-00	52	2

Part Code	Fig.	Key
V230-360-601-00	52	5
V230-360-601-20	5	2
	59	53
	60	3
	60	5
	60	13
	60	15
	60	43
	60	56
	60	58
V230-360-601-60	54	33
	59	26
V230-360-602-00	67	8
V230-360-603-00	60	20
V231-360-801-20	15	4
	17	8
	19	13
	38	3
	51	2
	51	9
	52	3
	54	28
	55	2
	55	14
	55	20
	55	25
	60	40
	60	52
V231-360-801-60	6	20
	28	11
	31	10
	41	8
	41	39
	42	21
	42	38
	42	43
	42	45
	42	49
	47	6
	47	8
	49	51
	49	57
	54	27
	55	27
	55	30

Part Code	Fig.	Key
V231-360-801-60	60	8
	60	34
	67	3
V231-360-802-00	6	11
	7	7
	16	4
	18	6
	24	2
	40	29
	43	20
	44	24
	54	29
	54	31
	59	29
	74	23
V231-360-802-50	16	5
	56	4
V231-360-803-00	40	16
V231-360-803-50	16	6
	41	43
V231-360-804-50	75	5
V231-360-805-50	41	32
V231-361-001-60	54	3
	57	12
	58	12
V231-361-002-00	53	11
	55	6
	55	9
	55	23
V231-361-002-50	36	37
	55	5
	55	8
V231-361-003-00	25	16
V231-361-004-00	25	15
V231-361-005-50	54	4
V231-361-006-50	11	21
	25	17
V231-361-205-50	7	12
V251-341-003-00	25	18
V251-341-202-50	48	4
V251-341-203-20	32	2
V251-341-205-00	10	3
V251-441-403-50	32	3
V273-360-802-00	55	28
V301-260-006-00	1	19

Numerical Index

Part Code	Fig.	Key
V304-260-008-00	28	15
	29	8
	29	21
	40	17
	40	35
	41	17
	42	3
	56	17
	56	35
	82	7
V304-260-010-00	28	24
	41	68
	63	14
V304-460-010-00	25	19
	53	12
V304-460-012-00	10	4
	27	15
	32	8
	35	9
	35	12
	36	6
	36	24
	48	5
V304-460-014-00	35	19
	70	4
V304-460-016-00	45	5
	45	16
	46	2
V304-700-008-00	2	3
V305-260-010-00	5	7
V305-260-012-00	77	3
V327-262-112-00	37	12
V334-260-014-00	40	27
V350-160-004-00	64	3
V350-160-006-00	50	6
V360-260-004-00	4	9
V360-260-006-00	57	14
	58	14
V361-260-006-00	49	13
	49	20
	49	45
V362-260-008-00	33	10
	51	7
	51	14
	56	5
V362-260-008-00	57	7
	58	7
	60	37
V362-260-010-00	49	49
	51	16
V401-160-006-00	41	14
	56	9
	56	27
V401-160-008-00	4	15
	40	7
	41	19
	42	4
	42	17
	80	14
	81	14
	81	14
	82	6
V401-160-010-00	4	34
	25	20
	39	10
	43	3
	44	3
	53	13
	56	14
	74	4
V401-160-014-00	70	3
V401-700-008-00	2	4
V402-160-012-00	10	5
	27	16
	31	15
	32	7
	35	13
	36	5
	37	11
	47	4
	48	3
V402-160-014-00	35	20
	62	4
V402-160-016-00	45	6
	45	17
	46	3
	48	13
	56	22
V411-260-005-00	40	14
V411-260-006-00	26	4
V411-260-006-00	43	9
	44	10
	57	5
	58	5
	74	10
V411-260-008-00	4	16
	28	18
	29	14
	29	24
	33	11
	40	9
	40	21
	47	10
	82	5
V411-260-010-00	22	6
	56	19
V411-260-012-00	27	17
V411-260-016-00	45	7
	45	18
	46	4
	56	23
	56	28
V500-161-601-50	52	9
V500-162-001-50	26	5
V500-162-002-00	22	7
	28	19
	29	15
	29	25
	40	10
	40	13
	40	22
V500-162-502-00	28	21
V500-163-002-00	37	13
	45	15
V500-164-003-00	45	4
	46	5
V511-100-805-00	28	2
	29	17
V523-100-801-60	6	12
	7	11
V523-101-002-40	6	15
	10	6
	11	22
	24	14
	25	21

Numerical Index

Part Code	Fig.	Key
V523-101-002-40	36	3
	36	36
	39	11
V560-160-008-00	1	38
	26	12
	49	28
	49	42
	49	47
V580-140-301-80	21	3
V580-140-302-50	80	24
	81	24
	81	24
V580-140-502-50	34	14
	40	2
	40	28
V580-140-602-50	19	4
V580-140-602-80	26	9
V580-140-604-00	26	7
V580-140-802-80	17	10
	18	8
	19	15
V600-110-630-50	8	6
	8	14
	23	8
	79	9
V600-110-630-60	36	8
V600-110-630-70	25	2
	25	9
	25	25
V600-150-600-00	56	10
V682-200-000-60	80	11
	81	11
	81	11
V682-200-001-00	17	3
	18	3
	19	5
V682-200-001-90	27	4
	27	8
V704-140-010-00	56	11
V704-140-016-00	56	30
V704-140-025-00	11	15
	79	24
V704-140-030-00	9	5
V704-140-035-00	12	4
	13	2

Part Code	Fig.	Key
V704-140-035-00	25	3
	25	10
	25	27
V705-140-024-00	80	17
	81	17
	81	17
V705-140-032-00	79	26
V705-140-042-00	7	3
	13	13
V705-140-052-00	11	8
	34	9
	36	21
V706-140-040-00	25	8
	34	19
V706-140-045-00	36	15
	39	21
V706-140-055-00	34	18
V707-140-055-00	11	18
V707-140-062-00	9	4
	11	4
V707-140-068-00	36	16
V707-140-072-00	14	4
	36	9
V707-140-075-00	24	24
V707-140-080-00	25	5
	25	12
V707-140-085-00	11	12
	25	29
V707-140-090-00	24	19
V720-101-900-70	40	20
V720-102-401-40	18	2
V720-102-401-60	7	10
	84	9
V720-102-402-00	17	6
	19	11
V720-102-402-10	84	3
V720-103-503-40	33	7
	35	16
V720-103-503-60	33	6
V720-105-705-20	79	38
V720-111-900-70	80	25
	81	25
	81	25
V720-112-401-00	41	60
	42	14

Part Code	Fig.	Key
V720-112-401-10	42	9
	42	28
	79	23
V720-112-401-20	41	52
	41	57
	80	21
	81	21
	81	21
V720-112-401-40	39	14
	41	30
	41	35
	41	46
	41	55
	42	30
	74	17
	79	22
	80	28
	81	28
	81	28
V720-112-401-60	41	28
	41	66
	73	2
	78	3
	78	7
V720-112-401-80	41	58
V720-112-402-00	41	12
	41	21
	41	26
	78	9
V720-112-402-20	41	65
	78	2
V720-113-502-40	6	6
V720-115-706-50	39	16
V721-103-103-50	41	6
V721-103-104-50	41	2
	41	5
V721-103-106-00	7	6
V721-103-106-50	79	34
	84	6
V721-103-107-00	35	2
V721-103-110-00	36	2
V723-112-004-40	83	11
V723-112-004-80	83	12
V730-101-401-00	41	61
V744-116-300-70	26	6

Numerical Index

Part Code	Fig.	Key	Part Code	Fig.	Key	Part Code	Fig.	Key
V744-118-300-80	40	5						
V744-120-420-80	13	14						
V744-122-350-80	27	13						
V744-125-350-70	79	28						
V744-125-470-80	7	4						
V744-135-500-80	16	3						
V760-150-000-00	37	5						
	37	10						
	56	8						
	56	26						
V761-150-000-00	35	17						
V763-150-000-00	22	3						
	28	8						
	35	10						
V780-140-000-1T	78	13						
V780-140-000-2T	41	53						
V780-140-000-4T	39	5						
V780-140-000-6T	41	31						
V782-160-000-2B	6	2						
V782-160-000-2T	10	7						
	41	23						
V782-160-000-4B	36	22						
V782-160-000-4T	39	4						
V782-160-000-6B	19	9						
V782-160-000-6T	43	21						
	44	25						
	74	24						
V782-160-000-8B	15	5						
W201-260-805-00	40	34						
	56	33						
	56	34						
W201-260-805-50	42	16						
W201-260-806-00	40	33						
W201-261-206-00	77	2						
W201-361-206-00	36	23						

Alpabetical Index

6005-097-216-00

Description	Fig.	Key
ADAPTER/200X070 ASSY	24	1
ARM/CONTROL	22	29
ARM/FLOATING COMP	22	20
ARM/TENSION	24	2
BALL,STEEL	2	5
BEARING	22	14
BEARING,RB/6002SS	17	7
BEARING,RB/6203	22	13
BEARING/BALL	11	48
	29	6
	29	11
BEARING/CONNECTING R	15	7
BEARING/CRANK SET	7	11
BEARING/CRANK/LOWER	7	13
BEARING/CRANK/UPPER	7	12
BEARING/THRUST/CRANK	7	14
	8	2
	8	4
BELT/VNR5A39.5	20	5
BODY/NOZZLE HOLDER	28	2
BOLT	2	7
	5	4
	7	2
	10	4
	11	42
	13	18
	17	8
	18	14
	29	9
	29	10
	29	19
	29	20
	29	21
	29	22
	29	24
BOLT,S/M6X12/7T	14	5
	22	16
BOLT,S/M6X35/7T	9	4
BOLT,S/M8X25/7T	5	3
BOLT,SEMS/M10X20,7T	12	4
BOLT/CONNECTINGROD	15	6
BOLT/CRANK	17	11
BOLT/EYE	18	11
BOLT/FLANGE	20	4
BOLT/M6	11	34
BOLT/M6	11	35
BOLT/M6X10	22	18
BOLT/WS	18	3
BOSS/SPLINE	17	9
BRACKET/ROCKERSHAFT	13	12
	13	13
BRG/CONROD/UN025 SET	8	5
BRG/CONROD/UN050 SET	8	6
BRG/CRANK/UN025 SET	8	1
BRG/CRANK/UN050 SET	8	3
BRUSH	29	17
BUSH	29	15
CAMSHAFT	14	1
CAMSHAFT/INJECTION P	22	10
CAP	19	23
CAP,OIL FILLER	3	5
CAP/12	3	9
CAP/OILFILLER	7	33
CARTRIDGE/OILFILTER	18	9
CLAMP	11	15
CLAMP/STRAINER	18	7
CLAMP/WIRE/10-15	19	7
CLAMP/WIRE/16-20	18	24
CLAMP/WIRE/20-24	19	24
CLAMP/WIRE/38-46	6	8
CLAMP/WIRE/52-63	6	10
CLAMP/WORM/16-25	18	18
CLIP/HOSE/18-22	18	25
	19	8
CLIP/HOSE/7.6-8.2	23	5
COLLOR	29	3
CONNECTINGROD ASSY	15	5
CONNECTOR/FUEL	23	1
CONNECTOR/GLOWPLUG	26	5
CONNECTOR/OILCOOLER	18	20
CORRUGATEDTUBE	23	6
COVER	29	13
COVER,BEARING	29	5
COVER/BLOWBY	3	3
COVER/CYLINDER HEAD	3	1
COVER/HYDRAULIC	11	49
	11	53
COVER/INJECTIONPUMP	7	26
CRANKSHAFT ASSY	17	1
CUP/SEALING/16	7	3
CUP/SEALING/20	11	3
CUP/SEALING/28	7	4
CUP/SEALING/36	7	5
CUP/SEALING/50	2	2
	7	6
CUTTER,VALVE	13	5
CYLINDERBLOCK ASSY	7	1
CYLINDERHEAD ASSY	2	1
DOWEL	7	22
EYEBOLT/OILJET ASSY	7	38
FAN/COOLING	20	1
FLANGEBOLT/M10X20	12	2
FLANGEBOLT/M10X70	25	5
FLANGEBOLT/M6X12	7	28
FLANGEBOLT/M6X16	11	38
	26	8
FLANGEBOLT/M8X12	10	8
FLANGEBOLT/M8X16	11	12
	18	8
FLANGEBOLT/M8X20	19	11
	19	21
	22	8
	25	3
FLANGEBOLT/M8X25	4	3
	19	16
FLANGEBOLT/M8X30	11	16
FLANGEBOLT/M8X45	19	20
FLANGEBOLT/M8X50	11	13
FLANGEBOLT/M8X55	13	19
FLANGEBOLT/M8X60	11	14
FLANGEBOLT/M8X70	11	10
FLANGEBOLT/M8X75	11	9
	19	12
FLANGEBOLT/M8X85	11	8
FLYWEIGHT ASSY	22	17
FLYWHEEL ASSY	17	5
FRAME	29	12
FRAME/DRIVEEND ASSY	29	7
GASKET	3	8
	6	2
	18	12
	18	16
	21	6
	26	7
	27	5

Alpabetical Index

Description	Fig.	Key
GASKET	27	22
	27	23
	27	24
	27	25
GASKET,NOZZLE	21	3
GASKET/COVER	7	27
	11	50
	11	54
	27	11
GASKET/CYLINDERHEAD	2	6
	27	3
GASKET/EXHAUST MANIF	5	2
	27	7
GASKET/GEARCASE	11	28
	27	14
GASKET/HOUSING	19	10
	27	20
GASKET/INLETMANIFOLD	4	2
	27	6
GASKET/OILFILLER	7	36
GASKET/PLATE	11	41
	27	15
GASKET/SPACER	19	18
	27	19
GASKET/WATERPUMP	19	2
	27	18
GEAR/CAMSHAFT	14	2
GEAR/CRANK	17	3
GEAR/IDLE ASSY	14	6
GEAR/INJECTIONPUMP	22	11
GEARCASE ASSY	11	1
GENERATOR ASSY	25	1
GLOWPLUG	26	3
GUIDE/LEVELGAGE COMP	7	31
HANGER	12	1
HANGER/F	12	3
HEATSHILD/NOZZLE	21	4
HOLDER ASSY	29	14
HOLDER/BRUSH ASSY	29	16
HOLDER/NOZZLE ASSY	28	1
HOSE/OILCOOLER/IN	18	22
HOSE/OILCOOLER/OUT	18	23
HOSE/RUBBER	6	7
	6	9
	18	17
HOSE/RUBBER	19	4
	19	5
	23	3
HOUSING/THERMOSTAT	19	9
INJECTIONNOZZLE ASSY	21	1
INJECTIONPUMP ASSY	22	1
JOINT	19	6
KEY/07X05X09	14	3
	22	12
KEY/07X05X20	17	4
LEVELGAUGE	7	30
LEVER/CONTROL COMP	22	26
MANIFOLD/EXHAUST	5	1
MANIFOLD/INLET	4	1
NIPPLE	7	25
NOZZLE ASSY	28	51
NUT	13	17
	28	50
	29	2
	29	23
	29	25
NUT,CAP/M8	11	20
NUT,SUS/M8	5	8
	6	3
NUT/CAP	3	7
NUT/FLANGE	26	4
NUT/FLANGE/M10	25	6
NUT/M08	11	11
	13	20
	19	3
	19	22
	22	9
NUT/M6	11	36
	22	30
NUT/M8	11	19
	11	51
	11	55
NUT/NOZZLERETAINING	28	5
OILCOOLER	18	19
OILFILLER COMP	7	35
OILPAN	9	1
OILPUMP ASSY	18	1
OILSEAL	7	15
	27	10
O-RING/1A,P18	9	3
O-RING/1A,P18	11	33
O-RING/1A,P22A	18	6
	27	17
O-RING/1A,P25	7	34
O-RING/1A,P8	22	27
O-RING/1A,S50	11	44
	27	16
O-RING/1A,S55	19	15
	27	21
PACKING	11	21
PIECE,DISTANCE	28	6
PIN	7	18
	7	29
	11	24
PIN,CONTROL	22	22
PIN,NOZZLE HOLDER	28	3
PIN,ST,B/10X18	10	3
	17	2
PIN/ARM	11	22
PIN/GROOVE	11	27
PIN/IDLEGEAR	7	8
PIN/PISTON	15	3
PIN/SNAP	11	23
PIN/SPRING	7	39
PIN/STRAIGHT	7	17
	10	7
	18	2
PIN/TUBE	7	16
	11	45
PIPE,WATER OUTLET	19	14
PIPE/FUEL	23	2
PIPE/INJECTION ASSY	21	7
	21	8
	21	9
PIPE/INLET	6	6
PIPE/OIL	7	32
PIPE/OIL ASSY	18	10
PIPE/OIL COMP	18	13
PIPE/OILJET	7	37
PIPE/WATER/HOUSING	7	24
PIPE/WATERR	11	39
PISTON	15	1
PISTON(OV/050)	16	1
PISTON(OV/100)	16	3
PISTON/VALVE/RELIEF	11	30

Alpabetical Index

6005-097-216-00

Description	Fig.	Key
PLATE	29	8
PLATE/ADJUST	25	2
PLATE/FRONT	11	40
PLATE/REAR	10	1
PLATE/THRUST	14	4
PLATE/THRUST/INJPUMP	22	15
PLUG	13	11
PLUG/M14X1.5	9	2
PLUG/PT1/2	2	3
PLUG/PT1/4	11	2
PLUG/PT1/8	7	7
	7	40
PLUG/SCREW	11	25
PLUG/SCREW/SEAL	7	23
POINTER	10	2
	10	6
PULLEY	29	1
PULLEY/CRANK	17	10
PULLEY/WATERPUMP	20	2
PUSHROD	13	7
REGULATOR ASSY	29	26
REPAIR/ENGINESET	27	1
RESISTANCE/1.0	23	4
RING SNAP	15	4
RING,SNAP/12 C	11	32
RING,SNAP/4 E	22	23
RING/PISTONSET	15	2
RING/SNAP	13	15
RINGGEAR	17	6
RINGPISTON/OV050 SET	16	2
RINGPISTON/OV100 SET	16	4
RINK/CONTROL	22	21
ROCKERARM	13	9
ROCKERSHAFT ASSY	13	8
ROTOR ASSY	29	4
RUBBERFLANGE	3	2
SCREW,SOCKET/M6X20	18	4
SCREW/ADJUST	13	16
SCREW/HOLLOW	22	3
SCREW/TAPPING	3	4
SEAL,BEARING CAP	7	9
	27	8
SEAL,BEARING CAP/7	7	10
	27	9
SEAL,OIL	2	4
SEAL,OIL	11	7
	27	2
	27	12
SEAL/CYL HEAD/UNDER	3	6
	27	4
SEAT/VALVESPRING	13	4
SENSOR/REVOLUTION/R	11	37
SHAFT/HYDRAULIC ASSY	11	47
SHAFT/ROCKERARM ASSY	13	10
SHIM/INJECTIONPUMP	22	4
	22	5
	22	6
	22	7
SHORTBLOCKENGIN ASSY	1	1
SOLENOID	26	6
SPACER	11	43
SPACER/FAN/68	20	3
SPACER/WATERPUMP	19	17
SPRING	13	14
	29	18
SPRING,RETURN	22	28
SPRING/GOVERNOR	22	25
SPRING/IDLE	22	34
SPRING/NOZZLEHOLDER	28	4
SPRING/RELIEF VALVE	11	31
SPRING/SETTING	22	24
SPRING/STARTING	22	33
SPRING/VALVE	13	3
STOPPER/FULLLOAD	11	18
STRAINER	18	5
STUD	2	8
	5	5
	5	6
	6	5
	7	20
	11	4
	11	5
	11	6
	11	46
STUD/M8X40	7	19
	19	19
STUD/M8X60/7T	7	21
SWITCH/OILPRESSURE	26	1
TAPPET	13	6
THERMOMETER	26	2
THERMOSTAT	19	13
THRUSTPIECE	22	19
TRIM/30	18	26
TURBOCHARGER ASSY	6	1
VALVE/EXHAUST	13	2
VALVE/INTAKE	13	1
VALVE/RELIEF ASSY	11	29
WASHER	21	2
WASHER,PL/M6	22	31
WASHER,PL/M8	5	7
	6	4
WASHER,SP/M12	10	5
WASHER,SP/M6	18	15
	22	32
WASHER,SP/M8	11	52
	11	56
WASHER/0.9	28	7
WASHER/0.925	28	8
WASHER/0.95	28	9
WASHER/0.975	28	10
WASHER/08X14X01	11	17
	11	26
	27	13
WASHER/1.0	28	11
WASHER/1.025	28	12
WASHER/1.05	28	13
WASHER/1.075	28	14
WASHER/1.1	28	15
WASHER/1.125	28	16
WASHER/1.15	28	17
WASHER/1.175	28	18
WASHER/1.2	28	19
WASHER/1.225	28	20
WASHER/1.25	28	21
WASHER/1.275	28	22
WASHER/1.3	28	23
WASHER/1.325	28	24
WASHER/1.35	28	25
WASHER/1.375	28	26
WASHER/1.4	28	27
WASHER/1.425	28	28
WASHER/1.45	28	29
WASHER/1.475	28	30
WASHER/1.5	28	31
WASHER/1.525	28	32

Alpabetical Index

Description	Fig.	Key	Description	Fig.	Key	Description	Fig.	Key
WASHER/1.55	28	33						
WASHER/1.575	28	34						
WASHER/1.6	28	35						
WASHER/1.625	28	36						
WASHER/1.65	28	37						
WASHER/1.675	28	38						
WASHER/1.7	28	39						
WASHER/1.725	28	40						
WASHER/1.75	28	41						
WASHER/1.775	28	42						
WASHER/1.8	28	43						
WASHER/1.825	28	44						
WASHER/1.85	28	45						
WASHER/1.875	28	46						
WASHER/1.9	28	47						
WASHER/1.925	28	48						
WASHER/1.95	28	49						
WASHER/9X22X2	25	4						
WASHER/AIR BLEEDER	22	2						
WASHER/CORRUGATE	21	5						
WASHER/OILCOOLER	18	21						
WATERPUMP ASSY	19	1						

Alpabetical Index

1834-097-110-00

Description	Fig.	Key
ADAPTER/45ß/R3/8XG3/	43	18
	44	22
ADAPTER/45/R3/8XG3/	74	21
ADAPTER/45DEG	31	13
ADAPTER/90ß	42	39
	42	42
ADAPTER/G1/4 ASSY	42	8
	42	27
ADAPTER/G3/8 ASSY	41	29
	41	34
	41	45
	42	5
	42	25
	42	33
ADAPTER/G3/8B ASSY	42	34
ADAPTER/G3/8-PF1/4	42	26
ADAPTER/L/G1/4 ASSY	42	15
ADAPTER/L/G3/8 ASSY	42	47
	43	15
	44	17
	74	16
ADAPTER/L/PF3/8 ASSY	42	31
ARM	60	42
	60	55
ARM/1ST COMP	43	7
	44	7
ARM/2ND COMP	44	8
	74	8
ARM/BRAKE	27	14
ARM/DIFFLOCK COMP	26	8
ARM/HST COMP	56	24
ARM/LIFT	39	20
ARM/MIRROR ASSY	54	32
ARM/NEUTRAL COMP	56	6
ARM/P/BRAKE SET	29	16
ARM/PLATE/4WD COMP	18	7
ARM/POSITION COMP	40	1
ARM/PTO/E4 COMP	19	14
	22	1
ARM/SHIFT/4WD COMP	18	1
ARM/SHIFT/PTO COMP	19	10
ARM/SHIFT/SUB COMP	17	5
ARM/SUB COMP	17	9
ARM/TRUNNION COMP	56	1
ARMATURE/STARTE ASSY	85	2

Description	Fig.	Key
BALL	85	17
BALL, STEEL	17	3
	18	3
	19	5
	27	4
	27	8
	80	11
	81	11
	81	11
BAND	57	21
	58	21
	59	19
	59	22
	63	7
BAND, WIRE/140	4	18
	5	12
	31	11
	42	12
	42	22
	57	8
	57	25
	58	8
	58	25
	58	29
	59	23
	60	6
	60	44
BAND, WIRE/250	43	17
	44	21
	57	26
	57	27
	57	28
	58	26
	58	27
	58	28
	59	24
	74	20
BAR	39	18
BATTERY/80D26R ASSY	57	1
	58	1
BEARING	85	3
	85	4
BEARING, RB/6000SS	56	10
BEARING, RB/6305	8	6
	8	14

Description	Fig.	Key
BEARING, RB/6305	23	8
	79	9
BEARING, RB/6306	36	8
BEARING, RB/6307	25	2
	25	9
	25	25
BEARING/6009/KBC	11	11
	24	20
BEARING/6205/KBC	11	7
	13	9
BEARING/BALL	8	2
	8	7
	11	16
	36	11
	36	27
	86	6
	86	11
BEARING/BALL/6004	7	2
	13	8
	13	12
BEARING/BALL/6006	8	15
	11	3
	11	17
	13	4
BEARING/BALL/6008	13	5
BEARING/BALL/6010C	34	17
	36	14
BEARING/BALL/6011C	34	16
BEARING/BALL/6206	8	3
	9	3
	11	2
	12	5
	36	33
BEARING/BALL/6207	14	3
BEARING/BALL/6208C	36	32
BEARING/BALL/6209C	11	10
	25	28
BEARING/BALL/6210C	24	15
BEARING/BALL/6308C	25	7
BEARING/BALL/6909	36	13
BEARING/NEEDLE	8	11
	12	7
BEARING/TAPERROLLER	23	2
	34	2
BELT/SEAT SET	53	14

Alpabetical Index

Description	Fig.	Key
BELT/VNR5A40.5	75	4
BLOCK/CYLINDER/HMP1	79	3
BLOCK/PORT/HMP1/007	79	2
BOLT	36	23
	57	10
	58	10
	86	9
	86	10
	86	19
	86	20
	86	21
	86	22
	86	24
BOLT,S/M10X20/7T	28	9
	39	25
	41	7
BOLT,S/M10X30/7T	39	6
BOLT,S/M6X35/7T	41	22
BOLT,S/M8X16	43	6
	44	6
	74	7
BOLT,S/M8X20	49	37
BOLT,S/M8X20/7T	49	39
BOLT,S/M8X40	41	54
BOLT,SEMS/M10X25,7T	24	13
BOLT,SEMS/M12X35/7T	6	16
	10	2
	35	11
BOLT,SEMS/M12X40/7T	6	14
BOLT,SEMS/M12X45/7T	6	17
BOLT,SP/M10X20/7T	20	2
	22	9
BOLT,SP/M10X25	41	3
BOLT,SP/M10X30/7T	2	10
BOLT,SP/M6X12	54	22
BOLT,SP/M6X12/7T	4	12
BOLT,SP/M6X16	60	46
BOLT,SP/M6X16/7T	4	26
	49	34
	57	24
	58	24
	59	21
BOLT,SP/M6X20/7T	1	14
	59	20
BOLT,SP/M8X16	43	12

Description	Fig.	Key
BOLT,SP/M8X16	44	14
	74	13
BOLT,SP/M8X16/7T	4	32
	49	33
BOLT,SP/M8X20	51	5
	51	12
	60	36
BOLT,SP/M8X20/7T	2	6
	4	36
	4	38
	29	6
	49	26
BOLT,SP/M8X25	51	13
BOLT,SP/M8X25/7T	2	9
	2	12
	3	14
	4	3
	56	32
BOLT,SP/M8X30	51	6
BOLT,SP/M8X35/7T	31	6
BOLT,WING/M8X20	55	28
BOLT/KNOB/M06X27	52	7
BOLT/M 8X50	40	34
	56	33
	56	34
BOLT/M 8X60	40	33
BOLT/M08X41	55	11
BOLT/M10X1.25X20	53	15
BOLT/M10X100/7T	39	8
	56	13
BOLT/M10X120	44	2
	74	3
BOLT/M10X120/7T	39	9
BOLT/M10X170	28	23
BOLT/M10X35/7T,P1.25	4	33
BOLT/M10X55/7T	39	7
BOLT/M10X80	43	2
BOLT/M12X30	36	38
BOLT/M12X30/7T	47	3
	48	2
BOLT/M12X35/7T	32	6
	35	8
BOLT/M12X40	79	36
BOLT/M12X60	77	2
BOLT/M14X30/9T	62	3

Description	Fig.	Key
BOLT/M14X45/7T	70	2
BOLT/M16X40	25	31
BOLT/M16X80/7T	48	11
BOLT/M16X90	63	2
BOLT/M6X14X16	49	12
	49	19
	49	22
	49	24
	50	3
	50	8
BOLT/M6X250	57	3
	58	3
BOLT/M6X55/7T	41	13
BOLT/M8X30	1	3
BOLT/M8X35	33	9
BOLT/M8X80	4	14
BOLT/M8XX55	42	16
BOLT/S	6	13
	32	4
BOLT/SM/M10X15	19	7
BOLT/SM/M10X23	16	8
	56	2
BOLT/SP	1	18
	3	6
	57	19
	57	23
	58	19
	58	23
BOLT/STUD	36	4
BOLT/STUD/M12X30	31	14
BOLT/THROUGH	85	16
BOLT/WS	85	15
BOOT	5	10
	60	11
BOOT/HORN	59	37
BRACKET COMP	2	11
BRACKET/AXLE COMP	32	1
BRACKET/CCB	67	2
BRACKET/COVER COMP	47	7
BRACKET/DRAWBAR COMP	48	1
BRACKET/E1 COMP	49	25
BRACKET/FENDER/H3	55	21
BRACKET/FENDER/REAR	55	24
BRACKET/FRAME COMP	4	31
BRACKET/LEVER COMP	5	1

Alpabetical Index

1834-097-110-00

Description	Fig.	Key
BRACKET/LINK/HOOD	49	38
BRACKET/RADIATO COMP	1	27
BRACKET/SPRING COMP	28	10
BRACKET/STEP/LH COMP	55	4
BRACKET/STEP/RH COMP	55	7
BRACKET/TANK/LH COMP	4	35
BRACKET/TANK/RH COMP	4	37
BREATHER ASSY	67	4
BRUSH	86	17
BUCKLE/TURN COMP	45	9
	45	22
	46	11
BULB/12V/5W	60	30
BULB/12V21/5W	82	9
BULB/12V21W	59	48
	82	8
BULB/12V5W	59	49
BULB/12V60/55W	57	16
	57	18
	58	16
	58	18
	76	2
	76	4
BULB/LAMP/12V1W	59	43
BULB/LAMP/14V60MA	59	31
BUSH	86	15
BUSH,LEVER	1	8
BUSH/10X12X20	43	5
	44	5
	74	6
BUSH/16X18X15	22	2
BUSH/16X18X25	56	25
BUSH/25X28X25	28	7
BUSH/32X36X25	56	7
BUSH/35X39X20	16	2
BUSH/45X50X42	39	3
BUSH/50X55X14	79	12
BUSH/50X55X37	39	2
BUSH/62X67X20	35	6
BUSH/62X67X30	35	15
BUSHING/DRAIN	85	20
BUTTON	29	4
BUZZER ASSY	59	27
CABLE/ACCELERATOR	5	9
CABLE/BATTERY ASSY	57	6

Description	Fig.	Key
CABLE/BATTERY ASSY	58	6
CABLE/EARTH ASSY	57	9
	58	9
CAM/BRAKE COMP	27	12
CAP	1	2
	1	41
CAP,BLANK/72	6	3
CAP,BLANK/M10	35	18
CAP,OIL/A	35	3
CAP,PTO SHAFT	15	3
CAP/30	5	14
CAP/32X7	79	29
CAP/35	6	4
CAP/BLANK/M10	36	19
CAP/BLANK/M16	6	18
	32	16
CAP/FUEL ASSY	4	4
CAP/OIL(30)	40	36
CAP/VALVE	68	6
	68	12
	69	5
	71	6
	71	12
	72	5
CAP/WHEEL	30	2
CASE ASSY	67	6
CASE/CYLINDER ASSY	39	1
CASE/DIFF	24	4
	34	10
CASE/DIFF/REAR ASSY	24	3
CASE/FINAL	36	1
CASE/FINAL/LH	36	17
CASE/FINAL/RH	36	18
CASE/HMP1/007	79	1
CASE/TRANSMISSION/F/	6	1
CASE/TRANSMISSION/M/	10	1
CASE/TRANSMISSION/RE	15	1
CHAIN/CHECK/A COMP	45	11
CHAIN/CHECK/B COMP	45	10
CHAIN/CHECK/E4 ASSY	45	8
CLAMP	33	8
CLAMP,HARNESS	39	12
	60	1
CLAMP,RADIATOR HOSE	42	20
CLAMP/23	42	37

Description	Fig.	Key
CLAMP/23	42	48
CLAMP/PIPE/39-42	2	8
CLAMP/WIRE/13-18	67	11
CLAMP/WIRE/22-26	67	12
CLAMP/WIRE/26-30	3	20
CLAMP/WIRE/30-38	1	24
CLAMP/WIRE/32-40	41	10
CLAMP/WIRE/36-44	1	23
CLAMP/WIRE/45-53	3	18
CLAMP/WIRE/54-65	3	8
CLAMP/WIRE/59-70	3	9
CLAMP/WORM/16-25	42	7
CLAMP/WORM/50-70	3	12
	3	17
CLEANER/AIR ASSY	3	1
CLIP	3	3
CLIP B	31	9
	42	11
	60	7
CLIP/BAND	59	17
CLIP/HOSE/11-13	4	24
	4	28
CLIP/HOSE/12.6-13.4	4	21
CLIP/HOSE/13.8-14.8	1	26
	4	22
	6	9
	39	28
CLIP/HOSE/8.7-9.3	4	19
	4	30
CLUMP	1	45
CLUTCH/PTO ASSY	8	8
CLUTCH/STARTER ASSY	85	5
COLLAR	60	47
	80	7
	81	7
	81	7
COLLAR(35X50X2)	25	4
	25	11
	25	26
COLLAR/08X10X14	1	4
COLLAR/08X12X15	31	4
COLLAR/09X14X11	1	32
COLLAR/09X14X14	60	18
COLLAR/09X14X21	75	6
COLLAR/11X21X03	41	62

Alpabetical Index

Description	Fig.	Key
COLLAR/12X24X12	53	18
COLLAR/16X32X08	40	26
COLLAR/19X28X02	80	9
	81	9
	81	9
COLLAR/26X34X14	8	13
COLLAR/41X55X4	36	30
COLLAR/46X51X16	34	3
COLLAR/46X54X146	25	24
COLLAR/48X52X17	34	4
COLLAR/64X76X16	23	3
COLLAR/69X80X07	23	6
COLLAR/9X14X8	51	4
	51	11
COLLOR	86	3
CONTROL VALVE ASSY	41	47
CONTROLLER/PTO/ST	59	51
CONTROLLER/STEERING	31	1
COOLER/OIL ASSY	42	23
COUPLING/20X27X52	13	10
	33	3
COUPLING/21X32X50	8	4
COUPLING/30X40X43	9	1
COUPLING/30X42X60	11	19
	14	1
COUPRING/16X27X55	7	8
COVER	39	13
	80	13
	81	13
	81	13
	85	23
COVER ASSY	3	2
	67	5
COVER,BEARING	86	5
COVER/BUSH/HMP1/007	79	31
COVER/CENTER	55	1
COVER/COLUMN	30	3
COVER/CYLINDER/LH	38	1
COVER/CYLINDER/RH	38	2
COVER/DASH/E4	54	13
COVER/END/REAR	86	13
COVER/FUSE	59	16
COVER/HOSE COMP	54	21
COVER/PUMP/HMP1/007	79	33
COVER/RELIEF/HST	6	10

Description	Fig.	Key
COVER/ROD/A SET	83	3
COVER/ROD/B SET	83	7
COVER/SHIELD	47	5
COVER/SIDE/LH COMP	4	39
COVER/SW COMP	60	49
COVER/SWITCH	59	4
COVER/TANK COMP	4	10
COVER/TRUNNION/HMP1/	79	32
COVER/WHEEL	36	35
CRANK/LIFT	39	22
CUP	84	4
CUP/FUEL	4	6
CUSHION/RUBBER/10X25	1	5
	1	37
	49	27
CYLINDER ASSY	31	12
DAMPER/HOOD ASSY	49	48
DIODE	59	6
DRAWBAR/E4	48	6
DUMPER/OIL ASSY	56	3
ELEMENT	84	7
ELEMENT ASSY	3	4
FENDER/LH COMP	51	1
FENDER/RH COMP	51	8
FILTER/FUEL	4	5
FILTER/FUEL ASSY	4	13
FILTER/OIL ASSY	42	40
	42	41
FILTER/SUCTION/400	41	1
FLAME/FRONT COMP	49	32
FLANGEBOLT	1	29
	42	24
	53	8
FLANGEBOLT/M10X16	54	3
	57	12
	58	12
FLANGEBOLT/M10X20	53	11
	55	6
	55	9
	55	23
FLANGEBOLT/M10X25	36	37
	55	5
	55	8
FLANGEBOLT/M10X30	25	16
FLANGEBOLT/M10X40	25	15

Description	Fig.	Key
FLANGEBOLT/M10X55	54	4
FLANGEBOLT/M10X65	11	21
	25	17
FLANGEBOLT/M12X55	7	12
FLANGEBOLT/M6X10	52	2
	52	5
FLANGEBOLT/M6X12	5	2
	59	53
	60	3
	60	5
	60	13
	60	15
	60	43
	60	56
	60	58
FLANGEBOLT/M6X16	54	33
	59	26
FLANGEBOLT/M6X20	67	8
FLANGEBOLT/M6X30	60	20
FLANGEBOLT/M8X12	15	4
	17	8
	19	13
	38	3
	51	2
	51	9
	52	3
	54	28
	55	2
	55	14
	55	20
	55	25
	60	40
	60	52
FLANGEBOLT/M8X16	6	20
	28	11
	31	10
	41	8
	41	39
	42	21
	42	38
	42	43
	42	45
	42	49
	47	6
	47	8

Alpabetical Index

1834-097-110-00

Description	Fig.	Key
FLANGEBOLT/M8X16	49	51
	49	57
	54	27
	55	27
	55	30
	60	8
	60	34
	67	3
FLANGEBOLT/M8X20	6	11
	7	7
	16	4
	18	6
	24	2
	40	29
	43	20
	44	24
	54	29
	54	31
	59	29
	74	23
FLANGEBOLT/M8X25	16	5
	56	4
FLANGEBOLT/M8X30	40	16
FLANGEBOLT/M8X35	16	6
	41	43
FLANGEBOLT/M8X45	75	5
FLANGEBOLT/M8X55	41	32
FORK/LIFT COMP	46	10
FORK/SHIFT/DIFFLOCK	26	1
FORK/SHIFT/PTO/E4	19	1
FORK/SHIFT/SUB/H	17	1
FRAME/DRIVEEND ASSY	86	7
FRAME/END/REAR	86	12
FRAME/LH COMP	54	24
FRAME/REAR/SAE/LH	62	1
FRAME/REAR/SAE/RH	62	2
FRAME/RH COMP	54	25
FRAME/STARTEREND	85	10
FRAME/UPPER/EEC COMP	63	1
FUSE(BLADE/32V15A)	59	11
FUSE/BLADE/32V05A	59	9
FUSE/BLADE/32V10A	59	10
FUSE/SLOW BLOW/40A	59	8
FUSE/SLOW BLOW/50A	59	7
GASKET	2	2
GASKET	79	19
	82	1
GAUGE/FUEL ASSY	4	8
GAUGE/LEBEL	15	2
GEAR/07X33 SET	23	1
GEAR/09X20 SET	34	1
GEAR/BEVEL/10	36	26
GEAR/BEVEL/11	36	7
GEAR/BEVEL/15	34	12
GEAR/BEVEL/17	36	10
GEAR/BEVEL/20	24	6
	24	7
GEAR/BEVEL/48	36	29
GEAR/HELICAL/09/LH	25	1
GEAR/HELICAL/09/RH	25	6
GEAR/HELICAL/11/E4	8	1
GEAR/HELICAL/53	25	23
GEAR/HERICAL/50	8	5
GEAR/SPUR/16/E4	12	6
GEAR/SPUR/18	12	2
GEAR/SPUR/21	11	1
GEAR/SPUR/24	13	1
GEAR/SPUR/27/E4	12	3
GEAR/SPUR/29	11	5
GEAR/SPUR/29-37	13	3
GEAR/SPUR/30	11	9
GEAR/SPUR/32	11	13
GEAR/SPUR/33-24/E4	12	10
GEAR/SPUR/34	13	6
GEAR/SPUR/35	12	1
GENERATOR ASSY	75	2
GENERATOR/60A SET	75	1
GRILLE	50	1
GRIP/03X17X74	43	14
	44	16
	74	15
GRIP/03X17X97	40	31
GRIP/4WD	21	2
GRIP/ASSIST	51	15
GRIP/MAIN	20	3
GRIP/MID/PTO	22	11
GRIP/ORANGE	29	5
GRIP/THROTTLE	5	8
GROMMET	51	3
	51	10
GROMMET/10X30X5	55	10
GROMMET/10X40X03	60	27
GROMMET/12X17X04	54	26
GROMMET/19X26	62	5
GUARD/LIGHT	60	32
GUIDE/LEVER/LH COMP	52	1
GUIDE/LEVER/RH COMP	52	4
HANDLE,ADJUST	41	69
HARNESS,GLOW	57	29
	58	30
HARNESS/HOOD ASSY	57	20
	58	20
HARNESS/JOINT/THERMO	57	31
	58	32
HARNESS/LAMP	60	31
HARNESS/MAIN/E4/H3	59	5
HARNESS/OILPRES ASSY	57	32
	58	33
HARNESS/ORTERNATER	75	7
HARNESS/SOCKET/E4	60	26
HARNESS/TRAILER/E4	60	25
HEAD/SPOOL	80	2
	81	2
	81	2
HOLDER	5	13
	41	36
HOLDER ASSY	74	5
HOLDER COMP	41	40
	43	4
	44	4
HOLDER/BRUSH ASSY	86	16
HOLDER/JE/9-9	60	38
	60	39
HOLDER/PIPE	41	37
	41	38
	41	41
	41	42
HOLDER/PLATE	40	24
HOLDER/RECTIFIE ASSY	86	14
HOLDER/STARTER ASSY	85	11
HOOD/SIDE/LH COMP	49	5
HOOD/SIDE/RH COMP	49	14
HOOD/UPPER COMP	49	1
HOOK COMP	1	31
HOOK/TOPLINK	45	26

Alpabetical Index

Description	Fig.	Key
HORN ASSY	57	22
	58	22
HOSE/08X13X300	4	23
	4	27
HOSE/08X15X220 ASSY	1	25
HOSE/100	41	9
HOSE/1180 ASSY	42	18
HOSE/130	42	6
HOSE/1450 ASSY	31	8
	42	10
HOSE/1700 ASSY	42	36
HOSE/1750 ASSY	42	19
HOSE/500 ASSY	42	46
HOSE/600 ASSY	44	19
	74	18
HOSE/640 ASSY	44	20
	74	19
HOSE/700	4	7
HOSE/950 ASSY	43	16
	44	18
HOSE/BREATHER	6	8
	39	27
	67	9
HOSE/CLEANER	3	7
	3	11
	3	16
HOSE/FUEL/630 ASSY	4	20
HOSE/FUEL/900 ASSY	4	29
HOSE/JOINT	21	5
HOSE/RADIATOR/INLET	1	21
HOSE/RADIATOR/OUTLET	1	22
HOSE/RUBBER	1	43
	1	44
	1	46
	3	19
	67	10
HOUSING/AXLE	35	1
HOUSING/AXLE/LH	25	13
HOUSING/AXLE/RH	25	14
HOUSING/STARTER ASSY	85	9
HST/TLE/26 ASSY	7	9
HUB(11X22X41)	54	2
HUB/PEDAL COMP	28	6
INSULATOR	1	10
	4	40
INSULATOR	28	5
	32	15
	48	9
	48	15
	49	2
	49	8
	49	18
	63	9
INSULATOR/080	1	30
	59	46
INSULATOR/10X10X500	55	22
INSULATOR/110X700X20	49	4
INSULATOR/120	20	4
	22	10
INSULATOR/15	31	7
INSULATOR/15X15X190	1	9
INSULATOR/180	42	35
INSULATOR/20X200	4	11
INSULATOR/240	54	6
INSULATOR/425	1	11
INSULATOR/60	1	12
	1	20
INSULATOR/CENTER	55	3
INSULATOR/COLUMN/LH	54	8
INSULATOR/COLUMN/RH	54	9
INSULATOR/COVER	54	23
INSULATOR/DASH	54	5
	54	10
INSULATOR/DASH/LH	54	11
INSULATOR/DASH/RH	54	12
INSULATOR/HEAT-RESIS	49	10
	49	11
INSULATOR/HOOD	49	3
INSULATOR/HOOD/1220	49	29
INSULATOR/LAMP	60	22
INSULATOR/LEVER/SUB	40	32
	43	13
	44	15
	74	14
INSULATOR/LH	54	18
INSULATOR/MUFFLER	49	9
INSULATOR/PANEL	54	7
INSULATOR/RH	54	19
INSULATOR/SIDE	49	15
INSULATOR/STEP/LH	55	16
INSULATOR/STEP/RH	55	18
INSULATOR/UPPER	54	17
KEY	1	39
	59	2
KEY/05X05X10	24	11
KNOB	59	36
LABEL/1322/2014	53	10
LABEL/4WD	65	7
LABEL/78/764	53	9
LABEL/BATTERY	66	10
	66	14
LABEL/BATTERY/80D26R	66	17
LABEL/C/BATTERY	66	12
LABEL/C/DRIVE/E4	66	8
LABEL/CAUTION/STEP	66	16
LABEL/CONTROL/FOOD	65	11
LABEL/CONTROL/LH	65	2
LABEL/CONTROL/POSITI	65	5
LABEL/CONTROL/PTO/E4	65	12
LABEL/CONTROL/RH	65	3
LABEL/CONTROL/SLOW R	65	9
LABEL/CONTROL/SUB	65	4
LABEL/DIFF	65	8
LABEL/ETHER	66	11
LABEL/FUEL	66	9
LABEL/FUSE	59	12
LABEL/FUSE/40A	59	13
LABEL/FUSE/50A	59	18
LABEL/LIGHTING	59	38
LABEL/MAINTENANCE	65	13
LABEL/PARKING	65	6
LABEL/PORT/1ST	43	23
	44	27
LABEL/PORT/2ND	44	28
	74	25
LABEL/PTO	66	7
LABEL/ROPS/E4	66	15
LABEL/SPEED/H/E4	65	10
LABEL/SUB/CONTROL	43	24
	44	29
LABEL/SUB/CONTROL/AU	43	22
	44	26
LABEL/SWITCH/MAIN/E4	65	1
LABEL/TRAILER	66	6
LABEL/TRH1833/H3	48	16

Alpabetical Index

1834-097-110-00

Description	Fig.	Key
LABEL/TURNSIGNAL	59	39
LABEL/W/BELT	66	2
LABEL/W/FAN	66	3
LABEL/W/FUEL	66	13
LABEL/W/HOT	66	4
LABEL/W/RADIATOR	66	1
LABEL/W/STARTER	66	5
LAMP/COMBINATION/REA	60	21
LAMP/FRONT SET	59	47
LAMP/HEAD/LHT/L ASSY	57	15
	76	1
LAMP/HEAD/LHT/R ASSY	57	17
	76	3
LAMP/HEAD/RHT/L ASSY	58	15
LAMP/HEAD/RHT/R ASSY	58	17
LAMP/LED ASSY	59	40
LAMP/NUMBERPLAT SET	60	29
LATCH ASSY	1	16
LEVER	59	35
LEVER/1ST	43	11
	44	12
LEVER/2ND	44	13
LEVER/4WD	21	1
LEVER/PARKING ASSY	29	1
LEVER/POSITION COMP	40	30
LEVER/PTO	22	8
LEVER/SUB	20	1
LEVER/THROTTLE COMP	5	4
LINING/11X40X03	5	3
LINING/16/30/03	40	23
LINING/50	49	52
LINK/DRAWBER	48	10
LINK/HOOD/LOWER COMP	49	40
LINK/HOOD/UPPER COMP	49	43
LINK/LOWER COMP	45	1
LINK/SPOOL COMP	40	11
LINK/SUPPORT COMP	40	18
LINK/TOP ASSY	45	19
LINK/TOP/LH COMP	45	20
LINK/TOP/RH COMP	45	21
LINKPIN	32	11
	45	25
	48	8
	63	6
MAT(LH)	55	31

Description	Fig.	Key
MAT(RH)	55	32
METAL/BRAKE	27	9
METAL/DIFF	24	1
METAL/INPUT/E4	7	5
METAL/MAIN	11	20
METAL/PIVOT/FRONT	35	5
METAL/PIVOT/REAR	35	14
METAL/RELIEF	41	24
METAL/SHIFT	18	5
METAL/TRUNNION	16	1
MIRROR ASSY	54	34
MUFFLER COMP	2	1
NEEDLE	79	11
NET/12X425X438 COMP	1	15
NET/GRILLE	50	4
NET/SIDE/LH COMP	49	50
NET/SIDE/RH COMP	49	58
NIPPLE,GREASE	37	5
	37	10
	56	8
	56	26
NIPPLE,GREASE/PT1/8	22	3
	28	8
	35	10
NIPPLE/GREASE	35	17
NOB/LOCK	63	11
NUT	37	4
	37	9
	45	12
	57	4
	57	11
	58	4
	58	11
	60	10
	85	21
	85	22
	86	2
	86	23
	86	25
NUT COMP	45	23
NUT(M22)	46	12
NUT,CASTLE/M12 P1.25	37	12
NUT,RING	84	5
NUT,SPEED/M4	64	3
NUT,SPEED/M6	50	6

Description	Fig.	Key
NUT,SUS/M8	2	3
NUT,U/M16	48	12
NUT,WASHER/M6	49	13
	49	20
	49	45
NUT/5/8-18UNF	31	2
NUT/FLANGE/M08	53	7
NUT/LH/M08	28	13
	29	10
	29	19
NUT/M06	50	2
	50	7
NUT/M08	41	18
NUT/M10	5	7
	28	24
	41	68
	63	14
NUT/M10/7T	25	19
	53	12
NUT/M12	77	3
NUT/M12/7T	10	4
	27	15
	32	8
	35	9
	35	12
	36	6
	36	24
	48	5
NUT/M14,P=1.5	40	27
NUT/M14/7T	35	19
	70	4
NUT/M16	63	3
NUT/M16/7T	45	5
	45	16
	46	2
NUT/M22	59	34
NUT/M25	34	5
NUT/M40X1.5	23	4
NUT/M6	1	19
NUT/M8	28	15
	29	8
	29	21
	40	17
	40	35
	41	17

Alpabetical Index

Description	Fig.	Key
NUT/M8	42	3
	56	17
	56	35
	82	7
NUT/RING	59	3
NUT/SM/M12X65	31	16
NUT/WASHER	1	28
NUT/WASHER/M10	49	49
	51	16
NUT/WASHER/M4	4	9
NUT/WASHER/M6	57	14
	58	14
NUT/WASHER/M8	33	10
	51	7
	51	14
	56	5
	57	7
	58	7
	60	37
OIL SEAL	79	30
O-RING	67	7
	85	19
O-RING/1A,G100	36	2
O-RING/1A,G35	41	6
O-RING/1A,G45	41	2
	41	5
O-RING/1A,G60	7	6
O-RING/1A,G65	79	34
	84	6
O-RING/1A,G70	35	2
O-RING/1A,P14	18	2
O-RING/1A,P16	7	10
	84	9
O-RING/1A,P20	17	6
	19	11
O-RING/1A,P21	84	3
O-RING/1A,P34	33	7
	35	16
O-RING/1A,P36	33	6
O-RING/1A,P52	79	38
O-RING/1A,P7	40	20
O-RING/1B,P10A	41	60
	42	14
O-RING/1B,P11	42	9
	42	28
O-RING/1B,P11	79	23
O-RING/1B,P12	41	52
	41	57
	80	21
	81	21
	81	21
O-RING/1B,P14	39	14
	41	30
	41	35
	41	46
	41	55
	42	30
	74	17
	79	22
	80	28
	81	28
	81	28
O-RING/1B,P16	41	28
	41	66
	73	2
	78	3
	78	7
O-RING/1B,P18	41	58
O-RING/1B,P20	41	12
	41	21
	41	26
	78	9
O-RING/1B,P22	41	65
	78	2
O-RING/1B,P24	6	6
O-RING/1B,P65	39	16
O-RING/1B,P7	80	25
	81	25
	81	25
O-RING/1B,S44	83	11
O-RING/1B,S48	83	12
O-RING/AS568/013	78	10
O-RING/AS568/014	78	11
O-RING/AS568/015	78	12
ORNAMENT/ISEKI	64	1
ORNAMENT/ISEKI/LH	64	4
ORNAMENT/ISEKI/RH	64	5
ORNAMENT/STEERING	64	7
ORNAMENT/TLE3400	64	6
PACKING	1	42
PACKING	35	4
PACKING,OIL PUMP	41	16
	42	2
PACKING/PISTON	83	2
PAD	28	3
PAD/PS	31	3
PANEL/DASH COMP	54	1
PANEL/INSTRUMEN ASSY	61	1
PANEL/REAR	55	29
PANEL/STEP COMP	55	19
PANEL/SWITCH COMP	59	28
PEDAL/BRAKE SET	28	1
PEDAL/HST ASSY	56	31
PIN	40	6
PIN ASSY	32	9
	63	4
PIN COMP	48	14
	49	35
PIN,HAIR	21	4
	56	20
PIN,KNOCK	27	11
PIN,ROD COMP	39	24
PIN,SNAP/6	43	10
	44	11
	74	11
PIN,SPLIT/1.6X15	52	9
PIN,SPLIT/2.5X20	28	21
PIN,SPLIT/2X15	26	5
PIN,SPLIT/2X20	22	7
	28	19
	29	15
	29	25
	40	10
	40	13
	40	22
PIN,SPLIT/3X20	37	13
	45	15
PIN,SPLIT/4X30	45	4
	46	5
PIN,SPRING/3X18 W	21	3
PIN,SPRING/3X25 W	80	24
	81	24
	81	24
PIN,SPRING/5X25 W	34	14
	40	2

Alpabetical Index

1834-097-110-00

Description	Fig.	Key
PIN,SPRING/5X25 W	40	28
PIN,SPRING/6X25 W	19	4
PIN,SPRING/6X28 W	26	9
PIN,SPRING/6X40 W	26	7
PIN,SPRING/8X28 W	17	10
	18	8
	19	15
PIN,ST	79	35
PIN,ST,B/10X24	6	15
	10	6
	11	22
	24	14
	25	21
	36	3
	36	36
	39	11
PIN,ST,B/8X16	6	12
	7	11
PIN,TAPER/8X50	28	2
	29	17
PIN,YOKE A	28	17
	29	23
PIN/05X23	40	12
PIN/06X31	43	8
	44	9
	74	9
PIN/06X32	26	3
PIN/08X19	29	13
PIN/08X29	49	41
PIN/08X35	29	12
PIN/08X97	49	46
PIN/12X48	45	14
PIN/12X75	34	13
PIN/16X51	46	13
PIN/19X94	45	24
	63	5
PIN/22X99	45	2
	46	1
PIN/25X91	48	7
PIN/30X116 COMP	32	10
PIN/8X36	28	20
PIN/ADJUST	56	12
PIN/M16	56	21
PIN/POSITION COMP	40	4
PIN/SNAP	1	38

Description	Fig.	Key
PIN/SNAP	26	12
	49	28
	49	42
	49	47
PIN/SNAP/B	5	11
PIN/SUPPORT COMP	40	19
PINION/BEVEL/11	34	11
PINION/BEVEL/12	24	5
PINION/STARTER	85	8
PIPE	3	15
	4	17
PIPE COMP	2	7
	3	10
PIPE,BREATHER	6	7
	39	26
PIPE/CHECKVALVE COMP	42	32
PIPE/DEL/FRONT COMP	41	20
PIPE/DEL/REAR/H COMP	41	33
PIPE/RETURN/H COMP	41	44
PIPE/SUC/FRONT COMP	41	11
PIPE/SUC/REAR COMP	41	4
PISTON	39	15
PLATE	6	19
	60	33
	63	12
	80	23
	81	23
	81	23
	86	8
PLATE/ADJAST	75	3
PLATE/BATTERY	57	2
	58	2
PLATE/BUMPER	70	1
PLATE/CAUTION	84	10
PLATE/CONTROLLER	31	5
PLATE/DASH/E1 COMP	54	20
PLATE/FRICTION	27	2
	27	6
PLATE/HITCH	32	5
PLATE/I/30X52	17	7
	19	12
PLATE/IR/19X65	4	2
PLATE/IR/25X138	56	18
PLATE/JOINT/F	49	21
PLATE/JOINT/R	49	23

Description	Fig.	Key
PLATE/L/187X83	47	1
	47	2
PLATE/NUMBER/E4	60	35
PLATE/PRESSURE/LH	27	1
PLATE/PRESSURE/RH	27	5
PLATE/PTO	22	5
PLATE/PV COMP	1	47
PLATE/REFLECTOR COMP	60	17
PLATE/SEAL	1	17
PLATE/SEPARATOR	27	3
	27	7
PLATE/SPRING	79	16
PLATE/STOP COMP	52	6
PLATE/SWASH/HMP1/003	79	4
PLATE/THRUST	79	10
PLATE/VALVE/MOTOR	79	6
PLATE/VALVE/PUMP	79	5
PLATE/Z/19X179	40	8
PLUG	41	51
PLUG(G3/8)	79	20
PLUG(PF1/4)	79	21
PLUG/G3/4 ASSY	6	5
PLUG/M14	80	18
	81	18
	81	18
PLUG/M18	41	27
	78	6
PLUG/M18 ASSY	73	1
PLUG/SCREW/SEAL	6	2
	10	7
	15	5
	19	9
	36	22
	39	4
	39	5
	41	23
	41	31
	41	53
	43	21
	44	25
	74	24
	78	13
PLUG/SEAL	80	27
	81	27
	81	27

Alpabetical Index

Description	Fig.	Key
POPPET	80	19
	81	19
	81	19
POPPET/1.3	78	4
POPPET/CHECK	79	17
POPPET/CHECK/0.7X2	79	18
POPPET/RELIEF	79	15
PROTECTOR/REAR COMP	49	53
PULLEY	86	1
PUMP/FUEL ASSY	4	25
PUMP/GEAR/5.2/R ASSY	42	1
PUMP/GEAR/L10 ASSY	41	15
RADIATOR ASSY	1	1
REFLECTOR ASSY	60	16
REGULATOR ASSY	86	26
RELAY ASSY	59	45
RELAY/5P ASSY	59	14
RELAY/FLASHER/EEC	59	25
RESERVETANK ASSY	1	40
RETAINER	85	7
REVER/2ND	74	12
RING	32	13
	36	34
	63	8
RING,BACK UP	39	17
RING,SNAP/10 C	56	11
RING,SNAP/16 C	56	30
RING,SNAP/24 C	80	17
	81	17
	81	17
RING,SNAP/25 C	11	15
	79	24
RING,SNAP/30 C	9	5
RING,SNAP/32 C	79	26
RING,SNAP/35 C	12	4
	13	2
	25	3
	25	10
	25	27
RING,SNAP/42 C	7	3
	13	13
RING,SNAP/52 C	11	8
	34	9
	36	21
RING,SNAP/R55	11	18
RING,SNAP/R62	9	4
	11	4
RING,SNAP/R68	36	16
RING,SNAP/R72	14	4
	36	9
RING,SNAP/R75	24	24
RING,SNAP/R80	25	5
	25	12
RING,SNAP/R85	11	12
	25	29
RING,SNAP/R90	24	19
RING,SNAP/S40	25	8
	34	19
RING,SNAP/S45	36	15
	39	21
RING,SNAP/S55	34	18
RING/BACK UP	41	61
RING/SEAL/55X03	8	9
RING/SNAP	8	12
	41	63
RING/SNAP/165	27	10
RING/SNAP/CH80	23	5
RING/SNAP/CS20	33	2
RING/SNAP/R62	79	25
RING/SNAP/WR37	83	6
	83	10
RIVET	55	33
ROD	29	2
	39	23
ROD COMP	28	16
	29	22
ROD PACKING	83	4
	83	8
ROD/08X057	56	16
ROD/FORK COMP	28	12
	29	18
ROD/FORK/RH ASSY	46	8
ROD/LEVER	1	36
ROD/LIFT COMP	46	9
ROD/LIFT/LH COMP	46	6
ROD/M08/420	29	7
ROD/M08LX110	29	11
ROD/PISTON COMP	83	1
ROD/TIE/JOINT ASSY	37	3
	37	8
ROD/TIE/LH ASSY	37	2
ROD/TIE/LH SET	37	1
ROD/TIE/RH ASSY	37	7
ROD/TIE/RH SET	37	6
ROD/U/142	26	11
RORA	85	6
ROTOR ASSY	86	4
RUBBER,BUFFER.A	55	12
SCREW	82	3
	84	2
	85	14
SCREW,SEMS/M5X30	60	28
SCREW,SOCKET/M6X10	80	26
	81	26
	81	26
SCREW,SOCKET/M8X20	80	15
	81	15
	81	15
SCREW,SP/M5X16	59	44
SCREW,SP/M6X16	30	4
	49	54
	49	59
	54	14
SCREW,SP/M6X20	61	2
SCREW,TAPPING	49	7
	49	17
SCREW/M4X16	41	70
SCREW/SOCKET	79	40
SCREW/SOCKET/M8X16	79	39
SCREW/TRUSS/M06X16	4	41
	54	15
	60	50
SEAL	84	1
SEAL,DUST	41	64
	83	5
	83	9
SEAL,OIL	25	30
	36	31
SEAL,OIL/21	34	8
SEAL,OIL/OS45554	39	19
SEAL,OIL/TC16307	26	6
SEAL,OIL/TC18308	40	5
SEAL,OIL/TC20428	13	14
SEAL,OIL/TC22358	27	13
SEAL,OIL/TC25357	79	28

Alpabetical Index

1834-097-110-00

Description	Fig.	Key
SEAL,OIL/TC25478	7	4
SEAL,OIL/TC35508	16	3
SEAL,OIL/TC4,14247	80	6
	80	16
	81	6
	81	6
	81	16
	81	16
SEAL/52	36	20
SEAL/OIL	14	5
	35	7
	79	27
SEAL/OIL ASSY	36	12
SEAL/WASHER/10	19	8
SEAT/BACK ASSY	53	2
SEAT/CUSHION ASSY	53	3
SEAT/SLIDE ASSY	53	6
SEAT/SLIDE/LEVE ASSY	53	5
SEAT/SUSPENSION ASSY	53	4
SEAT/W10 ASSY	53	1
SHAFT/178	36	25
SHAFT/312	35	22
SHAFT/396	35	21
SHAFT/4WD/496	33	1
SHAFT/4WD/CHANGE	13	7
SHAFT/4WD/E4	13	11
SHAFT/CLUTCH/PTO/E4	8	10
SHAFT/DIFFLOCK	26	2
SHAFT/DRIVE/PTO/E4	9	2
SHAFT/E4	11	14
SHAFT/IDLER	11	6
SHAFT/INPUT/E4	7	1
SHAFT/MOTOR/HMP1/003	79	8
SHAFT/PINION	24	8
SHAFT/PTO	14	2
SHAFT/PUMP/HMP1/003	79	7
SHAFT/SLOWRETURN	41	67
SHAFT/TRUNNION	16	7
SHAFT/WHEEL	36	28
SHAFT/WHEEL/E4	25	22
SHIELD/LH	49	6
SHIELD/RH	49	16
SHIFTER/PTO/E4	19	3
SHIM (C)	34	6
SHIM D T=0.1	34	7
SHIM/0.1	24	16
	24	21
SHIM/0.2	24	17
	24	22
SHIM/74X80X0.1	23	7
SHROUD/400	1	13
SHUCKLE	45	13
SLEEVE	80	8
	81	8
	81	8
SLEEVE/DETENT	80	10
	81	10
	81	10
SLEEVE/DIFFLOCK COMP	24	12
SLEEVE/SI354116	14	6
SPOOL/DELECT	80	22
	81	22
	81	22
SPRING	29	3
	41	49
	41	50
	46	7
	56	15
	80	20
	81	20
	81	20
	84	8
	86	18
SPRING,BRUSH	85	12
SPRING,DISK	5	5
SPRING,SHIFTER	18	4
SPRING/CLIP	46	14
SPRING/HC015	80	12
	81	12
	81	12
SPRING/HC021	79	14
SPRING/HC022	17	4
	19	6
SPRING/HC030	79	13
SPRING/HC042	80	5
	81	5
	81	5
SPRING/HC045	78	5
SPRING/HE066	28	22
SPRING/HE095	26	13
SPRING/HE108	28	4
SPRING/HE172	40	15
SPRING/HT020	1	35
SPRING/RETURN	85	18
SPRING/WASHER	40	25
STARTER ASSY	67	1
STAY/AUX COMP	43	19
	44	23
	74	22
STAY/BAR/HOSE	3	13
STAY/CONTROLLER	59	52
STAY/FILTER/CHARGE	42	44
STAY/LAMP	54	30
STAY/LAMP COMP	60	23
STAY/MUFFLER	2	5
STAY/SENSOR COMP	60	57
STAY/SHIFT/PTO/E4	19	2
STAY/SHIFT/SUB	17	2
STAY/SIDE/RH COMP	49	56
STAY/SWITCH	60	60
STAY/SWITCH COMP	60	45
	60	51
STAY/SWITCH/PTO COMP	60	14
STAY/SWITCH/SUB COMP	60	2
STAY/TOOL COMP	55	26
STEP/LH COMP	55	15
STEP/RH COMP	55	17
STEP/SUB COMP	55	13
STOPPER/SPRING/A	80	3
	81	3
	81	3
STOPPER/SPRING/B	80	4
	81	4
	81	4
STUD/M10X30/7T	25	18
STUD/M12X25/7T	48	4
STUD/M12X32/7T	32	2
STUD/M12X50/7T	10	3
STUD/M14X35/9T	32	3
SWITCH ASSY	59	33
SWITCH/ALTERNAT ASSY	59	42
SWITCH/BEACON ASSY	60	53
SWITCH/COMBINATION/E	59	32
SWITCH/HAZARD ASSY	59	30
SWITCH/LEVER ASSY	60	4

Alpabetical Index

Description	Fig.	Key
SWITCH/LEVER ASSY	60	41
	60	54
SWITCH/MAGNETIC ASSY	85	13
SWITCH/MAIN ASSY	59	1
SWITCH/PTO ASSY	59	41
SWITCH/PTO/STATIONAL	60	48
SWITCH/PUSH ASSY	60	9
	60	59
SWITCH/SENSOR ASSY	60	12
TANK/FUEL	4	1
TIRE/11.2-24/LH ASSY	68	1
TIRE/11.2-24/RH ASSY	68	7
TIRE/11.2-24-4P ASSY	68	3
	68	9
TIRE/11.2-24-4PR	68	4
	68	10
TIRE/212/80D15	72	3
TIRE/212/80D15 ASSY	72	1
TIRE/355/80D20	69	3
TIRE/355/80D20 ASSY	69	1
TIRE/7-16/LH ASSY	71	1
TIRE/7-16/RH ASSY	71	7
TIRE/7-16-4PR	71	4
	71	10
TIRE/7-16-4PR ASSY	71	3
	71	9
TOOL/FUSE	59	15
TRAY/BOTTLE	51	17
TRIM/130	49	55
	49	61
TRIM/170	49	31
TRIM/30	32	14
TRIM/430	49	60
TRIM/560	49	30
TRIM/70	57	30
	58	31
	60	24
TUBE	68	5
	68	11
	71	5
	71	11
TUBE/020	63	10
TUBE/120	57	13
	58	13
TUBE/190 COMP	33	5
TUBE/460 COMP	33	4
TURNBUCKLE/M8	28	14
	29	9
	29	20
UNIT/TIMER ASSY	59	50
U-NUT	1	7
	1	33
	47	9
U-NUT/M10X1.5	63	13
VALVE	3	5
	41	56
	69	4
	72	4
VALVE SET	41	48
VALVE SET	80	1
	81	1
	81	1
VALVE/CHECK ASSY	42	29
VALVE/CONTROL ASSY	43	1
	44	1
	74	2
VALVE/INDEPENDENT	42	13
VALVE/PRV/B ASSY	78	8
VALVE/REDUCE/21 SET	78	1
VALVE/RELIEF SET	79	37
VALVE/RELIEF/07 ASSY	41	25
VALVE/REMOTE/2ND/3	74	1
VALVE/SLOW RETURN/00	41	59
WASHER	5	6
	82	4
WASHER,PL/M10	22	6
	56	19
WASHER,PL/M12	27	17
WASHER,PL/M16	45	7
	45	18
	46	4
	56	23
	56	28
WASHER,PL/M5	40	14
WASHER,PL/M6	26	4
	43	9
	44	10
	57	5
	58	5
	74	10
WASHER,PL/M8	4	16
	28	18
	29	14
	29	24
	33	11
	40	9
	40	21
	47	10
	82	5
WASHER,SP/M10	4	34
	25	20
	39	10
	43	3
	44	3
	53	13
	56	14
	74	4
WASHER,SP/M12	10	5
	27	16
	31	15
	32	7
	35	13
	36	5
	37	11
	47	4
	48	3
WASHER,SP/M14	35	20
	62	4
	70	3
WASHER,SP/M16	45	6
	45	17
	46	3
	48	13
	56	22
WASHER,SP/M6	41	14
	56	9
	56	27
WASHER,SP/M8	2	4
	4	15
	40	7
	41	19
	42	4
	42	17
	80	14
	81	14

Alpabetical Index

Description	Fig.	Key	Description	Fig. Key	Description	Fig. Key
WASHER,SP/M8	81	14				
	82	6				
WASHER/07X18X01	54	16				
WASHER/07X18X02	49	44				
WASHER/09X28X05	60	19				
WASHER/11X22X02	53	17				
WASHER/16X26X02	56	29				
WASHER/17X35X2	22	4				
WASHER/19X30X03	45	3				
WASHER/24X9X3.2	1	6				
	49	36				
WASHER/25X46X3	12	8				
WASHER/30X46X03	12	9				
WASHER/38X52X01	24	10				
WASHER/63X75X02	24	23				
WASHER/6X14X3	50	5				
	64	2				
WASHER/6X24X2	52	8				
WASHER/75X90X03	24	18				
WASHER/9X22X2	1	34				
WASHER/PINION	24	9				
WASHER/RUBBER	82	2				
WASHER/SPRING/10	53	16				
WASHER/SPRING/M12	36	39				
WASHER/SPRING/M16	25	32				
WEIGHT/15 SET	77	1				
WHEEL/15X7COMP	72	2				
WHEEL/16X5JA COMP	71	2				
	71	8				
WHEEL/20XW11 COMP	69	2				
WHEEL/24XW10 COMP	68	2				
	68	8				
WHEEL/STEERING/360	30	1				
WIRE/02X300	32	12				
YOKE/STARTER ASSY	85	1				