Directions for use of Parts Catalogue

1. Applicable model of machines

All component and option parts used for TK538H tractors are listed in this parts catalogue.

1) MODEL TYPE

F····· 4WD

H····· HST.

S····· POWER STEERING & INDEPENDENT PTO

C····· CABIN

R····· ROPS

2) AREA CODE

E4···· EUROPE

2. Explanation for head paragraph

KEY	PART CODE	DESCRIPTION	SPC	TYPE OF MODEL						ITC	COL	GRP	REMARKS
				SSM48M	SSM48F	SSM48G	SRM48M	SRM48F	SRM48G				
1	8595-211-001-20	CASE/UPPER	*	1 -223									
1A	8657-201-081-00	CASE/UPPER	*	1 230-			1						
2	8595-211-002-10	CASE/LOWER	*	1			1						
3	V523-100-801-80	PIN	*	2			2						
4	V211-260-803-00	BOLT, SEMS	*	4			4						
			*	2 -223									
			*	2 230-			2						
				2			2						
				1			1						

① KEY shows the location of parts diagramed in the illustration.

② Parts numbers begin with `V´ and `W´ are standard parts of the market.

③ `LH´ and `RH´ on the parts name are described against the moving direction of the machine or are described on the condition how to install parts on the machines.

④ SPC : The following symbol classifies parts to be used for machines.

`*´ means standard parts.

`T´ shows that the parts can be installed as optional parts.

`R´ shows that the parts can be used as applicable parts to replace originally equipped parts.

⑤ Upper column : QTY shows the number of parts to be used for one unit of machine.

`M´ is indicated for parts supplied by a meter long.

`ℓ´ is indicated for parts supplied by liter.

`AR´ is indicated for parts need to be adjusted or regulated.

Lower column : serial number

—229 means serial number up to 229.

230— means serial number 230 and after.

⑥ ITC : Interchangeability

`1´…OLD ← NEW

New parts can be used in place of the old parts.

`2´…OLD → NEW

Old parts can be used in place of the new parts.

`3´…OLD →← NEW

Old parts and new parts can not be replaced each other.

⑦ COL : Color code

Color is signified with color code number for colored parts.

Please see the color list shown in the next page.

⑧ GRP : Parts shown in this column can be replaced by SET parts.

Example : Parts marked Ⓐ can be replaced by parts marked Ⓑ, and Ⓓ for Ⓒ, so the rest follow in the same alphabetical order.

⑨ Remarks

* Other maker's part code number is shown in this column.
* When Fig. No. is shown in the Remark column of SET parts or ASSY parts, each of their component parts are listed in said Fig. No.

3. Color :

The following colors are used color parts.

COLOR CODE	COLOR	SPRAY TYPE CODE NUMBER	PAINTS 4K DRUM	PAINTS 16K DRUM
4 G	CRYSTAL BLUE	1300-957-001-10	1300-957-003-00	1300-957-004-00
5 I	SUNSET GRAY	1300-959-001-10	1300-959-003-00	1300-959-004-00
6 G	SUMMER WHITE	1300-958-001-10	1300-958-003-00	1300-958-004-00
7 F	MIRROR BLACK	1300-954-001-10	1300-954-003-00	1300-954-004-00
8 E	SILVER MIST	1300-968-001-10	1300-968-003-00	1300-968-004-00
8 F	BRILLIANT BROWN METALLIC	1300-972-001-10	1300-972-003-00	————

NOTE : Color code is signified only for the parts assigned by the maker as color parts.

4. Serial Numbers :

1) For engines serial number is stamped on CYLINDER BLOCK ASSY.
   Please see Fig. No. 6－1.
2) For chassies serial number is shown on the LABEL.
   Please see

5. Parts Order

1) Parts numbers listed in the parts catalogue are all registered in "ISEKI on-line computer".
2) When you order parts, please make sure of correct numbers.
3) When substitute parts is available, the part number ordered will be automatically turned to a new part number.
4) Please be sure to use "ISEKI GENUINE PARTS".
   Any other similar parts other than ISEKI parts when used may cause a trouble that makes us unable to repair or guarantee the warrant.

P. 1 *** STRUCTURE TABLE OF MODEL ***

MODEL FIG	TK 5FFF 3HHH 8SSS HCER E4E 4 4													
1	***													
2	***													
3	***													
4	**													
5	*													
6	**													
7	*													
8	***													
9	***													
10	***													
11	***													
12	***													
13	***													
14	***													
15	***													
16	***													
17	***													
18	***													
19	***													
20	***													
21	***													
22	***													
23	***													
24	***													
25	***													
26	***													
27	***													
28	***													
29	***													
30	***													
31	***													
32	***													
33	***													
34	***													
35	***													
36	***													
37	***													
38	***													
39	***													
40	***													
41	***													
42	***													
43	***													
44	***													
45	***													

P. 2 *** STRUCTURE TABLE OF MODEL ***

MODEL FTG	TK 5FFF 3HHH 8SSS HCER E4E 4 4													
46	***													
47	***													
48	***													
49	***													
50	***													
51	***													
52	***													
53	***													
54	***													
55	***													
56	***													
57	***													
58	***													
59	***													
60	***													
61	***													
62	***													
63	**													
64	***													
65	***													
66	***													
67	***													
68	*													
69	***													
70	*													
71	**													
72	***													
73	***													
74	**													
75	*													
76	***													
77	***													
78	**													
79	*													
80	*													
81	*													
82	*													
83	*													
84	*													
85	**													
86	*													
87	***													
88	***													
89	***													
90	***													

P. 3 *** STRUCTURE TABLE OF MODEL ***

MODEL FTG	TKFHSHER E4E 4 4
91	**
92	*
93	***
94	***
95	**
96	*
97	*
98	***
99	*
100	*
101	*
102	*
103	*
104	*
105	*
106	*
107	*
108	*
109	*
110	*
111	***
112	***
113	TTT
114	***
115	***
116	TTT
117	TT
118	TTT
119	TTT
120	TTT
121	TTT
122	TTT
123	TTT
124	TTT
125	TTT
126	TTT
127	TTT
128	TTT
129	TTT
130	TTT
131	TTT
132	TTT
133	TTT
134	TT
135	TTT

P. 4 *** STRUCTURE TABLE OF MODEL ***

MODEL FIG	T K 5FFF 3HHH 8SSS HCER E4E 4 4													
136	TTT													
137	TTT													
138	TTT													
139	T													
140	T													
141	T													
142	TTT													
143	***													
144	***													
145	***													
146	***													
147	*													
148	*TT													
149	***													
150	***													

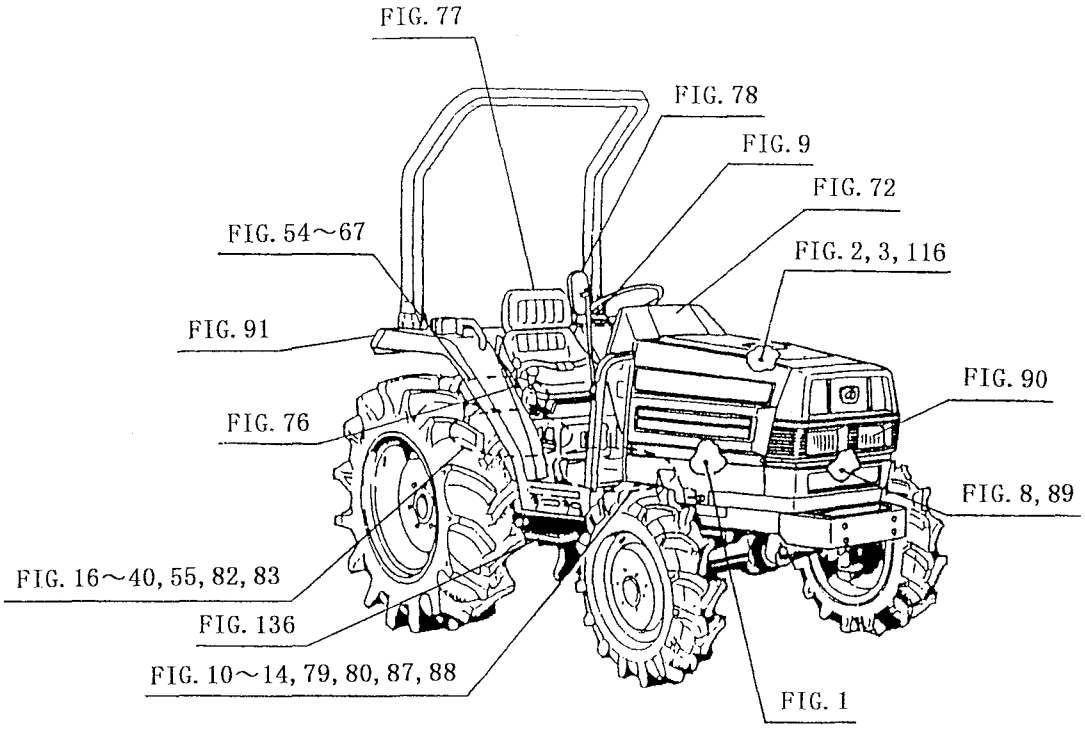
FIG. 77
FIG. 78
FIG. 9
FIG. 72
FIG. 54～67
FIG. 2, 3, 116
FIG. 91
FIG. 90
FIG. 76
FIG. 8, 89
FIG. 16～40, 55, 82, 83
FIG. 136
FIG. 10～14, 79, 80, 87, 88
FIG. 1

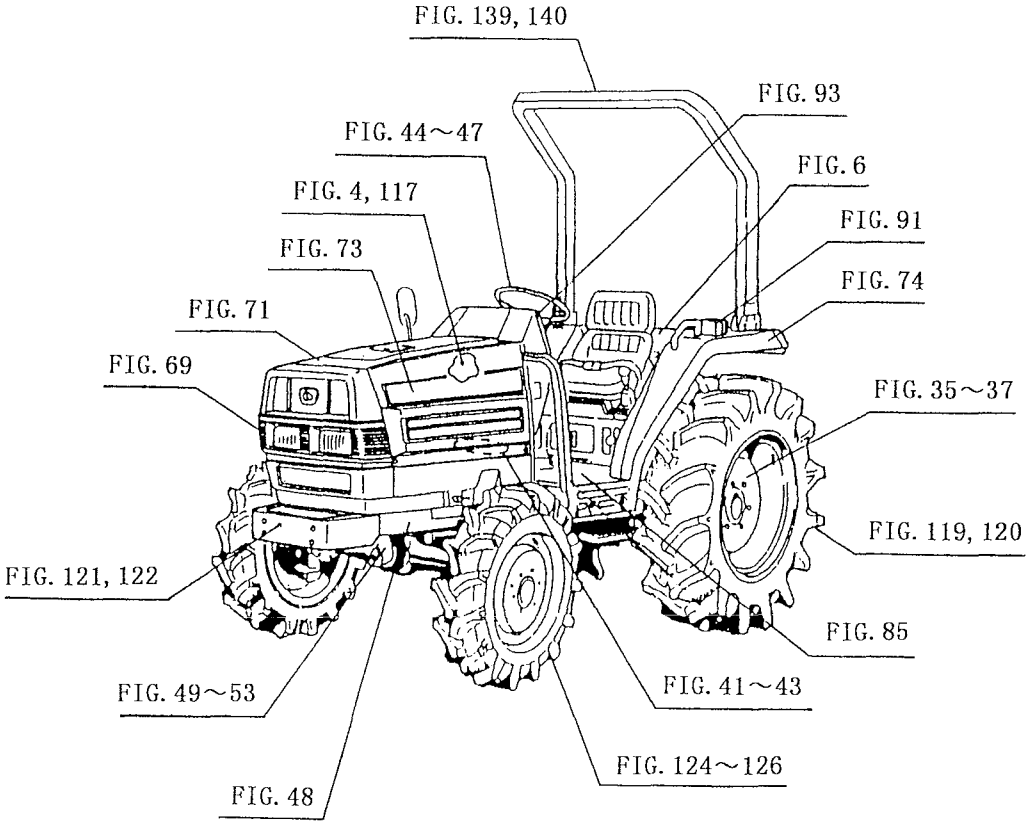
FIG. 139, 140
FIG. 93
FIG. 44～47
FIG. 6
FIG. 4, 117
FIG. 91
FIG. 73
FIG. 74
FIG. 71
FIG. 69
FIG. 35～37
FIG. 119, 120
FIG. 121, 122
FIG. 85
FIG. 41～43
FIG. 49～53
FIG. 124～126
FIG. 48

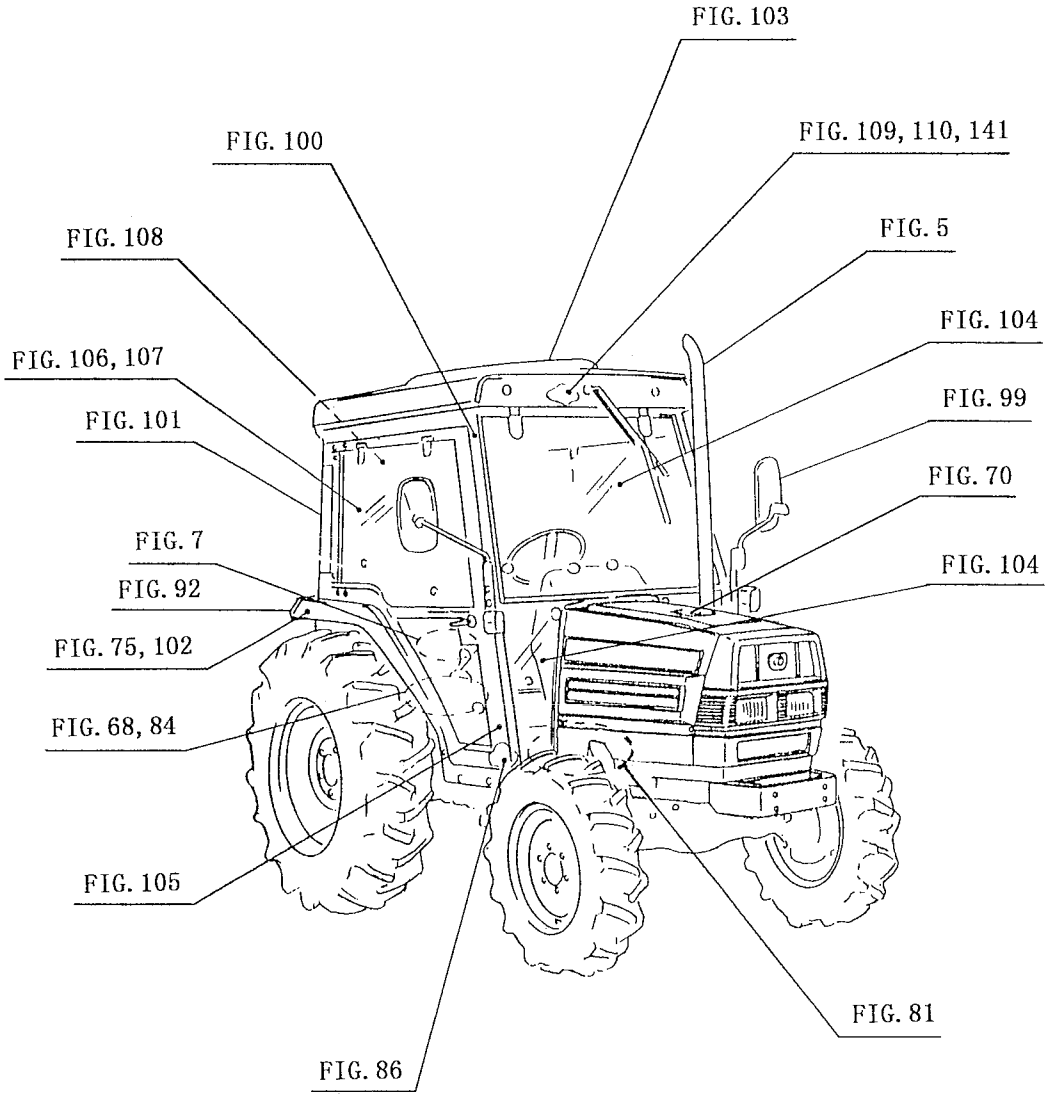
FIG. 103
FIG. 100
FIG. 109, 110, 141
FIG. 108
FIG. 5
FIG. 104
FIG. 106, 107
FIG. 99
FIG. 101
FIG. 70
FIG. 7
FIG. 104
FIG. 92
FIG. 75, 102
FIG. 68, 84
FIG. 105
FIG. 81
FIG. 86

CONTENTS

TK538H

ENGINE (E3CD-TB05)

CYLINDER HEAD ..... Fig. 1

CYLINDER HEAD COVER ..... Fig. 2

INLET MANIFOLD ..... Fig. 3

EXHAUST MANIFOLD ..... Fig. 4

TURBO CHARGER ..... Fig. 5

CYLINDER BLOCK ..... Fig. 6

BEARING/UNDER SIZE (OPTION) ..... Fig. 7

OIL PAN ..... Fig. 8

REAR PLATE ..... Fig. 9

TIMING GEAR CASE ..... Fig. 10

HANGER ..... Fig. 11

VALVE ..... Fig. 12

CAM SHAFT ..... Fig. 13

PISTON ..... Fig. 14

PISTON/OVER SIZE (OPTION) ..... Fig. 15

CRANK SHAFT ..... Fig. 16

OIL PUMP ..... Fig. 17

WATER PUMP ..... Fig. 18

COOLING FAN ..... Fig. 19

INJECTION NOZZLE ..... Fig. 20

INJECTION PUMP ..... Fig. 21

FUEL PIPE ..... Fig. 22

ELECTRIC (1) ..... Fig. 23

ELECTRIC (2) ..... Fig. 24

REPAIR PARTS (OPTION) ..... Fig. 25

COMPONENT PARTS FOR 6215-300-037-00 ON Fig.20 ..... Fig. 26

COMPONENT PARTS FOR 6215-600-078-00 ON Fig.21 ..... Fig. 27

COMPONENT PARTS FOR 6281-100-007-20 ON Fig.23 ..... Fig. 28

COMPONENT PARTS FOR 6281-200-020-00 ON Fig.23 ..... Fig. 29

CONTENTS

CHASSIS

FUEL SYSTEM ..... Fig. 1
AIR CLEANER SYSTEM ..... Fig. 2
RADIATOR SYSTEM ..... Fig. 3
MUFFLER SYSTEM (EXCEPT C TYPE) ..... Fig. 4
MUFFLER (UPPER) SYSTEM (C TYPE) ..... Fig. 5
TANK (FUEL) SYSTEM (EXCEPT C TYPE) ..... Fig. 6
TANK (FUEL) SYSTEM (C TYPE) ..... Fig. 7
BATTERY BASE SYSTEM ..... Fig. 8
ACCELERATOR SYSTEM ..... Fig. 9
CASE (FRONT) SYSTEM ..... Fig. 10
INPUT SHAFT SYSTEM ..... Fig. 11
MAIN GEAR SYSTEM ..... Fig. 12
HST UNIT SYSTEM ..... Fig. 13
GEAR (PTO) SYSTEM ..... Fig. 14
METAL (TRUNNION) SYSTEM ..... Fig. 15
CASE (MIDDLE) SYSTEM ..... Fig. 16
CASE (SPACER) SYSTEM ..... Fig. 17
METAL (HST) SYSTEM ..... Fig. 18
REAR MISSION CASE SYSTEM ..... Fig. 19
COVER HOLDER, COVER (BOTTOM) SYSTEM ..... Fig. 20
SUB CHANGE GEAR SYSTEM ..... Fig. 21
SUB CHANGE SYSTEM ..... Fig. 22
4WD DRIVE GEAR SYSTEM ..... Fig. 23
4WD CHANGE SYSTEM ..... Fig. 24
PTO COUNTER SYSTEM ..... Fig. 25
PTO CHANGE GEAR SYSTEM ..... Fig. 26
PTO CHANGE SYSTEM ..... Fig. 27
SUB CHANGE SYSTEM ..... Fig. 28
LEVER (SUB) SYSTEM ..... Fig. 29
LEVER (PTO) SYSTEM (A) ..... Fig. 30

LEVER (PTO) SYSTEM (B) ..... Fig. 31
LEVER (4WD), ROD (4WD) SYSTEM ..... Fig. 32
DRIVE PINION SYSTEM ..... Fig. 33
DIFFERENTIAL GEAR SYSTEM ..... Fig. 34
REAR AXLE HOUSING SYSTEM ..... Fig. 35
WHEEL PINION SYSTEM ..... Fig. 36
REAR WHEEL SHAFT SYSTEM ..... Fig. 37
BRAKE SYSTEM ..... Fig. 38
ROD (BRAKE) SYSTEM ..... Fig. 39
BRAKE (ARM) SYSTEM ..... Fig. 40
BRAKE PEDAL SYSTEM ..... Fig. 41
PARKING BRAKE SYSTEM ..... Fig. 42
DIFF – LOCK PEDAL SYSTEM ..... Fig. 43
STEERING WHEEL SYSTEM ..... Fig. 44
STEERING SHAFT SYSTEM ..... Fig. 45
TILT HANDLE SYSTEM ..... Fig. 46
POWER STEERING SYSTEM ..... Fig. 47
AXLE BRACKET SYSTEM ..... Fig. 48
DRIVE SHAFT SYSTEM ..... Fig. 49
BEVEL CASE SYSTEM ..... Fig. 50
AXLE HOUSING SYSTEM ..... Fig. 51
FRONT GEAR CASE SYSTEM ..... Fig. 52
TIE ROD SYSTEM ..... Fig. 53
CYLINDER CASE SYSTEM ..... Fig. 54
LIFT ARM SYSTEM ..... Fig. 55
CYLINDER SYSTEM ..... Fig. 56
SLOW RETURN SHAFT SYSTEM ..... Fig. 57
LINK (POSITION) SYSTEM ..... Fig. 58
BRACKET (POSITION) SYSTEM ..... Fig. 59
LEVER (POSITION), ROD (POSITION) SYSTEM ..... Fig. 60
PIPING (MAIN) SYSTEM (1/3) (2/3) (3/3) ..... Fig. 61
PIPING (SUB) SYSTEM ..... Fig. 62
STACK SYSTEM (EXCEPT C TYPE) ..... Fig. 63
PIPING (COOLER) SYSTEM ..... Fig. 64

COVER (SHIELD), REAR HITCH SYSTEM ..... Fig. 65
3P LINK SYSTEM ..... Fig. 66
LOWER LINK, LIFT ROD SYSTEM ..... Fig. 67
VALVE (REMOTE/2R) SYSTEM (C TYPE) ..... Fig. 68
GRILLE SYSTEM ..... Fig. 69
HOOD SYSTEM (C TYPE) ..... Fig. 70
HOOD SYSTEM (EXCEPT C TYPE) ..... Fig. 71
FRAME (HOOD), DASH – BOARD SYSTEM ..... Fig. 72
FAN COVER SYSTEM ..... Fig. 73
FENDER SYSTEM (EXCEPT C TYPE) ..... Fig. 74
FENDER SYSTEM (C TYPE) ..... Fig. 75
LEVER GUIDE, LEVER STOPPER SYSTEM ..... Fig. 76
SEAT SYSTEM ..... Fig. 77
BACK MIRROR SYSTEM (EXCEPT C TYPE) ..... Fig. 78
FRONT MOUNT SYSTEM (R TYPE) ..... Fig. 79
FRONT MOUNT SYSTEM (EXCEPT C, R TYPE) ..... Fig. 80
FRONT MOUNT SYSTEM (C TYPE) ..... Fig. 81
REAR MOUNT SYSTEM (EXCEPT C, R TYPE) ..... Fig. 82
REAR MOUNT SYSTEM (R TYPE) ..... Fig. 83
REAR MOUNT SYSTEM (C TYPE) ..... Fig. 84
FLOOR SYSTEM (EXCEPT C TYPE) ..... Fig. 85
FLOOR SYSTEM (C TYPE) ..... Fig. 86
PEDAL (HST) SYSTEM ..... Fig. 87
CRUISE CONTROL SYSTEM ..... Fig. 88
BATTERY (DELKOR) SYSTEM ..... Fig. 89
HEAD LAMP SYSTEM ..... Fig. 90
LAMP SYSTEM (EXCEPT C TYPE) ..... Fig. 91
LAMP SYSTEM (C TYPE) ..... Fig. 92
PANEL SYSTEM ..... Fig. 93
SWITCH SYSTEM ..... Fig. 94
HARNESS SYSTEM (EXCEPT C TYPE) ..... Fig. 95
HARNESS SYSTEM (C TYPE) ..... Fig. 96
HARNESS (CAB) SYSTEM (C TYPE) ..... Fig. 97
SWITCH (PTO) SYSTEM (S, P TYPE) ..... Fig. 98

MIRROR SYSTEM (C TYPE) ..... Fig. 99
FRAME (FRONT) SYSTEM (C TYPE) ..... Fig. 100
FRAME (REAR) SYSTEM (C TYPE) ..... Fig. 101
FRAME (ACCESSORY) SYSTEM (C TYPE) ..... Fig. 102
CANOPY SYSTEM (C TYPE) ..... Fig. 103
CAB GLASS SYSTEM (C TYPE) ..... Fig. 104
DOOR SYSTEM (C TYPE) ..... Fig. 105
DOOR GLASS SYSTEM (C TYPE) ..... Fig. 106
DOOR SEAL, DOOR LOCK SYSTEM (C TYPE) ..... Fig. 107
REAR GLASS, SEAL SYSTEM (C TYPE) ..... Fig. 108
COCKPIT SYSTEM (C TYPE) ..... Fig. 109
HEATER SYSTEM (C TYPE) (1/2) (2/2) ..... Fig. 110
ORNAMENT ..... Fig. 111
LABEL (CONTROL) ..... Fig. 112
LABEL (ENGLISH) ..... Fig. 113
LABEL ..... Fig. 114
TOOL ..... Fig. 115

OPTIONAL PARTS

AIR CLEANER ASSY (OPTION) ..... Fig. 116
MUFFLER (TAIL/UPPER) SYSTEM (EXCEPT C TYPE) (OPTION) ..... Fig. 117
PTO (MIDDLE) SET (OPTION) ..... Fig. 118
REAR WHEEL SYSTEM (OPTION) ..... Fig. 119
REAR WHEEL (TURF) SYSTEM (OPTION) ..... Fig. 120
FRONT HITCH SET (OPTION) ..... Fig. 121
FRONT HITCH (EEC) SET (OPTION) ..... Fig. 122
SPACER (AXLE) SET (OPTION) ..... Fig. 123
FRONT WHEEL SYSTEM (OPTION) ..... Fig. 124
HUB RING SYSTEM (OPTION) ..... Fig. 125
FRONT WHEEL (TURF) SYSTEM (OPTION) ..... Fig. 126
DRAFT SET (OPTION) ..... Fig. 127
VALVE (REMOTE/1) SET (OPTION) ..... Fig. 128
DRAW BAR SET (OPTION) ..... Fig. 129
TRAILER HITCH SET (OPTION) ..... Fig. 130

CREVICE (DRAW BAR) SYSTEM (OPTION) ····· Fig. 131
HIGH HITCH SET (OPTION) ····· Fig. 132
VALVE (REMOTE/1R) SET (OPTION) ····· Fig. 133
VALVE (REMOTE/2R) SET (EXCEPT C TYPE) (OPTION) ····· Fig. 134
VALVE (REMOTE/2) SET (OPTION) ····· Fig. 135
SUB STEP (R) SYSTEM (OPTION) ····· Fig. 136
SOCKET (7P) SYSTEM (OPTION) ····· Fig. 137
SWITCH (SAFETY/REPAIR) SET (OPTION) ····· Fig. 138
2 ROPS SYSTEM (R TYPE) (OPTION) ····· Fig. 139
ROPS SET (EXCEPT C, R TYPE) (OPTION) (1/2) (2/2) ····· Fig. 140
INTERIOR SYSTEM (C TYPE) (OPTION) ····· Fig. 141

COMPONENT PARTS

COMPONENT PARTS FOR K211 – 005 – 000 – 10 ON Fig.128, 135 ····· Fig. 142
COMPONENT PARTS FOR K211 – 008 – 000 – 10 ON Fig.56 ····· Fig. 143
COMPONENT PARTS FOR K256 – 001 – 000 – 00 ON Fig.62 ····· Fig. 144
COMPONENT PARTS FOR K275 – 001 – 000 – 00 ON Fig.62 ····· Fig. 145
COMPONENT PARTS FOR 1561 – 221 – 500 – 10 ON Fig.14 ····· Fig. 146
COMPONENT PARTS FOR 1581 – 621 – 530 – 00 ON Fig.97 ····· Fig. 147
COMPONENT PARTS FOR 1640 – 530 – 600 – 10 ON Fig.68, 133, 134 ····· Fig. 148
COMPONENT PARTS FOR 1673 – 407 – 550 – 00 ON Fig.47 ····· Fig. 149
COMPONENT PARTS FOR 1674 – 658 – 220 – 00 ON Fig.93 ····· Fig. 150

WIRING DIAGRAM

ENGINE

ENGINE

E3CD – TB05···TK538H

6005 - 097 - 350 - 00

FIG. 1 CYLINDER HEAD

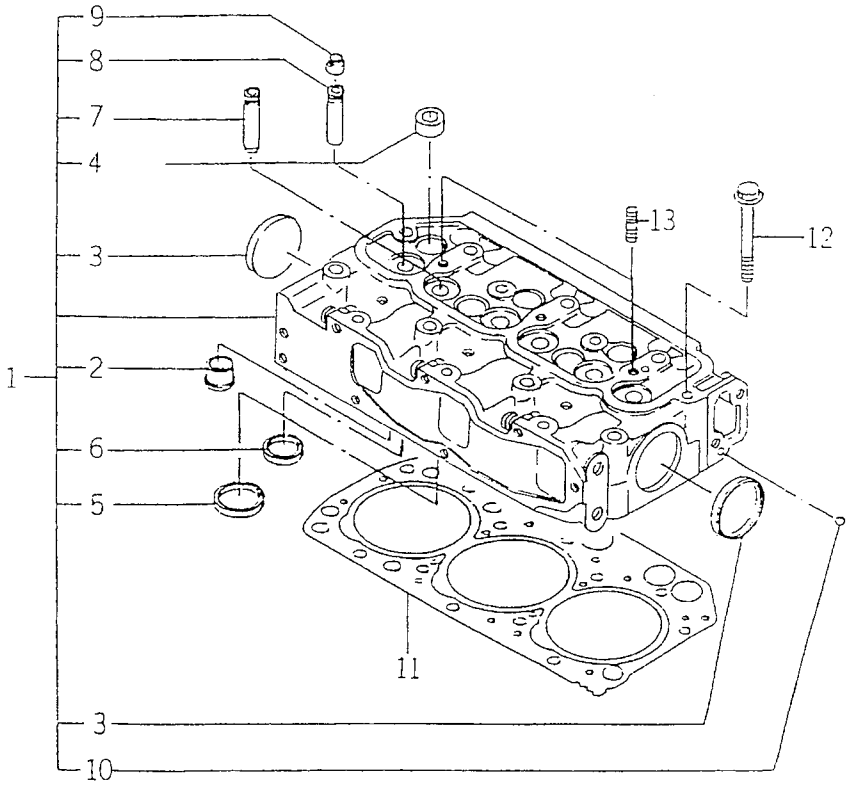

6005-101N

KEY	PART CODE	DESCRIPTION	SPC	TYPE OF MODEL E3CD TB05		ITC	COL	GRP	REMARKS
1	6211-110-043-60	CYLINDERHEAD ASSY	*	1					
2	6211-150-032-10	HOTPLUG ASSY	*	3					
3	6209-610-003-00	CUP/SEALING/50	*	2					
4	6209-605-004-10	PLUG/PT1/2	*	5					
5	6211-715-004-00	VALVESEAT/INLET	*	3					
6	6211-711-003-00	VALVESEAT/EXHAUST	*	3					
7	6211-721-003-10	VALVEGUIDE	*	3					
8	6211-721-004-00	VALVEGUIDE	*	3					
9	6212-569-002-00	SEAL, OIL	*	6					
10	V682-200-000-60	BALL	*	1					
11	6211-141-023-50	GASKET/CYLINDERHEAD	*	1					
12	6209-000-005-00	BOLT	*	14					
13	6209-300-014-00	STUD	*	2					

FIG. 2 CYLINDER HEAD COVER

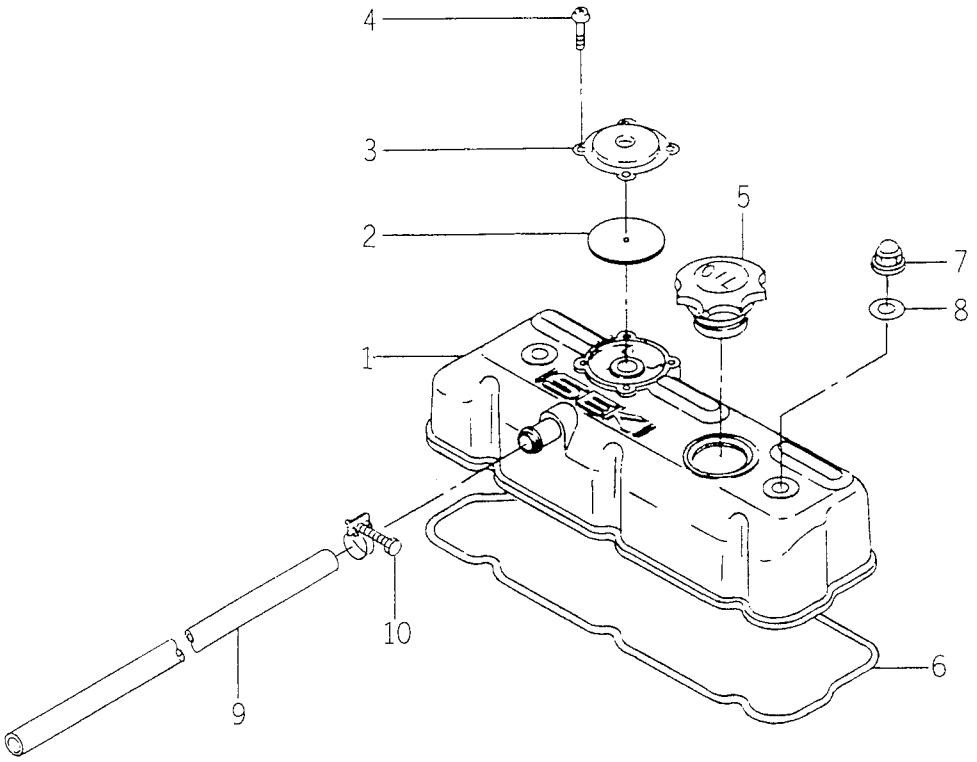

6005-110B

KEY	PART CODE	DESCRIPTION	SPC	TYPE OF MODEL E3CD TB05		ITC	COL	GRP	REMARKS
1	6211-170-007-20	COVER/CYLINDER/HEAD	*	1					
2	6211-179-011-20	RUBBERFLANGE	*	1					
3	6211-291-010-00	COVER/BLOWBY	*	1					
4	V195-164-008-30	SCREW/TAPPING	*	4					
5	6211-751-001-10	CAP, OIL FILLER	*	1					
6	6211-173-005-00	SEAL/CYL HEAD/UNDER	*	1					
7	6209-490-002-00	NUT, CAP	*	2					
8	6909-572-008-00	PACKING	*	2					
9	6209-366-005-10	HOSE/BLOWBY	*	1					
10	J061-213-018-00	CLAMP/WIRE/13-18	*	1					

FIG. 3 INLET MANIFOLD

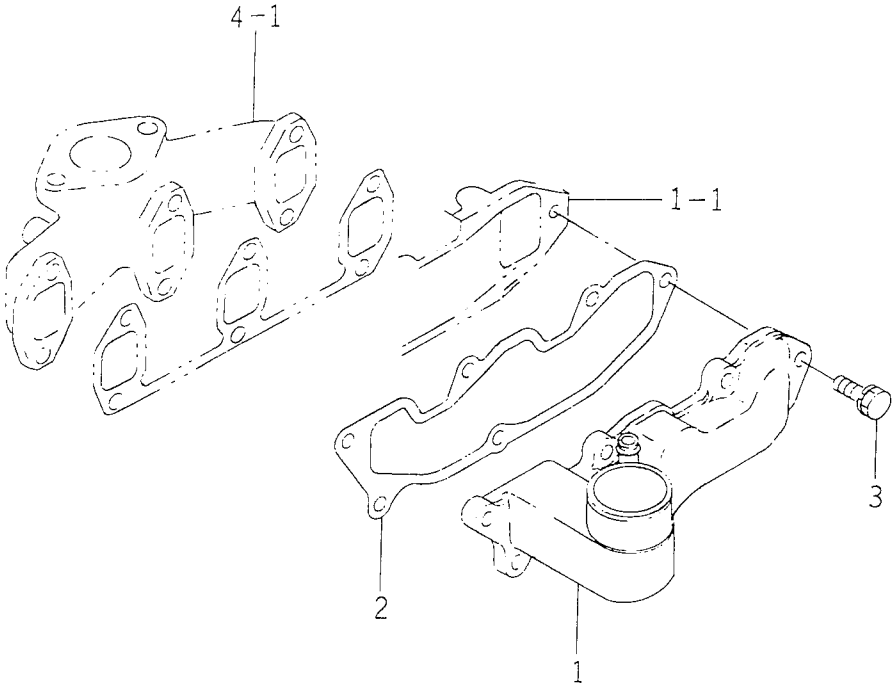

6005-120B

KEY	PART CODE	DESCRIPTION	SPC	TYPE OF MODEL E3CD TB05		ITC	COL	GRP	REMARKS
1	6214-111-023-00	MANIFOLD/INLET	*	1					
2	6214-115-003-10	GASKET/INLETMANIFOLD	*	1					
3	V211-560-802-50	BOLT, SEMS/M8X25 7T	*	6					

FIG. 4 EXHAUST MANIFOLD

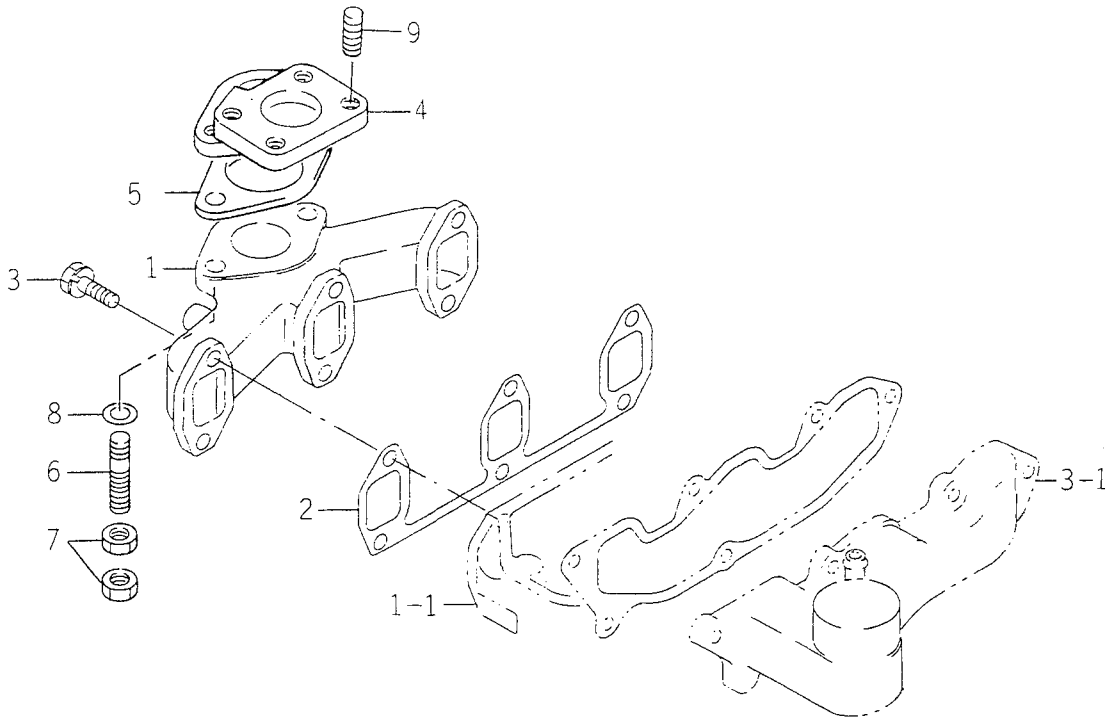

6005-140D

KEY	PART CODE	DESCRIPTION	SPC	TYPE OF MODEL E3CD TB05		ITC	COL	GRP	REMARKS
1	6214-141-023-00	MANIFOLD/EXHAUST	*	1					
2	6214-145-004-20	GASHET/EXH MANIFOLD	*	1					
3	V211-560-802-50	BOLT, SEMS/M8X25 7T	*	6					
4	6222-111-005-10	PIPE/EXHAUST	*	1					
5	1594-105-001-00	GASKET	*	1					
6	6209-300-012-00	STUD	*	2					
7	6209-409-004-00	NUT	*	4					
8	V411-700-010-00	WASHER	*	2					
9	6904-130-825-00	STUD	*	4					

FIG. 5 TURBO CHARGER

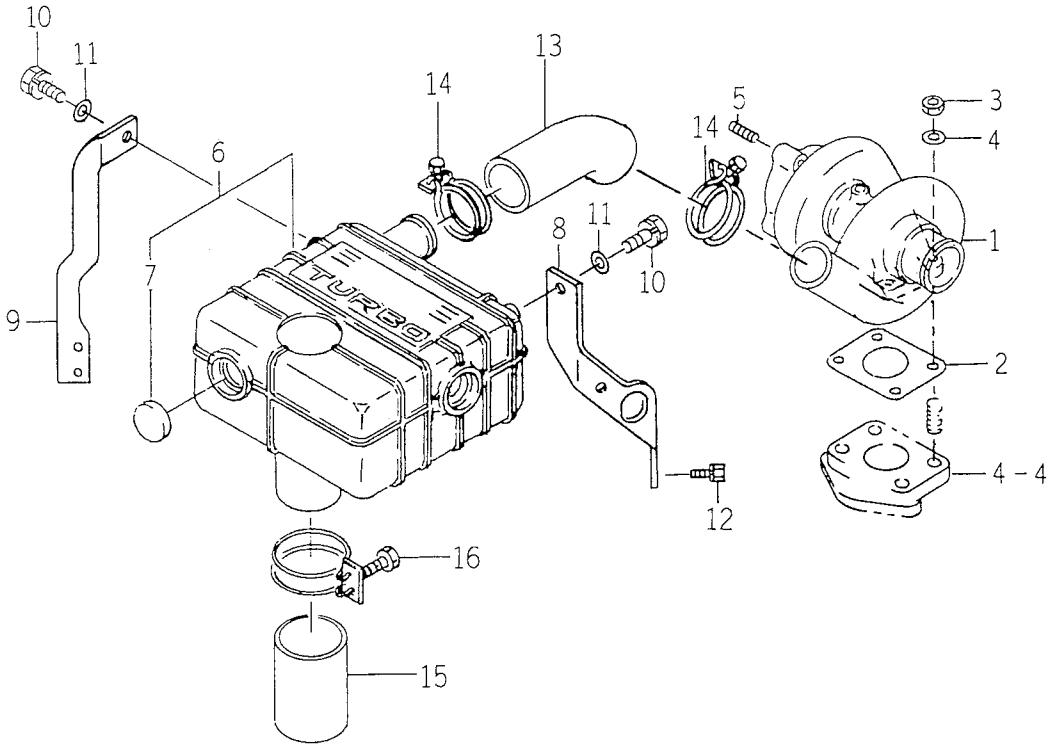

6005-160A

KEY	PART CODE	DESCRIPTION	SPC	TYPE OF MODEL E3CD TB05		ITC	COL	GRP	REMARKS
1	6214-400-006-00	TURBOCHARGER ASSY	*	1					
2	6214-145-009-00	GASKET	*	1					
3	V304-700-008-00	NUT	*	4					
4	V411-700-008-00	WASHER	*	4					
5	V251-340-802-50	BOLT/STUD	*	3					
6	6214-435-024-30	TANK/AIR ASSY	*	1					
7	3625-540-004-00	CAP, BLANK/30	*	2					
8	6214-439-010-10	STAY/TANK/A	*	1					
9	6214-439-011-10	STAY/TANK/B	*	1					
10	6209-037-017-10	BOLT/WS	*	4					
11	V411-260-008-00	WASHER, PL/M 8	*	4					
12	6901-911-020-00	BOLT, SEMS/M10X20	*	2					
13	6209-360-075-10	HOSE/RUBBER	*	1					
14	J061-238-046-00	CLAMP/WIRE/38-46	*	2					
15	6209-360-047-00	HOSE/RUBBER	*	1					
16	J061-252-063-00	CLAMP/WIRE/52-63	*	2					

FIG. 6 CYLINDER BLOCK

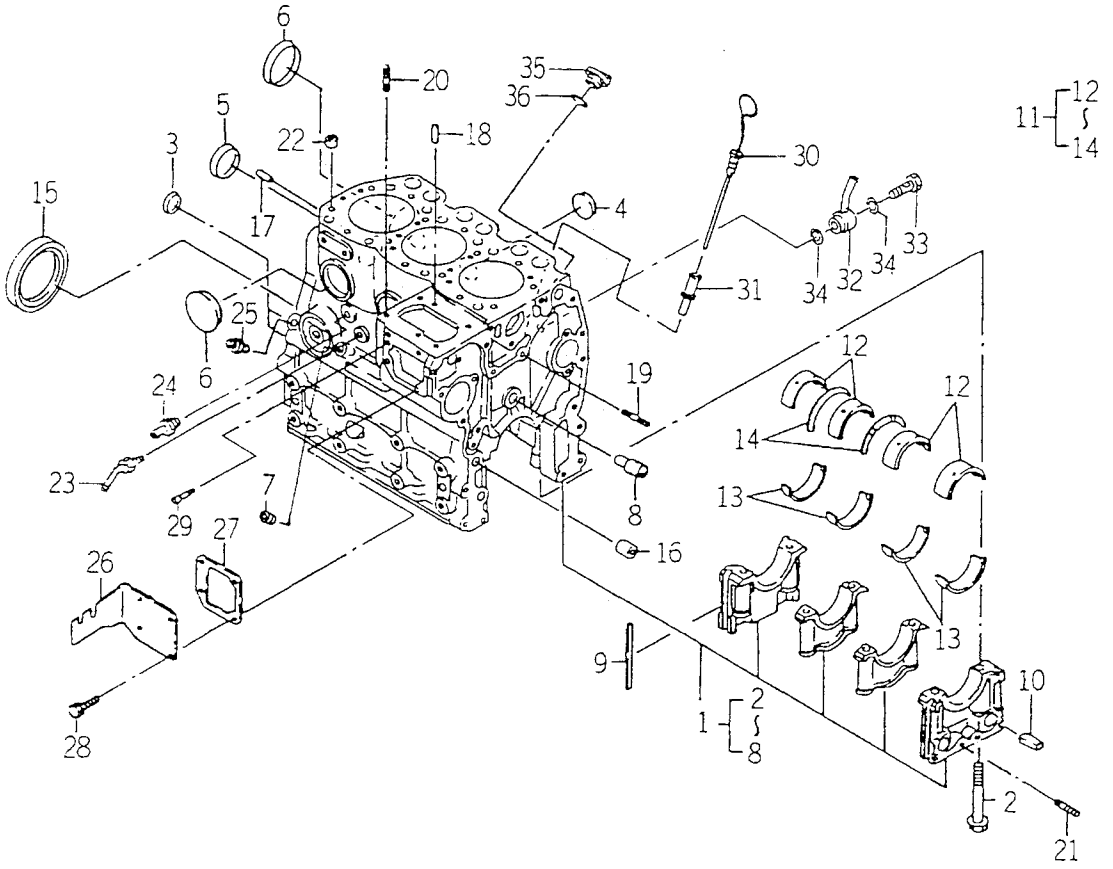

6005-201V

KEY	PART CODE	DESCRIPTION	SPC	TYPE OF MODEL E3CD TB05		ITC	COL	GRP	REMARKS
1	6211-210-055-70	CYLINDERBLOCK ASSY	*	1					
2	6209-000-006-00	BOLT	*	8					
3	6911-129-081-00	CAP, SEALING	*	2					
4	6209-610-001-00	CAP, SEALING	*	2					
5	6911-219-195-00	CAP, SEALING	*	1					
6	6209-610-003-00	CUP/SEALING/50	*	3					
7	6509-605-019-10	PLUG	*	7					
8	6212-531-008-20	PIN/IDLEGEAR	*	1					
9	6211-258-001-00	SEAL, BEARING CAP	*	4					
10	6211-258-002-00	SEAL, BEARING CAP/7	*	2					
11	6211-510-008-00	BEARING/CRANK SET	*	1					
12	6211-511-007-00	BEARING/CRANK/UPPER	*	4					
13	6211-511-008-00	BEARING/CRANK/LOWER	*	4					
14	6211-599-004-00	BEARING/THRUST/CRANK	*	2					
15	6209-625-003-20	OILSEAL	*	1					
16	6209-749-001-20	PIN/TUBE	*	2					
17	6908-160-816-00	PIN	*	2					
18	6209-740-005-00	PIN	*	2					
19	6904-110-840-00	STUD/M8X40	*	1					
20	6904-110-822-00	STUD	*	3					
21	V251-340-806-00	BOLT/STUD	*	1					
22	6294-453-002-00	DOWEL	*	2					
23	6213-721-007-00	PIPE/WATERDRAIN	*	1					
24	6213-721-005-00	PIPE/WATER/HOUSING	*	1					
25	6909-902-299-00	NIPPLE	*	1					
26	6211-291-015-10	COVER/INJECTIONPUMP	*	1					
27	6211-292-001-20	GASKET/COVER	*	1					
28	6209-030-097-00	BOLT/WS	*	4					
29	6215-549-013-00	PIN	*	1					
30	6211-760-020-10	LEVELGAGE	*	1					

FIG. 6 CYLINDER BLOCK

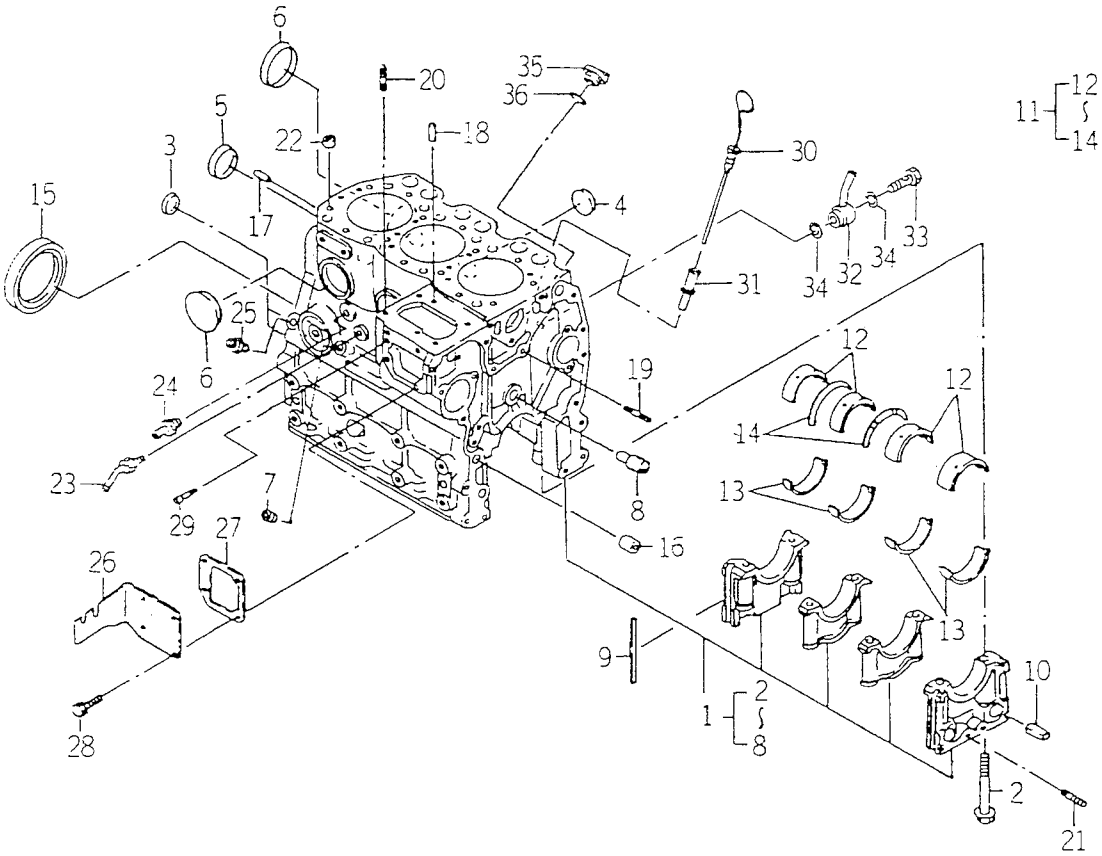

6005-201V

KEY	PART CODE	DESCRIPTION	SPC	TYPE OF MODEL E3CD TB05		ITC	COL	GRP	REMARKS
31	6211-766-006-10	GUIDE/LEVELGAGE COMP	*	1					
32	6213-319-010-00	CONNECTOR/OIL COMP	*	1					
33	6209-060-002-00	BOLT/EYE	*	1					
34	6213-319-011-00	GASKET	*	2					
35	6211-751-002-00	CAP/OILFILLER	*	1					
36	V720-103-502-50	O-RING/P25	*	1					

FIG. 7 BEARING/UNDER SIZE (OPTION)

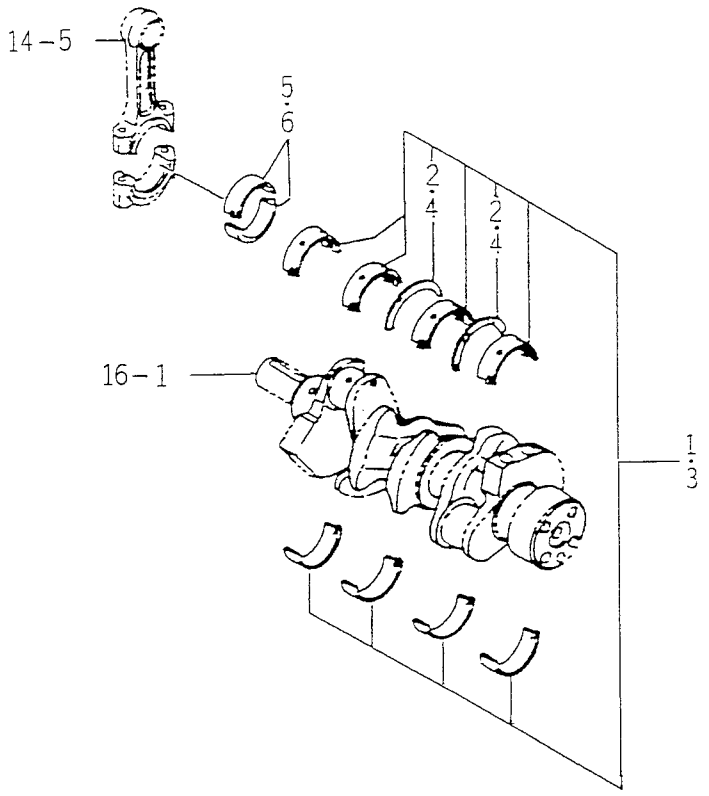

6005-209

KEY	PART CODE	DESCRIPTION	SPC	TYPE OF MODEL E3CD TB05		ITC	COL	GRP	REMARKS
1	6211-530-008-00	BEARING/CRANK/UNDER	T	1					025
2	6211-599-004-00	BEARING/THRUST/CRANK	T	2					
3	6211-540-008-00	BEARING/CRANK/UNDER	T	1					050
4	6211-599-004-00	BEARING/THRUST/CRANK	T	2					
5	6212-263-009-00	BEARING/CONROD/UNDER	T	6					025
6	6212-264-009-00	BEARING/CONROD/UNDER	T	6					050

FIG. 8 OIL PAN

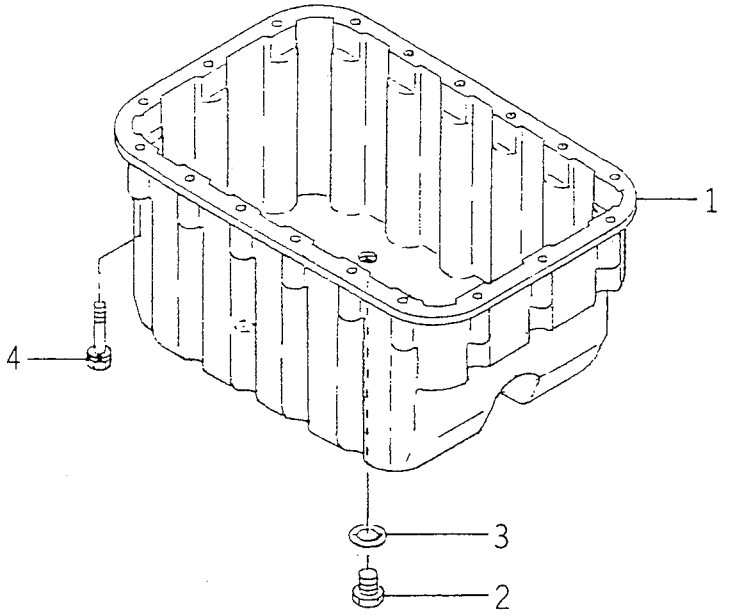

6005-210D

KEY	PART CODE	DESCRIPTION	SPC	TYPE OF MODEL E3CD TB05		ITC	COL	GRP	REMARKS
1	6211-361-038-10	OILPAN	*	1					
2	3805-355-002-10	PLUG/M14X1.5	*	2					
3	V720-102-401-80	O-RING/P18	*	2					
4	6901-910-635-00	BOLT	*	18					

FIG. 9 REAR PLATE

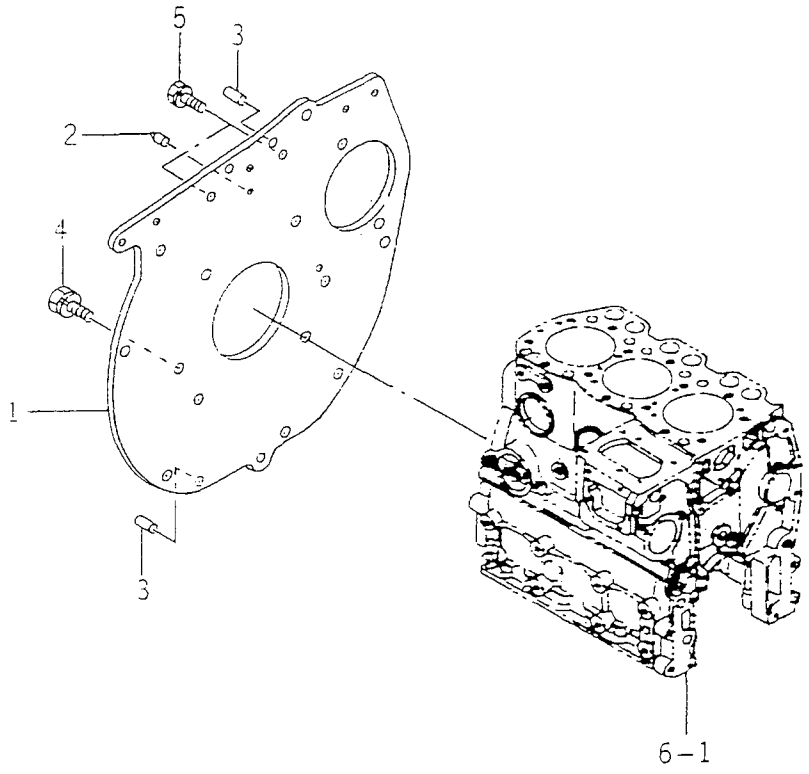

6005-220D

KEY	PART CODE	DESCRIPTION	SPC	TYPE OF MODEL E3CD TB05		ITC	COL	GRP	REMARKS
1	6211-341-030-10	PLATE/REAR	*	1					
2	6211-342-003-10	POINTER	*	1					
3	V523-101-001-80	PIN	*	2					
4	6209-030-091-00	BOLT/WS	*	6					
5	6901-911-025-00	BOLT	*	2					

FIG. 10 TIMING GEAR CASE

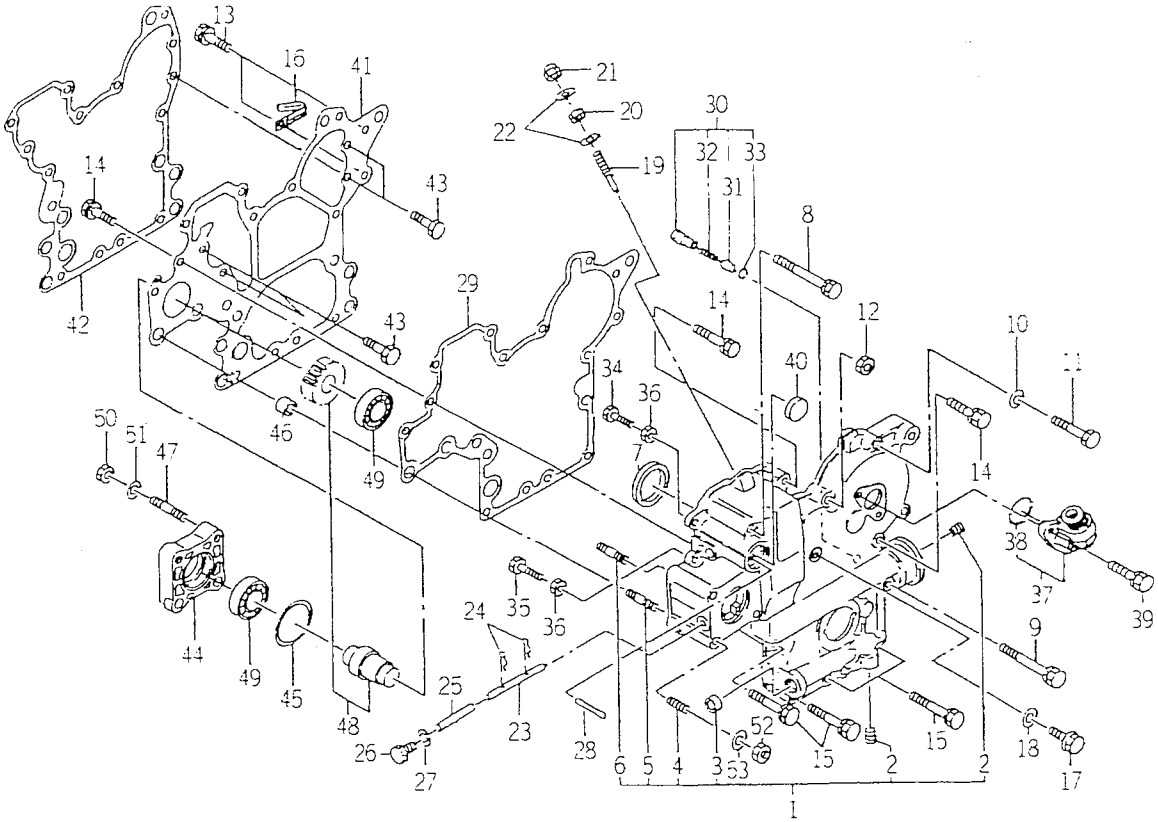

6005-240B

KEY	PART CODE	DESCRIPTION	SPC	TYPE OF MODEL E3CD TB05		ITC	COL	GRP	REMARKS
1	6211-310-009-50	GEARCASE ASSY	*	1					
2	6209-605-003-00	PLUG/PT1/4	*	2					
3	6209-610-004-00	CUP/SEALING/20	*	1					
4	6904-110-822-00	STUD	*	4					
5	6904-110-855-00	STUD	*	2					
6	6904-110-850-00	STUD	*	1					
7	6209-625-002-00	SEAL, OIL	*	1					
8	6209-030-005-00	BOLT/M8X85	*	1					
9	6209-030-006-00	BOLT/M8X75	*	1					
10	6909-160-508-00	WASHER, PL/M8	*	1					
11	V201-360-807-50	BOLT	*	1					
12	3817-401-001-00	NUT/M08	*	2					
13	V211-560-802-00	BOLT/M8X20	*	3					
14	6509-030-037-00	BOLT	*	3					
15	6209-030-095-00	BOLT/WS	*	4					
16	1650-650-015-00	CLAMP	*	1					
17	6209-046-001-00	BOLT/M8X30	*	1					
18	6209-500-003-00	WASHER/08X14X01	*	1					
19	6215-546-003-10	STOPPER/FULLLOAD	*	1					
20	6209-409-001-00	NUT/M8	*	1					
21	V341-120-008-00	NUT, CAP/M 8	*	1					
22	6209-920-002-00	PACKING	*	2					
23	6215-542-004-20	PIN/ARM	*	1					
24	P117-303-003-00	PIN/SNAP	*	2					
25	6215-542-005-00	PIN	*	1					
26	6909-202-308-00	PLUG	*	1					
27	6209-500-003-00	WASHER/08X14X01	*	1					
28	6209-740-001-00	PIN, GROOVE	*	1					
29	6211-312-005-10	GASKET/GEARCASE	*	1					
30	6213-160-003-10	VALVE/RELIEF ASSY	*	1					

FIG. 10 TIMING GEAR CASE

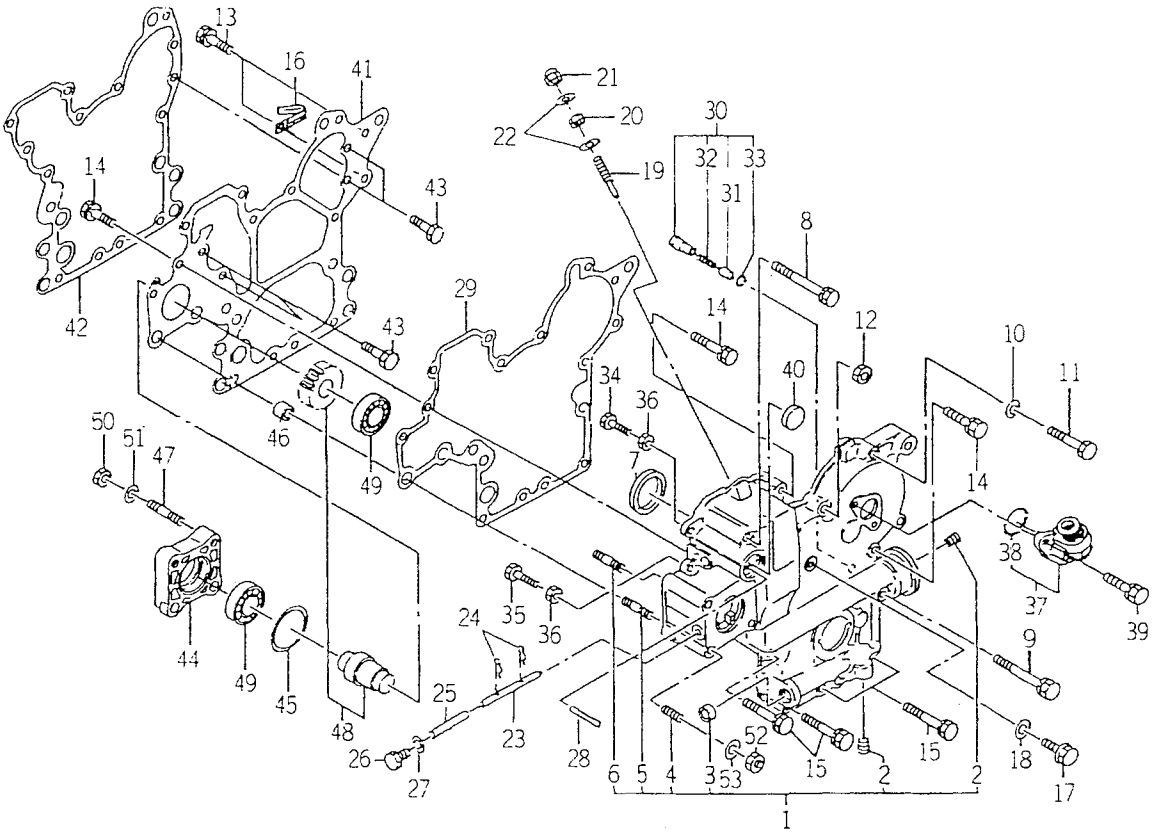

6005-240B

KEY	PART CODE	DESCRIPTION	SPC	TYPE OF MODEL E3CD TB05		ITC	COL	GRP	REMARKS
31	6213-161-003-10	PISTON/VALVE/RELIEF	*	1					
32	6213-164-001-00	SPRING/RELIEF VALVE	*	1					
33	V705-140-012-00	RING, SNAP/12 C	*	1					
34	6209-050-001-00	BOLT/M6	*	1					
35	6209-050-002-00	BOLT/M6	*	1					
36	6909-110-406-00	NUT	*	2					
37	6219-310-003-20	DRIVE/TACHOMETE ASSY	*	1					
38	V723-102-002-40	RING/O	*	1					
39	6901-910-616-00	BOLT, SEMS/M6X16	*	2					
40	3625-540-004-00	CAP, BLANK/30	*	1					
41	6211-311-013-00	PLATE/FRONT	*	1					
42	6211-312-006-10	GASKET/PLATE	*	1					
43	6902-050-816-00	BOLT	*	4					
44	6211-319-003-00	SPACER	*	1					
45	V723-102-005-00	O-RING 1A S50	*	1					
46	6209-749-001-20	PIN/TUBE	*	2					
47	6904-110-822-00	STUD	*	1					
48	6212-530-005-10	SHAFT/HYDRAULIC ASSY	*	1					
49	V600-110-600-50	BEARING, RB/6005	*	2					
50	6909-110-408-00	NUT/M8	*	4					
51	6909-150-508-00	WASHER	*	4					
52	6909-110-408-00	NUT/M8	*	4					
53	6909-150-508-00	WASHER	*	4					

FIG. 11 HANGER

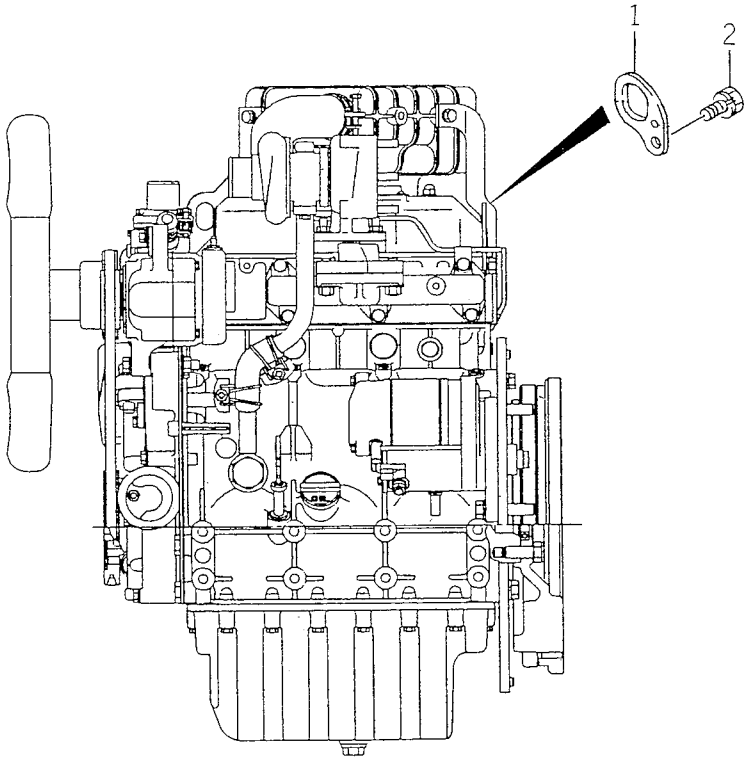

6005-290B

KEY	PART CODE	DESCRIPTION	SPC	TYPE OF MODEL E3CD TB05		ITC	COL	GRP	REMARKS
1	6211-777-007-20	HANGER	*	1					
2	6901-911-020-00	BOLT, SEMS/M10X20	*	1					

FIG. 12 VALVE

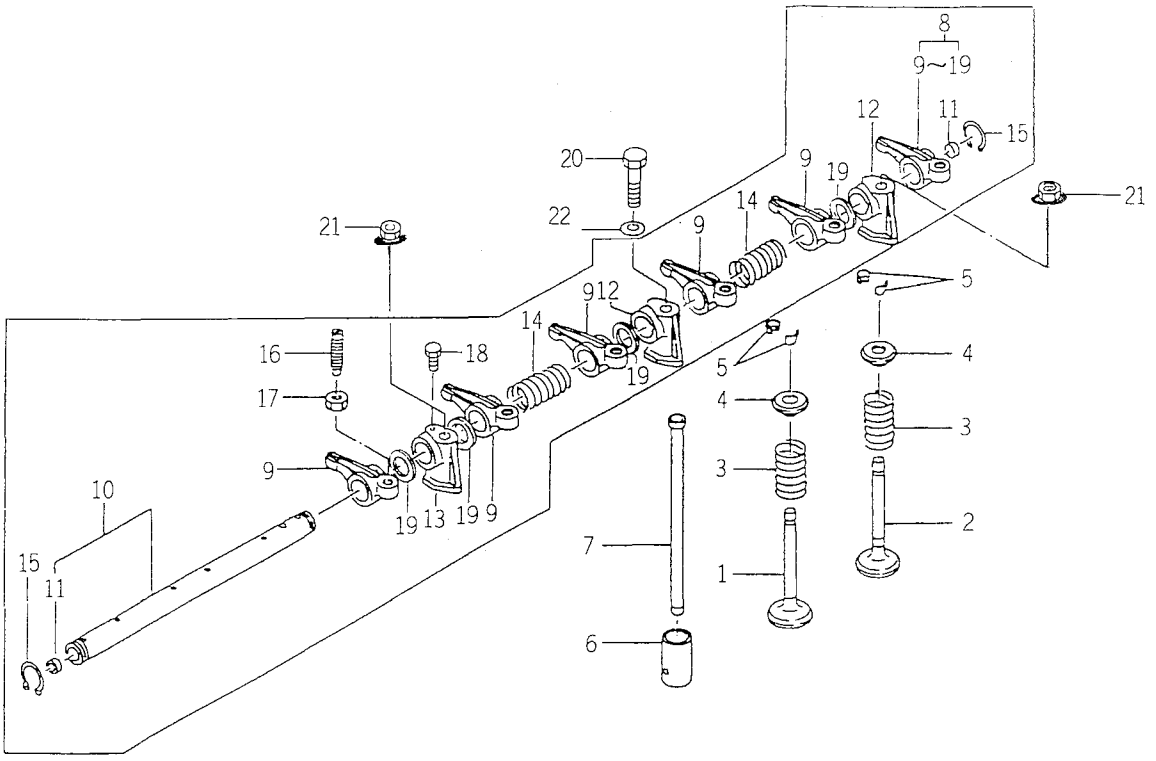

6005-301C

KEY	PART CODE	DESCRIPTION	SPC	TYPE OF MODEL E3CD TB05		ITC	COL	GRP	REMARKS
1	6212-551-004-00	VALVE/INTAKE	*	3					
2	6212-552-004-00	VALVE/EXHAUST	*	3					
3	6212-561-003-00	SPRING/VALVE	*	6					
4	6212-563-001-00	SEAT, VALVE SPRING	*	6					
5	6212-565-001-00	CUTTER, VALVE	*	12					
6	6212-571-002-20	TAPPET	*	6					
7	6212-575-003-00	PUSHROD	*	6					
8	6212-600-009-10	ROCKERSHAFT ASSY	*	1					
9	6212-611-004-10	ROCKERARM	*	6					
10	6212-620-008-10	SHAFT/ROCKERARM ASSY	*	1					
11	6212-626-002-10	PLUG	*	2					
12	6212-628-010-00	BRACKET/ROCKERSHAFT	*	2					
13	6212-628-011-00	BRACKET/ROCKERSHAFT	*	1					
14	6209-940-004-00	SPRING	*	2					
15	V704-140-016-00	RING, SNAP/16 C	*	2					
16	6212-616-002-00	SCREW ADJUST	*	6					
17	6209-409-003-00	NUT	*	6					
18	6209-000-002-00	BOLT	*	1					
19	6901-055-855-00	BOLT/M8X55	*	1					
20	3817-401-001-00	NUT/M08	*	2					
21	6209-500-005-00	WASHER/08X15.5X1.6	*	1					

FIG. 13 CAM SHAFT

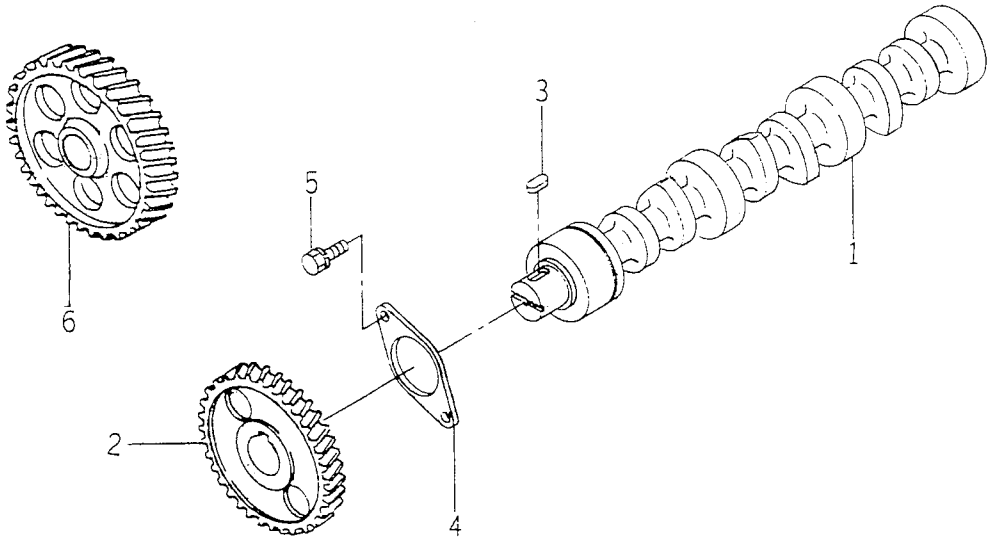

6005-310

KEY	PART CODE	DESCRIPTION	SPC	TYPE OF MODEL E3CD TB05		ITC	COL	GRP	REMARKS
1	6212-511-005-00	CAMSHAFT	*	1					
2	6212-522-004-00	GEAR/CAMSHAFT	*	1					
3	6908-000-716-00	KEY	*	1					
4	6212-535-007-00	PLATE/THRUST	*	1					
5	6901-910-612-00	BOLT, SEMS/M6X12	*	2					
6	6212-523-006-30	GEAR/IDLE ASSY	*	1					

FIG. 14 PISTON

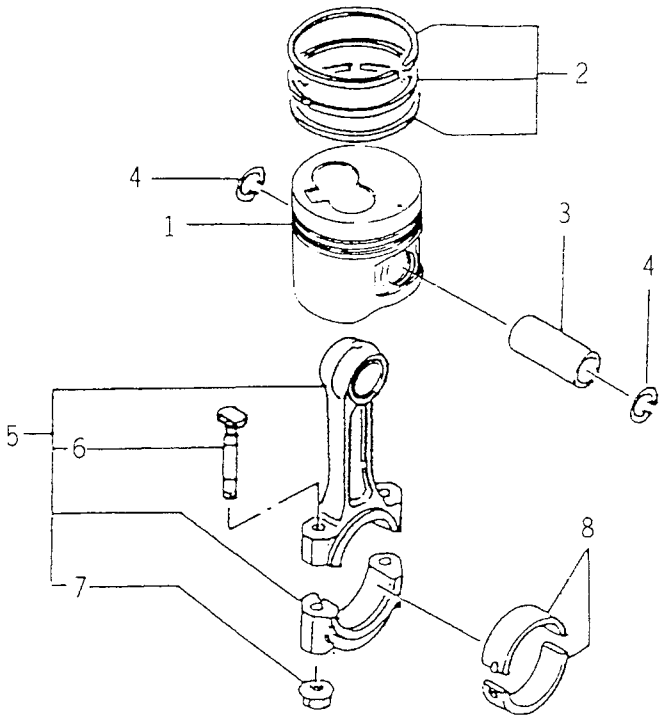

6005-340N

KEY	PART CODE	DESCRIPTION	SPC	TYPE OF MODEL E3CD TB05		ITC	COL	GRP	REMARKS
1	6212-111-054-60	PISTON	*	3					87
2	6212-121-019-40	RING/PISTON SET	*	3					87
3	6212-211-002-00	PIN/PISTON	*	3					
4	6909-950-115-00	RING SNAP	*	6					
5	6212-230-011-00	CONNECTINGROD ASSY	*	3					
6	6212-235-002-20	BOLT/CONNECTINGROD	*	6					
7	6209-440-002-10	NUT/FLANGE	*	6					
8	6212-261-009-10	BEARING/CON ROD	*	6					

FIG. 15 PISTON/OVER SIZE (OPTION)

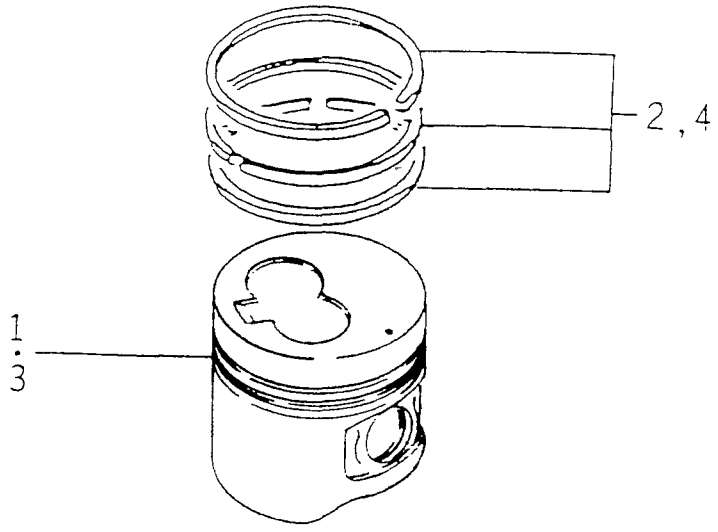

6005-349N

KEY	PART CODE	DESCRIPTION	SPC	TYPE OF MODEL E3CD TB05		ITC	COL	GRP	REMARKS
1	6212-114-054-60	PISTON/OV	T	3					87.5
2	6212-124-019-40	RING/PISTON/OV SET	T	3					87.5
3	6212-116-054-60	PISTON/OV	T	3					88.0
4	6212-126-019-40	RING/PISTON/OV SET	T	3					88.0

FIG. 16 CRANK SHAFT

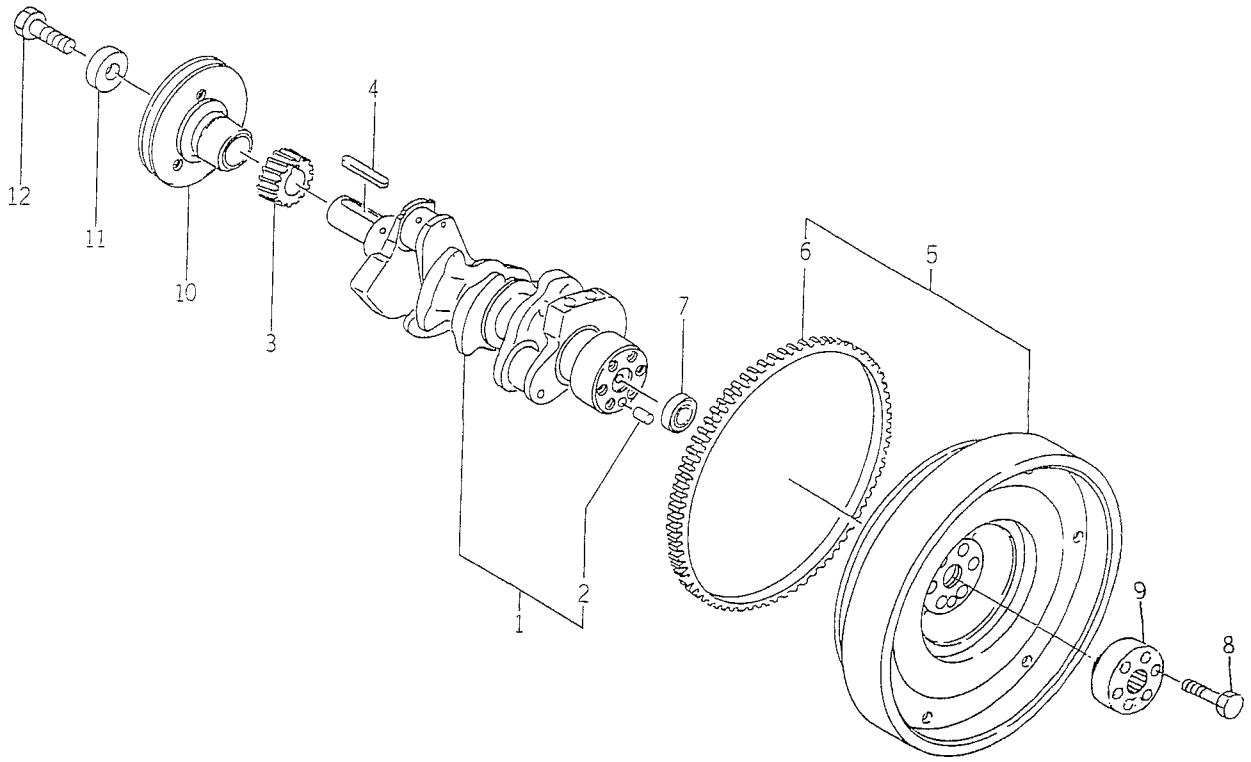

6005-350X

KEY	PART CODE	DESCRIPTION	SPC	TYPE OF MODEL E3CD TB05		ITC	COL	GRP	REMARKS
1	6212-310-011-40	CRANKSHAFT ASSY	*	1					
2	V523-101-001-80	PIN	*	1					
3	6212-521-002-00	GEAR, CRANK SHAFT	*	1					
4	6908-000-750-00	KEY	*	1					
5	6212-330-066-00	FLYWHEEL ASSY	*	1					
6	6212-333-002-00	RINGGEAR	*	1					
7	V600-150-600-20	BEARING, RB/6002SS	*	1					
8	6209-000-023-00	BOLT	*	6					
9	6212-339-005-00	BOSS/SPLINE	*	1					
10	6212-371-035-00	PULLEY/CRANK	*	1					
11	6212-379-001-00	WASHER	*	1					
12	6901-066-645-00	BOLT	*	1					

FIG. 17 OIL PUMP

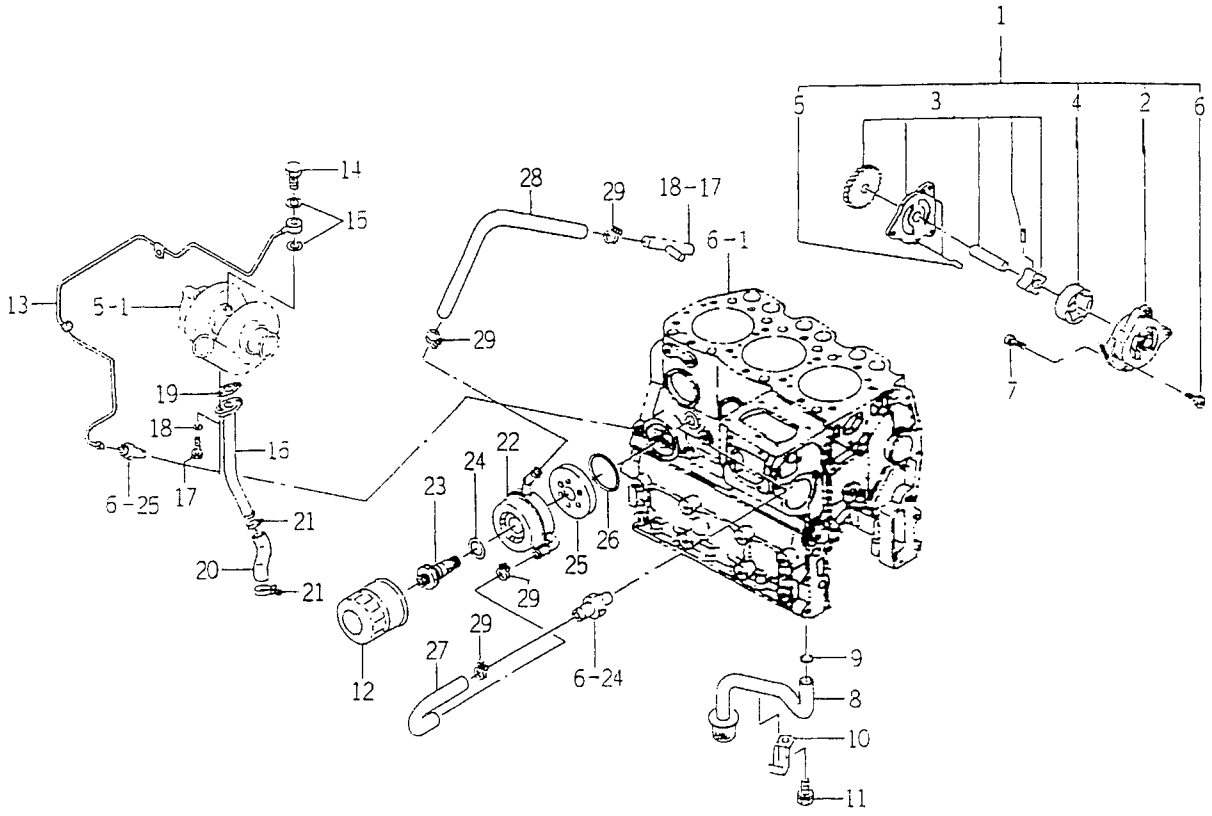

6005-401F

KEY	PART CODE	DESCRIPTION	SPC	TYPE OF MODEL E3CD TB05		ITC	COL	GRP	REMARKS
1	6213-100-004-30	OILPUMP ASSY	*	1					
2	6213-111-002-20	BODY/OILPUMP	*	1					
3	6213-120-002-30	GEAR/OILPUMP ASSY	*	1					
4	6213-125-002-10	ROTOR/OUTER	*	1					
5	6213-129-003-00	PIN/STRAIGHT	*	2					
6	6213-119-001-00	BOLT/WS	*	3					
7	V220-540-602-00	SCREW/SOCKET	*	3					
8	6213-140-013-00	STRAINER	*	1					
9	V720-113-502-20	RING/O	*	1					
10	6213-149-003-20	CLAMP/STRAINER	*	1					
11	6901-910-816-00	BOLT, SEMS/M8X16	*	1					
12	6213-240-005-10	CARTRIDGE/OILFILTER	*	1					
13	6213-311-041-10	PIPE/OIL ASSY	*	1					
14	6209-060-001-00	BOLT/EYE	*	1					
15	6909-571-410-00	PACKING	*	2					
16	6213-311-026-10	PIPE/OIL COMP	*	1					
17	6209-030-094-00	BOLT	*	2					
18	V401-160-006-00	WASHER, SP/M 6	*	2					
19	6209-630-004-10	GASKET	*	1					
20	6209-360-076-10	HOSE/RUBBER	*	1					
21	J061-116-025-00	CLAMP/WORM/16-25	*	2					
22	6221-700-002-10	OILCOOLER	*	1					
23	6221-726-002-10	CONNECTOR/OILCOOLER	*	1					
24	6221-726-004-00	WASHER/OILCOOLER	*	1					
25	6221-726-003-00	SPACER/OILCOOLER	*	1					
26	V723-102-006-00	RING/O	*	1					
27	6209-360-071-10	HOSE/OILCOOLER/IN	*	1					
28	6209-360-072-10	HOSE/OILCOOLER/OUT	*	1					
29	J061-216-020-00	CLAMP/WIRE/16-20	*	4					

FIG. 18 WATER PUMP

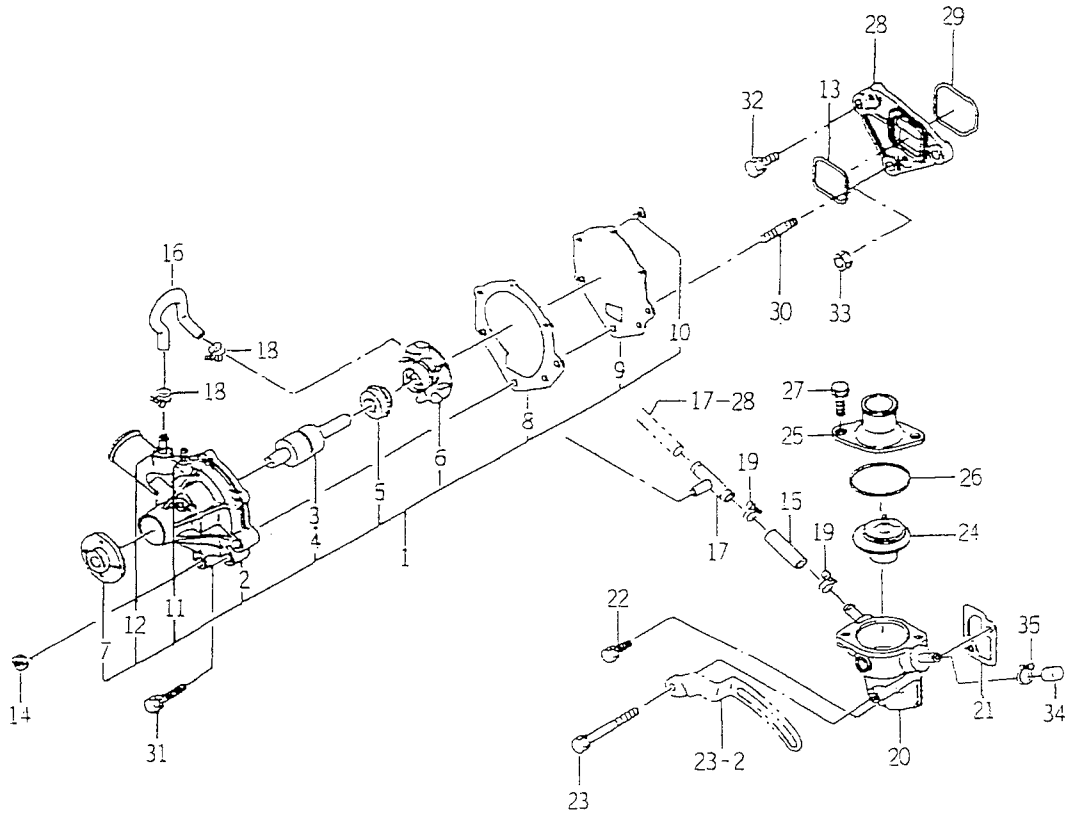

6005-420G

KEY	PART CODE	DESCRIPTION	SPC	TYPE OF MODEL E3CD TB05		ITC	COL	GRP	REMARKS
1	6213-610-011-10	WATERPUMP ASSY	*	1					
2	6213-611-006-00	BODY/WATERPUMP	*	1					
3	6213-631-002-00	BEARING/WATER PUMP	*	1					
4	6213-631-005-00	BEARING/WATERPUMP	*	1					
5	6213-622-002-10	SEAL SET/WATER PUMP	*	1					
6	6213-621-003-00	ROTOR/WATERPUMP	*	1					
7	6213-642-002-00	SEAL/WATER PUMPPULLE	*	1					
8	6213-613-002-10	GASKET	*	1					
9	6213-612-004-00	PLATE/WATER PUMP	*	1					
10	6213-619-003-00	SCREW/WATER PUMP	*	3					
11	6213-619-002-00	PIPE/WATER PUMP	*	2					
12	6213-619-009-00	PIPE/WATERPUMP	*	1					
13	V721-103-104-00	O-RING/G40	*	1					
14	3817-401-001-00	NUT/M08	*	2					
15	6213-729-004-10	HOSE/RUBBER	*	1					
16	6213-729-013-10	HOSE/RUBBER	*	1					
17	6213-719-002-00	JOINT	*	1					
18	J061-210-015-00	CLAMP/WIRE/10-15	*	2					
19	J061-216-020-00	CLAMP/WIRE/16-20	*	2					
20	6213-716-003-10	HOUSING/THERMOSTAT	*	1					
21	6213-743-002-10	GASKET/HOUSING	*	1					
22	V211-560-802-00	BOLT/M8X20	*	1					
23	6209-030-006-00	BOLT/M8X75	*	1					
24	6513-770-022-10	THERMOSTAT	*	1					
25	6213-711-003-20	PIPE, WATER OUTLET	*	1					
26	V723-102-005-50	O-RING	*	1					
27	6901-910-828-00	BOLT, SEMS	*	2					
28	6213-619-006-00	SPACER/WATERPUMP	*	1					
29	V721-113-105-00	O-RING HS90 G50	*	1					
30	6904-110-840-00	STUD/M8X40	*	2					

FIG. 18 WATER PUMP

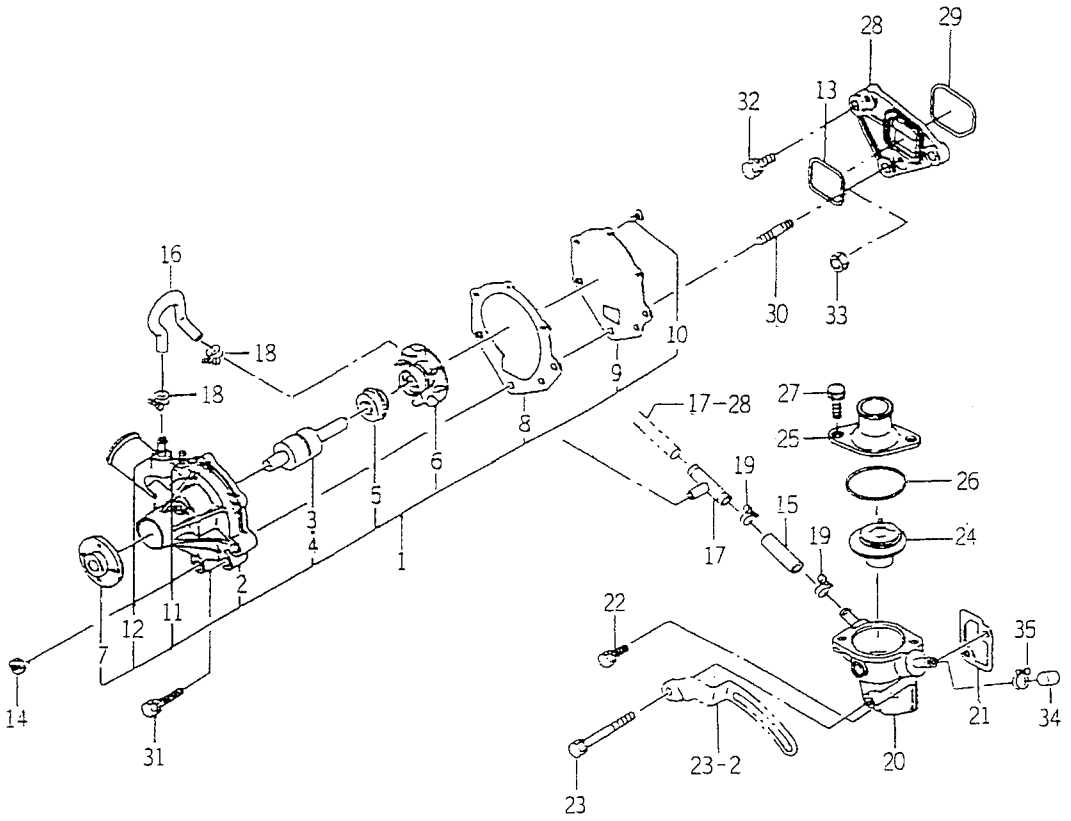

6005-420G

KEY	PART CODE	DESCRIPTION	SPC	TYPE OF MODEL E3CD TB05		ITC	COL	GRP	REMARKS
31	6901-910-845-00	BOLT, SEMS/M8X45	*	1					
32	V211-560-802-50	BOLT, SEMS/M8X25 7T	*	1					
33	3817-401-001-00	NUT/M08	*	1					
34	6213-729-011-00	CAP	*	2					
35	J061-220-024-00	CLAMP/WIRE/20-24	*	2					

FIG. 19 COOLING FAN

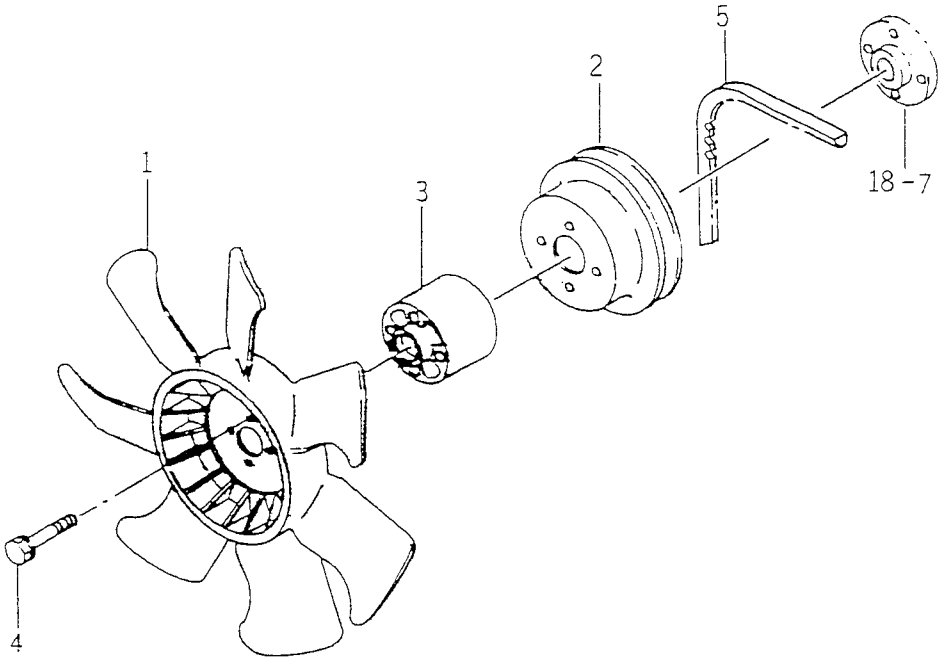

6005-4801

KEY	PART CODE	DESCRIPTION	SPC	TYPE OF MODEL E3CD TB05		ITC	COL	GRP	REMARKS
1	6213-660-015-00	FAN/COOLING	*	1					
2	6213-641-022-00	PULLEY/WATERPUMP	*	1					
3	6213-669-012-00	SPACER/FAN/53	*	1					
4	6209-030-092-00	BOLT/WS	*	4					
5	6213-671-031-00	BELT/VR5A39.5	*	1					

FIG. 20 INJECTION NOZZLE

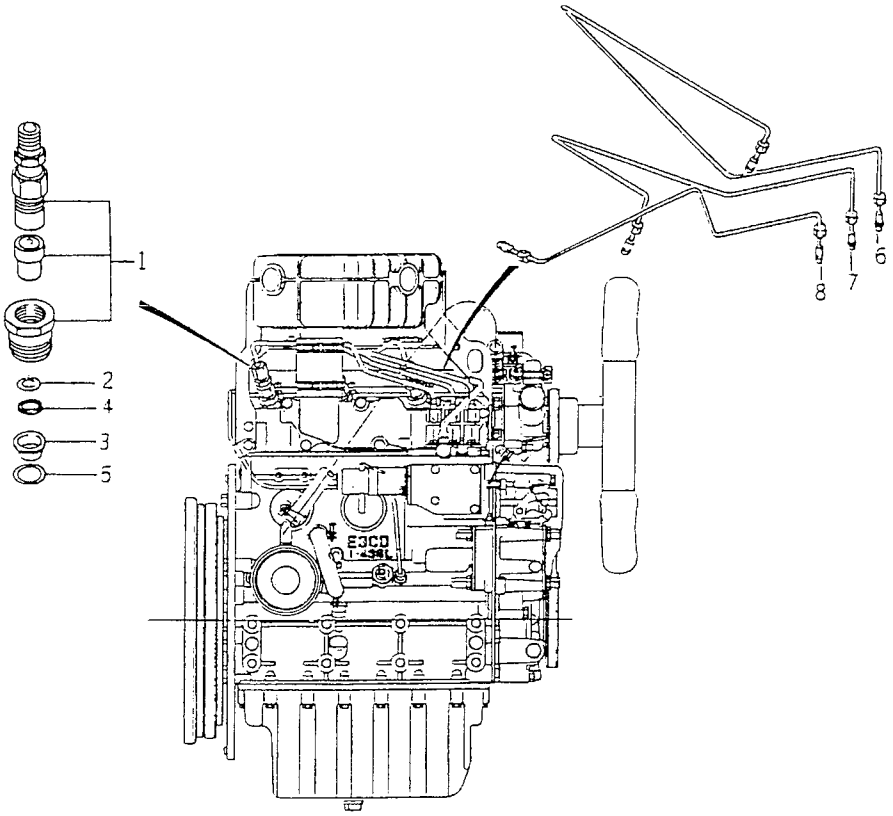

5005-501A

KEY	PART CODE	DESCRIPTION	SPC	TYPE OF MODEL E3CD TB05		ITC	COL	GRP	REMARKS
1	6215-300-037-00	INJECTIONNOZZLE ASSY	*	3					FIG 026
2	6215-315-002-00	GASKET, NOZZLE	*	3					
3	6215-315-006-00	HEATSHILD/NOZZLE	*	3					
4	6215-315-005-00	WASHER/CORRUGATE	*	3					
5	6215-315-007-00	GASKET	*	3					
6	6215-411-052-00	PIPE/INJECTION ASSY	*	1					
7	6215-411-053-10	PIPE/INJECTION ASSY	*	1					
8	6215-411-054-00	PIPE/INJECTION ASSY	*	1					

FIG. 21 INJECTION PUMP

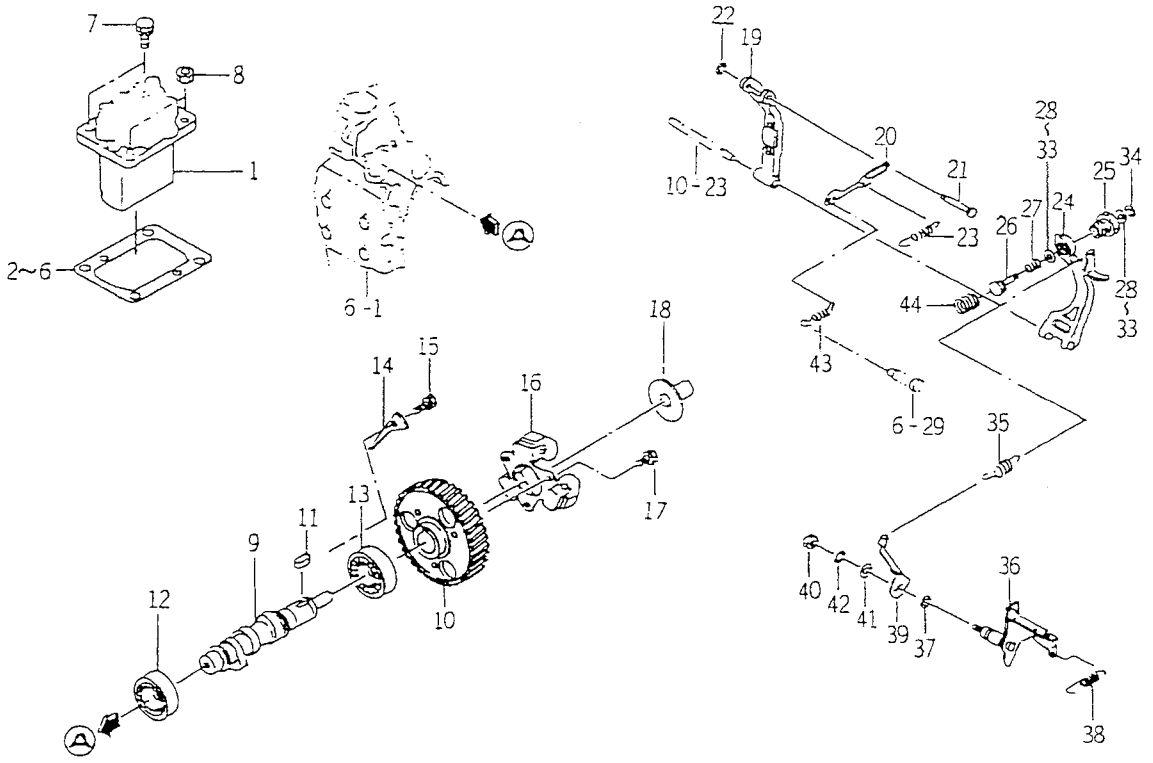

6005-510L

KEY	PART CODE	DESCRIPTION	SPC	TYPE OF MODEL E3CD TB05		ITC	COL	GRP	REMARKS
1	6215-600-078-00	INJECTIONPUMP ASSY	*	1					FIG 027
2	6219-752-006-00	SHIM/INJECTION P/0.3	*	1					
3	6219-752-007-00	SHIM/INJECTION P/0.1	*	1					
4	6219-752-008-00	SHIM/INJECTION P/0.2	*	1					
5	6219-752-009-00	SHIM/INJECTION P/0.4	*	1					
6	6219-752-010-00	SHIM/INJECTION P/0.5	*	1					
7	V211-560-802-00	BOLT/M8X20	*	2					
8	3817-401-001-00	NUT/M08	*	2					
9	6215-621-018-00	CAMSHAFT/INJ PUMP	*	1					
10	6212-524-006-10	GEAR/INJECTIONPUMP	*	1					
11	6908-000-716-00	KEY	*	1					
12	V600-110-620-30	BEARING, RB/6203	*	1					
13	V600-110-600-40	BEARING, RB/6004	*	1					
14	6212-535-009-00	PLATE/THRUST/INJPUMP	*	1					
15	6901-910-612-00	BOLT, SEMS/M6X12	*	1					
16	6215-520-007-10	FLYWEIGHT ASSY	*	1					
17	6209-030-043-00	BOLT/M6X10	*	3					
18	6215-526-001-10	PIECE, THRUST	*	1					
19	6215-541-001-10	ARM/FLOATING COMP	*	1					
20	6215-543-002-10	RINK/CONTROL	*	1					
21	6215-542-006-00	PIN, CONTROL	*	1					
22	V710-140-004-00	RING, SNAP/ 4 E	*	1					
23	6215-549-031-10	SPRING/SETTING	*	1					
24	6215-541-016-30	ARM/TENSION	*	1					
25	6215-549-038-00	CASE/ADAPTER	*	1					
26	6215-549-037-00	PIN/ADAPTER	*	1					
27	6215-549-005-10	SPRING ADAPTER	*	1					
28	6215-549-063-00	SHIM/ADAPTER/0.05	*	2					
29	6215-549-006-00	SHIM, ADAPTER/0.1	*	2					
30	6215-549-009-00	SHIM, ADAPTER/0.15	*	2					

FIG. 21 INJECTION PUMP

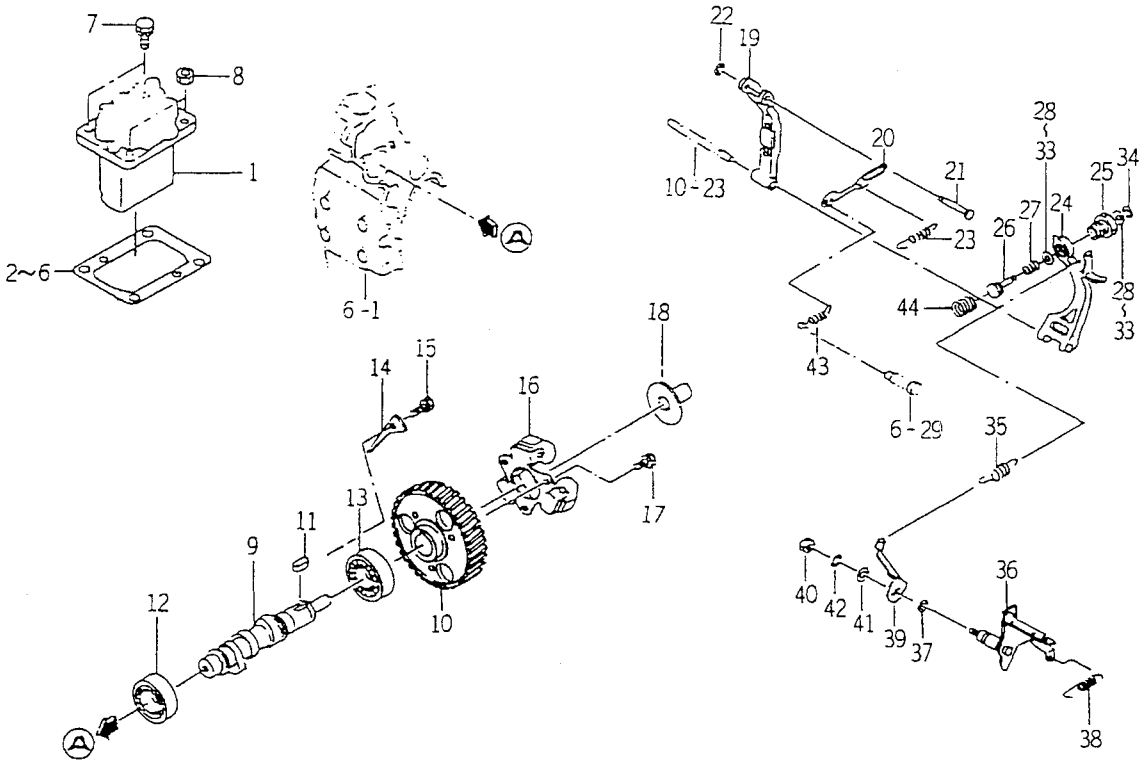

6005-510L

KEY	PART CODE	DESCRIPTION	SPC	TYPE OF MODEL E3CD TB05		ITC	COL	GRP	REMARKS
31	6215-549-010-00	SHIM, ADAPTER/0.2	*	2					
32	6215-549-023-00	SHIM/ADAPTER/0.5	*	1					
33	6215-549-024-00	SHIM/ADAPTER/1.0	*	1					
34	V710-140-004-00	RING, SNAP/ 4 E	*	1					
35	6215-531-019-00	SPRING/GOVERNOR	*	1					
36	6215-541-024-20	LEVER/CONTROL COMP	*	1					
37	V720-101-900-80	O-RING/P 8	*	1					
38	6209-580-002-10	SPRING, RETURN	*	1					
39	6215-549-007-10	ARM/CONTROL	*	1					
40	6909-110-406-00	NUT	*	1					
41	V411-260-006-00	WASHER / M6	*	1					
42	6909-150-506-00	WASHER, SP/M6	*	1					
43	6215-549-012-00	SPRING, STARTING	*	1					
44	6215-537-002-10	SPRING/IDLE	*	1					

FIG. 22 FUEL PIPE

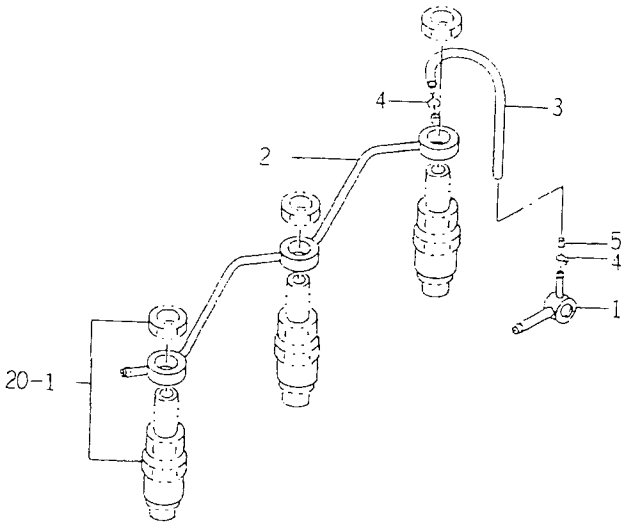

6005-550C

KEY	PART CODE	DESCRIPTION	SPC	TYPE OF MODEL E3CD TB05		ITC	COL	GRP	REMARKS
1	6215-412-004-00	CONNECTOR/FUEL	*	1					
2	6215-411-080-10	PIPE/FUEL	*	1					
3	6209-360-018-00	HOSE/RUBBER/160	*	1					
4	J062-076-082-00	CLIP/HOSE/7.6-8.2	*	2					
5	3640-586-004-00	RESISTANCE/1.0	*	1					

FIG. 23 ELECTRIC (1)

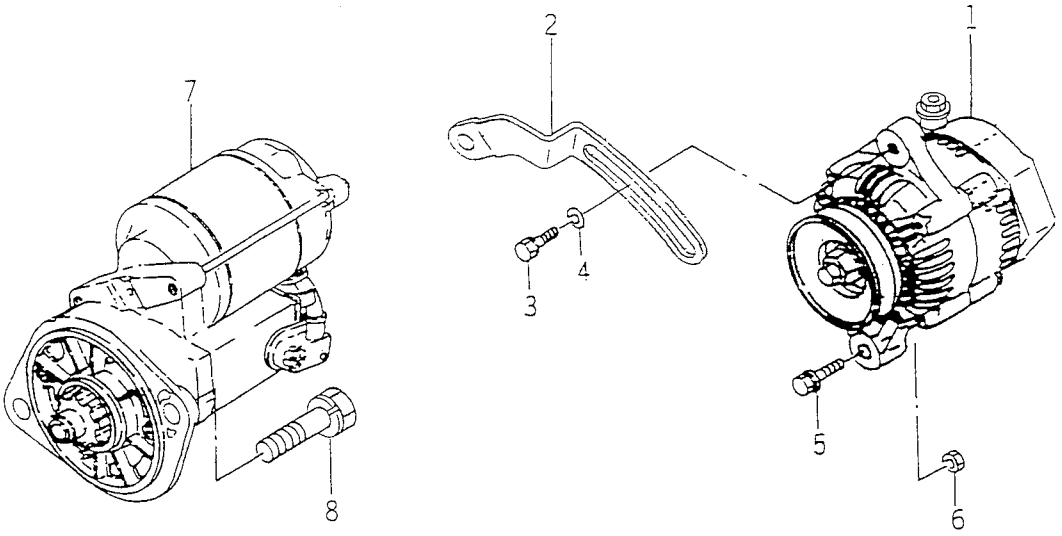

6005-801P

KEY	PART CODE	DESCRIPTION	SPC	TYPE OF MODEL E3CD TB05		ITC	COL	GRP	REMARKS
1	6281-200-020-00	GENERATOR ASSY	*	1					FIG 029
2	6213-674-006-10	PLATE/ADJUST	*	1					
3	V211-560-802-00	BOLT/M8X20	*	1					
4	1373-121-001-00	WASHER/9X22X2	*	1					
5	6209-031-083-00	BOLT/WSP	*	1					
6	6909-110-410-00	NUT/M10	*	1					
7	6281-100-007-20	STARTER ASSY	*	1					FIG 028
8	6901-931-240-00	BOLT	*	2					

FIG. 24 ELECTRIC (2)

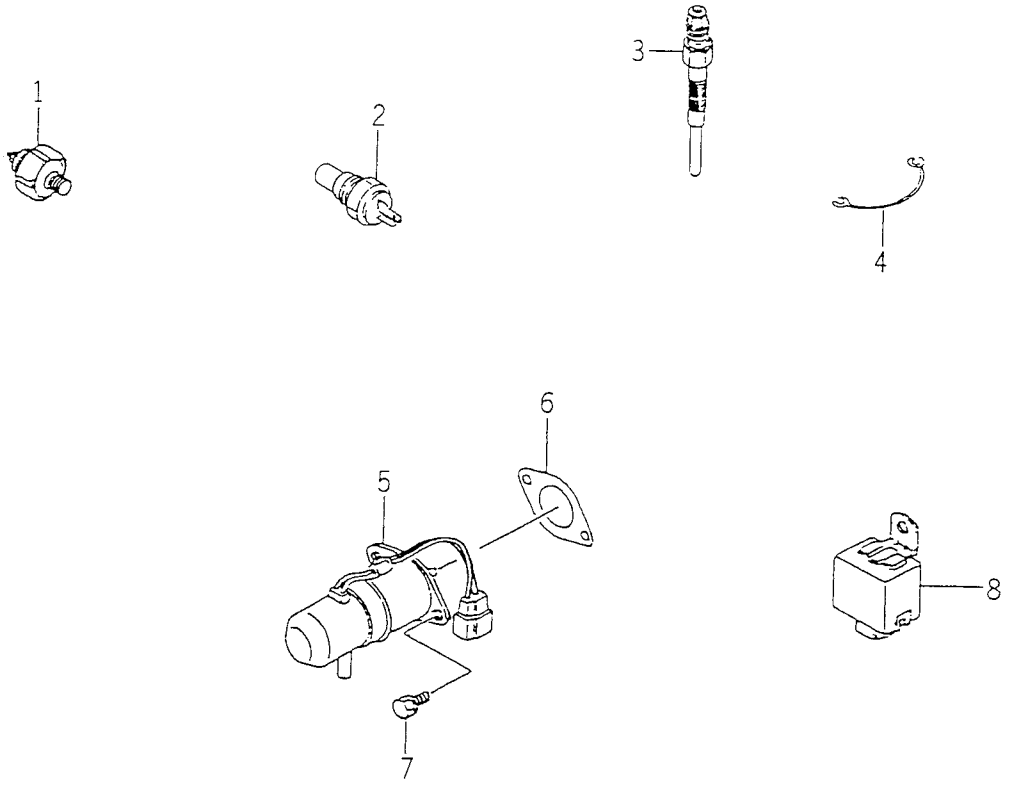

6005-820D

KEY	PART CODE	DESCRIPTION	SPC	TYPE OF MODEL E3CD TB05		ITC	COL	GRP	REMARKS
1	6281-971-003-00	SWITCH/OILPRESSURE	*	1					
2	6282-450-004-00	THERMOMETER	*	1					
3	6281-410-010-00	GLOWPLUG	*	3					
4	6219-732-012-00	CONNECTOR/GLOWPLUG	*	2					
5	6281-910-003-10	SOLENOID	*	1					
6	6209-630-002-10	GASKET	*	1					
7	6901-910-612-00	BOLT, SEMS/M6X12	*	2					
8	6281-920-001-00	RELAY, SOLENOID	*	1					

FIG. 25 REPAIR PARTS (OPTION)

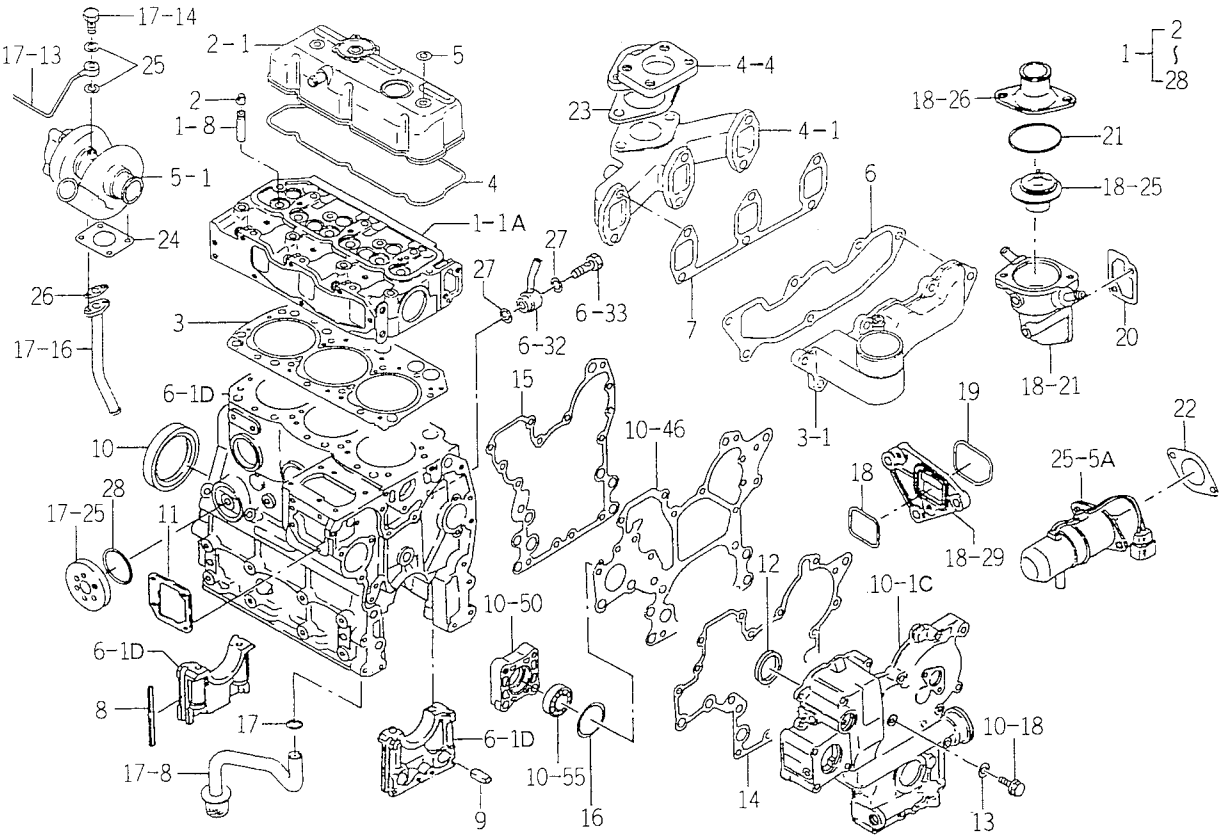

6005-999E

KEY	PART CODE	DESCRIPTION	SPC	TYPE OF MODEL E3CD TB05		ITC	COL	GRP	REMARKS
1	6287-810-029-00	REPAIR/ENGINE SET	T	1					
2	6212-569-002-00	SEAL, OIL	T	6					
3	6211-141-023-50	GASKET/CYLINDERHEAD	T	1					
4	6211-173-005-00	SEAL/CYL HEAD/UNDER	T	1					
5	6909-572-008-00	PACKING	T	2					
6	6214-115-003-10	GASKET/INLETMANIFOLD	T	1					
7	6214-145-004-20	GASHET/EXH MANIFOLD	T	1					
8	6211-258-001-00	SEAL, BEARING CAP	T	4					
9	6211-258-002-00	SEAL, BEARING CAP/7	T	2					
10	6209-625-003-20	OILSEAL	T	1					
11	6211-292-001-20	GASKET/COVER	T	1					
12	6209-625-002-00	SEAL, OIL	T	1					
13	6209-500-003-00	WASHER/08X14X01	T	2					
14	6211-312-005-10	GASKET/GEARCASE	T	1					
15	6211-312-006-10	GASKET/PLATE	T	1					
16	V723-102-005-00	O-RING 1A S50	T	1					
17	V720-113-502-20	RING/O	T	1					
18	V721-103-104-00	O-RING/G40	T	1					
19	V721-103-105-00	O-RING/G50	T	1					
20	6213-743-002-10	GASKET/HOUSING	T	1					
21	V723-102-005-50	O-RING	T	1					
22	6209-630-002-10	GASKET	T	1					
23	1594-105-001-00	GASKET	T	1					
24	6214-145-009-00	GASKET	T	1					
25	6909-571-410-00	PACKING	T	2					
26	6209-630-004-10	GASKET	T	1					
27	6213-319-011-00	GASKET	T	2					
28	V723-102-006-00	RING/O	T	1					

FIG. 26 COMPONENT PARTS FOR 6215 – 300 – 037 – 00 ON Fig.20

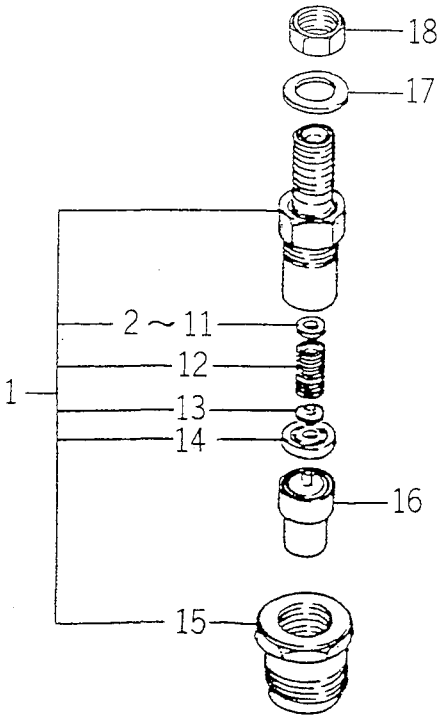

6215-3000

KEY	PART CODE	DESCRIPTION	SPC	TYPE OF MODEL E3CD TB05		ITC	COL	GRP	REMARKS
1	6215-330-022-00	HOLDER/NOZZLE ASSY	*	3					
2	6215-345-044-00	SHIM/0.10	*	3					
3	6215-345-045-00	SHIM/0.20	*	3					
4	6215-345-046-00	SHIM/0.30	*	3					
5	6215-345-047-00	SHIM/0.40	*	3					
6	6215-345-048-00	SHIM/0.50	*	3					
7	6215-345-049-00	SHIM/0.52	*	3					
8	6215-345-050-00	SHIM/0.54	*	3					
9	6215-345-051-00	SHIM/0.56	*	3					
10	6215-345-052-00	SHIM/0.58	*	3					
11	6215-345-053-00	SHIM/0.80	*	3					
12	6215-343-002-00	SPRING, NOZZLE	*	3					
13	6215-342-002-00	SEAT, SPRING	*	3					
14	6215-339-004-00	SPACER	*	3					
15	6215-332-006-00	NUT/NOZZLERETAINING	*	3					
16	6215-311-005-00	NOZZLE	*	3					
17	6215-359-003-00	GASKET	*	3					
18	6215-359-004-00	NUT	*	3					

FIG. 27 COMPONENT PARTS FOR 6215-600-078-00 ON Fig.21

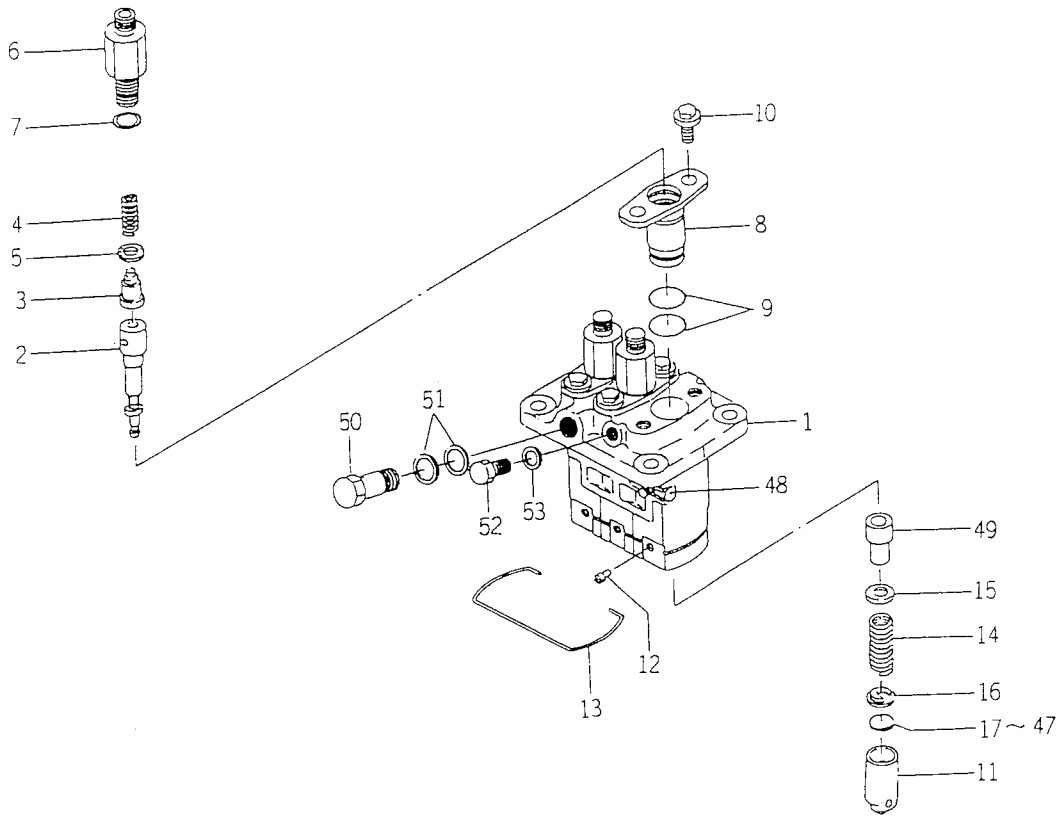

6215-6000

KEY	PART CODE	DESCRIPTION	SPC	TYPE OF MODEL E3CD TB05		ITC	COL	GRP	REMARKS
1	6215-611-015-00	HOUSING/PUMP	*	1					
2	6215-631-008-00	PLUNGER ASSY	*	3					
3	6215-641-002-00	VALVE, DELIVERY	*	3					
4	6215-643-005-00	SPRING/DELIVERYVALVE	*	3					
5	6215-649-008-00	GASKET	*	3					
6	6215-644-006-00	HOLDER/DELIVERYVALVE	*	3					
7	6215-649-009-00	O-RING	*	3					
8	6215-635-004-00	SLEEVEFLANGE	*	3					
9	6215-649-010-00	ORING	*	6					
10	6215-649-011-00	BOLT	*	6					
11	6215-622-003-00	TAPPET	*	3					
12	6215-629-017-00	PIN	*	3					
13	6215-629-035-00	SNAPRING	*	1					
14	6215-634-003-00	SPRING/PLUNGER	*	3					
15	6215-639-008-00	SPRINGSEAT	*	3					
16	6215-639-009-00	SPRINGSEAT	*	3					
17	6215-629-060-00	PLATE/T=2.60	*	1					
18	6215-629-061-00	PLATE/T=2.65	*	1					
19	6215-629-062-00	PLATE/T=2.70	*	1					
20	6215-629-063-00	PLATE/T=2.75	*	1					
21	6215-629-064-00	PLATE/T=2.80	*	1					
22	6215-629-065-00	PLATE/T=2.85	*	1					
23	6215-629-066-00	PLATE/T=2.90	*	1					
24	6215-629-067-00	PLATE/T=2.95	*	1					
25	6215-629-036-00	PLATE/T=3.00	*	1					
26	6215-629-037-00	PLATE/T=3.05	*	1					
27	6215-629-038-00	PLATE/T=3.10	*	1					
28	6215-629-039-00	PLATE/T=3.15	*	1					
29	6215-629-040-00	PLATE/T=3.20	*	1					
30	6215-629-041-00	PLATE/T=3.25	*	1					

FIG. 27 COMPONENT PARTS FOR 6215-600-078-00 ON Fig.21

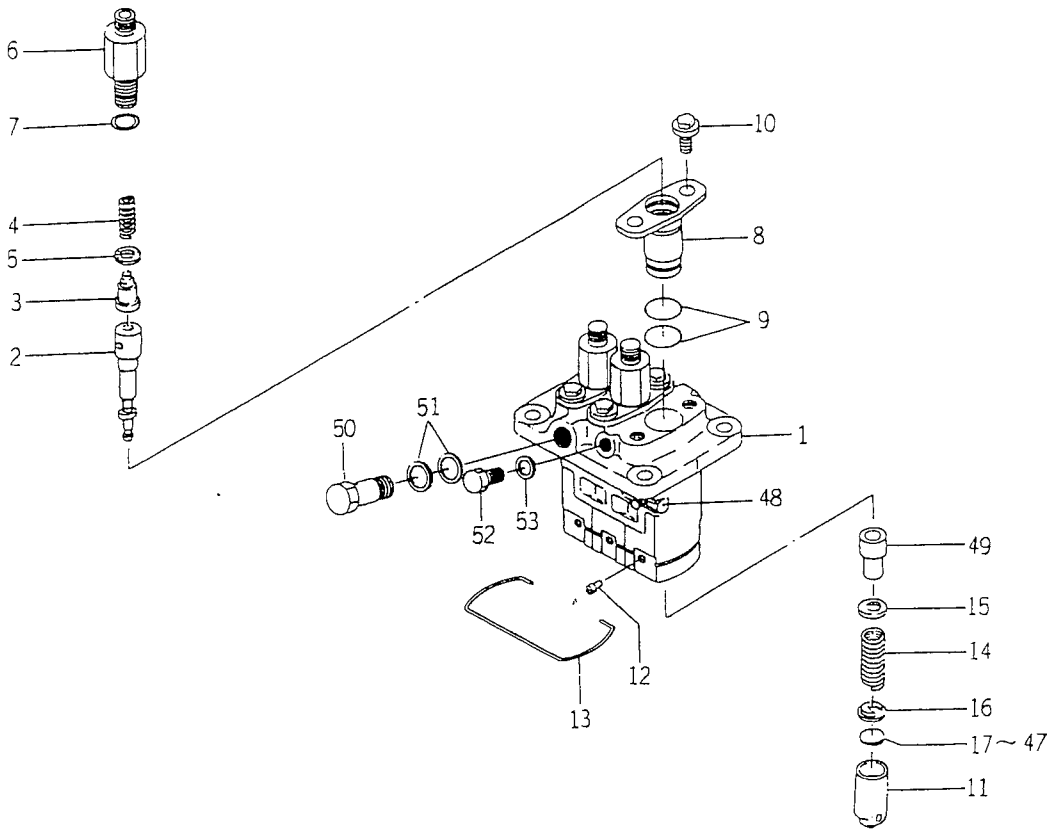

6215-6000

KEY	PART CODE	DESCRIPTION	SPC	TYPE OF MODEL E3CD TB05		ITC	COL	GRP	REMARKS
31	6215-629-042-00	PLATE/T=3.30	*	1					
32	6215-629-043-00	PLATE/T=3.35	*	1					
33	6215-629-044-00	PLATE/T=3.40	*	1					
34	6215-629-045-00	PLATE/T=3.45	*	1					
35	6215-629-046-00	PLATE/T=3.50	*	1					
36	6215-629-047-00	PLATE/T=3.55	*	1					
37	6215-629-048-00	PLATE/T=3.60	*	1					
38	6215-629-049-00	PLATE/T=3.65	*	1					
39	6215-629-050-00	PLATE/T=3.70	*	1					
40	6215-629-051-00	PLATE/T=3.75	*	1					
41	6215-629-052-00	PLATE/T=3.80	*	1					
42	6215-629-053-00	PLATE/T=3.85	*	1					
43	6215-629-054-00	PLATE/T=3.90	*	1					
44	6215-629-055-00	PLATE/T=3.95	*	1					
45	6215-629-056-00	PLATE/T=4.00	*	1					
46	6215-629-058-00	PLATE/T=4.05	*	1					
47	6215-629-059-00	PLATE/T=4.10	*	1					
48	6215-637-004-00	CONTROLRACK	*	1					
49	6215-635-005-00	CONTROLSLEEVE	*	3					
50	6215-619-023-00	EYEBOLT	*	1					
51	6115-639-008-00	GASKET	*	2					
52	6215-619-024-00	BOLT	*	1					
53	6215-359-006-00	GASKET	*	1					

FIG. 28 COMPONENT PARTS FOR 6281 – 100 – 007 – 20 ON Fig.23

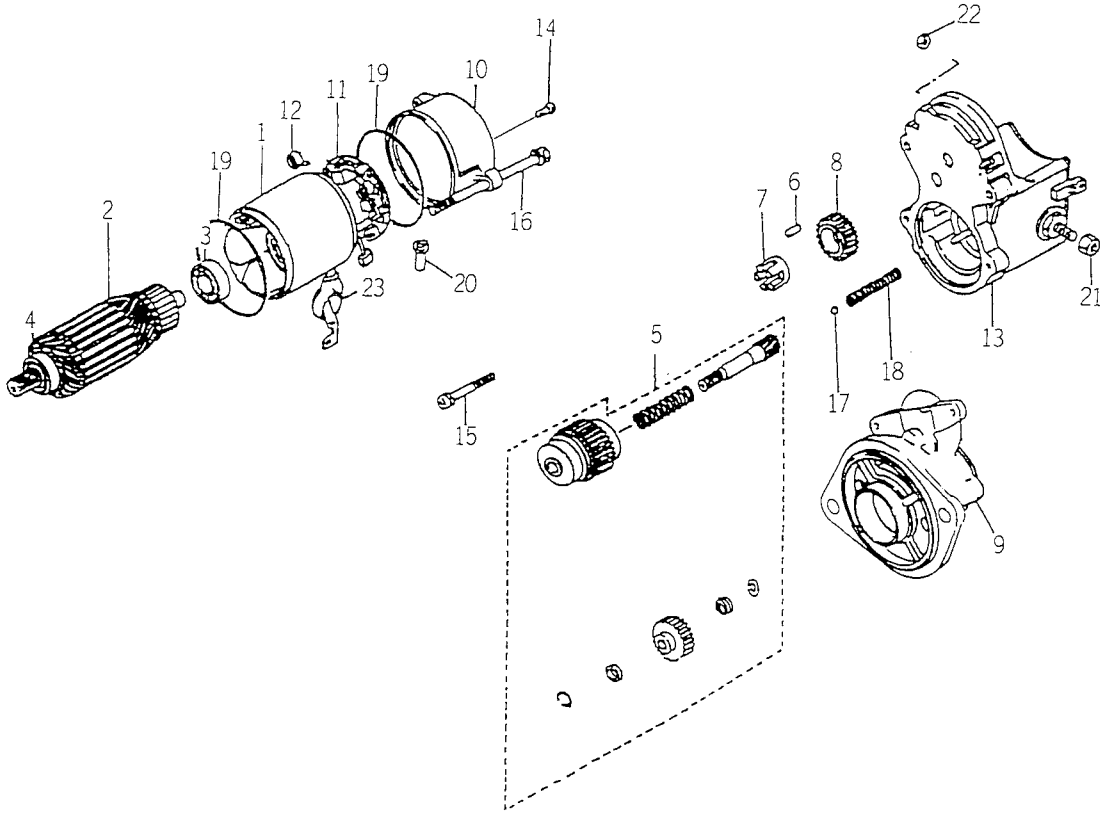

6281-1000

KEY	PART CODE	DESCRIPTION	SPC	TYPE OF MODEL E3CD TB05		ITC	COL	GRP	REMARKS
1	6281-111-005-00	YOKE/STARTER ASSY	*	1					
2	6281-121-006-00	ARMATURE/STARTE ASSY	*	1					
3	6281-129-038-00	BEARING	*	1					
4	6281-129-039-00	BEARING	*	1					
5	6281-124-007-10	CLUTCH/STARTER ASSY	*	1					
6	6581-129-099-00	RORA	*	5					
7	6281-129-040-00	RETAINER	*	1					
8	6281-123-005-00	PINION/STARTER	*	1					
9	6281-129-045-10	HOUSING/STARTER ASSY	*	1					
10	6281-115-011-00	FRAME/STARTEREND	*	1					
11	6281-116-004-00	HOLDER/STARTER ASSY	*	1					
12	6581-117-007-00	SPRING, BRUSH	*	4					
13	6281-151-017-10	SWITCH/MAGNETIC ASSY	*	1					
14	6281-129-062-00	SCREW	*	2					
15	6281-129-042-00	BOLT/WS	*	2					
16	6281-129-043-00	BOLT/THROUGH	*	2					
17	6581-129-092-00	BALL	*	1					
18	6281-129-044-00	SPRING/RETURN	*	1					
19	6281-129-003-00	O-RING	*	2					
20	6281-115-016-00	BUSHING/DRAIN	*	1					
21	6909-111-508-00	NUT	*	1					
22	6281-229-041-00	NUT	*	1					
23	6281-115-010-00	COVER	*	1					

FIG. 29 COMPONENT PARTS FOR 6281 – 200 – 020 – 00 ON Fig.23

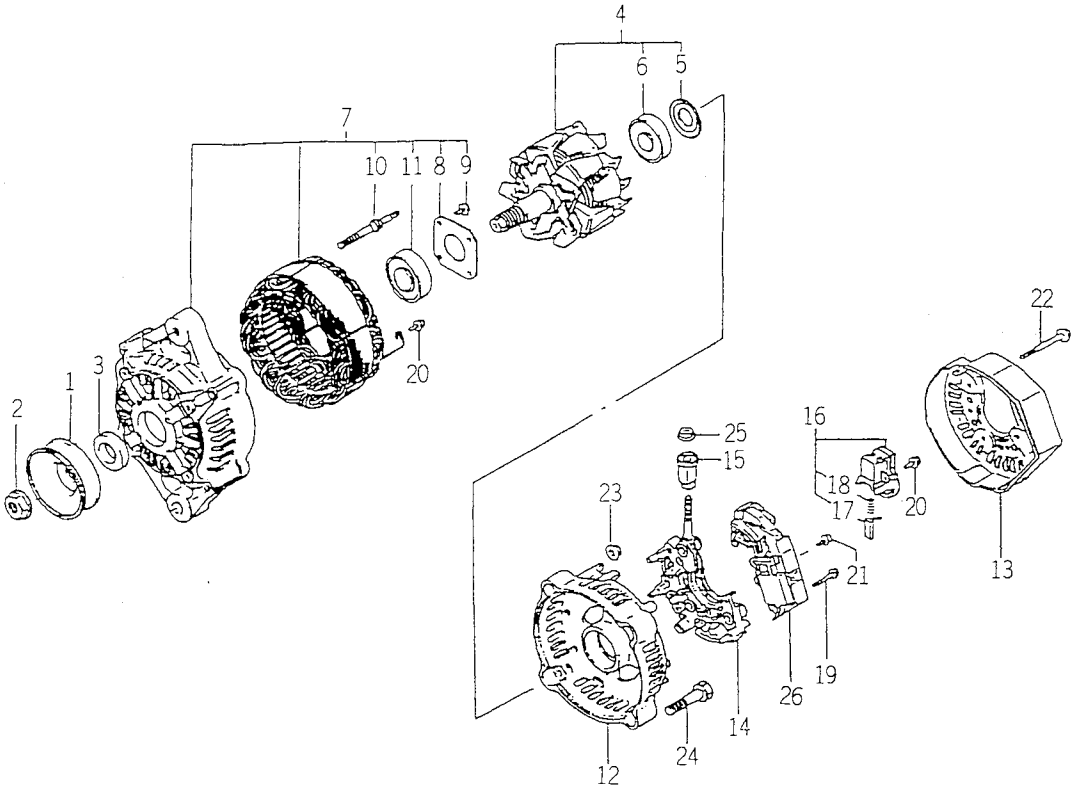

6281-2000

KEY	PART CODE	DESCRIPTION	SPC	TYPE OF MODEL E3CD TB05		ITC	COL	GRP	REMARKS
1	6281-222-012-00	PULLEY	*	1					
2	6281-229-002-00	NUT	*	1					
3	6281-229-003-00	COLLOR	*	1					
4	6281-221-007-00	ROTOR ASSY	*	1					
5	6281-229-004-00	COVER, BEARING	*	1					
6	6281-229-032-00	BEARING/BALL	*	1					
7	6281-213-017-00	FRAME/DRIVEEND ASSY	*	1					
8	6281-229-006-00	PLATE	*	1					
9	6281-229-007-00	BOLT	*	4					
10	6281-229-008-00	BOLT	*	2					
11	6281-229-033-00	BEARING/BALL	*	1					
12	6281-214-003-00	FRAME	*	1					
13	6281-214-004-00	COVER	*	1					
14	6281-229-029-00	HOLDER ASSY	*	1					
15	6281-229-011-00	BUSH	*	1					
16	6281-217-003-00	HOLDER/BRUSH ASSY	*	1					
17	6281-215-001-00	BRUSH	*	2					
18	6281-216-001-00	SPRING	*	2					
19	6281-229-012-00	BOLT	*	2					
20	6281-229-013-00	BOLT	*	6					
21	6281-229-014-00	BOLT	*	1					
22	6281-229-015-00	BOLT	*	3					
23	6281-229-016-00	NUT	*	2					
24	6281-229-017-00	BOLT	*	2					
25	6281-229-018-00	NUT	*	1					
26	6281-271-002-00	REGULATOR ASSY	*	1					

CHASSIS

FIG. 1 FUEL SYSTEM

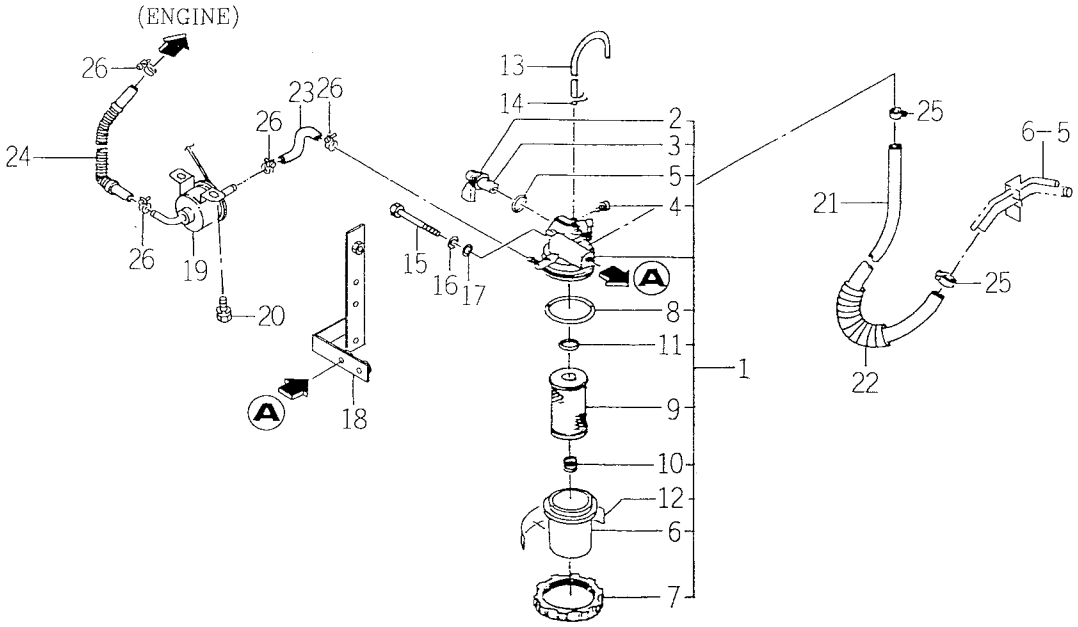

1641-102

KEY	PART CODE	DESCRIPTION	SPC	TYPE OF MODEL TK538H		ITC	COL	GRP	REMARKS
1	1650-111-220-00	FILTER/FUEL ASSY	*	1					
2	1560-102-202-50	LEVER	*	1					
3	1560-102-203-50	SEAL	*	1					
4	1560-102-204-40	SCREW	*	1					
5	V720-102-402-10	O-RING/P21	*	1					
6	1560-102-205-40	CUP	*	1					
7	1426-160-207-00	NUT, RING	*	1					
8	V721-103-106-50	O-RING/G65	*	1					
9	1513-102-329-00	ELEMENT	*	1					
10	1426-160-209-00	SPRING	*	1					
11	V720-102-401-60	O-RING/P16	*	1					
12	1513-102-332-00	PLATE, CAUTION	*	1					
13	1673-102-005-00	HOSE/RETURN	*	1					
14		WIRE	*	1					
15	V201-260-808-00	BOLT/M 8X80	*	1					
16	V401-160-008-00	WASHER, SP/M 8	*	1					
17	V411-260-008-00	WASHER, PL/M 8	*	1					
18	1641-102-500-00	STAY/PLATE/FILTER	*	1					
19	1703-105-210-00	PUMP/FUEL ASSY	*	1					
20	V210-260-601-20	BOLT, SEMS	*	2					
21	1560-102-002-30	HOSE/1150	*	1					
22	1673-102-004-10	INSULATOR/CORRUGATE/	*	1					
23	1650-111-006-00	HOSE/FUEL	*	1					
24	1673-102-001-10	HOSE/08X13X1250	*	1					
25	J061-112-022-00	CLAMP/WORM/12-22	*	2					
26	J061-211-013-00	CLAMP/WIRE/11-13	*	4					

FIG. 2 AIR CLEANER SYSTEM

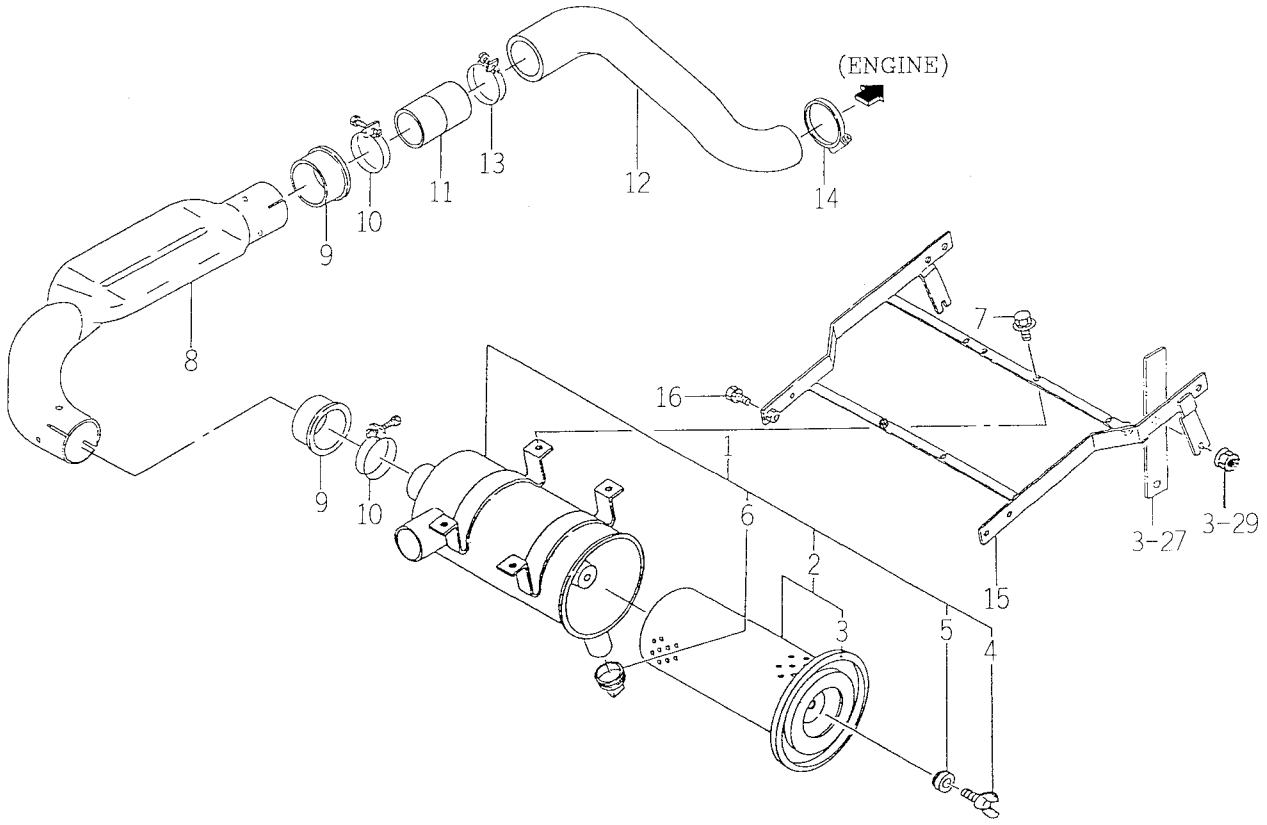

1674-103A

KEY	PART CODE	DESCRIPTION	SPC	TYPE OF MODEL TK538H		ITC	COL	GRP	REMARKS
1	1560-103-250-10	CLEANER/AIR ASSY	*	1					
2	1560-103-202-50	ELEMENT ASSY	*	1					
3	1560-103-261-00	GASKET	*	1					
4	V271-160-602-50	BOLT/M6X25	*	1					
5	1544-104-204-00	PACKING	*	1					
6	1544-104-205-00	VALVE	*	1					
7	V211-360-801-60	BOLT, SEMS (SP)	*	4					
8	1642-103-001-00	PIPE/INLET	*	1					
9	1560-103-002-40	GASKET	*	2					
10	J061-252-063-00	CLAMP/WIRE/52-63	*	2					
11	1674-103-001-00	PIPE/CONNECT	*	1					
12	1674-103-002-00	HOSE/INLET	*	1					
13	J061-252-063-00	CLAMP/WIRE/52-63	*	1					
14	J061-140-057-00	CLANP/WORM/40-57	*	1					
15	1560-103-240-20	BRACKET/CLEANER COMP	*	1					
16	V211-260-801-60	BOLT, SEMS (S) M8X16	*	4					

FIG. 3 RADIATOR SYSTEM

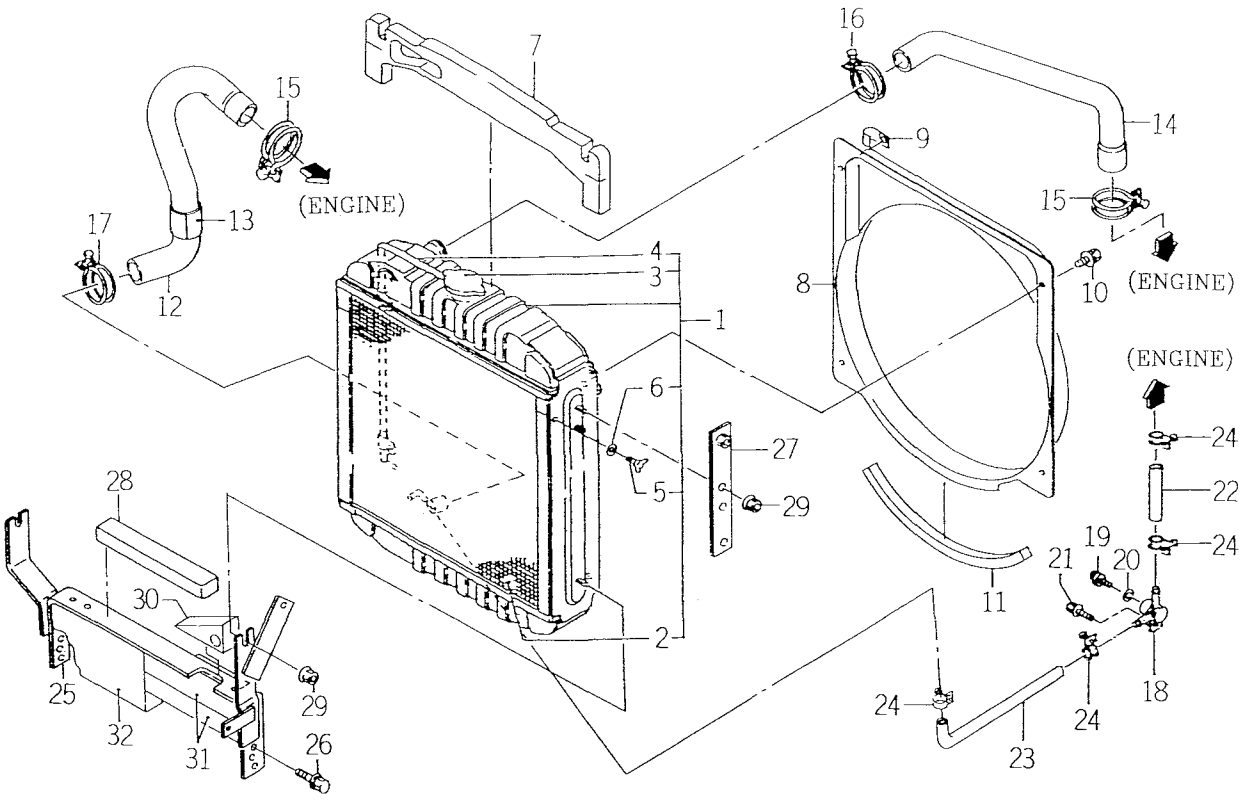

1641-104A

KEY	PART CODE	DESCRIPTION	SPC	TYPE OF MODEL TK538H		ITC	COL	GRP	REMARKS
1	1673-104-300-10	RADIATOR ASSY	*	1					
2	1673-104-302-00	NET/WIRE COMP	*	1					
3	1421-101-313-00	CAP	*	1					
4	1513-102-205-00	HOSE, UP/RUBBER	*	1					
5	V271-160-601-20	BOLT/WING/M6X12	*	1					
6	1560-104-206-40	WASHER	*	1					
7	1560-104-003-60	INSULATOR	*	1					
8	1673-104-004-00	SHROUD	*	1					
9	3737-172-009-00	CLAMP, MAIN HARNESS	*	2					
10	V210-360-601-20	BOLT, SEMS	*	4					
11	1650-102-006-00	INSULATOR	*	1					
12	1673-104-001-00	HOSE/RADIATOR/OUTLET	*	1					
13	1444-510-006-00	RUBBER B	*	1					
14	1673-104-002-10	HOSE/RADIATOR/INLET	*	1					
15	J061-234-042-00	CLAMP/WIRE/34-42	*	2					
16	J061-232-040-00	CLAMP/WIRE/32-40	*	1					
17	J061-230-038-00	CLAMP/WIRE/30-38	*	1					
18	1560-104-010-40	CONNECTOR	*	1					
19	1424-101-203-00	PLUG	*	1					
20	1424-101-204-00	PACKING	*	1					
21	V211-360-802-00	BOLT(SP) M8X20	*	1					
22	1673-104-009-00	HOSE/180	*	1					
23	1673-104-010-10	HOSE	*	1					
24	J061-210-015-00	CLAMP/WIRE/10-15	*	4					
25	1641-104-510-10	BRACKET/RADIATO COMP	*	1					
26	V211-660-802-50	BOLT/M8X25	*	4					
27	1560-104-220-60	STAY/PLATE COMP	*	1					
28	1427-111-244-10	SEAL/30X20X215	*	1					
29	V362-260-008-00	NUT/WASHER	*	6					
30	1674-104-001-00	INSULATOR	*	1					

FIG. 3 RADIATOR SYSTEM

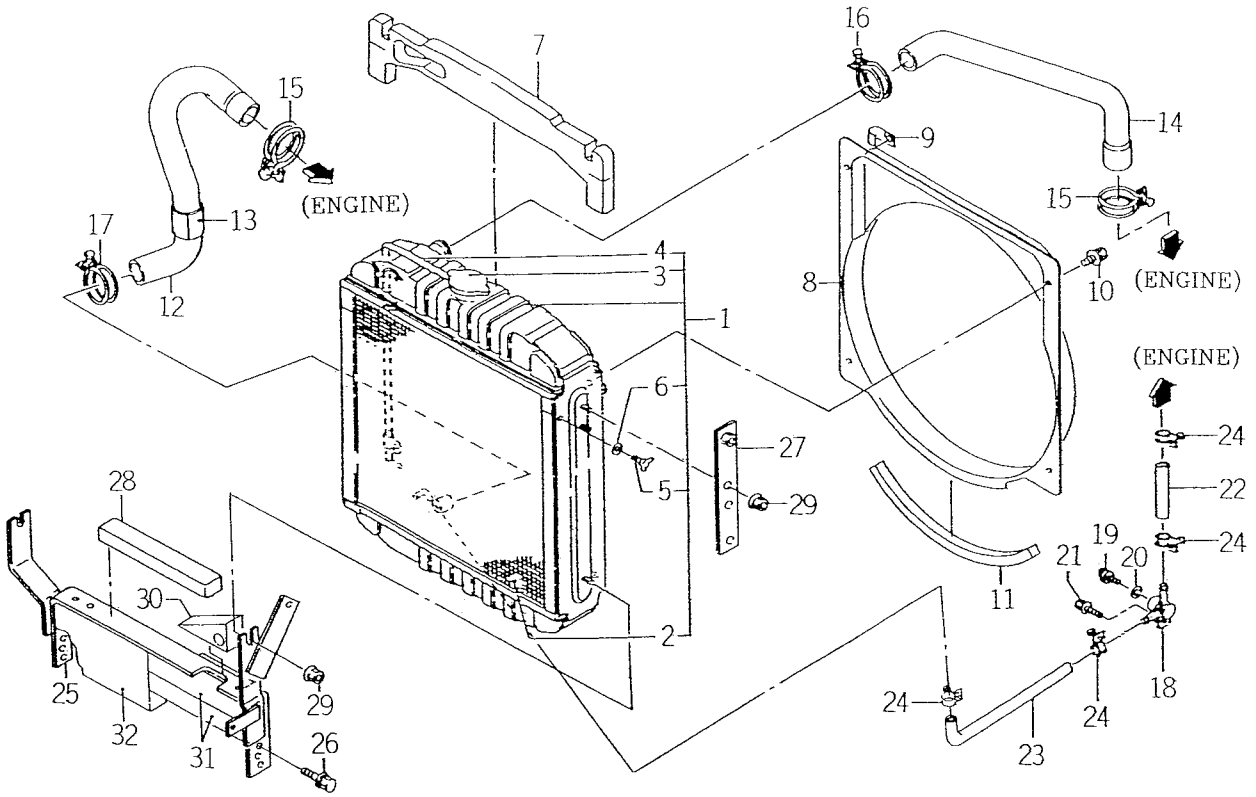

1641-104A

KEY	PART CODE	DESCRIPTION	SPC	TYPE OF MODEL TK538H		ITC	COL	GRP	REMARKS
31	1674-104-002-00	INSULATOR	*	2					
32	1674-104-003-10	INSULATOR	*	1					

FIG. 4 MUFFLER SYSTEM (EXCEPT C TYPE)

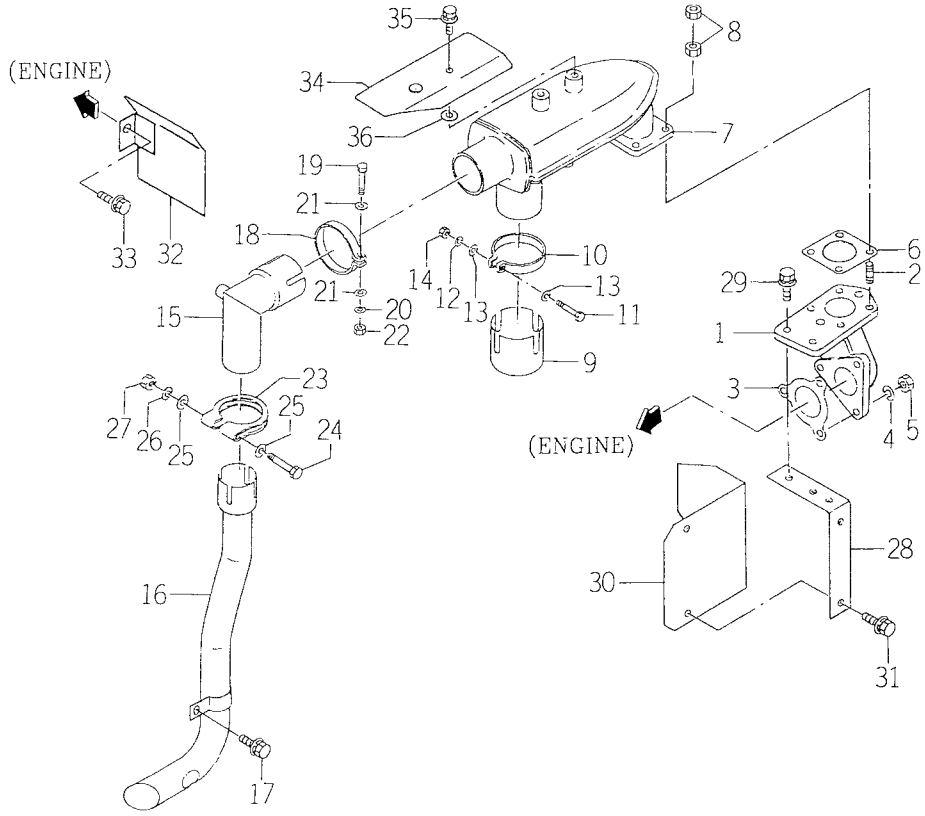

1674-105

KEY	PART CODE	DESCRIPTION	SPC	TYPE OF MODEL TK538H		ITC	COL	GRP	REMARKS
1	1674-105-001-00	ADAPTER/EXHAUST	*	1					
2	V251-340-802-50	BOLT/STUD	*	4					
3	3678-332-001-00	GASKET	*	1					
4	V401-160-008-00	WASHER, SP/M 8	*	3					
5	V304-460-008-00	NUT/M8	*	3					
6	6222-147-001-00	GASKET/MUFFLER	*	1					
7	1642-105-300-00	MUFFLER COMP	*	1					
8	1544-103-004-00	NUT/M8	*	8					
9	1642-105-004-00	PIPE	*	1					
10	1444-101-440-00	CLAMP COMP	*	1					
11	V201-261-006-50	BOLT/M10X65	*	1					
12	V401-160-010-00	WASHER, SP/M10	*	1					
13	V411-260-010-00	WASHER/M10	*	2					
14	V304-260-010-00	NUT	*	1					
15	1674-105-240-00	PIPE COMP	*	1					
16	1674-105-220-00	PIPE/TAIL/UNDER COMP	*	1					
17	V211-360-801-60	BOLT, SEMS (SP)	*	1					
18	1444-101-440-00	CLAMP COMP	*	1					
19	V201-261-006-50	BOLT/M10X65	*	1					
20	V401-160-010-00	WASHER, SP/M10	*	1					
21	V411-260-010-00	WASHER/M10	*	2					
22	V304-260-010-00	NUT	*	1					
23	1560-105-251-00	CLAMP	*	1					
24	V201-260-808-00	BOLT/M 8X80	*	1					
25	V411-260-008-00	WASHER, PL/M 8	*	2					
26	V401-160-008-00	WASHER, SP/M 8	*	1					
27	V304-260-008-00	NUT/M 8	*	1					
28	1674-105-250-10	PLATE COMP	*	1					
29	V211-360-802-50	BOLT, SEMS	*	2					
30	1674-105-002-10	PLATE	*	1					

FIG. 4 MUFFLER SYSTEM (EXCEPT C TYPE)

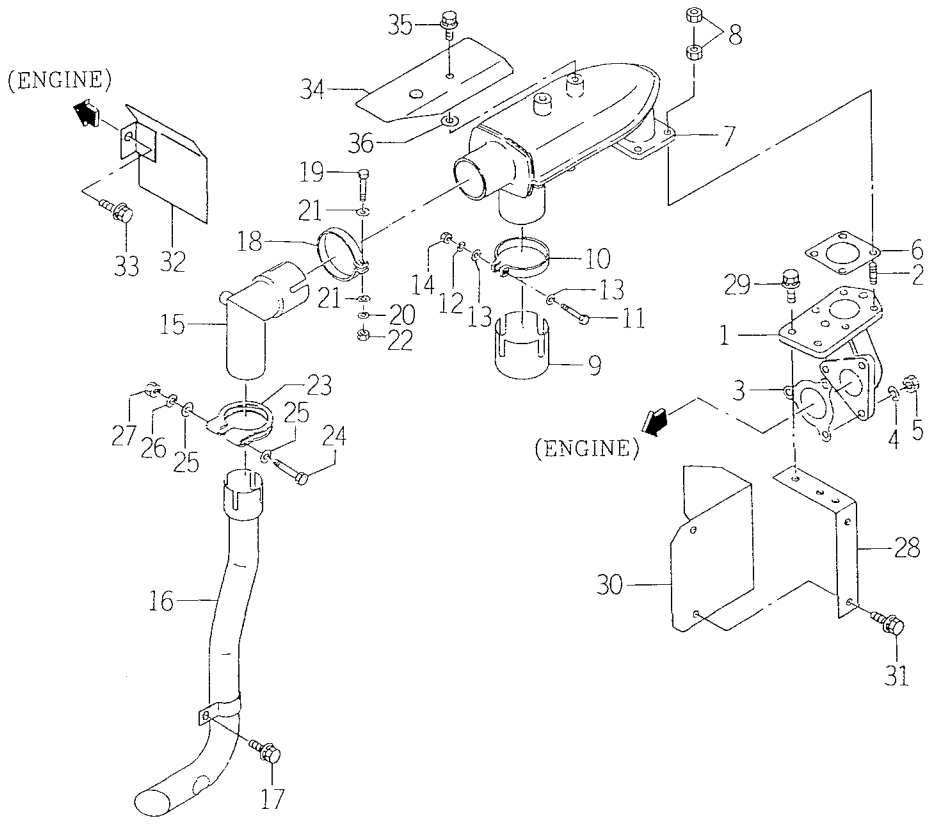

1674-105

KEY	PART CODE	DESCRIPTION	SPC	TYPE OF MODEL TK538H		ITC	COL	GRP	REMARKS
31	V211-360-801-60	BOLT, SEMS (SP)	*	2					
32	1650-601-270-20	COVER COMP	*	1					
33	V211-360-801-60	BOLT, SEMS (SP)	*	1					
34	1674-105-260-00	PLATE/MUFFLER COMP	*	1					
35	V211-360-801-20	BOLT, SEMS	*	1					
36	V411-260-008-00	WASHER, PL/M 8	*	1					

FIG. 5 MUFFLER (UPPER) SYSTEM (C TYPE)

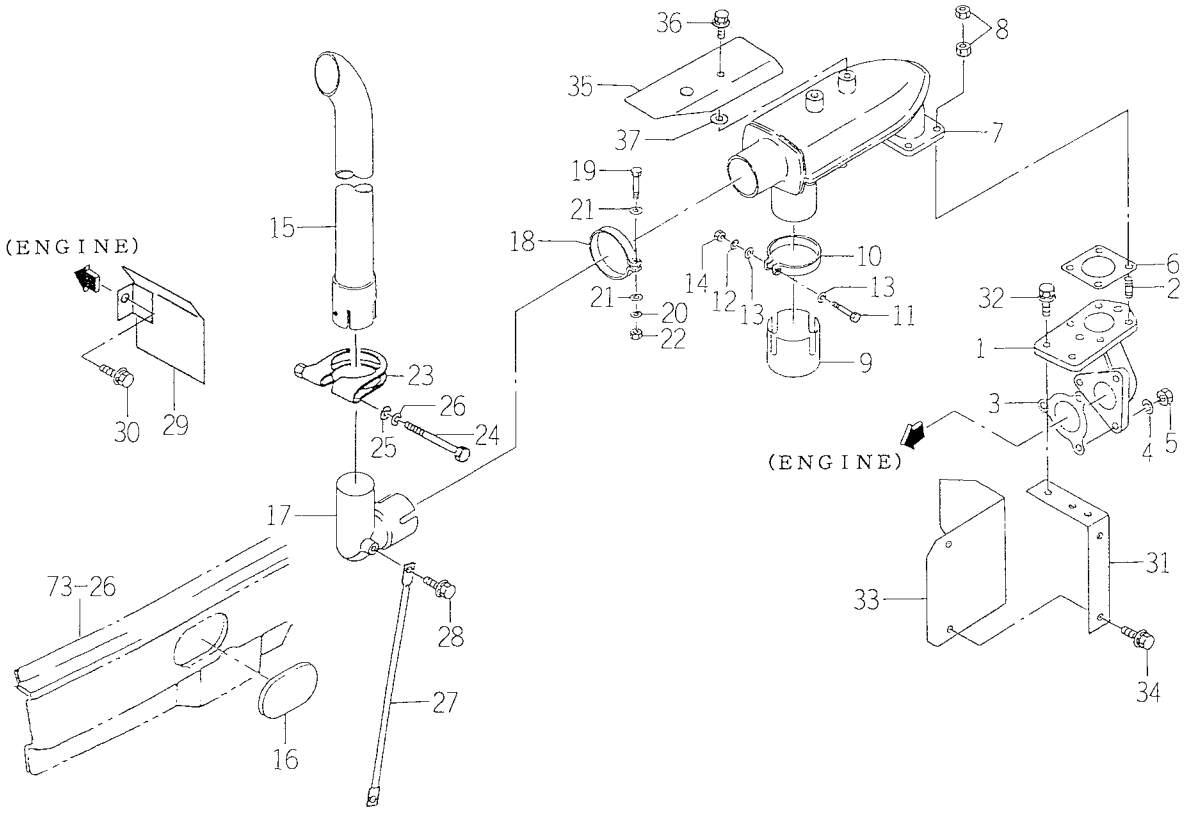

1674-105B

KEY	PART CODE	DESCRIPTION	SPC	TYPE OF MODEL TK538H		ITC	COL	GRP	REMARKS
1	1674-105-001-00	ADAPTER/EXHAUST	*	1					
2	V251-340-802-50	BOLT/STUD	*	4					
3	3678-332-001-00	GASKET	*	1					
4	V401-160-008-00	WASHER, SP/M 8	*	3					
5	V304-460-008-00	NUT/M8	*	3					
6	6222-147-001-00	GASKET/MUFFLER	*	1					
7	1642-105-300-00	MUFFLER COMP	*	1					
8	1544-103-004-00	NUT/M8	*	8					
9	1642-105-004-00	PIPE	*	1					
10	1444-101-440-00	CLAMP COMP	*	1					
11	V201-261-006-50	BOLT/M10X65	*	1					
12	V401-160-010-00	WASHER, SP/M10	*	1					
13	V411-260-010-00	WASHER/M10	*	2					
14	V304-260-010-00	NUT	*	1					
15	1594-105-230-00	PIPE/TAIL/UPPER	*	1					
16	1594-105-002-00	GROMMET	*	1					
17	1674-105-240-00	PIPE COMP	*	1					
18	1444-101-440-00	CLAMP COMP	*	1					
19	V201-261-006-50	BOLT/M10X65	*	1					
20	V401-160-010-00	WASHER, SP/M10	*	1					
21	V411-260-010-00	WASHER/M10	*	2					
22	V304-260-010-00	NUT	*	1					
23	1673-105-500-00	CLAMP COMP	*	1					
24	V201-260-808-00	BOLT/M 8X80	*	1					
25	V411-260-008-00	WASHER, PL/M 8	*	1					
26	V401-160-008-00	WASHER, SP/M 8	*	1					
27	1674-105-003-00	ROD	*	1					
28	V211-360-802-00	BOLT(SP) M8X20	*	2					
29	1650-601-270-20	COVER COMP	*	1					
30	V211-360-801-60	BOLT, SEMS (SP)	*	1					

FIG. 5 MUFFLER (UPPER) SYSTEM (C TYPE)

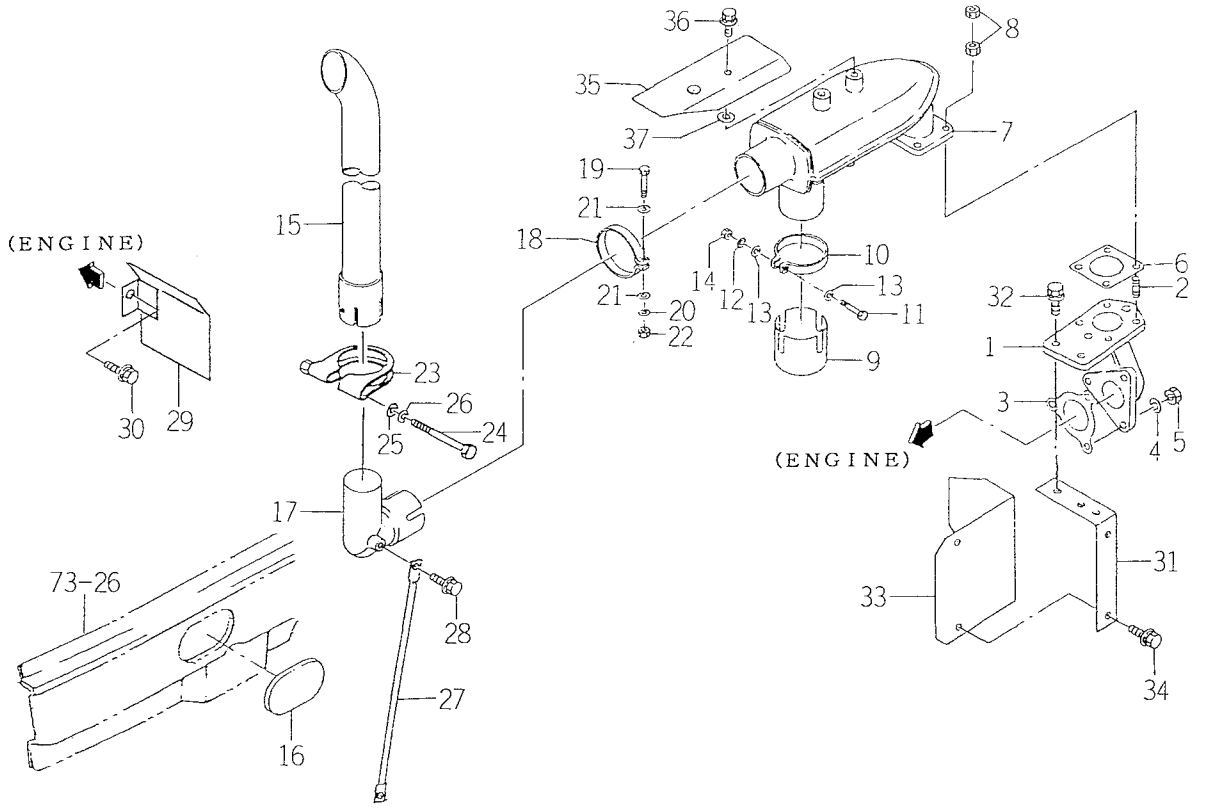

1674-105B

KEY	PART CODE	DESCRIPTION	SPC	TYPE OF MODEL TK538H		ITC	COL	GRP	REMARKS
31	1674-105-250-10	PLATE COMP	*	1					
32	V211-360-802-50	BOLT, SEMS	*	2					
33	1674-105-002-10	PLATE	*	1					
34	V211-360-801-60	BOLT, SEMS (SP)	*	2					
35	1674-105-260-00	PLATE/MUFFLER COMP	*	1					
36	V211-360-801-20	BOLT, SEMS	*	1					
37	V411-260-008-00	WASHER, PL/M 8	*	1					

FIG. 6 TANK (FUEL) SYSTEM (EXCEPT C TYPE)

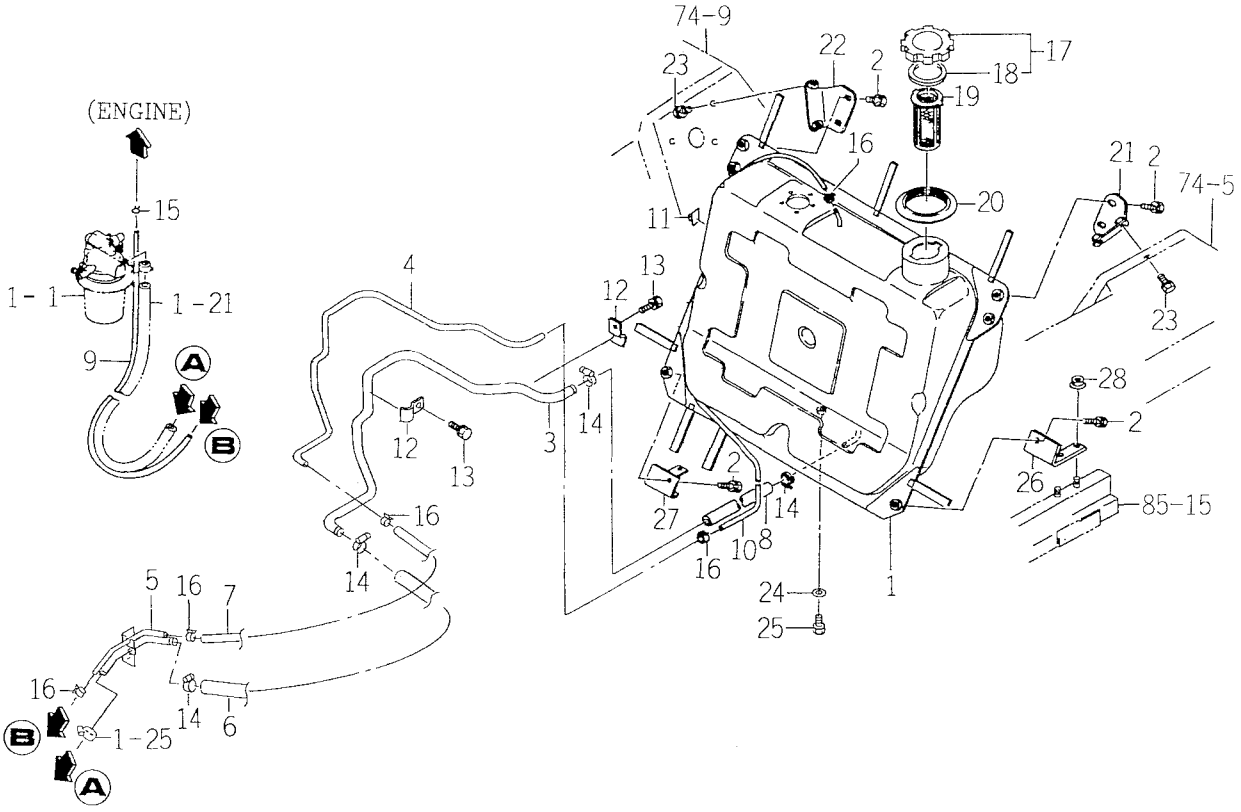

1641-111

KEY	PART CODE	DESCRIPTION	SPC	TYPE OF MODEL TK538H		ITC	COL	GRP	REMARKS
1	1640-111-210-00	TANK/FUEL COMP	*	1			4G		
2	V211-260-801-60	BOLT, SEMS (S) M8X16	*	6					
3	1641-111-051-00	PIPE/DERIVERY	*	1					
4	1641-111-052-00	PIPE/RETURN	*	1					
5	1641-111-510-00	PIPE/FUEL COMP	*	1					
6	1641-111-053-00	HOSE/600	*	1					
7	1641-111-054-00	HOSE/600	*	1					
8	1561-111-003-00	HOSE/430	*	1					
9	1560-111-007-00	HOSE/500	*	1					
10	1560-111-008-00	HOSE/1050	*	1					
11	1426-621-038-00	CLAMP, HARNESS	*	1					
12	1560-111-009-00	PLATE	*	2					
13	V211-260-801-20	BOLT, SEMS (S) M8X12	*	3					
14	J061-116-025-00	CLAMP/WORM/16-25	*	4					
15	J062-076-082-00	CLIP/HOSE/7.6-8.2	*	1					
16	J062-104-111-00	CLIP/HOSE/10.4-11.1	*	5					
17	1640-111-200-00	CAP/TANC ASSY	*	1					
18	1640-111-202-00	GASKET	*	1					
19	1513-111-009-00	STRAINER	*	1					
20	1640-111-001-00	INSULATOR/TANK	*	1					
21	1560-111-270-50	BRACKET, L COMP	*	1					
22	1560-111-280-50	BRACKET, R COMP	*	1					
23	V211-260-802-00	BOLT, SEMS (S)	*	4					
24	1407-111-001-00	WASHER/8X12X2	*	1					
25	V201-260-801-20	BOLT/M 8X12	*	1					
26	1560-111-001-10	PLATE, L	*	1					
27	1560-111-002-10	PLATE, R	*	1					
28	V363-260-008-00	NUT, LOCK/M8	*	4					

FIG. 7 TANK (FUEL) SYSTEM (C TYPE)

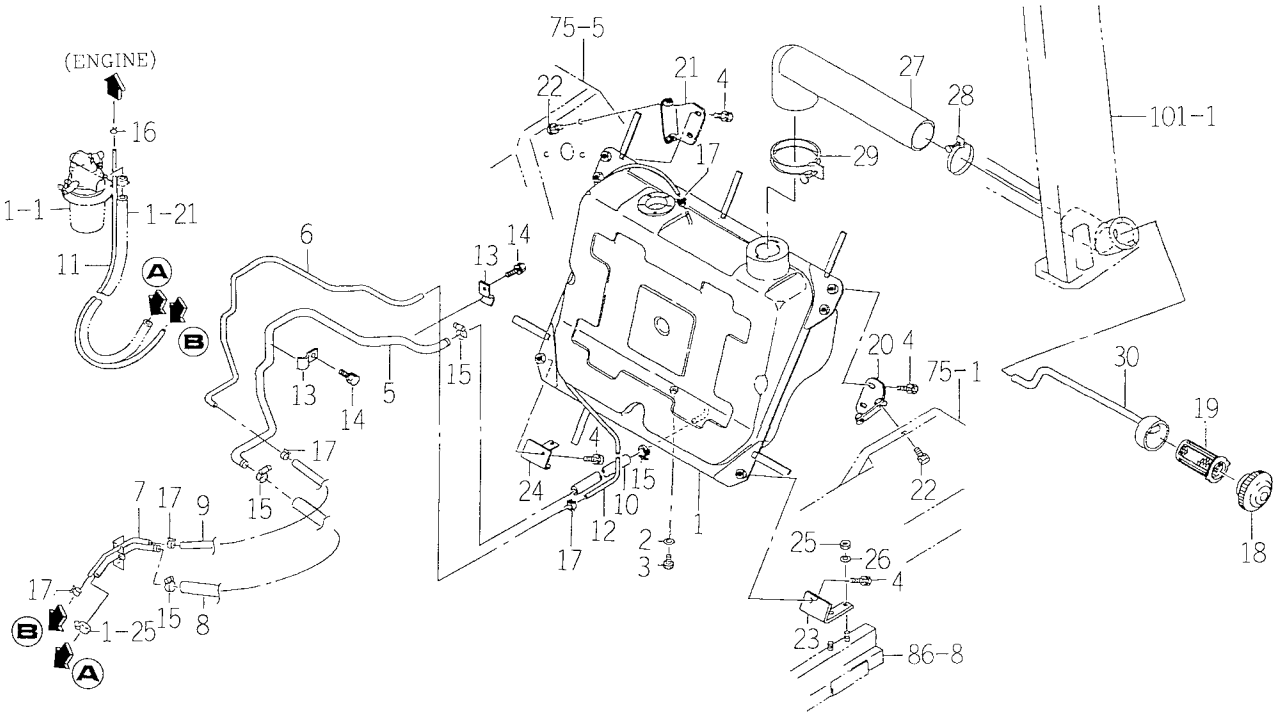

1674-111B

KEY	PART CODE	DESCRIPTION	SPC	TYPE OF MODEL TK538H		ITC	COL	GRP	REMARKS
1	1561-111-320-22	TANK/FUEL COMP	*	1			4G		
2	1407-111-001-00	WASHER/8X12X2	*	1					
3	V201-260-801-20	BOLT/M 8X12	*	1					
4	V211-260-801-60	BOLT, SEMS (S) M8X16	*	6					
5	1641-111-051-00	PIPE/DERIVERY	*	1					
6	1641-111-052-00	PIPE/RETURN	*	1					
7	1641-111-510-00	PIPE/FUEL COMP	*	1					
8	1641-111-053-00	HOSE/600	*	1					
9	1641-111-054-00	HOSE/600	*	1					
10	1561-111-003-00	HOSE/430	*	1					
11	1560-111-007-00	HOSE/500	*	1					
12	1560-111-008-00	HOSE/1050	*	1					
13	1560-111-009-00	PLATE	*	2					
14	V211-260-801-20	BOLT, SEMS (S) M8X12	*	3					
15	J061-116-025-00	CLAMP/WORM/16-25	*	4					
16	J062-076-082-00	CLIP/HOSE/7.6-8.2	*	1					
17	J062-104-111-00	CLIP/HOSE/10.4-11.1	*	5					
18	1682-111-300-00	CAP/FUEL ASSY	*	1					
19	1513-111-009-00	STRAINER	*	1					
20	1560-111-270-50	BRACKET, L COMP	*	1					
21	1560-111-280-50	BRACKET, R COMP	*	1					
22	V211-260-802-00	BOLT, SEMS (S)	*	4					
23	1560-111-001-10	PLATE, L	*	1					
24	1560-111-002-10	PLATE, R	*	1					
25	V304-260-008-00	NUT/M 8	*	4					
26	V401-160-008-00	WASHER, SP/M 8	*	4					
27	1560-111-101-00	HOSE, FUEL	*	1					
28	J061-140-057-00	CLANP/WORM/40-57	*	1					
29	J061-165-090-00	CLANP/WORM/65-90	*	1					
30	1560-111-360-00	PIPE AIR COMP	*	1					

FIG. 8 BATTERY BASE SYSTEM

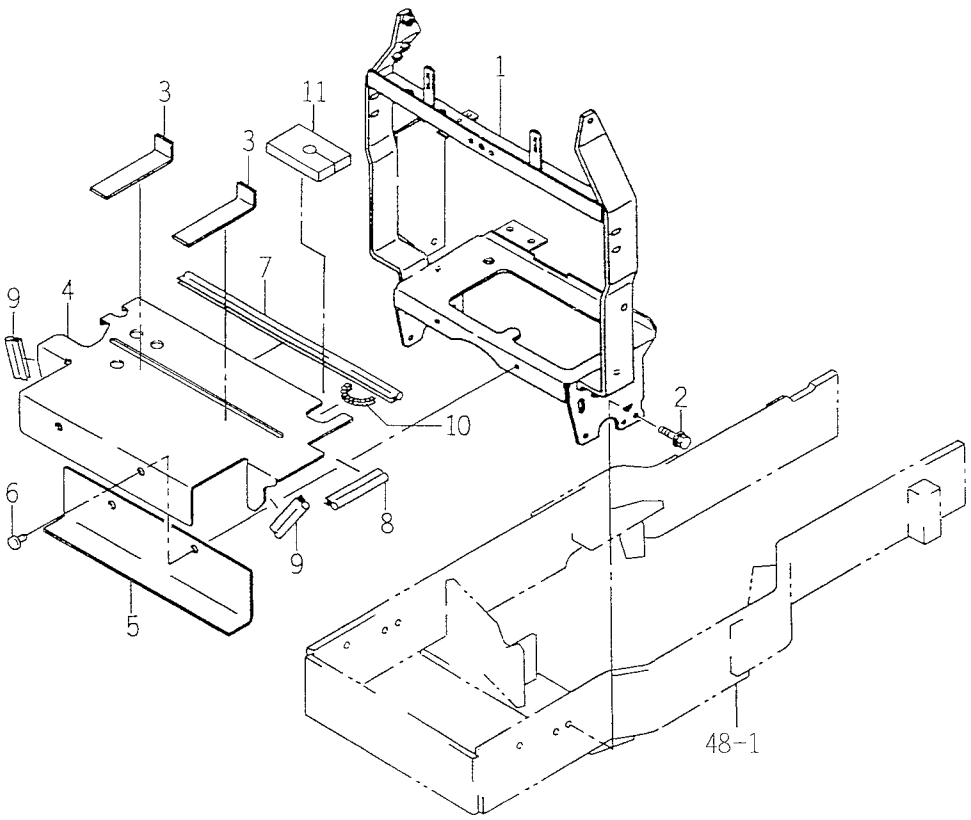

1641-112B

KEY	PART CODE	DESCRIPTION	SPC	TYPE OF MODEL TK538H		ITC	COL	GRP	REMARKS
1	1641-112-510-00	BRACKET/BATTERY/ST	*	1					
2	V211-660-802-00	BOLT/8X20	*	6					
3	1432-616-004-00	PLATE, RUBBER	*	2					
4	1641-112-056-10	SEAL/PLATE	*	1					
5	1673-112-003-10	SEAL	*	1					
6	1527-604-002-00	CLIP(B)	*	2					
7	1675-102-003-00	INSULATOR	*	1					
8	1650-601-009-00	TRIM/90	*	1					
9	1673-780-011-00	TRIM/50	*	2					
10	1673-112-006-00	PROTECTER	*	1					
11	1641-112-002-00	INSULATOR	*	1					

FIG. 9 ACCELERATOR SYSTEM

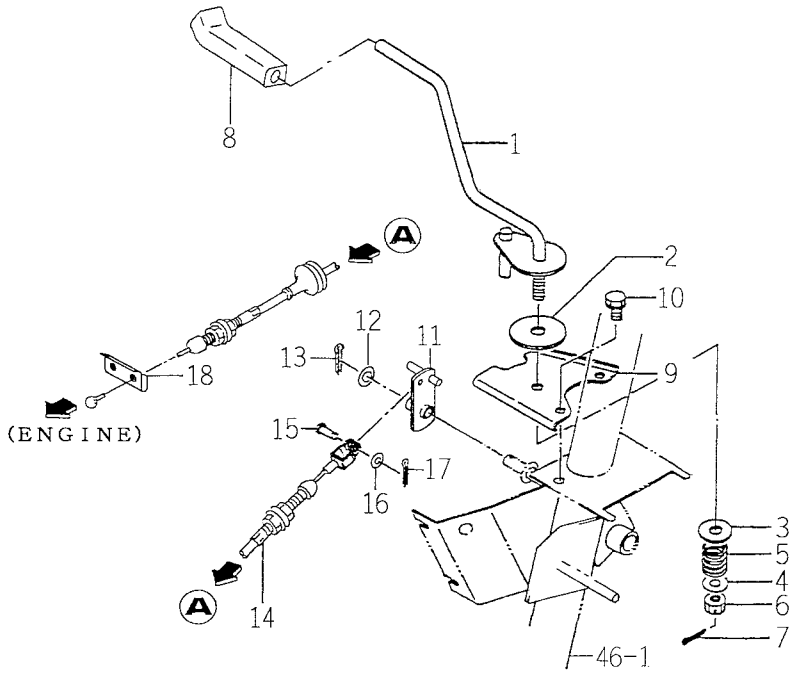

1641-116

KEY	PART CODE	DESCRIPTION	SPC	TYPE OF MODEL TK538H		ITC	COL	GRP	REMARKS
1	1560-116-250-50	LEVBER/BAR.10 COMP	*	1					
2	1600-505-007-00	LINING/13X50X3	*	1					
3	3610-440-018-00	WASHER	*	1					
4	V411-260-010-00	WASHER/M10	*	1					
5	1404-117-008-00	SPRING,PRESS/22	*	1					
6	V328-261-110-00	NUT/M10X1.25	*	1					
7	V500-162-502-00	PIN,SPLIT/2.5X20	*	1					
8	1646-116-051-00	GRIP/THROTTLE	*	1					
9	1564-116-001-30	GUIDE	*	1					
10	V211-260-801-60	BOLT,SEMS (S) M8X16	*	2					
11	1673-116-210-20	ARM COMP	*	1					
12	V410-260-010-00	WASHER,PL/M10	*	1					
13	V500-162-002-00	PIN,SPLIT/2 X20	*	1					
14	1674-116-200-10	CABLE/ACCELEATO ASSY	*	1					
15	1560-116-008-30	PIN/6X16	*	1					
16	V411-260-006-00	WASHER / M6	*	1					
17	V500-162-002-00	PIN,SPLIT/2 X20	*	1					
18	1675-116-001-00	HOLDER	*	1					

FIG. 10 CASE (FRONT) SYSTEM

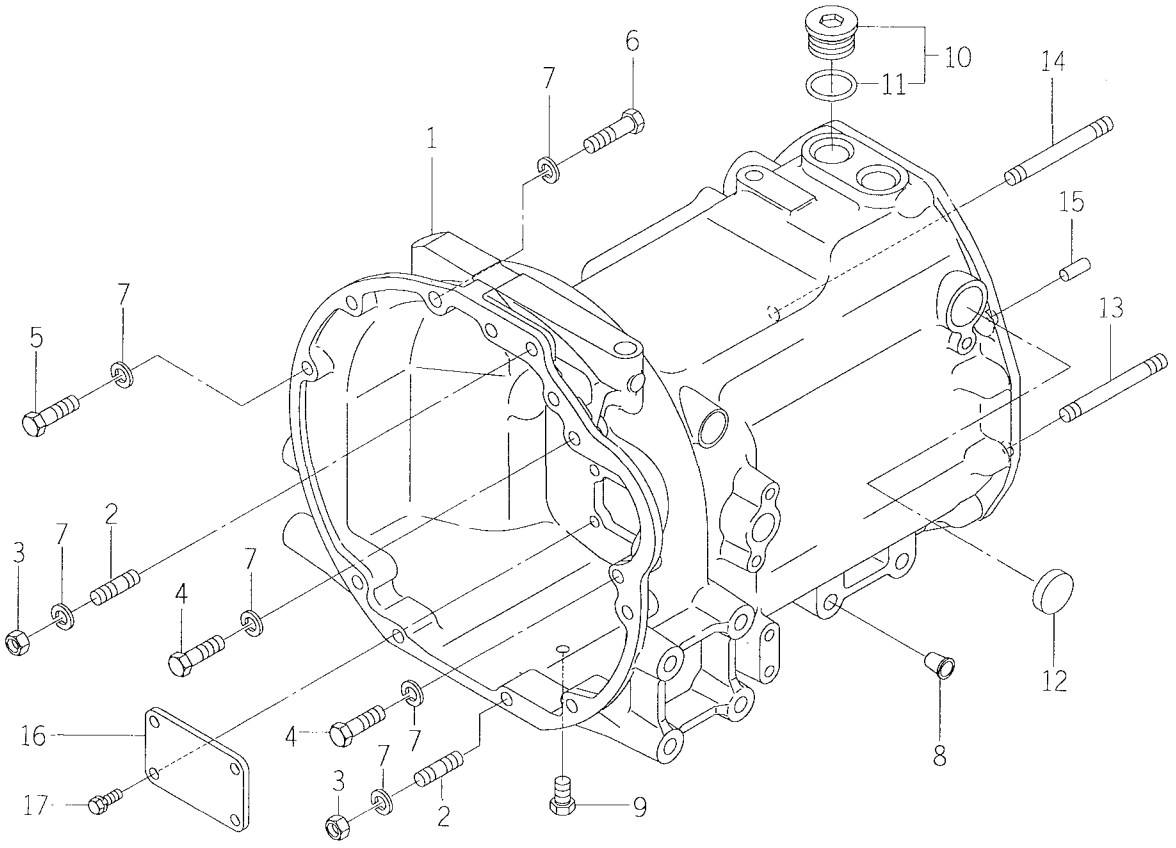

1641-201A

KEY	PART CODE	DESCRIPTION	SPC	TYPE OF MODEL TK538H		ITC	COL	GRP	REMARKS
1	1641-201-051-10	CASE/TRANSMISSION/FR	*	1					
2	V251-341-202-50	BOLT/M12X25	*	3					
3	V304-460-012-00	NUT/M12	*	3					
4	V201-361-204-00	BOLT/M12X40	*	2					
5	V201-361-203-00	BOLT/M12X30	*	5					
6	V201-361-204-50	BOLT/M12X45	*	1					
7	V401-160-012-00	WASHER, SP/M12	*	11					
8	1427-317-004-00	CAP, BLANK/M14	*	8					
9	V782-160-000-2B	PLUG/SCREW/SEAL	*	1					
10	1646-232-510-00	PLUG/PF1 ASSY	*	2					
11	V720-113-502-90	RING/O	*	2					
12	3737-211-007-00	CAP/35	*	2					
13	1650-201-001-10	BOLT/STUD/SEAL	*	8					
14	V251-341-210-00	BOLT/STUD	*	2					
15	V523-101-002-40	PIN	*	2					
16	1656-253-004-00	COVER/PLATE	*	1					
17	V211-260-802-00	BOLT, SEMS (S)	*	4					

FIG. 11 INPUT SHAFT SYSTEM

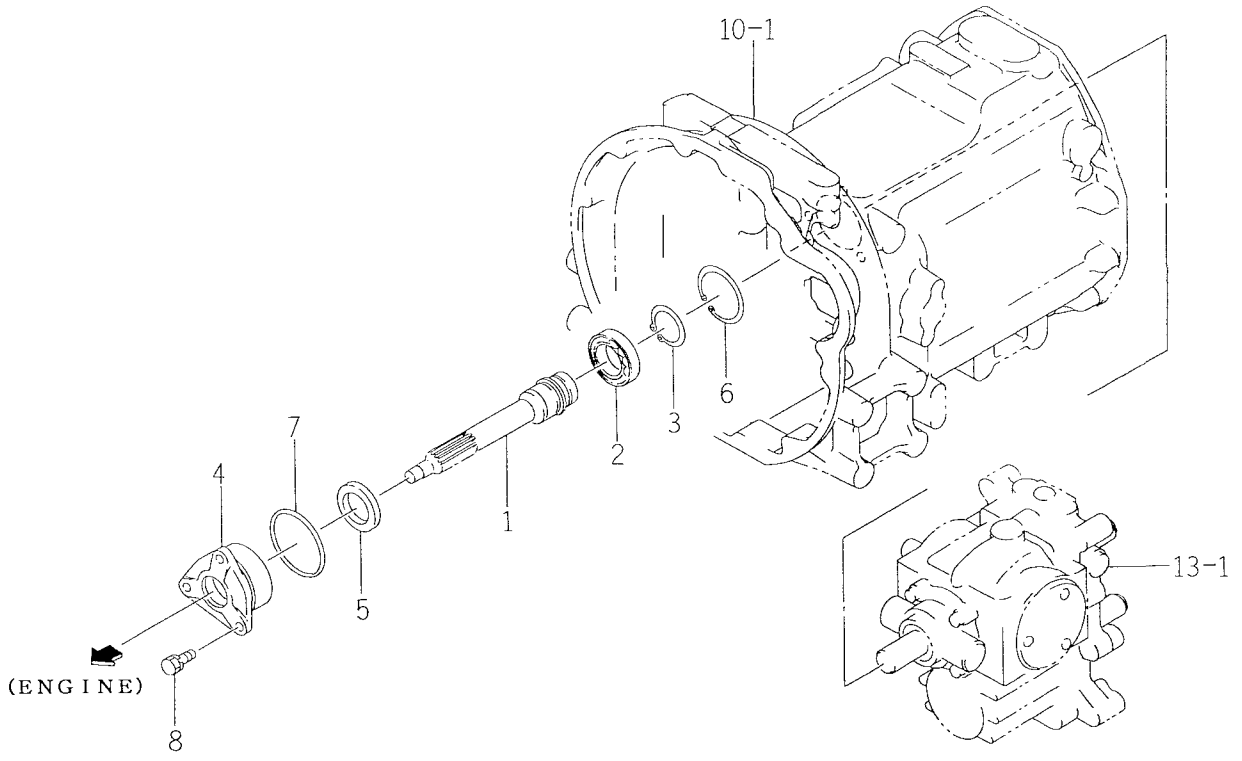

1641-207

KEY	PART CODE	DESCRIPTION	SPC	TYPE OF MODEL TK538H		ITC	COL	GRP	REMARKS
1	1641-207-051-00	SHAFT/INPUT	*	1					
2	V600-110-600-70	BEARING, RB/6007	*	1					
3	V704-140-035-00	RING, SNAP/35 C	*	1					
4	1641-207-052-00	MATAL/INPUT	*	1					
5	V744-135-550-80	SEAL, OIL/TC35558	*	1					
6	V707-140-062-00	RING/SNAP	*	1					
7	V721-103-107-00	O-RING/G70	*	1					
8	V211-560-802-00	BOLT/M8X20	*	3					

FIG. 12 MAIN GEAR SYSTEM

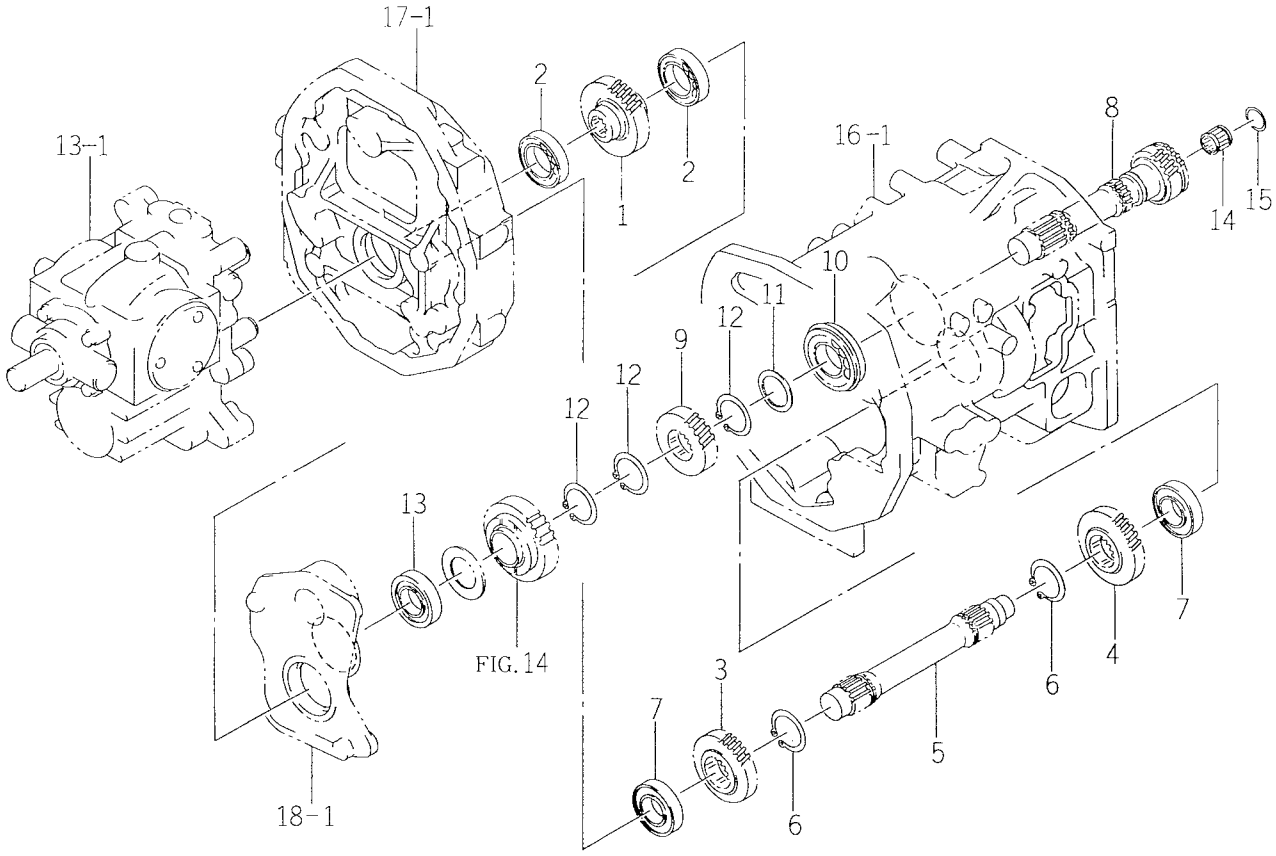

1641-209

KEY	PART CODE	DESCRIPTION	SPC	TYPE OF MODEL TK538H		ITC	COL	GRP	REMARKS
1	1641-209-051-00	GEAR/HELICAL/30	*	1					
2	V600-110-600-70	BEARING, RB/6007	*	2					
3	1641-209-052-00	GEAR/HELICAL/28	*	1					
4	1641-209-053-00	GEAR/HELICAL/30	*	1					
5	1641-209-054-00	SHAFT	*	1					
6	V704-140-035-00	RING, SNAP/35 C	*	2					
7	1560-206-003-00	BEARING/BALL	*	2					
8	1641-209-055-00	GEAR/SPUR/18	*	1					
9	1641-209-056-00	GEAR/HELICAL/26	*	1					
10	V607-110-620-70	BEARING, RB/6207N	*	1					
11	1444-314-004-10	COLLAR(35X50X2)	*	1					
12	V704-140-035-00	RING, SNAP/35 C	*	3					
13	1614-203-015-00	BEARING/BALL	*	1					
14	V654-420-262-00	BEARING, NR	*	1					
15	1560-208-023-00	RING, SNAP	*	1					

FIG. 13 HST UNIT SYSTEM

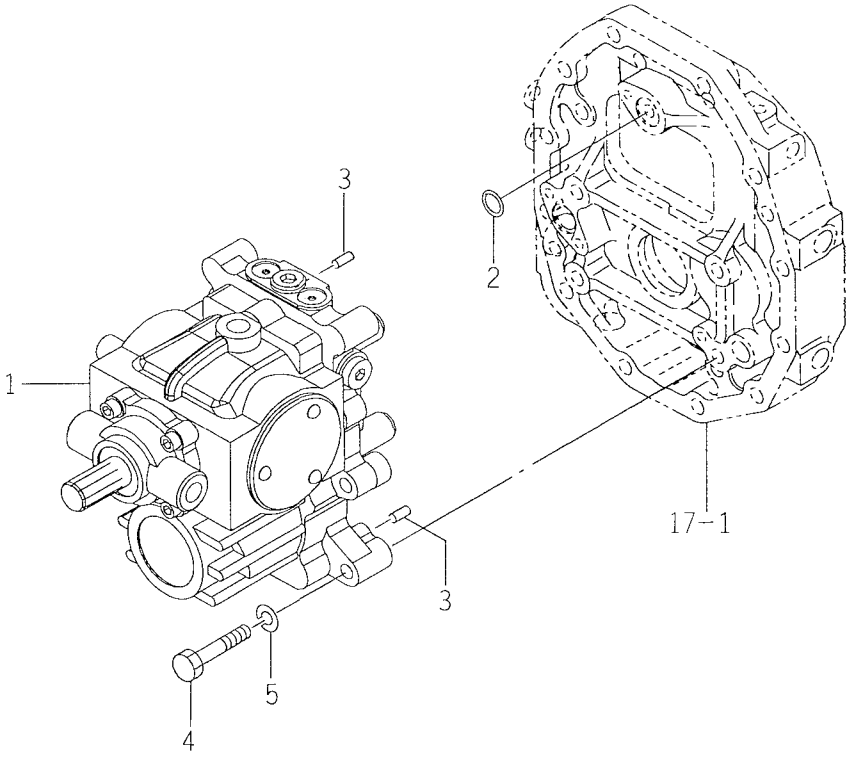

164I-217A

KEY	PART CODE	DESCRIPTION	SPC	TYPE OF MODEL TK538H		ITC	COL	GRP	REMARKS
1	1641-217-051-00	HST/28/28 ASSY	*	1					
2	V720-112-402-20	O-RING/P22	*	1					
3	V523-100-801-60	PIN	*	2					
4	V201-361-206-00	BOLT	*	4					
5	V401-160-012-00	WASHER, SP/M12	*	4					

FIG. 14 GEAR (PTO) SYSTEM

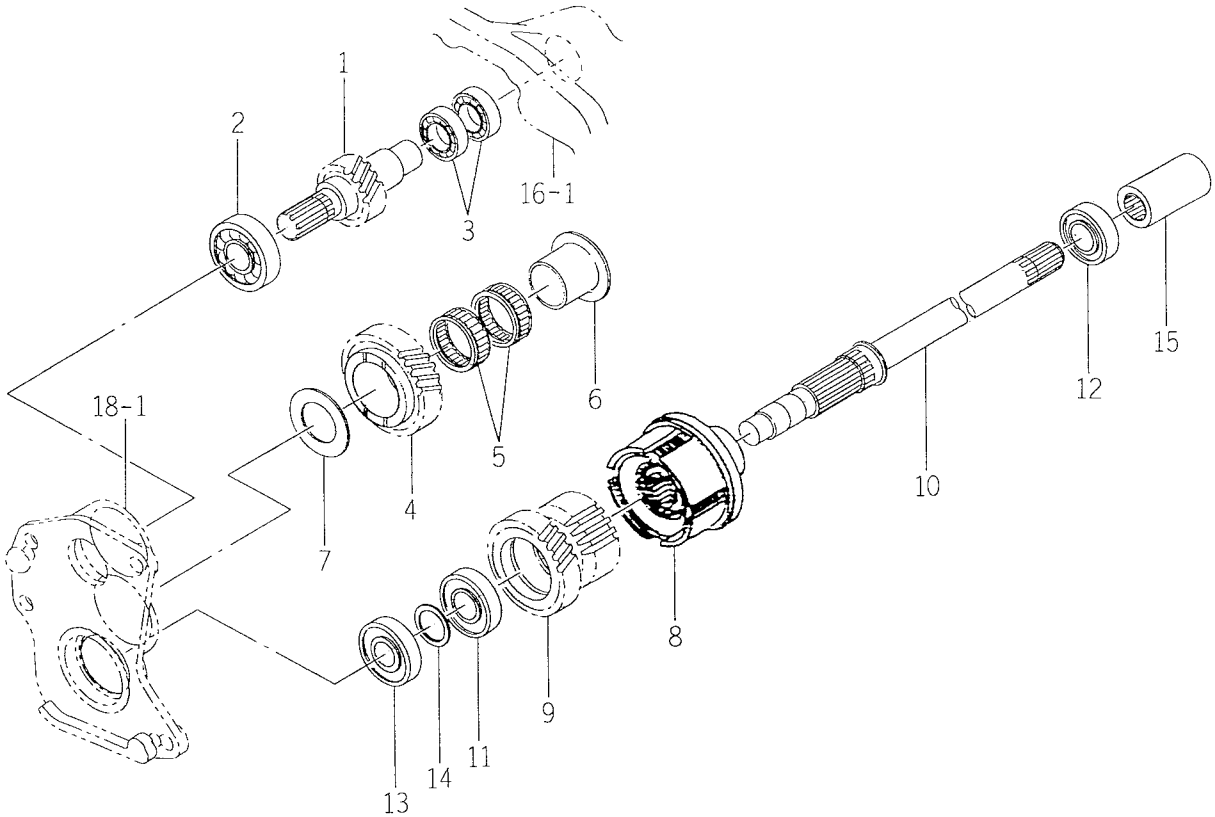

1641-221A

KEY	PART CODE	DESCRIPTION	SPC	TYPE OF MODEL TK538H		ITC	COL	GRP	REMARKS
1	1641-221-051-10	GEAR/HELICAL/16	*	1					
2	V600-110-630-50	BEARING, RB/6305	*	1					
3	V600-110-600-50	BEARING, RB/6005	*	2					
4	1641-221-052-10	GEAR/HELICAL/27	*	1					
5	V654-440-501-70	BEARING	*	2					
6	1641-221-053-00	BUSH/35X40X35	*	1					
7	1646-221-054-10	WASHER/35X62X03	*	1					
8	1561-221-500-10	CLUTCH/PTO ASSY	*	1					FIG 146
9	1641-221-054-10	GEAR/HELICAL/24	*	1					
10	1641-221-055-00	SHAFT/PTO	*	1					
11	V600-110-620-50	BEARING, RB/6205	*	1					
12	V600-110-600-50	BEARING, RB/6005	*	2					
13	1650-209-005-00	BEARING/BALL	*	1					
14	1593-307-052-10	COLLAR/26X35X03	*	1					
15	1560-220-004-10	COUPRING/21X36X65	*	2					

FIG. 15 METAL (TRUNNION) SYSTEM

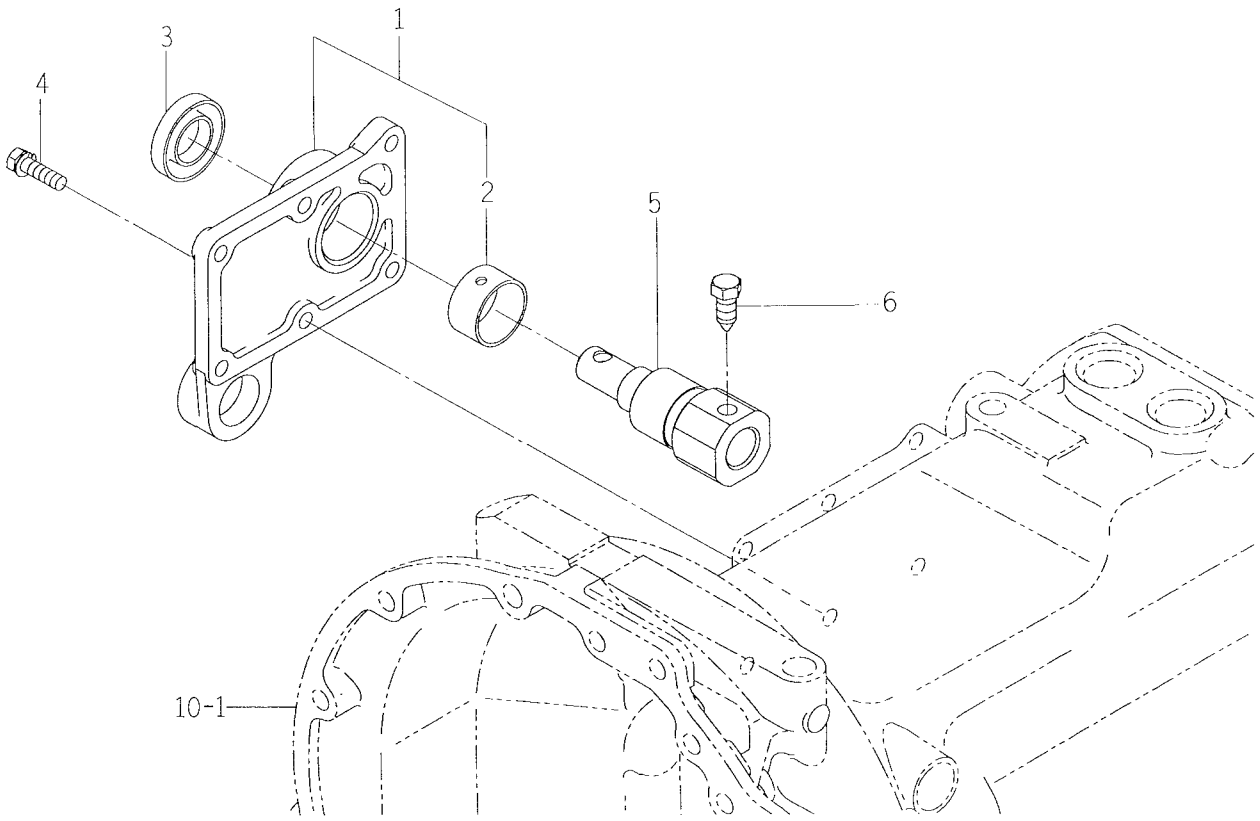

1641-226A

KEY	PART CODE	DESCRIPTION	SPC	TYPE OF MODEL TK538H		ITC	COL	GRP	REMARKS
1	1641-226-500-00	METAL/TRUNNION ASSY	*	1					
2	1646-226-512-00	BUSH/35X39X20	*	1					
3	V744-125-470-80	SEAL, OIL/TC25478	*	1					
4	V211-560-802-50	BOLT, SEMS/M8X25 7T	*	4					
5	1641-226-052-10	SHAFT/TRUNNION	*	1					
6	1646-226-053-00	BOLT/SM/M10X23	*	1					

FIG. 16 CASE (MIDDLE) SYSTEM

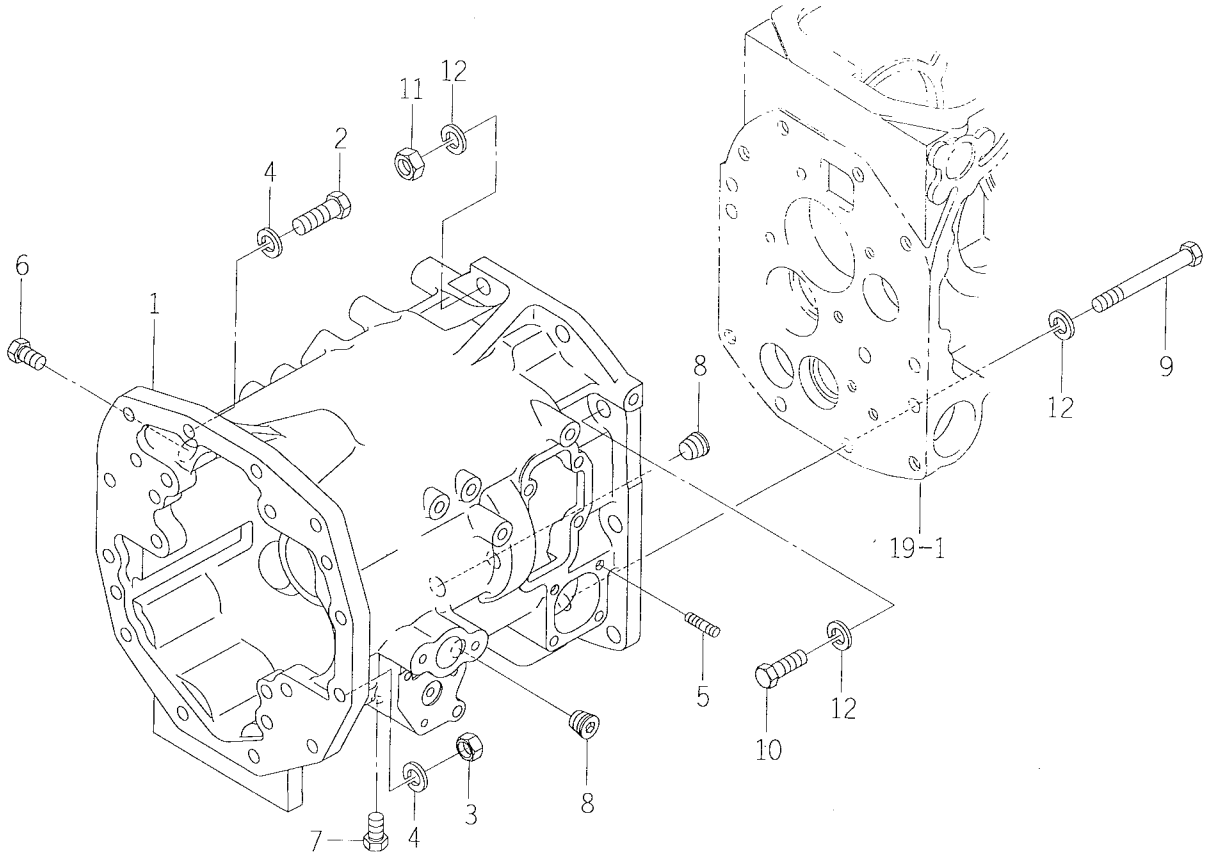

1641-230A

KEY	PART CODE	DESCRIPTION	SPC	TYPE OF MODEL TK538H		ITC	COL	GRP	REMARKS
1	1641-230-051-00	CASE/TRANSMISSION/M	*	1					
2	V201-361-203-50	BOLT/M12X35	*	2					
3	V304-460-012-00	NUT/M12	*	10					
4	V401-160-012-00	WASHER, SP/M12	*	12					
5	V251-260-802-0D	BOLT/STUD/SEAL	*	2					
6	V782-160-000-8B	PLUG/SCREW/SEAL	*	2					
7	V782-160-000-2T	PLUG/SCREW/SEAL	*	1					
8	V780-140-000-2T	PLUG/SCREW/SEAL	*	2					
9	V201-361-208-50	BOLT	*	2					
10	V201-361-203-50	BOLT/M12X35	*	2					
11	V304-460-012-00	NUT/M12	*	6					
12	V401-160-012-00	WASHER, SP/M12	*	10					

FIG. 17 CASE (SPACER) SYSTEM

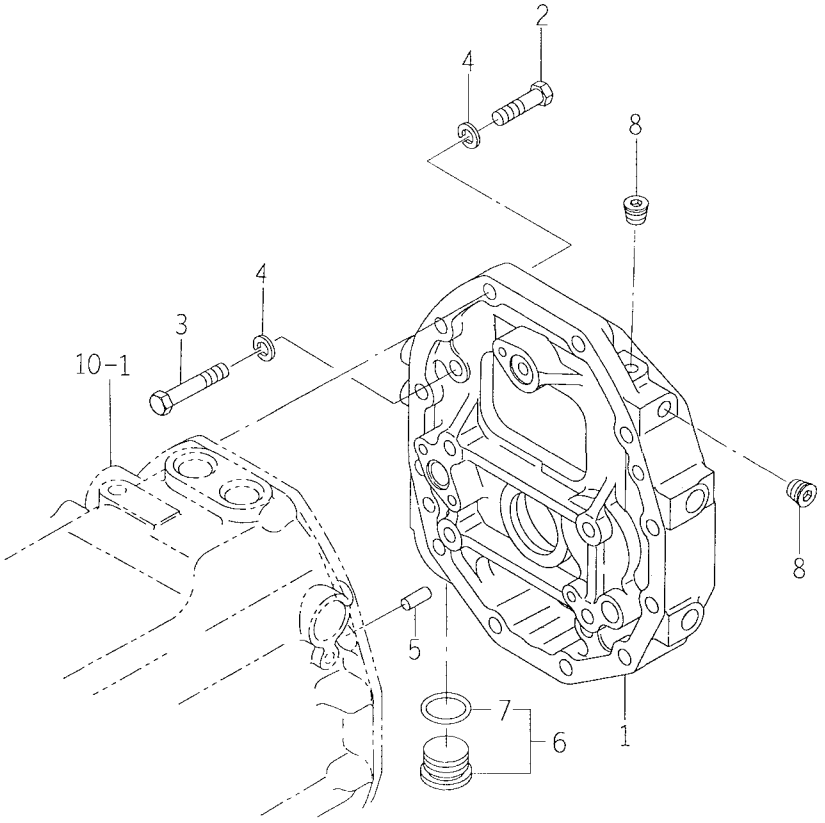

1641-232

KEY	PART CODE	DESCRIPTION	SPC	TYPE OF MODEL TK538H		ITC	COL	GRP	REMARKS
1	1641-232-051-00	CASE/SPACER/HST	*	1					
2	V201-361-204-50	BOLT/M12X45	*	2					
3	V201-361-206-50	BOLT	*	2					
4	V401-160-012-00	WASHER, SP/M12	*	4					
5	V523-101-002-40	PIN	*	2					
6	1641-232-510-00	PLUG/PF1/2 ASSY	*	1					
7	V720-112-401-80	O-RING/P18	*	1					
8	V780-140-000-4T	PLUG/SCREW/SEAL	*	2					

FIG. 18 METAL (HST) SYSTEM

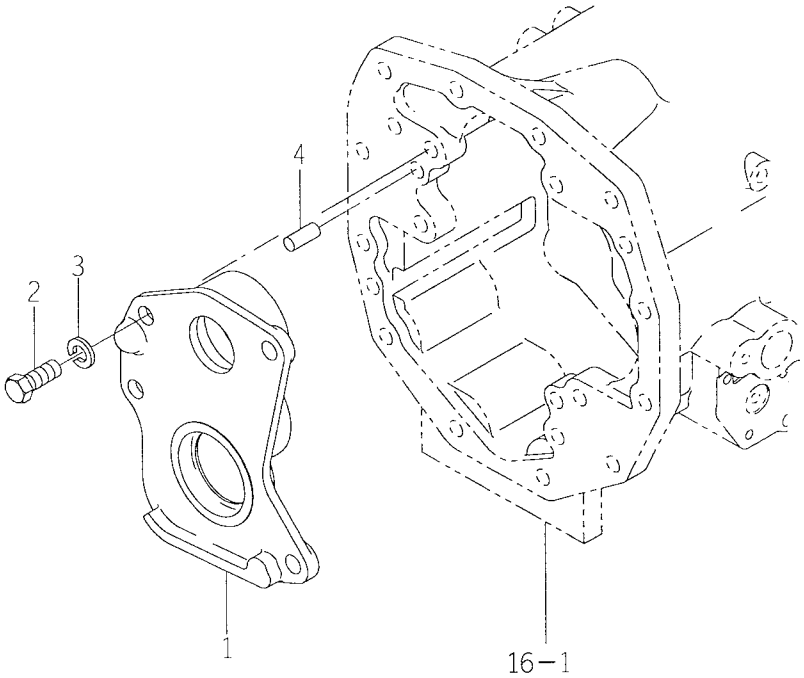

1641-233A

KEY	PART CODE	DESCRIPTION	SPC	TYPE OF MODEL TK538H		ITC	COL	GRP	REMARKS
1	1641-233-051-00	METAL/HST	*	1					
2	V201-361-203-00	BOLT/M12X30	*	4					
3	V401-160-012-00	WASHER, SP/M12	*	4					
4	V523-101-002-40	PIN	*	2					

FIG. 19 REAR MISSION CASE SYSTEM

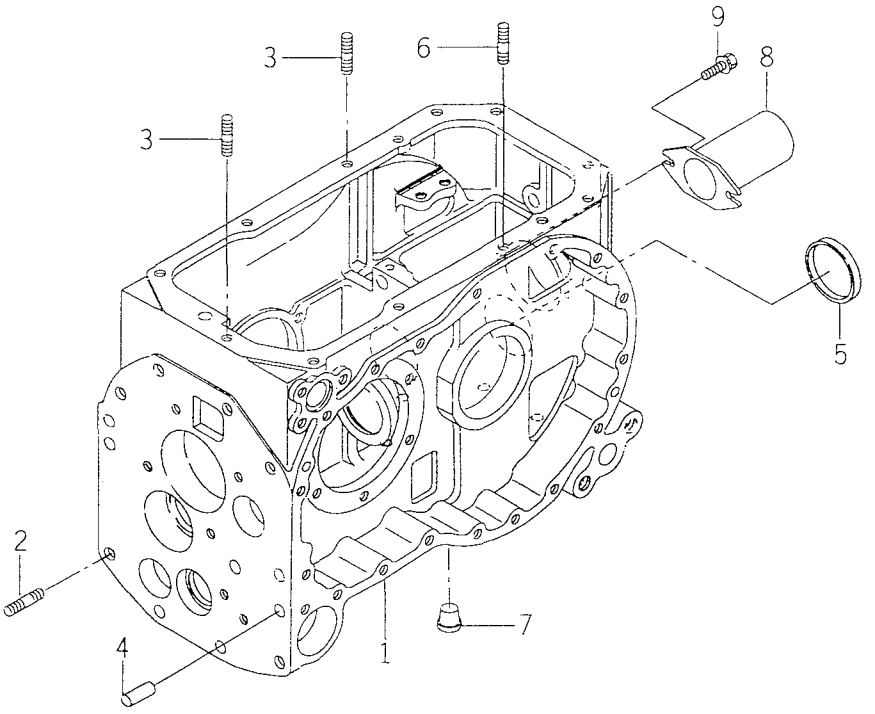

1594-240

KEY	PART CODE	DESCRIPTION	SPC	TYPE OF MODEL TK538H		ITC	COL	GRP	REMARKS
1	1594-240-001-10	CASE/TRANSMISSION	*	1					
2	V251-341-203-2D	BOLT/STUD/SEAL	*	6					
3	V251-341-002-8D	BOLT/STUD/SEAL	*	2					
4	V523-101-002-40	PIN	*	8					
5	1425-433-018-00	CAP, BLANK/72	*	1					
6	V251-341-003-5D	BOLT/STUD/SEAL	*	1					
7	1427-317-004-00	CAP, BLANK/M14	*	4					
8	1444-314-009-10	CAP, PTO SHAFT	*	1					
9	V211-360-801-60	BOLT, SEMS (SP)	*	2					

FIG. 20 COVER HOLDER, COVER (BOTTOM) SYSTEM

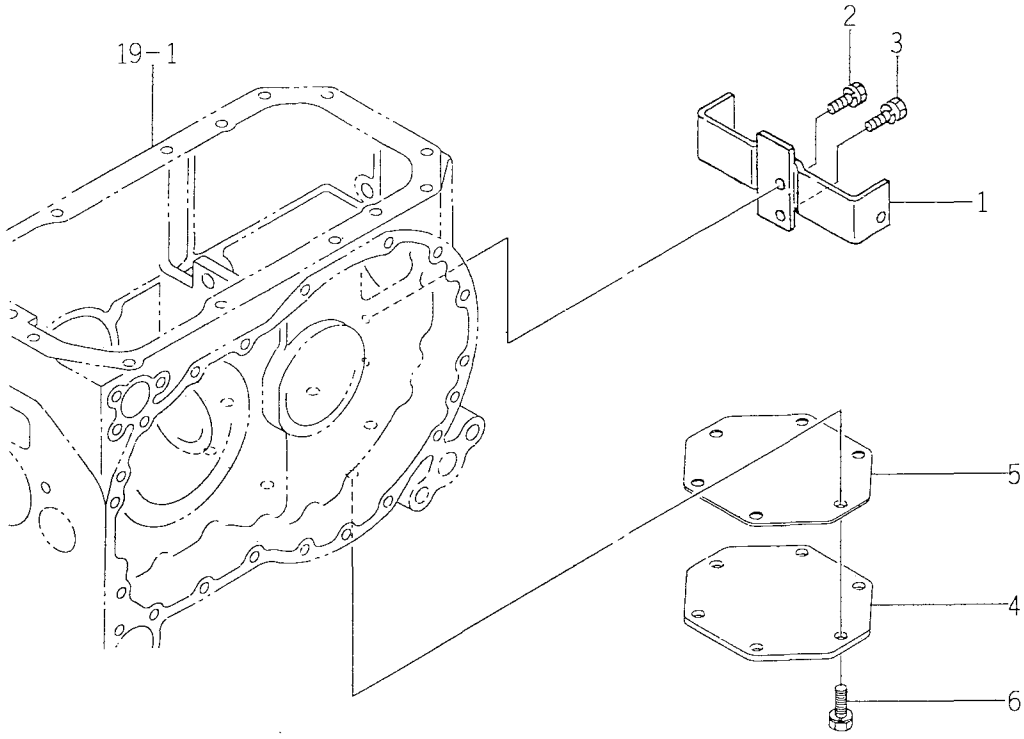

1596-240A

KEY	PART CODE	DESCRIPTION	SPC	TYPE OF MODEL TK538H		ITC	COL	GRP	REMARKS
1	1596-240-200-00	BRACKET COMP	*	1					
2	V211-260-802-50	BOLT/S	*	1					
3	V211-260-802-00	BOLT, SEMS (S)	*	1					
4	1594-240-002-10	PLATE	*	1					
5	1594-240-003-10	GASKET	*	1					
6	V211-261-002-50	BOLT(S) M10X25	*	6					

FIG. 21 SUB CHANGE GEAR SYSTEM

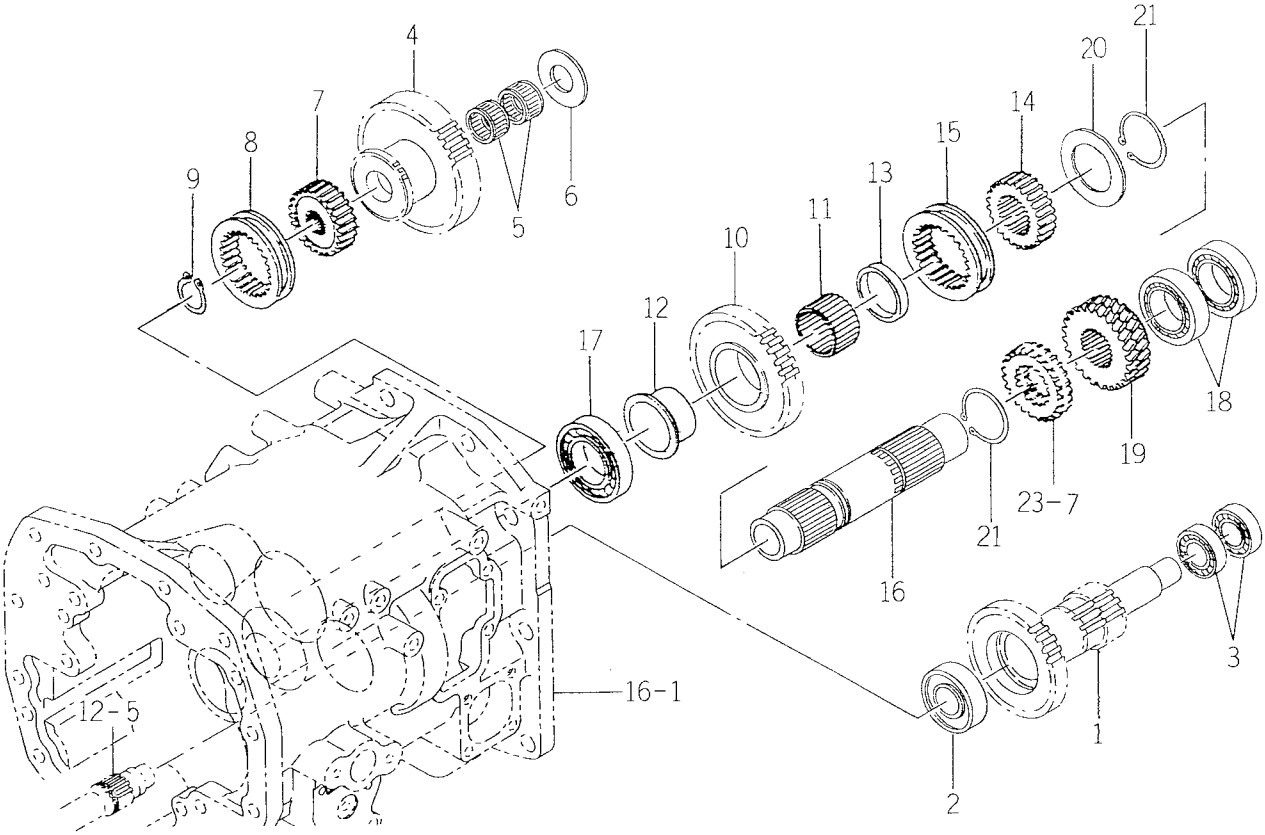

1641-243

KEY	PART CODE	DESCRIPTION	SPC	TYPE OF MODEL TK538H		ITC	COL	GRP	REMARKS
1	1641-243-051-00	GEAR/SPUR/30-14	*	1					
2	1594-221-001-00	BEARING/BALL 6205SH2	*	1					
3	V600-110-600-40	BEARING, RB/6004	*	2					
4	1641-243-052-00	GEAR/SPUR/35	*	1					
5	V654-425-302-00	BEARING	*	2					
6	1560-243-002-30	BEARING/25X50X4	*	1					
7	1560-243-011-40	HUB	*	1					
8	1524-236-005-00	COUPLING, SIDE	*	1					
9	V704-140-025-00	RING, SNAP/25 C	*	1					
10	1641-243-053-00	GEAR/SPUR/34	*	1					
11	V654-445-501-70	BEARING, KT455017	*	1					
12	1560-243-013-40	BUSH/40X58X29	*	1					
13	1560-243-015-40	COLLAR/46X50X8	*	1					
14	1560-243-017-30	HUB	*	1					
15	1524-236-005-00	COUPLING, SIDE	*	1					
16	1641-243-054-00	SHAFT	*	1					
17	V600-110-620-70	BEARING, RB/6207	*	1					
18	V600-110-600-70	BEARING, RB/6007	*	2					
19	1594-243-003-00	GEAR, HERICAL/23	*	1					
20	1641-243-055-00	WASHER/40X65X03	*	1					
21	V706-140-040-00	RING/SNAP	*	2					

FIG. 22 SUB CHANGE SYSTEM

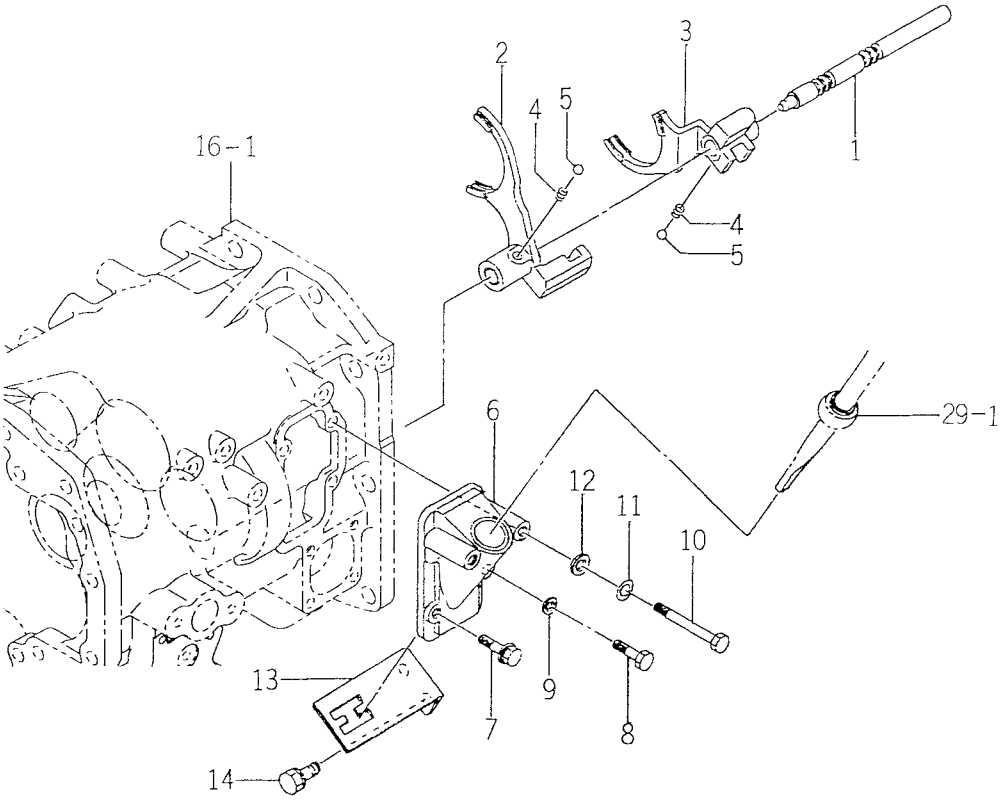

1560-259

KEY	PART CODE	DESCRIPTION	SPC	TYPE OF MODEL TK538H		ITC	COL	GRP	REMARKS
1	1560-259-017-00	STAY/SHIFT/SUB	*	1					
2	1560-259-003-40	FORK/SHIFT, SUB	*	1					
3	1560-259-004-40	FORK, SUB SHIFT	*	1					
4	1302-225-003-00	SPRING, SHIFTER	*	2					
5	V682-200-001-00	BALL	*	2					
6	1560-259-001-40	METAL	*	1					
7	V211-660-802-50	BOLT/M8X25	*	1					
8	V201-360-802-5B	BOLT/SEAL	*	1					
9	1560-223-008-50	SEAL	*	1					
10	V201-360-806-50	BOLT/M8X65 7T	*	2					
11	V401-160-008-00	WASHER, SP/M 8	*	2					
12	V411-260-008-00	WASHER, PL/M 8	*	2					
13	1560-259-012-30	GUIDE	*	1					
14	V211-261-002-00	BOLT, SEMS	*	2					

FIG. 23 4WD DRIVE GEAR SYSTEM

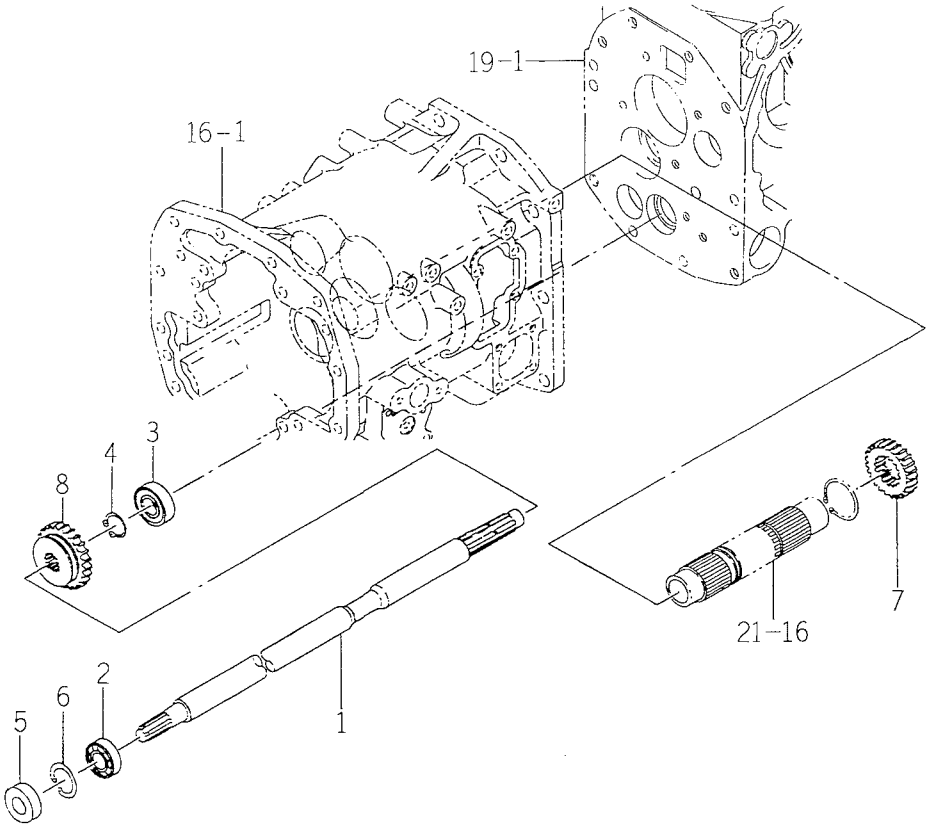

1674-262B

KEY	PART CODE	DESCRIPTION	SPC	TYPE OF MODEL TK538H		ITC	COL	GRP	REMARKS
1	1641-262-051-00	SHAFT/4WD	*	1					
2	V600-110-600-40	BEARING, RB/6004	*	1					
3	1564-263-002-00	BEARING, BALL	*	1					
4	V704-140-025-00	RING, SNAP/25 C	*	1					
5	V744-120-420-80	SEAL, OIL/TC20428	*	1					
6	V705-140-042-00	RING, SNAP/42 C	*	1					
7	1594-262-001-10	GEAR, SPUR/23	*	1					
8	1595-262-002-10	GEAR, SPUR/24	*	1					

FIG. 24 4WD CHANGE SYSTEM

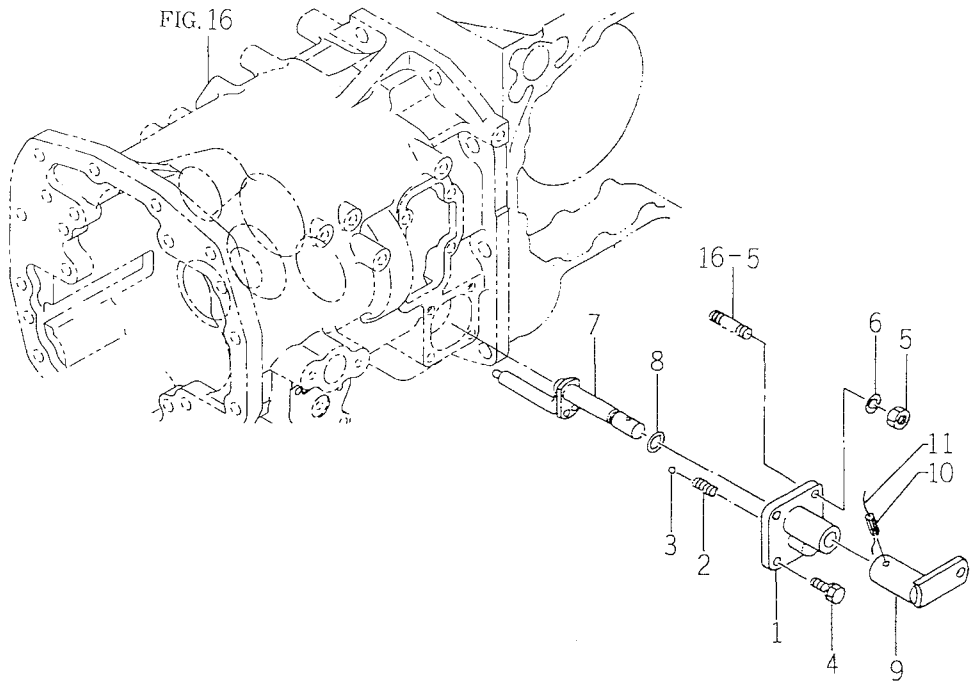

1594-265

KEY	PART CODE	DESCRIPTION	SPC	TYPE OF MODEL TK538H		ITC	COL	GRP	REMARKS
1	1560-265-002-10	HOUSING	*	1					
2	1302-225-003-00	SPRING, SHIFTER	*	1					
3	V682-200-001-00	BALL	*	1					
4	V211-260-802-00	BOLT, SEMS (S)	*	2					
5	V304-260-008-00	NUT/M 8	*	2					
6	V401-160-008-00	WASHER, SP/M 8	*	2					
7	1560-265-220-20	ARM COMP	*	1					
8	V720-102-401-40	O-RING/P14	*	1					
9	1594-265-210-00	ARM, PLATE COMP	*	1					
10	V580-140-602-50	PIN, SPRING/6 X25 W	*	1					
11		WIRE	*	1					

FIG. 25 PTO COUNTER SYSTEM

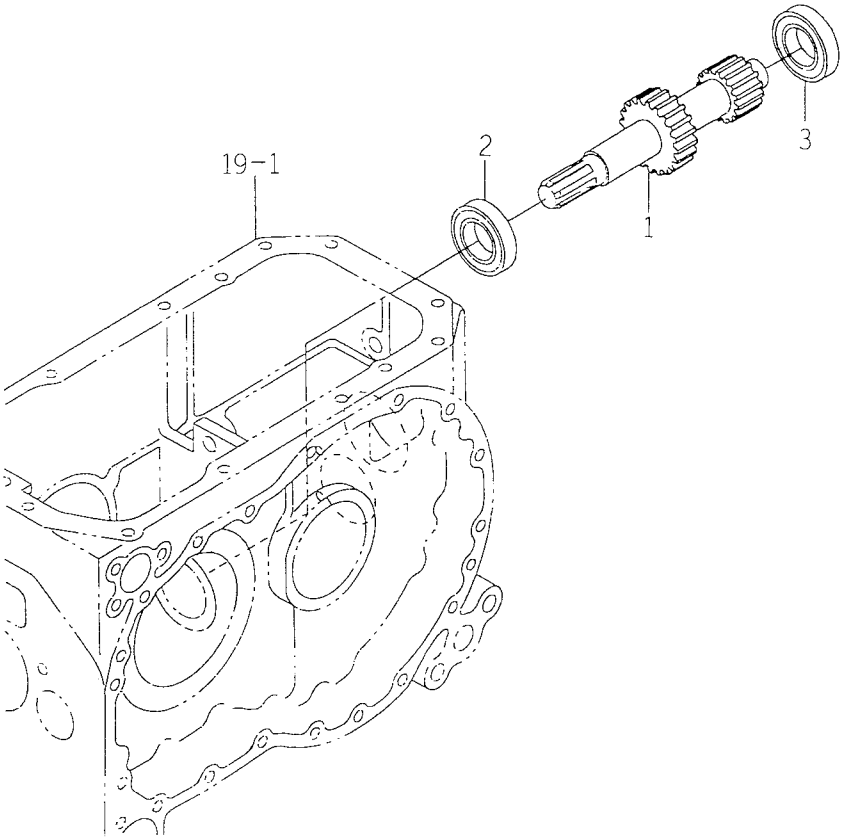

1674-270

KEY	PART CODE	DESCRIPTION	SPC	TYPE OF MODEL TK538H		ITC	COL	GRP	REMARKS
1	1594-270-001-20	GEAR/SPUR/20-13	*	1					
2	1597-218-001-00	BEARING/BALL	*	1					
3	7932-201-002-00	BEARING, RB/6306SH2	*	1					

FIG. 26 PTO CHANGE GEAR SYSTEM

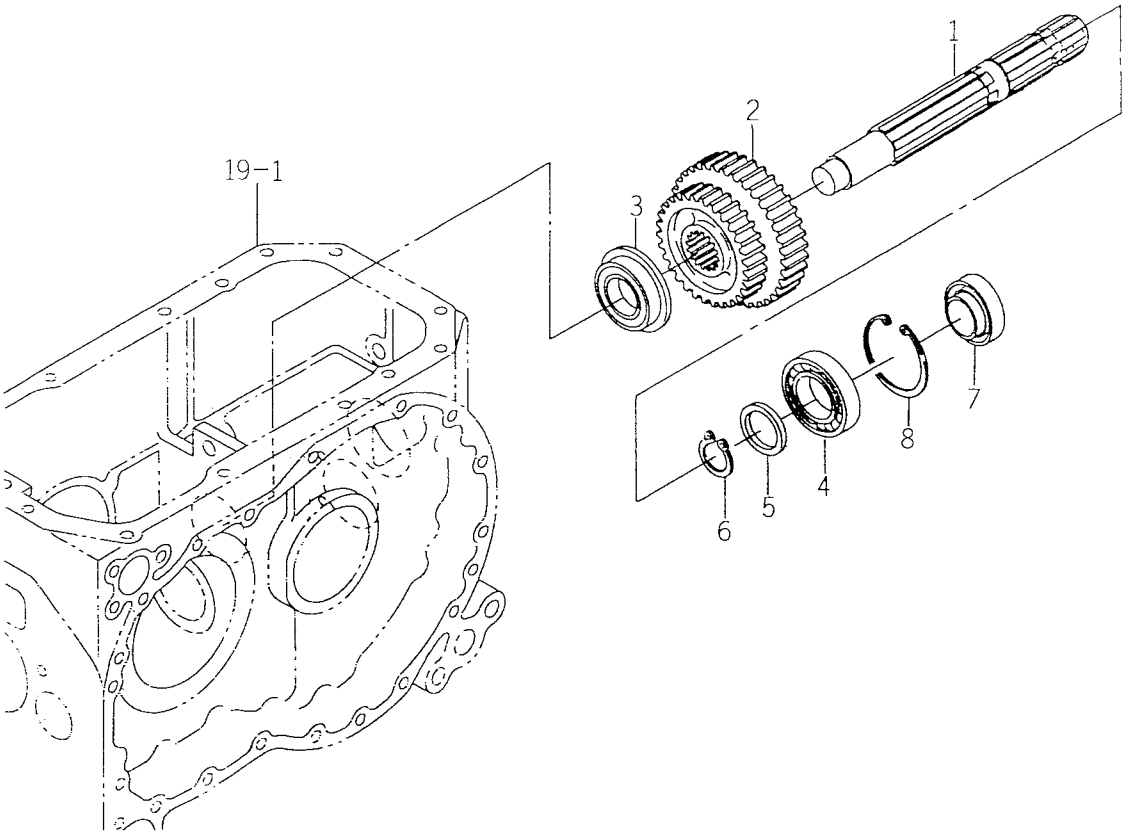

1674-273

KEY	PART CODE	DESCRIPTION	SPC	TYPE OF MODEL TK538H		ITC	COL	GRP	REMARKS
1	1594-273-001-30	SHAFT PTO	*	1					
2	1594-273-002-10	GEAR/SPUR/33-39	*	1					
3	1491-203-006-10	BEARING	*	1					
4	V600-110-620-70	BEARING, RB/6207	*	1					
5	1560-273-007-30	WASHER/35X46X3	*	1					
6	V704-140-035-00	RING, SNAP/35 C	*	1					
7	1632-273-200-00	SEAL, OIL	*	1					
8	V707-140-072-00	RING/SNAP	*	1					

FIG. 27 PTO CHANGE SYSTEM

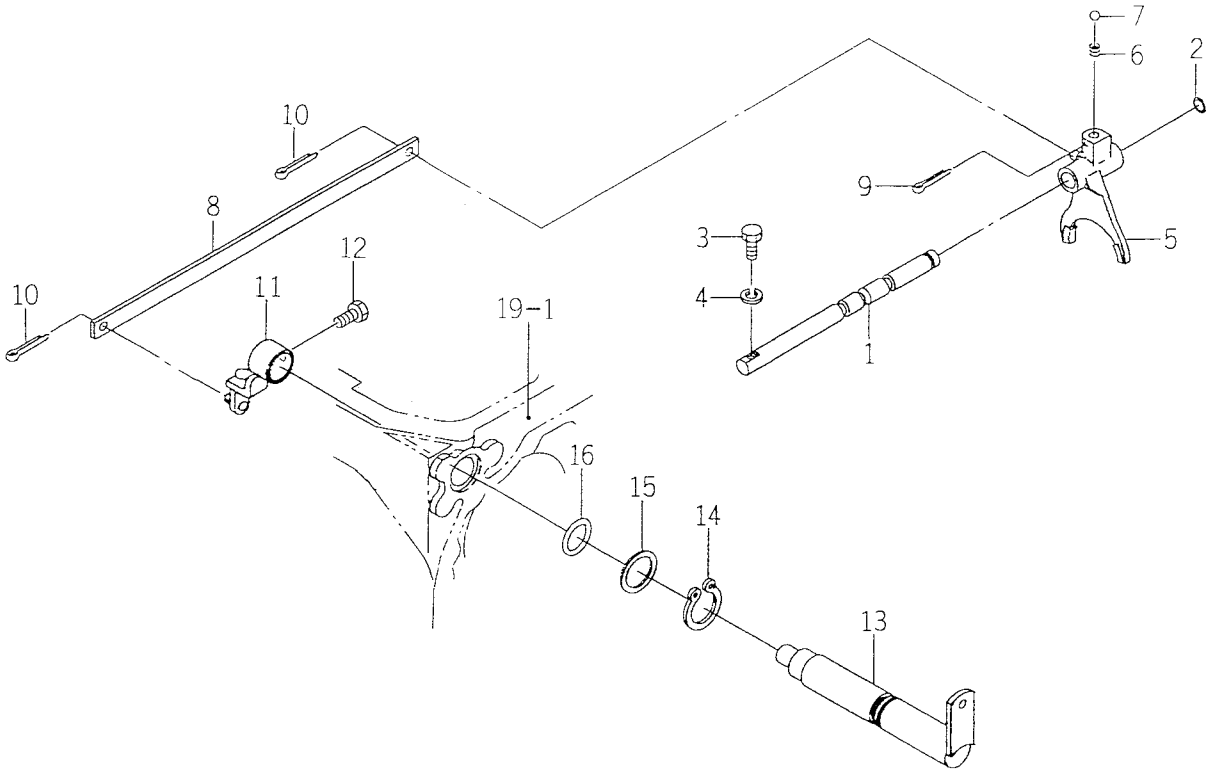

1595-275

KEY	PART CODE	DESCRIPTION	SPC	TYPE OF MODEL TK538H		ITC	COL	GRP	REMARKS
1	1594-275-001-10	STAY PTO SHIFT	*	1					
2	V720-102-401-00	O-RING/P10A	*	1					
3	1560-275-022-00	BOLT/M8X20	*	1					
4	V401-160-008-00	WASHER, SP/M 8	*	1					
5	1594-275-005-00	FORK, PTO SHIFT	*	1					
6	1302-225-003-00	SPRING, SHIFTER	*	1					
7	V682-200-001-00	BALL	*	1					
8	1594-275-004-00	PLATE/I/16X356	*	1					
9	V500-163-002-50	PIN, SPLIT/3 X25	*	1					
10	V500-162-502-00	PIN, SPLIT/2.5X20	*	2					
11	1560-275-330-10	ARM COMP	*	1					
12	1560-223-016-00	BOLT/M8X16	*	1					
13	1595-275-200-10	ARM	*	1					
14	V704-140-028-00	RING, SNAP/28 C	*	1					
15	1560-275-013-00	WASHER/28X37X2	*	1					
16	V720-103-502-20	O-RING/P22	*	1					

FIG. 28 SUB CHANGE SYSTEM

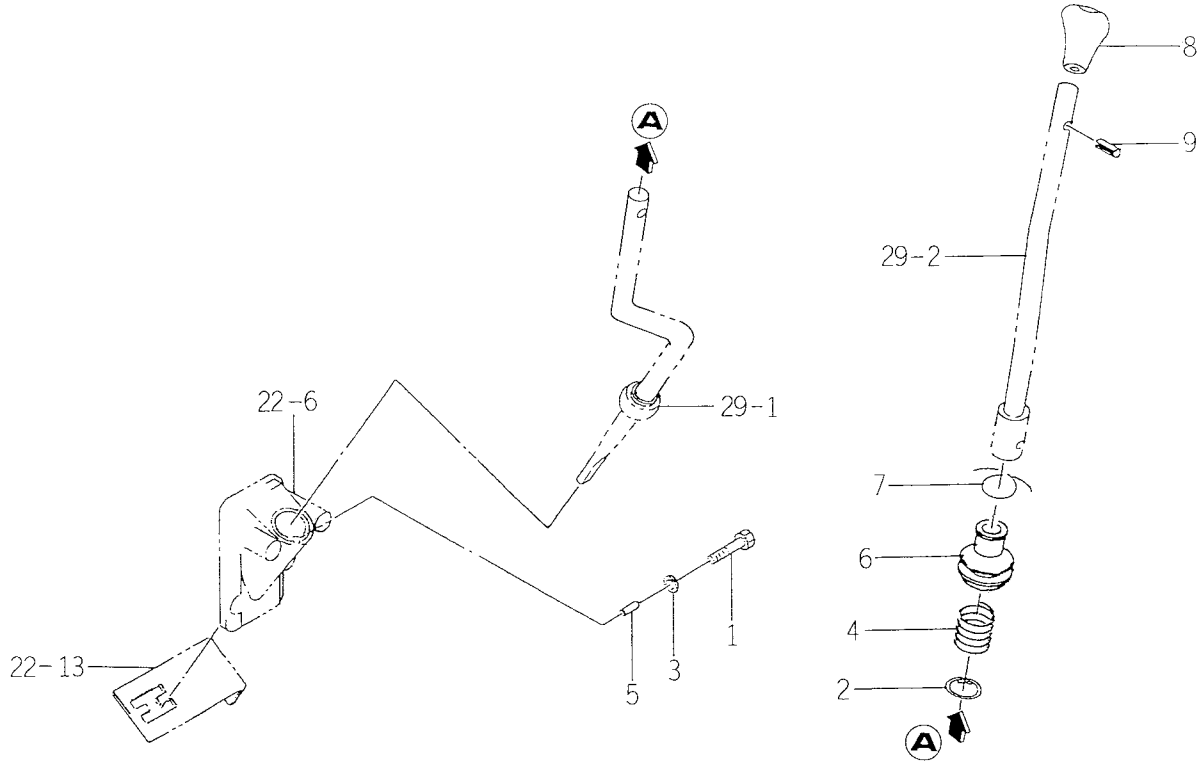

1673-280

KEY	PART CODE	DESCRIPTION	SPC	TYPE OF MODEL TK538H		ITC	COL	GRP	REMARKS
1	V201-260-801-20	BOLT/M 8X12	*	1					
2	V705-140-032-00	RING, SNAP/32 C	*	1					
3	1560-223-008-50	SEAL	*	1					
4	1560-290-006-30	SPRING	*	1					
5	V523-100-601-80	PIN	*	1					
6	1560-280-004-40	BOOT	*	1					
7		WIRE	*	1					
8	1673-280-001-00	GLIP/MAIN	*	1					
9	V580-140-602-00	PIN, SPRING	*	1					

FIG. 29 LEVER (SUB) SYSTEM

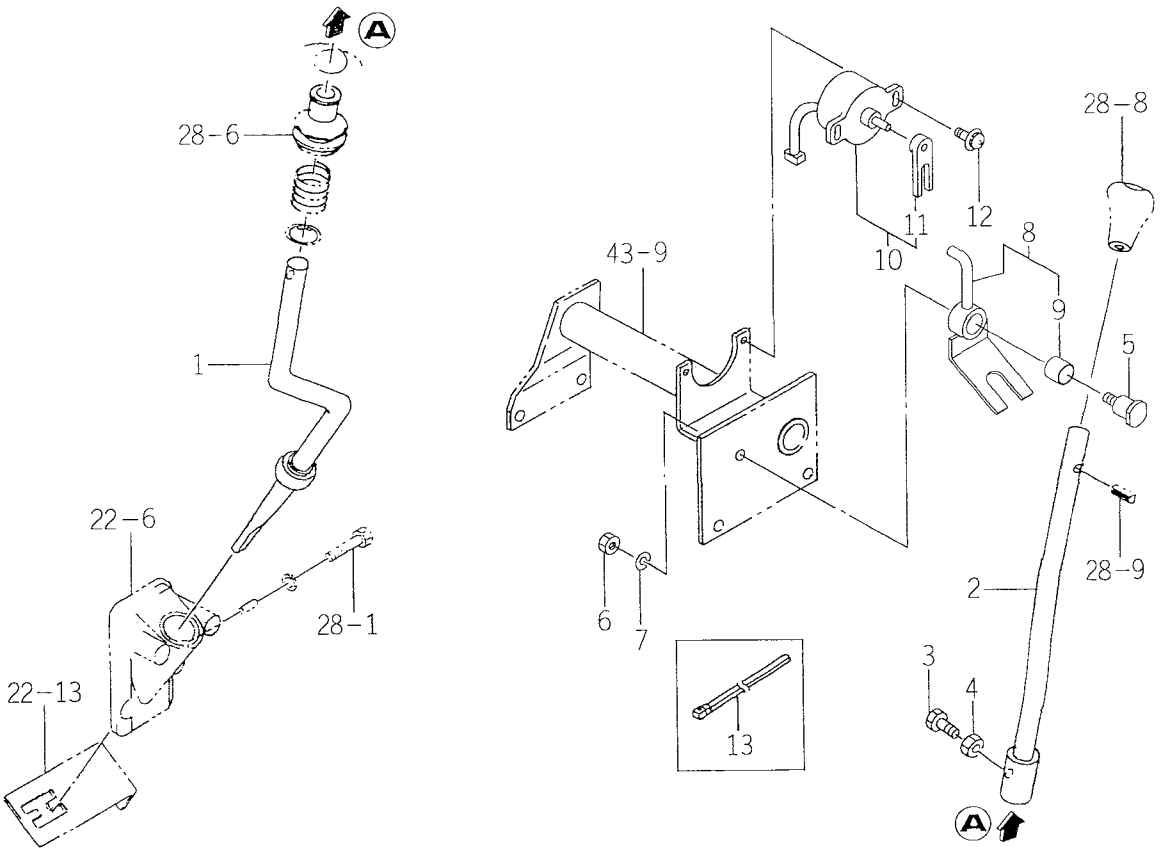

1641-281

KEY	PART CODE	DESCRIPTION	SPC	TYPE OF MODEL TK538H		ITC	COL	GRP	REMARKS
1	1595-281-200-20	LEVER/BAR/16 COMP	*	1					
2	1594-281-210-20	LEVER/BAR/16 COMP	*	1					
3	1600-502-003-00	BOLT, SM/M08X25	*	1					
4	V304-260-008-00	NUT/M 8	*	1					
5	1641-281-051-00	PIN/SET	*	1					
6	V304-260-008-00	NUT/M 8	*	1					
7	V401-160-008-00	WASHER, SP/M 8	*	1					
8	1641-281-520-10	ARM/SWITCH SET	*	1					
9	1560-314-291-00	BUSH/16X18X15	*	1					
10	2161-506-260-00	SENSOR ASSY	*	1					
11	2161-506-252-00	PLATE/SENSOR	*	1					
12	V120-376-001-60	SCREW/SP	*	2					
13	1342-402-006-00	BAND, WIRE/250	*	1					

FIG. 30 LEVER (PTO) SYSTEM (A)

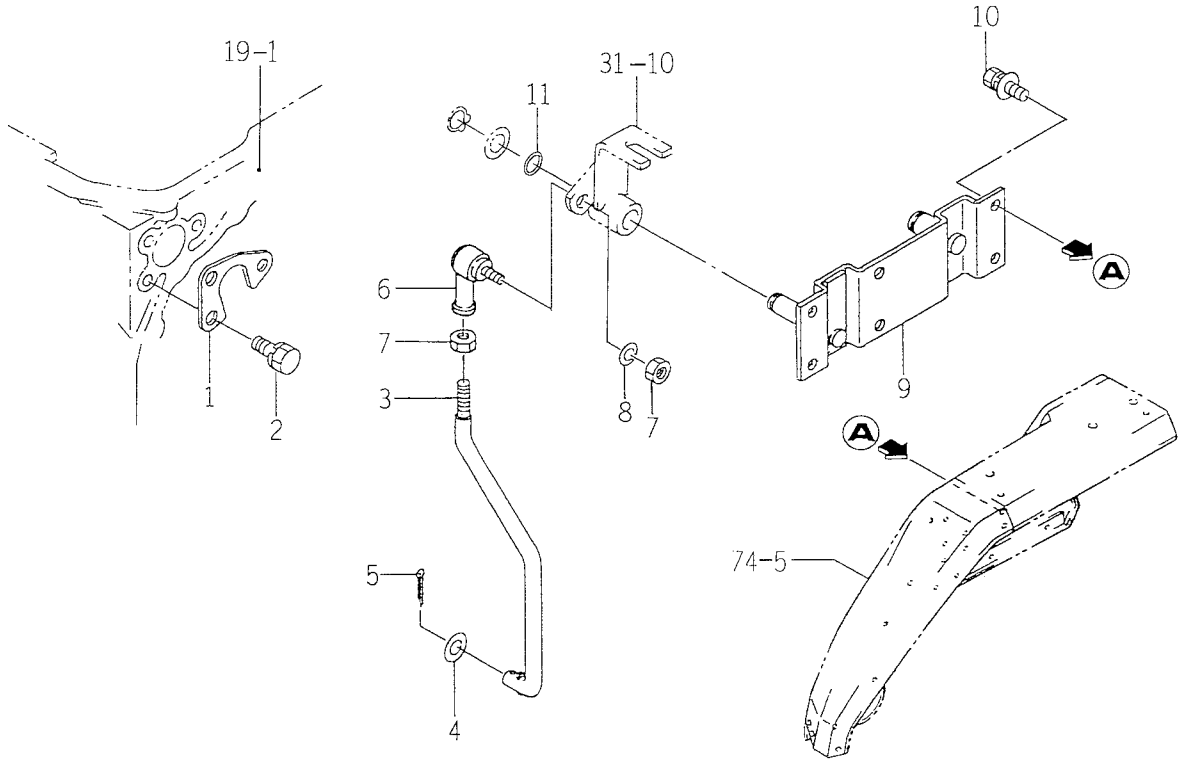

1594-285

KEY	PART CODE	DESCRIPTION	SPC	TYPE OF MODEL TK538H		ITC	COL	GRP	REMARKS
1	1594-285-001-00	PLATE PTO	*	1					
2	V211-261-001-60	BOLT(S) M10X16	*	3					
3	1594-285-002-10	ROD	*	1					
4	V411-260-010-00	WASHER/M10	*	1					
5	V500-162-002-00	PIN,SPLIT/2 X20	*	1					
6	1560-695-021-00	JOINT BALL M08RH	*	1					
7	V304-260-008-00	NUT/M 8	*	2					
8	V401-160-008-00	WASHER,SP/M 8	*	1					
9	1594-285-200-30	BRACKET COMP	*	1					
10	V211-360-801-60	BOLT,SEMS (SP)	*	6					
11	V720-101-901-00	O-RING	*	1					

FIG. 31 LEVER (PTO) SYSTEM (B)

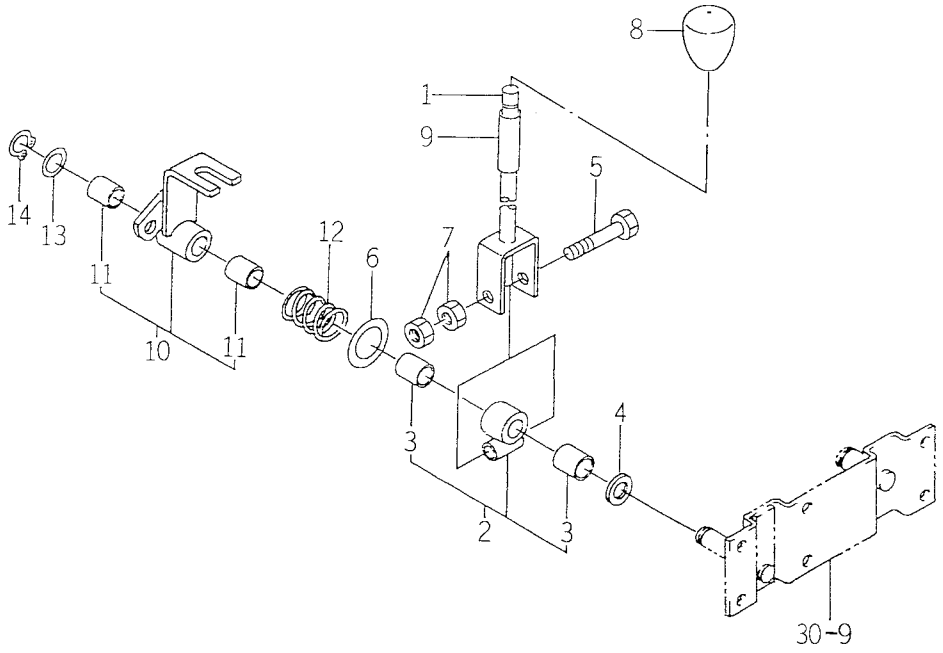

1595-285B

KEY	PART CODE	DESCRIPTION	SPC	TYPE OF MODEL TK538H		ITC	COL	GRP	REMARKS
1	1594-285-220-10	LEVER COMP	*	1					
2	1564-275-270-30	LINK COMP	*	1					
3	3646-102-011-10	BUSH/14X16X20	*	1					
4	1594-285-003-00	WASHER/14X24X5	*	1					
5	V201-261-005-50	BOLT/M10X55	*	1					
6	1564-275-007-00	WASHER/27X40X2	*	1					
7	V304-260-010-00	NUT	*	2					
8	1594-285-004-00	GRIP/PTO	*	1					
9	1560-511-001-00	HOSE/80	*	1					
10	1595-285-200-00	ARM ASSY	*	1					
11	3646-102-011-10	BUSH/14X16X20	*	2					
12	1560-285-008-40	SPRING	*	1					
13	1427-601-003-00	WASHER/15X24X2	*	1					
14	V704-140-014-00	RING, SNAP/14 C	*	1					

FIG. 32 LEVER (4WD), ROD (4WD) SYSTEM

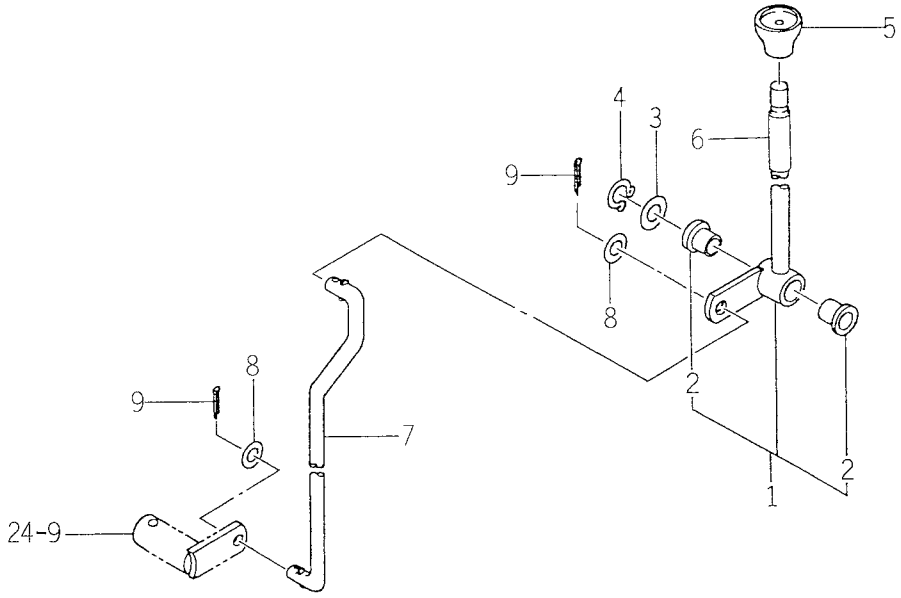

1594-287

KEY	PART CODE	DESCRIPTION	SPC	TYPE OF MODEL TK538H		ITC	COL	GRP	REMARKS
1	1594-287-200-00	LEVER/12 ASSY	*	1					
2	1560-287-002-30	BUSH/16X24X16	*	2					
3	3621-211-003-00	WASHER	*	1					
4	V704-140-016-00	RING, SNAP/16 C	*	1					
5	1544-219-005-00	KNOB, LEVER/12	*	1					
6	1560-511-001-00	HOSE/80	*	1					
7	1595-288-001-20	ROD	*	1					
8	V411-260-010-00	WASHER/M10	*	2					
9	V500-162-002-00	PIN, SPLIT/2 X20	*	2					

FIG. 33 DRIVE PINION SYSTEM

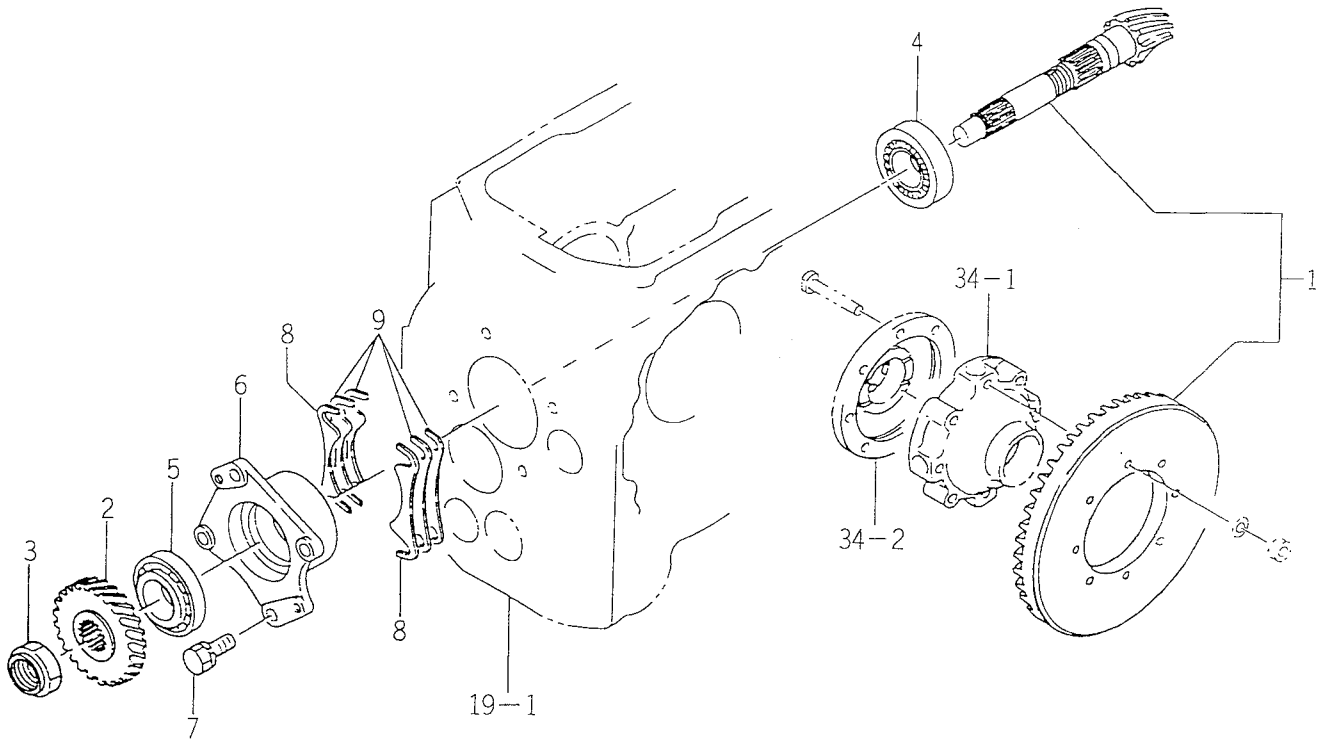

1674-302

KEY	PART CODE	DESCRIPTION	SPC	TYPE OF MODEL TK538H		ITC	COL	GRP	REMARKS
1	1594-302-200-10	GEAR/10-49 SET	*	1					
2	1594-302-001-00	GEAR, HERICAL/26	*	1					
3	1488-411-009-00	NUT (30)	*	1					
4	1560-301-002-00	ROLLER, BEARING32207-	*	1					
5	1560-301-003-00	ROLLER, BEARING30207C	*	1					
6	1560-301-004-30	METAL	*	1					
7	V211-561-002-50	BOLT/M10X25	*	4					
8	1560-301-005-40	SHIM/0.2	*	2					
9	1560-301-006-40	SHIM/0.1	*	4					

FIG. 34 DIFFERENTIAL GEAR SYSTEM

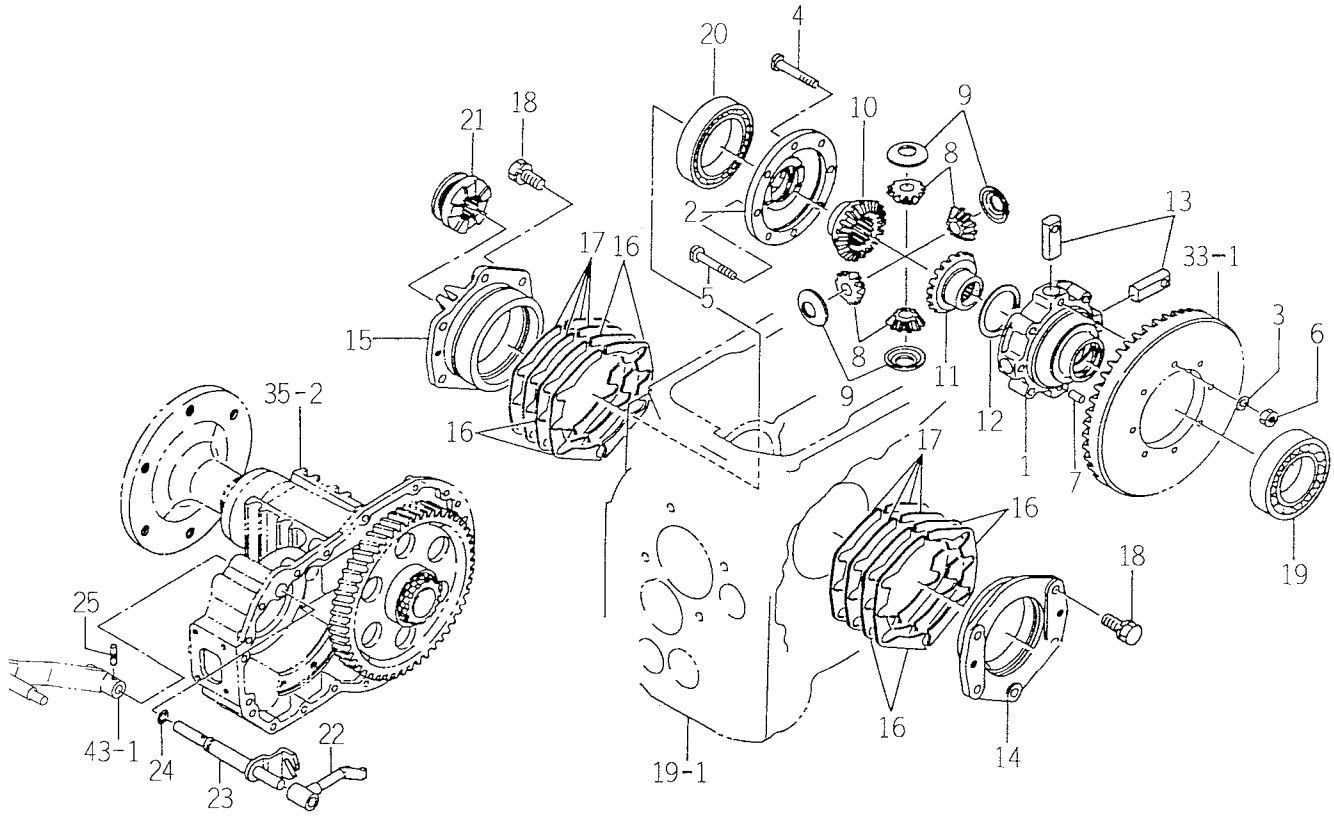

1594-303

KEY	PART CODE	DESCRIPTION	SPC	TYPE OF MODEL TK538H		ITC	COL	GRP	REMARKS
1	1650-304-001-00	CASE/DIFF	*	1					
2	1560-303-005-50	CASE	*	1					
3	V401-160-008-00	WASHER, SP/M 8	*	8					
4	1594-303-001-00	BOLT/M8X1.0X58	*	6					
5	1594-303-002-00	BOLT/REAMER/M8X1.0X5	*	2					
6	1594-303-003-00	NUT/SM/M8X1.0	*	8					
7	V523-101-002-40	PIN	*	1					
8	1444-318-004-00	PINION, DIFF/12T	*	4					
9	1650-304-008-00	WASHER/PINION	*	4					
10	1443-452-007-00	GEAR, BEVEL	*	1					
11	1560-303-002-00	GEAR, BEVEL/20T	*	1					
12	1650-304-007-00	WASHER/43X58X01	*	1					
13	1444-318-007-00	SHAFT, DIFF PINION	*	4					
14	1560-303-003-40	METAL	*	1					
15	1560-303-001-40	METAL	*	1					
16	1444-318-011-00	SHIM(A)	*	8					
17	1444-318-012-00	SHIM(B)	*	8					
18	V211-561-002-50	BOLT/M10X25	*	11					
19	V600-110-621-10	BEARING, RB/6211	*	1					
20	V600-110-601-30	BEARING, RB/6013	*	1					
21	1560-303-006-40	CLUTCH	*	1					
22	1560-303-007-40	ARM	*	1					
23	1560-303-200-50	CAM	*	1					
24	V720-102-401-60	O-RING/P16	*	1					
25	1488-302-003-00	PIN	*	1					

FIG. 35 REAR AXLE HOUSING SYSTEM

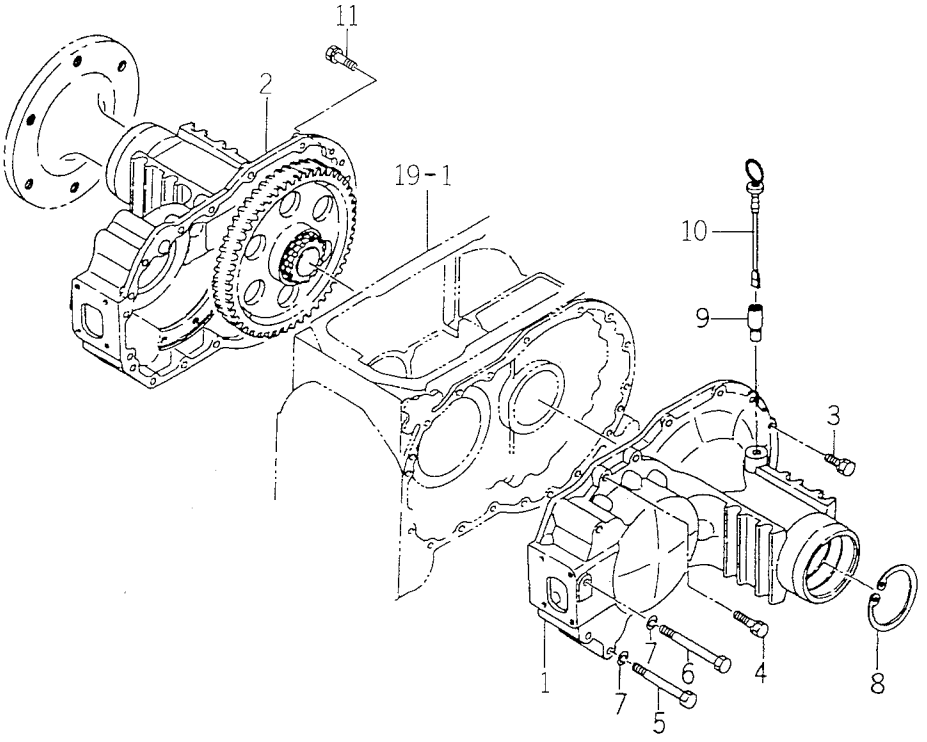

1560-304

KEY	PART CODE	DESCRIPTION	SPC	TYPE OF MODEL TK538H		ITC	COL	GRP	REMARKS
1	1560-304-001-60	HOUSING/AXLE/LH	*	1					
2	1560-304-002-60	HOUSING/AXLE/RH	*	1					
3	V211-561-003-00	BOLT/M10X30	*	17					
4	V211-561-004-00	BOLT/M10X40	*	8					
5	V201-361-010-00	BOLT/M10X100	*	6					
6	V201-361-011-00	BOLT	*	2					
7	V401-160-010-00	WASHER, SP/M10	*	8					
8	V707-140-090-00	RING/SNAP	*	2					
9	1560-304-003-00	COLLAR/6X14X40	*	1					
10	1560-240-007-40	GAUGE, OIL LEVEL	*	1					
11	V211-561-003-00	BOLT/M10X30	*	1					

FIG. 36 WHEEL PINION SYSTEM

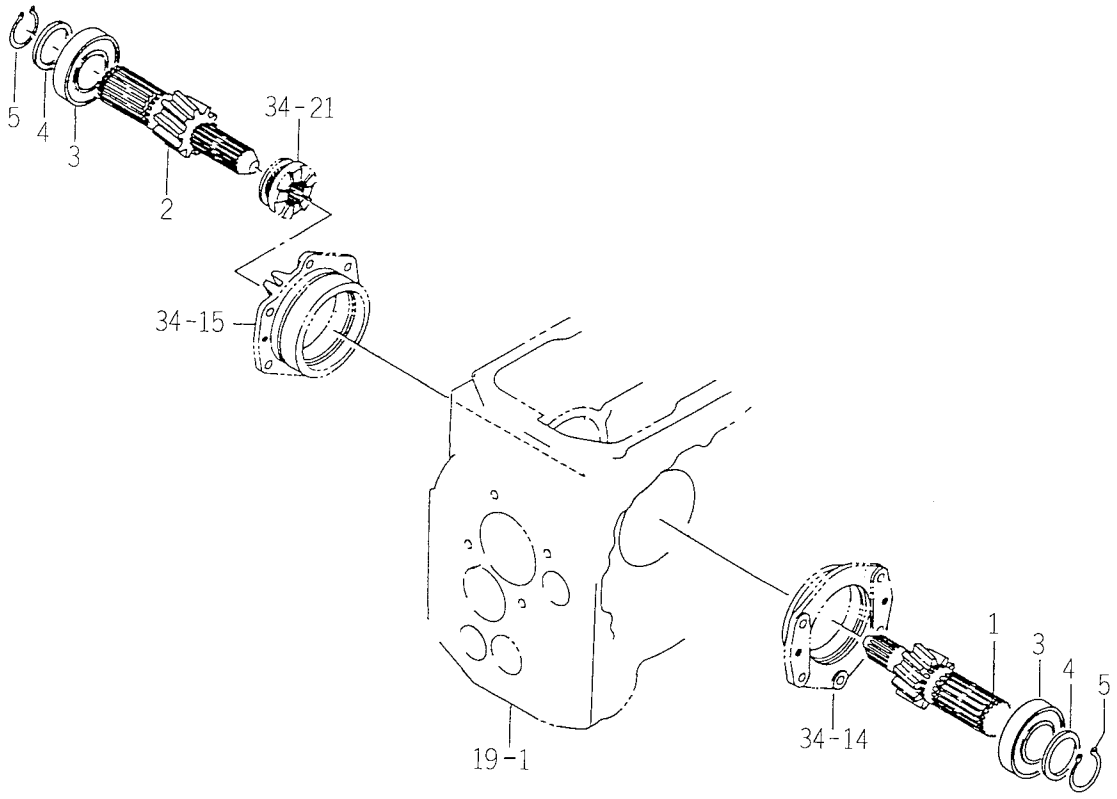

1642-306

KEY	PART CODE	DESCRIPTION	SPC	TYPE OF MODEL TK538H		ITC	COL	GRP	REMARKS
1	1642-306-001-00	PINION/HERICAL/10/LH	*	1					
2	1642-306-002-00	PINION/HERICAL/10/RH	*	1					
3	1594-306-001-00	BEARING/BALL6208RSH2	*	2					
4	1507-323-004-20	COLLAR, THRUST	*	2					
5	V706-140-040-00	RING/SNAP	*	2					

FIG. 37 REAR WHEEL SHAFT SYSTEM

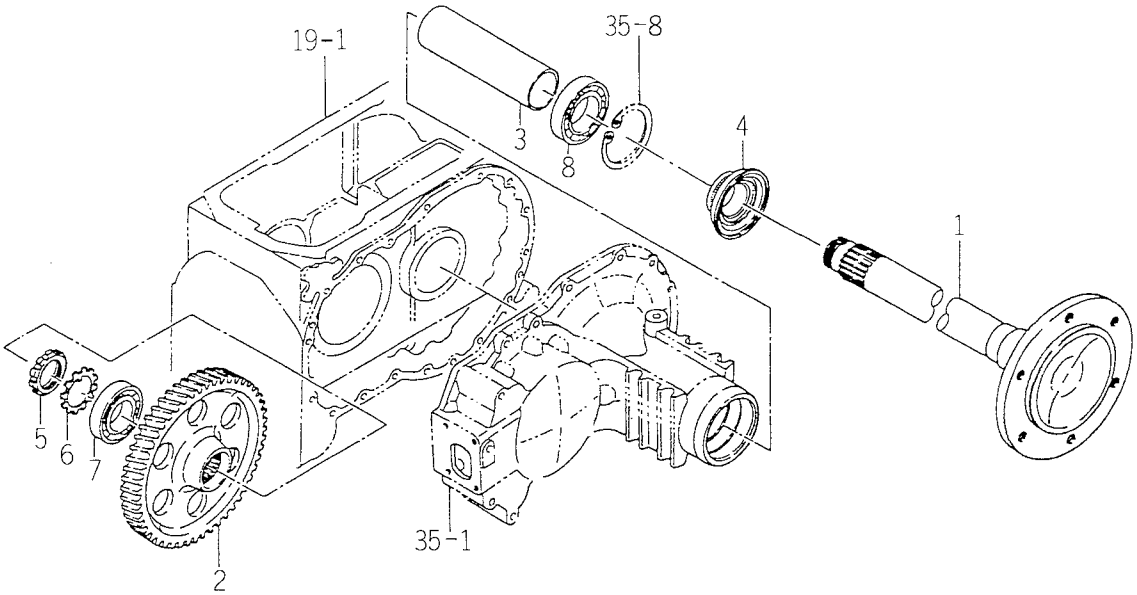

1642-307

KEY	PART CODE	DESCRIPTION	SPC	TYPE OF MODEL TK538H		ITC	COL	GRP	REMARKS
1	1642-307-002-20	SHAFT/WHEEL	*	2					
2	1642-307-001-10	GEAR/HELICAL/54	*	2					
3	1560-307-003-10	COLLAR/52X61X211	*	2					
4	1650-306-200-00	SEAL/OIL ASSY	*	2					
5	V670-200-009-00	NUT, ADAPTER/AN09	*	2					
6	V671-400-009-00	WASHER	*	2					
7	1502-211-015-00	BEARING, RB/6209SH	*	2					
8	V600-110-621-00	BEARING, RB/6210	*	2					

FIG. 38 BRAKE SYSTEM

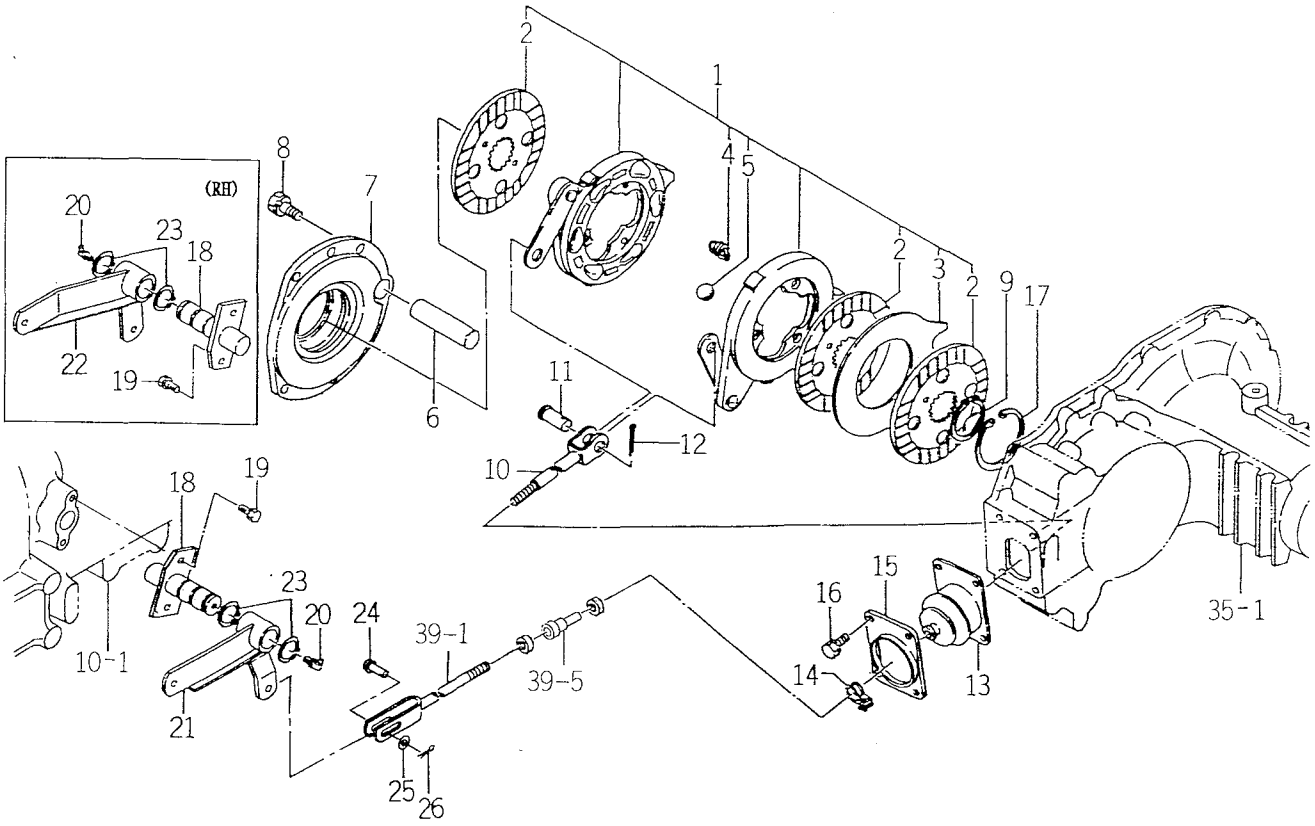

1641-310A

KEY	PART CODE	DESCRIPTION	SPC	TYPE OF MODEL TK538H		ITC	COL	GRP	REMARKS
1	1560-310-270-00	BRAKE ASSY	*	2					
2	1560-310-201-10	DISC, BRAKE	*	6					
3	1444-327-202-10	PLATE, SEPARATE	*	2					
4	1444-327-203-00	SPRING, RETURN	*	6					
5	V682-200-001-90	BALL	*	12					
6	1444-327-001-00	PIN, TORQUE	*	2					
7	1560-310-005-00	METAL/BRAKE	*	2					
8	V211-561-002-50	BOLT/M10X25	*	12					
9	V706-140-040-00	RING/SNAP	*	2					
10	1674-310-300-00	ROD/FORK COMP	*	2					
11	1444-327-003-00	PIN(15X30)	*	2					
12	V500-163-002-00	PIN, SPLIT/3 X20	*	2					
13	1560-310-003-40	BOOT	*	2					
14	J061-210-015-00	CLAMP/WIRE/10-15	*	2					
15	1560-310-004-40	PLATE	*	2					
16	V211-260-801-60	BOLT, SEMS (S) M8X16	*	8					
17	V707-140-080-00	RING/SNAP	*	2					
18	1560-310-210-40	PIN COMP	*	2					
19	V211-260-802-00	BOLT, SEMS (S)	*	4					
20	V763-150-000-00	NIPPLE, GREASE/PT1/8	*	2					
21	1641-310-510-00	ARM/BRAKE/LH COMP	*	1					
22	1560-310-260-40	ARM COMP	*	1					
23	V704-140-025-00	RING, SNAP/25 C	*	4					
24	1404-312-006-00	PIN, YOKE A	*	2					
25	V411-260-008-00	WASHER, PL/M 8	*	2					
26	V500-162-002-00	PIN, SPLIT/2 X20	*	2					

FIG. 39 ROD (BRAKE) SYSTEM

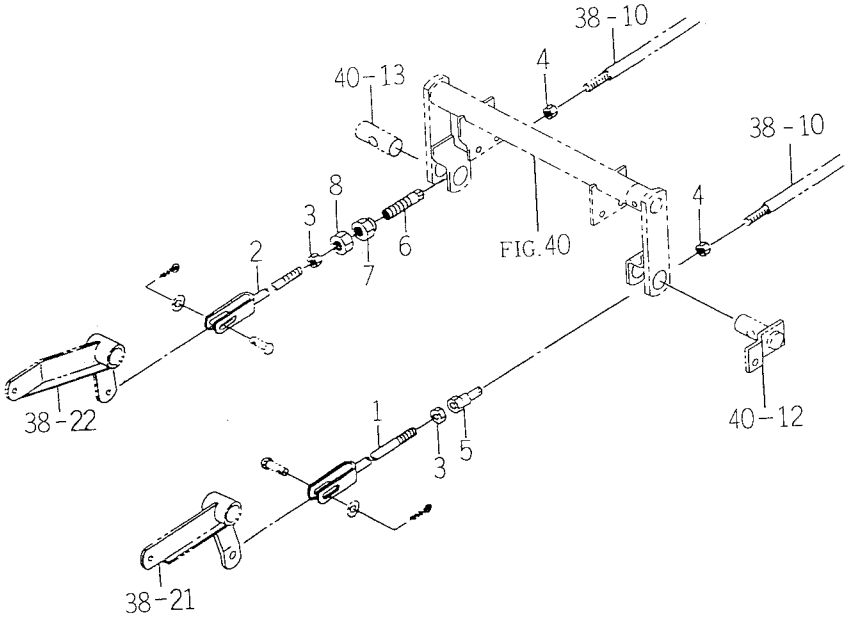

1674-312B

KEY	PART CODE	DESCRIPTION	SPC	TYPE OF MODEL TK538H		ITC	COL	GRP	REMARKS
1	1674-312-370-00	ROD/FORK/LH COMP	*	1					
2	1674-312-380-00	ROD/FORK/RH COMP	*	1					
3	V304-260-008-00	NUT/M 8	*	2					
4	1560-132-007-30	NUT/M8	*	2					
5	1596-312-003-00	BUCKLE/TURN/M08	*	1					
6	1594-312-003-20	BUCKLE/TURN/M08	*	1					
7	1594-312-004-00	NUT/M14	*	1					
8	V304-260-014-00	NUT/M14	*	1					

FIG. 40 BRAKE (ARM) SYSTEM

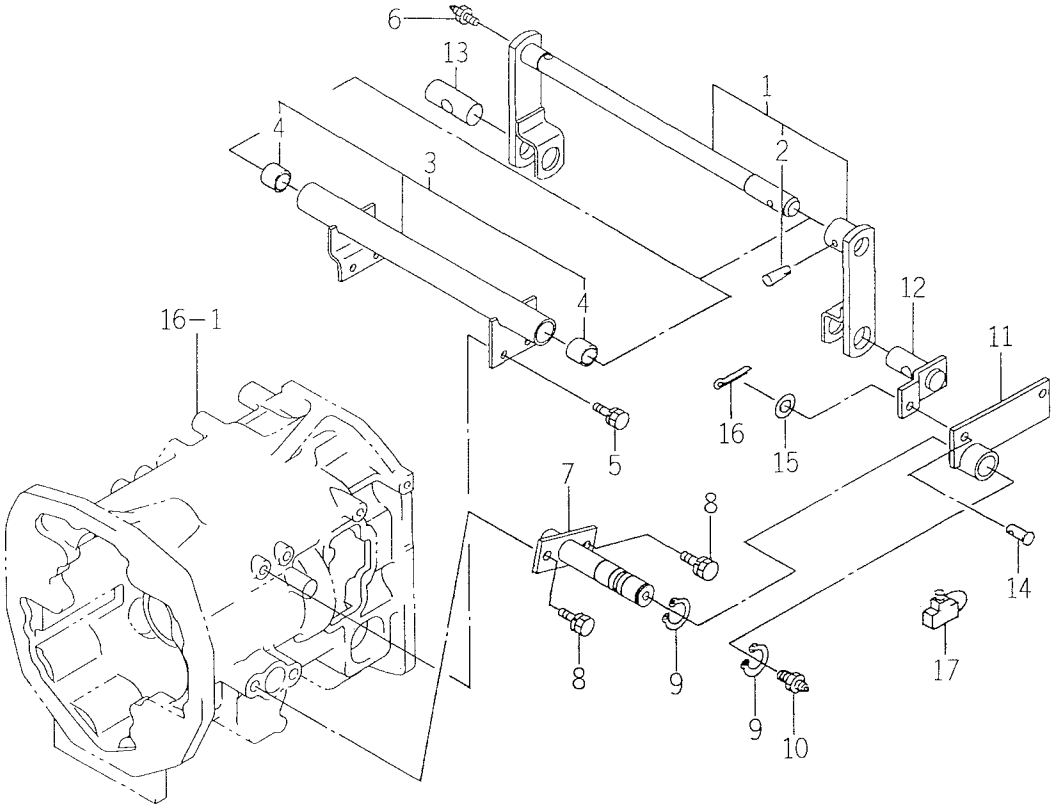

1674-312C

KEY	PART CODE	DESCRIPTION	SPC	TYPE OF MODEL TK538H		ITC	COL	GRP	REMARKS
1	1674-312-300-00	ARM/BRAKE SET	*	1					
2	V511-100-805-00	PIN, TAPER/8X50	*	1					
3	1674-312-330-00	HOLDER ASSY	*	1					
4	3664-540-001-00	BUSH/22X25X20	*	2					
5	V211-560-802-00	BOLT/M8X20	*	2					
6	V763-150-000-00	NIPPLE, GREASE/PT1/8	*	1					
7	1674-312-390-00	PIN/BRAKE COMP	*	1					
8	V211-561-002-00	BOLT/M10X20	*	2					
9	V704-140-025-00	RING, SNAP/25 C	*	2					
10	V763-150-000-00	NIPPLE, GREASE/PT1/8	*	1					
11	1674-312-350-00	ARM/PARKING COMP	*	1					
12	1674-312-360-00	PIN COMP	*	1					
13	1594-312-001-10	PIN/24X60	*	1					
14	2120-409-004-00	PIN	*	1					
15	V411-260-010-00	WASHER/M10	*	1					
16	V500-163-002-50	PIN, SPLIT/3 X25	*	1					
17	1594-312-005-00	CONNECTER	*	1					

FIG. 41 BRAKE PEDAL SYSTEM

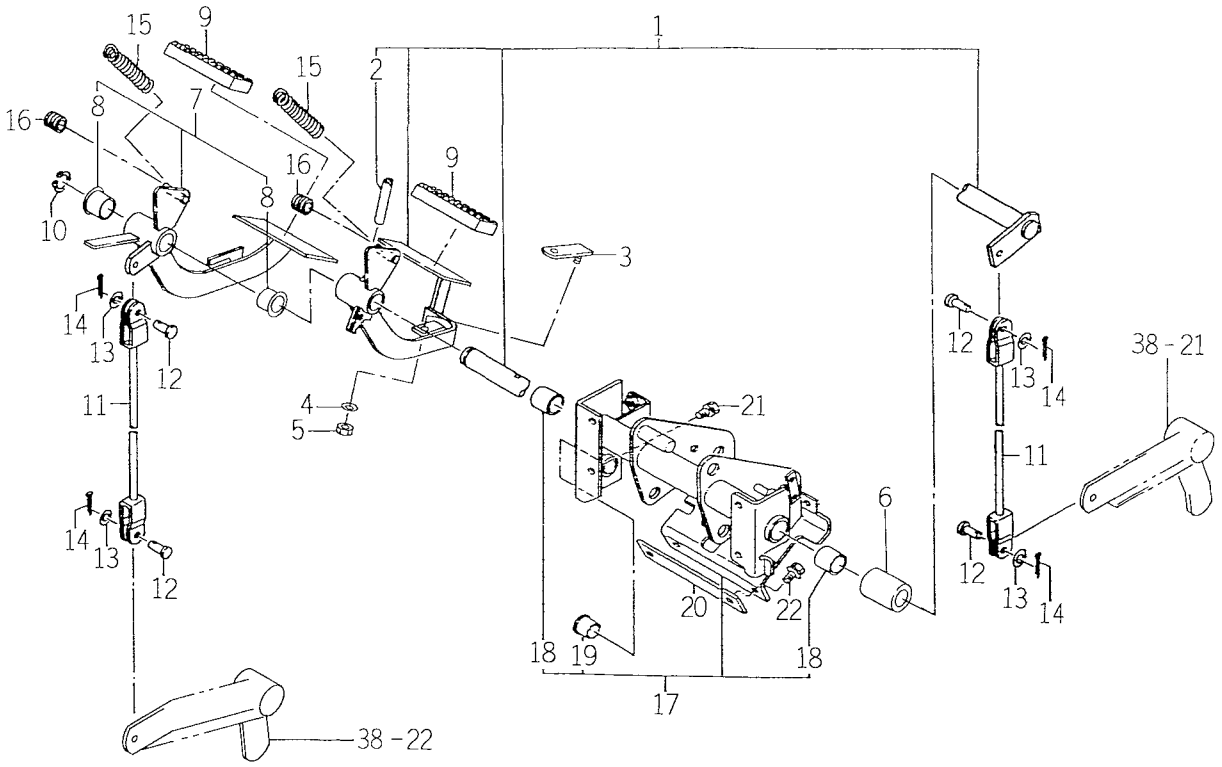

1641-314

KEY	PART CODE	DESCRIPTION	SPC	TYPE OF MODEL TK538H		ITC	COL	GRP	REMARKS
1	1641-314-500-00	PEDAL/BRAKE/LH ASSY	*	1					
2	V511-100-805-00	PIN, TAPER/8X50	*	1					
3	1673-314-220-10	LOCKPLATE COMP	*	1					
4	3560-203-004-00	SPRING, CONE	*	1					
5	P120-605-031-00	U-NUT	*	1					
6	1641-314-051-00	COLLAR/21X32X45	*	1					
7	1641-314-520-00	PEDAL/BRAKE/RH ASSY	*	1					
8	A101-251-008-00	BUSH/20X23X20	*	2					
9	1524-122-001-00	PAD	*	2					
10	V704-140-020-00	RING, SNAP/20C	*	1					
11	1560-314-250-30	ROD COMP	*	2					
12	1432-242-001-00	PIN	*	4					
13	V411-260-008-00	WASHER, PL/M 8	*	4					
14	V500-162-502-00	PIN, SPLIT/2.5X20	*	4					
15	1673-314-001-00	SPRING/HE106	*	2					
16	1560-132-001-10	TUBE	*	2					
17	1594-314-210-20	FRAME ASSY	*	1					
18	3670-703-008-00	BUSH/20X23X20	*	2					
19	1560-314-291-00	BUSH/16X18X15	*	1					
20	1560-314-002-00	PLATE	*	1					
21	V211-260-801-60	BOLT, SEMS (S) M8X16	*	4					
22	V211-360-802-00	BOLT(SP) M8X20	*	2					

FIG. 42 PARKING BRAKE SYSTEM

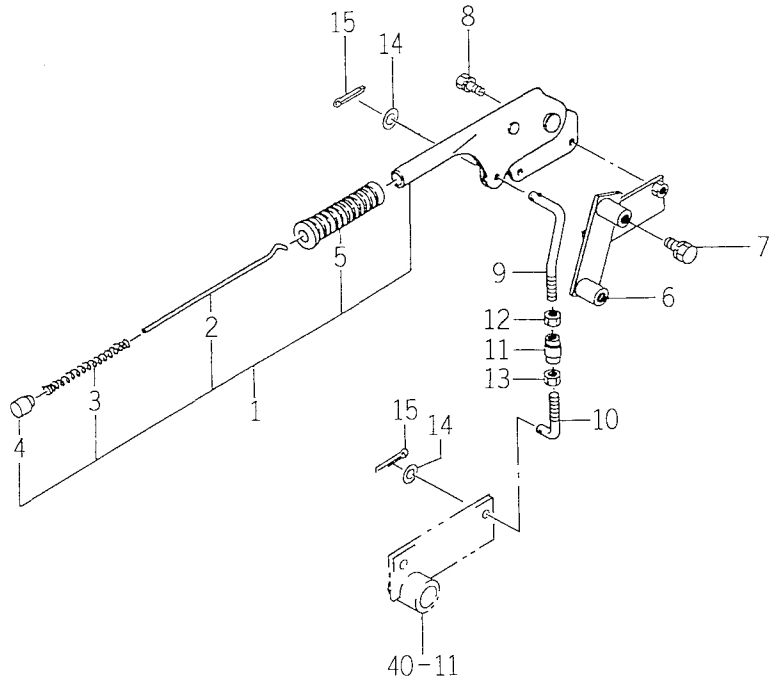

1674-314

KEY	PART CODE	DESCRIPTION	SPC	TYPE OF MODEL TK538H		ITC	COL	GRP	REMARKS
1	1442-313-200-10	BRAKE, PARKING ASSY	*	1					
2	1442-313-202-00	ROD	*	1					
3	1444-328-273-00	SPRING	*	1					
4	1444-328-272-00	BUTTON	*	1					
5	1442-313-203-00	GRIP	*	1					
6	1594-314-200-00	BRACKET COMP	*	1					
7	V211-261-002-00	BOLT, SEMS	*	2					
8	V211-260-802-00	BOLT, SEMS (S)	*	2					
9	1674-314-031-00	ROD	*	1					
10	1711-314-002-00	ROD/L/50/L	*	1					
11	1444-122-002-00	TURNBUCKLE/M8	*	1					
12	V304-260-008-00	NUT/M 8	*	1					
13	1560-132-007-30	NUT/M8	*	1					
14	V411-260-008-00	WASHER, PL/M 8	*	2					
15	V500-162-002-00	PIN, SPLIT/2 X20	*	2					

FIG. 43 DIFF – LOCK PEDAL SYSTEM

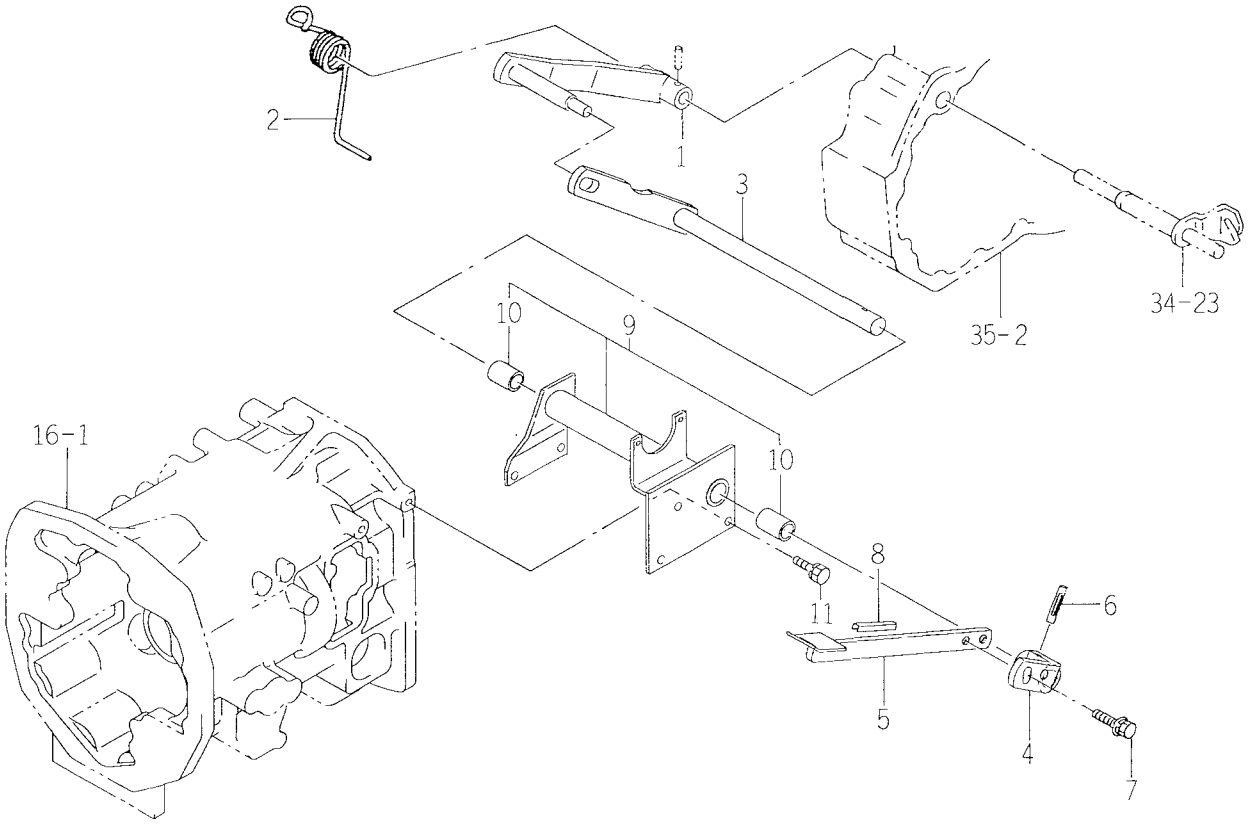

1674-316

KEY	PART CODE	DESCRIPTION	SPC	TYPE OF MODEL TK538H		ITC	COL	GRP	REMARKS
1	1674-316-210-10	ARM COMP	*	1					
2	1560-316-001-50	SPRING	*	1					
3	1674-316-220-10	BAR COMP	*	1					
4	1641-316-540-10	ARM COMP	*	1					
5	1641-316-550-10	PEDAL/DIFF COMP	*	1					
6	V530-160-803-20	PIN	*	1					
7	V211-661-002-50	BOLT 7T(SP)	*	2					
8	1594-625-002-00	INSULATOR	*	1					
9	1674-316-230-00	BRACKET/DIFFLOC ASSY	*	1					
10	1636-501-231-00	BUSH/20X23X30	*	2					
11	V211-560-801-60	BOLT, SEMS	*	4					

FIG. 44 STEERING WHEEL SYSTEM

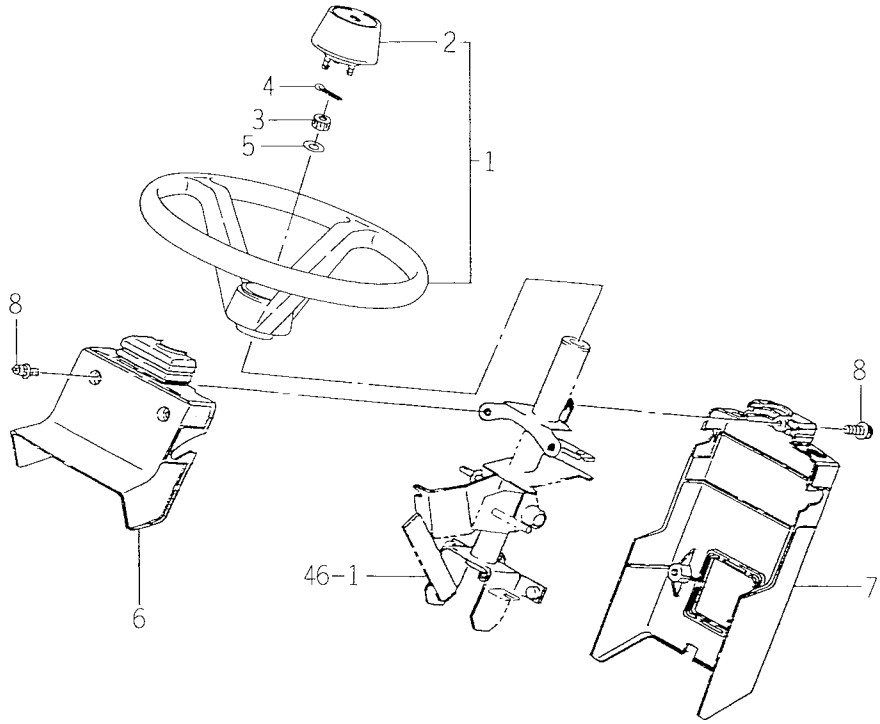

1674-401

KEY	PART CODE	DESCRIPTION	SPC	TYPE OF MODEL TK538H		ITC	COL	GRP	REMARKS
1	1656-401-220-00	WHEEL/STEERING ASSY	*	1					
2	1656-401-222-00	CAP	*	1					
3	V328-262-110-00	NUT	*	1					
4	V500-162-002-00	PIN, SPLIT/2 X20	*	1					
5	V411-260-010-00	WASHER/M10	*	1					
6	1674-401-051-00	COVER/COLUMN/FRONT	*	1					
7	1674-401-052-00	COVER/COLUMN/REAR	*	1					
8	V120-368-002-00	BOLT/M8X20	*	5					

FIG. 45 STEERING SHAFT SYSTEM

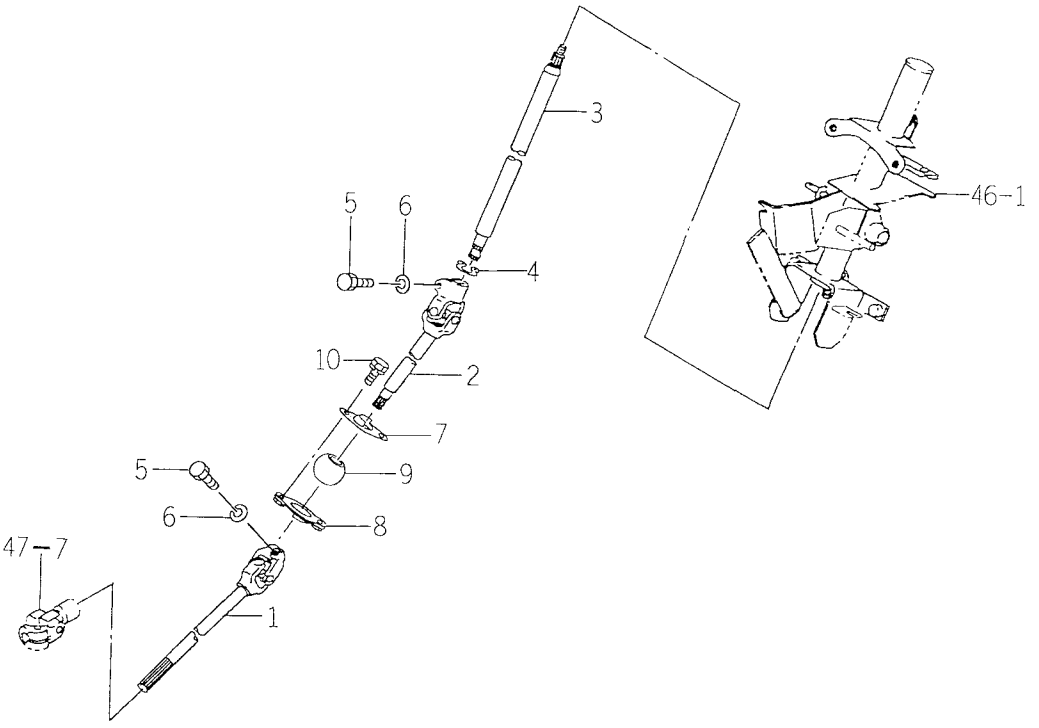

1674-402

KEY	PART CODE	DESCRIPTION	SPC	TYPE OF MODEL TK538H		ITC	COL	GRP	REMARKS
1	1673-402-201-00	SHAFT/STEERING/R	*	1					
2	1673-402-202-00	SHAFT/STEERING/F	*	1					
3	1674-402-001-00	SHAFT/STEERING	*	1					
4	V704-140-017-00	RING, SNAP/17 C	*	1					
5	1696-401-003-00	BOLT/SM/M08X26	*	2					
6	V401-160-008-00	WASHER, SP/M 8	*	2					
7	1560-402-210-30	HOLDER COMP	*	1					
8	1560-402-220-30	HOLDER COMP	*	1					
9	1690-401-210-00	BALL/STEERING ASSY	*	1					
10	V211-260-802-00	BOLT, SEMS (S)	*	2					

FIG. 46 TILT HANDLE SYSTEM

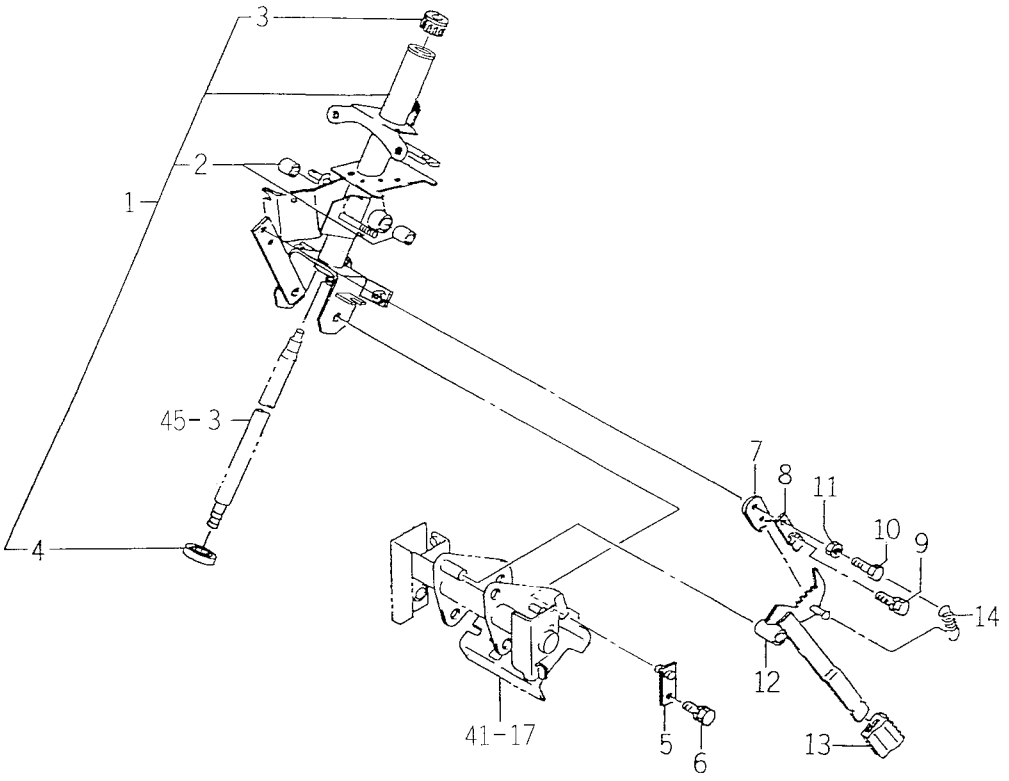

1641-404A

KEY	PART CODE	DESCRIPTION	SPC	TYPE OF MODEL TK538H		ITC	COL	GRP	REMARKS
1	1641-404-500-00	COLUMN/HST ASSY	*	1					
2	3646-102-011-10	BUSH/14X16X20	*	2					
3	1429-406-205-00	BUSH	*	1					
4	V600-130-600-30	BEARING, RB/6003ZZ	*	1					
5	1560-404-210-10	PIN/16X23 COMP	*	2					
6	V211-260-802-00	BOLT, SEMS (S)	*	2					
7	1560-404-001-00	PLATE	*	1					
8	1518-406-008-00	PLATE, GUIDE	*	1					
9	V211-560-802-50	BOLT, SEMS/M8X25 7T	*	1					
10	V201-360-804-00	BOLT/M8X40	*	1					
11	V304-260-008-00	NUT/M 8	*	1					
12	1560-404-220-40	CAM COMP	*	1					
13	1518-406-006-00	COVER, PEDAL	*	1					
14	1560-404-002-30	SPRING	*	1					

FIG. 47 POWER STEERING SYSTEM

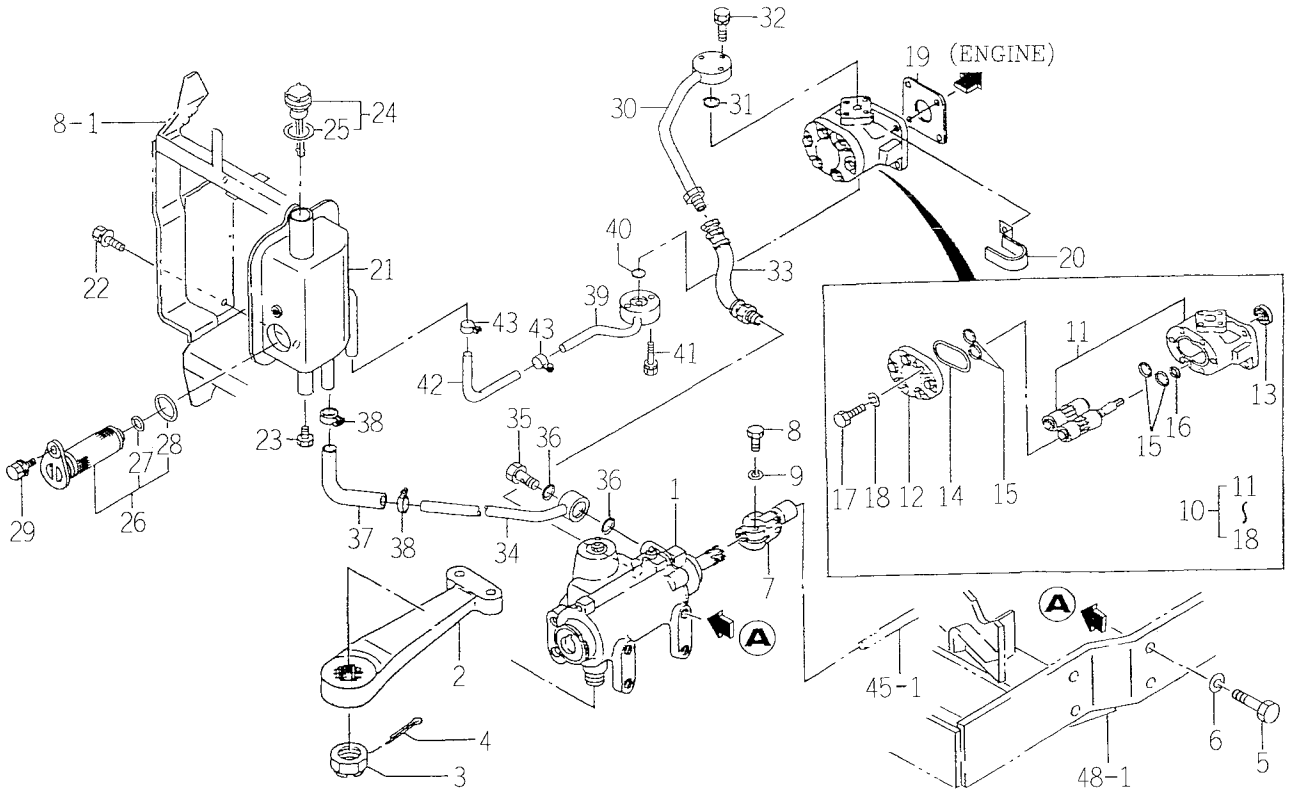

1673-407

KEY	PART CODE	DESCRIPTION	SPC	TYPE OF MODEL TK538H		ITC	COL	GRP	REMARKS
1	1673-407-550-00	STEERING/POWER/NB	*	1					FIG 149
2	1594-407-201-00	ARM	*	1					
3	1444-408-202-00	NUT, CASTLE/M27X1.5	*	1					
4	V500-165-005-00	PIN, SPLIT/5X50	*	1					
5	1560-406-002-00	BOLT/SM/M14X1.5X35	*	6					
6	1560-406-003-00	WASHER, SP/M14	*	6					
7	1560-406-001-00	JOINT	*	1					
8	1696-401-003-00	BOLT/SM/M08X26	*	1					
9	V401-160-008-00	WASHER, SP/M 8	*	1					
10	K135-013-000-00	PUMP, GEAR ASSY	*	1					
11	K135-013-100-10	PUMP SET	*	1					
12	K135-015-002-00	COVER, PUMP	*	1					
13	V744-114-280-70	SEAL, OIL	*	1					
14	V721-113-105-00	O-RING HS90 G50	*	1					
15	V720-112-402-20	O-RING/P22	*	4					
16	V720-111-900-60	O-RING P6 HS90	*	1					
17	K135-002-009-00	BOLT/M8X28 11T	*	6					
18	V401-170-008-00	S.W	*	6					
19	1404-503-006-00	PACKING, OIL PUMP	*	1					
20	1617-102-007-00	CLAMP	*	1					
21	1673-407-230-10	TANK/OIL COMP	*	1					
22	V211-360-801-60	BOLT, SEMS (SP)	*	2					
23	V782-160-000-4B	PLUG/SCREW/SEAL	*	1					
24	1518-407-240-00	CAP, OIL(B)ASSY	*	1					
25	1518-306-203-00	PACKING	*	1					
26	1614-407-260-00	FILTER/OIL ASSY	*	1					
27	V720-102-401-20	O-RING/P12	*	1					
28	V720-103-503-10	O-RING P31	*	1					
29	V210-360-601-60	BOLT(SP)/M6X16	*	1					
30	1673-407-200-10	PIPE/OIL/DERIVERY	*	1					

FIG. 47 POWER STEERING SYSTEM

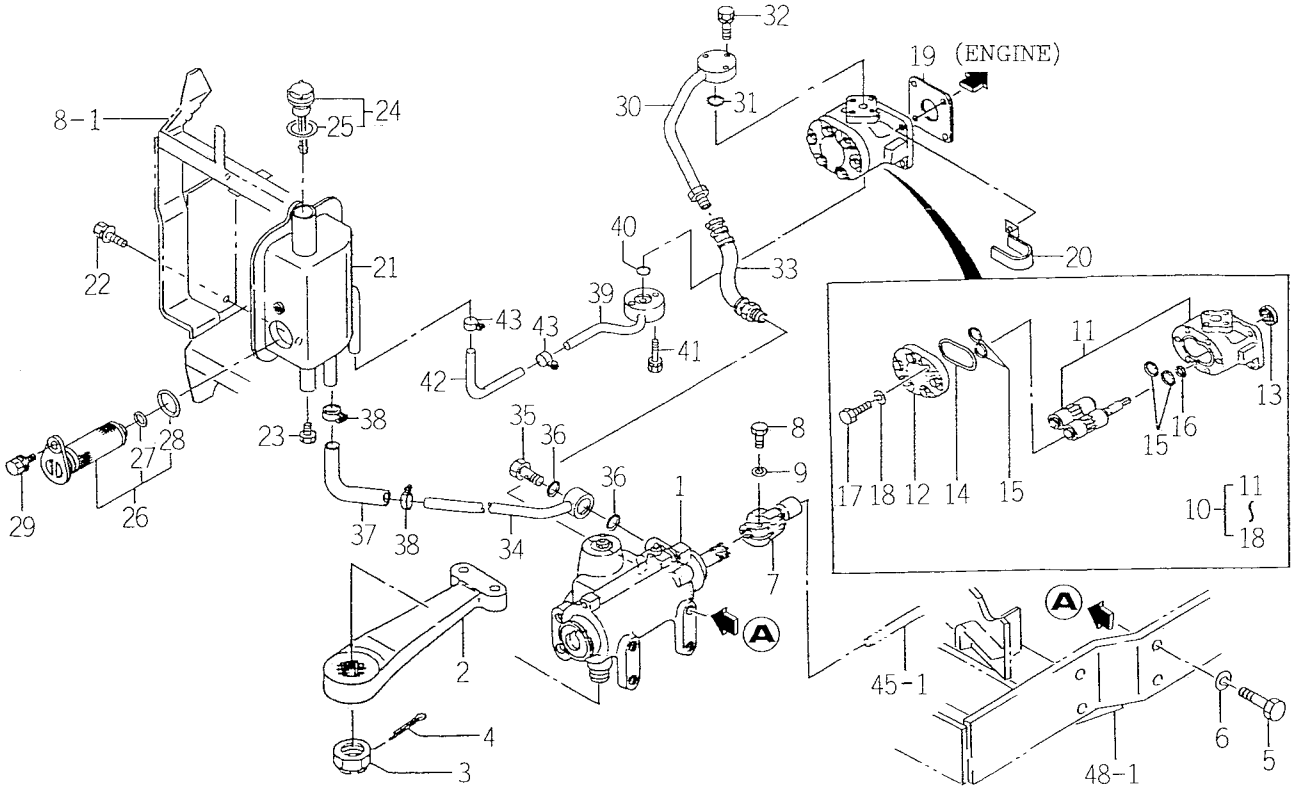

1673-407

KEY	PART CODE	DESCRIPTION	SPC	TYPE OF MODEL TK538H		ITC	COL	GRP	REMARKS
31	V720-112-402-00	O-RING/P20	*	1					
32	V210-560-602-50	BOLT/S	*	3					
33	1560-407-320-10	HOSE(195) ASSY	*	1					
34	1673-407-210-10	PIPE/OIL/TANK COMP	*	1					
35	1415-505-014-00	BOLT, CONNECTOR	*	1					
36	V720-112-401-80	O-RING/P18	*	2					
37	1576-408-002-00	HOSE/OIL	*	1					
38	J061-112-022-00	CLAMP/WORM/12-22	*	2					
39	1673-407-220-10	PIPE/OIL/SUCTIO COMP	*	1					
40	V720-112-402-00	O-RING/P20	*	1					
41	V210-560-603-00	BOLT/S	*	2					
42	1576-408-002-00	HOSE/OIL	*	1					
43	J061-112-022-00	CLAMP/WORM/12-22	*	2					

FIG. 48 AXLE BRACKET SYSTEM

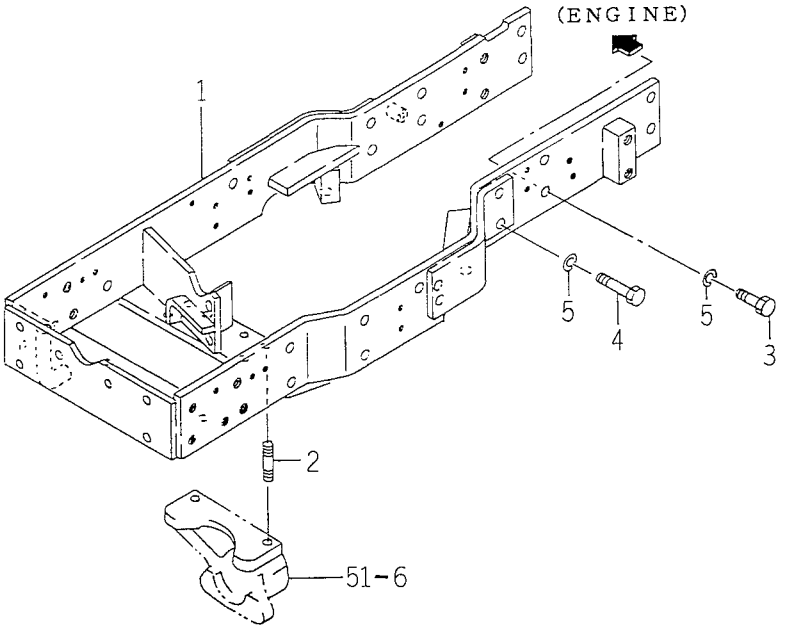

1674-410B

KEY	PART CODE	DESCRIPTION	SPC	TYPE OF MODEL TK538H		ITC	COL	GRP	REMARKS
1	1674-410-200-30	BRACKET/AXLE COMP	*	1					
2	V251-341-203-00	BOLT/STUD	*	2					
3	V201-361-203-00	BOLT/M12X30	*	8					
4	V201-361-204-50	BOLT/M12X45	*	4					
5	V401-160-012-00	WASHER, SP/M12	*	12					

FIG. 49 DRIVE SHAFT SYSTEM

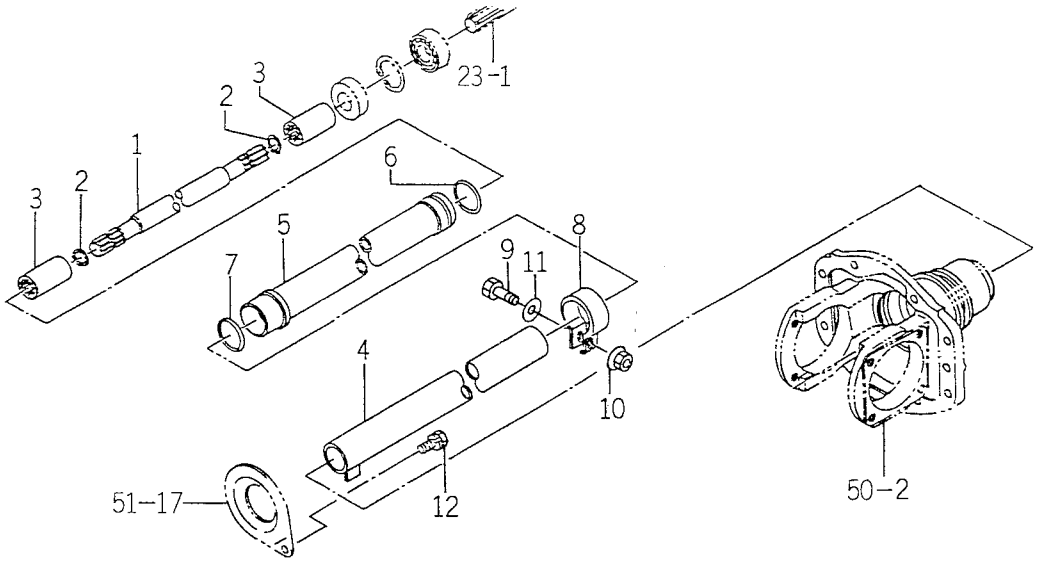

1673-431

KEY	PART CODE	DESCRIPTION	SPC	TYPE OF MODEL TK538H		ITC	COL	GRP	REMARKS
1	1611-431-001-00	SHAFT/4WD	*	1					
2	V704-140-020-00	RING, SNAP/20C	*	2					
3	1673-431-001-10	COUPRING/16X27X55	*	2					
4	1650-431-200-00	TUBE/370 COMP	*	1					
5	1444-410-210-00	PIPE(B)COMP	*	1					
6	V720-103-503-60	O-RING/P36	*	1					
7	V720-103-503-40	O-RING/P34	*	1					
8	1444-410-002-10	CLAMP	*	1					
9	V201-260-803-50	BOLT/M 8X35	*	1					
10	V362-260-008-00	NUT/WASHER	*	1					
11	V411-260-008-00	WASHER, PL/M 8	*	1					
12	V211-260-801-20	BOLT, SEMS (S) M8X12	*	1					

FIG. 50 BEVEL CASE SYSTEM

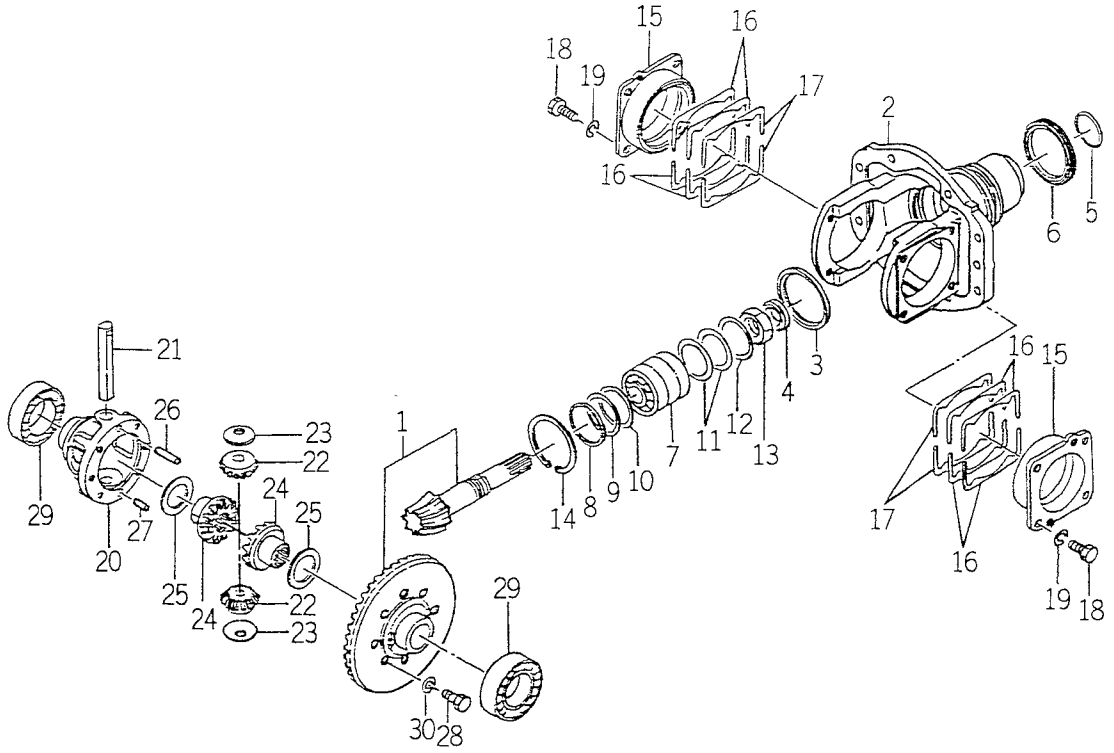

1560-432

KEY	PART CODE	DESCRIPTION	SPC	TYPE OF MODEL TK538H		ITC	COL	GRP	REMARKS
1	1560-432-200-40	GEAR/8-38 SET	*	1					
2	1560-432-001-70	CASE	*	1					
3	1444-411-002-00	COLLAR, THRUST (R)	*	1					
4	1614-222-007-00	SEAL/OIL	*	1					
5	V720-103-503-40	O-RING/P34	*	1					
6	1444-412-011-00	X-RING	*	1					
7	1560-432-210-00	BEARING/46CHI-32205R	*	1					
8	1444-411-008-00	COLLAR 48X56X4	*	1					
9	1444-411-009-00	SHIM A T=0.2	*	3					
10	1444-411-011-00	SHIM B T=0.1	*	2					
11	1444-411-012-00	SHIM (C)	*	3					
12	1444-411-013-00	SHIM D T=0.1	*	2					
13	1614-432-001-00	NUT/M25	*	1					
14	V707-140-056-00	RING/SNAP	*	1					
15	1560-432-006-00	METAL/DIFF	*	2					
16	1444-411-004-00	SHIM(A)	*	12					
17	1444-411-005-00	SHIM(B)	*	8					
18	V201-460-802-00	BOLT/M 8X20	*	8					
19	V401-160-008-00	WASHER, SP/M 8	*	8					
20	1673-432-001-00	CASE/DIFF	*	1					
21	1444-411-006-00	SHAFT, DIFF. PINION	*	1					
22	1560-432-002-30	PINION, BEVEL/11	*	2					
23	1427-301-005-00	COLLAR, PINION THRUST	*	2					
24	1560-432-003-30	GEAR, BEVEL/16	*	2					
25	1427-432-005-00	COLLAR, THRUST	*	2					
26	1560-432-005-00	PIN/ST	*	1					
27	1560-432-004-00	PIN/ST	*	1					
28	1544-304-006-10	BOLT/M8X25	*	6					
29	V600-110-600-80	BEARING, RB/6008	*	2					
30	V401-160-008-00	WASHER, SP/M 8	*	6					

FIG. 51 AXLE HOUSING SYSTEM

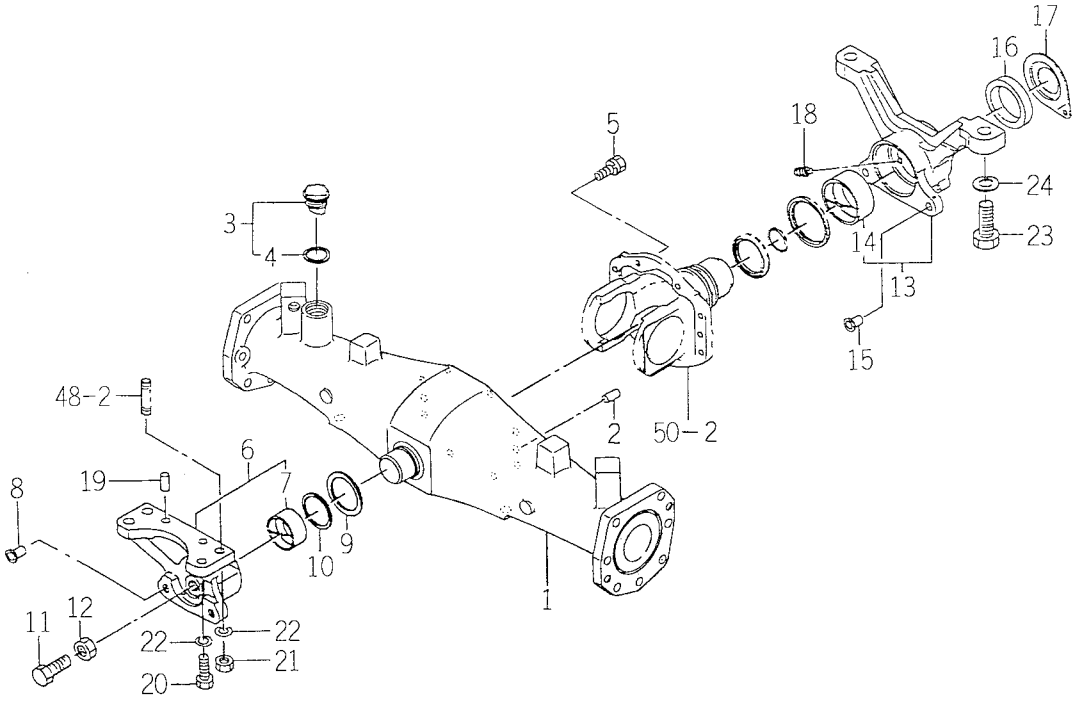

1674-433

KEY	PART CODE	DESCRIPTION	SPC	TYPE OF MODEL TK538H		ITC	COL	GRP	REMARKS
1	1561-433-006-10	HOUSING/AXLE	*	1					
2	V522-101-002-20	PIN	*	2					
3	1518-432-250-00	CAP, OIL ASSY	*	1					
4	1518-306-203-00	PACKING	*	1					
5	V211-561-002-50	BOLT/M10X25	*	8					
6	1594-433-230-00	METAL, PIVOT ASSY	*	1					
7	1560-433-212-00	BUSH/45X50X25	*	1					
8	1427-201-016-00	CAP, BLANK/M12	*	2					
9	1560-433-001-40	WASHER/50X65X5	*	1					
10	V742-145-600-60	SEAL, OIL/VC45606	*	1					
11	V201-361-604-50	BOLT	*	1					
12	V304-260-016-00	NUT/M16	*	1					
13	1594-433-240-10	METAL/PIVOT/REA ASSY	*	1					
14	1560-433-222-00	BUSH/60X65X30	*	1					
15	1427-317-004-00	CAP, BLANK/M14	*	2					
16	V742-150-720-60	SEAL, OIL/VC50726	*	1					
17	1560-433-002-40	COVER	*	1					
18	V761-150-000-00	NIPPLE/GREASE	*	2					
19	V523-101-002-40	PIN	*	2					
20	V201-361-203-50	BOLT/M12X35	*	2					
21	V304-460-012-00	NUT/M12	*	2					
22	V401-160-012-00	WASHER, SP/M12	*	4					
23	V203-361-805-00	BOLT/M8X50	*	2					
24	V401-160-018-00	WASHER, SP/M18	*	2					

FIG. 52 FRONT GEAR CASE SYSTEM

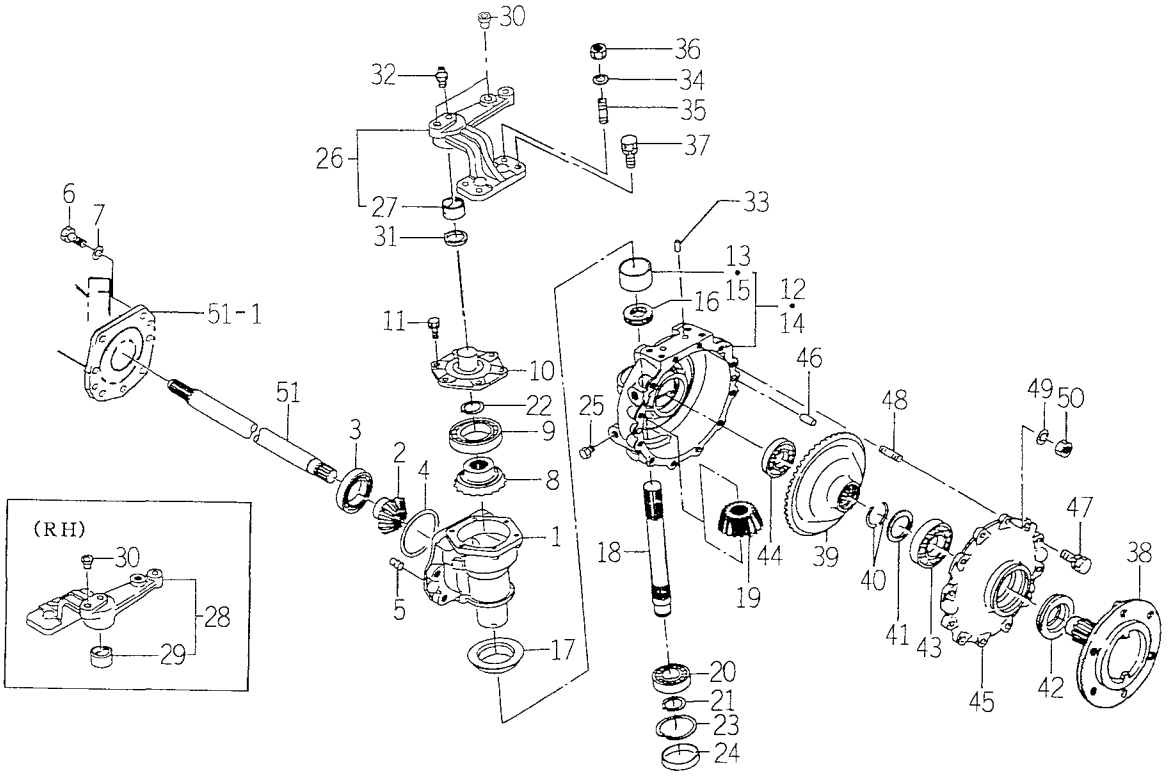

1674-434

KEY	PART CODE	DESCRIPTION	SPC	TYPE OF MODEL TK538H		ITC	COL	GRP	REMARKS
1	1560-434-001-40	CASE	*	2					
2	1560-434-002-30	GEAR, BEVEL/12	*	2					
3	V600-110-620-70	BEARING, RB/6207	*	2					
4	V721-103-109-50	O-RING/G95	*	2					
5	7963-201-003-00	PIN, KNOK	*	4					
6	V201-361-203-50	BOLT/M12X35	*	14					
7	V401-160-012-00	WASHER, SP/M12	*	14					
8	1560-434-003-30	GEAR, BEVEL/17	*	2					
9	1594-434-001-00	BEARING/BALL62092RK	*	2					
10	1560-434-004-30	COVER	*	2					
11	V211-260-802-00	BOLT, SEMS (S)	*	12					
12	1560-434-200-60	CASE/L ASSY	*	1					
13	1560-434-202-00	BUSH/50X55X30	*	1					
14	1560-434-210-60	CASE/R ASSY	*	1					
15	1560-434-202-00	BUSH/50X55X30	*	1					
16	V610-115-110-60	BEARING, TB/51106	*	2					
17	1560-434-014-30	SEAL, OIL	*	2					
18	1560-434-005-30	SHAFT	*	2					
19	1560-434-006-40	GEAR/BEVEL/17	*	2					
20	V600-110-630-50	BEARING, RB/6305	*	2					
21	V704-140-025-00	RING, SNAP/25 C	*	2					
22	V704-140-030-00	RING, SNAP/30 C	*	2					
23	V707-140-062-00	RING/SNAP	*	2					
24	1444-314-008-00	SEAL(62)	*	2					
25	V782-160-000-6B	PLUG/SCREW/SEAL	*	4					
26	1594-434-200-00	ARM, LH ASSY	*	1					
27	1560-434-222-00	BUSH	*	1					
28	1594-434-210-00	ARM RH ASSY	*	1					
29	1560-434-222-00	BUSH	*	1					
30	1427-120-002-00	CAP, BLANK/M10	*	4					

FIG. 52 FRONT GEAR CASE SYSTEM

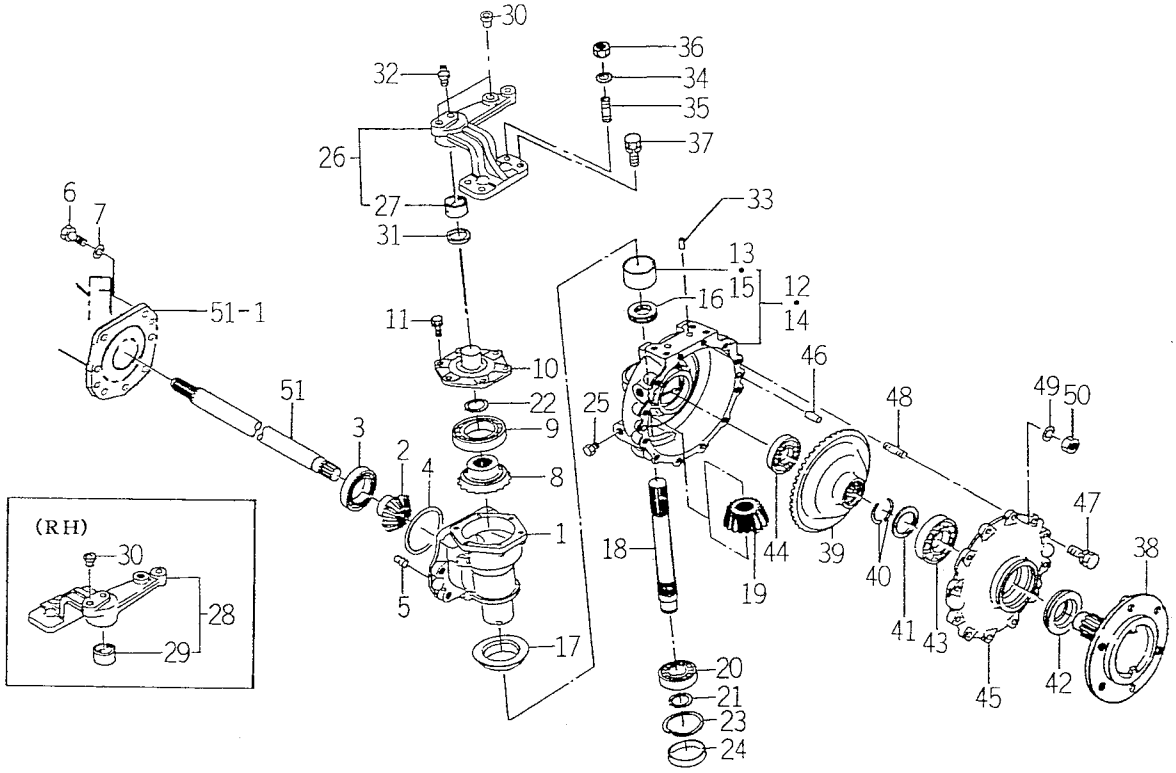

1674-434

KEY	PART CODE	DESCRIPTION	SPC	TYPE OF MODEL TK538H		ITC	COL	GRP	REMARKS
31	1421-433-031-00	SEAL, OIL/OS30374	*	2					
32	V761-150-000-00	NIPPLE/GREASE	*	2					
33	V523-101-002-40	PIN	*	4					
34	V401-160-010-00	WASHER, SP/M10	*	4					
35	V251-341-002-50	BOLT/STUD/SEAL	*	4					
36	V304-460-010-00	NUT/M10	*	4					
37	V211-561-002-50	BOLT/M10X25	*	4					
38	1560-434-007-60	SHAFT/WHEEL	*	2					
39	1560-434-008-40	GEAR/BEVEL/47	*	2					
40	1560-434-017-00	RING	*	4					
41	1560-434-011-40	COLLAR/41X55X4	*	2					
42	1560-434-012-30	SEAL, OIL	*	2					
43	V600-110-620-80	BEARING, RB/6208	*	2					
44	V600-110-620-60	BEARING, RB/6206	*	2					
45	1560-434-013-50	COVER	*	2					
46	V523-101-002-40	PIN	*	4					
47	V211-561-002-50	BOLT/M10X25	*	20					
48	V251-341-002-50	BOLT/STUD	*	4					
49	V401-160-010-00	WASHER, SP/M10	*	4					
50	V304-460-010-00	NUT/M10	*	4					
51	1561-435-001-30	SHAFT	*	2					

FIG. 53 TIE ROD SYSTEM

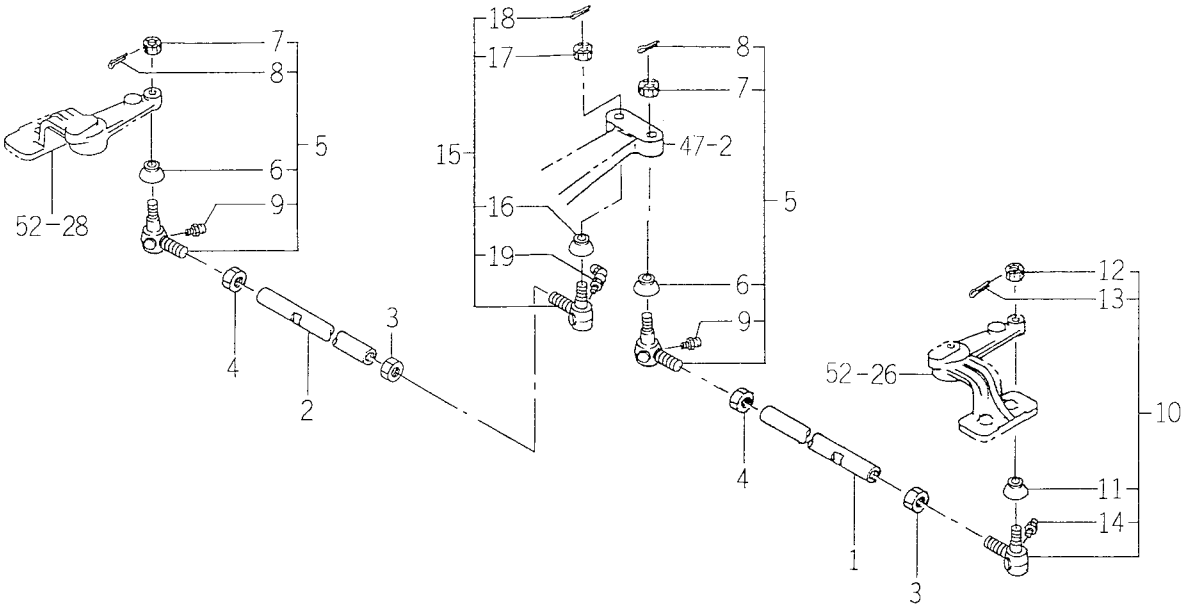

1561-436

KEY	PART CODE	DESCRIPTION	SPC	TYPE OF MODEL TK538H		ITC	COL	GRP	REMARKS
1	1561-436-003-00	ROD/TIE/LH	*	1					
2	1561-436-004-00	ROD/TIE/RH	*	1					
3	1421-403-001-00	NUT	*	2					
4	1421-403-002-00	NUT, LH THREAD/M17	*	2					
5	1421-400-054-10	END, ROD/L·R ASSY	*	2					
6	1404-402-001-00	COVER, DUST	*	2					
7	1421-403-003-00	NUT, SLOTTED/M12P1.25	*	2					
8	V500-163-002-00	PIN, SPLIT/3 X20	*	2					
9	1404-402-005-00	NIPPLE, GREASE	*	2					
10	1421-400-055-00	END, ROD RH ASSY	*	1					
11	1404-402-001-00	COVER, DUST	*	1					
12	1421-403-003-00	NUT, SLOTTED/M12P1.25	*	1					
13	V500-163-002-00	PIN, SPLIT/3 X20	*	1					
14	1404-402-005-00	NIPPLE, GREASE	*	1					
15	1444-404-210-10	END, ROD/R·L ASSY	*	1					
16	1404-402-001-00	COVER, DUST	*	1					
17	1421-403-003-00	NUT, SLOTTED/M12P1.25	*	1					
18	V500-163-002-00	PIN, SPLIT/3 X20	*	1					
19	1432-406-212-00	NIPPLE, GREASE/BM6F	*	1					

FIG. 54 CYLINDER CASE SYSTEM

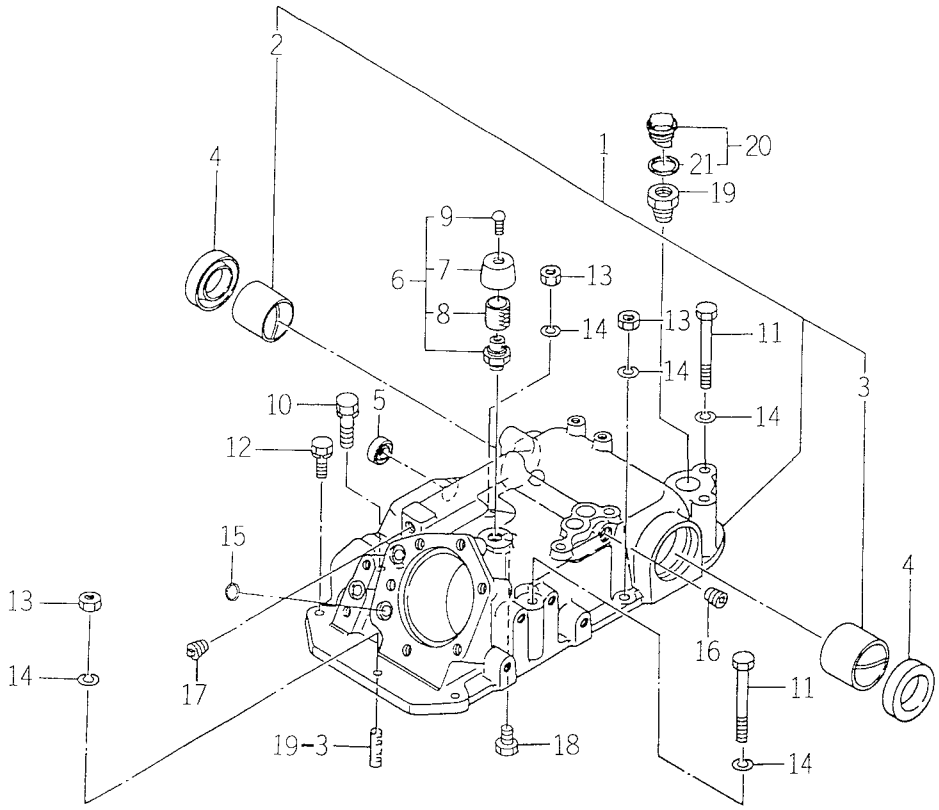

1540-501

KEY	PART CODE	DESCRIPTION	SPC	TYPE OF MODEL TK538H		ITC	COL	GRP	REMARKS
1	1560-501-220-00	CASE, CYLINDER ASSY	*	1					
2	1560-501-202-00	BUSH/45X50X42	*	1					
3	1560-501-203-00	BUSH/50X55X42	*	1					
4	V744-145-600-90	SEAL, OIL/TC45609	*	2					
5	V742-116-240-40	SEAL, OIL/VC16244	*	1					
6	1560-501-230-00	BREATHER ASSY	*	1					
7	1560-501-231-00	COVER	*	1					
8	1500-501-213-00	FILTER	*	1					
9	1500-501-214-00	SCREW/M4X20	*	1					
10	V211-561-004-00	BOLT/M10X40	*	1					
11	V201-361-009-00	BOLT/M10X90	*	3					
12	V211-561-003-00	BOLT/M10X30	*	4					
13	V304-460-010-00	NUT/M10	*	3					
14	V401-160-010-00	WASHER, SP/M10	*	6					
15	V720-112-401-40	O-RING/P14	*	3					
16	V780-140-000-60	PLUG/SCREW	*	1					
17	V781-160-000-60	NIPPLE/PT3/8	*	1					
18	V782-160-000-60	PLUG/SCREW	*	1					
19	1597-501-001-10	COLLAR/24X38X44	*	1			7F		
20	1518-432-250-00	CAP, OIL ASSY	*	1					
21	1518-306-203-00	PACKING	*	1					

FIG. 55 LIFT ARM SYSTEM

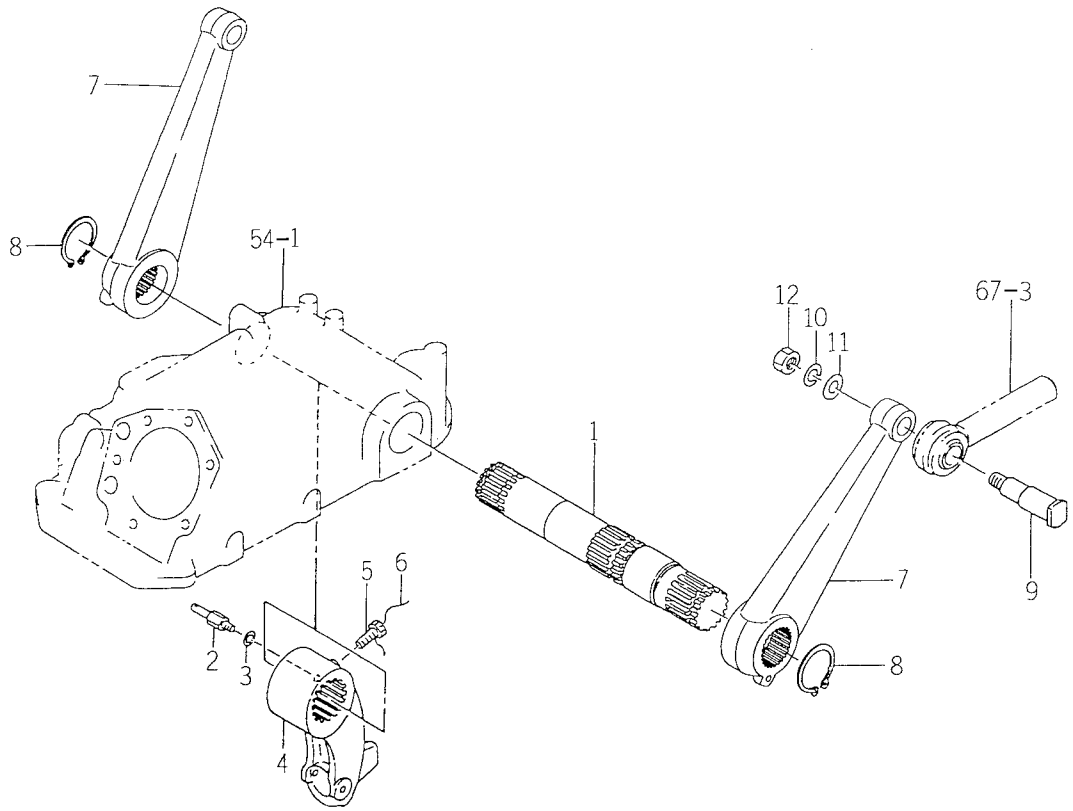

1674-505

KEY	PART CODE	DESCRIPTION	SPC	TYPE OF MODEL TK538H		ITC	COL	GRP	REMARKS
1	1560-505-001-50	BAR	*	1					
2	1560-505-004-00	PIN/12X45	*	1					
3	V401-160-008-00	WASHER, SP/M 8	*	1					
4	1560-505-003-50	CRANK, LIFT	*	1					
5	1415-216-006-00	BOLT	*	1					
6		WIRE	*	1					
7	1650-501-002-10	ARM/LIFT	*	2					
8	V706-140-045-00	RING/SNAP	*	2					
9	1560-527-001-70	PIN/22X93	*	1					
10	V401-160-016-00	WASHER, SP/M16	*	1					
11	V411-260-016-00	WASHER / M16	*	1					
12	V304-460-016-00	NUT/M16	*	1					

FIG. 56 CYLINDER SYSTEM

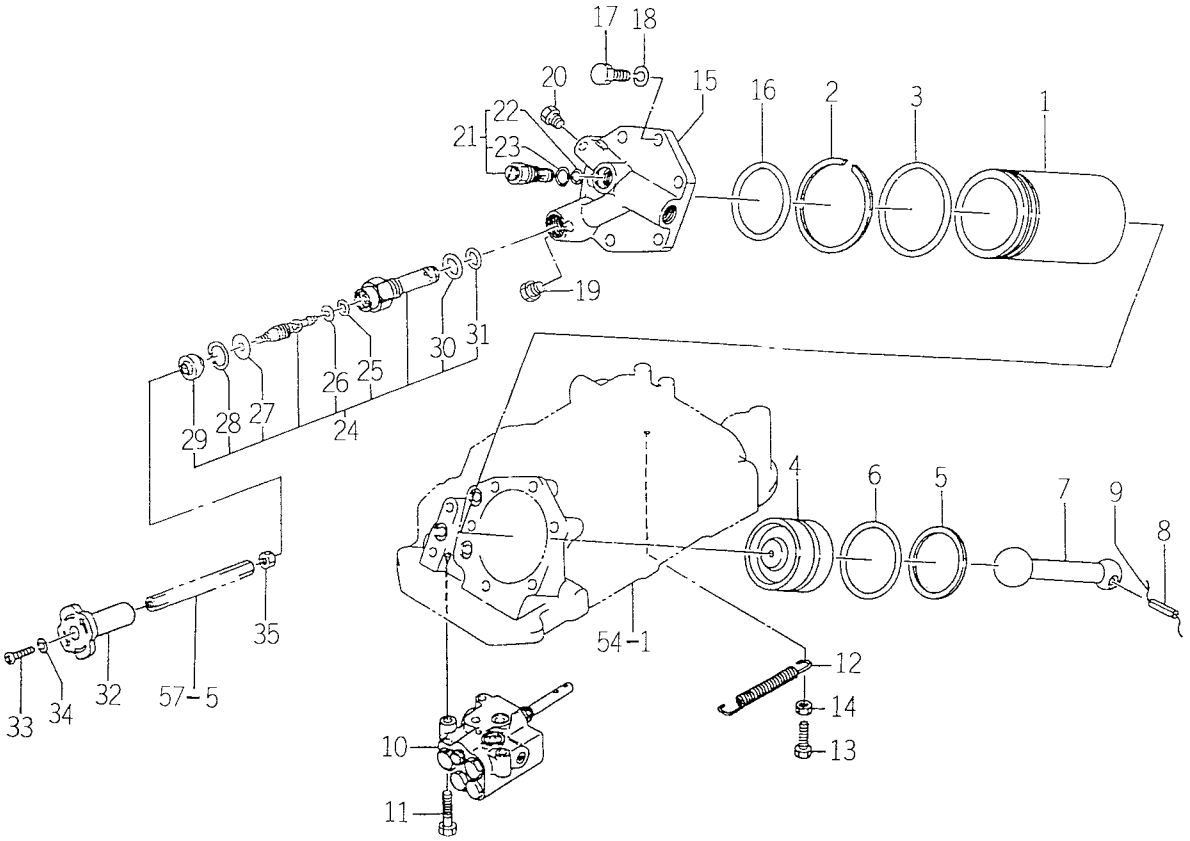

1673-507

KEY	PART CODE	DESCRIPTION	SPC	TYPE OF MODEL TK538H		ITC	COL	GRP	REMARKS
1	1560-507-001-30	CYLINDER	*	1					
2	1560-507-004-30	RING	*	1					
3	V721-113-109-00	O-RING/G90	*	1					
4	1560-507-005-00	PISTON	*	1					
5	1488-503-002-00	RING, BACK-UP	*	1					
6	V720-115-707-00	O-RING/P70 HS90	*	1					
7	1650-501-008-00	ROD	*	1					
8	V580-140-805-00	PIN, SPRING/8 X50 W	*	1					
9		WIRE	*	1					
10	K211-008-000-10	VALVE, COUNTROL ASSY	*	1					FIG 143
11	V211-260-804-00	BOLT, SEMS	*	3					
12	1560-507-002-40	SPRING	*	1					
13	V201-260-803-00	BOLT/M 8X30	*	1					
14	V304-260-008-00	NUT/M 8	*	1					
15	1560-507-008-00	HEAD	*	1					
16	V721-113-107-50	O-RING G75 HS90	*	1					
17	V201-361-203-50	BOLT/M12X35	*	6					
18	V401-160-012-00	WASHER, SP/M12	*	6					
19	V782-160-000-4T	PLUG/SCREW/SEAL	*	1					
20	V782-160-000-2T	PLUG/SCREW/SEAL	*	1					
21	K250-015-000-00	VALVE	*	1					
22	V720-112-401-20	O-RING/P12	*	1					
23	V720-112-401-80	O-RING/P18	*	1					
24	K231-004-000-20	VALVE/FRONT ASSY	*	1					
25	V720-112-401-00	O-RING/P10	*	1					
26	V730-101-401-00	RING, BACK UP	*	1					
27	K231-004-006-00	COLLAR/11X21X3	*	1					
28	V705-140-021-00	RING, SNAP/21 C	*	1					
29	K231-004-007-00	SEAL, DUST	*	1					
30	V720-112-402-20	O-RING/P22	*	1					

FIG. 56 CYLINDER SYSTEM

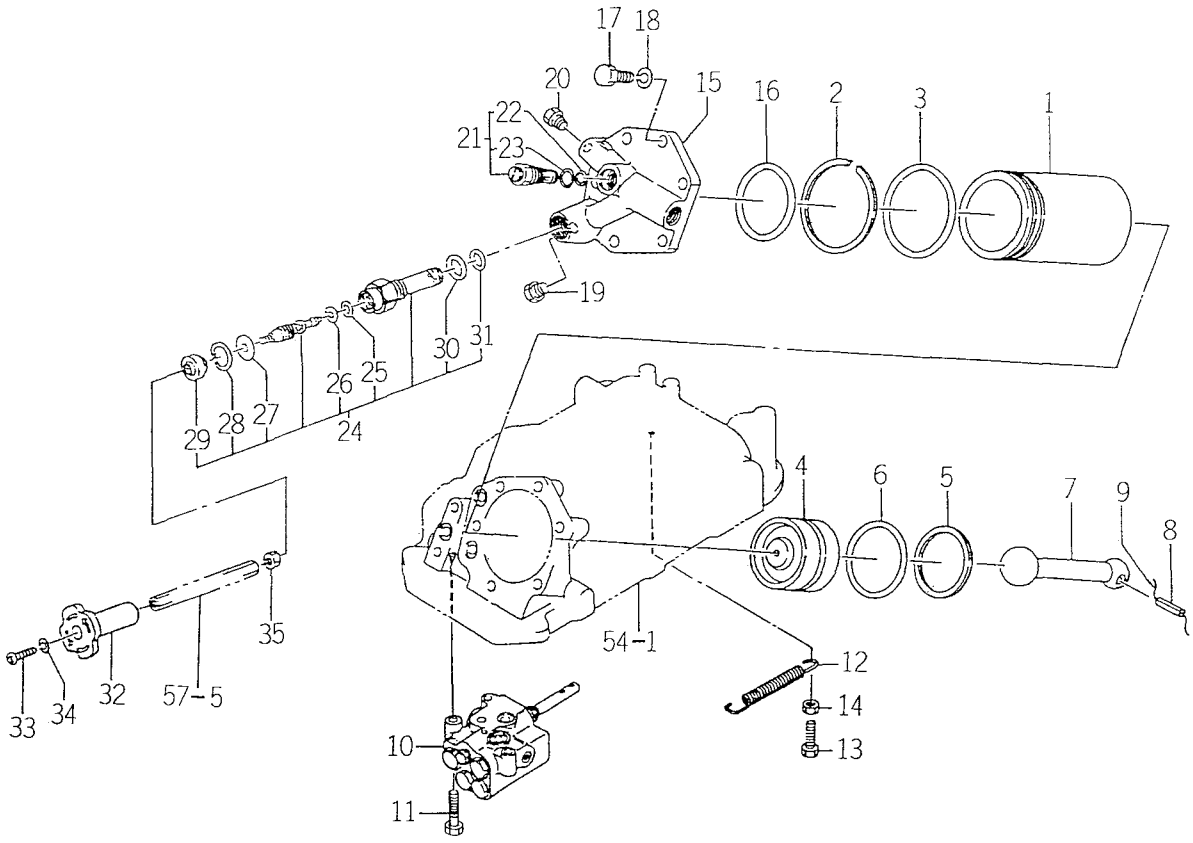

1673-507

KEY	PART CODE	DESCRIPTION	SPC	TYPE OF MODEL TK538H		ITC	COL	GRP	REMARKS
31	V720-112-401-60	O-RING/P16	*	1					
32	1560-507-007-00	KNOB	*	1					
33	V111-166-004-00	SCREW/M6X40	*	1					
34	V401-160-006-00	WASHER, SP/M 6	*	1					
35	V304-260-010-00	NUT	*	1					

FIG. 57 SLOW RETURN SHAFT SYSTEM

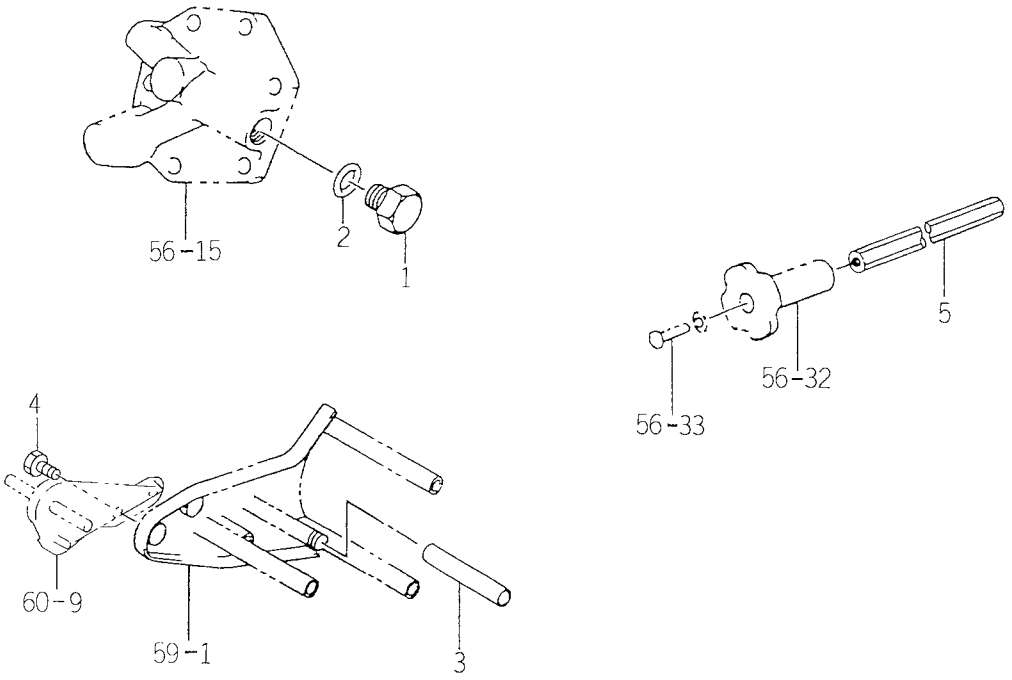

1560-507B

KEY	PART CODE	DESCRIPTION	SPC	TYPE OF MODEL TK538H		ITC	COL	GRP	REMARKS
1	1444-503-006-00	PLUG/M22	*	1					
2	V720-112-402-00	O-RING/P20	*	1					
3	1560-511-001-00	HOSE/80	*	1					
4	V201-260-801-20	BOLT/M 8X12	*	2					
5	1563-507-221-10	SHAFT, SLOW RETURN	*	1					

FIG. 58 LINK (POSITION) SYSTEM

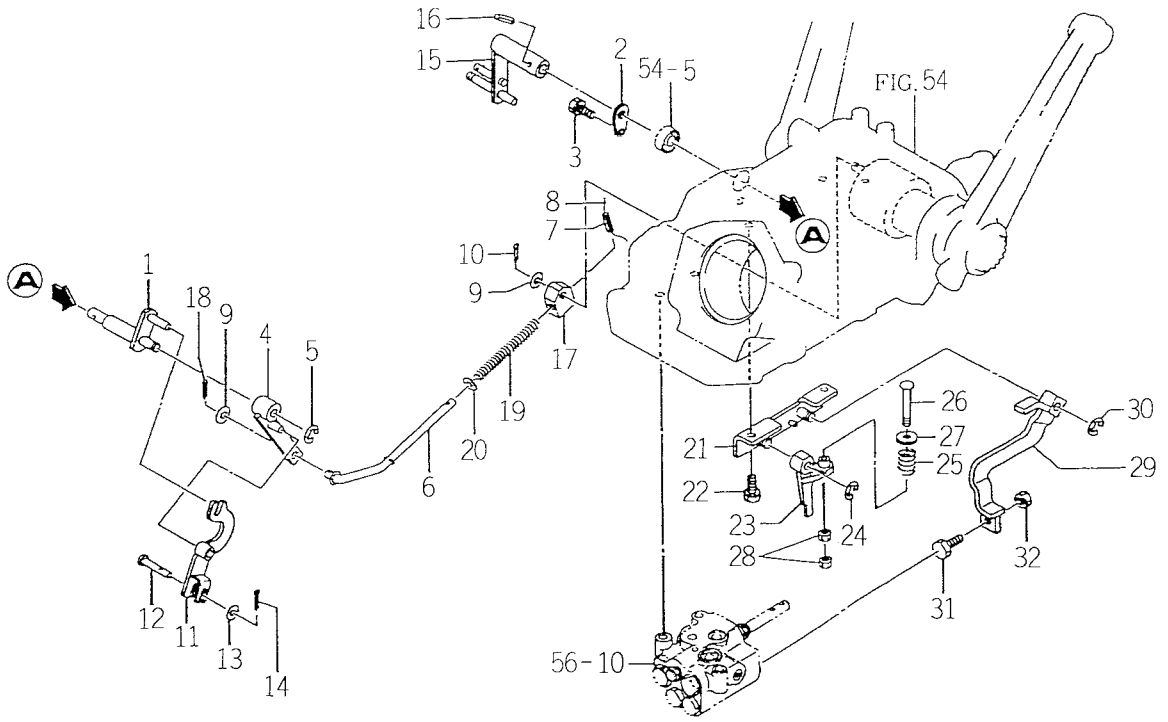

1673-509

KEY	PART CODE	DESCRIPTION	SPC	TYPE OF MODEL TK538H		ITC	COL	GRP	REMARKS
1	1560-509-300-00	ARM COMP	*	1					
2	1421-507-007-00	STOPPER	*	1					
3	V211-260-801-60	BOLT, SEMS (S) M8X16	*	1					
4	1560-509-310-00	ARM COMP	*	1					
5	V710-140-008-00	RING, SNAP/8 E	*	1					
6	1560-509-360-00	ROD	*	1					
7	V580-140-301-60	PIN, SPRING/3 X16 W	*	1					
8		WIRE	*	1					
9	V411-260-008-00	WASHER, PL/M 8	*	1					
10	V500-162-002-00	PIN, SPLIT/2 X20	*	1					
11	1560-509-340-00	ARM	*	1					
12	1560-509-006-40	PIN	*	1					
13	V411-260-006-00	WASHER / M6	*	1					
14	V500-162-002-00	PIN, SPLIT/2 X20	*	1					
15	1673-509-200-10	ARM COMP	*	1					
16	V580-140-402-00	PIN/SPRING	*	1					
17	1560-509-004-50	RING	*	1					
18	V500-162-002-00	PIN, SPLIT/2 X20	*	1					
19	1560-509-005-30	SPRING	*	1					
20	V411-260-008-00	WASHER, PL/M 8	*	1					
21	1560-509-320-10	BRACKET COMP	*	1					
22	V211-260-801-60	BOLT, SEMS (S) M8X16	*	2					
23	1560-509-012-00	ARM	*	1					
24	V710-140-008-00	RING, SNAP/8 E	*	1					
25	1560-509-008-40	SPRING	*	1					
26	1560-509-002-00	PIN/6X49	*	1					
27	1560-509-009-00	WASHER/7X22X3	*	1					
28	V301-260-006-00	NUT/M 6	*	2					
29	1560-509-350-00	ARM	*	1					
30	V710-140-008-00	RING, SNAP/8 E	*	1					

FIG. 58 LINK (POSITION) SYSTEM

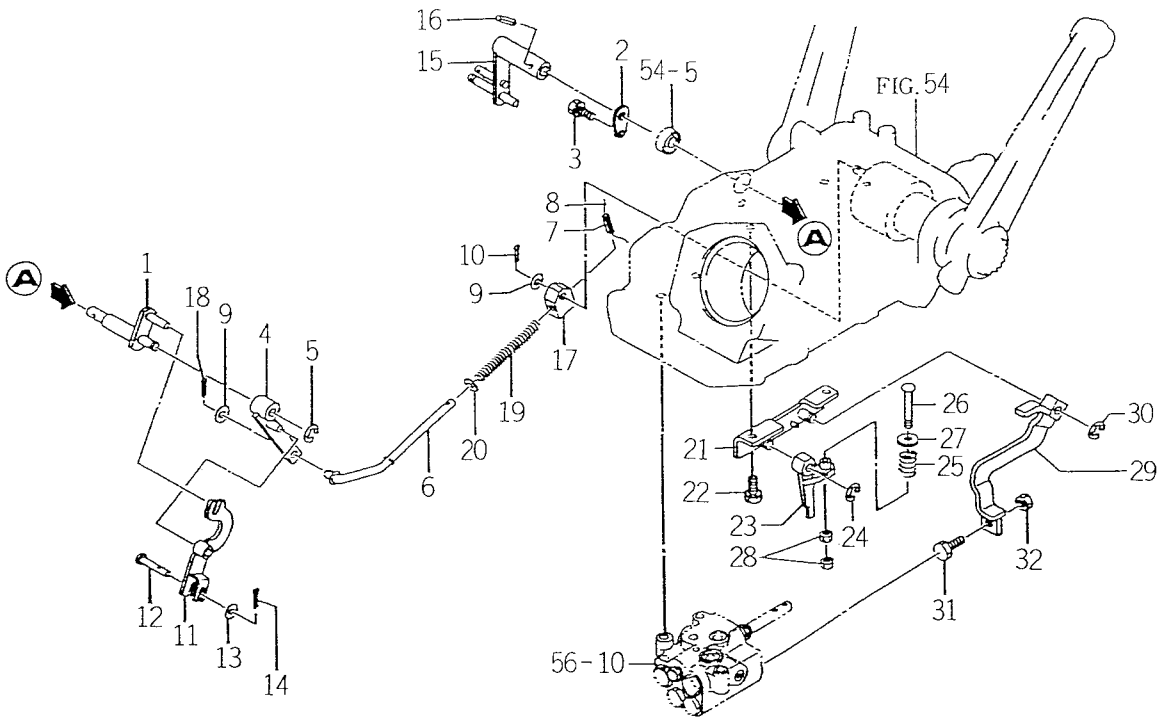

1673-509

KEY	PART CODE	DESCRIPTION	SPC	TYPE OF MODEL TK538H		ITC	COL	GRP	REMARKS
31	1673-509-001-00	ROD/PUSH	*	1					
32	V304-260-008-00	NUT/M 8	*	1					

FIG. 59 BRACKET (POSITION) SYSTEM

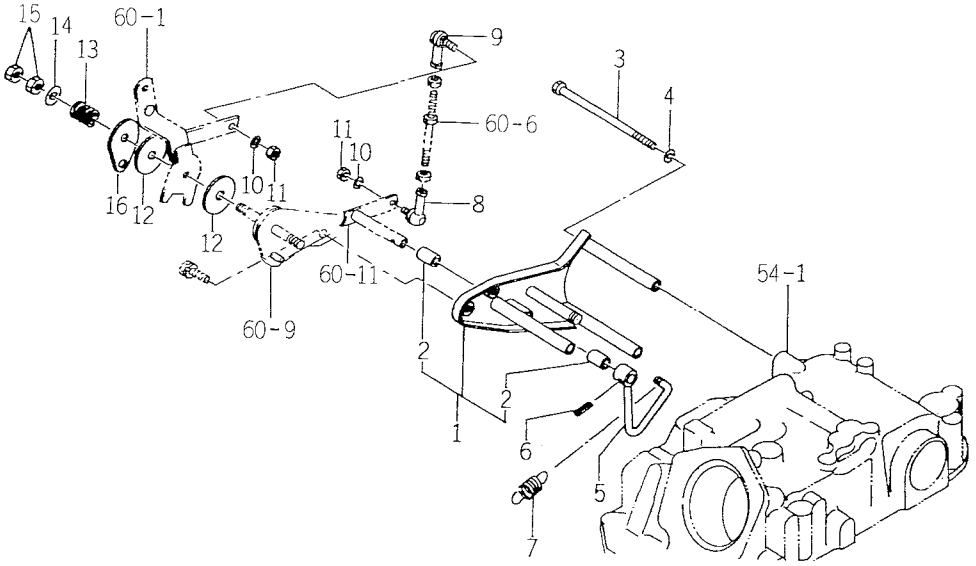

1594-511

KEY	PART CODE	DESCRIPTION	SPC	TYPE OF MODEL TK538H		ITC	COL	GRP	REMARKS
1	1560-511-290-50	BRACKET ASSY	*	1					
2	1560-511-015-00	BUSH/12X14X20	*	2					
3	V201-260-814-00	BOLT/M 8X140	*	3					
4	V401-160-008-00	WASHER, SP/M 8	*	3					
5	1560-511-260-50	ARM COMP	*	1					
6	V580-140-402-00	PIN/SPRING	*	1					
7	1560-511-006-50	SPRING	*	1					
8	1560-511-014-00	JOINT/BALL/M06/LH	*	1					
9	1560-511-013-00	JOINT/BALL/M06/RH	*	1					
10	V401-160-006-00	WASHER, SP/M 6	*	2					
11	V301-260-006-00	NUT/M 6	*	2					
12	1600-505-007-00	LINING/13X50X3	*	2					
13	1404-117-008-00	SPRING, PRESS/22	*	1					
14	V411-260-010-00	WASHER/M10	*	1					
15	1673-512-002-00	NUT	*	2					
16	1560-511-012-00	PLATE	*	1					

FIG. 60 LEVER (POSITION), ROD (POSITION) SYSTEM

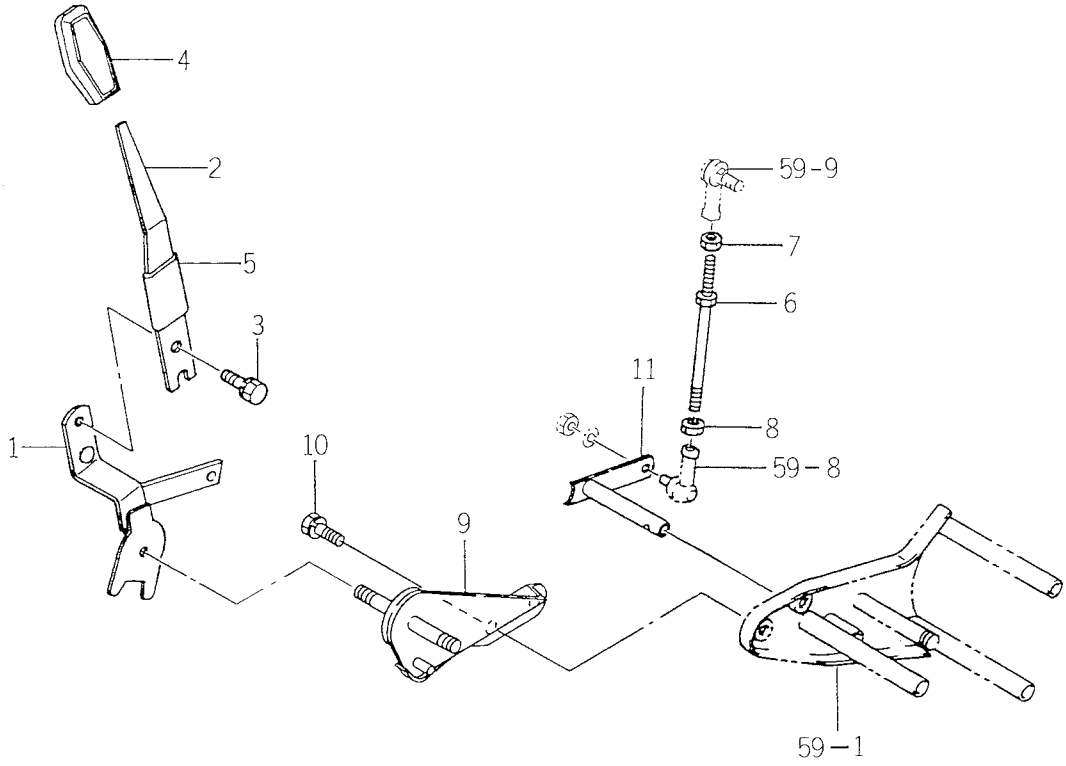

1594-511A

KEY	PART CODE	DESCRIPTION	SPC	TYPE OF MODEL TK538H		ITC	COL	GRP	REMARKS
1	1594-511-200-20	LEVER/PLATE COMP	*	1					
2	1594-511-001-10	LEVER	*	1					
3	V211-260-801-60	BOLT, SEMS (S) M8X16	*	1					
4	1432-242-004-00	GRIP, B	*	1					
5	1560-511-101-00	PROTECTER	*	1					
6	1563-513-210-30	ROD COMP	*	1					
7	V301-260-006-00	NUT/M 6	*	1					
8	1560-513-001-30	NUT/M6	*	1					
9	1563-513-220-50	HOLDER COMP	*	1					
10	V211-260-801-60	BOLT, SEMS (S) M8X16	*	2					
11	1563-513-230-40	ARM COMP	*	1					

FIG. 61 PIPING (MAIN) SYSTEM (1/3)

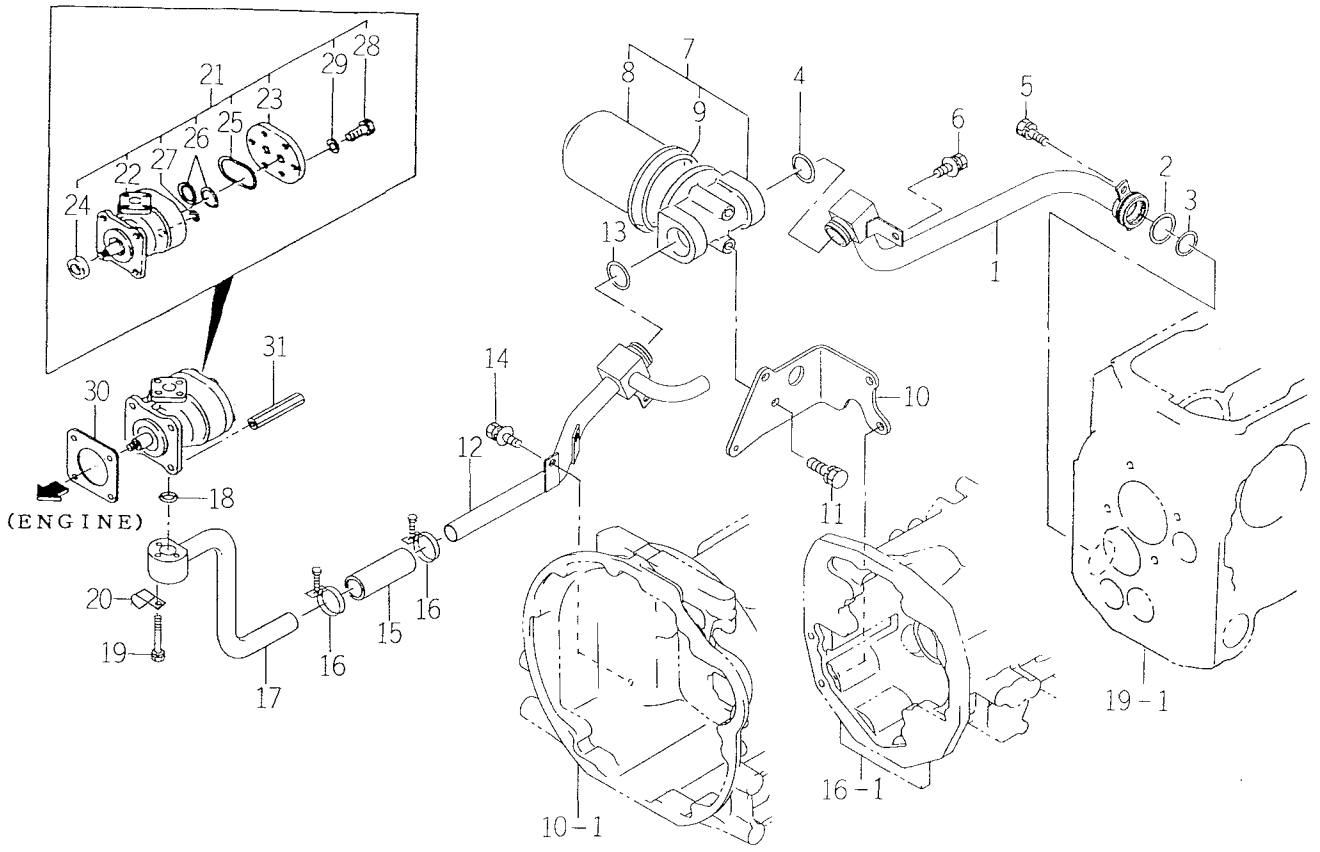

1674-515F

KEY	PART CODE	DESCRIPTION	SPC	TYPE OF MODEL TK538H		ITC	COL	GRP	REMARKS
1	1641-515-510-00	PIPE/SUC/REAR COMP	*	1					
2	V721-103-104-50	O-RING/G45	*	1					
3	V721-103-103-50	O-RING/G35	*	1					
4	V720-113-503-40	RING/O	*	1					
5	V211-261-002-00	BOLT, SEMS	*	1					
6	V211-360-801-60	BOLT, SEMS (SP)	*	1					
7	1641-515-390-00	FILTER/SUCTION/30	*	1					
8	1641-515-391-00	CARTRIDGE(30)	*	1					
9	1643-515-203-00	PACKING	*	1					
10	1641-515-051-00	BRACKET/FILTER	*	1					
11	V211-261-002-50	BOLT(S) M10X25	*	2					
12	1641-515-520-00	PIPE/SUC/MID COMP	*	1					
13	V720-113-503-40	RING/O	*	1					
14	V211-360-801-60	BOLT, SEMS (SP)	*	2					
15	1550-508-001-10	HOSE/90	*	1					
16	J061-228-036-00	CLAMP/WIRE/28-36	*	2					
17	1641-515-340-10	PIPE/SUCTION/F COMP	*	1					
18	V720-112-402-00	O-RING/P20	*	1					
19	V210-560-604-50	BOLT/S	*	3					
20	3737-172-009-00	CLAMP, MAIN HARNESS	*	1					
21	K135-022-000-00	PUMP, GEAR ASSY	*	1					
22	K135-022-100-00	PUMP SET	*	1					
23	K135-017-006-00	COVER, PUMP	*	1					
24	V744-114-280-70	SEAL, OIL	*	1					
25	V721-113-105-00	O-RING HS90 G50	*	1					
26	V720-112-402-20	O-RING/P22	*	4					
27	V720-111-900-60	O-RING P6 HS90	*	1					
28	K135-002-009-00	BOLT/M8X28 11T	*	6					
29	V401-170-008-00	S.W	*	6					
30	1404-503-006-00	PACKING, OIL PUMP	*	1					

FIG. 61 PIPING (MAIN) SYSTEM (2/3)

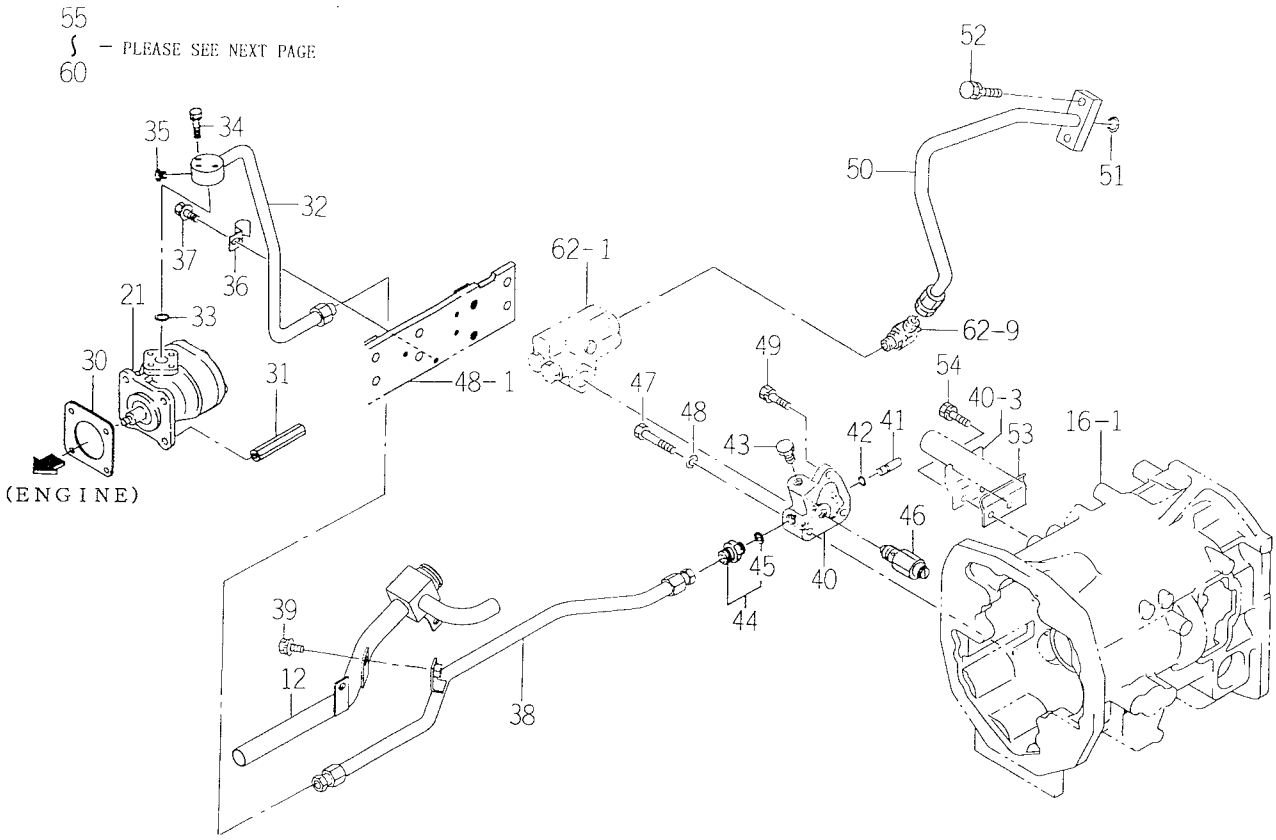

1674-515F

KEY	PART CODE	DESCRIPTION	SPC	TYPE OF MODEL TK538H		ITC	COL	GRP	REMARKS
31	1560-515-004-50	NUT/M08	*	1					
32	1673-515-240-10	PIPE/DERIVERY/E COMP	*	1					
33	V720-112-402-00	O-RING/P20	*	1					
34	V210-560-603-50	BOLT/S	*	3					
35	V782-160-000-2T	PLUG/SCREW/SEAL	*	1					
36	1564-515-001-20	PLATE	*	1					
37	V211-360-801-60	BOLT, SEMS (SP)	*	1					
38	1641-515-530-00	PIPE/DER/MID COMP	*	1					
39	V211-360-801-60	BOLT, SEMS (SP)	*	1					
40	1641-515-032-00	METAL/RELIEF	*	1					
41	1650-501-006-00	PIPE/30	*	1					
42	V723-111-500-80	RING/O	*	1					
43	V782-160-000-6T	PLUG/SCREW/SEAL	*	1					
44	1650-508-320-00	ADAPTER/PF3/8 ASSY	*	1					
45	V720-112-401-40	O-RING/P14	*	1					
46	K250-008-000-00	VALVE, RELIEF ASSY	*	1					
47	V201-260-805-00	BOLT/M 8X50	*	2					
48	V401-160-008-00	WASHER, SP/M 8	*	2					
49	V211-260-802-50	BOLT/S	*	1					
50	1674-515-510-10	PIPE/DER/REAR COMP	*	1					
51	V720-112-401-40	O-RING/P14	*	1					
52	V211-261-003-00	BOLT(S) M10X30	*	2					
53	1674-515-031-00	PLATE	*	1					
54	V211-560-802-00	BOLT/M8X20	*	2					
55	1673-515-002-00	COVER	*	1					
56	V211-261-003-00	BOLT(S) M10X30	*	1					
57	V211-261-002-50	BOLT(S) M10X25	*	1					
58	V720-112-402-00	O-RING/P20	*	2					
59	1641-515-550-00	FILTER/SUCTION ASSY	*	1					
60	V721-103-104-50	O-RING/G45	*	1					

FIG. 61 PIPING (MAIN) SYSTEM (3/3)

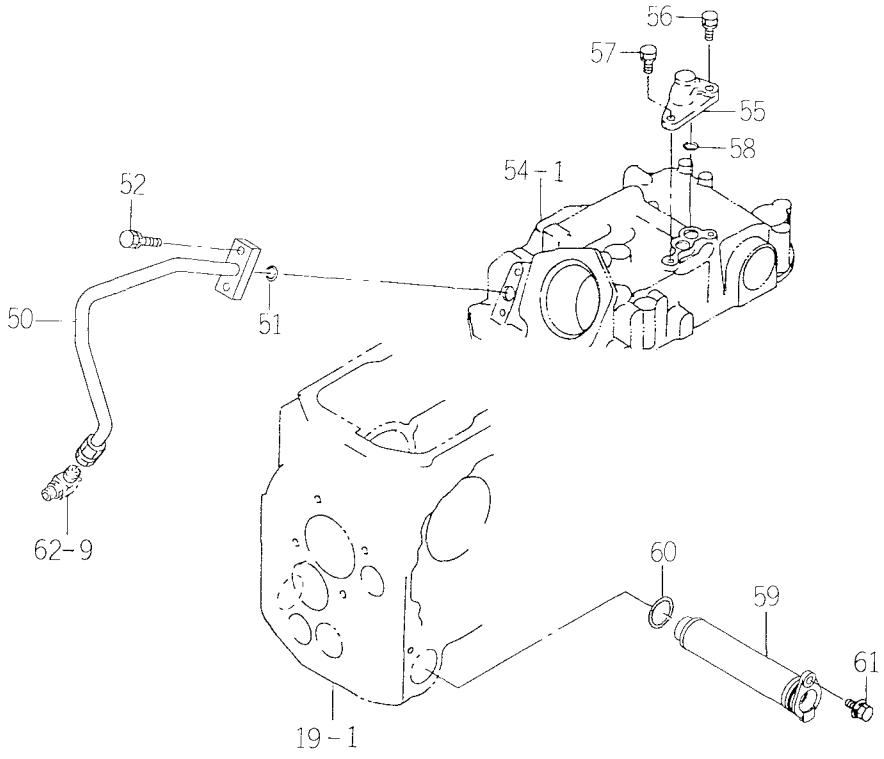

1674-515F

KEY	PART CODE	DESCRIPTION	SPC	TYPE OF MODEL TK538H		ITC	COL	GRP	REMARKS
61	V211-361-002-50	BOLT/SP	*	1					

FIG. 62 PIPING (SUB) SYSTEM

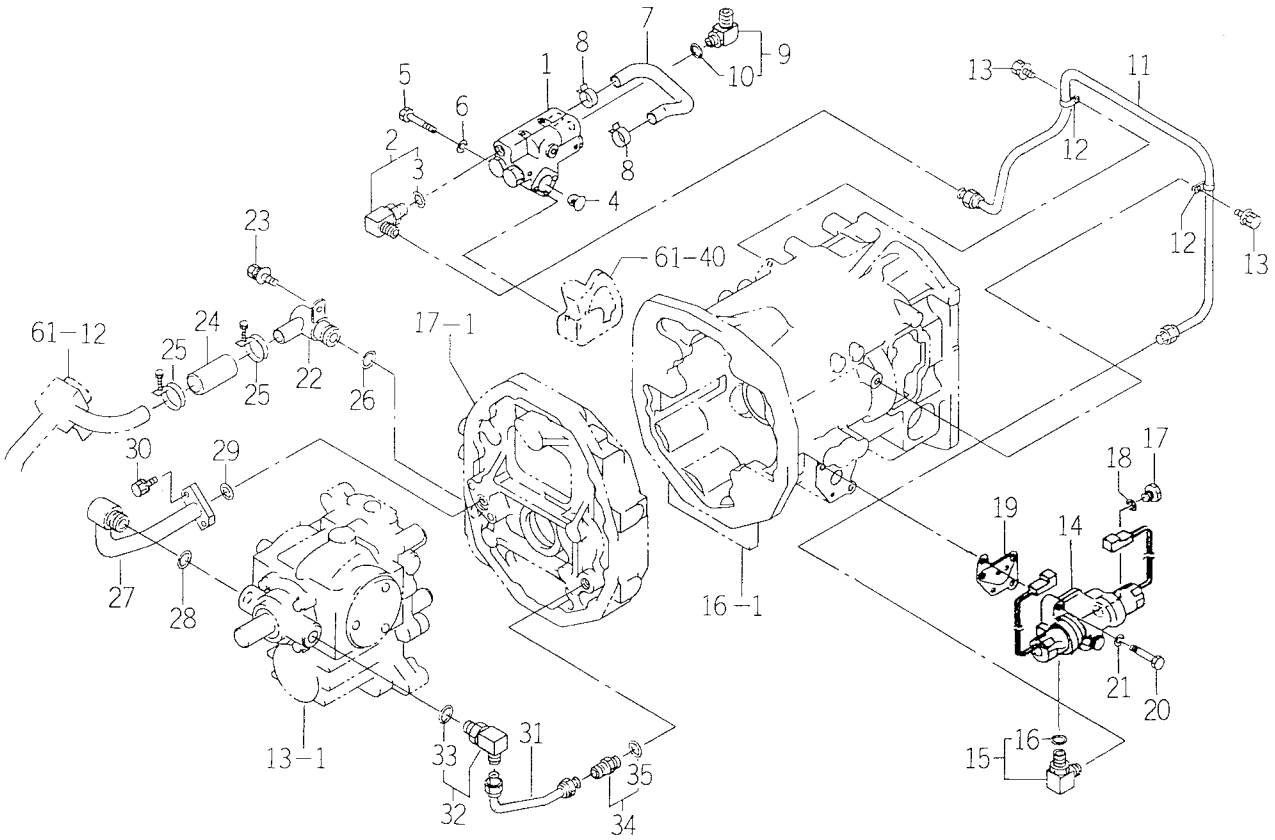

1674-516

KEY	PART CODE	DESCRIPTION	SPC	TYPE OF MODEL TK538H		ITC	COL	GRP	REMARKS
1	K256-001-000-00	REDUCE VALVE ASSY	*	1					FIG 144
2	1701-509-320-10	ADAPTER/L/G1/4 ASSY	*	1					
3	V720-112-401-10	RING/O	*	1					
4	1650-508-002-00	FILTER/LINE/12X18X15	*	1					
5	V200-360-604-50	BOLT	*	3					
6	V401-160-006-00	WASHER, SP/M 6	*	3					
7	1641-516-031-00	HOSE/OIL	*	1					
8	1673-782-016-00	CLIP/HOSE/17-20	*	2					
9	1701-508-320-00	ADAPTER/L/G1/2 ASSY	*	1					
10	V720-112-401-40	O-RING/P14	*	1					
11	1641-516-520-00	PIPE/PTO COMP	*	1					
12	1650-509-003-10	HOLDER/10	*	2					
13	V211-360-801-60	BOLT, SEMS (SP)	*	2					
14	K275-001-000-00	SOLINOID VALVE ASSY	*	1					FIG 145
15	1656-509-310-10	ADAPTER/L/PF1/4 ASSY	*	1					
16	V720-112-401-10	RING/O	*	1					
17	K275-001-003-00	PLUG(PF1/4)	*	1					
18	V720-102-401-10	O-RING/P11	*	1					
19	1650-509-004-00	GASKET/4WD/PTO	*	1					
20	V201-260-804-50	BOLT/M 8X45	*	2					
21	V401-160-008-00	WASHER, SP/M 8	*	2					
22	1641-516-530-00	CONNECTOR/SUC/HST	*	1					
23	V211-260-802-00	BOLT, SEMS (S)	*	1					
24	1641-516-051-00	HOSE/21X31X65	*	1					
25	J061-120-032-00	CLAMP/WORM/20-32	*	2					
26	V720-112-402-00	O-RING/P20	*	1					
27	1641-516-540-00	PIPE/SUC/HST COMP	*	1					
28	V720-112-402-20	O-RING/P22	*	1					
29	V720-112-401-80	O-RING/P18	*	1					
30	V211-560-802-50	BOLT, SEMS/M8X25 7T	*	2					

FIG. 62 PIPING (SUB) SYSTEM

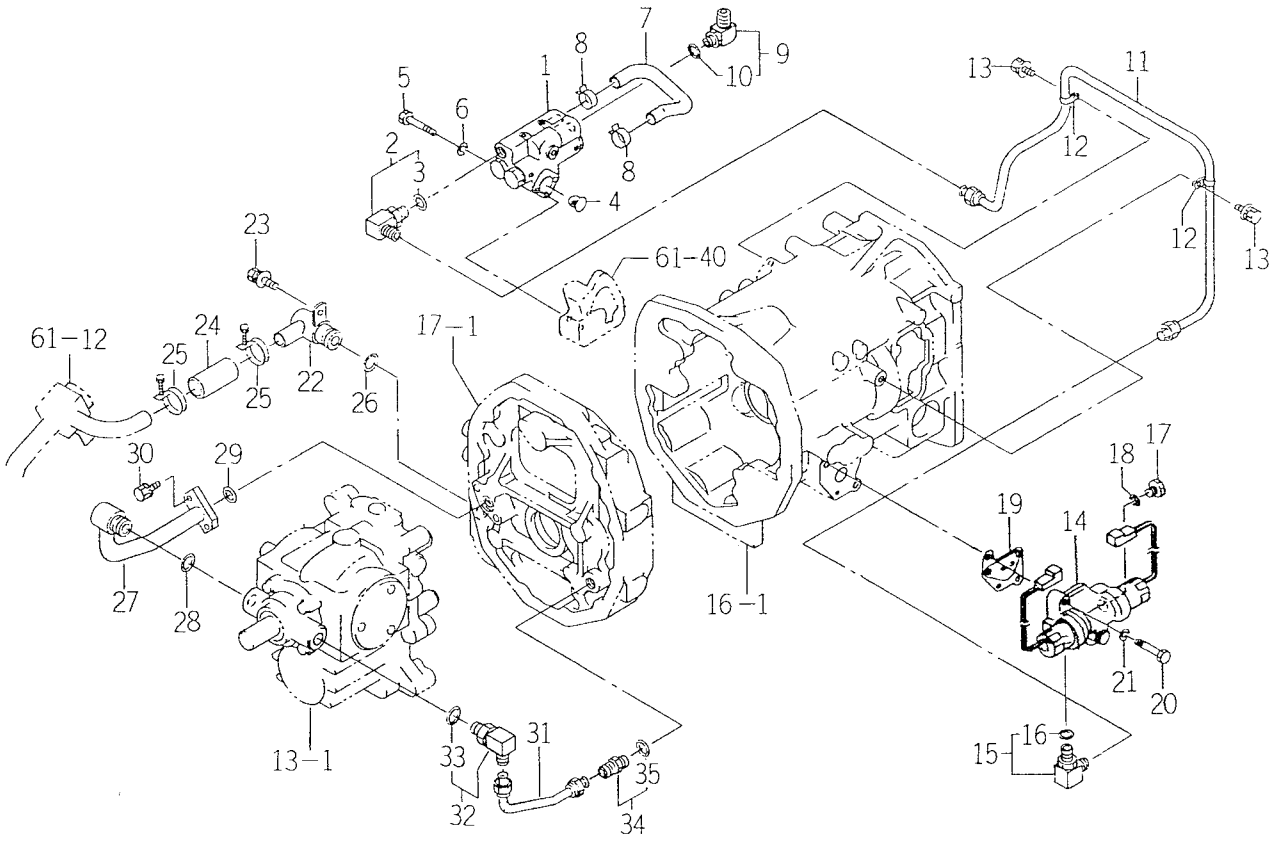

1674-516

KEY	PART CODE	DESCRIPTION	SPC	TYPE OF MODEL TK538H		ITC	COL	GRP	REMARKS
31	1641-516-550-00	PIPE/DEL/HST COMP	*	1					
32	1641-516-560-00	ADAPTER/L/M20 ASSY	*	1					
33	V720-112-401-40	O-RING/P14	*	1					
34	1650-509-300-00	ADAPTER/PF3/8 ASSY	*	1					
35	V720-112-401-40	O-RING/P14	*	1					

FIG. 63 STACK SYSTEM (EXCEPT C TYPE)

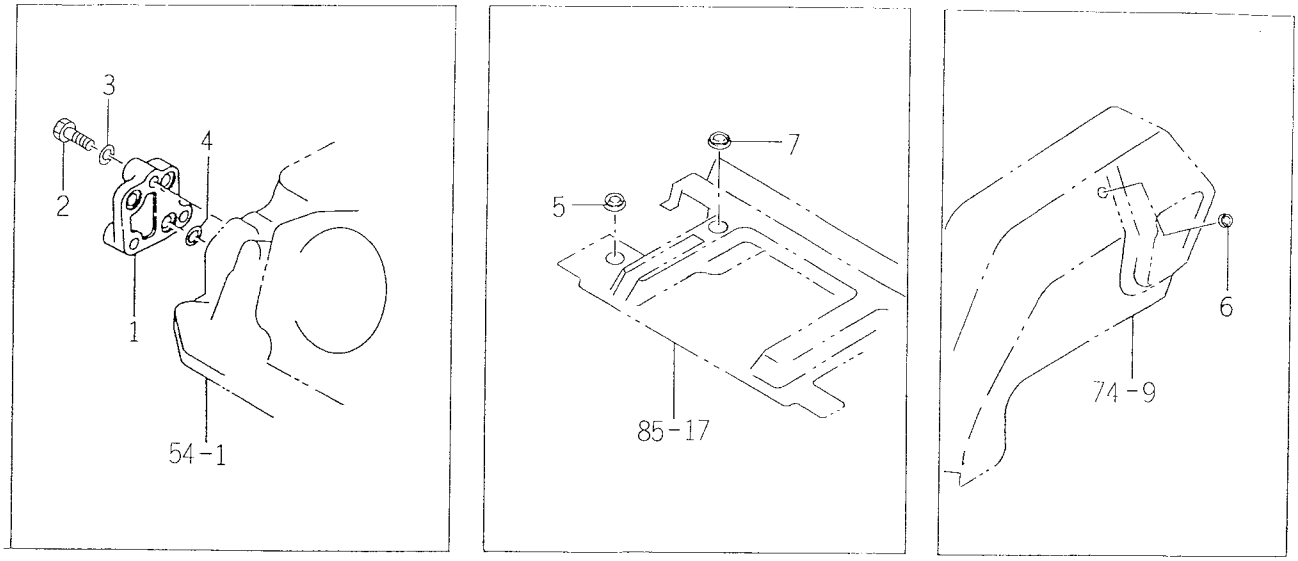

1594-517

KEY	PART CODE	DESCRIPTION	SPC	TYPE OF MODEL TK538H		ITC	COL	GRP	REMARKS
1	1704-519-001-00	COVER	*	1					
2	V201-261-004-00	BOLT/M10X40	*	3					
3	V401-160-010-00	WASHER, SP/M10	*	3					
4	V720-112-401-40	O-RING/P14	*	3					
5	1560-630-029-00	CAP/30	*	2					
6	1560-630-029-00	CAP/30	*	1					
7	1560-630-031-00	CAP/35	*	1					

FIG. 64 PIPING (COOLER) SYSTEM

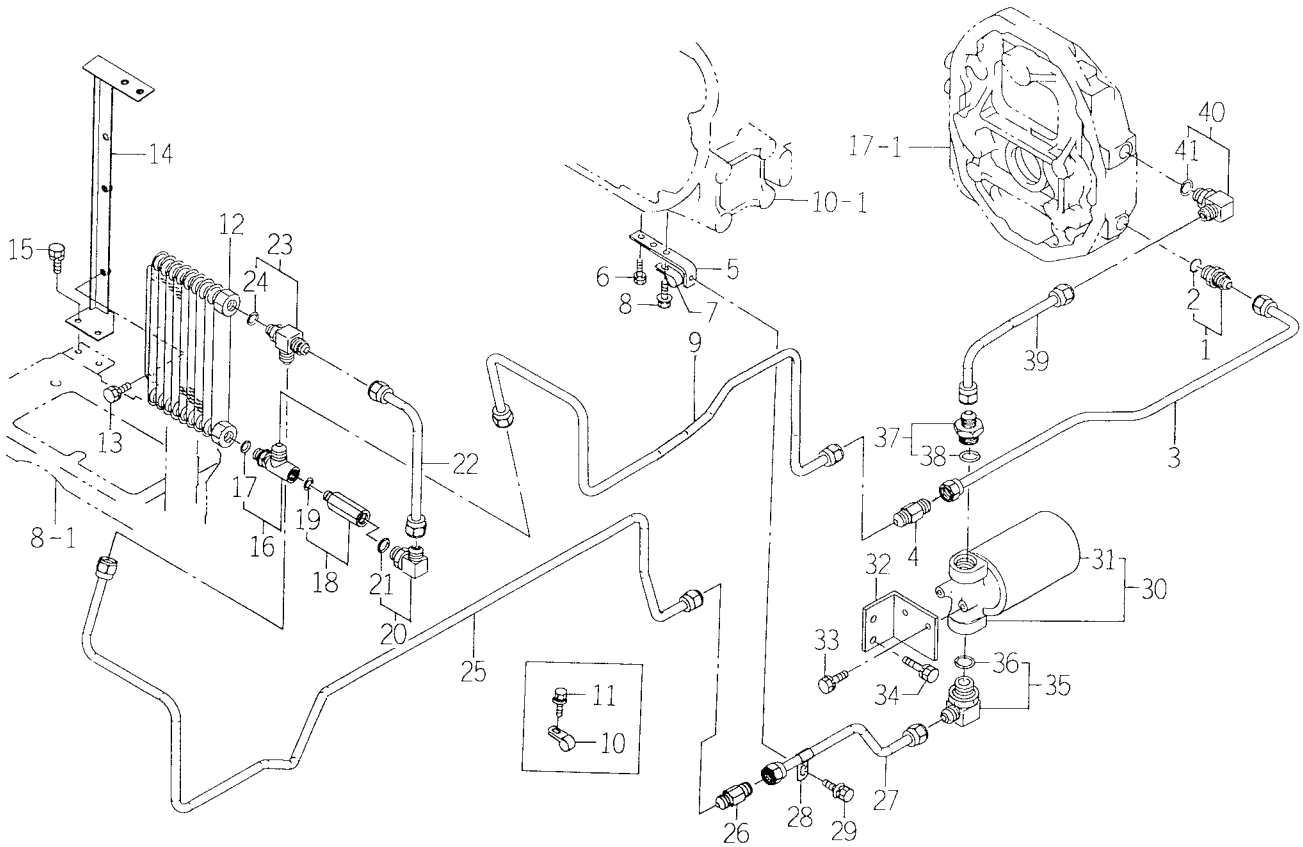

1641-517

KEY	PART CODE	DESCRIPTION	SPC	TYPE OF MODEL TK538H		ITC	COL	GRP	REMARKS
1	1650-509-300-00	ADAPTER/PF3/8 ASSY	*	1					
2	V720-112-401-40	O-RING/P14	*	1					
3	1641-517-510-00	PIPE/COOLER/REA COMP	*	1					
4	1641-517-057-00	ADAPTER/M20-M20	*	1					
5	1641-517-051-00	PLATE/L/19X112	*	1					
6	V211-260-801-60	BOLT, SEMS (S) M8X16	*	2					
7	1650-509-012-00	HOLDER/12	*	1					
8	V211-360-801-60	BOLT, SEMS (SP)	*	1					
9	1641-517-520-20	PIPE/COOLER/FRONT	*	1					
10	1650-509-012-00	HOLDER/12	*	4					
11	V211-360-801-60	BOLT, SEMS (SP)	*	4					
12	1646-407-560-00	COOLER/OIL ASSY	*	1					
13	V211-260-801-60	BOLT, SEMS (S) M8X16	*	2					
14	1641-517-530-00	BRACKET/COOLER COMP	*	1					
15	V211-260-801-60	BOLT, SEMS (S) M8X16	*	4					
16	1641-517-620-00	ADAPTER/G3/8 ASSY	*	1					
17	V720-112-401-40	O-RING/P14	*	1					
18	K220-002-000-00	VALVE/CHECK ASSY	*	1					
19	V720-112-401-40	O-RING/P14	*	1					
20	1650-509-310-00	ADAPTER/L/PF3/8 ASSY	*	1					
21	V720-112-401-40	O-RING/P14	*	1					
22	1641-517-540-00	PIPE/CHECKVALVE COMP	*	1					
23	1646-407-550-00	ADAPTER/G3/8 ASSY	*	1					
24	V720-112-401-40	O-RING/P14	*	1					
25	1641-517-550-10	PIPE/COOLER/OUT COMP	*	1					
26	1641-517-057-00	ADAPTER/M20-M20	*	1					
27	1641-517-560-00	PIPE/FILTER/IN COMP	*	1					
28	1650-509-012-00	HOLDER/12	*	1					
29	V211-360-801-60	BOLT, SEMS (SP)	*	1					
30	1646-516-690-00	FILTER/CHARGE ASSY	*	1					

FIG. 64 PIPING (COOLER) SYSTEM

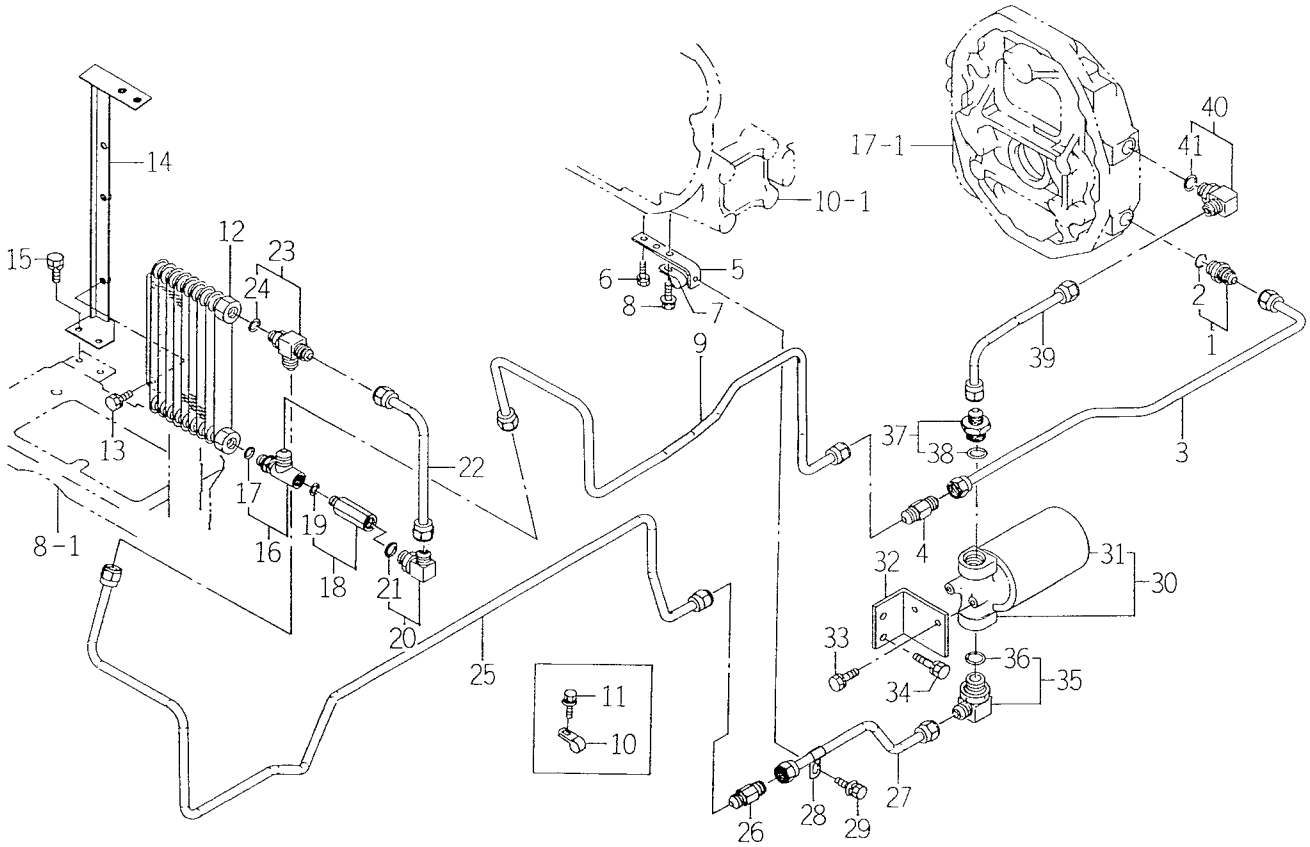

1641-517

KEY	PART CODE	DESCRIPTION	SPC	TYPE OF MODEL TK538H		ITC	COL	GRP	REMARKS
31	1646-516-692-00	CARTRIDGE ASSY	*	1					
32	1641-517-053-00	PLATE/L/70X85	*	1					
33	V211-260-801-60	BOLT, SEMS (S) M8X16	*	2					
34	V211-261-002-00	BOLT, SEMS	*	2					
35	1646-516-710-00	ADAPTER/L/G3/4 ASSY	*	1					
36	V720-113-502-40	O-RING/P24	*	1					
37	1641-517-580-10	ADAPTER/G3/4 ASSY	*	1					
38	V720-113-502-40	O-RING/P24	*	1					
39	1641-517-590-00	PIPE/FILTER/OUT COMP	*	1					
40	1650-509-310-00	ADAPTER/L/PF3/8 ASSY	*	1					
41	V720-112-401-40	O-RING/P14	*	1					

FIG. 65 COVER (SHIELD), REAR HITCH SYSTEM

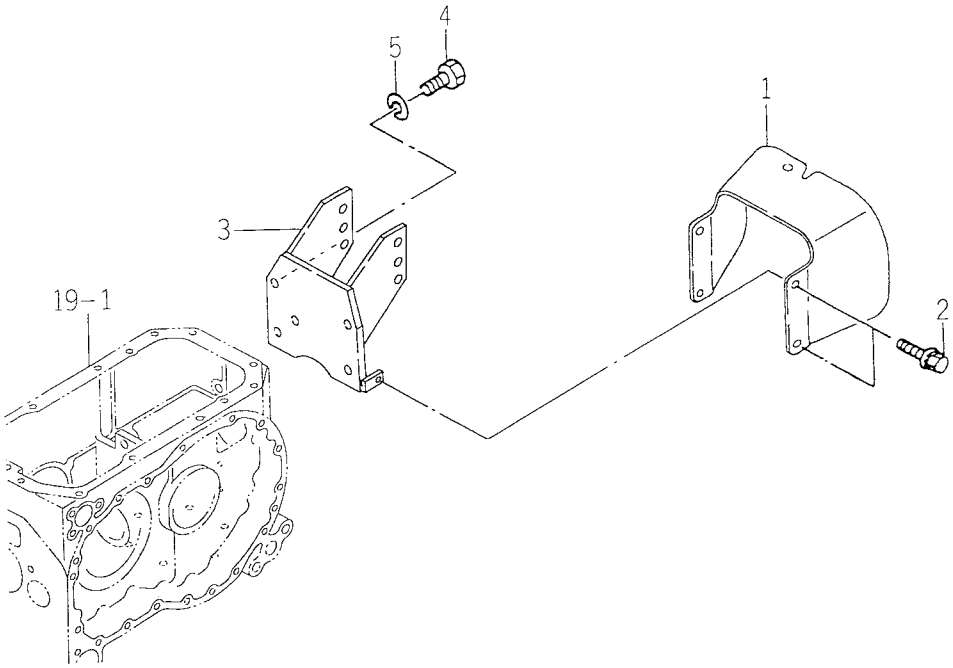

1594-520A

KEY	PART CODE	DESCRIPTION	SPC	TYPE OF MODEL TK538H		ITC	COL	GRP	REMARKS
1	1594-520-240-00	COVER/SHIELD COMP	*	1					
2	V211-360-801-60	BOLT, SEMS (SP)	*	4					
3	1594-521-210-20	BRACKET COMP	*	1					
4	V201-361-403-50	BOLT	*	4					
5	V401-160-014-00	WASHER, SP/M14	*	4					

FIG. 66 3P LINK SYSTEM

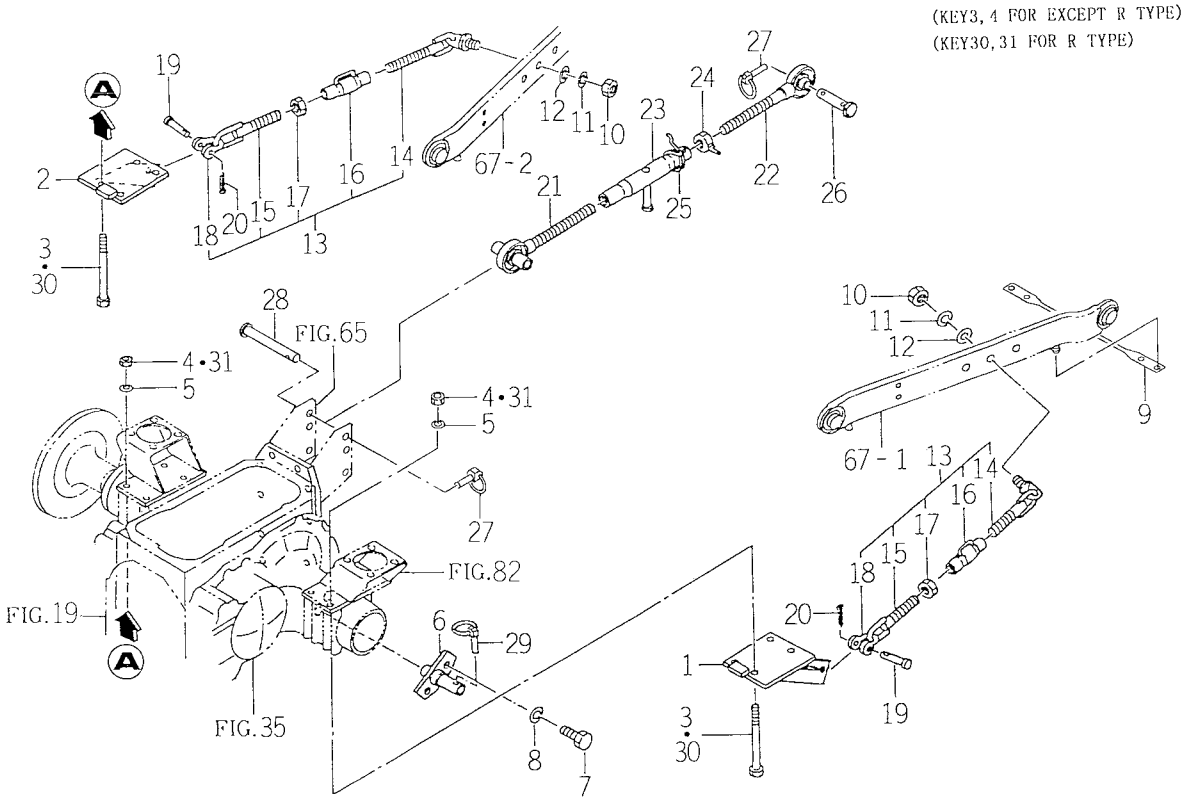

1560-525

KEY	PART CODE	DESCRIPTION	SPC	TYPE OF MODEL TK538H		ITC	COL	GRP	REMARKS
1	1560-525-200-50	BRACKET L COMP	*	1					
2	1560-525-210-50	BRACKET R COMP	*	1					
3	V201-361-215-50	BOLT	*	8					
4	V304-460-012-00	NUT/M12	*	8					
5	V401-160-012-00	WASHER, SP/M12	*	8					
6	1560-525-260-40	PIN	*	2					
7	V201-361-403-00	BOLT/M14X30	*	4					
8	V401-160-014-00	WASHER, SP/M14	*	4					
9	1560-525-003-00	BAND. 470	*	1					
10	V304-260-016-00	NUT/M16	*	2					
11	V401-160-016-00	WASHER, SP/M16	*	2					
12	V411-260-016-00	WASHER / M16	*	2					
13	1560-525-280-30	CHAIN CHACK ASSY	*	2					
14	1560-525-240-40	CHAIN/CHECK/REA COMP	*	2					
15	1560-525-250-40	CHAIN/CHECK COMP	*	2					
16	1444-514-230-00	TURNBUCKLE/A	*	2					
17	V304-260-016-00	NUT/M16	*	2					
18	1404-511-801-10	SCREW	*	2					
19	7963-611-003-00	PIN/12X48	*	2					
20	V500-163-002-00	PIN, SPLIT/3 X20	*	2					
21	1560-525-290-10	LINK/TOP/LH COMP	*	1					
22	1568-525-300-10	LINK/TOP/RH COMP	*	1					
23	1550-514-290-00	TURNBUCLE COMP	*	1					
24	1402-511-600-00	NUT, TOP LINK LOCK	*	1					
25	1560-525-002-40	SPRING	*	1					
26	1620-514-005-00	PIN/19X94	*	1					
27	1673-525-002-10	LINKPIN	*	2					
28	1640-525-001-00	PIN 19X132	*	1					
29	1673-525-002-10	LINKPIN	*	2					
30	V201-461-215-50	BOLT/M12X155	*	8					

FIG. 66 3P LINK SYSTEM

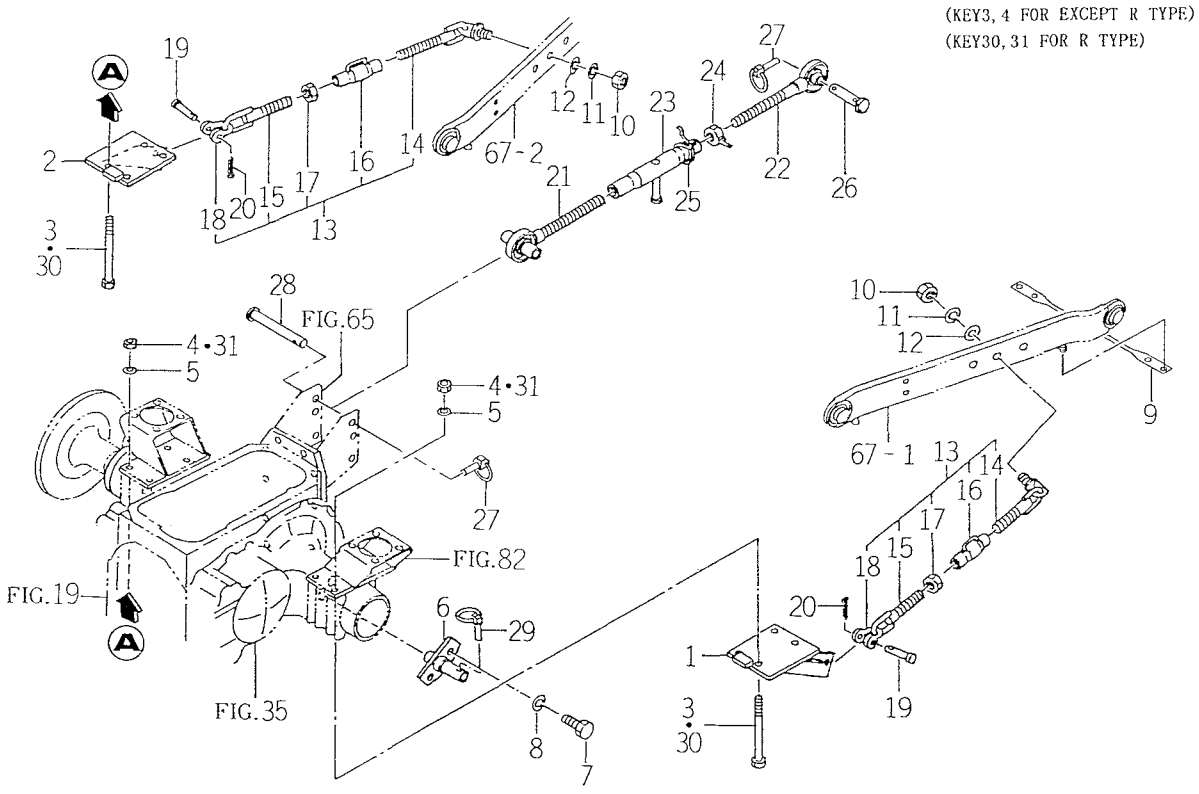

1640-525

KEY	PART CODE	DESCRIPTION	SPC	TYPE OF MODEL TK538H		ITC	COL	GRP	REMARKS
31	1640-626-001-00	NUT	*	8					

FIG. 67 LOWER LINK, LIFT ROD SYSTEM

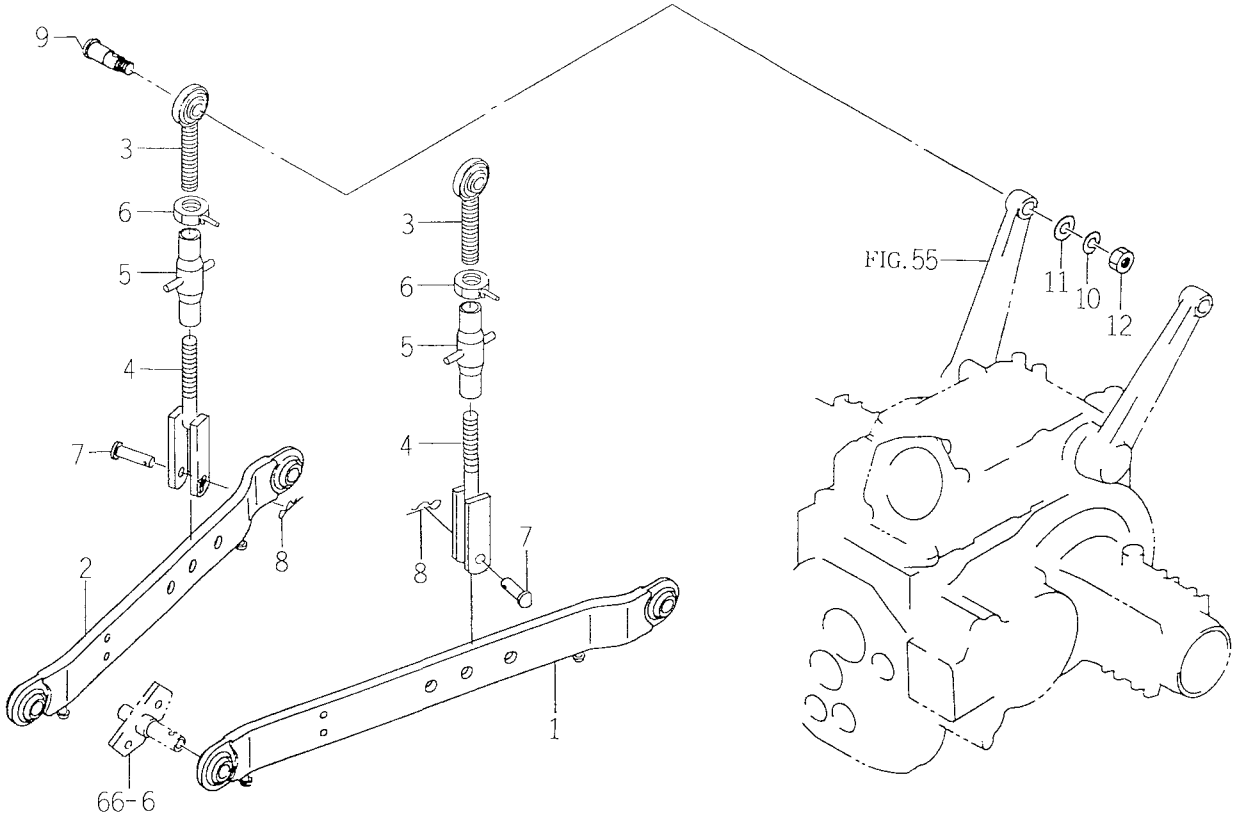

1560-525A

KEY	PART CODE	DESCRIPTION	SPC	TYPE OF MODEL TK538H		ITC	COL	GRP	REMARKS
1	1560-525-220-80	LINK/LOWER/LH COMP	*	1					
2	1560-525-230-80	LINK/LOWER/RH COMP	*	1					
3	1600-515-210-10	SCREW, RH/M24 COMP	*	2					
4	1600-515-230-10	SCREW, LH/M24X160COMP	*	2					
5	1600-515-240-00	BUCKLE, TURN/M24 COMP	*	2					
6	1402-511-600-00	NUT, TOP LINK LOCK	*	2					
7	7963-613-005-00	PIN/16X60	*	2					
8	1305-931-003-00	PIN, HAIR	*	2					
9	1560-527-001-70	PIN/22X93	*	1					
10	V401-160-016-00	WASHER, SP/M16	*	1					
11	V411-260-016-00	WASHER / M16	*	1					
12	V304-460-016-00	NUT/M16	*	1					

FIG. 68 VALVE (REMOTE/2R) SYSTEM (C TYPE)

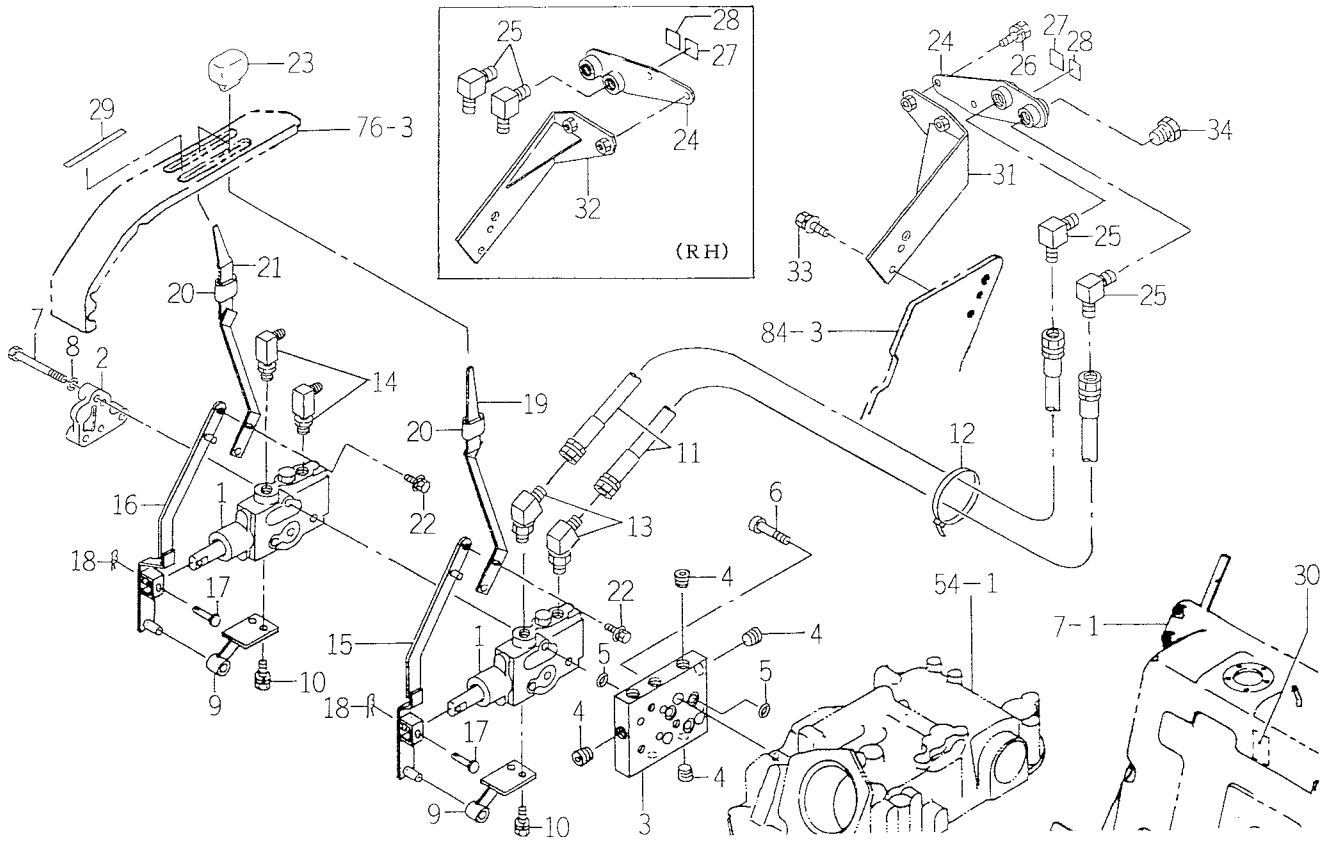

1674-530

KEY	PART CODE	DESCRIPTION	SPC	TYPE OF MODEL TK538H		ITC	COL	GRP	REMARKS
1	1640-530-600-10	VALVE/CONTROL ASSY	*	2					FIG 148
2	1614-501-003-10	COVER	*	1					
3	1640-530-001-10	METAL/BYPASS	*	1					
4	V780-140-000-40	PLUG/SCREW	*	8					
5	V720-112-401-40	O-RING/P14	*	6					
6	V220-541-002-00	SCREW/SOCKET	*	3					
7	V201-261-012-00	BOLT/M10X120	*	3					
8	V401-160-010-00	WASHER, SP/M10	*	3					
9	1640-530-260-00	HOLDER COMP	*	2					
10	V211-260-801-60	BOLT, SEMS (S) M8X16	*	4					
11	1640-530-270-10	HOSE/660 COMP	*	4					
12	1342-402-006-00	BAND, WIRE/250	*	1					
13	1640-530-003-00	CONNECTOR	*	2					
14	1640-530-009-00	CONNECTOR/L	*	2					
15	1640-530-230-00	ARM/1ST COMP	*	1					
16	1640-530-330-00	ARM/2ND COMP	*	1					
17	2144-519-007-00	PIN/06X31	*	2					
18	2130-601-018-00	PIN, SNAP/6	*	2					
19	1640-530-240-10	LEVER/1ST COMP	*	1					
20	1560-511-101-00	PROTECTER	*	2					
21	1640-530-340-00	LEVER/2ND COMP	*	1					
22	V211-360-801-60	BOLT, SEMS (SP)	*	2					
23	1612-531-003-00	GRIP	*	2					
24	1620-507-460-00	STAY/PIPE COMP	*	2					
25	1584-522-001-00	ADAPTER/90°	*	4					
26	V211-260-802-00	BOLT, SEMS (S)	*	4					
27	1518-903-006-00	MARK, PORT A	*	2					
28	1518-903-007-00	MARK, PORT B	*	2					
29	1640-530-007-00	LABEL/CONTROL/SUBCON	*	1					
30	1640-530-008-00	LABEL/SUBCON	*	1					

FIG. 68 VALVE (REMOTE/2R) SYSTEM (C TYPE)

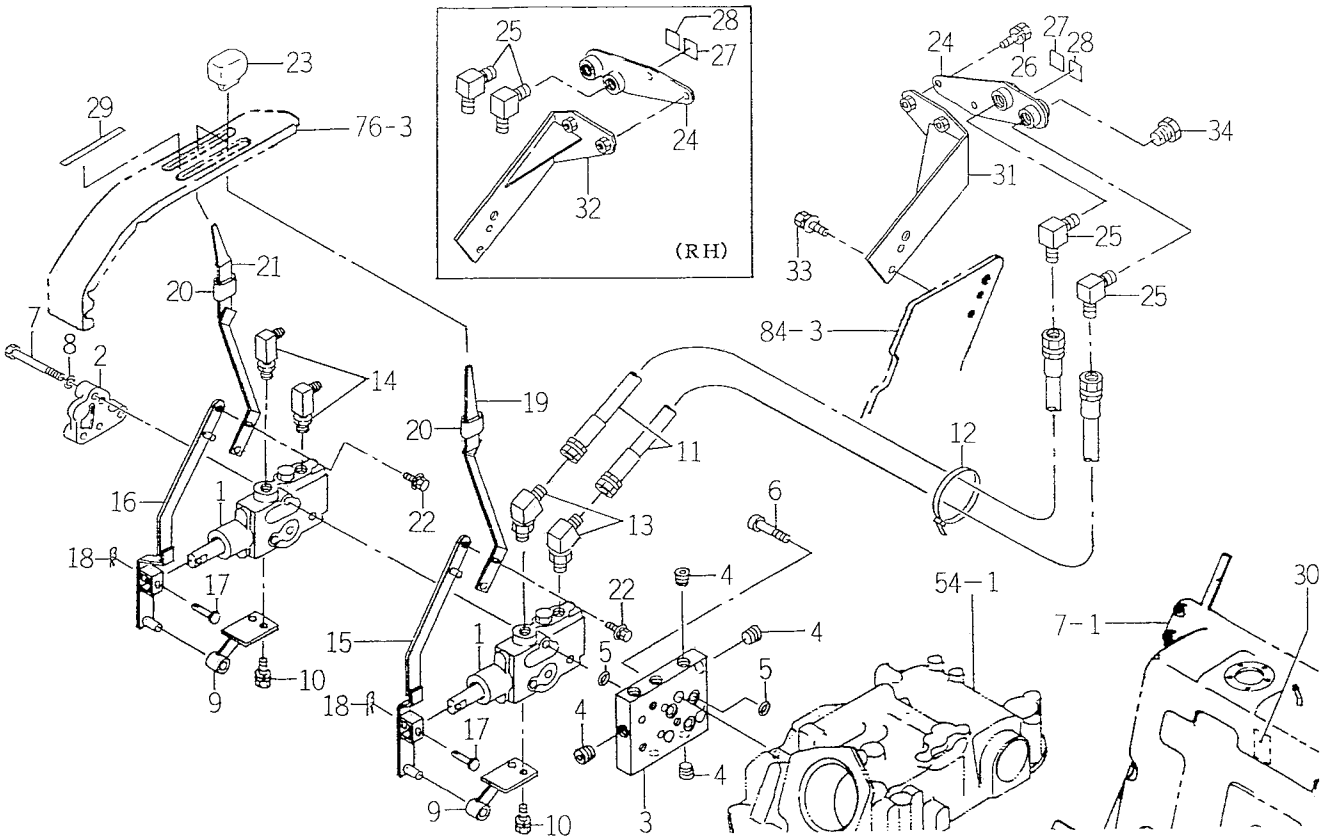

1674-530

KEY	PART CODE	DESCRIPTION	SPC	TYPE OF MODEL TK538H		ITC	COL	GRP	REMARKS
31	1640-530-280-00	STAY/HOSE/LH COMP	*	1					
32	1640-530-350-00	STAY/HOSE/RH COMP	*	1					
33	V211-360-801-60	BOLT, SEMS (SP)	*	4					
34	V782-160-000-6T	PLUG/SCREW/SEAL	*	4					

FIG. 69 GRILLE SYSTEM

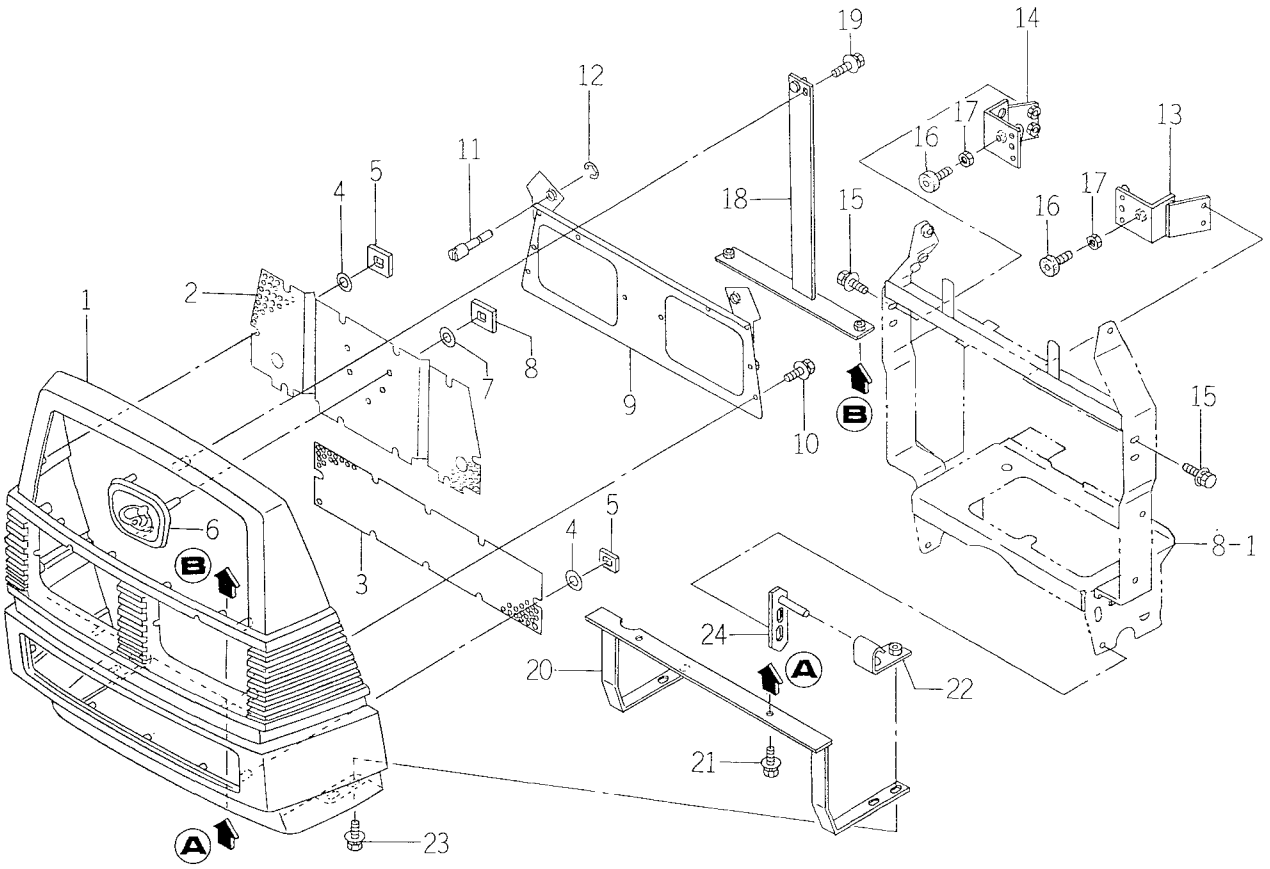

1673-601A

KEY	PART CODE	DESCRIPTION	SPC	TYPE OF MODEL TK538H		ITC	COL	GRP	REMARKS
1	1673-601-005-00	GRILLE	*	1					
2	1640-601-016-00	NET/UPPER	*	1					
3	1673-601-002-00	NET	*	1					
4	1444-601-015-00	WASHER/6X14X3	*	16					
5	V350-160-006-00	NUT, SPEED/P6	*	16					
6	3689-902-019-00	ORNAMENT/ISEKI	*	1					
7	1444-601-015-00	WASHER/6X14X3	*	3					
8	V350-160-004-00	NUT, SPEED/P4	*	3					
9	1673-601-210-00	HOLDER/LAMP COMP	*	1					
10	V210-360-601-60	BOLT(SP)/M6X16	*	4					
11	1673-601-003-00	PIN/FASTENER	*	2					
12	V710-140-009-00	RING, SNAP/ 9 E	*	2					
13	1673-601-260-00	HOLDER/LH COMP	*	1					
14	1673-601-270-00	HOLDER/RH COMP	*	1					
15	V211-360-802-00	BOLT(SP) M8X20	*	4					
16	1421-602-005-10	CUSHION, B/ RUBBER	*	2					
17	V304-260-008-00	NUT/M 8	*	2					
18	1673-601-220-10	FRAME/GRILLE/UPPER	*	1					
19	V210-360-601-60	BOLT(SP)/M6X16	*	1					
20	1673-601-230-10	FRAME/GRILLE/LOWER	*	1					
21	V211-360-802-50	BOLT, SEMS	*	2					
22	1560-601-330-20	HOOK COMP	*	2					
23	V211-360-802-00	BOLT(SP) M8X20	*	2					
24	1560-601-260-40	PIN COMP	*	2					

FIG. 70 HOOD SYSTEM (C TYPE)

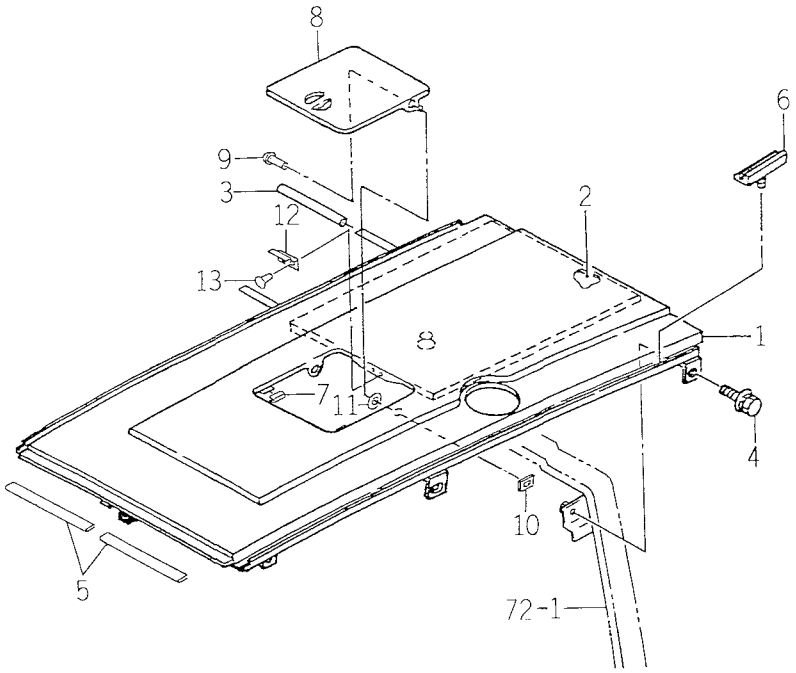

1674-601A

KEY	PART CODE	DESCRIPTION	SPC	TYPE OF MODEL TK538H		ITC	COL	GRP	REMARKS
1	1673-601-300-40	HOOD COMP	*	1			4G		
2	1674-601-001-10	INSULATOR	*	1					
3	1650-650-017-00	TUBE/120	*	2					
4	V211-360-802-00	BOLT(SP) M8X20	*	6					
5	1444-604-009-00	RUBBER, LINE	*	2					
6	1560-602-001-40	INSULATOR	*	4					
7	1672-601-002-00	TRIM/20	*	2					
8	1672-601-210-00	COVER/HOOD COMP	*	1			4G		
9	V290-106-001-20	RIVET/6 X12	*	2					
10	V350-160-006-00	NUT, SPEED/P6	*	2					
11	1560-601-017-00	WASHER/6X14X2	*	2					
12	1560-601-014-30	SPRING	*	1					
13	W296-134-007-00	RIVET, BLIND	*	2					

FIG. 71 HOOD SYSTEM (EXCEPT C TYPE)

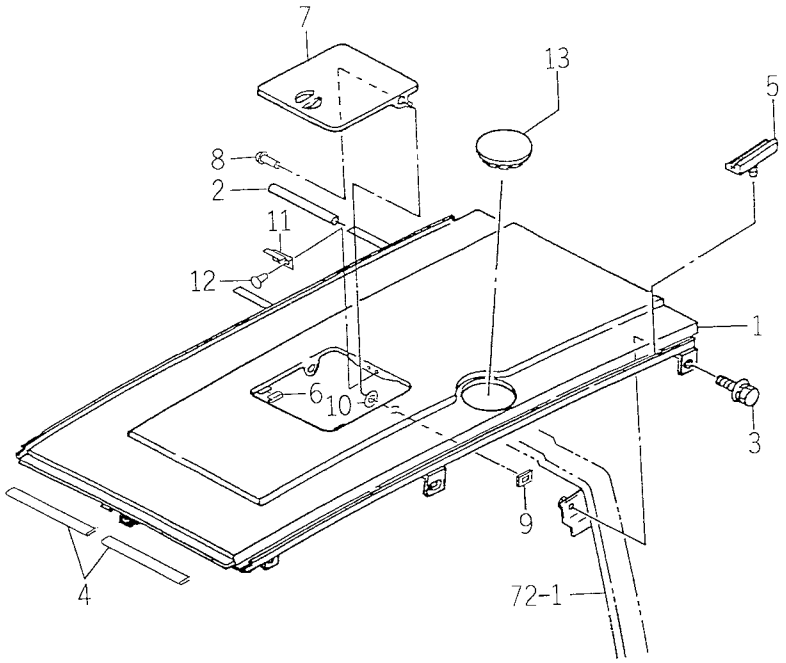

1674-601B

KEY	PART CODE	DESCRIPTION	SPC	TYPE OF MODEL TK538H		ITC	COL	GRP	REMARKS
1	1674-601-310-00	HOOD COMP	*	1			4G		
2	1650-650-017-00	TUBE/120	*	2					
3	V211-360-802-00	BOLT(SP) M8X20	*	6					
4	1444-604-009-00	RUBBER, LINE	*	2					
5	1560-602-001-40	INSULATOR	*	4					
6	1672-601-002-00	TRIM/20	*	2					
7	1672-601-210-00	COVER/HOOD COMP	*	1			4G		
8	V290-106-001-20	RIVET/6 X12	*	2					
9	V350-160-006-00	NUT, SPEED/P6	*	2					
10	1560-601-017-00	WASHER/6X14X2	*	2					
11	1560-601-014-30	SPRING	*	1					
12	W296-134-007-00	RIVET, BLIND	*	2					
13	1560-601-002-20	CAP/HOOD	*	1					

FIG. 72 FRAME (HOOD), DASH – BOARD SYSTEM

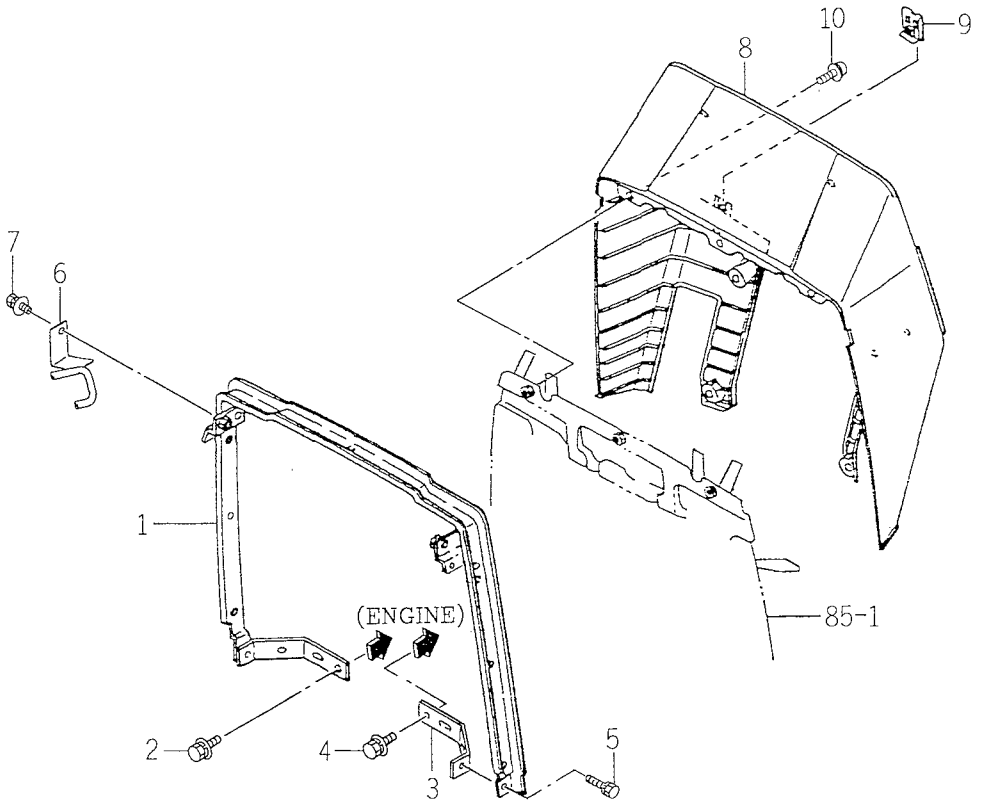

1674-602

KEY	PART CODE	DESCRIPTION	SPC	TYPE OF MODEL TK538H		ITC	COL	GRP	REMARKS
1	1674-602-200-00	FRAME/HOOD COMP	*	1					
2	V211-360-802-00	BOLT(SP) M8X20	*	2					
3	1560-602-273-60	STAY/PLATE	*	1					
4	V211-360-802-00	BOLT(SP) M8X20	*	2					
5	V211-260-802-00	BOLT, SEMS (S)	*	1					
6	1674-602-210-00	STAY/FUSE COMP	*	1					
7	V211-360-801-60	BOLT, SEMS (SP)	*	1					
8	1560-603-002-80	COVER/DASH	*	1					
9	1560-603-003-00	NUT/M6	*	2					
10	V120-368-002-00	BOLT/M8X20	*	7					

FIG. 73 FAN COVER SYSTEM

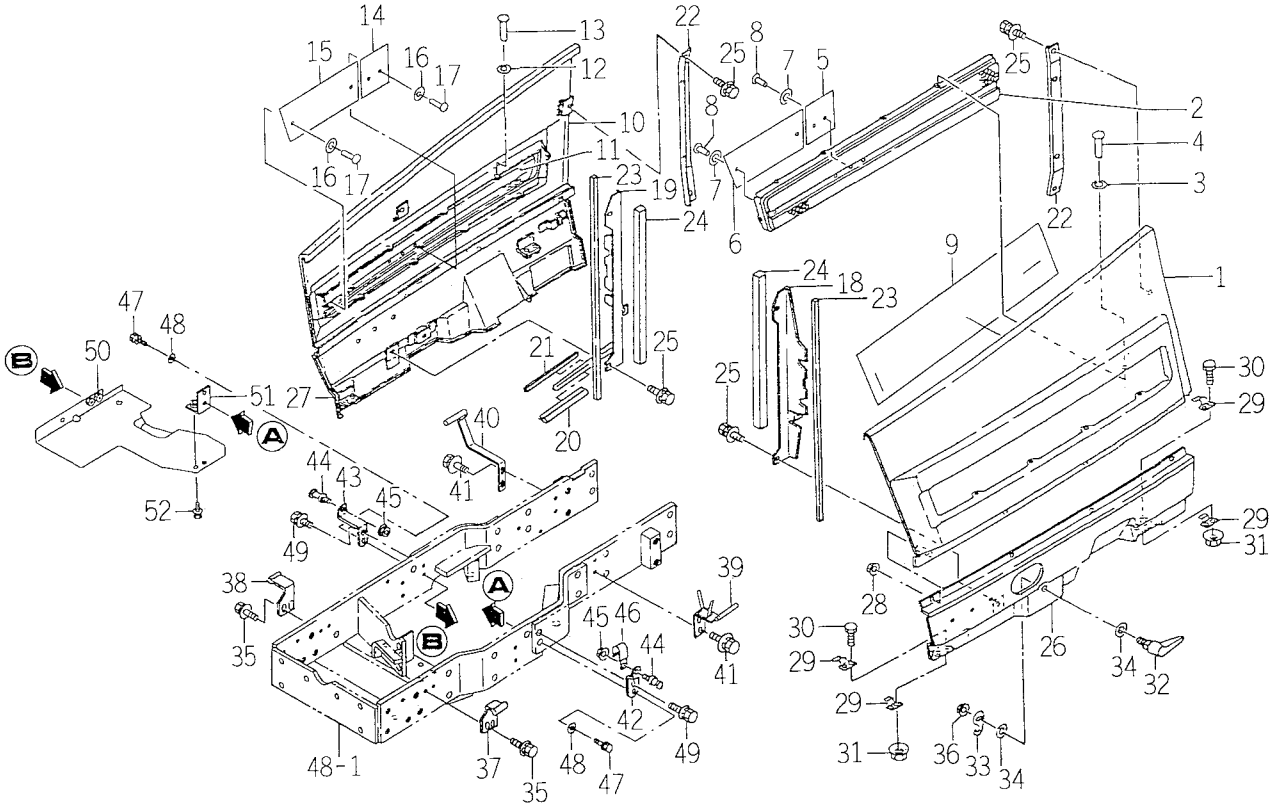

1674-604

KEY	PART CODE	DESCRIPTION	SPC	TYPE OF MODEL TK538H		ITC	COL	GRP	REMARKS
1	1594-604-220-20	COVER/SIDE/LH COMP	*	1			4G		
2	1594-604-001-00	NET LH	*	1			8E		
3	1480-604-204-00	WASHER	*	10					
4	W296-134-007-00	RIVET, BLIND	*	10					
5	1642-104-003-00	PLATE/I/102X80	*	1					
6	1674-604-211-00	PLATE	*	1					
7	1480-604-204-00	WASHER	*	4					
8	W296-134-007-00	RIVET, BLIND	*	4					
9	1611-604-001-00	INSULATOR	*	1					
10	1594-604-230-20	COVER/SIDE/RH COMP	*	1			4G		
11	1594-604-002-00	NET RH	*	1			8E		
12	1480-604-204-00	WASHER	*	10					
13	W296-134-007-00	RIVET, BLIND	*	10					
14	1642-104-003-00	PLATE/I/102X80	*	1					
15	1674-604-211-00	PLATE	*	1					
16	1480-604-204-00	WASHER	*	4					
17	W296-134-007-00	RIVET, BLIND	*	4					
18	1560-604-009-50	STAY/PLATE/LH	*	1					
19	1673-604-280-00	STAY/PLATE/RH COMP	*	1					
20	1673-112-004-00	INSULATOR/140	*	1					
21	4334-311-216-00	SOFT TAPE/10X5X160	*	1					
22	1560-604-024-10	BRACKET/PLATE	*	2					
23	1560-604-005-00	SEAL	*	2					
24	1560-104-004-40	SEAL	*	2					
25	V211-360-801-60	BOLT, SEMS (SP)	*	8					
26	1594-604-260-10	COVER/UNDER/LH COMP	*	1			8F		
27	1594-604-270-10	COVER/UNDER/RH COMP	*	1			8F		
28	V362-260-008-00	NUT/WASHER	*	8					
29	1560-604-022-70	SPRING	*	8					
30	V201-260-801-60	BOLT/M 8X16	*	8					

FIG. 73 FAN COVER SYSTEM

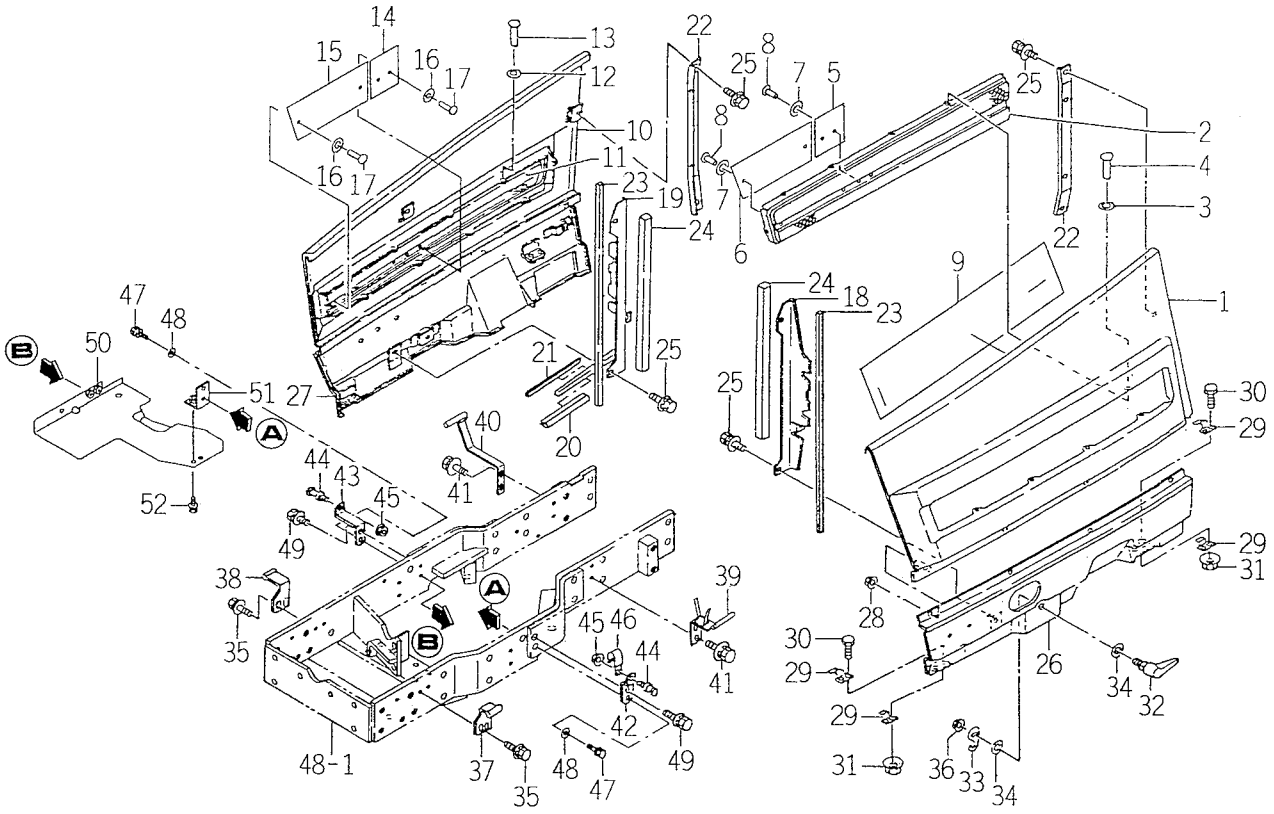

1674-604

KEY	PART CODE	DESCRIPTION	SPC	TYPE OF MODEL TK538H		ITC	COL	GRP	REMARKS
31	V362-260-008-00	NUT/WASHER	*	8					
32	1560-604-380-30	LEVER COMP	*	2					
33	1560-604-017-40	PLATE	*	2					
34	1560-604-018-40	WASHER/13X25X02	*	2					
35	V211-360-801-60	BOLT, SEMS (SP)	*	4					
36	V362-260-008-00	NUT/WASHER	*	2					
37	1560-604-031-00	STAY/LH/F	*	1					
38	1560-604-032-00	STAY/RH/F	*	1					
39	1673-604-220-10	PIN/LH/REAR COMP	*	1					
40	1674-604-200-10	PIN/RH/REAR COMP	*	1					
41	V211-360-801-60	BOLT, SEMS (SP)	*	4					
42	1560-604-361-50	SPRING	*	1					
43	1560-604-371-50	SPRING	*	1					
44	1560-604-362-50	PIN/08X37	*	2					
45	V362-260-008-00	NUT/WASHER	*	2					
46	1425-621-004-00	CLAMP, HARNESS	*	2					
47	V210-260-604-00	BOLT/S	*	2					
48	3560-503-302-00	WASHER, WIRE TENSION	*	2					
49	V211-360-803-00	BOLT/M8X30	*	2					
50	1640-410-200-20	PLATE COMP	*	1					
51	1640-410-210-00	PLATE COMP	*	1					
52	V210-360-601-60	BOLT(SP)/M6X16	*	1					

FIG. 74 FENDER SYSTEM (EXCEPT C TYPE)

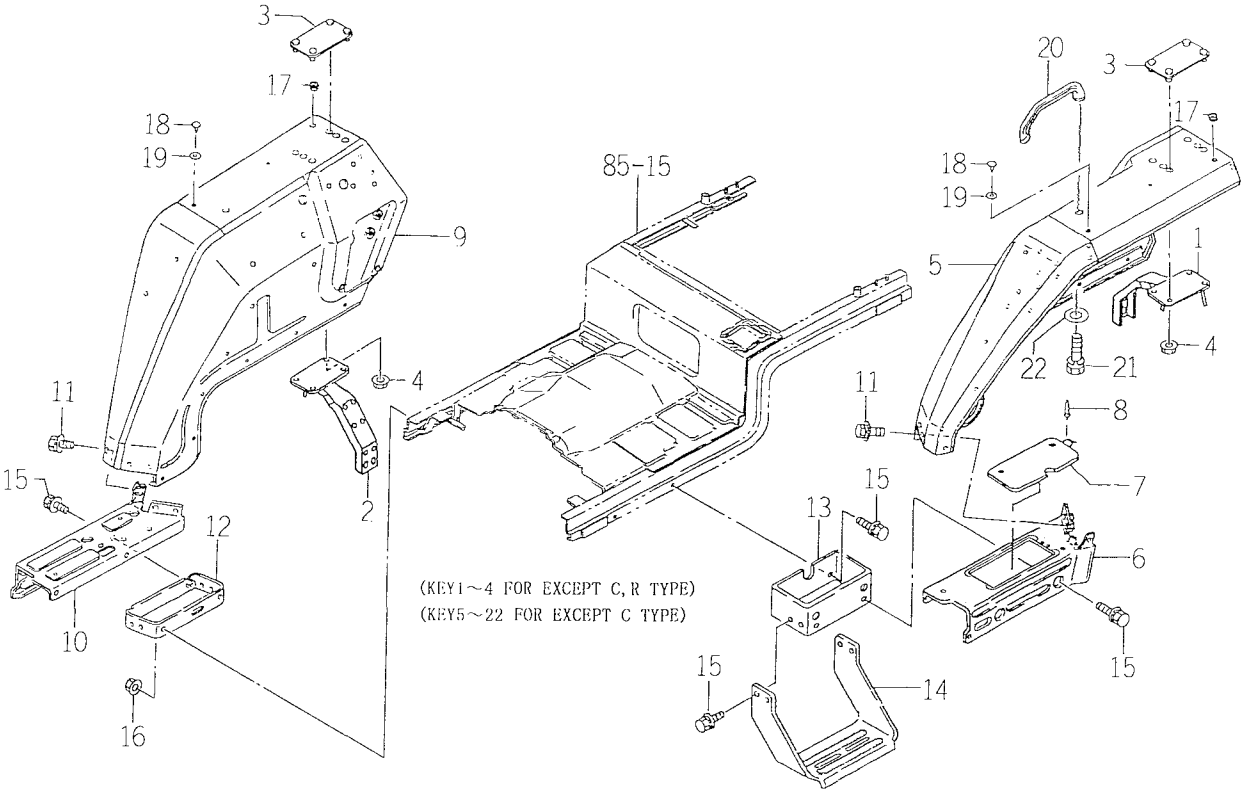

1674-606A

KEY	PART CODE	DESCRIPTION	SPC	TYPE OF MODEL TK538H		ITC	COL	GRP	REMARKS
1	1560-606-280-10	STAY/PLATE/LH COMP	*	1					
2	1560-606-290-10	STAY/PLATE/RH COMP	*	1					
3	1560-606-300-00	COVER COMP	*	2					
4	V362-260-008-00	NUT/WASHER	*	8					
5	1674-606-200-10	FENDER/LH COMP	*	1			4G		
6	1641-606-520-00	PANEL/FLOOR/LH COMP	*	1			4G		
7	1560-606-340-10	PLATE	*	1					
8	W296-203-206-30	RIVET/BLIND	*	2					
9	1674-606-210-10	FENDER/RHCOMP	*	1			4G		
10	1674-606-520-00	PANEL/FLOOR/RH COMP	*	1			4G		
11	V210-360-601-20	BOLT, SEMS	*	6					
12	1560-606-240-40	BRACKET COMP	*	1					
13	1560-606-330-00	BRACKET	*	1					
14	1560-630-321-50	STEP	*	1					
15	V211-360-802-00	BOLT(SP) M8X20	*	18					
16	V362-260-008-00	NUT/WASHER	*	2					
17	1432-651-028-00	GROMMET/9X13X2	*	4					
18	1527-604-002-00	CLIP(B)	*	2					
19	V411-260-008-00	WASHER, PL/M 8	*	2					
20	1612-608-003-00	GRIP/ASSIST	*	2					
21	V211-260-802-00	BOLT, SEMS (S)	*	4					
22	4101-102-038-00	WASHER/24X9X3.2	*	4					

FIG. 75 FENDER SYSTEM (C TYPE)

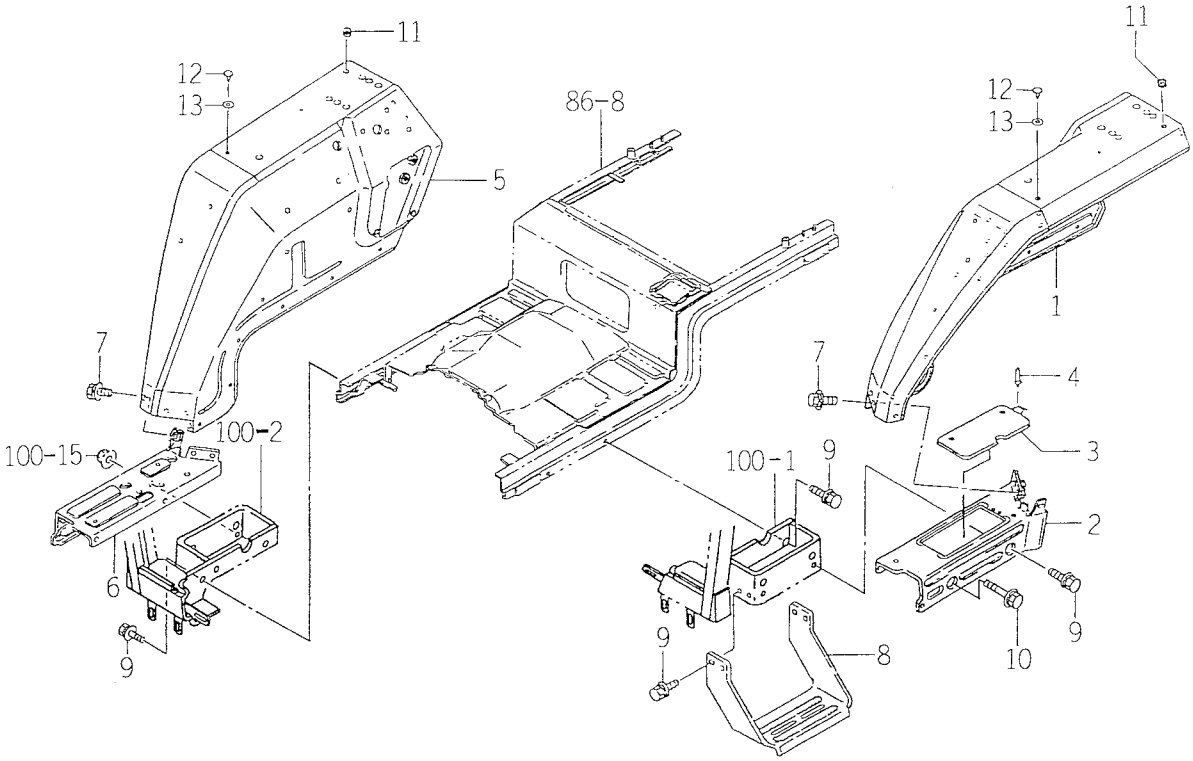

1674-606E

KEY	PART CODE	DESCRIPTION	SPC	TYPE OF MODEL TK538H		ITC	COL	GRP	REMARKS
1	1674-606-200-10	FENDER/LH COMP	*	1			4G		
2	1641-606-520-00	PANEL/FLOOR/LH COMP	*	1			4G		
3	1560-606-340-10	PLATE	*	1					
4	W296-203-206-30	RIVET/BLIND	*	2					
5	1674-606-210-10	FENDER/RHCOMP	*	1			4G		
6	1674-606-520-00	PANEL/FLOOR/RH COMP	*	1			4G		
7	V210-360-601-20	BOLT, SEMS	*	6					
8	1560-630-321-50	STEP	*	1					
9	V211-360-802-00	BOLT(SP) M8X20	*	22					
10	V211-360-804-00	BOLT	*	2					
11	1432-651-028-00	GROMMET/9X13X2	*	6					
12	1527-604-002-00	CLIP(B)	*	2					
13	V411-260-008-00	WASHER, PL/M 8	*	2					

FIG. 76 LEVER GUIDE, LEVER STOPPER SYSTEM

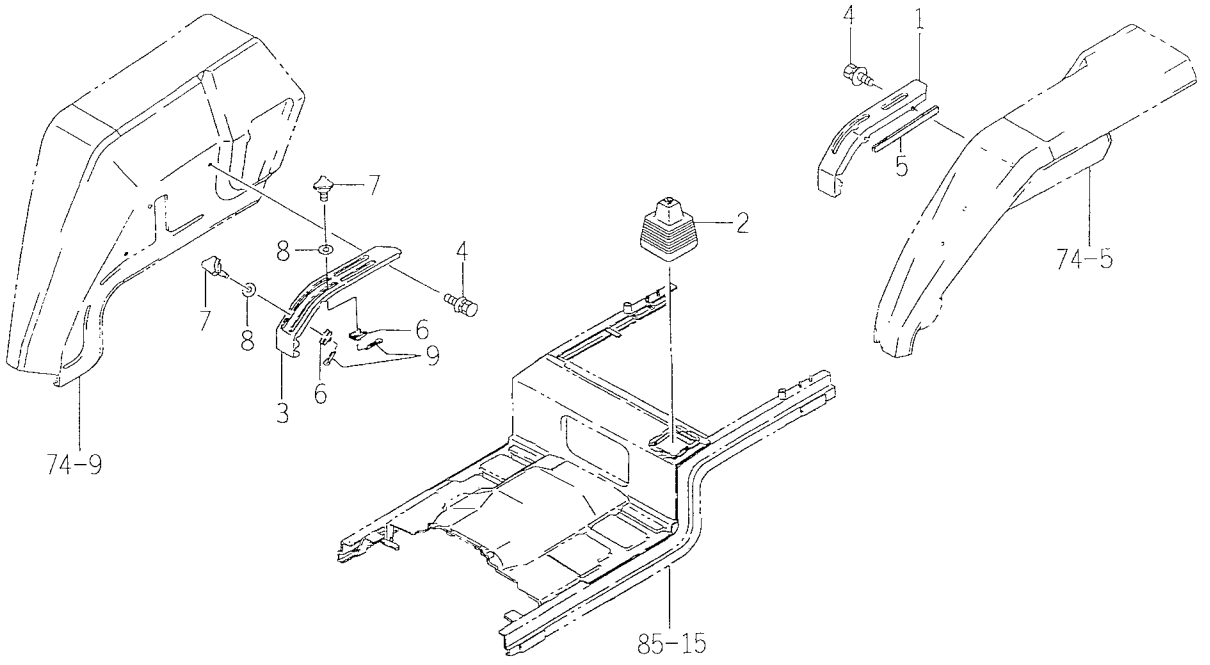

1674-608

KEY	PART CODE	DESCRIPTION	SPC	TYPE OF MODEL TK538H		ITC	COL	GRP	REMARKS
1	1594-608-001-21	GUIDE/LH	*	1			5I		
2	1560-608-220-30	BOOT	*	1					
3	1594-608-002-21	GUIDE/RH	*	1			5I		
4	V211-360-801-60	BOLT, SEMS (SP)	*	6					
5	1614-606-003-00	INSULATOR	*	1					
6	1594-609-200-00	PLATE COMP	*	2					
7	1594-609-001-00	BOLT/M6X22	*	2					
8	1421-507-014-00	WASHER/6X24X2	*	2					
9	V500-161-601-50	PIN, SPLIT/1.6X15	*	2					

FIG. 77 SEAT SYSTEM

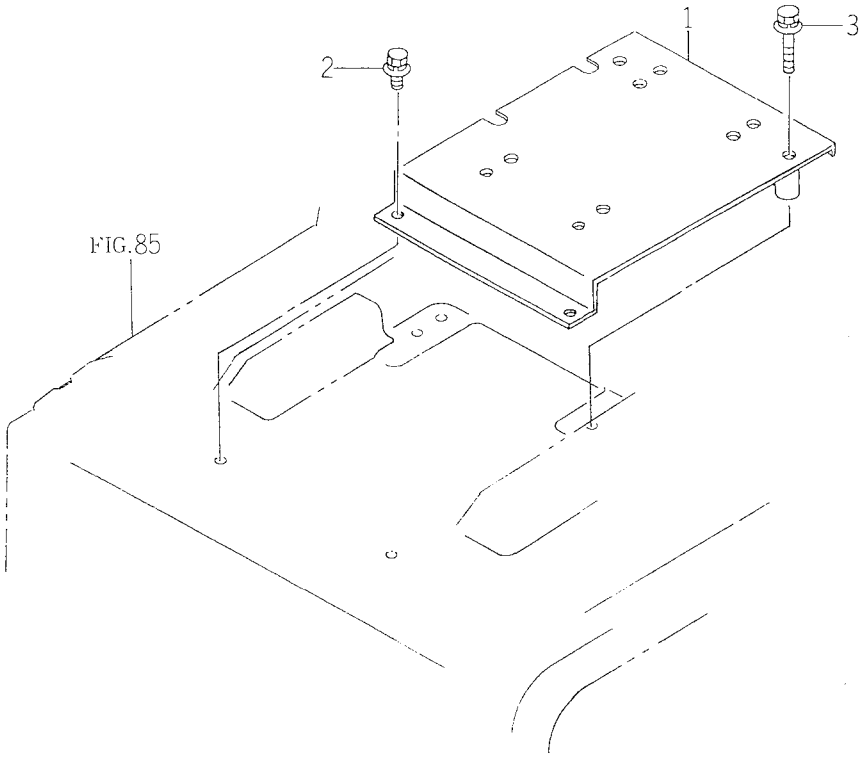

1594-611A

KEY	PART CODE	DESCRIPTION	SPC	TYPE OF MODEL TK538H		ITC	COL	GRP	REMARKS
1	1594-611-200-20	BRACKET SEAT COMP	*	1					
2	V211-360-802-00	BOLT(SP) M8X20	*	2					
3	V211-360-805-50	BOLT/M8X55	*	2					

FIG. 78 BACK MIRROR SYSTEM (EXCEPT C TYPE)

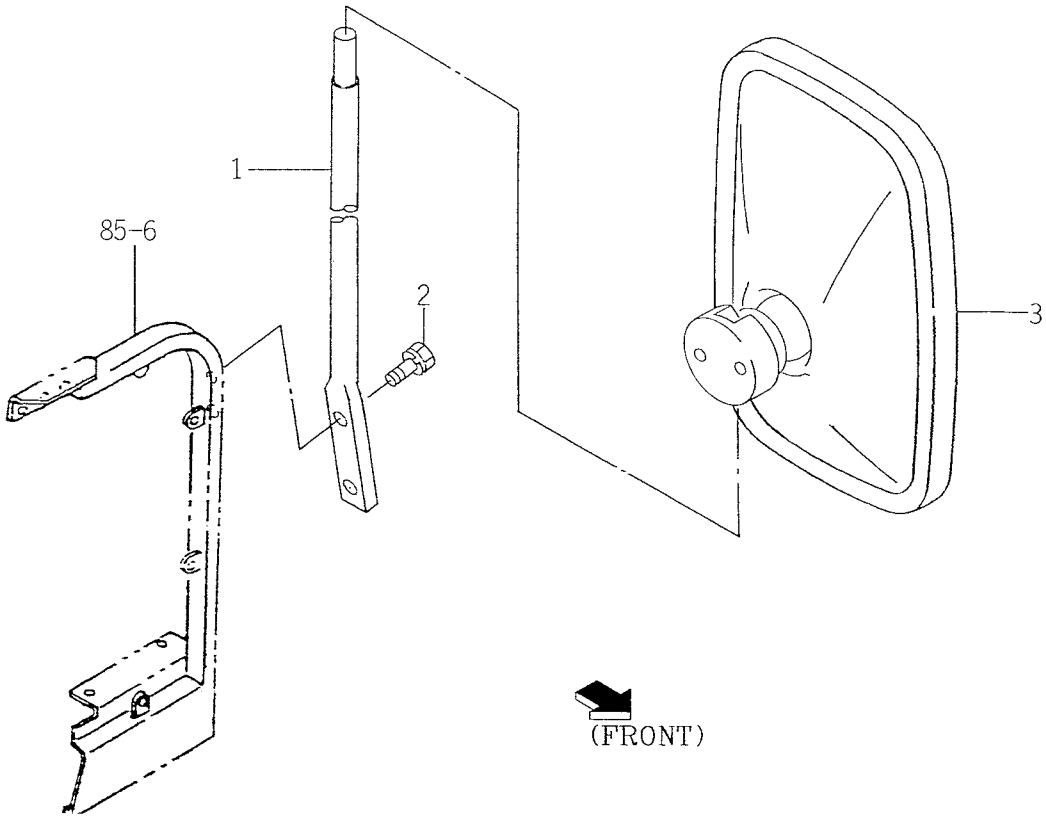

1674-619

KEY	PART CODE	DESCRIPTION	SPC	TYPE OF MODEL TK538H		ITC	COL	GRP	REMARKS
1	1600-619-001-10	STAY, MIRROR	*	1					
2	V211-260-802-00	BOLT, SEMS (S)	*	2					
3	1674-619-300-10	MIRROR ASSY	*	1					

FIG. 79 FRONT MOUNT SYSTEM (R TYPE)

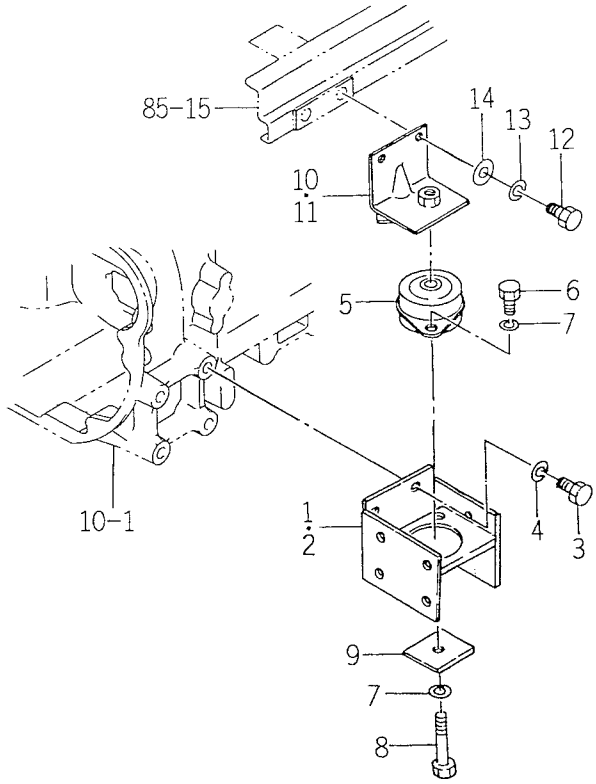

1640-625

KEY	PART CODE	DESCRIPTION	SPC	TYPE OF MODEL TK538H		ITC	COL	GRP	REMARKS
1	1594-625-500-00	BRACKET/LH COMP	*	1					
2	1594-625-510-00	BRACKET/RH COMP	*	1					
3	V201-461-403-20	BOLT/M14X32	*	8					
4	V401-160-014-00	WASHER, SP/M14	*	8					
5	1596-625-001-00	INSULATOR	*	2					
6	V201-461-202-00	BOLT/M12X20	*	4					
7	V401-160-012-00	WASHER, SP/M12	*	6					
8	V201-461-207-50	BOLT/M12X75	*	2					
9	1596-625-003-00	PLATE/I75X75	*	2					
10	1594-625-220-10	PLATE/LH COMP	*	1					
11	1594-625-230-10	PLATE/RH COMP	*	1					
12	V201-461-002-50	BOLT/M10X25	*	4					
13	V401-160-010-00	WASHER, SP/M10	*	4					
14	V411-260-010-00	WASHER/M10	*	4					

FIG. 80 FRONT MOUNT SYSTEM (EXCEPT C, R TYPE)

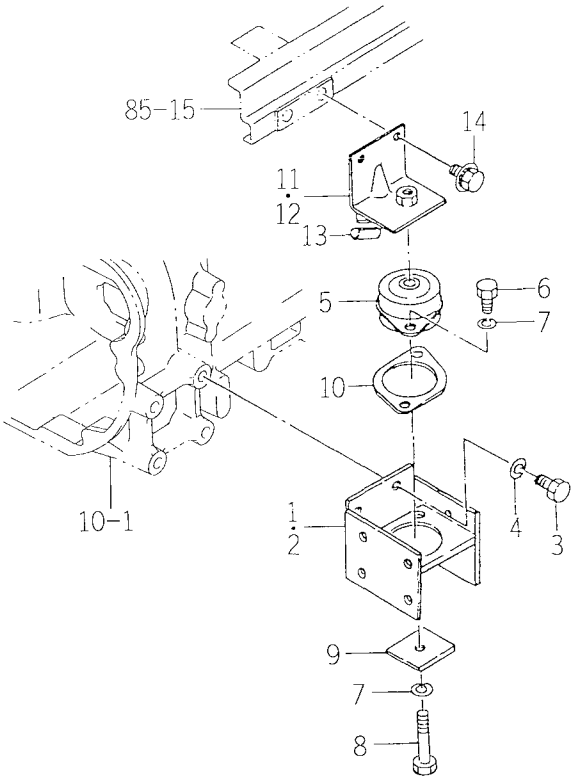

1594-625A

KEY	PART CODE	DESCRIPTION	SPC	TYPE OF MODEL TK538H		ITC	COL	GRP	REMARKS
1	1594-625-500-00	BRACKET/LH COMP	*	1					
2	1594-625-510-00	BRACKET/RH COMP	*	1					
3	V201-361-403-00	BOLT/M14X30	*	8					
4	V401-160-014-00	WASHER, SP/M14	*	8					
5	1596-625-001-00	INSULATOR	*	2					
6	V201-361-202-00	BOLT/M12X20	*	4					
7	V401-160-012-00	WASHER, SP/M12	*	6					
8	V201-461-207-50	BOLT/M12X75	*	2					
9	1596-625-003-00	PLATE/I75X75	*	2					
10	1594-625-001-00	PLATE	*	2					
11	1594-625-220-10	PLATE/LH COMP	*	1					
12	1594-625-230-10	PLATE/RH COMP	*	1					
13	1594-625-002-00	INSULATOR	*	2					
14	V211-661-002-00	BOLT/M10X20	*	4					

FIG. 81 FRONT MOUNT SYSTEM (C TYPE)

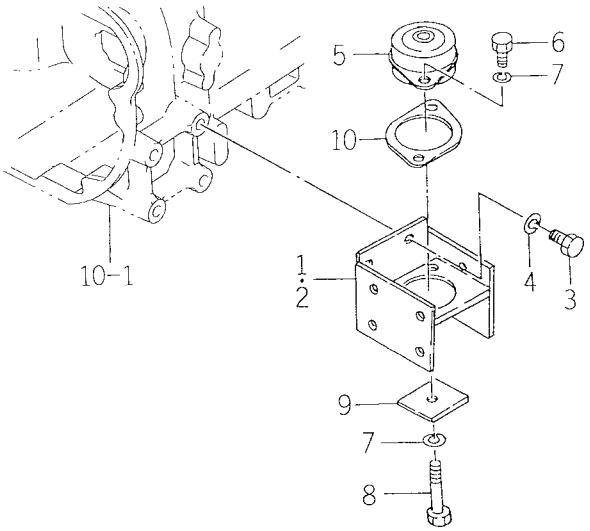

1594-625K

KEY	PART CODE	DESCRIPTION	SPC	TYPE OF MODEL TK538H		ITC	COL	GRP	REMARKS
1	1594-625-500-00	BRACKET/LH COMP	*	1					
2	1594-625-510-00	BRACKET/RH COMP	*	1					
3	V201-361-403-00	BOLT/M14X30	*	8					
4	V401-160-014-00	WASHER, SP/M14	*	8					
5	1596-625-001-00	INSULATOR	*	2					
6	V201-361-202-00	BOLT/M12X20	*	4					
7	V401-160-012-00	WASHER, SP/M12	*	6					
8	V201-461-207-50	BOLT/M12X75	*	2					
9	1596-625-003-00	PLATE/I75X75	*	2					
10	1596-625-002-00	PLATE	*	2					

FIG. 82 REAR MOUNT SYSTEM (EXCEPT C, R TYPE)

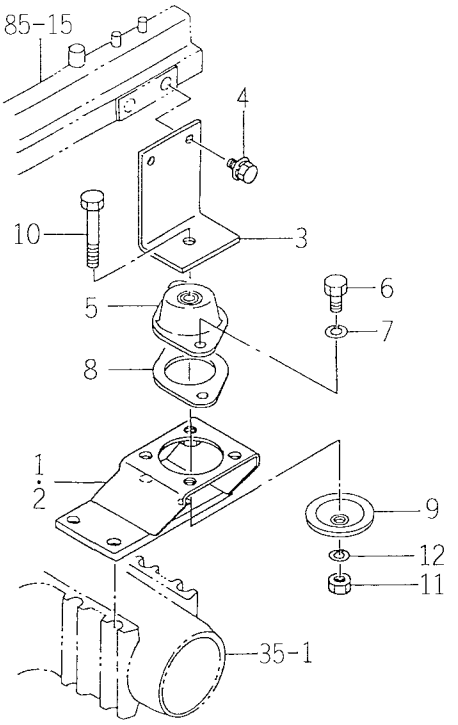

1594-626

KEY	PART CODE	DESCRIPTION	SPC	TYPE OF MODEL TK538H		ITC	COL	GRP	REMARKS
1	1560-626-320-00	BRACKET COMP	*	1					
2	1560-626-330-00	BRACKET COMP	*	1					
3	1561-626-001-00	PLATE/90X127	*	2					
4	V211-661-002-00	BOLT/M10X20	*	4					
5	1596-625-001-00	INSULATOR	*	2					
6	V201-361-202-00	BOLT/M12X20	*	4					
7	V401-160-012-00	WASHER, SP/M12	*	4					
8	1594-625-001-00	PLATE	*	2					
9	1427-117-001-00	WASHER/13X50X3	*	2					
10	V201-461-207-50	BOLT/M12X75	*	2					
11	V304-260-012-00	NUT/M12	*	2					
12	V401-160-012-00	WASHER, SP/M12	*	2					

FIG. 83 REAR MOUNT SYSTEM (R TYPE)

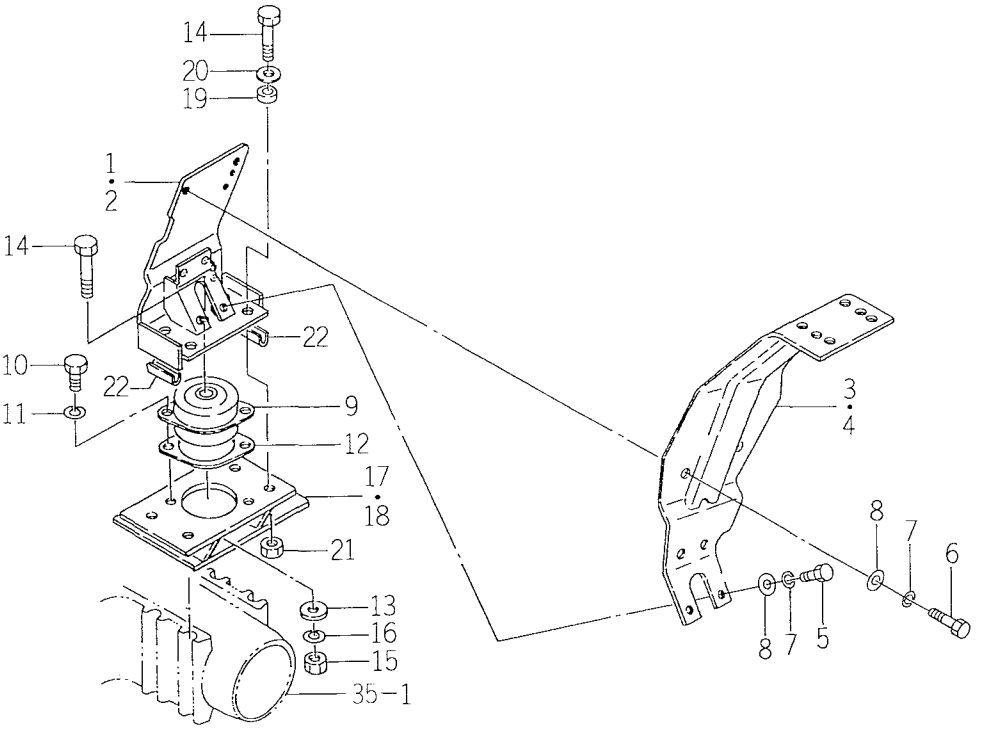

1640-626B

KEY	PART CODE	DESCRIPTION	SPC	TYPE OF MODEL TK538H		ITC	COL	GRP	REMARKS
1	1640-626-200-10	BRACKET/REAR/LH COMP	*	1					
2	1640-626-230-10	BRACKET/REAR/RH COMP	*	1					
3	1640-626-210-10	FENDER/SAV/LH COMP	*	1			4G		
4	1640-626-220-10	FENDER/SAV/RH COMP	*	1			4G		
5	V201-461-003-50	BOLT/M10X35	*	8					
6	V201-461-006-00	BOLT/M10X60	*	4					
7	V401-160-010-00	WASHER, SP/M10	*	12					
8	V411-260-010-00	WASHER/M10	*	12					
9	1596-625-001-00	INSULATOR	*	2					
10	V201-461-202-00	BOLT/M12X20	*	4					
11	V401-160-012-00	WASHER, SP/M12	*	4					
12	1594-625-001-00	PLATE	*	2					
13	1427-117-001-00	WASHER/13X50X3	*	2					
14	V201-461-207-50	BOLT/M12X75	*	10					
15	1640-626-001-00	NUT	*	2					
16	V401-160-012-00	WASHER, SP/M12	*	2					
17	1594-715-270-00	BRACKET/REAR/LH	*	1					
18	1594-715-280-00	BRACKET/MOUNT/RH	*	1					
19	1594-715-002-00	INSULATOR	*	8					
20	1427-431-003-00	WASHER/13X32X3	*	8					
21	1640-626-001-00	NUT	*	8					
22	1594-625-002-00	INSULATOR	*	4					

FIG. 84 REAR MOUNT SYSTEM (C TYPE)

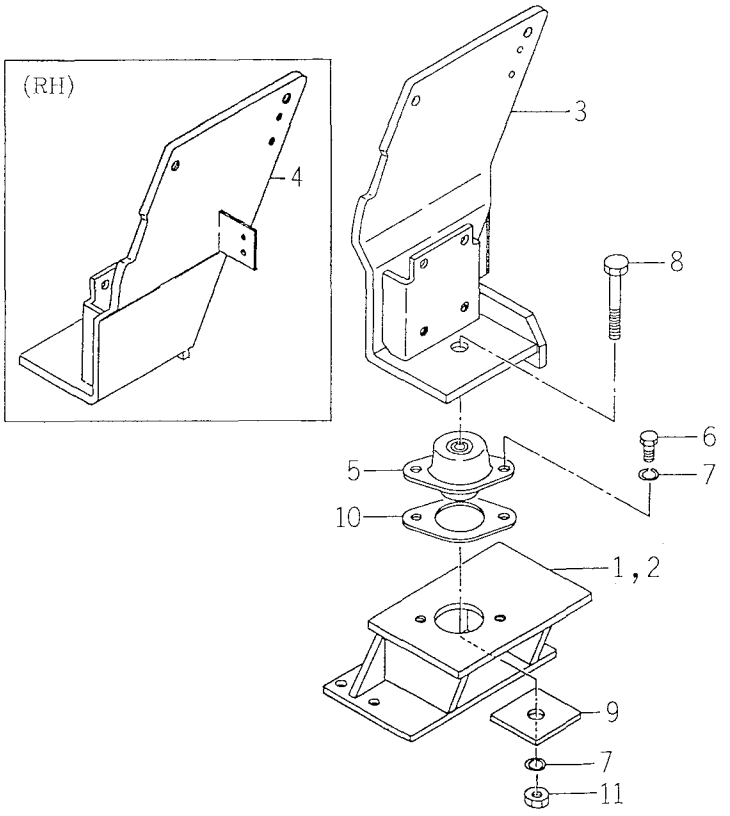

1594-626K

KEY	PART CODE	DESCRIPTION	SPC	TYPE OF MODEL TK538H		ITC	COL	GRP	REMARKS
1	1594-626-520-00	BRACKET/MOUNT COMP	*	1					
2	1594-626-530-00	BRACKET/MOUNT COMP	*	1					
3	1594-626-500-10	BRACKET/REAR/LH COMP	*	1					
4	1594-626-510-10	BRACKET/REAR/RH COMP	*	1					
5	1596-625-001-00	INSULATOR	*	2					
6	V201-361-202-00	BOLT/M12X20	*	4					
7	V401-160-012-00	WASHER, SP/M12	*	6					
8	V201-461-207-50	BOLT/M12X75	*	2					
9	1596-625-003-00	PLATE/I75X75	*	2					
10	1596-625-002-00	PLATE	*	2					
11	V304-460-012-00	NUT/M12	*	2					

FIG. 85 FLOOR SYSTEM (EXCEPT C TYPE)

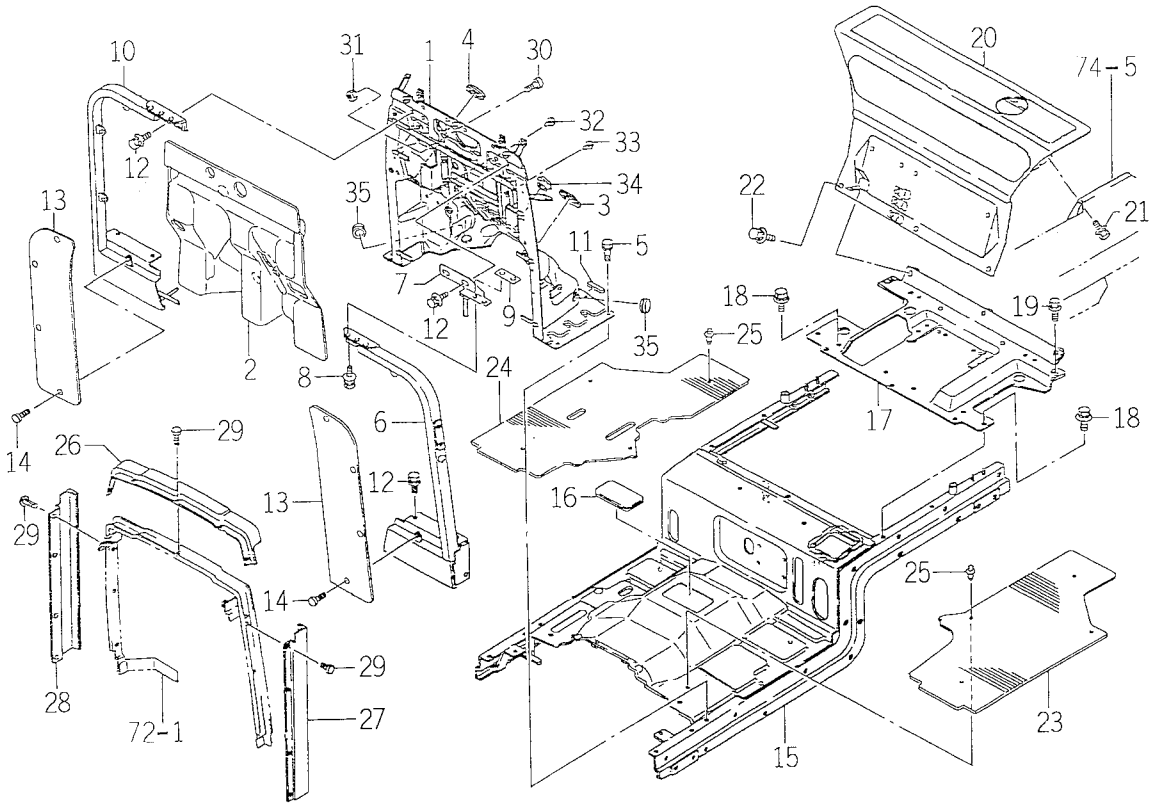

1674-630L

KEY	PART CODE	DESCRIPTION	SPC	TYPE OF MODEL TK538H		ITC	COL	GRP	REMARKS
1	1673-630-200-50	PANEL/DASH COMP	*	1			5I		
2	1674-630-004-00	INSULATOR	*	1					
3	1560-630-020-50	INSULATOR	*	1					
4	1560-630-021-50	INSULATOR	*	1					
5	V211-260-802-00	BOLT, SEMS (S)	*	10					
6	1594-630-220-40	FRAME/LH COMP	*	1			4G		
7	1641-630-300-00	HOLDER/FRAME COMP	*	1					
8	V211-360-802-00	BOLT(SP) M8X20	*	2					
9	1641-630-001-00	PLATE/I/19X50	*	1					
10	1594-630-230-32	FRAME. RH COMP	*	1			4G		
11	1564-630-012-00	INSULATOR	*	1					
12	V211-360-801-60	BOLT, SEMS (SP)	*	8					
13	1560-630-011-20	INSULATOR	*	2					
14	1527-604-002-00	CLIP(B)	*	8					
15	1674-630-510-00	PANEL/FLOOR/HST COMP	*	1			5I		
16	1674-630-053-00	CAP	*	1					
17	1594-630-200-61	PANEL/BACK COMP	*	1			5I		
18	V211-360-801-60	BOLT, SEMS (SP)	*	5					
19	V211-360-803-50	BOLT W SEMS M8X35	*	2					
20	1561-630-200-20	COVER/TANK COMP	*	1			4G		
21	V211-660-801-60	BOLT/M8X16	*	4					
22	V211-360-801-60	BOLT, SEMS (SP)	*	3					
23	1641-630-051-00	MAT/LH	*	1					
24	1674-630-051-00	MAT/RH	*	1					
25	1690-601-056-00	RIVET/PUSH/07	*	8					
26	1560-630-009-50	INSULATOR	*	1					
27	1594-630-001-20	INSULATOR/LH	*	1					
28	1594-630-002-20	INSULATOR/RH	*	1					
29	1527-604-002-00	CLIP(B)	*	13					
30	1421-602-005-10	CUSHION, B/ RUBBER	*	2					

FIG. 85 FLOOR SYSTEM (EXCEPT C TYPE)

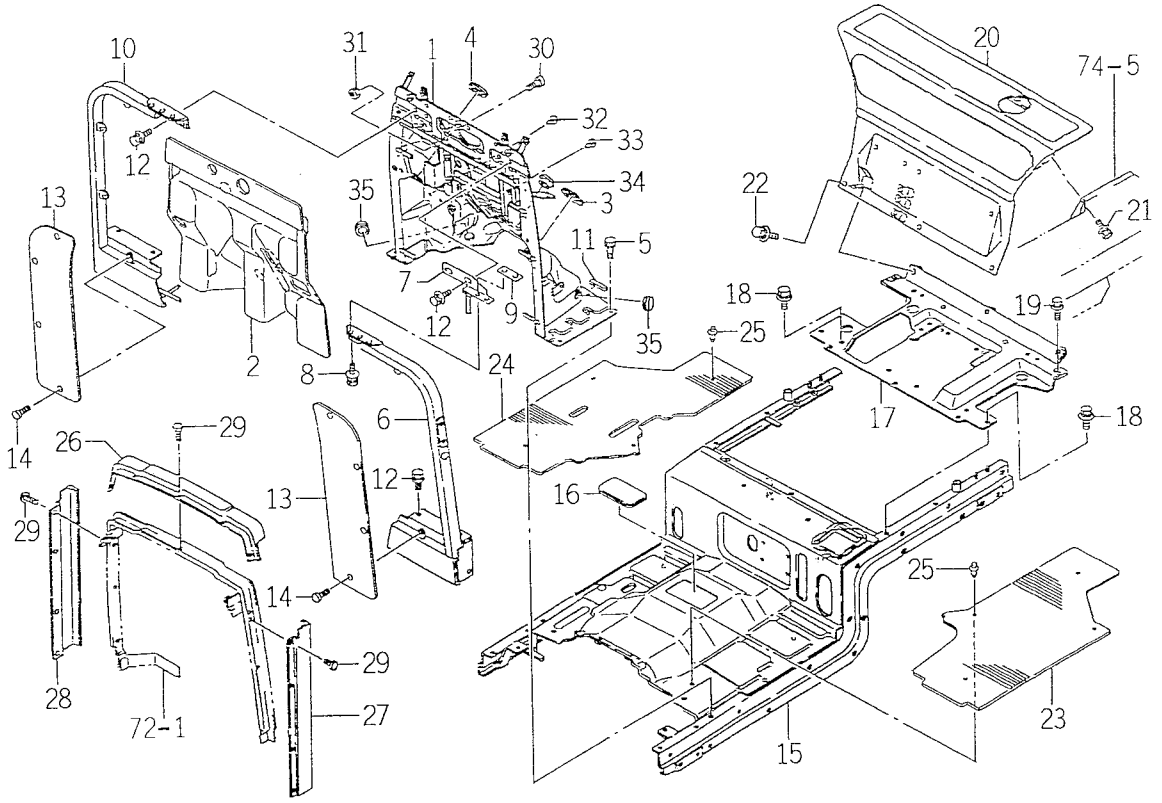

1674-630L

KEY	PART CODE	DESCRIPTION	SPC	TYPE OF MODEL TK538H		ITC	COL	GRP	REMARKS
31	V304-260-008-00	NUT/M 8	*	2					
32	1432-616-002-00	RUBBER, CUSHION	*	2					
33	1432-616-002-00	RUBBER, CUSHION	*	1					
34	1560-630-029-00	CAP/30	*	2					
35	1432-651-021-00	CAP, RUBBER (20)	*	2					

FIG. 86 FLOOR SYSTEM (C TYPE)

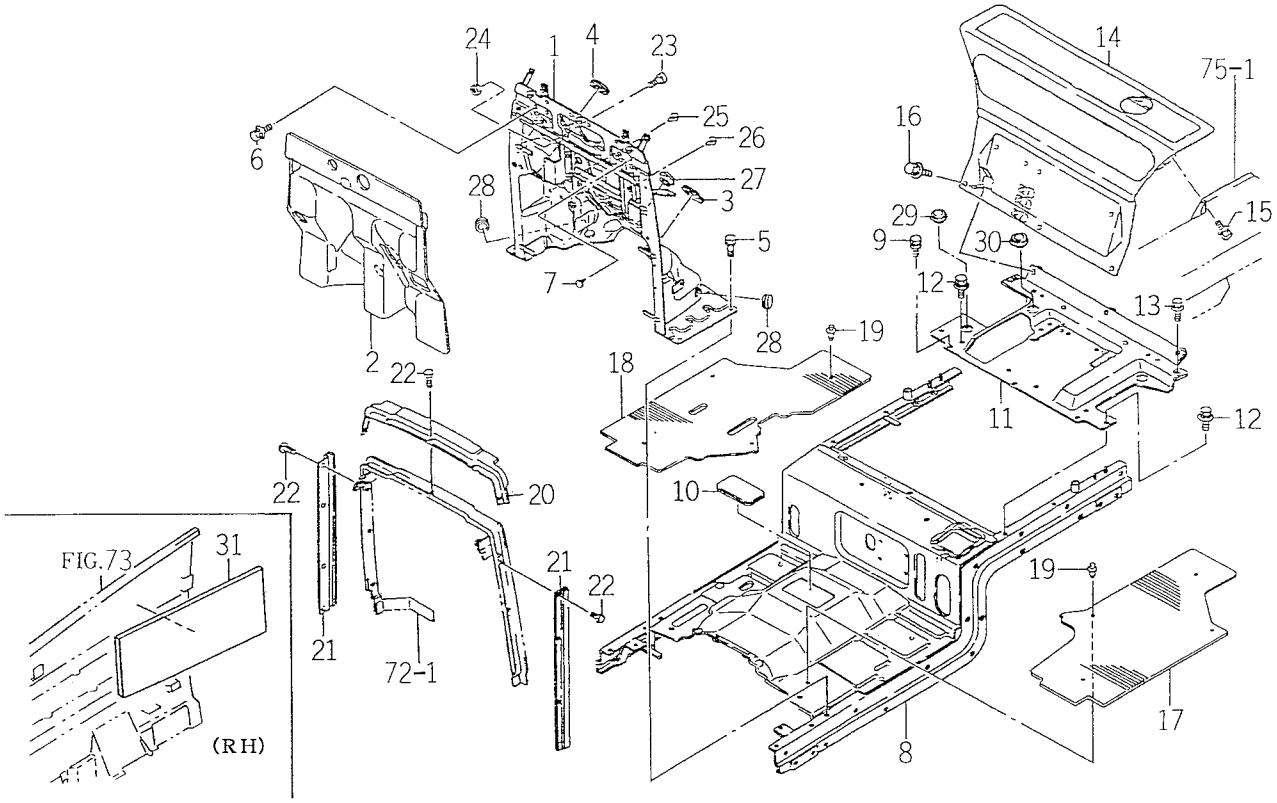

1674-630M

KEY	PART CODE	DESCRIPTION	SPC	TYPE OF MODEL TK538H		ITC	COL	GRP	REMARKS
1	1673-630-200-50	PANEL/DASH COMP	*	1			5I		
2	1674-630-004-00	INSULATOR	*	1					
3	1560-630-020-50	INSULATOR	*	1					
4	1560-630-021-50	INSULATOR	*	1					
5	V211-260-802-00	BOLT, SEMS (S)	*	10					
6	V211-360-801-60	BOLT, SEMS (SP)	*	6					
7	1434-611-002-10	CAP(M8)	*	4					
8	1674-630-510-00	PANEL/FLOOR/HST COMP	*	1			5I		
9	V211-360-801-60	BOLT, SEMS (SP)	*	4					
10	1674-630-053-00	CAP	*	1					
11	1594-630-200-61	PANEL/BACK COMP	*	1			5I		
12	V211-360-801-60	BOLT, SEMS (SP)	*	5					
13	V211-360-803-50	BOLT W SEMS M8X35	*	2					
14	1561-630-200-20	COVER/TANK COMP	*	1			4G		
15	V211-360-801-60	BOLT, SEMS (SP)	*	4					
16	V211-360-801-60	BOLT, SEMS (SP)	*	3					
17	1674-630-055-00	MAT/LH/C	*	1					
18	1674-630-056-00	MAT/RH/C	*	1					
19	1690-601-056-00	RIVET/PUSH/07	*	8					
20	1560-630-103-00	INSULATOR	*	1					
21	1560-630-022-40	INSULATOR	*	2					
22	1527-604-002-00	CLIP(B)	*	13					
23	1421-602-005-10	CUSHION, B/ RUBBER	*	2					
24	V304-260-008-00	NUT/M 8	*	2					
25	1432-616-002-00	RUBBER, CUSHION	*	2					
26	1432-616-002-00	RUBBER, CUSHION	*	1					
27	1560-630-029-00	CAP/30	*	2					
28	1432-651-021-00	CAP, RUBBER (20)	*	2					
29	1560-630-029-00	CAP/30	*	3					
30	1560-630-031-00	CAP/35	*	1					

FIG. 86 FLOOR SYSTEM (C TYPE)

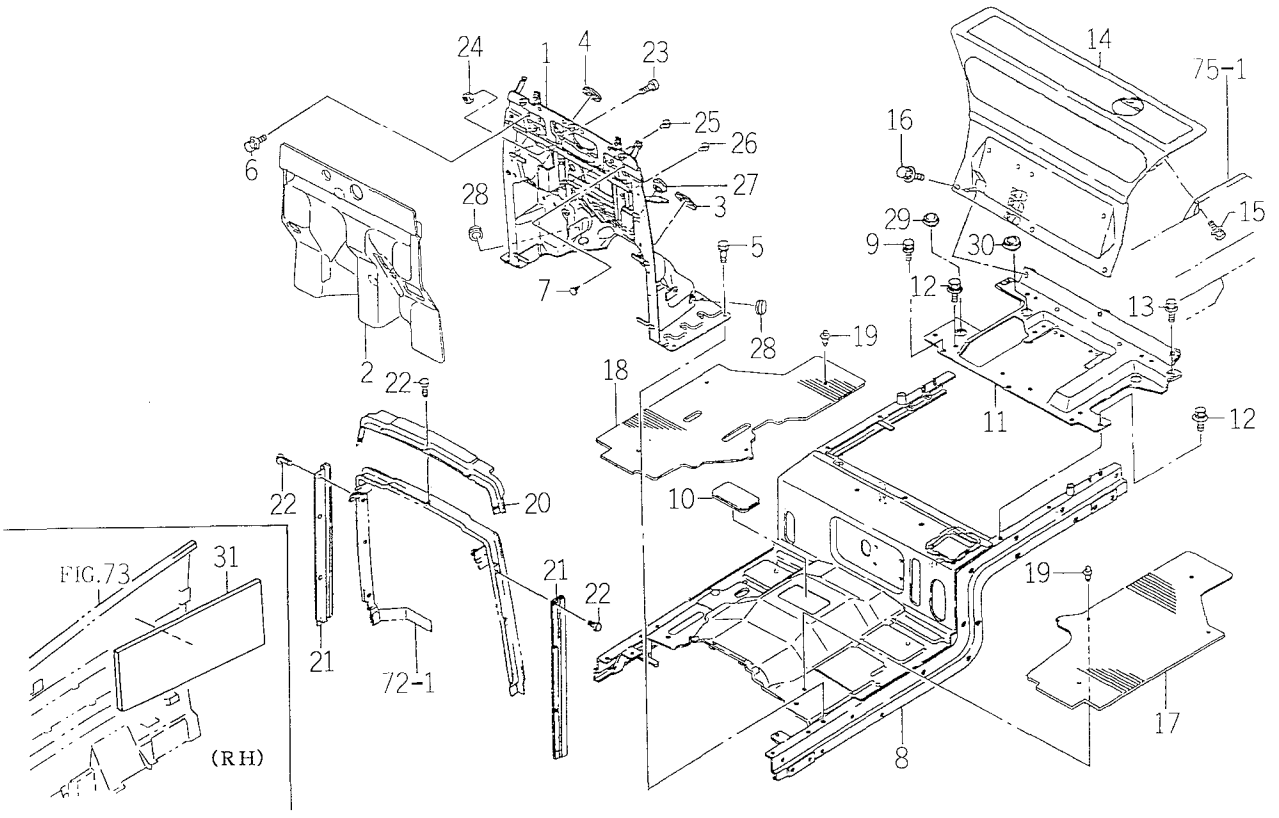

1674-630M

KEY	PART CODE	DESCRIPTION	SPC	TYPE OF MODEL TK538H		ITC	COL	GRP	REMARKS
31	1674-630-002-00	INSULATOR	*	1					

FIG. 87 PEDAL (HST) SYSTEM

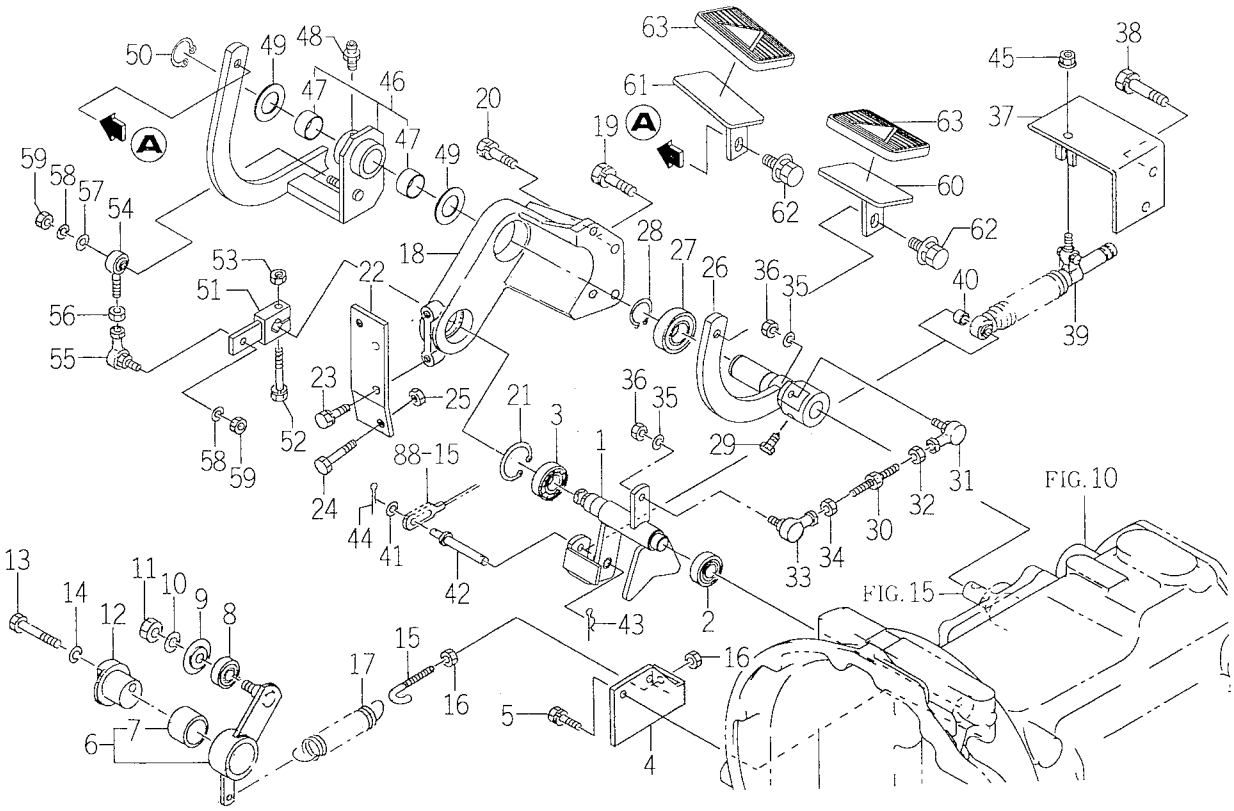

1674-640

KEY	PART CODE	DESCRIPTION	SPC	TYPE OF MODEL TK538H		ITC	COL	GRP	REMARKS
1	1646-640-210-20	SHAFT/COUNTER COMP	*	1					
2	V600-150-600-30	BEARING, RB/6003SS	*	1					
3	V600-150-600-40	BEARING, RB/6004SS	*	1					
4	1646-640-004-10	PLATE/NEUTRAL	*	1					
5	V211-560-802-00	BOLT/M8X20	*	2					
6	1646-640-220-10	ARM/NEUTRAL ASSY	*	1					
7	1646-640-221-00	BUSH/32X36X25	*	1					
8	V600-150-600-20	BEARING, RB/6002SS	*	1					
9	1689-271-006-00	WASHER/38X12X2	*	1					
10	V401-160-012-00	WASHER, SP/M12	*	1					
11	V304-260-012-00	NUT/M12	*	1					
12	1646-640-006-00	PIN/ADJUST	*	1					
13	V201-361-005-00	BOLT/M10X50	*	1					
14	V401-160-010-00	WASHER, SP/M10	*	1					
15	2146-123-002-00	HOOK/TENSION	*	1					
16	V304-260-008-00	NUT/M 8	*	2					
17	4322-131-006-10	SPRING/SAFTY/CLUTCH	*	1					
18	1674-640-001-00	METAL/LINK	*	1					
19	V211-561-002-50	BOLT/M10X25	*	2					
20	V211-560-803-50	BOLT/S	*	2					
21	V705-140-042-00	RING, SNAP/42 C	*	1					
22	1646-640-012-10	PLATE/STOPPER	*	1					
23	V211-560-802-00	BOLT/M8X20	*	2					
24	V201-261-004-00	BOLT/M10X40	*	2					
25	V304-260-010-00	NUT	*	2					
26	1646-640-270-10	ARM/HST/F COMP	*	1					
27	V600-150-600-50	BEARING, RB/6005SS	*	1					
28	V704-140-025-00	RING, SNAP/25 C	*	1					
29	1646-226-053-00	BOLT/SM/M10X23	*	1					
30	1646-640-002-00	ROD/M08X64	*	1					

FIG. 87 PEDAL (HST) SYSTEM

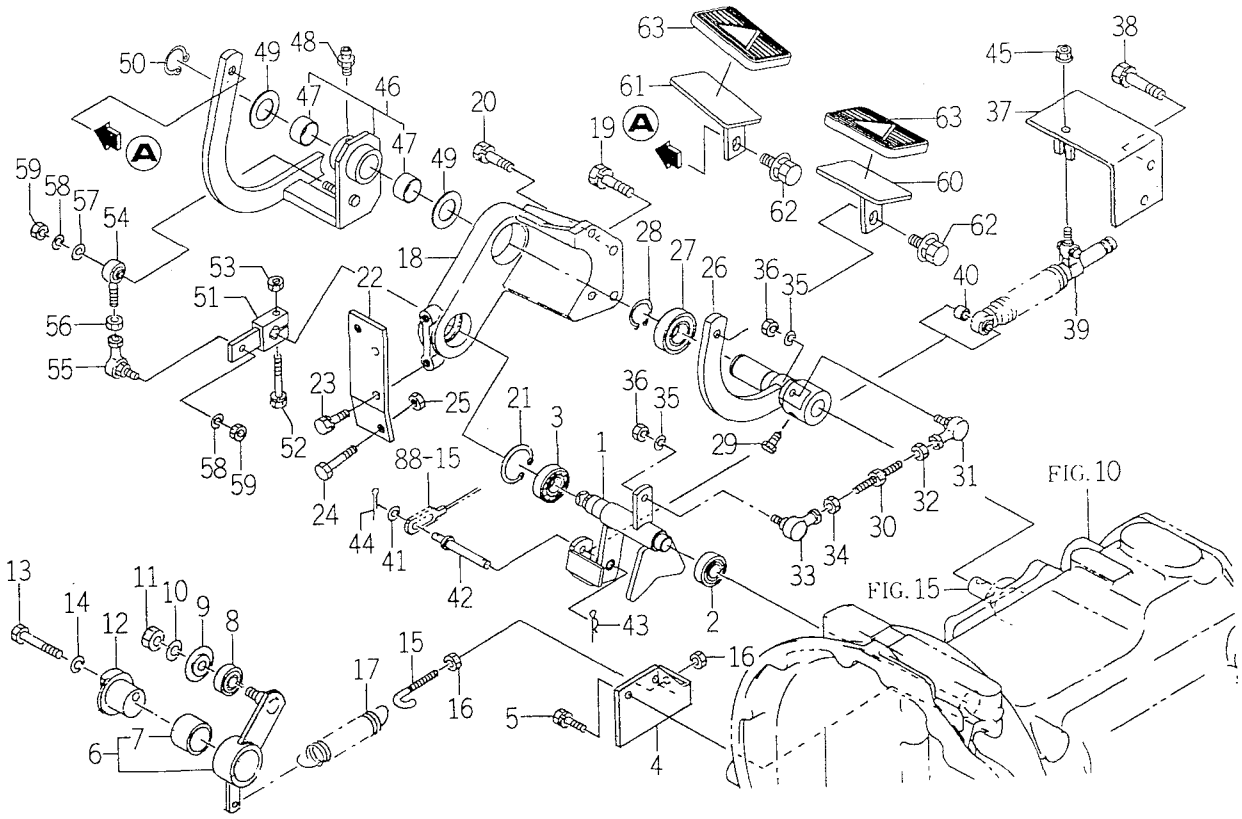

1674-640

KEY	PART CODE	DESCRIPTION	SPC	TYPE OF MODEL TK538H		ITC	COL	GRP	REMARKS
31	1560-695-021-00	JOINT BALL M08RH	*	1					
32	V304-460-008-00	NUT/M8	*	1					
33	1560-695-022-00	JOINT BALL M08LH	*	1					
34	1560-132-007-30	NUT/M8	*	1					
35	V401-160-008-00	WASHER, SP/M 8	*	2					
36	V304-260-008-00	NUT/M 8	*	2					
37	1641-640-240-00	PLATE/HOLDER COMP	*	1					
38	V211-561-002-00	BOLT/M10X20	*	2					
39	1646-640-580-00	DAMPER/OIL ASSY	*	1					
40	1646-640-008-10	COLLAR/09X14X09	*	1					
41	3207-102-103-00	WASHER	*	1					
42	1646-640-009-10	PIN/08X52	*	1					
43	1301-411-005-00	PIN, HAIR	*	1					
44	V500-162-001-50	PIN, SPLIT/2 X15	*	1					
45	V362-260-008-00	NUT/WASHER	*	1					
46	1674-640-200-00	ARM/HST/R ASSY	*	1					
47	8654-203-201-00	BUSH/25X28X15	*	2					
48	V760-150-000-00	NIPPLE, GREASE	*	1					
49	1646-640-001-00	WASHER/25X43X02	*	2					
50	V704-140-025-00	RING, SNAP/25 C	*	1					
51	1646-640-330-00	PIVOT/COUNTER COMP	*	1					
52	V211-560-804-50	BOLT, SEMS/M8X45 7T	*	1					
53	V304-260-008-00	NUT/M 8	*	1					
54	1646-640-003-00	JOINT/BALL/M08	*	1					
55	1560-695-021-00	JOINT BALL M08RH	*	1					
56	V304-260-008-00	NUT/M 8	*	1					
57	6209-500-005-00	WASHER/08X15.5X1.6	*	1					
58	V401-160-008-00	WASHER, SP/M 8	*	2					
59	V304-260-008-00	NUT/M 8	*	2					
60	1674-640-220-00	PEDAL/HST/L COMP	*	1					

FIG. 87 PEDAL (HST) SYSTEM

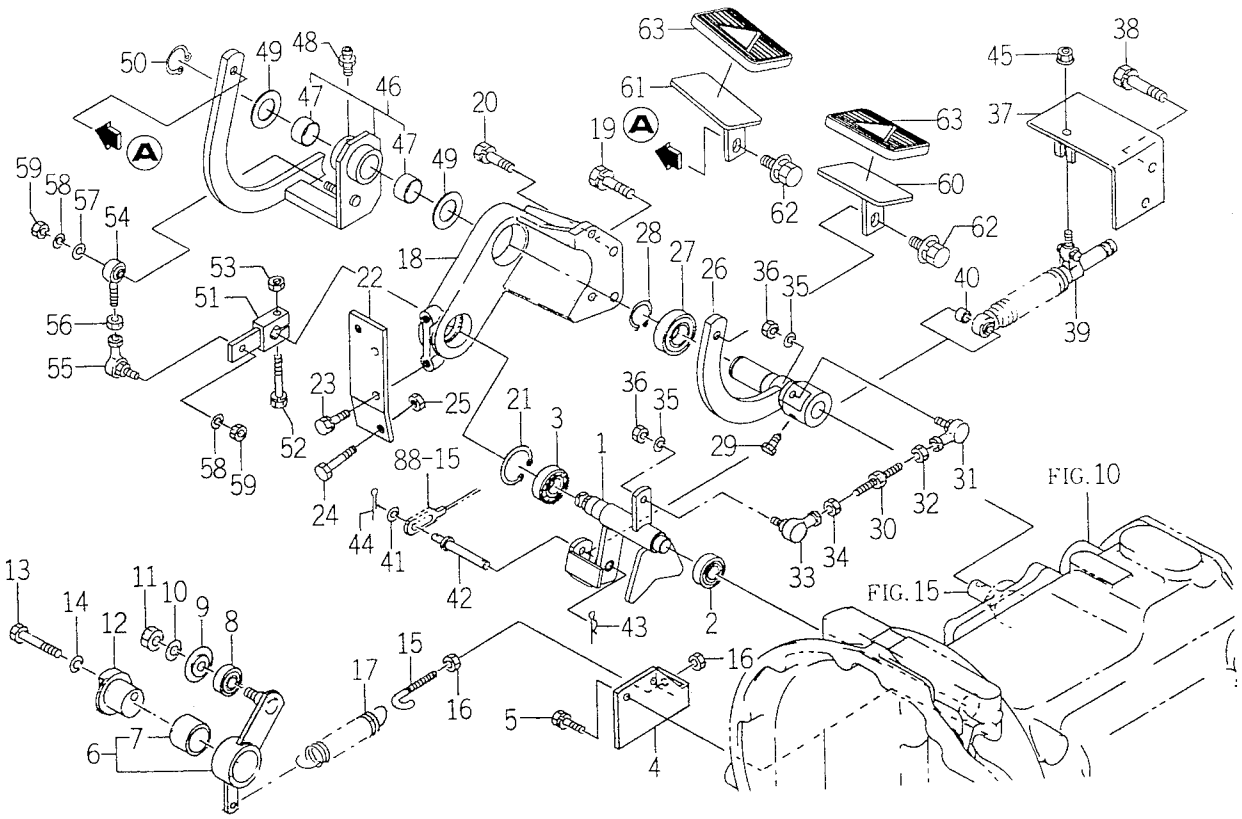

1674-640

KEY	PART CODE	DESCRIPTION	SPC	TYPE OF MODEL TK538H		ITC	COL	GRP	REMARKS
61	1674-640-230-00	PEDAL/HST/R COMP	*	1					
62	V211-661-002-00	BOLT/M10X20	*	2					
63	1608-207-014-00	PAD (HST)	*	2					

FIG. 88 CRUISE CONTROL SYSTEM

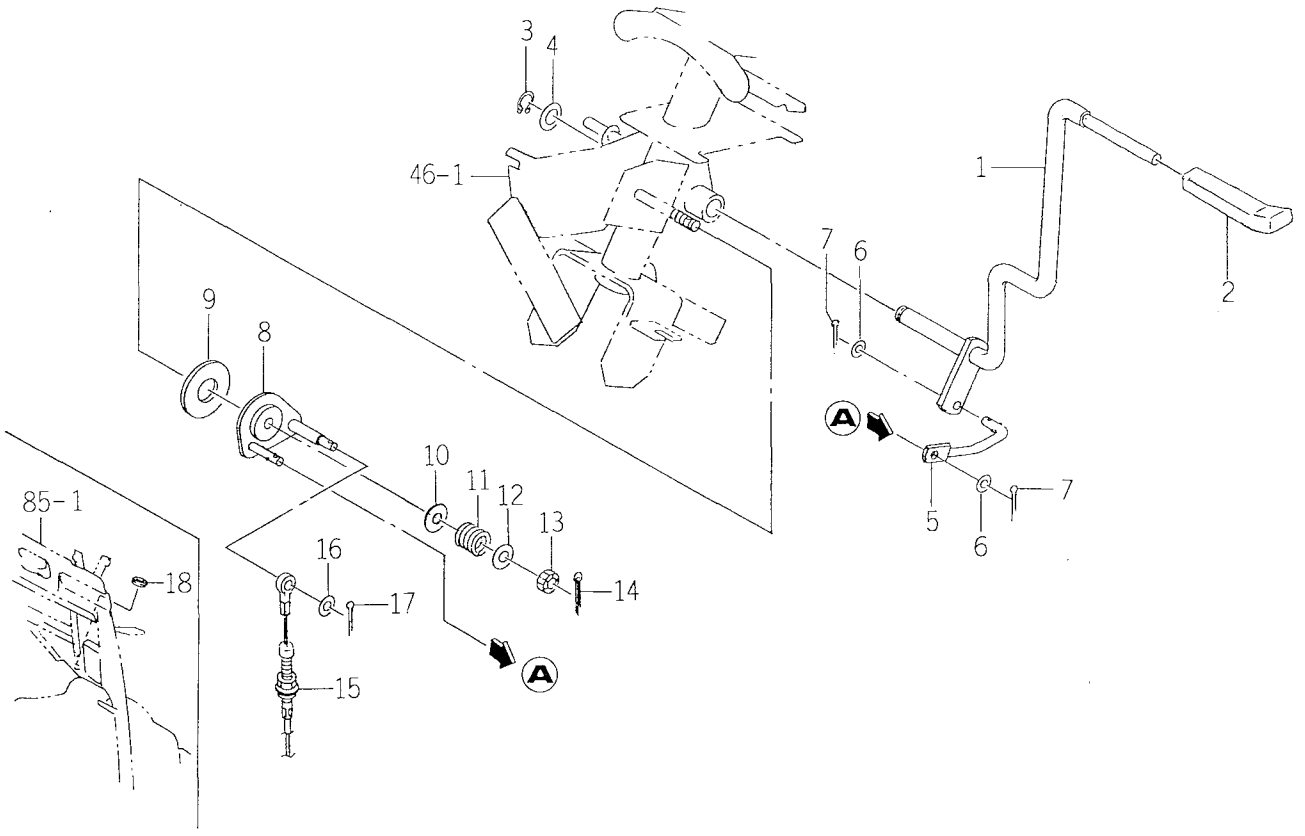

1641-642

KEY	PART CODE	DESCRIPTION	SPC	TYPE OF MODEL TK538H		ITC	COL	GRP	REMARKS
1	1646-642-220-10	LEVER/CRUISE COMP	*	1					
2	1614-117-001-00	GRIP/THROTTLE	*	1					
3	V704-140-014-00	RING, SNAP/14 C	*	1					
4	1427-601-003-00	WASHER/15X24X2	*	1					
5	1646-642-001-00	ROD	*	1					
6	V411-260-008-00	WASHER, PL/M 8	*	2					
7	V500-162-002-00	PIN, SPLIT/2 X20	*	2					
8	1646-642-210-00	PLATE/CRUISE COMP	*	1					
9	1704-116-005-00	FACING	*	1					
10	3610-440-018-00	WASHER	*	1					
11	1704-116-003-10	SPRING/HC024	*	1					
12	V411-260-010-00	WASHER/M10	*	1					
13	V328-261-110-00	NUT/M10X1.25	*	1					
14	V500-162-502-00	PIN, SPLIT/2.5X20	*	1					
15	1641-642-001-00	CABLE/CRUISE	*	1					
16	V411-260-008-00	WASHER, PL/M 8	*	1					
17	V500-162-002-00	PIN, SPLIT/2 X20	*	1					
18	1575-616-005-00	GROMMET/17X21X3	*	1					

FIG. 89 BATTERY (DELKOR) SYSTEM

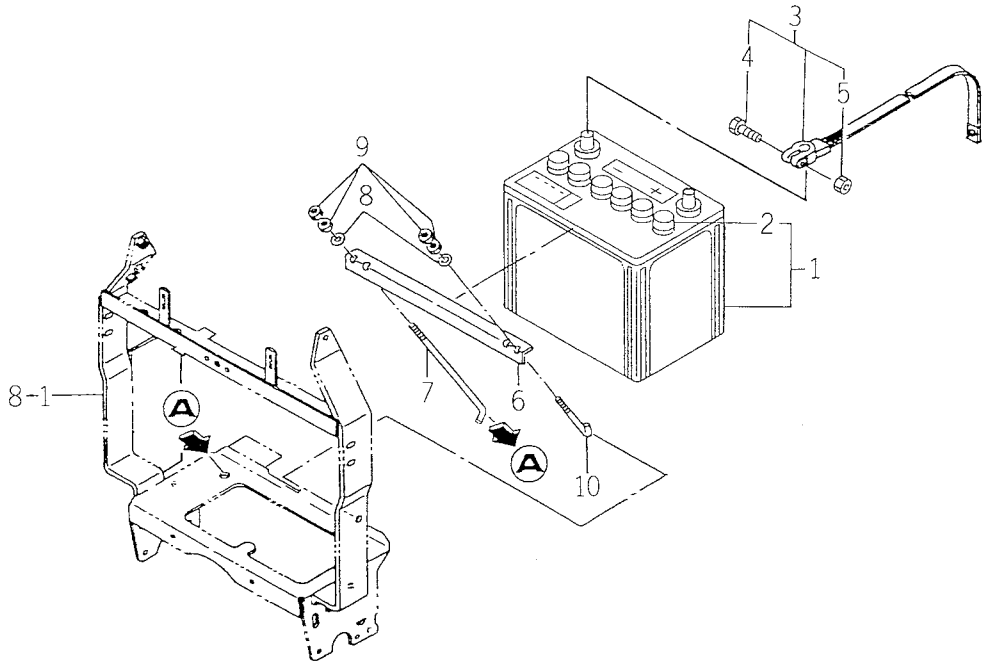

1659-650A

KEY	PART CODE	DESCRIPTION	SPC	TYPE OF MODEL TK538H		ITC	COL	GRP	REMARKS
1	1659-650-200-00	BATTERY/80D26R-MF	*	1					
2	1617-112-213-00	CAP	*	6					
3	1634-650-200-00	STRAP/GROUND ASSY	*	1					
4	1568-650-004-10	BOLT/M08X32	*	1					
5	1568-650-005-10	NUT/M08	*	1					
6	1422-687-001-00	PLATE, BATTERY SET	*	1					
7	1444-621-002-10	BOLT, BATTERY SET	*	1					
8	V411-260-006-00	WASHER / M6	*	2					
9	V301-260-006-00	NUT/M 6	*	4					
10	1427-621-004-00	BOLT, BATTERY SET(B)	*	1					

FIG. 90 HEAD LAMP SYSTEM

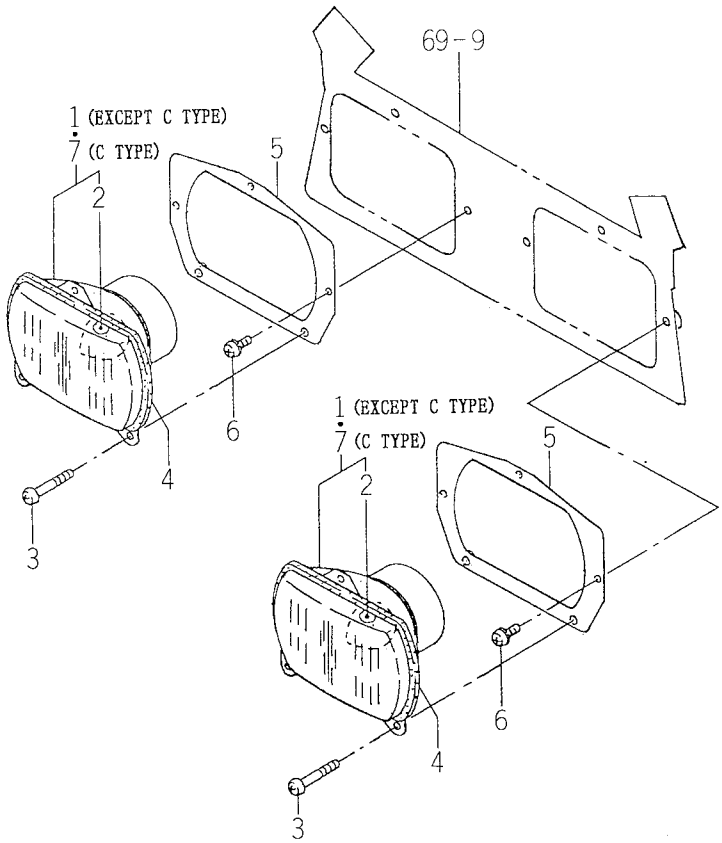

1674-652

KEY	PART CODE	DESCRIPTION	SPC	TYPE OF MODEL TK538H		ITC	COL	GRP	REMARKS
1	1674-652-200-00	LAMP/HEAD ASSY	*	2					
2	1674-652-202-00	BULB/12V/45/40W	*	2					
3	V111-166-003-00	SCREW/M6X30	*	6					
4	1560-601-015-40	SEAL	*	2					
5	1674-652-210-00	HOLDER/LAMP COMP	*	2					
6	V120-266-001-60	SCREW SEEMS/M6X16	*	4					
7	1674-652-220-00	LAMP/HEAD/G ASSY	*	2					

FIG. 91 LAMP SYSTEM (EXCEPT C TYPE)

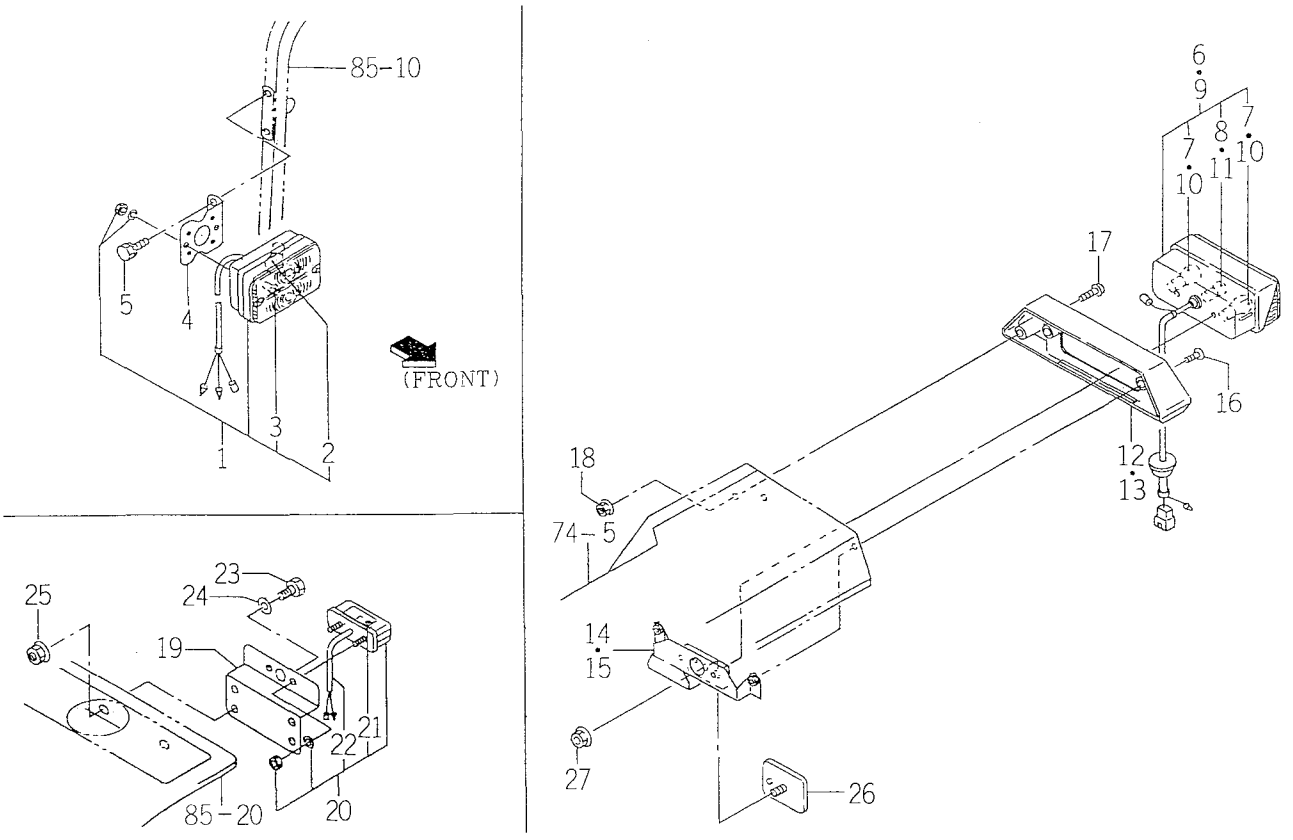

1674-654

KEY	PART CODE	DESCRIPTION	SPC	TYPE OF MODEL TK538H		ITC	COL	GRP	REMARKS
1	1674-654-200-00	LAMP/FRONT SET	*	2					
2	1674-654-211-00	BULB/12V21W	*	2					
3	1674-654-212-00	BULB/12V5W	*	2					
4	1594-654-001-20	BRACKET/LAMP/FRONT	*	2					
5	V211-260-801-60	BOLT, SEMS (S) M8X16	*	2					
6	1674-654-240-00	LAMP/COMBI/REAR/LH	*	1					
7	1674-654-211-00	BULB/12V21W	*	2					
8	1674-654-212-00	BULB/12V5W	*	1					
9	1674-654-260-00	LAMP/COMBI/REAR/RH	*	1					
10	1674-654-211-00	BULB/12V21W	*	2					
11	1674-654-212-00	BULB/12V5W	*	1					
12	1674-606-001-00	BRACKET/LH	*	1					
13	1674-606-002-00	BRACKET/RH	*	1					
14	1674-606-220-30	STAY/LAMP/REAR/LH	*	1					
15	1674-606-330-10	STAY/LAMP/REAR/LH	*	1					
16	V112-165-002-50	SCREW/M5X25	*	4					
17	V111-165-001-00	SCREW/M5X10	*	2					
18	V360-260-005-00	NUT/M5	*	2					
19	1594-654-261-10	BRACKET/LAMP/NUMBER	*	1					
20	1674-654-270-00	LAMP/NUMBERPLAT SET	*	1					
21	1674-654-271-00	BULB/12V/5W	*	1					
22	1674-654-272-00	HARNESS/LAMP	*	1					
23	V201-260-801-60	BOLT/M 8X16	*	2					
24	V411-260-008-00	WASHER, PL/M 8	*	2					
25	V363-260-008-00	NUT, LOCK/M8	*	2					
26	1600-622-321-00	REFLECTOR	*	2					
27	V361-260-006-00	NUT	*	2					

FIG. 92 LAMP SYSTEM (C TYPE)

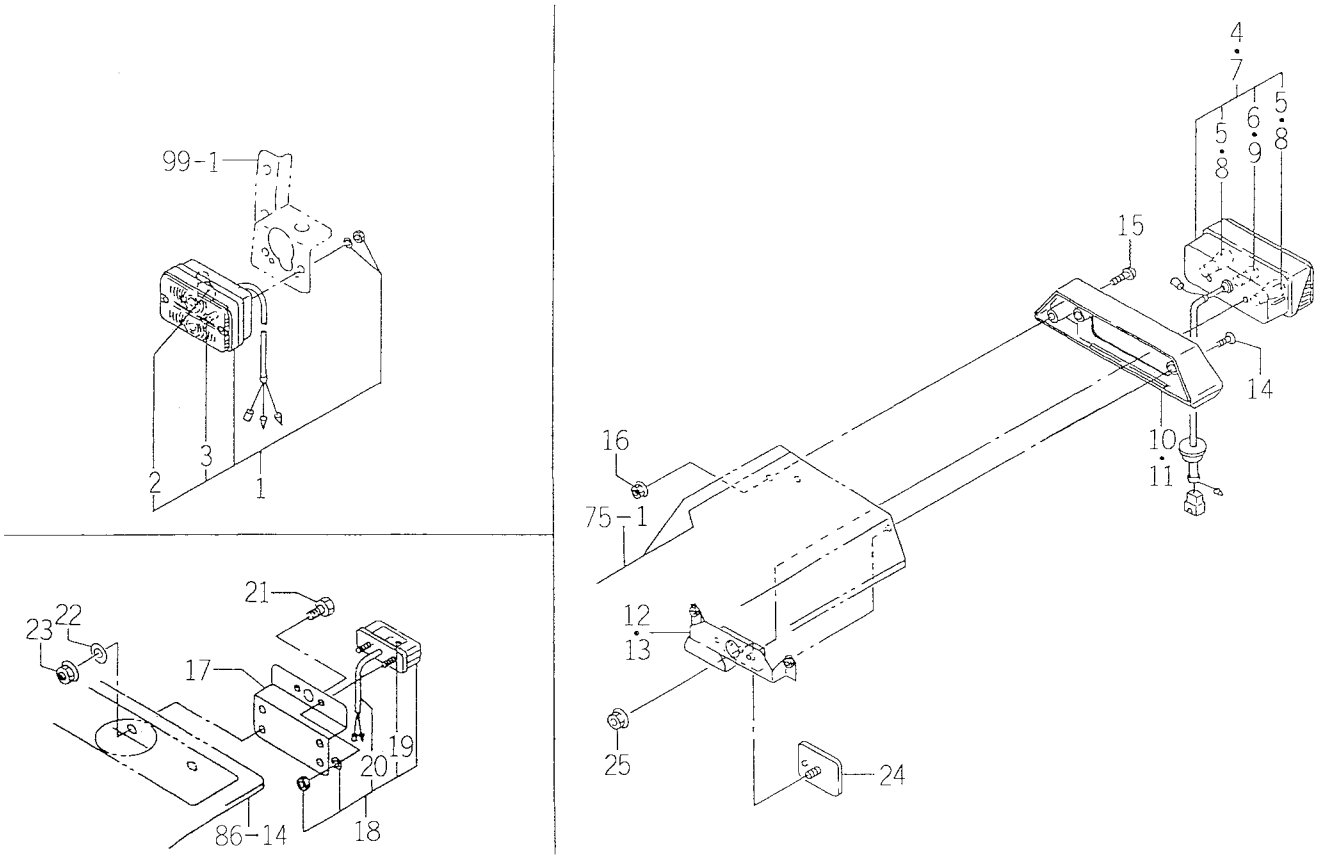

1674-654A

KEY	PART CODE	DESCRIPTION	SPC	TYPE OF MODEL TK538H		ITC	COL	GRP	REMARKS
1	1674-654-200-00	LAMP/FRONT SET	*	2					
2	1674-654-211-00	BULB/12V21W	*	2					
3	1674-654-212-00	BULB/12V5W	*	2					
4	1674-654-240-00	LAMP/COMBI/REAR/LH	*	1					
5	1674-654-211-00	BULB/12V21W	*	2					
6	1674-654-212-00	BULB/12V5W	*	1					
7	1674-654-260-00	LAMP/COMBI/REAR/RH	*	1					
8	1674-654-211-00	BULB/12V21W	*	2					
9	1674-654-212-00	BULB/12V5W	*	1					
10	1674-606-001-00	BRACKET/LH	*	1					
11	1674-606-002-00	BRACKET/RH	*	1					
12	1674-606-220-30	STAY/LAMP/REAR/LH	*	1					
13	1674-606-330-10	STAY/LAMP/REAR/LH	*	1					
14	V112-165-002-50	SCREW/M5X25	*	4					
15	V111-165-001-00	SCREW/M5X10	*	2					
16	V360-260-005-00	NUT/M5	*	2					
17	1594-654-261-10	BRACKET/LAMP/NUMBER	*	1					
18	1674-654-270-00	LAMP/NUMBERPLAT SET	*	1					
19	1674-654-271-00	BULB/12V/5W	*	1					
20	1674-654-272-00	HARNESS/LAMP	*	1					
21	V201-260-801-60	BOLT/M 8X16	*	2					
22	V411-260-008-00	WASHER,PL/M 8	*	2					
23	V363-260-008-00	NUT,LOCK/M8	*	2					
24	1600-622-321-00	REFLECTOR	*	2					
25	V361-260-006-00	NUT	*	2					

FIG. 93 PANEL SYSTEM

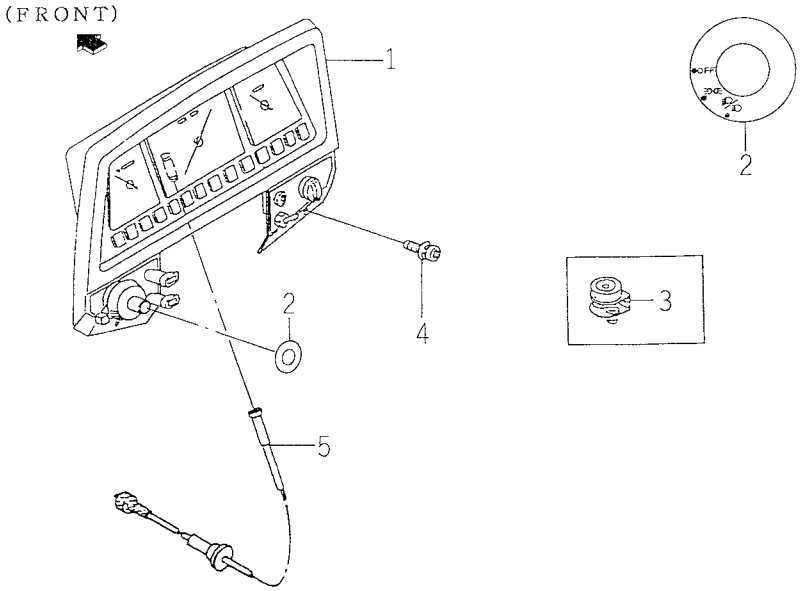

1674-658

KEY	PART CODE	DESCRIPTION	SPC	TYPE OF MODEL TK538H		ITC	COL	GRP	REMARKS
1	1674-658-220-00	PANEL/INSTRUMENT/E	*	1					FIG 150
2	1674-658-001-10	LABEL/CONTROL/SWITCH	*	1					
3	6281-420-001-00	RESISTANCE	*	1					
4	V120-366-001-60	SCREW	*	4					
5	1673-658-400-10	CABLE/METER ASSY	*	1					

FIG. 94 SWITCH SYSTEM

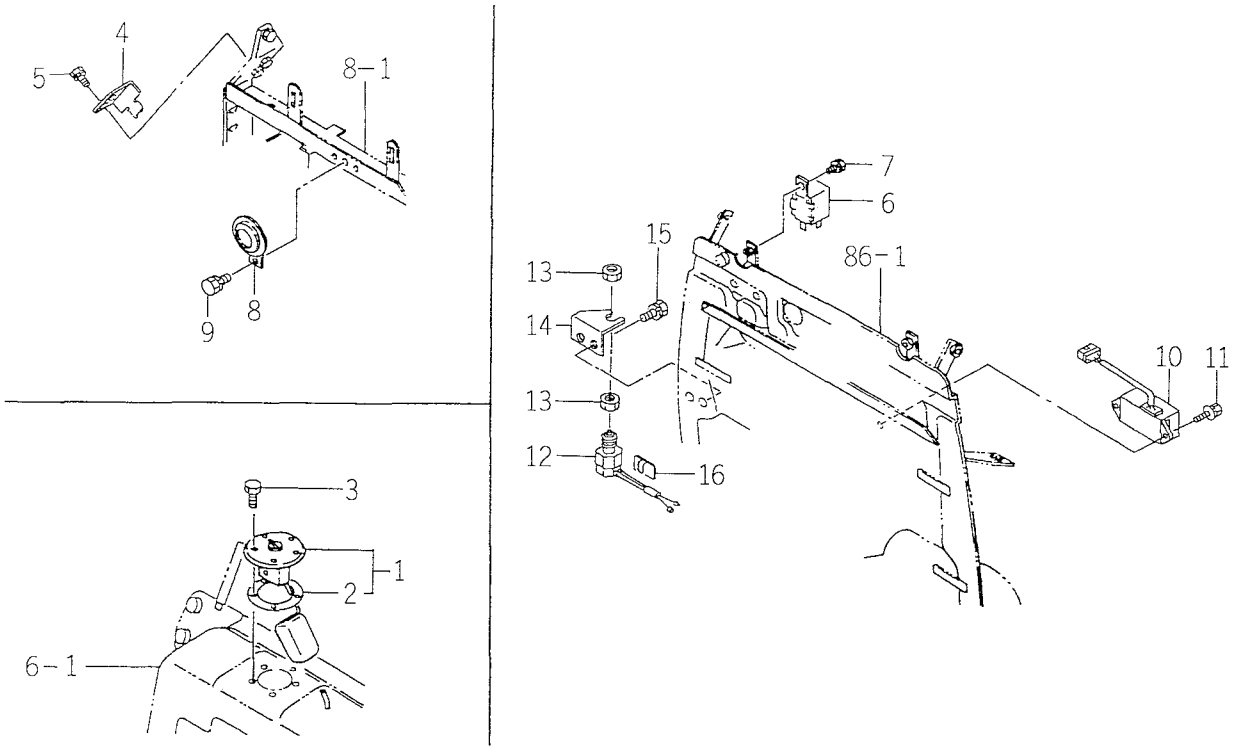

1674-664D

KEY	PART CODE	DESCRIPTION	SPC	TYPE OF MODEL TK538H		ITC	COL	GRP	REMARKS
1	1560-664-230-10	GAUGE ASSY	*	1					
2	1416-621-037-00	PACKING/RUBBER	*	1					
3	V200-260-501-0B	BOLT/SEAL	*	5					
4	1600-624-001-00	HOLDER/FUSE	*	1					
5	V211-260-801-60	BOLT, SEMS (S) M8X16	*	2					
6	1600-623-002-00	FLASHER ASSY	*	1					**********
7	V210-260-601-60	BOLT, SEMS (S)	*	1					
8	1674-664-200-00	HORN ASSY	*	1					
9	V211-260-801-60	BOLT, SEMS (S) M8X16	*	1					
10	1652-652-260-00	CONTROLLER/G ASSY	*	1					
11	V210-360-602-00	BOLT/SP	*	2					
12	1518-621-320-00	SWITCH, STOP	*	1					
13	1432-621-006-10	NUT, LOCK	*	2					
14	1594-664-001-20	PLATE	*	1					
15	V211-260-801-60	BOLT, SEMS (S) M8X16	*	2					
16	1426-621-038-00	CLAMP, HARNESS	*	1					

FIG. 95 HARNESS SYSTEM (EXCEPT C TYPE)

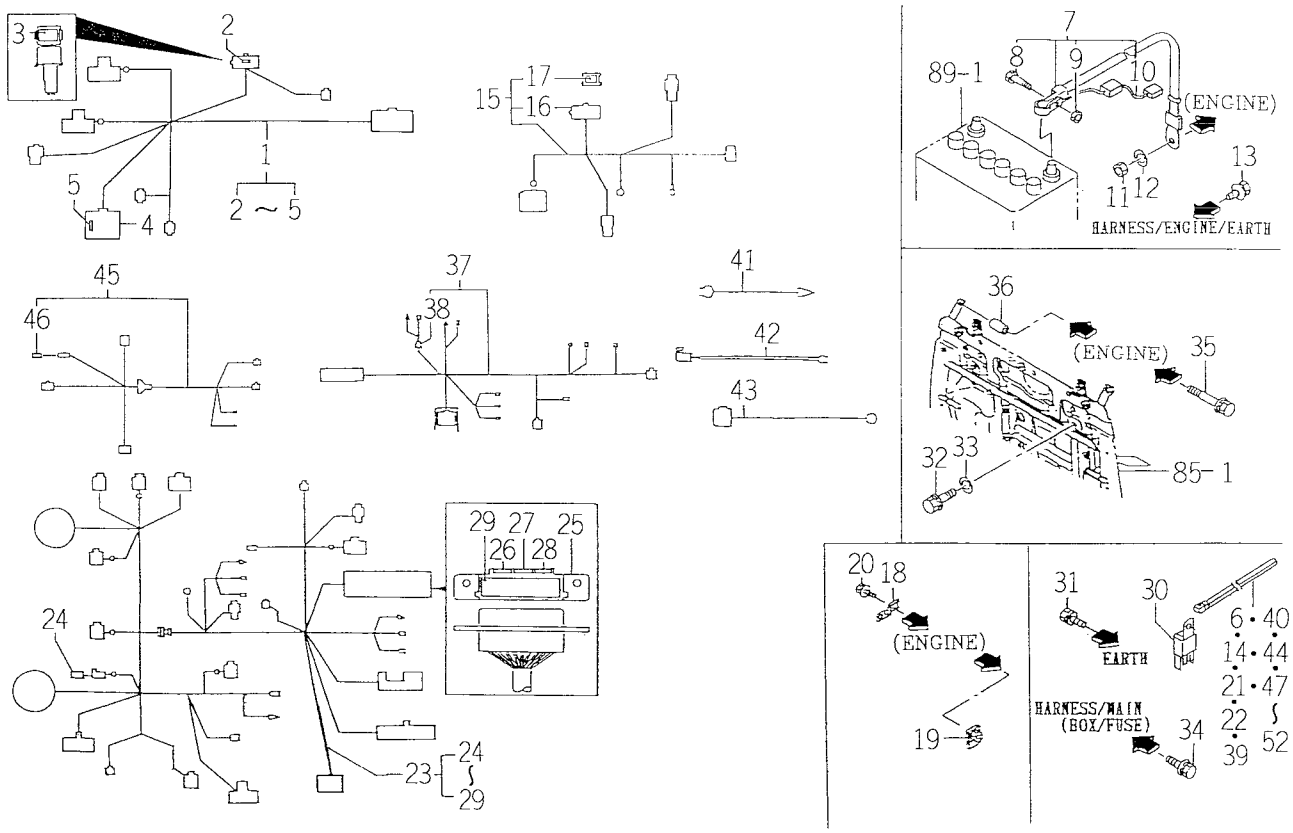

1674-666F

KEY	PART CODE	DESCRIPTION	SPC	TYPE OF MODEL TK538H	TYPE OF MODEL	ITC	COL	GRP	REMARKS
1	1674-666-200-10	HARNESS/ENGINE/E40/F	*	1					
2	1650-650-222-00	FUSE/SLOWBLOW	*	1					
3	1650-650-223-10	LABEL/SLOWBLOW/MAIN	*	1					
4	1596-664-213-00	COVER/FUSE/4	*	1					
5	1560-664-264-00	FUSE, BLADE	*	4					
6	1376-402-003-00	BAND, WIRE/140	*	1					
7	1673-666-250-00	CABLE/BATTERY ASSY	*	1					
8	1568-650-004-10	BOLT/M08X32	*	1					
9	1568-650-005-10	NUT/M08	*	1					
10	1673-666-252-00	HARNESS/BATTERY	*	1					
11	V304-260-008-00	NUT/M 8	*	1					
12	V401-160-008-00	WASHER, SP/M 8	*	1					
13	V211-360-801-60	BOLT, SEMS (SP)	*	1					
14	1376-402-003-00	BAND, WIRE/140	*	1					
15	1674-666-290-00	HARNESS/ENGINE/LH	*	1					
16	1650-650-243-00	FUSE/SLOWBLOW	*	1					
17	1650-652-252-10	LABEL/SLOW BLOW/ALTE	*	1					
18	1650-102-219-00	PLATE	*	1					
19	1560-603-003-00	NUT/M6	*	1					
20	V210-360-601-60	BOLT(SP)/M6X16	*	1					
21	1376-402-003-00	BAND, WIRE/140	*	2					
22	1376-402-003-00	BAND, WIRE/140	*	1					
23	1674-666-210-40	HARNESS/MAIN/E4 ASSY	*	1					
24	1560-666-212-00	DIODE	*	1					
25	1650-650-246-00	COVER/FUSE	*	1					
26	1575-623-010-00	FUSE/32V10A	*	5					
27	1575-623-011-00	FUSE/15A	*	3					
28	1600-624-271-00	FUSE	*	4					
29	1674-666-212-00	LABEL/FUSE/MAIN/E4	*	1					
30	1690-658-370-00	RELAY/4P ASSY	*	1					

FIG. 95 HARNESS SYSTEM (EXCEPT C TYPE)

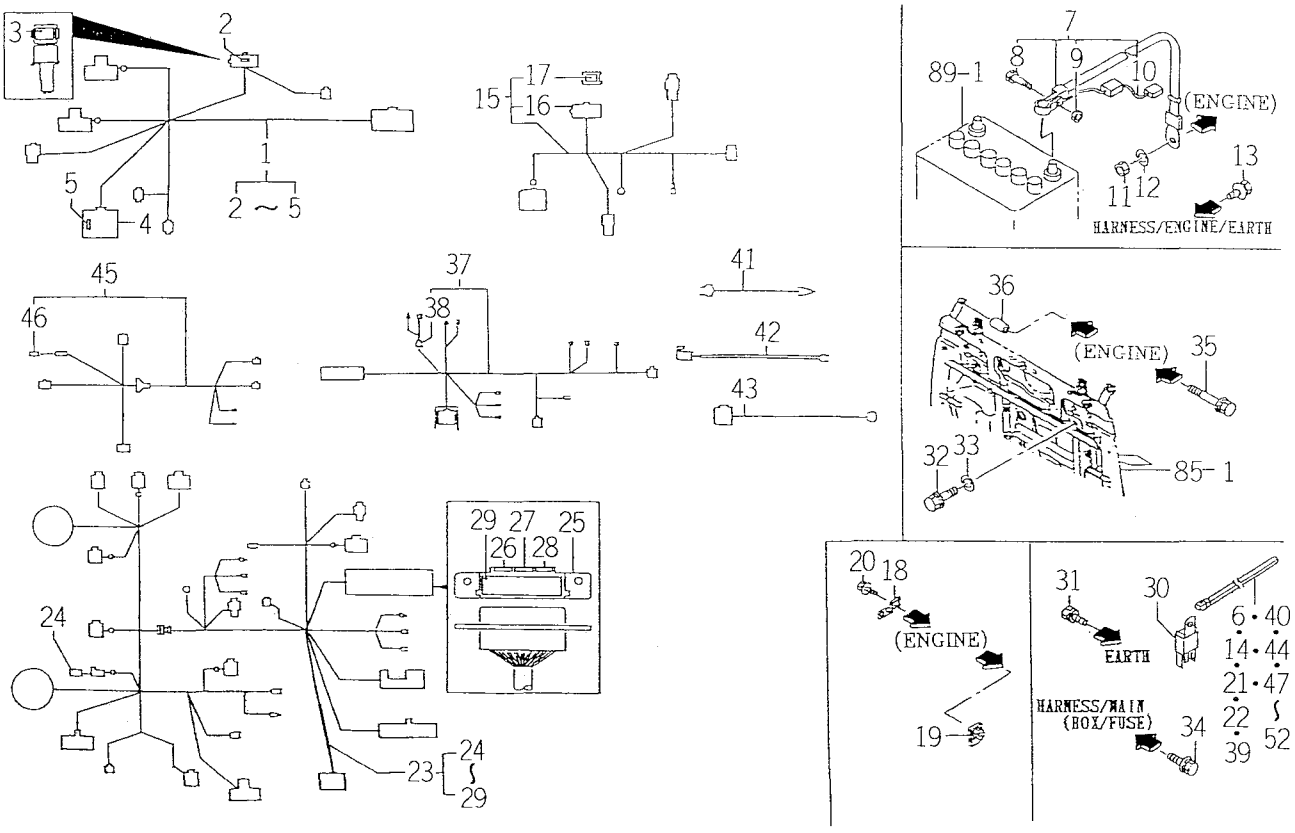

1674-666P

KEY	PART CODE	DESCRIPTION	SPC	TYPE OF MODEL TK538H		ITC	COL	GRP	REMARKS
31	V211-260-801-20	BOLT, SEMS (S) M8X12	*	2					
32	V211-360-801-60	BOLT, SEMS (SP)	*	1					
33	V401-160-008-00	WASHER, SP/M 8	*	1					
34	V210-360-602-50	BOLT/SP	*	2					
35	V210-360-603-50	BOLT/SP	*	1					
36	3676-274-001-00	COLLAR/07X11X20	*	1					
37	1640-666-520-10	HARNESS/REAR/SE ASSY	*	1					
38	1560-666-010-00	GROMMET/30	*	1					
39	1376-402-003-00	BAND, WIRE/140	*	4					
40	1342-402-006-00	BAND, WIRE/250	*	1					
41	1600-624-004-00	HARNESS, OIL PRESSURE	*	1					
42	1568-668-203-00	HARNESS, GLOW	*	1					
43	1650-652-254-00	HARNESS/ENGINE/EARTH	*	1					
44	1376-402-003-00	BAND, WIRE/140	*	1					
45	1641-666-210-00	HARNESS/PTO ASSY	*	1					
46	1652-654-212-00	DIOD	*	1					
47	1342-402-006-00	BAND, WIRE/250	*	3					
48	1342-402-006-00	BAND, WIRE/250	*	1					
49	1376-402-003-00	BAND, WIRE/140	*	1					
50	1342-402-006-00	BAND, WIRE/250	*	2					
51	1342-402-006-00	BAND, WIRE/250	*	2					
52	1376-402-003-00	BAND, WIRE/140	*	1					

FIG. 96 HARNESS SYSTEM (C TYPE)

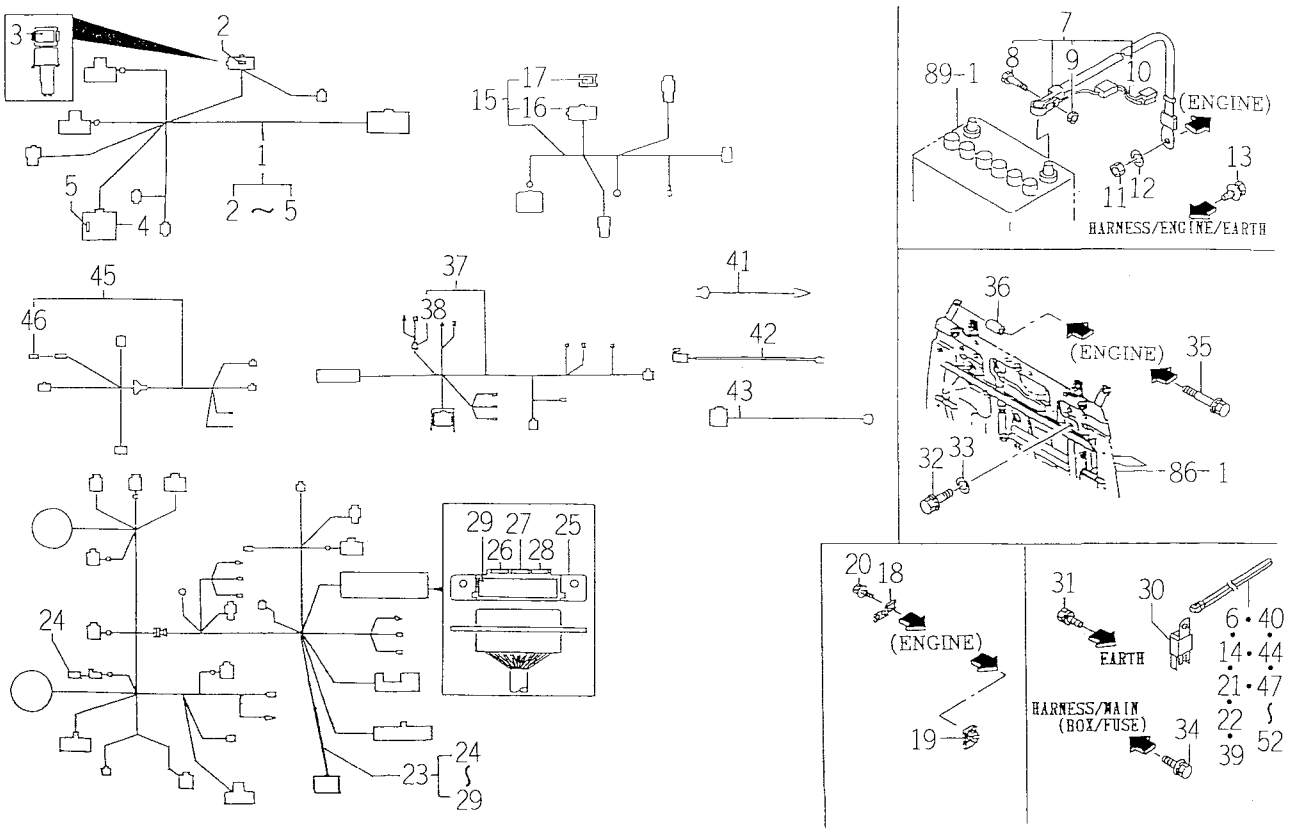

1674-666G

KEY	PART CODE	DESCRIPTION	SPC	TYPE OF MODEL TK538H		ITC	COL	GRP	REMARKS
1	1674-666-200-10	HARNESS/ENGINE/E40/F	*	1					
2	1650-650-222-00	FUSE/SLOWBLOW	*	1					
3	1650-650-223-10	LABEL/SLOWBLOW/MAIN	*	1					
4	1596-664-213-00	COVER/FUSE/4	*	1					
5	1560-664-264-00	FUSE, BLADE	*	4					
6	1376-402-003-00	BAND, WIRE/140	*	1					
7	1674-666-270-10	CABLE/BATTERY/C ASSY	*	1					
8	1568-650-004-10	BOLT/M08X32	*	1					
9	1568-650-005-10	NUT/M08	*	1					
10	1674-666-271-00	HARNESS/BATTERY	*	1					
11	V304-260-008-00	NUT/M 8	*	1					
12	V401-160-008-00	WASHER, SP/M 8	*	1					
13	V211-360-801-60	BOLT, SEMS (SP)	*	1					
14	1376-402-003-00	BAND, WIRE/140	*	1					
15	1674-666-290-00	HARNESS/ENGINE/LH	*	1					
16	1650-650-243-00	FUSE/SLOWBLOW	*	1					
17	1650-652-252-10	LABEL/SLOW BLOW/ALTE	*	1					
18	1650-102-219-00	PLATE	*	1					
19	1560-603-003-00	NUT/M6	*	1					
20	V210-360-601-60	BOLT(SP)/M6X16	*	1					
21	1376-402-003-00	BAND, WIRE/140	*	2					
22	1376-402-003-00	BAND, WIRE/140	*	1					
23	1674-666-210-40	HARNESS/MAIN/E4 ASSY	*	1					
24	1560-666-212-00	DIODE	*	1					
25	1650-650-246-00	COVER/FUSE	*	1					
26	1575-623-010-00	FUSE/32V10A	*	5					
27	1575-623-011-00	FUSE/15A	*	3					
28	1600-624-271-00	FUSE	*	4					
29	1674-666-212-00	LABEL/FUSE/MAIN/E4	*	1					
30	1690-658-370-00	RELAY/4P ASSY	*	1					

FIG. 96 HARNESS SYSTEM (C TYPE)

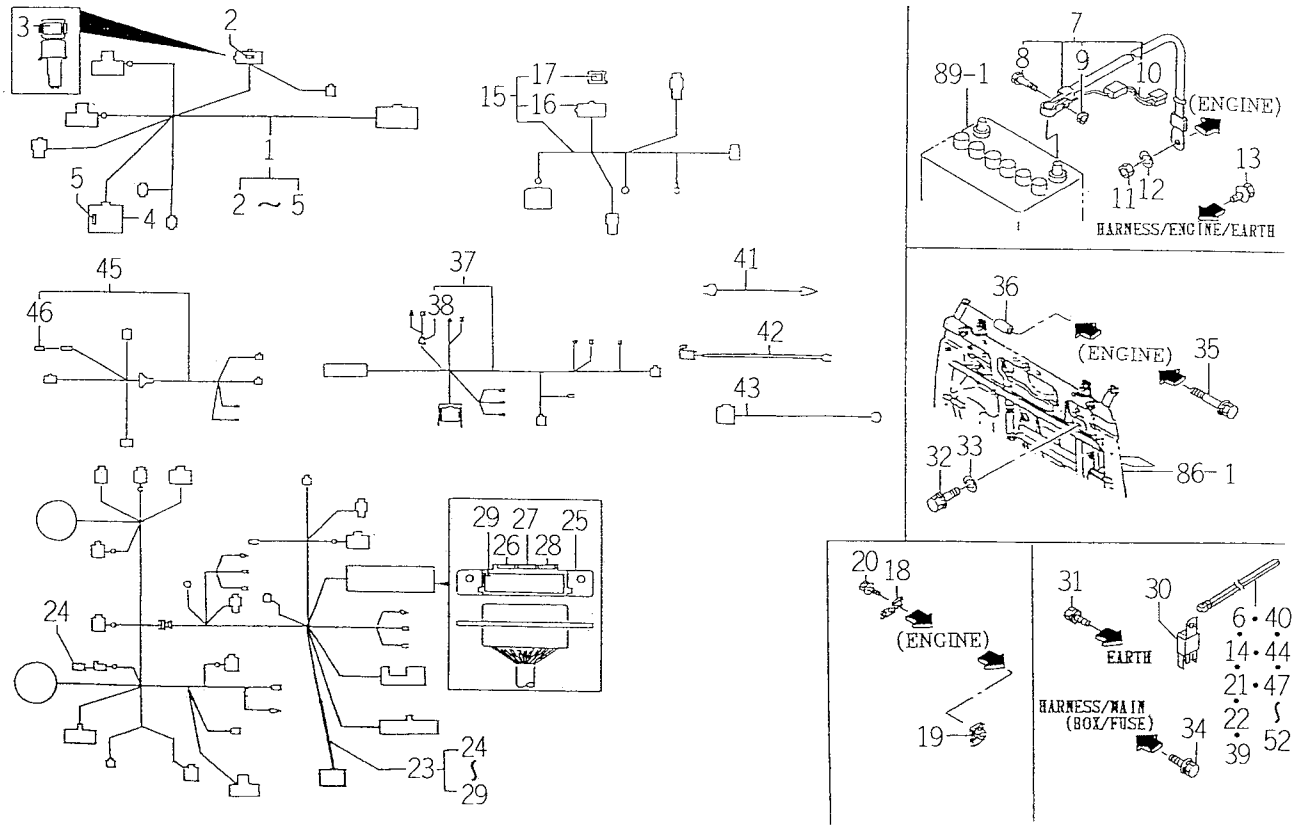

1674-666G

KEY	PART CODE	DESCRIPTION	SPC	TYPE OF MODEL TK538H		ITC	COL	GRP	REMARKS
31	V211-260-801-20	BOLT, SEMS (S) M8X12	*	2					
32	V211-360-801-60	BOLT, SEMS (SP)	*	1					
33	V401-160-008-00	WASHER, SP/M 8	*	1					
34	V210-360-602-50	BOLT/SP	*	2					
35	V210-360-603-50	BOLT/SP	*	1					
36	3676-274-001-00	COLLAR/07X11X20	*	1					
37	1640-666-520-10	HARNESS/REAR/SE ASSY	*	1					
38	1560-666-010-00	GROMMET/30	*	1					
39	1376-402-003-00	BAND, WIRE/140	*	4					
40	1342-402-006-00	BAND, WIRE/250	*	1					
41	1600-624-004-00	HARNESS, OIL PRESSURE	*	1					
42	1568-668-203-00	HARNESS, GLOW	*	1					
43	1650-652-254-00	HARNESS/ENGINE/EARTH	*	1					
44	1376-402-003-00	BAND, WIRE/140	*	1					
45	1641-666-210-00	HARNESS/PTO ASSY	*	1					
46	1652-654-212-00	DIOD	*	1					
47	1342-402-006-00	BAND, WIRE/250	*	3					
48	1342-402-006-00	BAND, WIRE/250	*	1					
49	1376-402-003-00	BAND, WIRE/140	*	1					
50	1342-402-006-00	BAND, WIRE/250	*	2					
51	1342-402-006-00	BAND, WIRE/250	*	2					
52	1376-402-003-00	BAND, WIRE/140	*	1					

FIG. 97 HARNESS (CAB) SYSTEM (C TYPE)

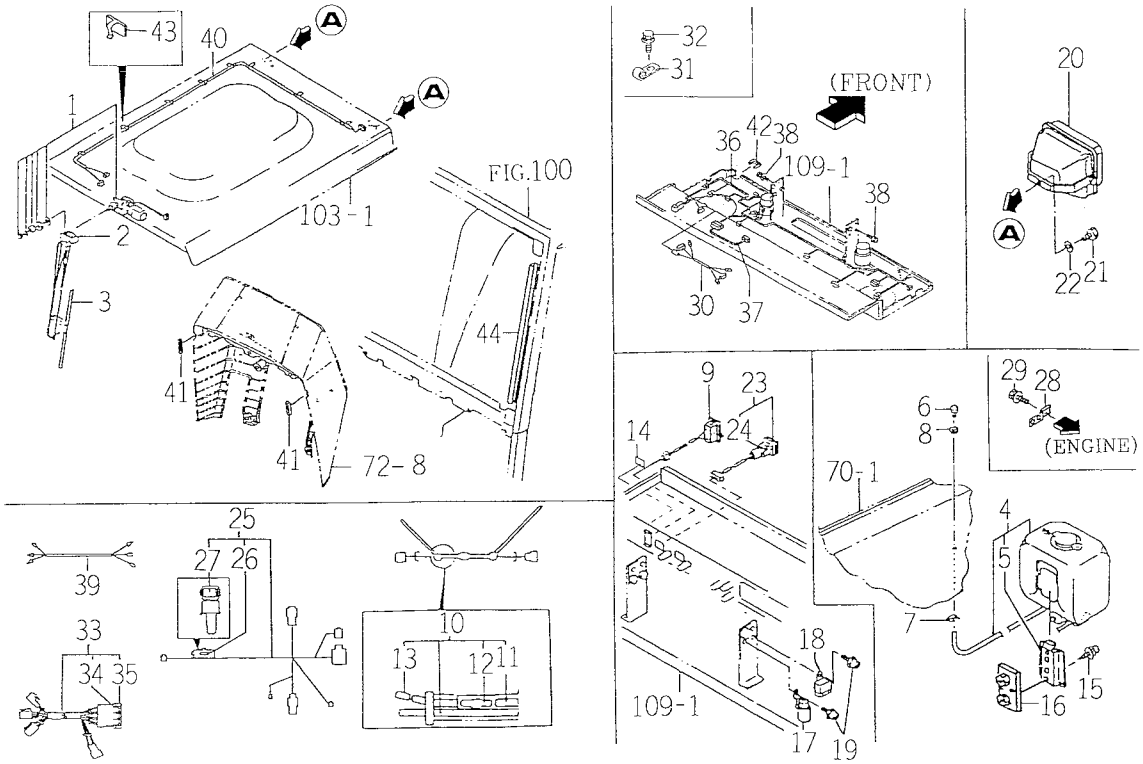

1674-669K

KEY	PART CODE	DESCRIPTION	SPC	TYPE OF MODEL TK538H		ITC	COL	GRP	REMARKS
1	1596-669-510-00	MOTOR ASSY	*	1					
2	1594-669-550-00	ARM ASSY	*	1					
3	1596-669-530-00	BLADE ASSY	*	1					
4	1566-669-540-00	TANK.WASHER ASSY	*	1					
5	1518-621-521-00	BRACKET	*	1					
6	1518-621-523-00	NOZZLE,WIPER TANK	*	1					
7	1518-621-524-00	BRACKET, NOZZLE	*	1					
8	1518-621-525-00	PACKING, NOZZLE	*	1					
9	1518-621-540-00	SWITCH,WIPER ASSY	*	1					
10	1566-669-580-20	HARNESS,WASHER ASSY	*	1					
11	1566-669-582-10	HOSE/2840	*	1					
12	1518-621-532-00	VALVE,CHECK	*	1					
13	1566-669-583-00	HOSE/150	*	1					
14	1674-669-002-00	LABEL/CONTROL/SWITCH	*	1					
15	V120-366-001-60	SCREW	*	7					
16	1594-669-530-00	PLATE COMP	*	1					
17	1581-621-290-00	RELAY/4P	*	2					
18	1593-623-530-00	RELAY,5P ASSY	*	1					
19	V120-366-001-60	SCREW	*	3					
20	1581-621-530-00	LAMP ASSY	*	2					FIG 147
21	V201-261-202-00	BOLT/M12X20	*	2					
22	V401-160-012-00	WASHER,SP/M12	*	2					
23	3652-273-240-00	SWITCH,UP-DOWN	*	1					
24	3652-273-241-00	BULB/12V5W	*	1					
25	1674-669-200-00	HARNESS/CAB/ENGINE	*	1					
26	1650-650-222-00	FUSE/SLOWBLOW	*	1					
27	1650-650-223-10	LABEL/SLOWBLOW/MAIN	*	1					
28	1650-102-219-00	PLATE	*	1					
29	V210-360-601-60	BOLT(SP)/M6X16	*	1					
30	1596-669-571-00	HARNESS/CAB/BYPASS	*	1					

FIG. 97 HARNESS (CAB) SYSTEM (C TYPE)

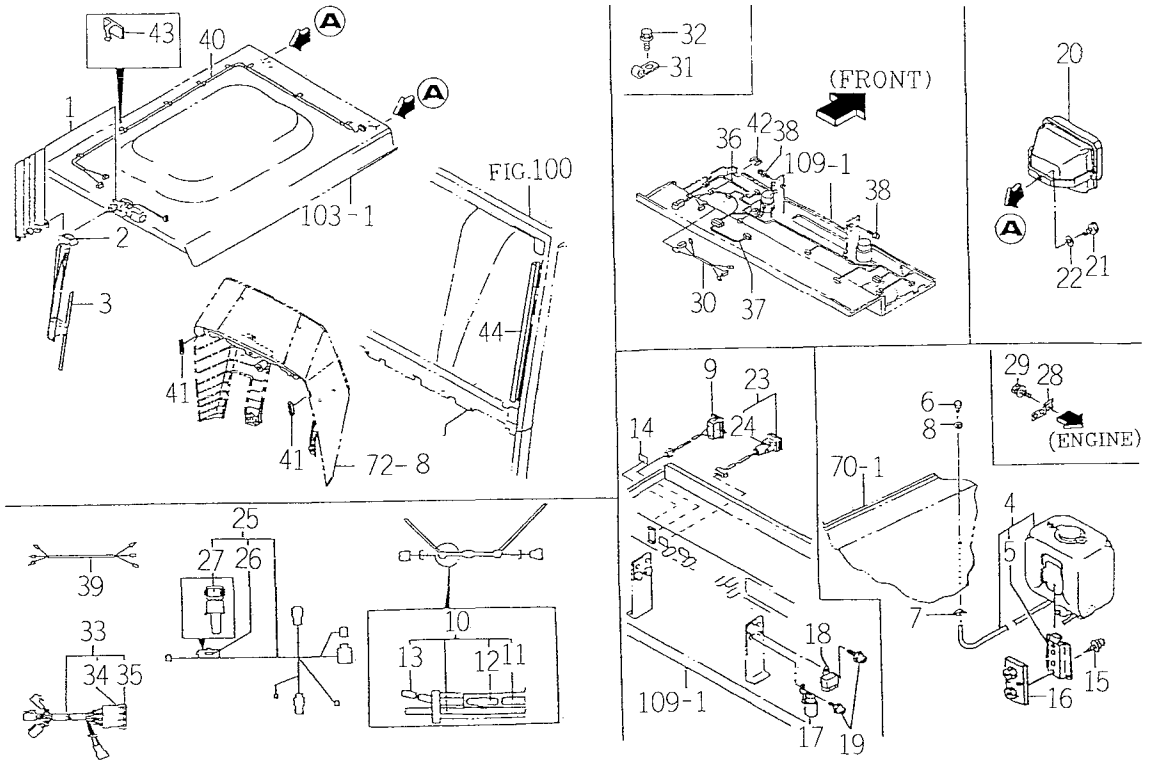

1674-669X

KEY	PART CODE	DESCRIPTION	SPC	TYPE OF MODEL TK538H		ITC	COL	GRP	REMARKS
31	1650-509-003-10	HOLDER/10	*	2					
32	V211-360-801-60	BOLT, SEMS (SP)	*	2					
33	1596-669-580-00	CASE	*	1					
34	1593-623-203-00	FUSE/32V20A	*	4					
35	1593-623-503-00	CAP, FUSE BOX	*	1					
36	1596-669-590-10	HARNESS/COOKPIT ASSY	*	1					
37	1596-669-106-00	HARNESS/HEATER	*	1					
38	V120-366-001-60	SCREW	*	1					
39	1596-669-104-00	HARNESS/ROPS	*	2					
40	1596-669-105-00	HARNESS/WORKING	*	1					
41	1596-669-108-00	INSULATOR	*	2					
42	1596-669-107-00	TRIM/75	*	1					
43	1426-621-038-00	CLAMP, HARNESS	*	8					
44	1568-669-101-00	INSULATOR	*	1					

FIG. 98 SWITCH (PTO) SYSTEM (S, P TYPE)

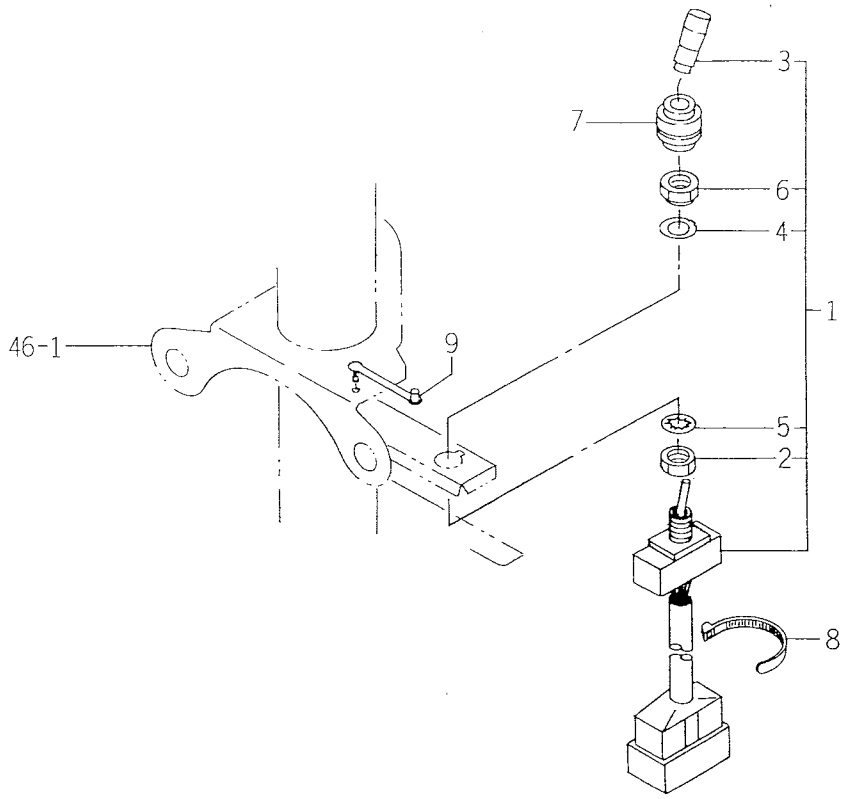

1640-674A

KEY	PART CODE	DESCRIPTION	SPC	TYPE OF MODEL TK538H		ITC	COL	GRP	REMARKS
1	1640-674-200-00	SWITCH/PTO ASSY	*	1					
2	1640-674-202-00	NUT	*	1					
3	1640-674-203-00	KNOB	*	1					
4	1640-674-204-00	WASHER	*	1					
5	1640-674-205-00	WASHER	*	1					
6	1640-674-206-00	NUT	*	1					
7	1640-674-001-00	BOOT/SWITCH	*	1					
8	1376-402-003-00	BAND, WIRE/140	*	1					
9	1444-621-008-00	CLAMP	*	1					

FIG. 99 MIRROR SYSTEM (C TYPE)

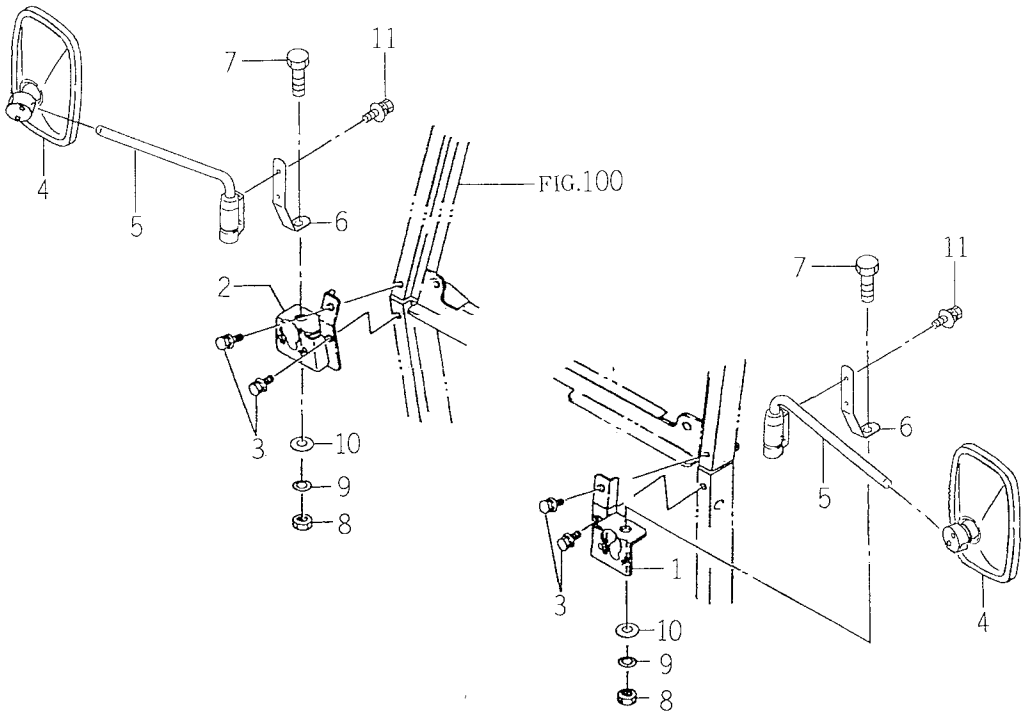

1674-682H

KEY	PART CODE	DESCRIPTION	SPC	TYPE OF MODEL TK538H		ITC	COL	GRP	REMARKS
1	1594-682-500-10	BRACKET/LH COMP	*	1					
2	1594-682-510-10	BRACKET/RH COMP	*	1					
3	V211-661-002-00	BOLT/M10X20	*	4					
4	1674-619-300-10	MIRROR ASSY	*	2					
5	1674-619-310-00	ARM/MIRROR ASSY	*	2					
6	1674-682-001-10	PLATE	*	2					
7	V201-361-603-00	BOLT	*	2					
8	V304-260-016-00	NUT/M16	*	2					
9	V401-160-016-00	WASHER, SP/M16	*	2					
10	V411-260-016-00	WASHER / M16	*	2					
11	V210-360-601-60	BOLT(SP)/M6X16	*	4					

FIG.100 FRAME (FRONT) SYSTEM (C TYPE)

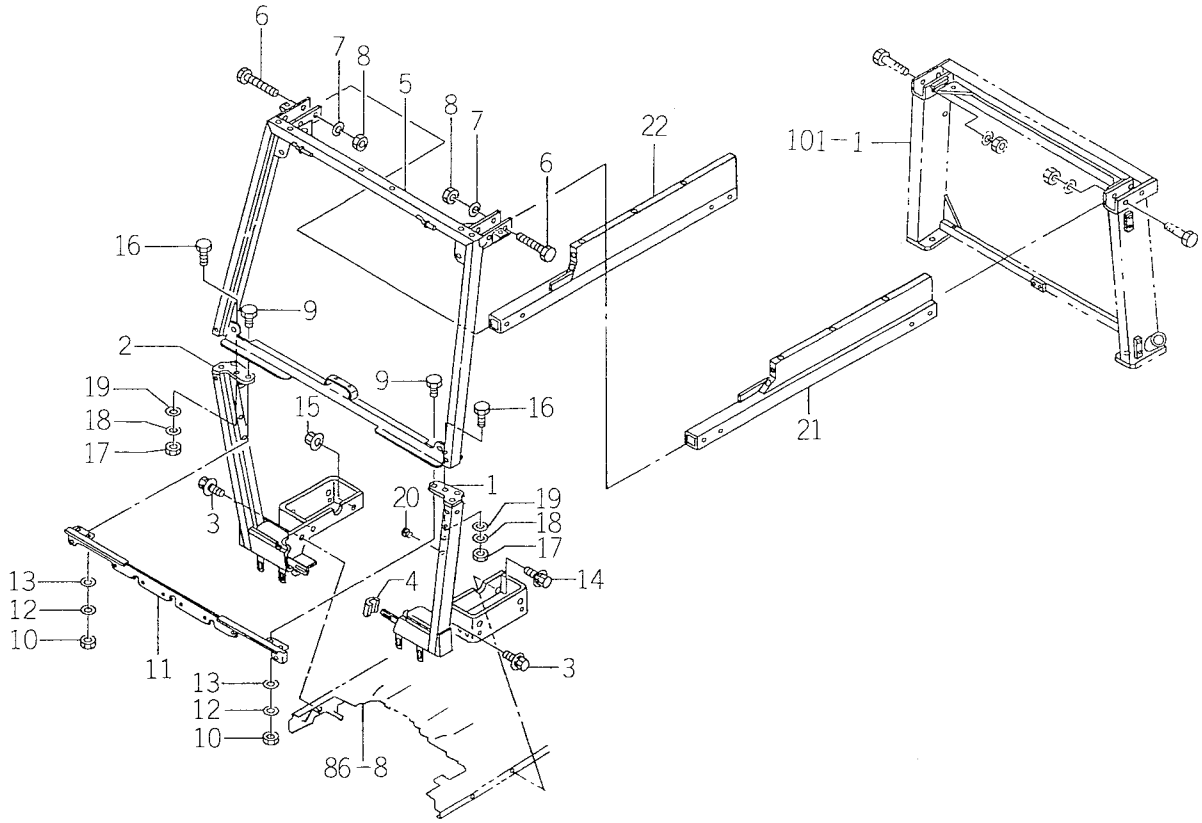

1674-701

KEY	PART CODE	DESCRIPTION	SPC	TYPE OF MODEL TK538H		ITC	COL	GRP	REMARKS
1	1594-701-500-01	FRAME/FRONT/LH COMP	*	1			4G		
2	1594-701-510-01	FRAME/FRONT/RH COMP	*	1			4G		
3	V211-661-002-00	BOLT/M10X20	*	4					
4	1568-701-001-00	INSULATOR	*	1					
5	1594-701-520-01	FRAME/FRONT COMP	*	1			4G		
6	V201-361-208-00	BOLT/M12X80	*	4					
7	V401-160-012-00	WASHER, SP/M12	*	4					
8	V304-460-012-00	NUT/M12	*	4					
9	V201-361-002-50	BOLT/M10X25	*	4					
10	V304-460-010-00	NUT/M10	*	4					
11	1560-701-530-11	FRAME/FRONT COMP	*	1			4G		
12	V401-160-010-00	WASHER, SP/M10	*	4					
13	V411-260-010-00	WASHER/M10	*	4					
14	V211-360-802-00	BOLT(SP) M8X20	*	2					
15	V362-260-008-00	NUT/WASHER	*	2					
16	V201-361-203-00	BOLT/M12X30	*	2					
17	V304-460-012-00	NUT/M12	*	2					
18	V401-160-012-00	WASHER, SP/M12	*	2					
19	V411-260-012-00	WASHER /M12	*	2					
20	1432-665-015-00	GROMMET/6X10X5	*	3					
21	1594-701-530-01	FRAME/SIDE/LH COMP	*	1			4G		
22	1594-701-540-01	FRAME/SIDE/RH COMP	*	1			4G		

FIG.101 FRAME (REAR) SYSTEM (C TYPE)

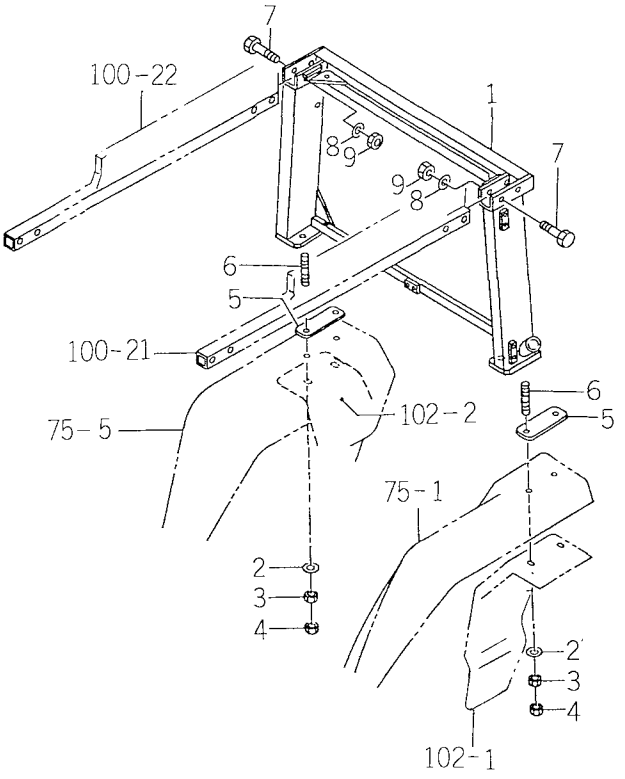

1595-702K

KEY	PART CODE	DESCRIPTION	SPC	TYPE OF MODEL TK538H		ITC	COL	GRP	REMARKS
1	1595-702-500-01	FRAME/REAR COMP	*	1			4G		
2	V411-260-012-00	WASHER /M12	*	4					
3	V304-460-012-00	NUT/M12	*	4					
4	V305-260-012-00	NUT/M12	*	4					
5	1560-702-101-00	INSULATOR	*	2					
6	1560-702-102-20	BOLT/STUD/M12X40	*	4					
7	V201-361-208-00	BOLT/M12X80	*	4					
8	V401-160-012-00	WASHER, SP/M12	*	4					
9	V304-460-012-00	NUT/M12	*	4					

FIG.102 FRAME (ACCESSORY) SYSTEM (C TYPE)

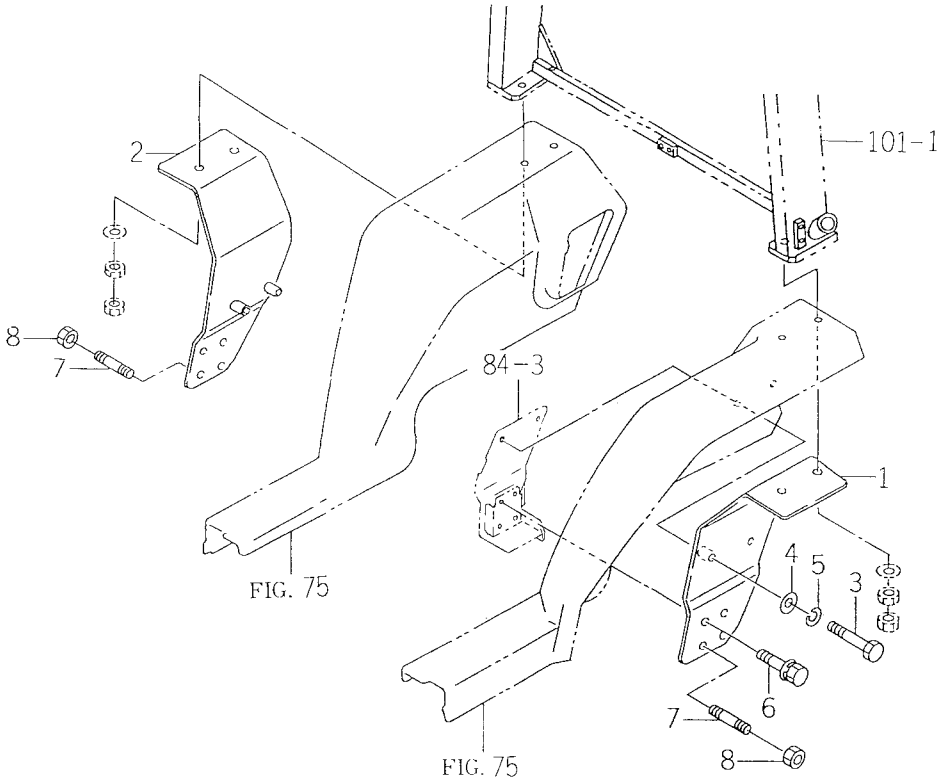

1560-703K

KEY	PART CODE	DESCRIPTION	SPC	TYPE OF MODEL TK538H		ITC	COL	GRP	REMARKS
1	1560-703-500-10	FENDER/SUB/LH COMP	*	1			4G		
2	1560-703-510-10	FENDER/SUB/RH COMP	*	1			4G		
3	V201-361-006-00	BOLT	*	4					
4	V411-260-010-00	WASHER/M10	*	6					
5	V401-160-010-00	WASHER, SP/M10	*	6					
6	V211-661-003-00	BOLT/SP	*	6					
7	V252-341-002-00	BOLT/STUD	*	2					
8	V304-460-010-00	NUT/M10	*	2					

FIG.103 CANOPY SYSTEM (C TYPE)

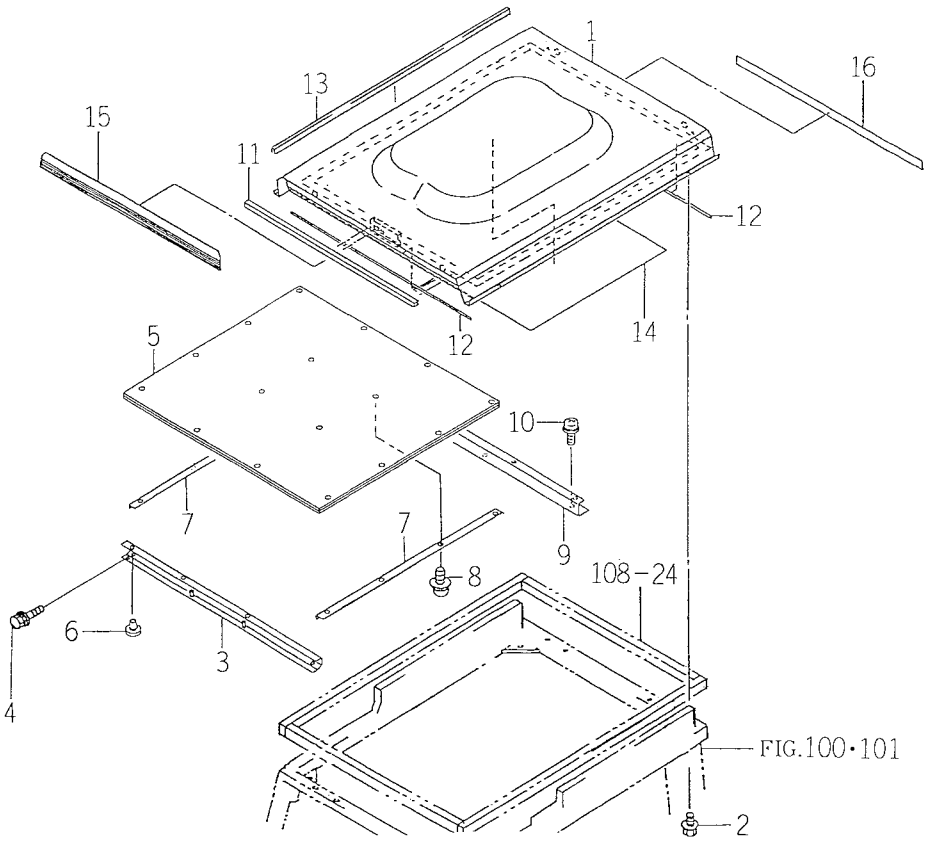

1594-705

KEY	PART CODE	DESCRIPTION	SPC	TYPE OF MODEL TK538H		ITC	COL	GRP	REMARKS
1	1594-705-500-01	ROOF COMP	*	1			4G		
2	V211-660-802-00	BOLT/8X20	*	4					
3	1594-705-520-00	STAY COMP	*	1					
4	V211-660-801-60	BOLT/M8X16	*	4					
5	1594-705-530-00	HEADLYNING	*	1					
6	1527-604-002-00	CLIP(B)	*	12					
7	1594-705-101-00	PLATE/L/749X25	*	2					
8	V120-366-001-60	SCREW	*	4					
9	1594-705-540-00	STAY/REAR COMP	*	1					
10	V120-366-001-60	SCREW	*	5					
11	1566-705-005-00	INSULATOR	*	1					
12	1596-705-103-00	TRIM/1025	*	2					
13	1594-705-108-00	TRIM/1300	*	2					
14	1596-705-104-00	INSULATOR	*	1					
15	1596-705-106-00	ORNAMENT	*	1					
16	1566-705-102-00	ORNAMENT, ROOF	*	1					

FIG.104 CAB GLASS SYSTEM (C TYPE)

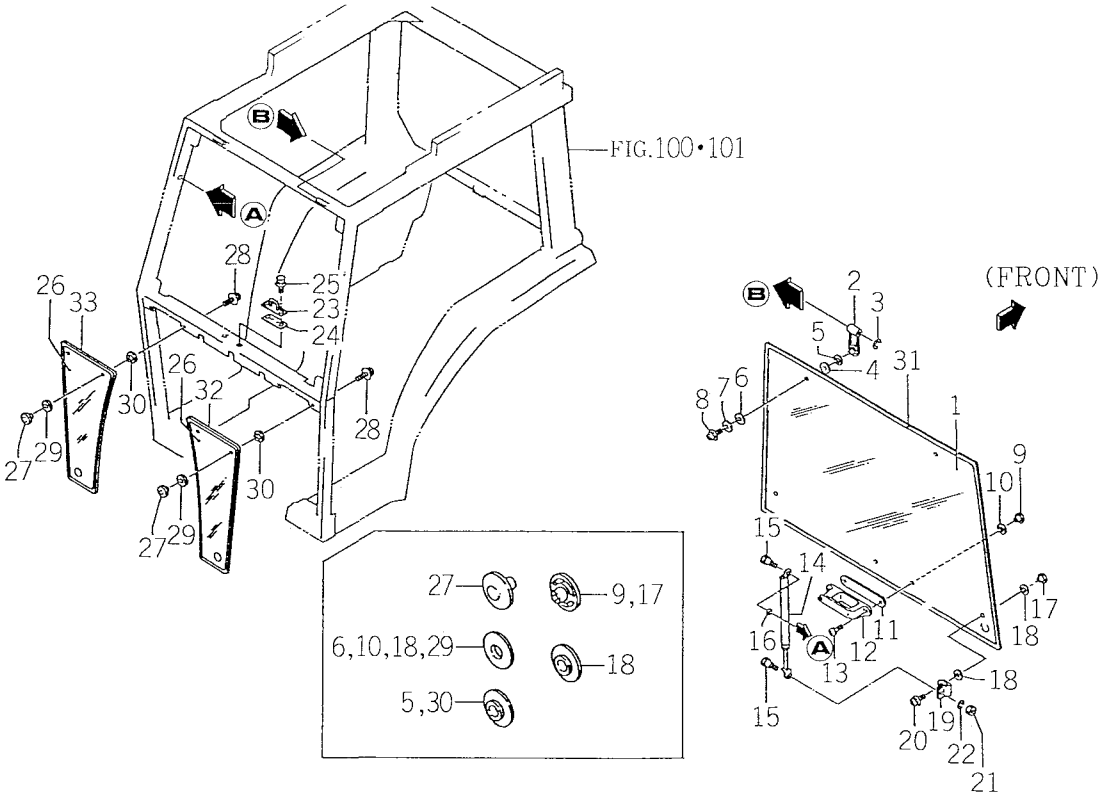

1594-721

KEY	PART CODE	DESCRIPTION	SPC	TYPE OF MODEL TK538H		ITC	COL	GRP	REMARKS
1	1594-721-101-00	GLASSTFRONT	*	1					
2	1581-740-112-00	HINGE	*	2					
3	1566-731-107-00	RING, RETANING/E07	*	2					
4	V411-260-008-00	WASHER, PL/M 8	*	2					
5	1566-721-103-00	GROMMET/13X17X02	*	2					
6	1581-740-113-00	GROMMET	*	2					
7	1581-740-114-00	WASHER 07X36X02	*	2					
8	V120-366-002-50	SOREN/SP/M6X25	*	2					
9	1581-742-102-00	NUT, GLASS	*	2					
10	1581-740-113-00	GROMMET	*	2					
11	1581-742-582-00	INSULATOR	*	1					
12	1581-742-590-00	HANDLE, WINDOW LOCK	*	1					
13	V120-266-002-00	SCREW, SEMS	*	2					
14	1564-743-102-00	DAMPER, WIND ASSY	*	2					
15	1581-742-105-00	BOLT, SET/M6X14	*	4					
16	1566-743-103-00	COLLAR/06X12X05	*	2					
17	1581-742-102-00	NUT, GLASS	*	2					
18	1581-740-113-00	GROMMET	*	4					
19	1581-742-621-00	PLATE	*	2					
20	V120-376-001-60	SCREW/SP	*	2					
21	V301-260-006-00	NUT/M 6	*	2					
22	V401-160-006-00	WASHER, SP/M 6	*	2					
23	1566-743-520-00	STAY, LOCK COMP	*	1					
24	1518-745-552-00	PLATE, ARM/A	*	1					
25	V210-360-602-00	BOLT/SP	*	2					
26	1594-721-102-00	GLASSTFRONT	*	2					
27	1581-742-102-00	NUT, GLASS	*	4					
28	V120-366-002-50	SOREN/SP/M6X25	*	4					
29	1581-740-113-00	GROMMET	*	4					
30	1566-721-103-00	GROMMET/13X17X02	*	4					

FIG.104 CAB GLASS SYSTEM (C TYPE)

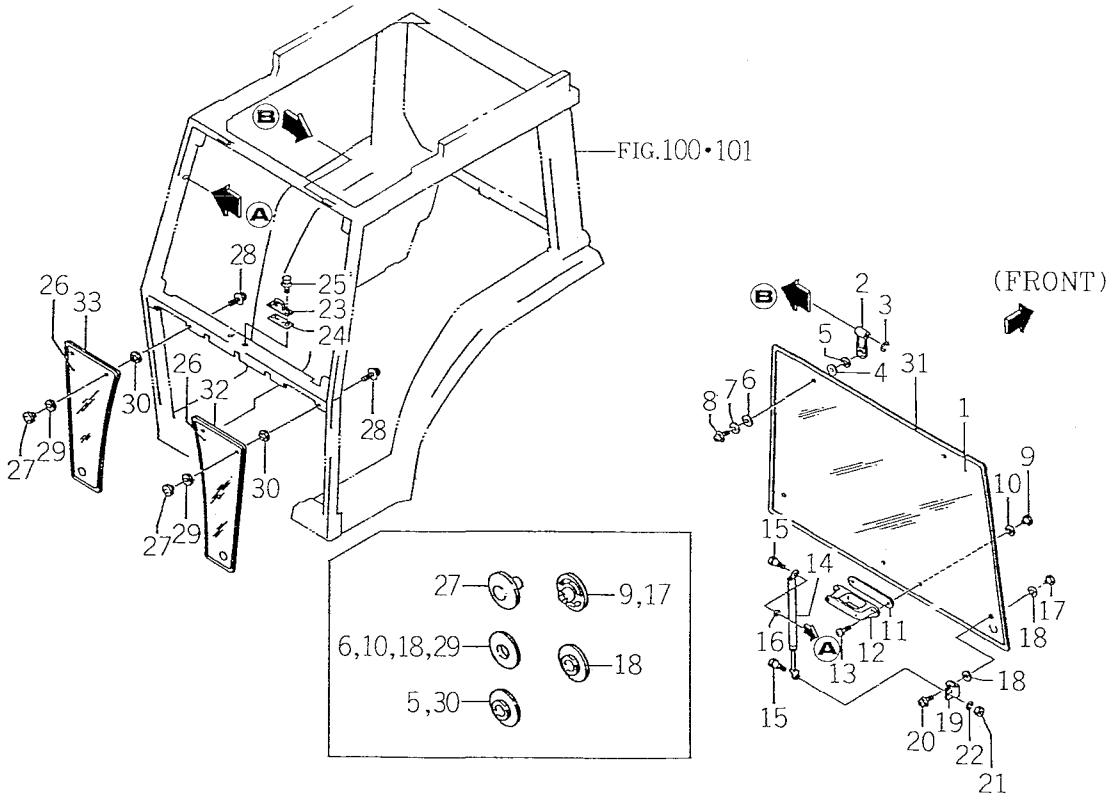

1560-722

KEY	PART CODE	DESCRIPTION	SPC	TYPE OF MODEL TK538H		ITC	COL	GRP	REMARKS
31	1560-722-101-00	INSULATOR	*	1					
32	1560-722-102-00	INSULATOR/LH	*	1					
33	1560-722-103-00	INSULATOR/RH	*	1					

FIG.105 DOOR SYSTEM (C TYPE)

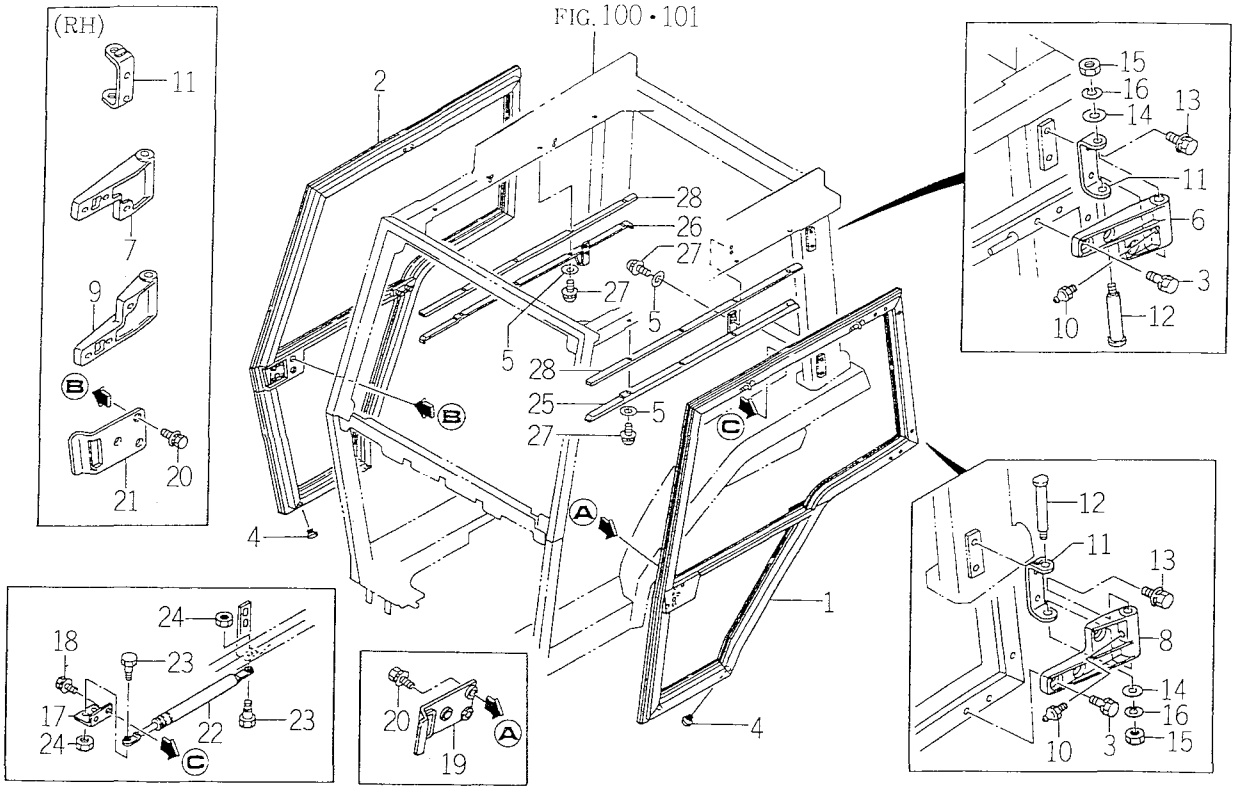

1560-730

KEY	PART CODE	DESCRIPTION	SPC	TYPE OF MODEL TK538H		ITC	COL	GRP	REMARKS
1	1560-730-500-20	DOOR/LH	*	1			7F		
2	1560-730-520-20	DOOR/RH	*	1			7F		
3	V211-560-802-50	BOLT, SEMS/M8X25 7T	*	12					
4	1560-606-011-00	CAP/13	*	4					
5	1518-730-122-00	WASHER/0.9X18X0.3	*	12					
6	1566-730-101-10	HINGE, DOOR LH	*	1					
7	1566-730-102-10	HINGE, DOOR RH	*	1					
8	1566-730-103-10	HINGE, DOOR LH	*	1					
9	1566-730-104-10	HINGE, DOOR RH	*	1					
10	V760-150-000-00	NIPPLE, GREASE	*	4					
11	1566-730-540-00	BRACKET COMP	*	4					
12	1566-730-105-10	PIN 16X100	*	4					
13	V211-660-802-00	BOLT/8X20	*	8					
14	V411-260-016-00	WASHER / M16	*	4					
15	V305-260-012-00	NUT/M12	*	4					
16	V401-160-012-00	WASHER, SP/M12	*	4					
17	1566-730-106-00	PLATE, L/40X50	*	2					
18	V210-360-601-60	BOLT(SP)/M6X16	*	4					
19	1566-730-107-00	COVER, DOOR LH	*	1					
20	V210-360-601-60	BOLT(SP)/M6X16	*	4					
21	1566-730-113-00	COVER, DOOR/RH	*	1					
22	1566-730-108-00	DAMPER DOOR ASSY	*	2					
23	1427-210-003-00	BOLT/M8X25	*	4					
24	2144-117-002-00	NUT/M8	*	4					
25	1560-730-540-00	STAY, PLATE/41	*	1					
26	1560-730-550-00	STAY/RH	*	1					
27	V120-365-001-20	SCREW/SP	*	12					
28	1560-730-103-00	INSULATOR	*	2					

FIG.106 DOOR GLASS SYSTEM (C TYPE)

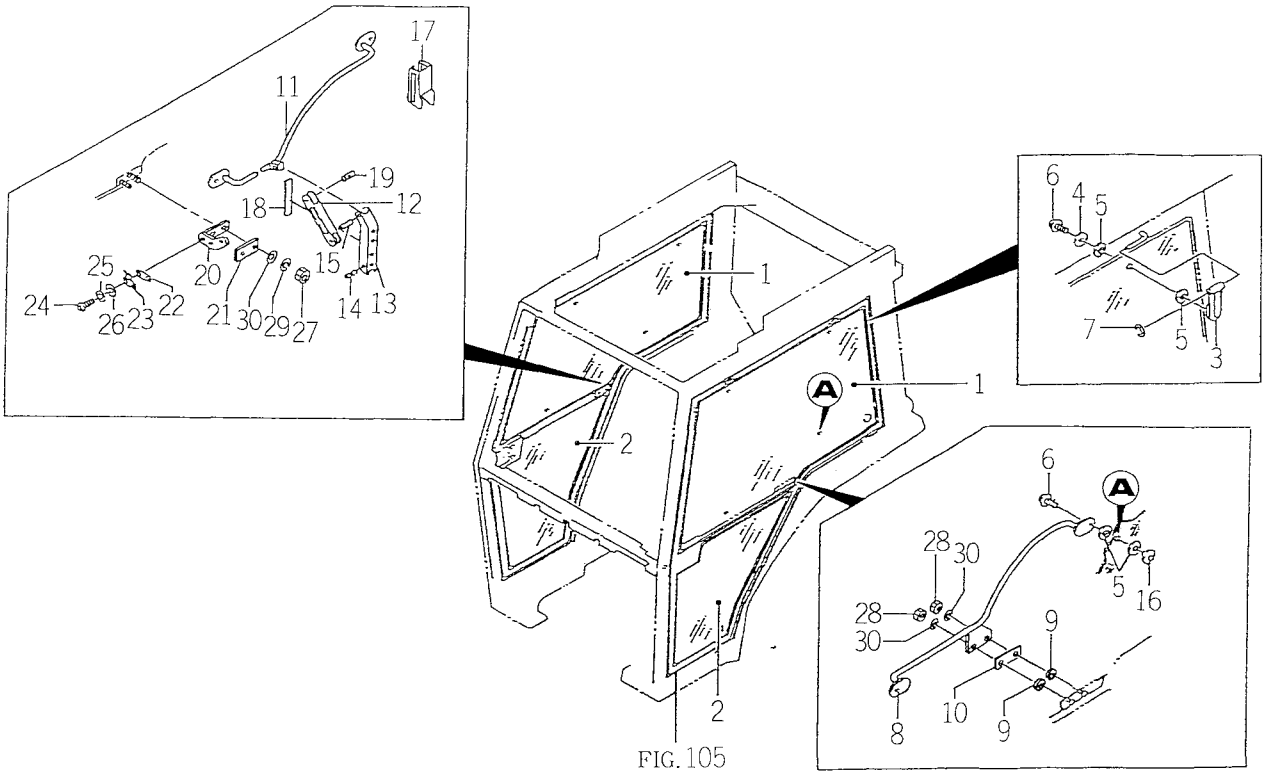

FIG. 105

1610-731M

KEY	PART CODE	DESCRIPTION	SPC	TYPE OF MODEL TK538H		ITC	COL	GRP	REMARKS
1	1594-731-101-00	GLASS/SIDE	*	2					
2	1594-731-102-00	GLASS/SIDE	*	2					
3	1581-740-112-00	HINGE	*	4					
4	1581-740-114-00	WASHER 07X36X02	*	4					
5	1581-740-113-00	GROMMET	*	16					
6	V120-366-001-60	SCREW	*	8					
7	1566-731-107-00	RING, RETANING/E07	*	4					
8	1610-731-200-00	GRIP/LH COMP	*	1					
9	1423-621-018-00	CUSHION/RUBBER	*	2					
10	1568-731-103-00	PLATE/I 25X60	*	1					
11	1560-731-550-00	GRIP/RH	*	1					
12	1581-740-552-10	BAR	*	1					
13	1581-740-553-10	GRIP	*	1					
14	1488-302-003-00	PIN	*	1					
15	1488-302-003-00	PIN	*	1					
16	1581-742-102-00	NUT, GLASS	*	4					
17	1581-740-556-00	GRIP	*	1					
18	1581-740-558-00	INSULATOR	*	1					
19	V580-140-601-60	PIN SPLIT W 6.0X16	*	1					
20	1566-731-550-10	BRACKET/RH COMP	*	1					
21	1568-731-103-00	PLATE/I 25X60	*	1					
22	1566-731-106-00	PLATE	*	1					
23	1560-604-022-70	SPRING	*	1					
24	V111-166-001-00	SCREW/M6X10	*	2					
25	V401-160-006-00	WASHER, SP/M 6	*	2					
26	V411-260-006-00	WASHER / M6	*	2					
27	V304-260-008-00	NUT/M 8	*	2					
28	P120-605-031-00	U-NUT	*	2					
29	V401-160-008-00	WASHER, SP/M 8	*	2					
30	V411-260-008-00	WASHER, PL/M 8	*	4					

FIG.107 DOOR SEAL, DOOR LOCK SYSTEM (C TYPE)

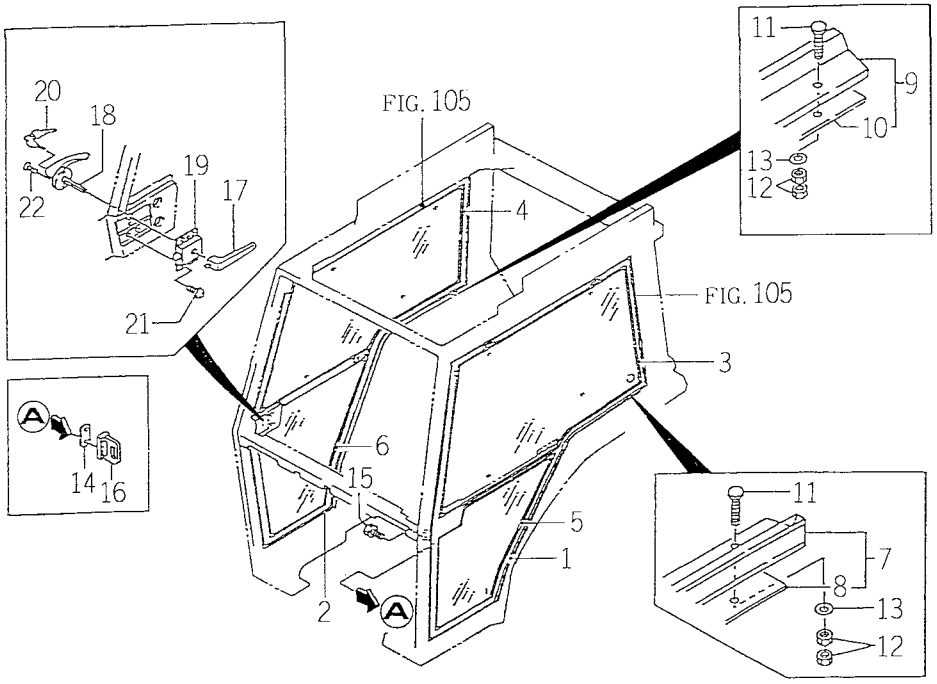

1560-732

KEY	PART CODE	DESCRIPTION	SPC	TYPE OF MODEL TK538H		ITC	COL	GRP	REMARKS
1	1560-732-101-00	INSULATOR/LH	*	1					
2	1560-732-102-00	INSULATOR/RH	*	1					
3	1560-732-103-00	INSULATOR/LH	*	1					
4	1560-732-104-00	INSULATOR/RH	*	1					
5	1560-732-105-00	INSULATOR/LH	*	1					
6	1560-732-106-00	INSULATOR/RH	*	1					
7	1560-731-500-00	INSULATOR/LH SET	*	1					
8	1560-731-512-00	SEAL/VHB/30X1090	*	1					
9	1560-731-510-00	INSULATOR/RH SET	*	1					
10	1560-731-512-00	SEAL/VHB/30X1090	*	1					
11	1566-732-113-00	BOTTON, FLAT	*	8					
12	V301-260-006-00	NUT/M 6	*	16					
13	V411-260-008-00	WASHER, PL/M 8	*	8					
14	1566-733-101-20	PLATE, I/25X54	*	2					
15	V211-660-802-00	BOLT/8X20	*	4					
16	1566-733-102-00	STRIKER	*	2					
17	1566-733-510-00	INNER HANDLE ASSY	*	2					
18	1566-733-520-00	HANDLE LOCK ASSY	*	2					
19	1566-733-530-00	DOOR LOCK ASSY	*	2					
20	1566-733-550-00	KEY ASSY	*	1					
21	V120-366-001-60	SCREW	*	8					
22	V112-165-001-60	SCREW/M5X16	*	4					

FIG.108 REAR GLASS, SEAL SYSTEM (C TYPE)

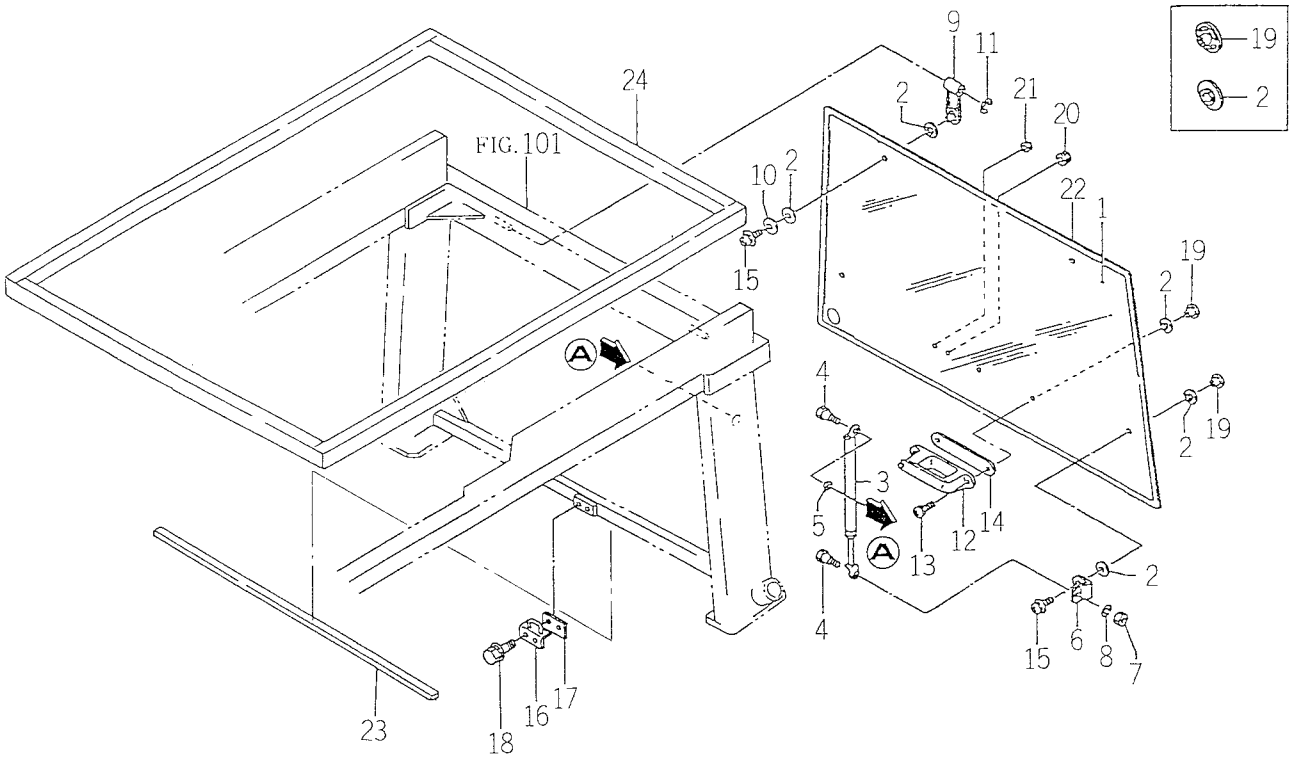

1594-743

KEY	PART CODE	DESCRIPTION	SPC	TYPE OF MODEL TK538H		ITC	COL	GRP	REMARKS
1	1594-743-101-00	GLASS/SIDE	*	1					
2	1581-740-113-00	GROMMET	*	10					
3	1566-743-102-00	DAMPER WIND ASSY	*	2					
4	1581-742-105-00	BOLT, SET/M6X14	*	4					
5	1566-743-103-00	COLLAR/06X12X05	*	2					
6	1581-742-621-00	PLATE	*	2					
7	V301-260-006-00	NUT/M 6	*	2					
8	V401-160-006-00	WASHER, SP/M 6	*	2					
9	1581-740-112-00	HINGE	*	2					
10	1581-740-114-00	WASHER 07X36X02	*	2					
11	1566-731-107-00	RING, RETANING/E07	*	2					
12	1581-742-590-00	HANDLE, WINDOW LOCK	*	1					
13	V120-266-002-00	SCREW, SEMS	*	2					
14	1581-742-582-00	INSULATOR	*	1					
15	V120-366-001-60	SCREW	*	4					
16	1560-743-500-00	STRIKER	*	1					
17	1568-731-103-00	PLATE/I 25X60	*	1					
18	V210-360-601-60	BOLT(SP)/M6X16	*	2					
19	1581-742-102-00	NUT, GLASS	*	4					
20	1432-665-014-00	GROMMET/13X17X5	*	1					
21	1432-665-015-00	GROMMET/6X10X5	*	1					
22	1560-744-101-00	INSULATOR	*	1					
23	1560-744-102-00	INSULATOR	*	1					
24	1594-752-101-00	INSULATOR/ROOF	*	1					

FIG.109 COCKPIT SYSTEM (C TYPE)

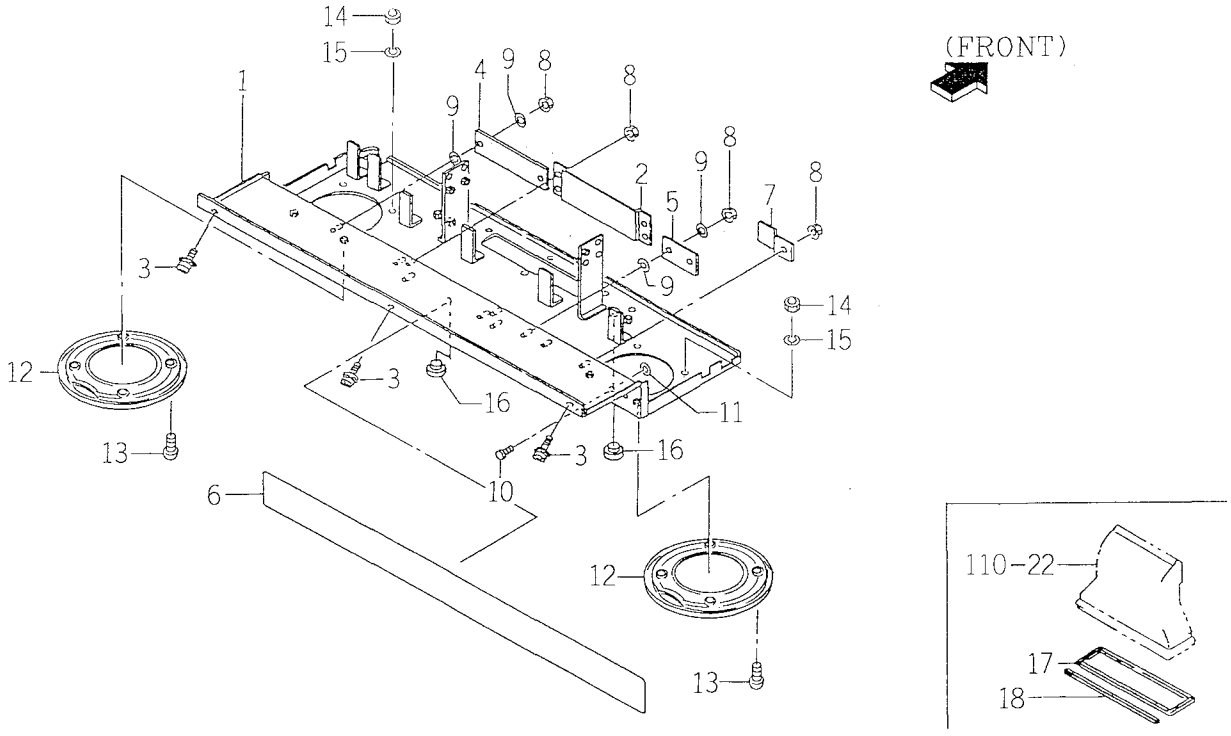

1594-770

KEY	PART CODE	DESCRIPTION	SPC	TYPE OF MODEL TK538H		ITC	COL	GRP	REMARKS
1	1594-770-500-20	PANEL/ROOF COMP	*	1					
2	1596-770-101-20	PLATE	*	1					
3	V120-366-001-60	SCREW	*	5					
4	1518-621-111-00	PLATE(A)	*	1					
5	1518-621-112-00	PLATE(B)	*	1					
6	1596-770-102-30	ORNAMENT/COCKPIT	*	1					
7	1566-669-112-00	PLATE	*	1					
8	V360-260-006-00	NUT/M6	*	9					
9	V411-260-006-00	WASHER / M6	*	8					
10	1527-604-002-00	CLIP(B)	*	4					
11	V411-260-008-00	WASHER, PL/M 8	*	4					
12	1674-770-001-00	COVER/SPEAKER	*	2					
13	V111-164-002-50	SCREW/M 4X25	*	8					
14	V301-260-004-00	NUT/M4	*	8					
15	V401-160-004-00	WASHER, SP/M 4	*	8					
16	1434-611-002-10	CAP(M8)	*	4					
17	1599-780-111-00	INSULATOR/HEATER	*	1					
18	1599-780-113-00	INSULATOR/HEATER	*	1					

FIG.110 HEATER SYSTEM (C TYPE) (1/2)

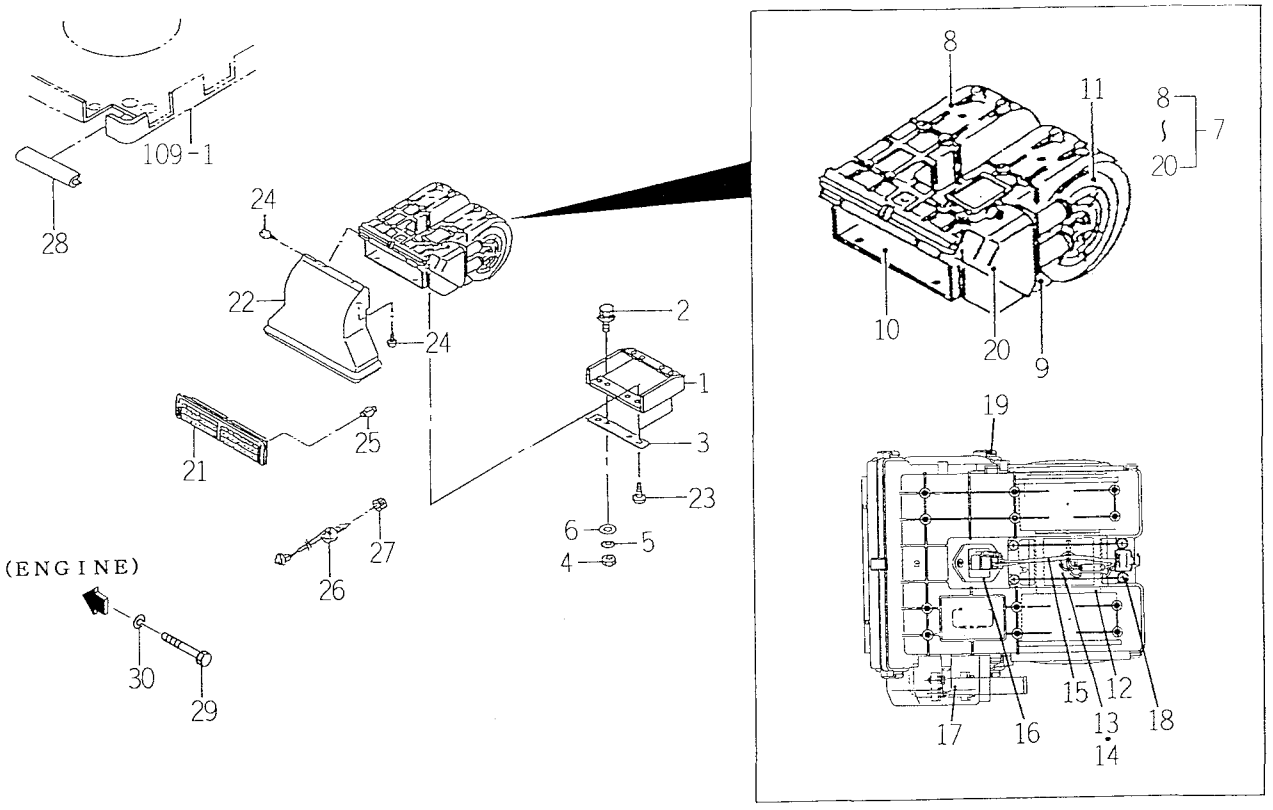

1674-780

KEY	PART CODE	DESCRIPTION	SPC	TYPE OF MODEL TK538H		ITC	COL	GRP	REMARKS
1	1594-780-600-00	BRACKET COMP	*	1					
2	V210-360-601-60	BOLT(SP)/M6X16	*	2					
3	1596-780-101-00	PLATE/I/25X281	*	1					
4	V301-260-006-00	NUT/M 6	*	2					
5	V401-160-006-00	WASHER,SP/M 6	*	2					
6	V411-260-006-00	WASHER / M6	*	2					
7	1596-780-520-00	HEATER	*	1					
8	1596-780-561-00	CASE	*	1					
9	1596-780-562-00	CASE	*	1					
10	1596-780-563-00	CASE	*	1					
11	1596-780-564-00	GRILLE	*	2					
12	1596-780-565-00	FAN/MOTOR	*	1					
13	1596-780-566-00	ISOLATOR	*	2					
14	1596-780-567-00	LINING	*	1					
15	1596-780-568-00	WIRE/HARNESS	*	1					
16	1596-780-569-00	RESISTOR	*	1					
17	1596-780-581-00	HEATER/CORE ASSY	*	1					
18	1596-780-503-00	SCREW/TAPPING/M04	*	1					
19	1596-780-582-00	CLIP	*	10					
20	1596-780-583-00	COVER	*	1					
21	1596-780-530-00	GRILLE	*	1					
22	1596-780-501-00	DUCT	*	1					
23	1596-780-502-00	SCREW/TAPPING/M05	*	4					
24	1596-780-503-00	SCREW/TAPPING/M04	*	4					
25	1596-780-504-00	NUT/SPRING	*	6					
26	1596-780-550-00	SWITCH/HEATER	*	1					
27	1596-780-512-00	KNOB	*	1					
28	1596-669-107-00	TRIM/75	*	1					
29	1560-559-002-00	BOLT/08X121	*	1					
30	V401-160-008-00	WASHER,SP/M 8	*	1					

FIG.110 HEATER SYSTEM (C TYPE) (2/2)

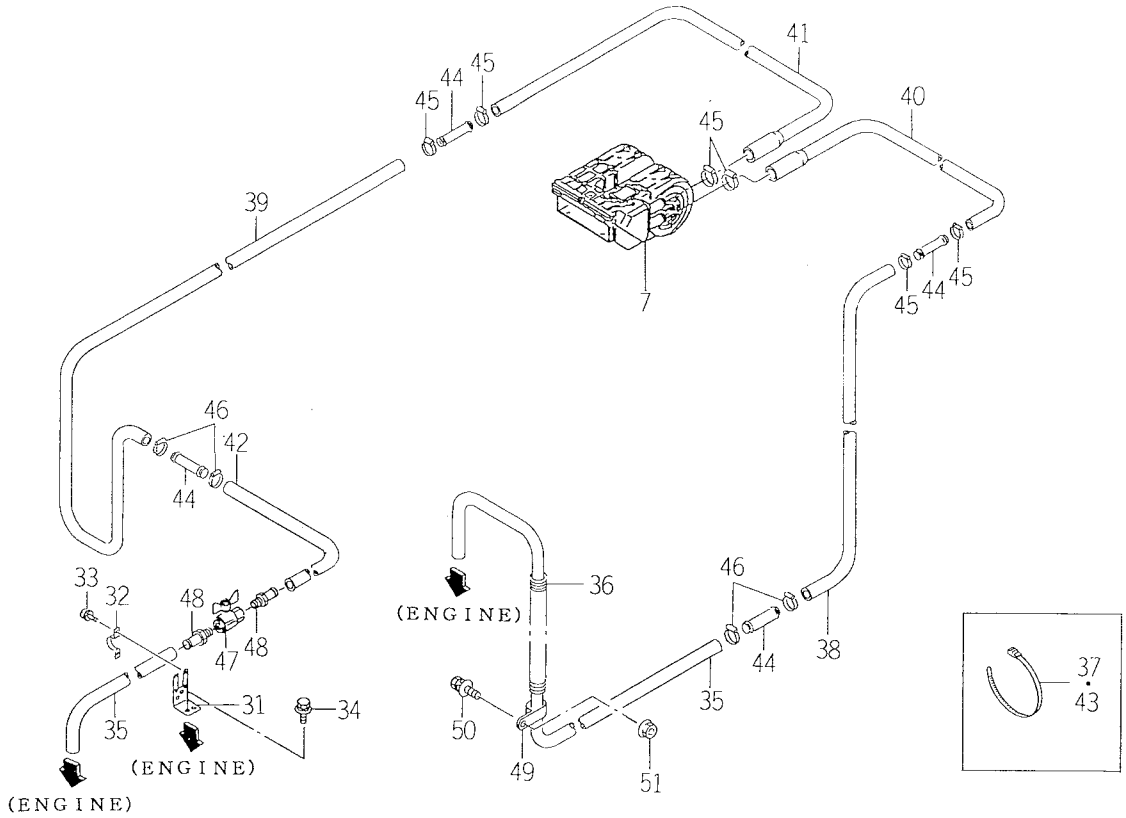

1674-780

KEY	PART CODE	DESCRIPTION	SPC	TYPE OF MODEL TK538H		ITC	COL	GRP	REMARKS
31	1599-780-650-10	BRACKET COMP	*	1					
32	1599-780-109-00	CLIP	*	2					
33	V120-264-001-20	BOLT/M4X12	*	4					
34	V211-360-801-60	BOLT, SEMS (SP)	*	1					
35	1674-780-001-00	HOSE/HEATER/D	*	1					
36	1674-780-011-00	INSULATOR/CORRUGATE/	*	1					
37	1342-402-006-00	BAND, WIRE/250	*	1					
38	1674-780-009-00	HOSE/HEATER	*	1					
39	1674-780-003-00	HOSE/HEATER	*	1					
40	1674-780-004-00	HOSE/HEATER	*	1					
41	1674-780-005-00	HOSE/HEATER	*	1					
42	1674-780-006-00	HOSE/HEATER	*	1					
43	1342-402-006-00	BAND, WIRE/250	*	1					
44	1674-780-007-00	CONNECTOR/STRAIGHT	*	3					
45	1650-780-011-00	CLIP/HOSE/18-22	*	6					
46	J061-116-025-00	CLAMP/WORM/16-25	*	6					
47	1599-780-620-00	COCK ASSY	*	1					
48	1674-780-008-00	JOINT/PT3/8	*	2					
49	1518-786-512-00	CLIP C	*	2					
50	V211-360-802-00	BOLT(SP) M8X20	*	2					
51	V362-260-008-00	NUT/WASHER	*	2					

FIG.111 ORNAMENT

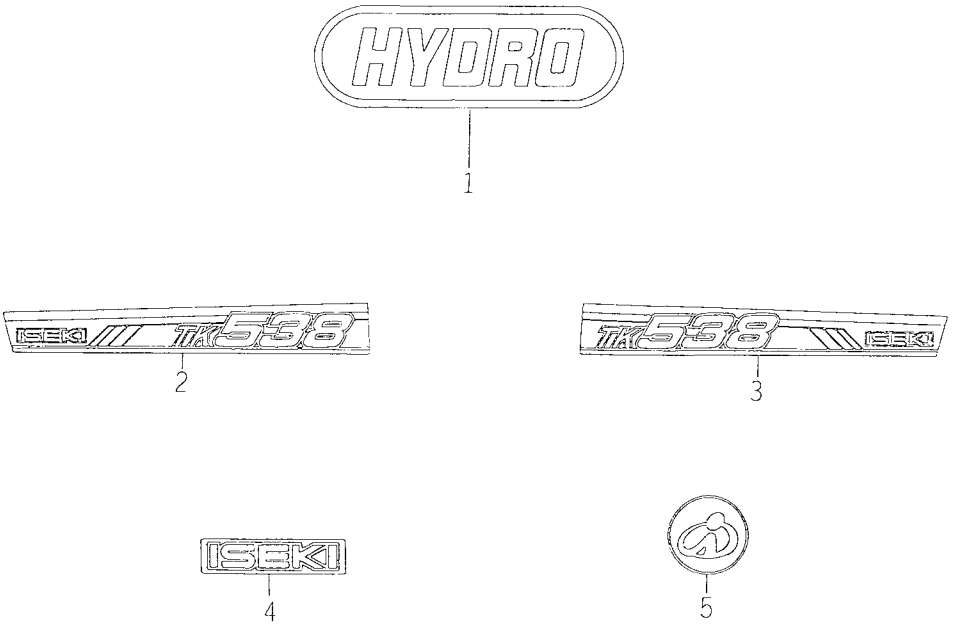

1646-901E

KEY	PART CODE	DESCRIPTION	SPC	TYPE OF MODEL TK538H		ITC	COL	GRP	REMARKS
1	1646-901-061-00	ORNAMENT/HYDRO	*	2					
2	1674-901-007-00	ORNAMENT/SIDE/538LH	*	1					
3	1674-901-008-00	ORNAMENT/SIDE/538RH	*	1					
4	1118-901-006-00	ORNAMENT/ISEKI	*	1					
5	1696-901-006-00	ORNAMENT/STEERING	*	1					

FIG.112 LABEL (CONTROL)

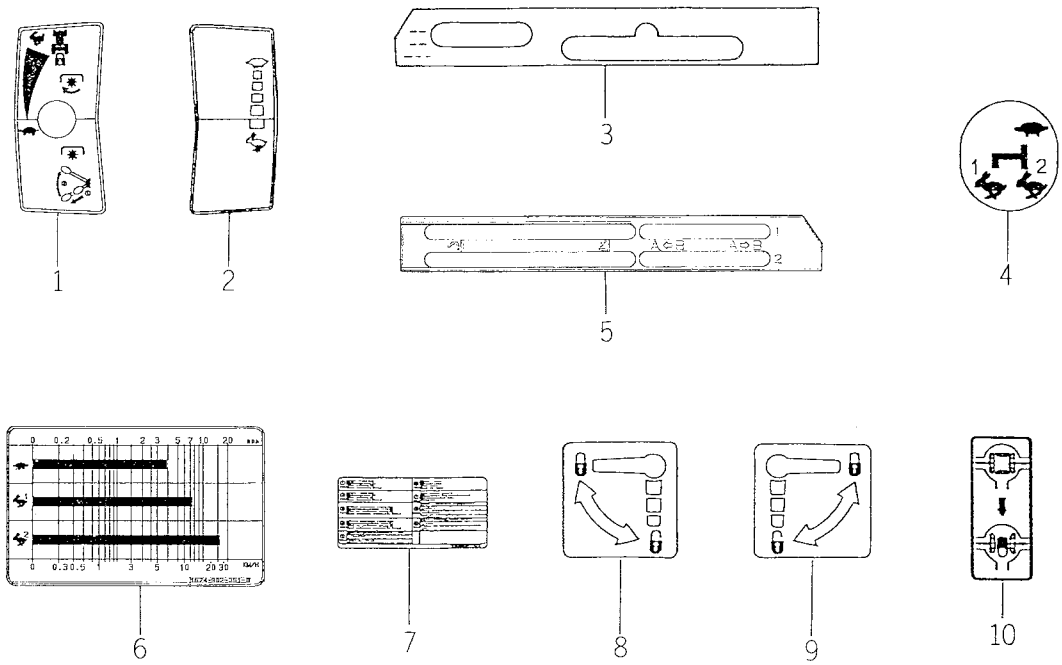

1674-902B

KEY	PART CODE	DESCRIPTION	SPC	TYPE OF MODEL TK538H		ITC	COL	GRP	REMARKS
1	1646-902-054-00	LABEL/CRUISE/PTO	*	1					
2	1560-903-004-80	LABEL/CONTROL/THROTT	*	1					
3	1594-904-001-10	LABEL/CONTROL	*	1					
4	1641-902-051-00	LABEL/CONTROL/SUB	*	1					
5	1674-902-006-00	LABEL/CONTROL/POSITI	*	1					
6	1674-902-051-00	LABEL/SPEED/HST	*	1					
7	1674-902-005-00	LABEL/FUSE/MAIN/E4	*	1					
8	1640-902-005-00	LABEL/KNOB/OPEN	*	1					
9	1640-902-006-00	LABEL/KNOB/OPEN	*	1					
10	1683-902-004-00	LABEL/DIFF	*	1					

FIG.113 LABEL (ENGLISH)

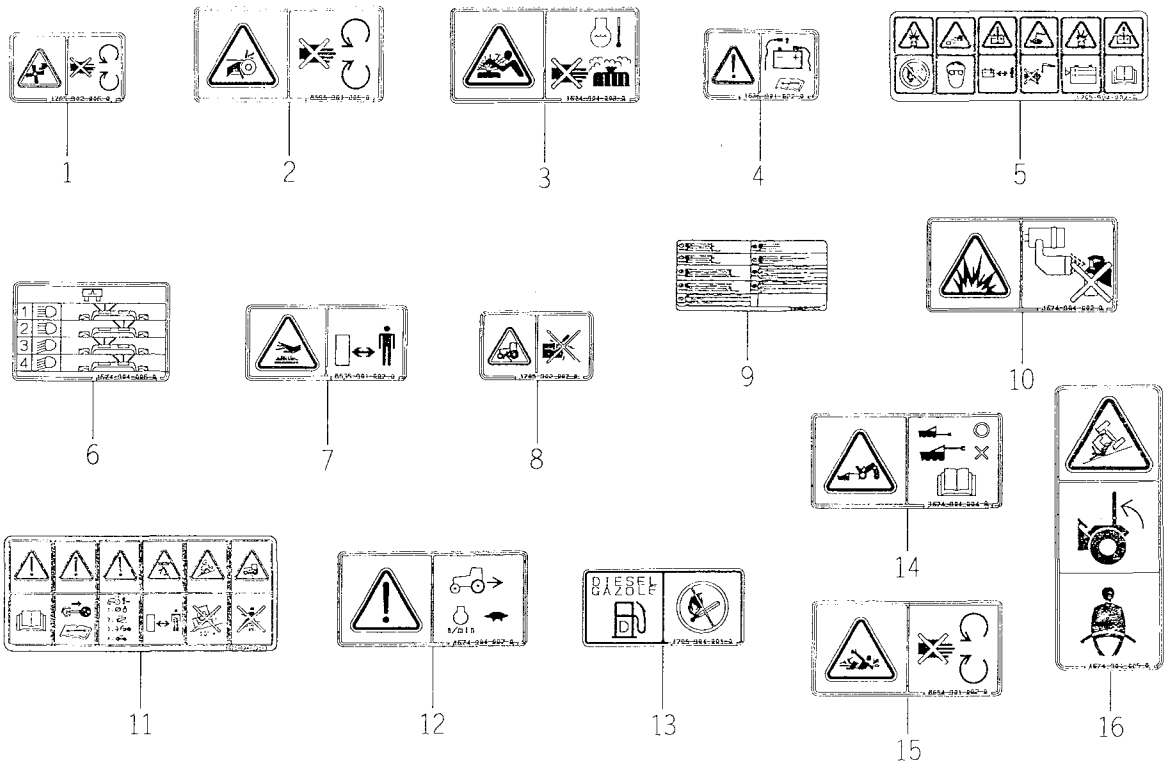

1674-904

KEY	PART CODE	DESCRIPTION	SPC	TYPE OF MODEL TK538H		ITC	COL	GRP	REMARKS
1	1705-902-006-00	LABEL/W/FAN	T	2					
2	8595-901-006-00	LABEL/WARNING/BELT	T	2					
3	1674-904-003-00	LABEL/RADIATOR	T	1					
4	1636-901-022-00	LABEL/CAUTION/BATTER	T	1					
5	1705-904-002-00	LABEL/BATTERY	T	1					
6	1674-904-006-00	LABEL/FUSE/LIGHT	T	1					
7	8595-901-007-00	LABEL/WARNING/HOT	T	1					
8	1705-902-007-00	LABEL/W/STARTER	T	1					
9	1674-902-005-00	LABEL/FUSE/MAIN/E4	T	1					
10	1674-904-002-00	LABEL/ETHER	T	1					
11	1674-904-001-00	LABEL/DRIVE	T	1					
12	1674-904-007-00	LABEL/SHIFT	T	1					
13	1705-904-001-00	LABEL/FUEL	T	1					
14	1674-904-004-00	LABEL/TRAILER	T	1					
15	8654-901-002-00	LABEL/PTO	T	1					
16	1674-904-005-00	LABEL/ROPS	T	1					

FIG.114 LABEL

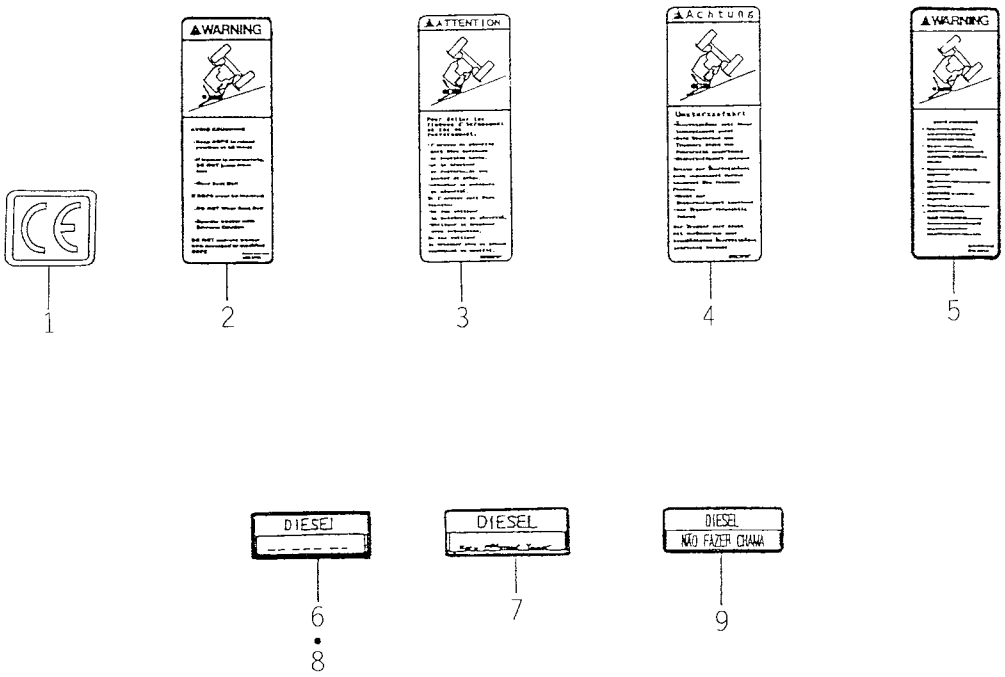

1620-905

KEY	PART CODE	DESCRIPTION	SPC	TYPE OF MODEL TK538H		ITC	COL	GRP	REMARKS
1	2500-901-027-00	LABEL/CE	*	1					
2	1640-903-045-10	LABEL/W/ROPS/E30	*	1					
3	1640-903-046-00	LABEL/W/ROPS/E50	*	1					
4	1640-903-047-00	LABEL/W/ROPS/E20	*	1					
5	1640-903-048-00	LABEL/W/ROPS/E40P	*	1					
6	1427-941-016-00	MARK, FUEL	*	1					
7	1427-934-013-00	MARK, FUEL/FR	*	1					
8	1600-902-023-00	LABEL, FUEL/D	*	1					
9	1640-903-067-00	LABEL/FUEL/P	*	1					

FIG.115 TOOL

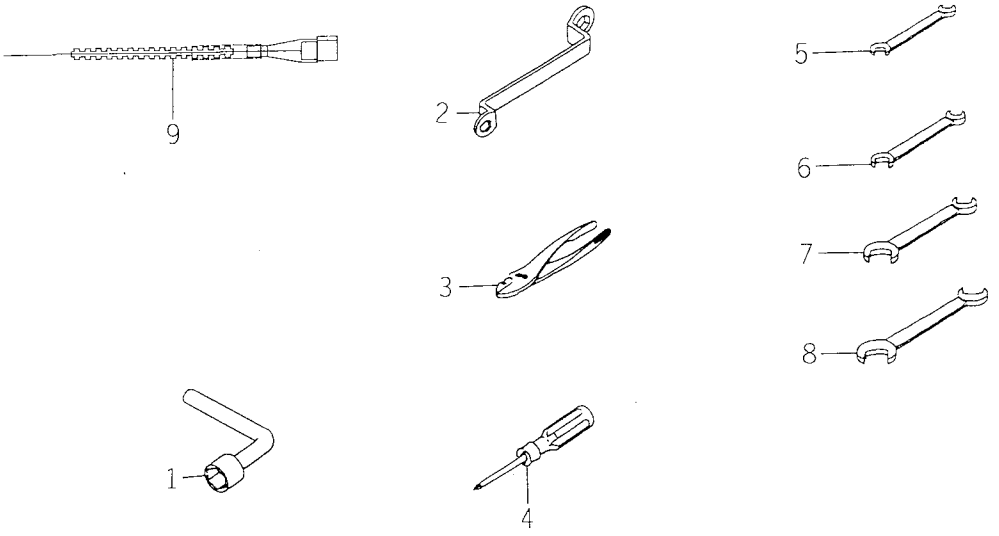

1674-912

KEY	PART CODE	DESCRIPTION	SPC	TYPE OF MODEL TK538H		ITC	COL	GRP	REMARKS
1	1421-906-001-00	SPANNER, BOX/22	*	1					
2	1401-906-005-00	WRENCH, SOCKET/17X19	*	1					
3	V936-150-015-00	PLIERS/G150	*	1					
4	2130-931-210-00	SCREWDRIVER ASSY	*	1					
5	V920-551-001-20	SPANNER/10X12	*	1					
6	V920-551-401-70	SPANNER/14X17	*	1					
7	V920-551-902-20	SPANNER/19X22	*	1					
8	V920-552-402-70	SPANNER/24X27	*	1					
9	1682-690-380-00	HARNESS/SOCKET ASSY	*	1					

FIG.116 AIR CLEANER ASSY (OPTION)

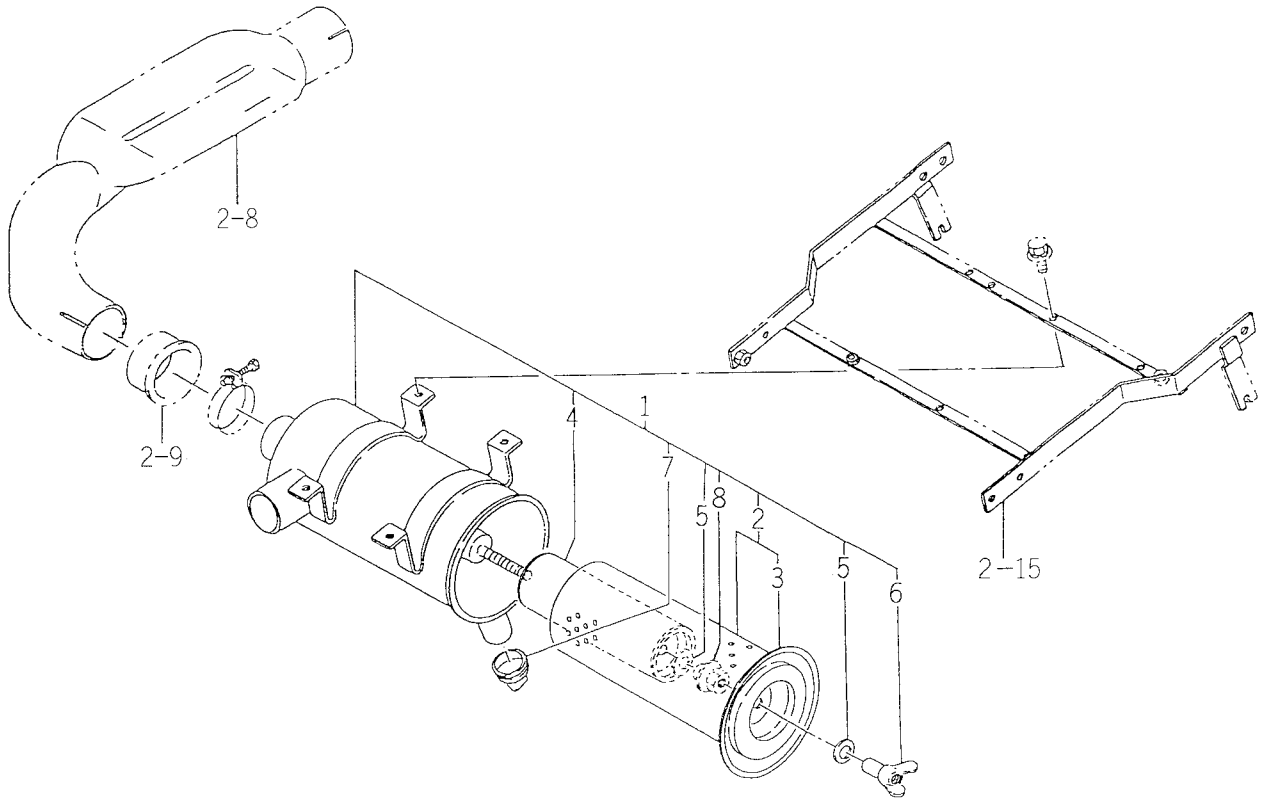

1674-103

KEY	PART CODE	DESCRIPTION	SPC	TYPE OF MODEL TK538H		ITC	COL	GRP	REMARKS
1	1595-103-200-00	CLEANER/AIR	T	1					
2	1572-103-250-00	ELEMENT, PAPER ASSY	T	1					
3	1560-103-261-00	GASKET	T	1					
4	1572-103-260-00	ELEMENT ASSY	T	1					
5	1419-101-010-00	PACKING ASSY	T	2					
6	1510-103-250-00	WING NUT ASSY	T	1					
7	1544-104-205-00	VALVE	T	1					
8	1510-103-201-00	NUT	T	1					

FIG.117 MUFFLER (TAIL/UPPER) SYSTEM (EXCEPT C TYPE) (OPTION)

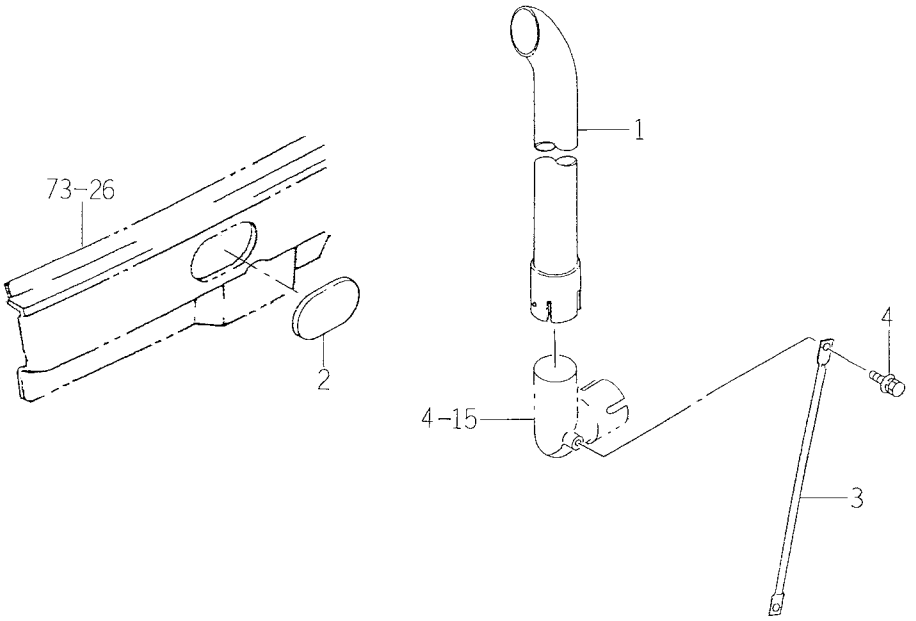

1674-105C

KEY	PART CODE	DESCRIPTION	SPC	TYPE OF MODEL TK538H		ITC	COL	GRP	REMARKS
1	1594-105-230-00	PIPE/TAIL/UPPER	T	1					
2	1594-105-002-00	GROMMET	T	1					
3	1674-105-003-00	ROD	T	1					
4	V211-360-802-00	BOLT(SP) M8X20	T	2					

FIG.118 PTO (MIDDLE) SET (OPTION)

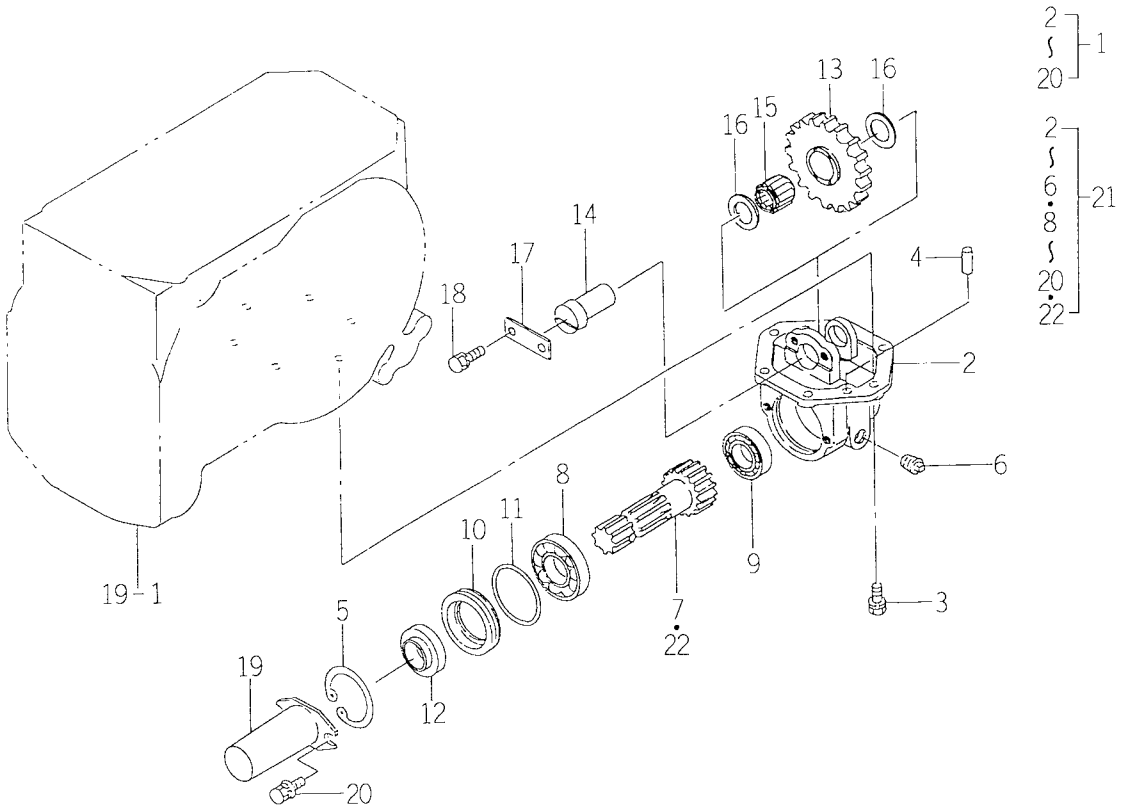

1594-272

KEY	PART CODE	DESCRIPTION	SPC	TYPE OF MODEL TK538H		ITC	COL	GRP	REMARKS
1	1594-272-200-00	PTO/MID SET	T	1					
2	1594-272-001-00	CASE	T	1					
3	V211-261-003-00	BOLT(S) M10X30	T	6					
4	V523-101-002-40	PIN	T	2					
5	V707-140-072-00	RING/SNAP	T	1					
6	V781-160-000-6B	PLUG/SCREW/SEAL	T	1					
7	1594-272-002-00	SHAFT/PTO.MID	T	1					
8	V600-110-620-60	BEARING,RB/6206	T	1					
9	V600-110-620-70	BEARING,RB/6207	T	1					
10	1560-273-003-00	METAL	T	1					
11	1524-244-005-00	O-RING	T	1					
12	1426-258-200-10	SEAL ASSY	T	1					
13	1594-272-003-00	GEAR/SPUR/37	T	1					
14	1594-272-004-00	SHAFT/IDLE	T	1					
15	V654-425-322-40	BEARING KT253224	T	1					
16	1435-203-001-00	COLLAR/25X46X3	T	2					
17	1594-272-006-00	PLATE	T	1					
18	V211-560-801-60	BOLT,SEMS	T	2					
19	1444-314-009-10	CAP,PTO SHAFT	T	1					
20	V211-360-801-60	BOLT,SEMS (SP)	T	2					
21	1640-272-200-00	PTO/MID SET	T	1					
22	1640-272-001-00	SHAFT/PTO/MID/SAE	T	1					

FIG.119 REAR WHEEL SYSTEM (OPTION)

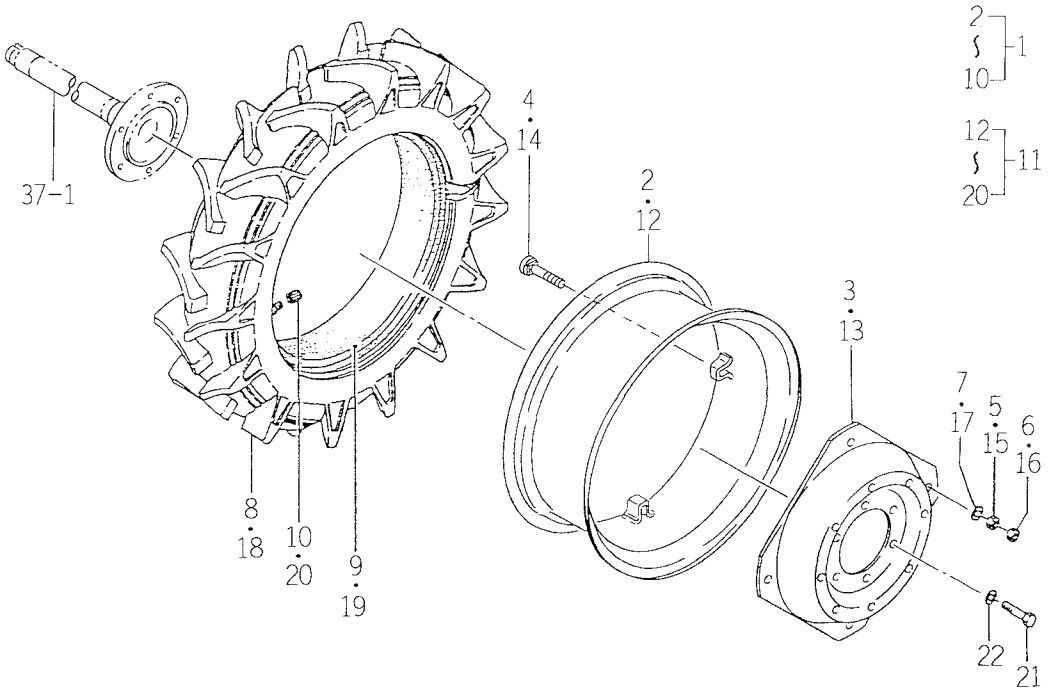

1595-320

KEY	PART CODE	DESCRIPTION	SPC	TYPE OF MODEL TK538H		ITC	COL	GRP	REMARKS
1	1595-320-210-20	TIRE/LH ASSY	T	1			6G		
2	1640-320-220-02	WHEEL/24XW10 COMP	T	1			6G		
3	1640-320-211-03	DISK	T	1			6G		
4	V240-461-608-50	BOLT/M16X85	T	4					
5	V304-460-016-00	NUT/M16	T	4					
6	V302-460-016-00	NUT/M16	T	4					
7	V401-160-016-00	WASHER, SP/M16	T	4					
8	1431-361-211-00	TIRE/12.4-24-4PR	T	1					
9	V889-001-242-40	TUBE	T	1					
10	V999-200-003-00	CAP, TIRE VALVE	T	1					
11	1595-320-220-20	TIRE/RH ASSY	T	1			6G		
12	1640-320-220-02	WHEEL/24XW10 COMP	T	1			6G		
13	1640-320-211-03	DISK	T	1			6G		
14	V240-461-608-50	BOLT/M16X85	T	4					
15	V304-460-016-00	NUT/M16	T	4					
16	V302-460-016-00	NUT/M16	T	4					
17	V401-160-016-00	WASHER, SP/M16	T	4					
18	1431-361-211-00	TIRE/12.4-24-4PR	T	1					
19	V889-001-242-40	TUBE	T	1					
20	V999-200-003-00	CAP, TIRE VALVE	T	1					
21	V201-361-603-00	BOLT	T	12					
22	V401-160-016-00	WASHER, SP/M16	T	12					

FIG.120 REAR WHEEL (TURF) SYSTEM (OPTION)

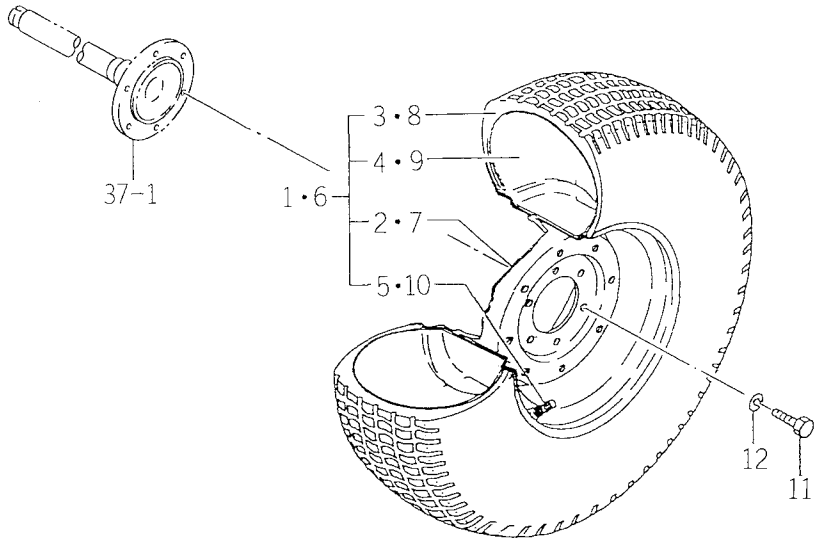

1594-321

KEY	PART CODE	DESCRIPTION	SPC	TYPE OF MODEL TK538H		ITC	COL	GRP	REMARKS
1	1510-331-310-00	TIRE, R.TURF L.H ASSY	T	1			6G		
2	1510-331-320-02	WHEEL/20XW11 COMP	T	1			6G		
3	1510-331-311-00	TIRE, R.TURF LH ASSY	T	1					
4	1510-331-312-00	TUBE	T	1					
5	V999-200-003-00	CAP, TIRE VALVE	T	1					
6	1510-331-330-00	TIRE, R.TURF R.H ASSY	T	1			6G		
7	1510-331-320-02	WHEEL/20XW11 COMP	T	1			6G		
8	1510-331-311-00	TIRE, R.TURF LH ASSY	T	1					
9	1510-331-312-00	TUBE	T	1					
10	V999-200-003-00	CAP, TIRE VALVE	T	1					
11	V201-361-603-00	BOLT	T	12					
12	V401-160-016-00	WASHER, SP/M16	T	12					

FIG.121 FRONT HITCH SET (OPTION)

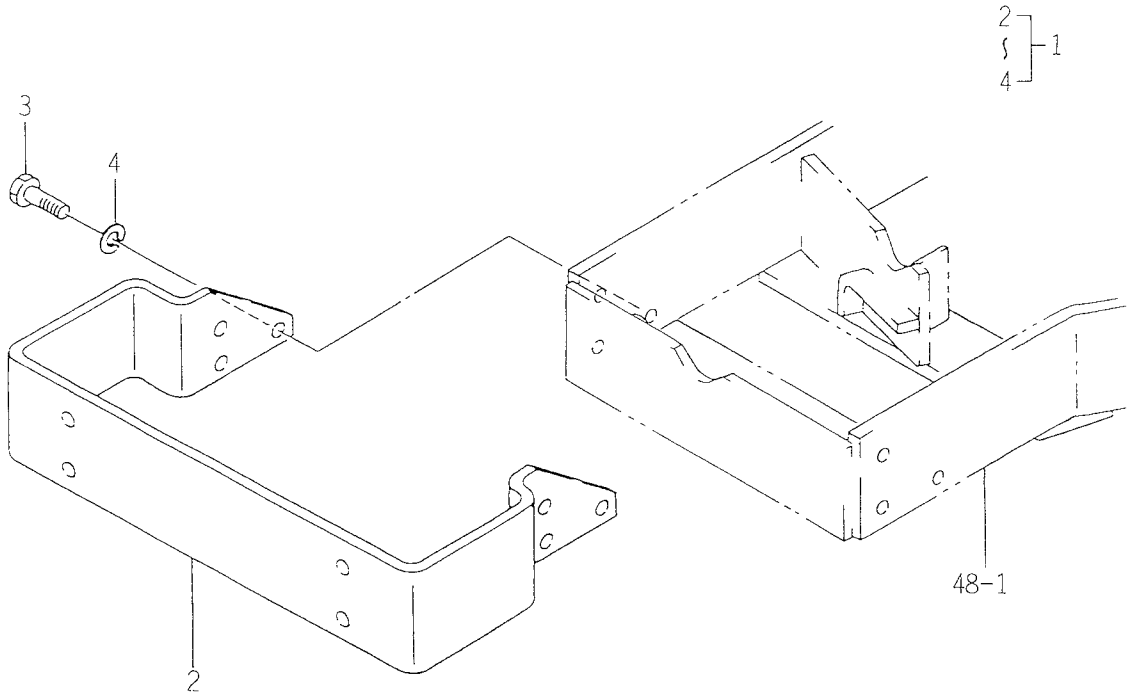

1594-410A

KEY	PART CODE	DESCRIPTION	SPC	TYPE OF MODEL TK538H		ITC	COL	GRP	REMARKS
1	1594-410-200-00	BRACKET/BUMPER SET	T	1					
2	1560-410-222-30	BRACKET	T	1					
3	V201-361-203-00	BOLT/M12X30	T	6					
4	V401-160-012-00	WASHER, SP/M12	T	6					

FIG.122 FRONT HITCH (EEC) SET (OPTION)

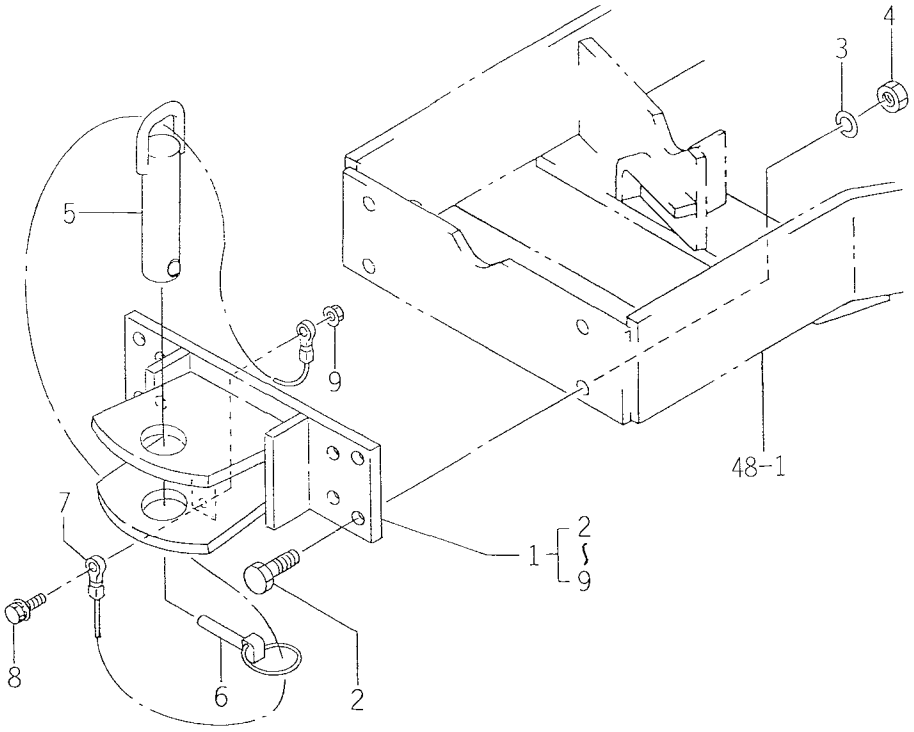

1674-410A

KEY	PART CODE	DESCRIPTION	SPC	TYPE OF MODEL TK538H		ITC	COL	GRP	REMARKS
1	1674-410-300-00	HITCH/FRONT SET	T	1					
2	V201-361-204-50	BOLT/M12X45	T	4					
3	V401-160-012-00	WASHER, SP/M12	T	4					
4	V304-460-012-00	NUT/M12	T	4					
5	1674-410-320-00	PIN/30X120 COMP	T	1					
6	1673-525-002-10	LINKPIN	T	1					
7	1674-410-301-00	CABLE	T	1					
8	V211-360-803-00	BOLT/M8X30	T	1					
9	V363-260-008-00	NUT, LOCK/M8	T	1					

FIG.123 SPACER (AXLE) SET (OPTION)

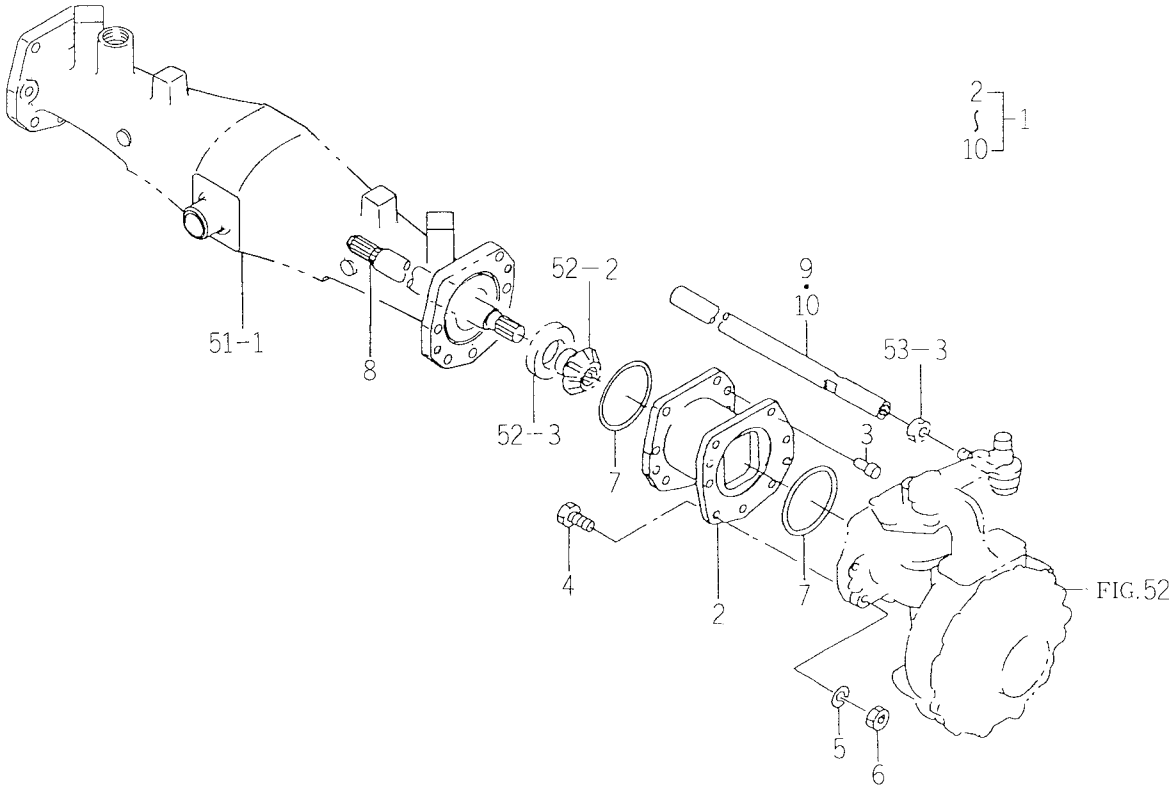

1594-433B

KEY	PART CODE	DESCRIPTION	SPC	TYPE OF MODEL TK538H		ITC	COL	GRP	REMARKS
1	1594-433-210-00	FLANGE/AXLE SET	T	1					
2	1594-433-220-00	FLANGE/AXLE COMP	T	2					
3	7963-201-003-00	PIN, KNOK	T	4					
4	V201-361-204-00	BOLT/M12X40	T	14					
5	V401-160-012-00	WASHER, SP/M12	T	14					
6	V304-460-010-00	NUT/M10	T	14					
7	V721-103-108-50	O-RING/G85	T	4					
8	1594-433-001-00	SHAFT/AXLE	T	2					
9	1594-433-002-00	ROD/TIE/LH	T	1					
10	1594-433-003-00	ROD/TIE/RH	T	1					

FIG.124 FRONT WHEEL SYSTEM (OPTION)

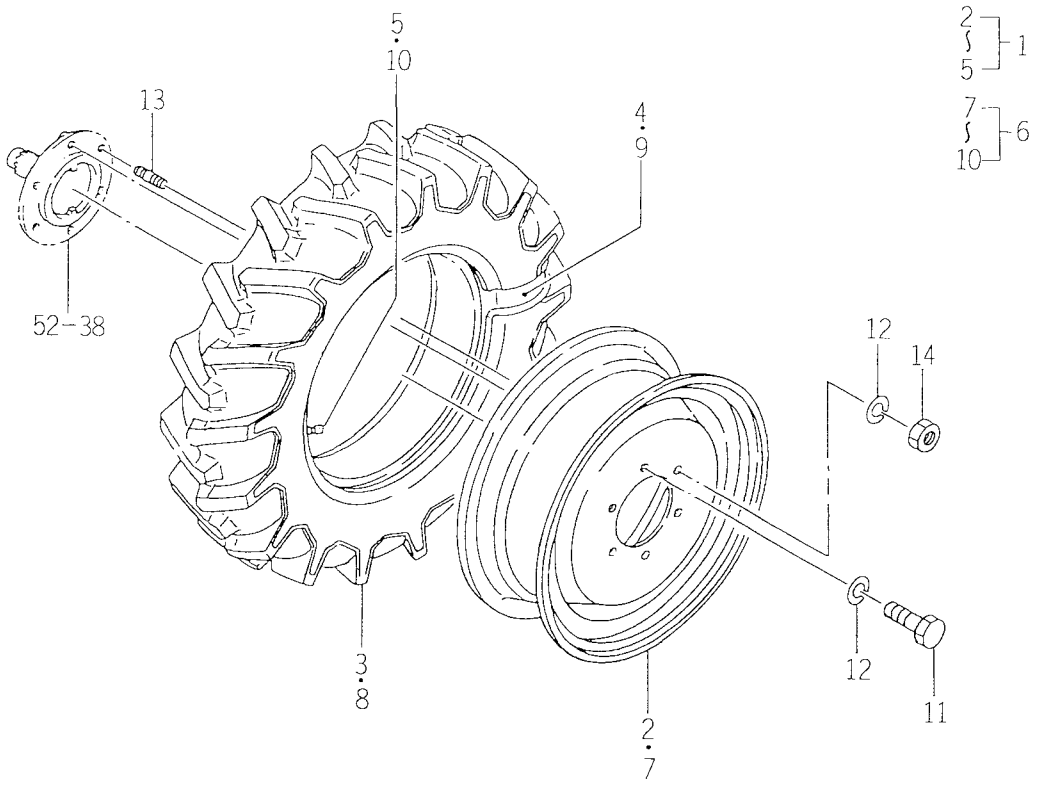

1640-437

KEY	PART CODE	DESCRIPTION	SPC	TYPE OF MODEL TK538H		ITC	COL	GRP	REMARKS
1	1640-437-210-00	TIRE/LH ASSY	T	1			6G		
2	1574-417-220-03	WHEEL/16X5.50F COMP	T	1			6G		
3	1640-437-211-00	TIRE/7-16-4	T	1					
4	1640-437-212-00	TUBE/TIRE/7-16	T	1					
5	V999-200-003-00	CAP, TIRE VALVE	T	1					
6	1640-437-220-00	TIRE/RH ASSY	T	1			6G		
7	1574-417-220-03	WHEEL/16X5.50F COMP	T	1			6G		
8	1640-437-211-00	TIRE/7-16-4	T	1					
9	1640-437-212-00	TUBE/TIRE/7-16	T	1					
10	V999-200-003-00	CAP, TIRE VALVE	T	1					
11	V201-361-203-00	BOLT/M12X30	T	8					
12	V401-160-012-00	WASHER, SP/M12	T	12					
13	V251-341-202-50	BOLT/M12X25	T	4					
14	V304-460-012-00	NUT/M12	T	4					

FIG.125 HUB RING SYSTEM (OPTION)

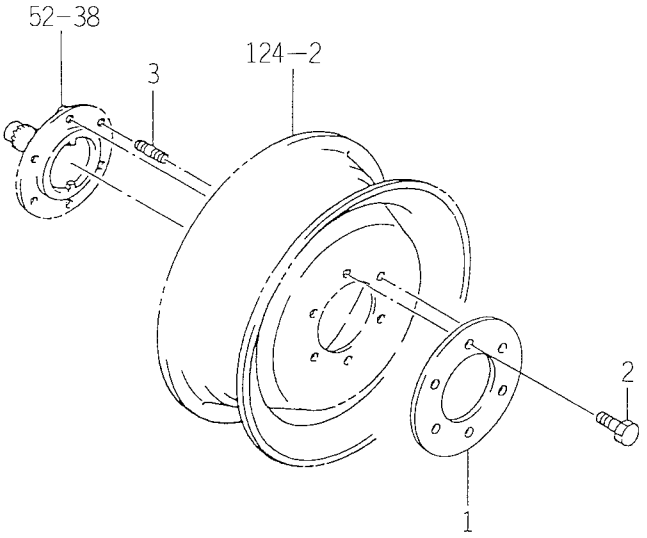

1594-437A

KEY	PART CODE	DESCRIPTION	SPC	TYPE OF MODEL TK538H		ITC	COL	GRP	REMARKS
1	1572-417-001-02	RING, HUB/150	T	2			6G		
2	V201-361-203-00	BOLT/M12X30	T	8					
3	V251-341-203-00	BOLT/STUD	T	4					

FIG.126 FRONT WHEEL (TURF) SYSTEM (OPTION)

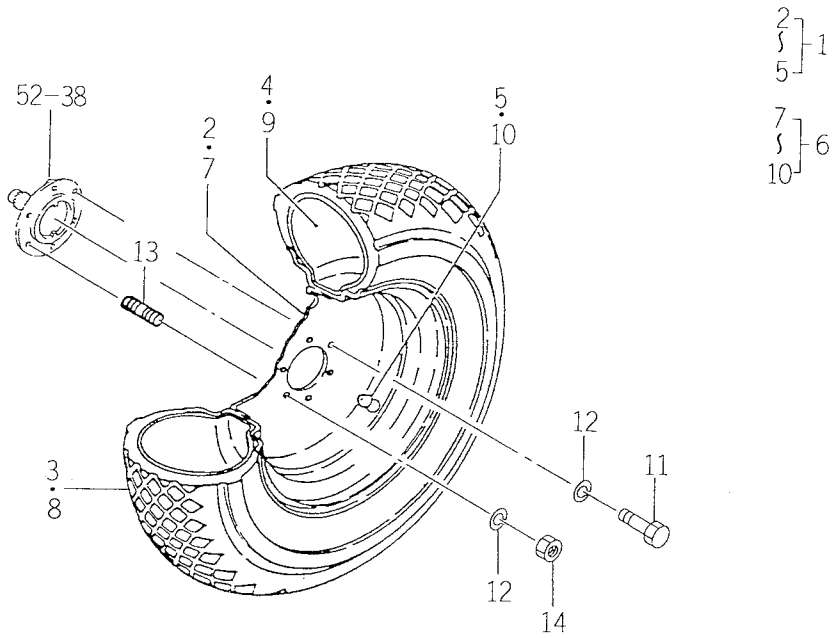

1594-438

KEY	PART CODE	DESCRIPTION	SPC	TYPE OF MODEL TK538H		ITC	COL	GRP	REMARKS
1	1510-417-310-00	TIRE, F. TURF L. H ASSY	T	1			6G		
2	1510-417-320-02	WHEEL/15X7JA COMP	T	1			6G		
3	1510-417-311-00	TIRE, F. TURF212-80-15	T	1					
4	1510-417-312-00	TUBE	T	1					
5	V999-200-003-00	CAP, TIRE VALVE	T	1					
6	1510-417-330-00	TIRE, F. TURF R. H ASSY	T	1			6G		
7	1510-417-320-02	WHEEL/15X7JA COMP	T	1			6G		
8	1510-417-311-00	TIRE, F. TURF212-80-15	T	1					
9	1510-417-312-00	TUBE	T	1					
10	V999-200-003-00	CAP, TIRE VALVE	T	1					
11	V201-361-203-00	BOLT/M12X30	T	8					
12	V401-160-012-00	WASHER, SP/M12	T	12					
13	V251-341-202-50	BOLT/M12X25	T	4					
14	V304-460-012-00	NUT/M12	T	4					

FIG.127 DRAFT SET (OPTION)

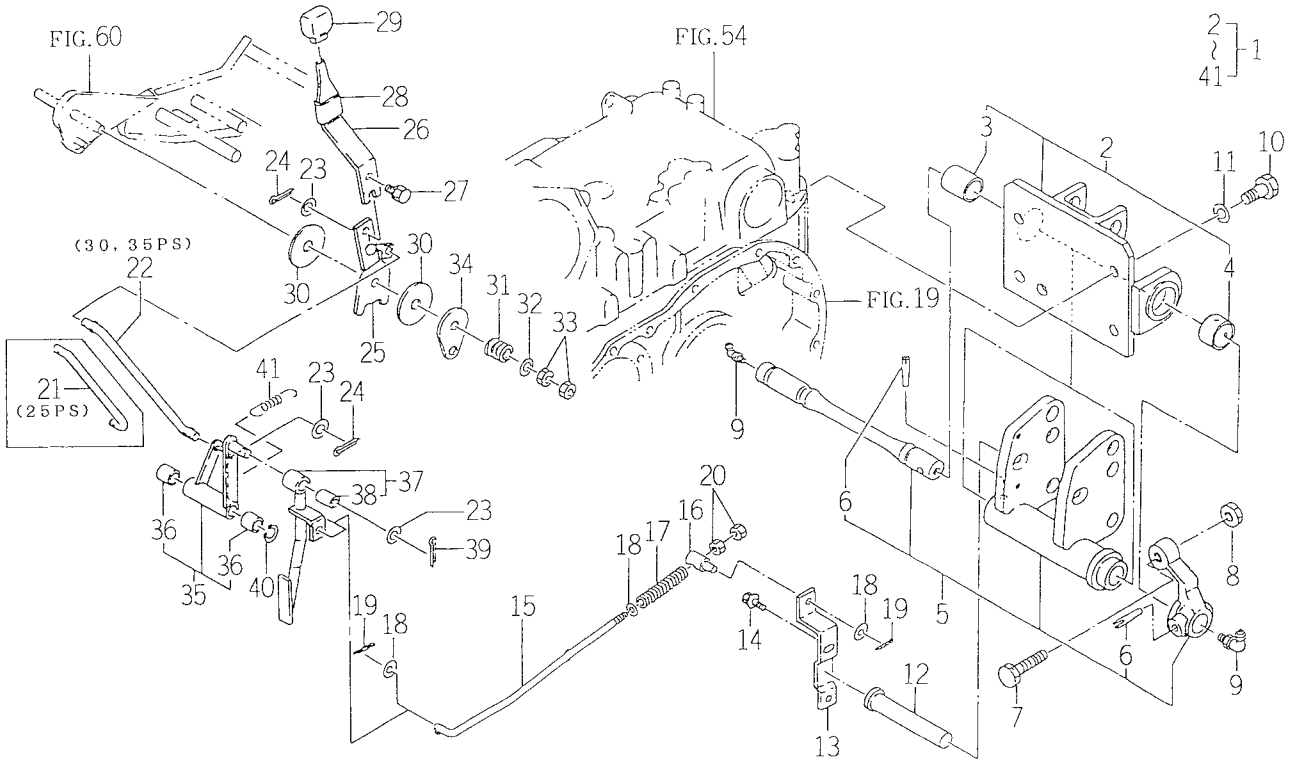

1594-512A

KEY	PART CODE	DESCRIPTION	SPC	TYPE OF MODEL TK538H		ITC	COL	GRP	REMARKS
1	1594-512-910-00	CONTROLLER/DRAF SET	T	1					
2	1594-512-210-10	BRACKET/DRAFT ASSY	T	1					
3	1560-522-002-00	BUSH/25X30X35	T	1					
4	1560-522-003-40	BUSH/33X38X20	T	1					
5	1560-522-230-40	HITCH ASSY	T	1					
6	V511-101-006-00	PIN, TAPER	T	2					
7	1594-512-004-00	BOLT/M14X50	T	1					
8	V304-260-014-00	NUT/M14	T	1					
9	V762-150-000-00	NIPPLE, GREASE/B-M6F	T	2					
10	V201-361-403-50	BOLT	T	4					
11	V401-160-014-00	WASHER, SP/M14	T	4					
12	1560-522-007-40	PIN/19X110	T	1					
13	1560-522-004-30	PLATE	T	1					
14	V211-360-801-60	BOLT, SEMS (SP)	T	2					
15	1594-512-002-00	ROD/DRAFT	T	1					
16	1560-522-008-30	JOINT	T	1					
17	1560-522-009-30	SPRING/HC076	T	1					
18	V411-260-008-00	WASHER, PL/M 8	T	2					
19	V500-162-502-00	PIN, SPLIT/2.5X20	T	2					
20	V304-260-008-00	NUT/M 8	T	2					
21	1561-514-211-40	ROD	T	1					
22	1563-514-211-40	ROD	T	1					
23	V411-260-008-00	WASHER, PL/M 8	T	4					
24	V500-162-002-00	PIN, SPLIT/2 X20	T	2					
25	1594-512-200-00	LEVER/PLATE COMP	T	1					
26	1594-512-001-10	LEVER/PLATE	T	1					
27	V211-260-801-60	BOLT, SEMS (S) M8X16	T	1					
28	1560-316-002-40	TUBE, STRAIGHT	T	1					
29	1415-505-015-00	GRIP	T	1					
30	1600-505-007-00	LINING/13X50X3	T	2					

FIG.127 DRAFT SET (OPTION)

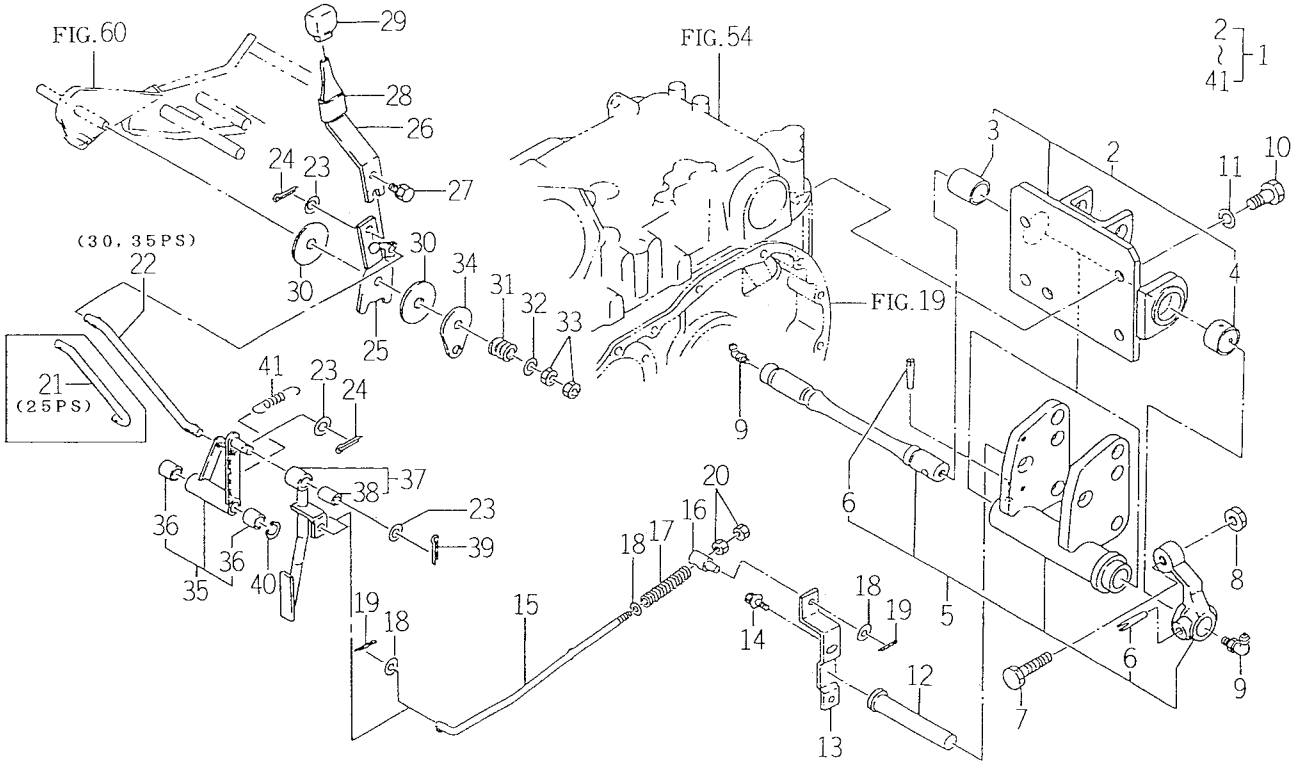

1594-512A

KEY	PART CODE	DESCRIPTION	SPC	TYPE OF MODEL TK538H		ITC	COL	GRP	REMARKS
31	1404-117-008-00	SPRING, PRESS/22	T	1					
32	V411-260-010-00	WASHER/M10	T	1					
33	V304-260-010-00	NUT	T	2					
34	1560-511-012-00	PLATE	T	1					
35	1560-512-230-60	ARM ASSY	T	1					
36	1560-511-015-00	BUSH/12X14X20	T	2					
37	1594-512-230-00	ARM/DRAFT ASSY	T	1					
38	1560-509-211-00	BUSH/10X12X20	T	1					
39	V500-162-002-00	PIN, SPLIT/2 X20	T	1					
40	V704-140-012-00	RING, SNAP/12 C	T	1					
41	1560-531-020-00	SPRING/HE068	T	1					

FIG.128 VALVE (REMOTE/1) SET (OPTION)

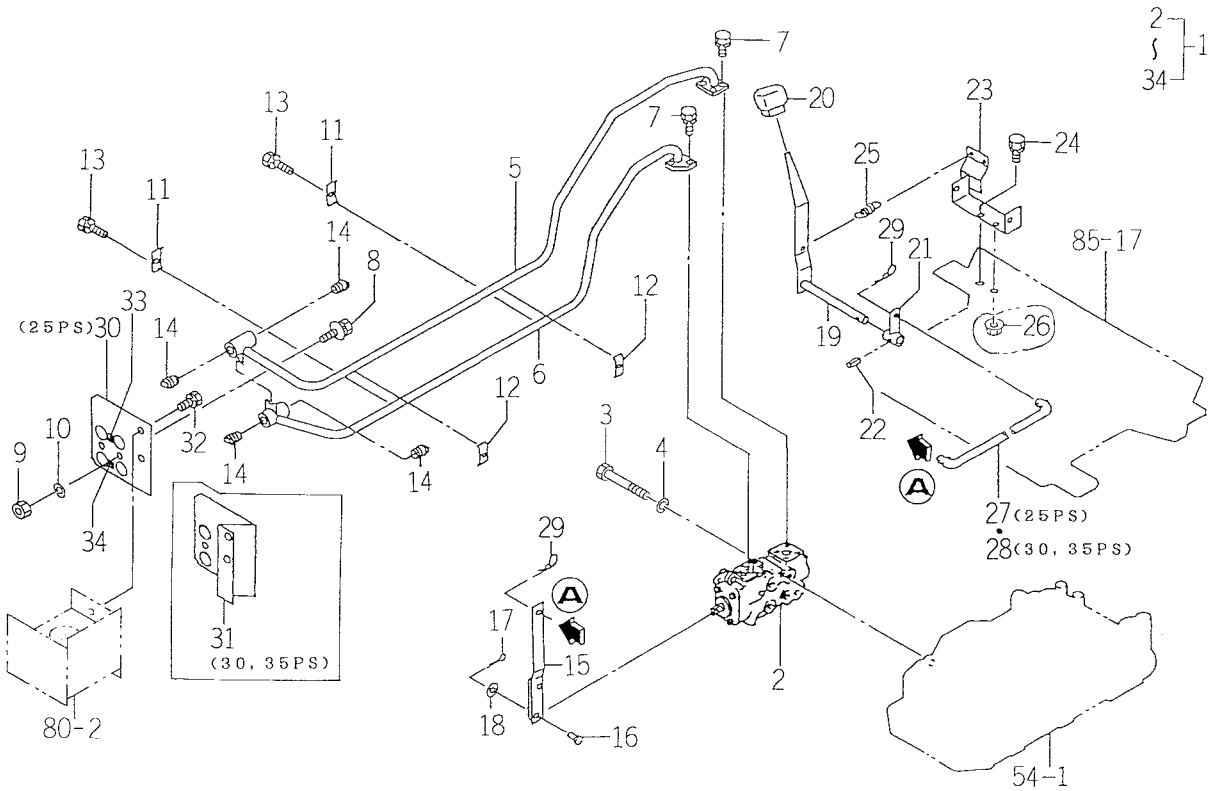

1594-517Z

KEY	PART CODE	DESCRIPTION	SPC	TYPE OF MODEL TK538H		ITC	COL	GRP	REMARKS
1	1594-517-910-00	VALVE SET	T	1					
2	K211-005-000-10	VALVE ASSY	T	1					FIG 142
3	V201-261-008-50	BOLT/M10X85	T	3					
4	V401-160-010-00	WASHER, SP/M10	T	3					
5	1594-517-200-20	PIPE/1ST/A COMP	T	1					
6	1594-517-210-20	PIPE/1ST/B COMP	T	1					
7	V211-260-802-50	BOLT/S	T	7					
8	V211-360-801-60	BOLT, SEMS (SP)	T	1					
9	V304-260-008-00	NUT/M 8	T	1					
10	V401-160-008-00	WASHER, SP/M 8	T	1					
11	1594-517-003-00	CLIP/19X3	T	2					
12	1594-517-004-00	CLIP/19X3	T	2					
13	V210-260-602-50	BOLT, S/M6X25	T	2					
14	V781-160-000-6T	PLUG/SCREW/SEAL	T	4					
15	1594-517-220-00	ARM COMP	T	1					
16	3614-725-006-00	PIN, STAY	T	2					
17	V500-162-001-50	PIN, SPLIT/2 X15	T	2					
18	V411-260-006-00	WASHER / M6	T	2					
19	1594-517-230-10	LEVER COMP	T	1					
20	1415-505-015-00	GRIP	T	1					
21	1594-517-240-10	ARM COMP	T	1					
22	V580-140-402-00	PIN/SPRING	T	1					
23	1594-517-250-10	BRACKET COMP	T	1					
24	V211-260-802-50	BOLT/S	T	2					
25	1415-125-021-00	SPRING, TENSION/46	T	1					
26	V363-260-008-00	NUT, LOCK/M8	T	1					
27	1594-517-002-00	ROD/218	T	1					
28	1595-517-002-00	ROD	T	1					
29	2130-601-018-00	PIN, SNAP/6	T	2					
30	1594-517-001-20	BRACKET	T	1					

FIG.128 VALVE (REMOTE/1) SET (OPTION)

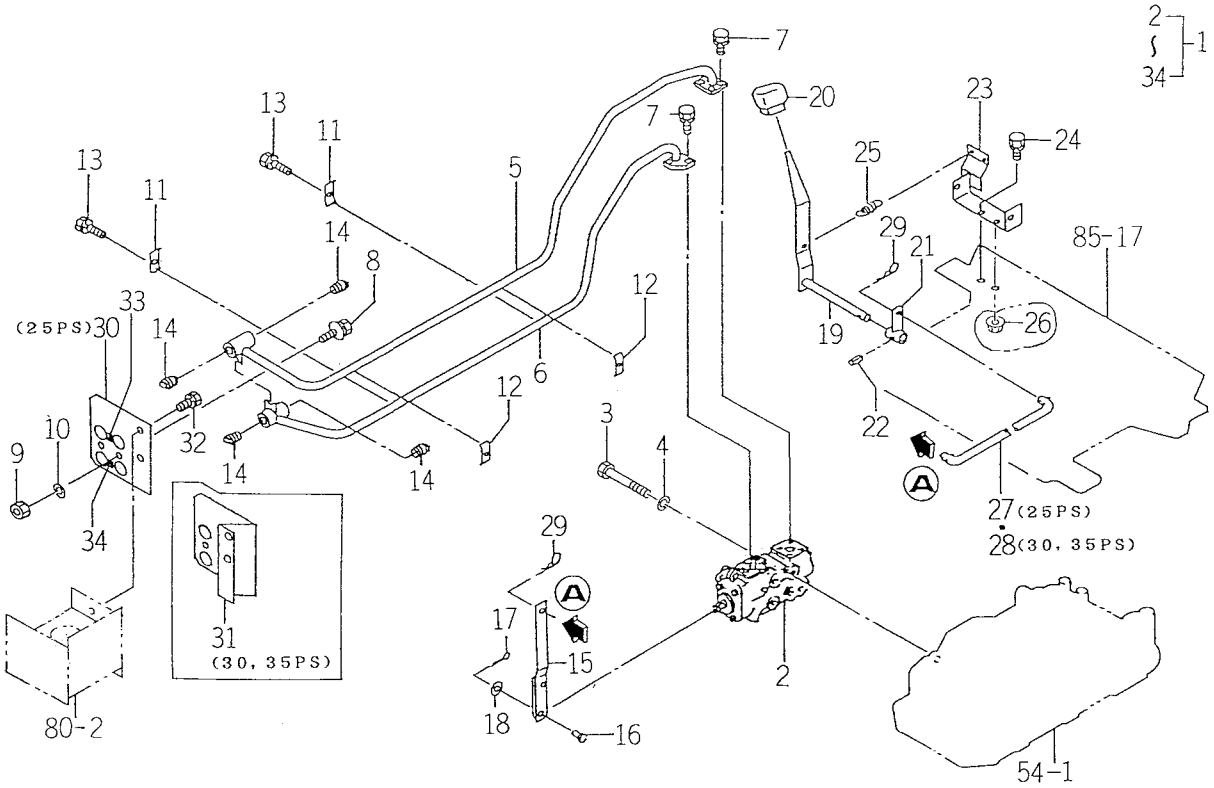

1594-517Z

KEY	PART CODE	DESCRIPTION	SPC	TYPE OF MODEL TK538H		ITC	COL	GRP	REMARKS
31	1595-517-001-20	BRACKET	T	1					
32	V211-260-801-60	BOLT, SEMS (S) M8X16	T	2					
33	1518-903-006-00	MARK, PORT A	T	1					
34	1518-903-007-00	MARK, PORT B	T	1					

FIG.129 DRAW BAR SET (OPTION)

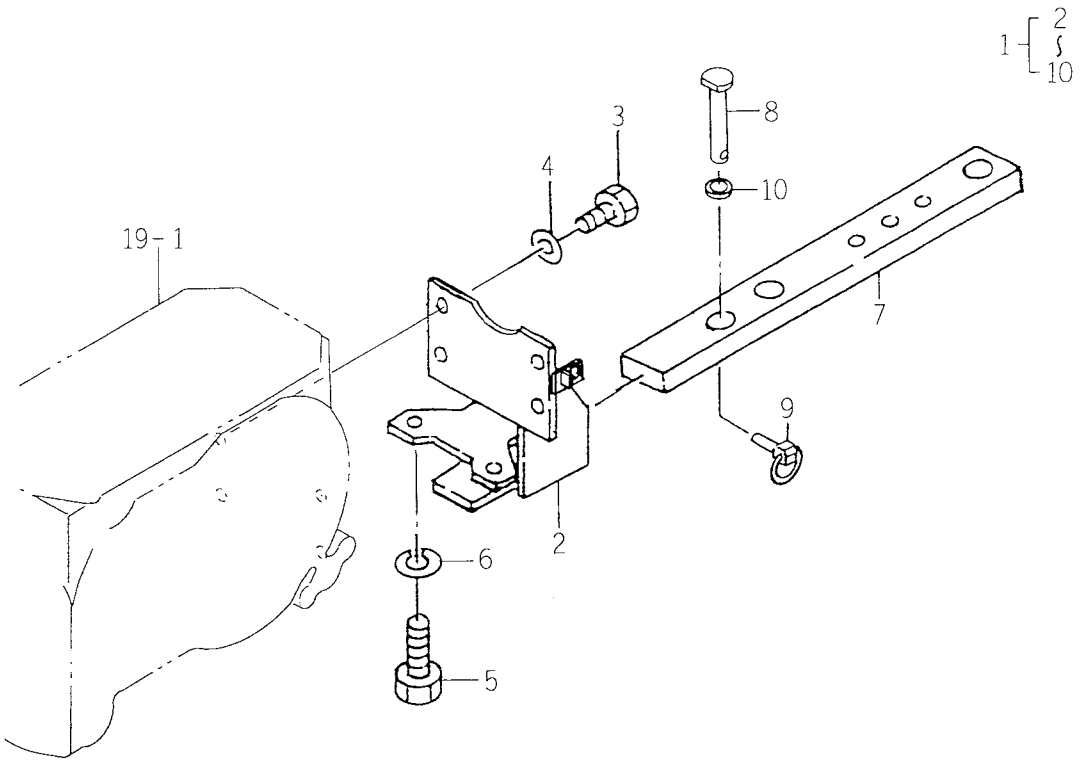

1640-520

KEY	PART CODE	DESCRIPTION	SPC	TYPE OF MODEL TK538H		ITC	COL	GRP	REMARKS
1	1640-520-400-10	DRAWBAR/FIX SET	T	1					
2	1640-520-210-20	BRACKET/DRAWBAR COMP	T	1					
3	V201-361-403-50	BOLT	T	4					
4	V401-160-014-00	WASHER, SP/M14	T	4					
5	V201-361-403-50	BOLT	T	2					
6	V401-160-014-00	WASHER, SP/M14	T	2					
7	1640-520-001-00	DRAWBAR	T	1					
8	1640-520-005-00	PIN/25X91	T	1					
9	1673-525-002-10	LINKPIN	T	1					
10	1640-520-004-00	INSULATOR	T	1					

FIG.130 TRAILER HITCH SET (OPTION)

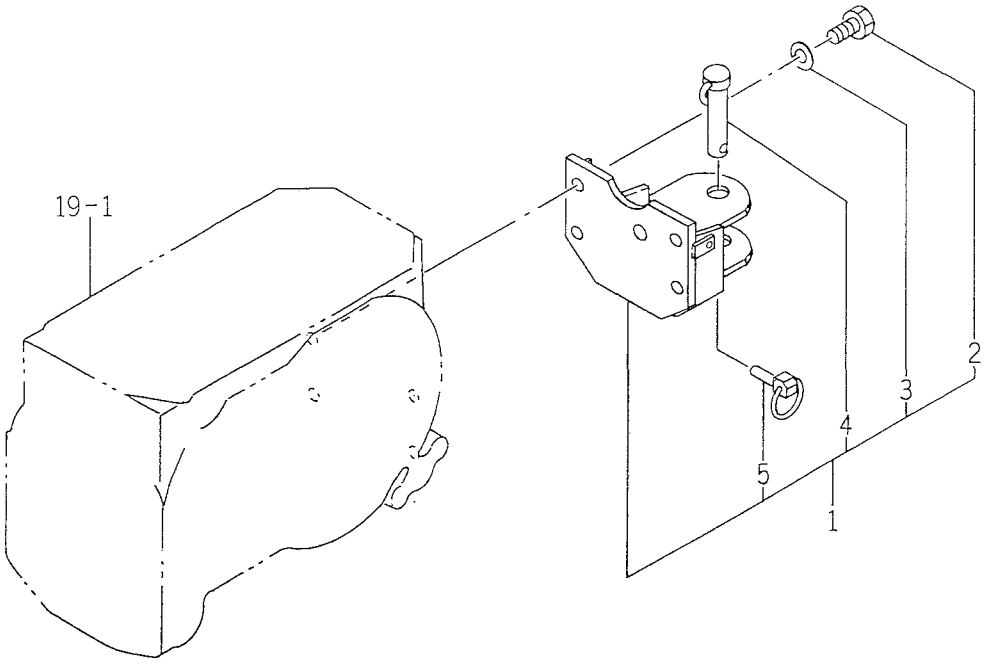

1595-520A

KEY	PART CODE	DESCRIPTION	SPC	TYPE OF MODEL TK538H		ITC	COL	GRP	REMARKS
1	1595-520-230-00	HITCH SET	T	1					
2	V201-361-403-50	BOLT	T	4					
3	V401-160-014-00	WASHER, SP/M14	T	4					
4	1488-247-250-00	PIN ASSY	T	1					
5	1673-525-002-10	LINKPIN	T	1					

FIG.131 CREVICE (DRAW BAR) SYSTEM (OPTION)

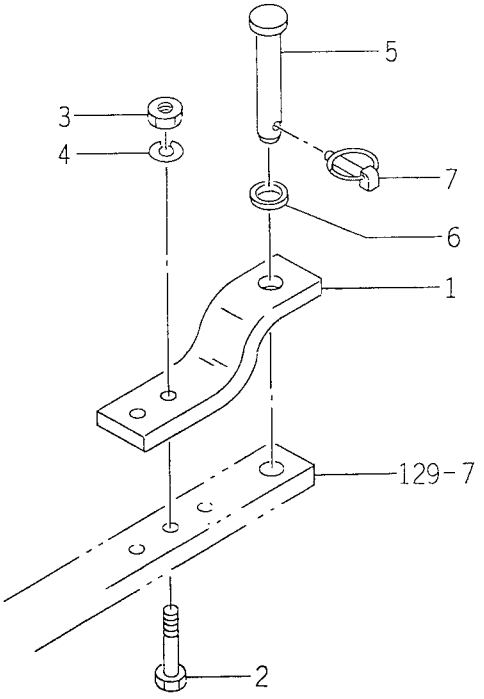

1640-520Z

KEY	PART CODE	DESCRIPTION	SPC	TYPE OF MODEL TK538H		ITC	COL	GRP	REMARKS
1	1640-520-002-00	LINK/DRAWBER	T	1					
2	V201-261-607-50	BOLT/M16X75	T	2					
3	1518-924-001-00	NUT, U/M16	T	2					
4	V401-160-016-00	WASHER, SP/M16	T	2					
5	1640-520-003-00	PIN/25X136	T	1					
6	1640-520-004-00	INSULATOR	T	1					
7	1673-525-002-10	LINKPIN	T	1					

FIG.132 HIGH HITCH SET (OPTION)

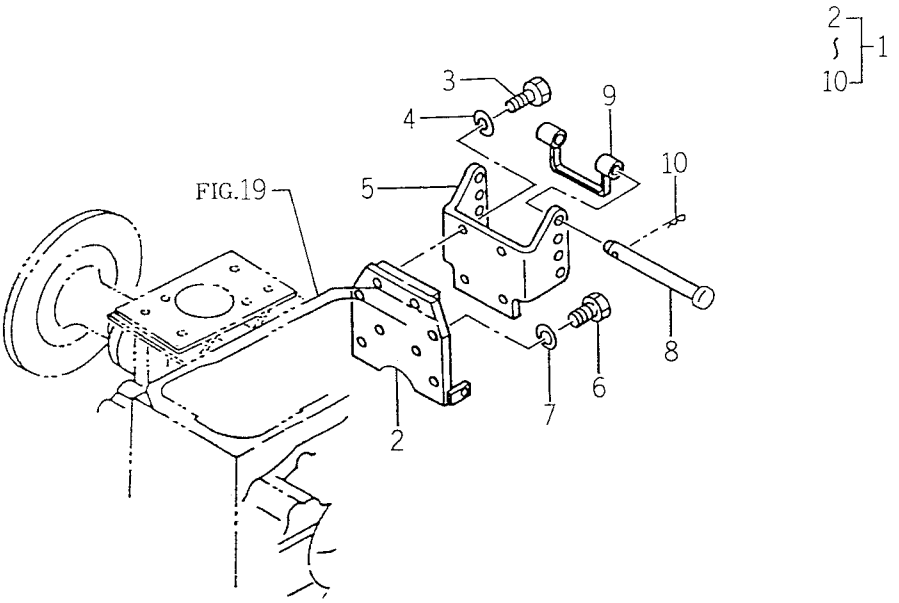

1594-521A

KEY	PART CODE	DESCRIPTION	SPC	TYPE OF MODEL TK538H		ITC	COL	GRP	REMARKS
1	1594-521-300-00	HIGH-HITCH SET	T	1					
2	1594-521-200-20	PLATE COMP	T	1					
3	V201-361-403-00	BOLT/M14X30	T	4					
4	V401-160-014-00	WASHER, SP/M14	T	4					
5	1594-521-001-10	BRACKET	T	1					
6	V201-361-403-00	BOLT/M14X30	T	4					
7	V401-160-014-00	WASHER, SP/M14	T	4					
8	1514-248-002-00	PIN/19X172	T	2					
9	1510-317-220-00	SPACER COMP	T	1					
10	1444-514-005-10	PIN, HAIR (19)	T	2					

FIG.133 VALVE (REMOTE/1R) SET (OPTION)

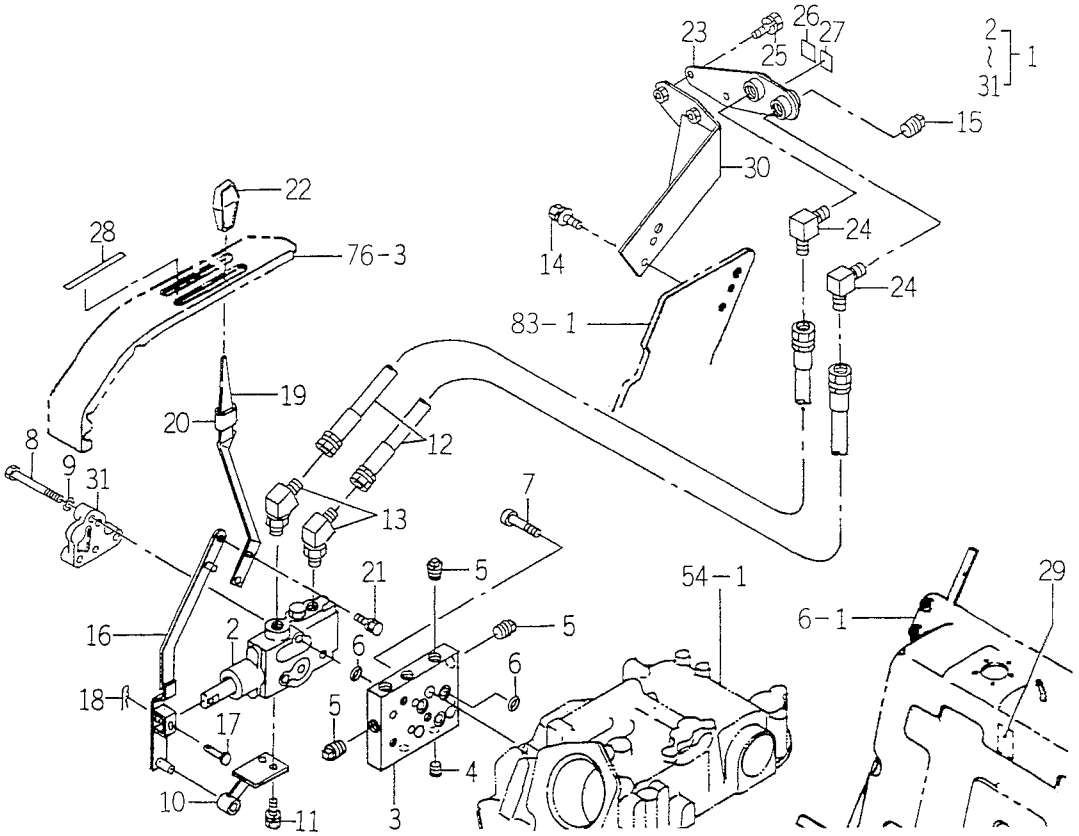

1640-530W

KEY	PART CODE	DESCRIPTION	SPC	TYPE OF MODEL TK538H		ITC	COL	GRP	REMARKS
1	1640-530-200-00	VALVE/REMOTE/1R SET	T	1					
2	1640-530-600-10	VALVE/CONTROL ASSY	T	1					FIG 148
3	1640-530-001-10	METAL/BYPASS	T	1					
4	V780-140-000-40	PLUG/SCREW	T	5					
5	V781-160-000-40	PLUG/SCREW	T	3					
6	V720-112-401-40	O-RING/P14	T	6					
7	V220-541-002-00	SCREW/SOCKET	T	3					
8	V201-261-008-00	BOLT/M10X80	T	3					
9	V401-160-010-00	WASHER, SP/M10	T	3					
10	1640-530-260-00	HOLDER COMP	T	1					
11	V211-260-801-60	BOLT, SEMS (S) M8X16	T	2					
12	1640-530-270-10	HOSE/660 COMP	T	2					
13	1640-530-003-00	CONNECTOR	T	2					
14	V211-360-802-00	BOLT(SP) M8X20	T	2					
15	V781-160-000-6T	PLUG/SCREW/SEAL	T	2					
16	1640-530-230-00	ARM/1ST COMP	T	1					
17	2144-519-007-00	PIN/06X31	T	1					
18	2130-601-018-00	PIN, SNAP/6	T	1					
19	1640-530-240-10	LEVER/1ST COMP	T	1					
20	1560-511-101-00	PROTECTER	T	1					
21	V211-260-801-20	BOLT, SEMS (S) M8X12	T	1					
22	1432-242-004-00	GRIP, B	T	1					
23	1620-507-460-00	STAY/PIPE COMP	T	1					
24	1584-522-001-00	ADAPTER/90°	T	2					
25	V211-260-802-00	BOLT, SEMS (S)	T	2					
26	1518-903-006-00	MARK, PORT A	T	1					
27	1518-903-007-00	MARK, PORT B	T	1					
28	1640-530-007-00	LABEL/CONTROL/SUBCON	T	1					
29	1640-530-008-00	LABEL/SUBCON	T	1					
30	1640-530-280-00	STAY/HOSE/LH COMP	T	1					

FIG.133 VALVE (REMOTE/1R) SET (OPTION)

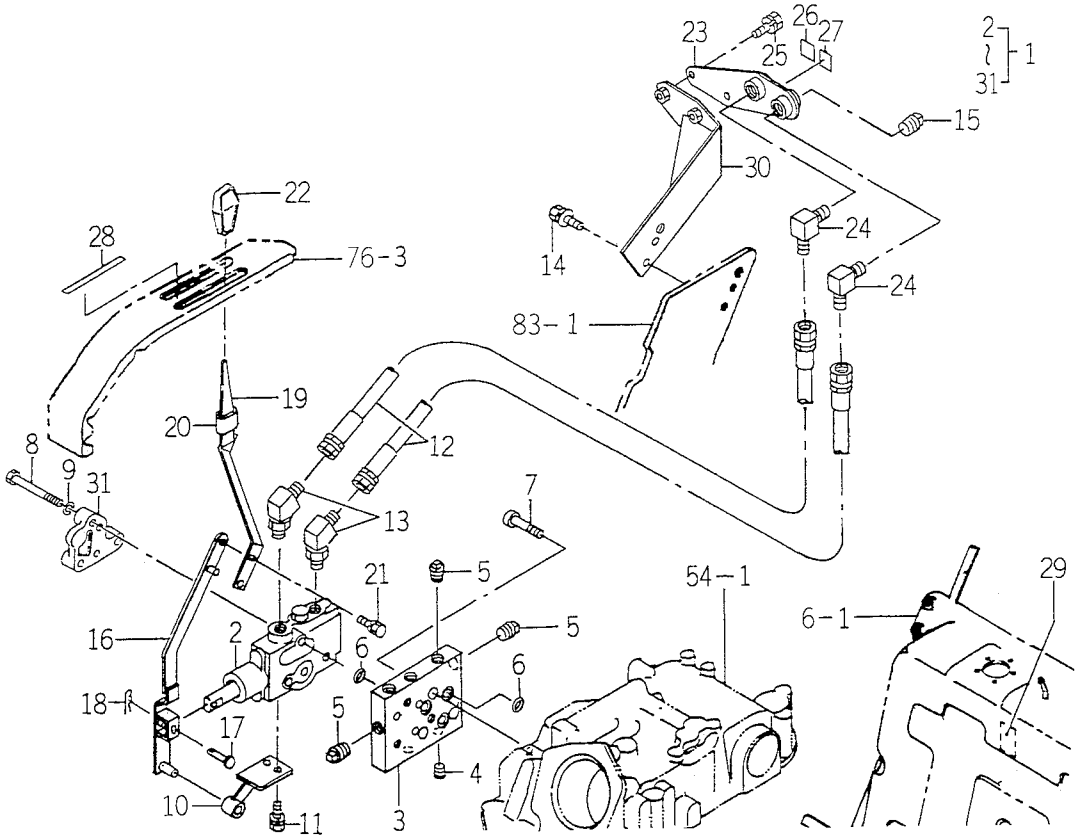

1640-530W

KEY	PART CODE	DESCRIPTION	SPC	TYPE OF MODEL TK538H		ITC	COL	GRP	REMARKS
31	1614-501-003-10	COVER	T	1					

FIG.134 VALVE (REMOTE/2R) SET (EXCEPT C TYPE) (OPTION)

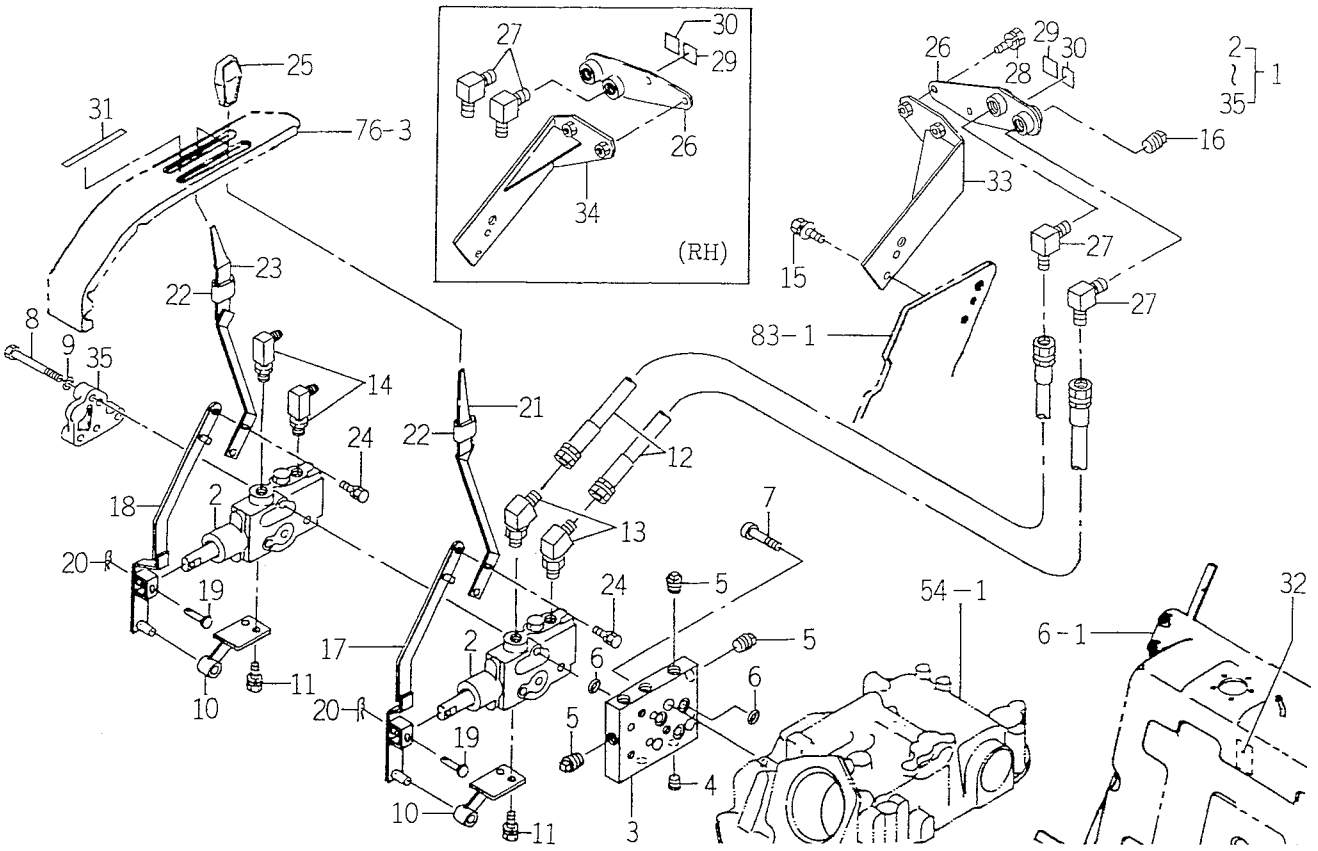

1640-530X

KEY	PART CODE	DESCRIPTION	SPC	TYPE OF MODEL TK538H		ITC	COL	GRP	REMARKS
1	1640-530-300-10	VALVE/REMOTE/2R SET	T	1					
2	1640-530-600-10	VALVE/CONTROL ASSY	T	2					FIG 148
3	1640-530-001-10	METAL/BYPASS	T	1					
4	V780-140-000-40	PLUG/SCREW	T	5					
5	V781-160-000-40	PLUG/SCREW	T	3					
6	V720-112-401-40	O-RING/P14	T	6					
7	V220-541-002-00	SCREW/SOCKET	T	3					
8	V201-261-012-00	BOLT/M10X120	T	3					
9	V401-160-010-00	WASHER, SP/M10	T	3					
10	1640-530-260-00	HOLDER COMP	T	2					
11	V211-260-801-60	BOLT, SEMS (S) M8X16	T	4					
12	1640-530-270-10	HOSE/660 COMP	T	4					
13	1640-530-003-00	CONNECTOR	T	2					
14	1640-530-009-00	CONNECTOR/L	T	2					
15	V211-360-802-00	BOLT(SP) M8X20	T	4					
16	V781-160-000-6T	PLUG/SCREW/SEAL	T	4					
17	1640-530-230-00	ARM/1ST COMP	T	1					
18	1640-530-330-00	ARM/2ND COMP	T	1					
19	2144-519-007-00	PIN/06X31	T	2					
20	2130-601-018-00	PIN, SNAP/6	T	2					
21	1640-530-240-10	LEVER/1ST COMP	T	1					
22	1560-511-101-00	PROTECTER	T	2					
23	1640-530-340-00	LEVER/2ND COMP	T	1					
24	V211-260-801-60	BOLT, SEMS (S) M8X16	T	2					
25	1432-242-004-00	GRIP, B	T	2					
26	1620-507-460-00	STAY/PIPE COMP	T	2					
27	1584-522-001-00	ADAPTER/90°	T	4					
28	V211-260-802-00	BOLT, SEMS (S)	T	4					
29	1518-903-006-00	MARK, PORT A	T	2					
30	1518-903-007-00	MARK, PORT B	T	2					

FIG.134 VALVE (REMOTE/2R) SET (EXCEPT C TYPE) (OPTION)

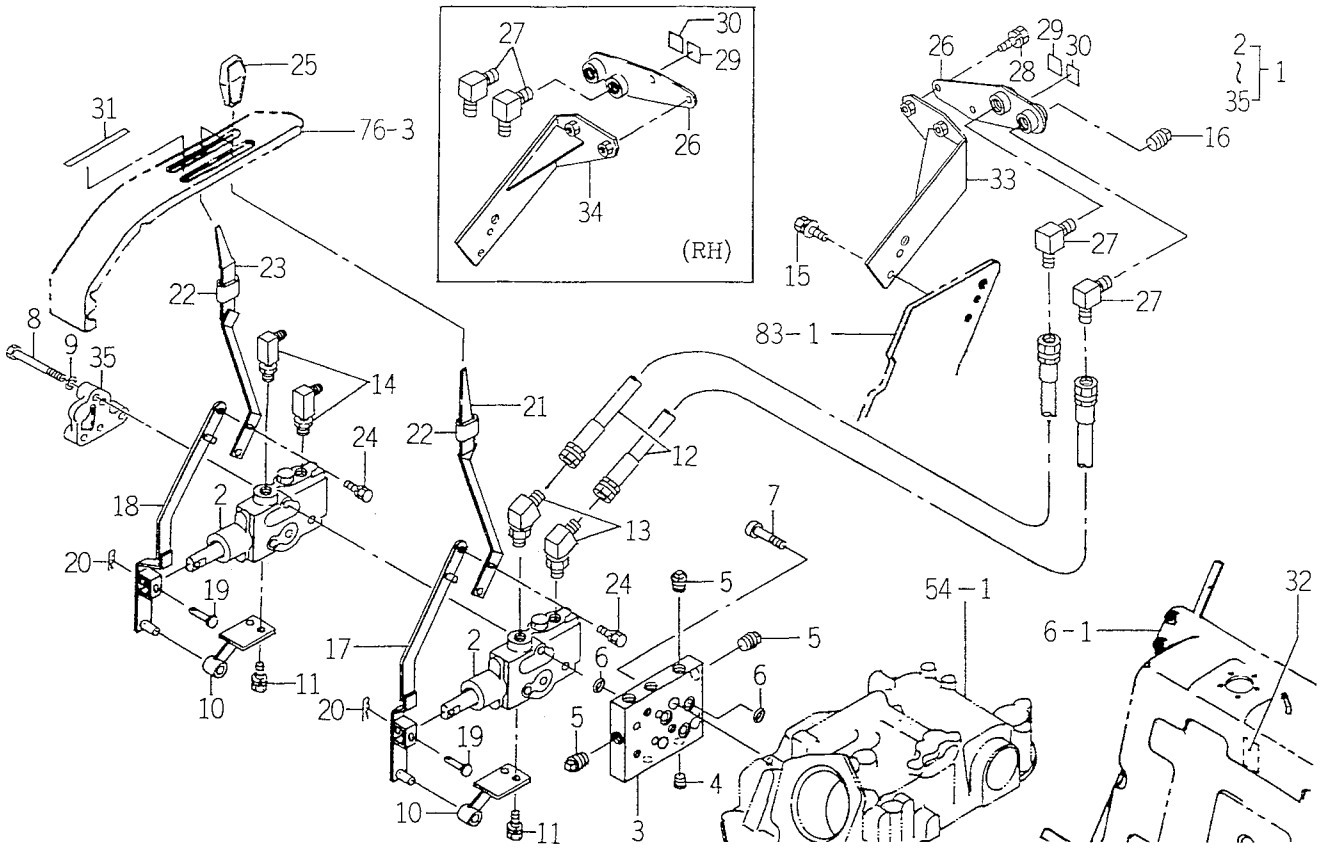

1640-530X

KEY	PART CODE	DESCRIPTION	SPC	TYPE OF MODEL TK538H		ITC	COL	GRP	REMARKS
31	1640-530-007-00	LABEL/CONTROL/SUBCON	T	1					
32	1640-530-008-00	LABEL/SUBCON	T	1					
33	1640-530-280-00	STAY/HOSE/LH COMP	T	1					
34	1640-530-350-00	STAY/HOSE/RH COMP	T	1					
35	1614-501-003-10	COVER	T	1					

FIG.135 VALVE (REMOTE/2) SET (OPTION)

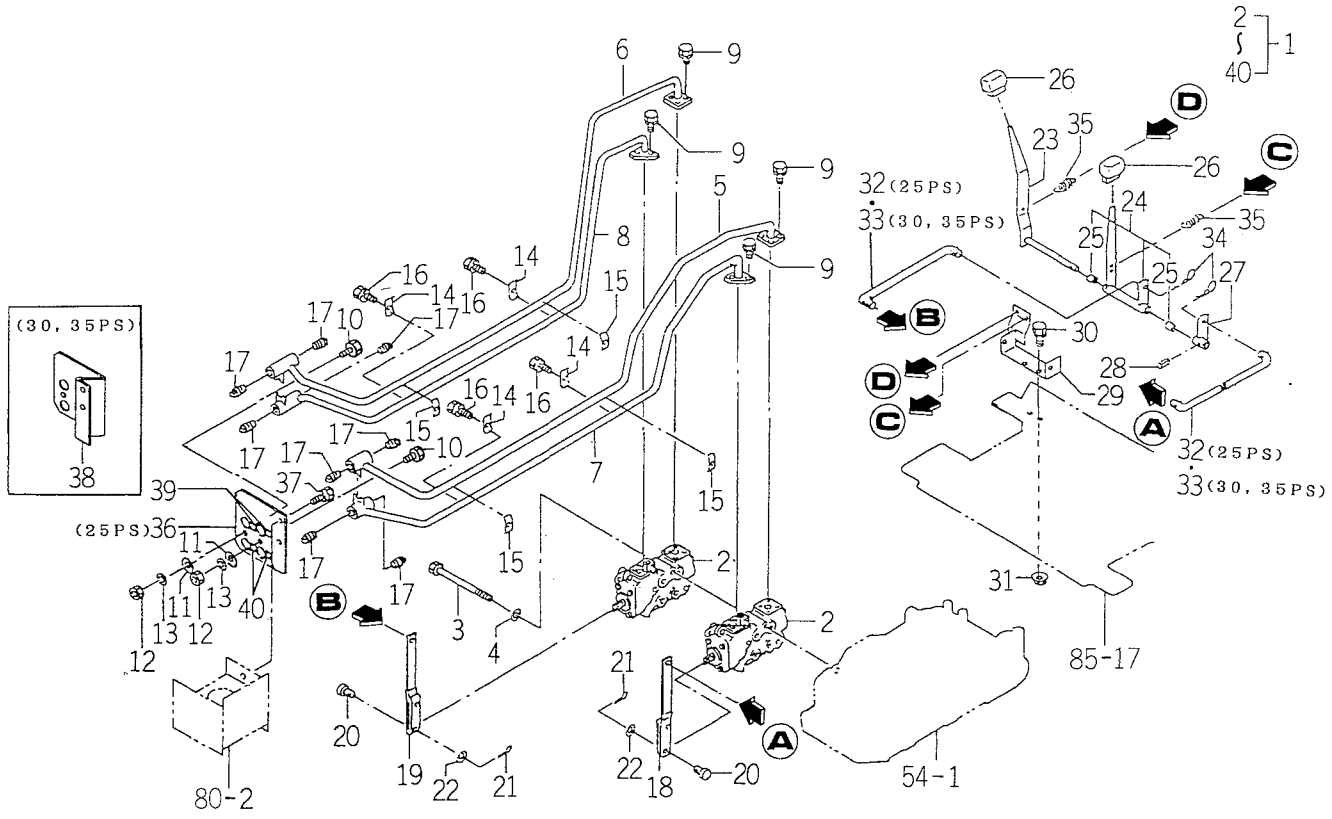

1594-530Y

KEY	PART CODE	DESCRIPTION	SPC	TYPE OF MODEL TK538H		ITC	COL	GRP	REMARKS
1	1594-530-910-00	VALVE SET	T	1					
2	K211-005-000-10	VALVE ASSY	T	2					FIG 142
3	V201-261-013-50	BOLT/M10X135	T	3					
4	V401-160-010-00	WASHER, SP/M10	T	3					
5	1594-517-200-20	PIPE/1ST/A COMP	T	1					
6	1594-530-200-20	PIPE COMP	T	1					
7	1594-517-210-20	PIPE/1ST/B COMP	T	1					
8	1594-530-210-20	PIPE COMP	T	1					
9	V211-260-802-50	BOLT/S	T	14					
10	V201-260-801-60	BOLT/M 8X16	T	2					
11	V411-260-008-00	WASHER, PL/M 8	T	2					
12	V304-260-008-00	NUT/M 8	T	2					
13	V401-160-008-00	WASHER, SP/M 8	T	2					
14	1594-517-003-00	CLIP/19X3	T	4					
15	1594-517-004-00	CLIP/19X3	T	4					
16	V210-260-604-00	BOLT/S	T	4					
17	V781-160-000-6T	PLUG/SCREW/SEAL	T	8					
18	1594-517-220-00	ARM COMP	T	1					
19	1594-530-220-00	ARM COMP	T	1					
20	3614-725-006-00	PIN, STAY	T	4					
21	V500-162-001-50	PIN, SPLIT/2 X15	T	4					
22	V411-260-006-00	WASHER / M6	T	4					
23	1594-517-230-10	LEVER COMP	T	1					
24	1594-530-230-10	LEVER/PLATE/2ND	T	1					
25	1588-502-007-00	BUSH(10X12X10)	T	2					
26	1415-505-015-00	GRIP	T	2					
27	1594-517-240-10	ARM COMP	T	1					
28	V580-140-402-00	PIN/SPRING	T	1					
29	1594-517-250-10	BRACKET COMP	T	1					
30	V211-260-802-50	BOLT/S	T	2					

FIG.135 VALVE (REMOTE/2) SET (OPTION)

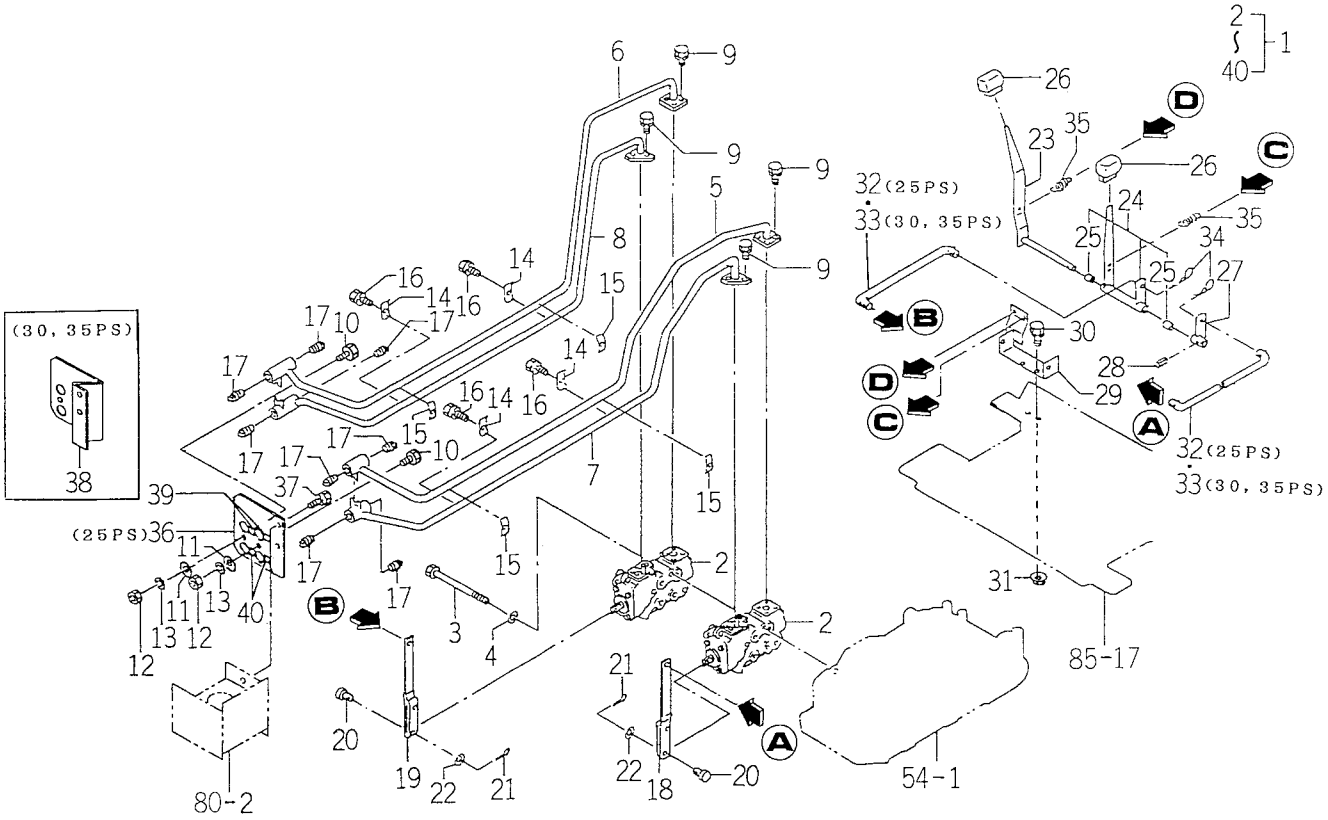

1594-530Y

KEY	PART CODE	DESCRIPTION	SPC	TYPE OF MODEL TK538H		ITC	COL	GRP	REMARKS
31	V363-260-008-00	NUT, LOCK/M8	T	1					
32	1594-517-002-00	ROD/218	T	2					
33	1595-517-002-00	ROD	T	2					
34	2130-601-018-00	PIN, SNAP/6	T	4					
35	1415-125-021-00	SPRING, TENSION/46	T	2					
36	1594-517-001-20	BRACKET	T	1					
37	V211-260-801-60	BOLT, SEMS (S) M8X16	T	2					
38	1595-517-001-20	BRACKET	T	1					
39	1518-903-006-00	MARK, PORT A	T	2					
40	1518-903-007-00	MARK, PORT B	T	2					

FIG.136 SUB STEP (R) SYSTEM (OPTION)

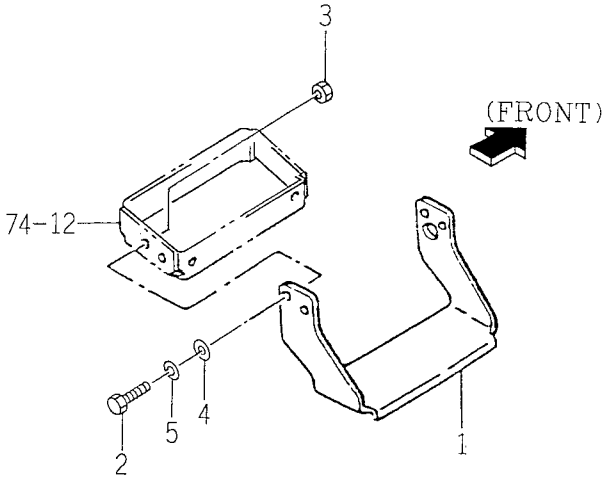

1560-606Z

KEY	PART CODE	DESCRIPTION	SPC	TYPE OF MODEL TK538H		ITC	COL	GRP	REMARKS
1	1560-630-321-50	STEP	T	1					
2	V201-360-802-00	BOLT/M8X20	T	4					
3	V304-460-008-00	NUT/M8	T	4					
4	V411-260-008-00	WASHER, PL/M 8	T	4					
5	V401-160-008-00	WASHER, SP/M 8	T	4					

FIG.137 SOCKET (7P) SYSTEM (OPTION)

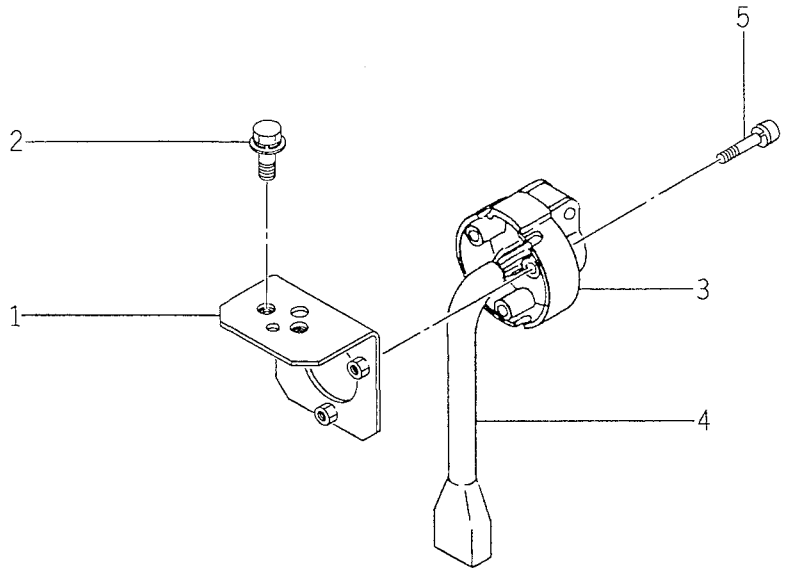

1640-664B

KEY	PART CODE	DESCRIPTION	SPC	TYPE OF MODEL TK538H		ITC	COL	GRP	REMARKS
1	1640-654-260-00	PLATE/SOCKET COMP	T	1					
2	V211-360-802-00	BOLT(SP) M8X20	T	2					
3	1600-624-201-00	PLUG/7P	T	1					**********
4	1682-690-380-00	HARNESS/SOCKET ASSY	T	1					
5	V120-265-003-00	BOLT/M5X30	T	3					

FIG.138 SWITCH (SAFETY/REPAIR) SET (OPTION)

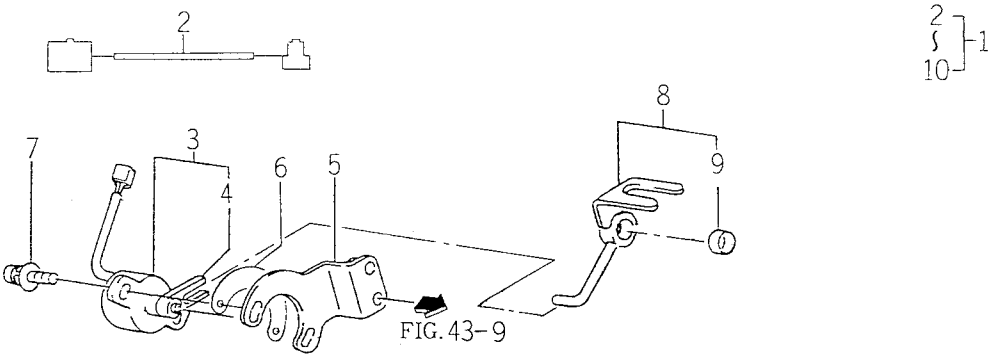

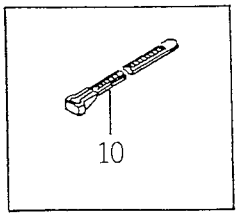

1640-666Z

KEY	PART CODE	DESCRIPTION	SPC	TYPE OF MODEL TK538H		ITC	COL	GRP	REMARKS
1	1640-666-530-00	SWITCH/SAFETY/REPAIR	T	1					
2	1640-666-540-00	HARNESS/NEUTRAL SWIT	T	1					
3	2161-506-260-00	SENSOR ASSY	T	1					
4	2161-506-252-00	PLATE/SENSOR	T	1					
5	1640-290-230-10	BRACKET/SWITCH COMP	T	1					
6	1640-290-003-00	PLATE	T	1					
7	V120-376-001-60	SCREW/SP	T	2					
8	1640-290-210-10	ARM/SWITCH SET	T	1					
9	1560-314-291-00	BUSH/16X18X15	T	1					
10	1342-402-006-00	BAND,WIRE/250	T	1					

FIG.139 2 ROPS SYSTEM (R TYPE) (OPTION)

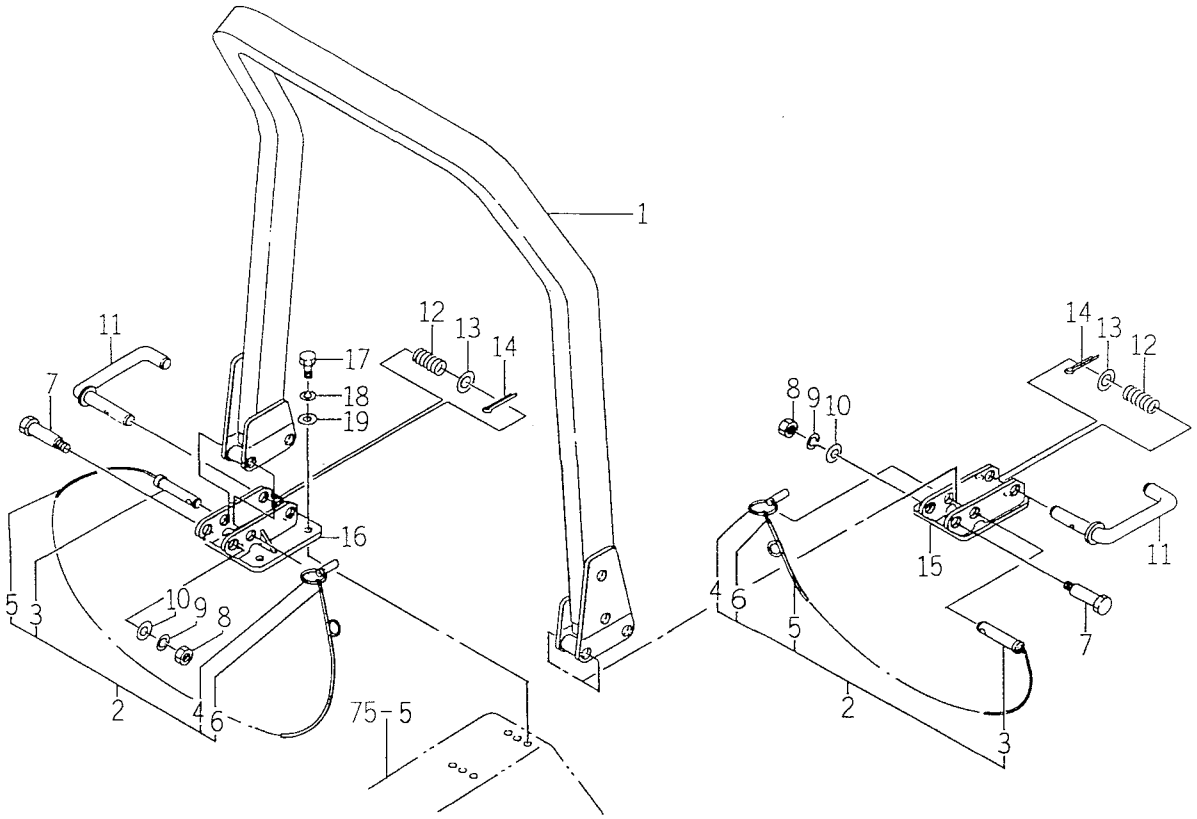

1640-702A

KEY	PART CODE	DESCRIPTION	SPC	TYPE OF MODEL TK538H		ITC	COL	GRP	REMARKS
1	1640-702-200-01	FRAME/REAR COMP	T	1			7F		
2	1614-702-550-00	PIN ASSY	T	2					
3	1614-702-560-00	PIN/19X94 COMP	T	2					
4	1673-525-002-10	LINKPIN	T	2					
5	1614-702-551-00	BAND	T	2					
6	1614-702-552-00	RING	T	6					
7	1614-702-053-00	BOLT/SET/M16X96	T	2					
8	V304-260-016-00	NUT/M16	T	2					
9	V401-160-016-00	WASHER, SP/M16	T	2					
10	V411-260-016-00	WASHER / M16	T	2					
11	1614-702-540-00	STOPPER COMP	T	2					
12	3600-463-006-10	SPRING/A	T	2					
13	V411-260-020-00	WASHER/M20	T	2					
14	V500-163-003-00	PIN, SPLIT/3X30	T	2					
15	1640-702-210-00	BRACKET/LH COMP	T	1					
16	1640-702-220-00	BRACKET/RH COMP	T	1					
17	V201-461-204-00	BOLT/M12X40	T	8					
18	V401-160-012-00	WASHER, SP/M12	T	8					
19	V411-260-012-00	WASHER /M12	T	8					

FIG.140 ROPS SET (EXCEPT C, R TYPE) (OPTION) (1/2)

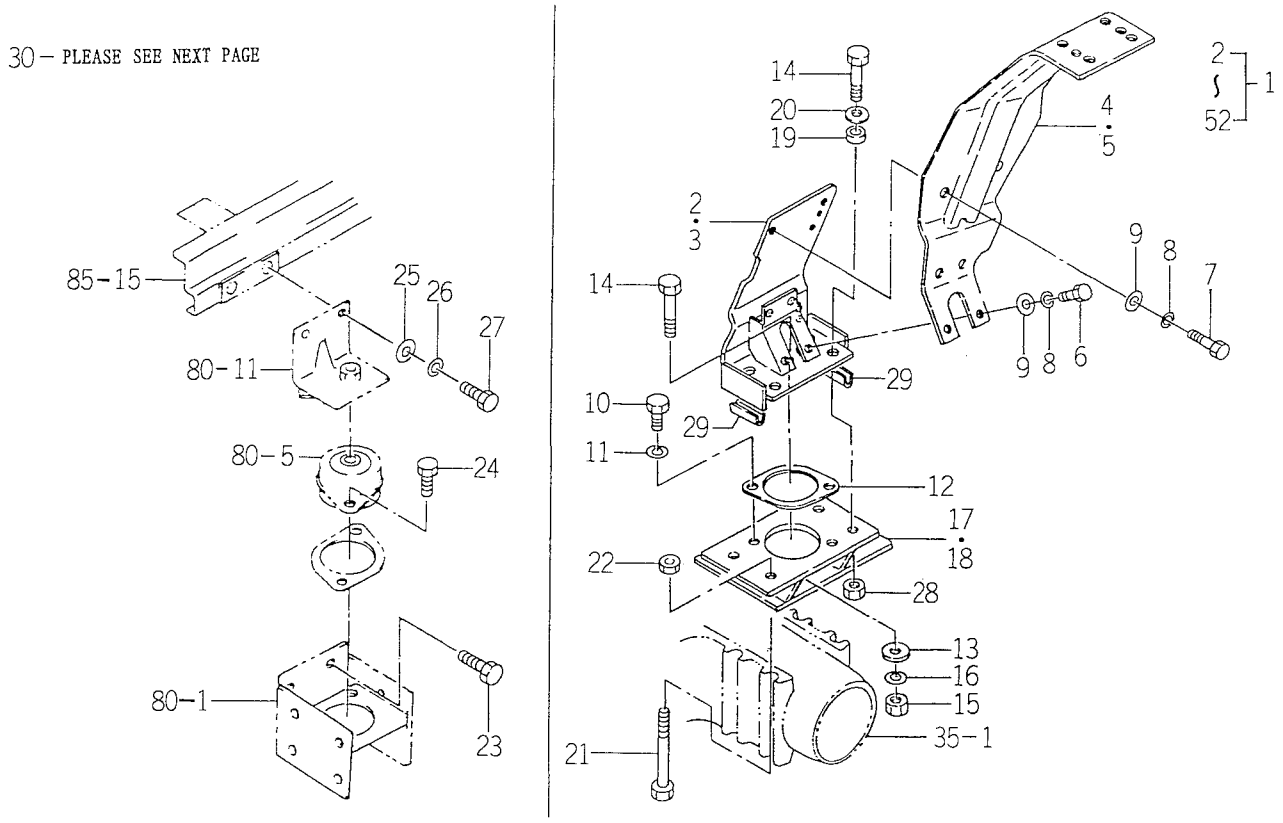

1674-702A

KEY	PART CODE	DESCRIPTION	SPC	TYPE OF MODEL TK538H		ITC	COL	GRP	REMARKS
1	1674-702-200-10	ROPS/SF134 SET	T	1					
2	1640-626-200-10	BRACKET/REAR/LH COMP	T	1					
3	1640-626-230-10	BRACKET/REAR/RH COMP	T	1					
4	1640-626-210-10	FENDER/SAV/LH COMP	T	1			4G		
5	1640-626-220-10	FENDER/SAV/RH COMP	T	1			4G		
6	V201-461-003-50	BOLT/M10X35	T	8					
7	V201-461-006-00	BOLT/M10X60	T	4					
8	V401-160-010-00	WASHER, SP/M10	T	12					
9	V411-260-010-00	WASHER/M10	T	12					
10	V201-461-202-00	BOLT/M12X20	T	4					
11	V401-160-012-00	WASHER, SP/M12	T	4					
12	1594-625-001-00	PLATE	T	2					
13	1427-117-001-00	WASHER/13X50X3	T	2					
14	V201-461-207-50	BOLT/M12X75	T	10					
15	1640-626-001-00	NUT	T	2					
16	V401-160-012-00	WASHER, SP/M12	T	2					
17	1594-715-270-00	BRACKET/REAR/LH	T	1					
18	1594-715-280-00	BRACKET/MOUNT/RH	T	1					
19	1594-715-002-00	INSULATOR	T	8					
20	1427-431-003-00	WASHER/13X32X3	T	8					
21	V201-461-215-50	BOLT/M12X155	T	8					
22	1640-626-001-00	NUT	T	8					
23	V201-461-403-20	BOLT/M14X32	T	8					
24	V201-461-202-00	BOLT/M12X20	T	4					
25	V411-260-010-00	WASHER/M10	T	4					
26	V401-160-010-00	WASHER, SP/M10	T	4					
27	V201-461-002-50	BOLT/M10X25	T	4					
28	1640-626-001-00	NUT	T	8					
29	1594-625-002-00	INSULATOR	T	4					
30	1640-702-200-01	FRAME/REAR COMP	T	1			7F		

FIG.140 ROPS SET (EXCEPT C, R TYPE) (OPTION) (2/2)

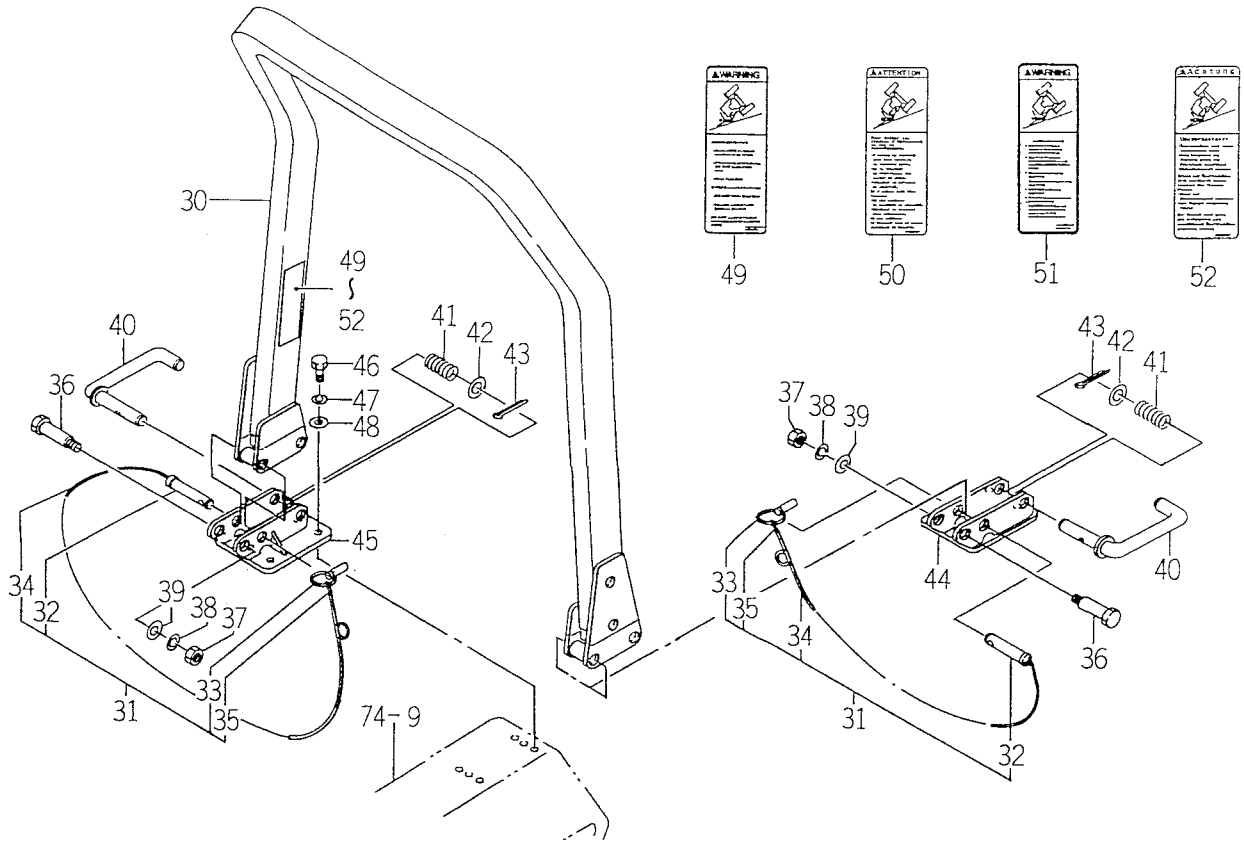

1674-702A

KEY	PART CODE	DESCRIPTION	SPC	TYPE OF MODEL TK538H		ITC	COL	GRP	REMARKS
31	1614-702-550-00	PIN ASSY	T	2					
32	1614-702-560-00	PIN/19X94 COMP	T	2					
33	1673-525-002-10	LINKPIN	T	2					
34	1614-702-551-00	BAND	T	2					
35	1614-702-552-00	RING	T	6					
36	1614-702-053-00	BOLT/SET/M16X96	T	2					
37	V304-260-016-00	NUT/M16	T	2					
38	V401-160-016-00	WASHER, SP/M16	T	2					
39	V411-260-016-00	WASHER / M16	T	2					
40	1614-702-540-00	STOPPER COMP	T	2					
41	3600-463-006-10	SPRING/A	T	2					
42	V411-260-020-00	WASHER/M20	T	2					
43	V500-163-003-00	PIN, SPLIT/3X30	T	2					
44	1640-702-210-00	BRACKET/LH COMP	T	1					
45	1640-702-220-00	BRACKET/RH COMP	T	1					
46	V201-461-204-00	BOLT/M12X40	T	8					
47	V401-160-012-00	WASHER, SP/M12	T	8					
48	V411-260-012-00	WASHER /M12	T	8					
49	1640-903-045-10	LABEL/W/ROPS/E30	T	1					
50	1640-903-046-00	LABEL/W/ROPS/E50	T	1					
51	1640-903-047-00	LABEL/W/ROPS/E20	T	1					
52	1640-903-048-00	LABEL/W/ROPS/E40P	T	1					

FIG.141 INTERIOR SYSTEM (C TYPE) (OPTION)

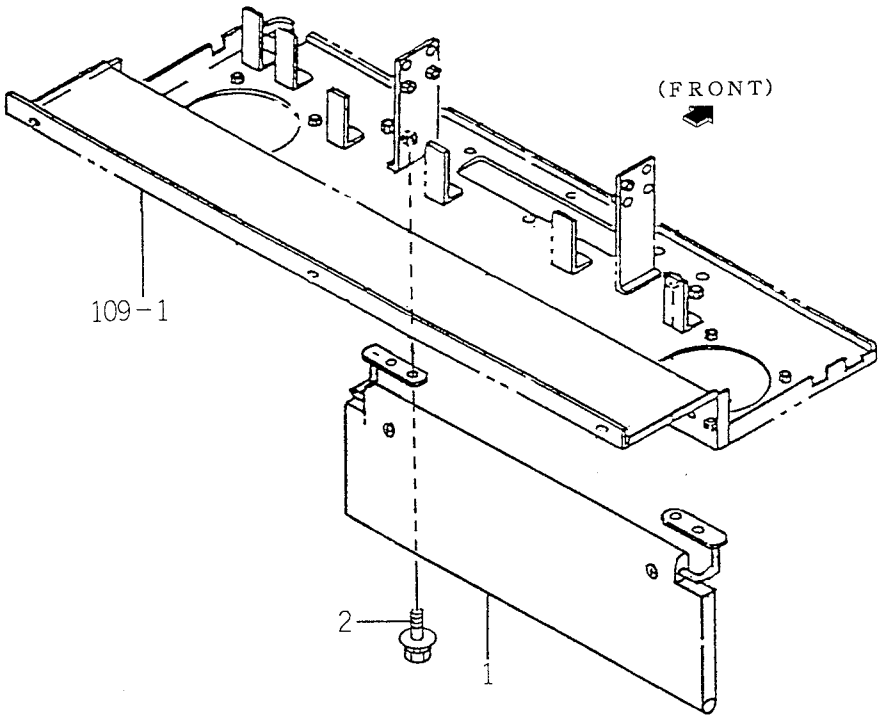

1596-760

KEY	PART CODE	DESCRIPTION	SPC	TYPE OF MODEL TK538H		ITC	COL	GRP	REMARKS
1	1596-760-500-10	VISOR/SUN SET	T	1					
2	V211-660-801-60	BOLT/M8X16	T	4					

FIG.142 COMPONENT PARTS FOR K211 – 005 – 000 – 10 ON Fig.128,135

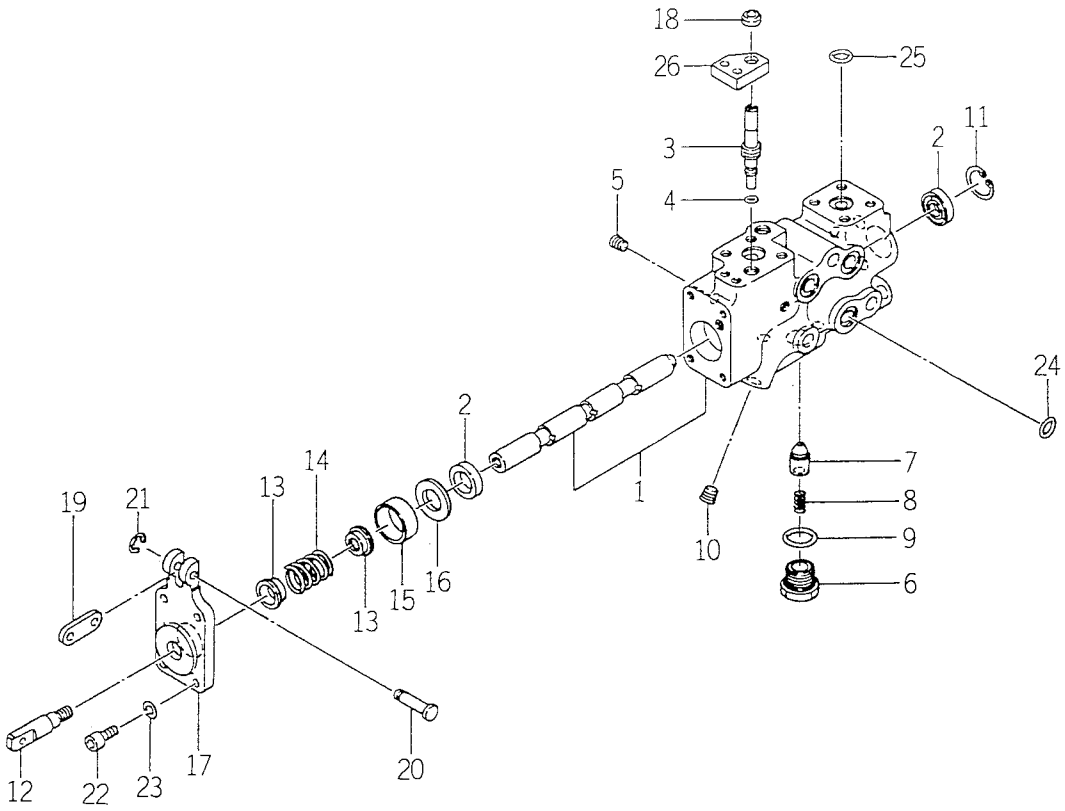

K211-0050

KEY	PART CODE	DESCRIPTION	SPC	TYPE OF MODEL TK538H		ITC	COL	GRP	REMARKS
1	K211-005-100-20	VALVE SET	T	1					
1	K211-005-100-20	VALVE SET	T	2					
2	K211-004-007-00	SEAL, OIL/TC4, 14247	T	2					
2	K211-004-007-00	SEAL, OIL/TC4, 14247	T	4					
3	K211-005-003-10	BOLT, CONTROL	T	1					
3	K211-005-003-10	BOLT, CONTROL	T	2					
4	V720-111-900-60	O-RING P6 HS90	T	1					
4	V720-111-900-60	O-RING P6 HS90	T	2					
5	K211-001-011-00	PLUG	T	4					
5	K211-001-011-00	PLUG	T	8					
6	K211-005-004-00	PLUG	T	1					
6	K211-005-004-00	PLUG	T	2					
7	K211-005-005-00	POPPET	T	1					
7	K211-005-005-00	POPPET	T	2					
8	K110-001-106-00	SPRING	T	1					
8	K110-001-106-00	SPRING	T	2					
9	V720-112-401-60	O-RING/P16	T	1					
9	V720-112-401-60	O-RING/P16	T	2					
10	V780-140-000-2T	PLUG/SCREW/SEAL	T	3					
10	V780-140-000-2T	PLUG/SCREW/SEAL	T	6					
11	V705-140-024-00	RING, SNAP	T	1					
11	V705-140-024-00	RING, SNAP	T	2					
12	K211-005-006-00	HEAD	T	1					
12	K211-005-006-00	HEAD	T	2					
13	K211-005-007-00	GUIDE, SPRING	T	2					
13	K211-005-007-00	GUIDE, SPRING	T	4					
14	K211-005-008-00	SPRING	T	1					
14	K211-005-008-00	SPRING	T	2					
15	K211-005-009-00	COLLAR/25X28X10	T	1					
15	K211-005-009-00	COLLAR/25X28X10	T	2					

FIG.142 COMPONENT PARTS FOR K211 – 005 – 000 – 10 ON Fig.128,135

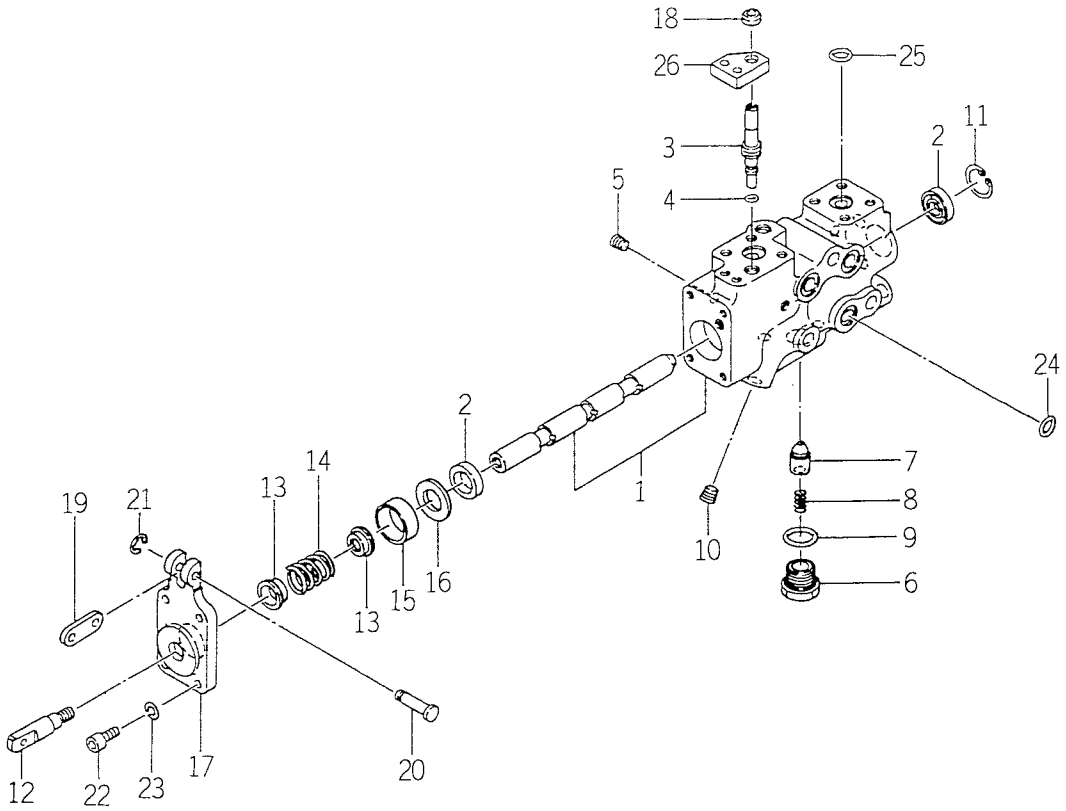

K211-0050

KEY	PART CODE	DESCRIPTION	SPC	TYPE OF MODEL TK538H		ITC	COL	GRP	REMARKS
16	K211-004-006-00	COLLAR	T	1					
16	K211-004-006-00	COLLAR	T	2					
17	K211-005-010-10	COVER	T	1					
17	K211-005-010-10	COVER	T	2					
18	V793-108-110-30	SEAL	T	1					
18	V793-108-110-30	SEAL	T	2					
19	K211-005-011-00	RING	T	1					
19	K211-005-011-00	RING	T	2					
20	K211-005-012-00	PIN/6X20	T	1					
20	K211-005-012-00	PIN/6X20	T	2					
21	V710-140-004-00	RING, SNAP/ 4 E	T	1					
21	V710-140-004-00	RING, SNAP/ 4 E	T	2					
22	V220-540-601-60	BOLT	T	6					
22	V220-540-601-60	BOLT	T	12					
23	V401-160-006-00	WASHER, SP/M 6	T	6					
23	V401-160-006-00	WASHER, SP/M 6	T	12					
24	V720-112-401-40	O-RING/P14	T	3					
24	V720-112-401-40	O-RING/P14	T	6					
25	V720-112-401-20	O-RING/P12	T	2					
25	V720-112-401-20	O-RING/P12	T	4					
26	K211-005-013-00	COVER	T	1					
26	K211-005-013-00	COVER	T	2					

FIG.143 COMPONENT PARTS FOR K211 – 008 – 000 – 10 ON Fig.56

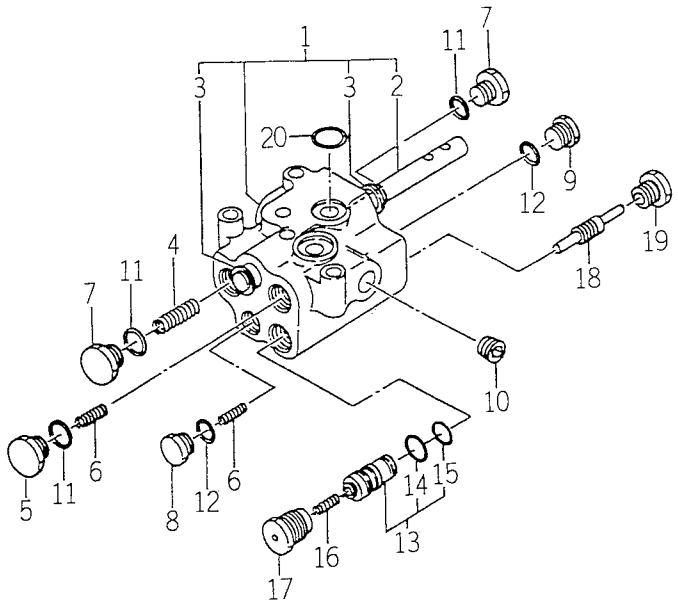

K211-0080

KEY	PART CODE	DESCRIPTION	SPC	TYPE OF MODEL TK538H		ITC	COL	GRP	REMARKS
1	K211-008-100-00	VALVE SET	*	1					
2	K211-008-003-00	HEAD/SPOOL	*	1					
3	V710-140-009-00	RING, SNAP/ 9 E	*	2					
4	K211-008-018-10	SPRING/HC029	*	1					
5	K211-013-006-00	PLUG/M16	*	1					
6	K211-008-010-00	SPRING/HC19	*	2					
7	K211-008-011-00	PLUG	*	2					
8	K211-008-012-00	PLUG	*	1					
9	K211-001-008-00	PLUG	*	1					
10	V780-140-000-4T	PLUG/SCREW/SEAL	*	2					
11	V720-112-401-40	O-RING/P14	*	3					
12	V720-112-401-20	O-RING/P12	*	2					
13	K211-008-200-00	CHECK, PIROT SET	*	1					
14	V723-111-501-40	O-RING	*	1					
15	V723-111-501-20	O-RING	*	1					
16	K211-008-010-00	SPRING/HC19	*	1					
17	K211-013-007-00	PLUG/M18	*	1					
18	K211-008-016-00	ROD	*	1					
19	K211-008-017-00	PLUG	*	1					
20	V720-112-401-40	O-RING/P14	*	2					

FIG.144 COMPONENT PARTS FOR K256 – 001 – 000 – 00 ON Fig.62

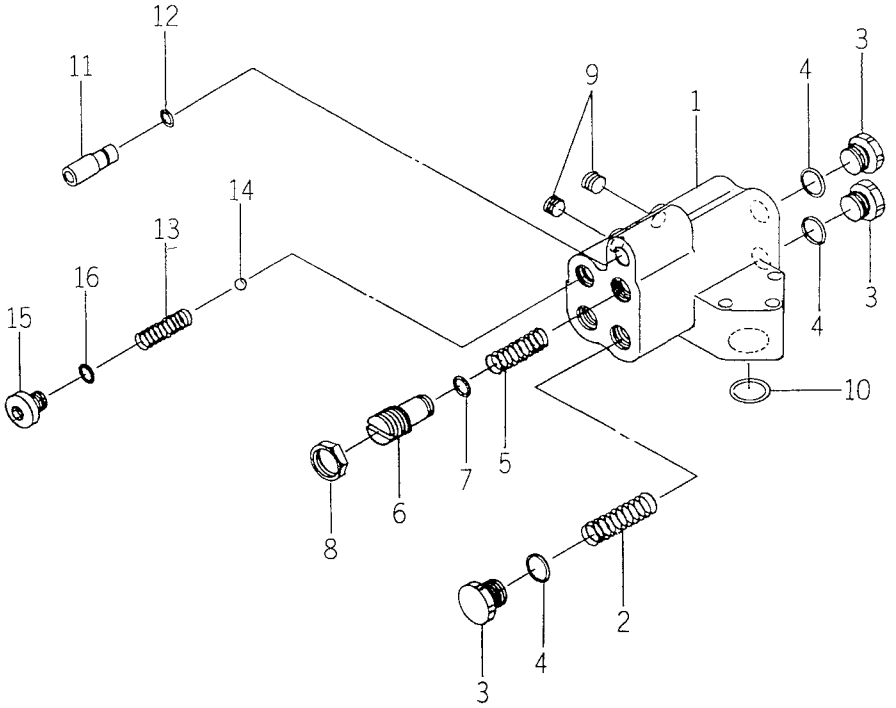

K256-0010

KEY	PART CODE	DESCRIPTION	SPC	TYPE OF MODEL TK538H		ITC	COL	GRP	REMARKS
1	K256-001-100-00	VALVE SET	*	1					
2	K256-001-004-10	SPRING(HC054)	*	1					
3	K211-008-011-00	PLUG	*	3					
4	V720-112-401-40	O-RING/P14	*	3					
5	K256-001-005-00	SPRING(HC042)	*	1					
6	K256-001-006-00	ADJUST SCREW(F)	*	1					
7	V720-112-401-00	O-RING/P10	*	1					
8	K250-008-005-00	LOCK-NUT	*	1					
9	V780-140-000-2T	PLUG/SCREW/SEAL	*	3					
10	V720-112-402-00	O-RING/P20	*	1					
11	K256-001-007-10	PIPE(30)	*	1					
12	V723-101-500-80	RING/O	*	1					
13	K234-001-004-00	SPRING/HC040	*	1					
14	V682-200-001-00	BALL	*	1					
15	K275-001-003-00	PLUG(PF1/4)	*	1					
16	V720-102-401-10	O-RING/P11	*	1					

FIG.145 COMPONENT PARTS FOR K275 – 001 – 000 – 00 ON Fig.62

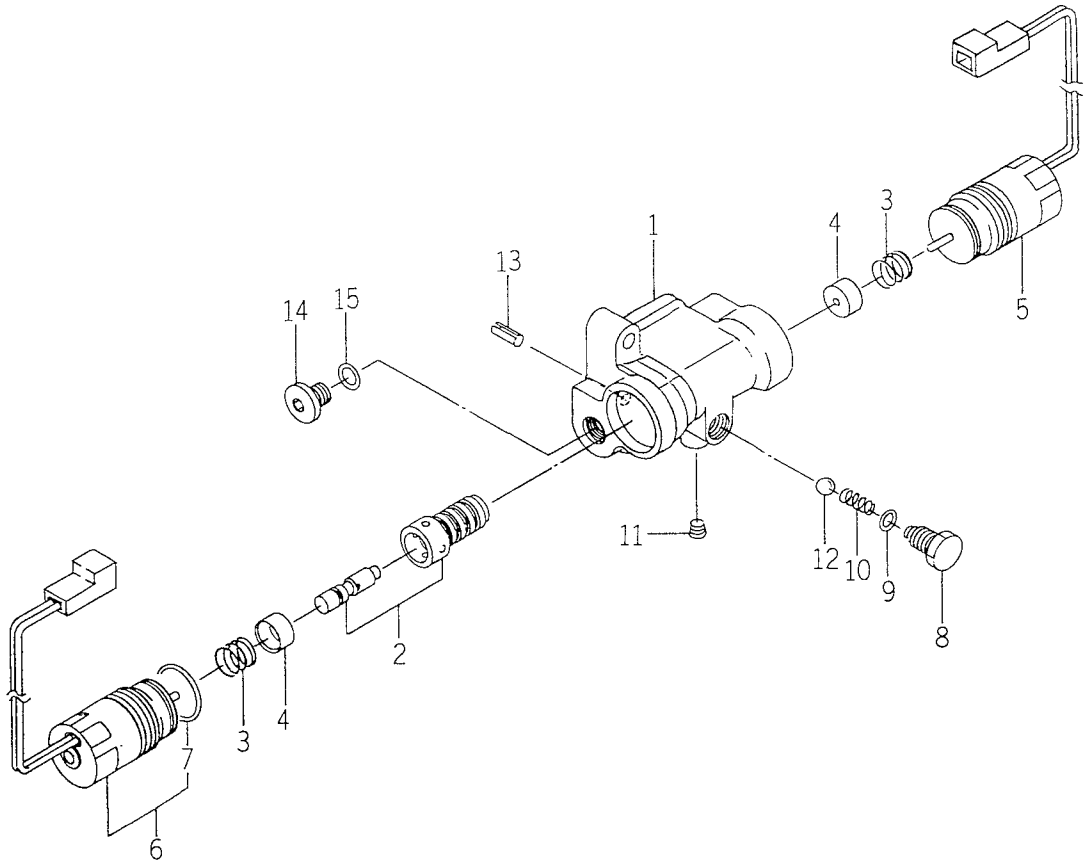

K275-0010

KEY	PART CODE	DESCRIPTION	SPC	TYPE OF MODEL TK538H		ITC	COL	GRP	REMARKS
1	K275-001-001-00	BODY/EDW3	*	1					
2	K275-001-100-00	SPOOL SET	*	1					
3	K270-001-003-10	SPRING/HC012	*	2					
4	K270-001-004-00	PLATE/SPRING	*	2					
5	K275-001-200-00	SOLENOID SET	*	1					
6	K200-016-200-00	SOLENOID SET	*	1					
7	V723-112-002-90	RING/O	*	1					
8	K275-001-002-00	PLUG(M12)	*	1					
9	V720-101-901-00	O-RING	*	1					
10	K110-001-106-00	SPRING	*	1					
11	V780-140-000-1T	PLUG/SCREW/SEAL	*	2					
12	V682-200-001-00	BALL	*	1					
13	V580-140-601-60	PIN SPLIT W 6.0X16	*	1					
14	K275-001-003-00	PLUG(PF1/4)	*	1					
15	V720-102-401-10	O-RING/P11	*	1					

FIG.146 COMPONENT PARTS FOR 1561 – 221 – 500 – 10 ON Fig.14

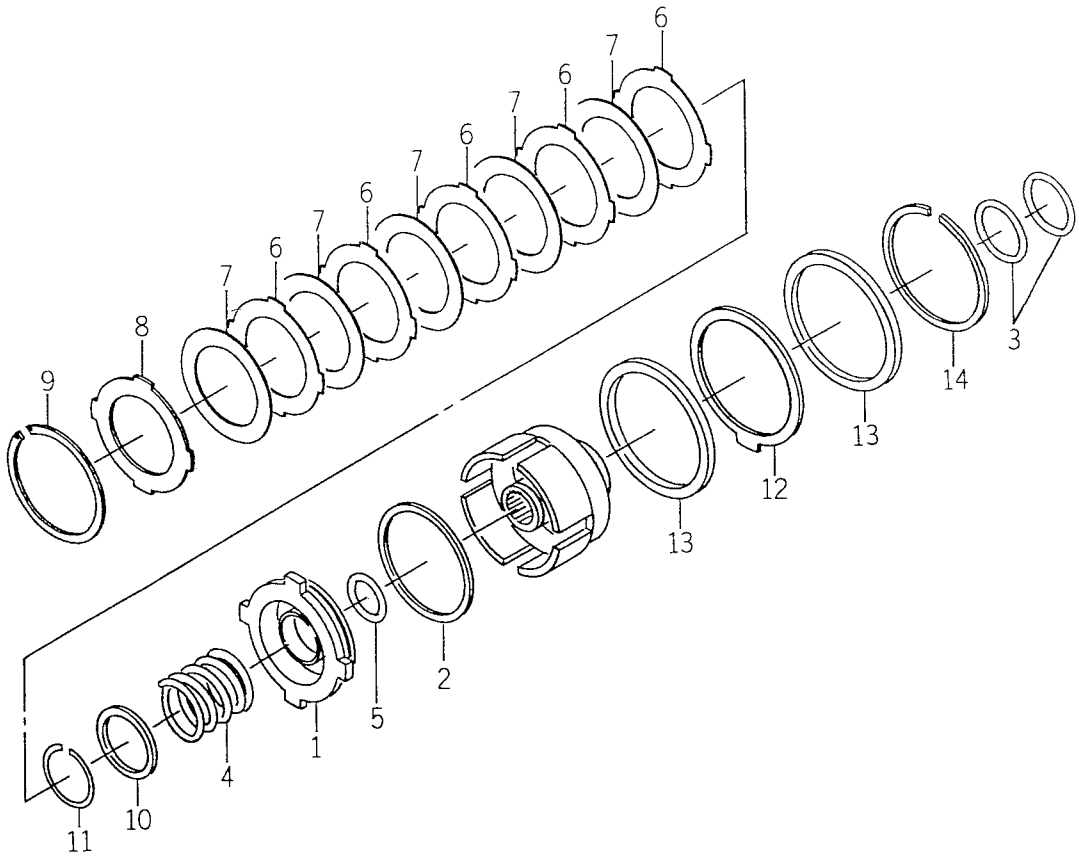

1561-2215

KEY	PART CODE	DESCRIPTION	SPC	TYPE OF MODEL TK538H		ITC	COL	GRP	REMARKS
1	1561-221-502-10	PISTON	*	1					
2	1561-221-503-00	SEALRING	*	1					
3	1561-221-504-00	SEALRING	*	2					
4	1561-221-505-00	SPRING	*	1					
5	1650-203-214-00	RING/40	*	1					
6	1650-203-219-00	PLATE/SEPARATER	*	5					
7	1650-203-218-00	PLATE/FRICTION	*	5					
8	1561-221-511-00	PLATE/BACK	*	1					
9	1650-203-222-00	RING/SNAP/CH100	*	1					
10	1561-221-509-00	WASH	*	1					
11	1650-203-217-00	RING/SNAP/CS40	*	1					
12	1561-221-506-00	BRAKE/DISK	*	1					
13	1561-221-507-00	BRAKE/PRESSURE	*	2					
14	1561-221-508-00	RING/SNAP/CS105	*	1					

FIG.147 COMPONENT PARTS FOR 1581 – 621 – 530 – 00 ON Fig.97

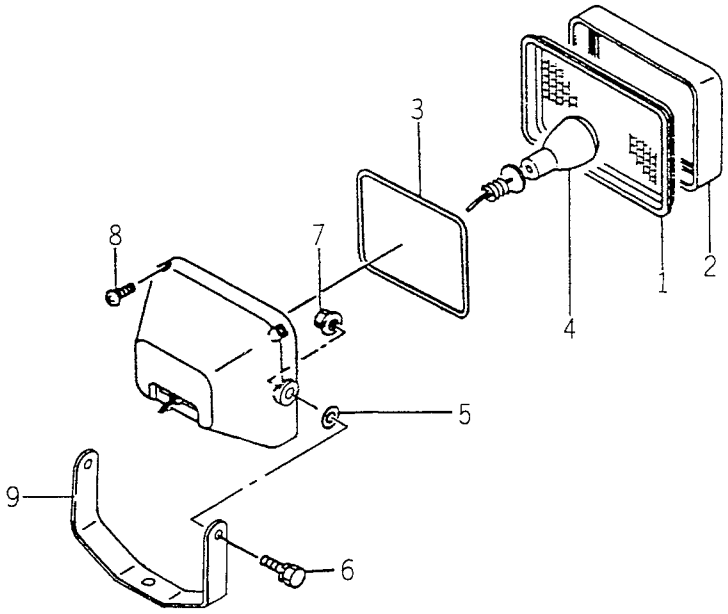

1581-6215

KEY	PART CODE	DESCRIPTION	SPC	TYPE OF MODEL TK538H		ITC	COL	GRP	REMARKS
1	1560-654-911-00	LENS	*	2					
2	1560-654-912-00	BRACKET	*	2					
3	1560-654-915-00	GASKET	*	2					
4	1560-654-916-00	BULB/12V35W	*	2					
5	1560-654-921-00	WASHER	*	4					
6	V210-260-601-60	BOLT, SEMS (S)	*	4					
7	3506-301-311-00	NUT	*	4					
8	V195-164-020-40	BOLT	*	8					
9	1560-654-919-00	STAY	*	2					

FIG.148 COMPONENT PARTS FOR 1640 – 530 – 600 – 10 ON Fig.68,133,134

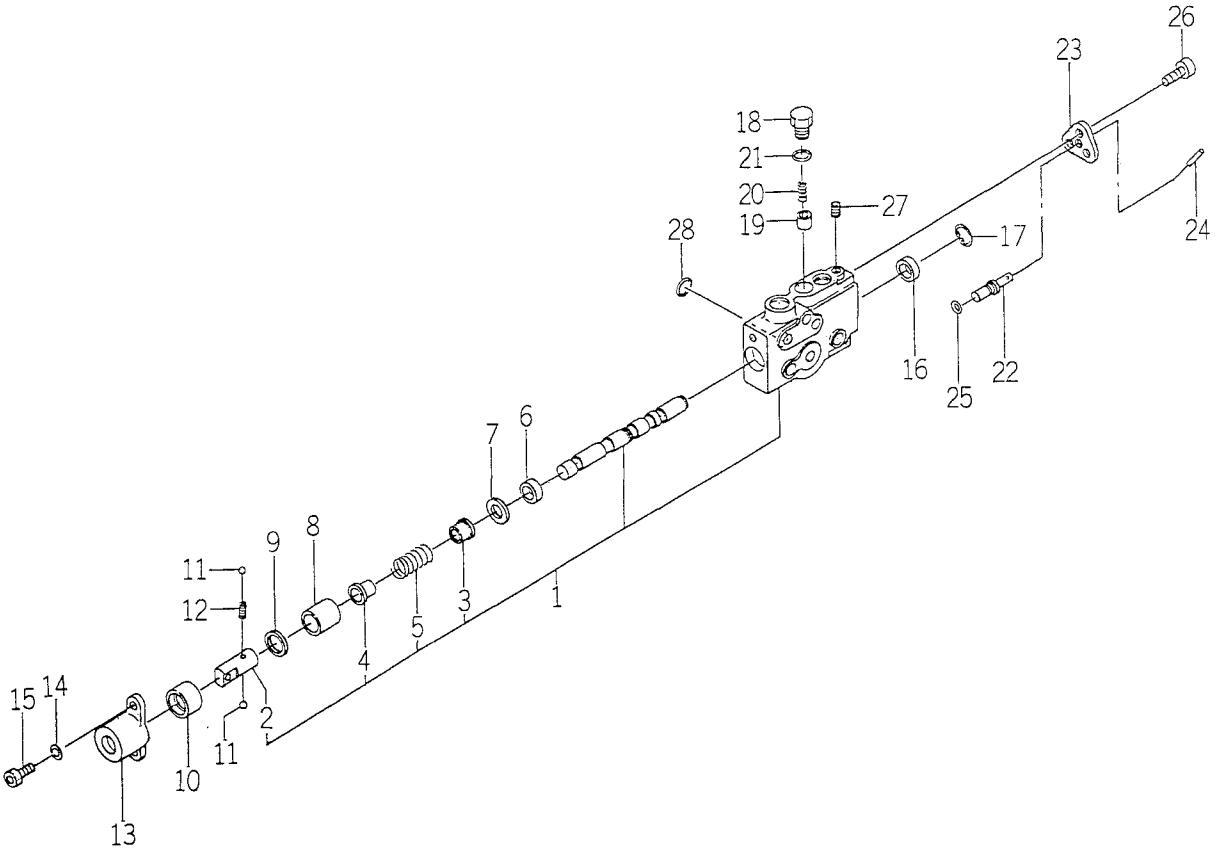

1640-5306

KEY	PART CODE	DESCRIPTION	SPC	TYPE OF MODEL TK538H		ITC	COL	GRP	REMARKS
1	1640-530-610-10	VALVE SET	T	1					
1	1640-530-610-10	VALVE SET	*	2					
2	1640-530-613-00	HEAD/SPOOL	T	1					
2	1640-530-613-00	HEAD/SPOOL	*	2					
3	1640-530-614-00	STOPPER/SPRING/A	T	1					
3	1640-530-614-00	STOPPER/SPRING/A	*	2					
4	1640-530-615-00	STOPPER/SPRING/B	T	1					
4	1640-530-615-00	STOPPER/SPRING/B	*	2					
5	K211-012-006-00	SPRING/HC042	T	1					
5	K211-012-006-00	SPRING/HC042	*	2					
6	K211-004-007-00	SEAL, OIL/TC4, 14247	T	1					
6	K211-004-007-00	SEAL, OIL/TC4, 14247	*	2					
7	K211-004-006-00	COLLAR	T	1					
7	K211-004-006-00	COLLAR	*	2					
8	1640-530-622-00	SLEEVE	T	1					
8	1640-530-622-00	SLEEVE	*	2					
9	1640-530-623-00	COLLAR/19X28X02	T	1					
9	1640-530-623-00	COLLAR/19X28X02	*	2					
10	1640-530-624-00	SLEEVE/DETENT	T	1					
10	1640-530-624-00	SLEEVE/DETENT	*	2					
11	V682-200-000-60	BALL	T	2					
11	V682-200-000-60	BALL	*	4					
12	1640-530-625-00	SPRING/HC015	T	1					
12	1640-530-625-00	SPRING/HC015	*	2					
13	1640-530-626-00	COVER	T	1					
13	1640-530-626-00	COVER	*	2					
14	V401-160-008-00	WASHER, SP/M 8	T	2					
14	V401-160-008-00	WASHER, SP/M 8	*	4					
15	V220-540-802-00	SCREW/SOCKET	T	2					
15	V220-540-802-00	SCREW/SOCKET	*	4					

FIG.148 COMPONENT PARTS FOR 1640 – 530 – 600 – 10 ON Fig.68,133,134

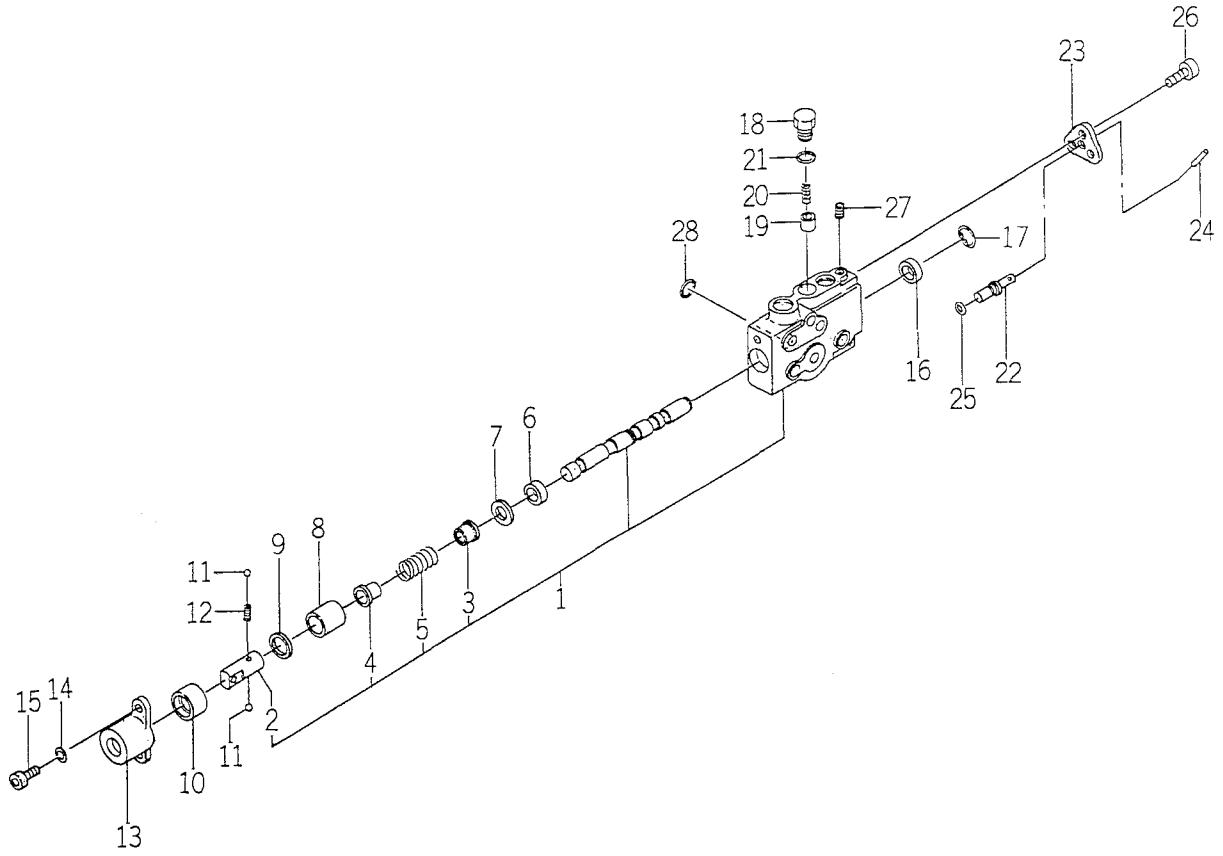

1640-5306

KEY	PART CODE	DESCRIPTION	SPC	TYPE OF MODEL TK538H		ITC	COL	GRP	REMARKS
16	K211-004-007-00	SEAL, OIL/TC4, 14247	T	1					
16	K211-004-007-00	SEAL, OIL/TC4, 14247	*	2					
17	V705-140-024-00	RING, SNAP	T	1					
17	V705-140-024-00	RING, SNAP	*	2					
18	1640-530-628-00	PLUG/M14	T	1					
18	1640-530-628-00	PLUG/M14	*	2					
19	1640-530-629-00	POPPET	T	1					
19	1640-530-629-00	POPPET	*	2					
20	K110-001-106-00	SPRING	T	1					
20	K110-001-106-00	SPRING	*	2					
21	V720-112-401-20	O-RING/P12	T	1					
21	V720-112-401-20	O-RING/P12	*	2					
22	1640-530-631-00	SPOOL/DELECT	T	1					
22	1640-530-631-00	SPOOL/DELECT	*	2					
23	1640-530-632-00	PLATE	T	1					
23	1640-530-632-00	PLATE	*	2					
24	V580-140-302-50	SPRING PIN (W)	T	1					
24	V580-140-302-50	SPRING PIN (W)	*	2					
25	V720-111-900-70	O-RING/P 7	T	1					
25	V720-111-900-70	O-RING/P 7	*	2					
26	V220-540-601-00	BOLT	T	3					
26	V220-540-601-00	BOLT	*	6					
27	K200-014-007-00	PLUG/SEAL	T	1					
27	K200-014-007-00	PLUG/SEAL	*	2					
28	V720-112-401-40	O-RING/P14	T	3					
28	V720-112-401-40	O-RING/P14	*	6					

FIG.149 COMPONENT PARTS FOR 1673-407-550-00 ON Fig.47

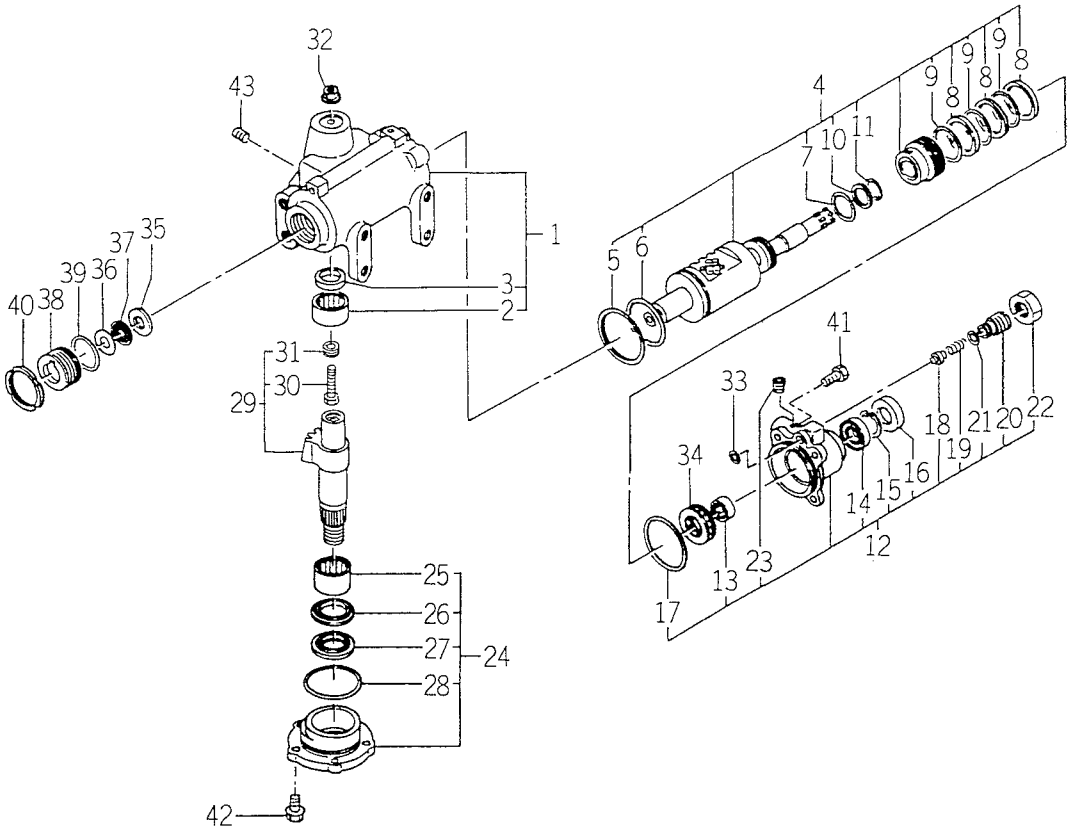

1673-4075

KEY	PART CODE	DESCRIPTION	SPC	TYPE OF MODEL TK538H		ITC	COL	GRP	REMARKS
1	1673-407-560-00	CASE/GEAR ASSY	*	1					
2	1444-408-213-00	BEARING, NR/FJL3020	*	1					
3	1444-408-214-00	PACKING, U	*	1					
4	1673-407-570-00	NUT ASSY	*	1					
5	1444-408-217-00	RING	*	1					
6	1444-408-218-00	O-RING	*	1					
7	1444-408-219-00	O-RING	*	1					
8	1444-408-301-00	RING	*	3					
9	1444-408-302-00	O-RING	*	3					
10	1444-408-303-00	RING	*	1					
11	V723-102-002-50	O-RING	*	1					
12	1673-407-580-00	HOUSING/VALVE ASSY	*	1					
13	1444-408-306-00	BEARING, NR	*	1					
14	1560-407-292-40	SEAL, OIL	*	1					
15	V705-140-032-00	RING, SNAP/32 C	*	1					
16	1444-408-308-00	SEAL, OIL	*	1					
17	V721-113-106-50	RING/O	*	1					
18	1513-408-217-00	POPPET	*	1					
19	1560-407-293-40	SPRING	*	1					
20	1550-408-325-00	BOLT	*	1					
21	1550-408-324-00	O-RING	*	1					
22	1550-408-326-00	NUT	*	1					
23	1550-408-321-00	PLUG, PT1/8	*	1					
24	1690-407-550-00	SIDECOVER ASSY	*	1					
25	1444-408-316-00	BEARING, NR/HJ243316	*	1					
26	1444-408-317-00	PACKING, U	*	1					
27	1444-408-318-00	SEAL, OIL	*	1					
28	V721-113-107-00	O-RING/G70	*	1					
29	1673-407-270-00	SHAFT/SECTOR ASSY	*	1					
30	1690-407-352-00	SCREW/ADJUST	*	1					

FIG.149 COMPONENT PARTS FOR 1673 – 407 – 550 – 00 ON Fig.47

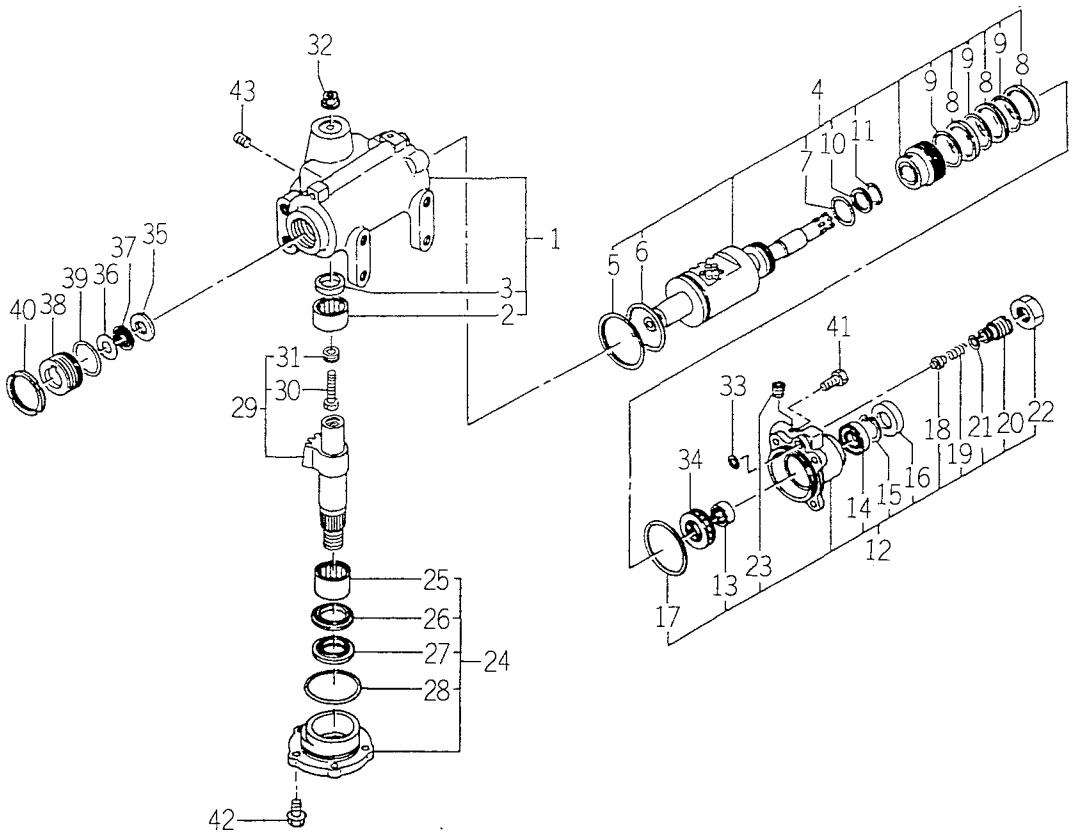

1673-4075

KEY	PART CODE	DESCRIPTION	SPC	TYPE OF MODEL TK538H		ITC	COL	GRP	REMARKS
31	1690-407-353-00	PLUG	*	1					
32	1444-408-323-00	NUT	*	1					
33	1690-407-511-00	ORING	*	1					
34	1513-408-223-00	BEARING, TB	*	1					
35	1560-407-261-30	COLLAR	*	1					
36	1560-407-262-30	COLLAR	*	1					
37	1560-407-263-40	BEARING/NEEDLE	*	1					
38	1560-407-264-40	COVER/FRONT	*	1					
39	V723-102-003-80	O-RING	*	1					
40	1560-407-265-40	NUT/M45X1.5	*	1					
41	V201-461-203-00	BOLT/M12X30	*	4					
42	1690-407-512-00	FLANGEBOLT	*	5					
43	1444-408-332-00	PLUG PT 1/4	*	1					

FIG.150 COMPONENT PARTS FOR 1674 – 658 – 220 – 00 ON Fig.93

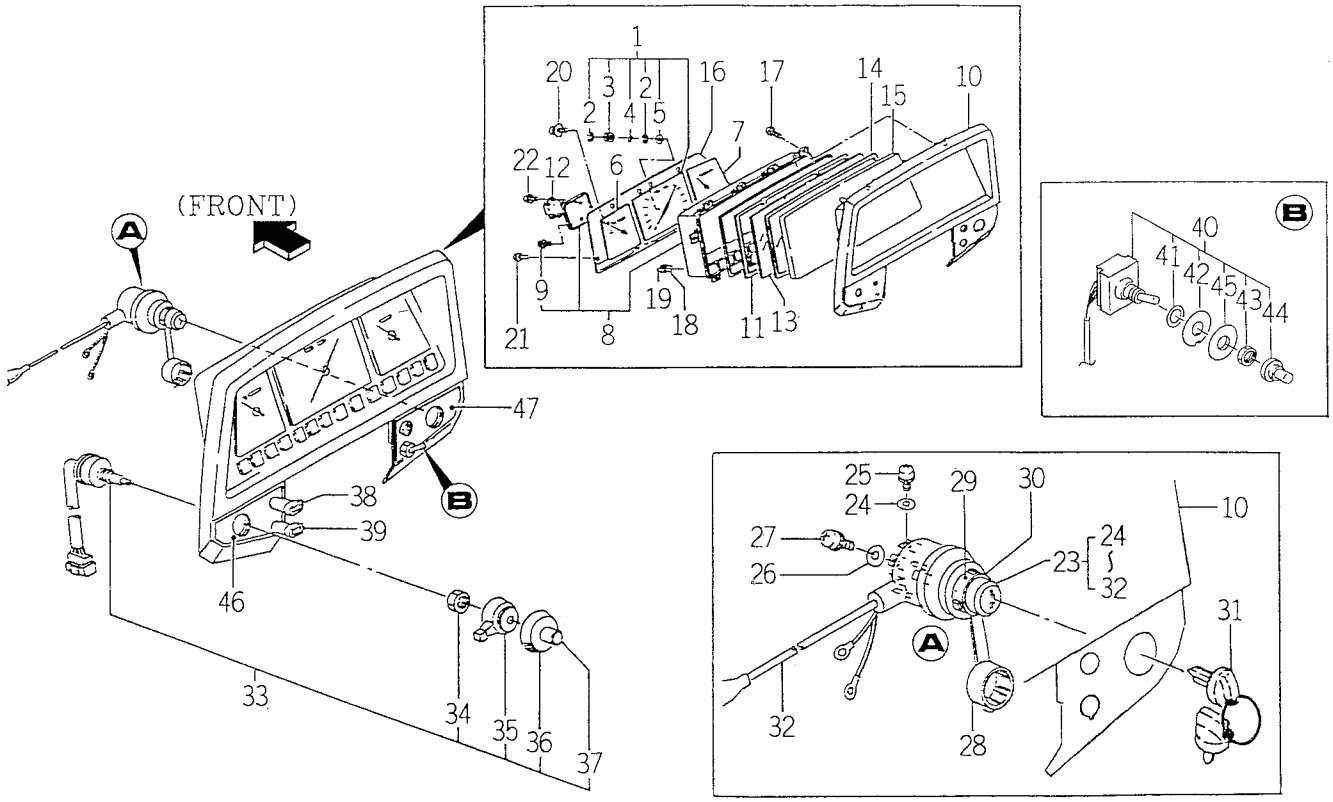

1674-6582

KEY	PART CODE	DESCRIPTION	SPC	TYPE OF MODEL TK538H		ITC	COL	GRP	REMARKS
1	1640-658-520-10	METER/TACHO ASSY	*	1					
2	1640-658-322-00	RING/E	*	2					
3	1673-658-214-00	GEAR	*	1					
4	1640-658-324-00	PIN	*	1					
5	1640-658-325-00	WASHER	*	1					
6	1650-652-212-00	META/FUEL ASSY	*	1					
7	1650-652-561-00	METER/TEMP	*	1					
8	1560-658-240-70	HOUSING ASSY	*	1					
9	1560-658-242-00	SCREW/TRAS, M04X12	*	3					
10	1673-658-212-00	VISOR	*	1					
11	1650-652-715-00	ESCUTCHEON ASSY	*	1					
12	1650-652-218-00	HOUSING/GEARBOX ASSY	*	1					
13	1518-621-208-00	GLASS	*	1					
14	1518-621-209-00	PACKING (A)	*	1					
15	1518-621-211-00	CASE, GLASS	*	1					
16	1561-660-412-00	BOARD	*	1					
17	V195-164-012-40	BOLT/M4X12	*	10					
18	3650-270-214-00	BULB	*	12					
19	1560-658-282-40	SOCKET	*	12					
20	1560-658-202-00	SCREW	*	6					
21	V195-163-008-30	PIN 3/3X08	*	3					
22	V120-264-001-00	SCREW/S	*	2					
23	1560-658-310-30	SWITCH SET	*	1					
24	V411-260-004-00	WASHER, PL/M 4	*	3					
25	V120-264-000-80	SCREW, PLUS/M4X8	*	3					
26	V411-260-005-00	WASHER, PL/M 5	*	3					
27	V120-265-001-00	SCREW, SEMS/M5X10	*	3					
28	1444-621-311-00	CAP	*	1					
29	1444-621-312-00	NUT, RING/M28X1.0	*	1					
30	1444-621-313-00	WASHER	*	1					

FIG.150 COMPONENT PARTS FOR 1674-658-220-00 ON Fig.93

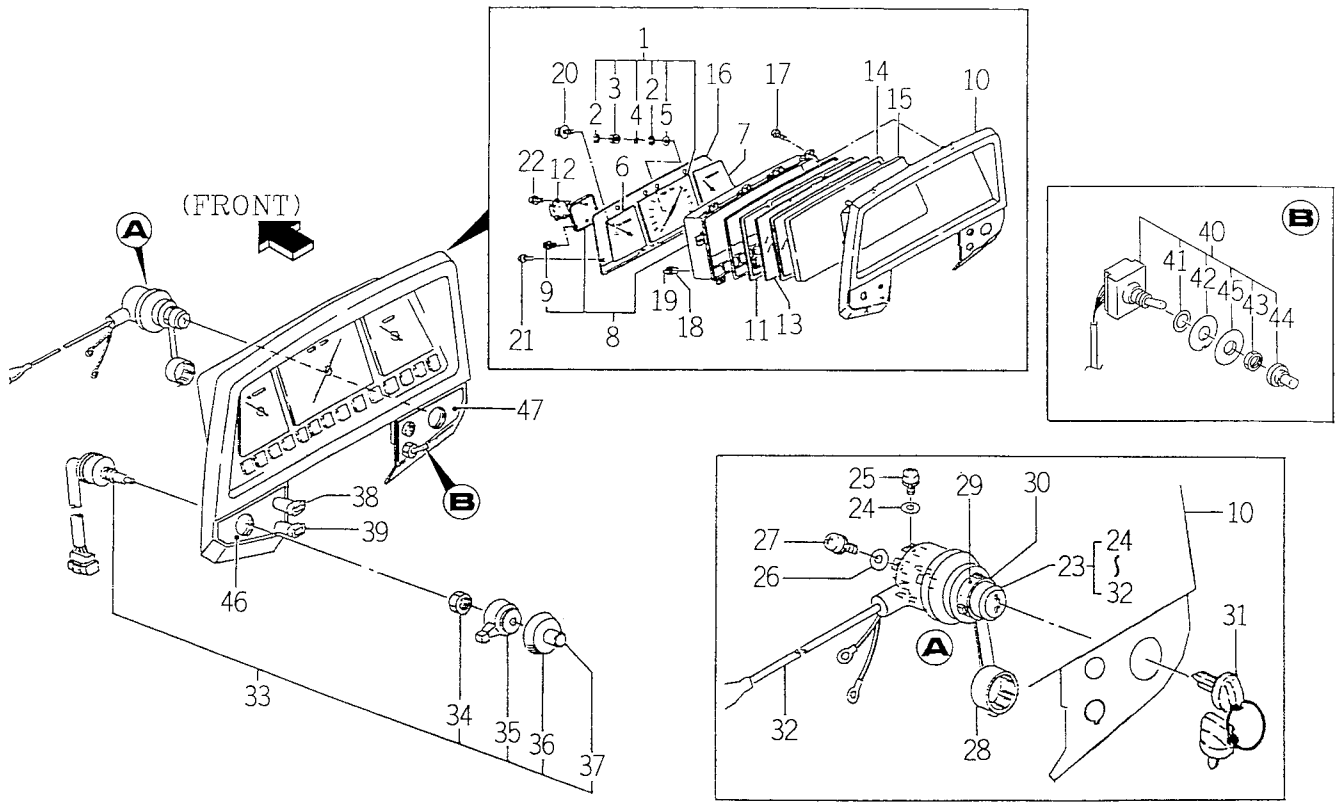

1674-6582

KEY	PART CODE	DESCRIPTION	SPC	TYPE OF MODEL TK538H		ITC	COL	GRP	REMARKS
31	1444-621-320-00	KEY ASSY	*	1					
32	1560-658-203-50	HARNESS ASSY	*	1					
33	1544-623-001-00	SWITCH ASSY	*	1					
34	1544-623-232-00	NUT/M22	*	1					
35	1544-623-233-00	LEVER	*	1					
36	1544-623-234-00	KNOB	*	1					
37	1544-623-235-00	BOOT/HORN	*	1					
38	1600-623-200-00	SWITCH	*	1					
39	1600-623-210-00	SWITCH, LAMP ASSY	*	1					
40	1594-658-240-00	SWITCH	*	1					
41	1594-658-242-00	WASHER	*	1					
42	1594-658-243-00	WASHER/12X30X01	*	1					
43	1594-658-244-00	NUT/M12	*	1					
44	1594-658-245-00	CAP	*	1					
45	1594-658-247-00	WASHER/13X30X01	*	1					
46	1594-658-201-00	MARK	*	1					
47	1594-658-202-00	LABEL/CONTROL/RH	*	1					

WIRING DIAGRAM

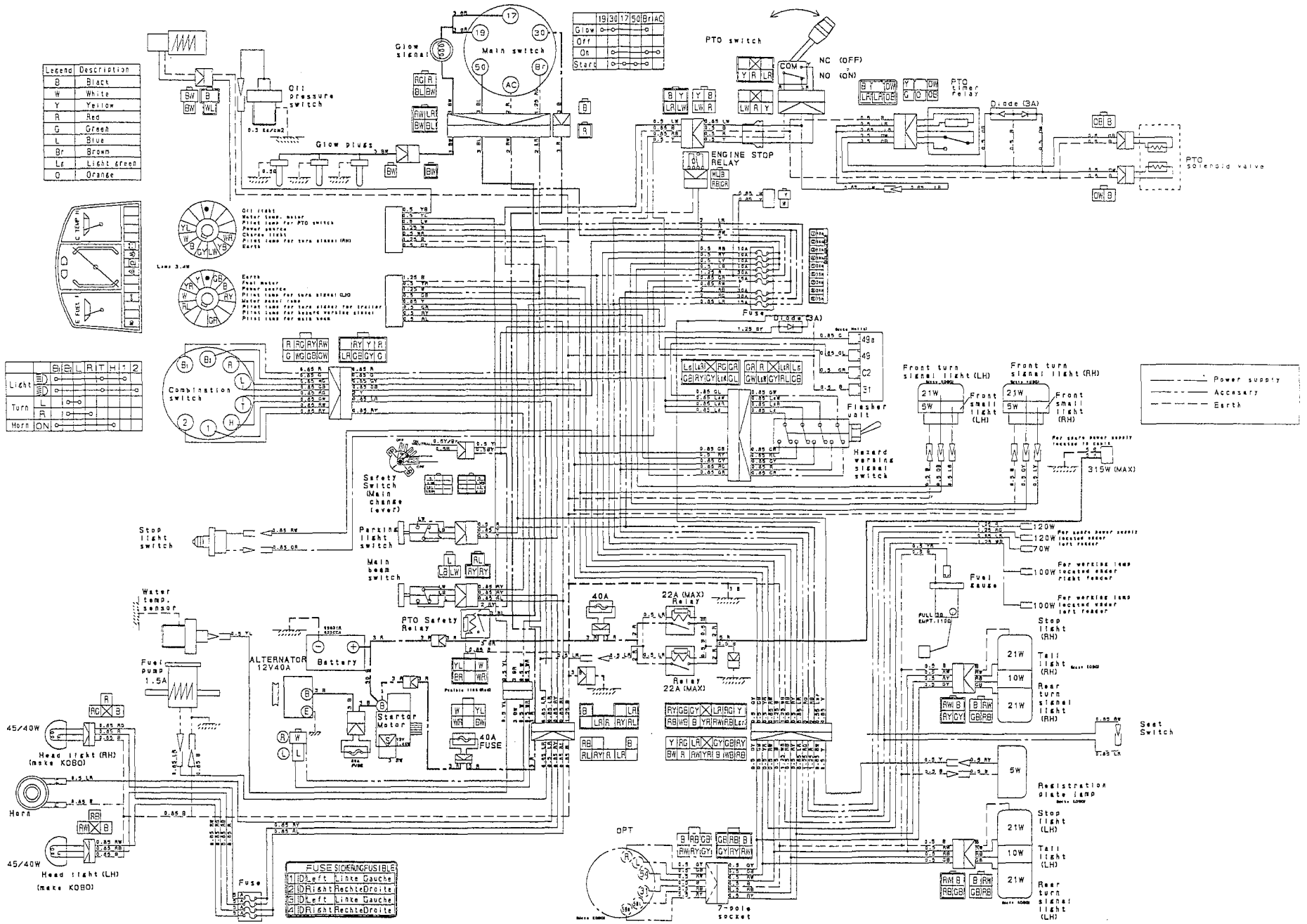

NUMERICAL INDEX

6005-097-350-00

PART CODE	FIG.	KEY	PART CODE	FIG.	KEY	PART CODE	FIG.	KEY
J061-116-025-00	17	21	V721-103-104-00	18	13	6209-300-012-00	4	6
J061-210-015-00	18	18		25	18	6209-300-014-00	1	13
J061-213-018-00	2	10	V721-103-105-00	25	19	6209-360-018-00	22	3
J061-216-020-00	17	29	V721-113-105-00	18	29	6209-360-047-00	5	15
	18	19	V723-102-002-40	10	38	6209-360-071-10	17	27
J061-220-024-00	18	35	V723-102-005-00	10	45	6209-360-072-10	17	28
J061-238-046-00	5	14		25	16	6209-360-075-10	5	13
J061-252-063-00	5	16	V723-102-005-50	18	26	6209-360-076-10	17	20
J062-076-082-00	22	4		25	21	6209-366-005-10	2	9
P117-303-003-00	10	24	V723-102-006-00	17	26	6209-409-001-00	10	20
V195-164-008-30	2	4		25	28	6209-409-003-00	12	17
V201-360-807-50	10	11	1373-121-001-00	23	4	6209-409-004-00	4	7
V211-560-802-00	10	13	1594-105-001-00	4	5	6209-440-002-10	14	7
	18	22		25	23	6209-490-002-00	2	7
	21	7	1650-650-015-00	10	16	6209-500-003-00	10	18
	23	3	3625-540-004-00	5	7		10	27
V211-560-802-50	3	3		10	40		25	13
	4	3	3640-586-004-00	22	5	6209-500-005-00	12	21
	18	32	3805-355-002-10	8	2	6209-580-002-10	21	38
V220-540-602-00	17	7	3817-401-001-00	10	12	6209-605-003-00	10	2
V251-340-802-50	5	5		12	20	6209-605-004-10	1	4
V251-340-806-00	6	21		18	14	6209-610-001-00	6	4
V304-700-008-00	5	3		18	33	6209-610-003-00	1	3
V341-120-008-00	10	21		21	8		6	6
V401-160-006-00	17	18	6115-639-008-00	27	51	6209-610-004-00	10	3
V411-260-006-00	21	41	6209-000-002-00	12	18	6209-625-002-00	10	7
V411-260-008-00	5	11	6209-000-005-00	1	12		25	12
V411-700-008-00	5	4	6209-000-006-00	6	2	6209-625-003-20	6	15
V411-700-010-00	4	8	6209-000-023-00	16	8		25	10
V523-101-001-80	9	3	6209-030-005-00	10	8	6209-630-002-10	24	6
	16	2	6209-030-006-00	10	9		25	22
V600-110-600-40	21	13		18	23	6209-630-004-10	17	19
V600-110-600-50	10	49	6209-030-043-00	21	17		25	26
V600-110-620-30	21	12	6209-030-091-00	9	4	6209-740-001-00	10	28
V600-150-600-20	16	7	6209-030-092-00	19	4	6209-740-005-00	6	18
V682-200-000-60	1	10	6209-030-094-00	17	17	6209-749-001-20	6	16
V704-140-016-00	12	15	6209-030-095-00	10	15		10	46
V705-140-012-00	10	33	6209-030-097-00	6	28	6209-920-002-00	10	22
V710-140-004-00	21	22	6209-031-083-00	23	5	6209-940-004-00	12	14
	21	34	6209-037-017-10	5	10	6211-110-043-60	1	1
V720-101-900-80	21	37	6209-046-001-00	10	17	6211-141-023-50	1	11
V720-102-401-80	8	3	6209-050-001-00	10	34		25	3
V720-103-502-50	6	36	6209-050-002-00	10	35	6211-150-032-10	1	2
V720-113-502-20	17	9	6209-060-001-00	17	14	6211-170-007-20	2	1
	25	17	6209-060-002-00	6	33	6211-173-005-00	2	6

6005-097-350-00

PART CODE	FIG.	KEY	PART CODE	FIG.	KEY	PART CODE	FIG.	KEY
6211-173-005-00	25	4	6212-230-011-00	14	5	6213-161-003-10	10	31
6211-179-011-20	2	2	6212-235-002-20	14	6	6213-164-001-00	10	32
6211-210-055-70	6	1	6212-261-009-10	14	8	6213-240-005-10	17	12
6211-258-001-00	6	9	6212-263-009-00	7	5	6213-311-026-10	17	16
	25	8	6212-264-009-00	7	6	6213-311-041-10	17	13
6211-258-002-00	6	10	6212-310-011-40	16	1	6213-319-010-00	6	32
	25	9	6212-330-066-00	16	5	6213-319-011-00	6	34
6211-291-010-00	2	3	6212-333-002-00	16	6		25	27
6211-291-015-10	6	26	6212-339-005-00	16	9	6213-610-011-10	18	1
6211-292-001-20	6	27	6212-371-035-00	16	10	6213-611-006-00	18	2
	25	11	6212-379-001-00	16	11	6213-612-004-00	18	9
6211-310-009-50	10	1	6212-511-005-00	13	1	6213-613-002-10	18	8
6211-311-013-00	10	41	6212-521-002-00	16	3	6213-619-002-00	18	11
6211-312-005-10	10	29	6212-522-004-00	13	2	6213-619-003-00	18	10
	25	14	6212-523-006-30	13	6	6213-619-006-00	18	28
6211-312-006-10	10	42	6212-524-006-10	21	10	6213-619-009-00	18	12
	25	15	6212-530-005-10	10	48	6213-621-003-00	18	6
6211-319-003-00	10	44	6212-531-008-20	6	8	6213-622-002-10	18	5
6211-341-030-10	9	1	6212-535-007-00	13	4	6213-631-002-00	18	3
6211-342-003-10	9	2	6212-535-009-00	21	14	6213-631-005-00	18	4
6211-361-038-10	8	1	6212-551-004-00	12	1	6213-641-022-00	19	2
6211-510-008-00	6	11	6212-552-004-00	12	2	6213-642-002-00	18	7
6211-511-007-00	6	12	6212-561-003-00	12	3	6213-660-015-00	19	1
6211-511-008-00	6	13	6212-563-001-00	12	4	6213-669-012-00	19	3
6211-530-008-00	7	1	6212-565-001-00	12	5	6213-671-031-00	19	5
6211-540-008-00	7	3	6212-569-002-00	1	9	6213-674-006-10	23	2
6211-599-004-00	6	14		25	2	6213-711-003-20	18	25
	7	2	6212-571-002-20	12	6	6213-716-003-10	18	20
	7	4	6212-575-003-00	12	7	6213-719-002-00	18	17
6211-711-003-00	1	6	6212-600-009-10	12	8	6213-721-005-00	6	24
6211-715-004-00	1	5	6212-611-004-10	12	9	6213-721-007-00	6	23
6211-721-003-10	1	7	6212-616-002-00	12	16	6213-729-004-10	18	15
6211-721-004-00	1	8	6212-620-008-10	12	10	6213-729-011-00	18	34
6211-751-001-10	2	5	6212-626-002-10	12	11	6213-729-013-10	18	16
6211-751-002-00	6	35	6212-628-010-00	12	12	6213-743-002-10	18	21
6211-760-020-10	6	30	6212-628-011-00	12	13		25	20
6211-766-006-10	6	31	6213-100-004-30	17	1	6214-111-023-00	3	1
6211-777-007-20	11	1	6213-111-002-20	17	2	6214-115-003-10	3	2
6212-111-054-60	14	1	6213-119-001-00	17	6		25	6
6212-114-054-60	15	1	6213-120-002-30	17	3	6214-141-023-00	4	1
6212-116-054-60	15	3	6213-125-002-10	17	4	6214-145-004-20	4	2
6212-121-019-40	14	2	6213-129-003-00	17	5		25	7
6212-124-019-40	15	2	6213-140-013-00	17	8	6214-145-009-00	5	2
6212-126-019-40	15	4	6213-149-003-20	17	10		25	24
6212-211-002-00	14	3	6213-160-003-10	10	30	6214-400-006-00	5	1

6005-097-350-00

PART CODE	FIG.	KEY	PART CODE	FIG.	KEY	PART CODE	FIG.	KEY
6214-435-024-30	5	6	6215-549-006-00	21	29	6215-629-062-00	27	19
6214-439-010-10	5	8	6215-549-007-10	21	39	6215-629-063-00	27	20
6214-439-011-10	5	9	6215-549-009-00	21	30	6215-629-064-00	27	21
6215-300-037-00	20	1	6215-549-010-00	21	31	6215-629-065-00	27	22
6215-311-005-00	26	16	6215-549-012-00	21	43	6215-629-066-00	27	23
6215-315-002-00	20	2	6215-549-013-00	6	29	6215-629-067-00	27	24
6215-315-005-00	20	4	6215-549-023-00	21	32	6215-631-008-00	27	2
6215-315-006-00	20	3	6215-549-024-00	21	33	6215-634-003-00	27	14
6215-315-007-00	20	5	6215-549-031-10	21	23	6215-635-004-00	27	8
6215-330-022-00	26	1	6215-549-037-00	21	26	6215-635-005-00	27	49
6215-332-006-00	26	15	6215-549-038-00	21	25	6215-637-004-00	27	48
6215-339-004-00	26	14	6215-549-063-00	21	28	6215-639-008-00	27	15
6215-342-002-00	26	13	6215-600-078-00	21	1	6215-639-009-00	27	16
6215-343-002-00	26	12	6215-611-015-00	27	1	6215-641-002-00	27	3
6215-345-044-00	26	2	6215-619-023-00	27	50	6215-643-005-00	27	4
6215-345-045-00	26	3	6215-619-024-00	27	52	6215-644-006-00	27	6
6215-345-046-00	26	4	6215-621-018-00	21	9	6215-649-008-00	27	5
6215-345-047-00	26	5	6215-622-003-00	27	11	6215-649-009-00	27	7
6215-345-048-00	26	6	6215-629-017-00	27	12	6215-649-010-00	27	9
6215-345-049-00	26	7	6215-629-035-00	27	13	6215-649-011-00	27	10
6215-345-050-00	26	8	6215-629-036-00	27	25	6219-310-003-20	10	37
6215-345-051-00	26	9	6215-629-037-00	27	26	6219-732-012-00	24	4
6215-345-052-00	26	10	6215-629-038-00	27	27	6219-752-006-00	21	2
6215-345-053-00	26	11	6215-629-039-00	27	28	6219-752-007-00	21	3
6215-359-003-00	26	17	6215-629-040-00	27	29	6219-752-008-00	21	4
6215-359-004-00	26	18	6215-629-041-00	27	30	6219-752-009-00	21	5
6215-359-006-00	27	53	6215-629-042-00	27	31	6219-752-010-00	21	6
6215-411-052-00	20	6	6215-629-043-00	27	32	6221-700-002-10	17	22
6215-411-053-10	20	7	6215-629-044-00	27	33	6221-726-002-10	17	23
6215-411-054-00	20	8	6215-629-045-00	27	34	6221-726-003-00	17	25
6215-411-080-10	22	2	6215-629-046-00	27	35	6221-726-004-00	17	24
6215-412-004-00	22	1	6215-629-047-00	27	36	6222-111-005-10	4	4
6215-520-007-10	21	16	6215-629-048-00	27	37	6281-100-007-20	23	7
6215-526-001-10	21	18	6215-629-049-00	27	38	6281-111-005-00	28	1
6215-531-019-00	21	35	6215-629-050-00	27	39	6281-115-010-00	28	23
6215-537-002-10	21	44	6215-629-051-00	27	40	6281-115-011-00	28	10
6215-541-001-10	21	19	6215-629-052-00	27	41	6281-115-016-00	28	20
6215-541-016-30	21	24	6215-629-053-00	27	42	6281-116-004-00	28	11
6215-541-024-20	21	36	6215-629-054-00	27	43	6281-121-006-00	28	2
6215-542-004-20	10	23	6215-629-055-00	27	44	6281-123-005-00	28	8
6215-542-005-00	10	25	6215-629-056-00	27	45	6281-124-007-10	28	5
6215-542-006-00	21	21	6215-629-058-00	27	46	6281-129-003-00	28	19
6215-543-002-10	21	20	6215-629-059-00	27	47	6281-129-038-00	28	3
6215-546-003-10	10	19	6215-629-060-00	27	17	6281-129-039-00	28	4
6215-549-005-10	21	27	6215-629-061-00	27	18	6281-129-040-00	28	7

6005-097-350-00

PART CODE	FIG.	KEY	PART CODE	FIG.	KEY	PART CODE	FIG.	KEY
6281-129-042-00	28	15	6581-129-092-00	28	17	6909-950-115-00	14	4
6281-129-043-00	28	16	6581-129-099-00	28	6	6911-129-081-00	6	3
6281-129-044-00	28	18	6901-055-855-00	12	19	6911-219-195-00	6	5
6281-129-045-10	28	9	6901-066-645-00	16	12			
6281-129-062-00	28	14	6901-910-612-00	13	5			
6281-151-017-10	28	13		21	15			
6281-200-020-00	23	1		24	7			
6281-213-017-00	29	7	6901-910-616-00	10	39			
6281-214-003-00	29	12	6901-910-635-00	8	4			
6281-214-004-00	29	13	6901-910-816-00	17	11			
6281-215-001-00	29	17	6901-910-828-00	18	27			
6281-216-001-00	29	18	6901-910-845-00	18	31			
6281-217-003-00	29	16	6901-911-020-00	5	12			
6281-221-007-00	29	4		11	2			
6281-222-012-00	29	1	6901-911-025-00	9	5			
6281-229-002-00	29	2	6901-931-240-00	23	8			
6281-229-003-00	29	3	6902-050-816-00	10	43			
6281-229-004-00	29	5	6904-110-822-00	6	20			
6281-229-006-00	29	8		10	4			
6281-229-007-00	29	9		10	47			
6281-229-008-00	29	10	6904-110-840-00	6	19			
6281-229-011-00	29	15		18	30			
6281-229-012-00	29	19	6904-110-850-00	10	6			
6281-229-013-00	29	20	6904-110-855-00	10	5			
6281-229-014-00	29	21	6904-130-825-00	4	9			
6281-229-015-00	29	22	6908-000-716-00	13	3			
6281-229-016-00	29	23		21	11			
6281-229-017-00	29	24	6908-000-750-00	16	4			
6281-229-018-00	29	25	6908-160-816-00	6	17			
6281-229-029-00	29	14	6909-110-406-00	10	36			
6281-229-032-00	29	6		21	40			
6281-229-033-00	29	11	6909-110-408-00	10	50			
6281-229-041-00	28	22		10	52			
6281-271-002-00	29	26	6909-110-410-00	23	6			
6281-410-010-00	24	3	6909-111-508-00	28	21			
6281-910-003-10	24	5	6909-150-506-00	21	42			
6281-920-001-00	24	8	6909-150-508-00	10	51			
6281-971-003-00	24	1		10	53			
6282-450-004-00	24	2	6909-160-508-00	10	10			
6287-810-029-00	25	1	6909-202-308-00	10	26			
6294-453-002-00	6	22	6909-571-410-00	17	15			
6509-030-037-00	10	14		25	25			
6509-605-019-10	6	7	6909-572-008-00	2	8			
6513-770-022-10	18	24		25	5			
6581-117-007-00	28	12	6909-902-299-00	6	25			

NUMERICAL INDEX

1674-097-120-00

PART CODE	FIG.	KEY	PART CODE	FIG.	KEY	PART CODE	FIG.	KEY
A101-251-008-00	41	8	K211-005-000-10	135	2	K275-001-001-00	145	1
J061-112-022-00	1	25	K211-005-003-10	142	3	K275-001-002-00	145	8
	47	38	K211-005-004-00	142	6	K275-001-003-00	62	17
	47	43	K211-005-005-00	142	7		144	15
J061-116-025-00	6	14	K211-005-006-00	142	12		145	14
	7	15	K211-005-007-00	142	13	K275-001-100-00	145	2
	110	46	K211-005-008-00	142	14	K275-001-200-00	145	5
J061-120-032-00	62	25	K211-005-009-00	142	15	P120-605-031-00	41	5
J061-140-057-00	2	14	K211-005-010-10	142	17		106	28
	7	28	K211-005-011-00	142	19	V111-164-002-50	109	13
J061-165-090-00	7	29	K211-005-012-00	142	20	V111-165-001-00	91	17
J061-210-015-00	3	24	K211-005-013-00	142	26		92	15
	38	14	K211-005-100-20	142	1	V111-166-001-00	106	24
J061-211-013-00	1	26	K211-008-000-10	56	10	V111-166-003-00	90	3
J061-228-036-00	61	16	K211-008-003-00	143	2	V111-166-004-00	56	33
J061-230-038-00	3	17	K211-008-010-00	143	6	V112-165-001-60	107	22
J061-232-040-00	3	16		143	16	V112-165-002-50	91	16
J061-234-042-00	3	15	K211-008-011-00	143	7		92	14
J061-252-063-00	2	10		144	3	V120-264-000-80	150	25
	2	13	K211-008-012-00	143	8	V120-264-001-00	150	22
J062-076-082-00	6	15	K211-008-016-00	143	18	V120-264-001-20	110	33
	7	16	K211-008-017-00	143	19	V120-265-001-00	150	27
J062-104-111-00	6	16	K211-008-018-10	143	4	V120-265-003-00	137	5
	7	17	K211-008-100-00	143	1	V120-266-001-60	90	6
K110-001-106-00	142	8	K211-008-200-00	143	13	V120-266-002-00	104	13
	145	10	K211-012-006-00	148	5		108	13
	148	20	K211-013-006-00	143	5	V120-365-001-20	105	27
K135-002-009-00	47	17	K211-013-007-00	143	17	V120-366-001-60	93	4
	61	28	K220-002-000-00	64	18		97	15
K135-013-000-00	47	10	K231-004-000-20	56	24		97	19
K135-013-100-10	47	11	K231-004-006-00	56	27		97	38
K135-015-002-00	47	12	K231-004-007-00	56	29		103	8
K135-017-006-00	61	23	K234-001-004-00	144	13		103	10
K135-022-000-00	61	21	K250-008-000-00	61	46		106	6
K135-022-100-00	61	22	K250-008-005-00	144	8		107	21
K200-014-007-00	148	27	K250-015-000-00	56	21		108	15
K200-016-200-00	145	6	K256-001-000-00	62	1		109	3
K211-001-008-00	143	9	K256-001-004-10	144	2	V120-366-002-50	104	8
K211-001-011-00	142	5	K256-001-005-00	144	5		104	28
K211-004-006-00	142	16	K256-001-006-00	144	6	V120-368-002-00	44	8
	148	7	K256-001-007-10	144	11		72	10
K211-004-007-00	142	2	K256-001-100-00	144	1	V120-376-001-60	29	12
	148	6	K270-001-003-10	145	3		104	20
	148	16	K270-001-004-00	145	4		138	7
K211-005-000-10	128	2	K275-001-000-00	62	14	V195-163-008-30	150	21

PART CODE	FIG.	KEY	PART CODE	FIG.	KEY	PART CODE	FIG.	KEY
V195-164-012-40	150	17	V201-361-202-00	81	6	V201-461-003-50	83	5
V195-164-020-40	147	8		82	6		140	6
V200-260-501-0B	94	3		84	6	V201-461-006-00	83	6
V200-360-604-50	62	5	V201-361-203-00	10	5		140	7
V201-260-801-20	6	25		18	2	V201-461-202-00	79	6
	7	3		48	3		83	10
	28	1		100	16		140	10
	57	4		121	3		140	24
V201-260-801-60	73	30		124	11	V201-461-203-00	149	41
	91	23		125	2	V201-461-204-00	139	17
	92	21		126	11		140	46
	135	10	V201-361-203-50	16	2	V201-461-207-50	79	8
V201-260-803-00	56	13		16	10		80	8
V201-260-803-50	49	9		51	20		81	8
V201-260-804-50	62	20		52	6		82	10
V201-260-805-00	61	47		56	17		83	14
V201-260-808-00	1	15	V201-361-204-00	10	4		84	8
	4	24		123	4		140	14
	5	24	V201-361-204-50	10	6	V201-461-215-50	66	30
V201-260-814-00	59	3		17	2		140	21
V201-261-004-00	63	2		48	4	V201-461-403-20	79	3
	87	24		122	2		140	23
V201-261-005-50	31	5	V201-361-206-00	13	4	V203-361-805-00	51	23
V201-261-006-50	4	11	V201-361-206-50	17	3	V210-260-601-20	1	20
	4	19	V201-361-208-00	100	6	V210-260-601-60	94	7
	5	11		101	7		147	6
	5	19	V201-361-208-50	16	9	V210-260-602-50	128	13
V201-261-008-00	133	8	V201-361-215-50	66	3	V210-260-604-00	73	47
V201-261-008-50	128	3	V201-361-403-00	66	7		135	16
V201-261-012-00	68	7		80	3	V210-360-601-20	3	10
	134	8		81	3		74	11
V201-261-013-50	135	3		132	3		75	7
V201-261-202-00	97	21		132	6	V210-360-601-60	47	29
V201-261-607-50	131	2	V201-361-403-50	65	4		69	10
V201-360-802-00	136	2		127	10		69	19
V201-360-802-5B	22	8		129	3		73	52
V201-360-804-00	46	10		129	5		95	20
V201-360-806-50	22	10		130	2		96	20
V201-361-002-50	100	9	V201-361-603-00	99	7		97	29
V201-361-005-00	87	13		119	21		99	11
V201-361-006-00	102	3		120	11		105	18
V201-361-009-00	54	11	V201-361-604-50	51	11		105	20
V201-361-010-00	35	5	V201-460-802-00	50	18		108	18
V201-361-011-00	35	6	V201-461-002-50	79	12		110	2
V201-361-202-00	80	6		140	27	V210-360-602-00	94	11

1674-097-120-00

PART CODE	FIG.	KEY	PART CODE	FIG.	KEY	PART CODE	FIG.	KEY
V210-360-602-00	104	25	V211-260-802-00	38	19	V211-360-801-60	61	37
V210-360-602-50	95	34		42	8		61	39
	96	34		45	10		62	13
V210-360-603-50	95	35		46	6		64	8
	96	35		52	11		64	11
V210-560-602-50	47	32		62	23		64	29
V210-560-603-00	47	41		68	26		65	2
V210-560-603-50	61	34		72	5		68	22
V210-560-604-50	61	19		74	21		68	33
V211-260-801-20	6	13		78	2		72	7
	7	14		85	5		73	25
	49	12		86	5		73	35
	95	31		133	25		73	41
	96	31		134	28		76	4
	133	21	V211-260-802-50	20	2		85	12
V211-260-801-60	2	16		61	49		85	18
	6	2		128	7		85	22
	7	4		128	24		86	6
	9	10		135	9		86	9
	38	16		135	30		86	12
	41	21	V211-260-804-00	56	11		86	15
	58	3	V211-261-001-60	30	2		86	16
	58	22	V211-261-002-00	22	14		95	13
	60	3		42	7		95	32
	60	10		61	5		96	13
	64	6		64	34		96	32
	64	13	V211-261-002-50	20	6		97	32
	64	15		61	11		110	34
	64	33		61	57		118	20
	68	10	V211-261-003-00	61	52		127	14
	91	5		61	56		128	8
	94	5		118	3	V211-360-802-00	3	21
	94	9	V211-360-801-20	4	35		5	28
	94	15		5	36		41	22
	127	27	V211-360-801-60	2	7		69	15
	128	32		4	17		69	23
	133	11		4	31		70	4
	134	11		4	33		71	3
	134	24		5	30		72	2
	135	37		5	34		72	4
V211-260-802-00	6	23		19	9		74	15
	7	22		30	10		75	9
	10	17		47	22		77	2
	20	3		61	6		85	8
	24	4		61	14		100	14

PART CODE	FIG.	KEY
V211-360-802-00	110	50
	117	4
	133	14
	134	15
	137	2
V211-360-802-50	4	29
	5	32
	69	21
V211-360-803-00	73	49
	122	8
V211-360-803-50	85	19
	86	13
V211-360-804-00	75	10
V211-360-805-50	77	3
V211-361-002-50	61	61
V211-560-801-60	43	11
	118	18
V211-560-802-00	11	8
	40	5
	61	54
	87	5
	87	23
V211-560-802-50	15	4
	46	9
	62	30
	105	3
V211-560-803-50	87	20
V211-560-804-50	87	52
V211-561-002-00	40	8
	87	38
V211-561-002-50	33	7
	34	18
	38	8
	51	5
	52	37
	52	47
	87	19
V211-561-003-00	35	3
	35	11
	54	12
V211-561-004-00	35	4
	54	10
V211-660-801-60	85	21
	103	4
	141	2

PART CODE	FIG.	KEY
V211-660-802-00	8	2
	103	2
	105	13
	107	15
V211-660-802-50	3	26
	22	7
V211-661-002-00	80	14
	82	4
	87	62
	99	3
	100	3
V211-661-002-50	43	7
V211-661-003-00	102	6
V220-540-601-00	148	26
V220-540-601-60	142	22
V220-540-802-00	148	15
V220-541-002-00	68	6
	133	7
	134	7
V240-461-608-50	119	4
	119	14
V251-260-802-0D	16	5
V251-340-802-50	4	2
	5	2
V251-341-002-5D	52	35
V251-341-002-50	52	48
V251-341-002-8D	19	3
V251-341-003-5D	19	6
V251-341-202-50	10	2
	124	13
	126	13
V251-341-203-00	48	2
	125	3
V251-341-203-2D	19	2
V251-341-210-00	10	14
V252-341-002-00	102	7
V271-160-601-20	3	5
V271-160-602-50	2	4
V290-106-001-20	70	9
	71	8
V301-260-004-00	109	14
V301-260-006-00	58	28
	59	11
	60	7
	89	9

PART CODE	FIG.	KEY
V301-260-006-00	104	21
	107	12
	108	7
	110	4
V302-460-016-00	119	6
	119	16
V304-260-008-00	4	27
	7	25
	24	5
	29	4
	29	6
	30	7
	39	3
	42	12
	46	11
	56	14
	58	32
	69	17
	85	31
	86	24
	87	16
	87	36
	87	53
	87	56
	87	59
	95	11
	96	11
	106	27
	127	20
	128	9
	135	12
V304-260-010-00	4	14
	4	22
	5	14
	5	22
	31	7
	56	35
	87	25
	127	33
V304-260-012-00	82	11
	87	11
V304-260-014-00	39	8
	127	8
V304-260-016-00	51	12
	66	10

1674-097-120-00

PART CODE	FIG.	KEY
V304-260-016-00	66	17
	99	8
	139	8
	140	37
V304-460-008-00	4	5
	5	5
	87	32
	136	3
V304-460-010-00	52	36
	52	50
	54	13
	100	10
	102	8
	123	6
V304-460-012-00	10	3
	16	3
	16	11
	51	21
	66	4
	84	11
	100	8
	100	17
	101	3
	101	9
	122	4
	124	14
	126	14
V304-460-016-00	55	12
	67	12
	119	5
	119	15
V305-260-012-00	101	4
	105	15
V328-261-110-00	9	6
	88	13
V328-262-110-00	44	3
V350-160-004-00	69	8
V350-160-006-00	69	5
	70	10
	71	9
V360-260-005-00	91	18
	92	16
V360-260-006-00	109	8
V361-260-006-00	91	27
	92	25

PART CODE	FIG.	KEY
V362-260-008-00	3	29
	49	10
	73	28
	73	31
	73	36
	73	45
	74	4
	74	16
	87	45
	100	15
	110	51
V363-260-008-00	6	28
	91	25
	92	23
	122	9
	128	26
	135	31
V401-160-004-00	109	15
V401-160-006-00	56	34
	59	10
	62	6
	104	22
	106	25
	108	8
	110	5
	142	23
V401-160-008-00	1	16
	4	4
	4	26
	5	4
	5	26
	7	26
	22	11
	24	6
	27	4
	29	7
	30	8
	34	3
	45	6
	47	9
	50	19
	50	30
	55	3
	59	4
	61	48

PART CODE	FIG.	KEY
V401-160-008-00	62	21
	87	35
	87	58
	95	12
	95	33
	96	12
	96	33
	106	29
	110	30
	128	10
	135	13
	136	5
	148	14
V401-160-010-00	4	12
	4	20
	5	12
	5	20
	35	7
	52	34
	52	49
	54	14
	63	3
	68	8
	79	13
	83	7
	87	14
	100	12
	102	5
	128	4
	133	9
	134	9
	135	4
	140	8
	140	26
V401-160-012-00	10	7
	13	5
	16	4
	16	12
	17	4
	18	3
	48	5
	51	22
	52	7
	56	18
	66	5

1674-097-120-00

PART CODE	FIG.	KEY	PART CODE	FIG.	KEY	PART CODE	FIG.	KEY
V401-160-012-00	79	7	V401-160-018-00	51	24	V411-260-010-00	30	4
	80	7	V401-170-008-00	47	18		32	8
	81	7		61	29		40	15
	82	7	V410-260-010-00	9	12		44	5
	82	12	V411-260-004-00	150	24		59	14
	83	11	V411-260-005-00	150	26		79	14
	83	16	V411-260-006-00	9	16		83	8
	84	7		58	13		88	12
	87	10		89	8		100	13
	97	22		106	26		102	4
	100	7		109	9		127	32
	100	18		110	6		140	9
	101	8		128	18		140	25
	105	16		135	22	V411-260-012-00	100	19
	121	4	V411-260-008-00	1	17		101	2
	122	3		4	25		139	19
	123	5		4	36		140	48
	124	12		5	25	V411-260-016-00	55	11
	126	12		5	37		66	12
	139	18		22	12		67	11
	140	11		38	25		99	10
	140	16		41	13		105	14
	140	47		42	14		139	10
V401-160-014-00	65	5		49	11		140	39
	66	8		58	9	V411-260-020-00	139	13
	79	4		58	20		140	42
	80	4		74	19	V500-161-601-50	76	9
	81	4		75	13	V500-162-001-50	87	44
	127	11		88	6		128	17
	129	4		88	16		135	21
	129	6		91	24	V500-162-002-00	9	13
	130	3		92	22		9	17
	132	4		104	4		30	5
	132	7		106	30		32	9
V401-160-016-00	55	10		107	13		38	26
	66	11		109	11		42	15
	67	10		127	18		44	4
	99	9		127	23		58	10
	119	7		135	11		58	14
	119	17		136	4		58	18
	119	22	V411-260-010-00	4	13		88	7
	120	12		4	21		88	17
	131	4		5	13		127	24
	139	9		5	21		127	39
	140	38		9	4	V500-162-502-00	9	7

PART CODE	FIG.	KEY	PART CODE	FIG.	KEY	PART CODE	FIG.	KEY
V500-162-502-00	27	10	V600-110-600-70	11	2	V704-140-025-00	21	9
	41	14		12	2		23	4
	88	14		21	18		38	23
	127	19	V600-110-600-80	50	29		40	9
V500-163-002-00	38	12	V600-110-601-30	34	20		52	21
	53	8	V600-110-620-50	14	11		87	28
	53	13	V600-110-620-60	52	44		87	50
	53	18		118	8	V704-140-028-00	27	14
	66	20	V600-110-620-70	21	17	V704-140-030-00	52	22
V500-163-002-50	27	9		26	4	V704-140-035-00	11	3
	40	16		52	3		12	6
V500-163-003-00	139	14		118	9		12	12
	140	43	V600-110-620-80	52	43		26	6
V500-165-005-00	47	4	V600-110-621-00	37	8	V705-140-021-00	56	28
V511-100-805-00	40	2	V600-110-621-10	34	19	V705-140-024-00	142	11
	41	2	V600-110-630-50	14	2		148	17
V511-101-006-00	127	6		52	20	V705-140-032-00	28	2
V522-101-002-20	51	2	V600-130-600-30	46	4		149	15
V523-100-601-80	28	5	V600-150-600-20	87	8	V705-140-042-00	23	6
V523-100-801-60	13	3	V600-150-600-30	87	2		87	21
V523-101-002-40	10	15	V600-150-600-40	87	3	V706-140-040-00	21	21
	17	5	V600-150-600-50	87	27		36	5
	18	4	V607-110-620-70	12	10		38	9
	19	4	V610-115-110-60	52	16	V706-140-045-00	55	8
	34	7	V654-420-262-00	12	14	V707-140-056-00	50	14
	51	19	V654-425-302-00	21	5	V707-140-062-00	11	6
	52	33	V654-425-322-40	118	15		52	23
	52	46	V654-440-501-70	14	5	V707-140-072-00	26	8
	118	4	V654-445-501-70	21	11		118	5
V530-160-803-20	43	6	V670-200-009-00	37	5	V707-140-080-00	38	17
V580-140-301-60	58	7	V671-400-009-00	37	6	V707-140-090-00	35	8
V580-140-302-50	148	24	V682-200-000-60	148	11	V710-140-004-00	142	21
V580-140-402-00	58	16	V682-200-001-00	22	5	V710-140-008-00	58	5
	59	6		24	3		58	24
	128	22		27	7		58	30
	135	28		144	14	V710-140-009-00	69	12
V580-140-601-60	106	19		145	12		143	3
	145	13	V682-200-001-90	38	5	V720-101-901-00	30	11
V580-140-602-00	28	9	V704-140-012-00	127	40		145	9
V580-140-602-50	24	10	V704-140-014-00	31	14	V720-102-401-00	27	2
V580-140-805-00	56	8		88	3	V720-102-401-10	62	18
V600-110-600-40	21	3	V704-140-016-00	32	4		144	16
	23	2	V704-140-017-00	45	4		145	15
V600-110-600-50	14	3	V704-140-020-00	41	10	V720-102-401-20	47	27
	14	12		49	2	V720-102-401-40	24	8

1674-097-120-00

PART CODE	FIG.	KEY	PART CODE	FIG.	KEY	PART CODE	FIG.	KEY
V720-102-401-60	1	11	V720-112-401-80	56	23	V744-114-280-70	47	13
	34	24		62	29		61	24
V720-102-402-10	1	5	V720-112-402-00	47	31	V744-120-420-80	23	5
V720-103-502-20	27	16		47	40	V744-125-470-80	15	3
V720-103-503-10	47	28		57	2	V744-135-550-80	11	5
V720-103-503-40	49	7		61	18	V744-145-600-90	54	4
	50	5		61	33	V760-150-000-00	87	48
V720-103-503-60	49	6		61	58		105	10
V720-111-900-60	47	16		62	26	V761-150-000-00	51	18
	61	27		144	10		52	32
	142	4	V720-112-402-20	13	2	V762-150-000-00	127	9
V720-111-900-70	148	25		47	15	V763-150-000-00	38	20
V720-112-401-00	56	25		56	30		40	6
	144	7		61	26		40	10
V720-112-401-10	62	3		62	28	V780-140-000-1T	145	11
	62	16	V720-113-502-40	64	36	V780-140-000-2T	16	8
V720-112-401-20	56	22		64	38		142	10
	142	25	V720-113-502-90	10	11		144	9
	143	12	V720-113-503-40	61	4	V780-140-000-4T	17	8
	148	21		61	13		143	10
V720-112-401-40	54	15	V720-115-707-00	56	6	V780-140-000-40	68	4
	61	45	V721-103-103-50	61	3		133	4
	61	51	V721-103-104-50	61	2		134	4
	62	10		61	60	V780-140-000-60	54	16
	62	33	V721-103-106-50	1	8	V781-160-000-40	133	5
	62	35	V721-103-107-00	11	7		134	5
	63	4	V721-103-108-50	123	7	V781-160-000-6B	118	6
	64	2	V721-103-109-50	52	4	V781-160-000-6T	128	14
	64	17	V721-113-105-00	47	14		133	15
	64	19		61	25		134	16
	64	21	V721-113-106-50	149	17		135	17
	64	24	V721-113-107-00	149	28	V781-160-000-60	54	17
	64	41	V721-113-107-50	56	16	V782-160-000-2B	10	9
	68	5	V721-113-109-00	56	3	V782-160-000-2T	16	7
	133	6	V723-101-500-80	144	12		56	20
	134	6	V723-102-002-50	149	11		61	35
	142	24	V723-102-003-80	149	39	V782-160-000-4B	47	23
	143	11	V723-111-500-80	61	42	V782-160-000-4T	56	19
	143	20	V723-111-501-20	143	15	V782-160-000-6B	52	25
	144	4	V723-111-501-40	143	14	V782-160-000-6T	61	43
	148	28	V723-112-002-90	145	7		68	34
V720-112-401-60	56	31	V730-101-401-00	56	26	V782-160-000-60	54	18
	142	9	V742-116-240-40	54	5	V782-160-000-8B	16	6
V720-112-401-80	17	7	V742-145-600-60	51	10	V793-108-110-30	142	18
	47	36	V742-150-720-60	51	16	V889-001-242-40	119	9

1674-097-120-00

PART CODE	FIG.	KEY	PART CODE	FIG.	KEY	PART CODE	FIG.	KEY
V889-001-242-40	119	19	1376-402-003-00	95	21	1421-403-002-00	53	4
V920-551-001-20	115	5		95	22	1421-403-003-00	53	7
V920-551-401-70	115	6		95	39		53	12
V920-551-902-20	115	7		95	44		53	17
V920-552-402-70	115	8		95	49	1421-433-031-00	52	31
V936-150-015-00	115	3		95	52	1421-507-007-00	58	2
V999-200-003-00	119	10		96	6	1421-507-014-00	76	8
	119	20		96	14	1421-602-005-10	69	16
	120	5		96	21		85	30
	120	10		96	22		86	23
	124	5		96	39	1421-906-001-00	115	1
	124	10		96	44	1422-687-001-00	89	6
	126	5		96	49	1423-621-018-00	106	9
	126	10		96	52	1424-101-203-00	3	19
W296-134-007-00	70	13		98	8	1424-101-204-00	3	20
	71	12	1401-906-005-00	115	2	1425-433-018-00	19	5
	73	4	1402-511-600-00	66	24	1425-621-004-00	73	46
	73	8		67	6	1426-160-207-00	1	7
	73	13	1404-117-008-00	9	5	1426-160-209-00	1	10
	73	17		59	13	1426-258-200-10	118	12
W296-203-206-30	74	8		127	31	1426-621-038-00	6	11
	75	4	1404-312-006-00	38	24		94	16
1118-901-006-00	111	4	1404-402-001-00	53	6		97	43
1301-411-005-00	87	43		53	11	1427-111-244-10	3	28
1302-225-003-00	22	4		53	16	1427-117-001-00	82	9
	24	2	1404-402-005-00	53	9		83	13
	27	6		53	14		140	13
1305-931-003-00	67	8	1404-503-006-00	47	19	1427-120-002-00	52	30
1342-402-006-00	29	13		61	30	1427-201-016-00	51	8
	68	12	1404-511-801-10	66	18	1427-210-003-00	105	23
	95	40	1407-111-001-00	6	24	1427-301-005-00	50	23
	95	47		7	2	1427-317-004-00	10	8
	95	48	1415-125-021-00	128	25		19	7
	95	50		135	35		51	15
	95	51	1415-216-006-00	55	5	1427-431-003-00	83	20
	96	40	1415-505-014-00	47	35		140	20
	96	47	1415-505-015-00	127	29	1427-432-005-00	50	25
	96	48		128	20	1427-601-003-00	31	13
	96	50		135	26		88	4
	96	51	1416-621-037-00	94	2	1427-621-004-00	89	10
	110	37	1419-101-010-00	116	5	1427-934-013-00	114	7
	110	43	1421-101-313-00	3	3	1427-941-016-00	114	6
	138	10	1421-400-054-10	53	5	1429-406-205-00	46	3
1376-402-003-00	95	6	1421-400-055-00	53	10	1431-361-211-00	119	8
	95	14	1421-403-001-00	53	3		119	18

PART CODE	FIG.	KEY	PART CODE	FIG.	KEY	PART CODE	FIG.	KEY
1432-242-001-00	41	12	1444-408-202-00	47	3	1480-604-204-00	73	16
1432-242-004-00	60	4	1444-408-213-00	149	2	1488-247-250-00	130	4
	133	22	1444-408-214-00	149	3	1488-302-003-00	34	25
	134	25	1444-408-217-00	149	5		106	14
1432-406-212-00	53	19	1444-408-218-00	149	6		106	15
1432-616-002-00	85	32	1444-408-219-00	149	7	1488-411-009-00	33	3
	85	33	1444-408-301-00	149	8	1488-503-002-00	56	5
	86	25	1444-408-302-00	149	9	1491-203-006-10	26	3
	86	26	1444-408-303-00	149	10	1500-501-213-00	54	8
1432-616-004-00	8	3	1444-408-306-00	149	13	1500-501-214-00	54	9
1432-621-006-10	94	13	1444-408-308-00	149	16	1502-211-015-00	37	7
1432-651-021-00	85	35	1444-408-316-00	149	25	1507-323-004-20	36	4
	86	28	1444-408-317-00	149	26	1510-103-201-00	116	8
1432-651-028-00	74	17	1444-408-318-00	149	27	1510-103-250-00	116	6
	75	11	1444-408-323-00	149	32	1510-317-220-00	132	9
1432-665-014-00	108	20	1444-408-332-00	149	43	1510-331-310-00	120	1
1432-665-015-00	100	20	1444-410-002-10	49	8	1510-331-311-00	120	3
	108	21	1444-410-210-00	49	5		120	8
1434-611-002-10	86	7	1444-411-002-00	50	3	1510-331-312-00	120	4
	109	16	1444-411-004-00	50	16		120	9
1435-203-001-00	118	16	1444-411-005-00	50	17	1510-331-320-02	120	2
1442-313-200-10	42	1	1444-411-006-00	50	21		120	7
1442-313-202-00	42	2	1444-411-008-00	50	8	1510-331-330-00	120	6
1442-313-203-00	42	5	1444-411-009-00	50	9	1510-417-310-00	126	1
1443-452-007-00	34	10	1444-411-011-00	50	10	1510-417-311-00	126	3
1444-101-440-00	4	10	1444-411-012-00	50	11		126	8
	4	18	1444-411-013-00	50	12	1510-417-312-00	126	4
	5	10	1444-412-011-00	50	6		126	9
	5	18	1444-503-006-00	57	1	1510-417-320-02	126	2
1444-122-002-00	42	11	1444-510-006-00	3	13		126	7
1444-314-004-10	12	11	1444-514-005-10	132	10	1510-417-330-00	126	6
1444-314-008-00	52	24	1444-514-230-00	66	16	1513-102-205-00	3	4
1444-314-009-10	19	8	1444-601-015-00	69	4	1513-102-329-00	1	9
	118	19		69	7	1513-102-332-00	1	12
1444-318-004-00	34	8	1444-604-009-00	70	5	1513-111-009-00	6	19
1444-318-007-00	34	13		71	4		7	19
1444-318-011-00	34	16	1444-621-002-10	89	7	1513-408-217-00	149	18
1444-318-012-00	34	17	1444-621-008-00	98	9	1513-408-223-00	149	34
1444-327-001-00	38	6	1444-621-311-00	150	28	1514-248-002-00	132	8
1444-327-003-00	38	11	1444-621-312-00	150	29	1518-306-203-00	47	25
1444-327-202-10	38	3	1444-621-313-00	150	30		51	4
1444-327-203-00	38	4	1444-621-320-00	150	31		54	21
1444-328-272-00	42	4	1480-604-204-00	73	3	1518-406-006-00	46	13
1444-328-273-00	42	3		73	7	1518-406-008-00	46	8
1444-404-210-10	53	15		73	12	1518-407-240-00	47	24

1674-097-120-00

PART CODE	FIG.	KEY	PART CODE	FIG.	KEY	PART CODE	FIG.	KEY
1518-432-250-00	51	3	1544-219-005-00	32	5	1560-111-360-00	7	30
	54	20	1544-304-006-10	50	28	1560-116-008-30	9	15
1518-621-111-00	109	4	1544-623-001-00	150	33	1560-116-250-50	9	1
1518-621-112-00	109	5	1544-623-232-00	150	34	1560-132-001-10	41	16
1518-621-208-00	150	13	1544-623-233-00	150	35	1560-132-007-30	39	4
1518-621-209-00	150	14	1544-623-234-00	150	36		42	13
1518-621-211-00	150	15	1544-623-235-00	150	37		87	34
1518-621-320-00	94	12	1550-408-321-00	149	23	1560-206-003-00	12	7
1518-621-521-00	97	5	1550-408-324-00	149	21	1560-208-023-00	12	15
1518-621-523-00	97	6	1550-408-325-00	149	20	1560-220-004-10	14	15
1518-621-524-00	97	7	1550-408-326-00	149	22	1560-223-008-50	22	9
1518-621-525-00	97	8	1550-508-001-10	61	15		28	3
1518-621-532-00	97	12	1550-514-290-00	66	23	1560-223-016-00	27	12
1518-621-540-00	97	9	1560-102-002-30	1	21	1560-240-007-40	35	10
1518-730-122-00	105	5	1560-102-202-50	1	2	1560-243-002-30	21	6
1518-745-552-00	104	24	1560-102-203-50	1	3	1560-243-011-40	21	7
1518-786-512-00	110	49	1560-102-204-40	1	4	1560-243-013-40	21	12
1518-903-006-00	68	27	1560-102-205-40	1	6	1560-243-015-40	21	13
	128	33	1560-103-002-40	2	9	1560-243-017-30	21	14
	133	26	1560-103-202-50	2	2	1560-259-001-40	22	6
	134	29	1560-103-240-20	2	15	1560-259-003-40	22	2
	135	39	1560-103-250-10	2	1	1560-259-004-40	22	3
1518-903-007-00	68	28	1560-103-261-00	2	3	1560-259-012-30	22	13
	128	34		116	3	1560-259-017-00	22	1
	133	27	1560-104-003-60	3	7	1560-265-002-10	24	1
	134	30	1560-104-004-40	73	24	1560-265-220-20	24	7
	135	40	1560-104-010-40	3	18	1560-273-003-00	118	10
1518-924-001-00	131	3	1560-104-206-40	3	6	1560-273-007-30	26	5
1524-122-001-00	41	9	1560-104-220-60	3	27	1560-275-013-00	27	15
1524-236-005-00	21	8	1560-105-251-00	4	23	1560-275-022-00	27	3
	21	15	1560-111-001-10	6	26	1560-275-330-10	27	11
1524-244-005-00	118	11		7	23	1560-280-004-40	28	6
1527-604-002-00	8	6	1560-111-002-10	6	27	1560-285-008-40	31	12
	74	18		7	24	1560-287-002-30	32	2
	75	12	1560-111-007-00	6	9	1560-290-006-30	28	4
	85	14		7	11	1560-301-002-00	33	4
	85	29	1560-111-008-00	6	10	1560-301-003-00	33	5
	86	22		7	12	1560-301-004-30	33	6
	103	6	1560-111-009-00	6	12	1560-301-005-40	33	8
	109	10		7	13	1560-301-006-40	33	9
1544-103-004-00	4	8	1560-111-101-00	7	27	1560-303-001-40	34	15
	5	8	1560-111-270-50	6	21	1560-303-002-00	34	11
1544-104-204-00	2	5		7	20	1560-303-003-40	34	14
1544-104-205-00	2	6	1560-111-280-50	6	22	1560-303-005-50	34	2
	116	7		7	21	1560-303-006-40	34	21

PART CODE	FIG.	KEY	PART CODE	FIG.	KEY	PART CODE	FIG.	KEY
1560-303-007-40	34	22	1560-432-210-00	50	7	1560-509-211-00	127	38
1560-303-200-50	34	23	1560-433-001-40	51	9	1560-509-300-00	58	1
1560-304-001-60	35	1	1560-433-002-40	51	17	1560-509-310-00	58	4
1560-304-002-60	35	2	1560-433-212-00	51	7	1560-509-320-10	58	21
1560-304-003-00	35	9	1560-433-222-00	51	14	1560-509-340-00	58	11
1560-307-003-10	37	3	1560-434-001-40	52	1	1560-509-350-00	58	29
1560-310-003-40	38	13	1560-434-002-30	52	2	1560-509-360-00	58	6
1560-310-004-40	38	15	1560-434-003-30	52	8	1560-511-001-00	31	9
1560-310-005-00	38	7	1560-434-004-30	52	10		32	6
1560-310-201-10	38	2	1560-434-005-30	52	18		57	3
1560-310-210-40	38	18	1560-434-006-40	52	19	1560-511-006-50	59	7
1560-310-260-40	38	22	1560-434-007-60	52	38	1560-511-012-00	59	16
1560-310-270-00	38	1	1560-434-008-40	52	39		127	34
1560-314-002-00	41	20	1560-434-011-40	52	41	1560-511-013-00	59	9
1560-314-250-30	41	11	1560-434-012-30	52	42	1560-511-014-00	59	8
1560-314-291-00	29	9	1560-434-013-50	52	45	1560-511-015-00	59	2
	41	19	1560-434-014-30	52	17		127	36
	138	9	1560-434-017-00	52	40	1560-511-101-00	60	5
1560-316-001-50	43	2	1560-434-200-60	52	12		68	20
1560-316-002-40	127	28	1560-434-202-00	52	13		133	20
1560-402-210-30	45	7		52	15		134	22
1560-402-220-30	45	8	1560-434-210-60	52	14	1560-511-260-50	59	5
1560-404-001-00	46	7	1560-434-222-00	52	27	1560-511-290-50	59	1
1560-404-002-30	46	14		52	29	1560-512-230-60	127	35
1560-404-210-10	46	5	1560-501-202-00	54	2	1560-513-001-30	60	8
1560-404-220-40	46	12	1560-501-203-00	54	3	1560-515-004-50	61	31
1560-406-001-00	47	7	1560-501-220-00	54	1	1560-522-002-00	127	3
1560-406-002-00	47	5	1560-501-230-00	54	6	1560-522-003-40	127	4
1560-406-003-00	47	6	1560-501-231-00	54	7	1560-522-004-30	127	13
1560-407-261-30	149	35	1560-505-001-50	55	1	1560-522-007-40	127	12
1560-407-262-30	149	36	1560-505-003-50	55	4	1560-522-008-30	127	16
1560-407-263-40	149	37	1560-505-004-00	55	2	1560-522-009-30	127	17
1560-407-264-40	149	38	1560-507-001-30	56	1	1560-522-230-40	127	5
1560-407-265-40	149	40	1560-507-002-40	56	12	1560-525-002-40	66	25
1560-407-292-40	149	14	1560-507-004-30	56	2	1560-525-003-00	66	9
1560-407-293-40	149	19	1560-507-005-00	56	4	1560-525-200-50	66	1
1560-407-320-10	47	33	1560-507-007-00	56	32	1560-525-210-50	66	2
1560-410-222-30	121	2	1560-507-008-00	56	15	1560-525-220-80	67	1
1560-432-001-70	50	2	1560-509-002-00	58	26	1560-525-230-80	67	2
1560-432-002-30	50	22	1560-509-004-50	58	17	1560-525-240-40	66	14
1560-432-003-30	50	24	1560-509-005-30	58	19	1560-525-250-40	66	15
1560-432-004-00	50	27	1560-509-006-40	58	12	1560-525-260-40	66	6
1560-432-005-00	50	26	1560-509-008-40	58	25	1560-525-280-30	66	13
1560-432-006-00	50	15	1560-509-009-00	58	27	1560-525-290-10	66	21
1560-432-200-40	50	1	1560-509-012-00	58	23	1560-527-001-70	55	9

1674-097-120-00

PART CODE	FIG.	KEY	PART CODE	FIG.	KEY	PART CODE	FIG.	KEY
1560-527-001-70	67	9	1560-630-020-50	86	3	1560-722-103-00	104	33
1560-531-020-00	127	41	1560-630-021-50	85	4	1560-730-103-00	105	28
1560-559-002-00	110	29		86	4	1560-730-500-20	105	1
1560-601-002-20	71	13	1560-630-022-40	86	21	1560-730-520-20	105	2
1560-601-014-30	70	12	1560-630-029-00	63	5	1560-730-540-00	105	25
	71	11		63	6	1560-730-550-00	105	26
1560-601-015-40	90	4		85	34	1560-731-500-00	107	7
1560-601-017-00	70	11		86	27	1560-731-510-00	107	9
	71	10		86	29	1560-731-512-00	107	8
1560-601-260-40	69	24	1560-630-031-00	63	7		107	10
1560-601-330-20	69	22		86	30	1560-731-550-00	106	11
1560-602-001-40	70	6	1560-630-103-00	86	20	1560-732-101-00	107	1
	71	5	1560-630-321-50	74	14	1560-732-102-00	107	2
1560-602-273-60	72	3		75	8	1560-732-103-00	107	3
1560-603-002-80	72	8		136	1	1560-732-104-00	107	4
1560-603-003-00	72	9	1560-654-911-00	147	1	1560-732-105-00	107	5
	95	19	1560-654-912-00	147	2	1560-732-106-00	107	6
	96	19	1560-654-915-00	147	3	1560-743-500-00	108	16
1560-604-005-00	73	23	1560-654-916-00	147	4	1560-744-101-00	108	22
1560-604-009-50	73	18	1560-654-919-00	147	9	1560-744-102-00	108	23
1560-604-017-40	73	33	1560-654-921-00	147	5	1560-903-004-80	112	2
1560-604-018-40	73	34	1560-658-202-00	150	20	1561-111-003-00	6	8
1560-604-022-70	73	29	1560-658-203-50	150	32		7	10
	106	23	1560-658-240-70	150	8	1561-111-320-22	7	1
1560-604-024-10	73	22	1560-658-242-00	150	9	1561-221-500-10	14	8
1560-604-031-00	73	37	1560-658-282-40	150	19	1561-221-502-10	146	1
1560-604-032-00	73	38	1560-658-310-30	150	23	1561-221-503-00	146	2
1560-604-361-50	73	42	1560-664-230-10	94	1	1561-221-504-00	146	3
1560-604-362-50	73	44	1560-664-264-00	95	5	1561-221-505-00	146	4
1560-604-371-50	73	43		96	5	1561-221-506-00	146	12
1560-604-380-30	73	32	1560-666-010-00	95	38	1561-221-507-00	146	13
1560-606-011-00	105	4		96	38	1561-221-508-00	146	14
1560-606-240-40	74	12	1560-666-212-00	95	24	1561-221-509-00	146	10
1560-606-280-10	74	1		96	24	1561-221-511-00	146	8
1560-606-290-10	74	2	1560-695-021-00	30	6	1561-433-006-10	51	1
1560-606-300-00	74	3		87	31	1561-435-001-30	52	51
1560-606-330-00	74	13		87	55	1561-436-003-00	53	1
1560-606-340-10	74	7	1560-695-022-00	87	33	1561-436-004-00	53	2
	75	3	1560-701-530-11	100	11	1561-514-211-40	127	21
1560-608-220-30	76	2	1560-702-101-00	101	5	1561-626-001-00	82	3
1560-626-320-00	82	1	1560-702-102-20	101	6	1561-630-200-20	85	20
1560-626-330-00	82	2	1560-703-500-10	102	1		86	14
1560-630-009-50	85	26	1560-703-510-10	102	2	1561-660-412-00	150	16
1560-630-011-20	85	13	1560-722-101-00	104	31	1563-507-221-10	57	5
1560-630-020-50	85	3	1560-722-102-00	104	32	1563-513-210-30	60	6

PART CODE	FIG.	KEY	PART CODE	FIG.	KEY	PART CODE	FIG.	KEY
1563-513-220-50	60	9	1568-525-300-10	66	22	1581-742-102-00	104	17
1563-513-230-40	60	11	1568-650-004-10	89	4		104	27
1563-514-211-40	127	22		95	8		106	16
1564-116-001-30	9	9		96	8		108	19
1564-263-002-00	23	3	1568-650-005-10	89	5	1581-742-105-00	104	15
1564-275-007-00	31	6		95	9		108	4
1564-275-270-30	31	2		96	9	1581-742-582-00	104	11
1564-515-001-20	61	36	1568-668-203-00	95	42		108	14
1564-630-012-00	85	11		96	42	1581-742-590-00	104	12
1564-743-102-00	104	14	1568-669-101-00	97	44		108	12
1566-669-112-00	109	7	1568-701-001-00	100	4	1581-742-621-00	104	19
1566-669-540-00	97	4	1568-731-103-00	106	10		108	6
1566-669-580-20	97	10		106	21	1584-522-001-00	68	25
1566-669-582-10	97	11		108	17		133	24
1566-669-583-00	97	13	1572-103-250-00	116	2		134	27
1566-705-005-00	103	11	1572-103-260-00	116	4	1588-502-007-00	135	25
1566-705-102-00	103	16	1572-417-001-02	125	1	1593-307-052-10	14	14
1566-721-103-00	104	5	1574-417-220-03	124	2	1593-623-203-00	97	34
	104	30		124	7	1593-623-503-00	97	35
1566-730-101-10	105	6	1575-616-005-00	88	18	1593-623-530-00	97	18
1566-730-102-10	105	7	1575-623-010-00	95	26	1594-105-002-00	5	16
1566-730-103-10	105	8		96	26		117	2
1566-730-104-10	105	9	1575-623-011-00	95	27	1594-105-230-00	5	15
1566-730-105-10	105	12		96	27		117	1
1566-730-106-00	105	17	1576-408-002-00	47	37	1594-221-001-00	21	2
1566-730-107-00	105	19		47	42	1594-240-001-10	19	1
1566-730-108-00	105	22	1581-621-290-00	97	17	1594-240-002-10	20	4
1566-730-113-00	105	21	1581-621-530-00	97	20	1594-240-003-10	20	5
1566-730-540-00	105	11	1581-740-112-00	104	2	1594-243-003-00	21	19
1566-731-106-00	106	22		106	3	1594-262-001-10	23	7
1566-731-107-00	104	3		108	9	1594-265-210-00	24	9
	106	7	1581-740-113-00	104	6	1594-270-001-20	25	1
	108	11		104	10	1594-272-001-00	118	2
1566-731-550-10	106	20		104	18	1594-272-002-00	118	7
1566-732-113-00	107	11		104	29	1594-272-003-00	118	13
1566-733-101-20	107	14		106	5	1594-272-004-00	118	14
1566-733-102-00	107	16		108	2	1594-272-006-00	118	17
1566-733-510-00	107	17	1581-740-114-00	104	7	1594-272-200-00	118	1
1566-733-520-00	107	18		106	4	1594-273-001-30	26	1
1566-733-530-00	107	19		108	10	1594-273-002-10	26	2
1566-733-550-00	107	20	1581-740-552-10	106	12	1594-275-001-10	27	1
1566-743-102-00	108	3	1581-740-553-10	106	13	1594-275-004-00	27	8
1566-743-103-00	104	16	1581-740-556-00	106	17	1594-275-005-00	27	5
	108	5	1581-740-558-00	106	18	1594-281-210-20	29	2
1566-743-520-00	104	23	1581-742-102-00	104	9	1594-285-001-00	30	1

1674-097-120-00

PART CODE	FIG.	KEY	PART CODE	FIG.	KEY	PART CODE	FIG.	KEY
1594-285-002-10	30	3	1594-517-004-00	128	12	1594-625-220-10	80	11
1594-285-003-00	31	4		135	15	1594-625-230-10	79	11
1594-285-004-00	31	8	1594-517-200-20	128	5		80	12
1594-285-200-30	30	9		135	5	1594-625-500-00	79	1
1594-285-220-10	31	1	1594-517-210-20	128	6		80	1
1594-287-200-00	32	1		135	7		81	1
1594-302-001-00	33	2	1594-517-220-00	128	15	1594-625-510-00	79	2
1594-302-200-10	33	1		135	18		80	2
1594-303-001-00	34	4	1594-517-230-10	128	19		81	2
1594-303-002-00	34	5		135	23	1594-626-500-10	84	3
1594-303-003-00	34	6	1594-517-240-10	128	21	1594-626-510-10	84	4
1594-306-001-00	36	3		135	27	1594-626-520-00	84	1
1594-312-001-10	40	13	1594-517-250-10	128	23	1594-626-530-00	84	2
1594-312-003-20	39	6		135	29	1594-630-001-20	85	27
1594-312-004-00	39	7	1594-517-910-00	128	1	1594-630-002-20	85	28
1594-312-005-00	40	17	1594-520-240-00	65	1	1594-630-200-61	85	17
1594-314-200-00	42	6	1594-521-001-10	132	5		86	11
1594-314-210-20	41	17	1594-521-200-20	132	2	1594-630-220-40	85	6
1594-407-201-00	47	2	1594-521-210-20	65	3	1594-630-230-32	85	10
1594-410-200-00	121	1	1594-521-300-00	132	1	1594-654-001-20	91	4
1594-433-001-00	123	8	1594-530-200-20	135	6	1594-654-261-10	91	19
1594-433-002-00	123	9	1594-530-210-20	135	8		92	17
1594-433-003-00	123	10	1594-530-220-00	135	19	1594-658-201-00	150	46
1594-433-210-00	123	1	1594-530-230-10	135	24	1594-658-202-00	150	47
1594-433-220-00	123	2	1594-530-910-00	135	1	1594-658-240-00	150	40
1594-433-230-00	51	6	1594-604-001-00	73	2	1594-658-242-00	150	41
1594-433-240-10	51	13	1594-604-002-00	73	11	1594-658-243-00	150	42
1594-434-001-00	52	9	1594-604-220-20	73	1	1594-658-244-00	150	43
1594-434-200-00	52	26	1594-604-230-20	73	10	1594-658-245-00	150	44
1594-434-210-00	52	28	1594-604-260-10	73	26	1594-658-247-00	150	45
1594-511-001-10	60	2	1594-604-270-10	73	27	1594-664-001-20	94	14
1594-511-200-20	60	1	1594-608-001-21	76	1	1594-669-530-00	97	16
1594-512-001-10	127	26	1594-608-002-21	76	3	1594-669-550-00	97	2
1594-512-002-00	127	15	1594-609-001-00	76	7	1594-682-500-10	99	1
1594-512-004-00	127	7	1594-609-200-00	76	6	1594-682-510-10	99	2
1594-512-200-00	127	25	1594-611-200-20	77	1	1594-701-500-01	100	1
1594-512-210-10	127	2	1594-625-001-00	80	10	1594-701-510-01	100	2
1594-512-230-00	127	37		82	8	1594-701-520-01	100	5
1594-512-910-00	127	1		83	12	1594-701-530-01	100	21
1594-517-001-20	128	30		140	12	1594-701-540-01	100	22
	135	36	1594-625-002-00	43	8	1594-705-101-00	103	7
1594-517-002-00	128	27		80	13	1594-705-108-00	103	13
	135	32		83	22	1594-705-500-01	103	1
1594-517-003-00	128	11		140	29	1594-705-520-00	103	3
	135	14	1594-625-220-10	79	10	1594-705-530-00	103	5

PART CODE	FIG.	KEY	PART CODE	FIG.	KEY	PART CODE	FIG.	KEY
1594-705-540-00	103	9	1596-664-213-00	96	4	1599-780-620-00	110	47
1594-715-002-00	83	19	1596-669-104-00	97	39	1599-780-650-10	110	31
	140	19	1596-669-105-00	97	40	1600-502-003-00	29	3
1594-715-270-00	83	17	1596-669-106-00	97	37	1600-505-007-00	9	2
	140	17	1596-669-107-00	97	42		59	12
1594-715-280-00	83	18		110	28		127	30
	140	18	1596-669-108-00	97	41	1600-515-210-10	67	3
1594-721-101-00	104	1	1596-669-510-00	97	1	1600-515-230-10	67	4
1594-721-102-00	104	26	1596-669-530-00	97	3	1600-515-240-00	67	5
1594-731-101-00	106	1	1596-669-571-00	97	30	1600-619-001-10	78	1
1594-731-102-00	106	2	1596-669-580-00	97	33	1600-622-321-00	91	26
1594-743-101-00	108	1	1596-669-590-10	97	36		92	24
1594-752-101-00	108	24	1596-705-103-00	103	12	1600-623-002-00	94	6
1594-770-500-20	109	1	1596-705-104-00	103	14	1600-623-200-00	150	38
1594-780-600-00	110	1	1596-705-106-00	103	15	1600-623-210-00	150	39
1594-904-001-10	112	3	1596-760-500-10	141	1	1600-624-001-00	94	4
1595-103-200-00	116	1	1596-770-101-20	109	2	1600-624-004-00	95	41
1595-262-002-10	23	8	1596-770-102-30	109	6		96	41
1595-275-200-10	27	13	1596-780-101-00	110	3	1600-624-201-00	137	3
1595-281-200-20	29	1	1596-780-501-00	110	22	1600-624-271-00	95	28
1595-285-200-00	31	10	1596-780-502-00	110	23		96	28
1595-288-001-20	32	7	1596-780-503-00	110	18	1600-902-023-00	114	8
1595-320-210-20	119	1		110	24	1608-207-014-00	87	63
1595-320-220-20	119	11	1596-780-504-00	110	25	1610-731-200-00	106	8
1595-517-001-20	128	31	1596-780-512-00	110	27	1611-431-001-00	49	1
	135	38	1596-780-520-00	110	7	1611-604-001-00	73	9
1595-517-002-00	128	28	1596-780-530-00	110	21	1612-531-003-00	68	23
	135	33	1596-780-550-00	110	26	1612-608-003-00	74	20
1595-520-230-00	130	1	1596-780-561-00	110	8	1614-117-001-00	88	2
1595-702-500-01	101	1	1596-780-562-00	110	9	1614-203-015-00	12	13
1596-240-200-00	20	1	1596-780-563-00	110	10	1614-222-007-00	50	4
1596-312-003-00	39	5	1596-780-564-00	110	11	1614-407-260-00	47	26
1596-625-001-00	79	5	1596-780-565-00	110	12	1614-432-001-00	50	13
	80	5	1596-780-566-00	110	13	1614-501-003-10	68	2
	81	5	1596-780-567-00	110	14		133	31
	82	5	1596-780-568-00	110	15		134	35
	83	9	1596-780-569-00	110	16	1614-606-003-00	76	5
	84	5	1596-780-581-00	110	17	1614-702-053-00	139	7
1596-625-002-00	81	10	1596-780-582-00	110	19		140	36
	84	10	1596-780-583-00	110	20	1614-702-540-00	139	11
1596-625-003-00	79	9	1597-218-001-00	25	2		140	40
	80	9	1597-501-001-10	54	19	1614-702-550-00	139	2
	81	9	1599-780-109-00	110	32		140	31
	84	9	1599-780-111-00	109	17	1614-702-551-00	139	5
1596-664-213-00	95	4	1599-780-113-00	109	18		140	34

1674-097-120-00

PART CODE	FIG.	KEY	PART CODE	FIG.	KEY	PART CODE	FIG.	KEY
1614-702-552-00	139	6	1640-530-001-10	133	3	1640-530-624-00	148	10
	140	35		134	3	1640-530-625-00	148	12
1614-702-560-00	139	3	1640-530-003-00	68	13	1640-530-626-00	148	13
	140	32		133	13	1640-530-628-00	148	18
1617-102-007-00	47	20		134	13	1640-530-629-00	148	19
1617-112-213-00	89	2	1640-530-007-00	68	29	1640-530-631-00	148	22
1620-507-460-00	68	24		133	28	1640-530-632-00	148	23
	133	23		134	31	1640-601-016-00	69	2
	134	26	1640-530-008-00	68	30	1640-626-001-00	66	31
1620-514-005-00	66	26		133	29		83	15
1632-273-200-00	26	7		134	32		83	21
1634-650-200-00	89	3	1640-530-009-00	68	14		140	15
1636-501-231-00	43	10		134	14		140	22
1636-901-022-00	113	4	1640-530-200-00	133	1		140	28
1640-111-001-00	6	20	1640-530-230-00	68	15	1640-626-200-10	83	1
1640-111-200-00	6	17		133	16		140	2
1640-111-202-00	6	18		134	17	1640-626-210-10	83	3
1640-111-210-00	6	1	1640-530-240-10	68	19		140	4
1640-272-001-00	118	22		133	19	1640-626-220-10	83	4
1640-272-200-00	118	21		134	21		140	5
1640-290-003-00	138	6	1640-530-260-00	68	9	1640-626-230-10	83	2
1640-290-210-10	138	8		133	10		140	3
1640-290-230-10	138	5		134	10	1640-654-260-00	137	1
1640-320-211-03	119	3	1640-530-270-10	68	11	1640-658-322-00	150	2
	119	13		133	12	1640-658-324-00	150	4
1640-320-220-02	119	2		134	12	1640-658-325-00	150	5
	119	12	1640-530-280-00	68	31	1640-658-520-10	150	1
1640-410-200-20	73	50		133	30	1640-666-520-10	95	37
1640-410-210-00	73	51		134	33		96	37
1640-437-210-00	124	1	1640-530-300-10	134	1	1640-666-530-00	138	1
1640-437-211-00	124	3	1640-530-330-00	68	16	1640-666-540-00	138	2
	124	8		134	18	1640-674-001-00	98	7
1640-437-212-00	124	4	1640-530-340-00	68	21	1640-674-200-00	98	1
	124	9		134	23	1640-674-202-00	98	2
1640-437-220-00	124	6	1640-530-350-00	68	32	1640-674-203-00	98	3
1640-520-001-00	129	7		134	34	1640-674-204-00	98	4
1640-520-002-00	131	1	1640-530-600-10	68	1	1640-674-205-00	98	5
1640-520-003-00	131	5		133	2	1640-674-206-00	98	6
1640-520-004-00	129	10		134	2	1640-702-200-01	139	1
	131	6	1640-530-610-10	148	1		140	30
1640-520-005-00	129	8	1640-530-613-00	148	2	1640-702-210-00	139	15
1640-520-210-20	129	2	1640-530-614-00	148	3		140	44
1640-520-400-10	129	1	1640-530-615-00	148	4	1640-702-220-00	139	16
1640-525-001-00	66	28	1640-530-622-00	148	8		140	45
1640-530-001-10	68	3	1640-530-623-00	148	9	1640-902-005-00	112	8

PART CODE	FIG.	KEY	PART CODE	FIG.	KEY	PART CODE	FIG.	KEY
1640-902-006-00	112	9	1641-233-051-00	18	1	1641-606-520-00	74	6
1640-903-045-10	114	2	1641-243-051-00	21	1		75	2
	140	49	1641-243-052-00	21	4	1641-630-001-00	85	9
1640-903-046-00	114	3	1641-243-053-00	21	10	1641-630-051-00	85	23
	140	50	1641-243-054-00	21	16	1641-630-300-00	85	7
1640-903-047-00	114	4	1641-243-055-00	21	20	1641-640-240-00	87	37
	140	51	1641-262-051-00	23	1	1641-642-001-00	88	15
1640-903-048-00	114	5	1641-281-051-00	29	5	1641-666-210-00	95	45
	140	52	1641-281-520-10	29	8		96	45
1640-903-067-00	114	9	1641-310-510-00	38	21	1641-902-051-00	112	4
1641-102-500-00	1	18	1641-314-051-00	41	6	1642-103-001-00	2	8
1641-104-510-10	3	25	1641-314-500-00	41	1	1642-104-003-00	73	5
1641-111-051-00	6	3	1641-314-520-00	41	7		73	14
	7	5	1641-316-540-10	43	4	1642-105-004-00	4	9
1641-111-052-00	6	4	1641-316-550-10	43	5		5	9
	7	6	1641-404-500-00	46	1	1642-105-300-00	4	7
1641-111-053-00	6	6	1641-515-032-00	61	40		5	7
	7	8	1641-515-051-00	61	10	1642-306-001-00	36	1
1641-111-054-00	6	7	1641-515-340-10	61	17	1642-306-002-00	36	2
	7	9	1641-515-390-00	61	7	1642-307-001-10	37	2
1641-111-510-00	6	5	1641-515-391-00	61	8	1642-307-002-20	37	1
	7	7	1641-515-510-00	61	1	1643-515-203-00	61	9
1641-112-002-00	8	11	1641-515-520-00	61	12	1646-116-051-00	9	8
1641-112-056-10	8	4	1641-515-530-00	61	38	1646-221-054-10	14	7
1641-112-510-00	8	1	1641-515-550-00	61	59	1646-226-053-00	15	6
1641-201-051-10	10	1	1641-516-031-00	62	7		87	29
1641-207-051-00	11	1	1641-516-051-00	62	24	1646-226-512-00	15	2
1641-207-052-00	11	4	1641-516-520-00	62	11	1646-232-510-00	10	10
1641-209-051-00	12	1	1641-516-530-00	62	22	1646-407-550-00	64	23
1641-209-052-00	12	3	1641-516-540-00	62	27	1646-407-560-00	64	12
1641-209-053-00	12	4	1641-516-550-00	62	31	1646-516-690-00	64	30
1641-209-054-00	12	5	1641-516-560-00	62	32	1646-516-692-00	64	31
1641-209-055-00	12	8	1641-517-051-00	64	5	1646-516-710-00	64	35
1641-209-056-00	12	9	1641-517-053-00	64	32	1646-640-001-00	87	49
1641-217-051-00	13	1	1641-517-057-00	64	4	1646-640-002-00	87	30
1641-221-051-10	14	1		64	26	1646-640-003-00	87	54
1641-221-052-10	14	4	1641-517-510-00	64	3	1646-640-004-10	87	4
1641-221-053-00	14	6	1641-517-520-20	64	9	1646-640-006-00	87	12
1641-221-054-10	14	9	1641-517-530-00	64	14	1646-640-008-10	87	40
1641-221-055-00	14	10	1641-517-540-00	64	22	1646-640-009-10	87	42
1641-226-052-10	15	5	1641-517-550-10	64	25	1646-640-012-10	87	22
1641-226-500-00	15	1	1641-517-560-00	64	27	1646-640-210-20	87	1
1641-230-051-00	16	1	1641-517-580-10	64	37	1646-640-220-10	87	6
1641-232-051-00	17	1	1641-517-590-00	64	39	1646-640-221-00	87	7
1641-232-510-00	17	6	1641-517-620-00	64	16	1646-640-270-10	87	26

1674-097-120-00

PART CODE	FIG.	KEY	PART CODE	FIG.	KEY	PART CODE	FIG.	KEY
1646-640-330-00	87	51	1650-650-222-00	95	2	1673-116-210-20	9	11
1646-640-580-00	87	39		96	2	1673-280-001-00	28	8
1646-642-001-00	88	5		97	26	1673-314-001-00	41	15
1646-642-210-00	88	8	1650-650-223-10	95	3	1673-314-220-10	41	3
1646-642-220-10	88	1		96	3	1673-402-201-00	45	1
1646-901-061-00	111	1		97	27	1673-402-202-00	45	2
1646-902-054-00	112	1	1650-650-243-00	95	16	1673-407-200-10	47	30
1650-102-006-00	3	11		96	16	1673-407-210-10	47	34
1650-102-219-00	95	18	1650-650-246-00	95	25	1673-407-220-10	47	39
	96	18		96	25	1673-407-230-10	47	21
	97	28	1650-652-212-00	150	6	1673-407-270-00	149	29
1650-111-006-00	1	23	1650-652-218-00	150	12	1673-407-550-00	47	1
1650-111-220-00	1	1	1650-652-252-10	95	17	1673-407-560-00	149	1
1650-201-001-10	10	13		96	17	1673-407-570-00	149	4
1650-203-214-00	146	5	1650-652-254-00	95	43	1673-407-580-00	149	12
1650-203-217-00	146	11		96	43	1673-431-001-10	49	3
1650-203-218-00	146	7	1650-652-561-00	150	7	1673-432-001-00	50	20
1650-203-219-00	146	6	1650-652-715-00	150	11	1673-509-001-00	58	31
1650-203-222-00	146	9	1650-780-011-00	110	45	1673-509-200-10	58	15
1650-209-005-00	14	13	1652-652-260-00	94	10	1673-512-002-00	59	15
1650-304-001-00	34	1	1652-654-212-00	95	46	1673-515-002-00	61	55
1650-304-007-00	34	12		96	46	1673-515-240-10	61	32
1650-304-008-00	34	9	1656-253-004-00	10	16	1673-525-002-10	66	27
1650-306-200-00	37	4	1656-401-220-00	44	1		66	29
1650-431-200-00	49	4	1656-401-222-00	44	2		122	6
1650-501-002-10	55	7	1656-509-310-10	62	15		129	9
1650-501-006-00	61	41	1659-650-200-00	89	1		130	5
1650-501-008-00	56	7	1672-601-002-00	70	7		131	7
1650-508-002-00	62	4		71	6		139	4
1650-508-320-00	61	44	1672-601-210-00	70	8		140	33
1650-509-003-10	62	12		71	7	1673-601-002-00	69	3
	97	31	1673-102-001-10	1	24	1673-601-003-00	69	11
1650-509-004-00	62	19	1673-102-004-10	1	22	1673-601-005-00	69	1
1650-509-012-00	64	7	1673-102-005-00	1	13	1673-601-210-00	69	9
	64	10	1673-104-001-00	3	12	1673-601-220-10	69	18
	64	28	1673-104-002-10	3	14	1673-601-230-10	69	20
1650-509-300-00	62	34	1673-104-004-00	3	8	1673-601-260-00	69	13
	64	1	1673-104-009-00	3	22	1673-601-270-00	69	14
1650-509-310-00	64	20	1673-104-010-10	3	23	1673-601-300-40	70	1
	64	40	1673-104-300-10	3	1	1673-604-220-10	73	39
1650-601-009-00	8	8	1673-104-302-00	3	2	1673-604-280-00	73	19
1650-601-270-20	4	32	1673-105-500-00	5	23	1673-630-200-50	85	1
	5	29	1673-112-003-10	8	5		86	1
1650-650-017-00	70	3	1673-112-004-00	73	20	1673-658-212-00	150	10
	71	2	1673-112-006-00	8	10	1673-658-214-00	150	3

PART CODE	FIG.	KEY	PART CODE	FIG.	KEY	PART CODE	FIG.	KEY
1673-658-400-10	93	5	1674-601-001-10	70	2	1674-654-211-00	91	7
1673-666-250-00	95	7	1674-601-310-00	71	1		91	10
1673-666-252-00	95	10	1674-602-200-00	72	1		92	2
1673-780-011-00	8	9	1674-602-210-00	72	6		92	5
1673-782-016-00	62	8	1674-604-200-10	73	40		92	8
1674-103-001-00	2	11	1674-604-211-00	73	6	1674-654-212-00	91	3
1674-103-002-00	2	12		73	15		91	8
1674-104-001-00	3	30	1674-606-001-00	91	12		91	11
1674-104-002-00	3	31		92	10		92	3
1674-104-003-10	3	32	1674-606-002-00	91	13		92	6
1674-105-001-00	4	1		92	11		92	9
	5	1	1674-606-200-10	74	5	1674-654-240-00	91	6
1674-105-002-10	4	30		75	1		92	4
	5	33	1674-606-210-10	74	9	1674-654-260-00	91	9
1674-105-003-00	5	27		75	5		92	7
	117	3	1674-606-220-30	91	14	1674-654-270-00	91	20
1674-105-220-00	4	16		92	12		92	18
1674-105-240-00	4	15	1674-606-330-10	91	15	1674-654-271-00	91	21
	5	17		92	13		92	19
1674-105-250-10	4	28	1674-606-520-00	74	10	1674-654-272-00	91	22
	5	31		75	6		92	20
1674-105-260-00	4	34	1674-619-300-10	78	3	1674-658-001-10	93	2
	5	35		99	4	1674-658-220-00	93	1
1674-116-200-10	9	14	1674-619-310-00	99	5	1674-664-200-00	94	8
1674-310-300-00	38	10	1674-630-002-00	86	31	1674-666-200-10	95	1
1674-312-300-00	40	1	1674-630-004-00	85	2		96	1
1674-312-330-00	40	3		86	2	1674-666-210-40	95	23
1674-312-350-00	40	11	1674-630-051-00	85	24		96	23
1674-312-360-00	40	12	1674-630-053-00	85	16	1674-666-212-00	95	29
1674-312-370-00	39	1		86	10		96	29
1674-312-380-00	39	2	1674-630-055-00	86	17	1674-666-270-10	96	7
1674-312-390-00	40	7	1674-630-056-00	86	18	1674-666-271-00	96	10
1674-314-031-00	42	9	1674-630-510-00	85	15	1674-666-290-00	95	15
1674-316-210-10	43	1		86	8		96	15
1674-316-220-10	43	3	1674-640-001-00	87	18	1674-669-002-00	97	14
1674-316-230-00	43	9	1674-640-200-00	87	46	1674-669-200-00	97	25
1674-401-051-00	44	6	1674-640-220-00	87	60	1674-682-001-10	99	6
1674-401-052-00	44	7	1674-640-230-00	87	61	1674-702-200-10	140	1
1674-402-001-00	45	3	1674-652-200-00	90	1	1674-770-001-00	109	12
1674-410-200-30	48	1	1674-652-202-00	90	2	1674-780-001-00	110	35
1674-410-300-00	122	1	1674-652-210-00	90	5	1674-780-003-00	110	39
1674-410-301-00	122	7	1674-652-220-00	90	7	1674-780-004-00	110	40
1674-410-320-00	122	5	1674-654-200-00	91	1	1674-780-005-00	110	41
1674-515-031-00	61	53		92	1	1674-780-006-00	110	42
1674-515-510-10	61	50	1674-654-211-00	91	2	1674-780-007-00	110	44

1674-097-120-00

PART CODE	FIG.	KEY	PART CODE	FIG.	KEY	PART CODE	FIG.	KEY
1674-780-008-00	110	48	1705-904-002-00	113	5	3737-211-007-00	10	12
1674-780-009-00	110	38	1711-314-002-00	42	10	4101-102-038-00	74	22
1674-780-011-00	110	36	2120-409-004-00	40	14	4322-131-006-10	87	17
1674-901-007-00	111	2	2130-601-018-00	68	18	4334-311-216-00	73	21
1674-901-008-00	111	3		128	29	6209-500-005-00	87	57
1674-902-005-00	112	7		133	18	6222-147-001-00	4	6
	113	9		134	20		5	6
1674-902-006-00	112	5		135	34	6281-420-001-00	93	3
1674-902-051-00	112	6	2130-931-210-00	115	4	7932-201-002-00	25	3
1674-904-001-00	113	11	2144-117-002-00	105	24	7963-201-003-00	52	5
1674-904-002-00	113	10	2144-519-007-00	68	17		123	3
1674-904-003-00	113	3		133	17	7963-611-003-00	66	19
1674-904-004-00	113	14		134	19	7963-613-005-00	67	7
1674-904-005-00	113	16	2146-123-002-00	87	15	8595-901-006-00	113	2
1674-904-006-00	113	6	2161-506-252-00	29	11	8595-901-007-00	113	7
1674-904-007-00	113	12		138	4	8654-203-201-00	87	47
1675-102-003-00	8	7	2161-506-260-00	29	10	8654-901-002-00	113	15
1675-116-001-00	9	18		138	3			
1682-111-300-00	7	18	2500-901-027-00	114	1			
1682-690-380-00	115	9	3207-102-103-00	87	41			
	137	4	3506-301-311-00	147	7			
1683-902-004-00	112	10	3560-203-004-00	41	4			
1689-271-006-00	87	9	3560-503-302-00	73	48			
1690-401-210-00	45	9	3600-463-006-10	139	12			
1690-407-352-00	149	30		140	41			
1690-407-353-00	149	31	3610-440-018-00	9	3			
1690-407-511-00	149	33		88	10			
1690-407-512-00	149	42	3614-725-006-00	128	16			
1690-407-550-00	149	24		135	20			
1690-601-056-00	85	25	3621-211-003-00	32	3			
	86	19	3646-102-011-10	31	3			
1690-658-370-00	95	30		31	11			
	96	30		46	2			
1696-401-003-00	45	5	3650-270-214-00	150	18			
	47	8	3652-273-240-00	97	23			
1696-901-006-00	111	5	3652-273-241-00	97	24			
1701-508-320-00	62	9	3664-540-001-00	40	4			
1701-509-320-10	62	2	3670-703-008-00	41	18			
1703-105-210-00	1	19	3676-274-001-00	95	36			
1704-116-003-10	88	11		96	36			
1704-116-005-00	88	9	3678-332-001-00	4	3			
1704-519-001-00	63	1		5	3			
1705-902-006-00	113	1	3689-902-019-00	69	6			
1705-902-007-00	113	8	3737-172-009-00	3	9			
1705-904-001-00	113	13		61	20			