Directions for use of Parts Catalogue

1. Applicable model of machines

All component and option parts used for TK529/TK533 tractors are listed in this parts catalogue.

1) MODEL TYPE

F : 4WD

U : POWER STEERING

K : SUPER FULL TURN

WX : ELC. VALVE

Z : PTO REVERSE

P : SAFETY FRAME

2) AREA CODE

E15·····FOR TAIWAN

2. Explanation for head paragraph

KEY	PART CODE	DESCRIPTION	QTY	TYPE OF MODEL						ITC	COL	GRP	REMARKS
				TF15	TF17	TF19							
126	1614-508-200-00	FILTER(SUCTION) ASSY	1		*						4E		
127	V721-103-103-50	O-RING	1		*								
128	1614-508-260-00	FILTER(SUCTION) ASSY	1		*	981- -1799							
129	1614-508-262-00	FILTER(LH)	1	*	*	*							FIG. 164
		ASSY	1	*	*	*					4E	A	
			1	*	*	*							
					*	1- -1999				3			
						*							
										1	4E	A	

① ② ③ ④ ⑤ ⑥ ⑦ ⑧ ⑨ ⑩

① KEY shows the location of parts diagramed in the illustration.

② Parts numbers begin with `V´ and `W´ are standard parts of the market.

③ `LH´ and `RH´ on the parts name are described against the moving direction of the machine or are described on the condition how to install parts on the machines.

④ QTY shows the number of parts to be used for one unit of machine.

`M´ is indicated for parts supplied by a meter long.

`ℓ´ is indicated for parts supplied by liter.

`AR´ is indicated for parts need to be adjusted or regulated.

⑤ The following symbol classifies parts to be used for machines.

`*´ means standard parts.

`T´ shows that the parts can be installed as optional parts.

`R´ shows that the parts can be used as applicable parts to replace originally equipped parts.

⑥ Serial number : upper row shows the serial number for the first product and lower row for the last product.

Example : Serial no. 1 through to serial no. 1999.

⑦ ITC : Interchangeability

`1´…OLD ← NEW

New parts can be used in place of the old parts.

`2´…OLD → NEW

Old parts can be used in place of the new parts.

`3´…OLD →← NEW

Old parts and new parts can not be replaced each other.

⑧ COL : Color code

Color is signified with color code number for colored parts.

Please see the color list shown in the next page.

⑨ GRP : Parts shown in this column can be replaced by SET parts.

Exsample : Parts marked Ⓐ can be replaced by parts marked Ⓑ, and Ⓓ for Ⓒ, so the rest follow in the same alphabetical order.

⑩ Remarks

* Other maker's part code number is shown in this column.

* When Fig. No. is shown in the Remark column of SET parts or ASSY parts, each of their component parts are listed in said Fig. No.

3. Color :

The following colors are used for color parts.

COLOR CODE	COLOR	SPRAY TYPE CODE NUMBER	PAINTS 4K DRUM	PAINTS 16K DRUM
4 G	CRYSTAL BLUE	1300-957-001-10	1300-957-003-00	1300-957-004-00
5 I	SUNSET GRAY	1300-959-001-10	1300-959-003-00	1300-959-004-00
5 K	FRENCH BLACK	1300-971-001-10	1300-971-003-00	1300-971-004-00
7 F	MIRROR BLACK	1300-954-001-10	1300-954-003-00	1300-954-004-00
8 E	SILVER MIST	1300-968-001-10	————	————
8 F	BRILLIANT BROWN METALLIC	1300-972-001-10	————	————

NOTE : Color code is signified only for the parts assigned by the maker as color parts.

4. Serial Numbers :

1) For engines serial number is stamped on CYLINDER BODY ASSY.
   Please see Fig. No. 5 – 1.
2) For chassies serial number is shown on the LABEL.
   Please see

5. Parts Order

1) Parts numbers listed in the parts catalogue are all registered in "ISEKI on-line computer".
2) When you order parts, please make sure of correct numbers.
3) When substitute parts is available, the part number ordered will be automatically turned to a new part number.
4) Please be sure to use "ISEKI GENUINE PARTS".

Any other similar parts other than ISEKI parts when used may cause a trouble that makes us unable to repair or guarantee the warrant.

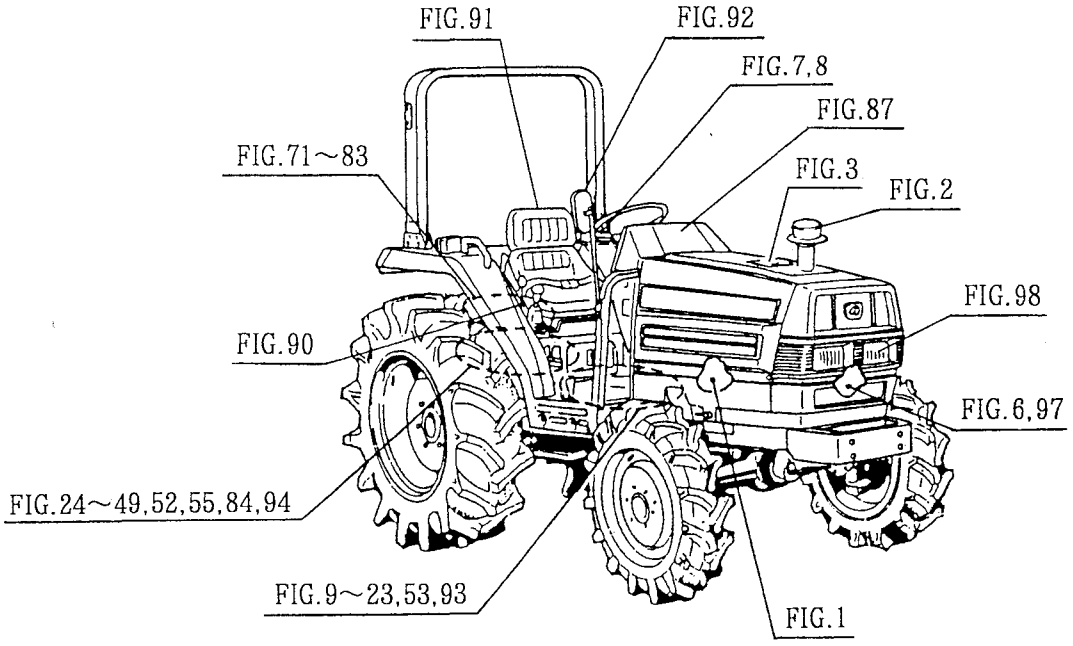
FIG.91
FIG.92
FIG.7,8
FIG.87
FIG.71～83
FIG.3
FIG.2
FIG.98
FIG.90
FIG.6,97
FIG.24～49,52,55,84,94
FIG.9～23,53,93
FIG.1

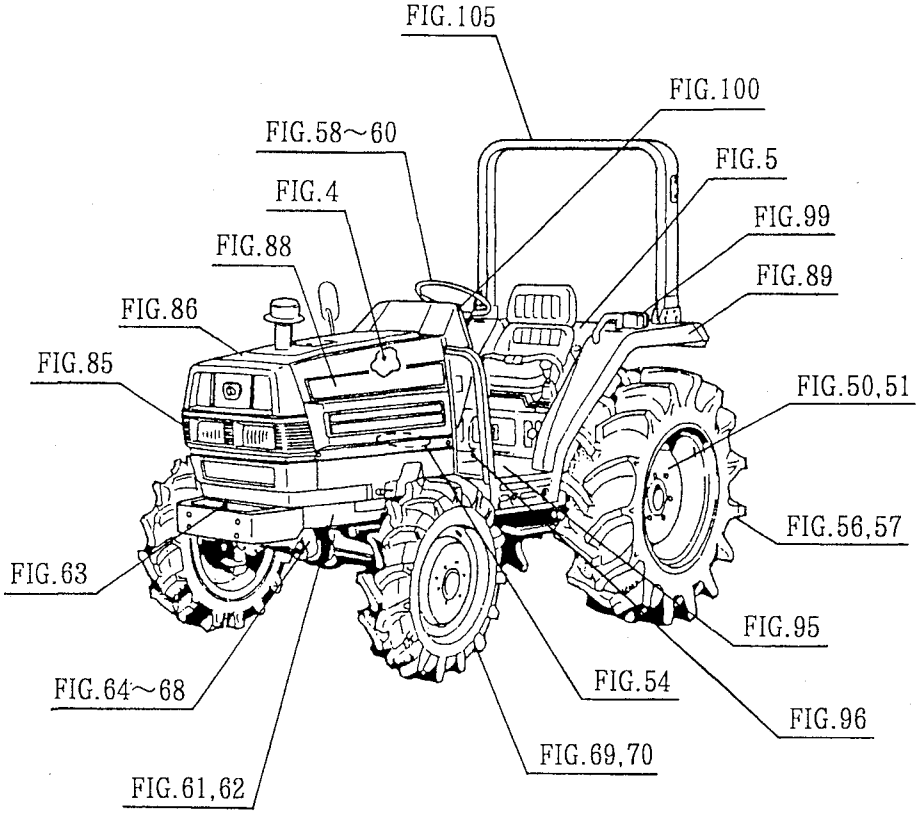
FIG.105
FIG.100
FIG.58～60
FIG.5
FIG.4
FIG.99
FIG.88
FIG.89
FIG.86
FIG.85
FIG.50,51
FIG.56,57
FIG.63
FIG.95
FIG.54
FIG.64～68
FIG.96
FIG.69,70
FIG.61,62

CONTENTS

TK529

ENGINE (E3CD-B06)

CYLINDER HEAD ..... Fig. 1

CYLINDER HEAD COVER ..... Fig. 2

INLET MANIFOLD ..... Fig. 3

EXHAUST MANIFOLD ..... Fig. 4

CYLINDER BLOCK ..... Fig. 5

BEARING/UNDER SIZE (OPTION) ..... Fig. 6

OIL PAN ..... Fig. 7

REAR PLATE ..... Fig. 8

TIMING GEAR CASE ..... Fig. 9

HANGER ..... Fig. 10

VALVE ..... Fig. 11

CAM SHAFT ..... Fig. 12

PISTON ..... Fig. 13

PISTON/OVER SIZE (OPTION) ..... Fig. 14

CRANK SHAFT ..... Fig. 15

OIL PUMP ..... Fig. 16

WATER PUMP ..... Fig. 17

COOLING FAN ..... Fig. 18

INJECTION NOZZLE ..... Fig. 19

INJECTION PUMP ..... Fig. 20

FUEL PIPE ..... Fig. 21

ELECTRIC (1) ..... Fig. 22

ELECTRIC (2) ..... Fig. 23

6215 - 300 - 031 - 00 ..... Fig. 24

6215 - 600 - 104 - 10 ..... Fig. 25

6281 - 100 - 007 - 10 ..... Fig. 26

6281 - 200 - 008 - 10 ..... Fig. 27

CONTENTS

TK533

ENGINE (E3CD-B05)

CYLINDER HEAD ..... Fig. 1

CYLINDER HEAD COVER ..... Fig. 2

INLET MANIFOLD ..... Fig. 3

EXHAUST MANIFOLD ..... Fig. 4

CYLINDER BLOCK ..... Fig. 5

BEARING/UNDER SIZE (OPTION) ..... Fig. 6

OIL PAN ..... Fig. 7

REAR PLATE ..... Fig. 8

TIMING GEAR CASE ..... Fig. 9

HANGER ..... Fig. 10

VALVE ..... Fig. 11

CAM SHAFT ..... Fig. 12

PISTON ..... Fig. 13

PISTON/OVER SIZE (OPTION) ..... Fig. 14

CRANK SHAFT ..... Fig. 15

OIL PUMP ..... Fig. 16

WATER PUMP ..... Fig. 17

COOLING FAN ..... Fig. 18

INJECTION NOZZLE ..... Fig. 19

INJECTION PUMP ..... Fig. 20

FUEL PIPE ..... Fig. 21

ELECTRIC (1) ..... Fig. 22

ELECTRIC (2) ..... Fig. 23

6215 - 300 - 031 - 00 ..... Fig. 24

6215 - 600 - 104 - 10 ..... Fig. 25

6281 - 100 - 007 - 10 ..... Fig. 26

6281 - 200 - 008 - 10 ..... Fig. 27

CONTENTS

CHASSIS

FUEL HOSE SYSTEM ····· Fig. 1
AIR CLEANER SYSTEM ····· Fig. 2
RADIATOR SYSTEM ····· Fig. 3
MUFFLER SYSTEM ····· Fig. 4
FUEL TANK SYSTEM ····· Fig. 5
BATTERY BASE SYSTEM ····· Fig. 6
ACCELERATOR SYSTEM (TK533) ····· Fig. 7
ACCELERATOR SYSTEM (TK529) ····· Fig. 8
MAIN CLUTCH SYSTEM ····· Fig. 9
CLUTCH SHAFT SYSTEM ····· Fig. 10
CLUTCH PEDAL SYSTEM ····· Fig. 11
FRONT MISSION CASE SYSTEM (TK529) ····· Fig. 12
FRONT MISSION CASE SYSTEM (TK533) ····· Fig. 13
INPUT GEAR SYSTEM ····· Fig. 14
CHANGE GEAR SYSTEM ····· Fig. 15
COUNTER GEAR SYSTEM ····· Fig. 16
REVERSE CHANGE GEAR SYSTEM (TK529) ····· Fig. 17
REVERSE CHANGE GEAR SYSTEM (TK533) ····· Fig. 18
PTO CHANGE SYSTEM ····· Fig. 19
PTO DRIVE SHAFT SYSTEM (TK529) ····· Fig. 20
PTO DRIVE SHAFT SYSTEM (TK533) ····· Fig. 21
MAIN CHANGE SYSTEM ····· Fig. 22
REVERSE CHANGE SYSTEM ····· Fig. 23
SPACER MISSION CASE SYSTEM ····· Fig. 24
REVERSE METAL SYSTEM ····· Fig. 25
REAR MISSION CASE SYSTEM ····· Fig. 26
SUB CHANGE GEAR SYSTEM ····· Fig. 27
SUB CHANGE SYSTEM ····· Fig. 28
4WD DRIVE GEAR SYSTEM ····· Fig. 29
FULL TURN CLUTCH SYSTEM ····· Fig. 30

4WD CHANGE SYSTEM ····· Fig. 31
PTO COUNTER SYSTEM ····· Fig. 32
PTO CHANGE GEAR SYSTEM ····· Fig. 33
PTO CHANGE SYSTEM (A) ····· Fig. 34
PTO CHANGE SYSTEM (B) (TK529) ····· Fig. 35
PTO CHANGE SYSTEM (B) (TK533) ····· Fig. 36
SUB CHANGE SYSTEM ····· Fig. 37
SUB LEVER,REVERSE LEVER SYSTEM ····· Fig. 38
REVERSE CABLE SYSTEM ····· Fig. 39
PTO LEVER SYSTEM (TK529) ····· Fig. 40
PTO LEVER SYSTEM (TK533) ····· Fig. 41
PTO ROD SYSTEM ····· Fig. 42
4WD LEVER SYSTEM ····· Fig. 43
4WD ROD SYSTEM ····· Fig. 44
MAIN CHANGE SYSTEM ····· Fig. 45
DRIVE PINION SYSTEM ····· Fig. 46
DIFFERENTIAL GEAR SYSTEM ····· Fig. 47
REAR AXLE HOUSING SYSTEM ····· Fig. 48
WHEEL PINION SYSTEM ····· Fig. 49
WHEEL SHAFT SYSTEM (TK529) ····· Fig. 50
WHEEL SHAFT SYSTEM (TK533) ····· Fig. 51
BRAKE SYSTEM ····· Fig. 52
BRAKE ROD SYSTEM ····· Fig. 53
BRAKE PEDAL SYSTEM ····· Fig. 54
DIFF - LOCK SYSTEM ····· Fig. 55
REAR WHEEL SYSTEM (TK529) ····· Fig. 56
REAR WHEEL SYSTEM (TK533) ····· Fig. 57
STEERING WHEEL SYSTEM ····· Fig. 58
STEERING SHAFT SYSTEM ····· Fig. 59
COLUMN SYSTEM ····· Fig. 60
POWER STEERING SYSTEM ····· Fig. 61
AXLE BRACKET SYSTEM ····· Fig. 62
WEIGHT SYSTEM ····· Fig. 63
DRIVE SHAFT SYSTEM ····· Fig. 64

BEVEL CASE SYSTEM ····· Fig. 65
AXLE HOUSING SYSTEM ····· Fig. 66
FRONT GEAR CASE SYSTEM ····· Fig. 67
TIE ROD SYSTEM ····· Fig. 68
FRONT WHEEL SYSTEM (TK529) ····· Fig. 69
FRONT WHEEL SYSTEM (TK533) ····· Fig. 70
CYLINDER CASE SYSTEM (TK533) ····· Fig. 71
CYLINDER CASE SYSTEM (TK529) ····· Fig. 72
LIFT ARM SYSTEM ····· Fig. 73
CYLINDER SYSTEM ····· Fig. 74
PIPING SYSTEM (A) (TK529) ····· Fig. 75
PIPING SYSTEM (A) (TK533) ····· Fig. 76
PIPING SYSTEM (B) ····· Fig. 77
STACK SYSTEM ····· Fig. 78
LEVEL VALVE SYSTEM ····· Fig. 79
REAR HITCH AND 3P LINK SYSTEM ····· Fig. 80
LOWER LINK AND LIFT ROD (LH) SYSTEM ····· Fig. 81
ELC. SYSTEM ····· Fig. 82
LEVEL SYSTEM ····· Fig. 83
VALVE SYSTEM ····· Fig. 84
GRILLE SYSTEM ····· Fig. 85
HOOD SYSTEM ····· Fig. 86
HOOD FRAME AND DASH－BOARD SYSTEM ····· Fig. 87
FAN COVER SYSTEM ····· Fig. 88
FENDER SYSTEM ····· Fig. 89
LEVER GUIDE SYSTEM ····· Fig. 90
SEAT SYSTEM ····· Fig. 91
BACK MIRROR SYSTEM ····· Fig. 92
FRONT MOUNT SYSTEM ····· Fig. 93
REAR MOUNT SYSTEM ····· Fig. 94
FLOOR SYSTEM ····· Fig. 95
FOOT COVER SYSTEM ····· Fig. 96
BATTERY SYSTEM ····· Fig. 97
HEAD LAMP SYSTEM ····· Fig. 98

LAMP SYSTEM ····· Fig. 99
PANEL SYSTEM ····· Fig. 100
SWITCH AND SENSOR SYSTEM ····· Fig. 101
SWITCH SYSTEM ····· Fig. 102
HARNESS SYSTEM ····· Fig. 103
ELC. SYSTEM (1/5, 2/5, 3/5, 4/5, 5/5) ····· Fig. 104
SAFETY FRAME SYSTEM ····· Fig. 105
ORNAMENT ····· Fig. 106
CONTROL LABEL ····· Fig. 107
SAFETY LABEL ····· Fig. 108
TOOL ····· Fig. 109

OPTIONAL PARTS

TRAILER HITCH SET (OPTION) ····· Fig. 110
EXTENSION HITCH SET (OPTION) ····· Fig. 111
WORKING LAMP SET (OPTION) ····· Fig. 112
TOP LINK SET (OPTION) ····· Fig. 113
WEIGHT SET (OPTION) ····· Fig. 114

COMPONENT PARTS

COMPONENT PARTS FOR K185 – 004 – 000 – 20 ON Fig. 83 ····· Fig. 115
COMPONENT PARTS FOR K200 – 016 – 000 – 00 ON Fig. 84 ····· Fig. 116
COMPONENT PARTS FOR K200 – 019 – 000 – 00 ON Fig. 79 ····· Fig. 117
COMPONENT PARTS FOR 1560 – 407 – 260 – 50 ON Fig. 61 ····· Fig. 118
COMPONENT PARTS FOR 1650 – 508 – 210 – 10 ON Fig. 74 ····· Fig. 119
COMPONENT PARTS FOR 1650 – 654 – 270 – 00 ON Fig. 112 ····· Fig. 120

WIRING DIAGRAM (E15)
WIRING DIAGRAM (WX/E15)

ENGINE

E3CD-B06···TK529

ENGINE

6005 - 097 -240 - 00

FIG. 1 CYLINDER HEAD

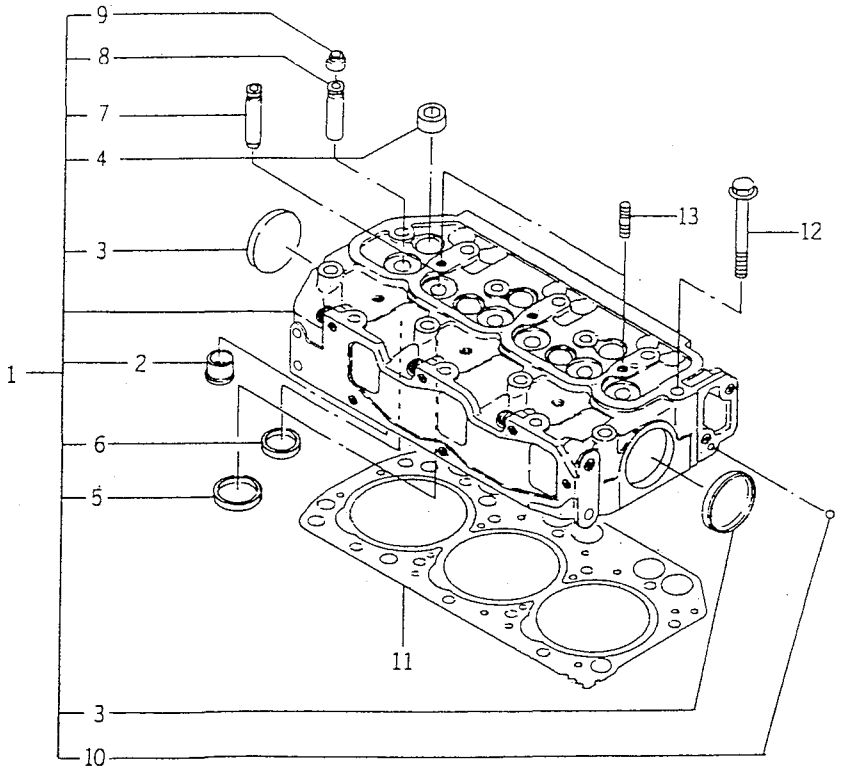

600E-101G

KEY	PART CODE	DESCRIPTION	QTY	TYPE OF MODEL E3CDB06		ITC	COL	GRP	REMARKS
1	6211 - 110 - 045 - 40	CYLINDERHEAD ASSY	1	*					
2	6211 - 150 - 033 - 10	HOTPLUG ASSY	3	*					
3	6209 - 610 - 003 - 00	CUP/SEALING/50	2	*					
4	6209 - 605 - 004 - 10	PLUG/PT1/2	5	*					
5	6211 - 715 - 006 - 00	VALVESEAT/INLET	3	*					
6	6211 - 711 - 005 - 00	VALVESEAT/EXHAUST	3	*					
7	6211 - 721 - 003 - 10	VALVEGUIDE	3	*					
8	6211 - 721 - 004 - 00	VALVEGUIDE	3	*					
9	6212 - 569 - 002 - 00	SEAL,OIL	6	*					
10	V682 - 200 - 000 - 60	BALL	1	*					
11	6211 - 141 - 023 - 40	GASKET/CYLINDERHEAD	1	*					
12	6209 - 000 - 005 - 00	BOLT	14	*					
13	6909 - 830 - 212 - 00	STUD,HEAD COVER	2	*					

FIG. 2 CYLINDER HEAD COVER

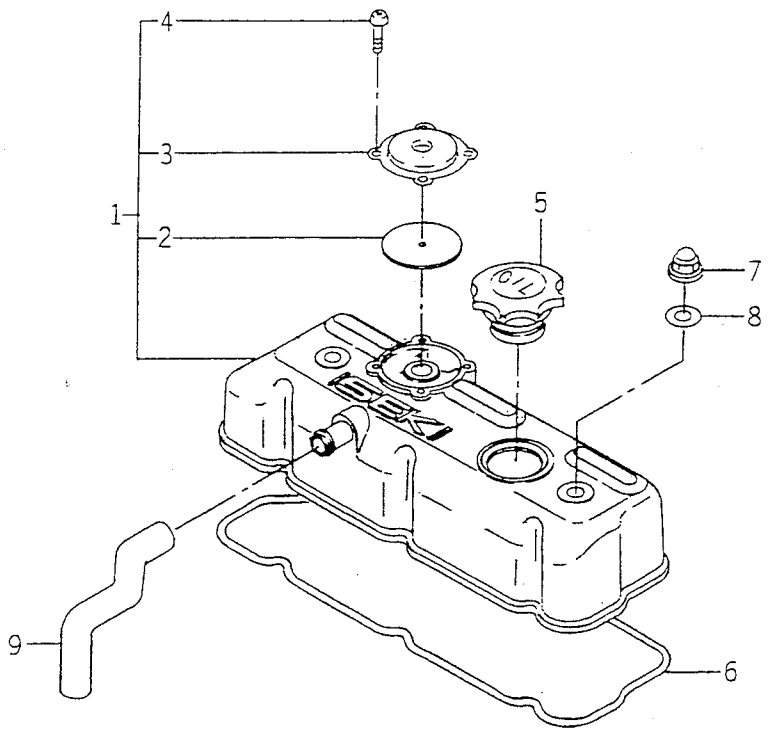

6005-110

KEY	PART CODE	DESCRIPTION	QTY	TYPE OF MODEL E3CDB06		ITC	COL	GRP	REMARKS
1	6211 - 170 - 007 - 20	COVER/CYLINDER/HEAD	1	*					
2	6211 - 179 - 011 - 20	RUBBERFLANGE	1	*					
3	6211 - 291 - 010 - 00	COVER/BLOWBY	1	*					
4	V195 - 164 - 008 - 30	SCREW/TAPPING	4	*					
5	6211 - 751 - 001 - 10	CAP,OIL FILLER	1	*					
6	6211 - 173 - 005 - 00	SEAL/CYL HEAD/UNDER	1	*					
7	6209 - 490 - 002 - 00	NUT,CAP	2	*					
8	6909 - 572 - 008 - 00	PACKING	2	*					
9	6209 - 360 - 031 - 00	HOSE/RUBBER	1	*					

FIG. 3 INLET MANIFOLD

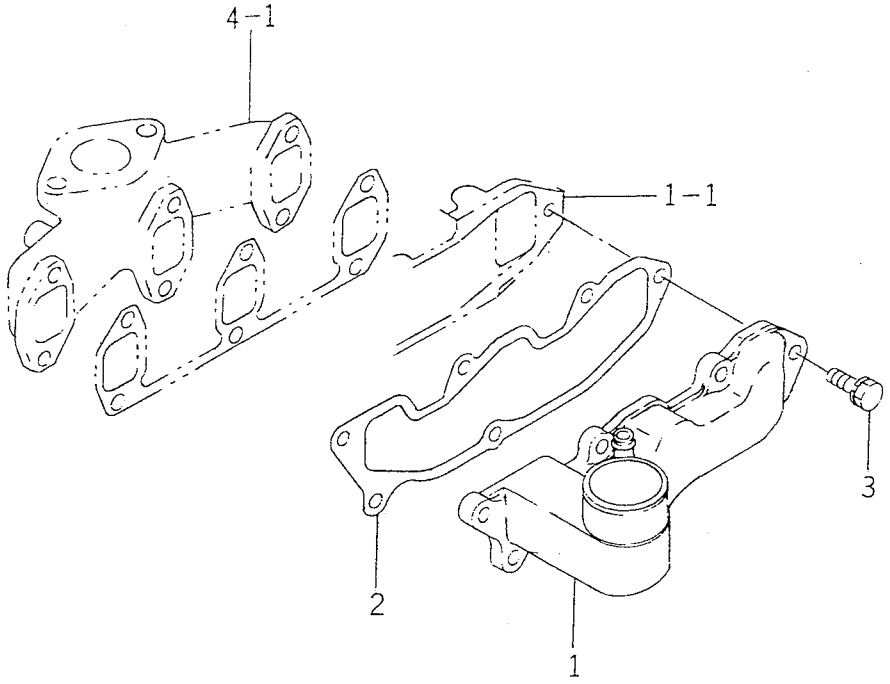

6005-120

KEY	PART CODE	DESCRIPTION	QTY	TYPE OF MODEL		ITC	COL	GRP	REMARKS
				E3CDB06					
1	6214 - 110 - 003 - 00	MANIFOLD/INLET ASSY	1	*					
2	6214 - 115 - 003 - 10	GASKET/INLETMANIFOLD	1	*					
3	V211 - 560 - 802 - 50	BOLT,SEMS/M8X25 7T	6	*					

FIG. 4 EXHAUST MANIFOLD

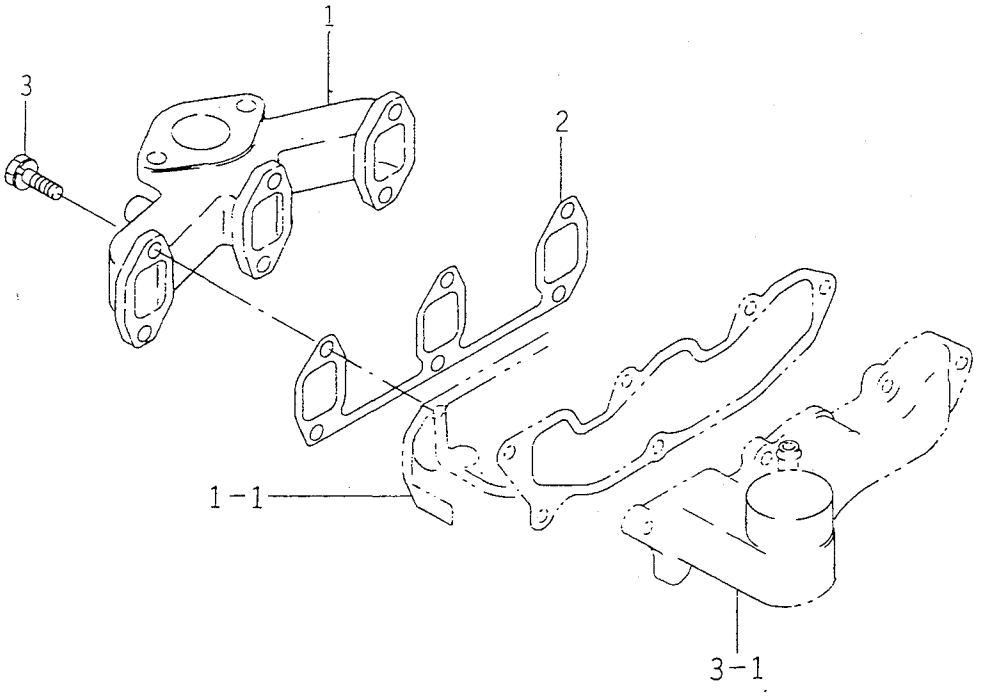

6005-140

KEY	PART CODE	DESCRIPTION	QTY	TYPE OF MODEL E3CDB06		ITC	COL	GRP	REMARKS
1	6214 - 141 - 023 - 00	MANIFOLD/EXHAUST	1	*					
2	6214 - 145 - 004 - 20	GASHET/EXH MANIFOLD	1	*					
3	V211 - 560 - 802 - 50	BOLT,SEMS/M8X25 7T	6	*					

FIG. 5 CYLINDER BLOCK

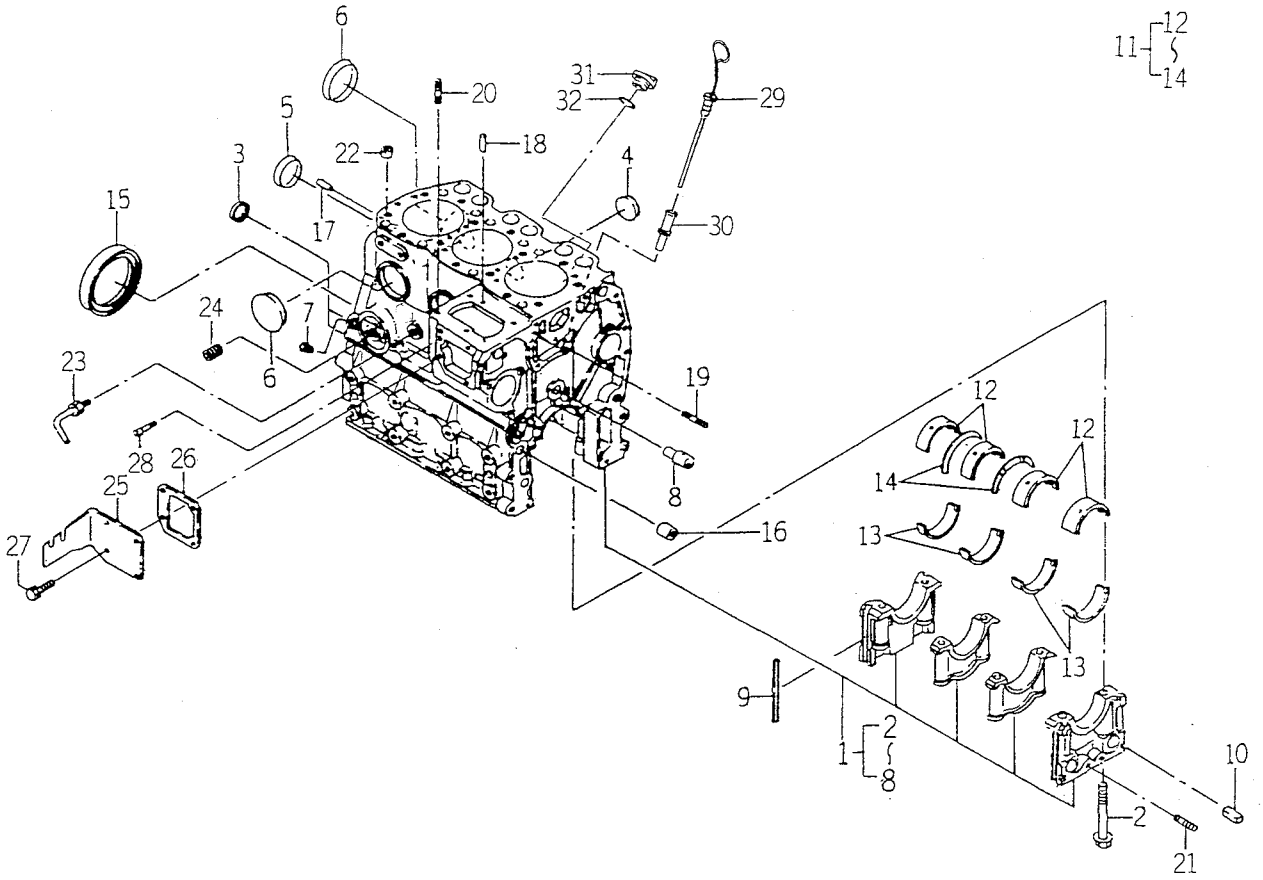

6005-201T

KEY	PART CODE	DESCRIPTION	QTY	TYPE OF MODEL		ITC	COL	GRP	REMARKS
				E3CDB06					
1	6211 - 210 - 056 - 10	CYLINDERBLOCK ASSY	1	*					
2	6209 - 000 - 006 - 00	BOLT	8	*					
3	6911 - 129 - 081 - 00	CAP,SEALING	2	*					
4	6209 - 610 - 001 - 00	CAP,SEALING	2	*					
5	6911 - 219 - 195 - 00	CAP,SEALING	1	*					
6	6209 - 610 - 003 - 00	CUP/SEALING/50	3	*					
7	6509 - 605 - 019 - 10	PLUG	8	*					
8	6212 - 531 - 008 - 20	PIN/IDLEGEAR	1	*					
9	6211 - 258 - 001 - 00	SEAL,BEARING CAP	4	*					
10	6211 - 258 - 002 - 00	SEAL,BEARING CAP/7	2	*					
11	6211 - 510 - 008 - 00	BEARING/CRANK SET	1	*					
12	6211 - 511 - 007 - 00	BEARING/CRANK/UPPER	4	*					
13	6211 - 511 - 008 - 00	BEARING/CRANK/LOWER	4	*					
14	6211 - 599 - 004 - 00	BEARING/THRUST/CRANK	2	*					
15	6209 - 625 - 003 - 10	OILSEAL	1	*					
16	6209 - 749 - 001 - 20	PIN/TUBE	2	*					
17	6908 - 160 - 816 - 00	PIN	2	*					
18	6209 - 740 - 005 - 00	PIN	2	*					
19	6904 - 110 - 840 - 00	STUD/M8X40	1	*					
20	6904 - 110 - 822 - 00	STUD	3	*					
21	V251 - 340 - 806 - 00	BOLT/STUD	1	*					
22	6294 - 453 - 002 - 00	DOWEL	2	*					
23	6213 - 721 - 007 - 00	PIPE/WATERDRAIN	1	*					
24	6213 - 319 - 001 - 00	CONNECTOR,OIL FILTER	1	*					
25	6211 - 291 - 015 - 10	COVER/INJECTIONPUMP	1	*					

FIG. 5 CYLINDER BLOCK

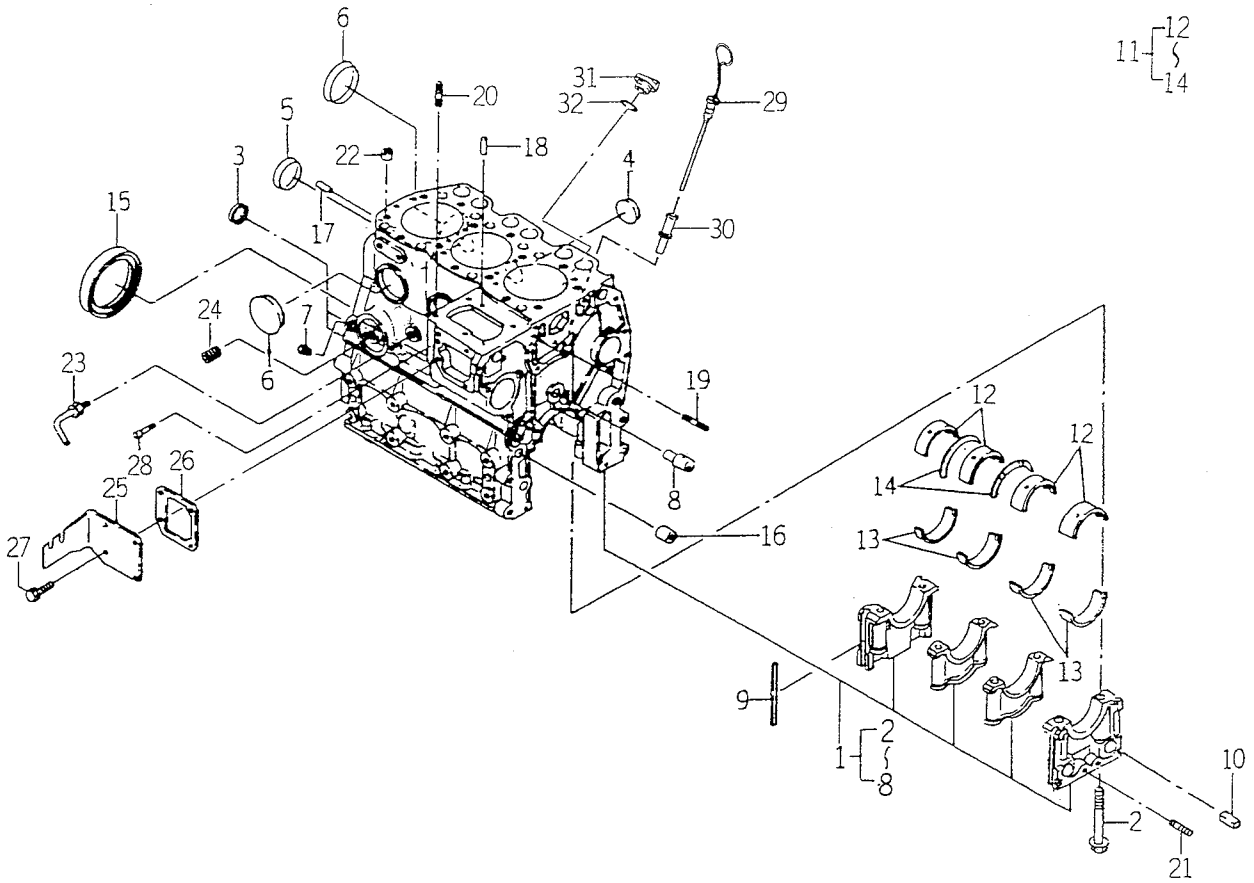

6005-201T

KEY	PART CODE	DESCRIPTION	QTY	TYPE OF MODEL E3CDB06		ITC	COL	GRP	REMARKS
26	6211 - 292 - 001 - 20	GASKET/COVER	1	*					
27	6901 - 910 - 614 - 00	BOLT	4	*					
28	6215 - 549 - 013 - 00	PIN	1	*					
29	6211 - 760 - 020 - 00	LEVELGAGE	1	*					
30	6211 - 766 - 006 - 10	GUIDE/LEVELGAGE COMP	1	*					
31	6211 - 751 - 002 - 00	CAP/OILFILLER	1	*					
32	V720 - 103 - 502 - 50	O - RING/P25	1	*					

FIG. 6 BEARING/UNDER SIZE (OPTION)

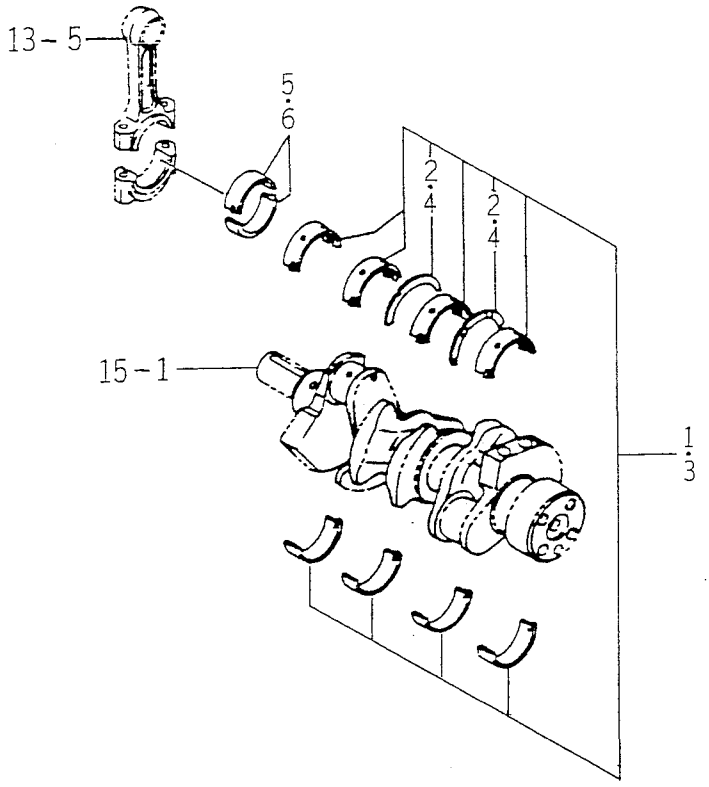

6005-209

KEY	PART CODE	DESCRIPTION	QTY	TYPE OF MODEL E3CDB06		ITC	COL	GRP	REMARKS
1	6211-530-008-00	BEARING/CRANK/UNDER	1	T					025
2	6211-599-004-00	BEARING/THRUST/CRANK	2	T					
3	6211-540-008-00	BEARING/CRANK/UNDER	1	T					050
4	6211-599-004-00	BEARING/THRUST/CRANK	2	T					
5	6212-263-009-00	BEARING/CONROD/UNDER	6	T					025
6	6212-264-009-00	BEARING/CONROD/UNDER	6	T					050

FIG. 7 OIL PAN

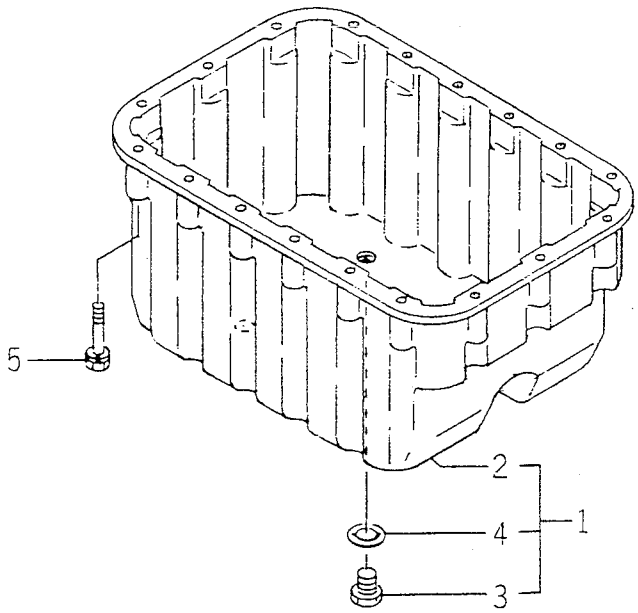

6005-210D

KEY	PART CODE	DESCRIPTION	QTY	TYPE OF MODEL E3CDB06		ITC	COL	GRP	REMARKS
1	6211 - 360 - 031 - 10	OILPAN ASSY	1	*					
2	6211 - 361 - 038 - 10	OILPAN	1	*					
3	3625 - 301 - 002 - 00	PLUG (M14X15)	2	*					
4	V720 - 102 - 401 - 80	O - RING/P18	2	*					
5	6901 - 910 - 635 - 00	BOLT	18	*					

FIG. 8 REAR PLATE

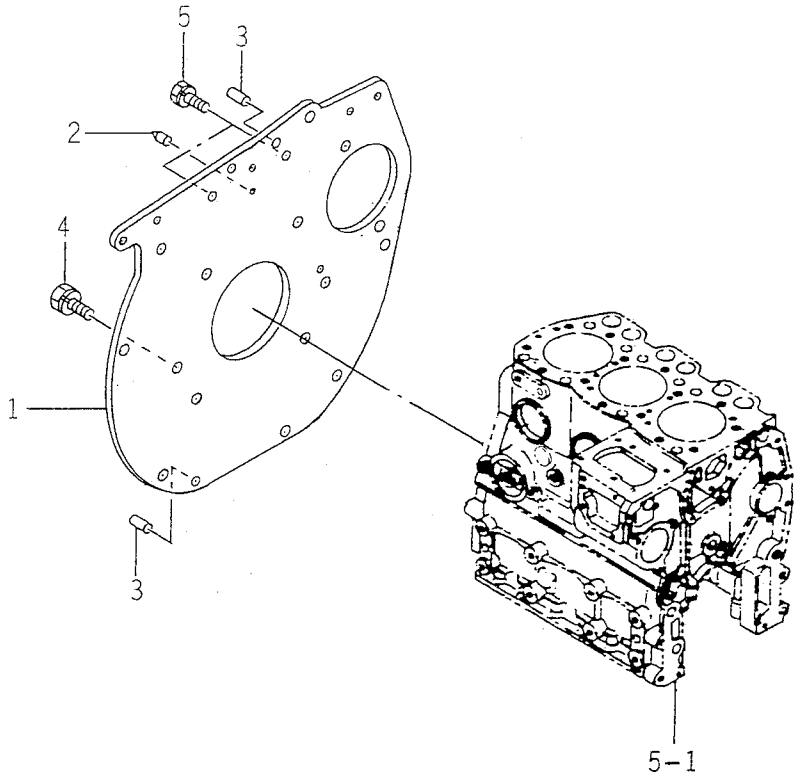

6005-220D

KEY	PART CODE	DESCRIPTION	QTY	TYPE OF MODEL E3CDB06		ITC	COL	GRP	REMARKS
1	6211 - 341 - 030 - 00	PLATE/REAR	1	*					
2	6211 - 342 - 003 - 10	POINTER	1	*					
3	V523 - 101 - 001 - 80	PIN	2	*					
4	6209 - 030 - 091 - 00	BOLT/WS	6	*					
5	6901 - 911 - 025 - 00	BOLT	2	*					

FIG. 9 TIMING GEAR CASE

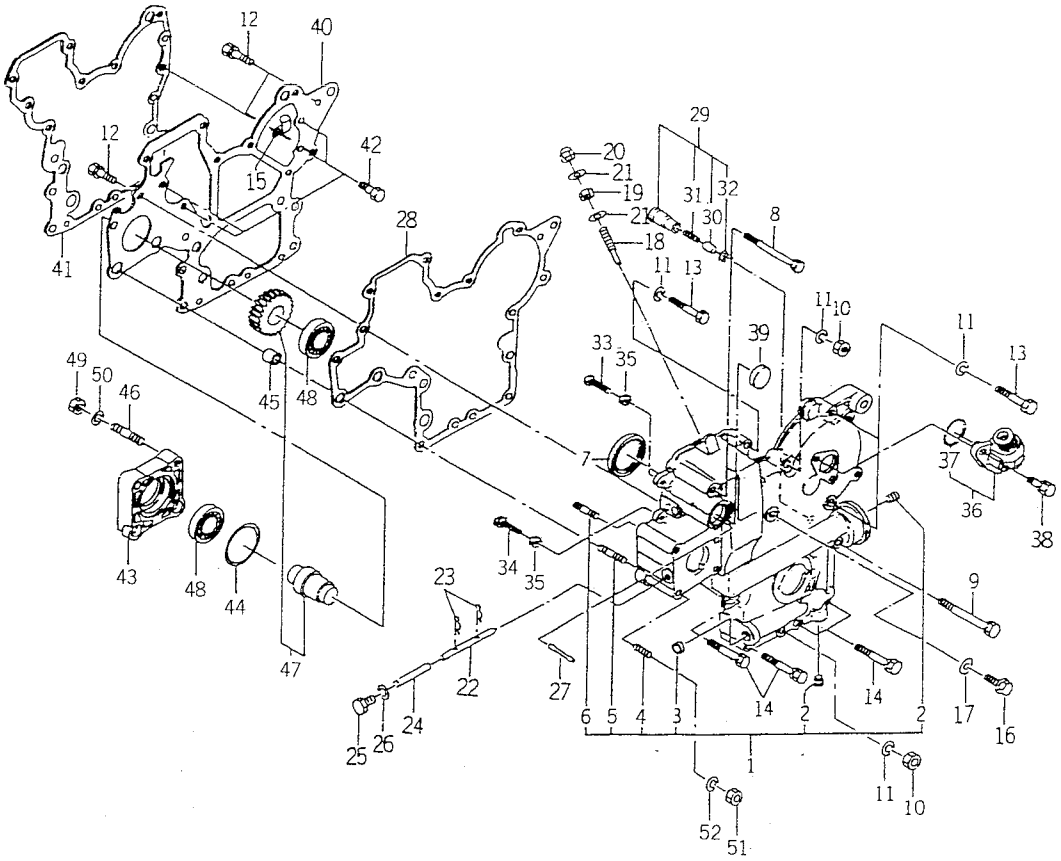

6005-240B

KEY	PART CODE	DESCRIPTION	QTY	TYPE OF MODEL E3CDB06		ITC	COL	GRP	REMARKS
1	6211 - 310 - 009 - 30	GEARCASE ASSY	1	*					
2	6209 - 605 - 003 - 00	PLUG/PT1/4	2	*					
3	6209 - 610 - 004 - 00	CUP/SEALING/20	1	*					
4	6904 - 110 - 822 - 00	STUD	4	*					
5	6904 - 110 - 855 - 00	STUD	2	*					
6	6904 - 110 - 850 - 00	STUD	1	*					
7	6209 - 625 - 002 - 00	SEAL,OIL	1	*					
8	6209 - 030 - 005 - 00	BOLT/M8X85	1	*					
9	6209 - 030 - 006 - 00	BOLT/M8X75	2	*					
10	6909 - 110 - 508 - 00	NUT/M8	2	*					
11	6909 - 150 - 508 - 00	WASHER	5	*					
12	V211 - 560 - 802 - 00	BOLT/M8X20	3	*					
13	6901 - 050 - 850 - 00	BOLT/M8X45	3	*					
14	6209 - 030 - 095 - 00	BOLT/WS	4	*					
15	1650 - 650 - 015 - 00	CLAMP	1	*					
16	6209 - 046 - 001 - 00	BOLT/M8X30	1	*					
17	6209 - 500 - 003 - 00	WASHER/08X14X01	1	*					
18	6215 - 546 - 003 - 00	STOPPER/FULLLOAD	1	*					
19	6209 - 409 - 001 - 00	NUT/M8	1	*					
20	V341 - 120 - 008 - 00	NUT,CAP/M 8	1	*					
21	6209 - 920 - 002 - 00	PACKING	2	*					
22	6215 - 542 - 004 - 20	PIN/ARM	1	*					
23	P117 - 303 - 003 - 00	PIN/SNAP	2	*					
24	6215 - 542 - 005 - 00	PIN	1	*					
25	6909 - 202 - 308 - 00	PLUG	1	*					

FIG. 9 TIMING GEAR CASE

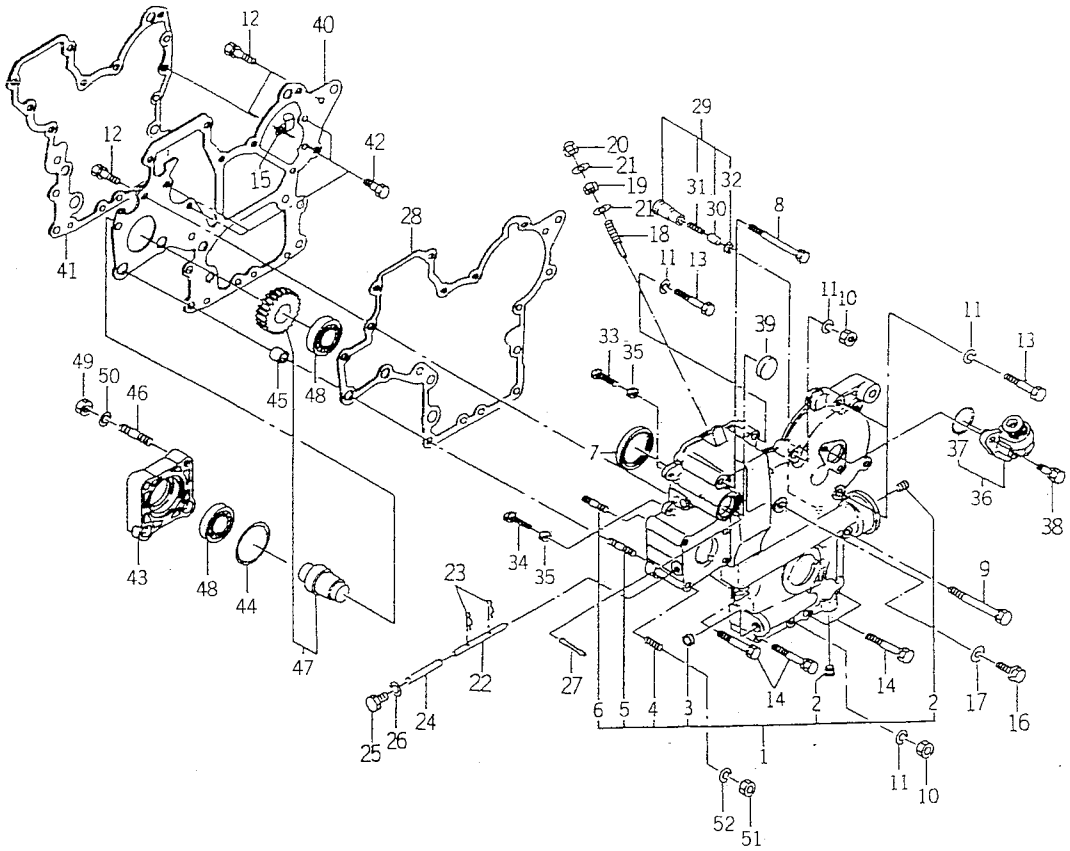

6005-240B

KEY	PART CODE	DESCRIPTION	QTY	TYPE OF MODEL E3CDB06		ITC	COL	GRP	REMARKS
26	6209 - 500 - 003 - 00	WASHER/08X14X01	1	*					
27	6209 - 740 - 001 - 00	PIN,GROOVE	1	*					
28	6211 - 312 - 005 - 10	GASKET/GEARCASE	1	*					
29	6213 - 160 - 002 - 00	VALVE/RELIEF ASSY	1	*					
30	6213 - 161 - 001 - 00	PISTON/RELIEF VALVE	1	*					
31	6213 - 164 - 001 - 00	SPRING/RELIEF VALVE	1	*					
32	V705 - 140 - 012 - 00	RING,SNAP/12 C	1	*					
33	6209 - 050 - 001 - 00	BOLT/M6	1	*					
34	6209 - 050 - 002 - 00	BOLT/M6	1	*					
35	6909 - 110 - 406 - 00	NUT	2	*					
36	6219 - 310 - 003 - 10	DRIVE/TACHOMETE ASSY	1	*					
37	V723 - 102 - 002 - 40	RING/O	1	*					
38	6901 - 910 - 616 - 00	BOLT,SEMS/M6X16	2	*					
39	3625 - 540 - 004 - 00	CAP,BLANK/30	1	*					
40	6211 - 311 - 013 - 00	PLATE/FRONT	1	*					
41	6211 - 312 - 006 - 10	GASKET/PLATE	1	*					
42	6902 - 050 - 816 - 00	BOLT	4	*					
43	6211 - 319 - 003 - 00	SPACER	1	*					
44	V723 - 102 - 005 - 00	O - RING 1A S50	1	*					
45	6209 - 749 - 001 - 20	PIN/TUBE	2	*					
46	6904 - 110 - 822 - 00	STUD	1	*					
47	6212 - 530 - 005 - 10	SHAFT/HYDRAULIC ASSY	1	*					
48	V600 - 110 - 600 - 50	BEARING,RB/6005	2	*					
49	6909 - 110 - 408 - 00	NUT/M8	4	*					
50	6909 - 150 - 508 - 00	WASHER	4	*					

FIG. 9 TIMING GEAR CASE

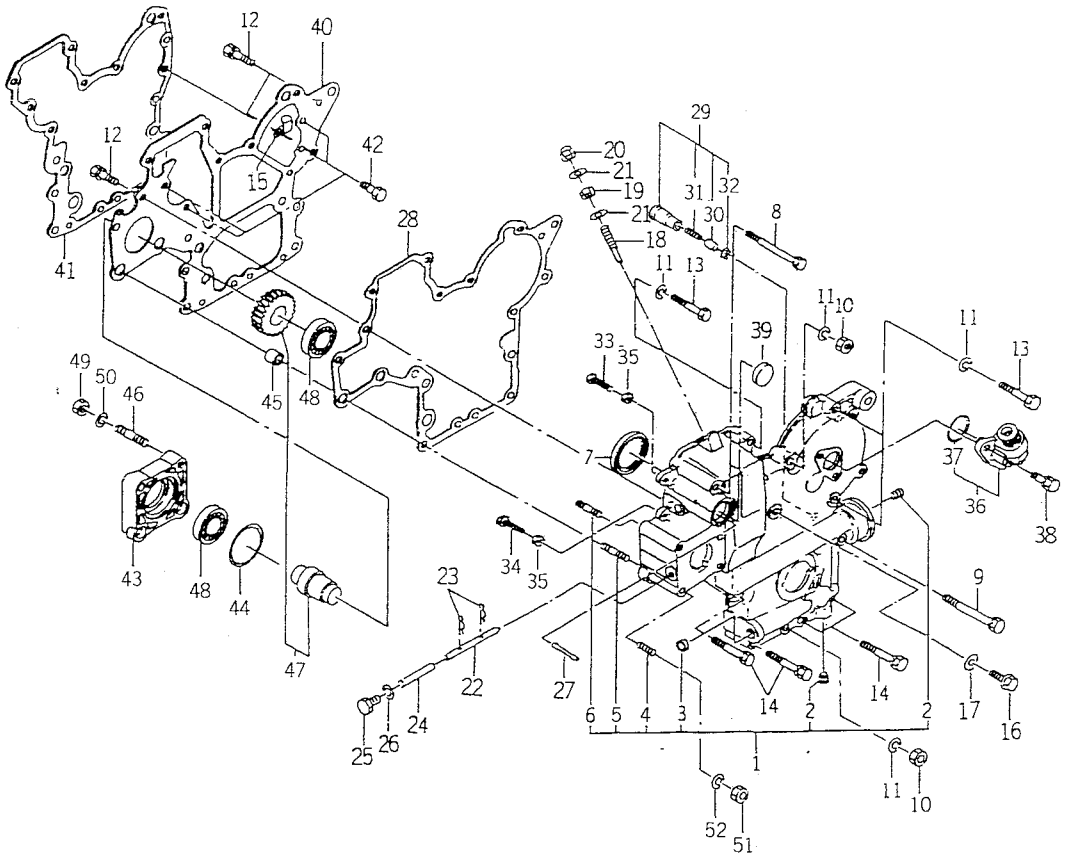

6005-240B

KEY	PART CODE	DESCRIPTION	QTY	TYPE OF MODEL E3CDB06		ITC	COL	GRP	REMARKS
51	6909 - 110 - 408 - 00	NUT/M8	4	*					
52	6909 - 150 - 508 - 00	WASHER	4	*					

FIG. 10 HANGER

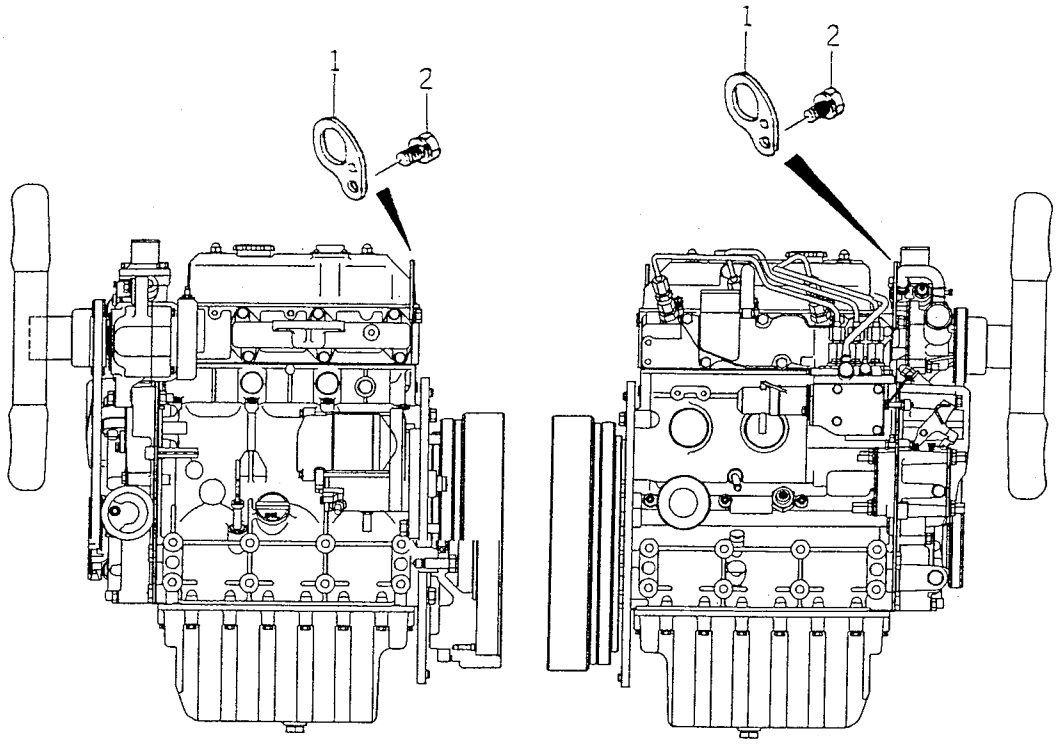

6003-290

KEY	PART CODE	DESCRIPTION	QTY	TYPE OF MODEL E3CDB06		ITC	COL	GRP	REMARKS
1	6211 - 777 - 007 - 20	HANGER	2	*					
2	6901 - 911 - 020 - 00	BOLT,SEMS/M10X20	2	*					

FIG. 11 VALVE

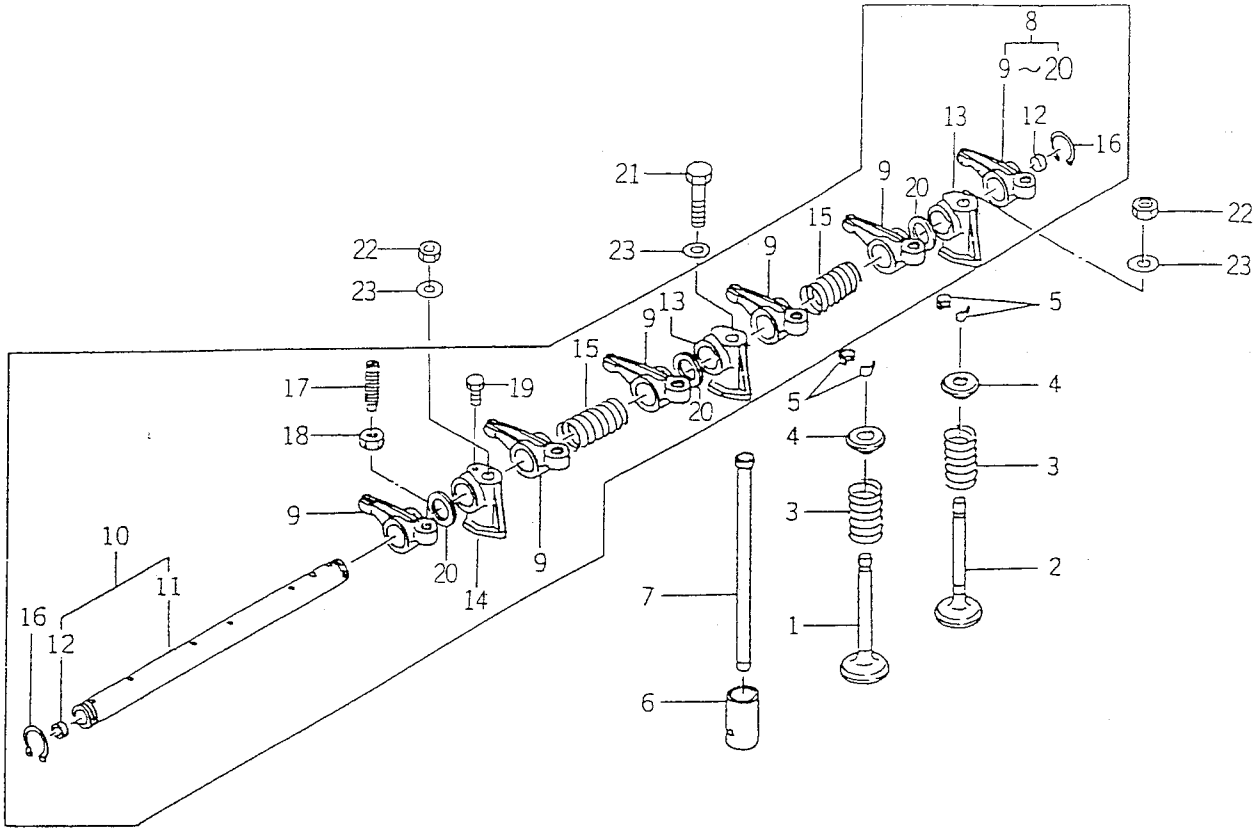

6005-301B

KEY	PART CODE	DESCRIPTION	QTY	TYPE OF MODEL E3CDB06		ITC	COL	GRP	REMARKS
1	6212 - 551 - 008 - 00	VALVE/INTAKE	3	*					
2	6212 - 552 - 008 - 00	VALVE/EXHAUST	3	*					
3	6212 - 561 - 003 - 00	SPRING/VALVE	6	*					
4	6212 - 563 - 001 - 00	SEAT,VALVE SPRING	6	*					
5	6212 - 565 - 001 - 00	CUTTER,VALVE	12	*					
6	6212 - 571 - 002 - 20	TAPPET	6	*					
7	6212 - 575 - 003 - 00	PUSHROD	6	*					
8	6212 - 600 - 009 - 10	ROCKERSHAFT ASSY	1	*					
9	6212 - 611 - 004 - 10	ROCKERARM	6	*					
10	6212 - 620 - 008 - 10	SHAFT/ROCKERARM ASSY	1	*					
11	6212 - 621 - 008 - 10	SHAFT/ROCKERARM	1	*					
12	6212 - 626 - 002 - 10	PLUG	2	*					
13	6212 - 628 - 006 - 00	BRACKET/ROCKERSHAFT	2	*					
14	6212 - 628 - 007 - 00	BRACKET/ROCKERSHAFT	1	*					
15	6209 - 940 - 004 - 00	SPRING	2	*					
16	V704 - 140 - 016 - 00	RING,SNAP/16 C	2	*					
17	6212 - 616 - 002 - 00	SCREW ADJUST	6	*					
18	6209 - 409 - 003 - 00	NUT	6	*					
19	6209 - 000 - 002 - 00	BOLT	1	*					
20	6212 - 619 - 001 - 20	SPACER/ROCKERARM	3	*					
21	6901 - 055 - 855 - 00	BOLT/M8X55	1	*					
22	6909 - 110 - 508 - 00	NUT/M8	2	*					
23	6209 - 500 - 005 - 00	WASHER/08X15.5X1.6	3	*					

FIG. 12 CAM SHAFT

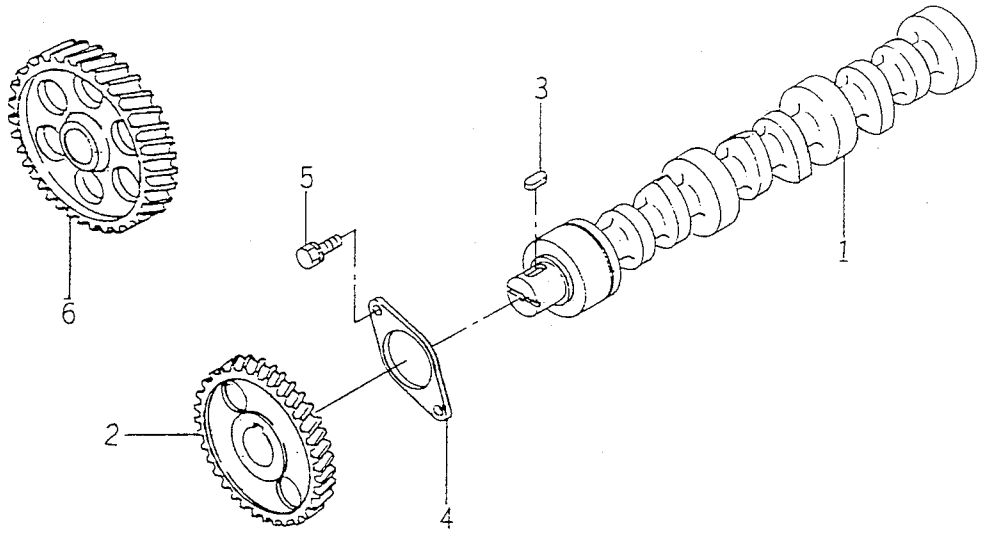

6005-310

KEY	PART CODE	DESCRIPTION	QTY	TYPE OF MODEL E3CDB06		ITC	COL	GRP	REMARKS
1	6212 - 511 - 005 - 00	CAMSHAFT	1	*					
2	6212 - 522 - 004 - 00	GEAR/CAMSHAFT	1	*					
3	6908 - 000 - 716 - 00	KEY	1	*					
4	6212 - 535 - 007 - 00	PLATE/THRUST	1	*					
5	6901 - 910 - 612 - 00	BOLT,SEMS/M6X12	2	*					
6	6212 - 523 - 006 - 30	GEAR/IDLE ASSY	1	*					

FIG. 13 PISTON

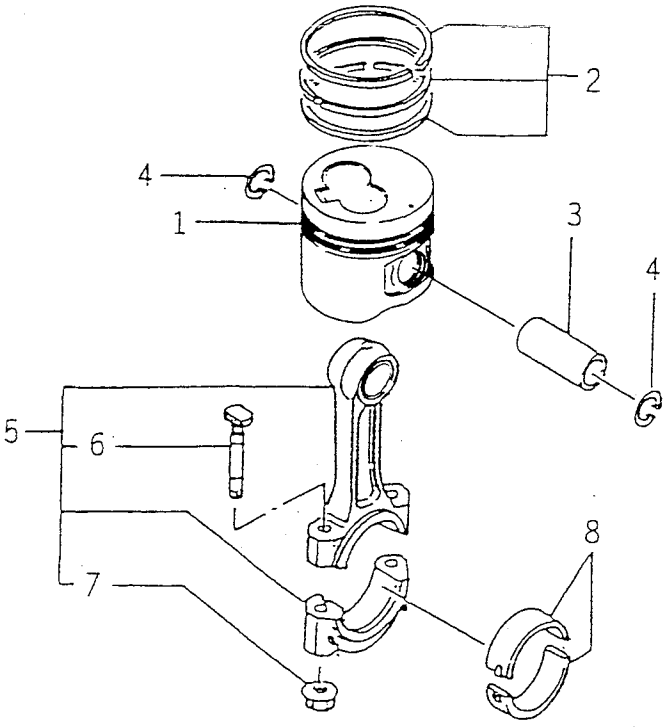

6005-340G

KEY	PART CODE	DESCRIPTION	QTY	TYPE OF MODEL E3CDB06		ITC	COL	GRP	REMARKS
1	6212 - 111 - 039 - 40	PISTON	3	*					87
2	6212 - 121 - 013 - 20	RING/PISTON SET	3	*					87
3	6512 - 211 - 018 - 00	PIN,PISTON	3	*					
4	6909 - 950 - 115 - 00	RING SNAP	6	*					
5	6212 - 230 - 005 - 00	CONNECTINGROD ASSY	3	*					
6	6212 - 235 - 002 - 10	BOLT/CONNECTINGROD	6	*					
7	6209 - 440 - 002 - 10	NUT/FLANGE	6	*					
8	6212 - 261 - 009 - 10	BEARING/CON ROD	6	*					

FIG. 14 PISTON／OVER SIZE (OPTION)

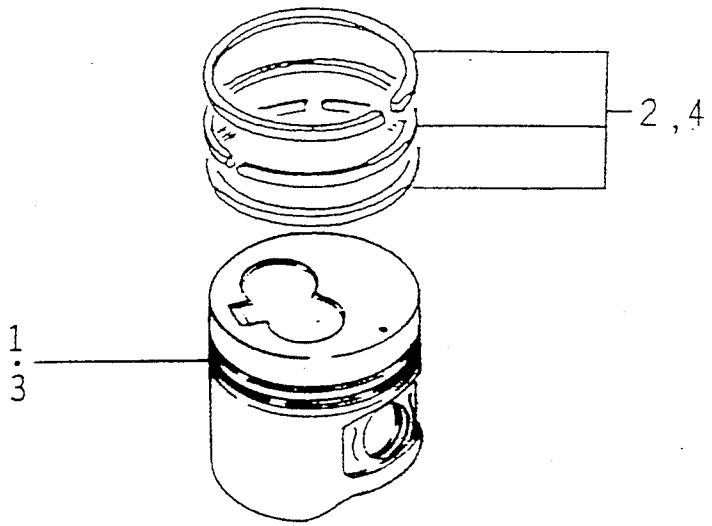

6005-349C

KEY	PART CODE	DESCRIPTION	QTY	TYPE OF MODEL		ITC	COL	GRP	REMARKS
				E3CDB06					
1	6212 - 114 - 039 - 40	PISTON／OV	3	T					87.5
2	6212 - 124 - 013 - 20	RING／PISTON／OV SET	3	T					87.5
3	6212 - 116 - 039 - 40	PISTON／OV	3	T					88.0
4	6212 - 126 - 013 - 20	RING／PISTON／OV SET	3	T					88.0

FIG. 15 CRANK SHAFT

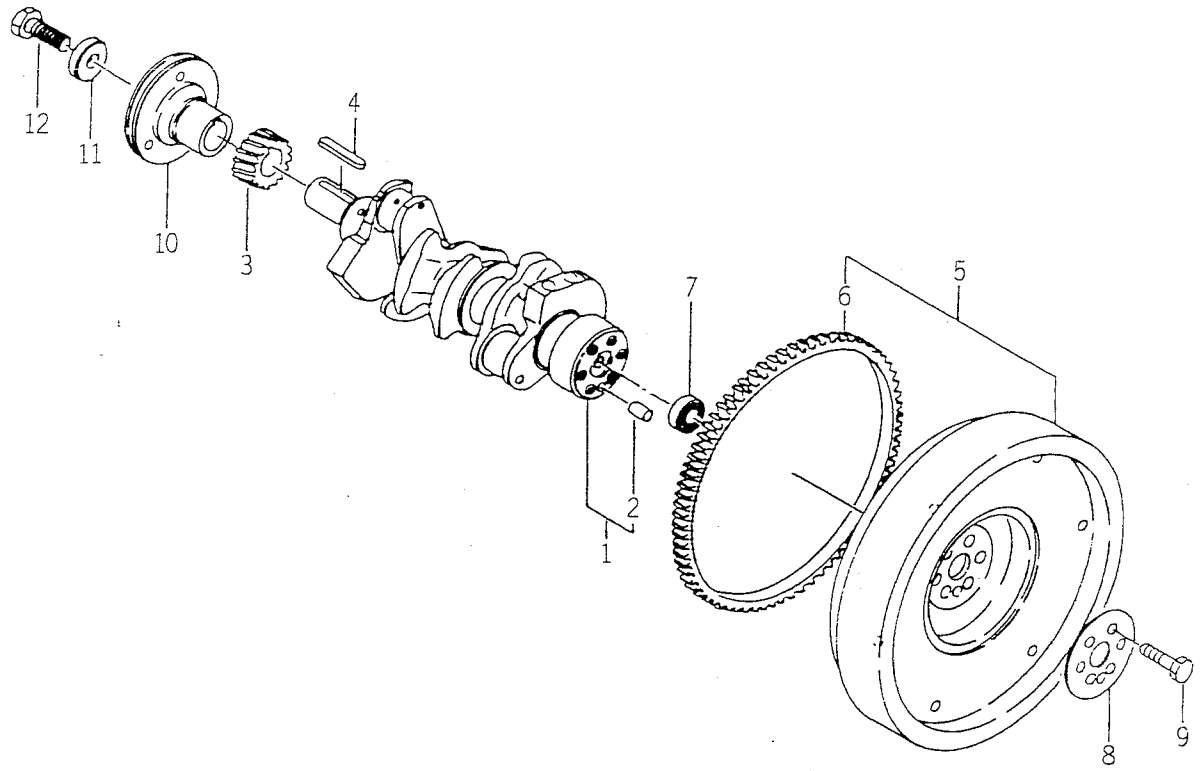

6005-350E

KEY	PART CODE	DESCRIPTION	QTY	TYPE OF MODEL E3CDB06		ITC	COL	GRP	REMARKS
1	6212 - 310 - 011 - 20	CRANKSHAFT ASSY	1	*					
2	V523 - 101 - 001 - 80	PIN	1	*					
3	6212 - 521 - 002 - 00	GEAR,CRANK SHAFT	1	*					
4	6908 - 000 - 750 - 00	KEY	1	*					
5	6212 - 330 - 029 - 30	FLYWHEEL ASSY	1	*					
6	6212 - 333 - 002 - 00	RINGGEAR	1	*					
7	V600 - 150 - 600 - 20	BEARING,RB/6002SS	1	*					
8	6212 - 336 - 001 - 00	WASHER	1	*					
9	6209 - 000 - 013 - 00	BOLT	6	*					
10	6212 - 371 - 022 - 00	PULLEY/CRANK	1	*					
11	6212 - 379 - 001 - 00	WASHER	1	*					
12	6901 - 066 - 645 - 00	BOLT	1	*					

FIG. 16 OIL PUMP

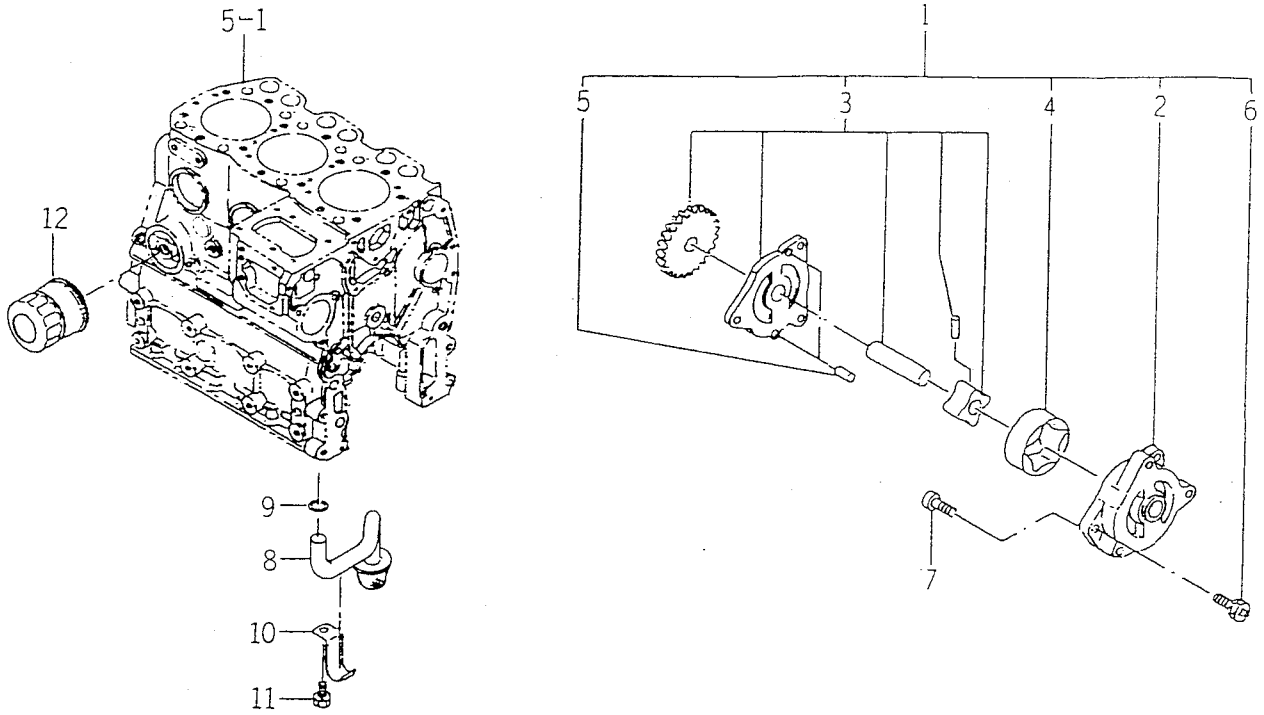

6005-401D

KEY	PART CODE	DESCRIPTION	QTY	TYPE OF MODEL E3CDB06		ITC	COL	GRP	REMARKS
1	6213 – 100 – 004 – 20	OILPUMP ASSY	1	*					
2	6213 – 111 – 002 – 20	BODY/OILPUMP	1	*					
3	6213 – 120 – 002 – 20	GEAR/OILPUMP ASSY	1	*					
4	6213 – 125 – 002 – 10	ROTOR/OUTER	1	*					
5	6213 – 129 – 003 – 00	PIN/STRAIGHT	2	*					
6	6213 – 119 – 001 – 00	BOLT/WS	3	*					
7	V220 – 540 – 602 – 00	SCREW/SOCKET	3	*					
8	6213 – 140 – 013 – 00	STRAINER	1	*					
9	V720 – 113 – 502 – 20	RING/O	1	*					
10	6213 – 149 – 003 – 20	CLAMP/STRAINER	1	*					
11	6901 – 910 – 816 – 00	BOLT,SEMS/M8X16	1	*					
12	6213 – 240 – 002 – 00	CARTRIDGE,OIL FILTER	1	*					

FIG. 17 WATER PUMP

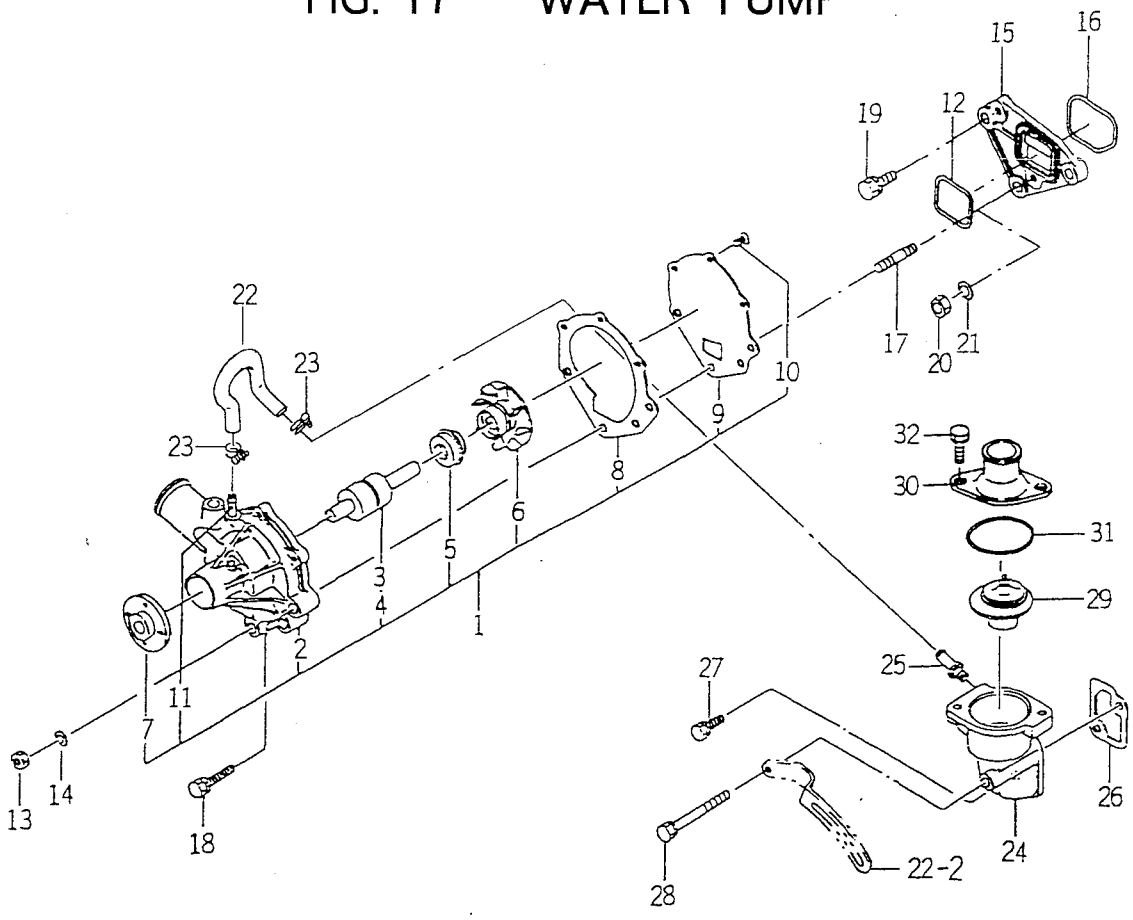

6005-420B

KEY	PART CODE	DESCRIPTION	QTY	TYPE OF MODEL E3CDB06		ITC	COL	GRP	REMARKS
1	6213 - 610 - 005 - 40	WATERPUMP ASSY	1	*					
2	6213 - 611 - 003 - 20	BODY/WATERPUMP	1	*					
3	6213 - 631 - 002 - 00	BEARING/WATER PUMP	1	*					
4	6213 - 631 - 005 - 00	BEARING/WATERPUMP	1	*					
5	6213 - 622 - 002 - 10	SEAL SET/WATER PUMP	1	*					
6	6213 - 621 - 003 - 00	ROTOR/WATERPUMP	1	*					
7	6213 - 642 - 002 - 00	SEAL/WATER PUMPPULLE	1	*					
8	6213 - 613 - 002 - 10	GASKET	1	*					
9	6213 - 612 - 004 - 00	PLATE/WATER PUMP	1	*					
10	6213 - 619 - 003 - 00	SCREW/WATER PUMP	3	*					
11	6213 - 619 - 002 - 00	PIPE/WATER PUMP	2	*					
12	V721 - 103 - 104 - 00	O - RING/G40	1	*					
13	6909 - 110 - 508 - 00	NUT/M8	2	*					
14	6909 - 150 - 508 - 00	WASHER	2	*					
15	6213 - 619 - 006 - 00	SPACER/WATERPUMP	1	*					
16	V721 - 103 - 105 - 00	O - RING/G50	1	*					
17	6904 - 110 - 840 - 00	STUD/M8X40	2	*					
18	6901 - 910 - 845 - 00	BOLT,SEMS/M8X45	1	*					
19	V211 - 560 - 802 - 50	BOLT,SEMS/M8X25 7T	1	*					
20	6909 - 110 - 508 - 00	NUT/M8	1	*					
21	6909 - 150 - 508 - 00	WASHER	1	*					
22	6213 - 729 - 013 - 10	HOSE/RUBBER	1	*					
23	J061 - 210 - 015 - 00	CLAMP/WIRE/10 - 15	2	*					
24	6213 - 716 - 001 - 40	HOUSING/THERMOSTAT	1	*					
25	6213 - 721 - 003 - 00	PIPE,PUMP HOUSING	1	*					

FIG. 17 WATER PUMP

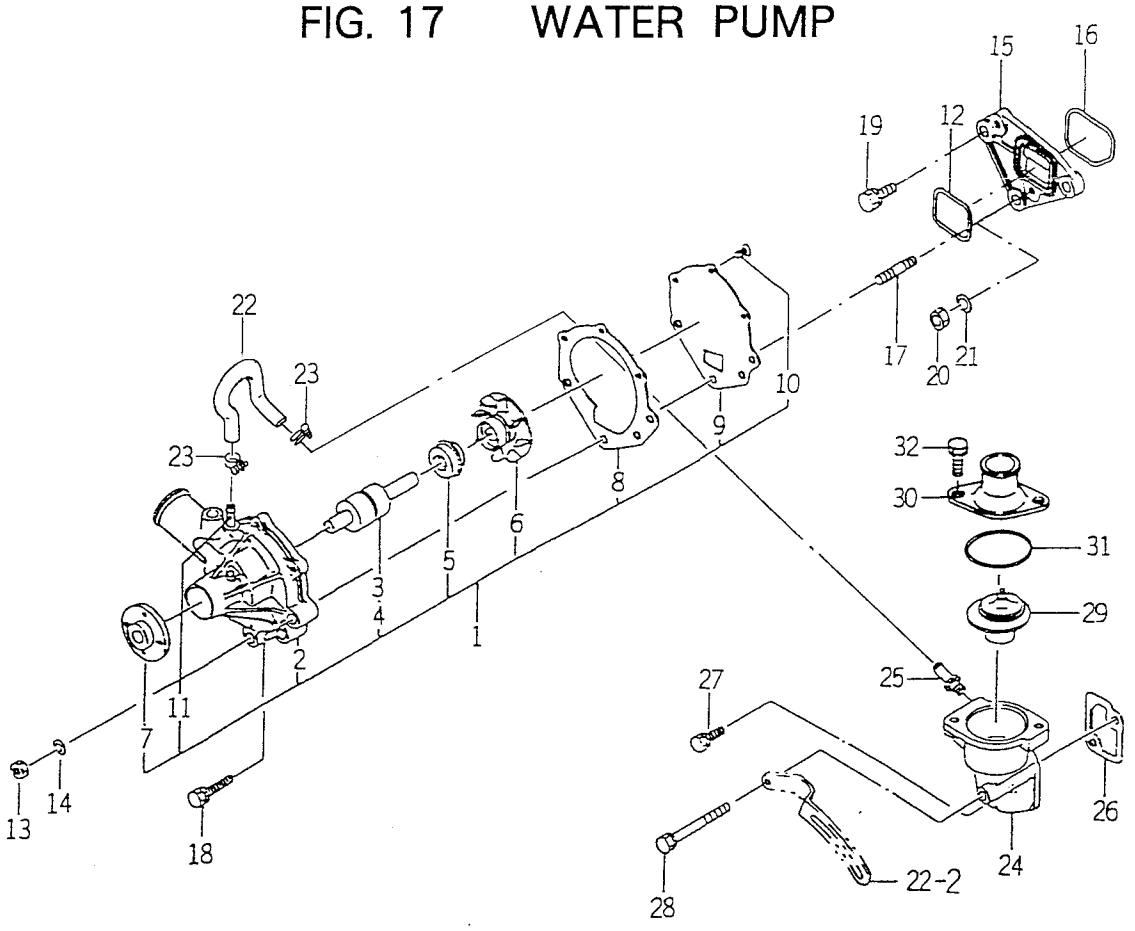

6005-420B

KEY	PART CODE	DESCRIPTION	QTY	TYPE OF MODEL E3CDB06		ITC	COL	GRP	REMARKS
26	6213 - 743 - 002 - 10	GASKET/HOUSING	1	*					
27	V211 - 560 - 802 - 00	BOLT/M8X20	1	*					
28	6209 - 030 - 006 - 00	BOLT/M8X75	1	*					
29	6513 - 770 - 022 - 10	THERMOSTAT	1	*					
30	6213 - 711 - 003 - 20	PIPE,WATER OUTLET	1	*					
31	V723 - 102 - 005 - 50	O - RING	1	*					
32	6901 - 910 - 828 - 00	BOLT,SEMS	2	*					

FIG. 18 COOLING FAN

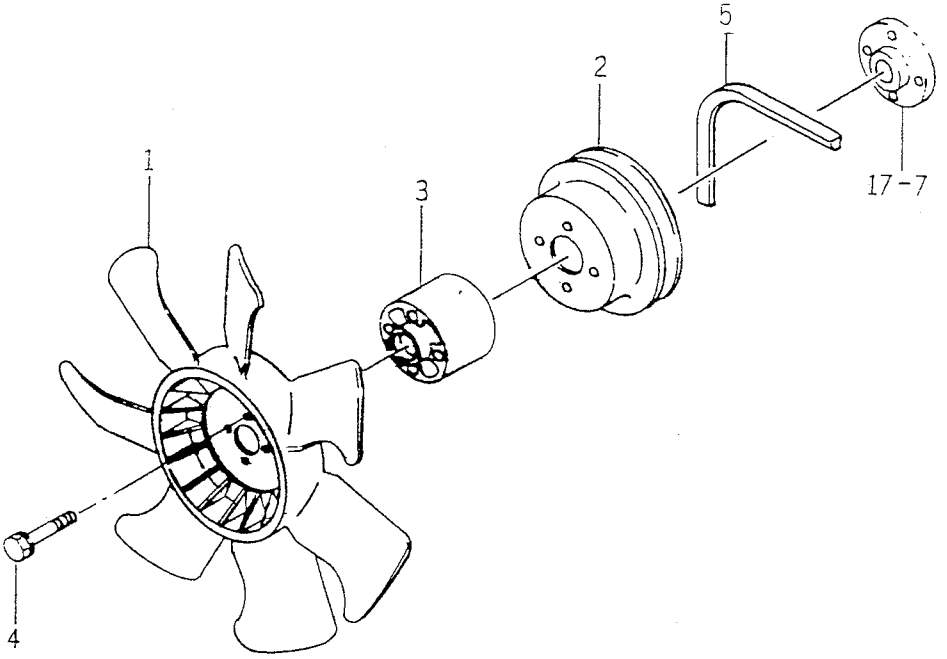

6005-480H

KEY	PART CODE	DESCRIPTION	QTY	TYPE OF MODEL		ITC	COL	GRP	REMARKS
				E3CDB06					
1	6213 - 660 - 015 - 00	FAN/COOLING	1	*					
2	6213 - 641 - 012 - 00	PULLEY/WATERPUMP	1	*					
3	6213 - 669 - 012 - 00	SPACER/FAN/53	1	*					
4	6209 - 030 - 092 - 00	BOLT/WS	4	*					
5	6513 - 671 - 138 - 00	BELT,COOLING FAN	1	*					

FIG. 19 INJECTION NOZZLE

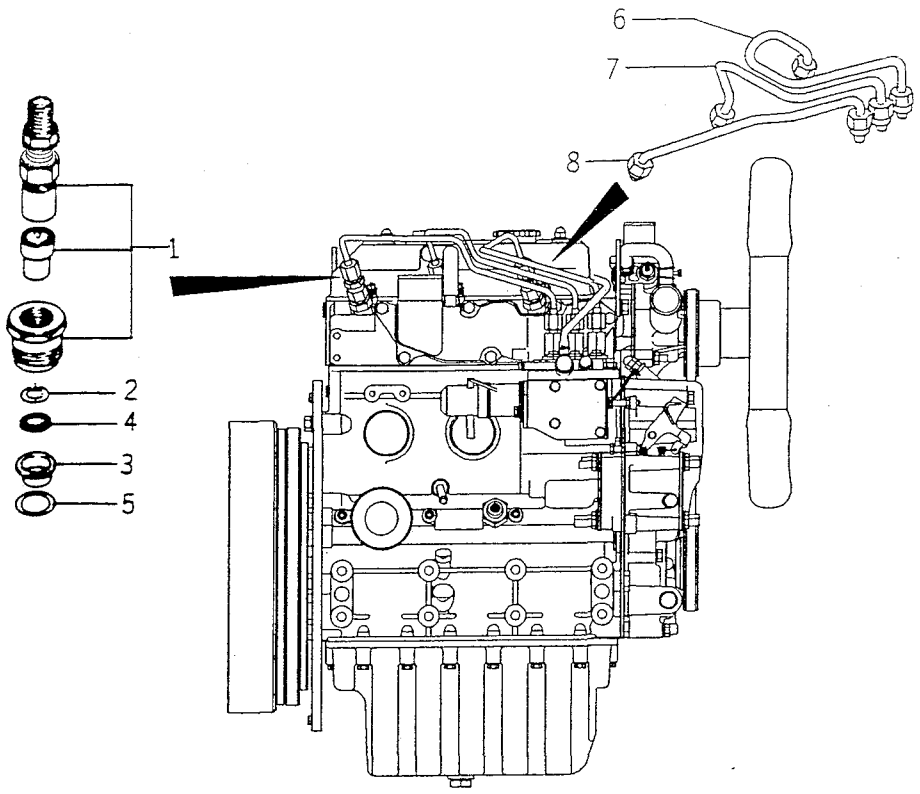

6005-501C

KEY	PART CODE	DESCRIPTION	QTY	TYPE OF MODEL E3CDB06		ITC	COL	GRP	REMARKS
1	6215 - 300 - 031 - 00	INJECTIONNOZZLE ASSY	3	*					FIG 024
2	6215 - 315 - 002 - 00	GASKET,NOZZLE	3	*					
3	6215 - 315 - 006 - 00	HEATSHILD/NOZZLE	3	*					
4	6215 - 315 - 005 - 00	WASHER/CORRUGATE	3	*					
5	6215 - 315 - 007 - 00	GASKET	3	*					
6	6215 - 411 - 067 - 00	PIPE/INJECTION ASSY	1	*					
7	6215 - 411 - 068 - 00	PIPE/INJECTION ASSY	1	*					
8	6215 - 411 - 069 - 00	PIPE/INJECTION ASSY	1	*					

FIG. 20 INJECTION PUMP

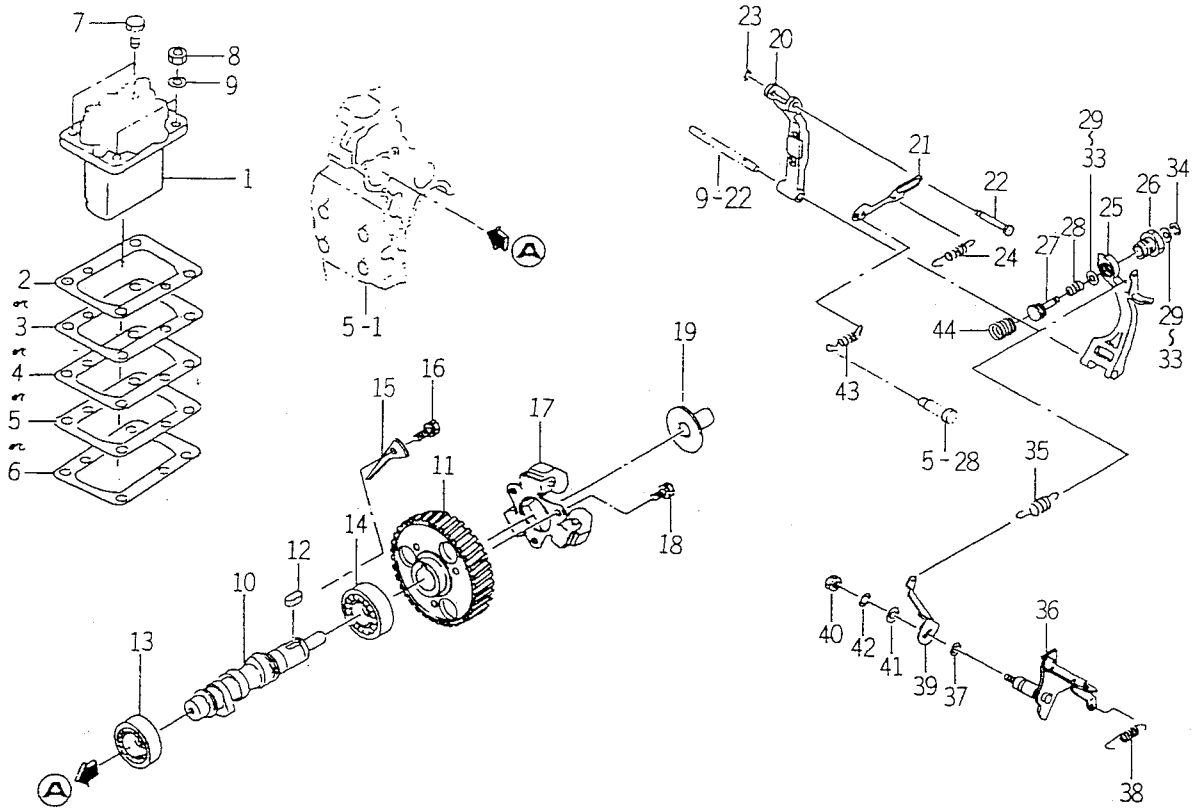

6005-51CG

KEY	PART CODE	DESCRIPTION	QTY	TYPE OF MODEL E3CDB06		ITC	COL	GRP	REMARKS
1	6215 - 600 - 104 - 10	INJECTIONPUMP ASSY	1	*					FIG 025
2	6219 - 752 - 006 - 00	SHIM/PUMP,INJ	1	*					
3	6219 - 752 - 007 - 00	SHIM/PUMP,INJ	1	*					
4	6219 - 752 - 008 - 00	SHIM/PUMP,INJ	1	*					
5	6219 - 752 - 009 - 00	SHIM/PUMP,INJ	1	*					
6	6219 - 752 - 010 - 00	SHIM/PUMP,INJ	1	*					
7	V211 - 560 - 802 - 00	BOLT/M8X20	2	*					
8	6909 - 110 - 508 - 00	NUT/M8	2	*					
9	6909 - 150 - 508 - 00	WASHER	2	*					
10	6215 - 621 - 017 - 00	CAMSHAFT/INJPUMP	1	*					
11	6212 - 524 - 006 - 00	GEAR/INJECTIONPUMP	1	*					
12	6908 - 000 - 716 - 00	KEY	1	*					
13	V600 - 110 - 620 - 30	BEARING,RB/6203	1	*					
14	V600 - 110 - 600 - 40	BEARING,RB/6004	1	*					
15	6212 - 535 - 009 - 00	PLATE/THRUST/INJPUMP	1	*					
16	6901 - 910 - 612 - 00	BOLT,SEMS/M6X12	1	*					
17	6215 - 520 - 001 - 00	FLYWEIGHT	1	*					
18	6209 - 030 - 043 - 00	BOLT/M6X10	3	*					
19	6215 - 526 - 001 - 10	PIECE,THRUST	1	*					
20	6215 - 541 - 001 - 00	ARM,FLOATING	1	*					
21	6215 - 543 - 002 - 10	RINK/CONTROL	1	*					
22	6215 - 542 - 006 - 00	PIN,CONTROL	1	*					
23	V710 - 140 - 004 - 00	RING,SNAP/ 4 E	1	*					
24	6215 - 549 - 031 - 10	SPRING/SETTING	1	*					
25	6215 - 541 - 016 - 30	ARM/TENSION	1	*					

FIG. 20 INJECTIOM PUMP

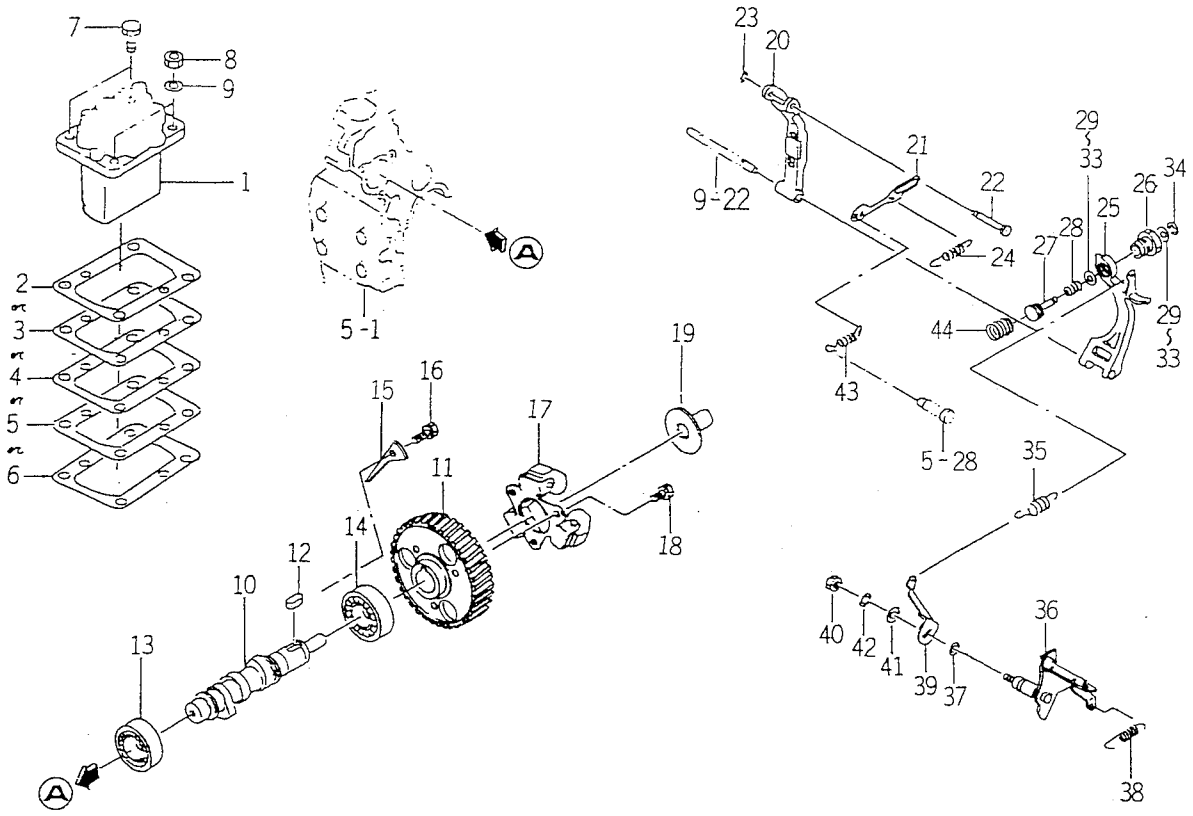

6005-510G

KEY	PART CODE	DESCRIPTION	QTY	TYPE OF MODEL E3CDB06		ITC	COL	GRP	REMARKS
26	6215 - 549 - 038 - 00	CASE/ADAPTER	1	*					
27	6215 - 549 - 037 - 00	PIN/ADAPTER	1	*					
28	6215 - 549 - 035 - 00	SPRING/ADAPTER	1	*					
29	6215 - 549 - 006 - 00	SHIM,ADAPTER	2	*					
30	6215 - 549 - 009 - 00	SHIM,ADAPTER	2	*					
31	6215 - 549 - 010 - 00	SHIM,ADAPTER	2	*					
32	6215 - 549 - 023 - 00	SHIM/ADAPTER	1	*					
33	6215 - 549 - 024 - 00	SHIM/ADAPTER	1	*					
34	V710 - 140 - 004 - 00	RING,SNAP/ 4 E	1	*					
35	6215 - 531 - 010 - 00	SPRING/GOVERNOR	1	*					
36	6215 - 541 - 024 - 10	LEVER/CONTROL COMP	1	*					
37	V720 - 101 - 900 - 80	O - RING/P 8	1	*					
38	6209 - 580 - 002 - 10	SPRING,RETURN	1	*					
39	6215 - 549 - 007 - 10	ARM/CONTROL	1	*					
40	6909 - 110 - 406 - 00	NUT	1	*					
41	V411 - 260 - 006 - 00	WASHER / M6	1	*					
42	6909 - 150 - 506 - 00	WASHER,SP/M6	1	*					
43	6215 - 549 - 012 - 00	SPRING,STARTING	1	*					
44	6215 - 537 - 002 - 10	SPRING/IDLE	1	*					

FIG. 21 FUEL PIPE

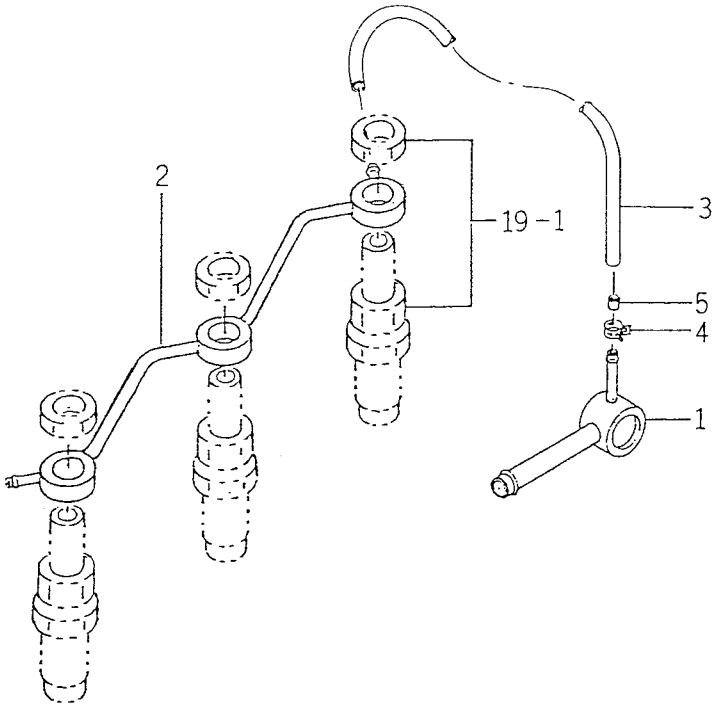

6005-550B

KEY	PART CODE	DESCRIPTION	QTY	TYPE OF MODEL		ITC	COL	GRP	REMARKS
				E3CDB06					
1	6215 - 412 - 004 - 00	CONNECTOR/FUEL	1	*					
2	6215 - 411 - 080 - 10	PIPE/FUEL	1	*					
3	6209 - 360 - 011 - 00	HOSE/RUBBER	1	*					
4	J062 - 076 - 082 - 00	CLIP/HOSE/7.6 - 8.2	2	*					
5	3640 - 586 - 004 - 00	RESISTANCE/1.0	1	*					

FIG. 22 ELECTRIC (1)

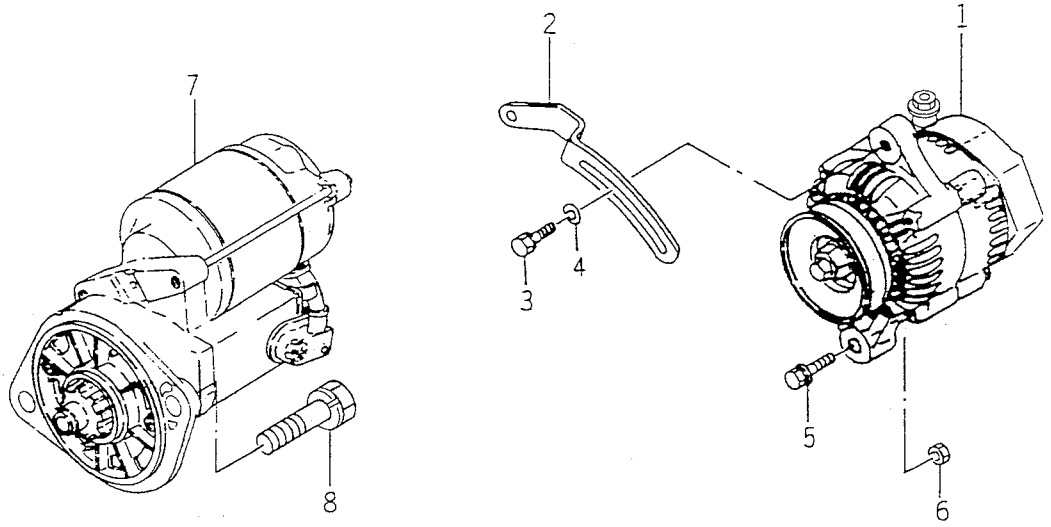

6C05-801F

KEY	PART CODE	DESCRIPTION	QTY	TYPE OF MODEL E3CDB06		ITC	COL	GRP	REMARKS
1	6281 - 200 - 008 - 10	GENERATOR ASSY	1	*					FIG 027
2	6213 - 674 - 006 - 10	PLATE/ADJUST	1	*					
3	V211 - 560 - 802 - 00	BOLT/M8X20	1	*					
4	1373 - 121 - 001 - 00	WASHER/9X22X2	1	*					
5	6209 - 031 - 083 - 00	BOLT/WSP	1	*					
6	6909 - 110 - 410 - 00	NUT/M10	1	*					
7	6281 - 100 - 007 - 10	STARTER ASSY	1	*					FIG 026
8	6901 - 931 - 240 - 00	BOLT	2	*					

FIG. 23 ELECTRIC (2)

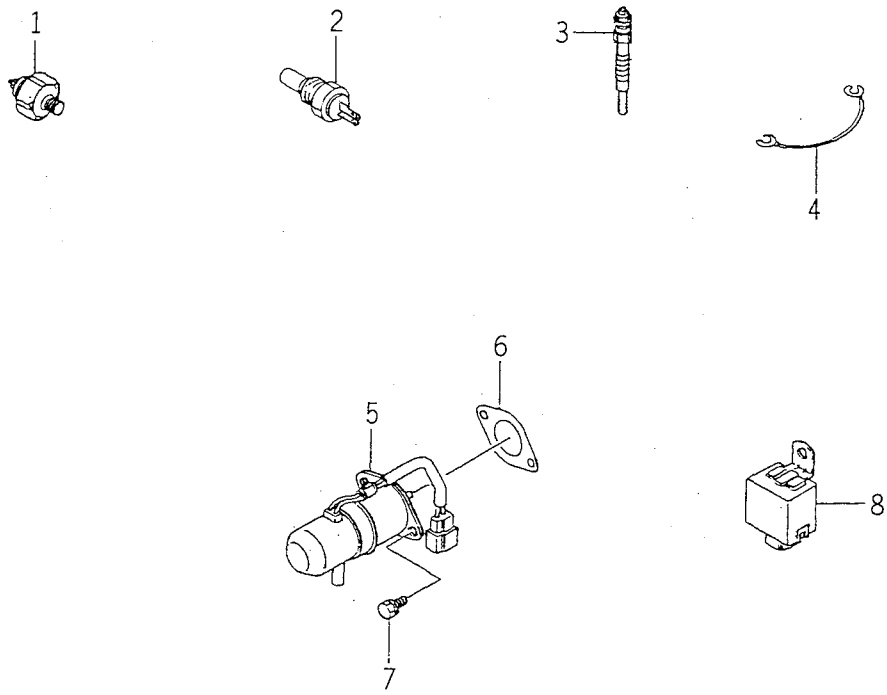

6005-820D

KEY	PART CODE	DESCRIPTION	QTY	TYPE OF MODEL E3CDB06		ITC	COL	GRP	REMARKS
1	6281 - 971 - 003 - 00	SWITCH/OILPRESSURE	1	*					
2	6282 - 450 - 004 - 00	THERMOMETER	1	*					
3	6281 - 410 - 010 - 00	GLOWPLUG	3	*					
4	6219 - 732 - 012 - 00	CONNECTOR/GLOWPLUG	2	*					
5	6281 - 910 - 003 - 00	SOLENOID	1	*					
6	6209 - 630 - 002 - 10	GASKET	1	*					
7	6901 - 910 - 612 - 00	BOLT,SEMS/M6X12	2	*					
8	6281 - 920 - 001 - 00	RELAY,SOLENOID	1	*					

FIG. 24 6215 – 300 – 031 – 00

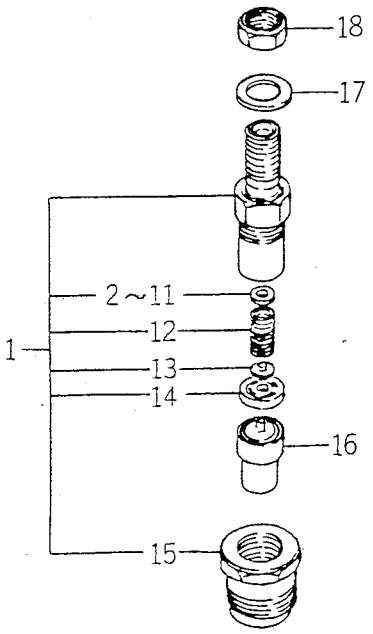

6215-3000

KEY	PART CODE	DESCRIPTION	QTY	TYPE OF MODEL E3CDB06		ITC	COL	GRP	REMARKS
1	6215 – 330 – 022 – 00	HOLDER/NOZZLE ASSY	3	*					
2	6215 – 345 – 044 – 00	SHIM/T = 0.1	3	*					
3	6215 – 345 – 045 – 00	SHIM/T = 0.2	3	*					
4	6215 – 345 – 046 – 00	SHIM/T = 0.3	3	*					
5	6215 – 345 – 047 – 00	SHIM/T = 0.4	3	*					
6	6215 – 345 – 048 – 00	SHIM/T = 0.5	3	*					
7	6215 – 345 – 049 – 00	SHIM/T = 0.52	3	*					
8	6215 – 345 – 050 – 00	SHIM/T = 0.54	3	*					
9	6215 – 345 – 051 – 00	SHIM/T = 0.56	3	*					
10	6215 – 345 – 052 – 00	SHIM/T = 0.58	3	*					
11	6215 – 345 – 053 – 00	SHIM/T = 0.8	3	*					
12	6215 – 343 – 002 – 00	SPRING,NOZZLE	3	*					
13	6215 – 342 – 002 – 00	SEAT,SPRING	3	*					
14	6215 – 339 – 004 – 00	SPACER	3	*					
15	6215 – 332 – 006 – 00	NUT/NOZZLERETAINING	3	*					
16	6215 – 311 – 028 – 00	NOZZLE ASSY	3	*					
17	6215 – 359 – 003 – 00	GASKET	3	*					
18	6215 – 359 – 004 – 00	NUT	3	*					

FIG. 25 6215 – 600 – 104 – 10

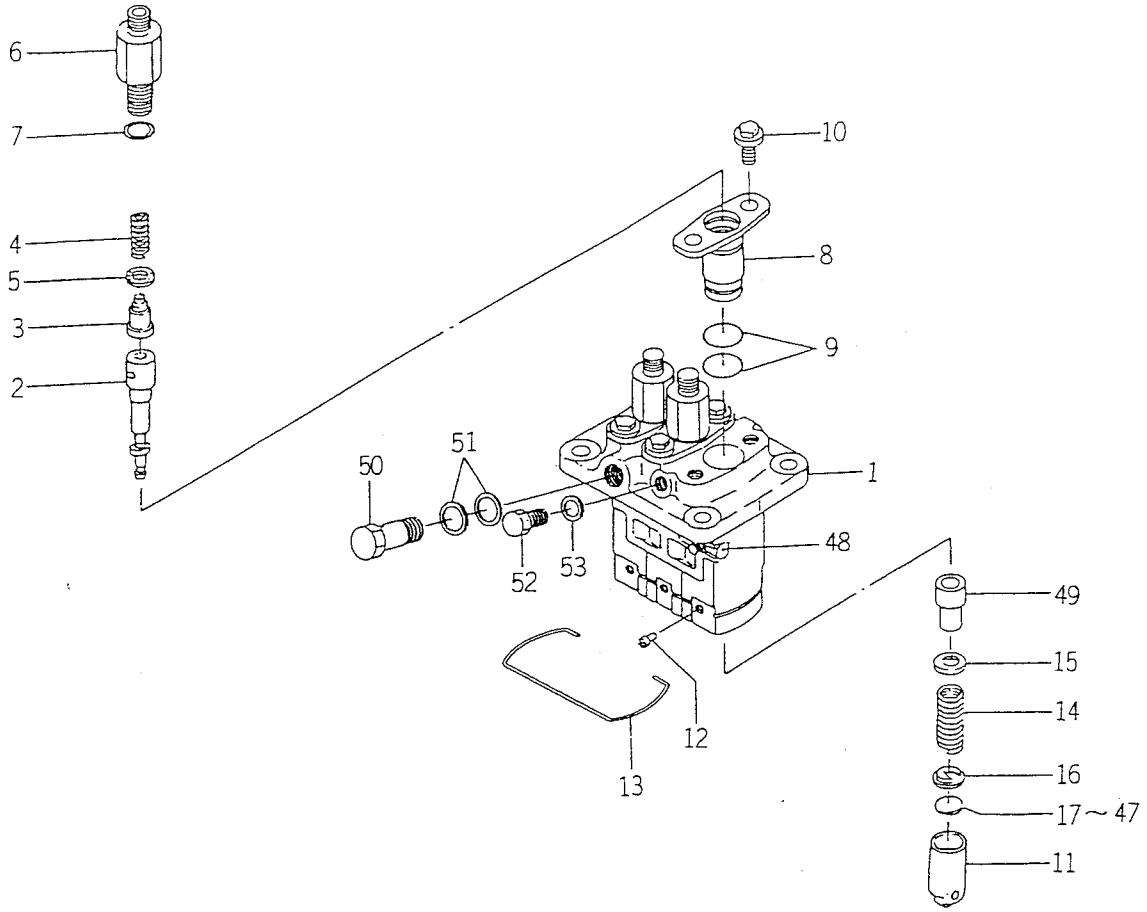

6215-6C01

KEY	PART CODE	DESCRIPTION	QTY	TYPE OF MODEL E3CDB06		ITC	COL	GRP	REMARKS
1	6215 – 611 – 009 – 00	HOUSING/PUMP	1	*					
2	6215 – 631 – 015 – 00	PLUNGER ASSY	3	*					
3	6215 – 641 – 002 – 00	VALVE,DELIVERY	3	*					
4	6215 – 643 – 005 – 00	SPRING/DELIVERYVALVE	3	*					
5	6215 – 649 – 008 – 00	GASKET	3	*					
6	6215 – 644 – 006 – 00	HOLDER/DELIVERYVALVE	3	*					
7	6215 – 649 – 009 – 00	O – RING	3	*					
8	6215 – 635 – 004 – 00	SLEEVEFLANGE	3	*					
9	6215 – 649 – 010 – 00	ORING	6	*					
10	6215 – 649 – 011 – 00	BOLT	6	*					
11	6215 – 622 – 003 – 00	TAPPET	3	*					
12	6215 – 629 – 017 – 00	PIN	3	*					
13	6215 – 629 – 035 – 00	SNAPRING	1	*					
14	6215 – 634 – 003 – 00	SPRING/PLUNGER	3	*					
15	6215 – 639 – 008 – 00	SPRINGSEAT	3	*					
16	6215 – 639 – 009 – 00	SPRINGSEAT	3	*					
17	6215 – 629 – 060 – 00	PLATE/T = 2.60	1	*					
18	6215 – 629 – 061 – 00	PLATE/T = 2.65	1	*					
19	6215 – 629 – 062 – 00	PLATE/T = 2.70	1	*					
20	6215 – 629 – 063 – 00	PLATE/T = 2.75	1	*					
21	6215 – 629 – 064 – 00	PLATE/T = 2.80	1	*					
22	6215 – 629 – 065 – 00	PLATE/T = 2.85	1	*					
23	6215 – 629 – 066 – 00	PLATE/T = 2.90	1	*					
24	6215 – 629 – 067 – 00	PLATE/T = 2.95	1	*					
25	6215 – 629 – 036 – 00	PLATE/T = 3.00	1	*					

FIG. 25 6215 – 600 – 104 – 10

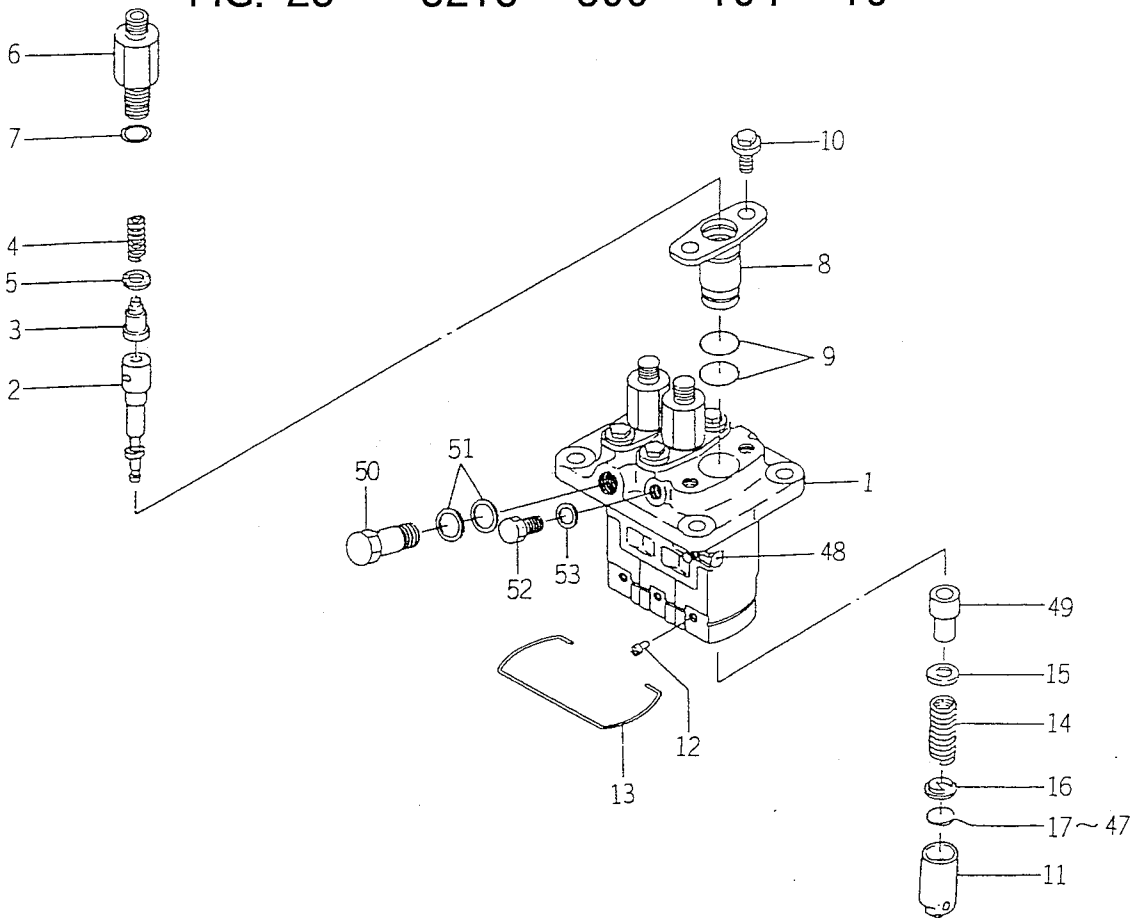

6215-6C01

KEY	PART CODE	DESCRIPTION	QTY	TYPE OF MODEL E3CDB06		ITC	COL	GRP	REMARKS
26	6215 – 629 – 037 – 00	PLATE/T = 3.05	1	*					
27	6215 – 629 – 038 – 00	PLATE/T = 3.10	1	*					
28	6215 – 629 – 039 – 00	PLATE/T = 3.15	1	*					
29	6215 – 629 – 040 – 00	PLATE/T = 3.20	1	*					
30	6215 – 629 – 041 – 00	PLATE/T = 3.25	1	*					
31	6215 – 629 – 042 – 00	PLATE/T = 3.30	1	*					
32	6215 – 629 – 043 – 00	PLATE/T = 3.35	1	*					
33	6215 – 629 – 044 – 00	PLATE/T = 3.40	1	*					
34	6215 – 629 – 045 – 00	PLATE/T = 3.45	1	*					
35	6215 – 629 – 046 – 00	PLATE/T = 3.50	1	*					
36	6215 – 629 – 047 – 00	PLATE/T = 3.55	1	*					
37	6215 – 629 – 048 – 00	PLATE/T = 3.60	1	*					
38	6215 – 629 – 049 – 00	PLATE/T = 3.65	1	*					
39	6215 – 629 – 050 – 00	PLATE/T = 3.70	1	*					
40	6215 – 629 – 051 – 00	PLATE/T = 3.75	1	*					
41	6215 – 629 – 052 – 00	PLATE/T = 3.80	1	*					
42	6215 – 629 – 053 – 00	PLATE/T = 3.85	1	*					
43	6215 – 629 – 054 – 00	PLATE/T = 3.90	1	*					
44	6215 – 629 – 055 – 00	PLATE/T = 3.95	1	*					
45	6215 – 629 – 056 – 00	PLATE/T = 4.00	1	*					
46	6215 – 629 – 058 – 00	PLATE/T = 4.05	1	*					
47	6215 – 629 – 059 – 00	PLATE/T = 4.10	1	*					
48	6215 – 637 – 004 – 00	CONTROLRACK	1	*					
49	6215 – 635 – 005 – 00	CONTROLSLEEVE	3	*					
50	6215 – 619 – 023 – 00	EYEBOLT	1	*					

FIG. 25 6215 – 600 – 104 – 10

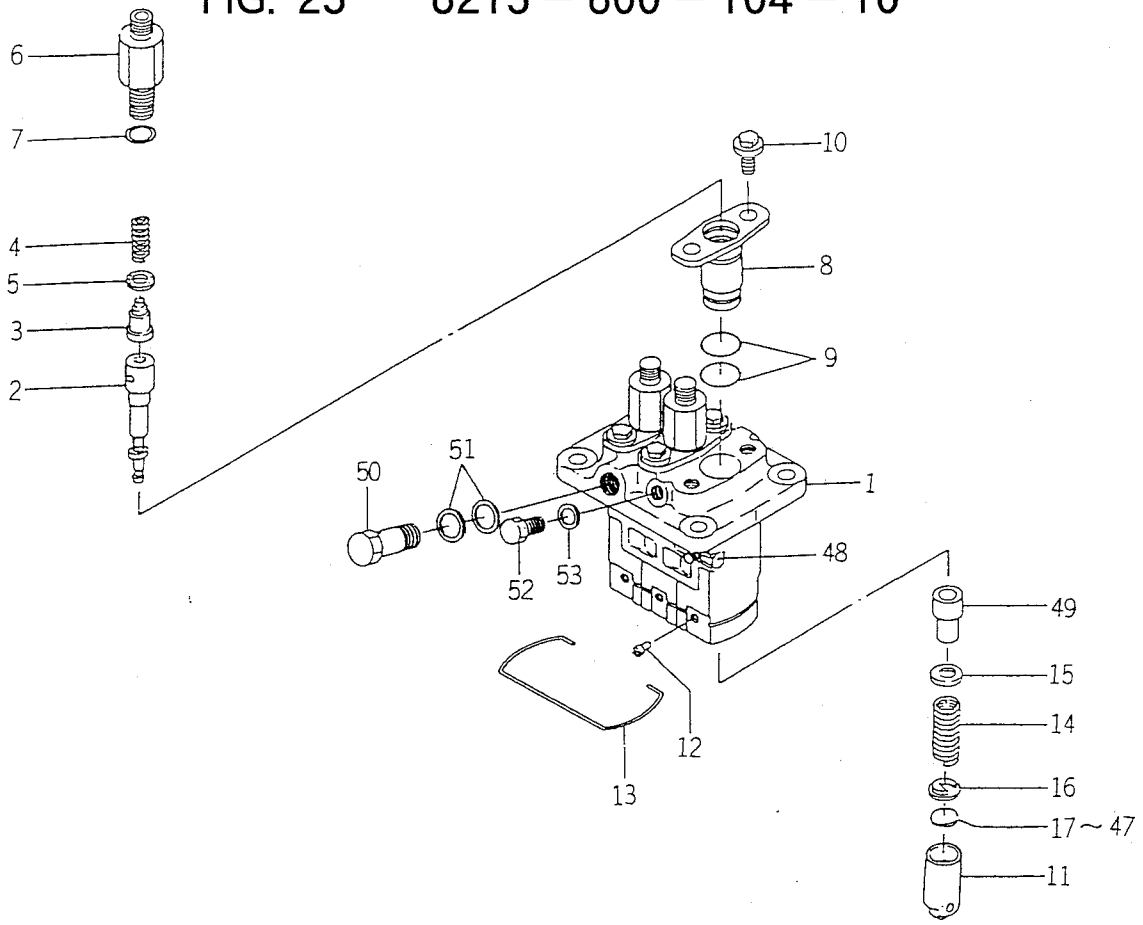

6215-6001

KEY	PART CODE	DESCRIPTION	QTY	TYPE OF MODEL E3CDB06		ITC	COL	GRP	REMARKS
51	6115 – 639 – 008 – 00	GASKET	2	*					
52	6215 – 619 – 024 – 00	BOLT	1	*					
53	6215 – 359 – 006 – 00	GASKET	1	*					

FIG. 26 6281 – 100 – 007 – 10

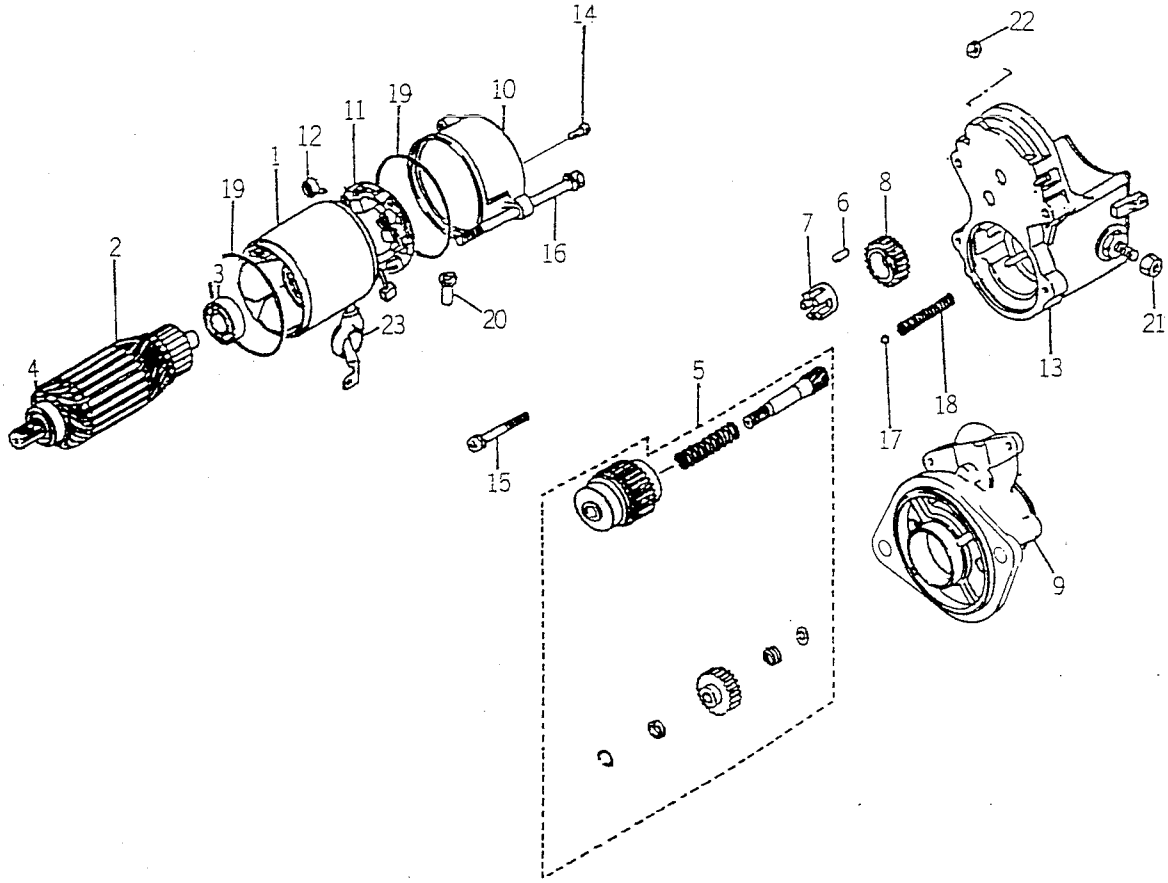

6281-1000

KEY	PART CODE	DESCRIPTION	QTY	TYPE OF MODEL E3CDB06		ITC	COL	GRP	REMARKS
1	6281 – 111 – 005 – 00	YOKE/STARTER ASSY	1	*					
2	6281 – 121 – 006 – 00	ARMATURE/STARTE ASSY	1	*					
3	6281 – 129 – 038 – 00	BEARING	1	*					
4	6281 – 129 – 039 – 00	BEARING	1	*					
5	6281 – 124 – 007 – 10	CLUTCH/STARTER ASSY	1	*					
6	6581 – 129 – 099 – 00	RORA	5	*					
7	6281 – 129 – 040 – 00	RETAINER	1	*					
8	6281 – 123 – 005 – 00	PINION/STARTER	1	*					
9	6281 – 129 – 045 – 00	HOUSING/STARTER ASSY	1	*					
10	6281 – 115 – 011 – 00	FRAME/STARTEREND	1	*					
11	6281 – 116 – 004 – 00	HOLDER/STARTER ASSY	1	*					
12	6581 – 117 – 007 – 00	SPRING,BRUSH	4	*					
13	6281 – 151 – 017 – 00	SWITCH/MAGNETIC ASSY	1	*					
14	6281 – 129 – 062 – 00	SCREW	2	*					
15	6281 – 129 – 042 – 00	BOLT/WS	2	*					
16	6281 – 129 – 043 – 00	BOLT/THROUGH	2	*					
17	6581 – 129 – 092 – 00	BALL	1	*					
18	6281 – 129 – 044 – 00	SPRING/RETURN	1	*					
19	6281 – 129 – 003 – 00	O – RING	2	*					
20	6281 – 115 – 016 – 00	BUSHING/DRAIN	1	*					
21	6909 – 111 – 508 – 00	NUT	1	*					
22	6281 – 229 – 041 – 00	NUT	1	*					
23	6281 – 115 – 010 – 00	COVER	1	*					

FIG. 27 6281 – 200 – 008 – 10

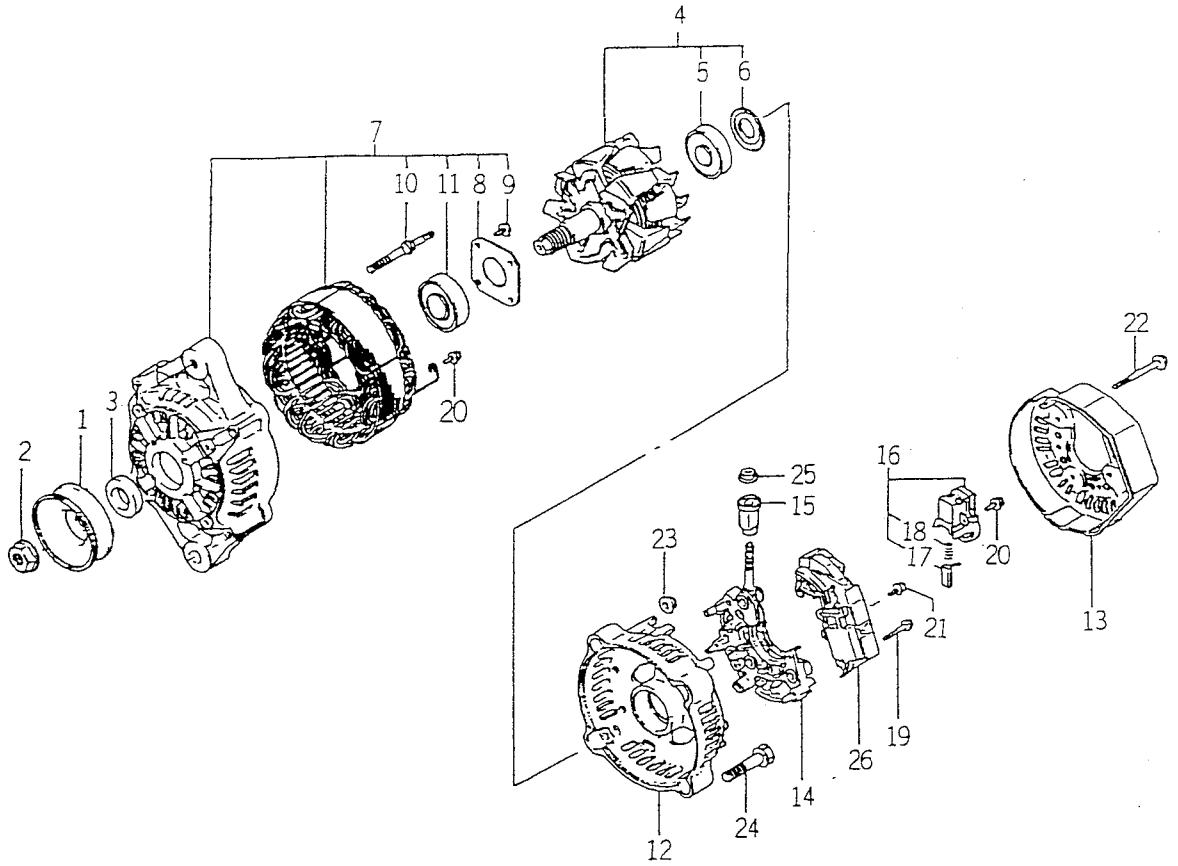

6281-2C0C

KEY	PART CODE	DESCRIPTION	QTY	TYPE OF MODEL E3CDB06		ITC	COL	GRP	REMARKS
1	6281 – 222 – 004 – 00	PULLEY	1	*					
2	6281 – 229 – 002 – 00	NUT	1	*					
3	6281 – 229 – 003 – 00	COLLOR	1	*					
4	6281 – 221 – 001 – 00	ROTOR ASSY	1	*					
5	6281 – 229 – 005 – 00	BEARING	1	*					
6	6281 – 229 – 004 – 00	COVER,BEARING	1	*					
7	6281 – 213 – 012 – 00	FRAME/DRIVEEND ASSY	1	*					
8	6281 – 229 – 006 – 00	PLATE	1	*					
9	6281 – 229 – 007 – 00	BOLT	4	*					
10	6281 – 229 – 008 – 00	BOLT	2	*					
11	6281 – 229 – 009 – 00	BEARING	1	*					
12	6281 – 214 – 003 – 00	FRAME	1	*					
13	6281 – 214 – 004 – 00	COVER	1	*					
14	6281 – 229 – 029 – 00	HOLDER ASSY	1	*					
15	6281 – 229 – 011 – 00	BUSH	1	*					
16	2145 – 161 – 211 – 00	HOLDER/BRUSH ASSY	1	*					
17	6281 – 215 – 001 – 00	BRUSH	2	*					
18	6281 – 216 – 001 – 00	SPRING	2	*					
19	6281 – 229 – 012 – 00	BOLT	2	*					
20	6281 – 229 – 013 – 00	BOLT	6	*					
21	6281 – 229 – 014 – 00	BOLT	1	*					
22	6281 – 229 – 015 – 00	BOLT	3	*					
23	6281 – 229 – 016 – 00	NUT	2	*					
24	6281 – 229 – 017 – 00	BOLT	2	*					
25	6281 – 229 – 018 – 00	NUT	1	*					

FIG. 27 6281 – 200 – 008 – 10

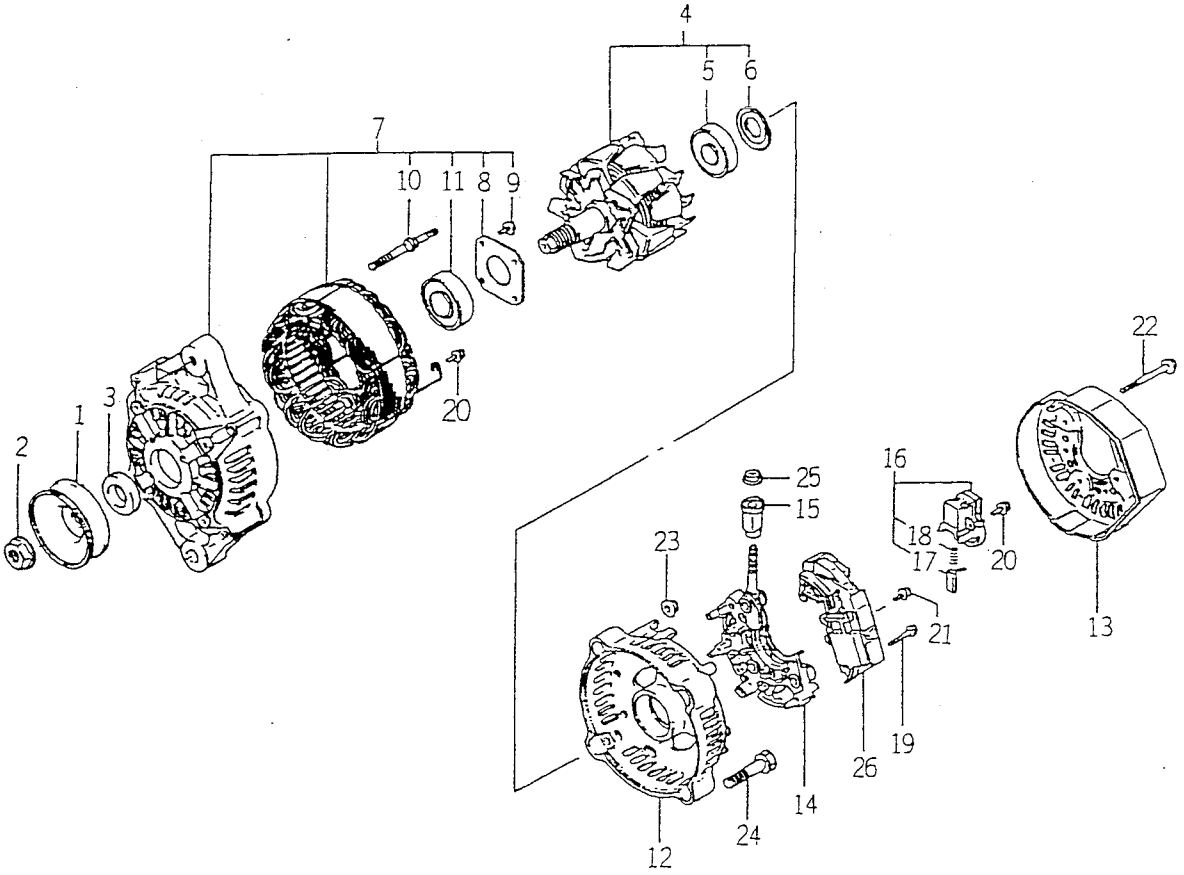

6281-20CC

KEY	PART CODE	DESCRIPTION	QTY	TYPE OF MODEL E3CDB06		ITC	COL	GRP	REMARKS
26	6281 – 271 – 002 – 00	REGULATOR ASSY	1	*					

ENGINE

E3CD-B05···TK533

ENGINE

6005 - 097 - 230 - 00

FIG. 1 CYLINDER HEAD

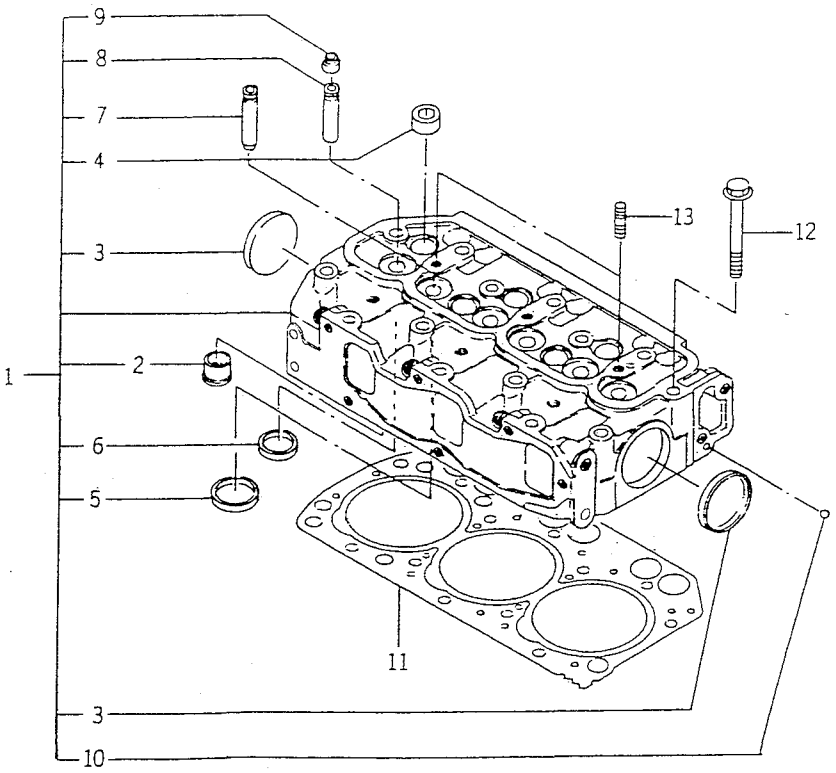

6005-101P

KEY	PART CODE	DESCRIPTION	QTY	TYPE OF MODEL E3CDB05		ITC	COL	GRP	REMARKS
1	6211 - 110 - 054 - 10	CYLINDERHEAD ASSY	1	*					
2	6211 - 150 - 032 - 10	HOTPLUG ASSY	3	*					
3	6209 - 610 - 003 - 00	CUP/SEALING/50	2	*					
4	6209 - 605 - 004 - 10	PLUG/PT1/2	5	*					
5	6211 - 715 - 006 - 00	VALVESEAT/INLET	3	*					
6	6211 - 711 - 005 - 00	VALVESEAT/EXHAUST	3	*					
7	6211 - 721 - 003 - 10	VALVEGUIDE	3	*					
8	6211 - 721 - 004 - 00	VALVEGUIDE	3	*					
9	6212 - 569 - 002 - 00	SEAL,OIL	6	*					
10	V682 - 200 - 000 - 60	BALL	1	*					
11	6211 - 141 - 023 - 40	GASKET/CYLINDERHEAD	1	*					
12	6209 - 000 - 005 - 00	BOLT	14	*					
13	6909 - 830 - 212 - 00	STUD,HEAD COVER	2	*					

FIG. 2 CYLINDER HEAD COVER

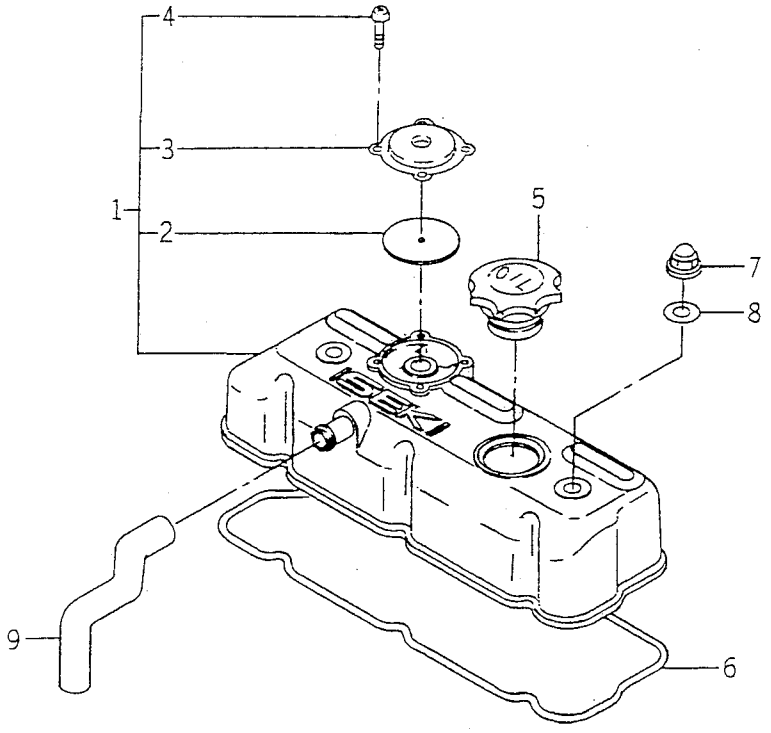

6005-110

KEY	PART CODE	DESCRIPTION	QTY	TYPE OF MODEL E3CDB05		ITC	COL	GRP	REMARKS
1	6211 - 170 - 007 - 20	COVER/CYLINDER/HEAD	1	*					
2	6211 - 179 - 011 - 20	RUBBERFLANGE	1	*					
3	6211 - 291 - 010 - 00	COVER/BLOWBY	1	*					
4	V195 - 164 - 008 - 30	SCREW/TAPPING	4	*					
5	6211 - 751 - 001 - 10	CAP,OIL FILLER	1	*					
6	6211 - 173 - 005 - 00	SEAL/CYL HEAD/UNDER	1	*					
7	6209 - 490 - 002 - 00	NUT,CAP	2	*					
8	6909 - 572 - 008 - 00	PACKING	2	*					
9	6209 - 360 - 031 - 00	HOSE/RUBBER	1	*					

FIG. 3 INLET MANIFOLD

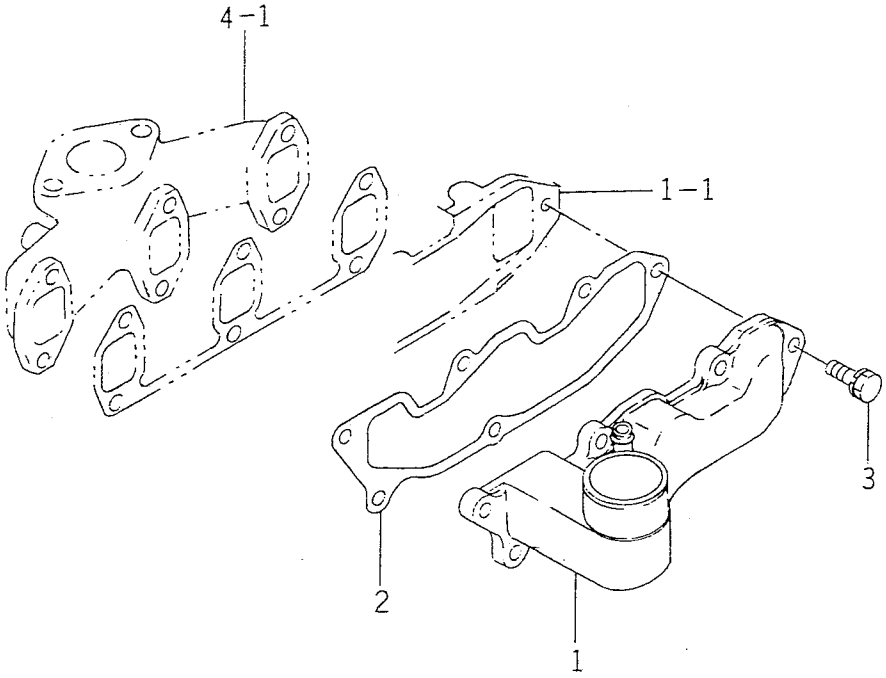

6005-120

KEY	PART CODE	DESCRIPTION	QTY	TYPE OF MODEL E3CDB05		ITC	COL	GRP	REMARKS
1	6214 - 110 - 003 - 00	MANIFOLD/INLET ASSY	1	*					
2	6214 - 115 - 003 - 10	GASKET/INLETMANIFOLD	1	*					
3	V211 - 560 - 802 - 50	BOLT,SEMS/M8X25 7T	6	*					

FIG. 4 EXHAUST MANIFOLD

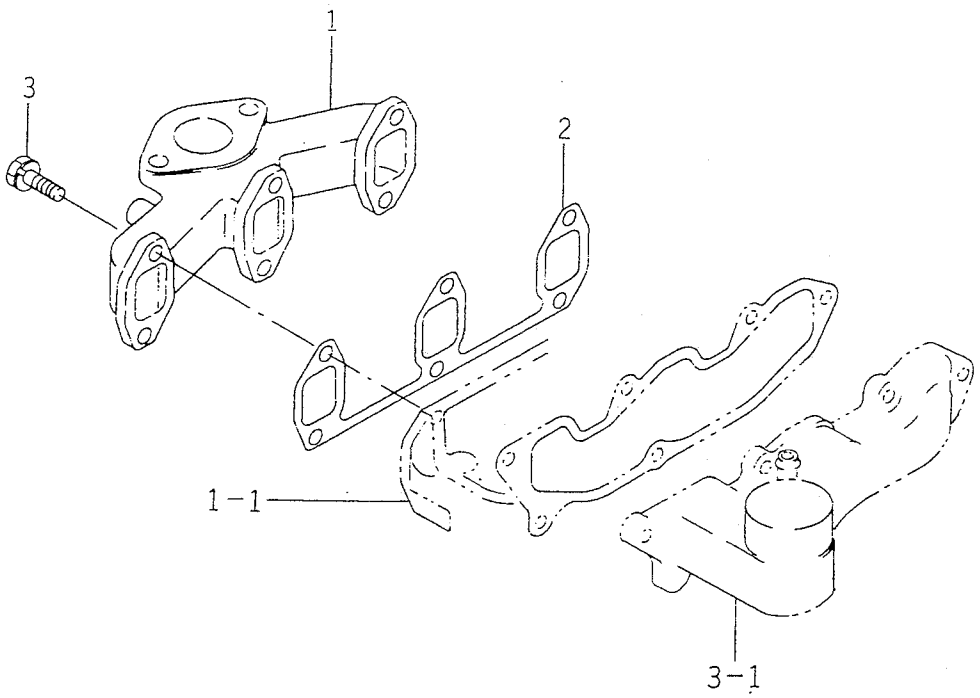

6005-140

KEY	PART CODE	DESCRIPTION	QTY	TYPE OF MODEL E3CDB05		ITC	COL	GRP	REMARKS
1	6214-141-023-00	MANIFOLD/EXHAUST	1	*					
2	6214-145-004-20	GASHET/EXH MANIFOLD	1	*					
3	V211-560-802-50	BOLT,SEMS/M8X25 7T	6	*					

FIG. 5 CYLINDER BLOCK

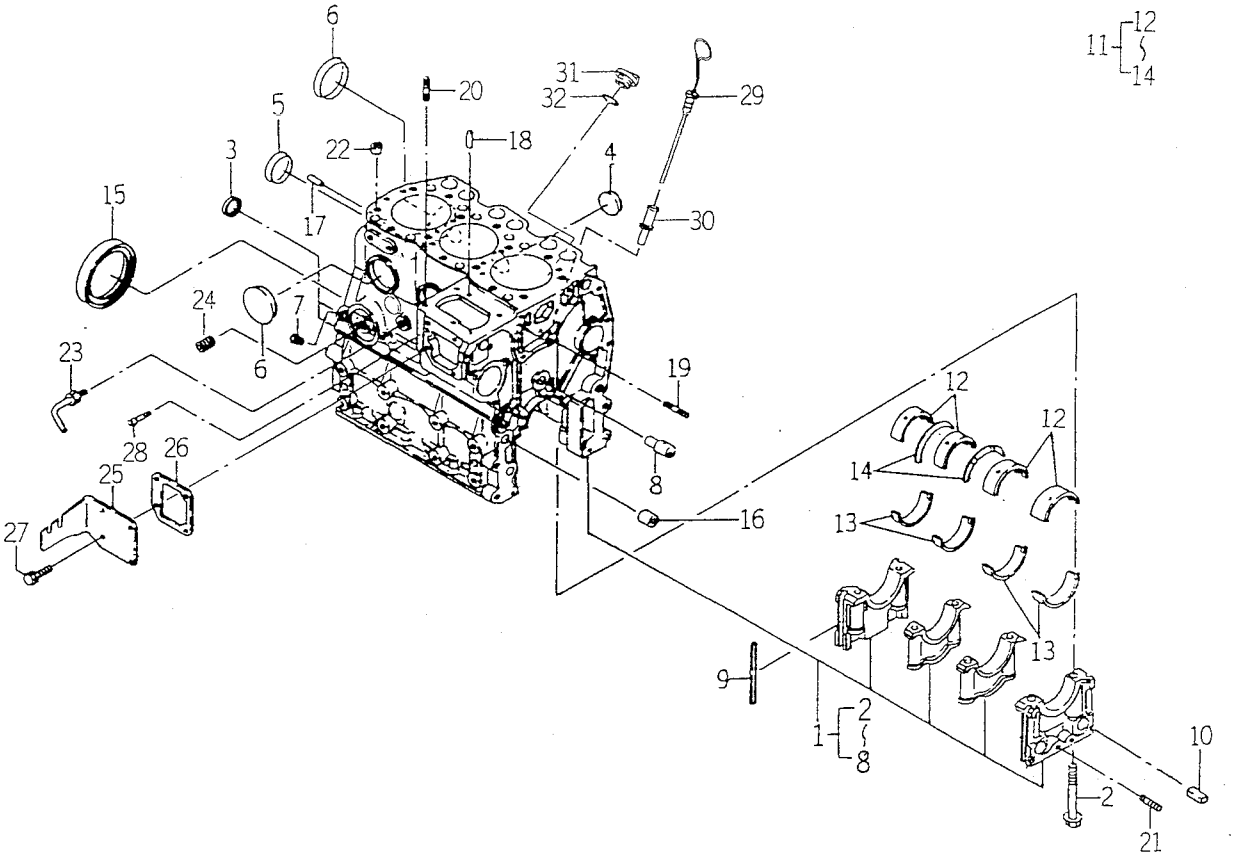

6005-201T

KEY	PART CODE	DESCRIPTION	QTY	TYPE OF MODEL E3CDB05		ITC	COL	GRP	REMARKS
1	6211 - 210 - 056 - 10	CYLINDERBLOCK ASSY	1	*					
2	6209 - 000 - 006 - 00	BOLT	8	*					
3	6911 - 129 - 081 - 00	CAP,SEALING	2	*					
4	6209 - 610 - 001 - 00	CAP,SEALING	2	*					
5	6911 - 219 - 195 - 00	CAP,SEALING	1	*					
6	6209 - 610 - 003 - 00	CUP/SEALING/50	3	*					
7	6509 - 605 - 019 - 10	PLUG	8	*					
8	6212 - 531 - 008 - 20	PIN/IDLEGEAR	1	*					
9	6211 - 258 - 001 - 00	SEAL,BEARING CAP	4	*					
10	6211 - 258 - 002 - 00	SEAL,BEARING CAP/7	2	*					
11	6211 - 510 - 008 - 00	BEARING/CRANK SET	1	*					
12	6211 - 511 - 007 - 00	BEARING/CRANK/UPPER	4	*					
13	6211 - 511 - 008 - 00	BEARING/CRANK/LOWER	4	*					
14	6211 - 599 - 004 - 00	BEARING/THRUST/CRANK	2	*					
15	6209 - 625 - 003 - 10	OILSEAL	1	*					
16	6209 - 749 - 001 - 20	PIN/TUBE	2	*					
17	6908 - 160 - 816 - 00	PIN	2	*					
18	6209 - 740 - 005 - 00	PIN	2	*					
19	6904 - 110 - 840 - 00	STUD/M8X40	1	*					
20	6904 - 110 - 822 - 00	STUD	3	*					
21	V251 - 340 - 806 - 00	BOLT/STUD	1	*					
22	6294 - 453 - 002 - 00	DOWEL	2	*					
23	6213 - 721 - 007 - 00	PIPE/WATERDRAIN	1	*					
24	6213 - 319 - 001 - 00	CONNECTOR,OIL FILTER	1	*					
25	6211 - 291 - 015 - 10	COVER/INJECTIONPUMP	1	*					

FIG. 5 CYLINDER BLOCK

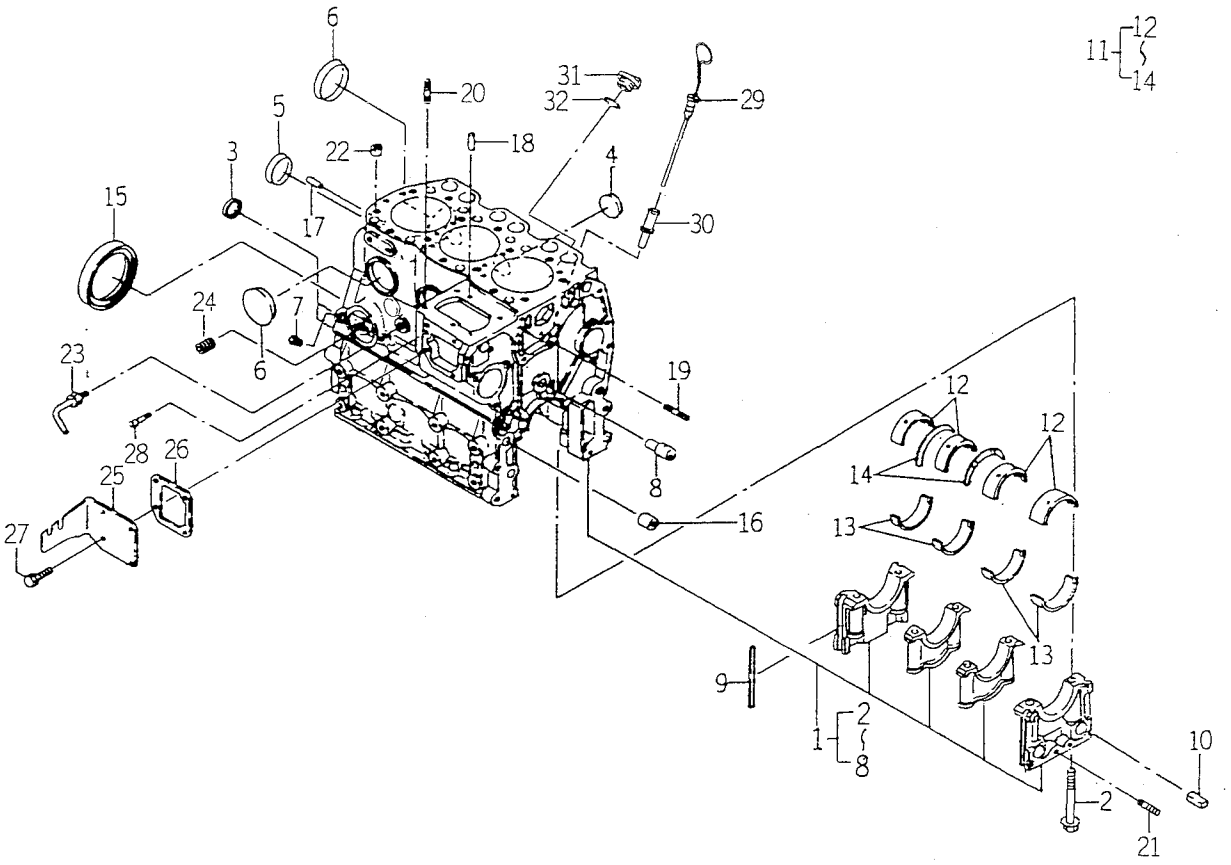

6005-201T

KEY	PART CODE	DESCRIPTION	QTY	TYPE OF MODEL E3CDB05		ITC	COL	GRP	REMARKS
26	6211 - 292 - 001 - 20	GASKET/COVER	1	*					
27	6901 - 910 - 614 - 00	BOLT	4	*					
28	6215 - 549 - 013 - 00	PIN	1	*					
29	6211 - 760 - 020 - 00	LEVELGAGE	1	*					
30	6211 - 766 - 006 - 10	GUIDE/LEVELGAGE COMP	1	*					
31	6211 - 751 - 002 - 00	CAP/OILFILLER	1	*					
32	V720 - 103 - 502 - 50	O - RING/P25	1	*					

FIG. 6 BEARING/UNDER SIZE (OPTION)

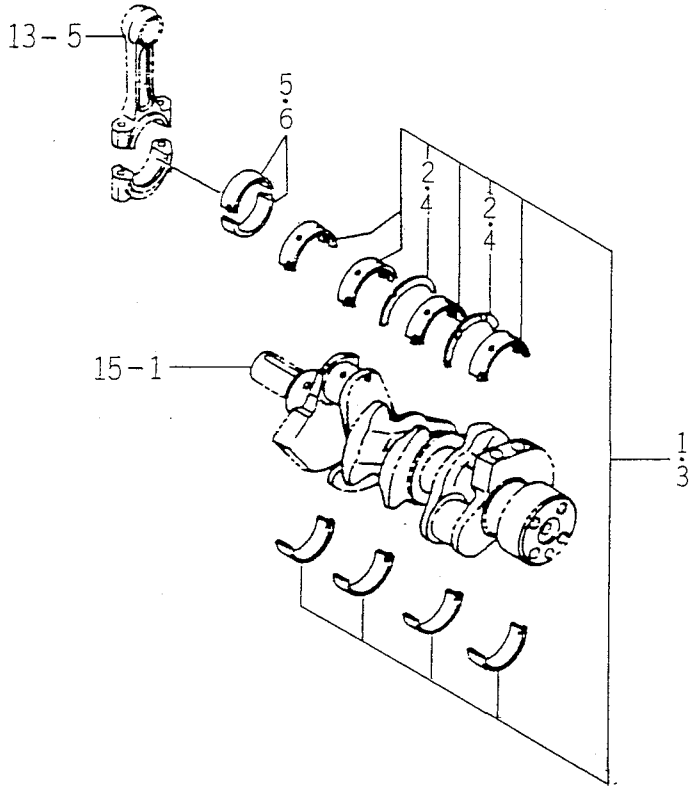

6005-209

KEY	PART CODE	DESCRIPTION	QTY	TYPE OF MODEL E3CDB05		ITC	COL	GRP	REMARKS
1	6211 - 530 - 008 - 00	BEARING/CRANK/UNDER	1	T					025
2	6211 - 599 - 004 - 00	BEARING/THRUST/CRANK	2	T					
3	6211 - 540 - 008 - 00	BEARING/CRANK/UNDER	1	T					050
4	6211 - 599 - 004 - 00	BEARING/THRUST/CRANK	2	T					
5	6212 - 263 - 009 - 00	BEARING/CONROD/UNDER	6	T					025
6	6212 - 264 - 009 - 00	BEARING/CONROD/UNDER	6	T					050

FIG. 7 OIL PAN

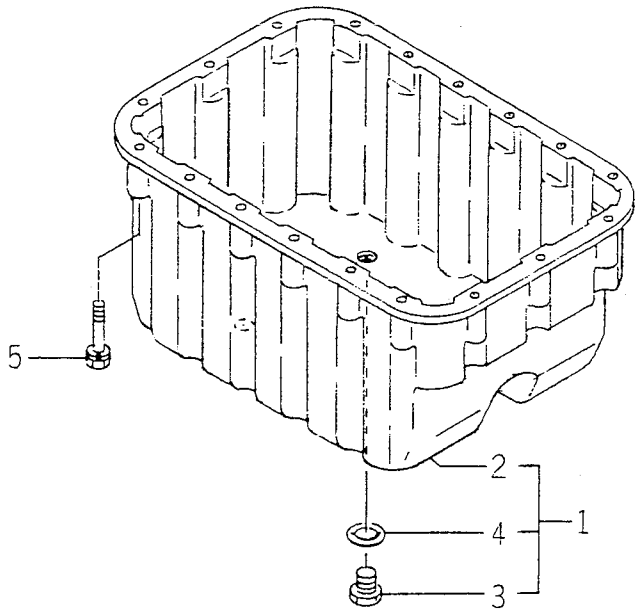

6005-210D

KEY	PART CODE	DESCRIPTION	QTY	TYPE OF MODEL E3CDB05		ITC	COL	GRP	REMARKS
1	6211 - 360 - 031 - 10	OILPAN ASSY	1	*					
2	6211 - 361 - 038 - 10	OILPAN	1	*					
3	3625 - 301 - 002 - 00	PLUG (M14X15)	2	*					
4	V720 - 102 - 401 - 80	O-RING/P18	2	*					
5	6901 - 910 - 635 - 00	BOLT	18	*					

FIG. 8 REAR PLATE

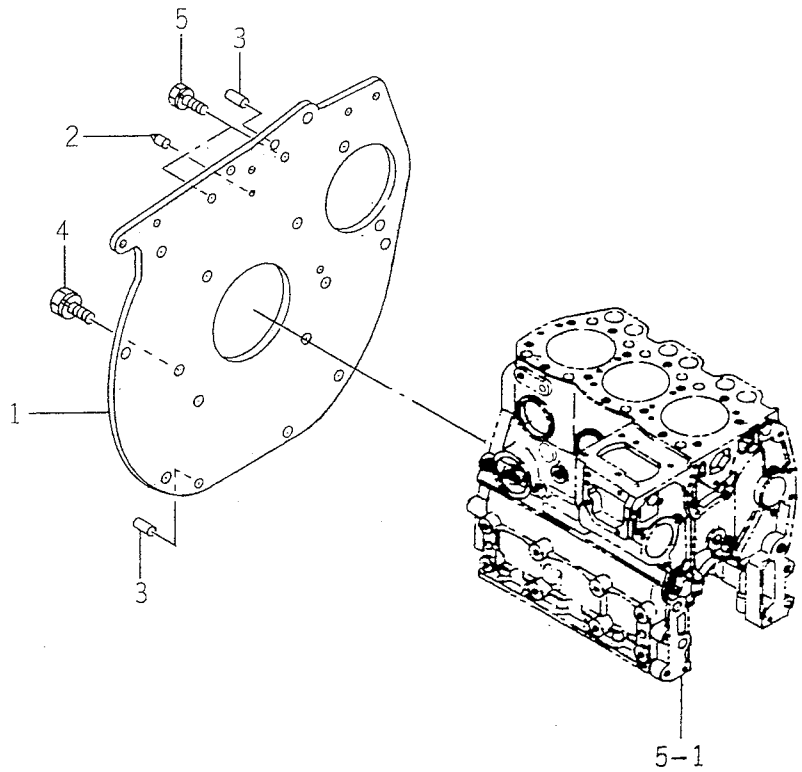

6005-220D

KEY	PART CODE	DESCRIPTION	QTY	TYPE OF MODEL		ITC	COL	GRP	REMARKS
				E3CDB05					
1	6211 - 341 - 030 - 00	PLATE/REAR	1	*					
2	6211 - 342 - 003 - 10	POINTER	1	*					
3	V523 - 101 - 001 - 80	PIN	2	*					
4	6209 - 030 - 091 - 00	BOLT/WS	6	*					
5	6901 - 911 - 025 - 00	BOLT	2	*					

FIG. 9 TIMING GEAR CASE

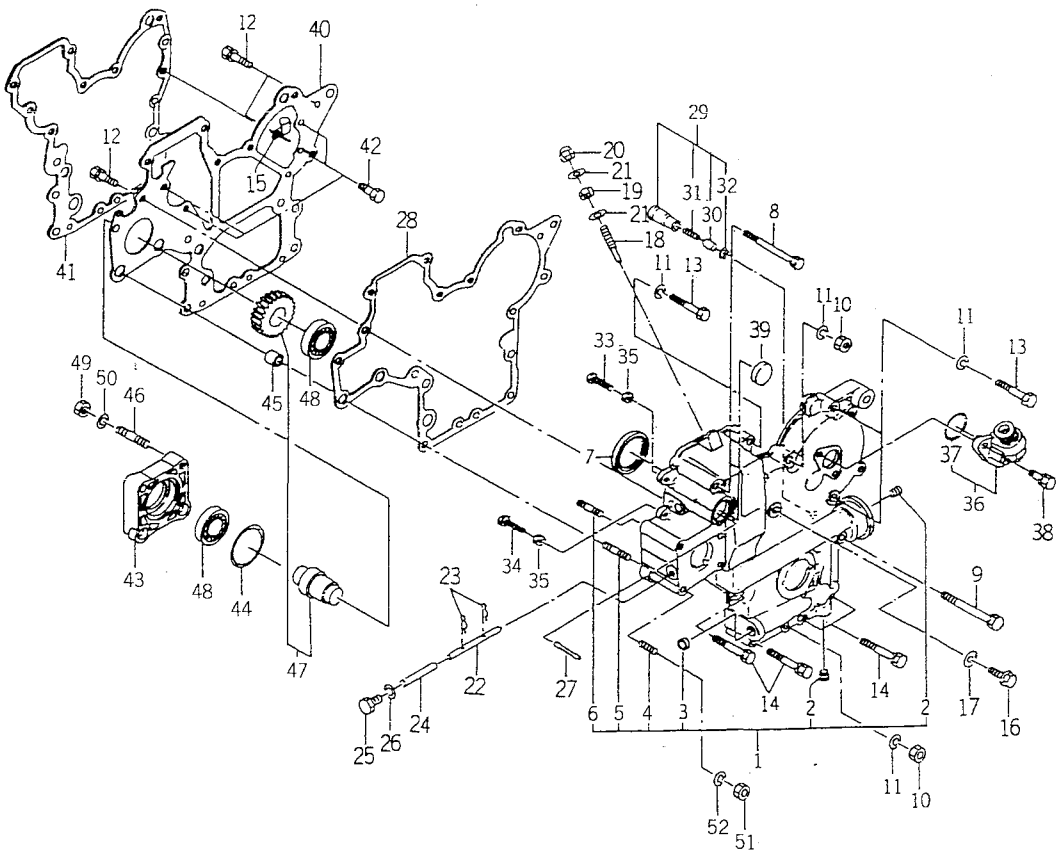

6005-240B

KEY	PART CODE	DESCRIPTION	QTY	TYPE OF MODEL E3CDB05		ITC	COL	GRP	REMARKS
1	6211 - 310 - 009 - 30	GEARCASE ASSY	1	*					
2	6209 - 605 - 003 - 00	PLUG/PT1/4	2	*					
3	6209 - 610 - 004 - 00	CUP/SEALING/20	1	*					
4	6904 - 110 - 822 - 00	STUD	4	*					
5	6904 - 110 - 855 - 00	STUD	2	*					
6	6904 - 110 - 850 - 00	STUD	1	*					
7	6209 - 625 - 002 - 00	SEAL,OIL	1	*					
8	6209 - 030 - 005 - 00	BOLT/M8X85	1	*					
9	6209 - 030 - 006 - 00	BOLT/M8X75	2	*					
10	6909 - 110 - 508 - 00	NUT/M8	2	*					
11	6909 - 150 - 508 - 00	WASHER	5	*					
12	V211 - 560 - 802 - 00	BOLT/M8X20	3	*					
13	6901 - 050 - 850 - 00	BOLT/M8X45	3	*					
14	6209 - 030 - 095 - 00	BOLT/WS	4	*					
15	1650 - 650 - 015 - 00	CLAMP	1	*					
16	6209 - 046 - 001 - 00	BOLT/M8X30	1	*					
17	6209 - 500 - 003 - 00	WASHER/08X14X01	1	*					
18	6215 - 546 - 003 - 00	STOPPER/FULLLOAD	1	*					
19	6209 - 409 - 001 - 00	NUT/M8	1	*					
20	V341 - 120 - 008 - 00	NUT,CAP/M 8	1	*					
21	6209 - 920 - 002 - 00	PACKING	2	*					
22	6215 - 542 - 004 - 20	PIN/ARM	1	*					
23	P117 - 303 - 003 - 00	PIN/SNAP	2	*					
24	6215 - 542 - 005 - 00	PIN	1	*					
25	6909 - 202 - 308 - 00	PLUG	1	*					

FIG. 9 TIMING GEAR CASE

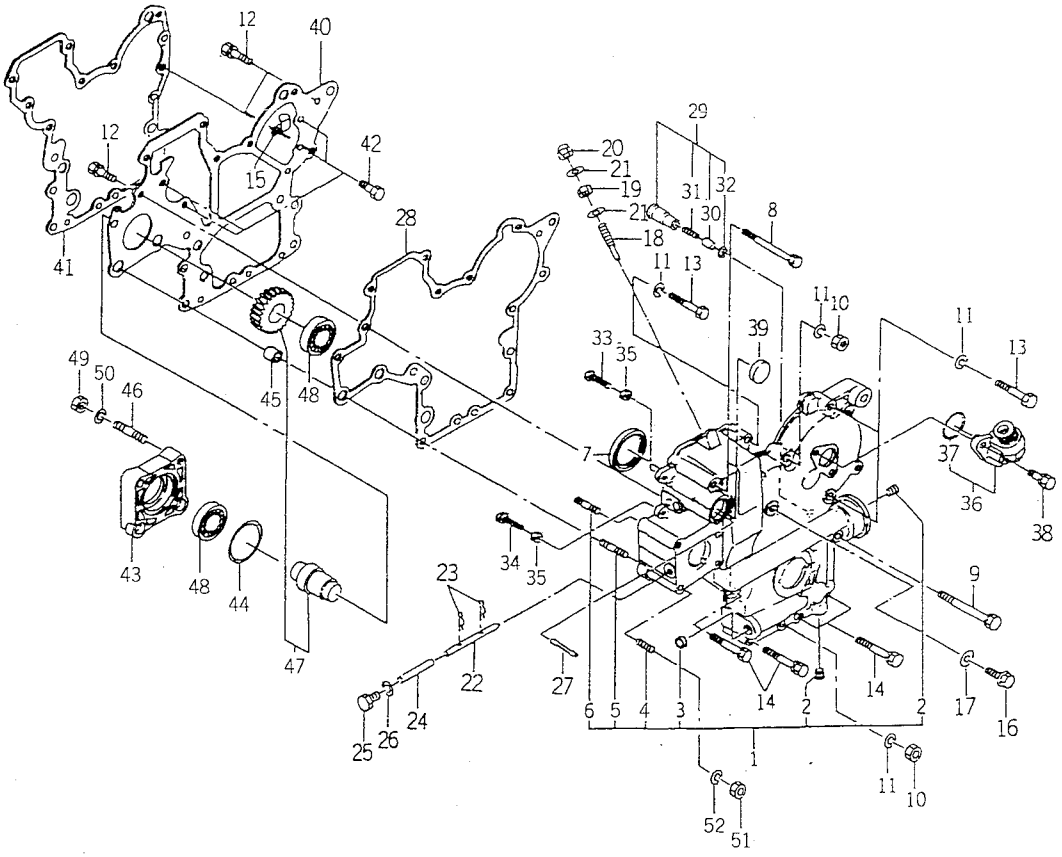

6005-240B

KEY	PART CODE	DESCRIPTION	QTY	TYPE OF MODEL E3CDB05		I T C	C O L	G R P	REMARKS
26	6209 - 500 - 003 - 00	WASHER/08X14X01	1	*					
27	6209 - 740 - 001 - 00	PIN,GROOVE	1	*					
28	6211 - 312 - 005 - 10	GASKET/GEARCASE	1	*					
29	6213 - 160 - 002 - 00	VALVE/RELIEF ASSY	1	*					
30	6213 - 161 - 001 - 00	PISTON/RELIEF VALVE	1	*					
31	6213 - 164 - 001 - 00	SPRING/RELIEF VALVE	1	*					
32	V705 - 140 - 012 - 00	RING,SNAP/12 C	1	*					
33	6209 - 050 - 001 - 00	BOLT/M6	1	*					
34	6209 - 050 - 002 - 00	BOLT/M6	1	*					
35	6909 - 110 - 406 - 00	NUT	2	*					
36	6219 - 310 - 003 - 10	DRIVE/TACHOMETE ASSY	1	*					
37	V723 - 102 - 002 - 40	RING/O	1	*					
38	6901 - 910 - 616 - 00	BOLT,SEMS/M6X16	2	*					
39	3625 - 540 - 004 - 00	CAP,BLANK/30	1	*					
40	6211 - 311 - 013 - 00	PLATE/FRONT	1	*					
41	6211 - 312 - 006 - 10	GASKET/PLATE	1	*					
42	6902 - 050 - 816 - 00	BOLT	4	*					
43	6211 - 319 - 003 - 00	SPACER	1	*					
44	V723 - 102 - 005 - 00	O - RING 1A S50	1	*					
45	6209 - 749 - 001 - 20	PIN/TUBE	2	*					
46	6904 - 110 - 822 - 00	STUD	1	*					
47	6212 - 530 - 005 - 10	SHAFT/HYDRAULIC ASSY	1	*					
48	V600 - 110 - 600 - 50	BEARING,RB/6005	2	*					
49	6909 - 110 - 408 - 00	NUT/M8	4	*					
50	6909 - 150 - 508 - 00	WASHER	4	*					

FIG. 9 TIMING GEAR CASE

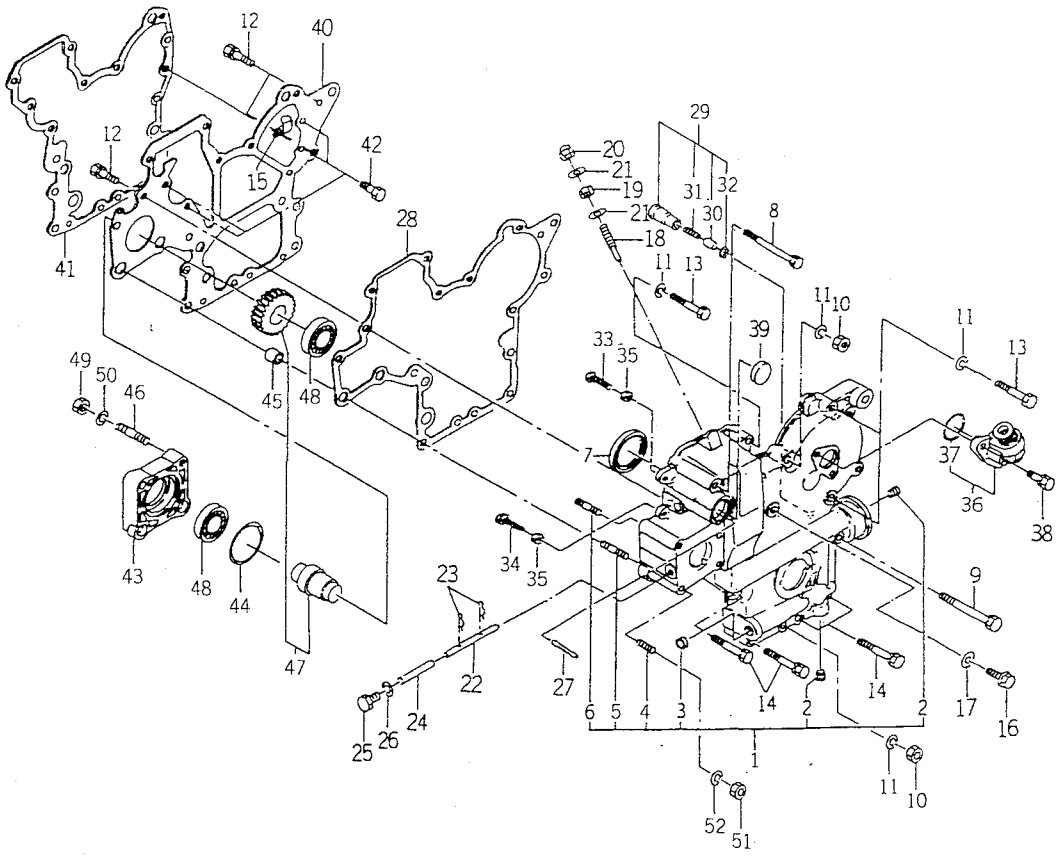

6005-240B

KEY	PART CODE	DESCRIPTION	QTY	TYPE OF MODEL E3CDB05		ITC	COL	GRP	REMARKS
51	6909 - 110 - 408 - 00	NUT/M8	4	*					
52	6909 - 150 - 508 - 00	WASHER	4	*					

FIG. 10 HANGER

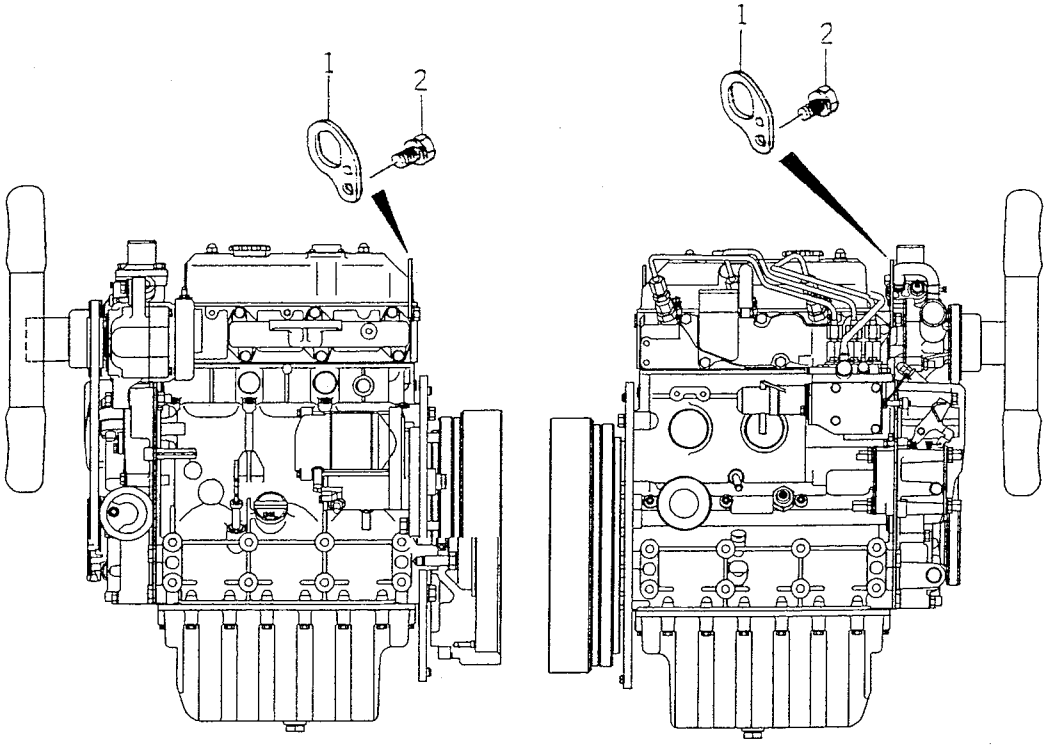

6003-250

KEY	PART CODE	DESCRIPTION	QTY	TYPE OF MODEL E3CDB05		ITC	COL	GRP	REMARKS
1	6211 - 777 - 007 - 20	HANGER	2	*					
2	6901 - 911 - 020 - 00	BOLT,SEMS/M10X20	2	*					

FIG. 11 VALVE

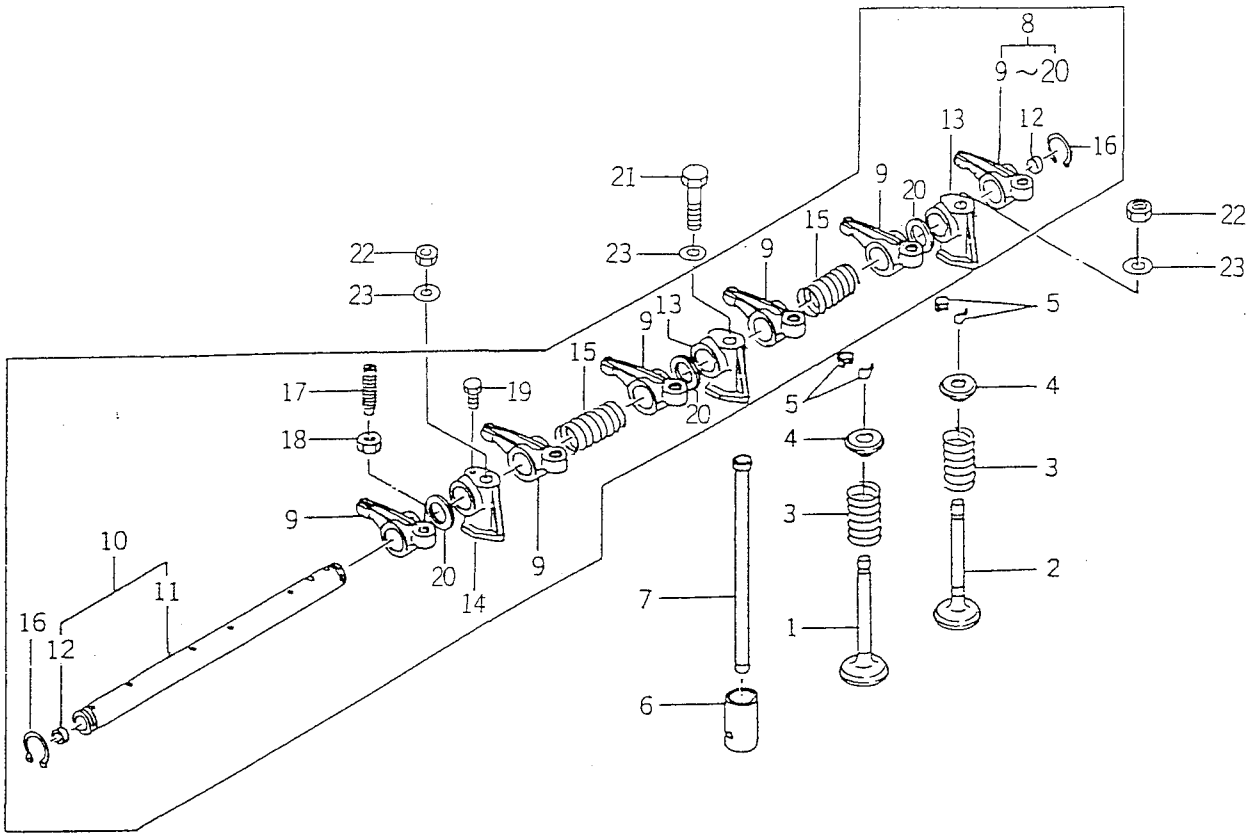

6005-301B

KEY	PART CODE	DESCRIPTION	QTY	TYPE OF MODEL E3CDB05		ITC	COL	GRP	REMARKS
1	6212 - 551 - 008 - 00	VALVE/INTAKE	3	*					
2	6212 - 552 - 008 - 00	VALVE/EXHAUST	3	*					
3	6212 - 561 - 003 - 00	SPRING/VALVE	6	*					
4	6212 - 563 - 001 - 00	SEAT,VALVE SPRING	6	*					
5	6212 - 565 - 001 - 00	CUTTER,VALVE	12	*					
6	6212 - 571 - 002 - 20	TAPPET	6	*					
7	6212 - 575 - 003 - 00	PUSHROD	6	*					
8	6212 - 600 - 009 - 10	ROCKERSHAFT ASSY	1	*					
9	6212 - 611 - 004 - 10	ROCKERARM	6	*					
10	6212 - 620 - 008 - 10	SHAFT/ROCKERARM ASSY	1	*					
11	6212 - 621 - 008 - 10	SHAFT/ROCKERARM	1	*					
12	6212 - 626 - 002 - 10	PLUG	2	*					
13	6212 - 628 - 006 - 00	BRACKET/ROCKERSHAFT	2	*					
14	6212 - 628 - 007 - 00	BRACKET/ROCKERSHAFT	1	*					
15	6209 - 940 - 004 - 00	SPRING	2	*					
16	V704 - 140 - 016 - 00	RING,SNAP/16 C	2	*					
17	6212 - 616 - 002 - 00	SCREW ADJUST	6	*					
18	6209 - 409 - 003 - 00	NUT	6	*					
19	6209 - 000 - 002 - 00	BOLT	1	*					
20	6212 - 619 - 001 - 20	SPACER/ROCKERARM	3	*					
21	6901 - 055 - 855 - 00	BOLT/M8X55	1	*					
22	6909 - 110 - 508 - 00	NUT/M8	2	*					
23	6209 - 500 - 005 - 00	WASHER/08X15.5X1.6	3	*					

FIG. 12 CAM SHAFT

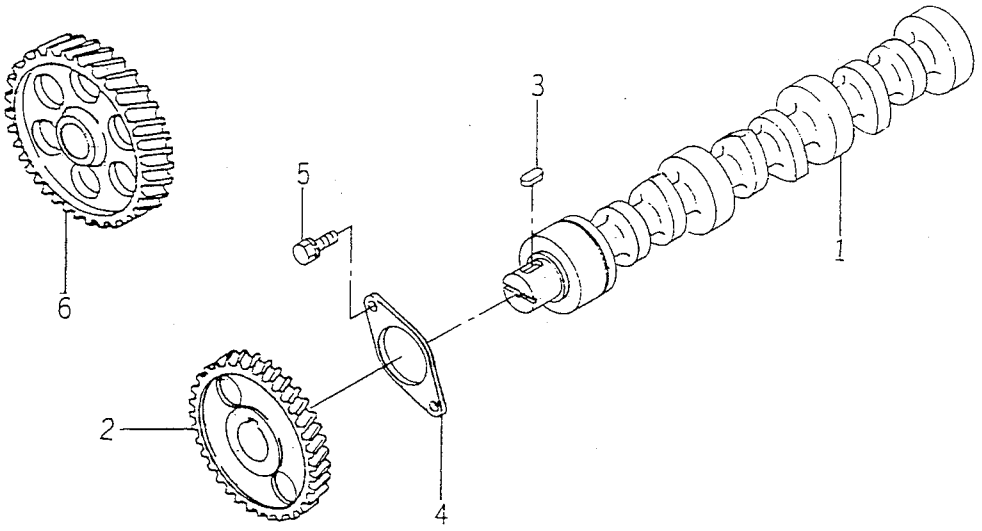

6005-310

KEY	PART CODE	DESCRIPTION	QTY	TYPE OF MODEL E3CDB05		ITC	COL	GRP	REMARKS
1	6212 - 511 - 005 - 00	CAMSHAFT	1	*					
2	6212 - 522 - 004 - 00	GEAR/CAMSHAFT	1	*					
3	6908 - 000 - 716 - 00	KEY	1	*					
4	6212 - 535 - 007 - 00	PLATE/THRUST	1	*					
5	6901 - 910 - 612 - 00	BOLT,SEMS/M6X12	2	*					
6	6212 - 523 - 006 - 30	GEAR/IDLE ASSY	1	*					

FIG. 13 PISTON

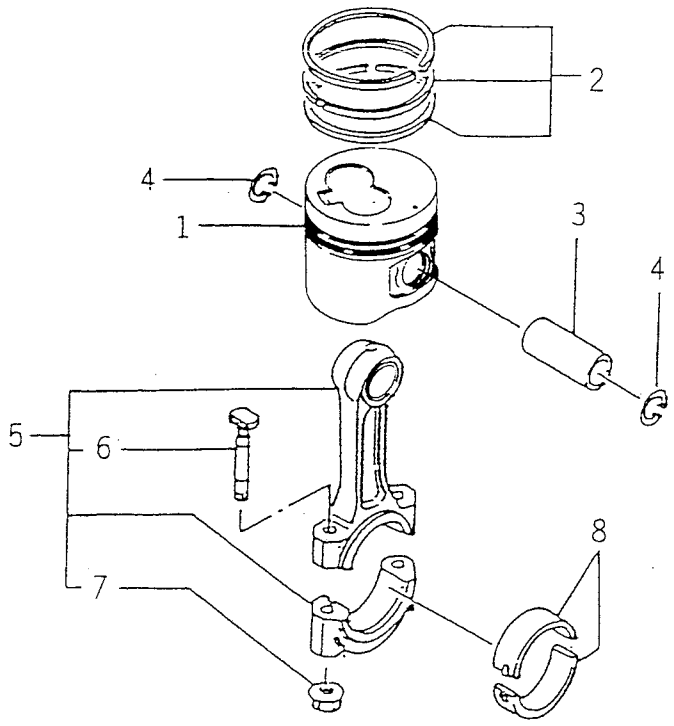

6005-340G

KEY	PART CODE	DESCRIPTION	QTY	TYPE OF MODEL E3CDB05		ITC	COL	GRP	REMARKS
1	6212 - 111 - 039 - 40	PISTON	3	*					87
2	6212 - 121 - 013 - 20	RING/PISTON SET	3	*					87
3	6512 - 211 - 018 - 00	PIN,PISTON	3	*					
4	6909 - 950 - 115 - 00	RING SNAP	6	*					
5	6212 - 230 - 005 - 00	CONNECTINGROD ASSY	3	*					
6	6212 - 235 - 002 - 10	BOLT/CONNECTINGROD	6	*					
7	6209 - 440 - 002 - 10	NUT/FLANGE	6	*					
8	6212 - 261 - 009 - 10	BEARING/CON ROD	6	*					

FIG. 14 PISTON／OVER SIZE (OPTION)

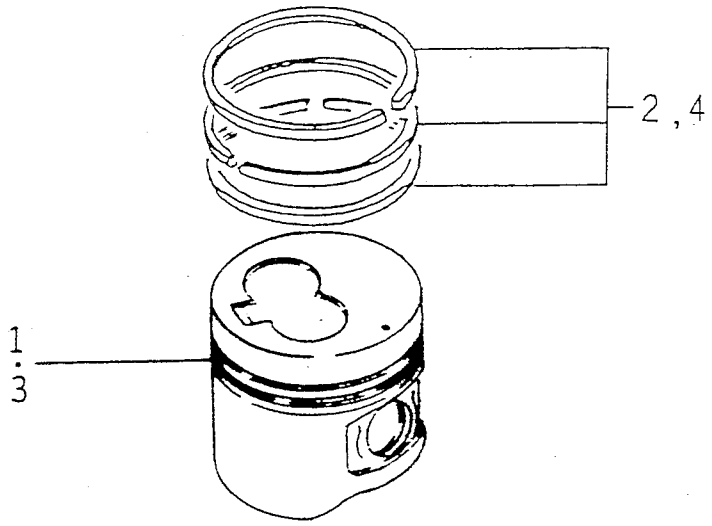

6005-349C

KEY	PART CODE	DESCRIPTION	QTY	TYPE OF MODEL		I T C	C O L	G R P	REMARKS
				E3CDB05					
1	6212 - 114 - 039 - 40	PISTON／OV	3	T					87.5
2	6212 - 124 - 013 - 20	RING／PISTON／OV SET	3	T					87.5
3	6212 - 116 - 039 - 40	PISTON／OV	3	T					88.0
4	6212 - 126 - 013 - 20	RING／PISTON／OV SET	3	T					88.0

FIG. 15 CRANK SHAFT

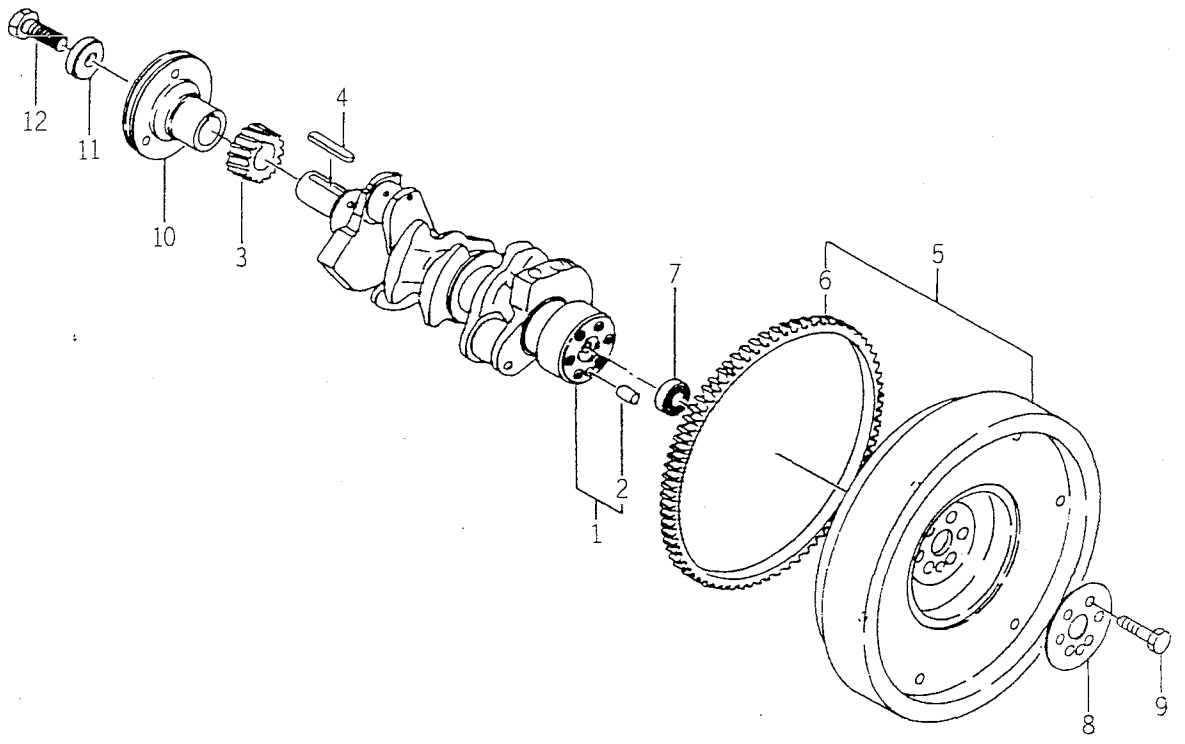

6005-350E

KEY	PART CODE	DESCRIPTION	QTY	TYPE OF MODEL E3CDB05		ITC	COL	GRP	REMARKS
1	6212 - 310 - 011 - 20	CRANKSHAFT ASSY	1	*					
2	V523 - 101 - 001 - 80	PIN	1	*					
3	6212 - 521 - 002 - 00	GEAR,CRANK SHAFT	1	*					
4	6908 - 000 - 750 - 00	KEY	1	*					
5	6212 - 330 - 029 - 30	FLYWHEEL ASSY	1	*					
6	6212 - 333 - 002 - 00	RINGGEAR	1	*					
7	V600 - 150 - 600 - 20	BEARING,RB/6002SS	1	*					
8	6212 - 336 - 001 - 00	WASHER	1	*					
9	6209 - 000 - 013 - 00	BOLT	6	*					
10	6212 - 371 - 022 - 00	PULLEY/CRANK	1	*					
11	6212 - 379 - 001 - 00	WASHER	1	*					
12	6901 - 066 - 645 - 00	BOLT	1	*					

FIG. 16 OIL PUMP

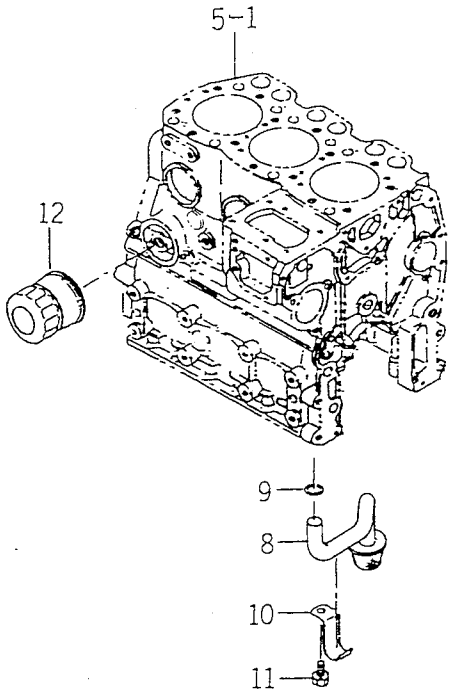

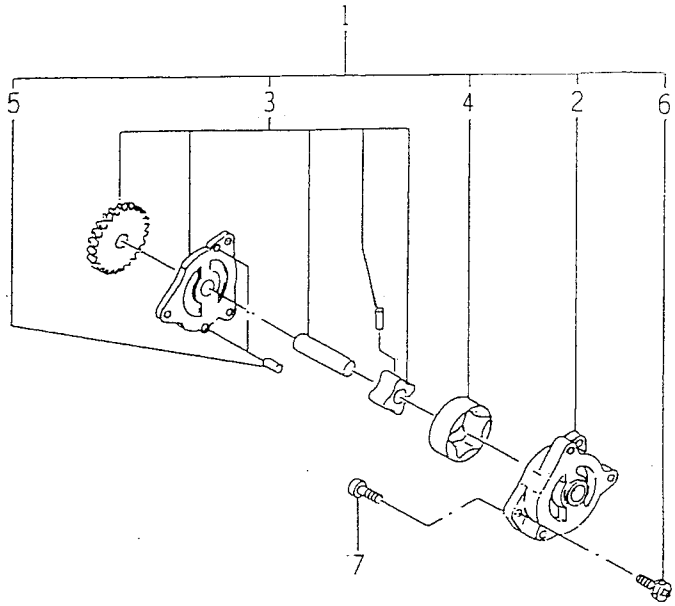

6GC5-401D

KEY	PART CODE	DESCRIPTION	QTY	TYPE OF MODEL E3CDB05		ITC	COL	GRP	REMARKS
1	6213 - 100 - 004 - 20	OILPUMP ASSY	1	*					
2	6213 - 111 - 002 - 20	BODY/OILPUMP	1	*					
3	6213 - 120 - 002 - 20	GEAR/OILPUMP ASSY	1	*					
4	6213 - 125 - 002 - 10	ROTOR/OUTER	1	*					
5	6213 - 129 - 003 - 00	PIN/STRAIGHT	2	*					
6	6213 - 119 - 001 - 00	BOLT/WS	3	*					
7	V220 - 540 - 602 - 00	SCREW/SOCKET	3	*					
8	6213 - 140 - 013 - 00	STRAINER	1	*					
9	V720 - 113 - 502 - 20	RING/O	1	*					
10	6213 - 149 - 003 - 20	CLAMP/STRAINER	1	*					
11	6901 - 910 - 816 - 00	BOLT,SEMS/M8X16	1	*					
12	6213 - 240 - 002 - 00	CARTRIDGE,OIL FILTER	1	*					

FIG. 17 WATER PUMP

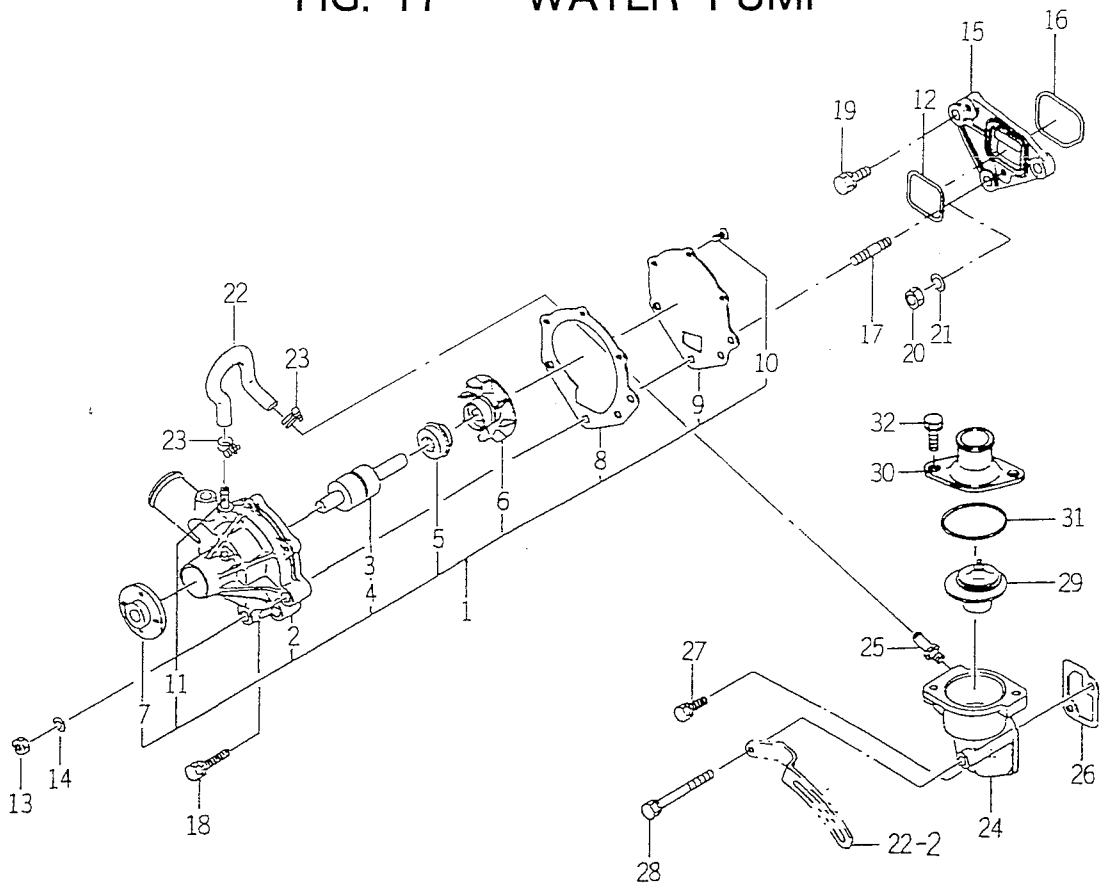

6005-420B

KEY	PART CODE	DESCRIPTION	QTY	TYPE OF MODEL E3CDB05		ITC	COL	GRP	REMARKS
1	6213 - 610 - 005 - 40	WATERPUMP ASSY	1	*					
2	6213 - 611 - 003 - 20	BODY/WATERPUMP	1	*					
3	6213 - 631 - 002 - 00	BEARING/WATER PUMP	1	*					
4	6213 - 631 - 005 - 00	BEARING/WATERPUMP	1	*					
5	6213 - 622 - 002 - 10	SEAL SET/WATER PUMP	1	*					
6	6213 - 621 - 003 - 00	ROTOR/WATERPUMP	1	*					
7	6213 - 642 - 002 - 00	SEAL/WATER PUMPPULLE	1	*					
8	6213 - 613 - 002 - 10	GASKET	1	*					
9	6213 - 612 - 004 - 00	PLATE/WATER PUMP	1	*					
10	6213 - 619 - 003 - 00	SCREW/WATER PUMP	3	*					
11	6213 - 619 - 002 - 00	PIPE/WATER PUMP	2	*					
12	V721 - 103 - 104 - 00	O - RING/G40	1	*					
13	6909 - 110 - 508 - 00	NUT/M8	2	*					
14	6909 - 150 - 508 - 00	WASHER	2	*					
15	6213 - 619 - 006 - 00	SPACER/WATERPUMP	1	*					
16	V721 - 103 - 105 - 00	O - RING/G50	1	*					
17	6904 - 110 - 840 - 00	STUD/M8X40	2	*					
18	6901 - 910 - 845 - 00	BOLT,SEMS/M8X45	1	*					
19	V211 - 560 - 802 - 50	BOLT,SEMS/M8X25 7T	1	*					
20	6909 - 110 - 508 - 00	NUT/M8	1	*					
21	6909 - 150 - 508 - 00	WASHER	1	*					
22	6213 - 729 - 013 - 10	HOSE/RUBBER	1	*					
23	J061 - 210 - 015 - 00	CLAMP/WIRE/10 - 15	2	*					
24	6213 - 716 - 001 - 40	HOUSING/THERMOSTAT	1	*					
25	6213 - 721 - 003 - 00	PIPE,PUMP HOUSING	1	*					

FIG. 17 WATER PUMP

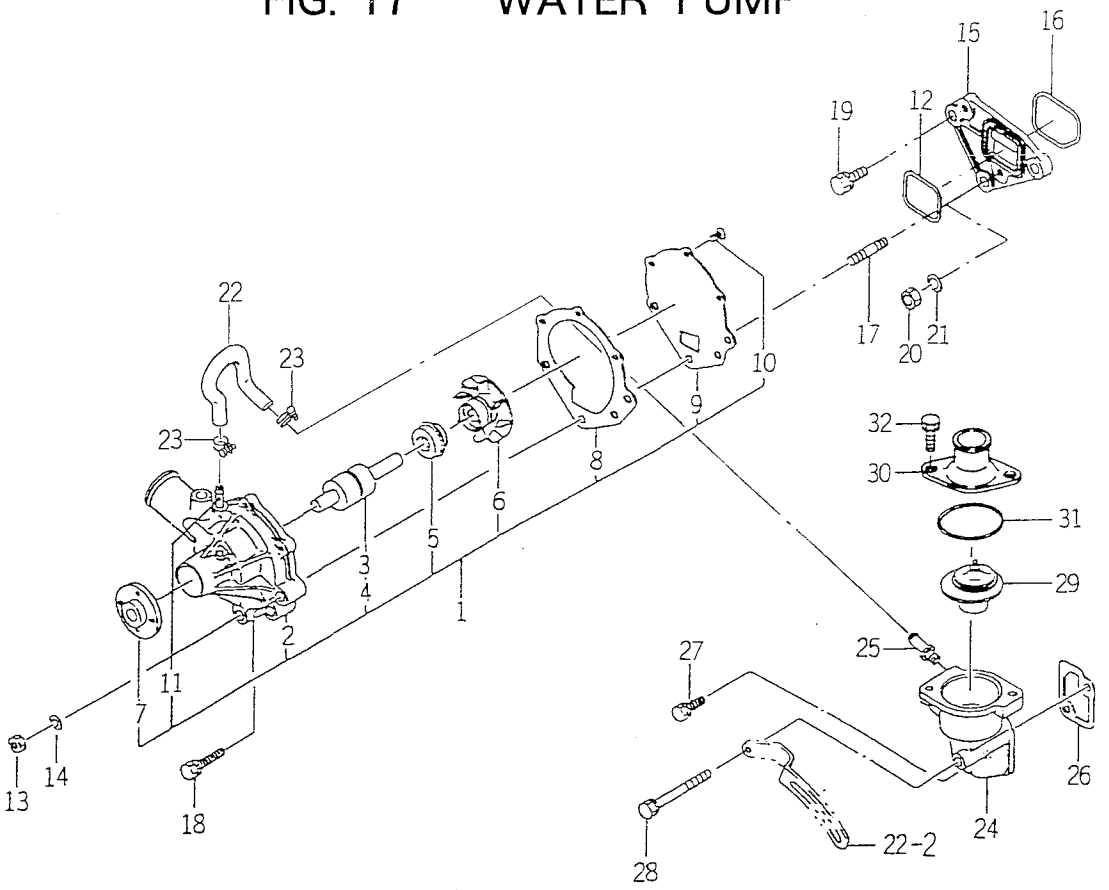

6005-420B

KEY	PART CODE	DESCRIPTION	QTY	TYPE OF MODEL E3CDB05		ITC	COL	GRP	REMARKS
26	6213 - 743 - 002 - 10	GASKET/HOUSING	1	*					
27	V211 - 560 - 802 - 00	BOLT/M8X20	1	*					
28	6209 - 030 - 006 - 00	BOLT/M8X75	1	*					
29	6513 - 770 - 022 - 10	THERMOSTAT	1	*					
30	6213 - 711 - 003 - 20	PIPE,WATER OUTLET	1	*					
31	V723 - 102 - 005 - 50	O - RING	1	*					
32	6901 - 910 - 828 - 00	BOLT,SEMS	2	*					

FIG. 18 COOLING FAN

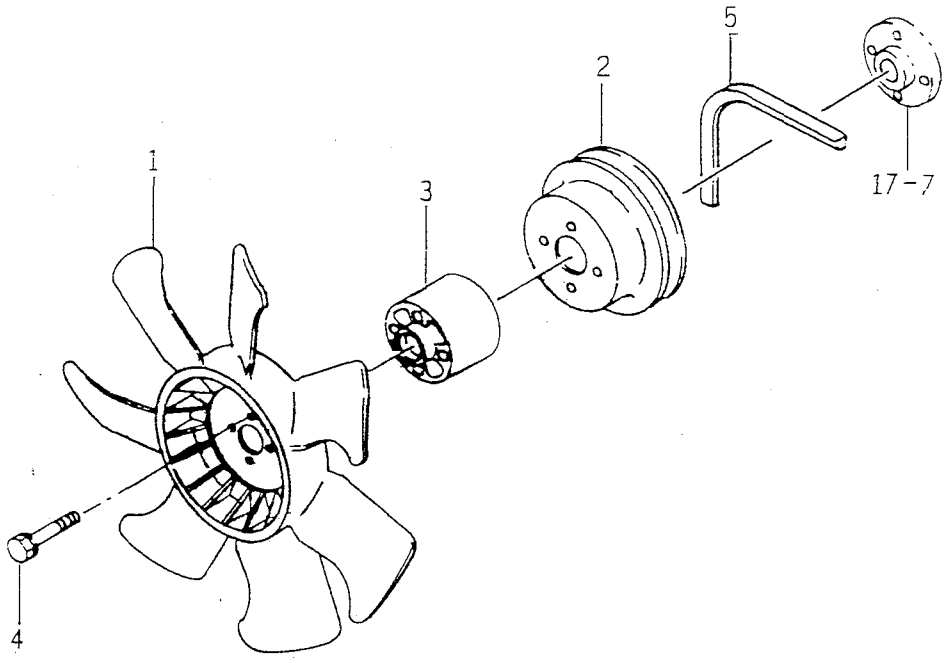

6005-480H

KEY	PART CODE	DESCRIPTION	QTY	TYPE OF MODEL		ITC	COL	GRP	REMARKS
				E3CDB05					
1	6213 - 660 - 015 - 00	FAN/COOLING	1	*					
2	6213 - 641 - 012 - 00	PULLEY/WATERPUMP	1	*					
3	6213 - 669 - 012 - 00	SPACER/FAN/53	1	*					
4	6209 - 030 - 092 - 00	BOLT/WS	4	*					
5	6513 - 671 - 138 - 00	BELT,COOLING FAN	1	*					

FIG. 19 INJECTION NOZZLE

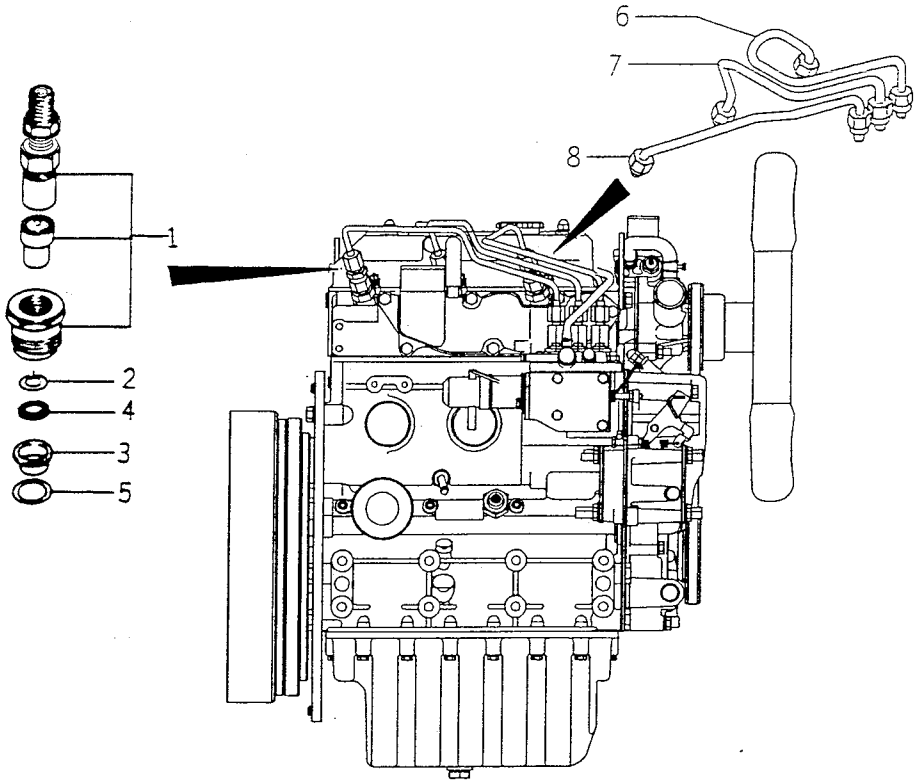

6005-601C

KEY	PART CODE	DESCRIPTION	QTY	TYPE OF MODEL E3CDB05		ITC	COL	GRP	REMARKS
1	6215 - 300 - 031 - 00	INJECTIONNOZZLE ASSY	3	*					FIG 024
2	6215 - 315 - 002 - 00	GASKET,NOZZLE	3	*					
3	6215 - 315 - 006 - 00	HEATSHILD/NOZZLE	3	*					
4	6215 - 315 - 005 - 00	WASHER/CORRUGATE	3	*					
5	6215 - 315 - 007 - 00	GASKET	3	*					
6	6215 - 411 - 067 - 00	PIPE/INJECTION ASSY	1	*					
7	6215 - 411 - 068 - 00	PIPE/INJECTION ASSY	1	*					
8	6215 - 411 - 069 - 00	PIPE/INJECTION ASSY	1	*					

FIG. 20 INJECTION PUMP

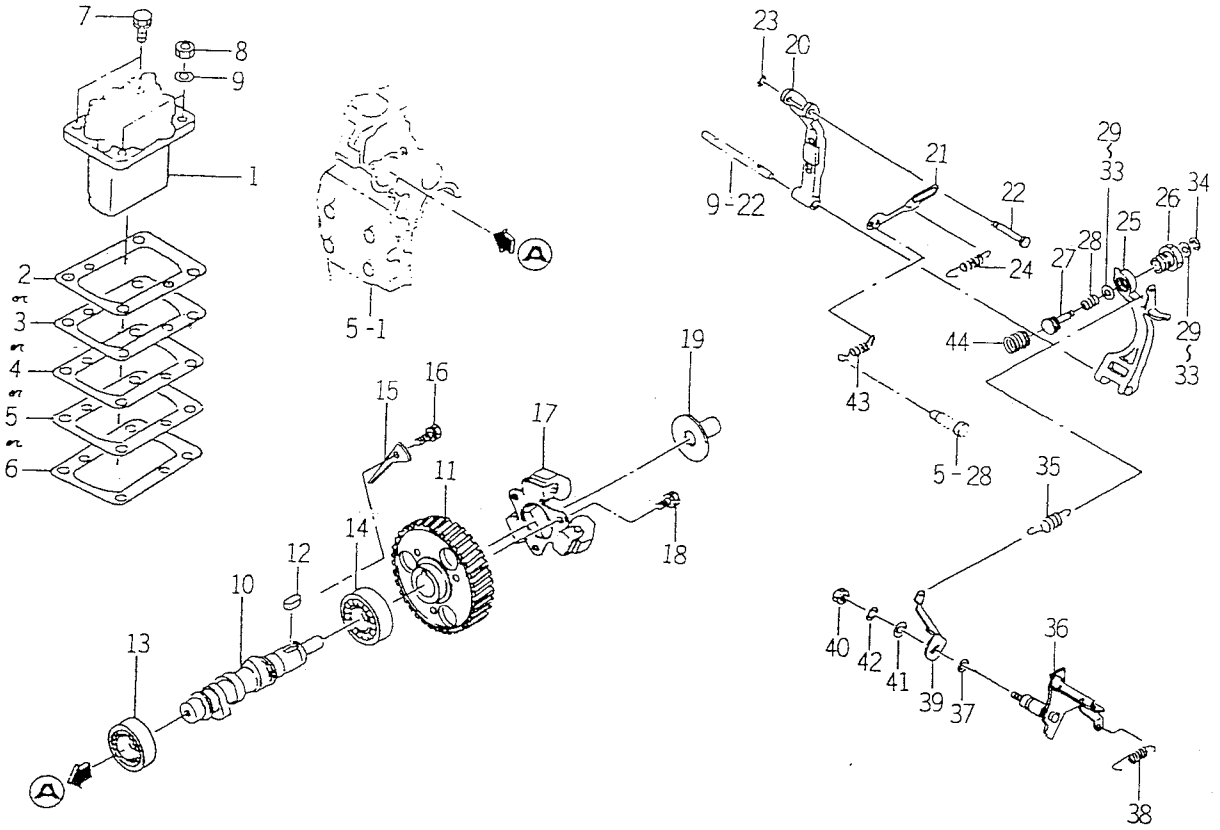

6005-510E

KEY	PART CODE	DESCRIPTION	QTY	TYPE OF MODEL E3CDB05		ITC	COL	GRP	REMARKS
1	6215 - 600 - 104 - 10	INJECTIONPUMP ASSY	1	*					FIG 025
2	6219 - 752 - 006 - 00	SHIM/PUMP,INJ	1	*					
3	6219 - 752 - 007 - 00	SHIM/PUMP,INJ	1	*					
4	6219 - 752 - 008 - 00	SHIM/PUMP,INJ	1	*					
5	6219 - 752 - 009 - 00	SHIM/PUMP,INJ	1	*					
6	6219 - 752 - 010 - 00	SHIM/PUMP,INJ	1	*					
7	V211 - 560 - 802 - 00	BOLT/M8X20	2	*					
8	6909 - 110 - 508 - 00	NUT/M8	2	*					
9	6909 - 150 - 508 - 00	WASHER	2	*					
10	6215 - 621 - 017 - 00	CAMSHAFT/INJPUMP	1	*					
11	6212 - 524 - 006 - 00	GEAR/INJECTIONPUMP	1	*					
12	6908 - 000 - 716 - 00	KEY	1	*					
13	V600 - 110 - 620 - 30	BEARING,RB/6203	1	*					
14	V600 - 110 - 600 - 40	BEARING,RB/6004	1	*					
15	6212 - 535 - 009 - 00	PLATE/THRUST/INJPUMP	1	*					
16	6901 - 910 - 612 - 00	BOLT,SEMS/M6X12	1	*					
17	6215 - 520 - 001 - 00	FLYWEIGHT	1	*					
18	6209 - 030 - 043 - 00	BOLT/M6X10	3	*					
19	6215 - 526 - 001 - 10	PIECE,THRUST	1	*					
20	6215 - 541 - 001 - 00	ARM,FLOATING	1	*					
21	6215 - 543 - 002 - 10	RINK/CONTROL	1	*					
22	6215 - 542 - 006 - 00	PIN,CONTROL	1	*					
23	V710 - 140 - 004 - 00	RING,SNAP/ 4 E	1	*					
24	6215 - 549 - 031 - 10	SPRING/SETTING	1	*					
25	6215 - 541 - 016 - 30	ARM/TENSION	1	*					

FIG. 20 INJECTION PUMP

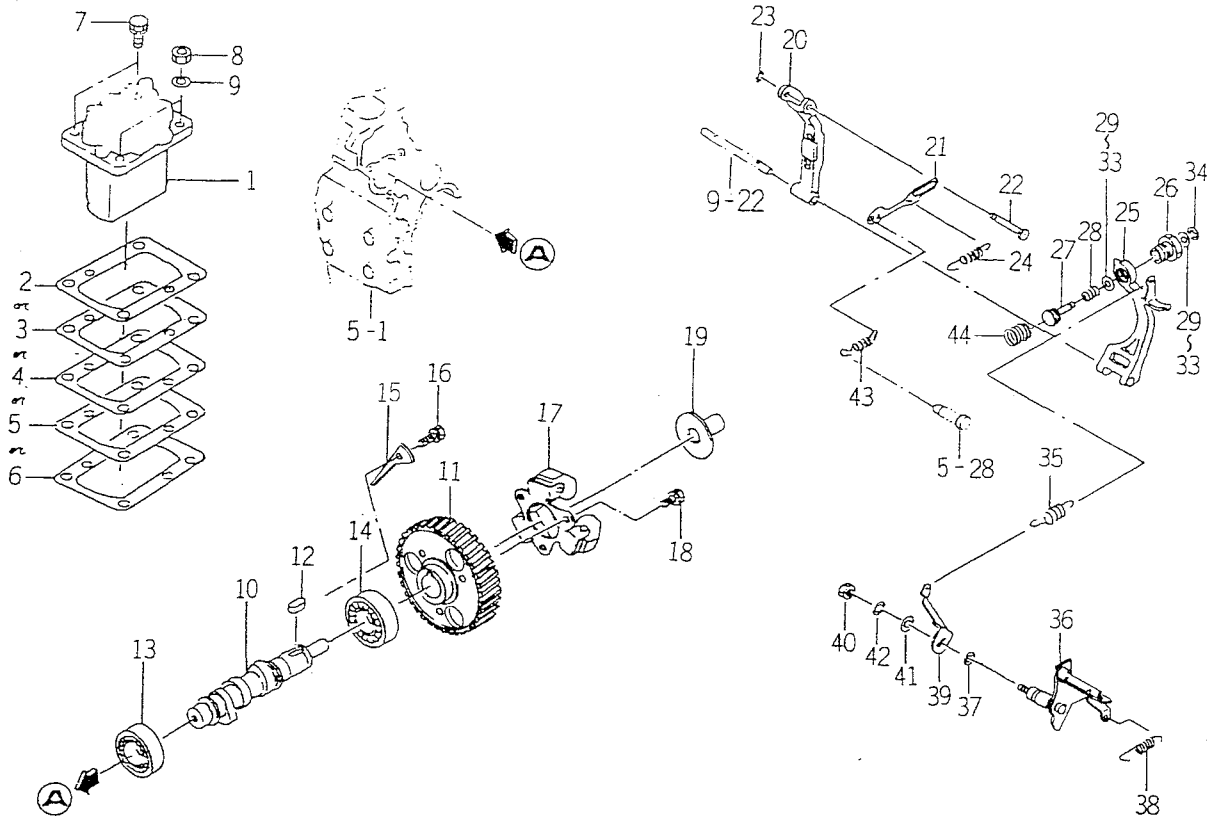

6005-510E

KEY	PART CODE	DESCRIPTION	QTY	TYPE OF MODEL E3CDB05		ITC	COL	GRP	REMARKS
26	6215 - 549 - 038 - 00	CASE/ADAPTER	1	*					
27	6215 - 549 - 037 - 00	PIN/ADAPTER	1	*					
28	6215 - 549 - 032 - 00	SPRING/ADAPTER	1	*					
29	6215 - 549 - 006 - 00	SHIM,ADAPTER	2	*					
30	6215 - 549 - 009 - 00	SHIM,ADAPTER	2	*					
31	6215 - 549 - 010 - 00	SHIM,ADAPTER	2	*					
32	6215 - 549 - 023 - 00	SHIM/ADAPTER	1	*					
33	6215 - 549 - 024 - 00	SHIM/ADAPTER	1	*					
34	V710 - 140 - 004 - 00	RING,SNAP/ 4 E	1	*					
35	6215 - 531 - 010 - 00	SPRING/GOVERNOR	1	*					
36	6215 - 541 - 024 - 10	LEVER/CONTROL COMP	1	*					
37	V720 - 101 - 900 - 80	O - RING/P 8	1	*					
38	6209 - 580 - 002 - 10	SPRING,RETURN	1	*					
39	6215 - 549 - 007 - 10	ARM/CONTROL	1	*					
40	6909 - 110 - 406 - 00	NUT	1	*					
41	V411 - 260 - 006 - 00	WASHER / M6	1	*					
42	6909 - 150 - 506 - 00	WASHER,SP/M6	1	*					
43	6215 - 549 - 012 - 00	SPRING,STARTING	1	*					
44	6215 - 537 - 002 - 10	SPRING/IDLE	1	*					

FIG. 21 FUEL PIPE

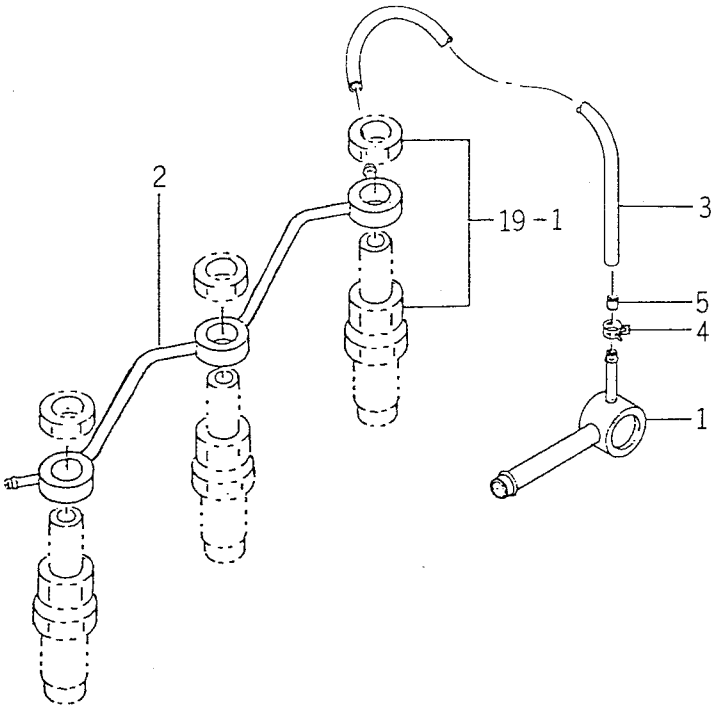

6005-550B

KEY	PART CODE	DESCRIPTION	QTY	TYPE OF MODEL E3CDB05		ITC	COL	GRP	REMARKS
1	6215-412-004-00	CONNECTOR/FUEL	1	*					
2	6215-411-080-10	PIPE/FUEL	1	*					
3	6209-360-011-00	HOSE/RUBBER	1	*					
4	J062-076-082-00	CLIP/HOSE/7.6-8.2	2	*					
5	3640-586-004-00	RESISTANCE/1.0	1	*					

FIG. 22 ELECTRIC (1)

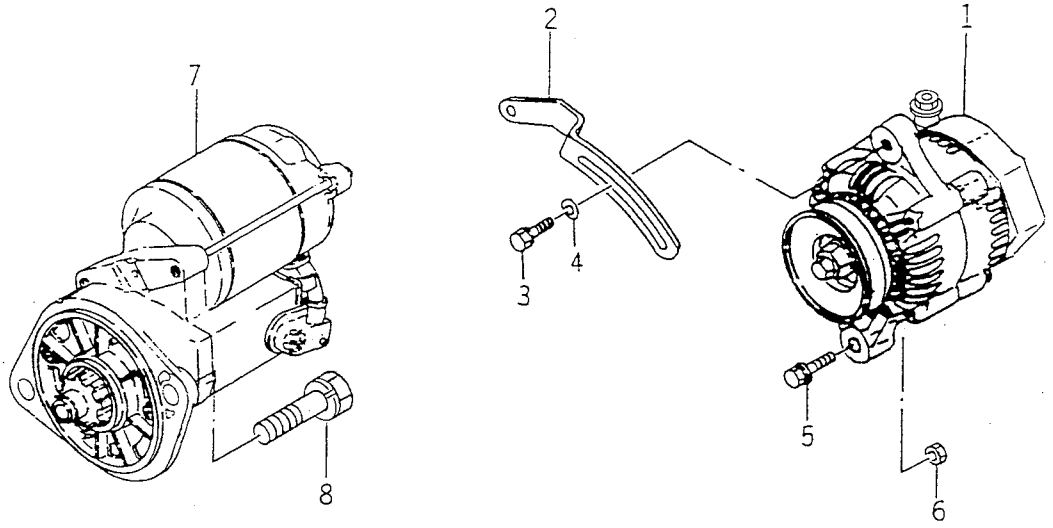

6005-801F

KEY	PART CODE	DESCRIPTION	QTY	TYPE OF MODEL E3CDB05		ITC	COL	GRP	REMARKS
1	6281 - 200 - 008 - 10	GENERATOR ASSY	1	*					FIG 027
2	6213 - 674 - 006 - 10	PLATE/ADJUST	1	*					
3	V211 - 560 - 802 - 00	BOLT/M8X20	1	*					
4	1373 - 121 - 001 - 00	WASHER/9X22X2	1	*					
5	6209 - 031 - 083 - 00	BOLT/WSP	1	*					
6	6909 - 110 - 410 - 00	NUT/M10	1	*					
7	6281 - 100 - 007 - 10	STARTER ASSY	1	*					FIG 026
8	6901 - 931 - 240 - 00	BOLT	2	*					

FIG. 23 ELECTRIC (2)

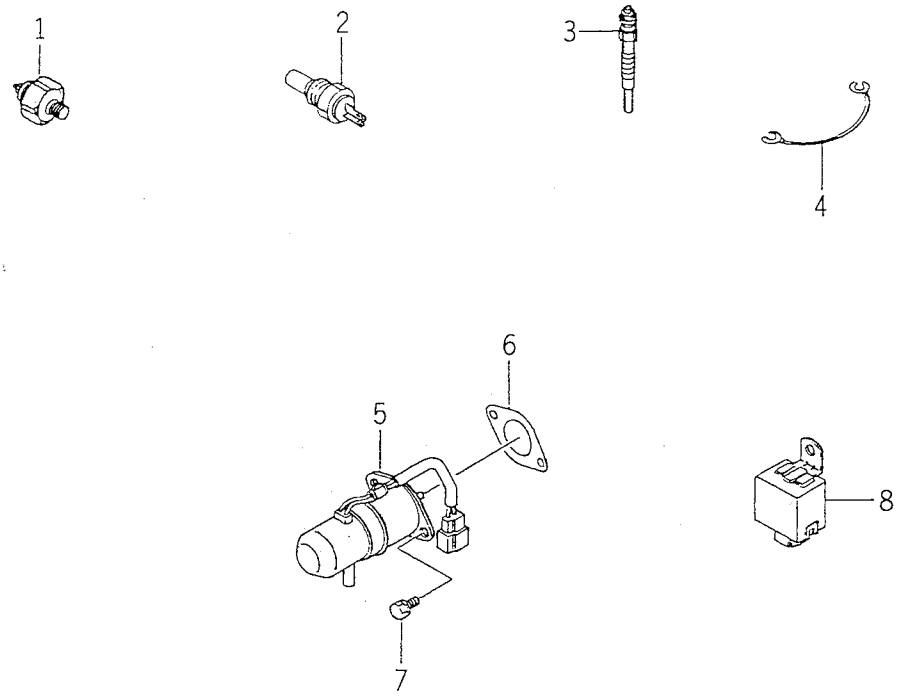

6C05-820D

KEY	PART CODE	DESCRIPTION	QTY	TYPE OF MODEL E3CDB05		ITC	COL	GRP	REMARKS
1	6281 - 971 - 003 - 00	SWITCH/OILPRESSURE	1	*					
2	6282 - 450 - 004 - 00	THERMOMETER	1	*					
3	6281 - 410 - 010 - 00	GLOWPLUG	3	*					
4	6219 - 732 - 012 - 00	CONNECTOR/GLOWPLUG	2	*					
5	6281 - 910 - 003 - 00	SOLENOID	1	*					
6	6209 - 630 - 002 - 10	GASKET	1	*					
7	6901 - 910 - 612 - 00	BOLT,SEMS/M6X12	2	*					
8	6281 - 920 - 001 - 00	RELAY,SOLENOID	1	*					

FIG. 24 6215 – 300 – 031 – 00

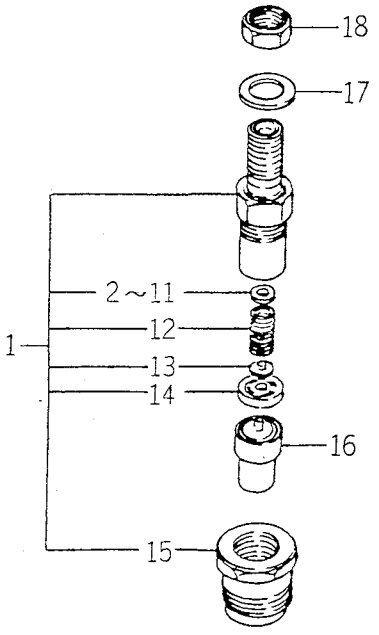

6215-3000

KEY	PART CODE	DESCRIPTION	QTY	TYPE OF MODEL E3CDB05		ITC	COL	GRP	REMARKS
1	6215 – 330 – 022 – 00	HOLDER/NOZZLE ASSY	3	*					
2	6215 – 345 – 044 – 00	SHIM/T = 0.1	3	*					
3	6215 – 345 – 045 – 00	SHIM/T = 0.2	3	*					
4	6215 – 345 – 046 – 00	SHIM/T = 0.3	3	*					
5	6215 – 345 – 047 – 00	SHIM/T = 0.4	3	*					
6	6215 – 345 – 048 – 00	SHIM/T = 0.5	3	*					
7	6215 – 345 – 049 – 00	SHIM/T = 0.52	3	*					
8	6215 – 345 – 050 – 00	SHIM/T = 0.54	3	*					
9	6215 – 345 – 051 – 00	SHIM/T = 0.56	3	*					
10	6215 – 345 – 052 – 00	SHIM/T = 0.58	3	*					
11	6215 – 345 – 053 – 00	SHIM/T = 0.8	3	*					
12	6215 – 343 – 002 – 00	SPRING,NOZZLE	3	*					
13	6215 – 342 – 002 – 00	SEAT,SPRING	3	*					
14	6215 – 339 – 004 – 00	SPACER	3	*					
15	6215 – 332 – 006 – 00	NUT/NOZZLERETAINING	3	*					
16	6215 – 311 – 028 – 00	NOZZLE ASSY	3	*					
17	6215 – 359 – 003 – 00	GASKET	3	*					
18	6215 – 359 – 004 – 00	NUT	3	*					

FIG. 25 6215 – 600 – 104 – 10

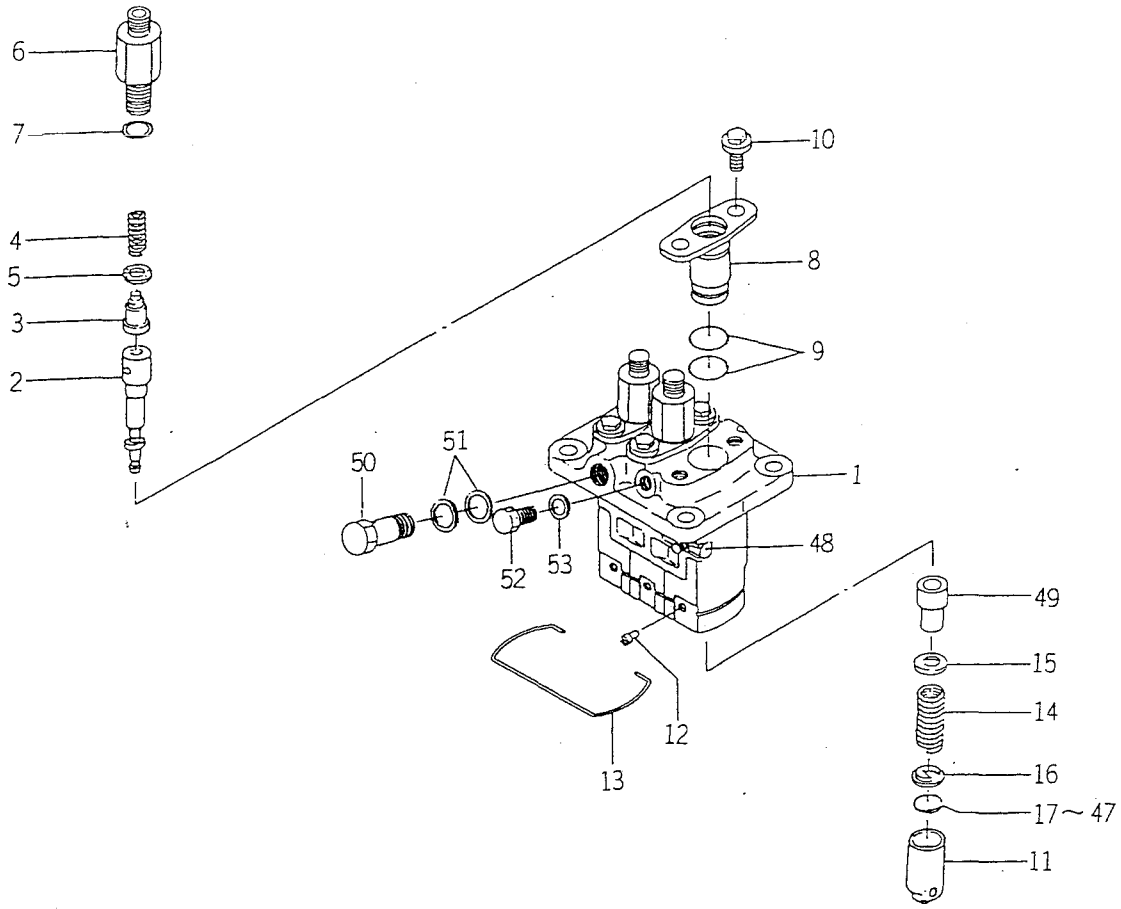

6215-6001

KEY	PART CODE	DESCRIPTION	QTY	TYPE OF MODEL E3CDB05		ITC	COL	GRP	REMARKS
1	6215 – 611 – 009 – 00	HOUSING/PUMP	1	*					
2	6215 – 631 – 015 – 00	PLUNGER ASSY	3	*					
3	6215 – 641 – 002 – 00	VALVE,DELIVERY	3	*					
4	6215 – 643 – 005 – 00	SPRING/DELIVERYVALVE	3	*					
5	6215 – 649 – 008 – 00	GASKET	3	*					
6	6215 – 644 – 006 – 00	HOLDER/DELIVERYVALVE	3	*					
7	6215 – 649 – 009 – 00	O – RING	3	*					
8	6215 – 635 – 004 – 00	SLEEVEFLANGE	3	*					
9	6215 – 649 – 010 – 00	ORING	6	*					
10	6215 – 649 – 011 – 00	BOLT	6	*					
11	6215 – 622 – 003 – 00	TAPPET	3	*					
12	6215 – 629 – 017 – 00	PIN	3	*					
13	6215 – 629 – 035 – 00	SNAPRING	1	*					
14	6215 – 634 – 003 – 00	SPRING/PLUNGER	3	*					
15	6215 – 639 – 008 – 00	SPRINGSEAT	3	*					
16	6215 – 639 – 009 – 00	SPRINGSEAT	3	*					
17	6215 – 629 – 060 – 00	PLATE/T = 2.60	1	*					
18	6215 – 629 – 061 – 00	PLATE/T = 2.65	1	*					
19	6215 – 629 – 062 – 00	PLATE/T = 2.70	1	*					
20	6215 – 629 – 063 – 00	PLATE/T = 2.75	1	*					
21	6215 – 629 – 064 – 00	PLATE/T = 2.80	1	*					
22	6215 – 629 – 065 – 00	PLATE/T = 2.85	1	*					
23	6215 – 629 – 066 – 00	PLATE/T = 2.90	1	*					
24	6215 – 629 – 067 – 00	PLATE/T = 2.95	1	*					
25	6215 – 629 – 036 – 00	PLATE/T = 3.00	1	*					

FIG. 25 6215 – 600 – 104 – 10

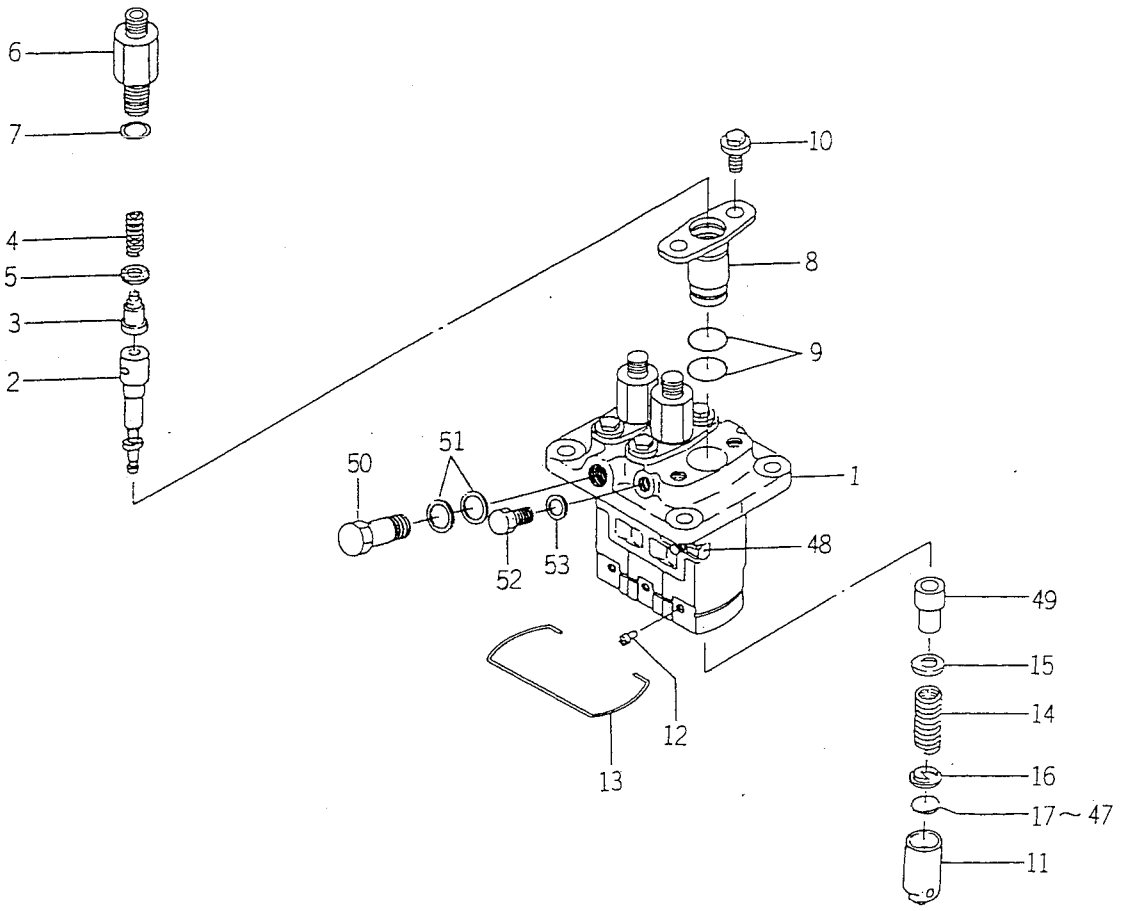

6215-6001

KEY	PART CODE	DESCRIPTION	QTY	TYPE OF MODEL E3CDB05		ITC	COL	GRP	REMARKS
26	6215 – 629 – 037 – 00	PLATE/T = 3.05	1	*					
27	6215 – 629 – 038 – 00	PLATE/T = 3.10	1	*					
28	6215 – 629 – 039 – 00	PLATE/T = 3.15	1	*					
29	6215 – 629 – 040 – 00	PLATE/T = 3.20	1	*					
30	6215 – 629 – 041 – 00	PLATE/T = 3.25	1	*					
31	6215 – 629 – 042 – 00	PLATE/T = 3.30	1	*					
32	6215 – 629 – 043 – 00	PLATE/T = 3.35	1	*					
33	6215 – 629 – 044 – 00	PLATE/T = 3.40	1	*					
34	6215 – 629 – 045 – 00	PLATE/T = 3.45	1	*					
35	6215 – 629 – 046 – 00	PLATE/T = 3.50	1	*					
36	6215 – 629 – 047 – 00	PLATE/T = 3.55	1	*					
37	6215 – 629 – 048 – 00	PLATE/T = 3.60	1	*					
38	6215 – 629 – 049 – 00	PLATE/T = 3.65	1	*					
39	6215 – 629 – 050 – 00	PLATE/T = 3.70	1	*					
40	6215 – 629 – 051 – 00	PLATE/T = 3.75	1	*					
41	6215 – 629 – 052 – 00	PLATE/T = 3.80	1	*					
42	6215 – 629 – 053 – 00	PLATE/T = 3.85	1	*					
43	6215 – 629 – 054 – 00	PLATE/T = 3.90	1	*					
44	6215 – 629 – 055 – 00	PLATE/T = 3.95	1	*					
45	6215 – 629 – 056 – 00	PLATE/T = 4.00	1	*					
46	6215 – 629 – 058 – 00	PLATE/T = 4.05	1	*					
47	6215 – 629 – 059 – 00	PLATE/T = 4.10	1	*					
48	6215 – 637 – 004 – 00	CONTROLRACK	1	*					
49	6215 – 635 – 005 – 00	CONTROLSLEEVE	3	*					
50	6215 – 619 – 023 – 00	EYEBOLT	1	*					

FIG. 25 6215 – 600 – 104 – 10

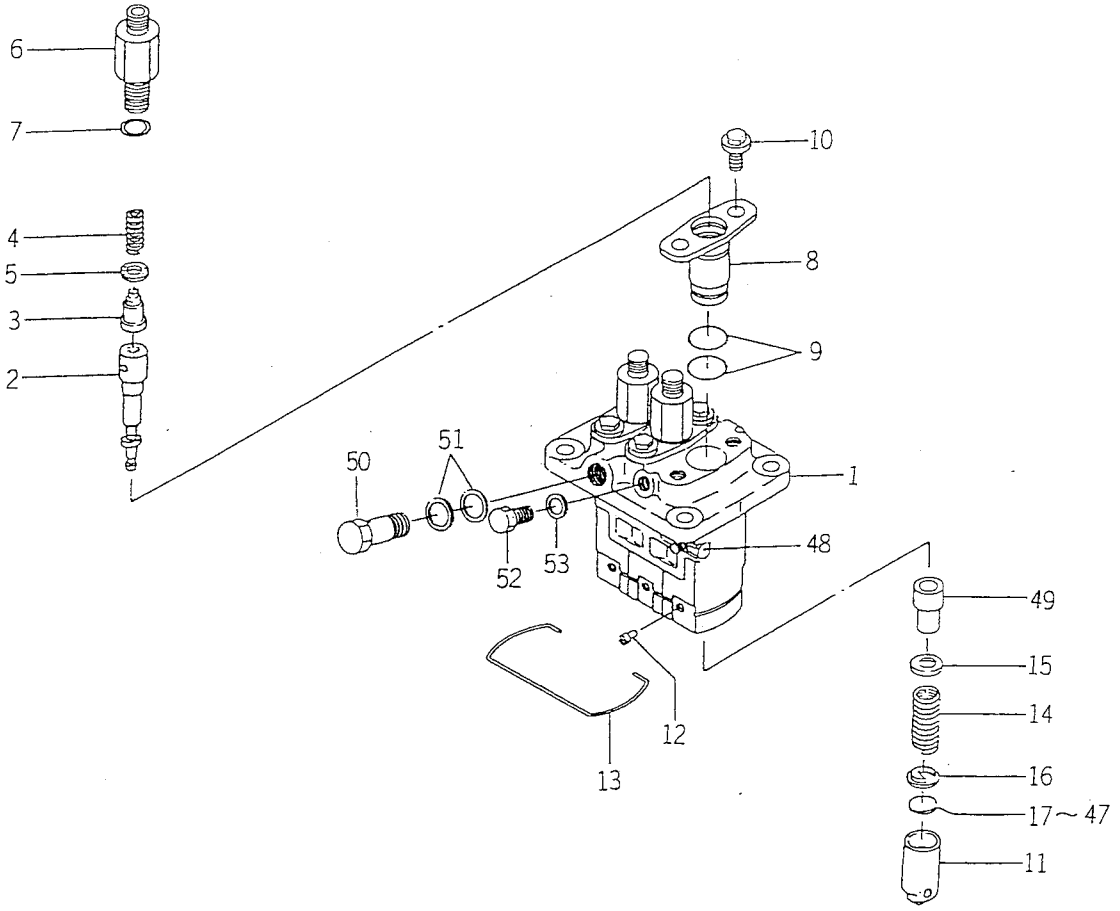

6215-6001

KEY	PART CODE	DESCRIPTION	QTY	TYPE OF MODEL E3CDB05		ITC	COL	GRP	REMARKS
51	6115 – 639 – 008 – 00	GASKET	2	*					
52	6215 – 619 – 024 – 00	BOLT	1	*					
53	6215 – 359 – 006 – 00	GASKET	1	*					

FIG. 26 6281 – 100 – 007 – 10

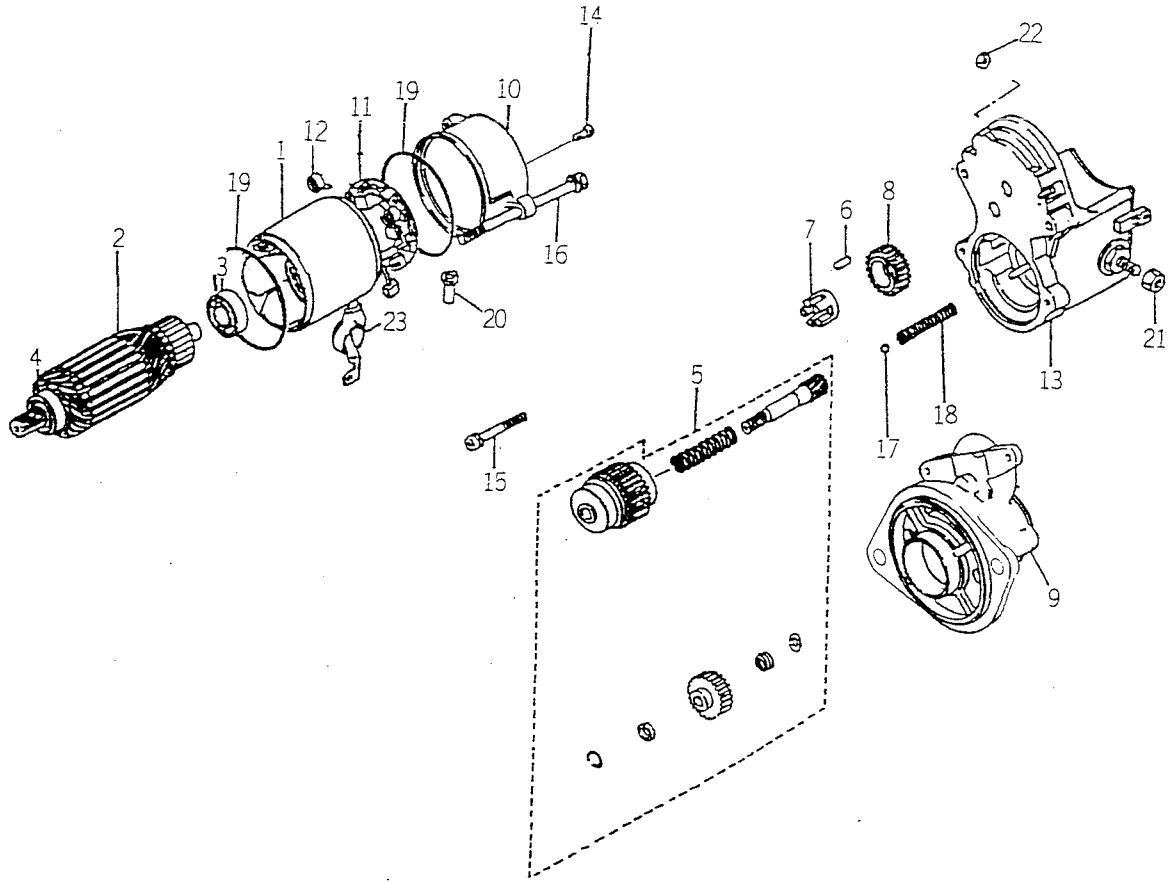

6281-1000

KEY	PART CODE	DESCRIPTION	QTY	TYPE OF MODEL E3CDB05		ITC	COL	GRP	REMARKS
1	6281 – 111 – 005 – 00	YOKE/STARTER ASSY	1	*					
2	6281 – 121 – 006 – 00	ARMATURE/STARTE ASSY	1	*					
3	6281 – 129 – 038 – 00	BEARING	1	*					
4	6281 – 129 – 039 – 00	BEARING	1	*					
5	6281 – 124 – 007 – 10	CLUTCH/STARTER ASSY	1	*					
6	6581 – 129 – 099 – 00	RORA	5	*					
7	6281 – 129 – 040 – 00	RETAINER	1	*					
8	6281 – 123 – 005 – 00	PINION/STARTER	1	*					
9	6281 – 129 – 045 – 00	HOUSING/STARTER ASSY	1	*					
10	6281 – 115 – 011 – 00	FRAME/STARTEREND	1	*					
11	6281 – 116 – 004 – 00	HOLDER/STARTER ASSY	1	*					
12	6581 – 117 – 007 – 00	SPRING,BRUSH	4	*					
13	6281 – 151 – 017 – 00	SWITCH/MAGNETIC ASSY	1	*					
14	6281 – 129 – 062 – 00	SCREW	2	*					
15	6281 – 129 – 042 – 00	BOLT/WS	2	*					
16	6281 – 129 – 043 – 00	BOLT/THROUGH	2	*					
17	6581 – 129 – 092 – 00	BALL	1	*					
18	6281 – 129 – 044 – 00	SPRING/RETURN	1	*					
19	6281 – 129 – 003 – 00	O – RING	2	*					
20	6281 – 115 – 016 – 00	BUSHING/DRAIN	1	*					
21	6909 – 111 – 508 – 00	NUT	1	*					
22	6281 – 229 – 041 – 00	NUT	1	*					
23	6281 – 115 – 010 – 00	COVER	1	*					

FIG. 27 6281 – 200 – 008 – 10

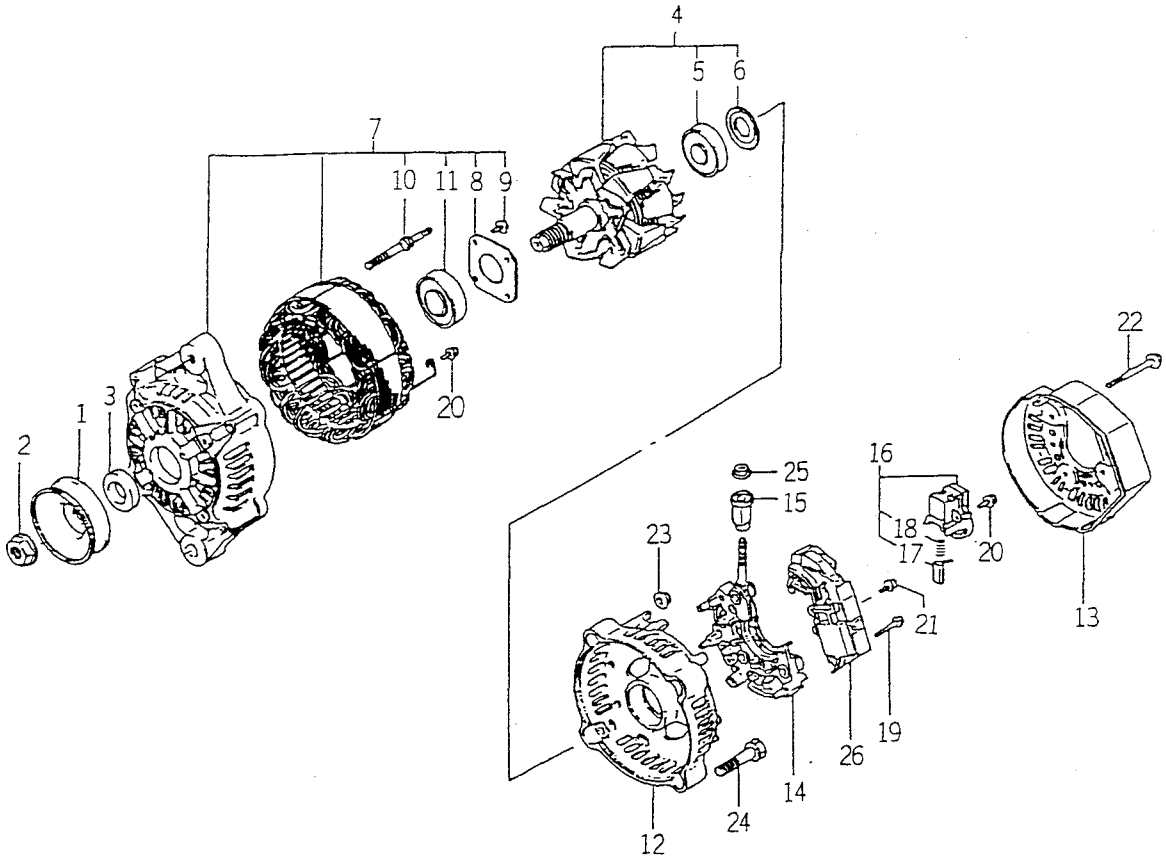

6281-2000

KEY	PART CODE	DESCRIPTION	QTY	TYPE OF MODEL E3CDB05		ITC	COL	GRP	REMARKS
1	6281 – 222 – 004 – 00	PULLEY	1	*					
2	6281 – 229 – 002 – 00	NUT	1	*					
3	6281 – 229 – 003 – 00	COLLOR	1	*					
4	6281 – 221 – 001 – 00	ROTOR ASSY	1	*					
5	6281 – 229 – 005 – 00	BEARING	1	*					
6	6281 – 229 – 004 – 00	COVER,BEARING	1	*					
7	6281 – 213 – 012 – 00	FRAME/DRIVEEND ASSY	1	*					
8	6281 – 229 – 006 – 00	PLATE	1	*					
9	6281 – 229 – 007 – 00	BOLT	4	*					
10	6281 – 229 – 008 – 00	BOLT	2	*					
11	6281 – 229 – 009 – 00	BEARING	1	*					
12	6281 – 214 – 003 – 00	FRAME	1	*					
13	6281 – 214 – 004 – 00	COVER	1	*					
14	6281 – 229 – 029 – 00	HOLDER ASSY	1	*					
15	6281 – 229 – 011 – 00	BUSH	1	*					
16	2145 – 161 – 211 – 00	HOLDER/BRUSH ASSY	1	*					
17	6281 – 215 – 001 – 00	BRUSH	2	*					
18	6281 – 216 – 001 – 00	SPRING	2	*					
19	6281 – 229 – 012 – 00	BOLT	2	*					
20	6281 – 229 – 013 – 00	BOLT	6	*					
21	6281 – 229 – 014 – 00	BOLT	1	*					
22	6281 – 229 – 015 – 00	BOLT	3	*					
23	6281 – 229 – 016 – 00	NUT	2	*					
24	6281 – 229 – 017 – 00	BOLT	2	*					
25	6281 – 229 – 018 – 00	NUT	1	*					

FIG. 27 6281 – 200 – 008 – 10

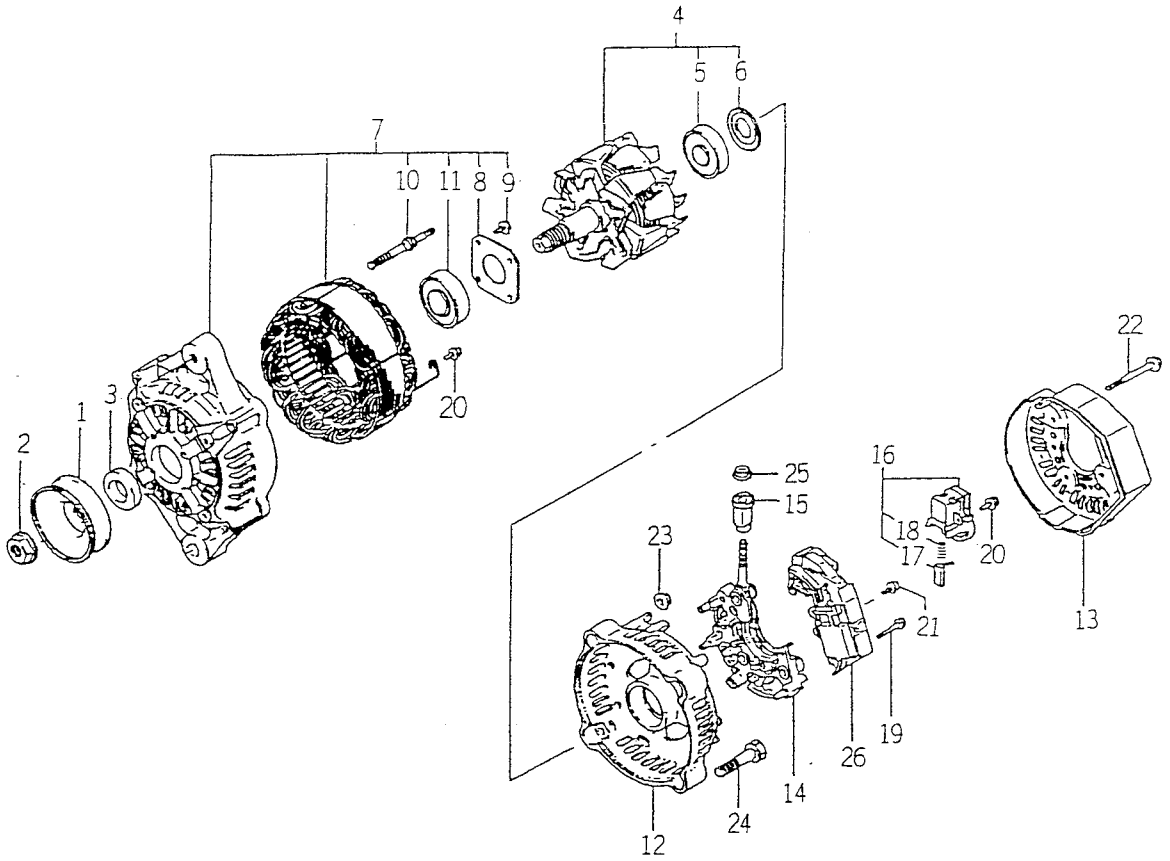

6281-2000

KEY	PART CODE	DESCRIPTION	QTY	TYPE OF MODEL E3CDB05		ITC	COL	GRP	REMARKS
26	6281 – 271 – 002 – 00	REGULATOR ASSY	1	*					

CHASSIS

FIG. 1 FUEL HOUSE SYSTEM

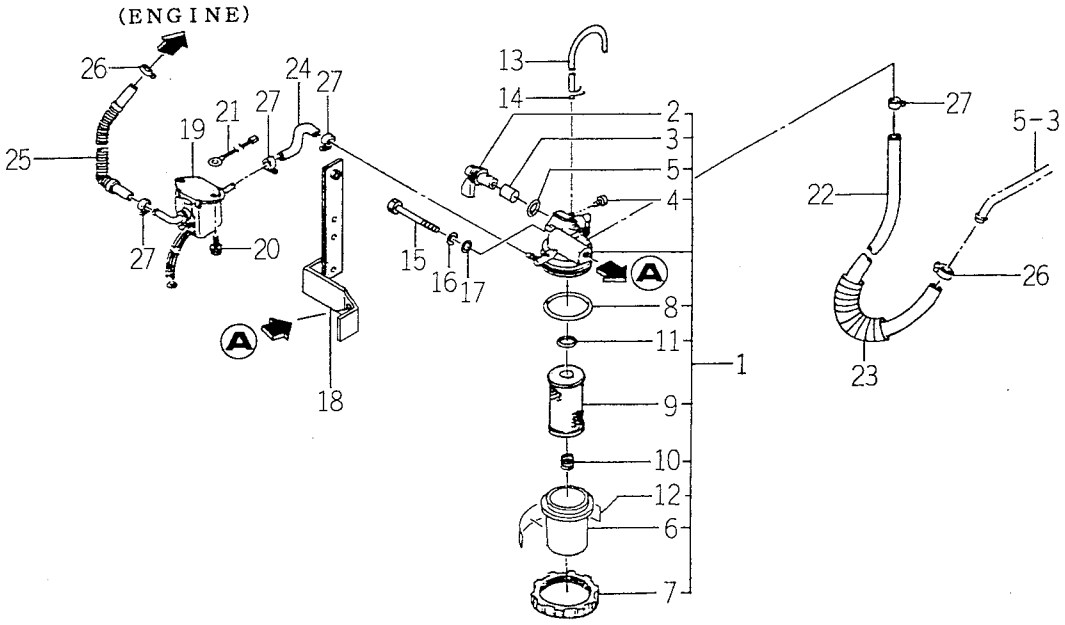

1673-102

KEY	PART CODE	DESCRIPTION	QTY	TYPE OF MODEL TK529	TYPE OF MODEL TK533	ITC	COL	GRP	REMARKS
1	1650 - 111 - 220 - 00	FILTER/FUEL ASSY	1	*	*				
2	1560 - 102 - 202 - 50	LEVER	1	*	*				
3	1560 - 102 - 203 - 50	SEAL	1	*	*				
4	1560 - 102 - 204 - 40	SCREW	1	*	*				
5	V720 - 102 - 402 - 10	O - RING/P21	1	*	*				
6	1560 - 102 - 205 - 40	CUP	1	*	*				
7	1426 - 160 - 207 - 00	NUT,RING	1	*	*				
8	V721 - 103 - 106 - 50	O - RING/G65	1	*	*				
9	1513 - 102 - 329 - 00	ELEMENT	1	*	*				
10	1426 - 160 - 209 - 00	SPRING	1	*	*				
11	V720 - 102 - 401 - 60	O - RING/P16	1	*	*				
12	1513 - 102 - 332 - 00	PLATE,CAUTION	1	*	*				
13	1673 - 102 - 005 - 00	HOSE/RETURN	1	*	*				
14		WIRE	1	*	*				
15	V201 - 260 - 808 - 00	BOLT/M 8X80	1	*	*				
16	V401 - 160 - 008 - 00	WASHER,SP/M 8	1	*	*				
17	V411 - 260 - 008 - 00	WASHER,PL/M 8	1	*	*				
18	1673 - 102 - 210 - 10	STAY/PLATE/FILTER	1	*	*				
19	3652 - 311 - 210 - 00	PUMP,FUEL ASSY	1	*	*				
20	V210 - 260 - 601 - 20	BOLT,SEMS	2	*	*				
21	1614 - 690 - 001 - 00	HARNESS/EARTH	1	*	*				
22	1560 - 102 - 002 - 30	HOSE/1150	1	*	*				
23	1673 - 102 - 004 - 10	INSULATOR/CORRUGATE/	1	*	*				
24	1560 - 102 - 003 - 20	HOSE/110	1	*	*				
25	1673 - 102 - 001 - 10	HOSE/08X13X1250	1	*	*				

FIG. 1 FUEL HOUSE SYSTEM

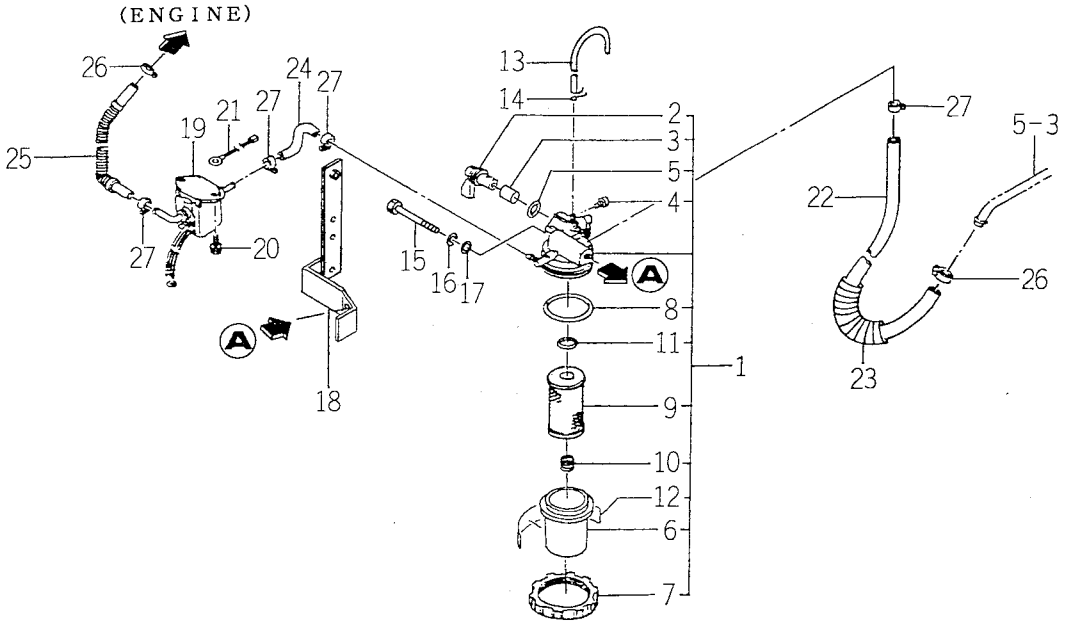

1673-102

KEY	PART CODE	DESCRIPTION	QTY	TYPE OF MODEL TK529	TYPE OF MODEL TK533	ITC	COL	GRP	REMARKS
26	J061 - 108 - 016 - 00	CLAMP/WORM/08 - 16	2	*	*				
27	J061 - 211 - 013 - 00	CLAMP/WIRE/11 - 13	4	*	*				

FIG. 2 AIR CLEANER SYSTEM

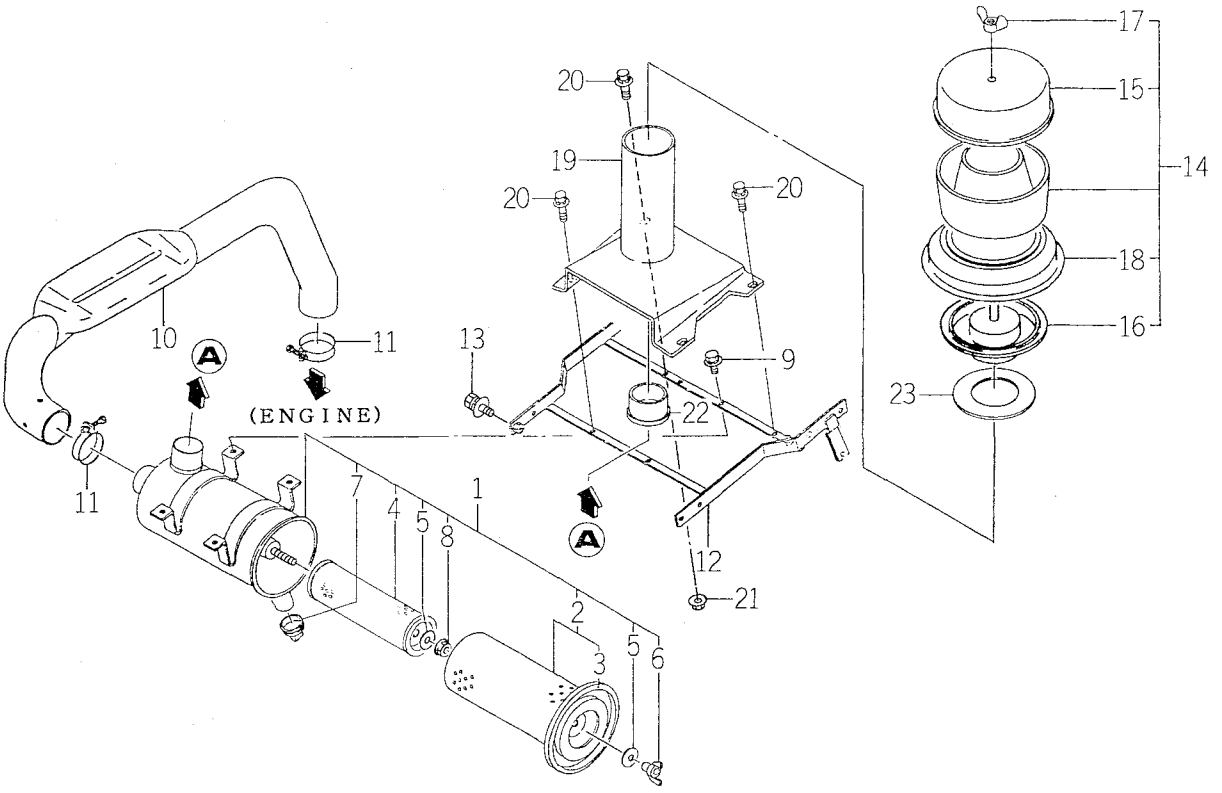

1674-103T

KEY	PART CODE	DESCRIPTION	QTY	TYPE OF MODEL TK529	TYPE OF MODEL TK533	ITC	COL	GRP	REMARKS
1	1643 - 103 - 200 - 00	CLEANER/AIR ASSY	1	*	*				
2	1572 - 103 - 250 - 00	ELEMENT,PAPER ASSY	1	*	*				
3	1560 - 103 - 261 - 00	GASKET	1	*	*				
4	1572 - 103 - 260 - 00	ELEMENT ASSY	1	*	*				
5	1419 - 101 - 010 - 00	PACKING ASSY	2	*	*				
6	1510 - 103 - 250 - 00	WING NUT ASSY	1	*	*				
7	1544 - 104 - 205 - 00	VALVE	1	*	*				
8	1510 - 103 - 201 - 00	NUT	1	*	*				
9	V211 - 660 - 802 - 00	BOLT/8X20	4	*	*				
10	1673 - 103 - 001 - 00	PIPE/INLET	1	*	*				
11	J061 - 249 - 060 - 00	CLAMP/WIRE/49 - 60	2	*	*				
12	1560 - 103 - 240 - 20	BRACKET/CLEANER COMP	1	*	*				
13	V211 - 660 - 802 - 00	BOLT/8X20	4	*	*				
14	1643 - 103 - 220 - 00	CYCLONE ASSY	1	*	*				
15	1426 - 153 - 311 - 00	COVER	1	*	*				
16	1426 - 153 - 313 - 00	COVER,LW	1	*	*				
17	1643 - 103 - 221 - 00	NUT/WING	1	*	*				
18	1643 - 103 - 222 - 00	GUIDE	1	*	*				
19	1643 - 103 - 210 - 10	PIPE/INLET COMP	1	*	*				
20	V211 - 660 - 802 - 00	BOLT/8X20	2	*	*				
21	V363 - 260 - 008 - 00	NUT,LOCK/M8	1	*	*				
22	1560 - 103 - 002 - 40	GASKET	1	*	*				
23	1524 - 103 - 001 - 00	SEAL/74	1	*	*				

FIG. 3 RADIATOR SYSTEM

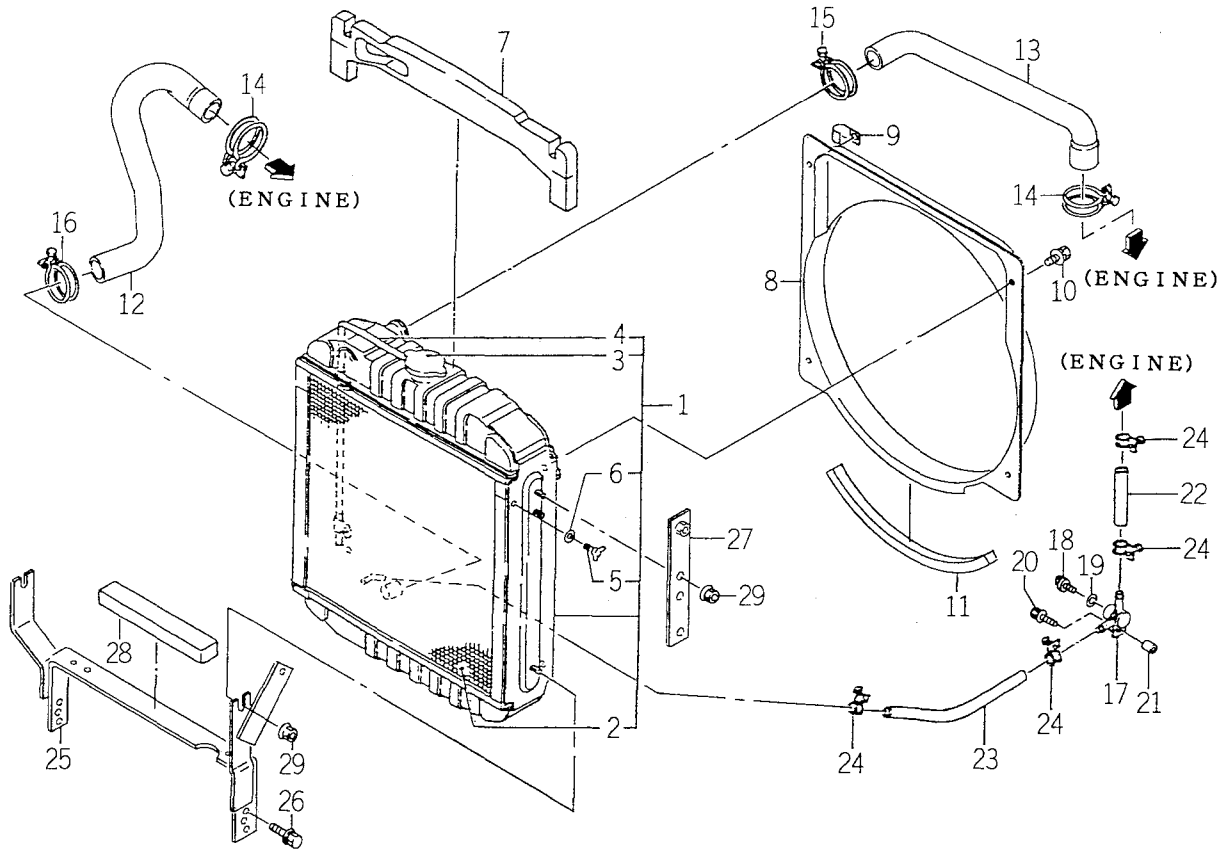

1673-104A

KEY	PART CODE	DESCRIPTION	QTY	TYPE OF MODEL TK529	TYPE OF MODEL TK533	ITC	COL	GRP	REMARKS
1	1673 - 104 - 300 - 10	RADIATOR ASSY	1	*	*				
2	1673 - 104 - 302 - 00	NET/WIRE COMP	1	*	*				
3	1421 - 101 - 313 - 00	CAP	1	*	*				
4	1513 - 102 - 205 - 00	HOSE,UP/RUBBER	1	*	*				
5	V271 - 160 - 601 - 20	BOLT,WING/M6X12	1	*	*				
6	1560 - 104 - 206 - 40	WASHER	1	*	*				
7	1560 - 104 - 003 - 60	INSULATOR	1	*	*				
8	1673 - 104 - 004 - 00	SHROUD	1	*	*				
9	3737 - 172 - 009 - 00	CLAMP,MAIN HARNESS	2	*	*				
10	V210 - 360 - 601 - 00	BOLT,SEMS/M6X10	4	*	*				
11	1650 - 102 - 006 - 00	INSULATOR	1	*	*				
12	1673 - 104 - 001 - 00	HOSE/RADIATOR/OUTLET	1	*	*				
13	1673 - 104 - 002 - 10	HOSE/RADIATOR/INLET	1	*	*				
14	J061 - 234 - 042 - 00	CLAMP/WIRE/34 - 42	2	*	*				
15	J061 - 232 - 040 - 00	CLAMP/WIRE/32 - 40	1	*	*				
16	J061 - 230 - 038 - 00	CLAMP/WIRE/30 - 38	1	*	*				
17	1560 - 104 - 010 - 40	CONNECTOR	1	*	*				
18	1424 - 101 - 203 - 00	PLUG	1	*	*				
19	1424 - 101 - 204 - 00	PACKING	1	*	*				
20	V211 - 360 - 804 - 00	BOLT	1	*	*				
21	1617 - 102 - 006 - 00	HUB/09X14X20	1	*	*				
22	1673 - 104 - 009 - 00	HOSE/180	1	*	*				
23	1673 - 104 - 010 - 10	HOSE	1	*	*				
24	J061 - 210 - 015 - 00	CLAMP/WIRE/10 - 15	4	*	*				
25	1673 - 104 - 220 - 00	BRACKET/RADIATO COMP	1	*	*				

FIG. 3 RADIATOR SYSTEM

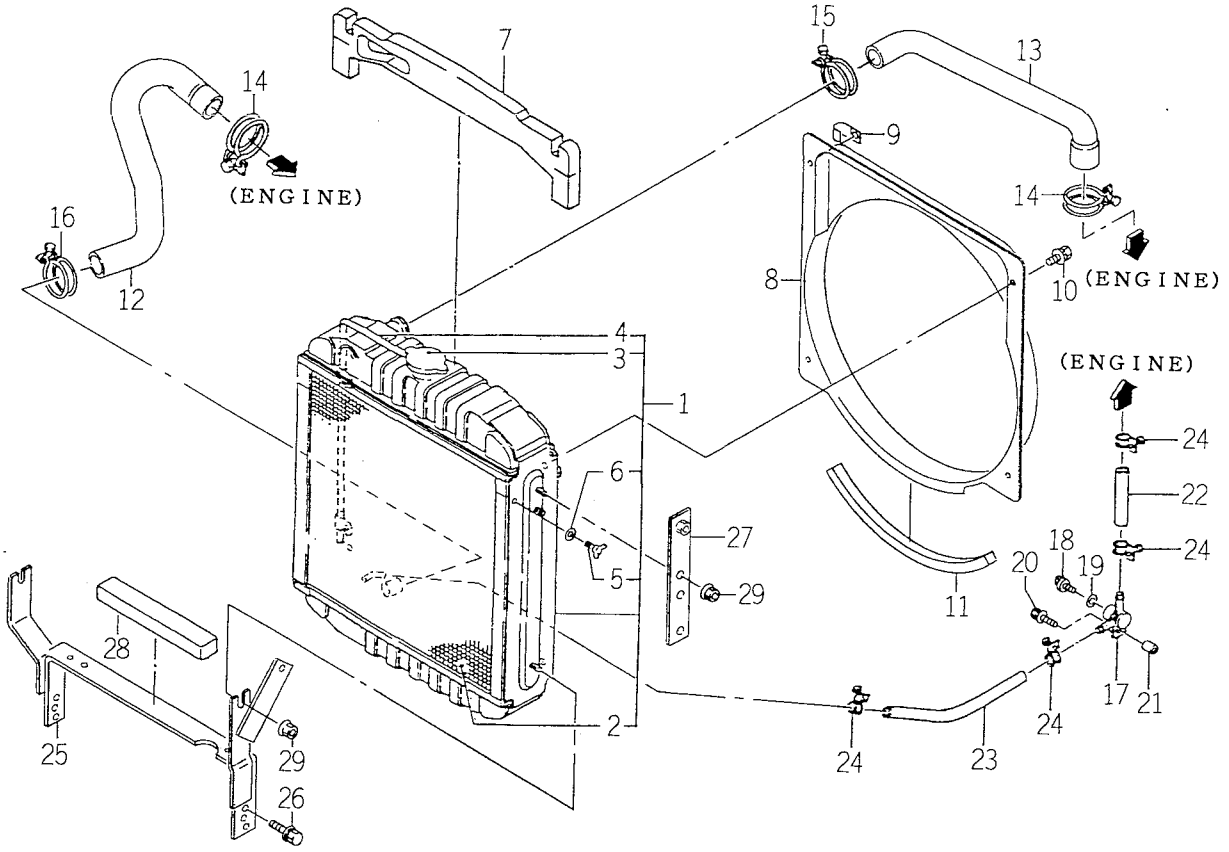

1673-104A

KEY	PART CODE	DESCRIPTION	QTY	TYPE OF MODEL TK529	TYPE OF MODEL TK533	ITC	COL	GRP	REMARKS
26	V211 - 660 - 802 - 50	BOLT/M8X25	4	*	*				
27	1560 - 104 - 220 - 60	STAY/PLATE COMP	1	*	*				
28	1427 - 111 - 244 - 10	SEAL/30X20X215	1	*	*				
29	V362 - 260 - 008 - 00	NUT/WASHER	6	*	*				

FIG. 4 MUFFLER SYSTEM

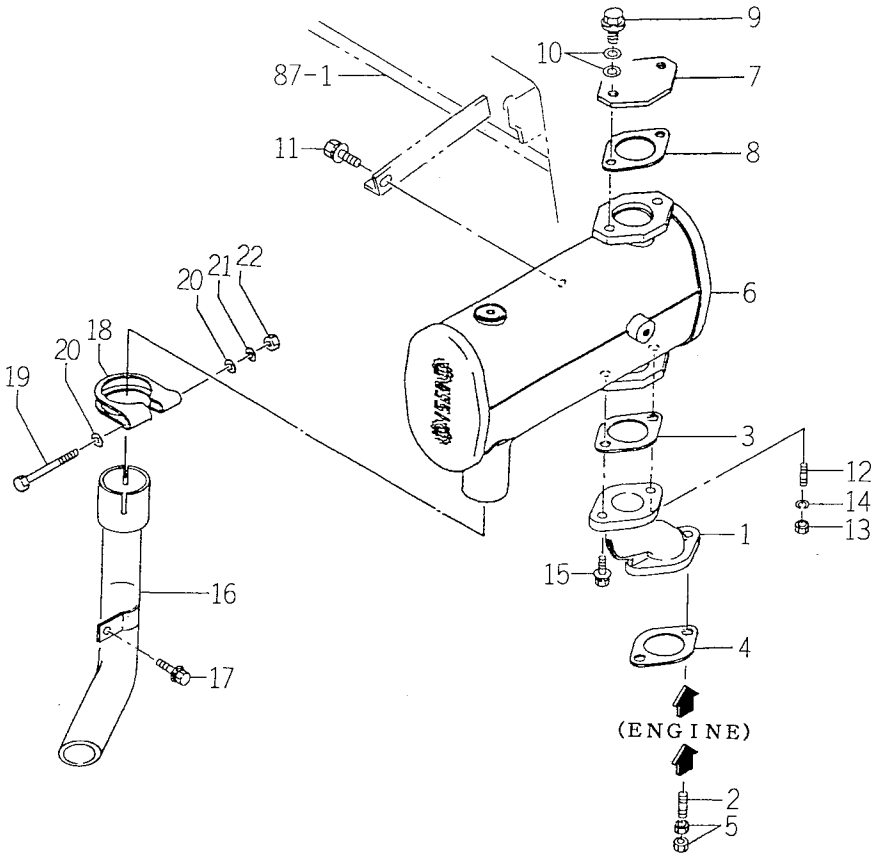

1673-105

KEY	PART CODE	DESCRIPTION	QTY	TYPE OF MODEL TK529	TYPE OF MODEL TK533	ITC	COL	GRP	REMARKS
1	1673 - 105 - 001 - 00	ADAPTER/EXHAUST	1	*	*				
2	1673 - 105 - 002 - 00	BOLT/STUD/M10X35	2	*	*				
3	1594 - 105 - 001 - 00	GASKET	1	*	*				
4	1594 - 105 - 001 - 00	GASKET	1	*	*				
5	V333 - 500 - 010 - 00	NUT M10	4	*	*				
6	1560 - 105 - 260 - 00	MUFFLER COMP	1	*	*				
7	1560 - 105 - 252 - 00	COVER	1	*	*				
8	1594 - 105 - 001 - 00	GASKET	1	*	*				
9	1560 - 105 - 004 - 00	BOLT/M10X25	2	*	*				
10	V411 - 260 - 010 - 00	WASHER/M10	4	*	*				
11	V211 - 360 - 801 - 60	BOLT,SEMS (SP)	2	*	*				
12	1673 - 105 - 003 - 00	BOLT/STUD/M10X25	1	*	*				
13	V333 - 500 - 010 - 00	NUT M10	1	*	*				
14	V401 - 160 - 010 - 00	WASHER,SP/M10	1	*	*				
15	1560 - 105 - 004 - 00	BOLT/M10X25	1	*	*				
16	1673 - 105 - 210 - 00	PIPE/TAIL/UNDER COMP	1	*	*				
17	V211 - 360 - 801 - 60	BOLT,SEMS (SP)	1	*	*				
18	1560 - 105 - 251 - 00	CLAMP	1	*	*				
19	V201 - 260 - 808 - 00	BOLT/M 8X80	1	*	*				
20	V411 - 260 - 008 - 00	WASHER,PL/M 8	2	*	*				
21	V401 - 160 - 008 - 00	WASHER,SP/M 8	1	*	*				
22	V304 - 260 - 008 - 00	NUT/M 8	1	*	*				

FIG. 5 FUEL TANK SYSTEM

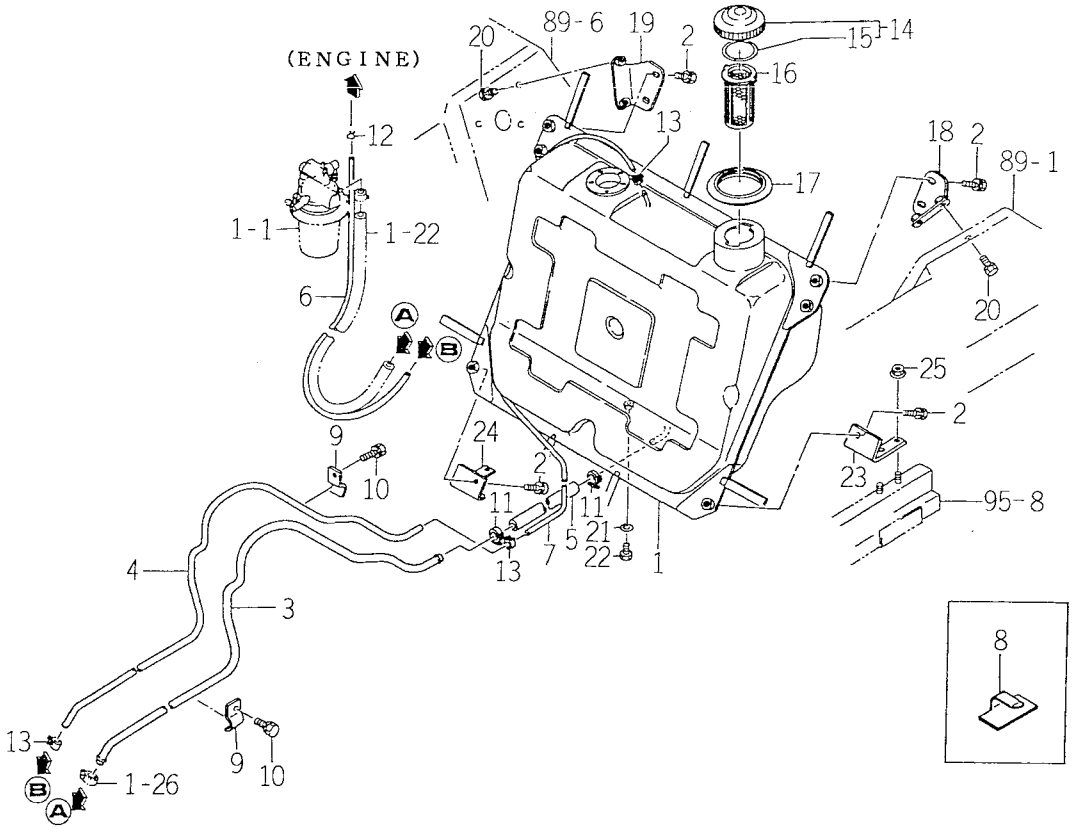

1561-111B

KEY	PART CODE	DESCRIPTION	QTY	TYPE OF MODEL TK529	TYPE OF MODEL TK533	ITC	COL	GRP	REMARKS
1	1561 - 111 - 320 - 20	TANK/FUEL COMP	1	*	*				
2	V211 - 260 - 801 - 60	BOLT,SEMS (S) M8X16	6	*	*				
3	1560 - 111 - 004 - 20	PIPE,DELIVERY	1	*	*				
4	1560 - 111 - 005 - 10	PIPE	1	*	*				
5	1561 - 111 - 003 - 00	HOSE/430	1	*	*				
6	1560 - 111 - 007 - 00	HOSE/500	1	*	*				
7	1560 - 111 - 008 - 00	HOSE/1050	1	*	*				
8	1426 - 621 - 038 - 00	CLAMP,HARNESS	1	*	*				
9	1560 - 111 - 009 - 00	PLATE	4	*	*				
10	V211 - 260 - 801 - 20	BOLT,SEMS (S) M8X12	4	*	*				
11	J061 - 116 - 025 - 00	CLAMP/WORM/16 - 25	2	*	*				
12	J062 - 076 - 082 - 00	CLIP/HOSE/7.6 - 8.2	1	*	*				
13	J062 - 104 - 111 - 00	CLIP/HOSE/10.4 - 11.1	3	*	*				
14	1554 - 111 - 210 - 00	CAP ASSY	1	*	*				
15	1575 - 612 - 223 - 00	PACKING,CAP	1	*	*				
16	1513 - 111 - 009 - 00	STRAINER	1	*	*				
17	1560 - 111 - 003 - 20	COVER	1	*	*				
18	1560 - 111 - 270 - 50	BRACKET,L COMP	1	*	*				
19	1560 - 111 - 280 - 50	BRACKET,R COMP	1	*	*				
20	V211 - 260 - 802 - 00	BOLT,SEMS (S)	4	*	*				
21	1407 - 111 - 001 - 00	WASHER/8X12X2	1	*	*				
22	V201 - 260 - 801 - 20	BOLT/M 8X12	1	*	*				
23	1560 - 111 - 001 - 10	PLATE,L	1	*	*				
24	1560 - 111 - 002 - 10	PLATE,R	1	*	*				
25	V363 - 260 - 008 - 00	NUT,LOCK/M8	4	*	*				

FIG. 6 BATTERY BASE SYSTEM

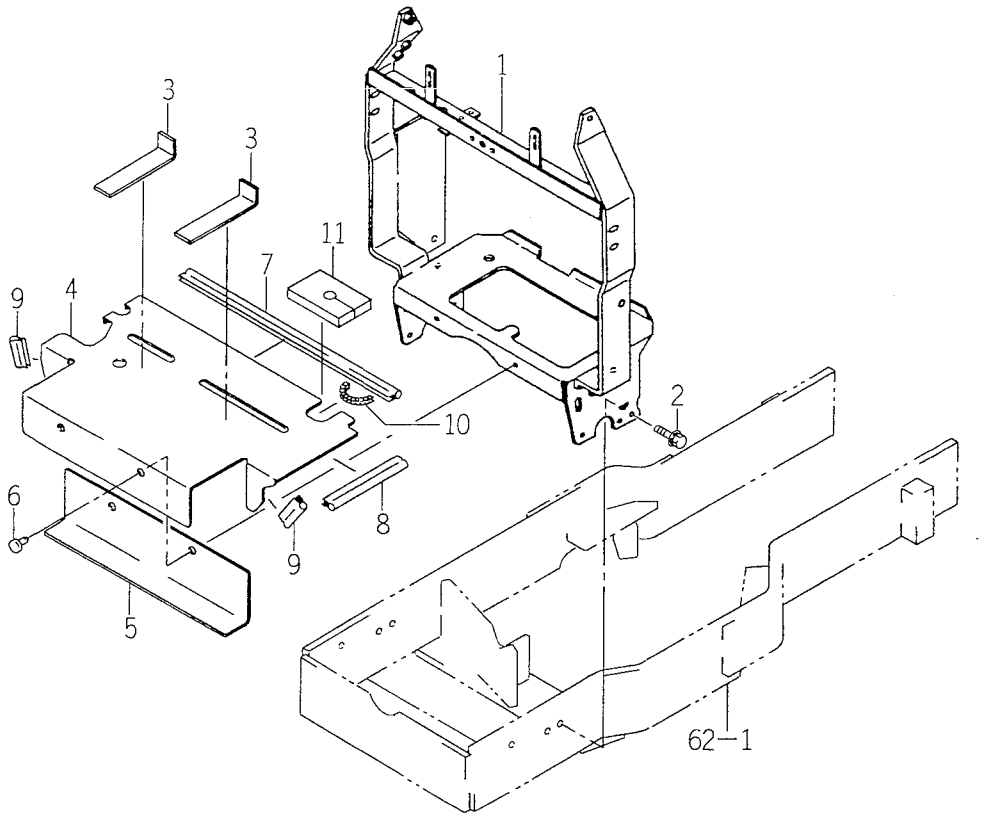

1673-112

KEY	PART CODE	DESCRIPTION	QTY	TYPE OF MODEL TK529	TYPE OF MODEL TK533	ITC	COL	GRP	REMARKS
1	1673 - 112 - 200 - 00	BRACKET/BATTERY COMP	1	*	*				
2	V211 - 660 - 802 - 00	BOLT/8X20	6	*	*				
3	1432 - 616 - 004 - 00	PLATE,RUBBER	2	*	*				
4	1673 - 112 - 005 - 00	SEAL/PLATE	1	*	*				
5	1673 - 112 - 003 - 10	SEAL	1	*	*				
6	1527 - 604 - 002 - 00	CLIP (B)	2	*	*				
7	1675 - 102 - 003 - 00	INSULATOR	1	*	*				
8	1673 - 112 - 004 - 00	INSULATOR/140	1	*	*				
9	1673 - 780 - 011 - 00	TRIM/50	2	*	*				
10	1673 - 112 - 006 - 00	PROTECTER	1	*	*				
11	1641 - 112 - 002 - 00	INSULATOR	1	*	*				

FIG. 7 ACCELERATOR SYSTEM (TK533)

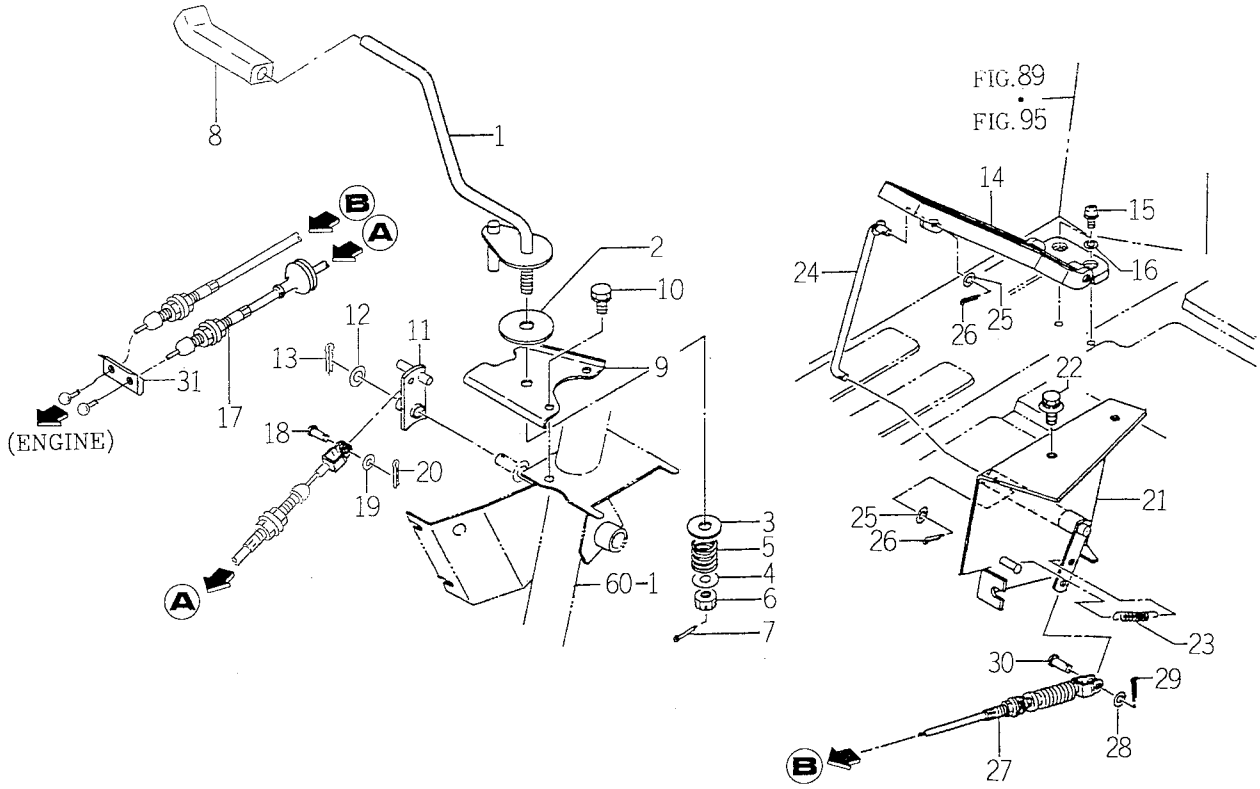

1673-116

KEY	PART CODE	DESCRIPTION	QTY	TYPE OF MODEL TK529	TYPE OF MODEL TK533	ITC	COL	GRP	REMARKS
1	1560 - 116 - 250 - 50	LEVBER/BAR.10 COMP	1		*				
2	1600 - 505 - 007 - 00	LINING/13X50X3	1		*				
3	3610 - 440 - 018 - 00	WASHER	1		*				
4	V411 - 260 - 010 - 00	WASHER/M10	1		*				
5	1404 - 117 - 008 - 00	SPRING,PRESS/22	1		*				
6	V328 - 261 - 110 - 00	NUT/M10X1.25	1		*				
7	V500 - 162 - 502 - 00	PIN,SPLIT/2.5X20	1		*				
8	1614 - 117 - 001 - 00	GRIP/THROTTLE	1		*				
9	1564 - 116 - 001 - 30	GUIDE	1		*				
10	V211 - 260 - 801 - 60	BOLT,SEMS (S) M8X16	2		*				
11	1673 - 116 - 210 - 10	ARM COMP	1		*				
12	V410 - 260 - 010 - 00	WASHER,PL/M10	1		*				
13	V500 - 162 - 002 - 00	PIN,SPLIT/2 X20	1		*				
14	1568 - 116 - 210 - 00	PEDAL ASSY	1		*				
15	V120 - 266 - 001 - 60	SCREW SEEMS/M6X16	2		*				
16	V411 - 260 - 006 - 00	WASHER / M6	2		*				
17	1673 - 116 - 200 - 10	CABLE/ACCELERATOR	1		*				
18	1560 - 116 - 008 - 30	PIN/6X16	1		*				
19	V411 - 260 - 006 - 00	WASHER / M6	1		*				
20	V500 - 162 - 002 - 00	PIN,SPLIT/2 X20	1		*				
21	1560 - 116 - 340 - 10	BRACKET COMP	1		*				
22	V211 - 360 - 802 - 00	BOLT (SP) M8X20	3		*				
23	1414 - 312 - 002 - 00	SPRING,TENSION/53	1		*				
24	1560 - 116 - 330 - 30	ROD COMP	1		*				
25	V411 - 260 - 006 - 00	WASHER / M6	2		*				

FIG. 7 ACCELERATOR SYSTEM (TK533)

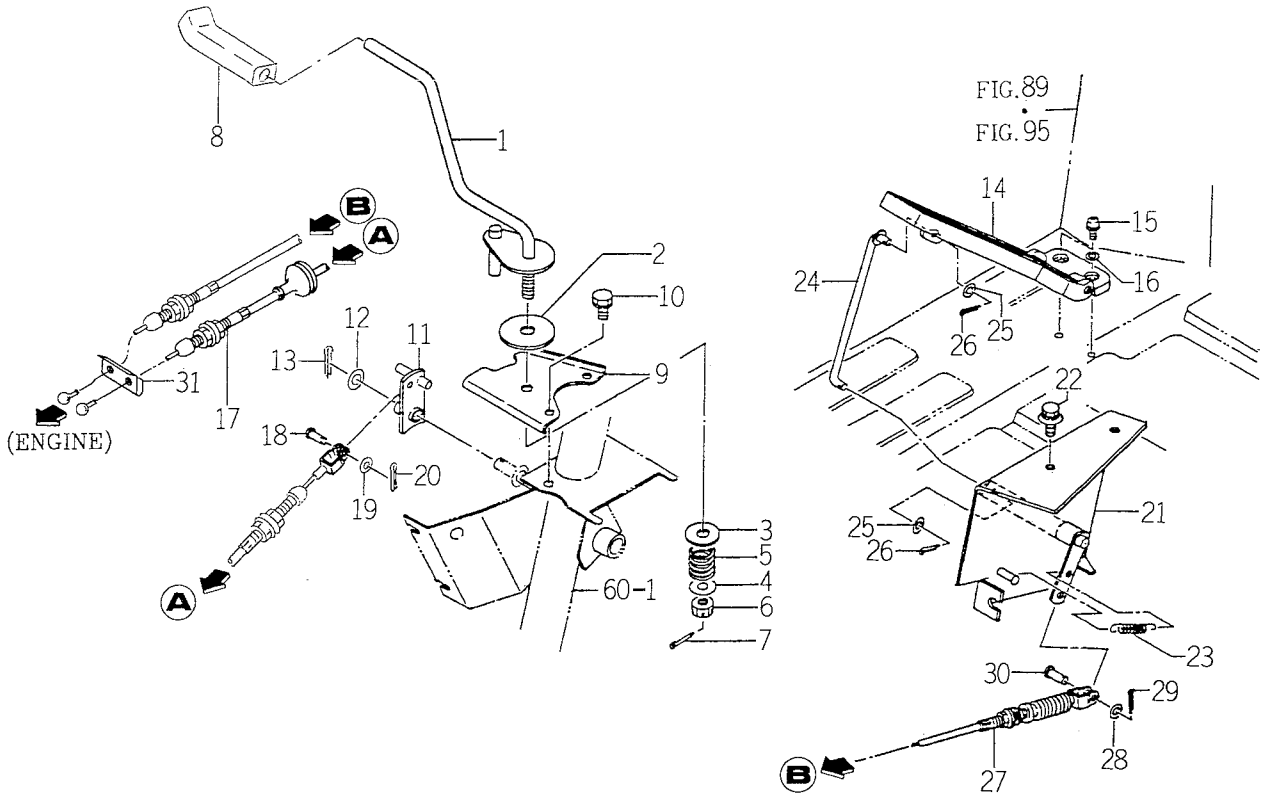

1673-116

KEY	PART CODE	DESCRIPTION	QTY	TYPE OF MODEL TK529	TYPE OF MODEL TK533	ITC	COL	GRP	REMARKS
26	V500 - 162 - 002 - 00	PIN,SPLIT/2 X20	2		*				
27	1650 - 116 - 230 - 00	CABLE/PEDAL ASSY	1		*				
28	V411 - 260 - 006 - 00	WASHER / M6	1		*				
29	V500 - 162 - 002 - 00	PIN,SPLIT/2 X20	1		*				
30	1560 - 116 - 008 - 30	PIN/6X16	1		*				
31	1675 - 116 - 001 - 00	HOLDER	1		*				

FIG. 8 ACCELERATOR SYSTEM (TK529)

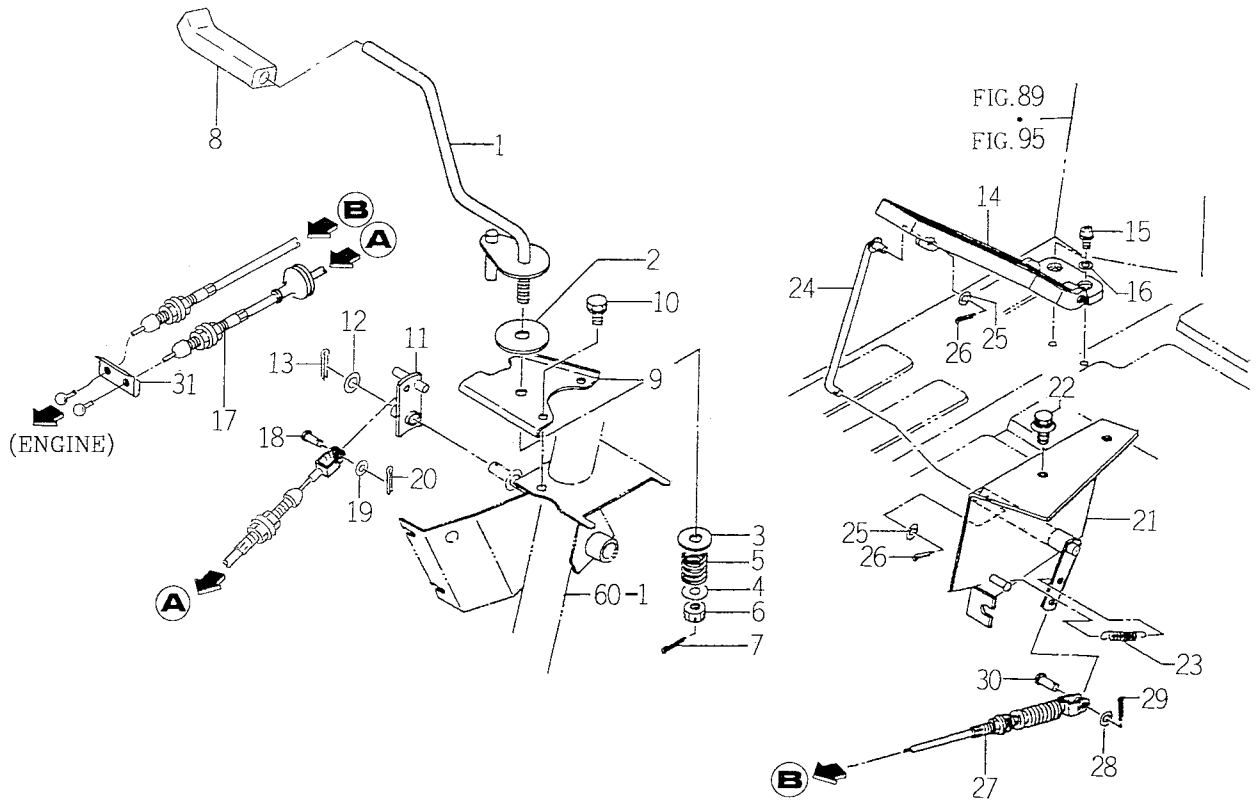

1674-116T

KEY	PART CODE	DESCRIPTION	QTY	TYPE OF MODEL TK529	TYPE OF MODEL TK533	ITC	COL	GRP	REMARKS
1	1560 - 116 - 250 - 50	LEVBER/BAR.10 COMP	1	*					
2	1600 - 505 - 007 - 00	LINING/13X50X3	1	*					
3	3610 - 440 - 018 - 00	WASHER	1	*					
4	V411 - 260 - 010 - 00	WASHER/M10	1	*					
5	1404 - 117 - 008 - 00	SPRING,PRESS/22	1	*					
6	V328 - 261 - 110 - 00	NUT/M10X1.25	1	*					
7	V500 - 162 - 502 - 00	PIN,SPLIT/2.5X20	1	*					
8	1614 - 117 - 001 - 00	GRIP/THROTTLE	1	*					
9	1564 - 116 - 001 - 30	GUIDE	1	*					
10	V211 - 260 - 801 - 60	BOLT,SEMS (S) M8X16	2	*					
11	1673 - 116 - 210 - 10	ARM COMP	1	*					
12	V410 - 260 - 010 - 00	WASHER,PL/M10	1	*					
13	V500 - 162 - 002 - 00	PIN,SPLIT/2 X20	1	*					
14	1568 - 116 - 210 - 00	PEDAL ASSY	1	*					
15	V120 - 266 - 001 - 60	SCREW SEEMS/M6X16	2	*					
16	V411 - 260 - 006 - 00	WASHER / M6	2	*					
17	1673 - 116 - 200 - 10	CABLE/ACCELERATOR	1	*					
18	1560 - 116 - 008 - 30	PIN/6X16	1	*					
19	V411 - 260 - 006 - 00	WASHER / M6	1	*					
20	V500 - 162 - 002 - 00	PIN,SPLIT/2 X20	1	*					
21	1674 - 116 - 500 - 00	BRACKET COMP	1	*					
22	V211 - 360 - 802 - 00	BOLT (SP) M8X20	3	*					
23	1414 - 312 - 002 - 00	SPRING,TENSION/53	1	*					
24	1560 - 116 - 330 - 30	ROD COMP	1	*					
25	V411 - 260 - 006 - 00	WASHER / M6	2	*					

FIG. 8 ACCELERATOR SYSTEM (TK529)

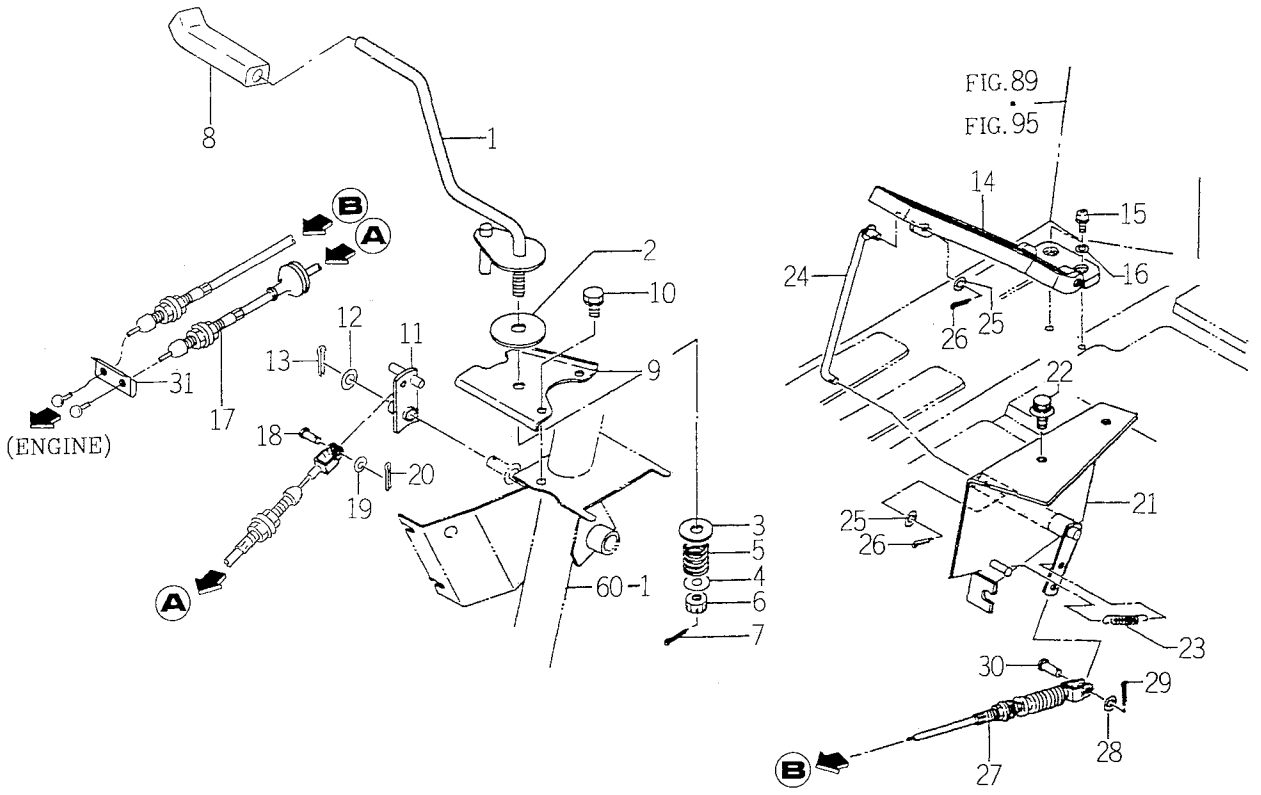

1674-116T

KEY	PART CODE	DESCRIPTION	QTY	TYPE OF MODEL TK529	TYPE OF MODEL TK533	ITC	COL	GRP	REMARKS
26	V500 - 162 - 002 - 00	PIN,SPLIT/2 X20	2	*					
27	1650 - 116 - 230 - 00	CABLE/PEDAL ASSY	1	*					
28	V411 - 260 - 006 - 00	WASHER / M6	1	*					
29	V500 - 162 - 002 - 00	PIN,SPLIT/2 X20	1	*					
30	1560 - 116 - 008 - 30	PIN/6X16	1	*					
31	1675 - 116 - 001 - 00	HOLDER	1	*					

FIG. 9 MAIN CLUTCH SYSTEM

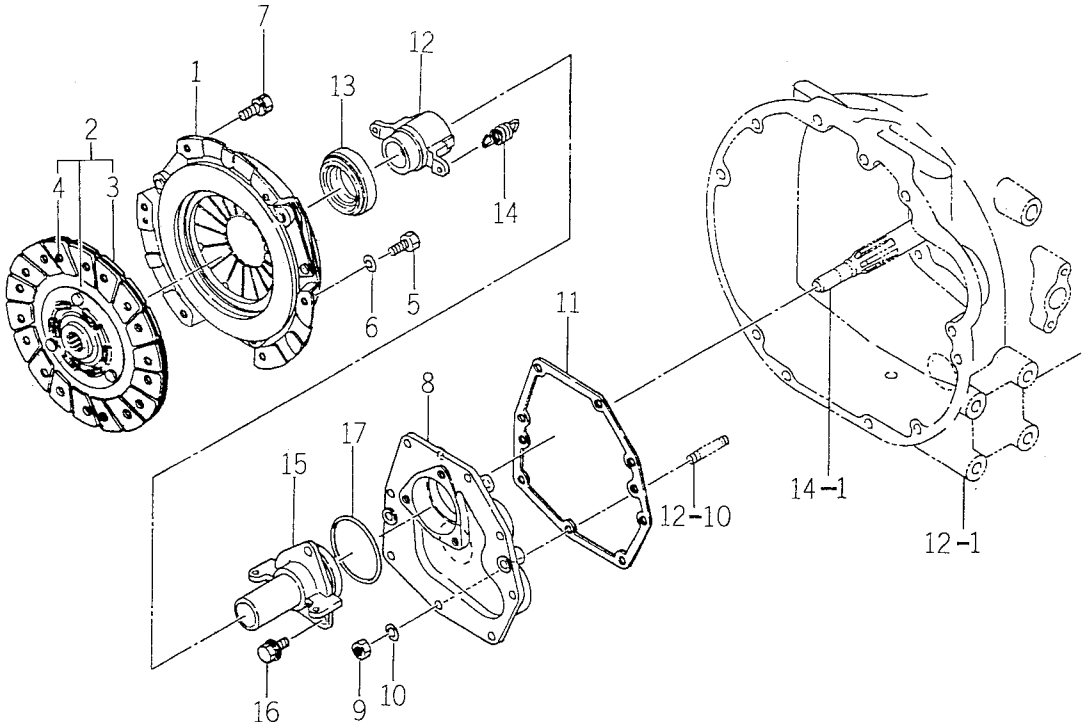

1673-120

KEY	PART CODE	DESCRIPTION	QTY	TYPE OF MODEL TK529	TYPE OF MODEL TK533	ITC	COL	GRP	REMARKS
1	1650 - 120 - 230 - 00	COVER/SINGLE/22 ASSY	1	*	*				
2	1650 - 120 - 240 - 00	DISK/CLUTCH/225 COMP	1	*	*				
3	1594 - 121 - 211 - 00	FACING	2	*	*				
4	1561 - 121 - 212 - 40	RIVET	18	*	*				
5	1415 - 121 - 009 - 00	BOLT,REAMER/M8X25	2	*	*				
6	V401 - 160 - 008 - 00	WASHER,SP/M 8	2	*	*				
7	V211 - 560 - 802 - 50	BOLT,SEMS/M8X25 7T	4	*	*				
8	1560 - 120 - 001 - 50	METAL/INPUT	1	*	*				
9	V304 - 460 - 008 - 00	NUT/M8	8	*	*				
10	V401 - 160 - 008 - 00	WASHER,SP/M 8	8	*	*				
11	1560 - 120 - 003 - 00	GASKET	1	*	*				
12	1673 - 120 - 001 - 00	SLEEVE	1	*	*				
13	1445 - 120 - 002 - 00	BEARING,CLUTCH RS.	1	*	*				
14	1432 - 120 - 004 - 00	SPRING,TENSION/31	2	*	*				
15	1560 - 120 - 002 - 30	METAL/SLEEVE	1	*	*				
16	V211 - 660 - 802 - 00	BOLT/8X20	3	*	*				
17	V721 - 103 - 106 - 00	O - RING/G60	1	*	*				

FIG. 10 CLUTCH SHAFT SYSTEM

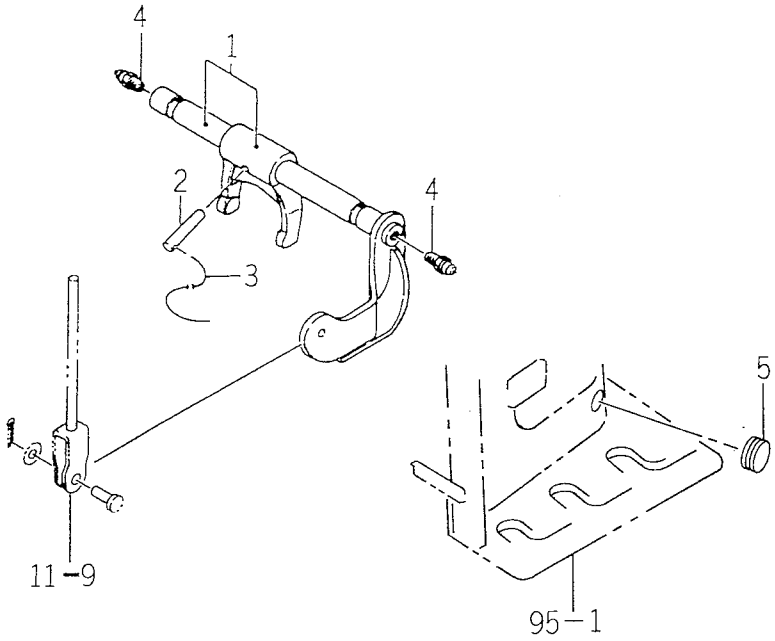

1674-130

KEY	PART CODE	DESCRIPTION	QTY	TYPE OF MODEL TK529	TYPE OF MODEL TK533	ITC	COL	GRP	REMARKS
1	1560 - 130 - 200 - 60	BAR SET	1	*	*				
2	1560 - 130 - 001 - 00	PIN	1	*	*				
3		WIRE	1	*	*				
4	V761 - 150 - 000 - 00	NIPPLE/GREASE	2	*	*				
5	1432 - 651 - 021 - 00	CAP,RUBBER (20)	2	*	*				

FIG. 11 CLUTCH PEDAL SYSTEM

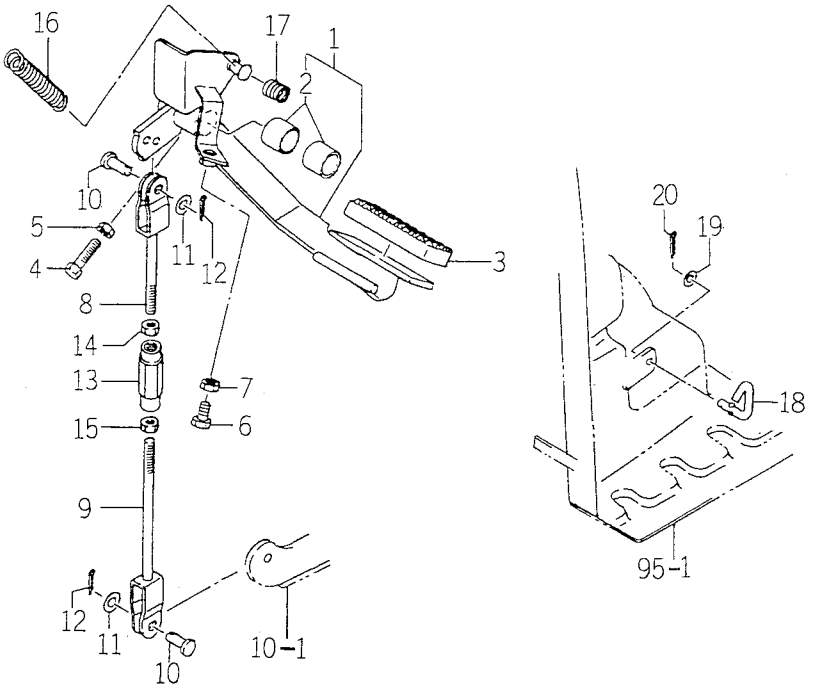

1560-132

KEY	PART CODE	DESCRIPTION	QTY	TYPE OF MODEL TK529	TYPE OF MODEL TK533	ITC	COL	GRP	REMARKS
1	1560 - 132 - 200 - 70	PEDAL,CLUTCH ASSY	1	*	*				
2	3670 - 703 - 008 - 00	BUSH/20X23X20	2	*	*				
3	1524 - 122 - 001 - 00	PAD	1	*	*				
4	V201 - 260 - 803 - 00	BOLT/M 8X30	1	*	*				
5	V304 - 260 - 008 - 00	NUT/M 8	1	*	*				
6	V201 - 260 - 802 - 00	BOLT/M 8X20	1	*	*				
7	V304 - 260 - 008 - 00	NUT/M 8	1	*	*				
8	1560 - 132 - 240 - 40	ROD COMP	1	*	*				
9	1560 - 132 - 260 - 60	ROD COMP	1	*	*				
10	1432 - 242 - 001 - 00	PIN	2	*	*				
11	V411 - 260 - 008 - 00	WASHER,PL/M 8	2	*	*				
12	V500 - 162 - 502 - 00	PIN,SPLIT/2.5X20	2	*	*				
13	1444 - 122 - 002 - 00	TURNBUCKLE/M8	1	*	*				
14	1560 - 132 - 007 - 30	NUT/M8	1	*	*				
15	V304 - 260 - 008 - 00	NUT/M 8	1	*	*				
16	1673 - 314 - 001 - 00	SPRING/HE106	1	*	*				
17	1560 - 132 - 001 - 10	TUBE	1	*	*				
18	1675 - 135 - 001 - 00	HOOK	1	*	*				
19	V411 - 260 - 006 - 00	WASHER / M6	1	*	*				
20	V500 - 162 - 002 - 00	PIN,SPLIT/2 X20	1	*	*				

FIG. 12 FRONT MISSION CASE SYSTEM (TK529)

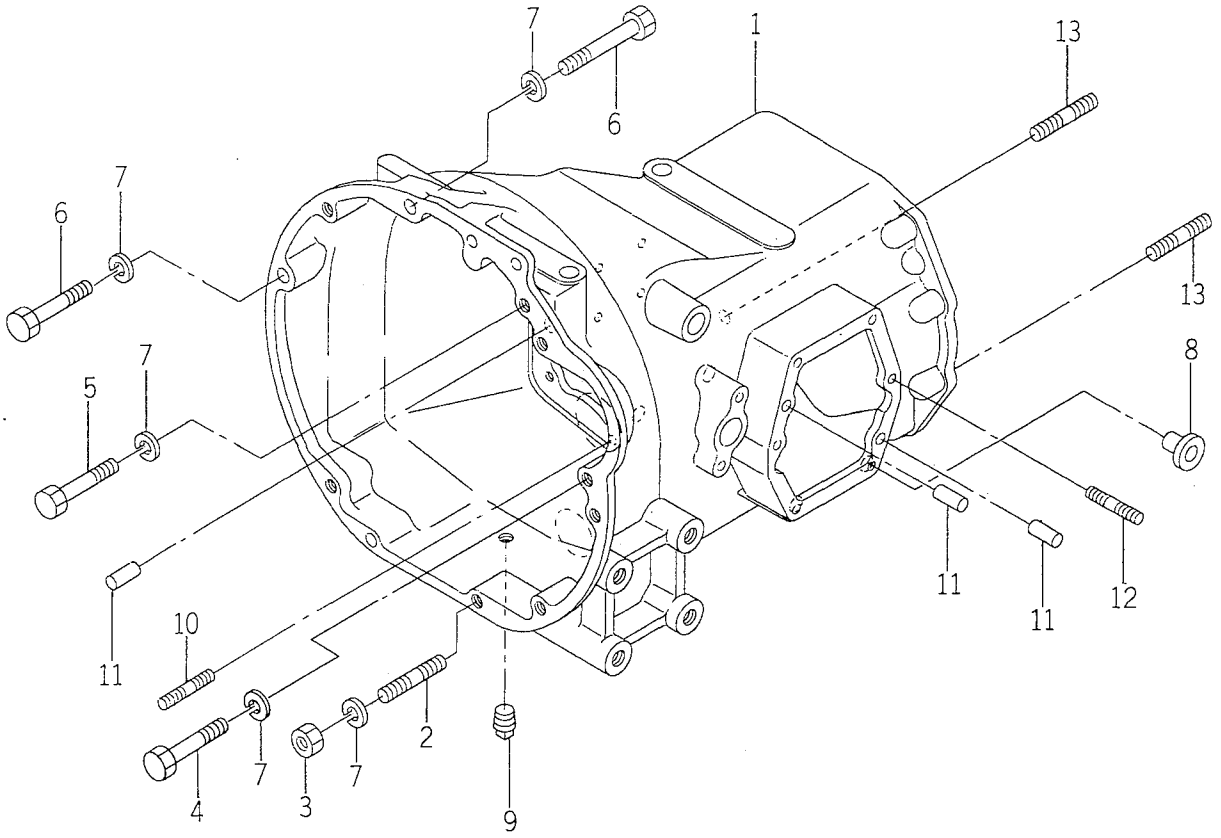

1673-201D

KEY	PART CODE	DESCRIPTION	QTY	TYPE OF MODEL TK529	TYPE OF MODEL TK533	ITC	COL	GRP	REMARKS
1	1673 - 201 - 001 - 00	CASE/TRANSMISSION/F	1	*					
2	V251 - 341 - 202 - 50	BOLT/M12X25	2	*					
3	V304 - 460 - 012 - 00	NUT/M12	2	*					
4	V201 - 361 - 204 - 00	BOLT/M12X40	2	*					
5	V201 - 361 - 203 - 00	BOLT/M12X30	6	*					
6	V201 - 361 - 204 - 50	BOLT/M12X45	1	*					
7	V401 - 160 - 012 - 00	WASHER,SP/M12	8	*					
8	1427 - 317 - 004 - 00	CAP,BLANK/M14	8	*					
9	1326 - 706 - 002 - 10	PLUG,DRAIN	1	*					
10	V251 - 440 - 802 - 5D	BOLT/STUD/SEAL	8	*					
11	V523 - 101 - 002 - 40	PIN	6	*					
12	V251 - 260 - 802 - 0D	BOLT/STUD/SEAL	1	*					
13	V251 - 341 - 203 - 50	BOLT	5	*					

FIG. 13 FRONT MISSION CASE SYSTEM (TK533)

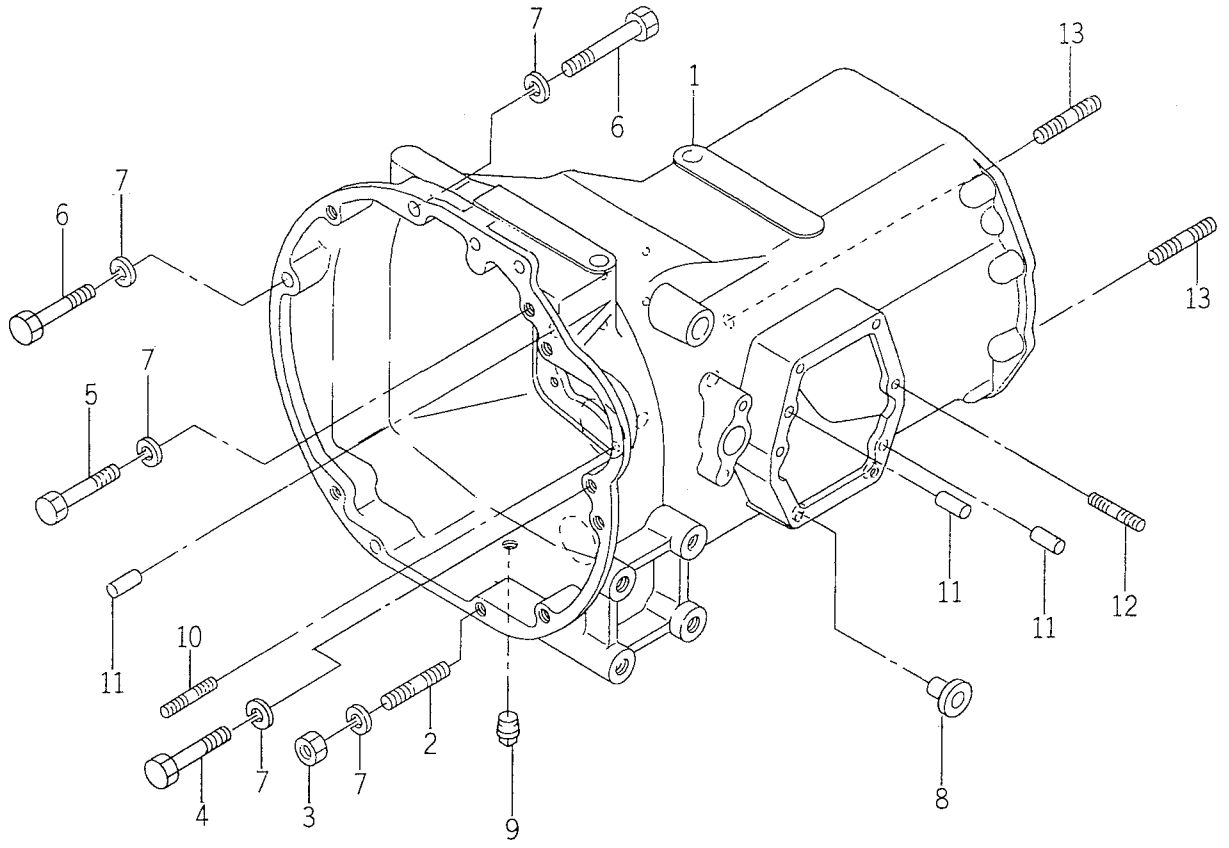

1673-201E

KEY	PART CODE	DESCRIPTION	QTY	TYPE OF MODEL TK529	TYPE OF MODEL TK533	ITC	COL	GRP	REMARKS
1	1673 - 201 - 011 - 00	CASE/TRANSMISSION/F	1		*				
2	V251 - 341 - 202 - 50	BOLT/M12X25	2		*				
3	V304 - 460 - 012 - 00	NUT/M12	2		*				
4	V201 - 361 - 204 - 00	BOLT/M12X40	2		*				
5	V201 - 361 - 203 - 00	BOLT/M12X30	6		*				
6	V201 - 361 - 204 - 50	BOLT/M12X45	1		*				
7	V401 - 160 - 012 - 00	WASHER,SP/M12	8		*				
8	1427 - 317 - 004 - 00	CAP,BLANK/M14	8		*				
9	1326 - 706 - 002 - 10	PLUG,DRAIN	1		*				
10	V251 - 440 - 802 - 5D	BOLT/STUD/SEAL	8		*				
11	V523 - 101 - 002 - 40	PIN	6		*				
12	V251 - 260 - 802 - 0D	BOLT/STUD/SEAL	1		*				
13	V251 - 341 - 203 - 50	BOLT	5		*				

FIG. 14 INPUT GEAR SYSTEM

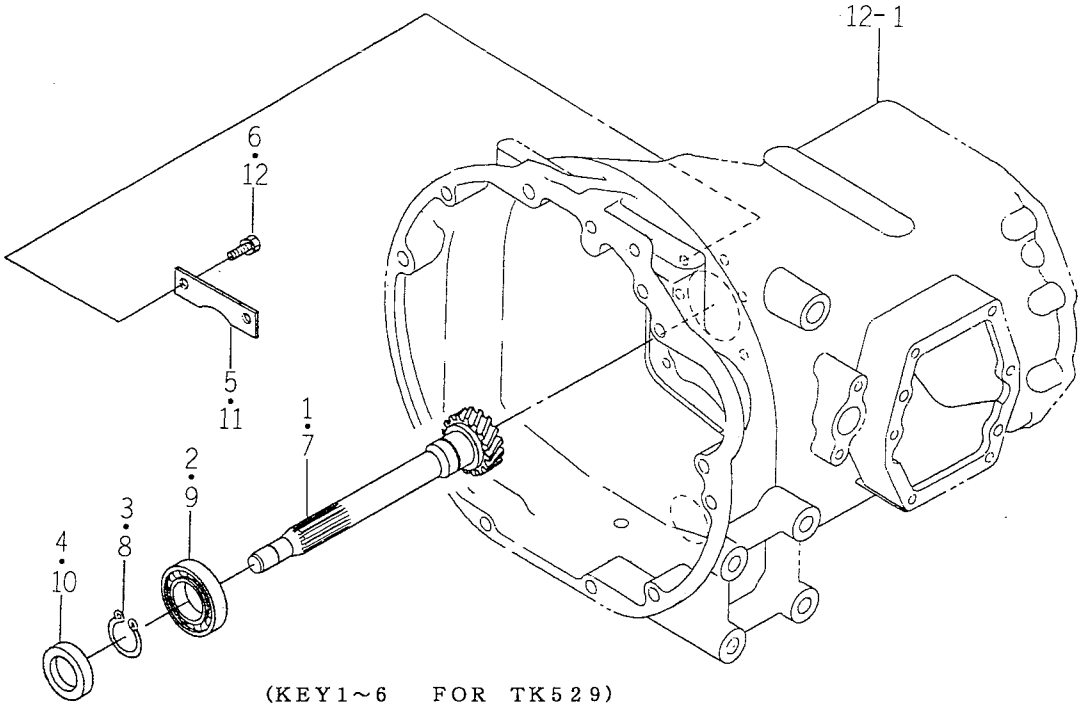

(KEY1~6 FOR TK529)
(KEY7~12 FOR TK533)

1673-206

KEY	PART CODE	DESCRIPTION	QTY	TYPE OF MODEL TK529	TYPE OF MODEL TK533	ITC	COL	GRP	REMARKS
1	1673 - 206 - 001 - 00	GEAR/HELICAL/19	1	*					
2	1560 - 206 - 003 - 00	BEARING/BALL	1	*					
3	V704 - 140 - 030 - 00	RING,SNAP/30 C	1	*					
4	V744 - 130 - 450 - 80	SEAL,OIL/TC30458	1	*					
5	1560 - 206 - 002 - 30	PLATE	1	*					
6	V211 - 560 - 801 - 60	BOLT,SEMS	2	*					
7	1673 - 206 - 011 - 00	GEAR/HELICAL/18	1		*				
8	V704 - 140 - 030 - 00	RING,SNAP/30 C	1		*				
9	1560 - 206 - 003 - 00	BEARING/BALL	1		*				
10	V744 - 130 - 450 - 80	SEAL,OIL/TC30458	1		*				
11	1560 - 206 - 002 - 30	PLATE	1		*				
12	V211 - 560 - 801 - 60	BOLT,SEMS	2		*				

FIG. 15 CHANGE GEAR SYSTEM

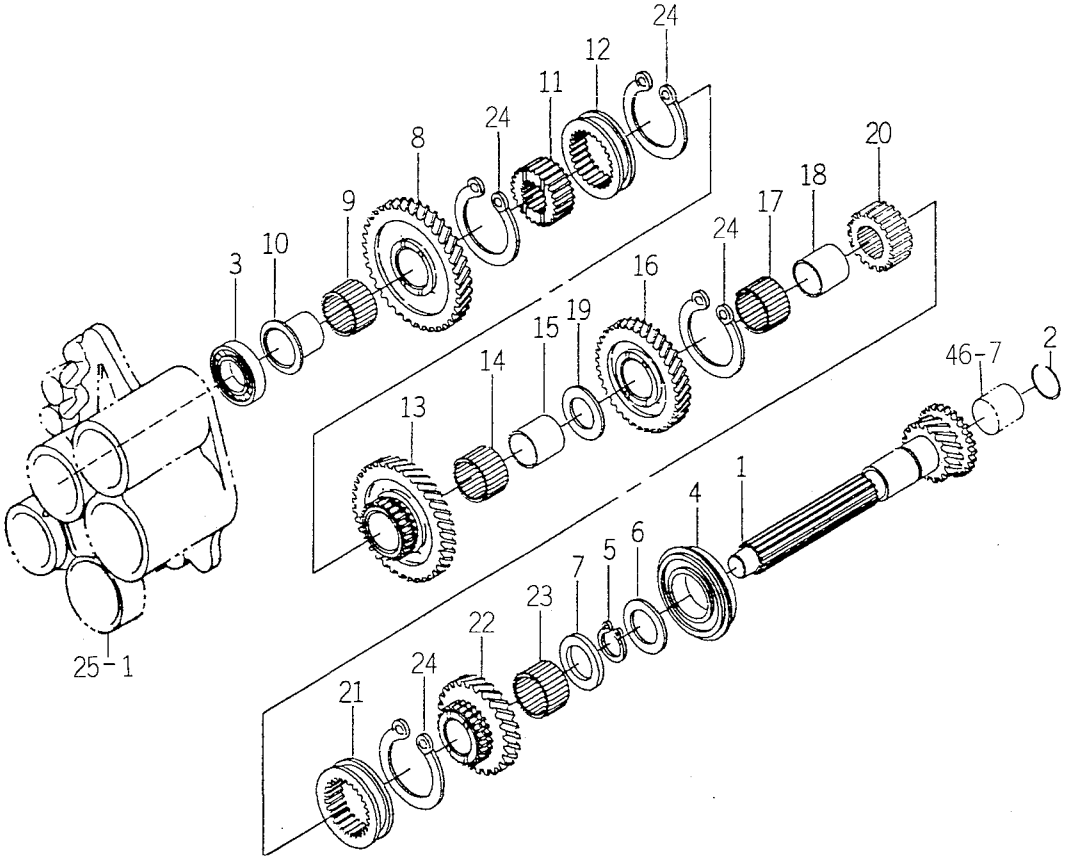

1673-208A

KEY	PART CODE	DESCRIPTION	QTY	TYPE OF MODEL TK529	TYPE OF MODEL TK533	ITC	COL	GRP	REMARKS
1	1560 – 208 – 001 – 60	GEAR,HERICAL/14	1	*	*				
2	1560 – 208 – 023 – 00	RING,SNAP	1	*	*				
3	V600 – 110 – 630 – 40	BEARING,RB/6304	1	*	*				
4	1560 – 208 – 002 – 00	BEARING,BALL	1	*	*				
5	V704 – 140 – 030 – 00	RING,SNAP/30 C	1	*	*				
6	1560 – 208 – 018 – 40	WASHER/30X46X2	1	*	*				
7	1560 – 208 – 021 – 40	WASHER/30X46X5	1	*	*				
8	1611 – 208 – 001 – 00	GEAR/HELICAL/39	1	*	*				
9	V654 – 432 – 372 – 30	BEARING,KT/323723	1	*	*				
10	1560 – 208 – 016 – 40	BUSH/28X46X34	1	*	*				
11	1560 – 208 – 012 – 30	HUB	1	*	*				
12	1560 – 208 – 022 – 40	COUPLING/51X68X18	1	*	*				
13	1560 – 208 – 007 – 60	GEAR/HELICAL/36	1	*	*				
14	V654 – 432 – 372 – 30	BEARING,KT/323723	1	*	*				
15	1560 – 208 – 009 – 30	BUSH/28X32X31	1	*	*				
16	1560 – 208 – 015 – 50	GEAR/HELICAL/32	1	*	*				
17	V654 – 432 – 372 – 30	BEARING,KT/323723	1	*	*				
18	1560 – 208 – 009 – 30	BUSH/28X32X31	1	*	*				
19	1560 – 208 – 010 – 40	WASHER/28X46X3	1	*	*				
20	1560 – 208 – 012 – 30	HUB	1	*	*				
21	1560 – 208 – 022 – 40	COUPLING/51X68X18	1	*	*				
22	1560 – 208 – 017 – 50	GEAR/HELICAL/29	1	*	*				
23	V654 – 430 – 352 – 40	BEARING,NR/KT303524	1	*	*				
24	V706 – 140 – 050 – 00	RING/SNAP	4	*	*				

FIG. 16 COUNTER GEAR SYSTEM

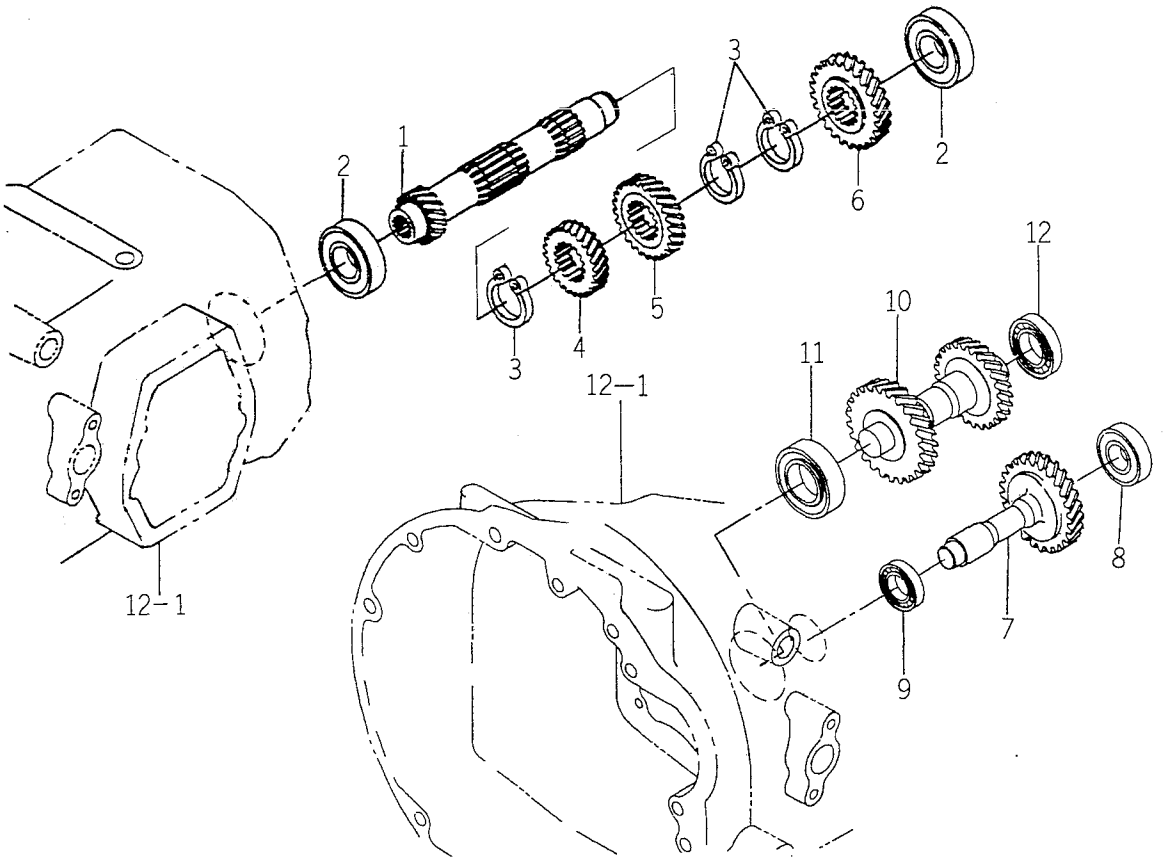

1673-212A

KEY	PART CODE	DESCRIPTION	QTY	TYPE OF MODEL TK529	TYPE OF MODEL TK533	ITC	COL	GRP	REMARKS
1	1611 - 212 - 001 - 00	GEAR/HELICAL/17	1	*	*				
2	1560 - 206 - 003 - 00	BEARING/BALL	2	*	*				
3	V704 - 140 - 035 - 00	RING,SNAP/35 C	3	*	*				
4	1611 - 212 - 002 - 00	GEAR/HELICAL/20	1	*	*				
5	1611 - 212 - 003 - 00	GEAR/HELICAL/23	1	*	*				
6	1611 - 212 - 004 - 00	GEAR/HELICAL/27	1	*	*				
7	1673 - 214 - 001 - 00	GEAR/HELICAL/30	1	*	*				
8	1650 - 209 - 005 - 00	BEARING/BALL	1	*	*				
9	V600 - 110 - 600 - 40	BEARING,RB/6004	1	*	*				
10	1560 - 218 - 001 - 40	GEAR,HERICAL/31 - 27	1	*	*				
11	1594 - 218 - 001 - 00	BEARING/BALL 6305SH2	1	*	*				
12	V600 - 110 - 620 - 50	BEARING,RB/6205	1	*	*				

FIG. 17 REVERSE CHANGE GEAR SYSTEM (TK529)

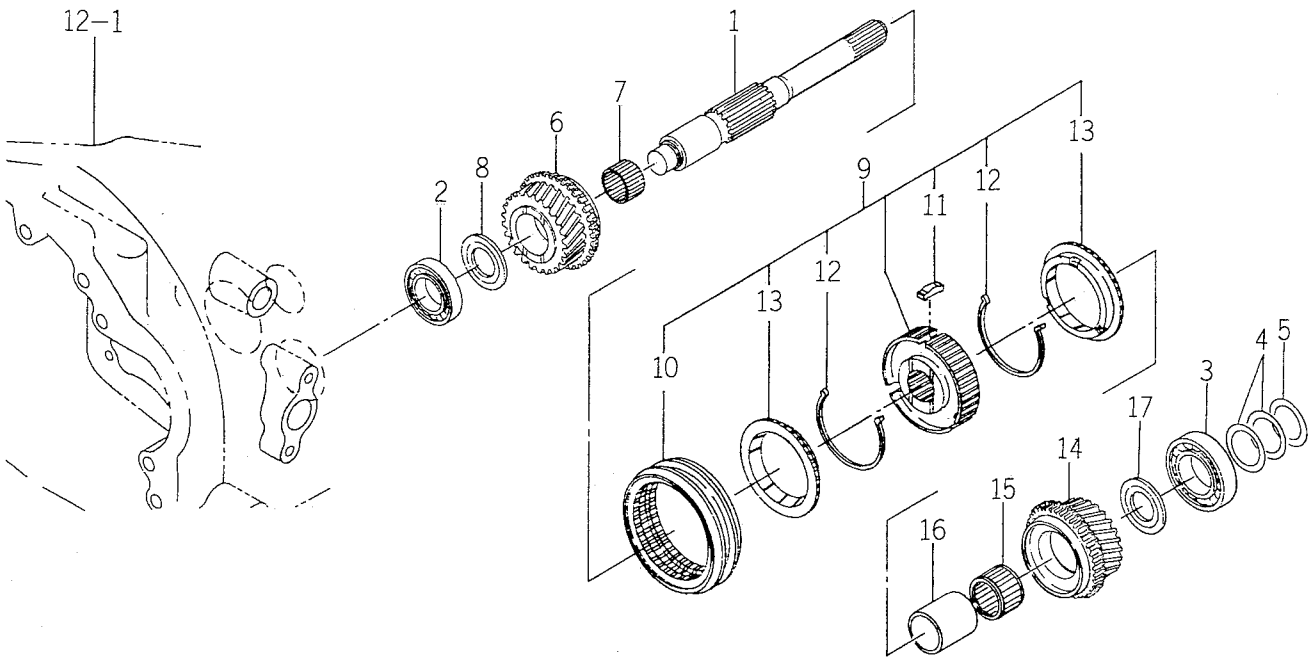

1673-216A

KEY	PART CODE	DESCRIPTION	QTY	TYPE OF MODEL TK529	TYPE OF MODEL TK533	ITC	COL	GRP	REMARKS
1	1673 - 216 - 001 - 00	SHAFT/REVERSE/U	1	*					
2	V600 - 110 - 630 - 40	BEARING,RB/6304	1	*					
3	V600 - 110 - 630 - 50	BEARING,RB/6305	1	*					
4	1425 - 431 - 008 - 00	SHIM,A	2	*					
5	1415 - 205 - 016 - 00	SHIM,B	1	*					
6	1673 - 216 - 211 - 10	GEAR/HELICAL/25	1	*					
7	V654 - 430 - 352 - 40	BEARING,NR/KT303524	1	*					
8	1650 - 203 - 013 - 00	WASHER/25X46X03	1	*					
9	1650 - 214 - 200 - 10	SYNCHRONIZER/30 ASSY	1	*					
10	1650 - 214 - 202 - 00	SLEEVE	1	*					
11	1627 - 205 - 223 - 00	PIN/INSERT	3	*					
12	1650 - 214 - 203 - 00	SPRING	2	*					
13	1650 - 214 - 204 - 00	RING/SYNCHRONIZER	2	*					
14	1673 - 216 - 008 - 00	GEAR/HELICAL/23	1	*					
15	V654 - 435 - 402 - 60	BEARING,NR/KT354026	1	*					
16	1673 - 216 - 013 - 00	BUSH/30X35X39	1	*					
17	1650 - 203 - 013 - 00	WASHER/25X46X03	1	*					

FIG. 18 REVERSE CHANGE GEAR SYSTEM (TK533)

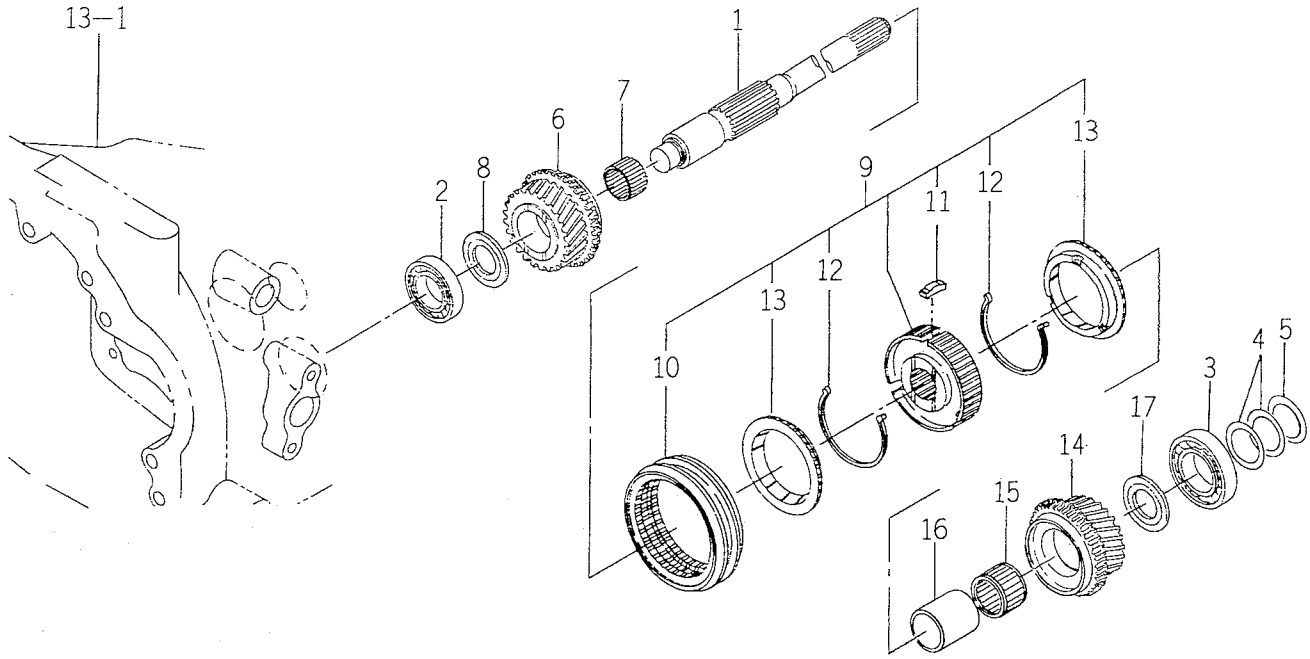

1673-216B

KEY	PART CODE	DESCRIPTION	QTY	TYPE OF MODEL TK529	TYPE OF MODEL TK533	ITC	COL	GRP	REMARKS
1	1673 - 216 - 002 - 00	SHAFT/REVERSE/U	1		*				
2	V600 - 110 - 630 - 40	BEARING,RB/6304	1		*				
3	V600 - 110 - 630 - 50	BEARING,RB/6305	1		*				
4	1425 - 431 - 008 - 00	SHIM,A	2		*				
5	1415 - 205 - 016 - 00	SHIM,B	1		*				
6	1673 - 216 - 221 - 10	GEAR/HELICAL/26	1		*				
7	V654 - 430 - 352 - 40	BEARING,NR/KT303524	1		*				
8	1650 - 203 - 013 - 00	WASHER/25X46X03	1		*				
9	1650 - 214 - 200 - 10	SYNCHRONIZER/30 ASSY	1		*				
10	1650 - 214 - 202 - 00	SLEEVE	1		*				
11	1627 - 205 - 223 - 00	PIN/INSERT	3		*				
12	1650 - 214 - 203 - 00	SPRING	2		*				
13	1650 - 214 - 204 - 00	RING/SYNCHRONIZER	2		*				
14	1673 - 216 - 011 - 00	GEAR/HELICAL/24	1		*				
15	V654 - 435 - 402 - 60	BEARING,NR/KT354026	1		*				
16	1673 - 216 - 013 - 00	BUSH/30X35X39	1		*				
17	1650 - 203 - 013 - 00	WASHER/25X46X03	1		*				

FIG. 19 PTO CHANGE SYSTEM

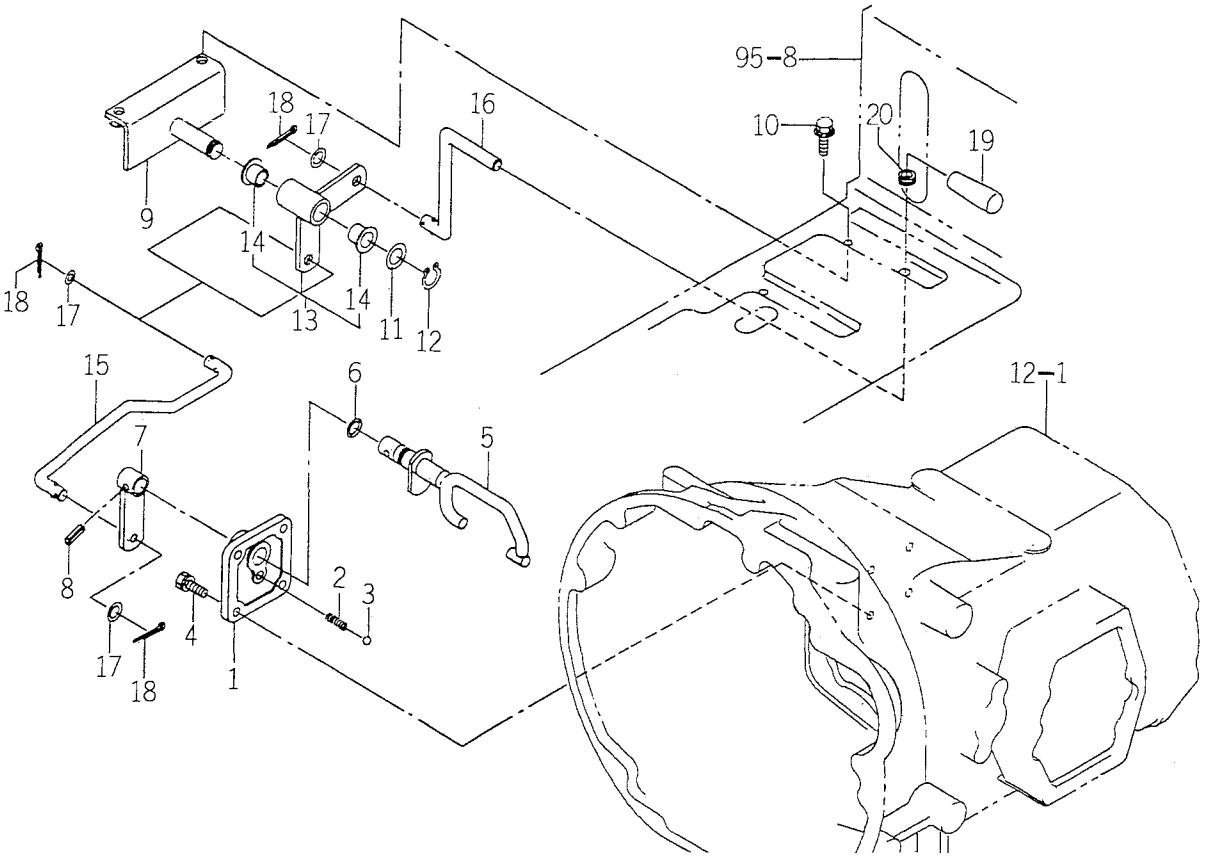

1560-222A

KEY	PART CODE	DESCRIPTION	QTY	TYPE OF MODEL TK529	TYPE OF MODEL TK533	ITC	COL	GRP	REMARKS
1	1560 - 222 - 007 - 00	METAL/PTO	1	*	*				
2	1302 - 225 - 003 - 00	SPRING,SHIFTER	1	*	*				
3	V682 - 200 - 001 - 00	BALL	1	*	*				
4	V211 - 260 - 802 - 00	BOLT,SEMS (S)	4	*	*				
5	1560 - 222 - 200 - 00	ARM COMP	1	*	*				
6	V720 - 102 - 401 - 40	O - RING/P14	1	*	*				
7	1560 - 222 - 210 - 10	ARM COMP	1	*	*				
8	V580 - 140 - 602 - 50	PIN,SPRING/6 X25 W	1	*	*				
9	1560 - 222 - 220 - 00	BRACKET COMP	1	*	*				
10	V211 - 360 - 802 - 00	BOLT (SP) M8X20	2	*	*				
11	3621 - 211 - 003 - 00	WASHER	1	*	*				
12	V704 - 140 - 016 - 00	RING,SNAP/16 C	1	*	*				
13	1560 - 222 - 230 - 00	ARM SET	1	*	*				
14	1560 - 287 - 002 - 30	BUSH/16X24X16	2	*	*				
15	1560 - 222 - 008 - 10	ROD	1	*	*				
16	1560 - 222 - 009 - 10	LEVER	1	*	*				
17	V411 - 260 - 010 - 00	WASHER/M10	3	*	*				
18	V500 - 162 - 002 - 00	PIN,SPLIT/2 X20	3	*	*				
19	3640 - 585 - 001 - 00	GLIP/YELLOW	1	*	*				
20	1427 - 621 - 012 - 00	GROMMET	1	*	*				

FIG. 20 PTO DRIVE SHAFT SYSTEM (TK529)

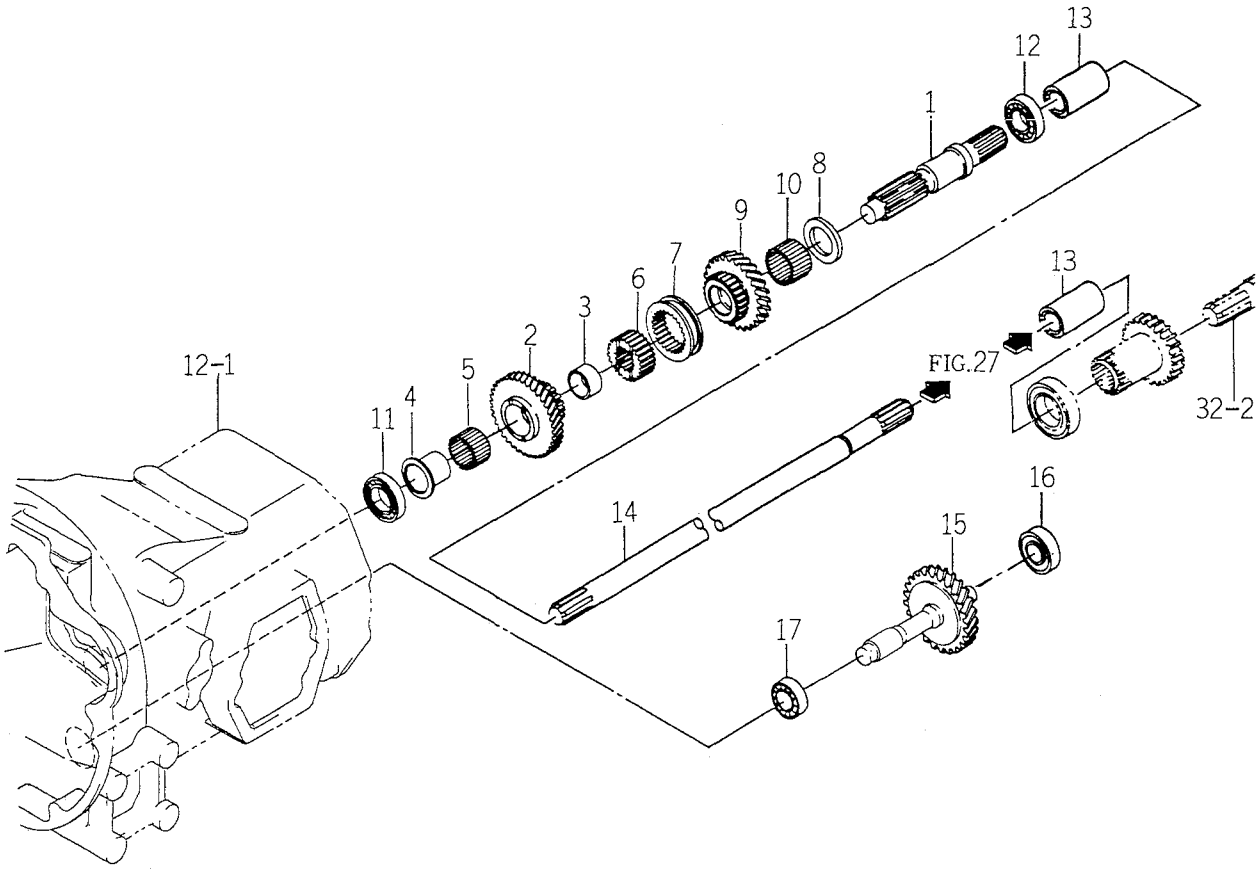

1673-222A

KEY	PART CODE	DESCRIPTION	QTY	TYPE OF MODEL TK529	TYPE OF MODEL TK533	ITC	COL	GRP	REMARKS
1	1560 - 222 - 001 - 20	SHAFT/PTO	1	*					
2	1560 - 222 - 002 - 20	GEAR/HERICAL/28	1	*					
3	1560 - 222 - 003 - 10	BUSH/28X32X15	1	*					
4	1560 - 208 - 016 - 40	BUSH/28X46X34	1	*					
5	V654 - 432 - 372 - 30	BEARING,KT/323723	1	*					
6	1560 - 208 - 012 - 30	HUB	1	*					
7	1560 - 208 - 022 - 40	COUPLING/51X68X18	1	*					
8	1560 - 208 - 021 - 40	WASHER/30X46X5	1	*					
9	1560 - 222 - 004 - 20	GEAR/HERICAL/28	1	*					
10	V654 - 430 - 352 - 40	BEARING,NR/KT303524	1	*					
11	V600 - 110 - 630 - 40	BEARING,RB/6304	1	*					
12	V600 - 110 - 620 - 50	BEARING,RB/6205	1	*					
13	1560 - 220 - 004 - 10	COUPRING/21X36X65	2	*					
14	1561 - 220 - 001 - 30	SHAFT/PTO	1	*					
15	1673 - 222 - 001 - 00	GEAR/HELICAL/32	1	*					
16	1560 - 214 - 003 - 00	BEARING/BALL/6304SH2	1	*					
17	V600 - 110 - 600 - 40	BEARING,RB/6004	1	*					

FIG. 21 PTO DRIVE SHAFT SYSTEM (TK533)

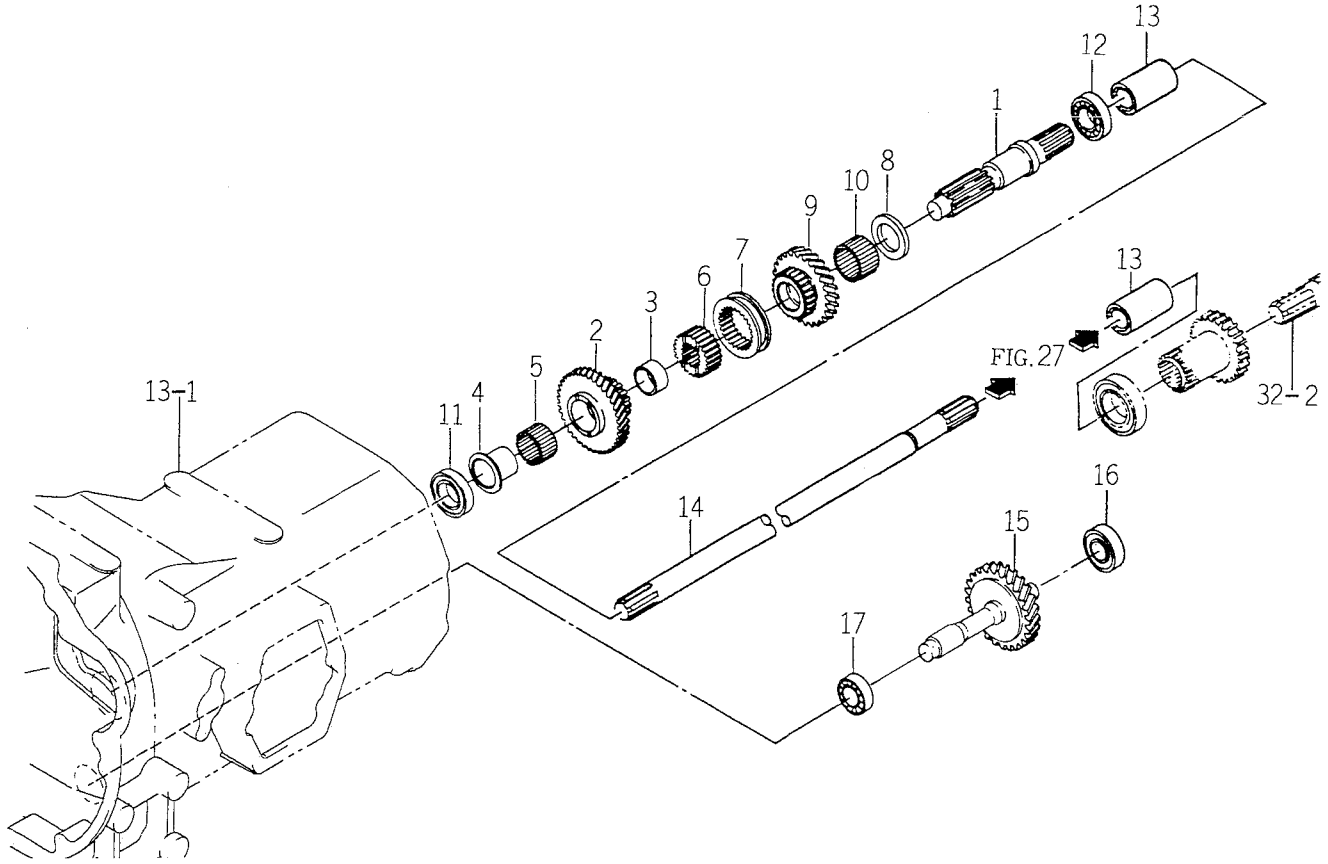

1673-222B

KEY	PART CODE	DESCRIPTION	QTY	TYPE OF MODEL TK529	TYPE OF MODEL TK533	ITC	COL	GRP	REMARKS
1	1560 - 222 - 001 - 20	SHAFT/PTO	1		*				
2	1563 - 222 - 001 - 20	GEAR/HELICAL/29	1		*				
3	1560 - 222 - 003 - 10	BUSH/28X32X15	1		*				
4	1560 - 208 - 016 - 40	BUSH/28X46X34	1		*				
5	V654 - 432 - 372 - 30	BEARING,KT/323723	1		*				
6	1560 - 208 - 012 - 30	HUB	1		*				
7	1560 - 208 - 022 - 40	COUPLING/51X68X18	1		*				
8	1560 - 208 - 021 - 40	WASHER/30X46X5	1		*				
9	1560 - 222 - 004 - 20	GEAR/HERICAL/28	1		*				
10	V654 - 430 - 352 - 40	BEARING,NR/KT303524	1		*				
11	1560 - 214 - 003 - 00	BEARING/BALL/6304SH2	1		*				
12	V600 - 110 - 620 - 50	BEARING,RB/6205	1		*				
13	1560 - 220 - 004 - 10	COUPRING/21X36X65	2		*				
14	1563 - 220 - 001 - 30	SHAFT/PTO	1		*				
15	1673 - 222 - 001 - 00	GEAR/HELICAL/32	1		*				
16	1560 - 214 - 003 - 00	BEARING/BALL/6304SH2	1		*				
17	V600 - 110 - 600 - 40	BEARING,RB/6004	1		*				

FIG. 22 MAIN CHANGE SYSTEM

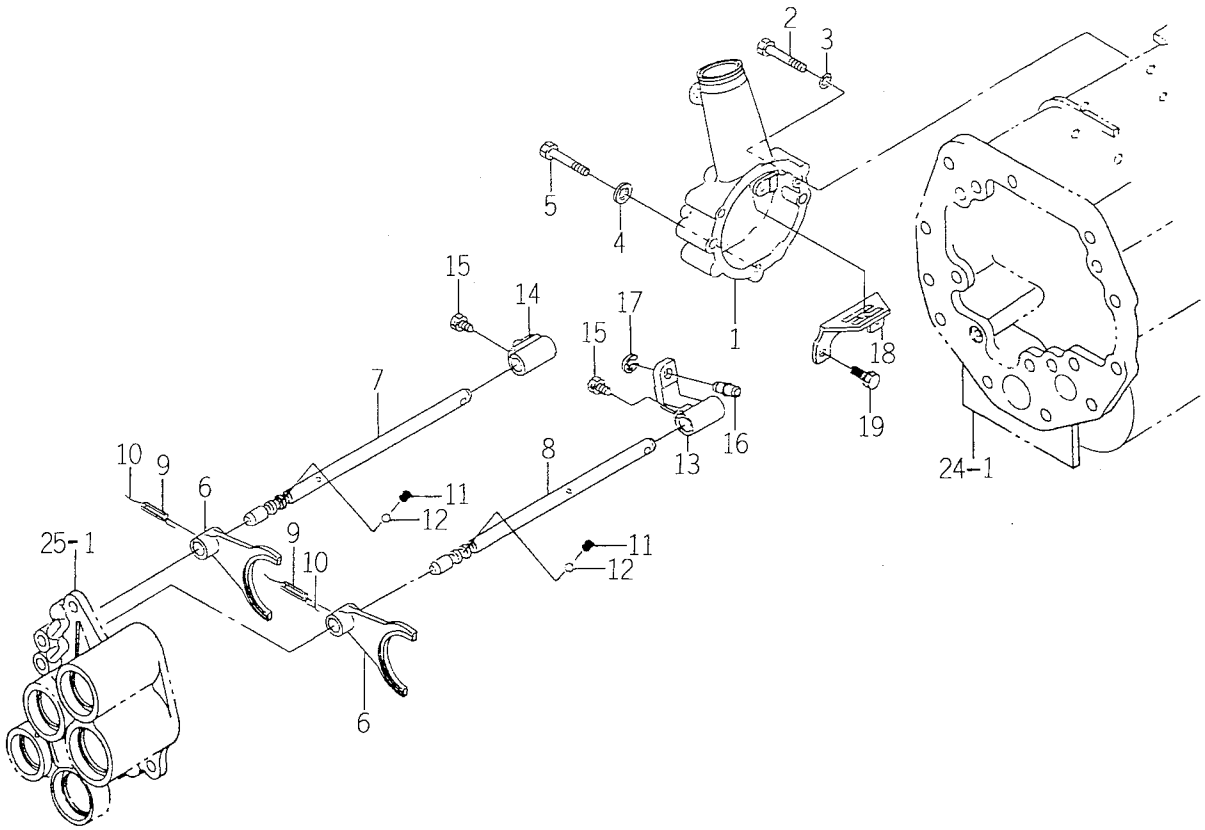

1561-223A

KEY	PART CODE	DESCRIPTION	QTY	TYPE OF MODEL TK529	TYPE OF MODEL TK533	ITC	COL	GRP	REMARKS
1	1561 - 223 - 002 - 50	METAL/MAIN	1	*	*				
2	V201 - 360 - 805 - 00	BOLT/M8X50	2	*	*				
3	V401 - 160 - 008 - 00	WASHER,SP/M 8	2	*	*				
4	1560 - 223 - 008 - 50	SEAL	1	*	*				
5	V201 - 360 - 805 - 0B	BOLT/SEAL	1	*	*				
6	1560 - 223 - 001 - 80	FORK/SHIFT/MAIN	2	*	*				
7	1560 - 223 - 013 - 00	STAY	1	*	*				
8	1560 - 223 - 014 - 00	STAY	1	*	*				
9	V580 - 140 - 602 - 50	PIN,SPRING/6 X25 W	2	*	*				
10		WIRE	2	*	*				
11	1302 - 225 - 003 - 00	SPRING,SHIFTER	2	*	*				
12	V682 - 200 - 001 - 00	BALL	2	*	*				
13	1560 - 223 - 005 - 50	LINK	1	*	*				
14	1560 - 223 - 011 - 40	LINK	1	*	*				
15	1560 - 223 - 016 - 00	BOLT/M8X16	2	*	*				
16	1560 - 223 - 012 - 40	PIN	1	*	*				
17	V710 - 140 - 007 - 00	RING,SNAP/7 E	1	*	*				
18	1560 - 223 - 007 - 40	GUIDE	1	*	*				
19	V211 - 560 - 801 - 60	BOLT,SEMS	2	*	*				

FIG. 23 REVERSE CHAGE SYSTEM

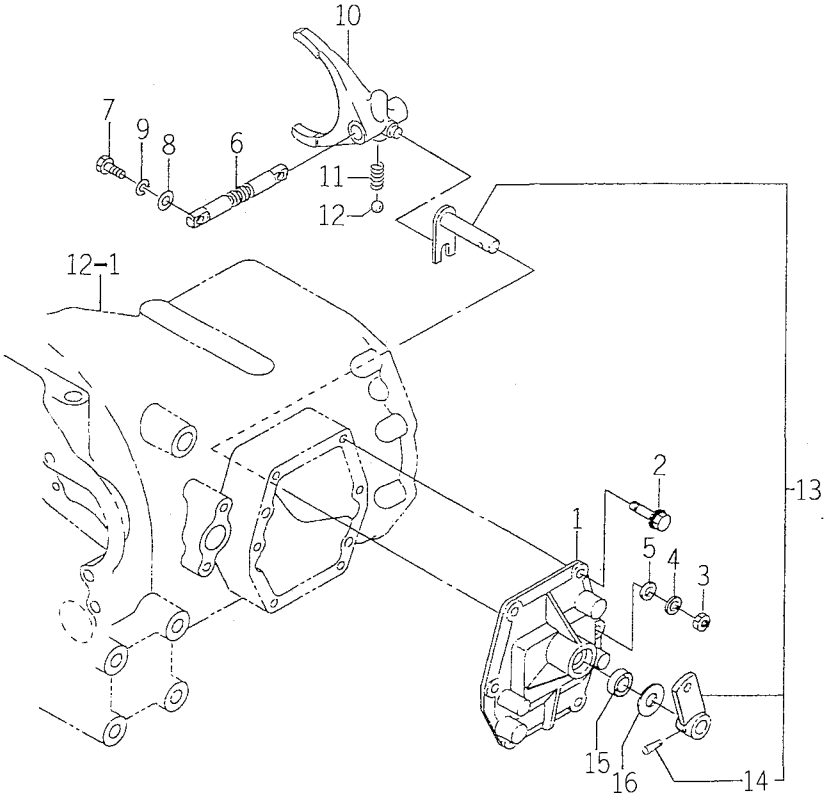

1673-225

KEY	PART CODE	DESCRIPTION	QTY	TYPE OF MODEL TK529	TYPE OF MODEL TK533	ITC	COL	GRP	REMARKS
1	1560 - 225 - 001 - 50	METAL	1	*	*				
2	V211 - 360 - 802 - 00	BOLT (SP) M8X20	5	*	*				
3	V304 - 260 - 008 - 00	NUT/M 8	1	*	*				
4	V401 - 160 - 008 - 00	WASHER,SP/M 8	1	*	*				
5	V411 - 260 - 008 - 00	WASHER,PL/M 8	1	*	*				
6	1673 - 225 - 003 - 00	STAY/SHIFT/REVERSE	1	*	*				
7	1415 - 121 - 009 - 00	BOLT,REAMER/M8X25	2	*	*				
8	V411 - 260 - 008 - 00	WASHER,PL/M 8	2	*	*				
9	V401 - 160 - 008 - 00	WASHER,SP/M 8	2	*	*				
10	1673 - 225 - 001 - 00	FORK/SHIFT/REVERSE/U	1	*	*				
11	1650 - 253 - 003 - 00	SPRING/HC022	1	*	*				
12	V682 - 200 - 001 - 00	BALL	1	*	*				
13	1560 - 225 - 220 - 00	ARM	1	*	*				
14	V511 - 100 - 603 - 60	PIN/6X30	1	*	*				
15	V744 - 114 - 250 - 70	SEAL,OIL/TC14257	1	*	*				
16	1366 - 701 - 202 - 00	WASHER/14X32X2	1	*	*				

FIG. 24 SPACER MISSION CASE SYSTEM

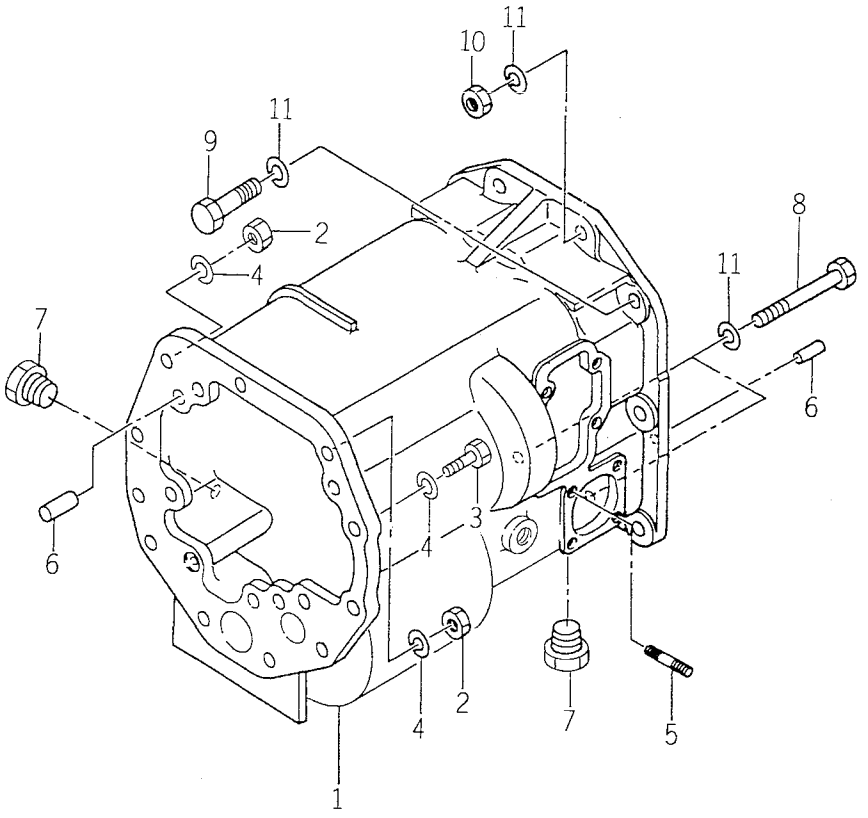

1560-230B

KEY	PART CODE	DESCRIPTION	QTY	TYPE OF MODEL TK529	TYPE OF MODEL TK533	ITC	COL	GRP	REMARKS
1	1560 - 230 - 003 - 00	CASE/TRANSMISSION	1	*	*				
2	V304 - 460 - 012 - 00	NUT/M12	5	*	*				
3	V201 - 361 - 203 - 50	BOLT/M12X35	5	*	*				
4	V401 - 160 - 012 - 00	WASHER,SP/M12	10	*	*				
5	V251 - 260 - 802 - 0D	BOLT/STUD/SEAL	2	*	*				
6	V523 - 101 - 002 - 40	PIN	3	*	*				
7	V782 - 160 - 000 - 8B	PLUG/SCREW/SEAL	2	*	*				
8	V201 - 361 - 208 - 50	BOLT	2	*	*				
9	V201 - 361 - 203 - 50	BOLT/M12X35	2	*	*				
10	V304 - 460 - 012 - 00	NUT/M12	6	*	*				
11	V401 - 160 - 012 - 00	WASHER,SP/M12	10	*	*				

FIG. 25 REVERSE METAL SYSTEM

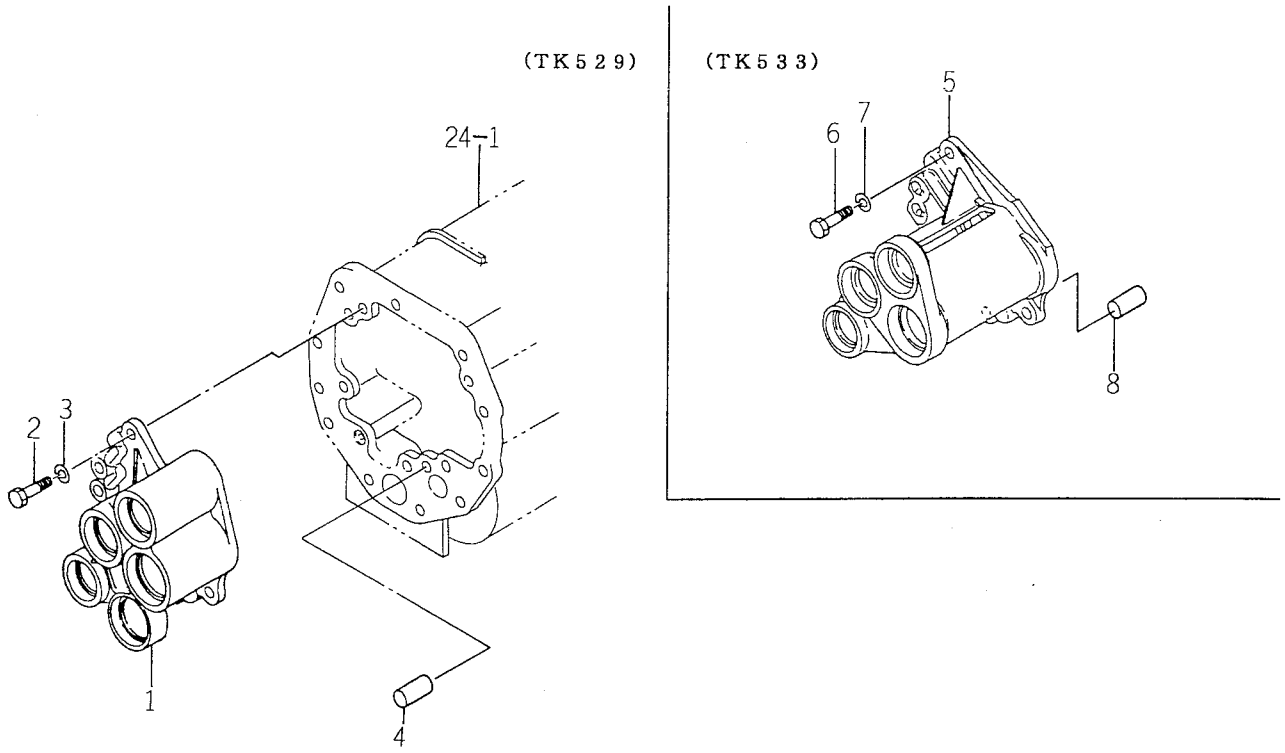

1561-232

KEY	PART CODE	DESCRIPTION	QTY	TYPE OF MODEL TK529	TYPE OF MODEL TK533	ITC	COL	GRP	REMARKS
1	1561 - 232 - 001 - 80	METAL/REVERSE	1	*					
2	V201 - 261 - 203 - 00	BOLT/M12X30	4	*					
3	V401 - 160 - 012 - 00	WASHER,SP/M12	4	*					
4	V523 - 101 - 002 - 40	PIN	1	*					
5	1563 - 232 - 001 - 80	METAL/REVERSE	1		*				
6	V201 - 261 - 203 - 00	BOLT/M12X30	4		*				
7	V401 - 160 - 012 - 00	WASHER,SP/M12	4		*				
8	V523 - 101 - 002 - 40	PIN	1		*				

FIG. 26 REAR MISSION CASE SYSTEM

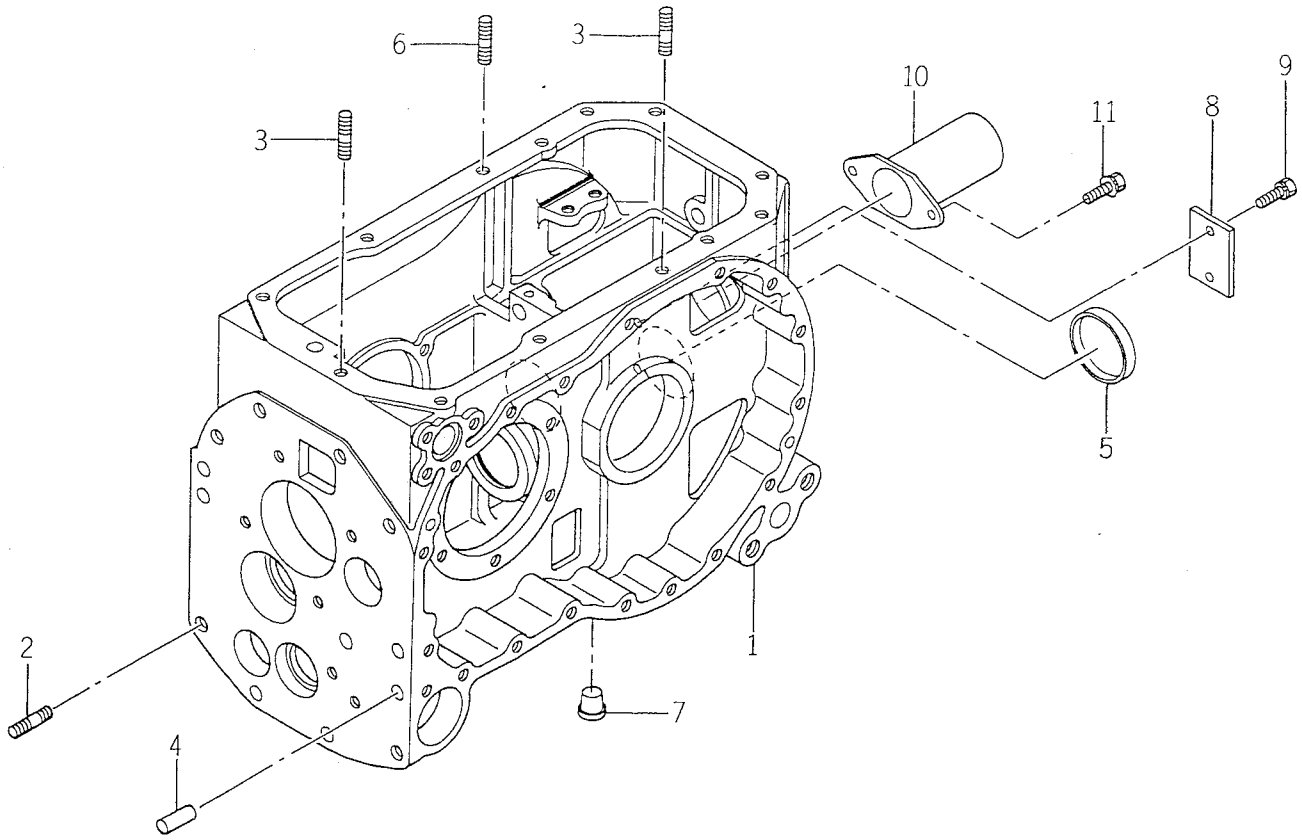

1673-240

KEY	PART CODE	DESCRIPTION	QTY	TYPE OF MODEL TK529	TYPE OF MODEL TK533	ITC	COL	GRP	REMARKS
1	1560 - 240 - 001 - 90	CASE/TRANSMISSION	1	*	*				
2	V251 - 341 - 203 - 2D	BOLT/STUD/SEAL	6	*	*				
3	V251 - 341 - 002 - 8D	BOLT/STUD/SEAL	2	*	*				
4	V523 - 101 - 002 - 40	PIN	8	*	*				
5	1425 - 433 - 018 - 00	CAP,BLANK/72	1	*	*				
6	V251 - 341 - 003 - 5D	BOLT/STUD/SEAL	1	*	*				
7	1427 - 317 - 004 - 00	CAP,BLANK/M14	8	*	*				
8	1560 - 240 - 004 - 50	PLATE/I/44X63	1	*	*				
9	V211 - 560 - 801 - 60	BOLT,SEMS	2	*	*				
10	1444 - 314 - 009 - 10	CAP,PTO SHAFT	1	*	*				
11	V211 - 360 - 801 - 60	BOLT,SEMS (SP)	2	*	*				

FIG. 27 SUB CHANGE GEAR SYSTEM

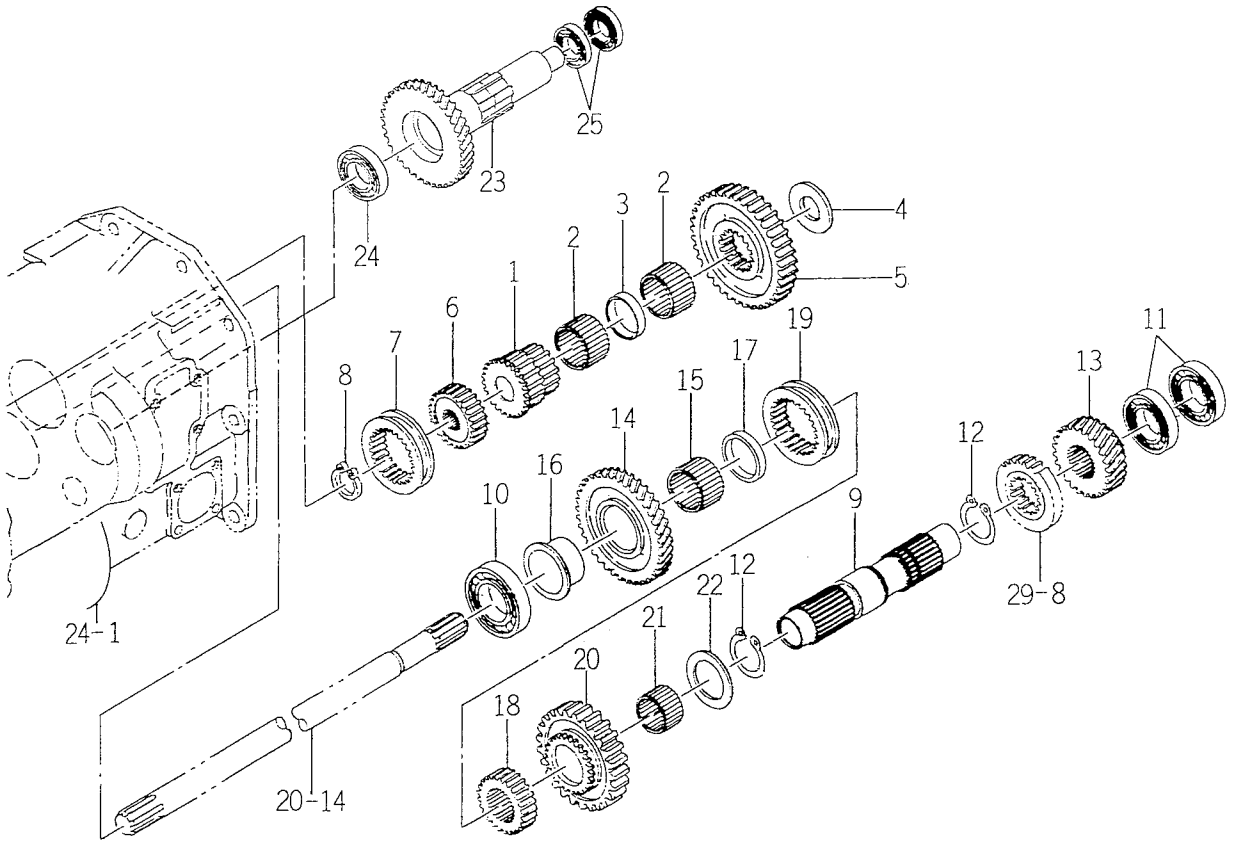

1673-243B

KEY	PART CODE	DESCRIPTION	QTY	TYPE OF MODEL TK529	TYPE OF MODEL TK533	ITC	COL	GRP	REMARKS
1	1560 - 243 - 008 - 50	GEAR,SPUR/16	1	*	*				
2	V654 - 425 - 301 - 70	BEARING,NR/KT253017	2	*	*				
3	1560 - 243 - 005 - 40	COLLAR/26X30X10	1	*	*				
4	1560 - 243 - 002 - 30	BEARING/25X50X4	1	*	*				
5	1611 - 243 - 001 - 00	GEAR/SPUR/38	1	*	*				
6	1560 - 243 - 011 - 40	HUB	1	*	*				
7	1524 - 236 - 005 - 00	COUPLING,SIDE	1	*	*				
8	V704 - 140 - 025 - 00	RING,SNAP/25 C	1	*	*				
9	1560 - 243 - 003 - 50	SHAFT	1	*	*				
10	V600 - 110 - 620 - 70	BEARING,RB/6207	1	*	*				
11	V600 - 110 - 600 - 70	BEARING,RB/6007	2	*	*				
12	V706 - 140 - 040 - 00	RING/SNAP	2	*	*				
13	1611 - 243 - 002 - 10	GEAR/HELICAL/21	1	*	*				
14	1560 - 243 - 012 - 30	GEAR/HERICAL,35	1	*	*				
15	V654 - 445 - 501 - 70	BEARING,KT455017	1	*	*				
16	1560 - 243 - 013 - 40	BUSH/40X58X29	1	*	*				
17	1560 - 243 - 015 - 40	COLLAR/46X50X8	1	*	*				
18	1560 - 243 - 017 - 30	HUB	1	*	*				
19	1524 - 236 - 005 - 00	COUPLING,SIDE	1	*	*				
20	1560 - 243 - 014 - 30	COLLAR,SPUR/37	1	*	*				
21	V654 - 440 - 451 - 70	BEARING,KT404517	1	*	*				
22	1560 - 243 - 022 - 30	WASHER/40X58X3	1	*	*				
23	1611 - 250 - 001 - 00	GEAR/33 - 10	1	*	*				
24	V600 - 110 - 620 - 50	BEARING,RB/6205	1	*	*				
25	V600 - 110 - 600 - 40	BEARING,RB/6004	2	*	*				

FIG. 28 SUB CHANGE SYSTEM

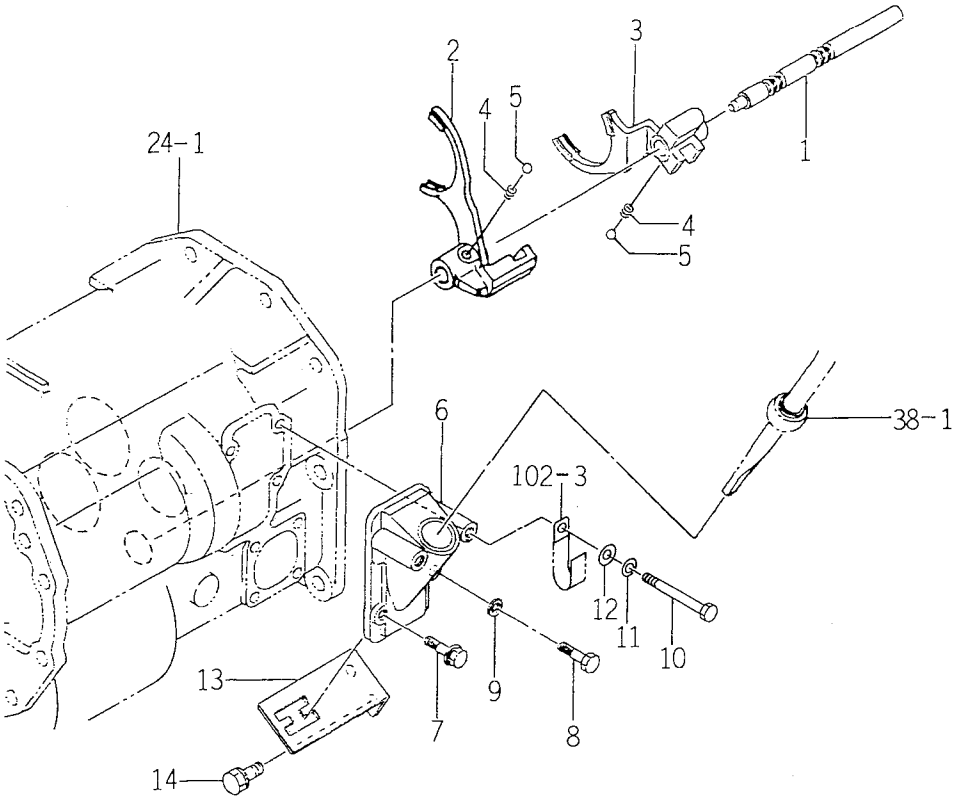

1560-259A

KEY	PART CODE	DESCRIPTION	QTY	TYPE OF MODEL TK529	TYPE OF MODEL TK533	ITC	COL	GRP	REMARKS
1	1560 - 259 - 017 - 00	STAY/SHIFT/SUB	1	*	*				
2	1560 - 259 - 018 - 00	FORK/SHIFT/SUB	1	*	*				
3	1560 - 259 - 004 - 40	FORK,SUB SHIFT	1	*	*				
4	1302 - 225 - 003 - 00	SPRING,SHIFTER	2	*	*				
5	V682 - 200 - 001 - 00	BALL	2	*	*				
6	1560 - 259 - 001 - 40	METAL	1	*	*				
7	V211 - 660 - 802 - 50	BOLT/M8X25	1	*	*				
8	V201 - 360 - 802 - 5B	BOLT/SEAL	1	*	*				
9	1560 - 223 - 008 - 50	SEAL	1	*	*				
10	V201 - 360 - 806 - 50	BOLT/M8X65 7T	2	*	*				
11	V401 - 160 - 008 - 00	WASHER,SP/M 8	2	*	*				
12	V411 - 260 - 008 - 00	WASHER,PL/M 8	2	*	*				
13	1560 - 259 - 012 - 30	GUIDE	1	*	*				
14	V211 - 261 - 002 - 00	BOLT,SEMS	2	*	*				

FIG. 29 4WD DRIVE GEAR SYSTEM

(KEY 1 ~10 FOR TK529)
(KEY 11~20 FOR TK533)

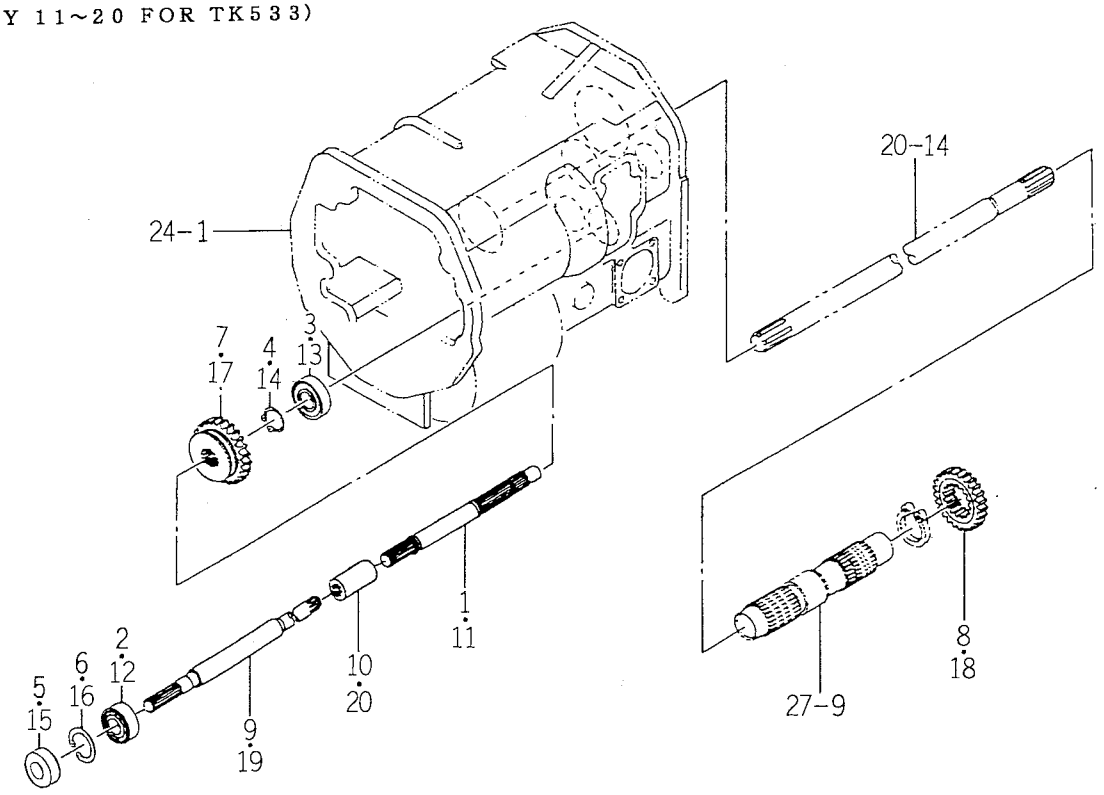

1673-262A

KEY	PART CODE	DESCRIPTION	QTY	TYPE OF MODEL TK529	TYPE OF MODEL TK533	ITC	COL	GRP	REMARKS
1	1560 - 261 - 010 - 00	SHAFT	1	*					
2	V600 - 110 - 600 - 40	BEARING,RB/6004	1	*					
3	1564 - 263 - 002 - 00	BEARING,BALL	1	*					
4	V704 - 140 - 025 - 00	RING,SNAP/25 C	1	*					
5	V744 - 120 - 420 - 80	SEAL,OIL/TC20428	1	*					
6	V705 - 140 - 042 - 00	RING,SNAP/42 C	1	*					
7	1611 - 261 - 001 - 10	GEAR (SPUR/28)	1	*					
8	1611 - 261 - 002 - 10	GEAR (SPUR/20)	1	*					
9	1561 - 261 - 003 - 10	SHAFT	1	*					
10	1673 - 431 - 001 - 10	COUPRING/16X27X55	1	*					
11	1560 - 261 - 010 - 00	SHAFT	1		*				
12	V600 - 110 - 600 - 40	BEARING,RB/6004	1		*				
13	1564 - 263 - 002 - 00	BEARING,BALL	1		*				
14	V704 - 140 - 025 - 00	RING,SNAP/25 C	1		*				
15	V744 - 120 - 420 - 80	SEAL,OIL/TC20428	1		*				
16	V705 - 140 - 042 - 00	RING,SNAP/42 C	1		*				
17	1611 - 261 - 001 - 10	GEAR (SPUR/28)	1		*				
18	1611 - 261 - 002 - 10	GEAR (SPUR/20)	1		*				
19	1563 - 261 - 005 - 10	SHAFT	1		*				
20	1673 - 431 - 001 - 10	COUPRING/16X27X55	1		*				

FIG. 30 FULL TURN CLUTCH SYSTEM

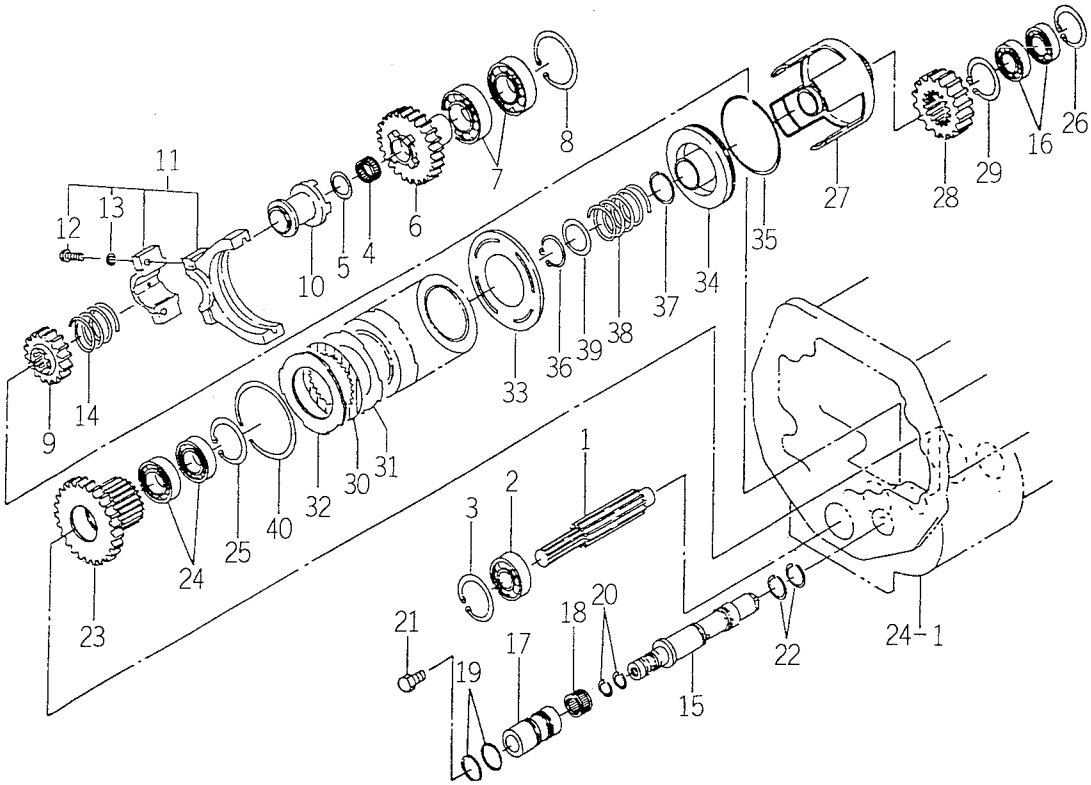

1560-263

KEY	PART CODE	DESCRIPTION	QTY	TYPE OF MODEL TK529	TYPE OF MODEL TK533	ITC	COL	GRP	REMARKS
1	1560 - 263 - 001 - 00	SHAFT	1	*	*				
2	V600 - 110 - 600 - 40	BEARING,RB/6004	1	*	*				
3	V705 - 140 - 042 - 00	RING,SNAP/42 C	1	*	*				
4	V654 - 420 - 261 - 10	BEARING	1	*	*				
5	1575 - 261 - 005 - 00	WASHER/20X30X03	1	*	*				
6	1560 - 263 - 002 - 30	GEAR/SPUR/26	1	*	*				
7	V600 - 110 - 620 - 60	BEARING,RB/6206	2	*	*				
8	V707 - 140 - 062 - 00	RING/SNAP	1	*	*				
9	1560 - 263 - 004 - 00	GEAR/SPUR/18	1	*	*				
10	1560 - 263 - 016 - 20	CAM/CLUTCH	1	*	*				
11	1560 - 263 - 200 - 10	FORK/SHIFT/4WD SET	1	*	*				
12	1575 - 261 - 203 - 00	BOLT/SM/M8X1.25X30	2	*	*				
13	V401 - 160 - 008 - 00	WASHER,SP/M 8	2	*	*				
14	1575 - 261 - 009 - 10	SPRING/HC037	1	*	*				
15	1560 - 263 - 012 - 00	SHAFT	1	*	*				
16	V600 - 110 - 600 - 40	BEARING,RB/6004	1	*	*				
17	1560 - 263 - 013 - 00	COLLAR/20X29X59	1	*	*				
18	1614 - 205 - 015 - 00	BEARING/NEEDLE	1	*	*				
19	V723 - 102 - 002 - 60	O - RING	2	*	*				
20	1560 - 263 - 014 - 00	RING/20	2	*	*				
21	1326 - 706 - 002 - 10	PLUG,DRAIN	1	*	*				
22	1575 - 261 - 018 - 00	RING/25	2	*	*				
23	1560 - 263 - 015 - 10	GEAR/SPUR/30	1	*	*				
24	V600 - 110 - 600 - 50	BEARING,RB/6005	2	*	*				
25	V705 - 140 - 047 - 00	RING,SNAP/47 C	1	*	*				

FIG. 30 FULL TURN CLUTCH SYSTEM

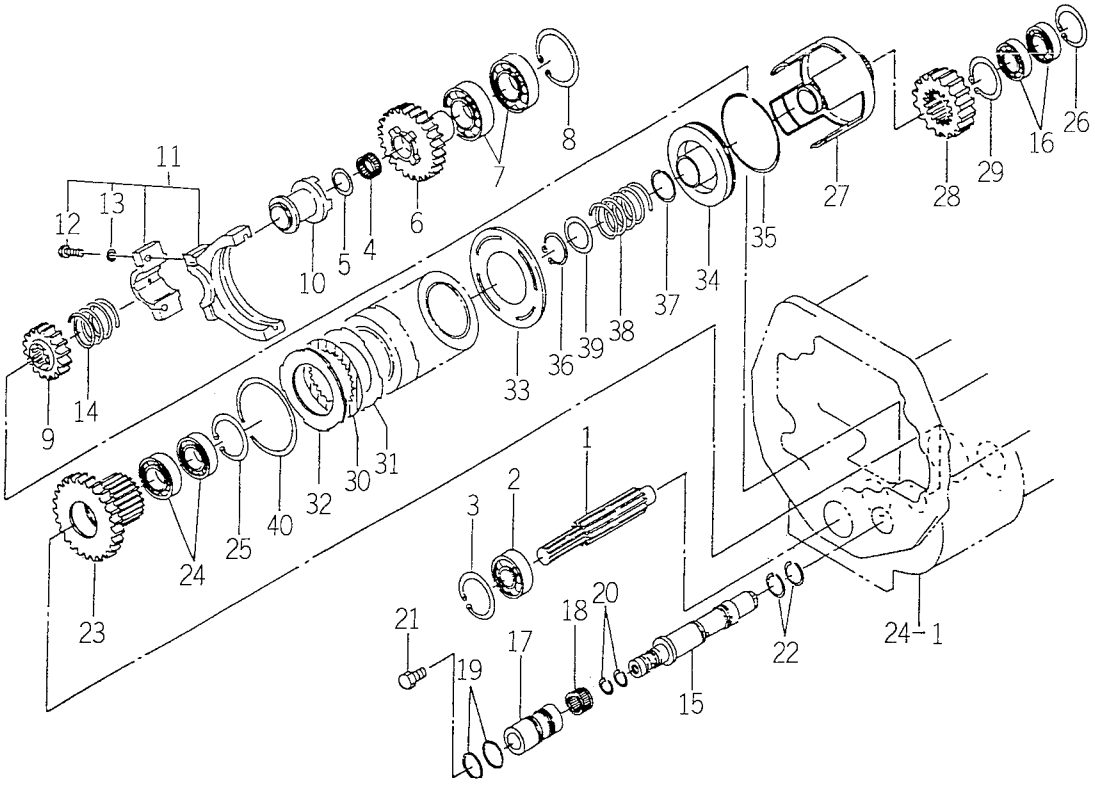

1560-263

KEY	PART CODE	DESCRIPTION	QTY	TYPE OF MODEL TK529	TYPE OF MODEL TK533	ITC	COL	GRP	REMARKS
26	V705 - 140 - 042 - 00	RING,SNAP/42 C	1	*	*				
27	1560 - 263 - 006 - 10	HOUSING/CLUTCH	1	*	*				
28	1560 - 263 - 005 - 00	GEAR/SPUR/22	1	*	*				
29	V706 - 140 - 040 - 00	RING/SNAP	1	*	*				
30	1575 - 261 - 016 - 00	DISKPLATE	5	*	*				
31	1575 - 261 - 017 - 00	SEPARATERPLATE	4	*	*				
32	1575 - 261 - 025 - 00	BACKPLATE	1	*	*				
33	1575 - 261 - 015 - 00	SHIFTERPLATE	1	*	*				
34	1560 - 263 - 007 - 00	PISTON	1	*	*				
35	1575 - 261 - 021 - 00	RING/88	1	*	*				
36	V704 - 140 - 032 - 00	RING,SNAP/32 C	1	*	*				
37	1560 - 263 - 008 - 00	RING/33	1	*	*				
38	1560 - 263 - 009 - 00	SPRING/HC054	1	*	*				
39	1560 - 263 - 011 - 00	WASHER/33X40X02	1	*	*				
40	1575 - 261 - 022 - 00	RING/90	1	*	*				

FIG. 31 4WD CHANGE SYSTEM

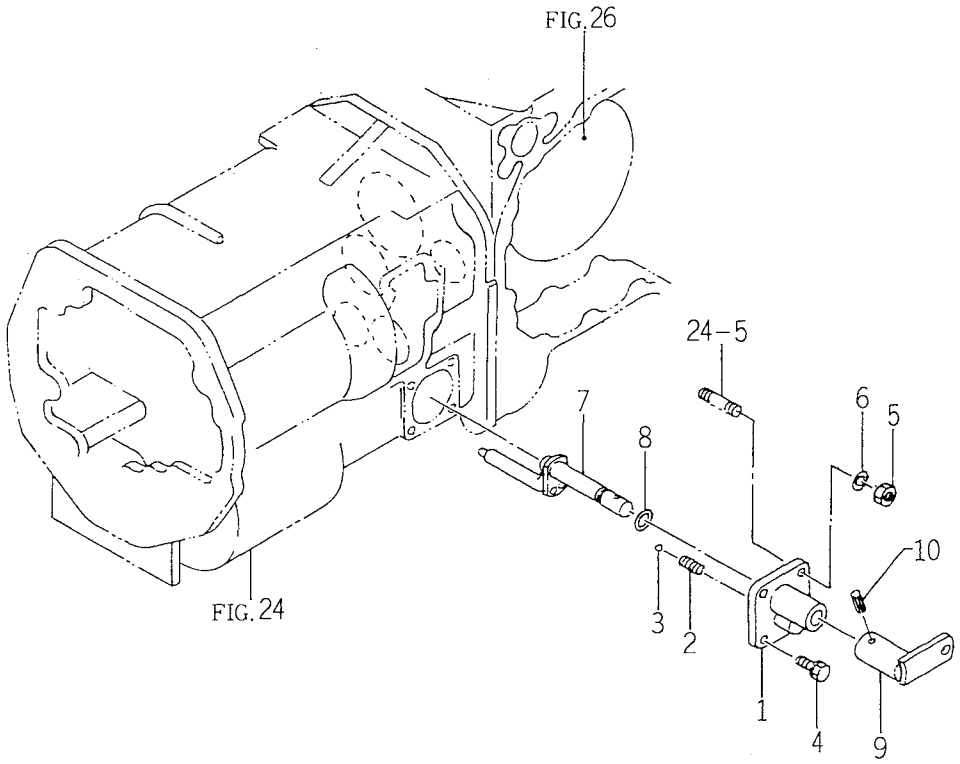

1560-265A

KEY	PART CODE	DESCRIPTION	QTY	TYPE OF MODEL TK529	TYPE OF MODEL TK533	ITC	COL	GRP	REMARKS
1	1560 - 265 - 002 - 10	HOUSING	1	*	*				
2	1302 - 225 - 003 - 00	SPRING,SHIFTER	1	*	*				
3	V682 - 200 - 001 - 00	BALL	1	*	*				
4	V211 - 260 - 802 - 00	BOLT,SEMS (S)	2	*	*				
5	V304 - 260 - 008 - 00	NUT/M 8	2	*	*				
6	V401 - 160 - 008 - 00	WASHER,SP/M 8	2	*	*				
7	1560 - 265 - 220 - 20	ARM COMP	1	*	*				
8	V720 - 102 - 401 - 40	O - RING/P14	1	*	*				
9	1560 - 265 - 230 - 00	ARM,PLATE COMP	1	*	*				
10	V580 - 140 - 602 - 50	PIN,SPRING/6 X25 W	1	*	*				

FIG. 32 PTO COUNTER SYSTEM

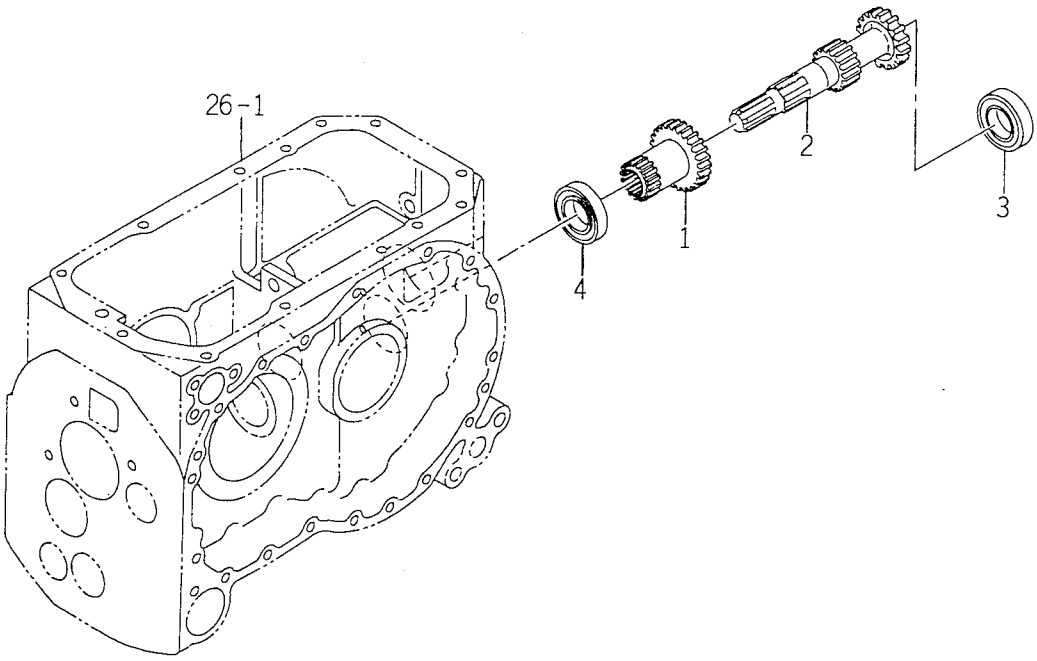

1673-270A

KEY	PART CODE	DESCRIPTION	QTY	TYPE OF MODEL TK529	TYPE OF MODEL TK533	ITC	COL	GRP	REMARKS
1	1673 - 270 - 002 - 00	GEAR/SPUR/17 - 22	1	*	*				
2	1611 - 270 - 003 - 10	GEAR/SPUR/13 - 20	1	*	*				
3	1597 - 218 - 001 - 00	BEARING/BALL	1	*	*				
4	7932 - 201 - 002 - 00	BEARING,RB/6306SH2	1	*	*				

FIG. 33 PTO CHANGE GEAR SYSTEM

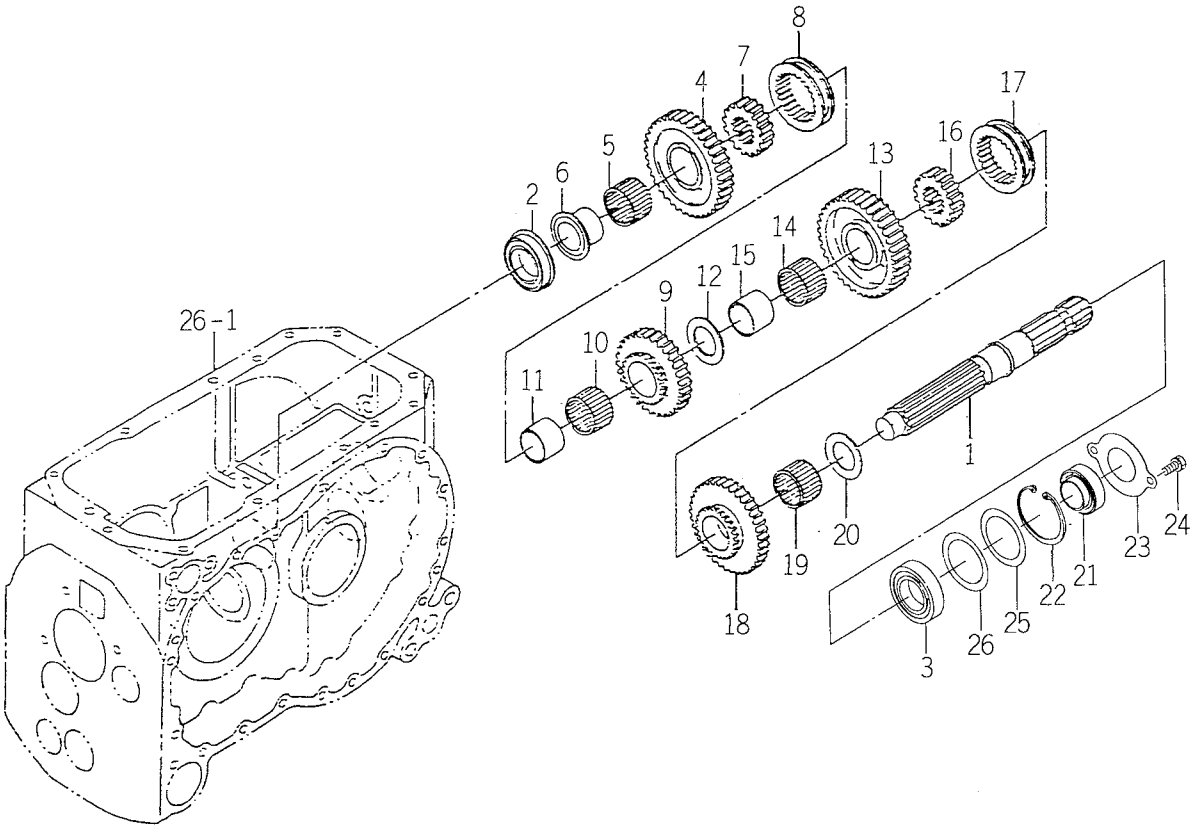

1674-273T

KEY	PART CODE	DESCRIPTION	QTY	TYPE OF MODEL TK529	TYPE OF MODEL TK533	ITC	COL	GRP	REMARKS
1	1611 - 273 - 001 - 10	SHAFT,PTO	1	*	*				
2	1491 - 203 - 006 - 10	BEARING	1	*	*				
3	3653 - 108 - 007 - 00	BEARING,BALL	1	*	*				
4	1673 - 273 - 002 - 00	GEAR/SPUR/36	1	*	*				
5	V654 - 440 - 452 - 70	BEARING,NR/KT404527	1	*	*				
6	1564 - 273 - 003 - 20	BUSH/35X56X30	1	*	*				
7	1564 - 273 - 005 - 20	HUB/35X62X20	1	*	*				
8	1524 - 236 - 005 - 00	COUPLING,SIDE	1	*	*				
9	1611 - 273 - 003 - 00	GEAR/SPUR/31	1	*	*				
10	V654 - 440 - 452 - 70	BEARING,NR/KT404527	1	*	*				
11	1611 - 273 - 004 - 00	BUSH/35X40X27	1	*	*				
12	1564 - 273 - 008 - 20	WASHER/35X55X03	1	*	*				
13	1611 - 273 - 005 - 00	GEAR/SPUR/40	1	*	*				
14	V654 - 440 - 452 - 70	BEARING,NR/KT404527	1	*	*				
15	1611 - 273 - 006 - 00	BUSH/35X40X32	1	*	*				
16	1564 - 273 - 005 - 20	HUB/35X62X20	1	*	*				
17	1524 - 236 - 005 - 00	COUPLING,SIDE	1	*	*				
18	1611 - 273 - 008 - 00	GEAR/SPUR/33	1	*	*				
19	V654 - 435 - 422 - 00	BEARING,NEEDLE (CAGE)	1	*	*				
20	1564 - 273 - 008 - 20	WASHER/35X55X03	1	*	*				
21	1632 - 273 - 200 - 00	SEAL,OIL	1	*	*				
22	V707 - 140 - 072 - 00	RING/SNAP	1	*	*				
23	1632 - 273 - 004 - 00	COVER/PLATE	1	*	*				
24	V211 - 360 - 801 - 60	BOLT,SEMS (SP)	2	*	*				
25	7964 - 201 - 008 - 00	SHIM,B	1	*	*				

FIG. 33 PTO CHANGE GEAR SYSTEM

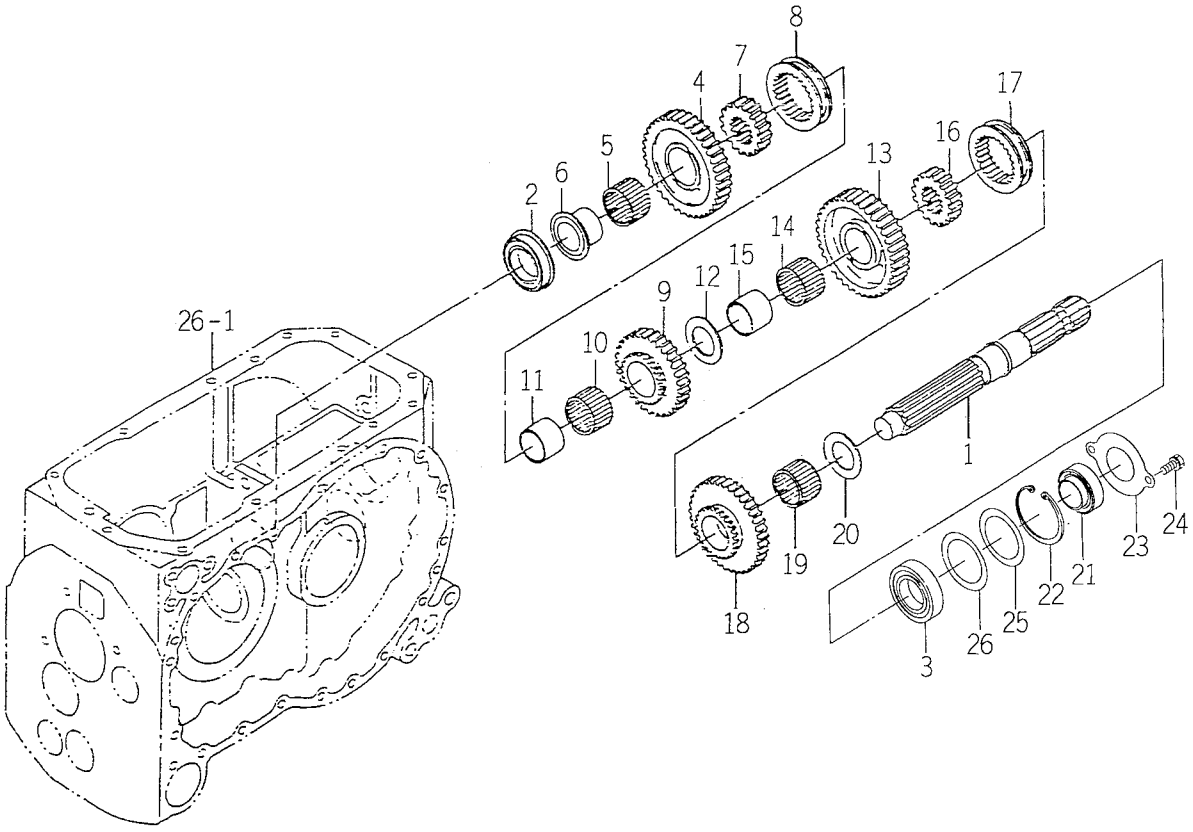

1574-273T

KEY	PART CODE	DESCRIPTION	QTY	TYPE OF MODEL TK529	TYPE OF MODEL TK533	ITC	COL	GRP	REMARKS
26	1632 - 273 - 003 - 00	SHIM/0.5	1	*	*				

FIG. 34 PTO CHANGE SYSTEM (A)

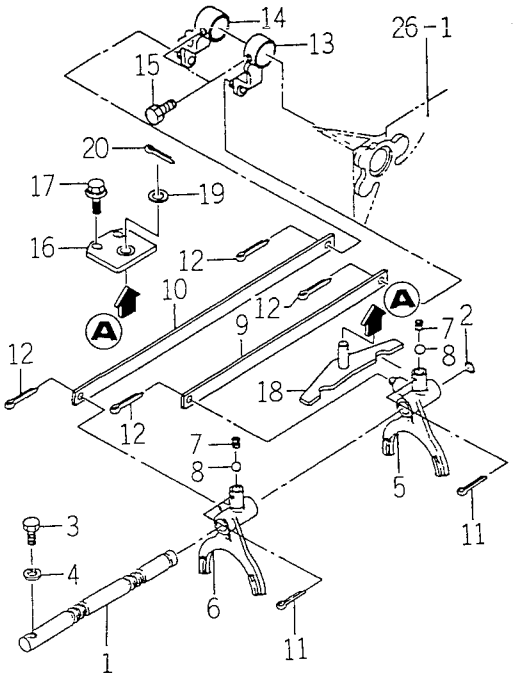

1611-275

KEY	PART CODE	DESCRIPTION	QTY	TYPE OF MODEL TK529	TYPE OF MODEL TK533	ITC	COL	GRP	REMARKS
1	1611 - 275 - 001 - 10	STAY/SHIFT/PTO	1	*	*				
2	V720 - 102 - 401 - 00	O - RING/P10A	1	*	*				
3	1560 - 275 - 022 - 00	BOLT/M8X20	1	*	*				
4	V401 - 160 - 008 - 00	WASHER,SP/M 8	1	*	*				
5	1611 - 275 - 002 - 00	FORK/SHIFT/PTO	1	*	*				
6	1611 - 275 - 003 - 00	FORK/SHIFT/PTO	1	*	*				
7	1302 - 225 - 003 - 00	SPRING,SHIFTER	2	*	*				
8	V682 - 200 - 001 - 00	BALL	2	*	*				
9	1560 - 275 - 004 - 40	PLATE/I,16X296	1	*	*				
10	1560 - 275 - 005 - 30	PLATE/I,16X376	1	*	*				
11	V500 - 163 - 002 - 50	PIN,SPLIT/3 X25	2	*	*				
12	V500 - 162 - 502 - 00	PIN,SPLIT/2.5X20	4	*	*				
13	1560 - 275 - 320 - 00	ARM COMP	1	*	*				
14	1560 - 275 - 330 - 10	ARM COMP	1	*	*				
15	1560 - 223 - 016 - 00	BOLT/M8X16	2	*	*				
16	1560 - 275 - 280 - 00	HOLDER COMP	1	*	*				
17	V211 - 660 - 802 - 50	BOLT/M8X25	2	*	*				
18	1611 - 275 - 200 - 00	LINK/PTO COMP	1	*	*				
19	V411 - 260 - 010 - 00	WASHER/M10	1	*	*				
20	V500 - 162 - 502 - 00	PIN,SPLIT/2.5X20	1	*	*				

FIG. 35 PTO CHANGE SYSTE (B) (TK529)

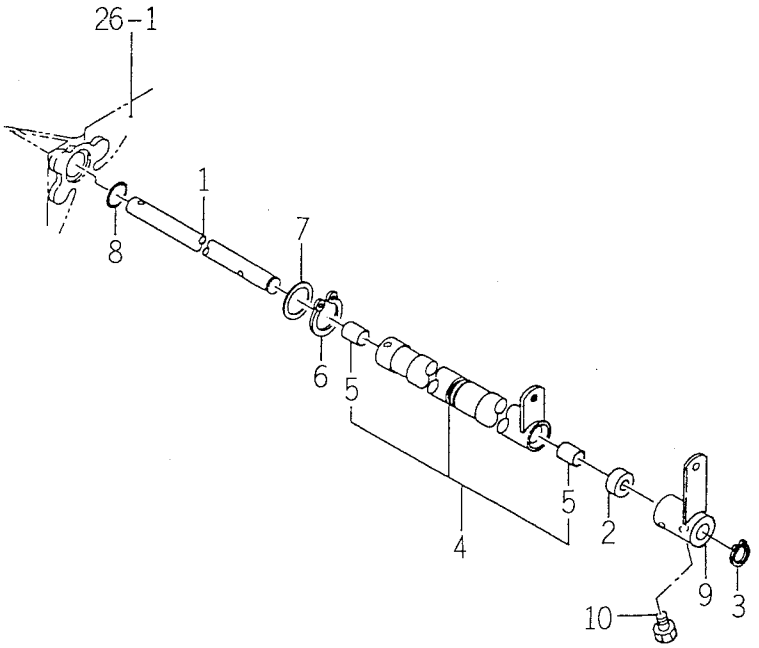

1673-275

KEY	PART CODE	DESCRIPTION	QTY	TYPE OF MODEL TK529	TYPE OF MODEL TK533	ITC	COL	GRP	REMARKS
1	1560 - 275 - 021 - 00	PIN/16X317	1	*					
2	V742 - 116 - 240 - 40	SEAL,OIL/VC16244	1	*					
3	V704 - 140 - 016 - 00	RING,SNAP/16 C	1	*					
4	1673 - 275 - 220 - 00	ARM/PTO ASSY	1	*					
5	1560 - 275 - 012 - 00	BUSH/16X18X20	2	*					
6	V704 - 140 - 028 - 00	RING,SNAP/28 C	1	*					
7	1560 - 275 - 013 - 00	WASHER/28X37X2	1	*					
8	V720 - 103 - 502 - 20	O - RING/P22	1	*					
9	1673 - 275 - 210 - 10	ARM/70 COMP	1	*					
10	1560 - 223 - 016 - 00	BOLT/M8X16	1	*					

FIG. 36 PTO CHANGE SYSTEM (B) (TK533)

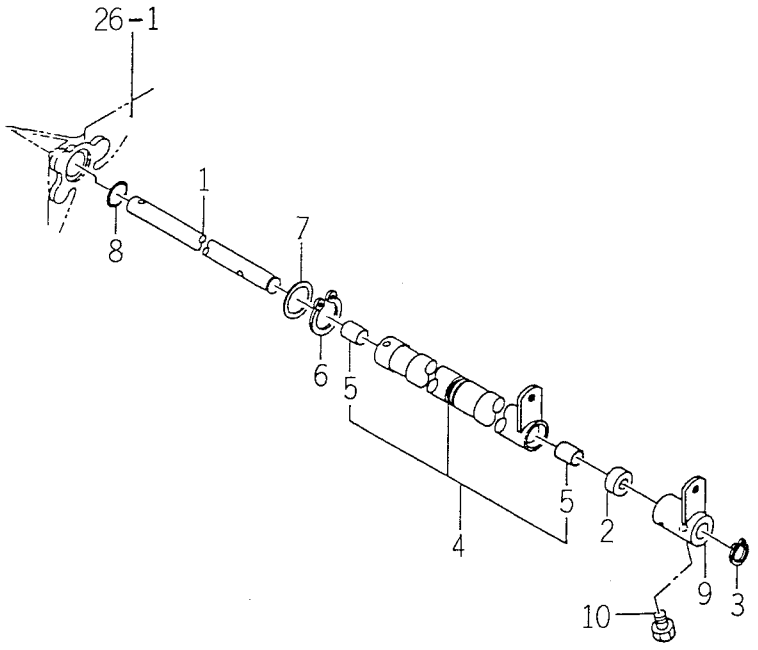

1611-275A

KEY	PART CODE	DESCRIPTION	QTY	TYPE OF MODEL TK529	TYPE OF MODEL TK533	ITC	COL	GRP	REMARKS
1	1560 - 275 - 021 - 00	PIN/16X317	1		*				
2	V742 - 116 - 240 - 40	SEAL,OIL/VC16244	1		*				
3	V704 - 140 - 016 - 00	RING,SNAP/16 C	1		*				
4	1611 - 275 - 210 - 00	ARM/PTO/IN ASSY	1		*				
5	1560 - 275 - 012 - 00	BUSH/16X18X20	2		*				
6	V704 - 140 - 028 - 00	RING,SNAP/28 C	1		*				
7	1560 - 275 - 013 - 00	WASHER/28X37X2	1		*				
8	V720 - 103 - 502 - 20	O - RING/P22	1		*				
9	1611 - 275 - 230 - 00	ARM/PTO COMP	1		*				
10	1560 - 223 - 016 - 00	BOLT/M8X16	1		*				

FIG. 37 SUB CHANGE SYSTEM

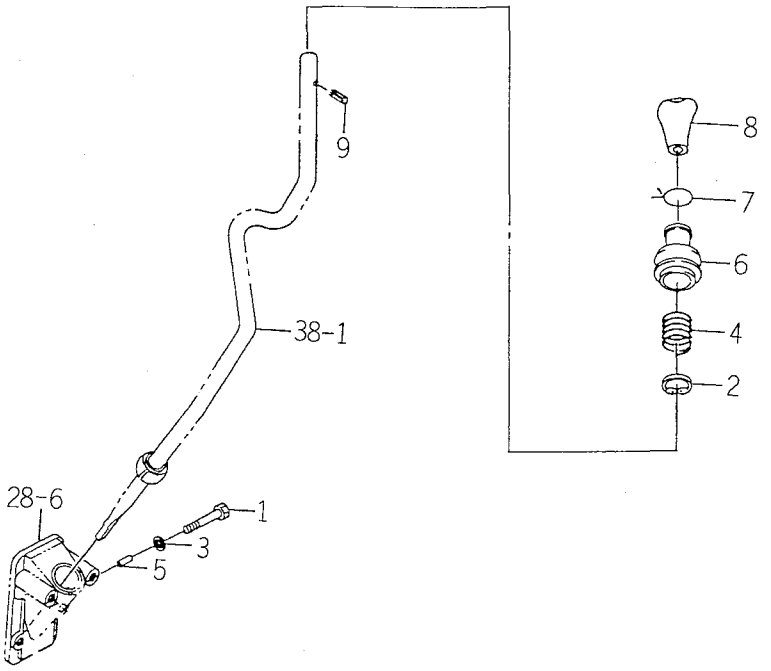

1673-280

KEY	PART CODE	DESCRIPTION	QTY	TYPE OF MODEL TK529	TYPE OF MODEL TK533	ITC	COL	GRP	REMARKS
1	V201 - 260 - 801 - 20	BOLT/M 8X12	1	*	*				
2	V705 - 140 - 032 - 00	RING,SNAP/32 C	1	*	*				
3	1560 - 223 - 008 - 50	SEAL	1	*	*				
4	1560 - 290 - 006 - 30	SPRING	1	*	*				
5	V523 - 100 - 601 - 80	PIN	1	*	*				
6	1560 - 280 - 004 - 40	BOOT	1	*	*				
7		WIRE	1	*	*				
8	1673 - 280 - 001 - 00	GLIP/MAIN	1	*	*				
9	V580 - 140 - 602 - 00	PIN,SPRING	1	*	*				

FIG. 38 SUB LEVER,REVERSE LEVER SYSTEM

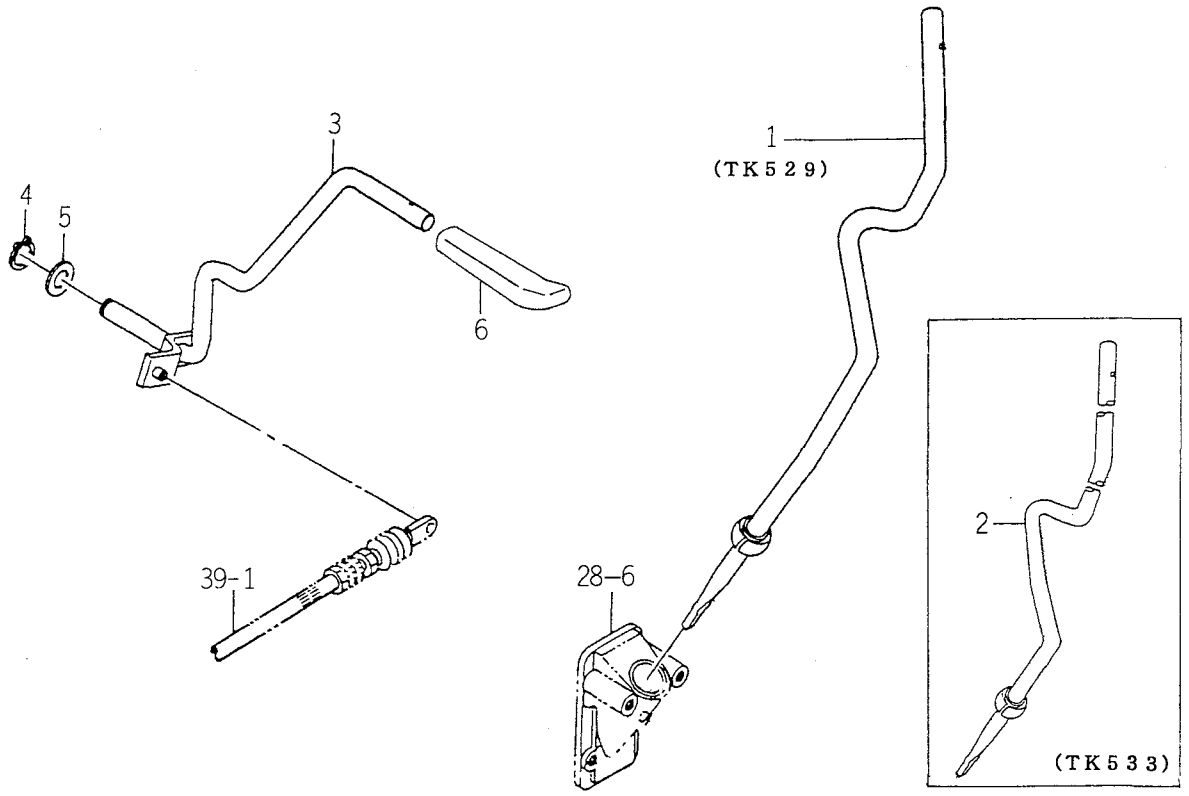

1561-281

KEY	PART CODE	DESCRIPTION	QTY	TYPE OF MODEL TK529	TYPE OF MODEL TK533	ITC	COL	GRP	REMARKS
1	1561 - 281 - 001 - 70	LEVER/BAR/16	1	*					
2	1563 - 281 - 001 - 90	LEVER/BAR/16	1		*				
3	1566 - 283 - 200 - 30	LEVER COMP	1	*	*				
4	V704 - 140 - 014 - 00	RING,SNAP/14 C	1	*	*				
5	1427 - 601 - 003 - 00	WASHER/15X24X2	1	*	*				
6	1614 - 117 - 001 - 00	GRIP/THROTTLE	1	*	*				

FIG. 39 REVERSE CABLE SYSTEM

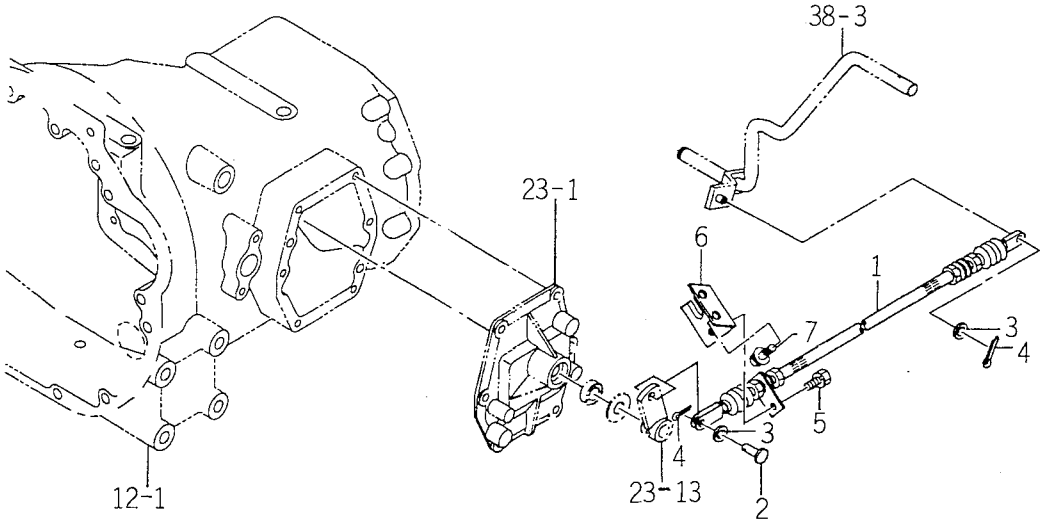

1561-284

KEY	PART CODE	DESCRIPTION	QTY	TYPE OF MODEL TK529	TYPE OF MODEL TK533	ITC	COL	GRP	REMARKS
1	1561 - 284 - 200 - 10	CABLE/REVERSE ASSY	1	*	*				
2	1432 - 242 - 001 - 00	PIN	1	*	*				
3	V411 - 260 - 008 - 00	WASHER,PL/M 8	2	*	*				
4	V500 - 162 - 002 - 00	PIN,SPLIT/2 X20	2	*	*				
5	V211 - 560 - 801 - 60	BOLT,SEMS	1	*	*				
6	1561 - 284 - 001 - 00	STAY	1	*	*				
7	V211 - 660 - 801 - 60	BOLT/M8X16	2	*	*				

FIG. 40 PTO LEVER SYSTEM (TK529)

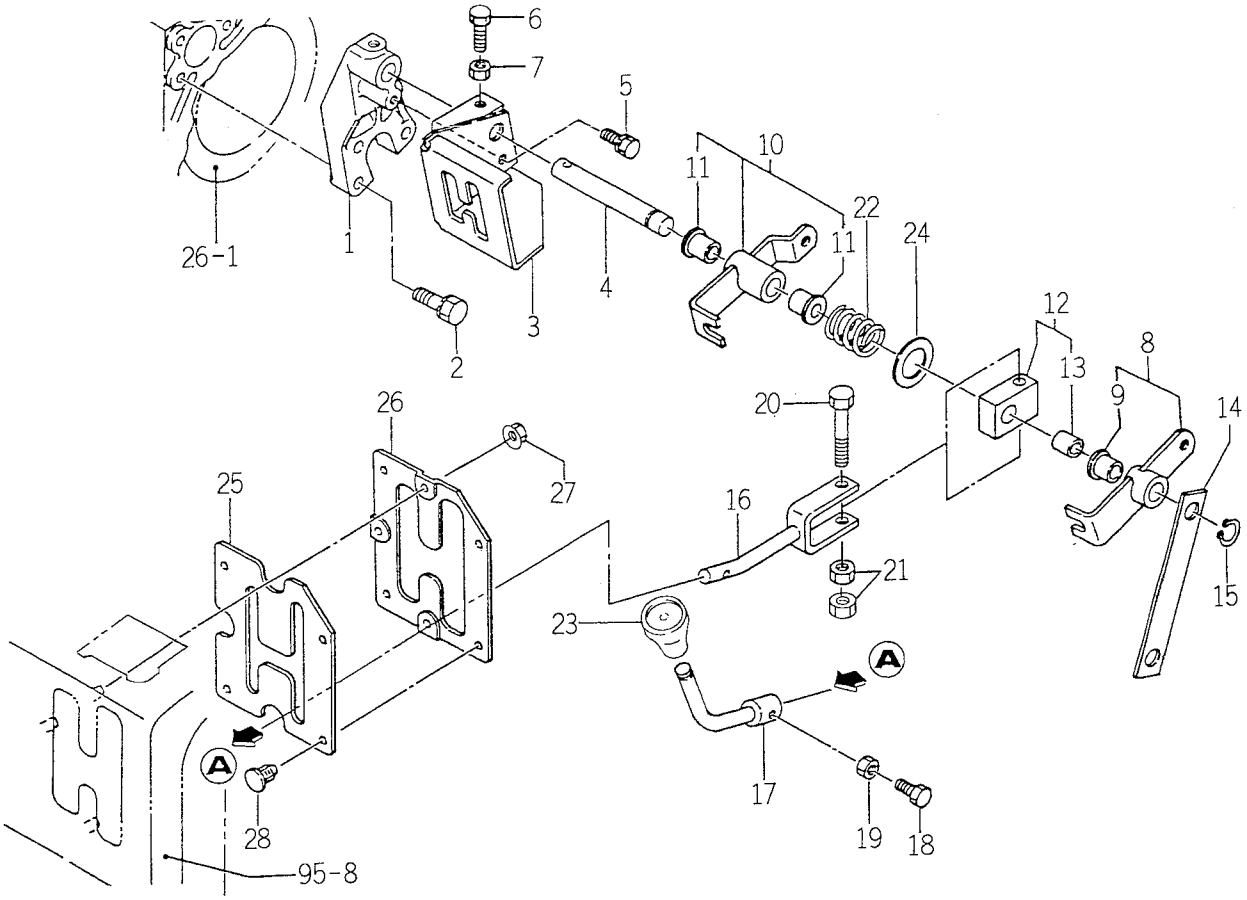

1673-285

KEY	PART CODE	DESCRIPTION	QTY	TYPE OF MODEL TK529	TYPE OF MODEL TK533	ITC	COL	GRP	REMARKS
1	1561 - 285 - 220 - 60	METAL/POT	1	*					
2	V211 - 261 - 003 - 50	BOLT,SEMS	3	*					
3	1560 - 285 - 230 - 20	GUIDE COMP	1	*					
4	1560 - 285 - 003 - 40	PIN/16X119	1	*					
5	V211 - 560 - 801 - 60	BOLT,SEMS	1	*					
6	1560 - 285 - 015 - 00	BOLT,SET/M8X30	1	*					
7	V304 - 260 - 008 - 00	NUT/M 8	1	*					
8	1561 - 285 - 230 - 60	ARM ASSY	1	*					
9	1560 - 285 - 006 - 20	BUSH/16X24X21	1	*					
10	1561 - 285 - 240 - 60	ARM ASSY	1	*					
11	1560 - 285 - 006 - 20	BUSH/16X24X21	2	*					
12	1560 - 285 - 300 - 50	LINK ASSY	1	*					
13	3640 - 111 - 001 - 10	BUSH/16X18X15	1	*					
14	1561 - 285 - 001 - 00	PLATE,I/25X161	1	*					
15	V704 - 140 - 016 - 00	RING,SNAP/16 C	1	*					
16	1560 - 285 - 400 - 00	LEVER/BAR/12 COMP	1	*					
17	1560 - 285 - 310 - 20	LEVER/BAR/12 COMP	1	*					
18	1560 - 223 - 016 - 00	BOLT/M8X16	1	*					
19	V304 - 260 - 008 - 00	NUT/M 8	1	*					
20	V201 - 261 - 006 - 00	BOLT/M10X60	1	*					
21	V304 - 260 - 010 - 00	NUT	2	*					
22	1560 - 285 - 008 - 40	SPRING	1	*					
23	1544 - 219 - 006 - 00	KNOB/12	1	*					
24	1560 - 285 - 009 - 40	WASHER/28X40X02	1	*					
25	1560 - 285 - 012 - 10	INSULATOR	1	*					

FIG. 40 PTO LEVER SYSTEM (TK529)

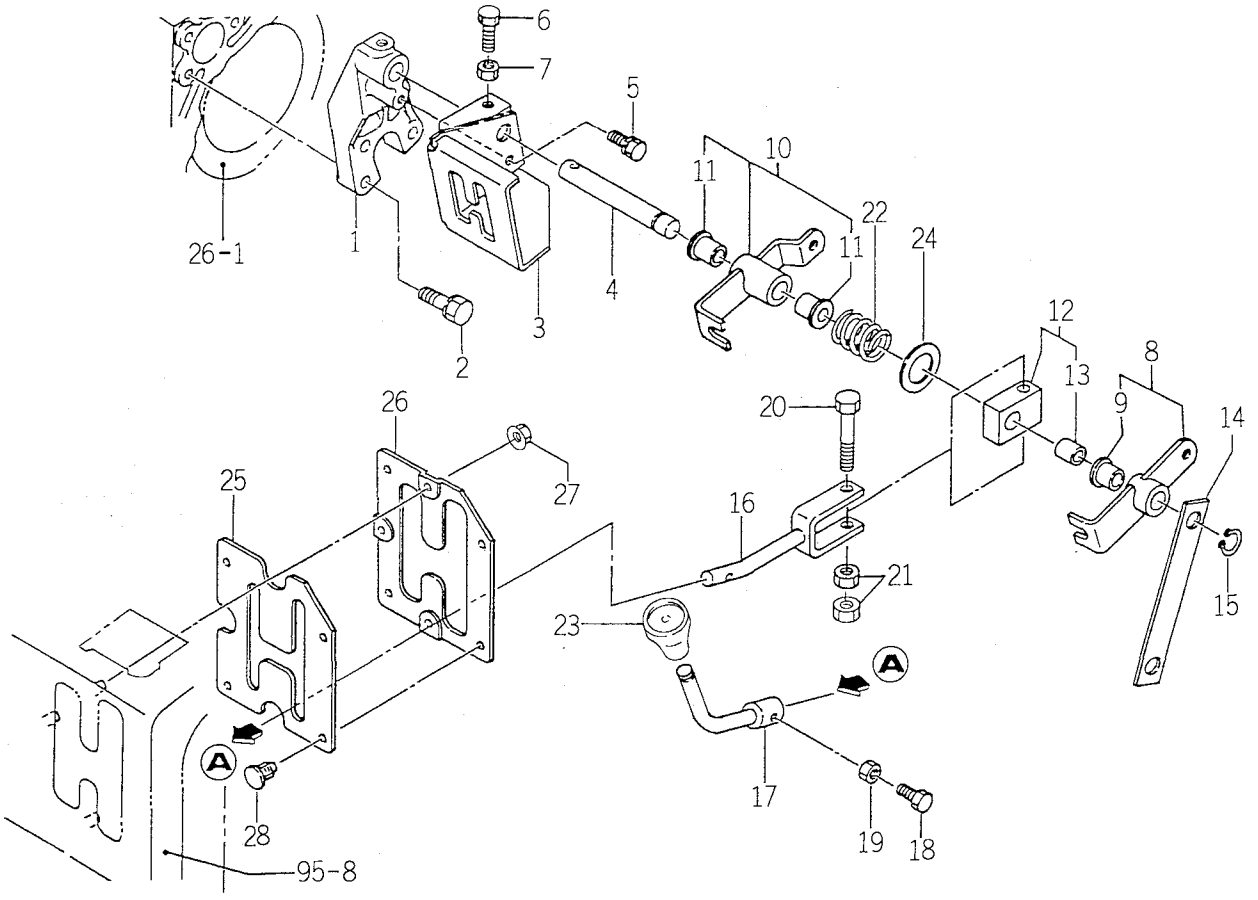

1673-285

KEY	PART CODE	DESCRIPTION	QTY	TYPE OF MODEL TK529	TYPE OF MODEL TK533	ITC	COL	GRP	REMARKS
26	1560 – 285 – 013 – 00	GUIDE	1	*					
27	V361 – 260 – 006 – 00	NUT	3	*					
28	1527 – 604 – 002 – 00	CLIP (B)	4	*					

FIG. 41 PTO LEVER SYSTEM (TK533)

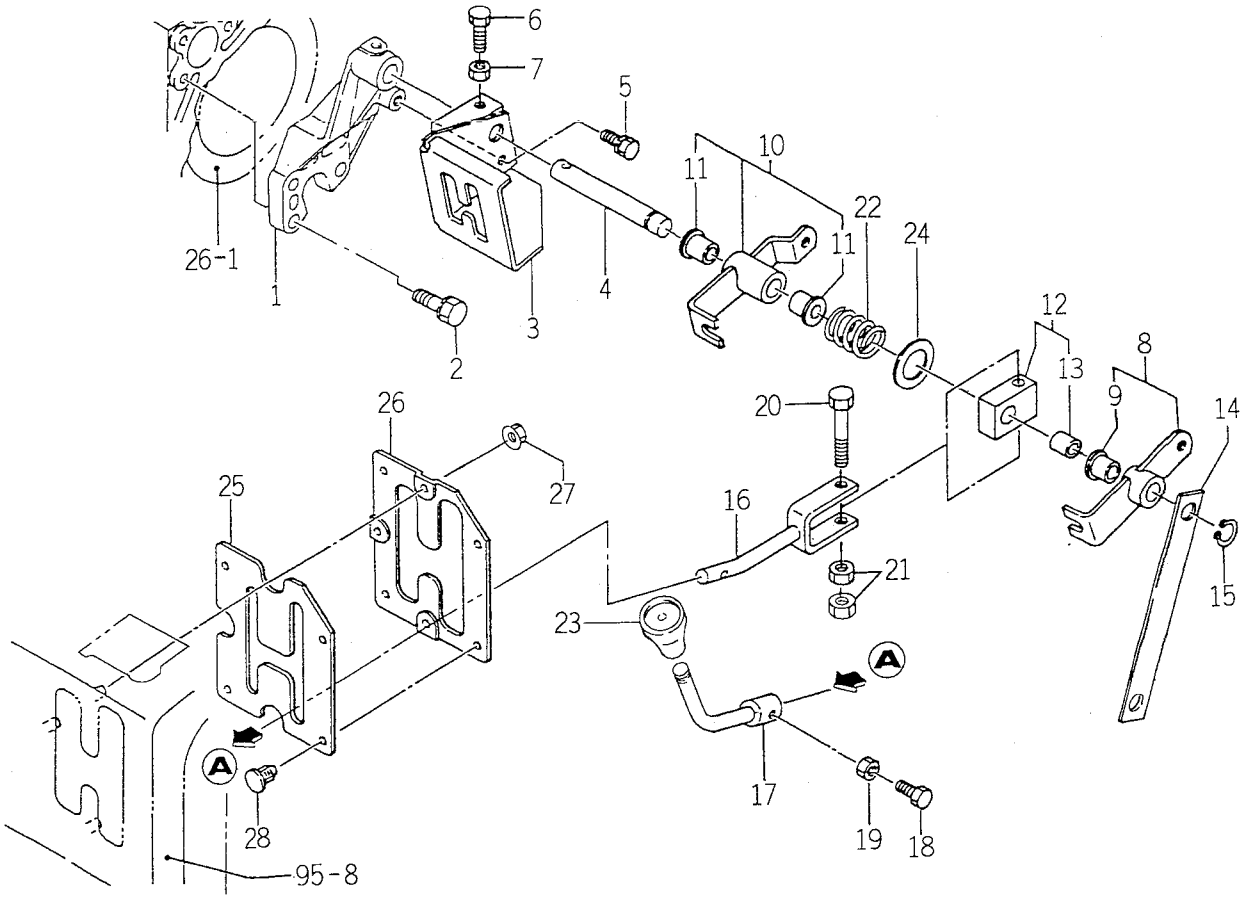

1673-285A

KEY	PART CODE	DESCRIPTION	QTY	TYPE OF MODEL TK529	TYPE OF MODEL TK533	ITC	COL	GRP	REMARKS
1	1563 - 285 - 220 - 60	METAL/PTO	1		*				
2	V211 - 261 - 003 - 50	BOLT,SEMS	3		*				
3	1560 - 285 - 230 - 20	GUIDE COMP	1		*				
4	1560 - 285 - 003 - 40	PIN/16X119	1		*				
5	V211 - 560 - 801 - 60	BOLT,SEMS	1		*				
6	1560 - 285 - 015 - 00	BOLT,SET/M8X30	1		*				
7	V304 - 260 - 008 - 00	NUT/M 8	1		*				
8	1563 - 285 - 230 - 60	ARM ASSY	1		*				
9	1560 - 285 - 006 - 20	BUSH/16X24X21	1		*				
10	1563 - 285 - 240 - 60	ARM ASSY	1		*				
11	1560 - 285 - 006 - 20	BUSH/16X24X21	2		*				
12	1560 - 285 - 300 - 50	LINK ASSY	1		*				
13	3640 - 111 - 001 - 10	BUSH/16X18X15	1		*				
14	1563 - 285 - 001 - 00	PLATE,I/25X209	1		*				
15	V704 - 140 - 016 - 00	RING,SNAP/16 C	1		*				
16	1560 - 285 - 400 - 00	LEVER/BAR/12 COMP	1		*				
17	1560 - 285 - 310 - 20	LEVER/BAR/12 COMP	1		*				
18	1560 - 223 - 016 - 00	BOLT/M8X16	1		*				
19	V304 - 260 - 008 - 00	NUT/M 8	1		*				
20	V201 - 261 - 006 - 00	BOLT/M10X60	1		*				
21	V304 - 260 - 010 - 00	NUT	2		*				
22	1560 - 285 - 008 - 40	SPRING	1		*				
23	1544 - 219 - 006 - 00	KNOB/12	1		*				
24	1560 - 285 - 009 - 40	WASHER/28X40X02	1		*				
25	1560 - 285 - 012 - 10	INSULATOR	1		*				

FIG. 41 PTO LEVER SYSTEM (TK533)

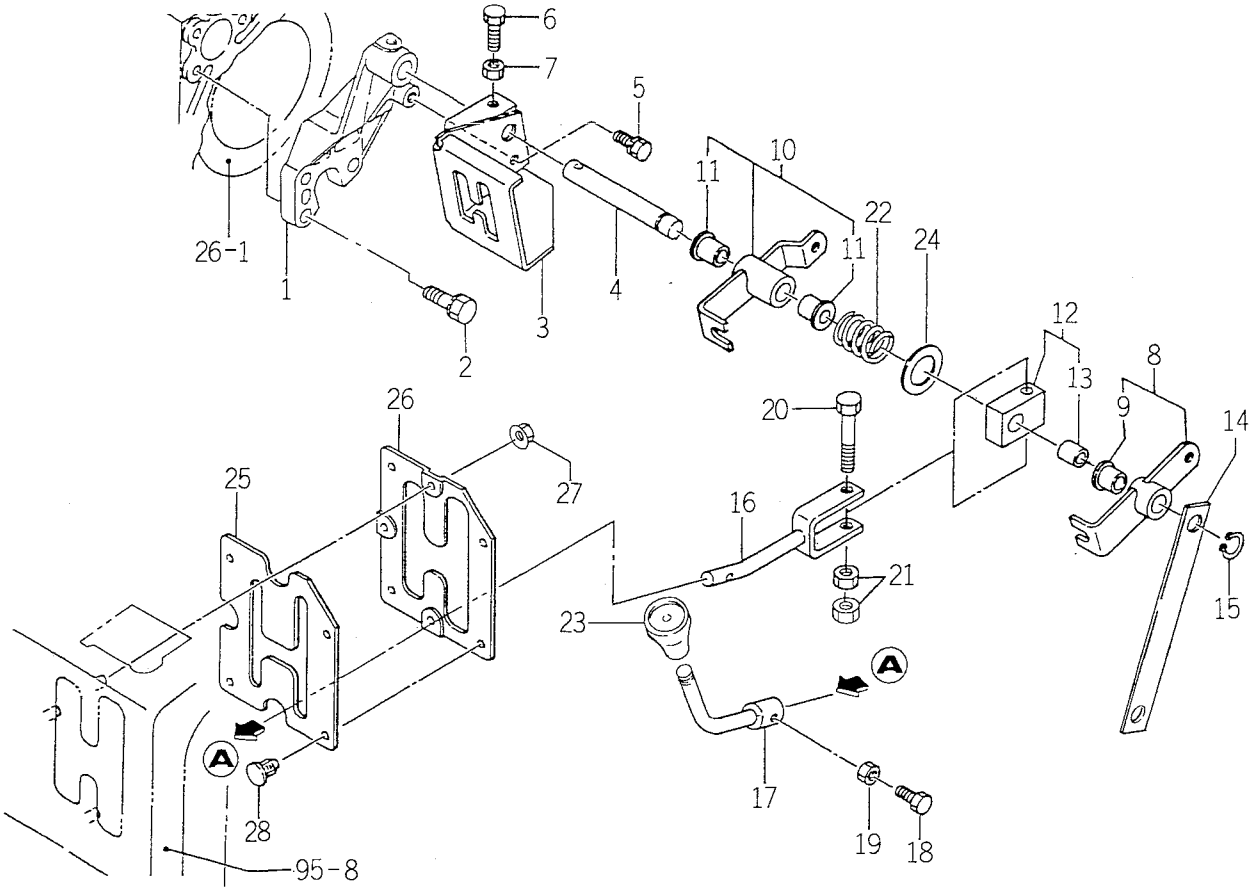

1673-285A

KEY	PART CODE	DESCRIPTION	QTY	TYPE OF MODEL TK529	TYPE OF MODEL TK533	ITC	COL	GRP	REMARKS
26	1560 - 285 - 013 - 00	GUIDE	1		*				
27	V361 - 260 - 006 - 00	NUT	3		*				
28	1527 - 604 - 002 - 00	CLIP (B)	4		*				

FIG. 42 PTO ROD SYSTEM

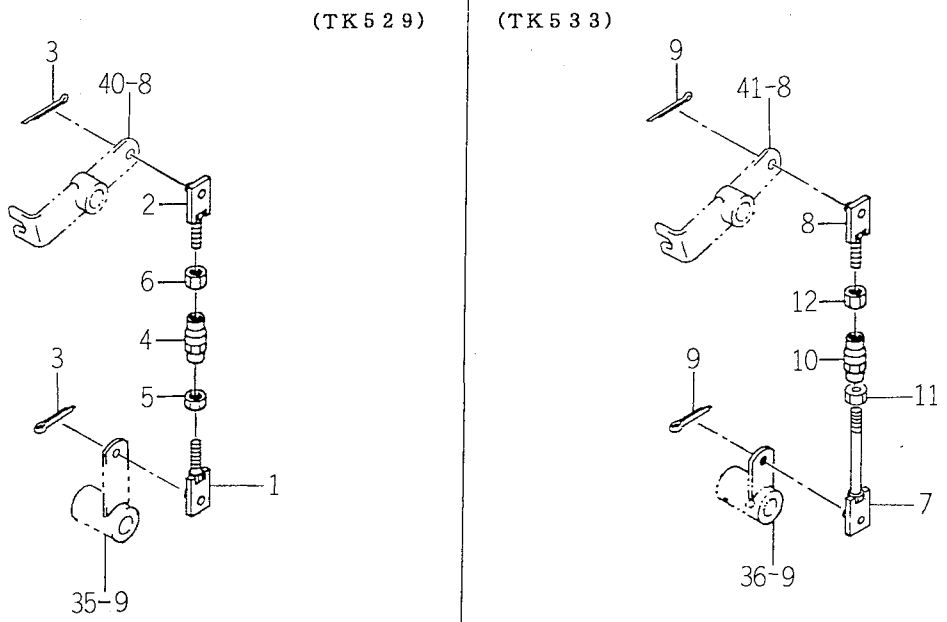

1560-286

KEY	PART CODE	DESCRIPTION	QTY	TYPE OF MODEL TK529	TYPE OF MODEL TK533	ITC	COL	GRP	REMARKS
1	1560 - 286 - 200 - 60	ROD/55 COMP	2	*					
2	1560 - 286 - 210 - 60	ROD,LH/55 COMP	2	*					
3	V500 - 162 - 002 - 00	PIN,SPLIT/2 X20	4	*					
4	1444 - 122 - 002 - 00	TURNBUCKLE/M8	2	*					
5	V304 - 260 - 008 - 00	NUT/M 8	2	*					
6	1560 - 132 - 007 - 30	NUT/M8	2	*					
7	1563 - 286 - 200 - 60	ROD/105 COMP	2		*				
8	1560 - 286 - 210 - 60	ROD,LH/55 COMP	2		*				
9	V500 - 162 - 002 - 00	PIN,SPLIT/2 X20	4		*				
10	1444 - 122 - 002 - 00	TURNBUCKLE/M8	2		*				
11	V304 - 260 - 008 - 00	NUT/M 8	2		*				
12	1560 - 132 - 007 - 30	NUT/M8	2		*				

FIG. 43 4WD LEVER SYSTEM

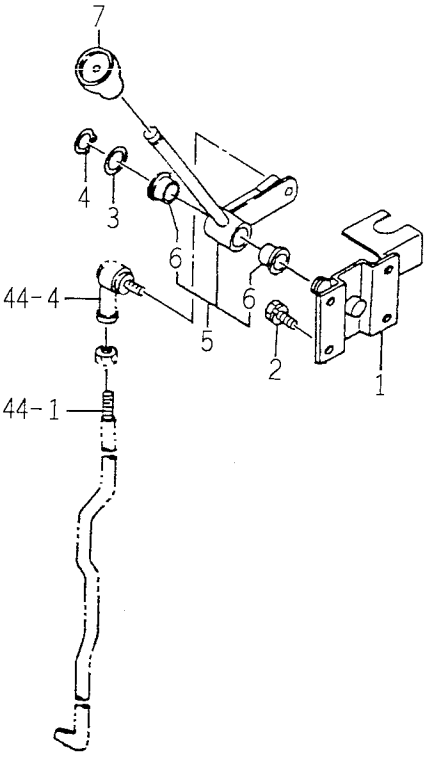

1560-287A

KEY	PART CODE	DESCRIPTION	QTY	TYPE OF MODEL TK529	TYPE OF MODEL TK533	ITC	COL	GRP	REMARKS
1	1560 - 287 - 250 - 00	BRACKET COMP	1	*	*				
2	V211 - 260 - 801 - 60	BOLT,SEMS (S) M8X16	4	*	*				
3	3621 - 211 - 003 - 00	WASHER	1	*	*				
4	V704 - 140 - 016 - 00	RING,SNAP/16 C	1	*	*				
5	1560 - 287 - 270 - 00	LEVER/BAR/12	1	*	*				
6	1560 - 287 - 002 - 30	BUSH/16X24X16	2	*	*				
7	1544 - 219 - 006 - 00	KNOB/12	1	*	*				

FIG. 44 4WD ROD SYSTEM

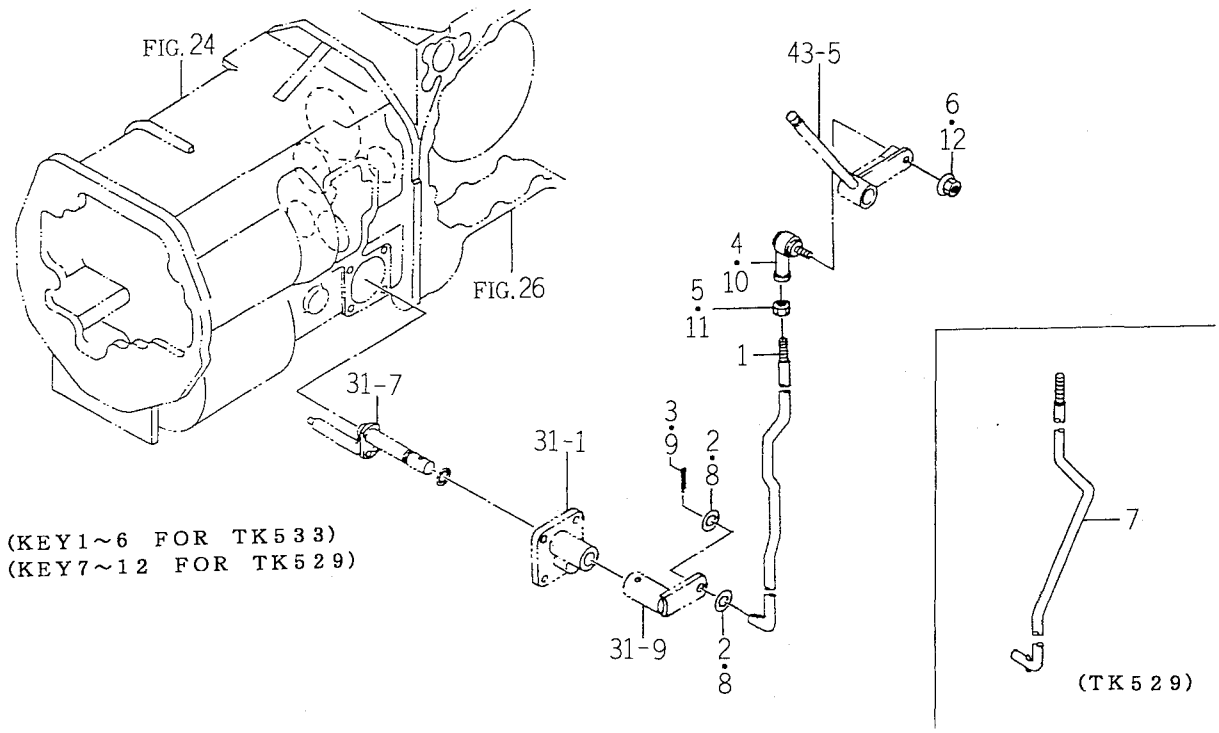

1563-288

KEY	PART CODE	DESCRIPTION	QTY	TYPE OF MODEL TK529	TYPE OF MODEL TK533	ITC	COL	GRP	REMARKS
1	1563 - 288 - 201 - 60	ROD	1		*				
2	V411 - 260 - 010 - 00	WASHER/M10	2		*				
3	V500 - 162 - 002 - 00	PIN,SPLIT/2 X20	1		*				
4	1560 - 695 - 021 - 00	JOINT BALL M08RH	1		*				
5	V304 - 260 - 008 - 00	NUT/M 8	1		*				
6	V362 - 260 - 008 - 00	NUT/WASHER	1		*				
7	1673 - 288 - 001 - 00	ROD	1	*					
8	V411 - 260 - 010 - 00	WASHER/M10	2	*					
9	V500 - 162 - 002 - 00	PIN,SPLIT/2 X20	1	*					
10	1560 - 695 - 021 - 00	JOINT BALL M08RH	1	*					
11	V304 - 260 - 008 - 00	NUT/M 8	1	*					
12	V362 - 260 - 008 - 00	NUT/WASHER	1	*					

FIG. 45 MAIN CHANGE SYSYTEM

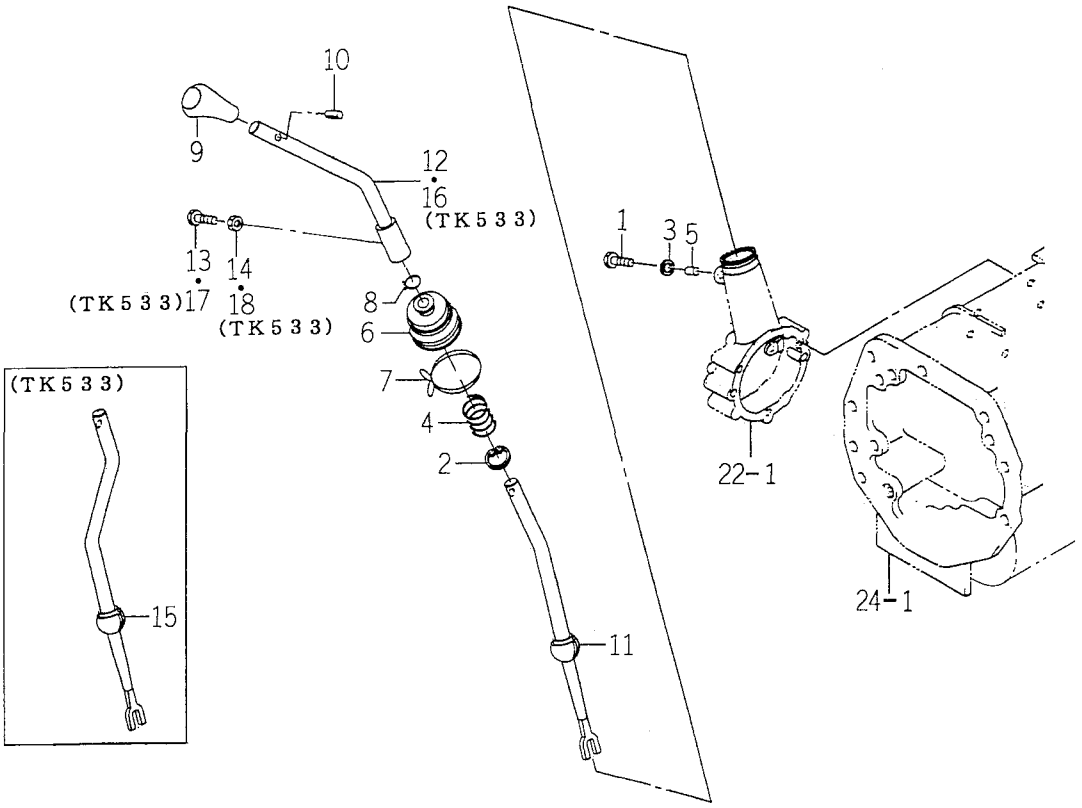

1673-290

KEY	PART CODE	DESCRIPTION	QTY	TYPE OF MODEL TK529	TYPE OF MODEL TK533	ITC	COL	GRP	REMARKS
1	V201 - 260 - 801 - 20	BOLT/M 8X12	1	*	*				
2	V705 - 140 - 032 - 00	RING,SNAP/32 C	1	*	*				
3	1560 - 223 - 008 - 50	SEAL	1	*	*				
4	1560 - 290 - 006 - 30	SPRING	1	*	*				
5	V523 - 100 - 601 - 80	PIN	1	*	*				
6	1444 - 218 - 009 - 00	BOOT,CHANGE LEVER	1	*	*				
7		WIRE	1	*	*				
8		WIRE	1	*	*				
9	1673 - 280 - 001 - 00	GLIP/MAIN	1	*	*				
10	V580 - 140 - 602 - 00	PIN,SPRING	1	*	*				
11	1594 - 291 - 200 - 20	LEVER/BAR/16 COMP	1	*					
12	1594 - 291 - 210 - 40	LEVER/BAR/16 COMP	1	*					
13	1600 - 502 - 003 - 00	BOLT,SM/M08X25	1	*					
14	V304 - 260 - 008 - 00	NUT/M 8	1	*					
15	1595 - 291 - 200 - 20	LEVER/BAR/16 COMP	1		*				
16	1594 - 291 - 210 - 40	LEVER/BAR/16 COMP	1		*				
17	1600 - 502 - 003 - 00	BOLT,SM/M08X25	1		*				
18	V304 - 260 - 008 - 00	NUT/M 8	1		*				

FIG. 46 DRIVE PINION SYSTEM

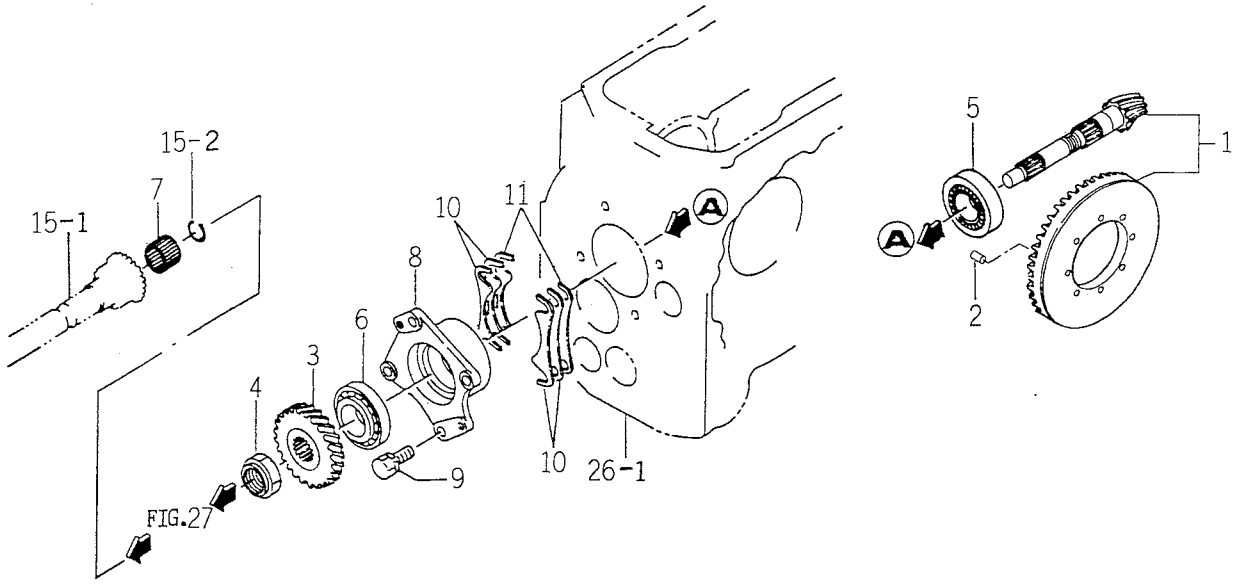

1673-301B

KEY	PART CODE	DESCRIPTION	QTY	TYPE OF MODEL TK529	TYPE OF MODEL TK533	ITC	COL	GRP	REMARKS
1	1562 - 301 - 200 - 40	GEAR/9X51 SET	1	*	*				
2	V523 - 101 - 002 - 40	PIN	1	*	*				
3	1611 - 301 - 001 - 10	GEAR/HELICAL/28	1	*	*				
4	1488 - 411 - 009 - 00	NUT (30)	1	*	*				
5	1560 - 301 - 002 - 00	ROLLER,BEARING32207 -	1	*	*				
6	1560 - 301 - 003 - 00	ROLLER,BEARING30207C	1	*	*				
7	V654 - 420 - 262 - 00	BEARING,NR	1	*	*				
8	1560 - 301 - 004 - 30	METAL	1	*	*				
9	V211 - 561 - 002 - 50	BOLT/M10X25	4	*	*				
10	1560 - 301 - 005 - 40	SHIM/0.2	4	*	*				
11	1560 - 301 - 006 - 40	SHIM/0.1	2	*	*				

FIG. 47 DIFFERENTAL GEAR SYSTEM

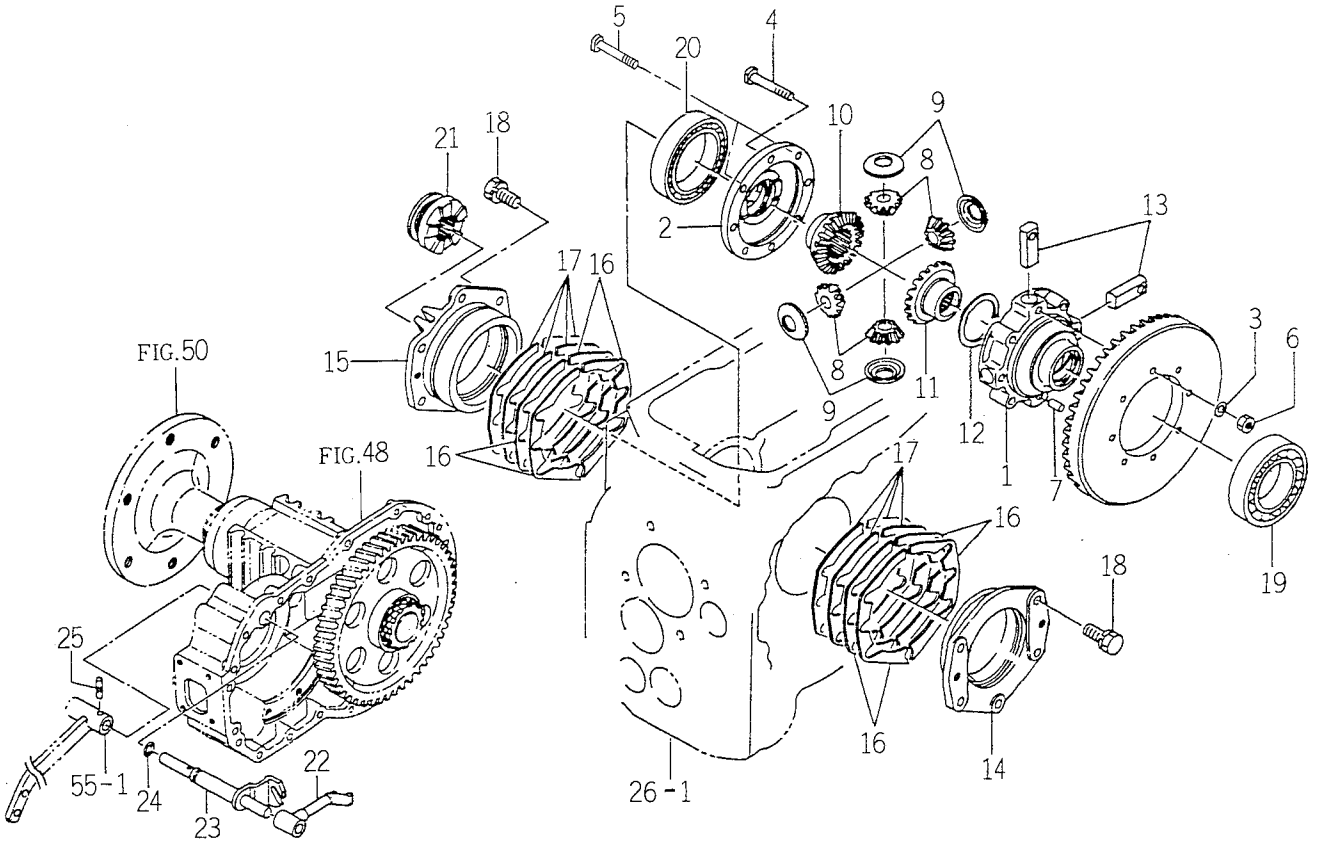

1594-303

KEY	PART CODE	DESCRIPTION	QTY	TYPE OF MODEL TK529	TYPE OF MODEL TK533	ITC	COL	GRP	REMARKS
1	1650 - 304 - 001 - 00	CASE/DIFF	1	*	*				
2	1560 - 303 - 005 - 50	CASE	1	*	*				
3	V401 - 160 - 008 - 00	WASHER,SP/M 8	8	*	*				
4	1594 - 303 - 001 - 00	BOLT/M8X1.0X58	6	*	*				
5	1594 - 303 - 002 - 00	BOLT/REAMER/M8X1.0X5	2	*	*				
6	1594 - 303 - 003 - 00	NUT/SM/M8X1.0	8	*	*				
7	V523 - 101 - 002 - 40	PIN	1	*	*				
8	1444 - 318 - 004 - 00	PINION,DIFF/12T	4	*	*				
9	1650 - 304 - 008 - 00	WASHER/PINION	4	*	*				
10	1443 - 452 - 007 - 00	GEAR,BEVEL	1	*	*				
11	1560 - 303 - 002 - 00	GEAR,BEVEL/20T	1	*	*				
12	1650 - 304 - 007 - 00	WASHER/43X58X01	1	*	*				
13	1444 - 318 - 007 - 00	SHAFT,DIFF PINION	4	*	*				
14	1560 - 303 - 003 - 40	METAL	1	*	*				
15	1560 - 303 - 001 - 40	METAL	1	*	*				
16	1444 - 318 - 011 - 00	SHIM (A)	8	*	*				
17	1444 - 318 - 012 - 00	SHIM (B)	8	*	*				
18	V211 - 561 - 002 - 50	BOLT/M10X25	11	*	*				
19	V600 - 110 - 621 - 10	BEARING,RB/6211	1	*	*				
20	V600 - 110 - 601 - 30	BEARING,RB/6013	1	*	*				
21	1560 - 303 - 006 - 40	CLUTCH	1	*	*				
22	1560 - 303 - 007 - 40	ARM	1	*	*				
23	1560 - 303 - 200 - 50	CAM	1	*	*				
24	V720 - 102 - 401 - 60	O - RING/P16	1	*	*				
25	1488 - 302 - 003 - 00	PIN	1	*	*				

FIG. 48 REAR AXLE HOUSING SYSTEM

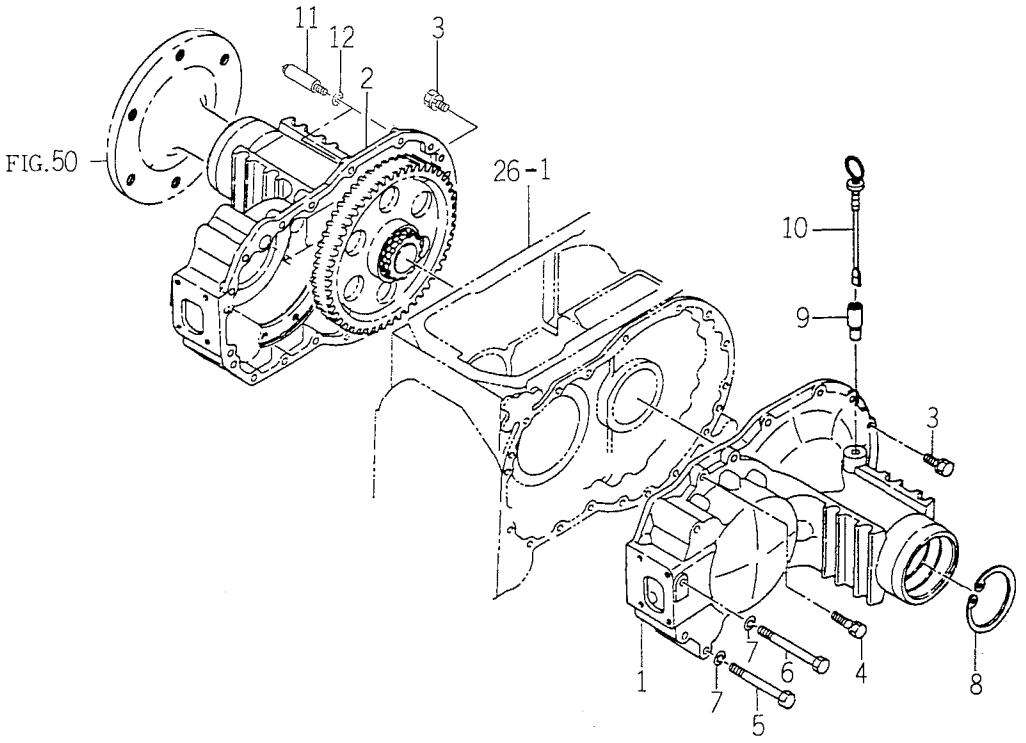

1674-304T

KEY	PART CODE	DESCRIPTION	QTY	TYPE OF MODEL TK529	TYPE OF MODEL TK533	ITC	COL	GRP	REMARKS
1	1560 - 304 - 001 - 50	HOUSING/AXLE,L	1	*	*				
2	1560 - 304 - 002 - 50	HOUSING,AXLE R	1	*	*				
3	V211 - 561 - 003 - 00	BOLT/M10X30	17	*	*				
4	V211 - 561 - 004 - 00	BOLT/M10X40	8	*	*				
5	V201 - 361 - 010 - 00	BOLT/M10X100	5	*	*				
6	V201 - 361 - 011 - 00	BOLT	3	*	*				
7	V401 - 160 - 010 - 00	WASHER,SP/M10	8	*	*				
8	V707 - 140 - 090 - 00	RING/SNAP	2	*	*				
9	1560 - 304 - 003 - 00	COLLAR/6X14X40	1	*	*				
10	1560 - 240 - 007 - 40	GAUGE,OIL LEVEL	1	*	*				
11	1673 - 304 - 001 - 00	BOLT/M10X86	2	*	*				
12	V401 - 160 - 010 - 00	WASHER,SP/M10	2	*	*				

FIG. 49 WHEEL PINON SYSTEM

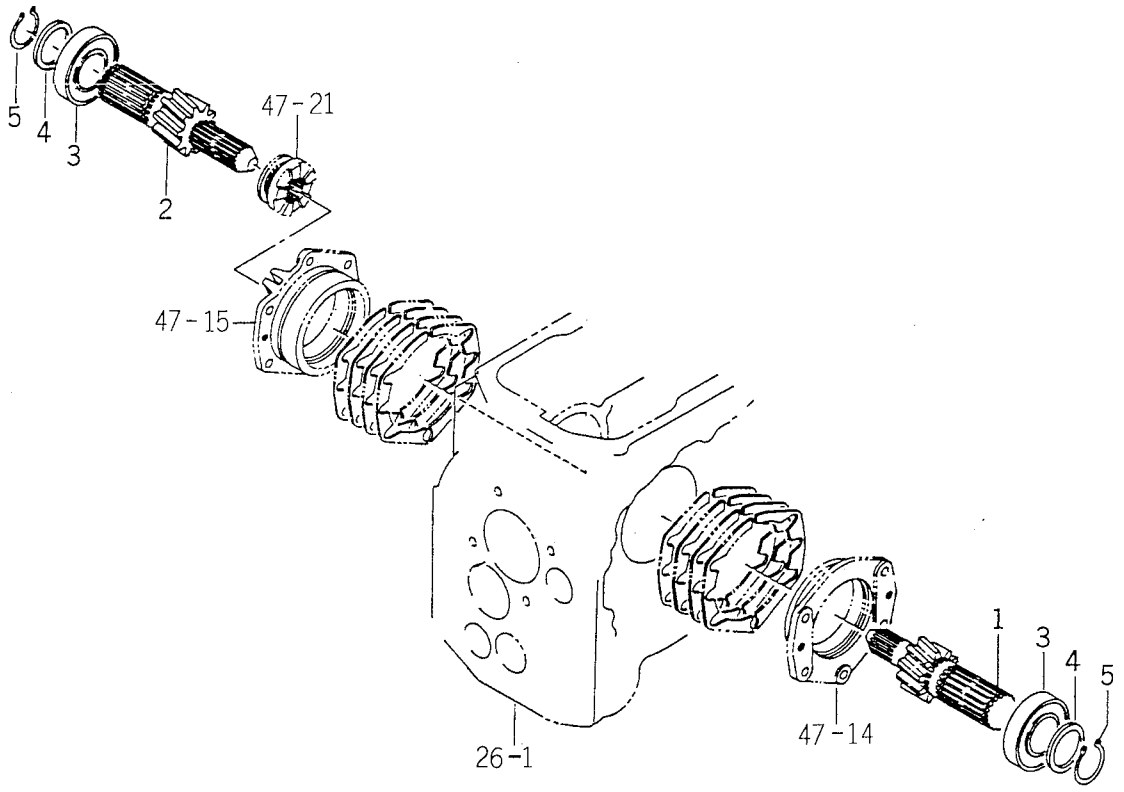

1560-306

KEY	PART CODE	DESCRIPTION	QTY	TYPE OF MODEL TK529	TYPE OF MODEL TK533	ITC	COL	GRP	REMARKS
1	1507 - 323 - 001 - 00	PINION,WHEEL (10) L.H	1	*	*				
2	1507 - 323 - 002 - 00	PINION,WHEEL (10) R.H	1	*	*				
3	1560 - 306 - 001 - 00	BEARING,BALL 6208SH2	2	*	*				
4	1507 - 323 - 004 - 20	COLLAR,THRUST	2	*	*				
5	V706 - 140 - 040 - 00	RING/SNAP	2	*	*				

FIG. 50 WHEEL SHAFT SYSTEM (TK529)

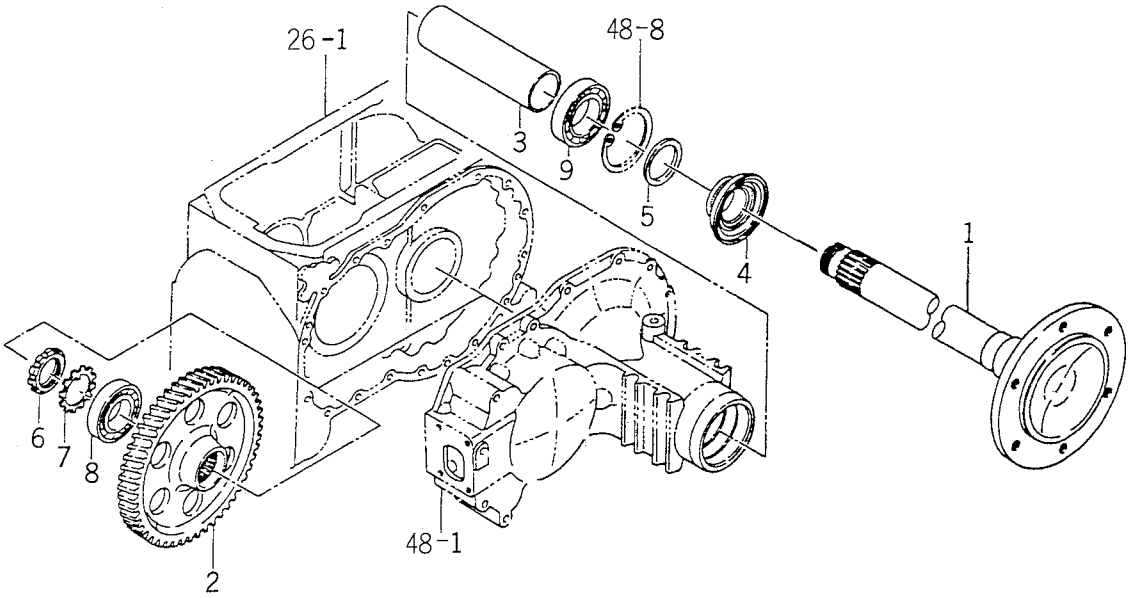

1561-307

KEY	PART CODE	DESCRIPTION	QTY	TYPE OF MODEL TK529	TYPE OF MODEL TK533	ITC	COL	GRP	REMARKS
1	1561 - 307 - 001 - 60	SHAFT/WHEEL	2	*					
2	1560 - 307 - 002 - 60	GEAR/HERICAL,54	2	*					
3	1560 - 307 - 003 - 10	COLLAR/52X61X211	2	*					
4	1560 - 307 - 200 - 40	SEAL/OIL/UNITIGHTS	2	*					
5	1416 - 307 - 003 - 00	COLLAR/50X65X4	2	*					
6	V670 - 200 - 009 - 00	NUT,ADAPTER/AN09	2	*					
7	V671 - 400 - 009 - 00	WASHER	2	*					
8	1502 - 211 - 015 - 00	BEARING,RB/6209SH	2	*					
9	V600 - 110 - 621 - 00	BEARING,RB/6210	2	*					

FIG. 51 WHEEL SHAFT SYSTEM (TK533)

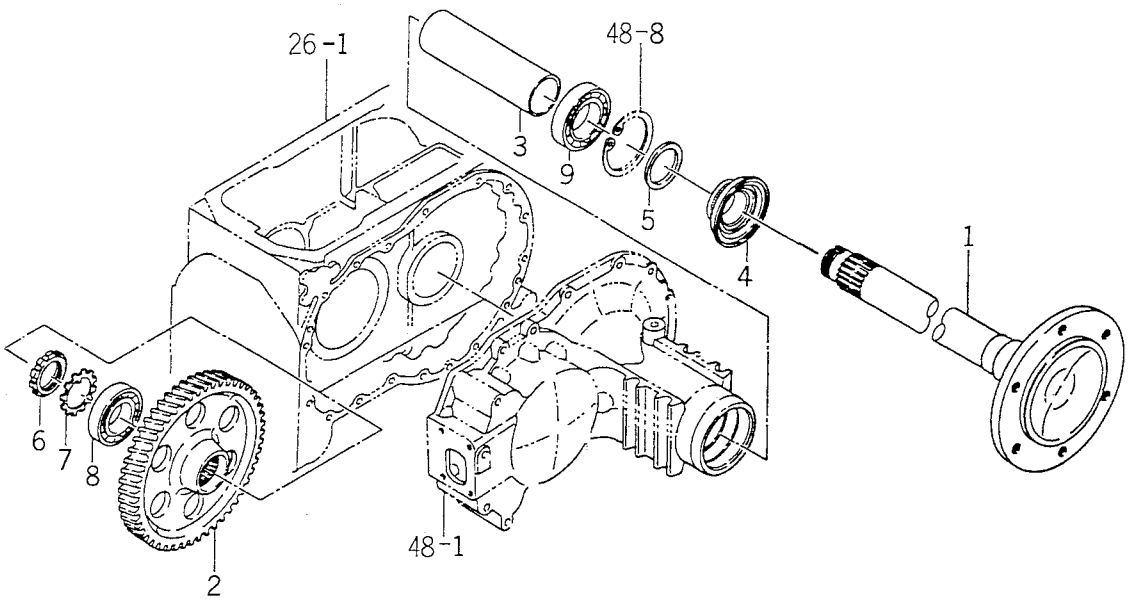

1611-307

KEY	PART CODE	DESCRIPTION	QTY	TYPE OF MODEL TK529	TYPE OF MODEL TK533	ITC	COL	GRP	REMARKS
1	1611 - 307 - 001 - 10	SHAFT/WHEEL	2		*				
2	1560 - 307 - 002 - 60	GEAR/HERICAL,54	2		*				
3	1560 - 307 - 003 - 10	COLLAR/52X61X211	2		*				
4	1560 - 307 - 200 - 40	SEAL/OIL/UNITIGHTS	2		*				
5	1416 - 307 - 003 - 00	COLLAR/50X65X4	2		*				
6	V670 - 200 - 009 - 00	NUT,ADAPTER/AN09	2		*				
7	V671 - 400 - 009 - 00	WASHER	2		*				
8	1502 - 211 - 015 - 00	BEARING,RB/6209SH	2		*				
9	V600 - 110 - 621 - 00	BEARING,RB/6210	2		*				

FIG. 52 BRAKE SYSTEM

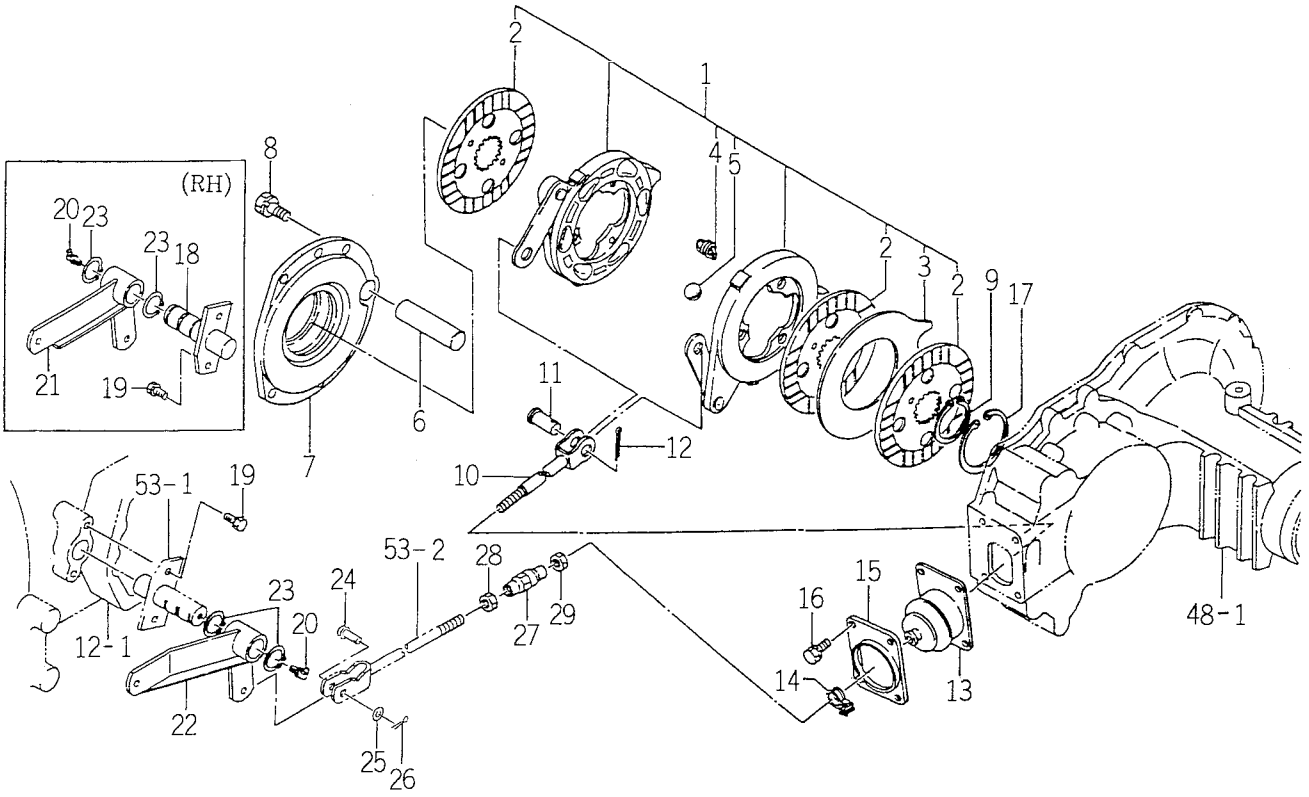

1560-310

KEY	PART CODE	DESCRIPTION	QTY	TYPE OF MODEL TK529	TYPE OF MODEL TK533	ITC	COL	GRP	REMARKS
1	1560 - 310 - 270 - 00	BRAKE ASSY	2	*	*				
2	1560 - 310 - 201 - 10	DISC,BRAKE	6	*	*				
3	1444 - 327 - 202 - 10	PLATE,SEPARATE	2	*	*				
4	1444 - 327 - 203 - 00	SPRING,RETURN	6	*	*				
5	V682 - 200 - 001 - 90	BALL	12	*	*				
6	1444 - 327 - 001 - 00	PIN,TORQUE	2	*	*				
7	1560 - 310 - 005 - 00	METAL/BRAKE	2	*	*				
8	V211 - 561 - 002 - 50	BOLT/M10X25	12	*	*				
9	V706 - 140 - 040 - 00	RING/SNAP	2	*	*				
10	1488 - 310 - 220 - 00	ROD,BRAKE COMP	2	*	*				
11	1444 - 327 - 003 - 00	PIN (15X30)	2	*	*				
12	V500 - 163 - 002 - 00	PIN,SPLIT/3 X20	2	*	*				
13	1560 - 310 - 003 - 40	BOOT	2	*	*				
14	J061 - 210 - 015 - 00	CLAMP/WIRE/10 - 15	2	*	*				
15	1560 - 310 - 004 - 40	PLATE	2	*	*				
16	V211 - 260 - 801 - 60	BOLT,SEMS (S) M8X16	8	*	*				
17	V707 - 140 - 080 - 00	RING/SNAP	2	*	*				
18	1560 - 310 - 210 - 40	PIN COMP	1	*	*				
19	V211 - 260 - 802 - 00	BOLT,SEMS (S)	4	*	*				
20	V763 - 150 - 000 - 00	NIPPLE,GREASE/PT1/8	2	*	*				
21	1560 - 310 - 220 - 50	ARM COMP	1	*	*				
22	1560 - 310 - 260 - 40	ARM COMP	1	*	*				
23	V704 - 140 - 025 - 00	RING,SNAP/25 C	4	*	*				
24	1404 - 312 - 006 - 00	PIN,YOKE A	2	*	*				
25	V411 - 260 - 008 - 00	WASHER,PL/M 8	2	*	*				

FIG. 52 BRAKE SYSTEM

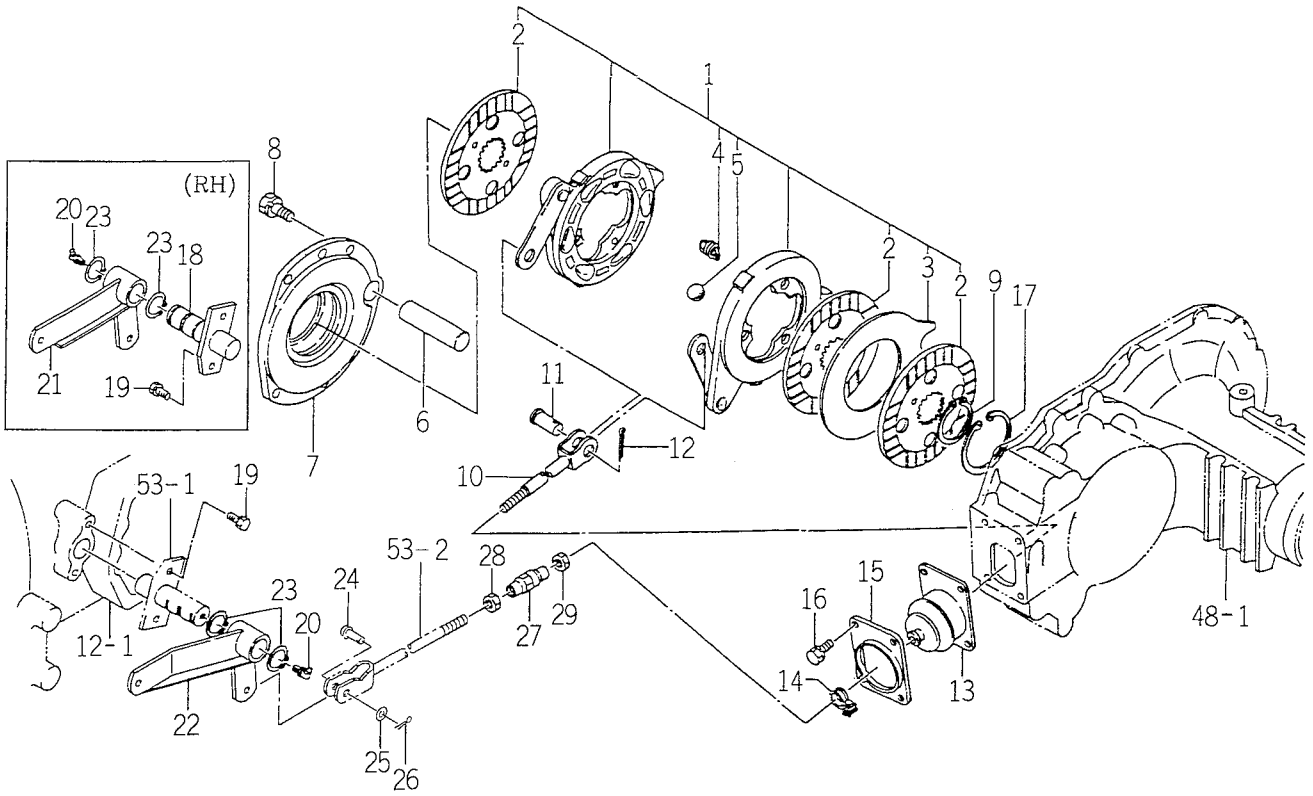

1560-310

KEY	PART CODE	DESCRIPTION	QTY	TYPE OF MODEL TK529	TYPE OF MODEL TK533	ITC	COL	GRP	REMARKS
26	V500 - 162 - 002 - 00	PIN,SPLIT/2 X20	2	*	*				
27	1444 - 122 - 002 - 00	TURNBUCKLE/M8	2	*	*				
28	V304 - 260 - 008 - 00	NUT/M 8	2	*	*				
29	1560 - 132 - 007 - 30	NUT/M8	2	*	*				

FIG. 53 BRAKE ROD SYSTEM

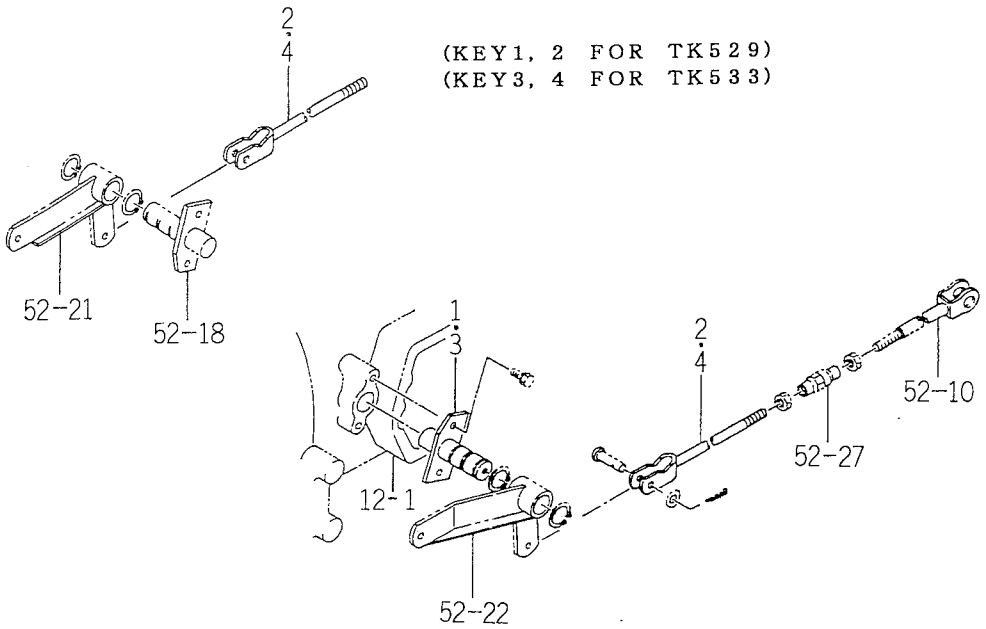

1561-310B

KEY	PART CODE	DESCRIPTION	QTY	TYPE OF MODEL TK529	TYPE OF MODEL TK533	ITC	COL	GRP	REMARKS
1	1560 - 310 - 210 - 40	PIN COMP	1	*					
2	1561 - 310 - 210 - 40	ROD/FORK COMP	2	*					
3	1560 - 310 - 210 - 40	PIN COMP	1		*				
4	1563 - 310 - 200 - 40	ROD/FORK COMP	2		*				

FIG. 54 BRAKE PEDAL SYSTEM

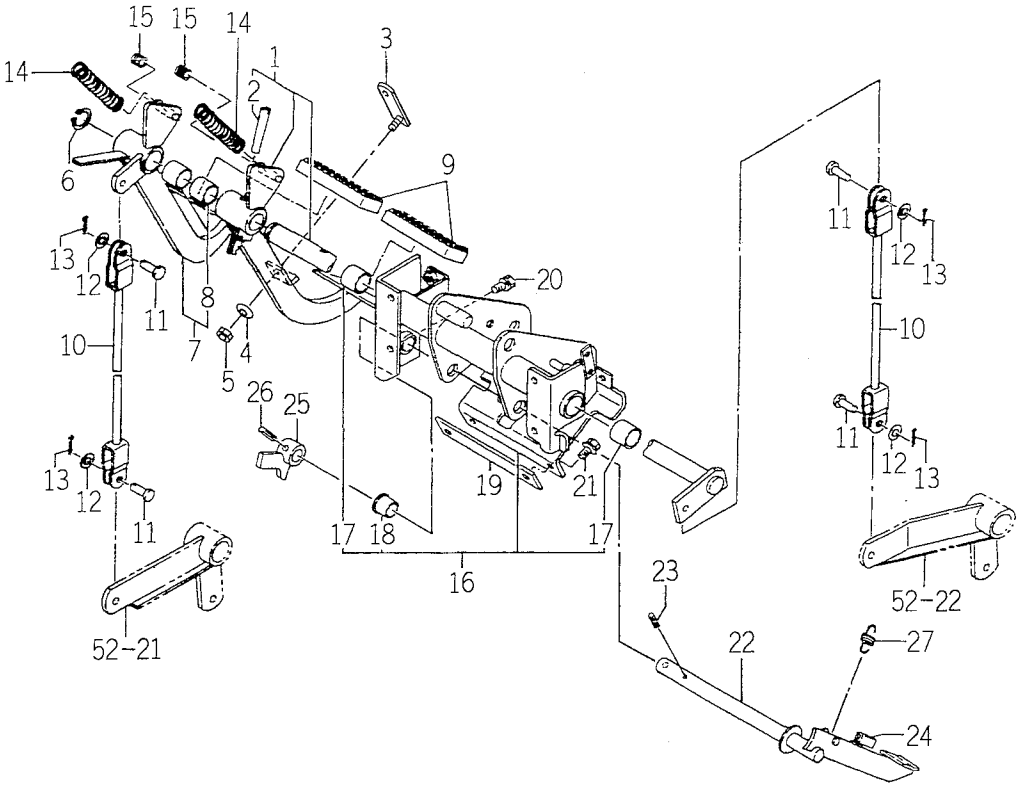

1673-314

KEY	PART CODE	DESCRIPTION	QTY	TYPE OF MODEL TK529	TYPE OF MODEL TK533	ITC	COL	GRP	REMARKS
1	1673 - 314 - 200 - 00	PEDAL/BRAKE/LH SET	1	*	*				
2	V511 - 100 - 805 - 00	PIN,TAPER/8X50	1	*	*				
3	1673 - 314 - 220 - 10	LOCKPLATE COMP	1	*	*				
4	3560 - 203 - 004 - 00	SPRING,CONE	1	*	*				
5	P120 - 605 - 031 - 00	U - NUT	1	*	*				
6	V704 - 140 - 020 - 00	RING,SNAP/20C	1	*	*				
7	1594 - 314 - 230 - 20	PEDAL/BRAKE/RH ASSY	1	*	*				
8	A101 - 251 - 008 - 00	BUSH/20X23X20	2	*	*				
9	1524 - 122 - 001 - 00	PAD	2	*	*				
10	1560 - 314 - 250 - 30	ROD COMP	2	*	*				
11	1432 - 242 - 001 - 00	PIN	4	*	*				
12	V411 - 260 - 008 - 00	WASHER,PL/M 8	4	*	*				
13	V500 - 162 - 502 - 00	PIN,SPLIT/2.5X20	4	*	*				
14	1673 - 314 - 001 - 00	SPRING/HE106	2	*	*				
15	1560 - 132 - 001 - 10	TUBE	2	*	*				
16	1594 - 314 - 210 - 20	FRAME ASSY	1	*	*				
17	3670 - 703 - 008 - 00	BUSH/20X23X20	2	*	*				
18	1560 - 314 - 291 - 00	BUSH/16X18X15	1	*	*				
19	1560 - 314 - 002 - 00	PLATE	1	*	*				
20	V211 - 260 - 801 - 60	BOLT,SEMS (S) M8X16	4	*	*				
21	V211 - 360 - 802 - 00	BOLT (SP) M8X20	2	*	*				
22	1594 - 314 - 250 - 10	PEDAL,PARKING COMP	1	*	*				
23	V580 - 140 - 402 - 50	PIN,SPRING/4 X25	1	*	*				
24	1560 - 314 - 001 - 00	INSULATOR	1	*	*				
25	1560 - 314 - 360 - 20	ARM/PARKING	1	*	*				

FIG. 54 BRAKE PEDAL SYSTEM

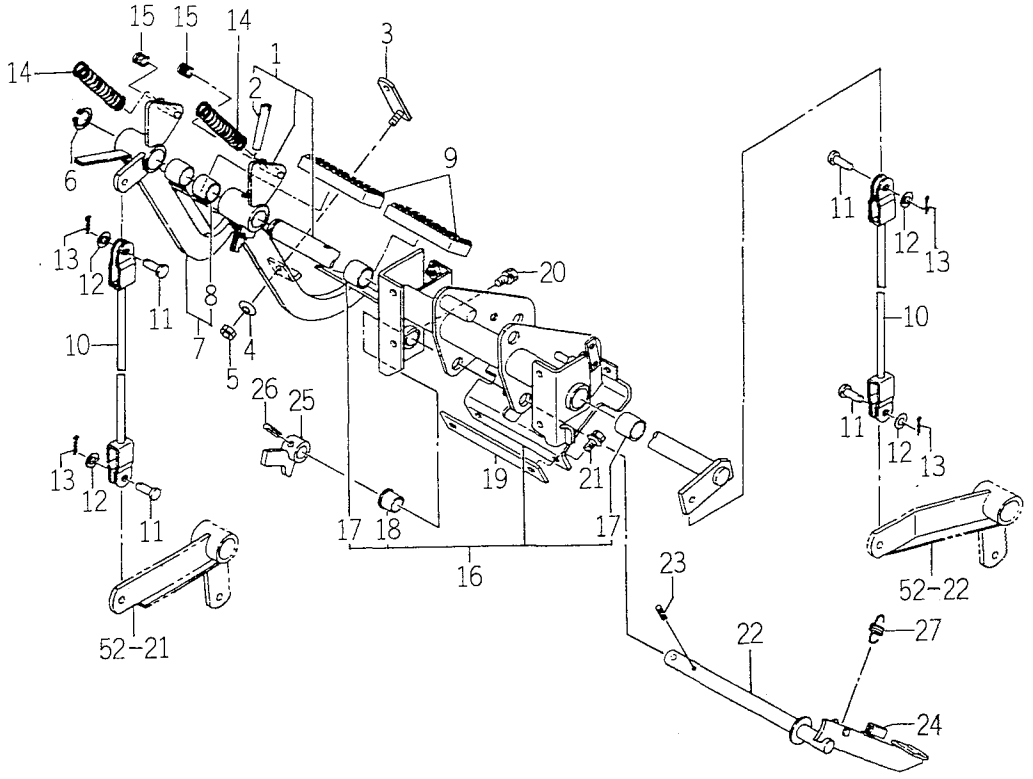

1673-314

KEY	PART CODE	DESCRIPTION	QTY	TYPE OF MODEL TK529	TYPE OF MODEL TK533	ITC	COL	GRP	REMARKS
26	V580 - 140 - 602 - 50	PIN,SPRING/6 X25 W	1	*	*				
27	1432 - 120 - 004 - 00	SPRING,TENSION/31	1	*	*				

FIG. 55 DIFF – LOCK SYSTEM

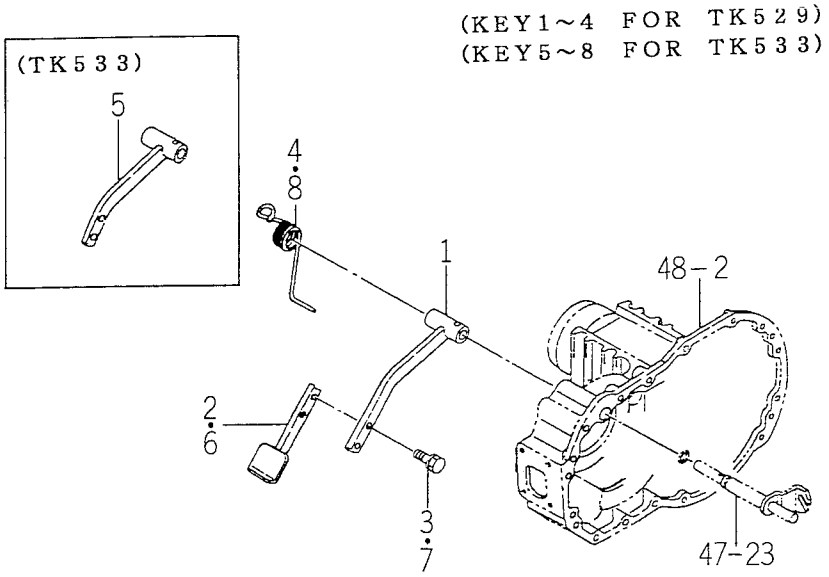

1561-316

KEY	PART CODE	DESCRIPTION	QTY	TYPE OF MODEL TK529	TYPE OF MODEL TK533	ITC	COL	GRP	REMARKS
1	1561 – 316 – 230 – 50	PEDAL COMP	1	*					
2	1560 – 316 – 210 – 00	PEDAL COMP	1	*					
3	V211 – 261 – 002 – 50	BOLT (S) M10X25	2	*					
4	1560 – 316 – 001 – 50	SPRING	1	*					
5	1563 – 316 – 220 – 50	PEDAL	1		*				
6	1560 – 316 – 210 – 00	PEDAL COMP	1		*				
7	V211 – 261 – 002 – 50	BOLT (S) M10X25	2		*				
8	1560 – 316 – 001 – 50	SPRING	1		*				

FIG. 56 REAR WHEEL SYSTEM (TK529)

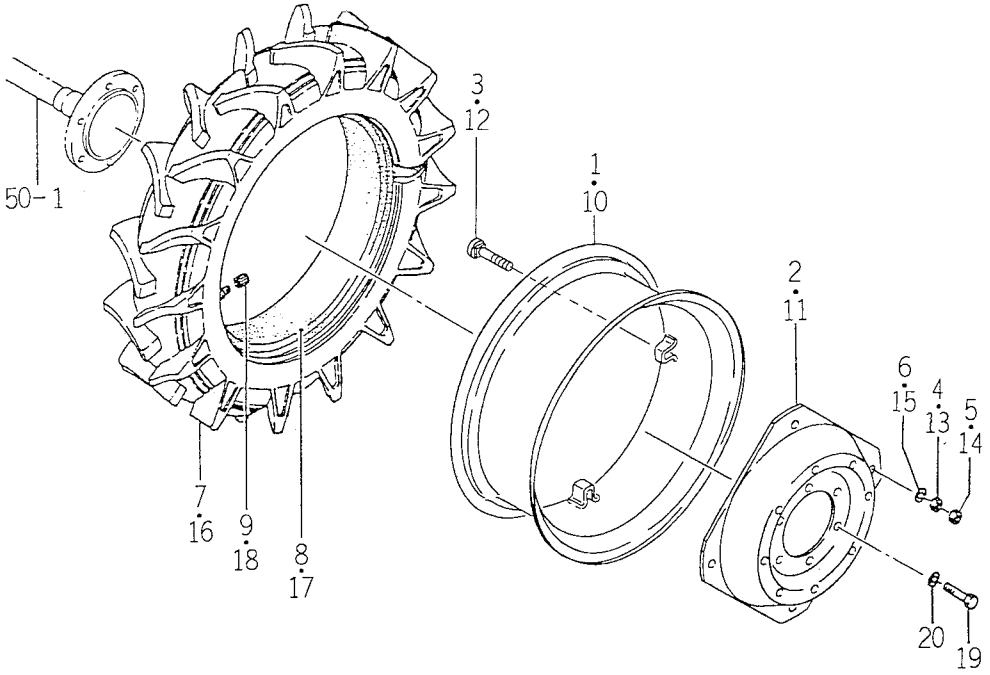

1667-317

KEY	PART CODE	DESCRIPTION	QTY	TYPE OF MODEL TK529	TYPE OF MODEL TK533	ITC	COL	GRP	REMARKS
1	1640 - 320 - 220 - 00	WHEEL/24XW10 COMP	1	*			5K		
2	1640 - 320 - 211 - 00	DISK	1	*			5K		
3	V240 - 461 - 608 - 50	BOLT/M16X85	4	*					
4	V304 - 460 - 016 - 00	NUT/M16	4	*					
5	V302 - 460 - 016 - 00	NUT/M16	4	*					
6	V401 - 160 - 016 - 00	WASHER,SP/M16	4	*					
7	1563 - 320 - 211 - 00	TIRE/12.4 - 24 - 4	1	*					
8	V889 - 001 - 242 - 40	TUBE	1	*					
9	V999 - 200 - 003 - 00	CAP,TIRE VALVE	1	*					
10	1640 - 320 - 220 - 00	WHEEL/24XW10 COMP	1	*			5K		
11	1640 - 320 - 211 - 00	DISK	1	*			5K		
12	V240 - 461 - 608 - 50	BOLT/M16X85	4	*					
13	V304 - 460 - 016 - 00	NUT/M16	4	*					
14	V302 - 460 - 016 - 00	NUT/M16	4	*					
15	V401 - 160 - 016 - 00	WASHER,SP/M16	4	*					
16	1563 - 320 - 211 - 00	TIRE/12.4 - 24 - 4	1	*					
17	V889 - 001 - 242 - 40	TUBE	1	*					
18	V999 - 200 - 003 - 00	CAP,TIRE VALVE	1	*					
19	V201 - 361 - 603 - 00	BOLT	12	*					
20	V401 - 160 - 016 - 00	WASHER,SP/M16	12	*					

FIG. 57 REAR WHEEL SYSTEM (TK533)

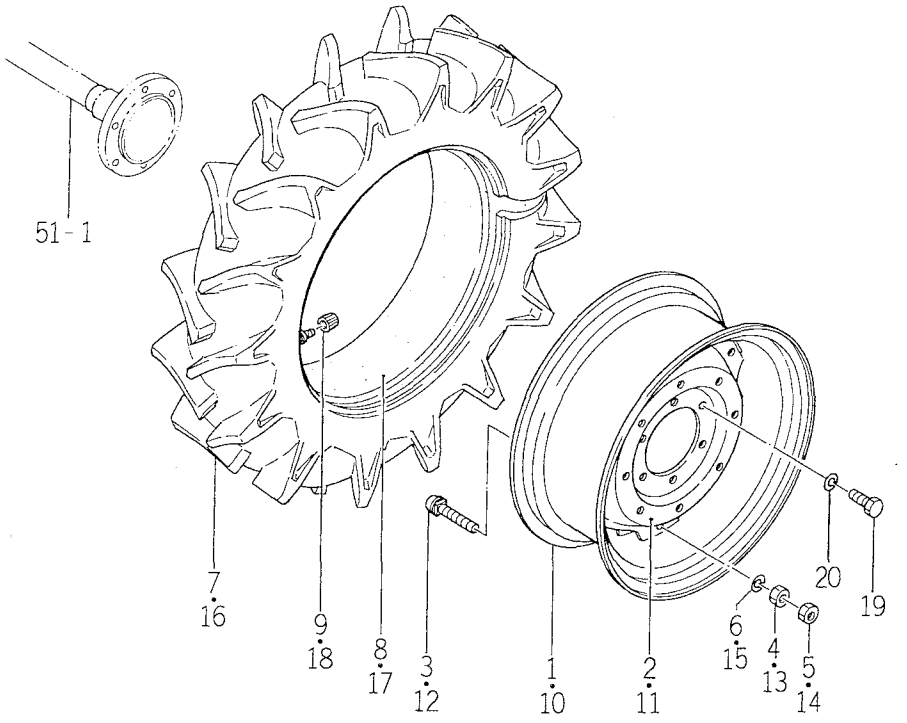

1673-317

KEY	PART CODE	DESCRIPTION	QTY	TYPE OF MODEL TK529	TYPE OF MODEL TK533	ITC	COL	GRP	REMARKS
1	1489 - 317 - 220 - 00	W11 - 26 WHEEL RIM	1		*				
2	1489 - 317 - 211 - 00	DISK,REAR WHEEL	1		*				
3	1447 - 331 - 213 - 00	BOLT	6		*				
4	V304 - 460 - 016 - 00	NUT	6		*				
5	V302 - 460 - 016 - 00	NUT/M16	6		*				
6	V401 - 160 - 016 - 00	WASHER,SP/M16	6		*				
7	1673 - 317 - 211 - 00	TIRE/12.4 - 26	1		*				
8	1673 - 317 - 212 - 00	TUBE/TIRE/12.4 - 26)	1		*				
9	V999 - 200 - 003 - 00	CAP,TIRE VALVE	1		*				
10	1489 - 317 - 220 - 00	W11 - 26 WHEEL RIM	1		*				
11	1489 - 317 - 211 - 00	DISK,REAR WHEEL	1		*				
12	1447 - 331 - 213 - 00	BOLT	6		*				
13	V304 - 460 - 016 - 00	NUT	6		*				
14	V302 - 460 - 016 - 00	NUT/M16	6		*				
15	V401 - 160 - 016 - 00	WASHER,SP/M16	6		*				
16	1673 - 317 - 211 - 00	TIRE/12.4 - 26	1		*				
17	1673 - 317 - 212 - 00	TUBE/TIRE/12.4 - 26)	1		*				
18	V999 - 200 - 003 - 00	CAP,TIRE VALVE	1		*				
19	V201 - 361 - 603 - 00	BOLT	12		*				
20	V401 - 160 - 016 - 00	WASHER,SP/M16	12		*				

FIG. 58 STEERING WHEEL SYSTEM

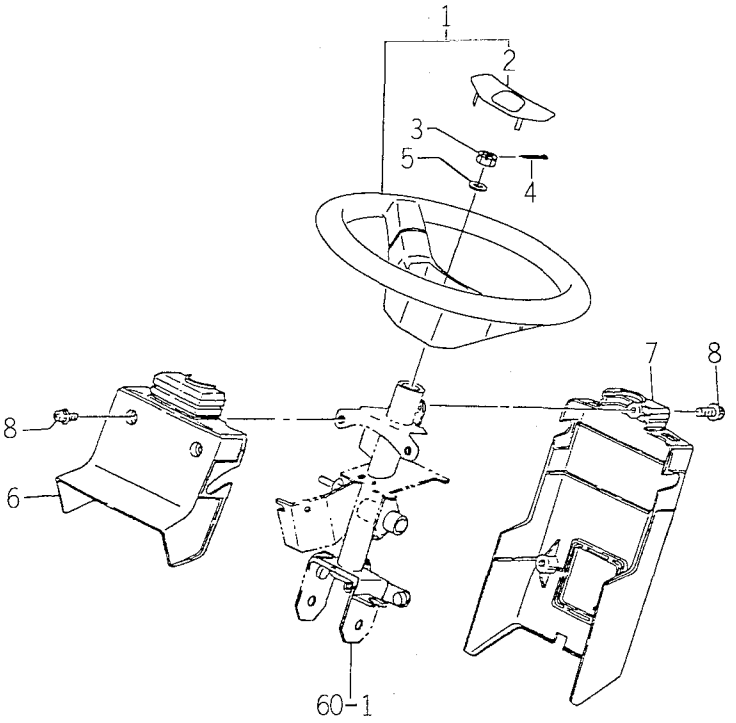

1673-401

KEY	PART CODE	DESCRIPTION	QTY	TYPE OF MODEL TK529	TYPE OF MODEL TK533	ITC	COL	GRP	REMARKS
1	2161 - 331 - 400 - 10	STEERING/2/380 ASSY	1	*	*				
2	2161 - 331 - 401 - 10	CAP/STEERING	1	*	*				
3	V328 - 262 - 110 - 00	NUT	1	*	*				
4	V500 - 162 - 002 - 00	PIN,SPLIT/2 X20	1	*	*				
5	V411 - 260 - 010 - 00	WASHER/M10	1	*	*				
6	1673 - 401 - 001 - 00	COVER/COLUMN/FRONT	1	*	*				
7	1673 - 401 - 002 - 00	COVER/COLUMN/REAR	1	*	*				
8	V120 - 368 - 002 - 00	BOLT/M8X20	5	*	*				

FIG. 59 STEERING SHAFT SYSTEM

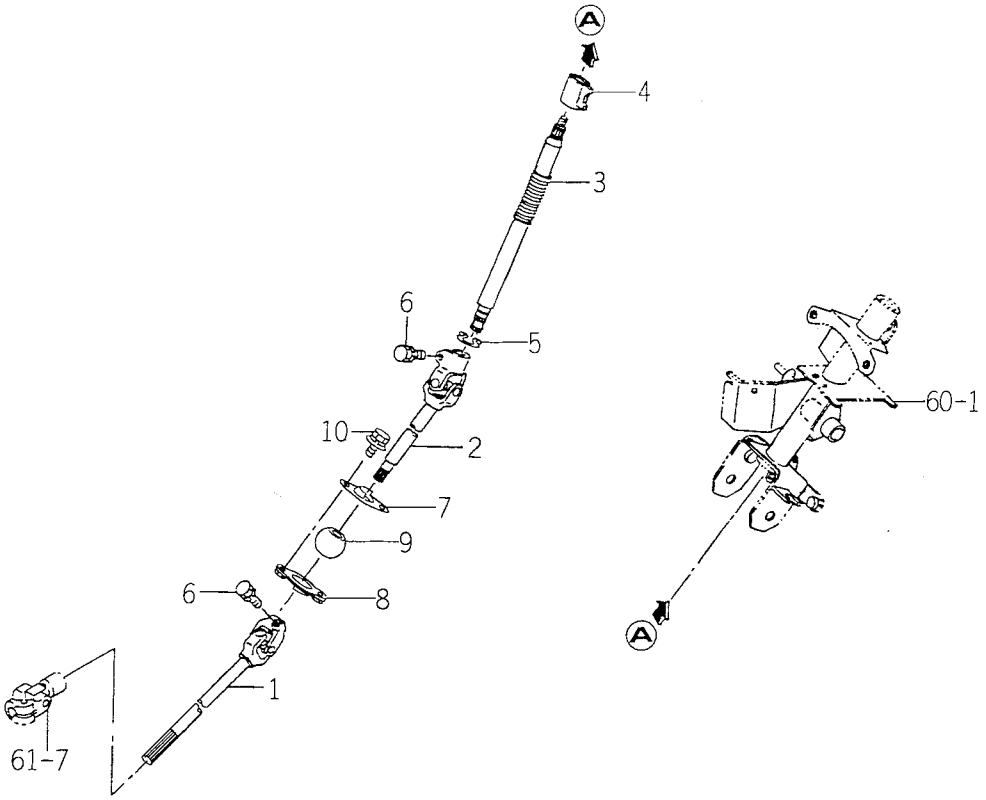

1673-402A

KEY	PART CODE	DESCRIPTION	QTY	TYPE OF MODEL TK529	TYPE OF MODEL TK533	ITC	COL	GRP	REMARKS
1	1673 - 402 - 201 - 00	SHAFT/STEERING/R	1	*	*				
2	1673 - 402 - 202 - 00	SHAFT/STEERING/F	1	*	*				
3	1673 - 402 - 001 - 00	SHAFT/STEERING	1	*	*				
4	1560 - 403 - 001 - 10	CAM/STEERING	1	*	*				
5	V704 - 140 - 017 - 00	RING,SNAP/17 C	1	*	*				
6	V211 - 560 - 802 - 50	BOLT,SEMS/M8X25 7T	2	*	*				
7	1560 - 402 - 210 - 30	HOLDER COMP	1	*	*				
8	1560 - 402 - 220 - 30	HOLDER COMP	1	*	*				
9	1560 - 402 - 001 - 00	BALL	1	*	*				
10	V211 - 360 - 802 - 00	BOLT (SP) M8X20	2	*	*				

FIG. 60 COLUMN SYSTEM

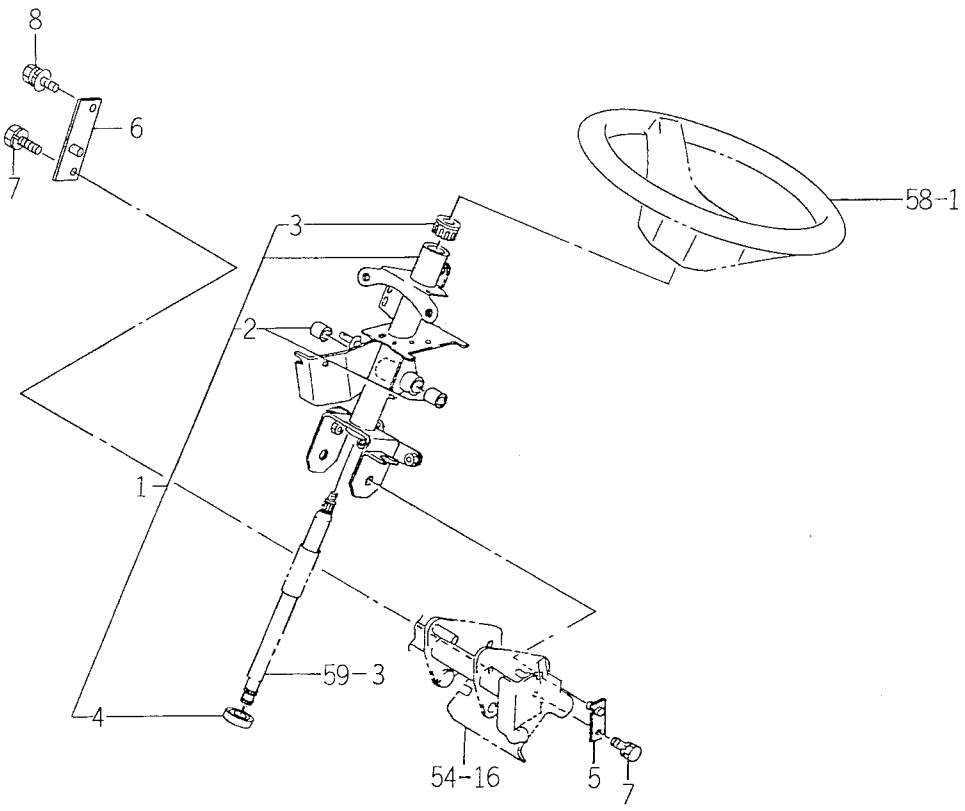

1673-404

KEY	PART CODE	DESCRIPTION	QTY	TYPE OF MODEL TK529	TYPE OF MODEL TK533	ITC	COL	GRP	REMARKS
1	1673 - 404 - 200 - 10	COLUMN COMP	1	*	*				
2	3646 - 102 - 011 - 10	BUSH/14X16X20	2	*	*				
3	1429 - 406 - 205 - 00	BUSH	1	*	*				
4	V600 - 130 - 600 - 30	BEARING,RB/6003ZZ	1	*	*				
5	1560 - 404 - 210 - 10	PIN/16X23 COMP	1	*	*				
6	1673 - 404 - 220 - 00	PIN/16 COMP	1	*	*				
7	V211 - 260 - 802 - 00	BOLT,SEMS (S)	2	*	*				
8	V211 - 660 - 802 - 50	BOLT/M8X25	1	*	*				

FIG. 61 POWER STEERING SYSTEM

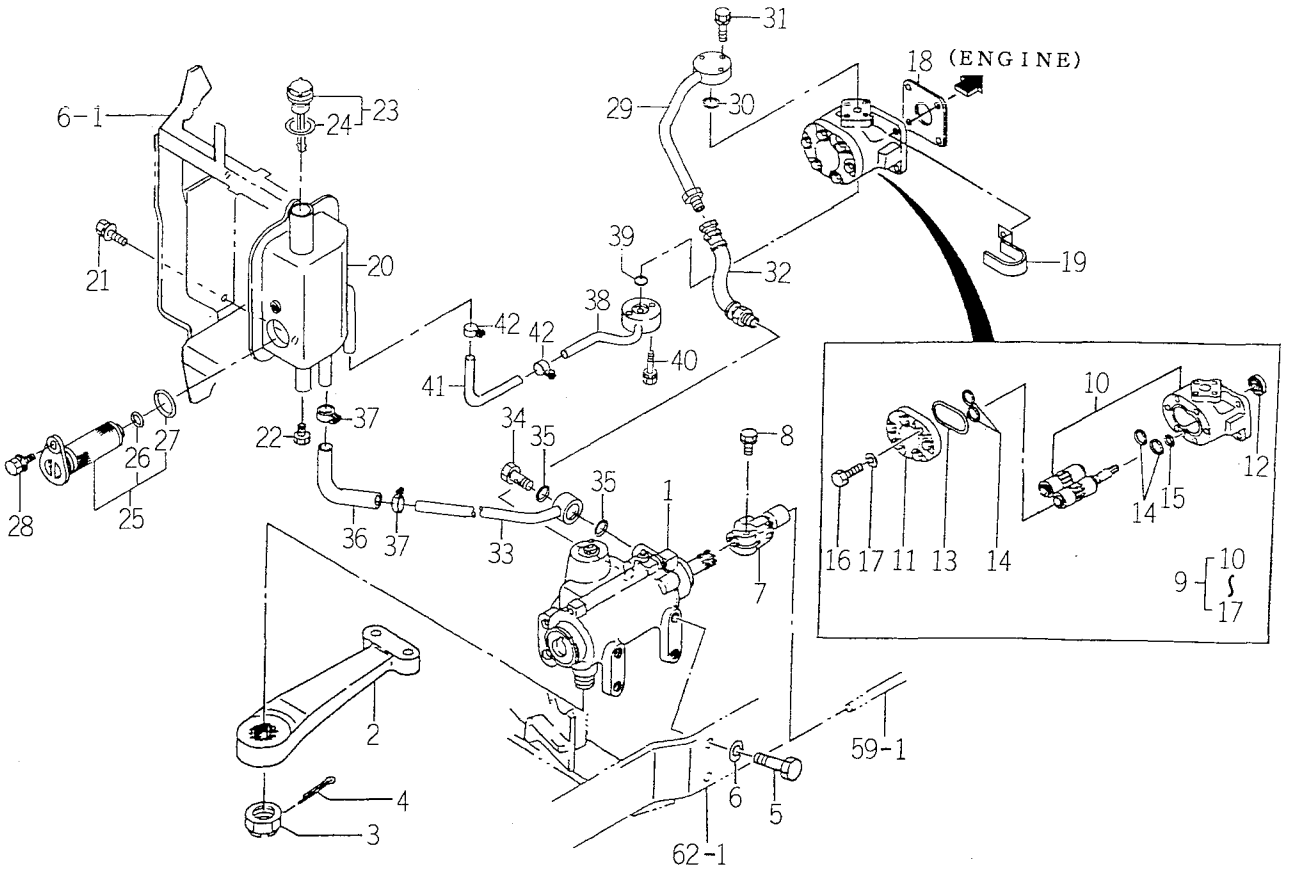

1673-407

KEY	PART CODE	DESCRIPTION	QTY	TYPE OF MODEL TK529	TYPE OF MODEL TK533	ITC	COL	GRP	REMARKS
1	1560 - 407 - 260 - 50	STEERING/POWER ASSY	1	*	*				FIG 118
2	1594 - 407 - 201 - 00	ARM	1	*	*				
3	1444 - 408 - 202 - 00	NUT,CASTLE/M27X1.5	1	*	*				
4	V500 - 165 - 005 - 00	PIN,SPLIT/5X50	1	*	*				
5	1560 - 406 - 002 - 00	BOLT/SM/M14X1.5X35	6	*	*				
6	1560 - 406 - 003 - 00	WASHER,SP/M14	6	*	*				
7	1560 - 406 - 001 - 00	JOINT	1	*	*				
8	V211 - 560 - 803 - 00	BOLT/M8X30	1	*	*				
9	K135 - 013 - 000 - 00	PUMP,GEAR ASSY	1	*	*				
10	K135 - 013 - 100 - 00	PUMP,GEAR SET	1	*	*				
11	K135 - 017 - 006 - 00	COVER,PUMP	1	*	*				
12	V744 - 114 - 280 - 70	SEAL,OIL	1	*	*				
13	V721 - 113 - 105 - 00	O - RING HS90 G50	1	*	*				
14	V720 - 112 - 402 - 20	O - RING/P22	4	*	*				
15	V720 - 111 - 900 - 60	O - RING P6 HS90	1	*	*				
16	K135 - 002 - 009 - 00	BOLT/M8X28 11T	6	*	*				
17	V401 - 170 - 008 - 00	S.W	6	*	*				
18	1404 - 503 - 006 - 00	PACKING,OIL PUMP	1	*	*				
19	1617 - 102 - 007 - 00	CLAMP	1	*	*				
20	1673 - 407 - 230 - 10	TANK/OIL COMP	1	*	*				
21	V211 - 360 - 801 - 60	BOLT,SEMS (SP)	2	*	*				
22	1326 - 706 - 002 - 10	PLUG,DRAIN	1	*	*				
23	1518 - 407 - 240 - 00	CAP,OIL (B) ASSY	1	*	*				
24	1518 - 306 - 203 - 00	PACKING	1	*	*				
25	1614 - 407 - 260 - 00	FILTER/OIL ASSY	1	*	*				

FIG. 61 POWER STEERING SYSTEM

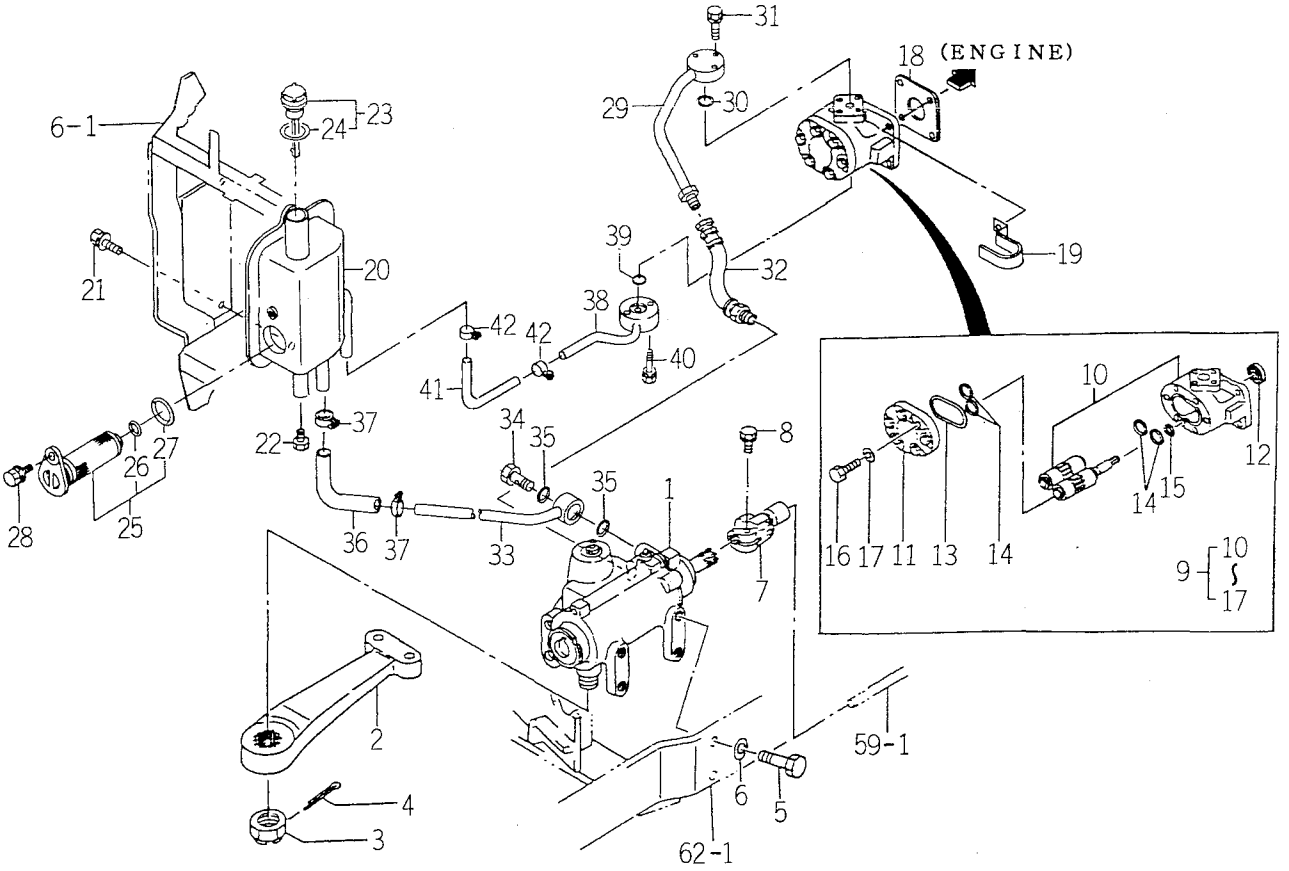

1673-4C7

KEY	PART CODE	DESCRIPTION	QTY	TYPE OF MODEL TK529	TYPE OF MODEL TK533	ITC	COL	GRP	REMARKS
26	V720 - 102 - 401 - 20	O - RING/P12	1	*	*				
27	V720 - 103 - 503 - 10	O - RING P31	1	*	*				
28	V210 - 360 - 601 - 60	BOLT (SP) /M6X16	1	*	*				
29	1673 - 407 - 200 - 00	PIPE/OIL/DEREVERY	1	*	*				
30	V720 - 112 - 402 - 00	O - RING/P20	1	*	*				
31	V210 - 560 - 602 - 50	BOLT/S	3	*	*				
32	1560 - 407 - 320 - 10	HOSE (195) ASSY	1	*	*				
33	1673 - 407 - 210 - 10	PIPE/OIL/TANK COMP	1	*	*				
34	1415 - 505 - 014 - 00	BOLT,CONNECTOR	1	*	*				
35	V720 - 112 - 401 - 80	O - RING/P18	2	*	*				
36	1576 - 408 - 002 - 00	HOSE/OIL	1	*	*				
37	J061 - 116 - 025 - 00	CLAMP/WORM/16 - 25	2	*	*				
38	1673 - 407 - 220 - 10	PIPE/OIL/SUCTIO COMP	1	*	*				
39	V720 - 112 - 402 - 00	O - RING/P20	1	*	*				
40	V210 - 560 - 603 - 00	BOLT/S	2	*	*				
41	1576 - 408 - 002 - 00	HOSE/OIL	1	*	*				
42	J061 - 116 - 025 - 00	CLAMP/WORM/16 - 25	2	*	*				

FIG. 62 AXLE BRACKET SYSTEM

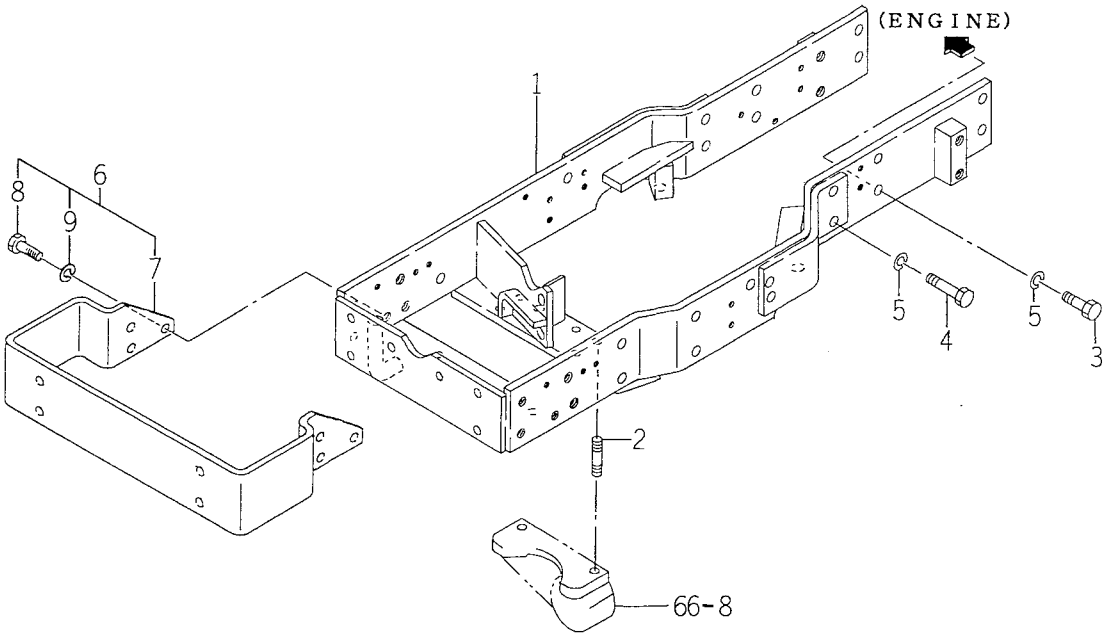

1674-410

KEY	PART CODE	DESCRIPTION	QTY	TYPE OF MODEL TK529	TYPE OF MODEL TK533	ITC	COL	GRP	REMARKS
1	1673 - 410 - 200 - 10	BRACKET/AXLE COMP	1	*	*				
2	V251 - 341 - 203 - 00	BOLT/STUD	2	*	*				
3	V201 - 361 - 203 - 00	BOLT/M12X30	8	*	*				
4	V201 - 361 - 204 - 50	BOLT/M12X45	4	*	*				
5	V401 - 160 - 012 - 00	WASHER,SP/M12	12	*	*				
6	1594 - 410 - 200 - 00	BRACKET/BUMPER SET	1	*	*				
7	1560 - 410 - 222 - 30	BRACKET	1	*	*				
8	V201 - 361 - 203 - 00	BOLT/M12X30	6	*	*				
9	V401 - 160 - 012 - 00	WASHER,SP/M12	6	*	*				

FIG. 63 WEIGHT SYSTEM

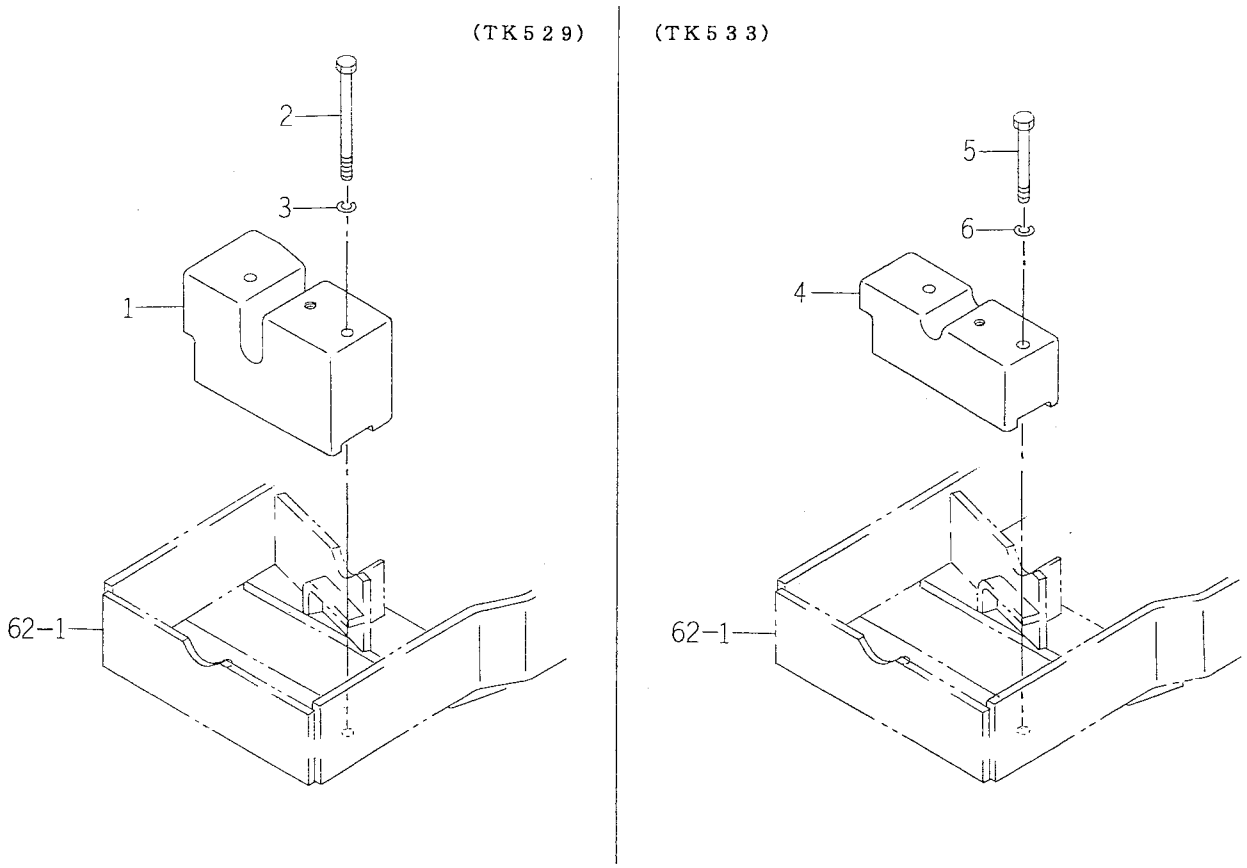

1673-410A

KEY	PART CODE	DESCRIPTION	QTY	TYPE OF MODEL		ITC	COL	GRP	REMARKS
				TK529	TK533				
1	1673 - 410 - 001 - 00	WEIGHT/34	1	*					
2	V201 - 361 - 217 - 00	BOLT	2	*					
3	V401 - 160 - 012 - 00	WASHER,SP/M12	2	*					
4	1673 - 410 - 003 - 00	WEIGHT/15	1		*				
5	V201 - 361 - 212 - 00	BOLT	2		*				
6	V401 - 160 - 012 - 00	WASHER,SP/M12	2		*				

FIG. 64 DRIVE SHAFT SYSTEM

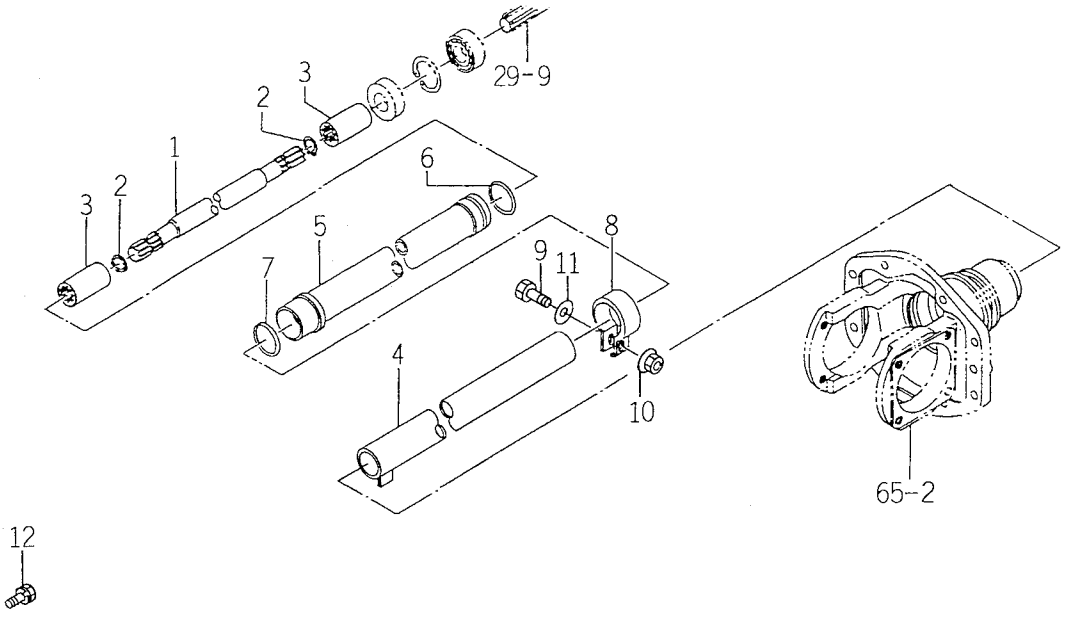

1673-431

KEY	PART CODE	DESCRIPTION	QTY	TYPE OF MODEL TK529	TYPE OF MODEL TK533	ITC	COL	GRP	REMARKS
1	1611 - 431 - 001 - 00	SHAFT/4WD	1	*	*				
2	V704 - 140 - 020 - 00	RING,SNAP/20C	2	*	*				
3	1673 - 431 - 001 - 10	COUPRING/16X27X55	2	*	*				
4	1673 - 431 - 200 - 00	TUBE/345 COMP	1	*	*				
5	1444 - 410 - 210 - 00	PIPE (B) COMP	1	*	*				
6	V720 - 103 - 503 - 60	O - RING/P36	1	*	*				
7	V720 - 103 - 503 - 40	O - RING/P34	1	*	*				
8	1444 - 410 - 002 - 10	CLAMP	1	*	*				
9	V201 - 260 - 803 - 50	BOLT/M 8X35	1	*	*				
10	V362 - 260 - 008 - 00	NUT/WASHER	1	*	*				
11	V411 - 260 - 008 - 00	WASHER,PL/M 8	1	*	*				
12	V211 - 260 - 801 - 20	BOLT,SEMS (S) M8X12	1	*	*				

FIG. 65 BEVEL CASE SYSTEM

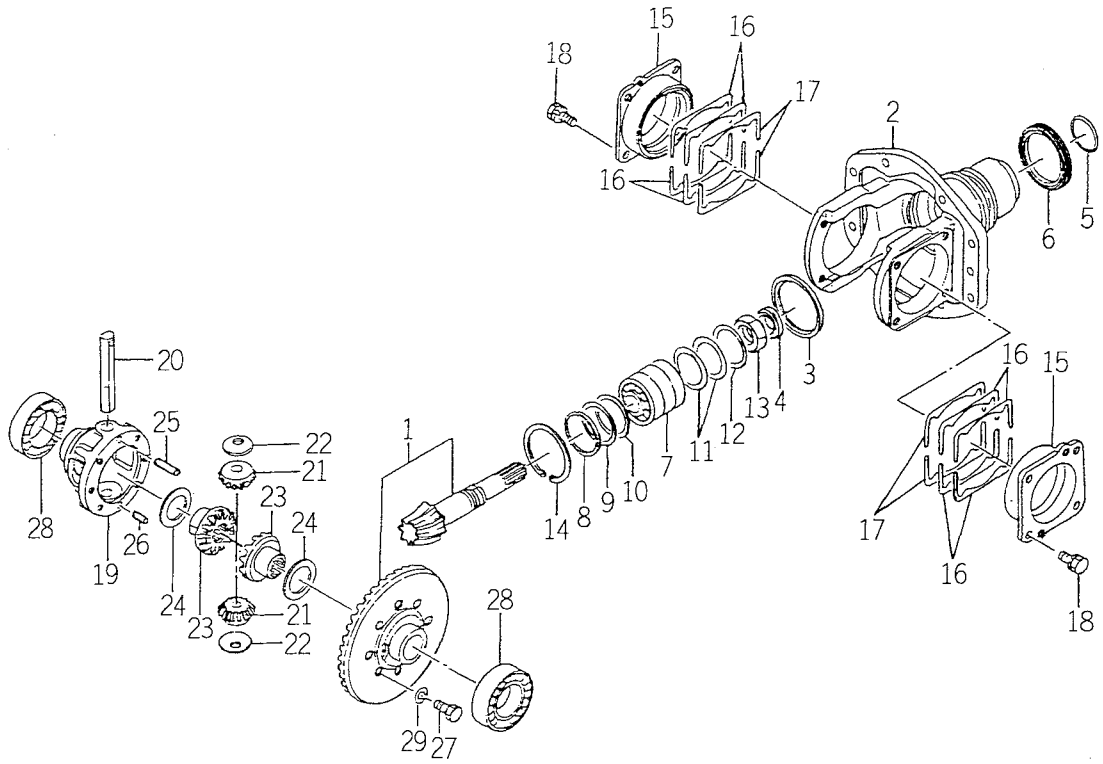

1560-432

KEY	PART CODE	DESCRIPTION	QTY	TYPE OF MODEL TK529	TYPE OF MODEL TK533	ITC	COL	GRP	REMARKS
1	1560 - 432 - 200 - 30	GEAR SET/8X38T	1	*	*				
2	1560 - 432 - 001 - 60	CASE	1	*	*				
3	1444 - 411 - 002 - 00	COLLAR,THRUST (R)	1	*	*				
4	1614 - 222 - 007 - 00	SEAL/OIL	1	*	*				
5	V720 - 103 - 503 - 40	O - RING/P34	1	*	*				
6	1444 - 412 - 011 - 00	X - RING	1	*	*				
7	1560 - 432 - 210 - 00	BEARING/46CHI - 32205R	1	*	*				
8	1444 - 411 - 008 - 00	COLLAR 48X56X4	1	*	*				
9	1444 - 411 - 009 - 00	SHIM A T = 0.2	3	*	*				
10	1444 - 411 - 011 - 00	SHIM B T = 0.1	2	*	*				
11	1444 - 411 - 012 - 00	SHIM (C)	3	*	*				
12	1444 - 411 - 013 - 00	SHIM D T = 0.1	2	*	*				
13	1614 - 432 - 001 - 00	NUT/M25	1	*	*				
14	V707 - 140 - 056 - 00	RING/SNAP	1	*	*				
15	1444 - 411 - 003 - 00	METAL,DIFFERENTIAL	2	*	*				
16	1444 - 411 - 004 - 00	SHIM (A)	12	*	*				
17	1444 - 411 - 005 - 00	SHIM (B)	8	*	*				
18	V211 - 560 - 802 - 00	BOLT/M8X20	8	*	*				
19	1550 - 432 - 002 - 00	CASE,FRONT DIFF	1	*	*				
20	1444 - 411 - 006 - 00	SHAFT,DIFF. PINION	1	*	*				
21	1560 - 432 - 002 - 30	PINION,BEVEL/11	2	*	*				
22	1427 - 301 - 005 - 00	COLLAR,PINION THRUST	2	*	*				
23	1560 - 432 - 003 - 30	GEAR,BEVEL/16	2	*	*				
24	1427 - 432 - 005 - 00	COLLAR,THRUST	2	*	*				
25	1560 - 432 - 005 - 00	PIN/ST	1	*	*				

FIG. 65 BEVEL CASE SYSTEM

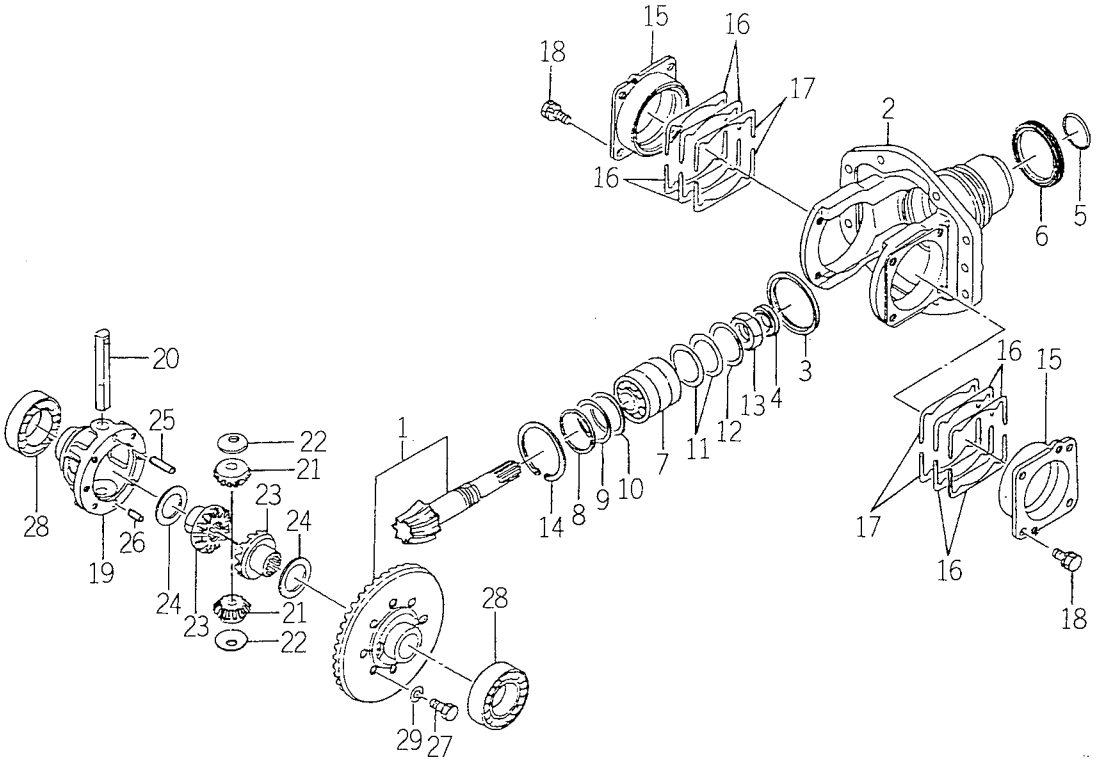

1560-432

KEY	PART CODE	DESCRIPTION	QTY	TYPE OF MODEL TK529	TYPE OF MODEL TK533	ITC	COL	GRP	REMARKS
26	1560 - 432 - 004 - 00	PIN/ST	1	*	*				
27	1544 - 304 - 006 - 10	BOLT/M8X25	6	*	*				
28	V600 - 110 - 600 - 80	BEARING,RB/6008	2	*	*				
29	V401 - 160 - 008 - 00	WASHER,SP/M 8	6	*	*				

FIG. 66 AXLE HOUSING SYSTEM

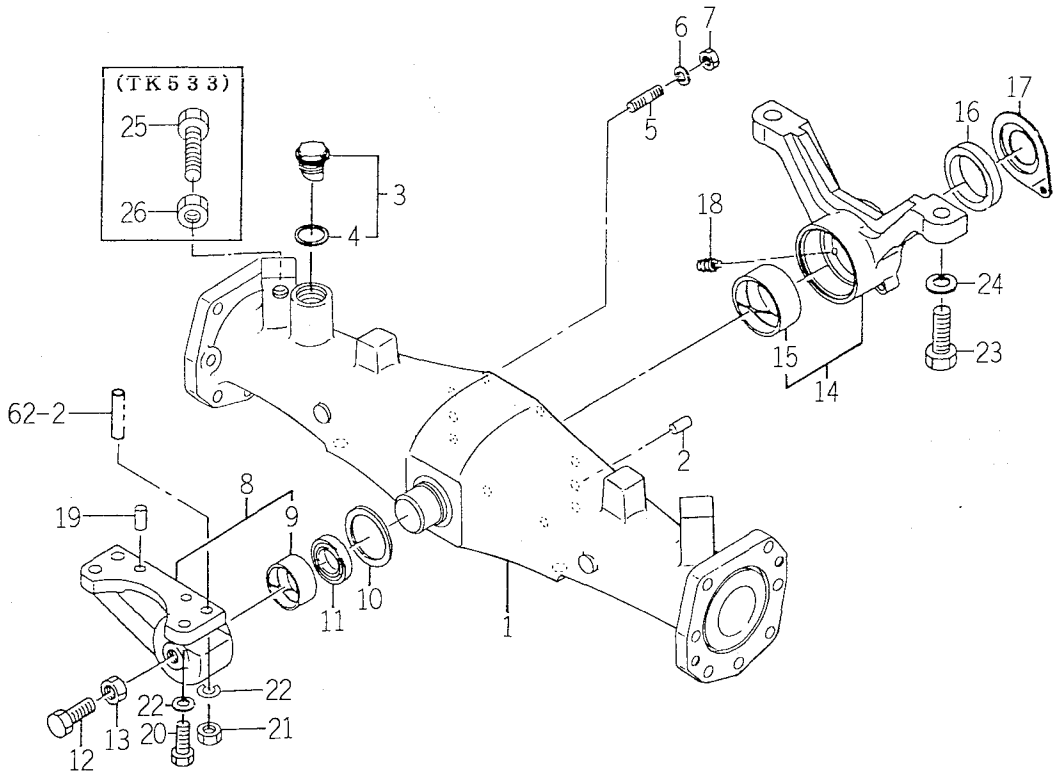

1673-433

KEY	PART CODE	DESCRIPTION	QTY	TYPE OF MODEL TK529	TYPE OF MODEL TK533	ITC	COL	GRP	REMARKS
1	1561 - 433 - 006 - 10	HOUSING/AXLE	1	*	*				
2	V522 - 101 - 002 - 20	PIN	2	*	*				
3	1518 - 432 - 250 - 00	CAP,OIL ASSY	1	*	*				
4	1518 - 306 - 203 - 00	PACKING	1	*	*				
5	V251 - 341 - 002 - 50	BOLT/STUD	8	*	*				
6	V401 - 160 - 010 - 00	WASHER,SP/M10	8	*	*				
7	V304 - 460 - 010 - 00	NUT/M10	8	*	*				
8	1560 - 433 - 210 - 40	METAL,PIVOT ASSY	1	*	*				
9	1560 - 433 - 212 - 00	BUSH/45X50X25	1	*	*				
10	1560 - 433 - 001 - 40	WASHER/50X65X5	1	*	*				
11	V742 - 145 - 600 - 60	SEAL,OIL/VC45606	1	*	*				
12	V201 - 361 - 604 - 50	BOLT	1	*	*				
13	V304 - 260 - 016 - 00	NUT/M16	1	*	*				
14	1560 - 433 - 220 - 50	METAL/PIVOT ASSY	1	*	*				
15	1560 - 433 - 222 - 00	BUSH/60X65X30	1	*	*				
16	V742 - 150 - 720 - 60	SEAL,OIL/VC50726	1	*	*				
17	1560 - 433 - 002 - 40	COVER	1	*	*				
18	V761 - 150 - 000 - 00	NIPPLE/GREASE	2	*	*				
19	V523 - 101 - 002 - 40	PIN	2	*	*				
20	V201 - 361 - 203 - 50	BOLT/M12X35	2	*	*				
21	V304 - 460 - 012 - 00	NUT/M12	2	*	*				
22	V401 - 160 - 012 - 00	WASHER,SP/M12	4	*	*				
23	V203 - 361 - 805 - 00	BOLT/M8X50	2	*	*				
24	V401 - 160 - 018 - 00	WASHER,SP/M18	2	*	*				
25	W201 - 361 - 609 - 00	BOLT	2		*				

FIG. 66 AXLE HOUSING SYSTEM

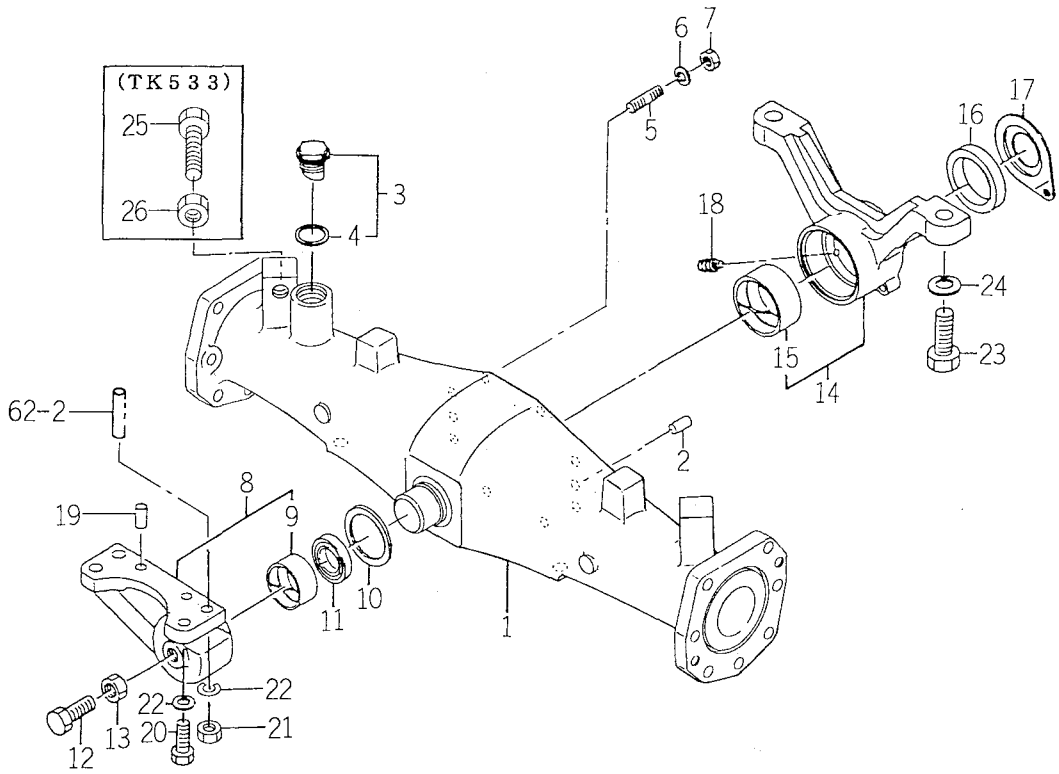

1673-433

KEY	PART CODE	DESCRIPTION	QTY	TYPE OF MODEL TK529	TYPE OF MODEL TK533	ITC	COL	GRP	REMARKS
26	V304 - 460 - 016 - 00	NUT/M16	2		*				

FIG. 67 FRONT GEAR CASE SYSTEM

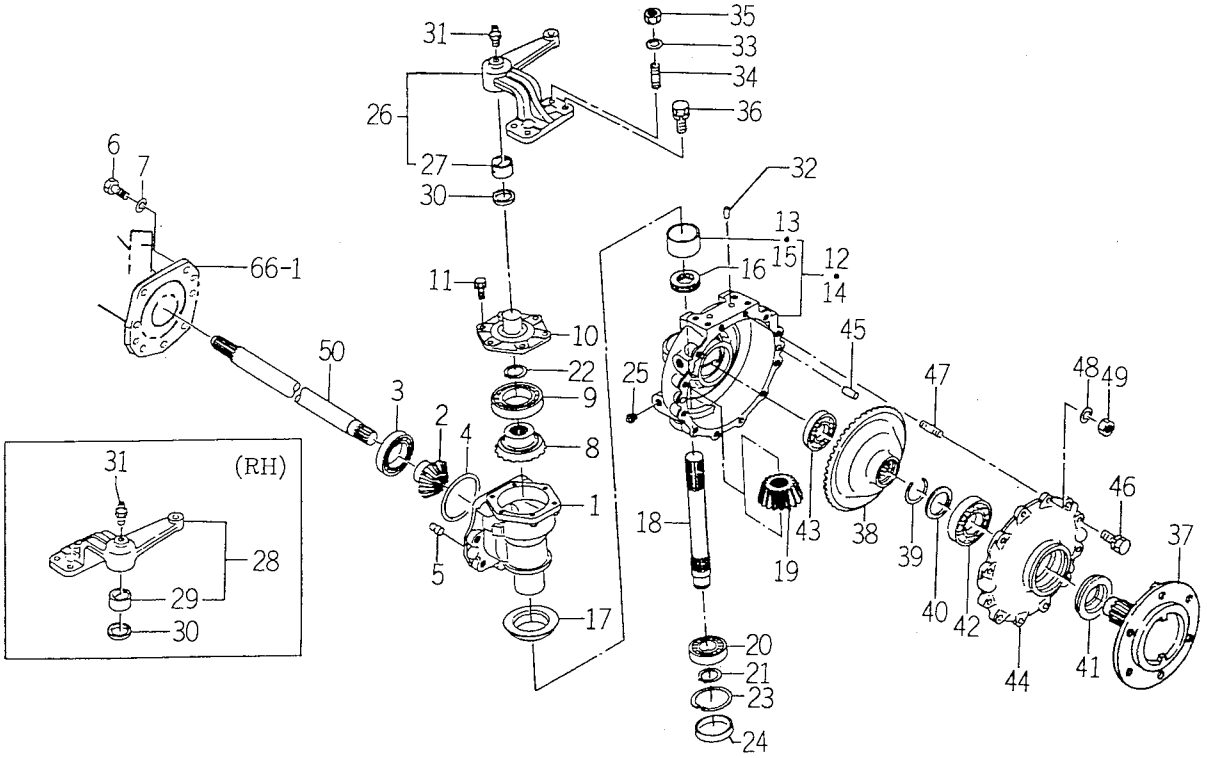

1673-434

KEY	PART CODE	DESCRIPTION	QTY	TYPE OF MODEL TK529	TYPE OF MODEL TK533	ITC	COL	GRP	REMARKS
1	1560 - 434 - 001 - 40	CASE	2	*	*				
2	1560 - 434 - 002 - 30	GEAR,BEVEL/12	2	*	*				
3	V600 - 110 - 620 - 70	BEARING,RB/6207	2	*	*				
4	V721 - 103 - 109 - 50	O - RING/G95	2	*	*				
5	7963 - 201 - 003 - 00	PIN,KNOK	4	*	*				
6	V201 - 361 - 203 - 50	BOLT/M12X35	14	*	*				
7	V401 - 160 - 012 - 00	WASHER,SP/M12	14	*	*				
8	1560 - 434 - 003 - 30	GEAR,BEVEL/17	2	*	*				
9	V600 - 110 - 620 - 90	BEARING,RB/6209	2	*	*				
10	1560 - 434 - 004 - 30	COVER	2	*	*				
11	V211 - 260 - 802 - 00	BOLT,SEMS (S)	12	*	*				
12	1560 - 434 - 200 - 60	CASE/L ASSY	1	*	*				
13	1560 - 434 - 202 - 00	BUSH/50X55X30	1	*	*				
14	1560 - 434 - 210 - 60	CASE/R ASSY	1	*	*				
15	1560 - 434 - 202 - 00	BUSH/50X55X30	1	*	*				
16	V610 - 115 - 110 - 60	BEARING,TB/51106	2	*	*				
17	1560 - 434 - 014 - 30	SEAL,OIL	2	*	*				
18	1560 - 434 - 005 - 30	SHAFT	2	*	*				
19	1560 - 434 - 006 - 40	GEAR/BEVEL/17	2	*	*				
20	V600 - 110 - 630 - 50	BEARING,RB/6305	2	*	*				
21	V704 - 140 - 025 - 00	RING,SNAP/25 C	2	*	*				
22	V704 - 140 - 030 - 00	RING,SNAP/30 C	2	*	*				
23	V707 - 140 - 062 - 00	RING/SNAP	2	*	*				
24	1444 - 314 - 008 - 00	SEAL (62)	2	*	*				
25	V782 - 160 - 000 - 8B	PLUG/SCREW/SEAL	4	*	*				

FIG. 67 FRONT GEAR CASE SYSTEM

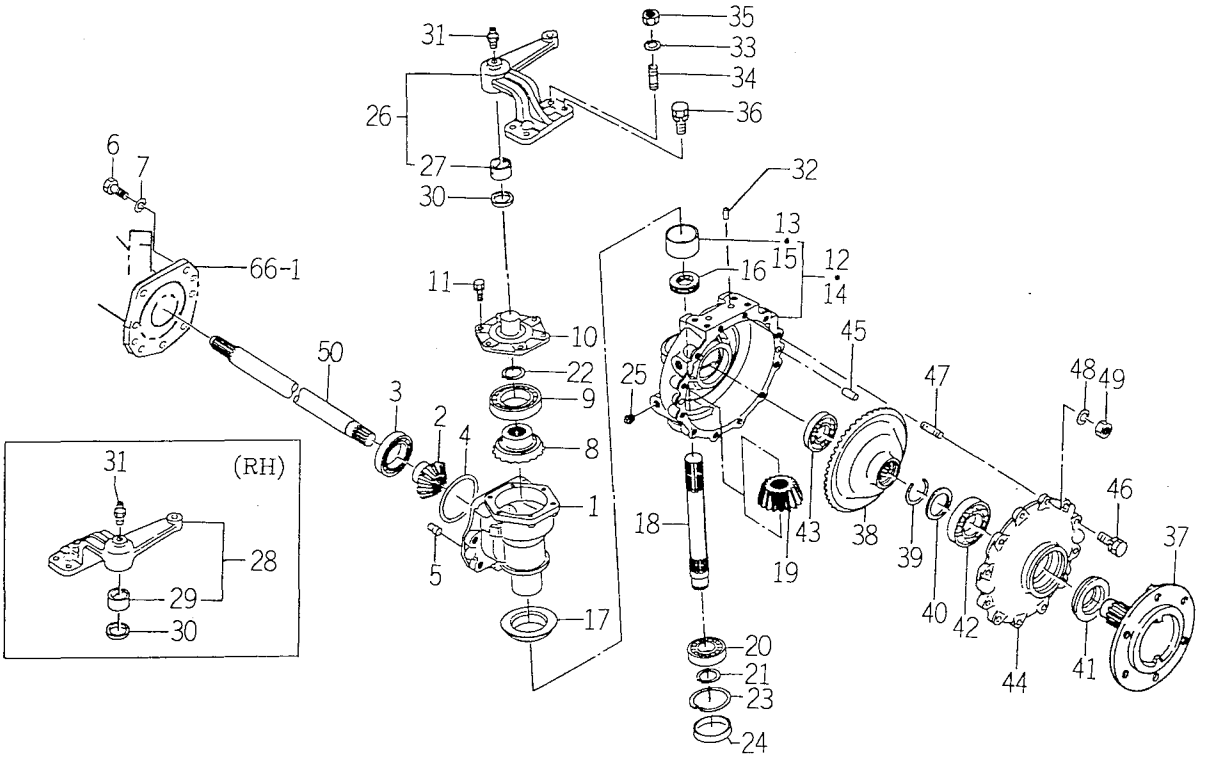

1673-434

KEY	PART CODE	DESCRIPTION	QTY	TYPE OF MODEL TK529	TYPE OF MODEL TK533	ITC	COL	GRP	REMARKS
26	1560 - 434 - 320 - 00	ARM/KNUCKLE/LH ASSY	1	*	*				
27	1560 - 434 - 222 - 00	BUSH	1	*	*				
28	1560 - 434 - 330 - 00	ARM/KNUCKLE/RH ASSY	1	*	*				
29	1560 - 434 - 222 - 00	BUSH	1	*	*				
30	1421 - 433 - 031 - 00	SEAL,OIL/OS30374	2	*	*				
31	V761 - 150 - 000 - 00	NIPPLE/GREASE	2	*	*				
32	V523 - 101 - 002 - 40	PIN	4	*	*				
33	V401 - 160 - 010 - 00	WASHER,SP/M10	4	*	*				
34	V251 - 341 - 002 - 5D	BOLT/STUD/SEAL	4	*	*				
35	V304 - 460 - 010 - 00	NUT/M10	4	*	*				
36	V211 - 561 - 002 - 50	BOLT/M10X25	4	*	*				
37	1560 - 434 - 007 - 60	SHAFT/WHEEL	2	*	*				
38	1560 - 434 - 008 - 40	GEAR/BEVEL/47	2	*	*				
39	1560 - 434 - 017 - 00	RING	4	*	*				
40	1560 - 434 - 011 - 40	COLLAR/41X55X4	2	*	*				
41	1560 - 434 - 012 - 30	SEAL,OIL	2	*	*				
42	V600 - 110 - 620 - 80	BEARING,RB/6208	2	*	*				
43	V600 - 110 - 620 - 60	BEARING,RB/6206	2	*	*				
44	1560 - 434 - 013 - 50	COVER	2	*	*				
45	V523 - 101 - 002 - 40	PIN	4	*	*				
46	V211 - 561 - 002 - 50	BOLT/M10X25	20	*	*				
47	V251 - 341 - 002 - 50	BOLT/STUD	4	*	*				
48	V401 - 160 - 010 - 00	WASHER,SP/M10	4	*	*				
49	V304 - 460 - 010 - 00	NUT/M10	4	*	*				
50	1561 - 435 - 001 - 30	SHAFT	2	*	*				

FIG. 68 TIE ROD SYSTEM

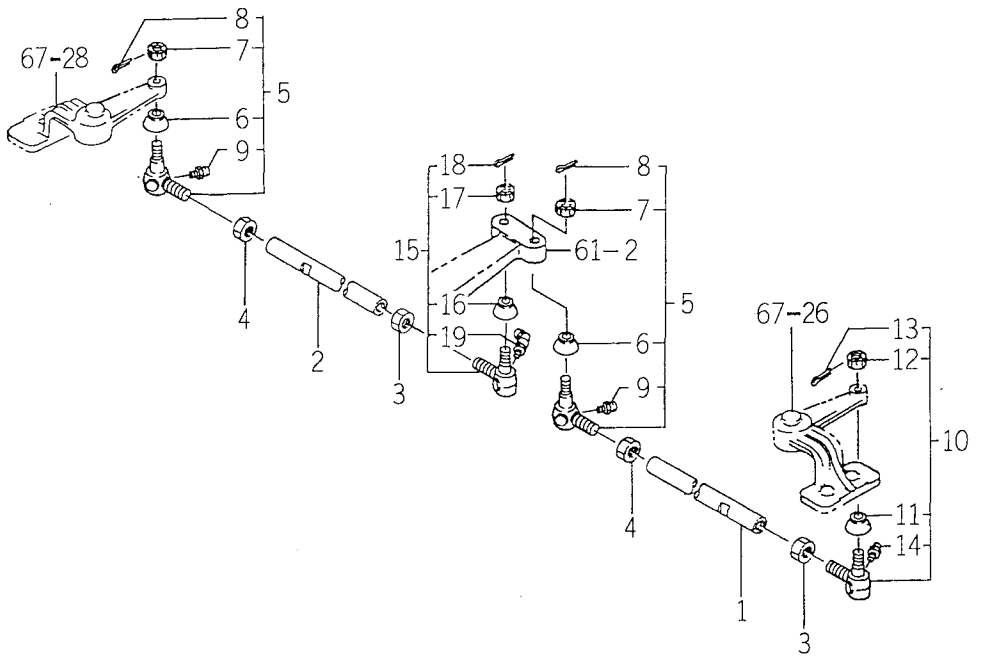

1561-436

KEY	PART CODE	DESCRIPTION	QTY	TYPE OF MODEL TK529	TYPE OF MODEL TK533	ITC	COL	GRP	REMARKS
1	1561 - 436 - 003 - 00	ROD/TIE/LH	1	*	*				
2	1561 - 436 - 004 - 00	ROD/TIE/RH	1	*	*				
3	1421 - 403 - 001 - 00	NUT	2	*	*				
4	1421 - 403 - 002 - 00	NUT,LH THREAD/M17	2	*	*				
5	1421 - 400 - 054 - 10	END,ROD/L・R ASSY	2	*	*				
6	1404 - 402 - 001 - 00	COVER,DUST	2	*	*				
7	1421 - 403 - 003 - 00	NUT,SLOTTED/M12P1.25	2	*	*				
8	V500 - 163 - 002 - 00	PIN,SPLIT/3 X20	2	*	*				
9	1404 - 402 - 005 - 00	NIPPLE,GREASE	2	*	*				
10	1421 - 400 - 055 - 00	END,ROD RH ASSY	1	*	*				
11	1404 - 402 - 001 - 00	COVER,DUST	1	*	*				
12	1421 - 403 - 003 - 00	NUT,SLOTTED/M12P1.25	1	*	*				
13	V500 - 163 - 002 - 00	PIN,SPLIT/3 X20	1	*	*				
14	1404 - 402 - 005 - 00	NIPPLE,GREASE	1	*	*				
15	1444 - 404 - 210 - 10	END,ROD/R・L ASSY	1	*	*				
16	1404 - 402 - 001 - 00	COVER,DUST	1	*	*				
17	1421 - 403 - 003 - 00	NUT,SLOTTED/M12P1.25	1	*	*				
18	V500 - 163 - 002 - 00	PIN,SPLIT/3 X20	1	*	*				
19	1432 - 406 - 212 - 00	NIPPLE,GREASE/BM6F	1	*	*				

FIG. 69 FRONT WHEEL SYSTEM (TK529)

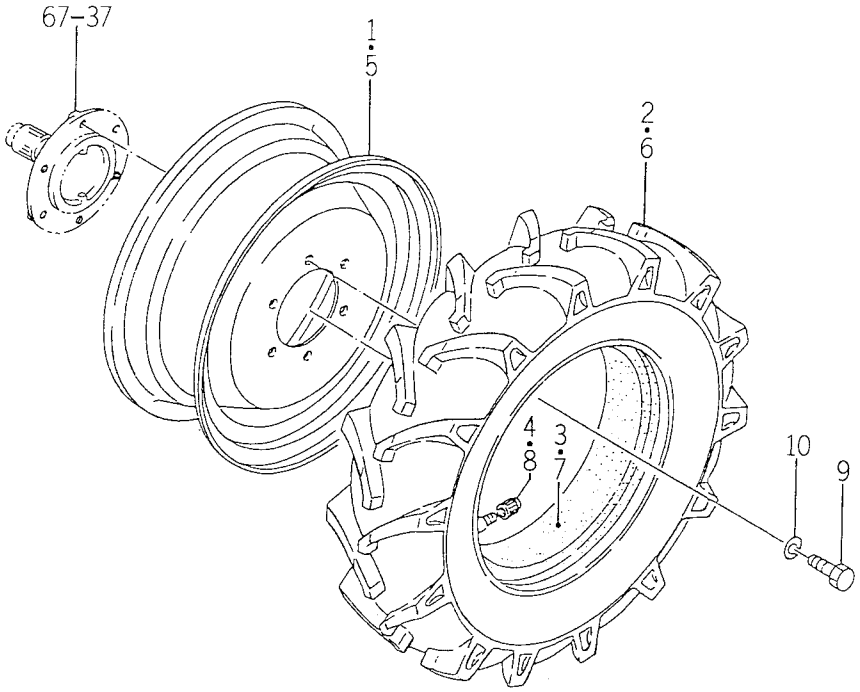

1651-437

KEY	PART CODE	DESCRIPTION	QTY	TYPE OF MODEL TK529	TYPE OF MODEL TK533	ITC	COL	GRP	REMARKS
1	1574 - 417 - 220 - 00	WHEEL/16X5.50F	1	*					
2	1447 - 417 - 212 - 10	TIRE/7 - 16 - 4	1	*					
3	V883 - 000 - 071 - 60	TUBE/ 7 - 16	1	*					
4	V999 - 200 - 003 - 00	CAP,TIRE VALVE	1	*					
5	1574 - 417 - 220 - 00	WHEEL/16X5.50F	1	*					
6	1447 - 417 - 212 - 10	TIRE/7 - 16 - 4	1	*					
7	V883 - 000 - 071 - 60	TUBE/ 7 - 16	1	*					
8	V999 - 200 - 003 - 00	CAP,TIRE VALVE	1	*					
9	V201 - 361 - 202 - 50	BOLT/M12X25	12	*					
10	V401 - 160 - 012 - 00	WASHER,SP/M12	12	*					

FIG. 70 FRONT WHEEL SYSTEM (TK533)

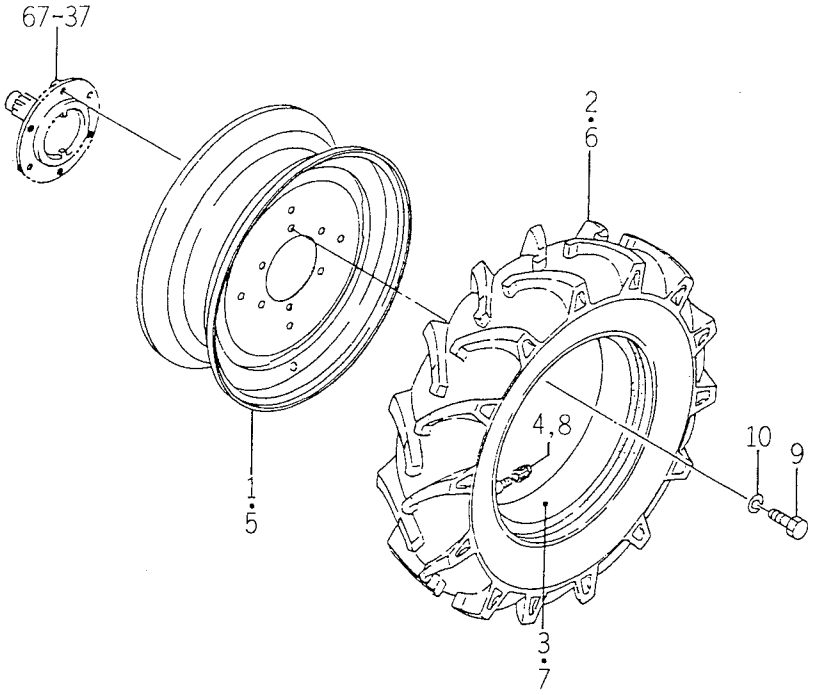

1655-437

KEY	PART CODE	DESCRIPTION	QTY	TYPE OF MODEL TK529	TYPE OF MODEL TK533	ITC	COL	GRP	REMARKS
1	1611 - 437 - 220 - 00	WHEEL/16X5.50F COMP	1		*				
2	1488 - 417 - 211 - 10	TIRE/8 - 16 - 4	1		*				
3	V889 - 000 - 081 - 60	TUBE/ 8 - 16	1		*				
4	V999 - 200 - 003 - 00	CAP,TIRE VALVE	1		*				
5	1611 - 437 - 220 - 00	WHEEL/16X5.50F COMP	1		*				
6	1488 - 417 - 211 - 10	TIRE/8 - 16 - 4	1		*				
7	V889 - 000 - 081 - 60	TUBE/ 8 - 16	1		*				
8	V999 - 200 - 003 - 00	CAP,TIRE VALVE	1		*				
9	V201 - 361 - 202 - 50	BOLT/M12X25	12		*				
10	V401 - 160 - 012 - 00	WASHER,SP/M12	12		*				

FIG. 71 CYLINDER CASE SYSTEM (TK533)

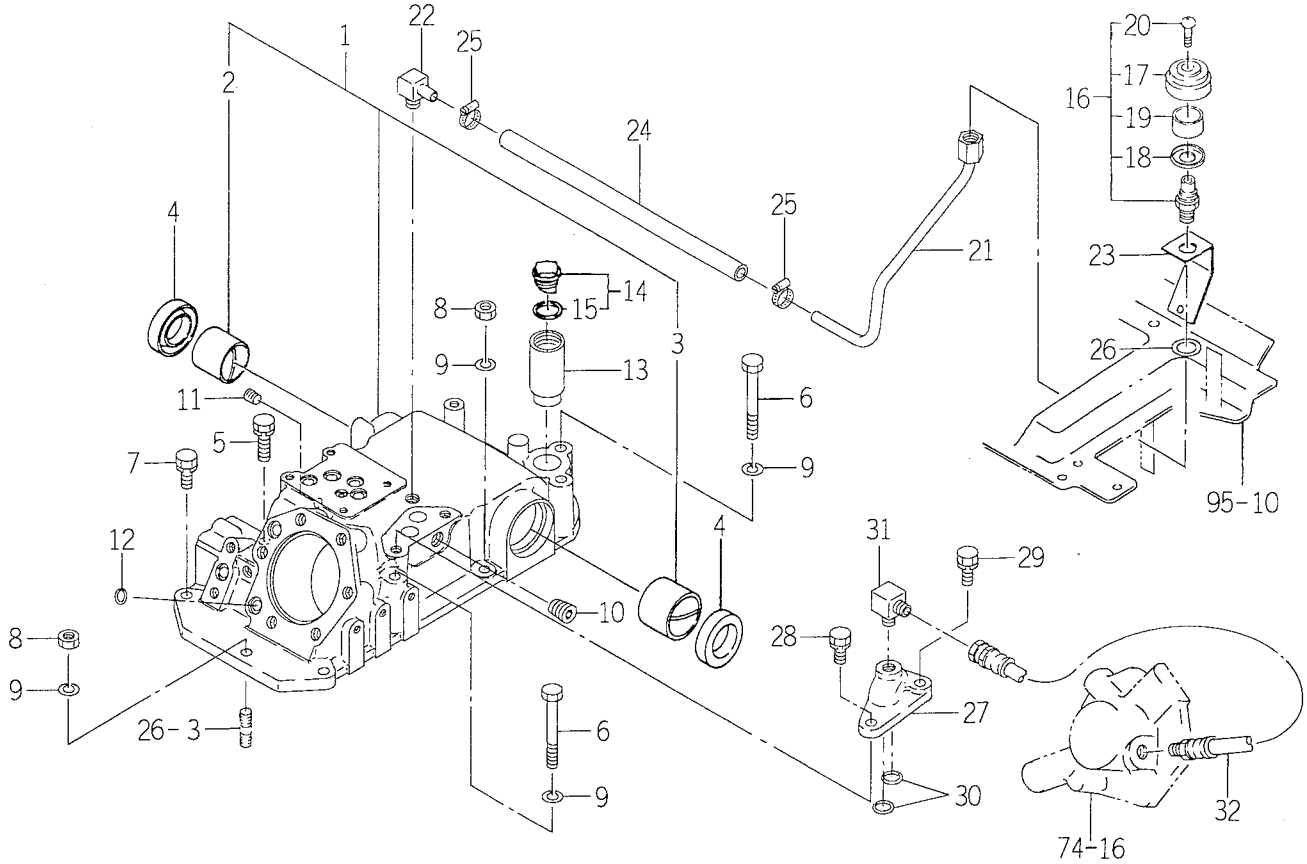

1674-501B

KEY	PART CODE	DESCRIPTION	QTY	TYPE OF MODEL TK529	TYPE OF MODEL TK533	ITC	COL	GRP	REMARKS
1	1560 - 551 - 200 - 30	CASE/CYLINDER ASSY	1		*				
2	1560 - 501 - 202 - 00	BUSH/45X50X42	1		*				
3	1560 - 501 - 203 - 00	BUSH/50X55X42	1		*				
4	V744 - 145 - 600 - 90	SEAL,OIL/TC45609	2		*				
5	V211 - 561 - 004 - 00	BOLT/M10X40	1		*				
6	V201 - 361 - 009 - 00	BOLT/M10X90	3		*				
7	V211 - 561 - 003 - 00	BOLT/M10X30	4		*				
8	V304 - 460 - 010 - 00	NUT/M10	3		*				
9	V401 - 160 - 010 - 00	WASHER,SP/M10	6		*				
10	V780 - 140 - 000 - 60	PLUG/SCREW	1		*				
11	V780 - 140 - 000 - 40	PLUG/SCREW	2		*				
12	V720 - 112 - 401 - 40	O - RING/P14	2		*				
13	1632 - 501 - 003 - 10	COLLAR/24X38X72	1		*				
14	1518 - 432 - 250 - 00	CAP,OIL ASSY	1		*				
15	1518 - 306 - 203 - 00	PACKING	1		*				
16	1632 - 501 - 200 - 00	BREATHER ASSY	1		*				
17	1632 - 501 - 202 - 00	COVER	1		*				
18	1632 - 501 - 203 - 00	COVER/UNDER	1		*				
19	1632 - 501 - 204 - 00	FILTER	1		*				
20	1632 - 501 - 205 - 00	SCREW/M06X20	1		*				
21	1643 - 551 - 200 - 00	PIPE COMP	1		*				
22	1632 - 501 - 004 - 00	DRAIN/BREATHER	1		*				
23	1643 - 501 - 001 - 20	PLATE	1		*				
24	1643 - 551 - 001 - 00	HOSE/350	1		*				
25	J061 - 116 - 025 - 00	CLAMP/WORM/16 - 25	2		*				

FIG. 71 CYLINDER CASE SYSTEM (TK533)

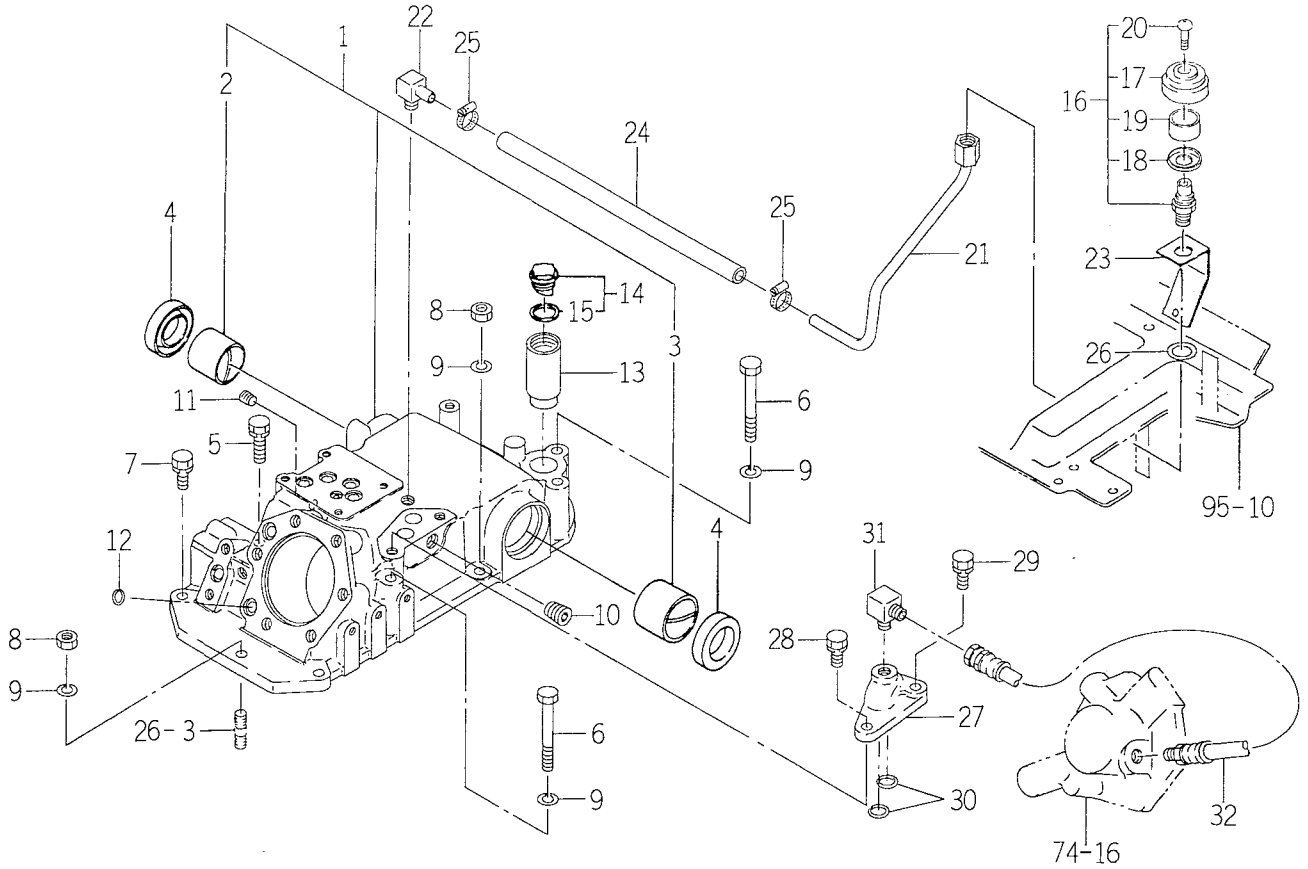

1674-501B

KEY	PART CODE	DESCRIPTION	QTY	TYPE OF MODEL TK529	TYPE OF MODEL TK533	ITC	COL	GRP	REMARKS
26	V411 - 260 - 018 - 00	WASHER,PL/M18	2		*				
27	1674 - 515 - 001 - 00	COVER	1		*				
28	V211 - 261 - 002 - 50	BOLT (S) M10X25	1		*				
29	V211 - 261 - 003 - 00	BOLT (S) M10X30	1		*				
30	V720 - 112 - 402 - 00	O - RING/P20	2		*				
31	3768 - 185 - 022 - 10	ADAPTER (90° /PUMP)	1		*				
32	1564 - 407 - 290 - 00	HOSE/280 ASSY	1		*				

FIG. 72 CYLINDER CASE SYSTEM (TK529)

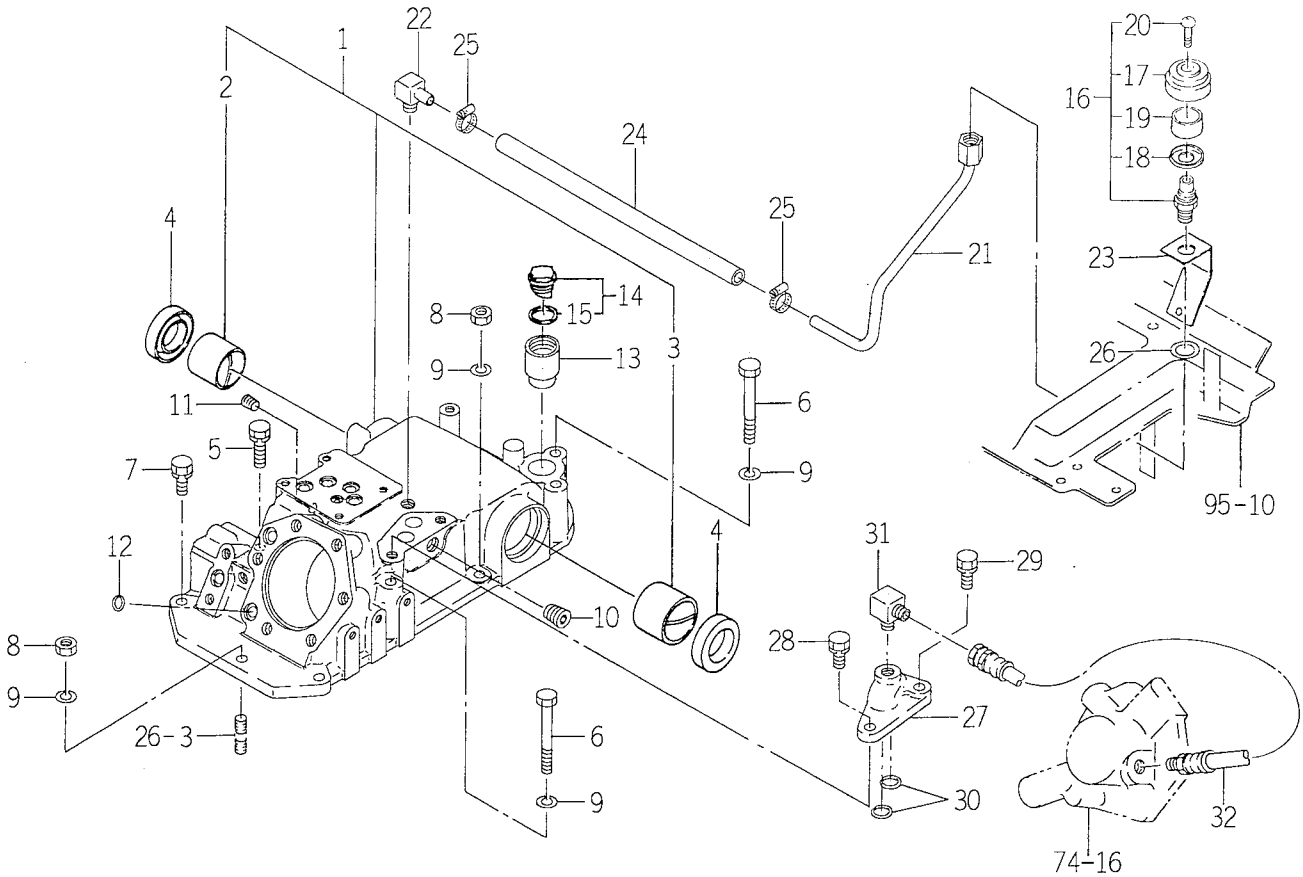

1674-501T

KEY	PART CODE	DESCRIPTION	QTY	TYPE OF MODEL TK529	TYPE OF MODEL TK533	ITC	COL	GRP	REMARKS
1	1560 - 551 - 200 - 30	CASE/CYLINDER ASSY	1	*					
2	1560 - 501 - 202 - 00	BUSH/45X50X42	1	*					
3	1560 - 501 - 203 - 00	BUSH/50X55X42	1	*					
4	V744 - 145 - 600 - 90	SEAL,OIL/TC45609	2	*					
5	V211 - 561 - 004 - 00	BOLT/M10X40	1	*					
6	V201 - 361 - 009 - 00	BOLT/M10X90	3	*					
7	V211 - 561 - 003 - 00	BOLT/M10X30	4	*					
8	V304 - 460 - 010 - 00	NUT/M10	3	*					
9	V401 - 160 - 010 - 00	WASHER,SP/M10	6	*					
10	V780 - 140 - 000 - 60	PLUG/SCREW	1	*					
11	V780 - 140 - 000 - 40	PLUG/SCREW	2	*					
12	V720 - 112 - 401 - 40	O - RING/P14	2	*					
13	1597 - 501 - 001 - 10	COLLAR/24X38X44	1	*					
14	1518 - 432 - 250 - 00	CAP,OIL ASSY	1	*					
15	1518 - 306 - 203 - 00	PACKING	1	*					
16	1632 - 501 - 200 - 00	BREATHER ASSY	1	*					
17	1632 - 501 - 202 - 00	COVER	1	*					
18	1632 - 501 - 203 - 00	COVER/UNDER	1	*					
19	1632 - 501 - 204 - 00	FILTER	1	*					
20	1632 - 501 - 205 - 00	SCREW/M06X20	1	*					
21	1643 - 551 - 200 - 00	PIPE COMP	1	*					
22	1632 - 501 - 004 - 00	DRAIN/BREATHER	1	*					
23	1643 - 501 - 001 - 20	PLATE	1	*					
24	1643 - 551 - 001 - 00	HOSE/350	1	*					
25	J061 - 116 - 025 - 00	CLAMP/WORM/16 - 25	2	*					

FIG. 72 CYLINDER CASE SYSTEM (TK529)

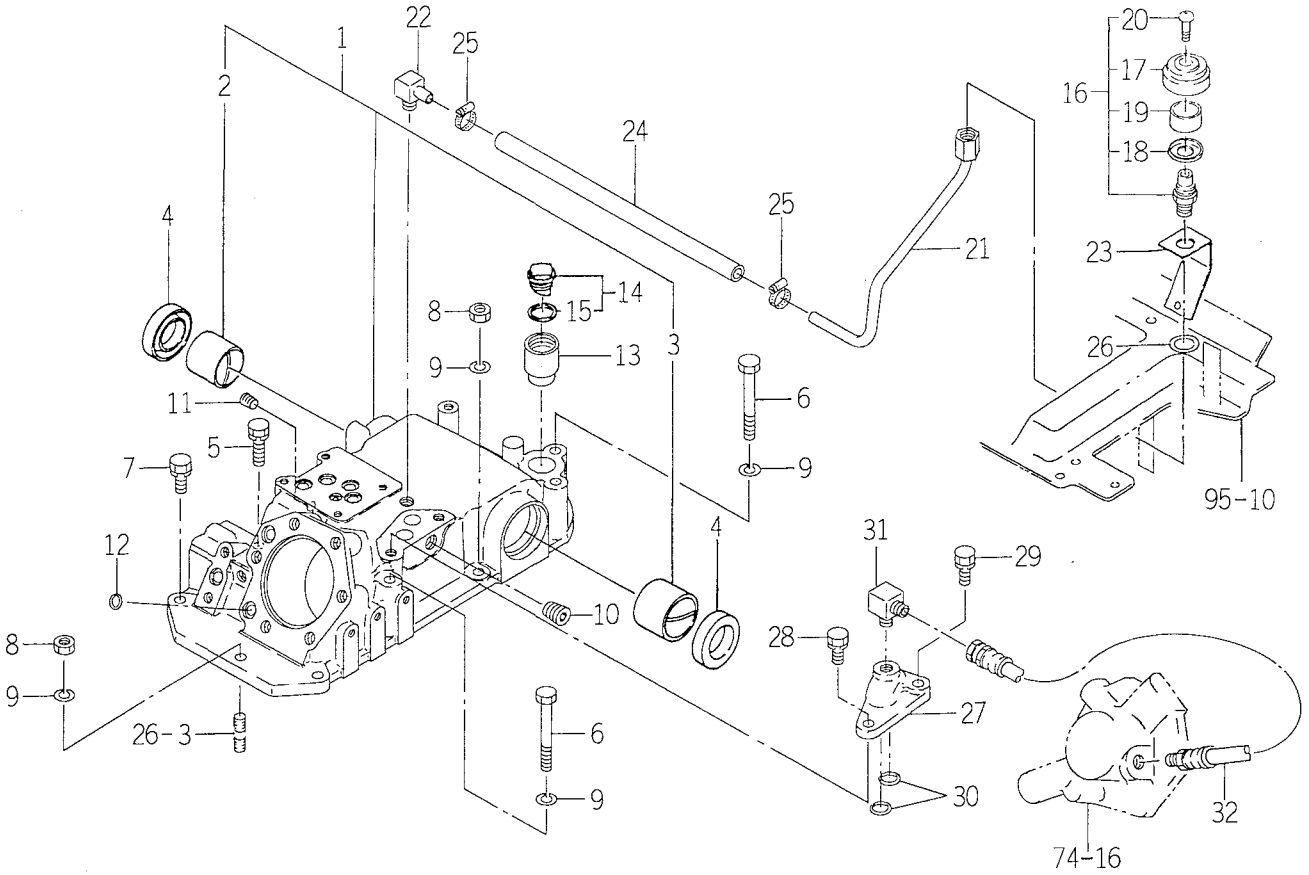

1674-501T

KEY	PART CODE	DESCRIPTION	QTY	TYPE OF MODEL TK529	TYPE OF MODEL TK533	ITC	COL	GRP	REMARKS
26	V411 - 260 - 018 - 00	WASHER,PL/M18	2	*					
27	1674 - 515 - 001 - 00	COVER	1	*					
28	V211 - 261 - 002 - 50	BOLT (S) M10X25	1	*					
29	V211 - 261 - 003 - 00	BOLT (S) M10X30	1	*					
30	V720 - 112 - 402 - 00	O - RING/P20	2	*					
31	3768 - 185 - 022 - 10	ADAPTER (90° /PUMP)	1	*					
32	1564 - 407 - 290 - 00	HOSE/280 ASSY	1	*					

FIG. 73 LIFT ARM SYSTEM

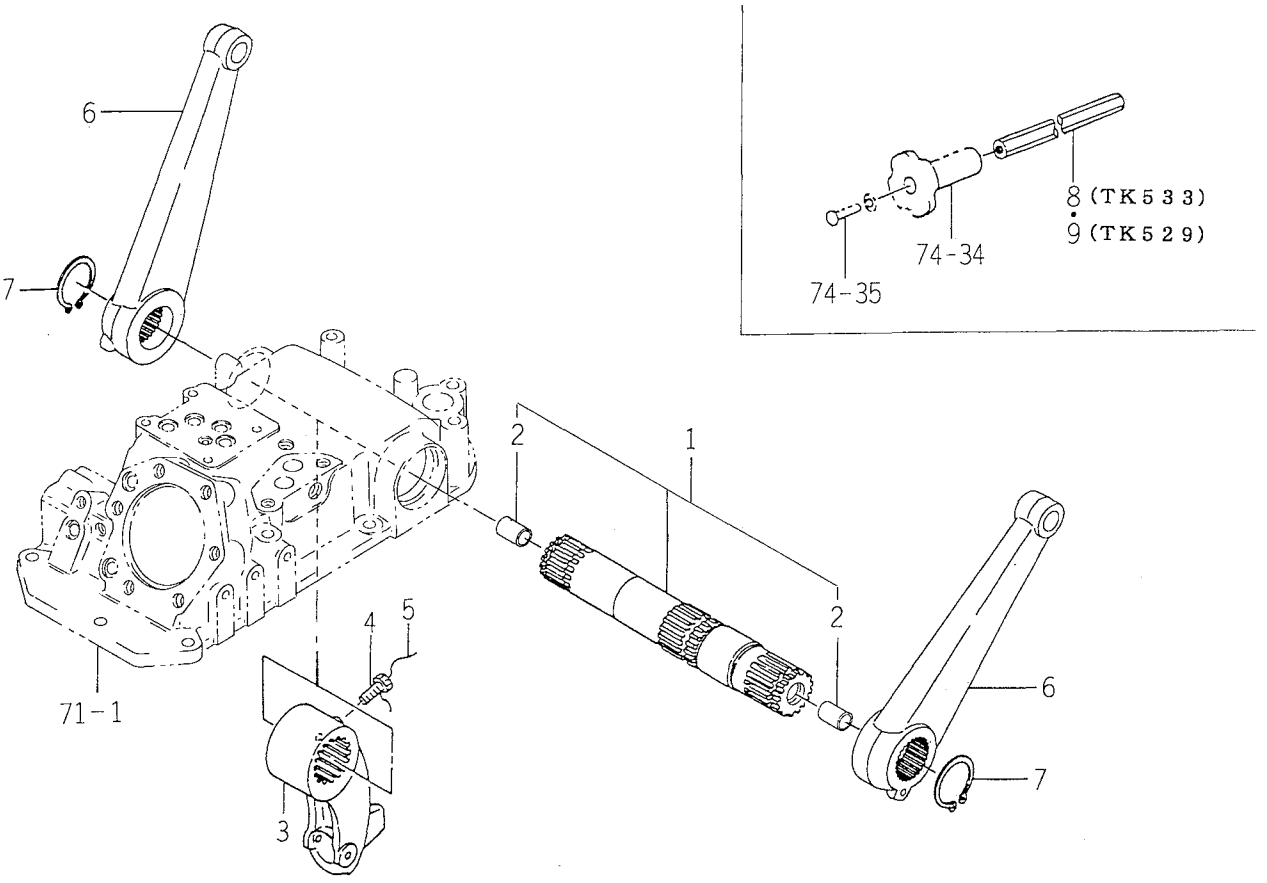

1674-505T

KEY	PART CODE	DESCRIPTION	QTY	TYPE OF MODEL TK529	TYPE OF MODEL TK533	ITC	COL	GRP	REMARKS
1	1560 - 555 - 210 - 00	BAR ASSY	1	*	*				
2	1588 - 515 - 008 - 00	BUSH/15X17X25	2	*	*				
3	1560 - 505 - 003 - 50	CRANK.LIFT	1	*	*				
4	1415 - 216 - 006 - 00	BOLT	1	*	*				
5		WIRE	1	*	*				
6	1650 - 501 - 002 - 10	ARM/LIFT	2	*	*				
7	V706 - 140 - 045 - 00	RING/SNAP	2	*	*				
8	1563 - 507 - 221 - 10	SHAFT,SLOW RETURN	1		*				
9	1564 - 507 - 230 - 10	SHAFT/SLOW RETURN	1	*					

FIG. 74 CYLINDER SYSTEM

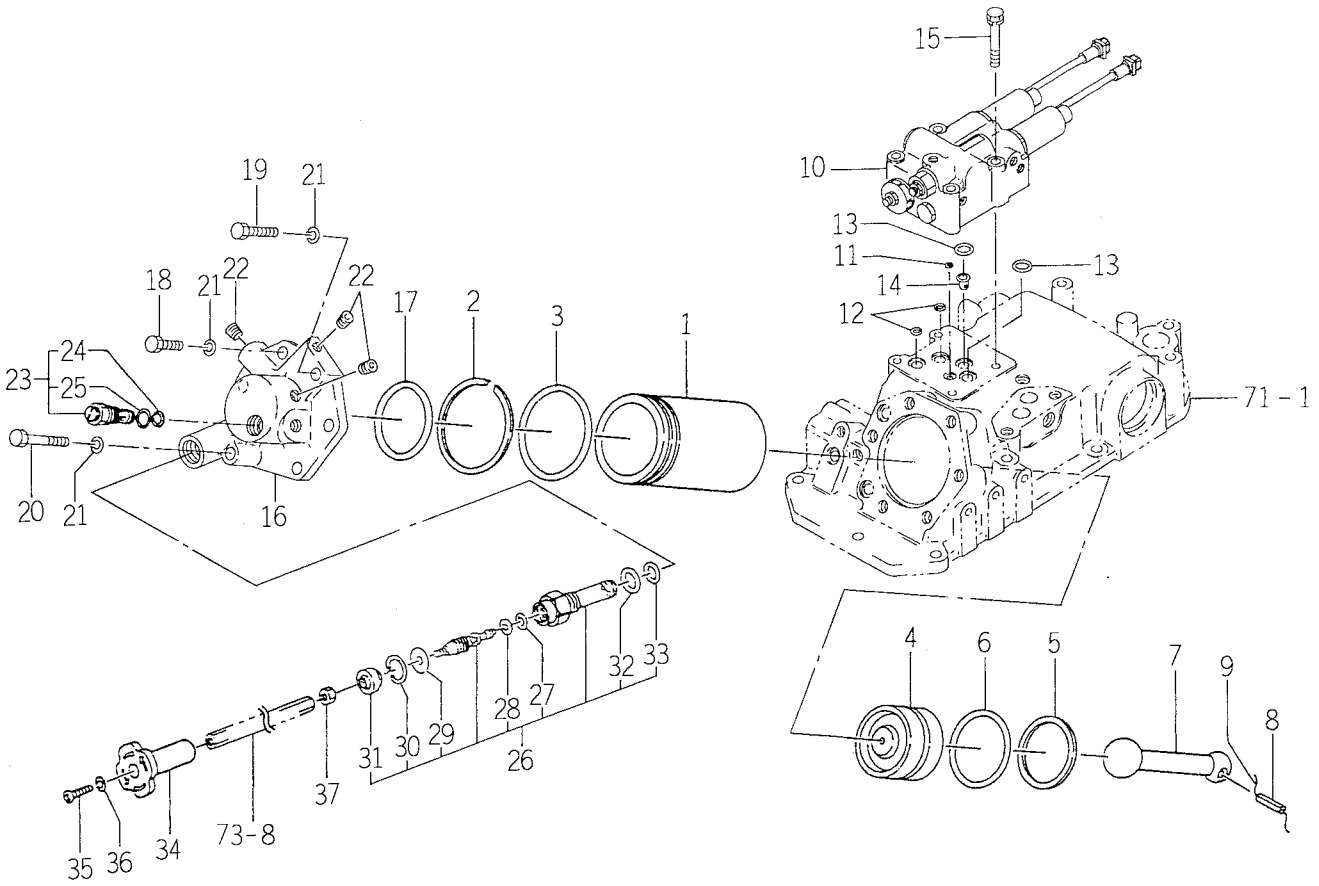

1674-507T

KEY	PART CODE	DESCRIPTION	QTY	TYPE OF MODEL TK529	TYPE OF MODEL TK533	ITC	COL	GRP	REMARKS
1	1560 - 507 - 001 - 30	CYLINDER	1	*	*				
2	1560 - 507 - 004 - 30	RING	1	*	*				
3	V721 - 113 - 109 - 00	O - RING/G90	1	*	*				
4	1560 - 507 - 005 - 00	PISTON	1	*	*				
5	1488 - 503 - 002 - 00	RING,BACK - UP	1	*	*				
6	V720 - 115 - 707 - 00	O - RING/P70 HS90	1	*	*				
7	1650 - 501 - 008 - 00	ROD	1	*	*				
8	V580 - 140 - 805 - 00	PIN,SPRING/8 X50 W	1	*	*				
9		WIRE	1	*	*				
10	1650 - 508 - 210 - 10	VALVE/SOLENOID/MAIN	1	*	*				FIG 119
11	V720 - 112 - 401 - 00	O - RING/P10	1	*	*				
12	V720 - 112 - 401 - 40	O - RING/P14	2	*	*				
13	V720 - 112 - 402 - 00	O - RING/P20	2	*	*				
14	1675 - 503 - 001 - 00	FILTER/LINE/09X12X15	1	*	*				
15	V211 - 260 - 806 - 00	BOLT,SEMS (S)	4	*	*				
16	1674 - 557 - 001 - 00	HEAD/CYLINDER	1	*	*				
17	V721 - 113 - 107 - 50	O - RING G75 HS90	1	*	*				
18	V201 - 361 - 203 - 50	BOLT/M12X35	4	*	*				
19	V201 - 361 - 204 - 50	BOLT/M12X45	1	*	*				
20	V201 - 361 - 207 - 00	BOLT/M12X70	1	*	*				
21	V401 - 160 - 012 - 00	WASHER,SP/M12	6	*	*				
22	V780 - 140 - 000 - 40	PLUG/SCREW	3	*	*				
23	K250 - 015 - 000 - 00	VALVE	1	*	*				
24	V720 - 112 - 401 - 20	O - RING/P12	1	*	*				
25	V720 - 112 - 401 - 80	O - RING/P18	1	*	*				

FIG. 74 CYLINDER SYSTEM

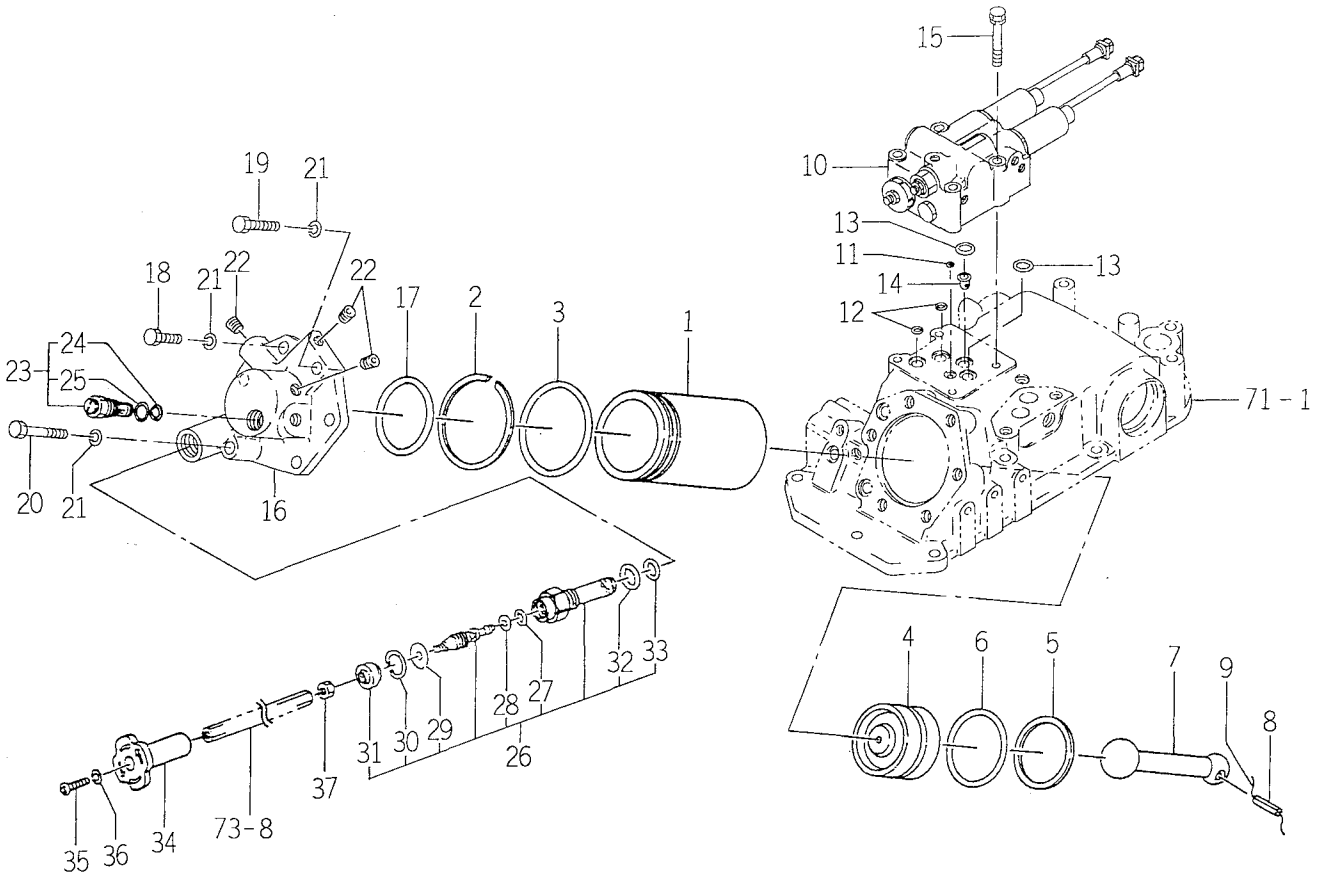

1674-507T

KEY	PART CODE	DESCRIPTION	QTY	TYPE OF MODEL TK529	TYPE OF MODEL TK533	ITC	COL	GRP	REMARKS
26	K231 - 004 - 000 - 20	VALVE/FRONT ASSY	1	*	*				
27	V720 - 112 - 401 - 00	O - RING/P10	1	*	*				
28	V730 - 101 - 401 - 00	RING,BACK UP	1	*	*				
29	K231 - 004 - 006 - 00	COLLAR/11X21X3	1	*	*				
30	V705 - 140 - 021 - 00	RING,SNAP/21 C	1	*	*				
31	K231 - 004 - 007 - 00	SEAL,DUST	1	*	*				
32	V720 - 112 - 402 - 20	O - RING/P22	1	*	*				
33	V720 - 112 - 401 - 60	O - RING/P16	1	*	*				
34	1560 - 507 - 007 - 00	KNOB	1	*	*				
35	V111 - 166 - 004 - 00	SCREW/M6X40	1	*	*				
36	V401 - 160 - 006 - 00	WASHER,SP/M 6	1	*	*				
37	V304 - 260 - 010 - 00	NUT	1	*	*				

FIG. 75 PIPING SYSTEM (A) (TK529)

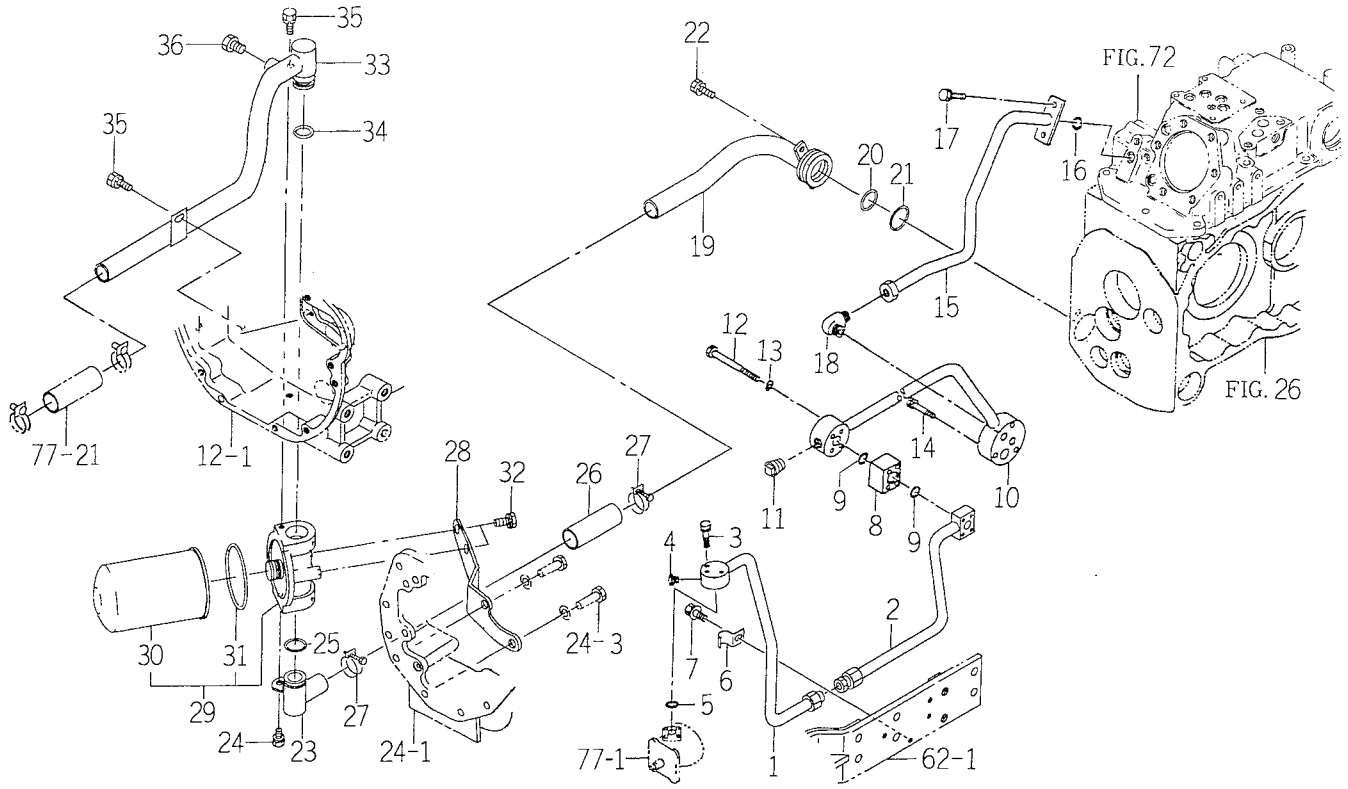

1674-515C

KEY	PART CODE	DESCRIPTION	QTY	TYPE OF MODEL TK529	TYPE OF MODEL TK533	ITC	COL	GRP	REMARKS
1	1673 - 515 - 240 - 10	PIPE/DERIVERY/E COMP	1	*					
2	1673 - 515 - 250 - 10	PIPE/DERIVERY/F COMP	1	*					
3	V210 - 560 - 603 - 50	BOLT/S	3	*					
4	1326 - 706 - 002 - 10	PLUG,DRAIN	1	*					
5	V720 - 112 - 402 - 00	O - RING/P20	1	*					
6	1564 - 515 - 001 - 20	PLATE	1	*					
7	V211 - 360 - 801 - 60	BOLT,SEMS (SP)	1	*					
8	1560 - 515 - 001 - 40	FLANGE	1	*					
9	V720 - 112 - 402 - 00	O - RING/P20	2	*					
10	1561 - 515 - 280 - 00	PIPE/DELIVERY/MID	1	*					
11	V781 - 160 - 000 - 8B	PLUG	1	*					
12	V200 - 360 - 611 - 00	BOLT	4	*					
13	V401 - 160 - 006 - 00	WASHER,SP/M 6	4	*					
14	V211 - 260 - 804 - 00	BOLT,SEMS	3	*					
15	1560 - 515 - 310 - 00	PIPE/DELIVERY/REAR	1	*					
16	V720 - 112 - 401 - 40	O - RING/P14	1	*					
17	V211 - 261 - 003 - 00	BOLT (S) M10X30	2	*					
18	1560 - 545 - 003 - 00	CONNECTOR	1	*					
19	1674 - 515 - 340 - 00		1	*					
20	V721 - 103 - 103 - 50	O - RING/G35	1	*					
21	V721 - 103 - 104 - 50	O - RING/G45	1	*					
22	V211 - 261 - 002 - 00	BOLT,SEMS	1	*					
23	1643 - 515 - 230 - 10	PIPE/INLET COMP	1	*					
24	V211 - 260 - 801 - 60	BOLT,SEMS (S) M8X16	1	*					
25	V721 - 103 - 103 - 00	O - RING/G30	1	*					

FIG. 75 PIPING SYSTEM (A) (TK529)

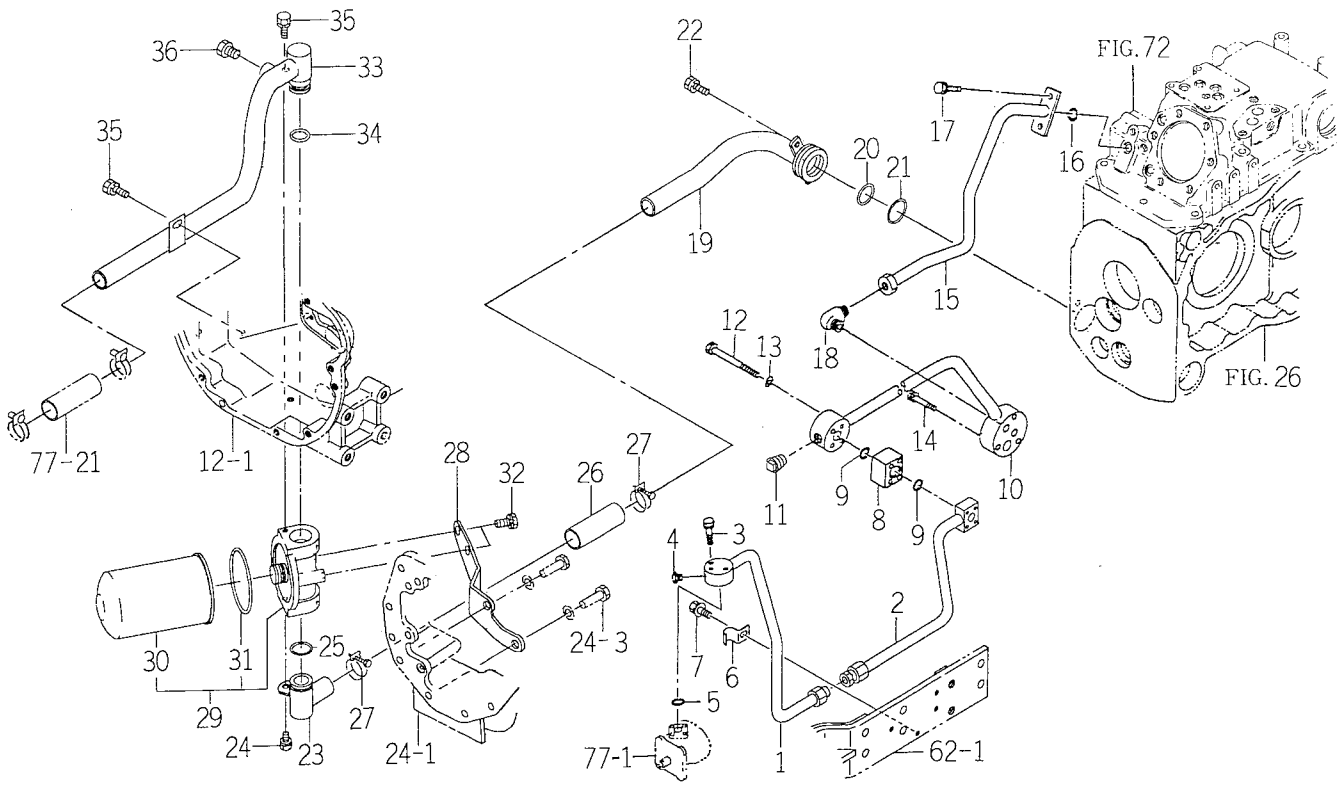

1674-515C

KEY	PART CODE	DESCRIPTION	QTY	TYPE OF MODEL TK529	TYPE OF MODEL TK533	ITC	COL	GRP	REMARKS
26	1560 - 515 - 003 - 10	HOSE/100	1	*					
27	J061 - 232 - 040 - 00	CLAMP/WIRE/32 - 40	2	*					
28	1674 - 515 - 002 - 00	BRACKET/FILTER	1	*					
29	1643 - 515 - 200 - 20	FILTER/SUCTION/20	1	*					
30	1643 - 515 - 202 - 10	CARTRIDGE/20	1	*					
31	1643 - 515 - 203 - 00	PACKING	1	*					
32	V211 - 261 - 002 - 50	BOLT (S) M10X25	2	*					
33	1674 - 515 - 310 - 10	PIPE/OUTLET COMP	1	*					
34	V721 - 103 - 103 - 00	O - RING/G30	1	*					
35	V211 - 260 - 801 - 60	BOLT,SEMS (S) M8X16	2	*					
36	1326 - 706 - 002 - 10	PLUG,DRAIN	1	*					

FIG. 76 PIPING SYSTEM (A) (TK533)

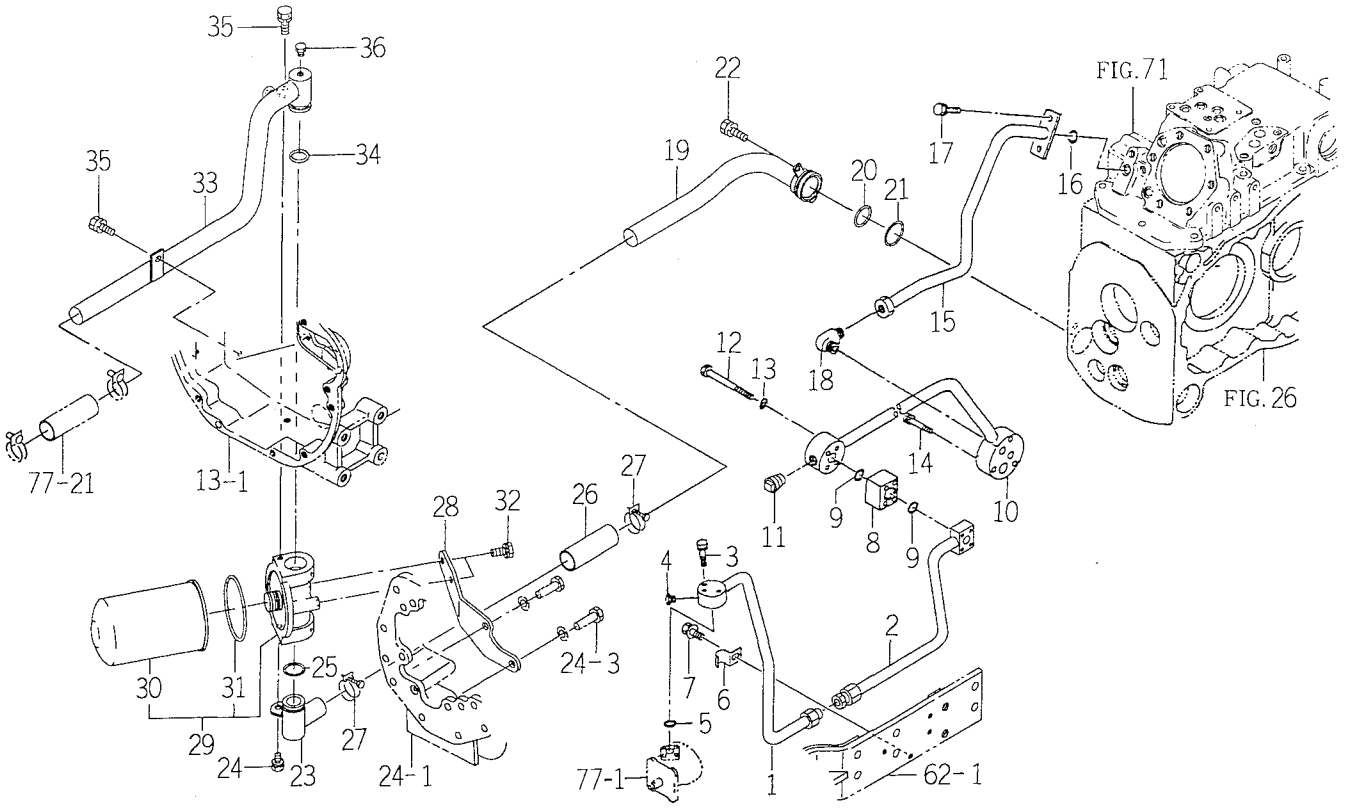

1674-515D

KEY	PART CODE	DESCRIPTION	QTY	TYPE OF MODEL TK529	TYPE OF MODEL TK533	ITC	COL	GRP	REMARKS
1	1673 - 515 - 240 - 10	PIPE/DERIVERY/E COMP	1		*				
2	1673 - 515 - 250 - 10	PIPE/DERIVERY/F COMP	1		*				
3	V210 - 560 - 603 - 50	BOLT/S	3		*				
4	1326 - 706 - 002 - 10	PLUG,DRAIN	1		*				
5	V720 - 112 - 402 - 00	O - RING/P20	1		*				
6	1564 - 515 - 001 - 20	PLATE	1		*				
7	V211 - 360 - 801 - 60	BOLT,SEMS (SP)	1		*				
8	1560 - 515 - 001 - 40	FLANGE	1		*				
9	V720 - 112 - 402 - 00	O - RING/P20	2		*				
10	1563 - 515 - 260 - 20	PIPE/DELIVERY/MID	1		*				
11	V781 - 160 - 000 - 8B	PLUG	1		*				
12	V200 - 360 - 611 - 00	BOLT	4		*				
13	V401 - 160 - 006 - 00	WASHER,SP/M 6	4		*				
14	V211 - 260 - 804 - 00	BOLT,SEMS	3		*				
15	1560 - 515 - 310 - 00	PIPE/DELIVERY/REAR	1		*				
16	V720 - 112 - 401 - 40	O - RING/P14	1		*				
17	V211 - 261 - 003 - 00	BOLT (S) M10X30	2		*				
18	1560 - 545 - 003 - 00	CONNECTOR	1		*				
19	1643 - 515 - 240 - 00	SUCTION/OPIPE/R COMP	1		*				
20	V721 - 103 - 103 - 50	O - RING/G35	1		*				
21	V721 - 103 - 104 - 50	O - RING/G45	1		*				
22	V211 - 261 - 002 - 00	BOLT,SEMS	1		*				
23	1643 - 515 - 230 - 10	PIPE/INLET COMP	1		*				
24	V211 - 260 - 801 - 60	BOLT,SEMS (S) M8X16	1		*				
25	V721 - 103 - 103 - 00	O - RING/G30	1		*				

FIG. 76 PIPING SYSTEM (A) (TK533)

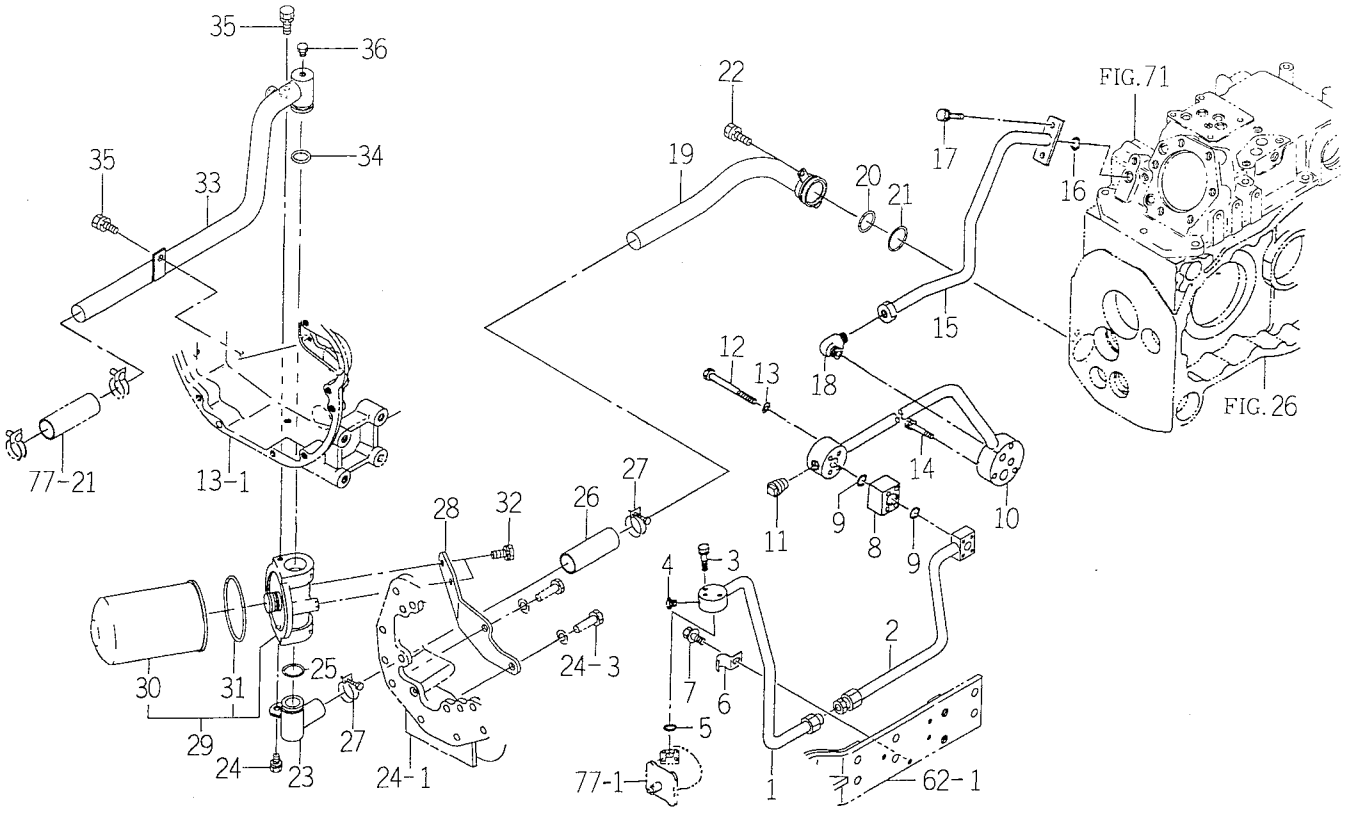

1674-515D

KEY	PART CODE	DESCRIPTION	QTY	TYPE OF MODEL TK529	TYPE OF MODEL TK533	ITC	COL	GRP	REMARKS
26	1560 - 515 - 003 - 10	HOSE/100	1		*				
27	J061 - 232 - 040 - 00	CLAMP/WIRE/32 - 40	2		*				
28	1643 - 515 - 001 - 00	BRACKET/FILTER	1		*				
29	1643 - 515 - 200 - 20	FILTER/SUCTION/20	1		*				
30	1643 - 515 - 202 - 10	CARTRIDGE/20	1		*				
31	1643 - 515 - 203 - 00	PACKING	1		*				
32	V211 - 261 - 002 - 50	BOLT (S) M10X25	2		*				
33	1643 - 515 - 220 - 20	PIPE/OUTLET COMP	1		*				
34	V721 - 103 - 103 - 00	O - RING/G30	1		*				
35	V211 - 260 - 801 - 60	BOLT,SEMS (S) M8X16	2		*				
36	1326 - 706 - 002 - 10	PLUG,DRAIN	1		*				

FIG. 77 PIPING SYSTEM (B)

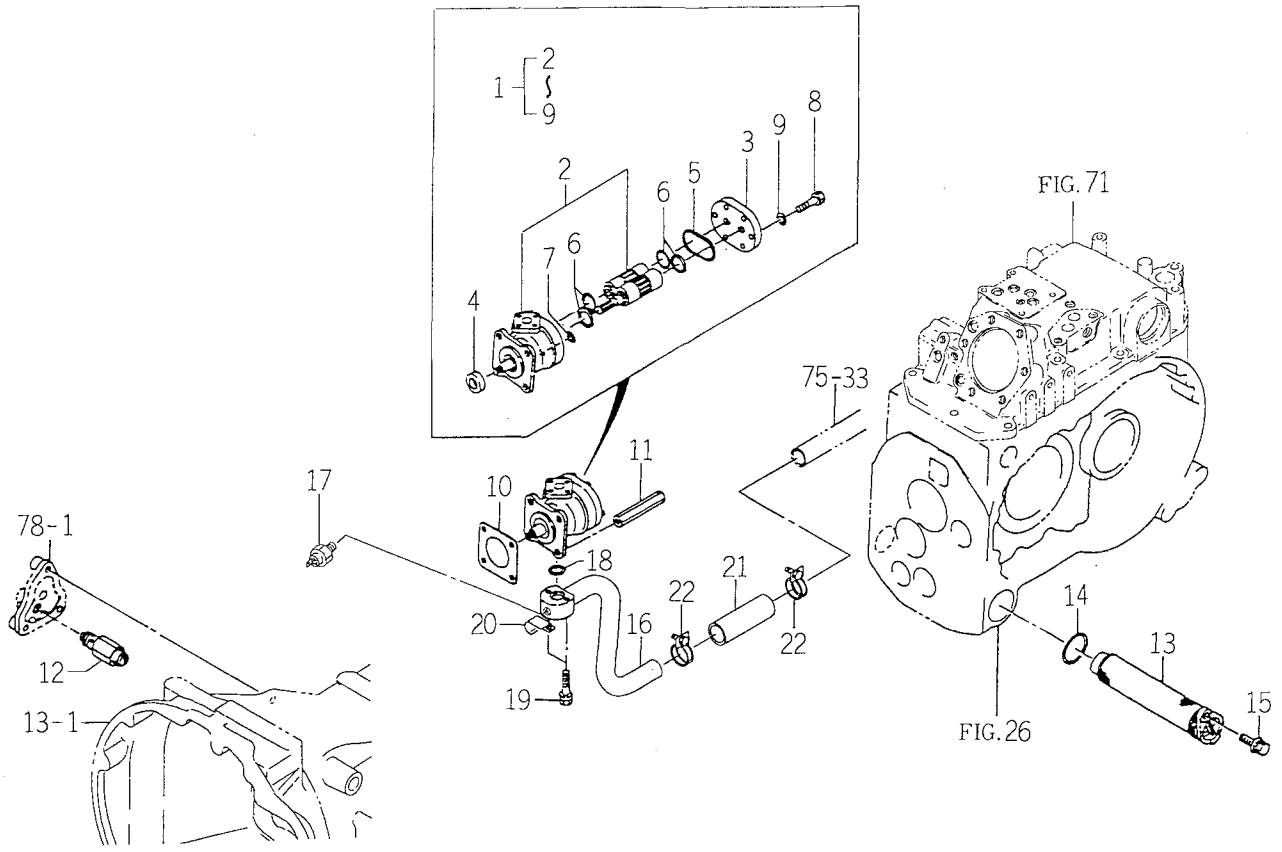

1674-515T

KEY	PART CODE	DESCRIPTION	QTY	TYPE OF MODEL TK529	TYPE OF MODEL TK533	ITC	COL	GRP	REMARKS
1	K135 - 012 - 000 - 00	PUMP,GEAR ASSY	1	*	*				
2	K135 - 012 - 100 - 00	PUMP,GEAR ASSY	1	*	*				
3	K135 - 017 - 006 - 00	COVER,PUMP	1	*	*				
4	V744 - 114 - 280 - 70	SEAL,OIL	1	*	*				
5	V721 - 113 - 105 - 00	O - RING HS90 G50	1	*	*				
6	V720 - 112 - 402 - 20	O - RING/P22	4	*	*				
7	V720 - 111 - 900 - 60	O - RING P6 HS90	1	*	*				
8	K135 - 002 - 009 - 00	BOLT/M8X28 11T	6	*	*				
9	V401 - 170 - 008 - 00	S.W	6	*	*				
10	1404 - 503 - 006 - 00	PACKING,OIL PUMP	1	*	*				
11	1560 - 515 - 004 - 40	NUT/M8	1	*	*				
12	K250 - 008 - 000 - 00	VALVE,RELIEF ASSY	1	*	*				
13	1560 - 515 - 230 - 60	FILTER/SUCTION ASSY	1	*	*				
14	V721 - 103 - 104 - 50	O - RING/G45	1	*	*				
15	V211 - 361 - 002 - 50	BOLT/SP	1	*	*				
16	1674 - 515 - 300 - 00	PIPE/SUCTION/FE COMP	1	*	*				
17	1501 - 621 - 001 - 00	SENSOR,VACUUM	1	*	*				
18	V720 - 112 - 402 - 00	O - RING/P20	1	*	*				
19	V210 - 560 - 604 - 50	BOLT/S	2	*	*				
20	3737 - 172 - 009 - 00	CLAMP,MAIN HARNESS	1	*	*				
21	1560 - 515 - 003 - 10	HOSE/100	1	*	*				
22	J061 - 232 - 040 - 00	CLAMP/WIRE/32 - 40	2	*	*				

FIG. 78 STACK SYSTEM

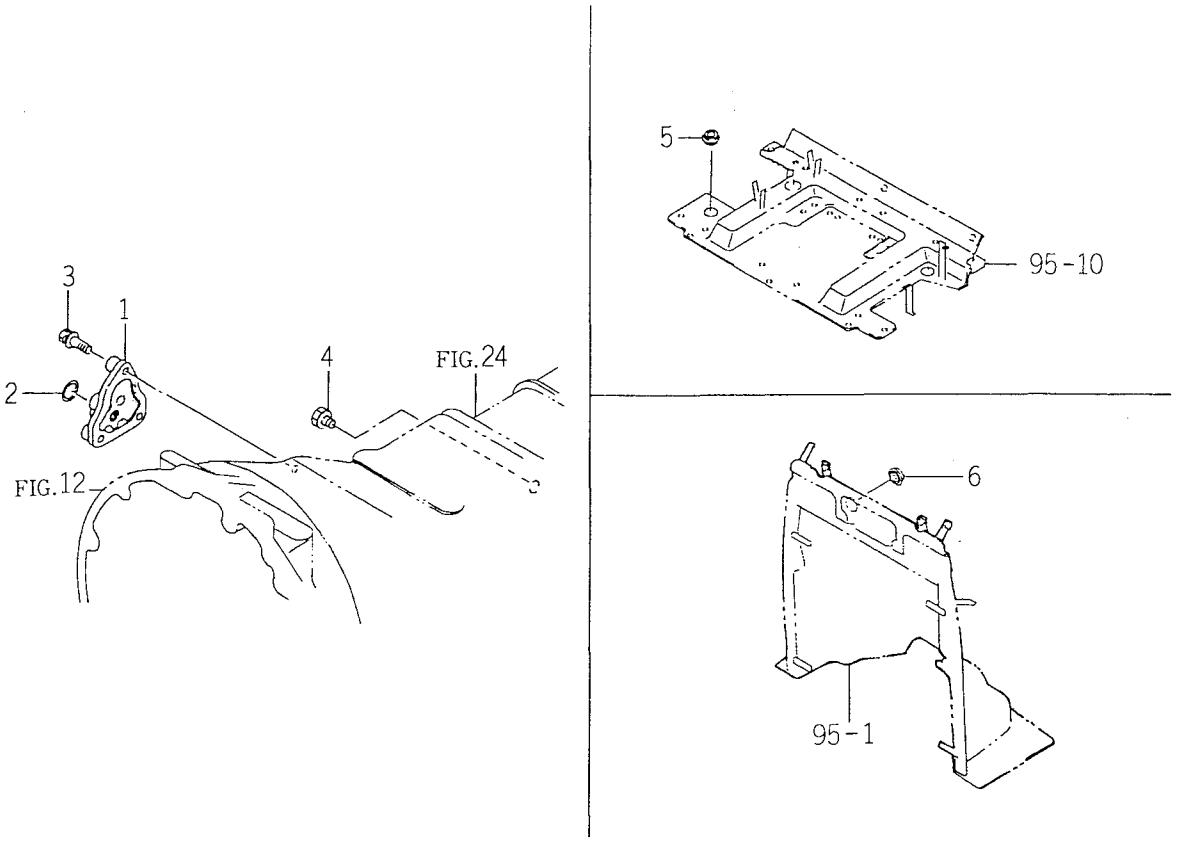

1560-517B

KEY	PART CODE	DESCRIPTION	QTY	TYPE OF MODEL TK529	TYPE OF MODEL TK533	ITC	COL	GRP	REMARKS
1	1560 - 517 - 001 - 40	FRANGE	1	*	*				
2	V720 - 112 - 402 - 00	O - RING/P20	1	*	*				
3	V211 - 360 - 803 - 50	BOLT W SEMS M8X35	3	*	*				
4	V782 - 160 - 000 - 4T	PLUG/SCREW/SEAL	1	*	*				
5	1560 - 630 - 028 - 00	CAP/30	1	*	*				
6	1560 - 630 - 029 - 00	CAP/30	1	*	*				

FIG. 79 LEVEL VALVE SYSTEM

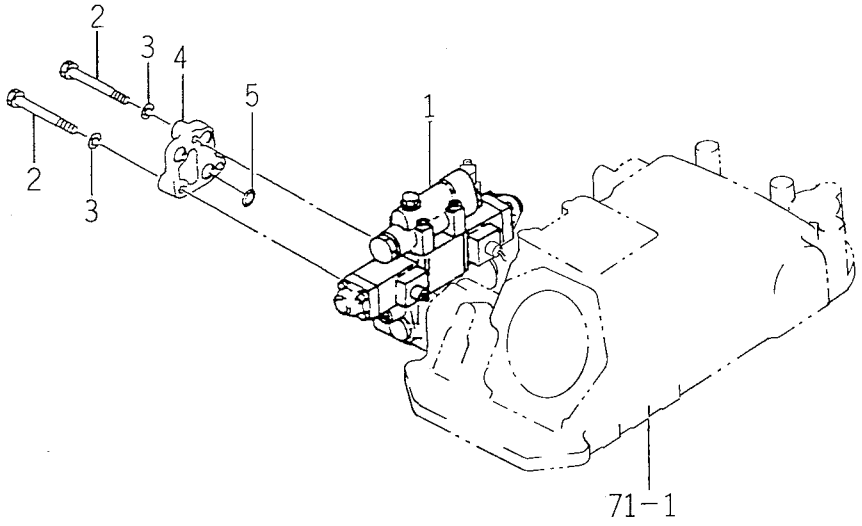

1674-519T

KEY	PART CODE	DESCRIPTION	QTY	TYPE OF MODEL TK529	TYPE OF MODEL TK533	ITC	COL	GRP	REMARKS
1	K200 - 019 - 000 - 00	VALVE ASSY	1	*	*				FIG 117
2	V201 - 261 - 008 - 50	BOLT/M10X85	3	*	*				
3	V401 - 160 - 010 - 00	WASHER,SP/M10	3	*	*				
4	1560 - 517 - 002 - 60	COVER	1	*	*				
5	V720 - 112 - 401 - 40	O - RING/P14	3	*	*				

FIG. 80 REAR HITCH AND 3P LINK SYSTEM

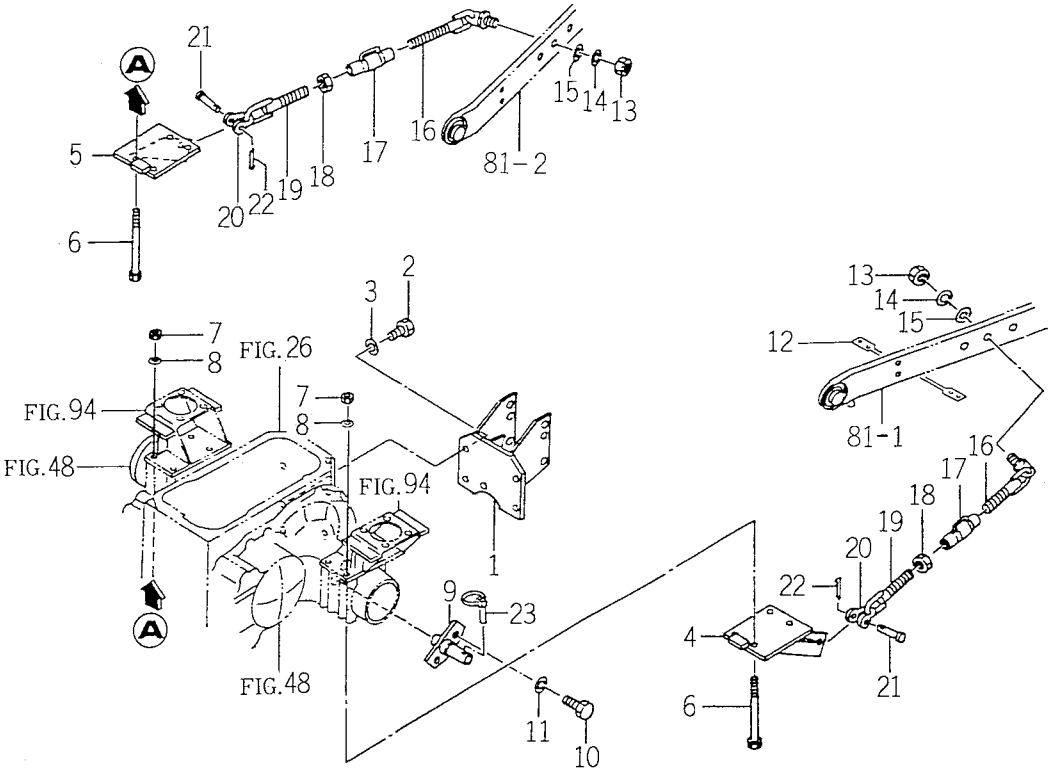

1560-521

KEY	PART CODE	DESCRIPTION	QTY	TYPE OF MODEL TK529	TYPE OF MODEL TK533	ITC	COL	GRP	REMARKS
1	1560 - 521 - 200 - 80	BRACKET COMP	1	*	*				
2	V201 - 361 - 403 - 50	BOLT	4	*	*				
3	V401 - 160 - 014 - 00	WASHER,SP/M14	4	*	*				
4	1560 - 525 - 200 - 50	BRACKET L COMP	1	*	*				
5	1560 - 525 - 210 - 50	BRACKET R COMP	1	*	*				
6	V201 - 361 - 215 - 50	BOLT	8	*	*				
7	V304 - 460 - 012 - 00	NUT/M12	8	*	*				
8	V401 - 160 - 012 - 00	WASHER,SP/M12	8	*	*				
9	1560 - 525 - 260 - 40	PIN	2	*	*				
10	V201 - 361 - 403 - 00	BOLT/M14X30	4	*	*				
11	V401 - 160 - 014 - 00	WASHER,SP/M14	4	*	*				
12	1560 - 525 - 003 - 00	BAND.470	1	*	*				
13	V304 - 260 - 016 - 00	NUT/M16	2	*	*				
14	V401 - 160 - 016 - 00	WASHER,SP/M16	2	*	*				
15	V411 - 260 - 016 - 00	WASHER / M16	2	*	*				
16	1650 - 514 - 510 - 00	CHAIN/CHECK/REAR/A	2	*	*				
17	1444 - 514 - 230 - 00	TURNBUCKLE/A	2	*	*				
18	V304 - 260 - 016 - 00	NUT/M16	2	*	*				
19	1560 - 525 - 250 - 40	CHAIN/CHECK COMP	2	*	*				
20	1404 - 511 - 801 - 10	SCREW	2	*	*				
21	7963 - 611 - 003 - 00	PIN/12X48	2	*	*				
22	V500 - 163 - 002 - 00	PIN,SPLIT/3 X20	2	*	*				
23	1421 - 502 - 002 - 00	PIN,LINK	2	*	*				

FIG. 81 LOWER LINK AND LIFT ROD (LH) SYSTEM

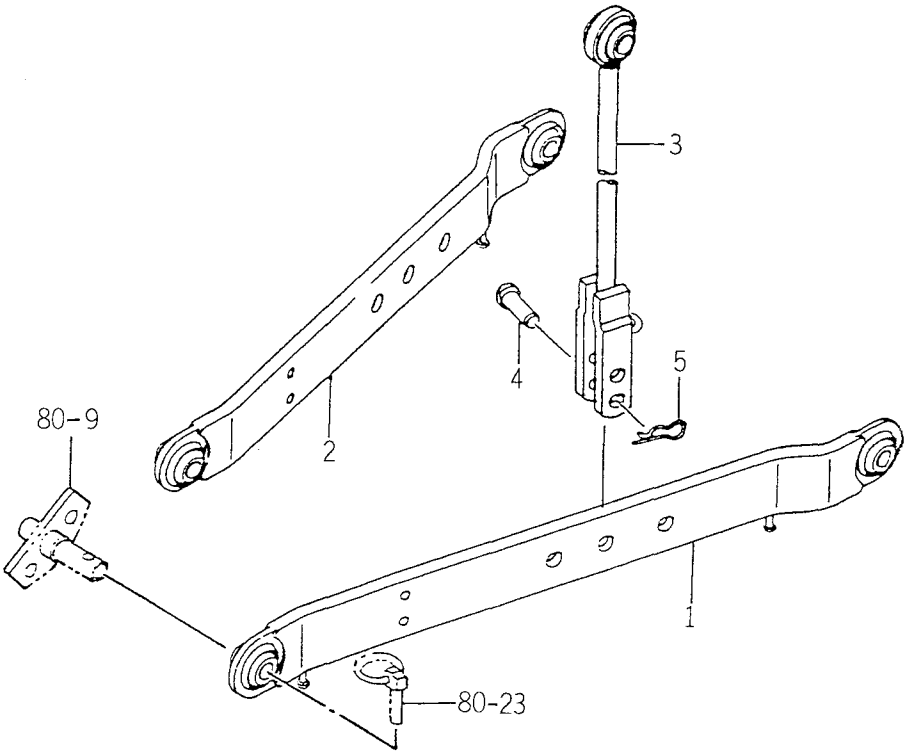

1673-525A

KEY	PART CODE	DESCRIPTION	QTY	TYPE OF MODEL TK529	TYPE OF MODEL TK533	ITC	COL	GRP	REMARKS
1	1673 - 525 - 200 - 00	LINK/LOWER/LH COMP	1	*	*				
2	1673 - 525 - 210 - 00	LINK/LOWER/RH COMP	1	*	*				
3	1594 - 526 - 200 - 10	ROD/FORK COMP	1	*	*				
4	1560 - 526 - 001 - 40	PIN/16X51	1	*	*				
5	1305 - 931 - 003 - 00	PIN,HAIR	1	*	*				

FIG. 82 ELC. SYSTEM

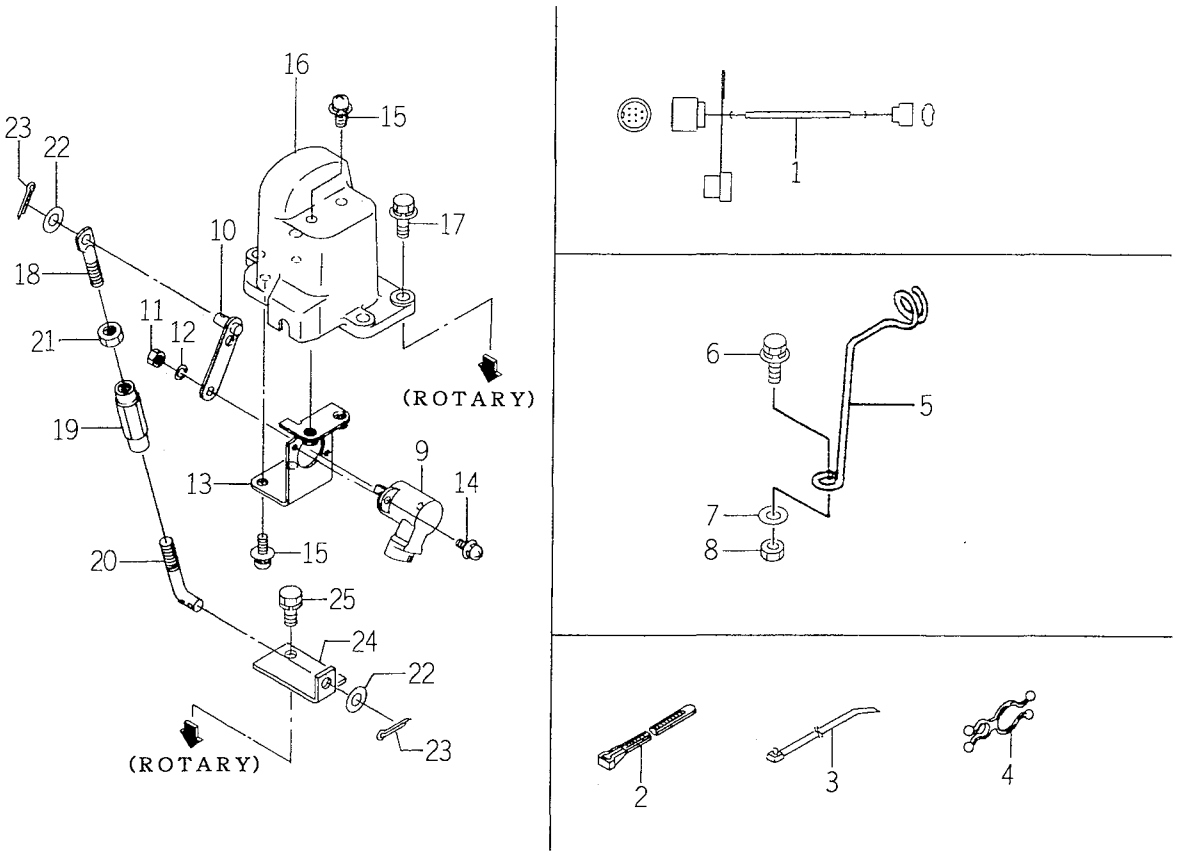

1674-531T

KEY	PART CODE	DESCRIPTION	QTY	TYPE OF MODEL TK529	TYPE OF MODEL TK533	ITC	COL	GRP	REMARKS
1	1650 - 654 - 740 - 00	HARNESS/AUTO/TG ASSY	1	*	*				
2	1376 - 402 - 003 - 00	BAND,WIRE/140	2	*	*				
3	1560 - 695 - 015 - 00	CLAMP	2	*	*				
4	1650 - 650 - 012 - 10	CLIP/PAUSELOCK	1	*	*				
5	1564 - 531 - 002 - 00	GUIDE/WIRE	1	*	*				
6	V211 - 360 - 803 - 00	BOLT/M8X30	1	*	*				
7	V411 - 260 - 008 - 00	WASHER,PL/M 8	1	*	*				
8	V304 - 260 - 008 - 00	NUT/M 8	1	*	*				
9	1614 - 520 - 260 - 00	SENSOR/ANGLE	1	*	*				
10	1650 - 505 - 460 - 00	ARM/SENSOR COMP	1	*	*				
11	V301 - 260 - 006 - 00	NUT/M 6	1	*	*				
12	V401 - 160 - 006 - 00	WASHER,SP/M 6	1	*	*				
13	1614 - 520 - 340 - 00	HOLDER/SENSOR COMP	1	*	*				
14	V120 - 364 - 001 - 20	SCREW,SP/M4X12	2	*	*				
15	V120 - 366 - 001 - 60	SCREW	4	*	*				
16	1614 - 520 - 009 - 00	CASE/SENSOR	1	*	*				
17	V211 - 360 - 802 - 50	BOLT,SEMS	4	*	*				
18	3652 - 285 - 001 - 00	BOLT	1	*	*				
19	1444 - 122 - 002 - 00	TURNBUCKLE/M8	1	*	*				
20	1614 - 520 - 017 - 00	ROD	1	*	*				
21	V304 - 260 - 008 - 00	NUT/M 8	1	*	*				
22	V411 - 260 - 008 - 00	WASHER,PL/M 8	2	*	*				
23	V500 - 162 - 002 - 00	PIN,SPLIT/2 X20	2	*	*				
24	1614 - 520 - 013 - 10	PLATE/L/38X70	1	*	*				
25	V211 - 260 - 802 - 00	BOLT,SEMS (S)	2	*	*				

FIG. 83 LEVEL SYSTEM

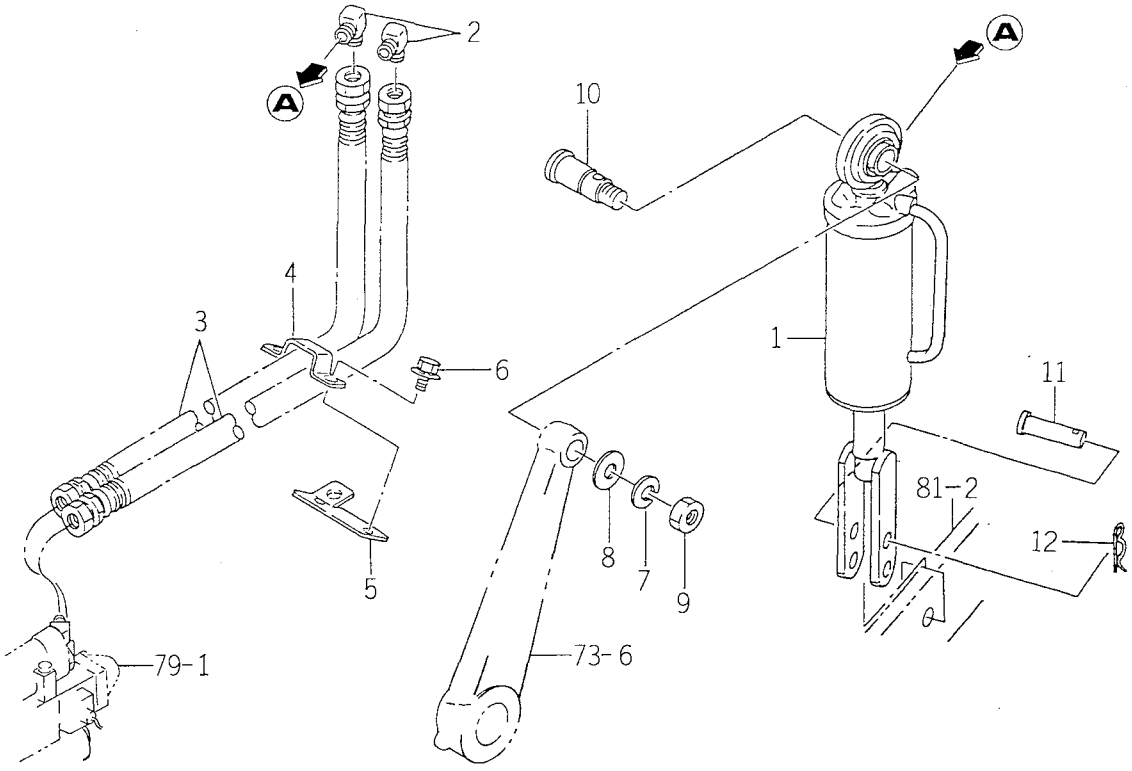

1674-541T

KEY	PART CODE	DESCRIPTION	QTY	TYPE OF MODEL TK529	TYPE OF MODEL TK533	ITC	COL	GRP	REMARKS
1	K185 - 004 - 000 - 20	CYLINDER	1	*	*				FIG 115
2	3768 - 185 - 022 - 10	ADAPTER (90° /PUMP)	1	*	*				
3	1560 - 541 - 240 - 00	HOSE/1000 ASSY	2	*	*				
4	1575 - 511 - 003 - 00	PLATE	1	*	*				
5	1560 - 541 - 003 - 10	PLATE/HOLDER	1	*	*				
6	V211 - 360 - 801 - 20	BOLT,SEMS	2	*	*				
7	V401 - 160 - 016 - 00	WASHER,SP/M16	1	*	*				
8	V411 - 260 - 016 - 00	WASHER / M16	1	*	*				
9	V304 - 460 - 016 - 00	NUT/M16	1	*	*				
10	1560 - 527 - 001 - 60	PIN/22X90	1	*	*				
11	1560 - 526 - 001 - 40	PIN/16X51	1	*	*				
12	1305 - 931 - 003 - 00	PIN,HAIR	1	*	*				

FIG. 84 VALVE SYSTEM

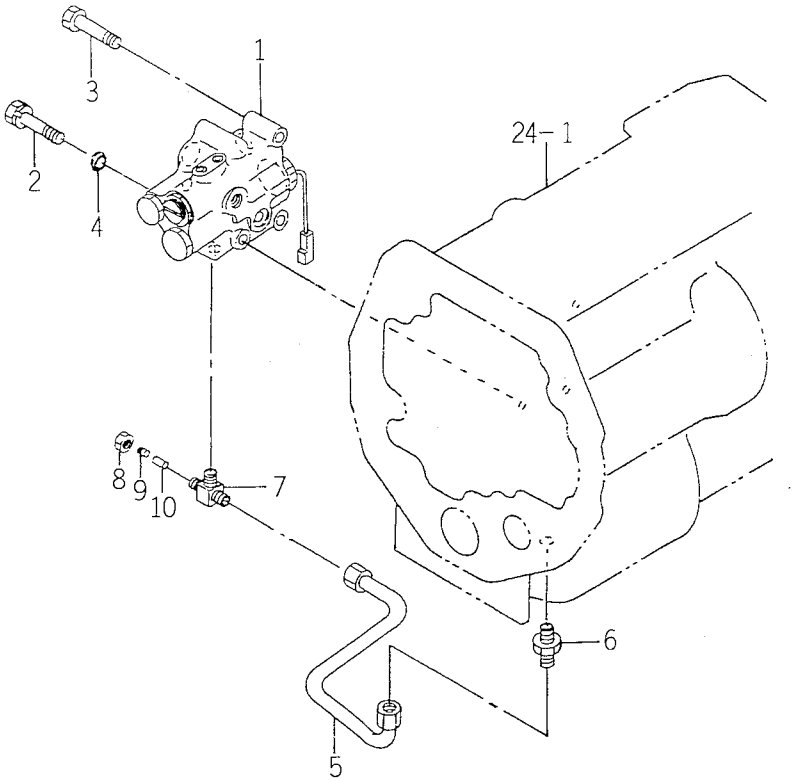

1560-546

KEY	PART CODE	DESCRIPTION	QTY	TYPE OF MODEL TK529	TYPE OF MODEL TK533	ITC	COL	GRP	REMARKS
1	K200 - 016 - 000 - 00	VALVE ASSY	1	*	*				FIG 116
2	V211 - 260 - 805 - 00	BOLT/M8X50	2	*	*				
3	V201 - 260 - 805 - 0B	BOLT/SEAL	1	*	*				
4	1560 - 223 - 008 - 50	SEAL	1	*	*				
5	1560 - 545 - 210 - 00	PIPE/DELIVERY/4WD	1	*	*				
6	1614 - 509 - 001 - 00	NIPPLE/STRAIGHT	1	*	*				
7	1560 - 545 - 005 - 00	CONNECTOR	1	*	*				
8	1560 - 545 - 212 - 00	NUT	1	*	*				
9	1560 - 545 - 213 - 00	SLEEVE	1	*	*				
10	3610 - 201 - 213 - 00	PIN,BRAKE	1	*	*				

FIG. 85 GRILLE SYSTEM

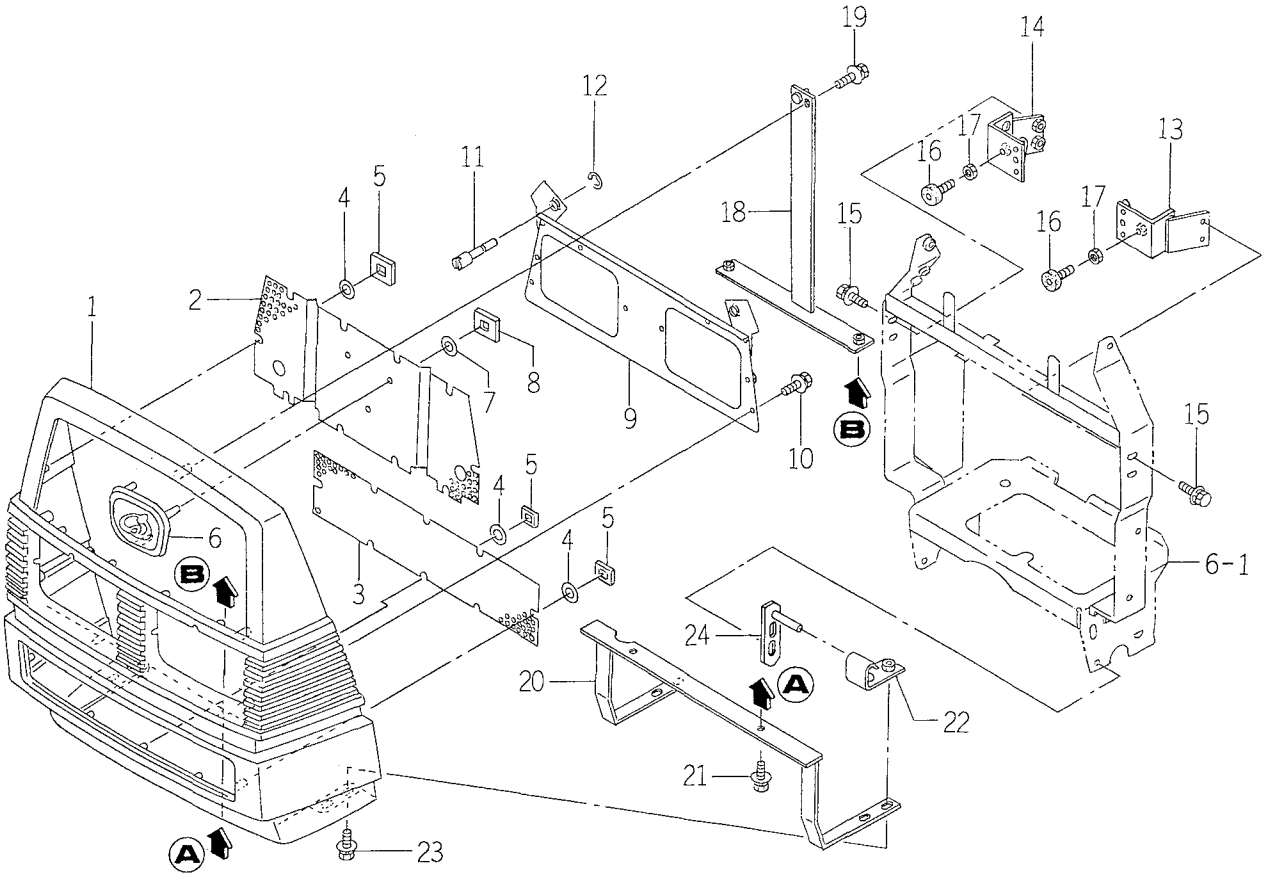

1673-601A

KEY	PART CODE	DESCRIPTION	QTY	TYPE OF MODEL TK529	TYPE OF MODEL TK533	ITC	COL	GRP	REMARKS
1	1673 - 601 - 005 - 00	GRILLE	1	*	*				
2	1673 - 601 - 001 - 00	NET	1	*	*				
3	1673 - 601 - 002 - 00	NET	1	*	*				
4	1444 - 601 - 015 - 00	WASHER/6X14X3	16	*	*				
5	V350 - 160 - 006 - 00	NUT,SPEED/P6	16	*	*				
6	3689 - 902 - 019 - 00	ORNAMENT/ISEKI	1	*	*				
7	1444 - 601 - 015 - 00	WASHER/6X14X3	3	*	*				
8	V350 - 160 - 004 - 00	NUT,SPEED/P4	3	*	*				
9	1673 - 601 - 210 - 00	HOLDER/LAMP COMP	1	*	*				
10	V210 - 360 - 601 - 60	BOLT (SP) /M6X16	4	*	*				
11	1673 - 601 - 003 - 00	PIN/FASTENER	2	*	*				
12	V710 - 140 - 009 - 00	RING,SNAP/ 9 E	2	*	*				
13	1673 - 601 - 260 - 00	HOLDER/LH COMP	1	*	*				
14	1673 - 601 - 270 - 00	HOLDER/RH COMP	1	*	*				
15	V211 - 360 - 802 - 00	BOLT (SP) M8X20	4	*	*				
16	1421 - 602 - 005 - 10	CUSHION,B/ RUBBER	2	*	*				
17	V304 - 260 - 008 - 00	NUT/M 8	2	*	*				
18	1673 - 601 - 220 - 10	FRAME/GRILLE/UPPER	1	*	*				
19	V210 - 360 - 601 - 60	BOLT (SP) /M6X16	1	*	*				
20	1673 - 601 - 230 - 10	FRAME/GRILLE/LOWER	1	*	*				
21	V211 - 360 - 802 - 50	BOLT,SEMS	2	*	*				
22	1560 - 601 - 330 - 20	HOOK COMP	2	*	*				
23	V211 - 360 - 802 - 00	BOLT (SP) M8X20	2	*	*				
24	1560 - 601 - 260 - 40	PIN COMP	2	*	*				

FIG. 86 HOOD SYSTEM

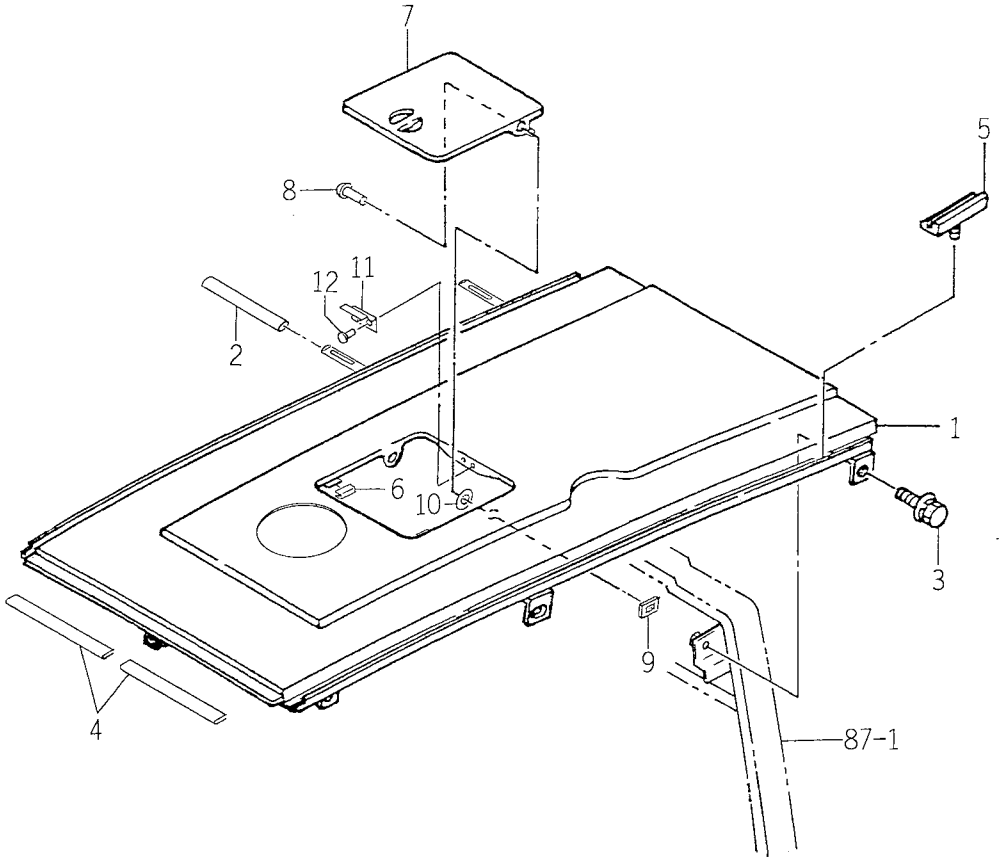

1674-601T

KEY	PART CODE	DESCRIPTION	QTY	TYPE OF MODEL TK529	TYPE OF MODEL TK533	ITC	COL	GRP	REMARKS
1	1674 - 601 - 300 - 00	HOOD COMP	1	*	*		4G		
2	1650 - 650 - 017 - 00	TUBE/120	2	*	*				
3	V211 - 360 - 802 - 00	BOLT (SP) M8X20	6	*	*				
4	1444 - 604 - 009 - 00	RUBBER,LINE	2	*	*				
5	1560 - 602 - 001 - 40	INSULATOR	4	*	*				
6	1672 - 601 - 002 - 00	TRIM/20	2	*	*				
7	1672 - 601 - 210 - 00	COVER/HOOD COMP	1	*	*		4G		
8	V290 - 106 - 001 - 20	RIVET	2	*	*				
9	V350 - 160 - 006 - 00	NUT,SPEED/P6	2	*	*				
10	1560 - 601 - 017 - 00	WASHER/6X14X2	2	*	*				
11	1560 - 601 - 014 - 30	SPRING	1	*	*				
12	W296 - 134 - 007 - 00	RIVET,BLIND	2	*	*				

FIG. 87 HOOD FRAME AND DASH – BOARD SYSTEM

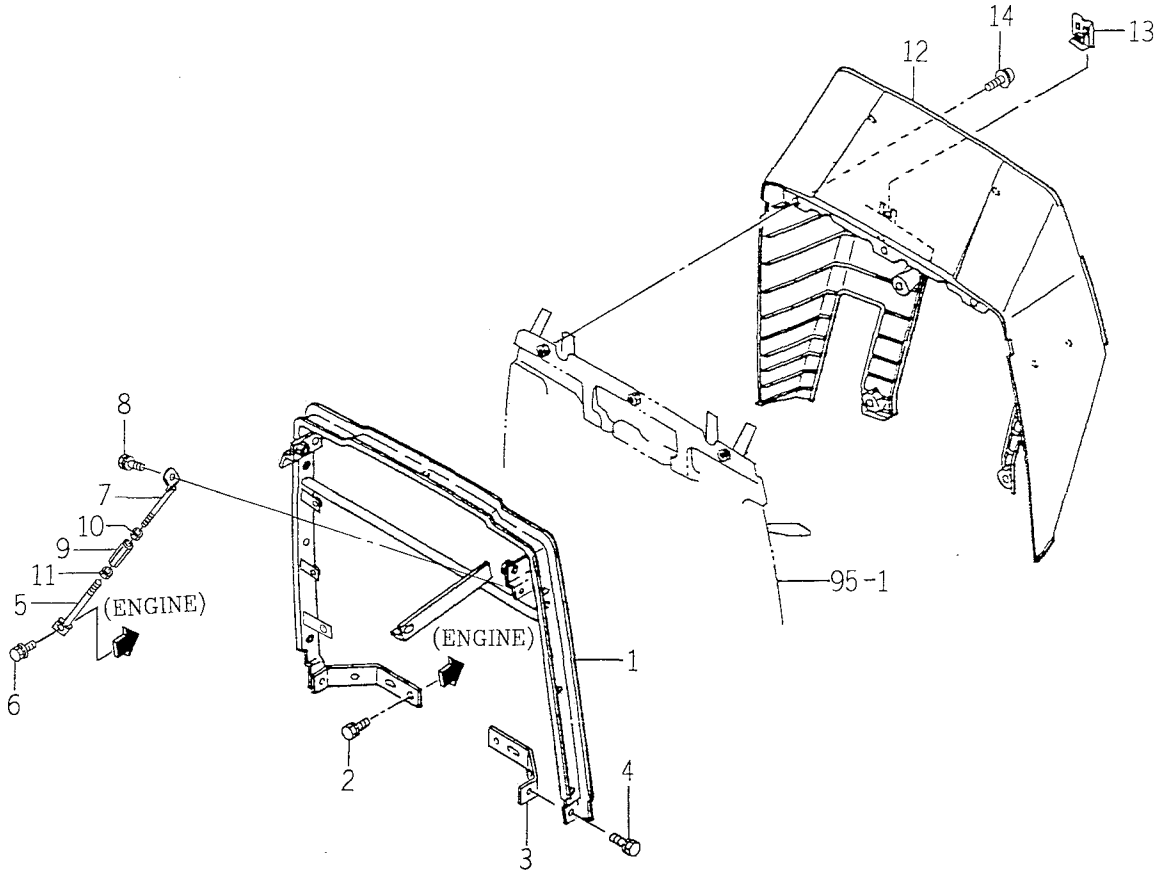

1673-602

KEY	PART CODE	DESCRIPTION	QTY	TYPE OF MODEL TK529	TYPE OF MODEL TK533	ITC	COL	GRP	REMARKS
1	1673 – 602 – 240 – 00	FRAME/HOODCOMP	1	*	*				
2	V211 – 260 – 802 – 00	BOLT,SEMS (S)	2	*	*				
3	1560 – 602 – 273 – 60	STAY/PLATE	1	*	*				
4	V211 – 260 – 802 – 00	BOLT,SEMS (S)	1	*	*				
5	1673 – 602 – 220 – 00	ROD/M10/L COMP	1	*	*				
6	V211 – 360 – 801 – 60	BOLT,SEMS (SP)	1	*	*				
7	1673 – 602 – 210 – 00	ROD/M10 COMP	1	*	*				
8	V211 – 260 – 802 – 00	BOLT,SEMS (S)	1	*	*				
9	3640 – 109 – 002 – 00	ADJUSTER,ROD	1	*	*				
10	V304 – 260 – 010 – 00	NUT	1	*	*				
11	1560 – 112 – 003 – 00	NUT,SM/M10	1	*	*				
12	1560 – 603 – 002 – 80	COVER/DASH	1	*	*				
13	1560 – 603 – 003 – 00	NUT/M6	2	*	*				
14	V120 – 368 – 002 – 00	BOLT/M8X20	7	*	*				

FIG. 88 FAN COVER SYSTEM

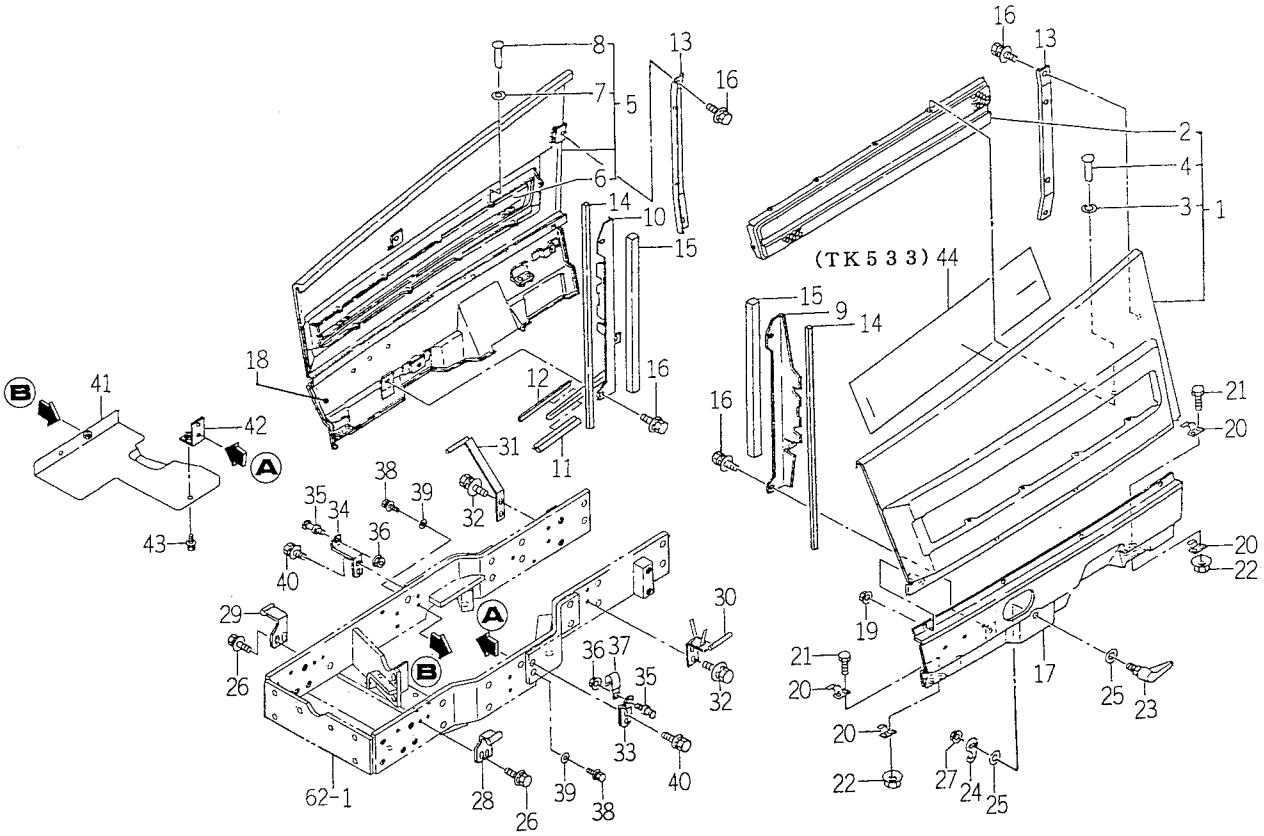

1673-604

KEY	PART CODE	DESCRIPTION	QTY	TYPE OF MODEL TK529	TYPE OF MODEL TK533	ITC	COL	GRP	REMARKS
1	1673 - 604 - 240 - 00	COVER/SIDE/LH ASSY	1	*	*		4G		
2	1560 - 604 - 001 - 50	NET/LH	1	*	*				
3	1480 - 604 - 204 - 00	WASHER	10	*	*				
4	W296 - 134 - 007 - 00	RIVET,BLIND	10	*	*				
5	1673 - 604 - 250 - 00	COVER/SIDE/RH ASSY	1	*	*		4G		
6	1560 - 604 - 002 - 50	NET/RH	1	*	*				
7	1480 - 604 - 204 - 00	WASHER	10	*	*				
8	W296 - 134 - 007 - 00	RIVET,BLIND	10	*	*				
9	1560 - 604 - 009 - 50	STAY/PLATE/LH	1	*	*				
10	1673 - 604 - 280 - 00	STAY/PLATE/RH COMP	1	*	*				
11	1673 - 112 - 004 - 00	INSULATOR/140	1	*	*				
12	4334 - 311 - 216 - 00	SOFT TAPE/10X5X160	1	*	*				
13	1560 - 604 - 024 - 10	BRACKET/PLATE	2	*	*				
14	1560 - 604 - 005 - 00	SEAL	2	*	*				
15	1560 - 104 - 004 - 40	SEAL	2	*	*				
16	V211 - 360 - 801 - 60	BOLT,SEMS (SP)	8	*	*				
17	1594 - 604 - 260 - 10	COVER/UNDER/LH COMP	1	*	*		8F		
18	1594 - 604 - 270 - 10	COVER/UNDER/RH COMP	1	*	*		8F		
19	V362 - 260 - 008 - 00	NUT/WASHER	8	*	*				
20	1560 - 604 - 022 - 70	SPRING	8	*	*				
21	V201 - 260 - 801 - 60	BOLT/M 8X16	8	*	*				
22	V362 - 260 - 008 - 00	NUT/WASHER	8	*	*				
23	1560 - 604 - 380 - 30	LEVER COMP	2	*	*				
24	1560 - 604 - 017 - 40	PLATE	2	*	*				
25	1560 - 604 - 018 - 40	WASHER/13X25X02	2	*	*				

FIG. 88 FAN COVER SYSTEM

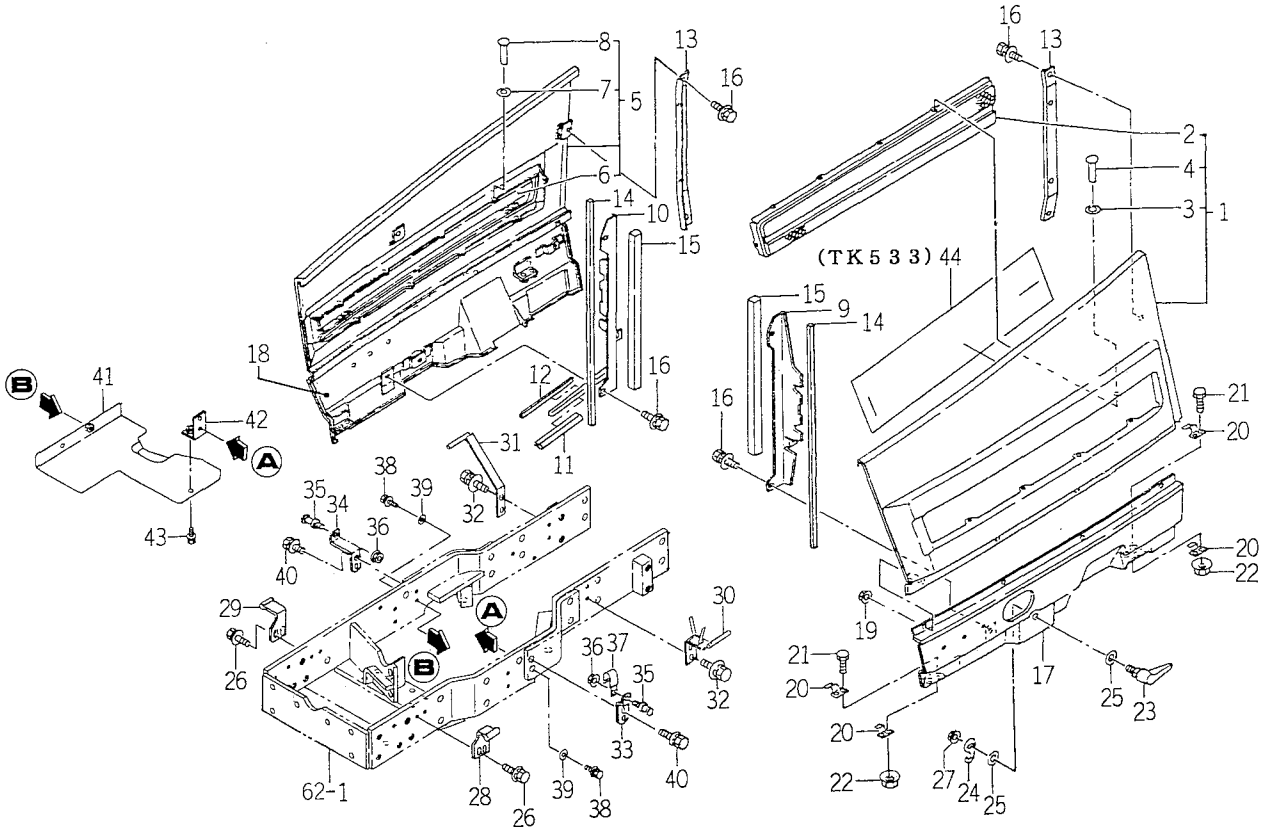

1673-604

KEY	PART CODE	DESCRIPTION	QTY	TYPE OF MODEL TK529	TYPE OF MODEL TK533	ITC	COL	GRP	REMARKS
26	V211 - 360 - 801 - 60	BOLT,SEMS (SP)	4	*	*				
27	V362 - 260 - 008 - 00	NUT/WASHER	2	*	*				
28	1560 - 604 - 031 - 00	STAY/LH/F	1	*	*				
29	1560 - 604 - 032 - 00	STAY/RH/F	1	*	*				
30	1673 - 604 - 220 - 10	PIN/LH/REAR COMP	1	*	*				
31	1673 - 604 - 230 - 00	PIN/RH/REAR COMP	1	*	*				
32	V211 - 360 - 801 - 60	BOLT,SEMS (SP)	4	*	*				
33	1560 - 604 - 361 - 50	SPRING	1	*	*				
34	1560 - 604 - 371 - 50	SPRING	1	*	*				
35	1560 - 604 - 362 - 50	PIN/08X37	2	*	*				
36	V362 - 260 - 008 - 00	NUT/WASHER	2	*	*				
37	1425 - 621 - 004 - 00	CLAMP,HARNESS	2	*	*				
38	V210 - 360 - 604 - 00	BOLT/SP	2	*	*				
39	V411 - 260 - 008 - 00	WASHER,PL/M 8	2	*	*				
40	V211 - 360 - 803 - 00	BOLT/M8X30	2	*	*				
41	1640 - 410 - 200 - 10	PLATE COMP	1	*	*				
42	1640 - 410 - 210 - 00	PLATE COMP	1	*	*				
43	V210 - 360 - 601 - 60	BOLT (SP) /M6X16	1	*	*				
44	1611 - 604 - 001 - 00	INSULATOR	1		*				

FIG. 89 FENDER SYSTEM

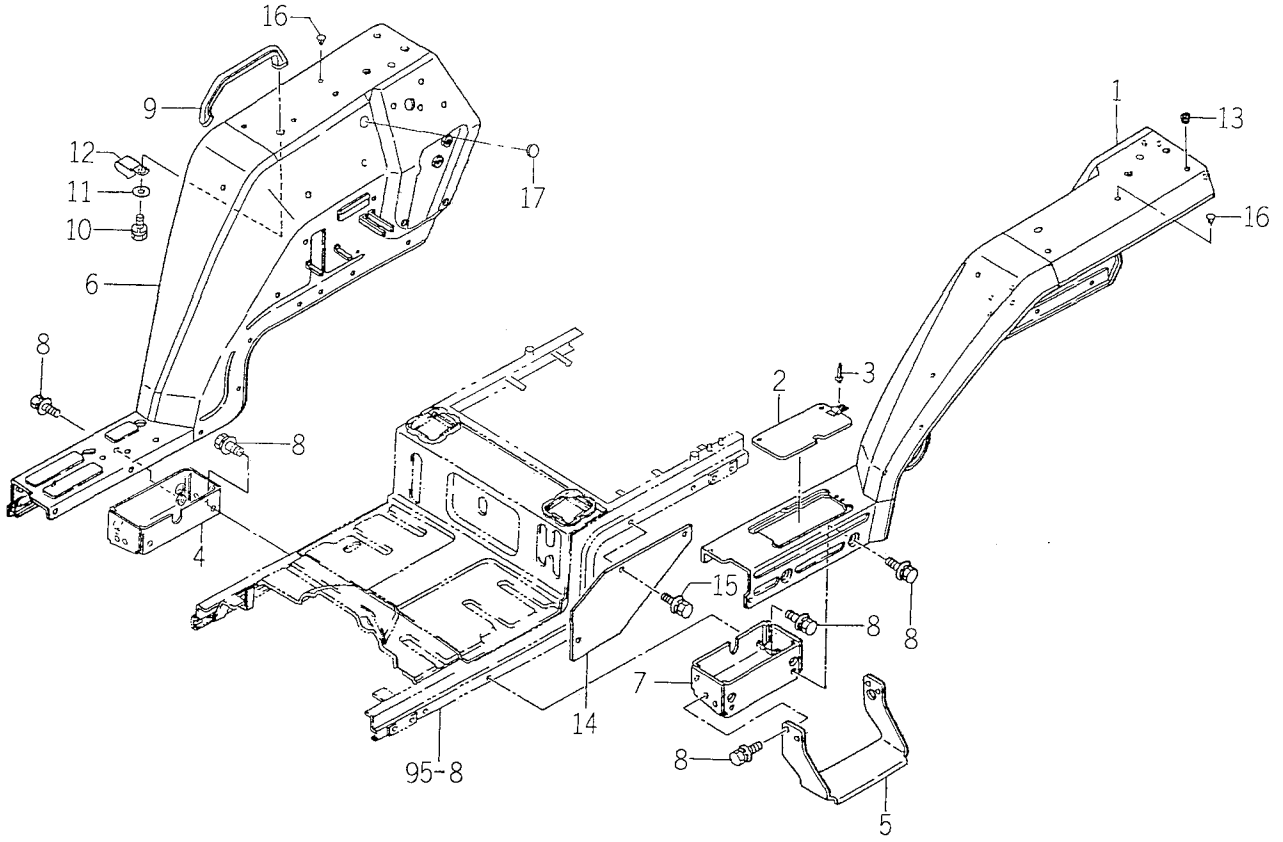

1673-606

KEY	PART CODE	DESCRIPTION	QTY	TYPE OF MODEL TK529	TYPE OF MODEL TK533	ITC	COL	GRP	REMARKS
1	1673 - 606 - 200 - 10	FENDER/LH COMP	1	*	*		4G		
2	1560 - 606 - 340 - 10	PLATE	1	*	*				
3	W296 - 203 - 206 - 30	RIVET/BLIND	2	*	*				
4	1560 - 606 - 330 - 00	BRACKET	1	*	*				
5	1560 - 630 - 321 - 50	STEP	1	*	*				
6	1673 - 606 - 210 - 20	FENDER/RH COMP	1	*	*		4G		
7	1560 - 606 - 240 - 40	BRACKET COMP	1	*	*				
8	V211 - 360 - 802 - 00	BOLT (SP) M8X20	20	*	*				
9	1612 - 608 - 003 - 00	GRIP/ASSIST	2	*	*				
10	V211 - 260 - 802 - 00	BOLT,SEMS (S)	4	*	*				
11	4101 - 102 - 038 - 00	WASHER/24X9X3.2	4	*	*				
12	1425 - 621 - 004 - 00	CLAMP,HARNESS	2	*	*				
13	1432 - 651 - 028 - 00	GROMMET/9X13X2	2	*	*				
14	1560 - 606 - 013 - 10	COVER	2	*	*				
15	V211 - 360 - 801 - 60	BOLT,SEMS (SP)	6	*	*				
16	1434 - 611 - 002 - 10	CAP (M8)	2	*	*				
17	1560 - 630 - 028 - 00	CAP/30	1	*	*				

FIG. 90 LEVER GUIDE SYSTEM

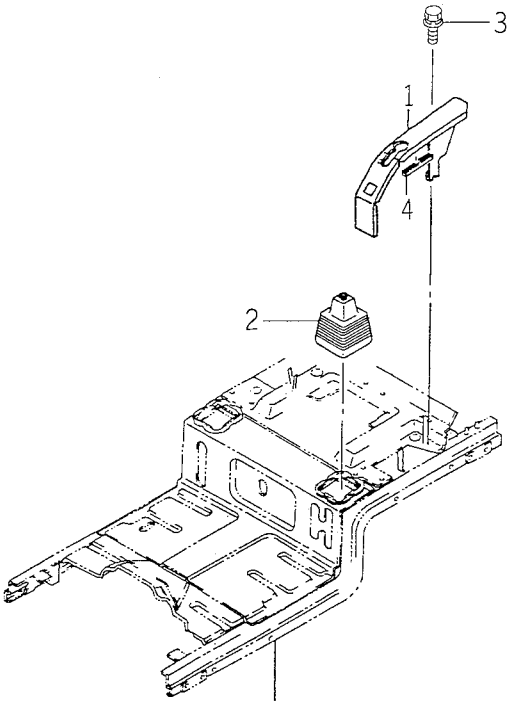

FIG. 95

1560-608G

KEY	PART CODE	DESCRIPTION	QTY	TYPE OF MODEL TK529	TYPE OF MODEL TK533	ITC	COL	GRP	REMARKS
1	1560 - 608 - 260 - 01	GUIDE/LH COMP	1	*	*		5I		
2	1560 - 608 - 220 - 30	BOOT	2	*	*				
3	V211 - 360 - 801 - 60	BOLT,SEMS (SP)	4	*	*				
4	1519 - 604 - 005 - 00	RUBBER,HOOK	1	*	*				

FIG. 91 SEAT SYSTEM

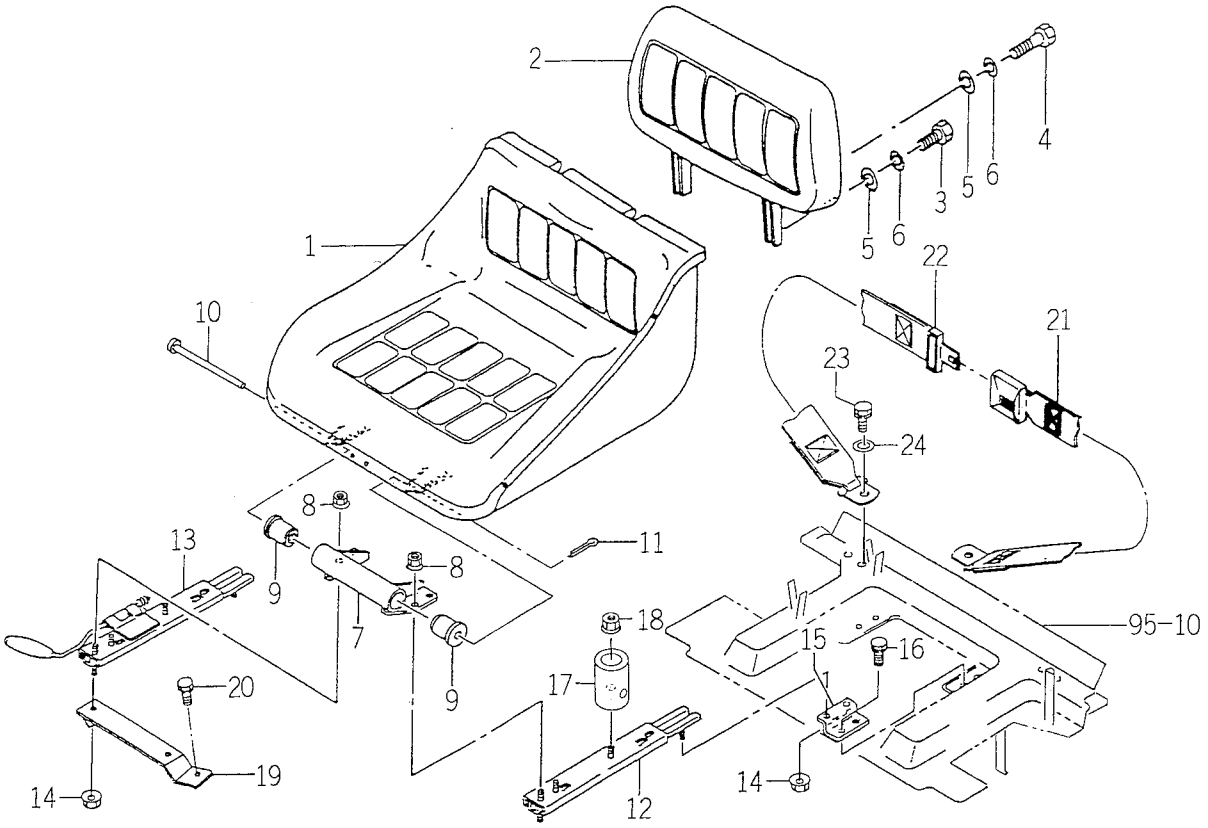

1673-611

KEY	PART CODE	DESCRIPTION	QTY	TYPE OF MODEL TK529	TYPE OF MODEL TK533	ITC	COL	GRP	REMARKS
1	1614 - 611 - 551 - 00	SEAT/A	1	*	*				
2	1614 - 611 - 552 - 00	SEAT/B	1	*	*				
3	V200 - 260 - 602 - 00	BOLT/M 6X20	2	*	*				
4	V200 - 260 - 603 - 00	BOLT/M 6X30	2	*	*				
5	V411 - 260 - 006 - 00	WASHER / M6	4	*	*				
6	V401 - 160 - 006 - 00	WASHER,SP/M 6	4	*	*				
7	1560 - 611 - 250 - 00	BRACKET COMP	1	*	*				
8	V363 - 260 - 008 - 00	NUT,LOCK/M8	4	*	*				
9	1488 - 611 - 001 - 00	RUBBER,CUSHION (A)	2	*	*				
10	1488 - 611 - 003 - 10	PIN,SEAT SET	1	*	*				
11	V500 - 162 - 502 - 00	PIN,SPLIT/2.5X20	1	*	*				
12	1488 - 611 - 210 - 00	ADJUSTER,SEAT L ASSY	1	*	*				
13	1488 - 611 - 220 - 10	ADJUSTER,SEAT/RH	1	*	*				
14	V363 - 260 - 008 - 00	NUT,LOCK/M8	4	*	*				
15	1560 - 611 - 007 - 00	PLATE/Z/60X50	2	*	*				
16	V211 - 260 - 801 - 60	BOLT,SEMS (S) M8X16	4	*	*				
17	1672 - 611 - 001 - 00	INSULATOR	2	*	*				
18	V362 - 260 - 008 - 00	NUT/WASHER	2	*	*				
19	1560 - 611 - 006 - 00	BRACKET	1	*	*				
20	V211 - 260 - 801 - 60	BOLT,SEMS (S) M8X16	2	*	*				
21	1673 - 611 - 201 - 00	BELT/BUCKLESIDE ASSY	1	*	*				
22	1673 - 611 - 202 - 00	BELT/TUNGSIDE ASSY	1	*	*				
23	V211 - 561 - 002 - 50	BOLT/M10X25	2	*	*				
24	V411 - 260 - 010 - 00	WASHER/M10	2	*	*				

FIG. 92 BACK MIRROR SYSTEM

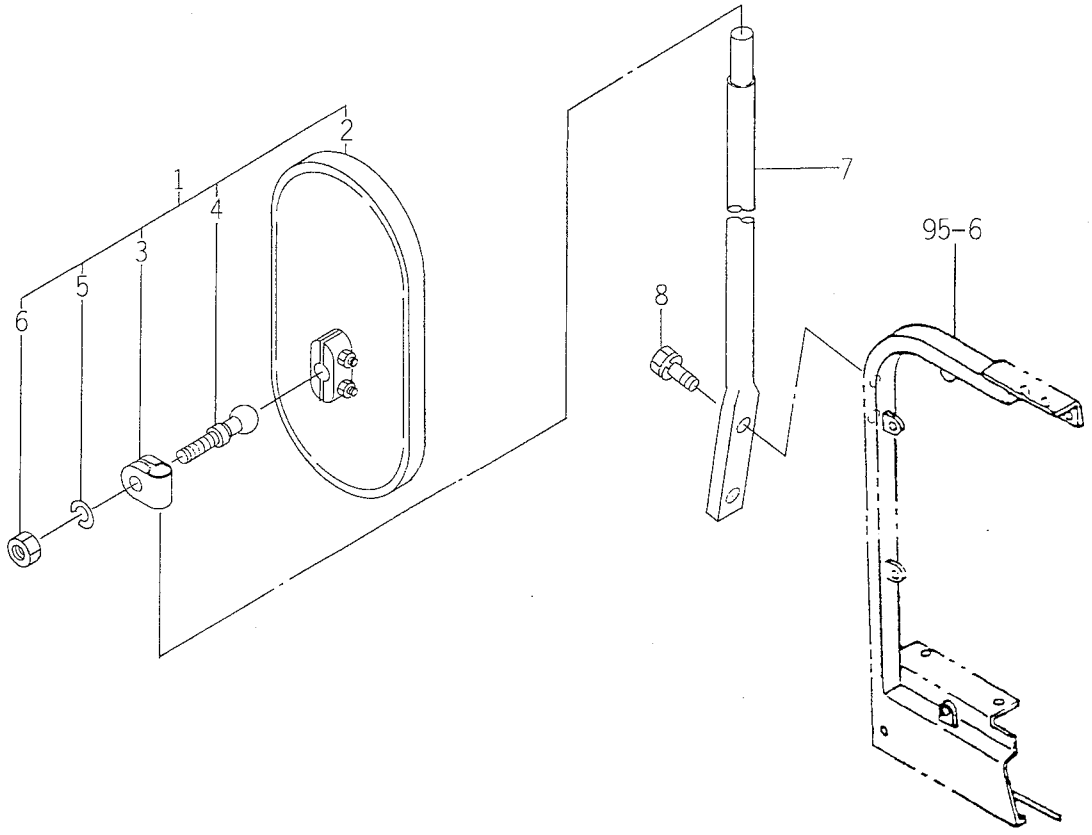

1600-619

KEY	PART CODE	DESCRIPTION	QTY	TYPE OF MODEL TK529	TYPE OF MODEL TK533	ITC	COL	GRP	REMARKS
1	1600 - 619 - 210 - 10	MIRROR ASSY	1	*	*				
2	1541 - 621 - 210 - 00	MIRROR ASSY	1	*	*				
3	1600 - 619 - 211 - 00	STAY	1	*	*				
4	1600 - 619 - 212 - 00	PIVOT	1	*	*				
5	1600 - 619 - 213 - 00	WASHER/LOCK	1	*	*				
6	1600 - 619 - 214 - 00	NUT	1	*	*				
7	1600 - 619 - 001 - 10	STAY,MIRROR	1	*	*				
8	V211 - 260 - 802 - 00	BOLT,SEMS (S)	2	*	*				

FIG. 93 FRONT MOUNT SYSTEM

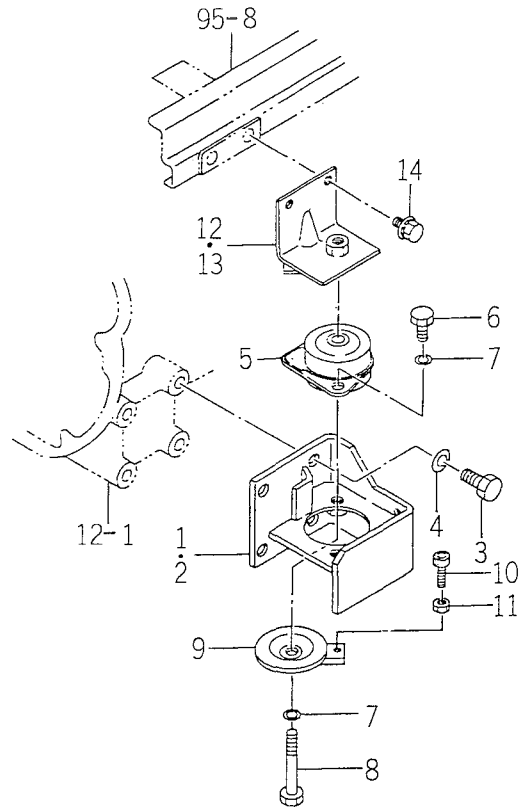

1560-625A

KEY	PART CODE	DESCRIPTION	QTY	TYPE OF MODEL TK529	TYPE OF MODEL TK533	ITC	COL	GRP	REMARKS
1	1560 - 625 - 260 - 10	BRACKET F LH COMP	1	*	*				
2	1560 - 625 - 270 - 10	BRACKET F RH COMP	1	*	*				
3	V201 - 261 - 403 - 00	BOLT/M14X30	8	*	*				
4	V401 - 160 - 014 - 00	WASHER,SP/M14	8	*	*				
5	1560 - 625 - 011 - 00	INSULATOR	2	*	*				
6	V201 - 361 - 202 - 50	BOLT/M12X25	4	*	*				
7	V401 - 160 - 012 - 00	WASHER,SP/M12	6	*	*				
8	V201 - 361 - 208 - 00	BOLT/M12X80	2	*	*				
9	1560 - 625 - 300 - 00	WASHER COMP	2	*	*				
10	1560 - 630 - 024 - 00	INSULATOR	2	*	*				
11	V304 - 260 - 008 - 00	NUT/M 8	2	*	*				
12	1560 - 625 - 280 - 10	PLATE LH COMP	1	*	*				
13	1560 - 625 - 290 - 10	PLATE RH COMP	1	*	*				
14	V211 - 661 - 002 - 00	BOLT/M10X20	4	*	*				

FIG. 94 REAR MOUNT SYSTEM

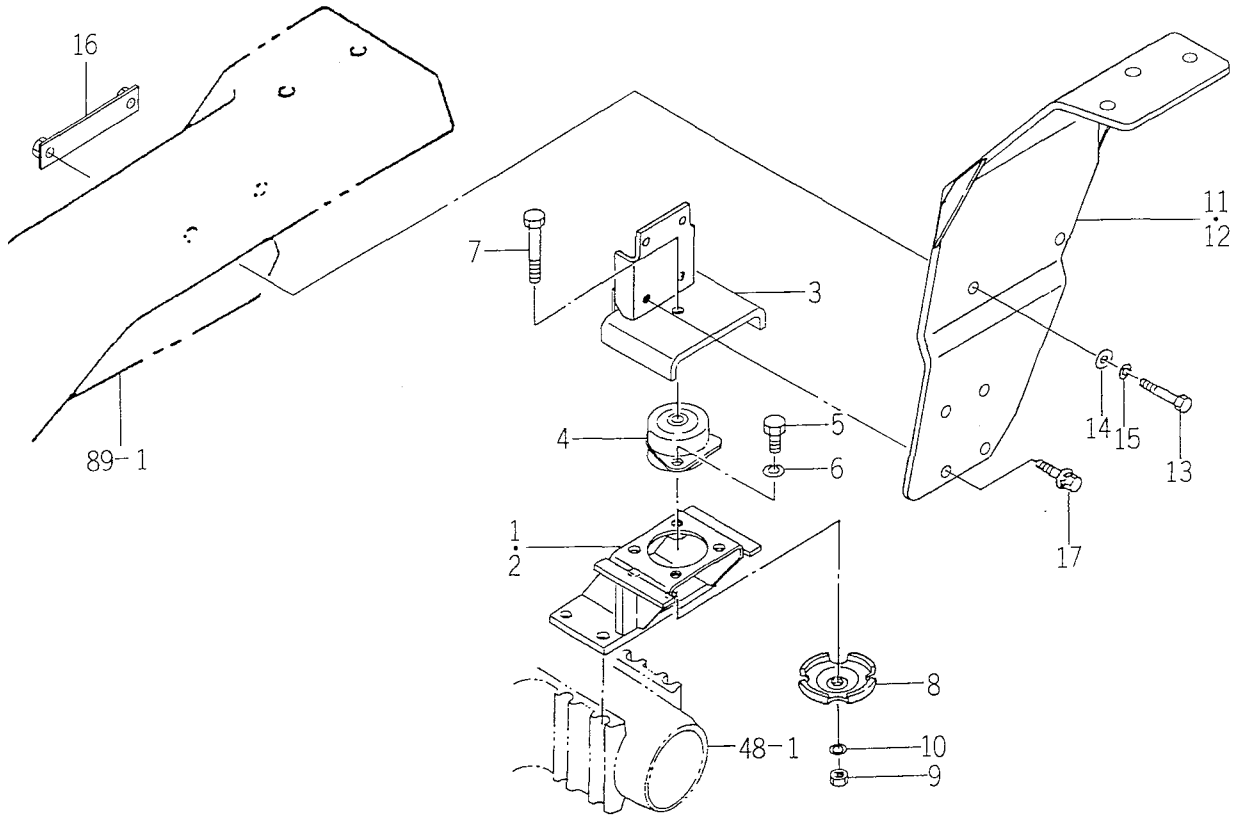

1673-626

KEY	PART CODE	DESCRIPTION	QTY	TYPE OF MODEL TK529	TYPE OF MODEL TK533	ITC	COL	GRP	REMARKS
1	1673 - 626 - 240 - 10	BRACKET/MOUNT COMP	1	*	*				
2	1673 - 626 - 250 - 10	BRACKET/MOUNT COMP	1	*	*				
3	1673 - 626 - 200 - 10	BRACKET/REAR COMP	2	*	*				
4	1560 - 625 - 011 - 00	INSULATOR	2	*	*				
5	V201 - 361 - 202 - 50	BOLT/M12X25	4	*	*				
6	V401 - 160 - 012 - 00	WASHER,SP/M12	4	*	*				
7	V201 - 361 - 208 - 00	BOLT/M12X80	2	*	*				
8	1673 - 626 - 002 - 00	WASHER	2	*	*				
9	V304 - 460 - 012 - 00	NUT/M12	2	*	*				
10	V401 - 160 - 012 - 00	WASHER,SP/M12	2	*	*				
11	1673 - 626 - 220 - 30	FENDER/SUB/LH COMP	1	*	*		4G		
12	1673 - 626 - 230 - 30	FENDER/SUB/RH COMP	1	*	*		4G		
13	V201 - 361 - 005 - 50	BOLT	4	*	*				
14	V411 - 260 - 010 - 00	WASHER/M10	4	*	*				
15	V401 - 160 - 010 - 00	WASHER,SP/M10	4	*	*				
16	1673 - 626 - 260 - 00	PLATE COMP	2	*	*				
17	V211 - 661 - 003 - 50	BOLT/SP	8	*	*				

FIG. 95 FLOOR SYSTEM

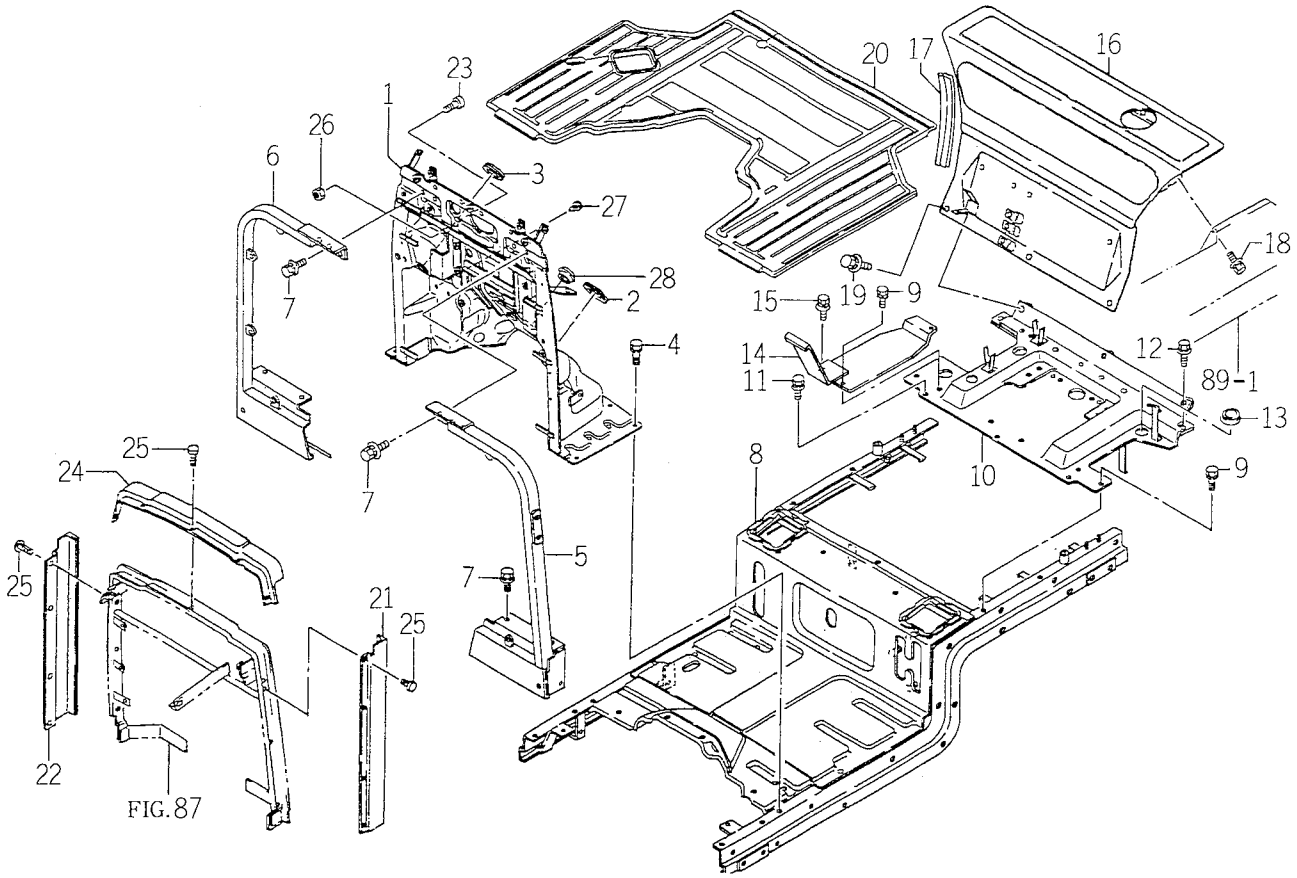

1674-630T

KEY	PART CODE	DESCRIPTION	QTY	TYPE OF MODEL TK529	TYPE OF MODEL TK533	ITC	COL	GRP	REMARKS
1	1673 - 630 - 200 - 20	PANEL/DASH COMP	1	*	*		5I		
2	1560 - 630 - 020 - 50	INSULATOR	1	*	*				
3	1560 - 630 - 021 - 50	INSULATOR	1	*	*				
4	V211 - 260 - 802 - 00	BOLT,SEMS (S)	10	*	*				
5	1673 - 630 - 210 - 00	FRAME/LH COMP	1	*	*				
6	1673 - 630 - 220 - 00	FRAME/RH COMP	1	*	*				
7	V211 - 360 - 801 - 60	BOLT,SEMS (SP)	10	*	*				
8	1560 - 630 - 360 - 50	PANEL/FLOOR COMP	1	*	*		5I		
9	V211 - 260 - 801 - 60	BOLT,SEMS (S) M8X16	4	*	*				
10	1560 - 630 - 370 - 30	PANEL/BACK COMP	1	*	*		7F		
11	V211 - 360 - 801 - 60	BOLT,SEMS (SP)	7	*	*				
12	V211 - 360 - 803 - 50	BOLT W SEMS M8X35	2	*	*				
13	1560 - 630 - 028 - 00	CAP/30	1	*	*				
14	1674 - 630 - 200 - 00	PLATE COMP	1	*	*				
15	V211 - 360 - 801 - 60	BOLT,SEMS (SP)	2	*	*				
16	1561 - 630 - 200 - 20	COVER/TANK COMP	1	*	*		4G		
17	1674 - 630 - 005 - 00	INSULATOR	2	*	*				
18	V211 - 660 - 801 - 60	BOLT/M8X16	4	*	*				
19	V211 - 360 - 801 - 60	BOLT,SEMS (SP)	3	*	*				
20	1560 - 630 - 027 - 20	MAT	1	*	*				
21	1594 - 630 - 001 - 20	INSULATOR/LH	1	*	*				
22	1594 - 630 - 002 - 20	INSULATOR/RH	1	*	*				
23	1421 - 602 - 005 - 10	CUSHION,B/ RUBBER	2	*	*				
24	1560 - 630 - 009 - 50	INSULATOR	1	*	*				
25	1527 - 604 - 002 - 00	CLIP (B)	13	*	*				

FIG. 95 FLOOR SYSTEM

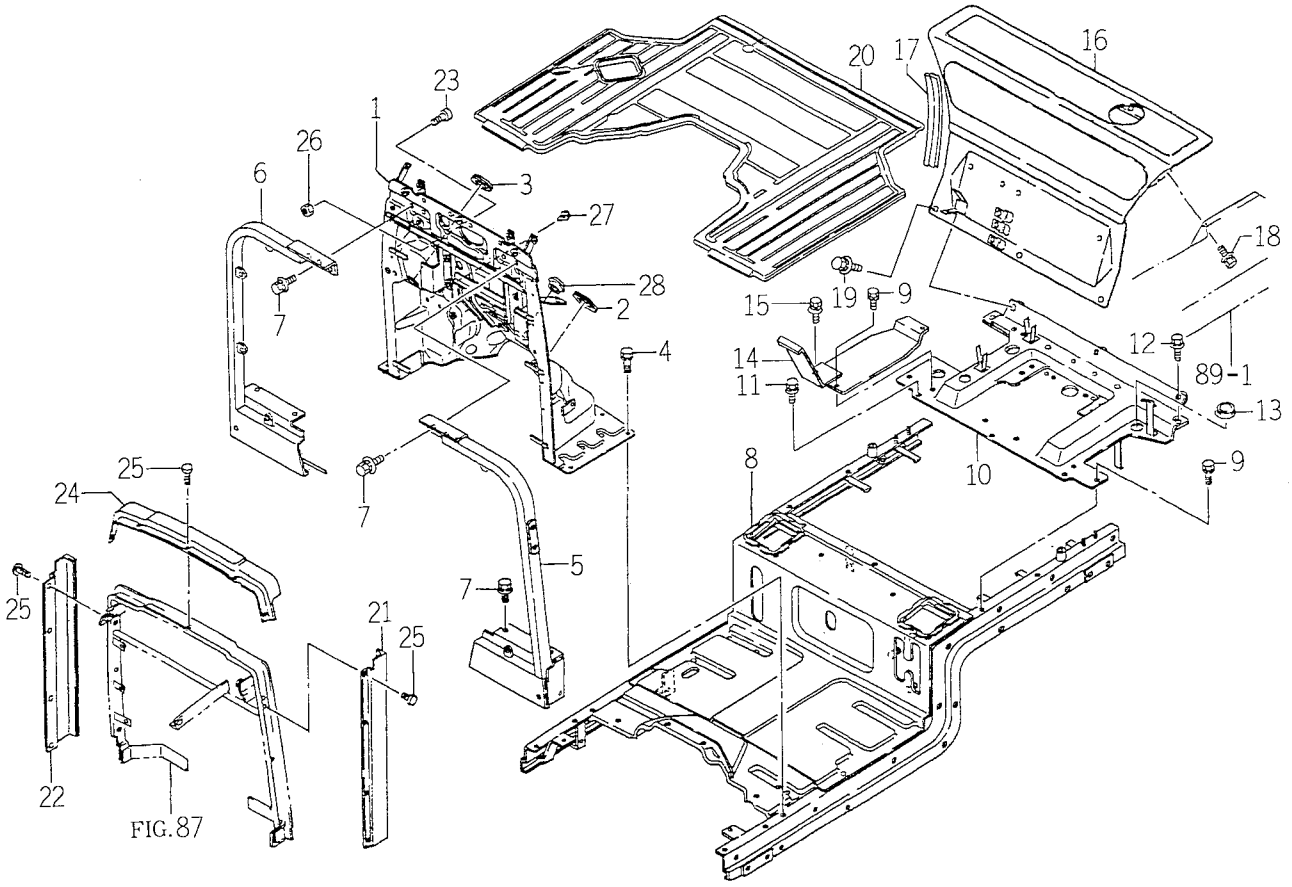

1674-636T

KEY	PART CODE	DESCRIPTION	QTY	TYPE OF MODEL TK529	TYPE OF MODEL TK533	ITC	COL	GRP	REMARKS
26	V304 - 260 - 008 - 00	NUT/M 8	2	*	*				
27	1432 - 616 - 002 - 00	RUBBER,CUSHION	3	*	*				
28	1560 - 630 - 029 - 00	CAP/30	2	*	*				

FIG. 96 FOOT COVER SYSTEM

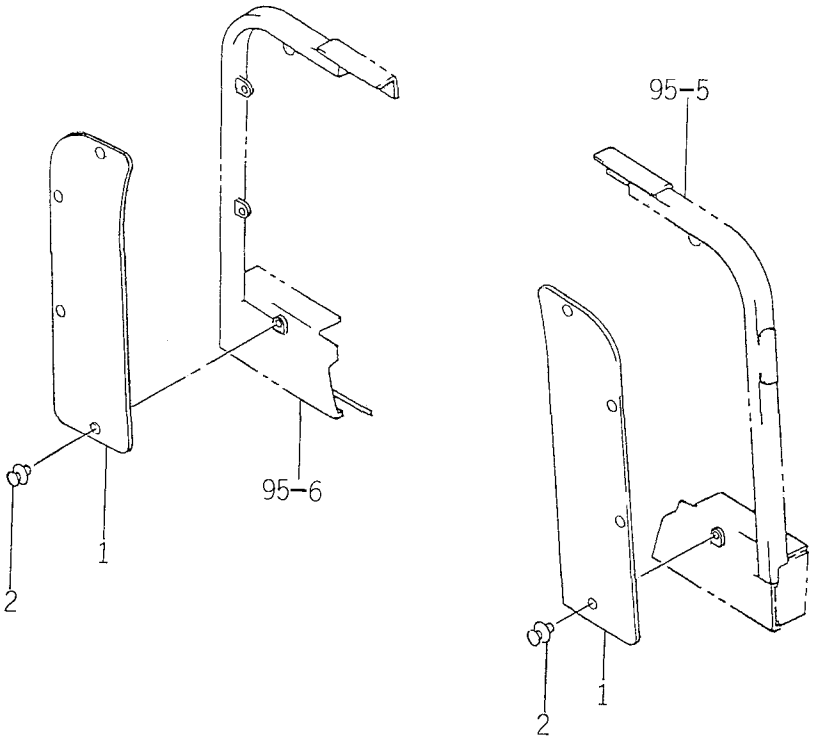

1560-631

KEY	PART CODE	DESCRIPTION	QTY	TYPE OF MODEL TK529	TYPE OF MODEL TK533	ITC	COL	GRP	REMARKS
1	1560 - 630 - 011 - 20	INSULATOR	2	*	*				
2	1560 - 630 - 012 - 00	RIVET	8	*	*				

FIG. 97 BATTERY SYSTEM

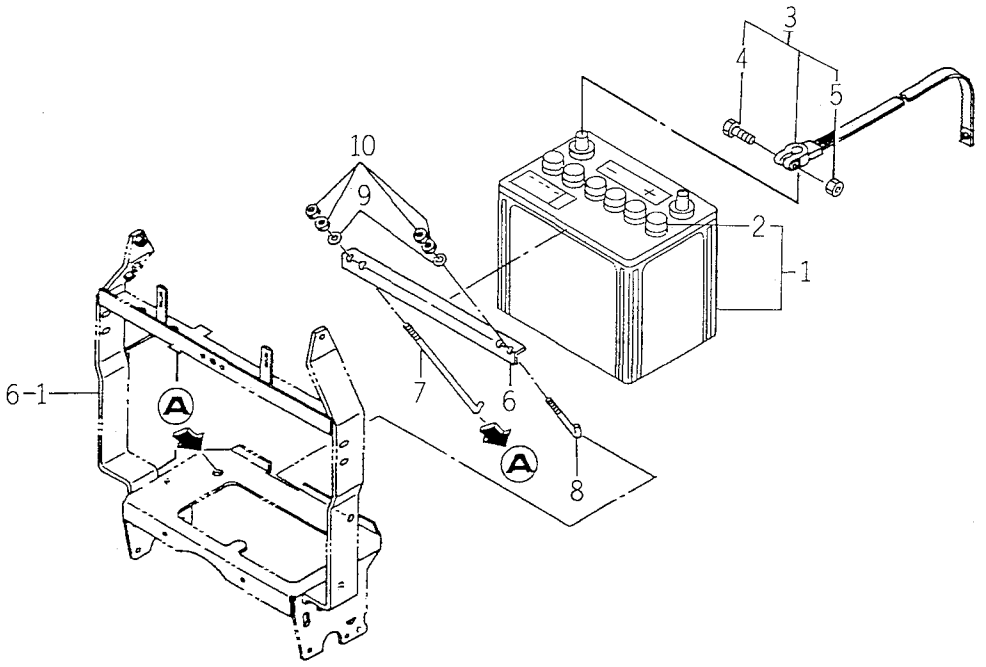

1560-650B

KEY	PART CODE	DESCRIPTION	QTY	TYPE OF MODEL TK529	TYPE OF MODEL TK533	ITC	COL	GRP	REMARKS
1	1659 - 650 - 200 - 00	BATTERY/80D26R - MF	1	*	*				YU80 - D26 - RMF - 00
2	1617 - 112 - 213 - 00	CAP	6	*	*				
3	1634 - 650 - 200 - 00	STRAP/GROUND ASSY	1	*	*				
4	1568 - 650 - 004 - 10	BOLT/M08X32	1	*	*				
5	1568 - 650 - 005 - 10	NUT/M08	1	*	*				
6	1422 - 687 - 001 - 00	PLATE,BATTERY SET	1	*	*				
7	1444 - 621 - 002 - 10	BOLT,BATTERY SET	1	*	*				
8	1427 - 621 - 004 - 00	BOLT,BATTERY SET (B)	1	*	*				
9	V411 - 260 - 006 - 00	WASHER / M6	2	*	*				
10	V301 - 260 - 006 - 00	NUT/M 6	4	*	*				

FIG. 98 HEAD LAMP SYSTEM

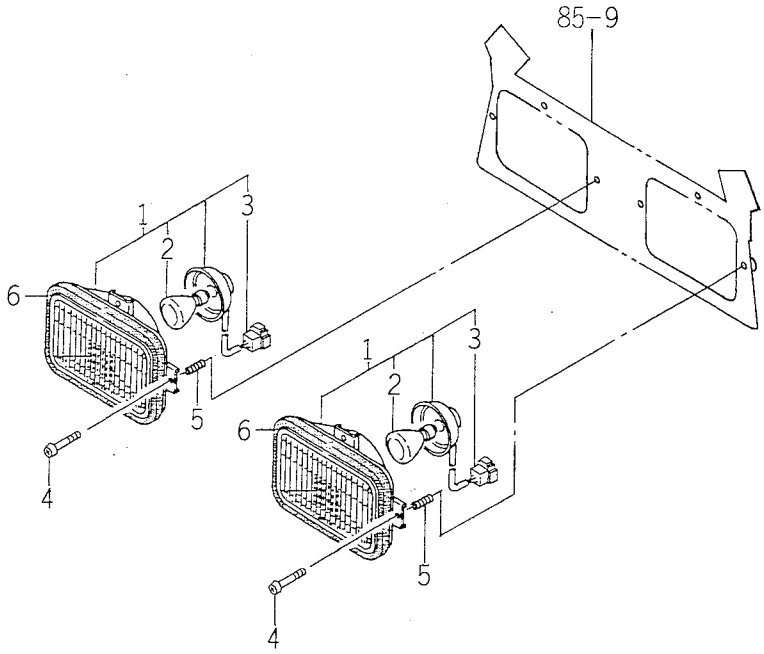

1673-652

KEY	PART CODE	DESCRIPTION	QTY	TYPE OF MODEL TK529	TYPE OF MODEL TK533	ITC	COL	GRP	REMARKS
1	1560 - 652 - 200 - 00	LAMP,HEAD ASSY	2	*	*				
2	1488 - 621 - 272 - 00	BULB/12V 45/45W	2	*	*				
3	1560 - 652 - 202 - 00	HARNESS COMP	2	*	*				
4	V111 - 166 - 003 - 00	SCREW/M6X30	6	*	*				
5	1421 - 507 - 015 - 00	SPRING,PRESS/26	6	*	*				
6	1560 - 601 - 015 - 40	SEAL	2	*	*				

FIG. 99 LAMP SYSTEM

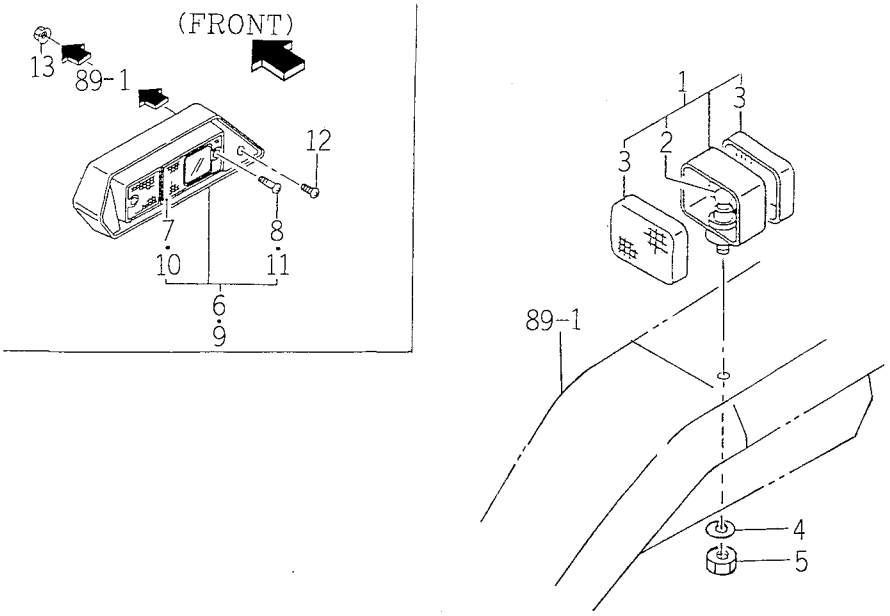

1560-654

KEY	PART CODE	DESCRIPTION	QTY	TYPE OF MODEL TK529	TYPE OF MODEL TK533	ITC	COL	GRP	REMARKS
1	1444 - 621 - 240 - 00	LAMP,TURNSIGNAL ASSY	2	*	*				
2	1444 - 621 - 242 - 00	BULB/12V 20W	2	*	*				
3	1444 - 621 - 243 - 00	LENS	4	*	*				
4	V401 - 160 - 010 - 00	WASHER,SP/M10	2	*	*				
5	V334 - 260 - 010 - 00	NUT/M10	2	*	*				
6	1560 - 654 - 220 - 30	REFLECTOR/L SET	1	*	*				
7	1560 - 654 - 210 - 40	RIFRECTOR	1	*	*				
8	V111 - 165 - 005 - 50	SCREW	2	*	*				
9	1560 - 654 - 230 - 30	REFLECTOR/R SET	1	*	*				
10	1560 - 654 - 210 - 40	RIFRECTOR	1	*	*				
11	V111 - 165 - 005 - 50	SCREW	2	*	*				
12	V111 - 165 - 001 - 20	SCREW/M5X12	2	*	*				
13	V360 - 260 - 005 - 00	NUT/M5	6	*	*				

FIG.100 PANEL SYSTEM

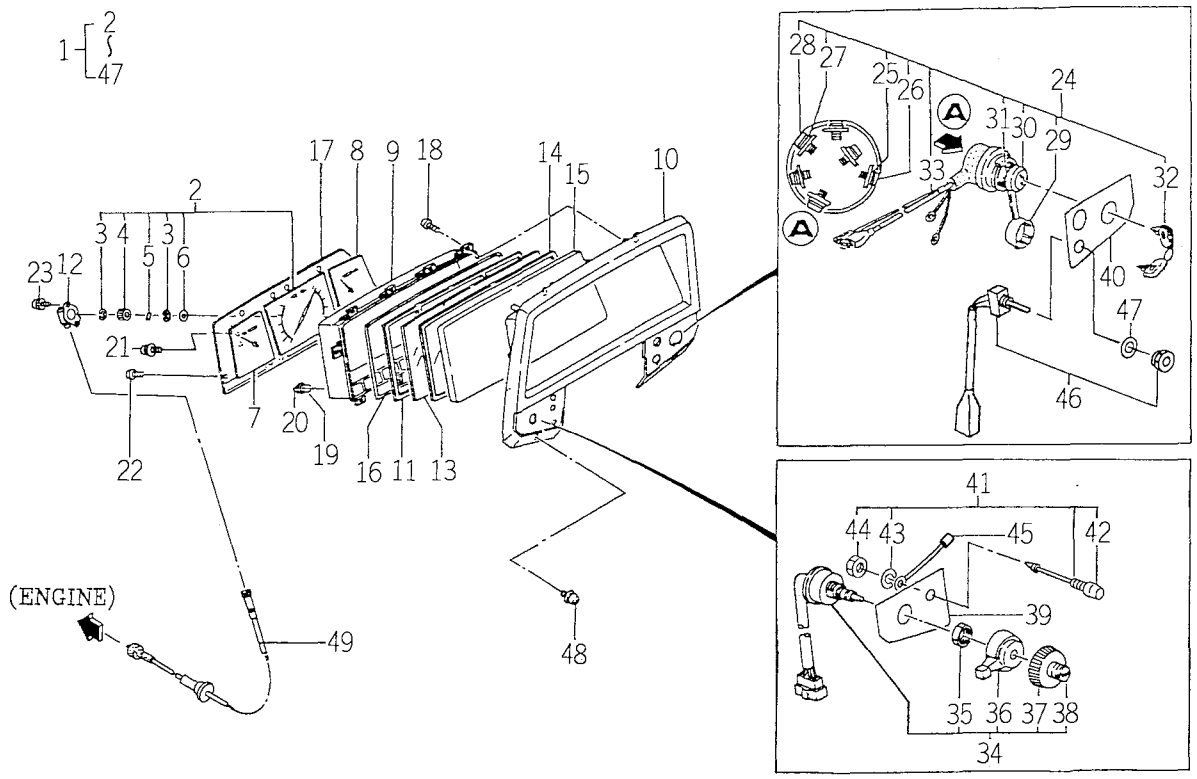

1674-658T

KEY	PART CODE	DESCRIPTION	QTY	TYPE OF MODEL TK529	TYPE OF MODEL TK533	ITC	COL	GRP	REMARKS
1	1674 - 658 - 520 - 00	PANEL/INSTRUMEN SET	1	*	*				
2	1673 - 658 - 211 - 20	METER/TACHO ASSY	1	*	*				
3	1640 - 658 - 322 - 00	RING/E	2	*	*				
4	1673 - 658 - 214 - 00	GEAR	1	*	*				
5	1640 - 658 - 324 - 00	PIN	1	*	*				
6	1640 - 658 - 325 - 00	WASHER	1	*	*				
7	1650 - 652 - 212 - 00	META/FUEL ASSY	1	*	*				
8	1650 - 652 - 561 - 00	METER/TEMP	1	*	*				
9	1650 - 652 - 215 - 00	CASE ASSY	1	*	*				
10	1673 - 658 - 212 - 00	VISOR	1	*	*				
11	1560 - 658 - 250 - 40	ESCUTCHEON	1	*	*				
12	1650 - 652 - 218 - 00	HOUSING/GEARBOX ASSY	1	*	*				
13	1518 - 621 - 208 - 00	GLASS	1	*	*				
14	1518 - 621 - 209 - 00	PACKING (A)	1	*	*				
15	1518 - 621 - 211 - 00	CASE,GLASS	1	*	*				
16	1518 - 621 - 214 - 00	PACKING (B)	1	*	*				
17	1561 - 660 - 412 - 00	BOARD	1	*	*				
18	V195 - 164 - 012 - 40	BOLT/M4X12	10	*	*				
19	3650 - 270 - 214 - 00	BULB	13	*	*				
20	1560 - 658 - 282 - 40	SOCKET	13	*	*				
21	1560 - 658 - 202 - 00	SCREW	6	*	*				
22	V195 - 163 - 008 - 30	PIN 3/3X08	3	*	*				
23	V120 - 264 - 001 - 00	SCREW/S	2	*	*				
24	1560 - 658 - 310 - 30	SWITCH SET	1	*	*				
25	V411 - 260 - 004 - 00	WASHER,PL/M4	3	*	*				

FIG.100 PANEL SYSEM

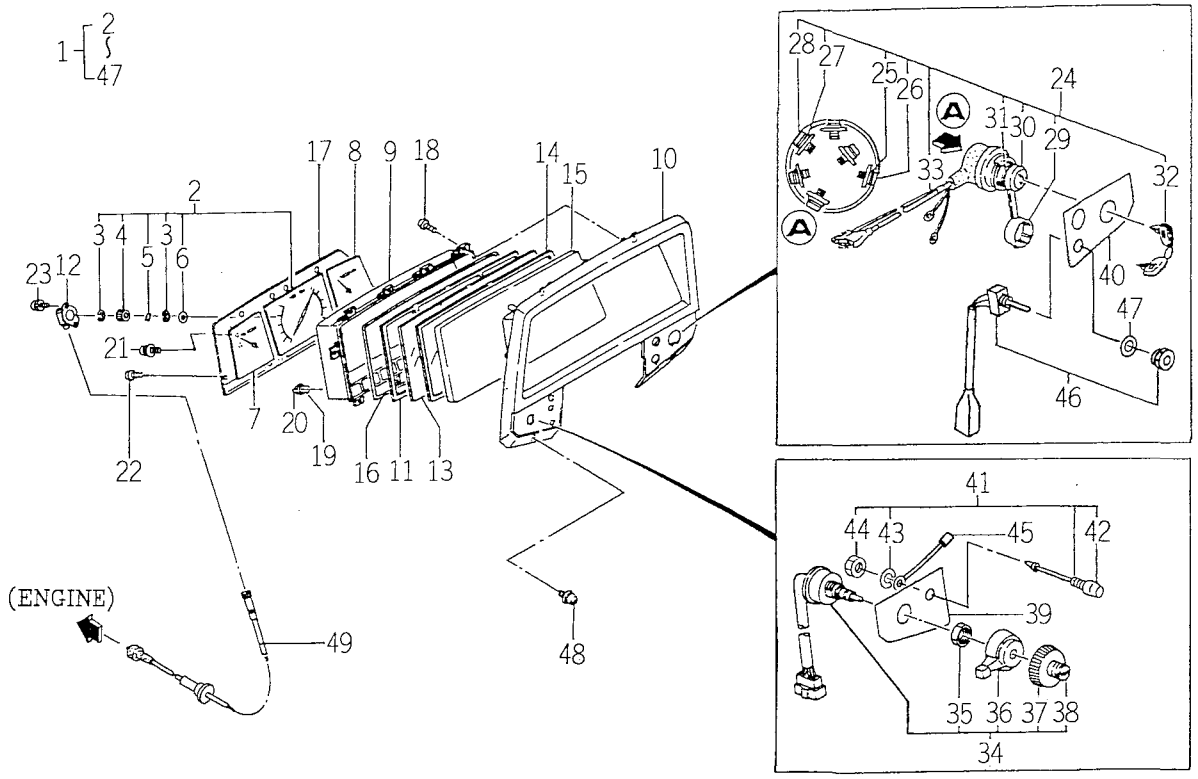

1674-658T

KEY	PART CODE	DESCRIPTION	QTY	TYPE OF MODEL TK529	TYPE OF MODEL TK533	ITC	COL	GRP	REMARKS
26	V120 - 264 - 000 - 80	SCREW,PLUS/M4X8	3	*	*				
27	V411 - 260 - 005 - 00	WASHER,PL/M 5	3	*	*				
28	V120 - 265 - 001 - 00	SCREW,PLUS/M5X0.8X8	3	*	*				
29	1444 - 621 - 311 - 00	CAP	1	*	*				
30	1444 - 621 - 312 - 00	NUT,RING/M28X1.0	1	*	*				
31	1444 - 621 - 313 - 00	WASHER	1	*	*				
32	1444 - 621 - 320 - 00	KEY ASSY	1	*	*				
33	1560 - 658 - 203 - 50	HARNESS ASSY	1	*	*				
34	1544 - 623 - 001 - 00	SWITCH ASSY	1	*	*				
35	1544 - 623 - 232 - 00	NUT/M22	1	*	*				
36	1544 - 623 - 233 - 00	LEVER	1	*	*				
37	1544 - 623 - 234 - 00	KNOB	1	*	*				
38	1544 - 623 - 235 - 00	BOOT/HORN	1	*	*				
39	1560 - 658 - 401 - 00	LABEL/CONTROL,VISOR	1	*	*				
40	1674 - 658 - 501 - 00	LABEL/CONTROL/VISOR	1	*	*				
41	1566 - 658 - 620 - 00	SWITCH/CHECKER ASSY	1	*	*				
42	2145 - 542 - 232 - 10	BOOT	1	*	*				
43	V401 - 160 - 008 - 00	WASHER,SP/M 8	1	*	*				
44	V335 - 260 - 008 - 00	NUT	1	*	*				
45	1560 - 658 - 402 - 00	HARNESS	1	*	*				
46	1593 - 621 - 230 - 30	SWITCH,MOTOR RELAY	1	*	*				
47	1674 - 658 - 502 - 00	WASHER	1	*	*				
48	V120 - 366 - 001 - 60	SCREW	4	*	*				
49	1673 - 658 - 400 - 00	CABLE/METER ASSY	1	*	*				

FIG.101 SWITCH AND SENSOR SYSTEM

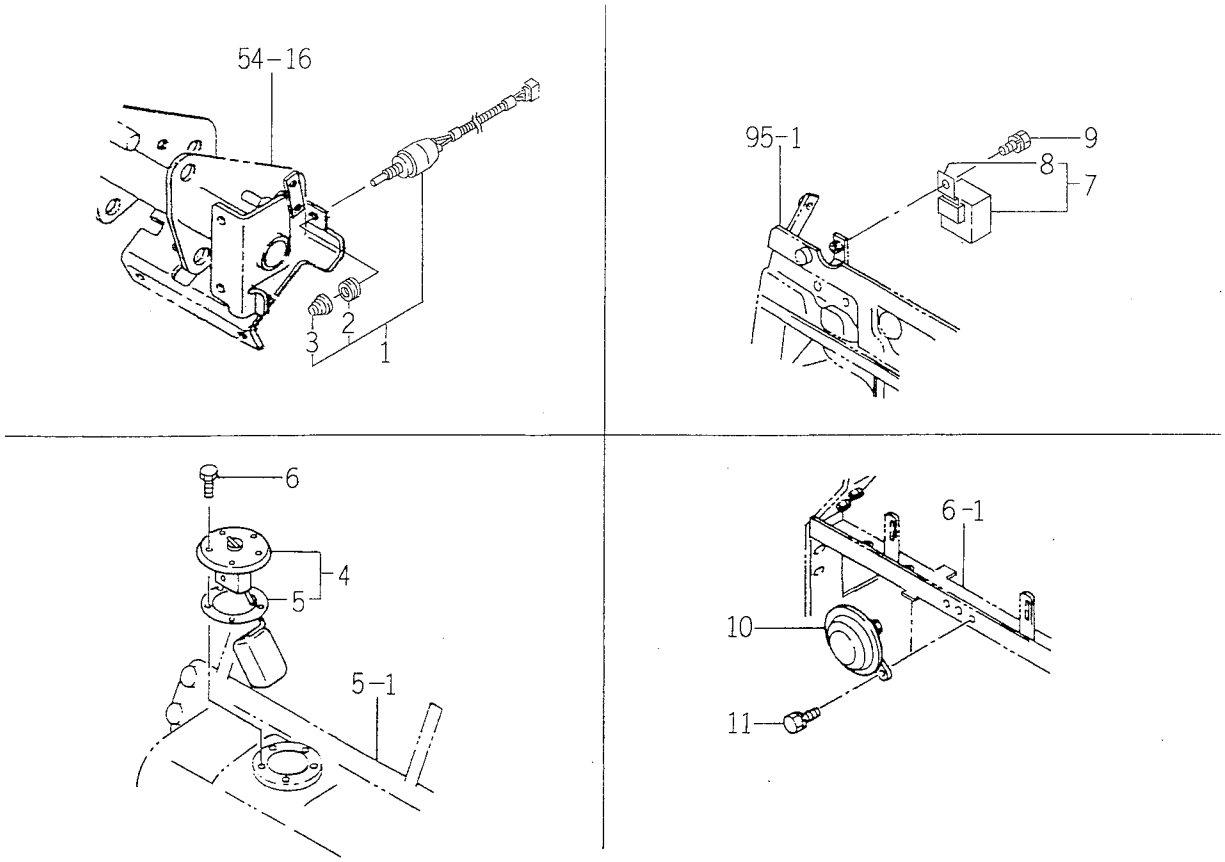

1673-664

KEY	PART CODE	DESCRIPTION	QTY	TYPE OF MODEL TK529	TYPE OF MODEL TK533	ITC	COL	GRP	REMARKS
1	1560 - 664 - 250 - 00	SWITCH/PUSH SET	1	*	*				
2	1560 - 664 - 252 - 00	NUT	1	*	*				
3	1560 - 664 - 253 - 00	BOOT	1	*	*				
4	1560 - 664 - 230 - 10	GAUGE ASSY	1	*	*				
5	1416 - 621 - 037 - 00	PACKING/RUBBER	1	*	*				
6	V200 - 260 - 501 - 0B	BOLT/SEAL	5	*	*				
7	1614 - 680 - 300 - 00	FLASHER ASSY	1	*	*				
8	1614 - 680 - 302 - 00	PLATE	1	*	*				
9	V210 - 260 - 601 - 60	BOLT,SEMS (S)	1	*	*				
10	1560 - 664 - 001 - 00	HORN	1	*	*				
11	V210 - 260 - 601 - 20	BOLT,SEMS	2	*	*				

FIG.102 SWITCH SYSTEM

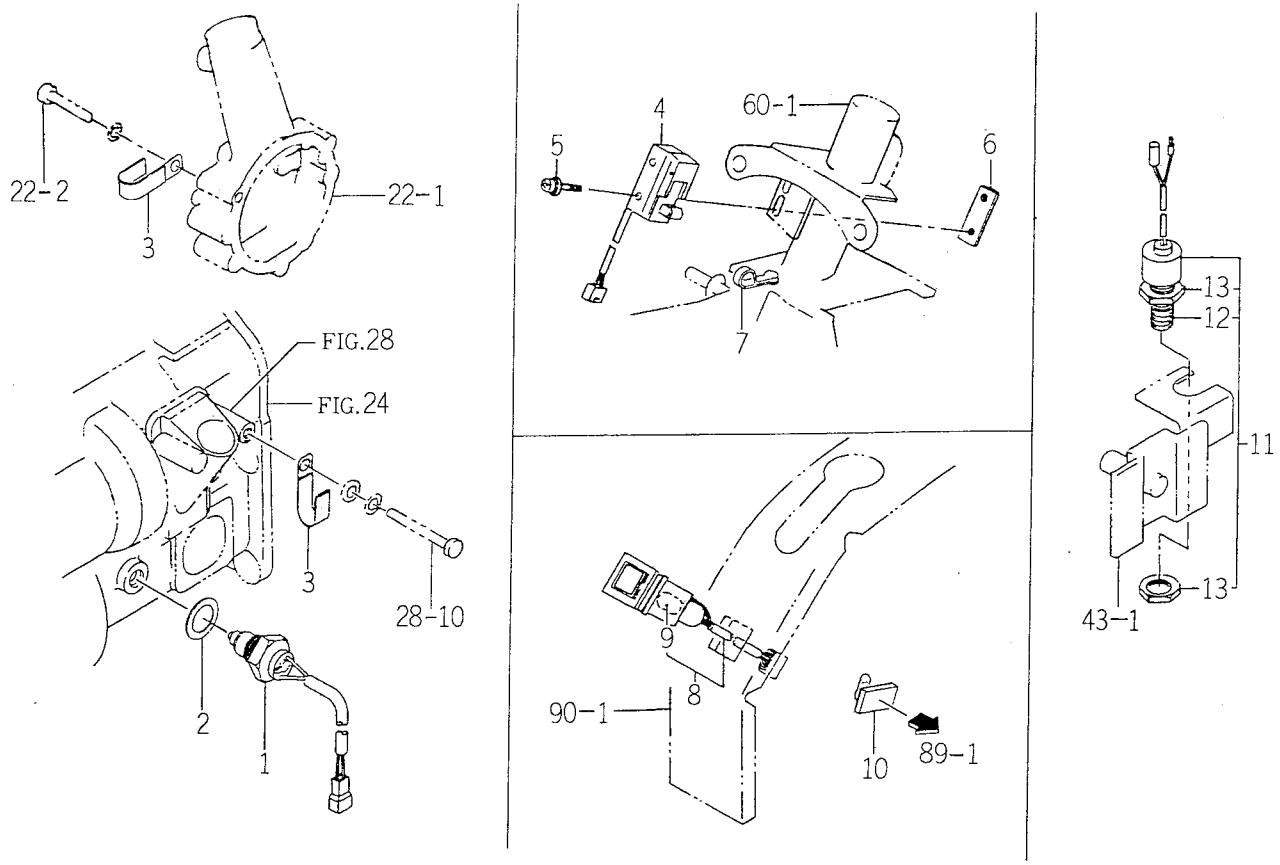

1673-664A

KEY	PART CODE	DESCRIPTION	QTY	TYPE OF MODEL TK529	TYPE OF MODEL TK533	ITC	COL	GRP	REMARKS
1	1564 - 667 - 220 - 00	SWITCH/PUSH ASSY	1	*	*				
2	1518 - 621 - 007 - 00	WASHER/23X35X2	1	*	*				
3	1425 - 621 - 004 - 00	CLAMP,HARNESS	2	*	*				
4	1560 - 664 - 270 - 00	SWITCH/LIMIT ASSY	1	*	*				
5	V120 - 364 - 003 - 00	SCREW/M4X30	2	*	*				
6	3656 - 271 - 001 - 00	PLATE/I,13X40	1	*	*				
7	1444 - 621 - 008 - 00	CLAMP	1	*	*				
8	2144 - 542 - 250 - 00	SWITCH ASSY	1	*	*				
9	3650 - 270 - 214 - 00	BULB	1	*	*				
10	1426 - 621 - 038 - 00	CLAMP,HARNESS	1	*	*				
11	1575 - 623 - 250 - 00	SWITCH/PUSH ASSY	1	*	*				
12	1491 - 623 - 223 - 00	BOOT	1	*	*				
13	1491 - 623 - 222 - 00	NUT/M20	2	*	*				

FIG.103 HARNESS SYSTEM

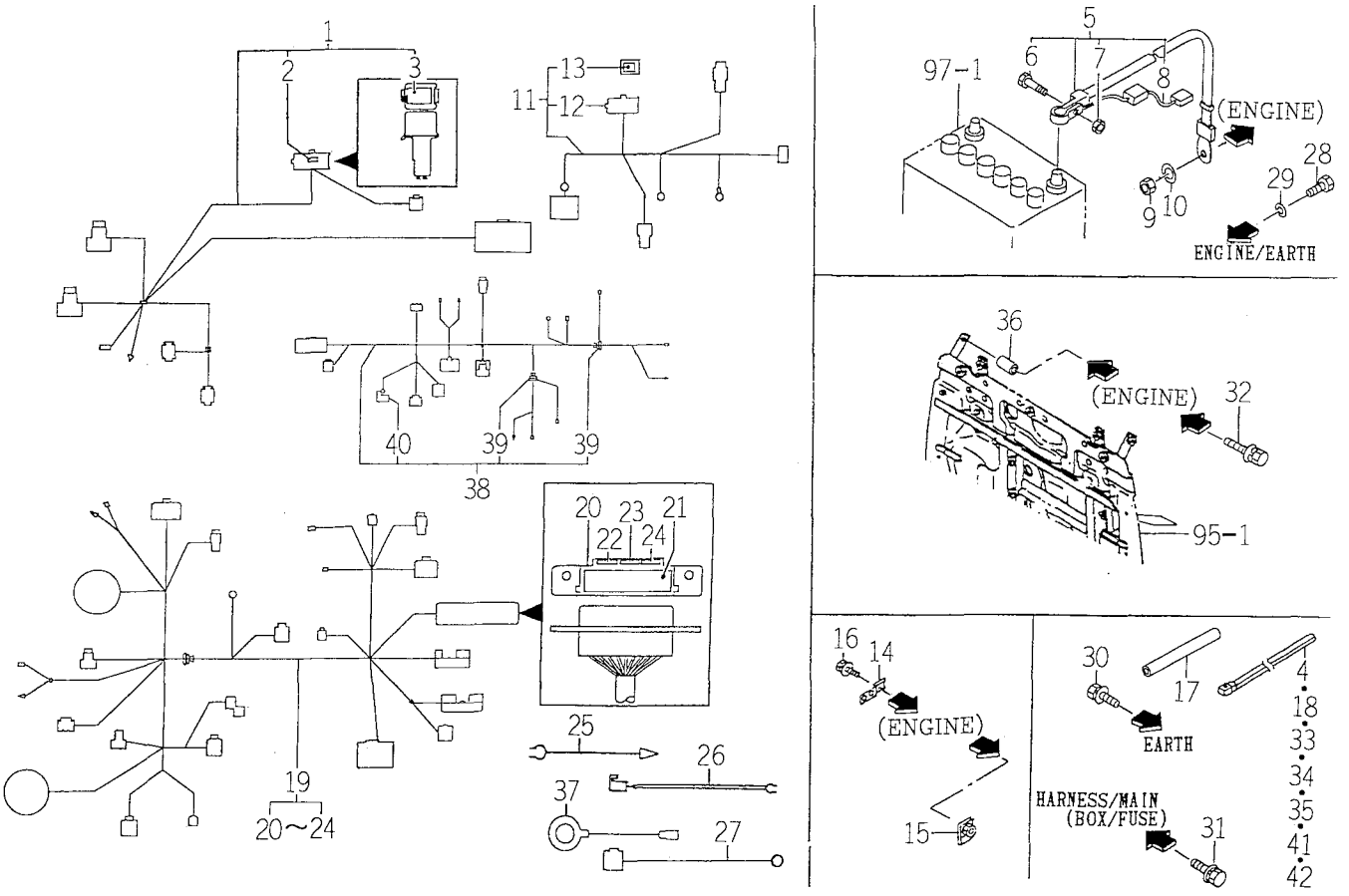

1674-666T

KEY	PART CODE	DESCRIPTION	QTY	TYPE OF MODEL TK529	TYPE OF MODEL TK533	ITC	COL	GRP	REMARKS
1	1673 - 666 - 200 - 00	HARNESS/ENGINE/ ASSY	1	*	*				
2	1650 - 650 - 222 - 00	FUSE/SLOWBLOW	1	*	*				
3	1650 - 650 - 223 - 10	LABEL/SLOWBLOW/MAIN	1	*	*				
4	1376 - 402 - 003 - 00	BAND,WIRE/140	1	*	*				
5	1673 - 666 - 250 - 00	CABLE/BATTERY ASSY	1	*	*				
6	1568 - 650 - 004 - 10	BOLT/M08X32	1	*	*				
7	1568 - 650 - 005 - 10	NUT/M08	1	*	*				
8	1673 - 666 - 252 - 00	HARNESS/BATTERY	1	*	*				
9	V304 - 260 - 008 - 00	NUT/M 8	1	*	*				
10	V401 - 160 - 008 - 00	WASHER,SP/M 8	1	*	*				
11	1674 - 666 - 290 - 00	HARNESS/ENGINE/LH	1	*	*				
12	1650 - 650 - 243 - 00	FUSE/SLOWBLOW	1	*	*				
13	1650 - 652 - 252 - 10	LABEL/SLOW BLOW/ALTE	1	*	*				
14	1650 - 102 - 219 - 00	PLATE	1	*	*				
15	1560 - 603 - 003 - 00	NUT/M6	1	*	*				
16	V210 - 360 - 601 - 60	BOLT (SP) /M6X16	1	*	*				
17	1650 - 650 - 017 - 00	TUBE/120	1	*	*				
18	1376 - 402 - 003 - 00	BAND,WIRE/140	2	*	*				
19	1674 - 666 - 500 - 00	HARNESS/MAIN/E1 ASSY	1	*	*				
20	1650 - 650 - 246 - 00	COVER/FUSE	1	*	*				
21	1673 - 666 - 221 - 00	LABEL/FUSE/MAIN	1	*	*				
22	1560 - 664 - 264 - 00	FUSE,BLADE	3	*	*				
23	1575 - 623 - 010 - 00	FUSE/32V10A	7	*	*				
24	1575 - 623 - 011 - 00	FUSE/15A	2	*	*				
25	1600 - 624 - 004 - 00	HARNESS,OIL PRESSURE	1	*	*				

FIG.103 HARNESS SYSTEM

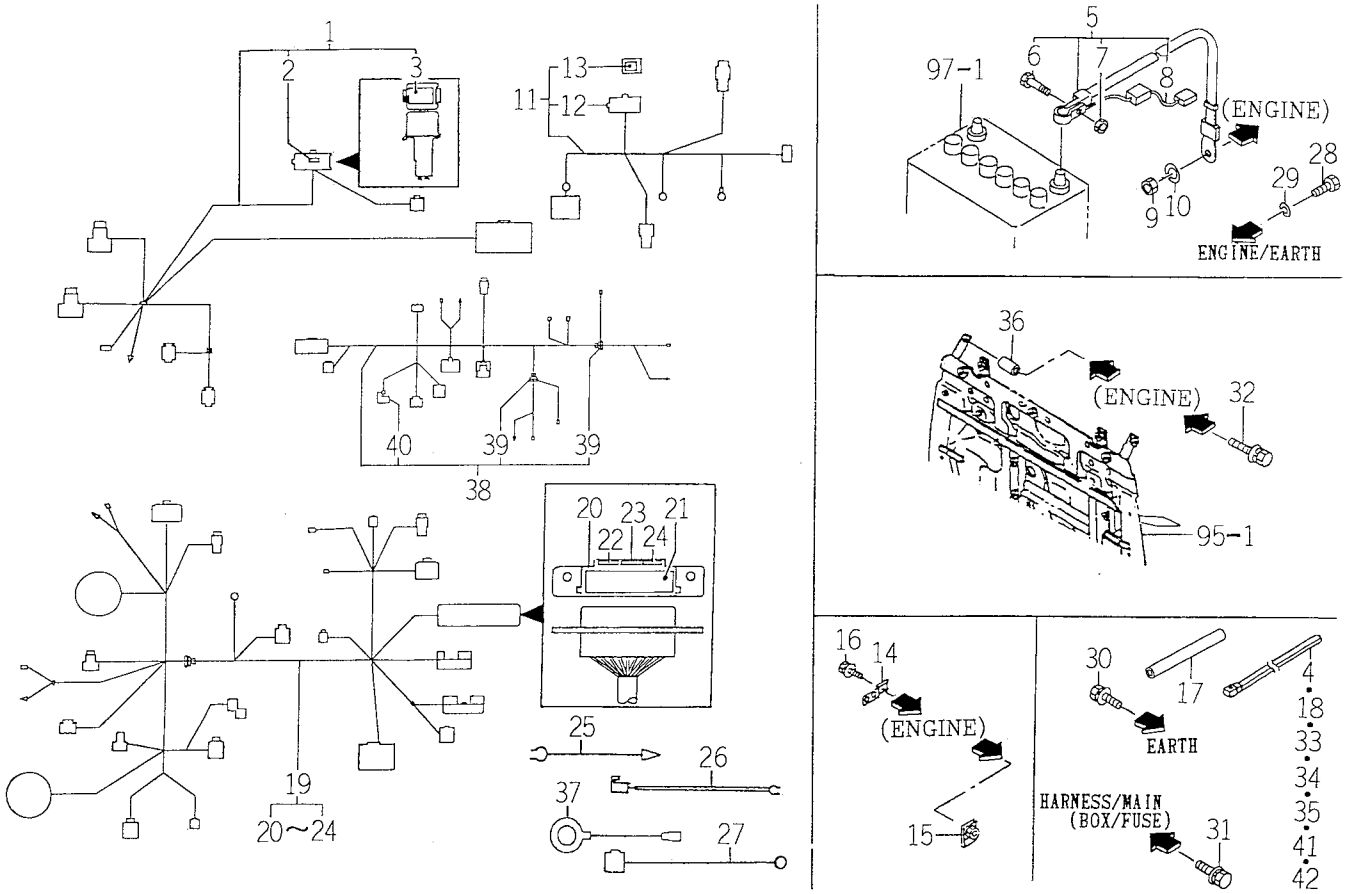

1674-666T

KEY	PART CODE	DESCRIPTION	QTY	TYPE OF MODEL TK529	TYPE OF MODEL TK533	ITC	COL	GRP	REMARKS
26	1568 - 668 - 203 - 00	HARNESS,GLOW	1	*	*				
27	1650 - 652 - 254 - 00	HARNESS/ENGINE/EARTH	1	*	*				
28	V201 - 260 - 801 - 20	BOLT/M 8X12	1	*	*				
29	V401 - 160 - 008 - 00	WASHER,SP/M 8	1	*	*				
30	V211 - 360 - 801 - 60	BOLT,SEMS (SP)	1	*	*				
31	V210 - 360 - 602 - 50	BOLT/SP	2	*	*				
32	V210 - 360 - 603 - 50	BOLT/SP	1	*	*				
33	1342 - 402 - 006 - 00	BAND,WIRE/250	1	*	*				
34	1376 - 402 - 003 - 00	BAND,WIRE/140	1	*	*				
35	1376 - 402 - 003 - 00	BAND,WIRE/140	2	*	*				
36	3676 - 274 - 001 - 00	COLLAR/07X11X20	1	*	*				
37	1614 - 690 - 001 - 00	HARNESS/EARTH	2	*	*				
38	1673 - 666 - 280 - 00	HARNESS/REAR/K ASSY	1	*	*				
39	1560 - 666 - 010 - 00	GROMMET/30	2	*	*				
40	1560 - 666 - 212 - 00	DIODE	1	*	*				
41	1376 - 402 - 003 - 00	BAND,WIRE/140	4	*	*				
42	1342 - 402 - 006 - 00	BAND,WIRE/250	1	*	*				

FIG.104 ELC. SYSTEM (1/5)

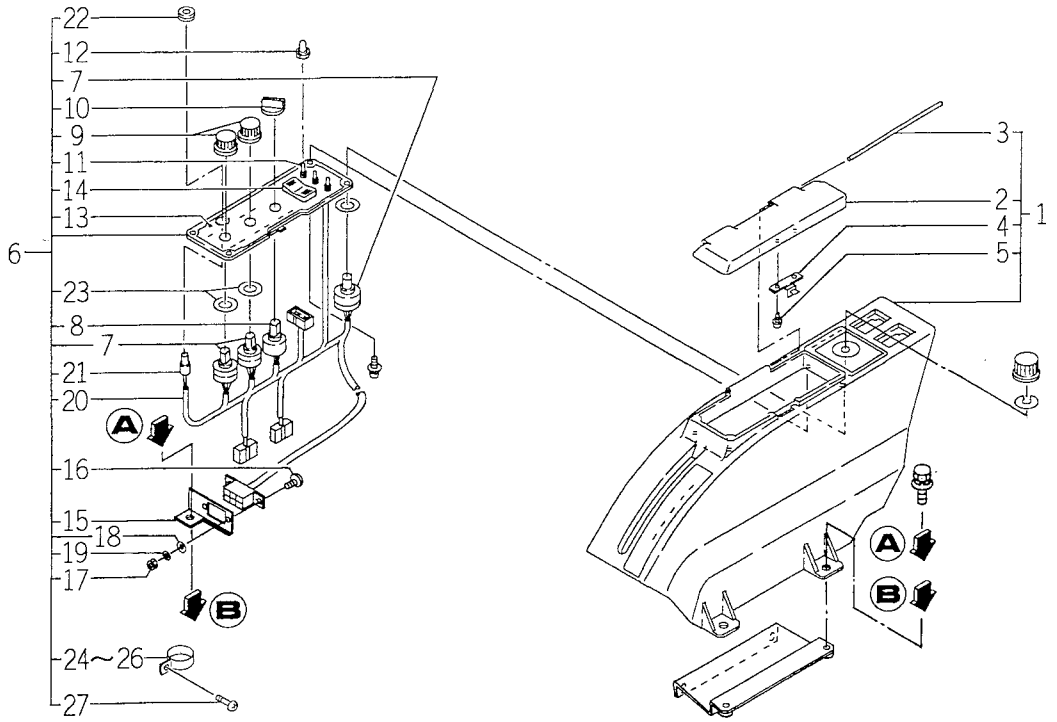

1674-690T

KEY	PART CODE	DESCRIPTION	QTY	TYPE OF MODEL TK529	TYPE OF MODEL TK533	ITC	COL	GRP	REMARKS
1	1674 - 695 - 210 - 00	PANEL/WX ASSY	1	*	*				
2	1650 - 608 - 502 - 10	COVER/WX	1	*	*				
3	1650 - 608 - 503 - 00	BAR/04X144	1	*	*				
4	1614 - 695 - 703 - 00	COVER/CONTROL/LOCK	1	*	*				
5	V195 - 164 - 012 - 30	SCREW/TAPPING	2	*	*				
6	1650 - 608 - 560 - 20	PANEL/SWITCH ASSY	1	*	*				
7	1575 - 651 - 465 - 00	SWITCH/ROTARY/SMALL	3	*	*				
8	1575 - 651 - 464 - 00	SWITCH/ROTARY	1	*	*				
9	1588 - 651 - 205 - 00	KNOB	2	*	*				
10	3650 - 218 - 002 - 00	KNOB,LOCK	1	*	*				
11	1575 - 651 - 466 - 00	SWITCH/TOGGLE	3	*	*				
12	1614 - 695 - 003 - 00	CAP/SWITCH	3	*	*				
13	1650 - 608 - 561 - 10	LABEL/CONTROL	1	*	*				
14	1650 - 608 - 580 - 00	SWITCH/SEESAW ASSY	1	*	*				
15	1650 - 608 - 562 - 00	HOLDER/PLATE	1	*	*				
16	V111 - 163 - 000 - 80	SCREW/M3X0.5X8	2	*	*				
17	V301 - 260 - 003 - 00	NUT	2	*	*				
18	V411 - 260 - 003 - 00	WASHER/M3	2	*	*				
19	V401 - 160 - 003 - 00	WASHER,SP/M 3	2	*	*				
20	1650 - 608 - 600 - 00	HARNESS/PANEL ASSY	1	*	*				
21	1675 - 695 - 003 - 00	SWITCH/VR ASSY	1	*	*				
22	1650 - 608 - 013 - 00	GROMMET	1	*	*				
23	1675 - 695 - 005 - 00	INSULATOR	2	*	*				
24	1650 - 608 - 014 - 00	CRAMP	1	*	*				
25	1650 - 608 - 015 - 00	CRAMP	2	*	*				

FIG.104 ELC. SYSTEM (2/5)

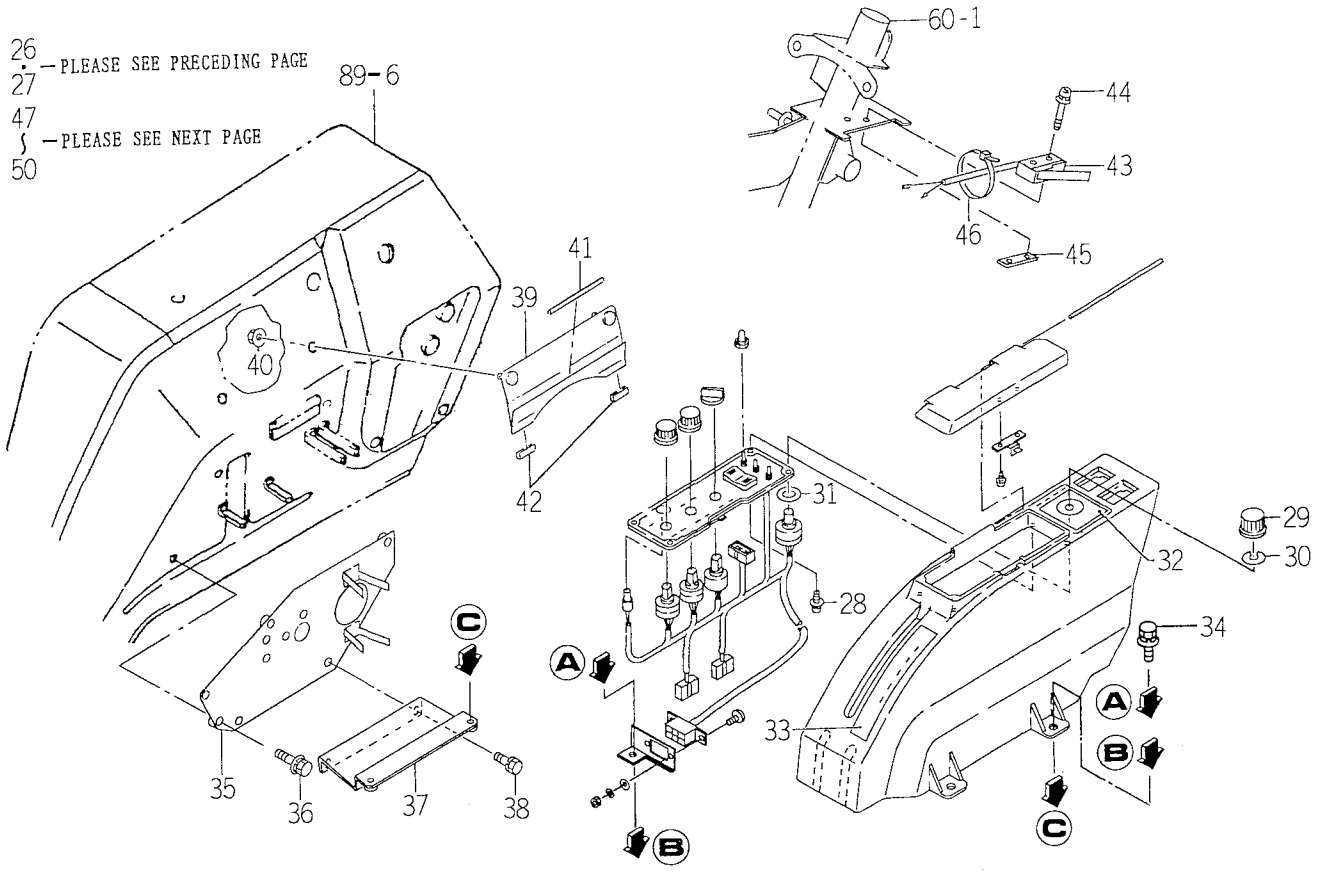

1674-890T

KEY	PART CODE	DESCRIPTION	QTY	TYPE OF MODEL TK529	TYPE OF MODEL TK533	ITC	COL	GRP	REMARKS
26	1650 - 608 - 016 - 00	CRAMP	1	*	*				
27	1650 - 608 - 017 - 00	SCREW/M04X06	4	*	*				
28	V120 - 364 - 001 - 00	SCREW/SP	4	*	*				
29	1588 - 651 - 204 - 00	KNOB	1	*	*				
30	3652 - 273 - 002 - 00	SORING	1	*	*				
31	1675 - 695 - 005 - 00	INSULATOR	1	*	*				
32	1650 - 608 - 223 - 00	LABEL/DEPTH	1	*	*				
33	1650 - 608 - 221 - 00	LABEL/POS	1	*	*				
34	V211 - 360 - 802 - 00	BOLT (SP) M8X20	2	*	*				
35	1674 - 695 - 280 - 00	BRACKET COMP	1	*	*				
36	V211 - 360 - 802 - 50	BOLT,SEMS	3	*	*				
37	1674 - 695 - 360 - 00	PLATE COMP	1	*	*				
38	V211 - 260 - 801 - 20	BOLT,SEMS (S) M8X12	2	*	*				
39	1674 - 695 - 290 - 00	PLATE COMP	1	*	*				
40	V363 - 260 - 008 - 00	NUT,LOCK/M8	2	*	*				
41	1519 - 604 - 005 - 00	RUBBER,HOOK	1	*	*				
42	1596 - 669 - 107 - 00	TRIM/75	2	*	*				
43	3640 - 270 - 200 - 00	SWITCH,SAFETY ASSY/C	1	*	*				
44	V120 - 364 - 003 - 00	SCREW/M4X30	2	*	*				
45	3656 - 271 - 001 - 00	PLATE/I,13X40	1	*	*				
46	1376 - 402 - 003 - 00	BAND,WIRE/140	1	*	*				
47	1674 - 695 - 004 - 00	PLATE	1	*	*				
48	V211 - 260 - 801 - 20	BOLT,SEMS (S) M8X12	3	*	*				
49	1674 - 695 - 350 - 00	LEVER/POS/E15 COMP	1	*	*				
50	1674 - 695 - 002 - 00	LEVER/POS	1	*	*				

FIG.104 ELC. SYSTEM (3/5)

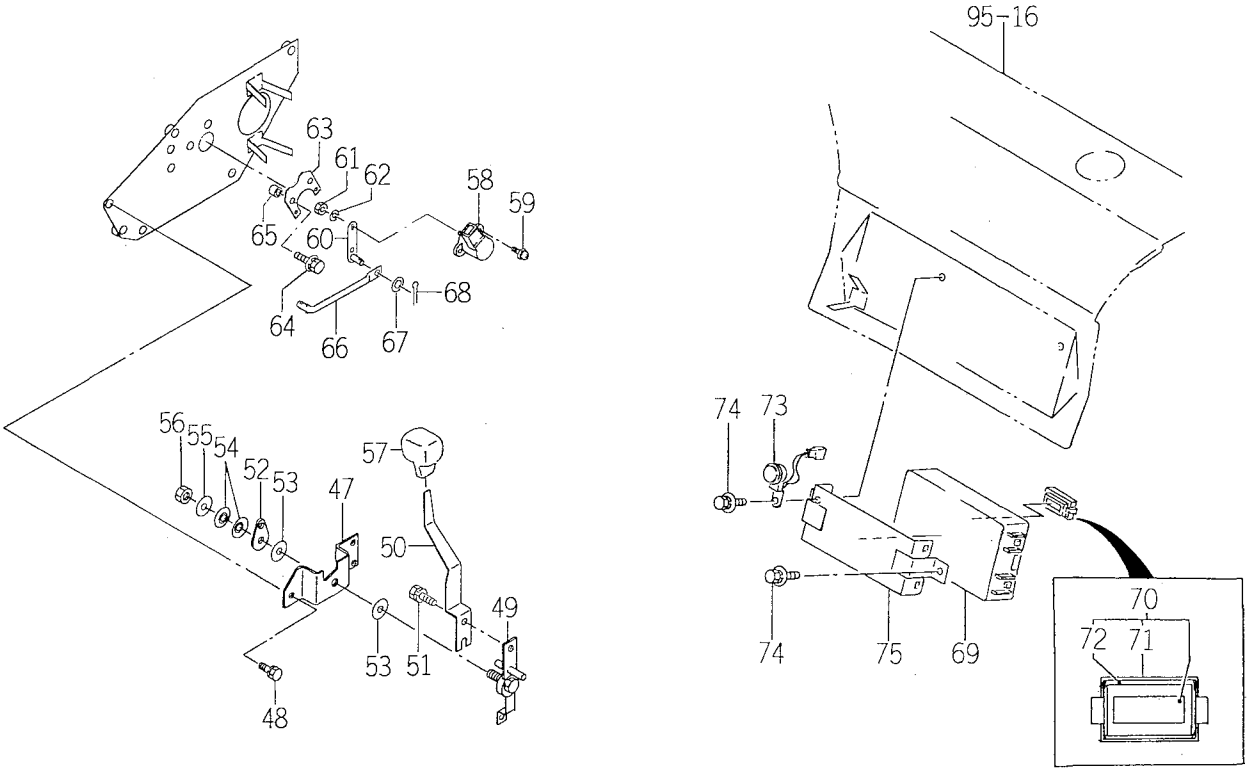

1674-690T

KEY	PART CODE	DESCRIPTION	QTY	TYPE OF MODEL TK529	TYPE OF MODEL TK533	ITC	COL	GRP	REMARKS
51	V211 - 260 - 801 - 20	BOLT,SEMS (S) M8X12	1	*	*				
52	1614 - 505 - 002 - 00	PLATE	1	*	*				
53	1614 - 505 - 003 - 00	LINING/11X30X02	2	*	*				
54	1614 - 505 - 004 - 00	SPRING/WASHER	2	*	*				
55	V411 - 260 - 010 - 00	WASHER/M10	1	*	*				
56	1581 - 782 - 111 - 00	NUT.U/M10	1	*	*				
57	1614 - 262 - 003 - 00	GRIP/SUB	1	*	*				
58	1614 - 520 - 260 - 00	SENSOR/ANGLE	1	*	*				
59	V120 - 364 - 001 - 20	SCREW,SP/M4X12	2	*	*				
60	1650 - 505 - 460 - 00	ARM/SENSOR COMP	1	*	*				
61	V301 - 260 - 006 - 00	NUT/M 6	1	*	*				
62	V401 - 160 - 006 - 00	WASHER,SP/M 6	1	*	*				
63	1674 - 695 - 003 - 00	PLATE/I/50X50	1	*	*				
64	V211 - 360 - 802 - 50	BOLT,SEMS	2	*	*				
65	1564 - 560 - 005 - 00	COLLAR/09X14X10	2	*	*				
66	1614 - 531 - 009 - 00	ROD	1	*	*				
67	V411 - 260 - 008 - 00	WASHER,PL/M 8	2	*	*				
68	V500 - 162 - 002 - 00	PIN,SPLIT/2 X20	2	*	*				
69	3676 - 274 - 200 - 00	CONTROLLER/C ASSY	1	*	*				
70	1674 - 695 - 310 - 00	ROMPACK/WX ASSY	1	*	*				
71	3676 - 274 - 312 - 00	COVER/ROM	1	*	*				
72	3676 - 274 - 313 - 00	RUBBER,SEAL	1	*	*				
73	1650 - 654 - 590 - 00	BUZZER ASSY	1	*	*				
74	V210 - 360 - 601 - 20	BOLT,SEMS	2	*	*				
75	1672 - 695 - 200 - 00	BRACKET COMP	1	*	*				

FIG.104 ELC. SYSTEM (4/5)

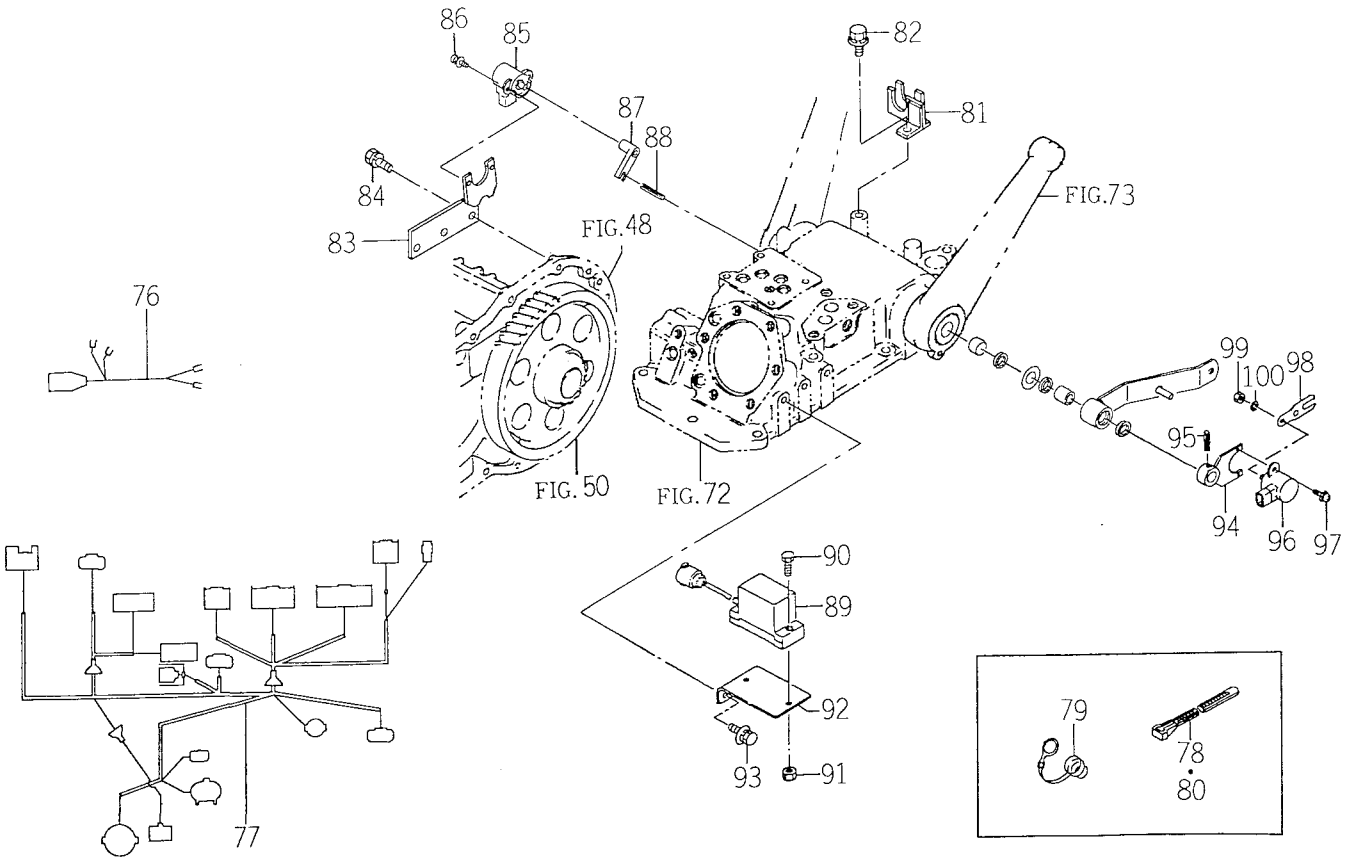

1674-690T

KEY	PART CODE	DESCRIPTION	QTY	TYPE OF MODEL TK529	TYPE OF MODEL TK533	ITC	COL	GRP	REMARKS
76	1560 - 690 - 240 - 00	HARNESS,SOLENOID	1	*	*				
77	1674 - 695 - 400 - 00	HARNESS/REAR/WX ASSY	1	*	*				
78	1376 - 402 - 003 - 00	BAND,WIRE/140	1	*	*				
79	1614 - 520 - 014 - 00	CAP	1	*	*				
80	1342 - 402 - 006 - 00	BAND,WIRE/250	1	*	*				
81	1560 - 695 - 390 - 00	HOLDER COMP	1	*	*				
82	V211 - 360 - 801 - 60	BOLT,SEMS (SP)	1	*	*				
83	1674 - 695 - 270 - 00	HOLDER/SENSOR COMP	1	*	*				
84	V211 - 260 - 801 - 60	BOLT,SEMS (S) M8X16	2	*	*				
85	1650 - 505 - 230 - 00	SENSOR/ANGLE/11 ASSY	1	*	*				
86	V120 - 364 - 001 - 20	SCREW,SP/M4X12	2	*	*				
87	1588 - 651 - 322 - 00	ARM	1	*	*				
88	V580 - 140 - 604 - 00	PIN,SPRING/6 X40 W	1	*	*				
89	1650 - 505 - 450 - 00	SENSOR/SLOPE ASSY	1	*	*				
90	V200 - 260 - 603 - 50	BOLT/M 6X35	2	*	*				
91	V301 - 260 - 006 - 00	NUT/M 6	2	*	*				
92	1674 - 695 - 001 - 00	PLATE/L/65X108	1	*	*				
93	V211 - 360 - 802 - 00	BOLT (SP) M8X20	2	*	*				
94	1673 - 690 - 430 - 00	ARM COMP	1	*	*				
95	V580 - 140 - 503 - 20	PIN,SPRING/5 X32 W	1	*	*				
96	1614 - 520 - 260 - 00	SENSOR/ANGLE	1	*	*				
97	V120 - 364 - 001 - 20	SCREW,SP/M4X12	2	*	*				
98	1650 - 505 - 001 - 00	ARM/PLATE	1	*	*				
99	V301 - 260 - 006 - 00	NUT/M 6	1	*	*				
100	V401 - 160 - 006 - 00	WASHER,SP/M 6	1	*	*				

FIG.104 ELC. SYSTEM (5/5)

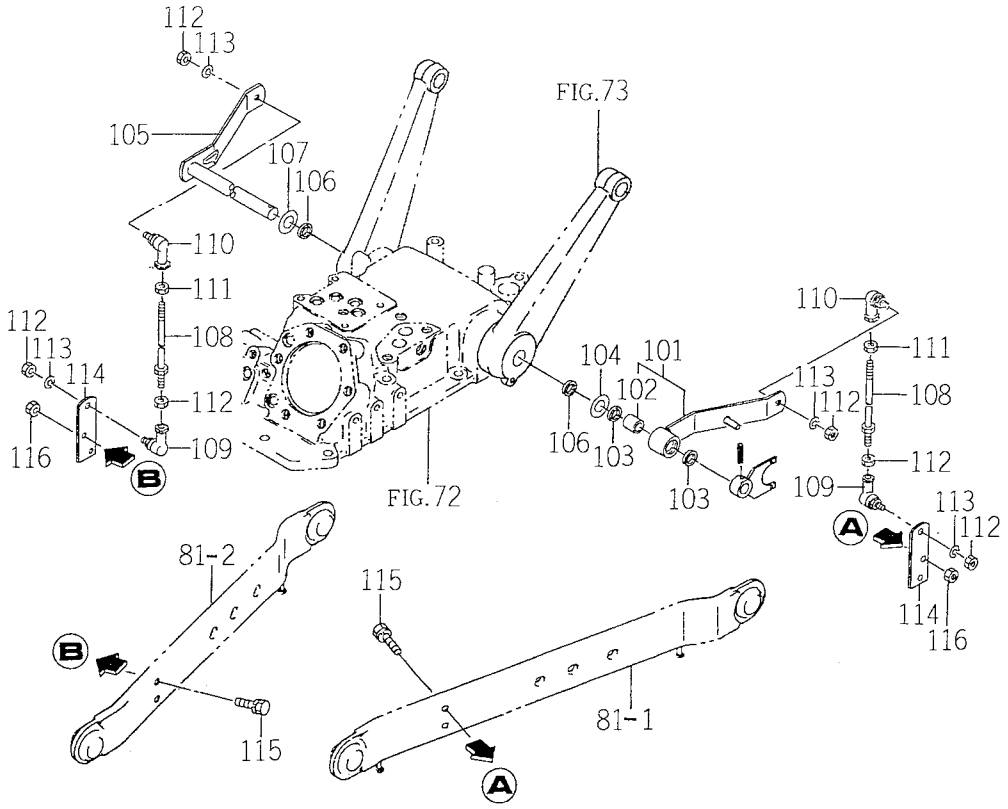

1674-690T

KEY	PART CODE	DESCRIPTION	QTY	TYPE OF MODEL TK529	TYPE OF MODEL TK533	ITC	COL	GRP	REMARKS
101	1673 - 690 - 400 - 10	ARM/LEVEL/LH ASSY	1	*	*				
102	3656 - 631 - 005 - 00	BUSH/15X17X20	1	*	*				
103	1588 - 515 - 011 - 00	SEAL/OIL	2	*	*				
104	4319 - 312 - 004 - 10	SPRING	1	*	*				
105	1650 - 505 - 270 - 20	ARM/LEVEL/RH COMP	1	*	*				
106	1588 - 515 - 011 - 00	SEAL/OIL	2	*	*				
107	4319 - 312 - 004 - 10	SPRING	1	*	*				
108	1588 - 515 - 360 - 00	ROD	2	*	*				
109	1560 - 695 - 021 - 00	JOINT BALL M08RH	2	*	*				
110	1560 - 695 - 022 - 00	JOINT BALL M08LH	2	*	*				
111	1560 - 132 - 007 - 30	NUT/M8	2	*	*				
112	V304 - 260 - 008 - 00	NUT/M 8	6	*	*				
113	V401 - 160 - 008 - 00	WASHER,SP/M 8	4	*	*				
114	1650 - 505 - 004 - 10	PLATE/1/32X95	2	*	*				
115	V211 - 260 - 803 - 50	BOLT (S) M8X35	4	*	*				
116	V304 - 260 - 008 - 00	NUT/M 8	4	*	*				

FIG.105 SAFFTY FRAME SYSTEM

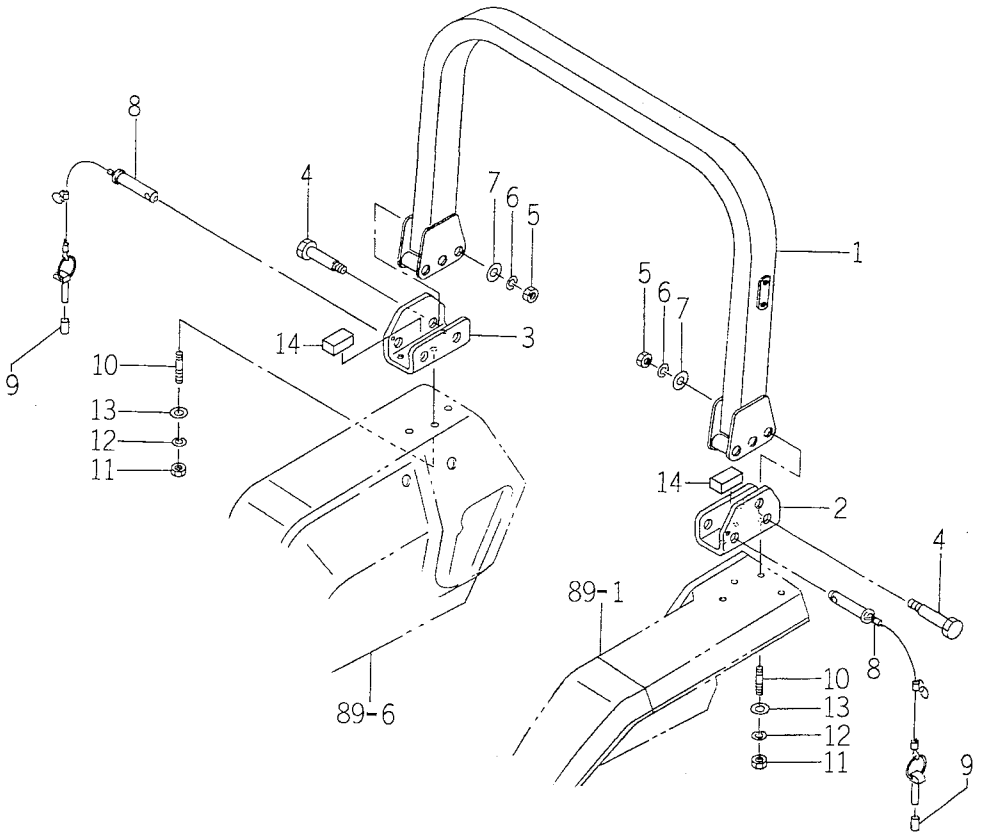

1673-702

KEY	PART CODE	DESCRIPTION	QTY	TYPE OF MODEL TK529	TYPE OF MODEL TK533	ITC	COL	GRP	REMARKS
1	1673 - 702 - 300 - 00	FRAME COMP	1	*	*		5I		
2	1673 - 702 - 310 - 10	HOLDER/FRAME/LH COMP	1	*	*				
3	1673 - 702 - 320 - 10	HOLDER/FRAME/RH COMP	1	*	*				
4	1673 - 702 - 001 - 10	BOLT/SET/M16X102	2	*	*				
5	V304 - 260 - 016 - 00	NUT/M16	2	*	*				
6	V401 - 160 - 016 - 00	WASHER,SP/M16	2	*	*				
7	V411 - 260 - 016 - 00	WASHER / M16	2	*	*				
8	1673 - 702 - 330 - 10	PIN COMP	2	*	*				
9	1673 - 702 - 351 - 10	HOSE/028	2	*	*				
10	1560 - 702 - 102 - 10	STUD/M12	6	*	*				
11	V304 - 460 - 012 - 00	NUT/M12	6	*	*				
12	V401 - 160 - 012 - 00	WASHER,SP/M12	6	*	*				
13	V411 - 260 - 012 - 00	WASHER /M12	6	*	*				
14	1421 - 602 - 008 - 00	CUSHION,C/RUBBER	2	*	*				

FIG.106 ORNAMENT

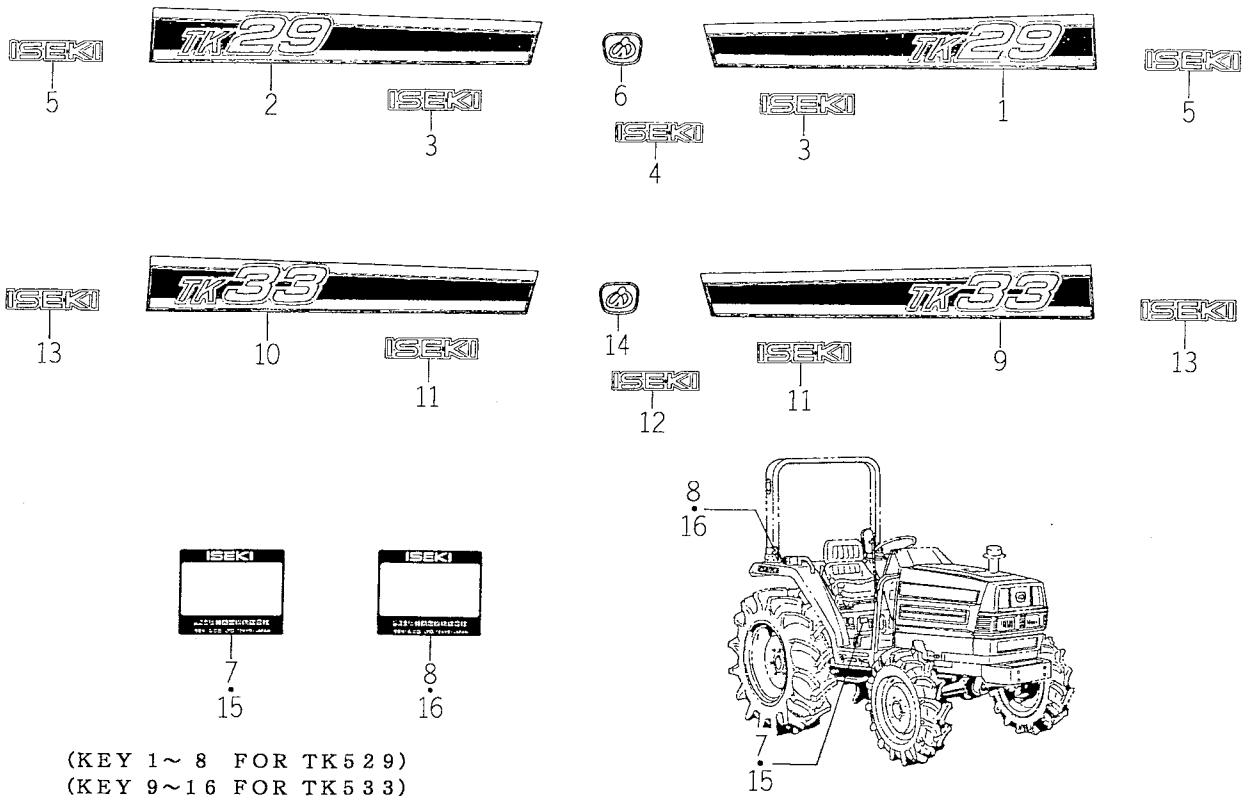

(KEY 1～8 FOR TK529)
(KEY 9～16 FOR TK533)

1674-901C

KEY	PART CODE	DESCRIPTION	QTY	TYPE OF MODEL TK529	TYPE OF MODEL TK533	ITC	COL	GRP	REMARKS
1	1673 - 901 - 005 - 00	ORNAMENT/29/LH	1	*					
2	1673 - 901 - 006 - 00	ORNAMENT/29/RH	1	*					
3	1614 - 906 - 003 - 00	ORNAMENT/ISEKI	2	*					
4	1118 - 901 - 006 - 00	ORNAMENT/ISEKI	1	*					
5	1614 - 906 - 003 - 00	ORNAMENT/ISEKI	2	*					
6	2161 - 331 - 001 - 00	ORNAMENT/I/STEERING	1	*					
7		LABEL/MODEL ASSY	1	*					
8		LABEL/MODEL ASSY	1	*					
9	1673 - 901 - 003 - 00	ORNAMENT/33/LH	1		*				
10	1673 - 901 - 004 - 00	ORNAMENT/33/RH	1		*				
11	1614 - 906 - 003 - 00	ORNAMENT/ISEKI	2		*				
12	1118 - 901 - 006 - 00	ORNAMENT/ISEKI	1		*				
13	1614 - 906 - 003 - 00	ORNAMENT/ISEKI	2		*				
14	2161 - 331 - 001 - 00	ORNAMENT/I/STEERING	1		*				
15		LABEL/MODEL ASSY	1		*				
16		LABEL/MODEL ASSY	1		*				

FIG.107 CONTROL LABEL

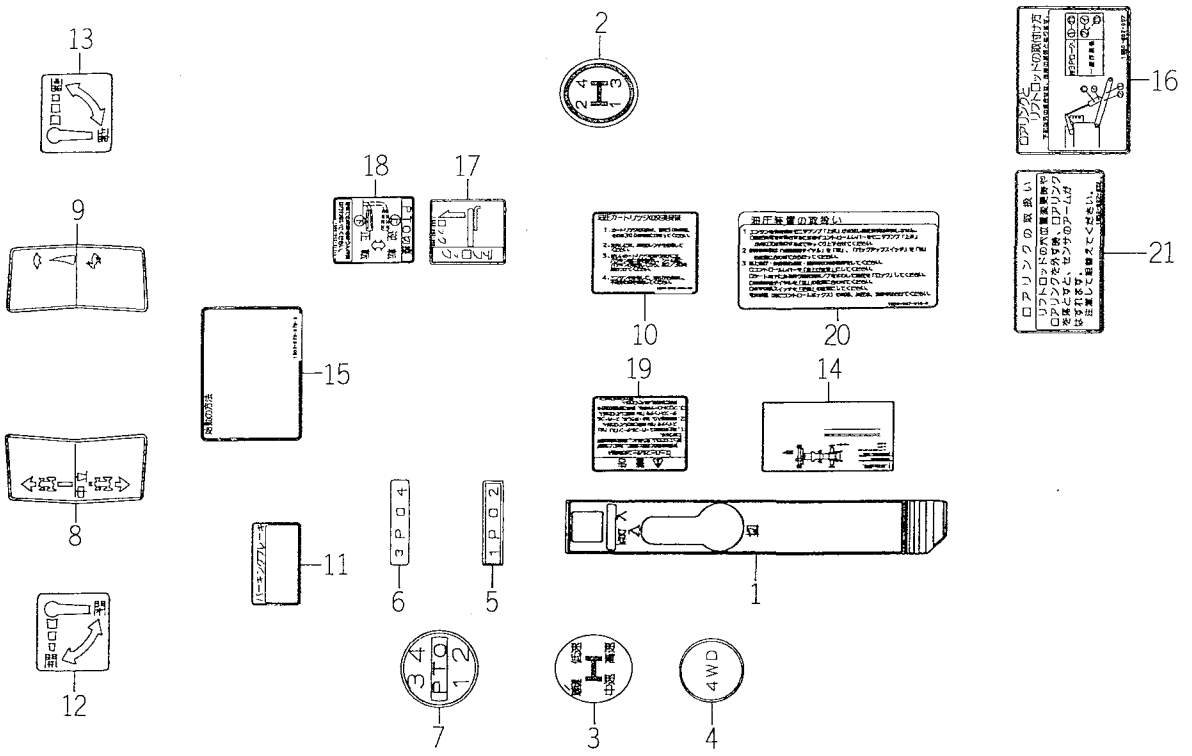

1674-902T

KEY	PART CODE	DESCRIPTION	QTY	TYPE OF MODEL TK529	TYPE OF MODEL TK533	ITC	COL	GRP	REMARKS
1	1560 - 902 - 005 - 10	LABEL/CONTROL/4WD	1	*	*				
2	1560 - 904 - 023 - 00	MARK	1	*	*				
3	1673 - 902 - 004 - 00	LABEL/CONTROL/SUB	1	*	*				
4	1560 - 902 - 003 - 40	LABEL,CONTROL/AWD	1	*	*				
5	1560 - 904 - 006 - 40	LABEL/PTO,1 - 2	1	*	*				
6	1560 - 904 - 007 - 40	LABEL/PTO,3 - 4	1	*	*				
7	1673 - 902 - 005 - 00	LABEL/CONTROL/PTO	1	*	*				
8	1560 - 903 - 003 - 80	LABEL/CONTROL/LINEAR	1	*	*				
9	1560 - 903 - 004 - 80	LABEL/CONTROL/THROTT	1	*	*				
10	1650 - 902 - 008 - 10	LABEL/MAINTENANCE/OI	1	*	*				
11	1614 - 903 - 006 - 00	LABEL/CAUTION/PARKIN	1	*	*				
12	1560 - 904 - 016 - 00	LABEL,KNOB/LH	1	*	*				
13	1560 - 904 - 017 - 00	LABEL,KNOB/RH	1	*	*				
14	1673 - 902 - 001 - 20	LABEL/MAINTENANCE/OI	1	*	*				
15	1650 - 902 - 013 - 00	LABEL/CONTROL/START	1	*	*				
16	1650 - 902 - 007 - 00	LABEL/POSITION/3P	1	*	*				
17	1650 - 902 - 009 - 00	LABEL/DEF	1	*	*				
18	1560 - 903 - 011 - 10	LABEL/PTO/R	1	*	*				
19	1673 - 903 - 004 - 00	LABEL/WARNING/SUPER	1	*	*				
20	1650 - 902 - 016 - 00	LABEL/CONTROL/WX	1	*	*				
21	1650 - 902 - 032 - 10	LABEL/MAINTENANCE/SE	1	*	*				

FIG.108 SAFFTY LABEL

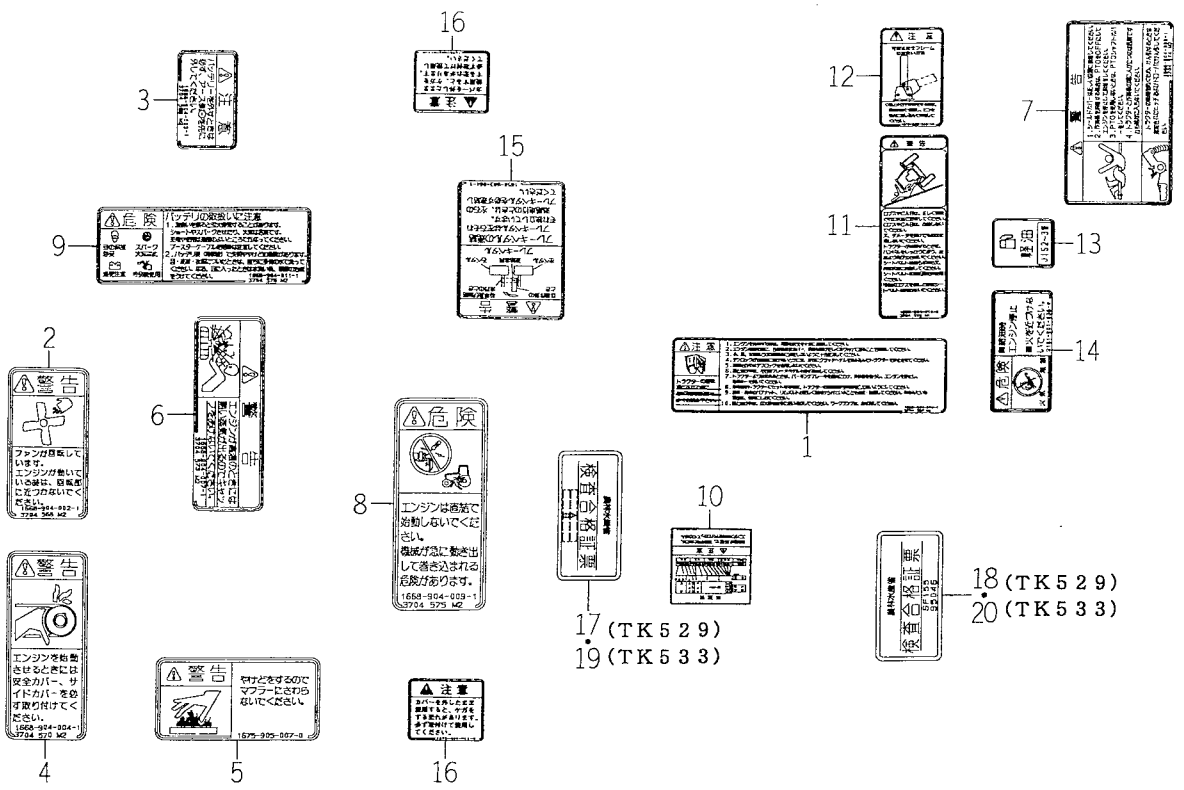

1674-903T

KEY	PART CODE	DESCRIPTION	QTY	TYPE OF MODEL TK529	TYPE OF MODEL TK533	ITC	COL	GRP	REMARKS
1	1668 - 904 - 001 - 10	LABEL/CAUTION/DRIVE	1	*	*				
2	1668 - 904 - 002 - 10	LABEL/WARNING/FAN	1	*	*				
3	1668 - 904 - 003 - 10	LABEL/CAUTION/BATTER	1	*	*				
4	1668 - 904 - 004 - 10	LABEL/WARNING/SHIELD	1	*	*				
5	1675 - 905 - 007 - 00	LABEL/WARNING/MUFFLE	1	*	*				
6	1668 - 904 - 007 - 10	LABEL/WARNING/RADIAT	1	*	*				
7	1668 - 904 - 008 - 10	LABEL/WARNING/SHIELD	1	*	*				
8	1668 - 904 - 009 - 10	LABEL/DANGER/STARTER	1	*	*				
9	1668 - 904 - 011 - 20	LABEL/DANGER/BATTERY	1	*	*				
10	1650 - 903 - 001 - 10	LABEL/CAUTION/SPEED	1	*	*				
11	1668 - 904 - 014 - 10	LABEL/WARNING/ROPS	1	*	*				
12	1673 - 903 - 002 - 00	LABEL/CAUTION/SF	1	*	*				
13	1675 - 904 - 002 - 00	LABEL/DIESELFUEL	1	*	*				
14	2161 - 901 - 038 - 00	LABEL	1	*	*				
15	1650 - 903 - 004 - 10	LABEL/WARNING/BRAKE	1	*	*				
16	1675 - 905 - 012 - 00	LABEL/CAUTION/COVER	2	*	*				
17	1673 - 919 - 013 - 00	LABEL/INSPECTION/TK2	1	*					
18	1673 - 919 - 005 - 00	LABEL/INSPECTION/SF	1	*					
19	1673 - 919 - 023 - 00	LABEL/INSPECTION/TK3	1		*				
20	1673 - 919 - 005 - 00	LABEL/INSPECTION/SF	1		*				

FIG.109 TOOL

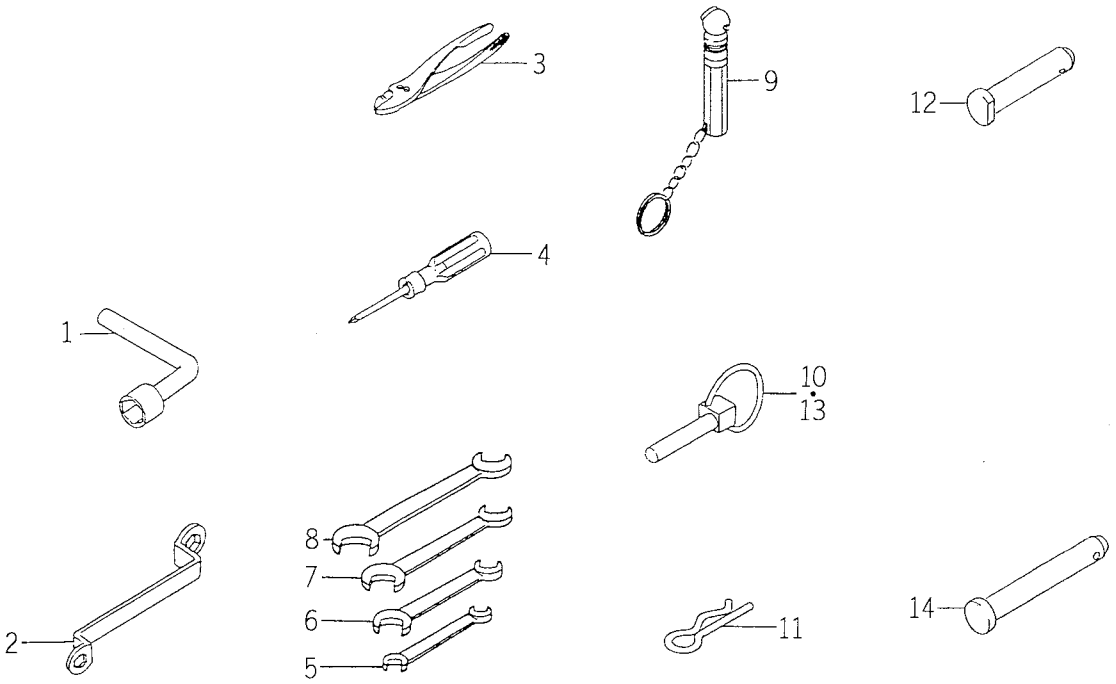

1674-912T

KEY	PART CODE	DESCRIPTION	QTY	TYPE OF MODEL TK529	TYPE OF MODEL TK533	ITC	COL	GRP	REMARKS
1	1421 - 906 - 001 - 00	SPANNER,BOX/22	1	*	*				
2	1401 - 906 - 005 - 00	WRENCH,SOCKET/17X19	1	*	*				
3	V936 - 150 - 015 - 00	PLIERS/G150	1	*	*				
4	2130 - 931 - 210 - 00	SCREWDRIVER ASSY	1	*	*				
5	V920 - 551 - 001 - 20	SPANNER/10X12	1	*	*				
6	V920 - 551 - 401 - 70	SPANNER/14X17	1	*	*				
7	V920 - 551 - 902 - 20	SPANNER/19X22	1	*	*				
8	V920 - 552 - 402 - 70	SPANNER/24X27	1	*	*				
9	1560 - 906 - 001 - 00	GAUGE,AIR	1	*	*				
10	1421 - 502 - 002 - 00	PIN,LINK	2	*	*				
11	1305 - 931 - 003 - 00	PIN,HAIR	1	*	*				
12	1620 - 514 - 005 - 00	PIN/19X94	1	*	*				
13	1421 - 502 - 002 - 00	PIN,LINK	2	*	*				
14	1640 - 525 - 001 - 00	PIN 19X132	1	*	*				

FIG.110 TRALIER HITCH SET (OPTION)

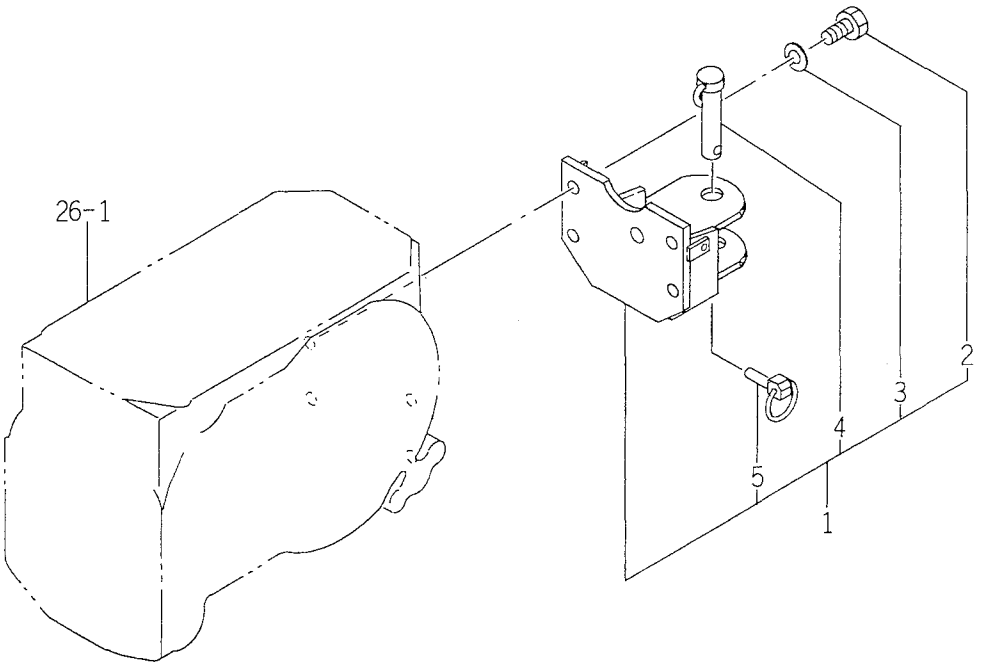

1595-520A

KEY	PART CODE	DESCRIPTION	QTY	TYPE OF MODEL TK529	TYPE OF MODEL TK533	ITC	COL	GRP	REMARKS
1	1595 - 520 - 230 - 00	HITCH SET	1	T	T				
2	V201 - 361 - 403 - 50	BOLT	4	T	T				
3	V401 - 160 - 014 - 00	WASHER,SP/M14	4	T	T				
4	1488 - 247 - 250 - 00	PIN ASSY	1	T	T				
5	1421 - 502 - 002 - 00	PIN,LINK	1	T	T				

FIG.111 EXTENSION HITCH SET (OPTION)

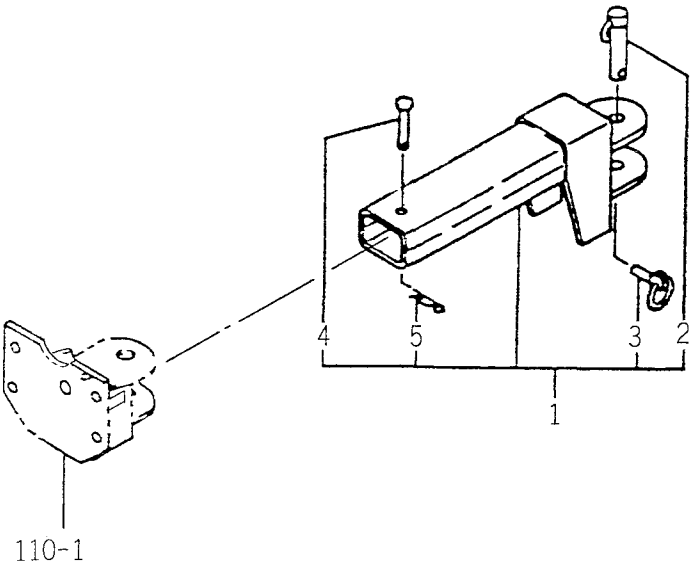

156C-52CZ

KEY	PART CODE	DESCRIPTION	QTY	TYPE OF MODEL TK529	TYPE OF MODEL TK533	ITC	COL	GRP	REMARKS
1	1560 - 520 - 900 - 00	LINK/DRAW BAR	1	T	T				
2	1488 - 247 - 250 - 00	PIN ASSY	1	T	T				
3	1421 - 502 - 002 - 00	PIN,LINK	1	T	T				
4	3747 - 183 - 002 - 00	PIN,CYL R.	1	T	T				
5	1305 - 931 - 003 - 00	PIN,HAIR	1	T	T				

FIG.112 WORKING LAMP SET (OPTION)

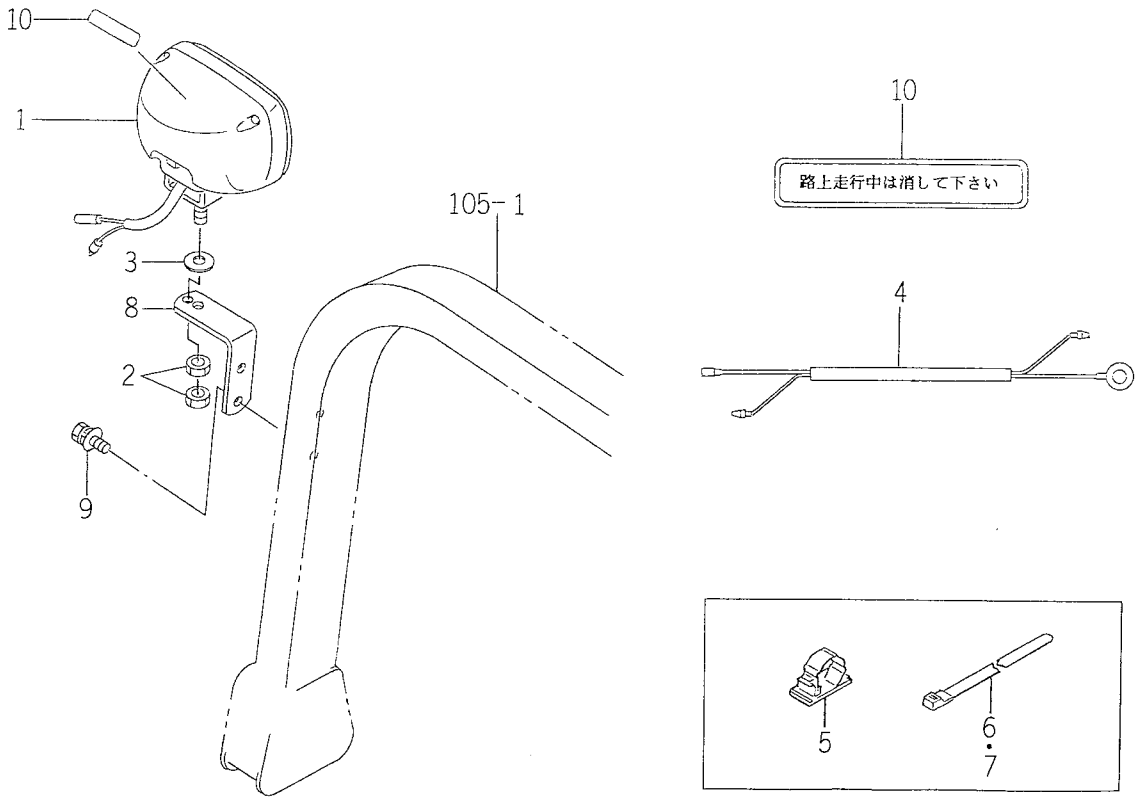

1673-654Z

KEY	PART CODE	DESCRIPTION	QTY	TYPE OF MODEL TK529	TYPE OF MODEL TK533	ITC	COL	GRP	REMARKS
1	1650 - 654 - 270 - 00	LAMP/WORKING ASSY	1	T	T				FIG 120
2	V334 - 260 - 010 - 00	NUT/M10	2	T	T				
3	1612 - 606 - 001 - 00	INSULATOR	1	T	T				
4	1650 - 654 - 702 - 00	HARNESS/WORKING	1	T	T				
5	1650 - 652 - 014 - 00	CLAMP	1	T	T				
6	1376 - 402 - 003 - 00	BAND,WIRE/140	3	T	T				
7	1342 - 402 - 006 - 00	BAND,WIRE/250	1	T	T				
8	1673 - 654 - 201 - 00	PLATE	1	T	T				
9	V211 - 360 - 802 - 00	BOLT (SP) M8X20	2	T	T				
10	1423 - 903 - 007 - 00	MARK,WORK LAMP	1	T	T				

FIG.113 TOP LINK SET (OPTION)

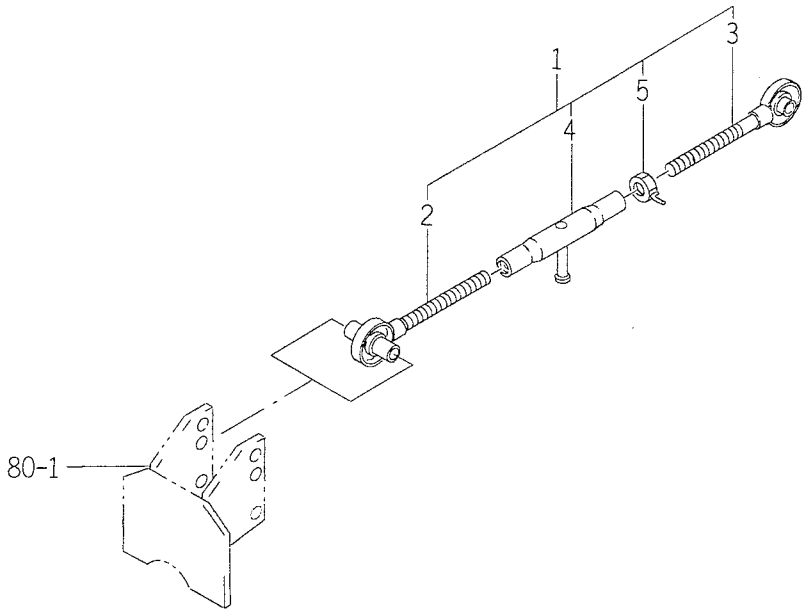

1650-930

KEY	PART CODE	DESCRIPTION	QTY	TYPE OF MODEL TK529	TYPE OF MODEL TK533	ITC	COL	GRP	REMARKS
1	1650 - 514 - 900 - 00	LINK/TOP SET	1	T	T				
2	1560 - 525 - 290 - 10	LINK/TOP/LH COMP	1	T	T				
3	1568 - 525 - 300 - 10	LINK/TOP/RH COMP	1	T	T				
4	1550 - 514 - 290 - 00	TURNBUCLE COMP	1	T	T				
5	1402 - 511 - 600 - 00	NUT,TOP LINK LOCK	1	T	T				

FIG.114 WEIGHT SET (OPTION)

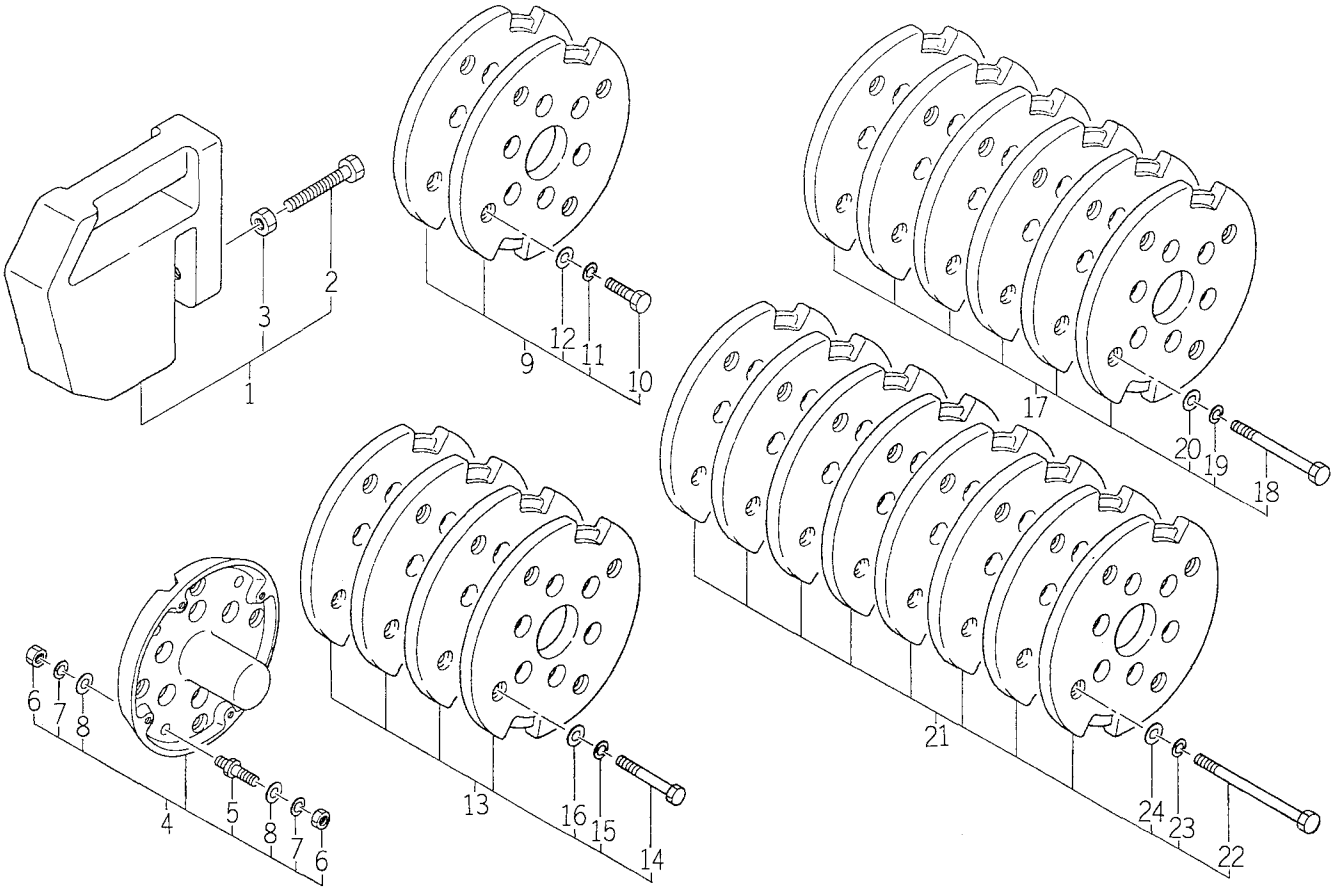

1560-940Z

KEY	PART CODE	DESCRIPTION	QTY	TYPE OF MODEL TK529	TYPE OF MODEL TK533	ITC	COL	GRP	REMARKS
1	1560 - 940 - 200 - 40	WEIGHT/16 SET	1	T	T				
2	W201 - 261 - 207 - 50	BOLT	1	T	T				
3	V304 - 260 - 012 - 00	NUT/M12	1	T	T				
4	1560 - 940 - 220 - 40	WEIGHT/66 SET	1	T	T				
5	1444 - 952 - 220 - 00	BOLT/A COMP	8	T	T				
6	V304 - 260 - 016 - 00	NUT/M16	16	T	T				
7	V401 - 160 - 016 - 00	WASHER,SP/M16	16	T	T				
8	V411 - 260 - 016 - 00	WASHER / M16	16	T	T				
9	1560 - 940 - 230 - 40	WEIGHT/60 SET	1	T	T				
10	V201 - 261 - 604 - 00	BOLT/M16X40	8	T	T				
11	V401 - 160 - 016 - 00	WASHER,SP/M16	8	T	T				
12	V411 - 260 - 016 - 00	WASHER / M16	8	T	T				
13	1560 - 940 - 240 - 40	WEIGHT/120 SET	1	T	T				
14	V201 - 261 - 607 - 50	BOLT/M16X75	8	T	T				
15	V401 - 160 - 016 - 00	WASHER,SP/M16	8	T	T				
16	V411 - 260 - 016 - 00	WASHER / M16	8	T	T				
17	1560 - 940 - 250 - 40	WEIGHT/180 SET	1	T	T				
18	V201 - 261 - 611 - 00	BOLT/M16X110	8	T	T				
19	V401 - 160 - 016 - 00	WASHER,SP/M16	8	T	T				
20	V411 - 260 - 016 - 00	WASHER / M16	8	T	T				
21	1560 - 940 - 260 - 40	WEIGHT/240 SET	1	T	T				
22	V201 - 261 - 615 - 00	BOLT/M16X150	8	T	T				
23	V401 - 160 - 016 - 00	WASHER,SP/M16	8	T	T				
24	V411 - 260 - 016 - 00	WASHER / M16	8	T	T				

FIG. 115 COMPONENT PARTS FOR K185-004-000-20 ON Fig. 83

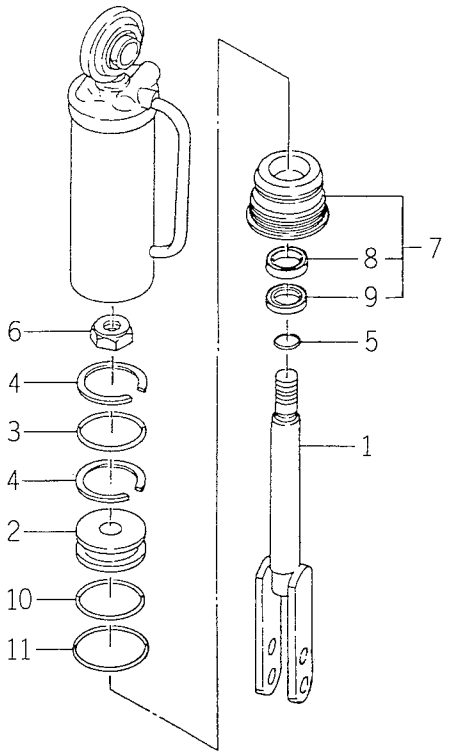

K185-0040

KEY	PART CODE	DESCRIPTION	QTY	TYPE OF MODEL TK529	TYPE OF MODEL TK533	ITC	COL	GRP	REMARKS
1	K185 - 004 - 200 - 00	PISTON ROD COMP	1	*	*				
2	K185 - 004 - 001 - 00	PISTON	1	*	*				
3	V720 - 115 - 705 - 00	RING/O	1	*	*				
4	V730 - 106 - 005 - 00	RING/BACK UP	2	*	*				
5	V723 - 111 - 501 - 60	O - RING	1	*	*				
6	K185 - 004 - 003 - 00	NUT	1	*	*				
7	K185 - 004 - 300 - 00	COVER,ROD SET	1	*	*				
8	K182 - 034 - 002 - 00	ROD PACKING	1	*	*				
9	K182 - 034 - 003 - 00	DUST SEAL	1	*	*				
10	V721 - 113 - 105 - 50	O - RING/G55	1	*	*				
11	V723 - 102 - 006 - 30	RING/O	1	*	*				

FIG. 116 COMPONENT PARTS FOR K200-016-000-00 ON Fig. 84

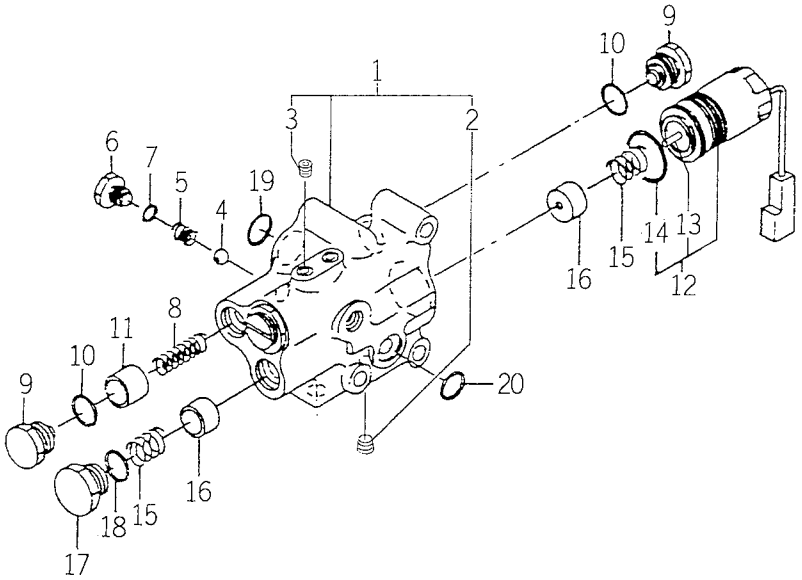

K200-0160

KEY	PART CODE	DESCRIPTION	QTY	TYPE OF MODEL TK529	TYPE OF MODEL TK533	ITC	COL	GRP	REMARKS
1	K200 - 016 - 100 - 10	VALVE SET	1	*	*				
2	V780 - 140 - 000 - 2T	PLUG/SCREW/SEAL	1	*	*				
3	V780 - 140 - 000 - 1T	PLUG/SCREW/SEAL	5	*	*				
4	V682 - 200 - 000 - 80	BALL	1	*	*				
5	K110 - 001 - 106 - 00	SPRING	1	*	*				
6	K221 - 001 - 007 - 00	PLUG	1	*	*				
7	V720 - 111 - 900 - 80	O - RING/P8	1	*	*				
8	K233 - 001 - 004 - 00	SPRING/HC036	1	*	*				
9	K211 - 008 - 011 - 00	PLUG	2	*	*				
10	V720 - 112 - 401 - 40	O - RING/P14	2	*	*				
11	K200 - 014 - 005 - 00	COLLAR	1	*	*				
12	K200 - 016 - 200 - 00	SOLENOID SET	1	*	*				
13	K270 - 001 - 201 - 00	ROD	1	*	*				
14	V723 - 112 - 002 - 90	RING/O	1	*	*				
15	K270 - 001 - 003 - 10	SPRING/HC012	2	*	*				
16	K270 - 001 - 004 - 00	PLATE/SPRING	2	*	*				
17	K200 - 014 - 006 - 00	PLUG	1	*	*				
18	V720 - 112 - 401 - 80	O - RING/P18	1	*	*				
19	V720 - 112 - 401 - 40	O - RING/P14	2	*	*				
20	V720 - 112 - 401 - 20	O - RING/P12	1	*	*				

FIG. 117 COMPONENT PARTS FOR K200-019-000-00 ON Fig. 79

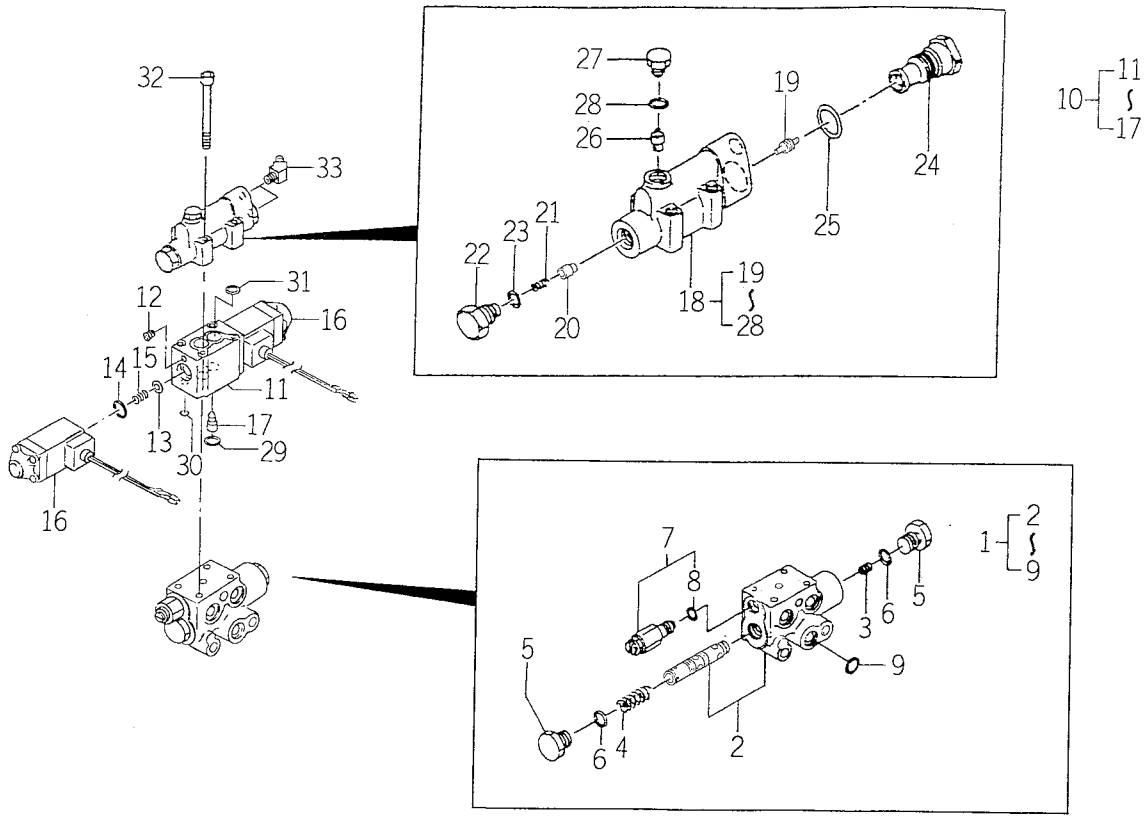

K200-0190

KEY	PART CODE	DESCRIPTION	QTY	TYPE OF MODEL		ITC	COL	GRP	REMARKS
				TK529	TK533				
1	K234 - 001 - 000 - 00	FRO - CON VALVE ASSY	1	*	*				
2	K234 - 001 - 100 - 00	VALVE SET	1	*	*				
3	K234 - 001 - 003 - 00	SCREW/0.7	1	*	*				
4	K234 - 001 - 004 - 00	SPRING/HC040	1	*	*				
5	K234 - 001 - 005 - 00	PLUG/M18	2	*	*				
6	V720 - 112 - 401 - 60	O - RING/P16	2	*	*				
7	K250 - 031 - 000 - 00	VALVE/RELIEF ASSY	1	*	*				
8	V720 - 112 - 401 - 60	O - RING/P16	1	*	*				
9	V720 - 112 - 401 - 40	O - RING/P14	3	*	*				
10	K200 - 019 - 100 - 00	SOLENOID VALVE	1	*	*				
11	1560 - 519 - 230 - 00	CASE ASSY	1	*	*				
12	1560 - 519 - 202 - 00	PLUG	1	*	*				
13	1560 - 519 - 206 - 00	WASHER	2	*	*				
14	1560 - 519 - 203 - 00	RING/O	2	*	*				
15	1560 - 519 - 205 - 00	SPRING/HC	2	*	*				
16	1560 - 519 - 208 - 00	SOLENOID	2	*	*				
17	1560 - 519 - 207 - 00	POPET	1	*	*				
18	K221 - 001 - 000 - 10	VALVE,CHACK ASSY	1	*	*				
19	K221 - 001 - 002 - 00	PILOT SPOOL	1	*	*				
20	K221 - 001 - 003 - 00	POPET	1	*	*				
21	K110 - 001 - 106 - 00	SPRING	1	*	*				
22	K221 - 001 - 004 - 00	PLUG	1	*	*				
23	V720 - 112 - 401 - 20	O - RING/P12	1	*	*				
24	K221 - 001 - 005 - 10	ADAPTER	1	*	*				
25	V720 - 112 - 401 - 80	O - RING/P18	1	*	*				

FIG. 117 COMPONENT PARTS FOR K200-019-000-00 ON Fig. 79

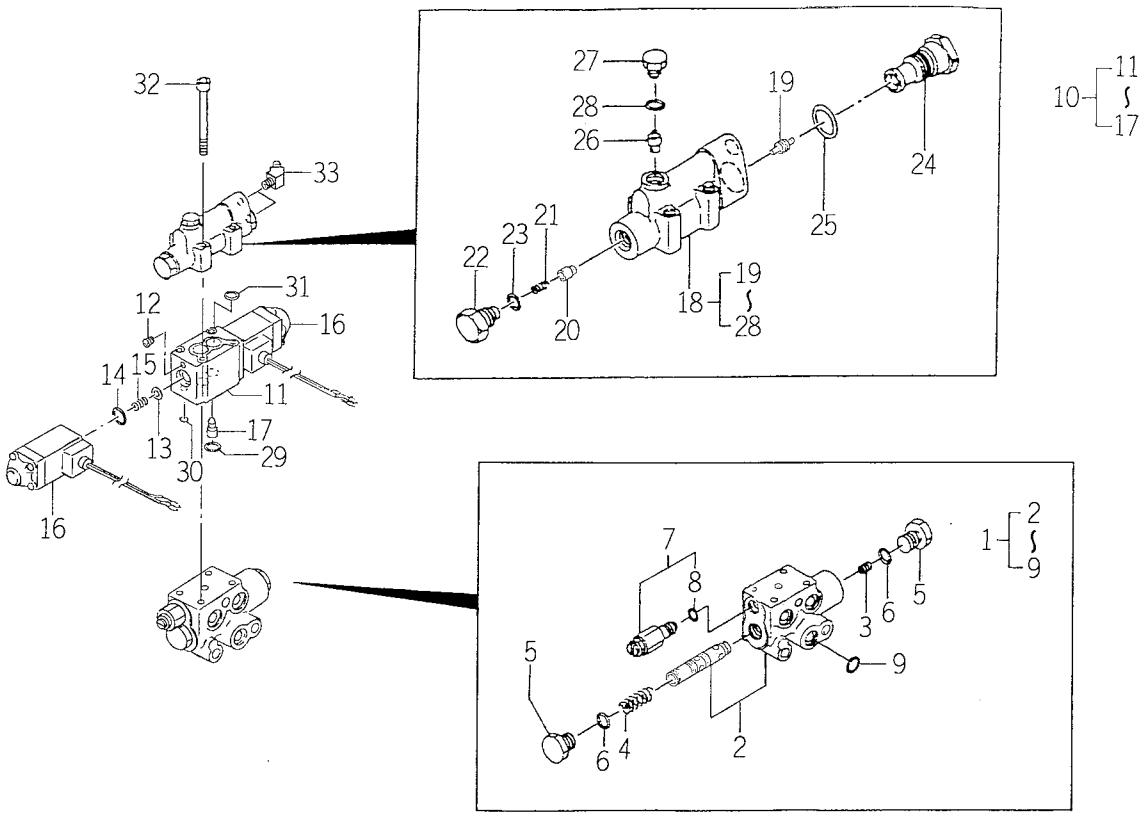

K200-019C

KEY	PART CODE	DESCRIPTION	QTY	TYPE OF MODEL TK529	TYPE OF MODEL TK533	ITC	COL	GRP	REMARKS
26	K221 - 001 - 006 - 10	POPET/0.9	1	*	*				
27	K221 - 001 - 007 - 00	PLUG	1	*	*				
28	V720 - 111 - 900 - 80	O - RING/P8	1	*	*				
29	V720 - 112 - 401 - 20	O - RING/P12	2	*	*				
30	V720 - 111 - 900 - 50	O - RING/P5 HS90	1	*	*				
31	V720 - 112 - 401 - 10	RING/O	2	*	*				
32	V220 - 540 - 508 - 50	SCREW/SOCKET	4	*	*				
33	3631 - 350 - 201 - 10	ADAPTER/45°	2	*	*				

FIG. 118 COMPONENT PARTS FOR 1560-407-260-50 ON Fig. 61

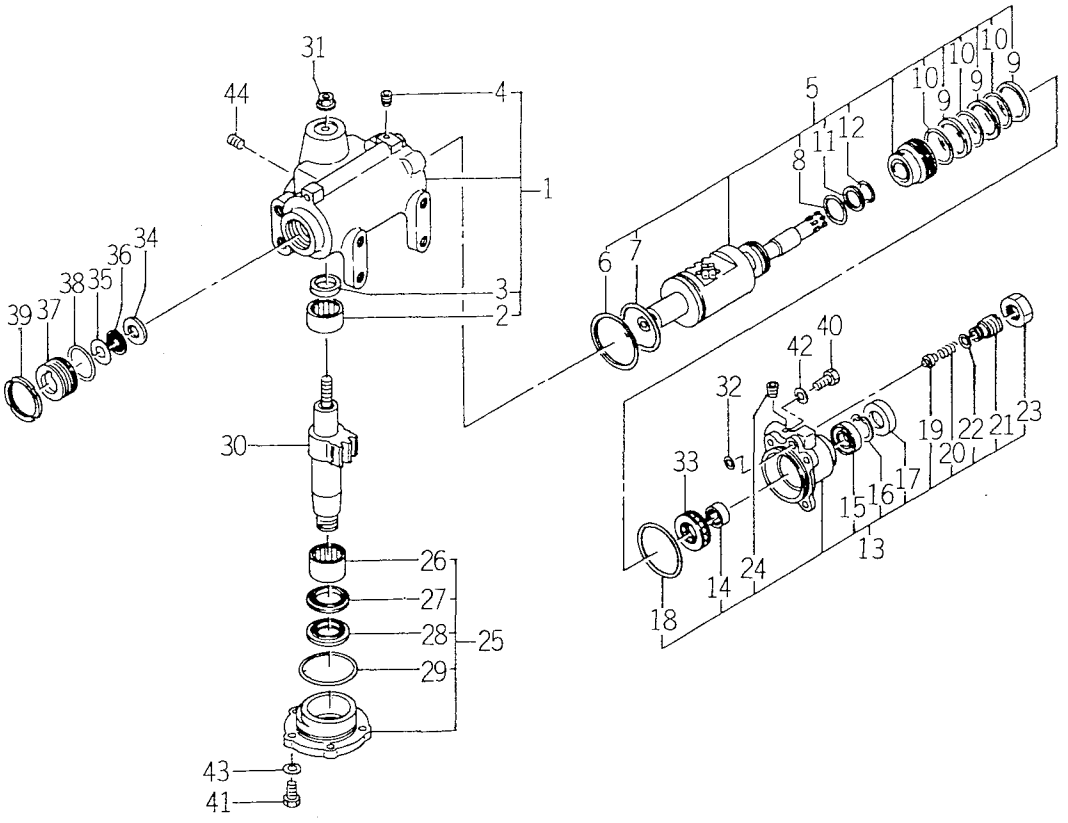

1560-4072

KEY	PART CODE	DESCRIPTION	QTY	TYPE OF MODEL TK529	TYPE OF MODEL TK533	ITC	COL	GRP	REMARKS
1	1560 - 407 - 270 - 40	CASE/STEERING ASSY	1	*	*				
2	1444 - 408 - 213 - 00	BEARING,NR/FJL3020	1	*	*				
3	1444 - 408 - 214 - 00	PACKING,U	1	*	*				
4	1550 - 408 - 321 - 00	PLUG,PT1/8	1	*	*				
5	1560 - 407 - 280 - 50	NUT ASSY	1	*	*				
6	1444 - 408 - 217 - 00	RING	1	*	*				
7	1444 - 408 - 218 - 00	O - RING	1	*	*				
8	1444 - 408 - 219 - 00	O - RING	1	*	*				
9	1444 - 408 - 301 - 00	RING	3	*	*				
10	1444 - 408 - 302 - 00	O - RING	3	*	*				
11	1444 - 408 - 303 - 00	RING	1	*	*				
12	V723 - 102 - 002 - 50	O - RING	1	*	*				
13	1560 - 407 - 290 - 40	HOUSING ASSY	1	*	*				
14	1444 - 408 - 306 - 00	BEARING,NR	1	*	*				
15	1560 - 407 - 292 - 40	SEAL,OIL	1	*	*				
16	V705 - 140 - 032 - 00	RING,SNAP/32 C	1	*	*				
17	1444 - 408 - 308 - 00	SEAL,OIL	1	*	*				
18	V721 - 103 - 106 - 50	O - RING/G65	1	*	*				
19	1513 - 408 - 217 - 00	POPPET	1	*	*				
20	1560 - 407 - 293 - 40	SPRING	1	*	*				
21	1550 - 408 - 325 - 00	BOLT	1	*	*				
22	1550 - 408 - 324 - 00	O - RING	1	*	*				
23	1550 - 408 - 326 - 00	NUT	1	*	*				
24	1550 - 408 - 321 - 00	PLUG,PT1/8	1	*	*				
25	1444 - 408 - 370 - 00	COVER,SIDE ASSY	1	*	*				

FIG. 118 COMPONENT PARTS FOR 1560-407-260-50 ON Fig. 61

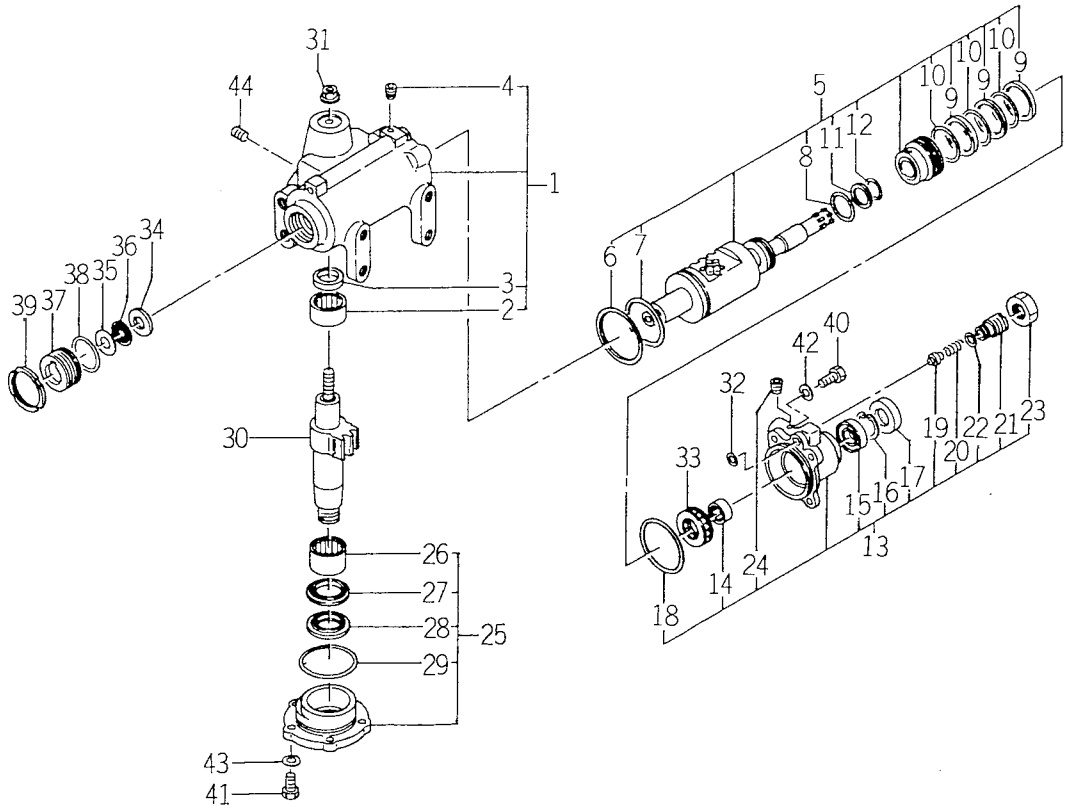

1560-4072

KEY	PART CODE	DESCRIPTION	QTY	TYPE OF MODEL TK529	TYPE OF MODEL TK533	ITC	COL	GRP	REMARKS
26	1444 - 408 - 316 - 00	BEARING,NR/HJ243316	1	*	*				
27	1444 - 408 - 317 - 00	PACKING,U	1	*	*				
28	1444 - 408 - 318 - 00	SEAL,OIL	1	*	*				
29	V721 - 103 - 107 - 00	O - RING/G70	1	*	*				
30	1560 - 407 - 300 - 40	SHAFT/SECTOR ASSY	1	*	*				
31	1444 - 408 - 323 - 00	NUT	1	*	*				
32	V720 - 101 - 900 - 80	O - RING/P 8	1	*	*				
33	1513 - 408 - 223 - 00	BEARING,TB	1	*	*				
34	1560 - 407 - 261 - 30	COLLAR	1	*	*				
35	1560 - 407 - 262 - 30	COLLAR	1	*	*				
36	1560 - 407 - 263 - 40	BEARING/NEEDLE	1	*	*				
37	1560 - 407 - 264 - 40	COVER/FRONT	1	*	*				
38	V723 - 102 - 003 - 80	O - RING	1	*	*				
39	1560 - 407 - 265 - 40	NUT/M45X1.5	1	*	*				
40	V201 - 461 - 203 - 00	BOLT/M12X30	4	*	*				
41	V201 - 461 - 002 - 50	BOLT/M10X25	5	*	*				
42	V401 - 160 - 012 - 00	WASHER,SP/M12	4	*	*				
43	V401 - 160 - 010 - 00	WASHER,SP/M10	5	*	*				
44	1444 - 408 - 332 - 00	PLUG PT 1/4	1	*	*				

FIG. 119 COMPONENT PARTS FOR 1650-508-210-10 ON Fig. 74

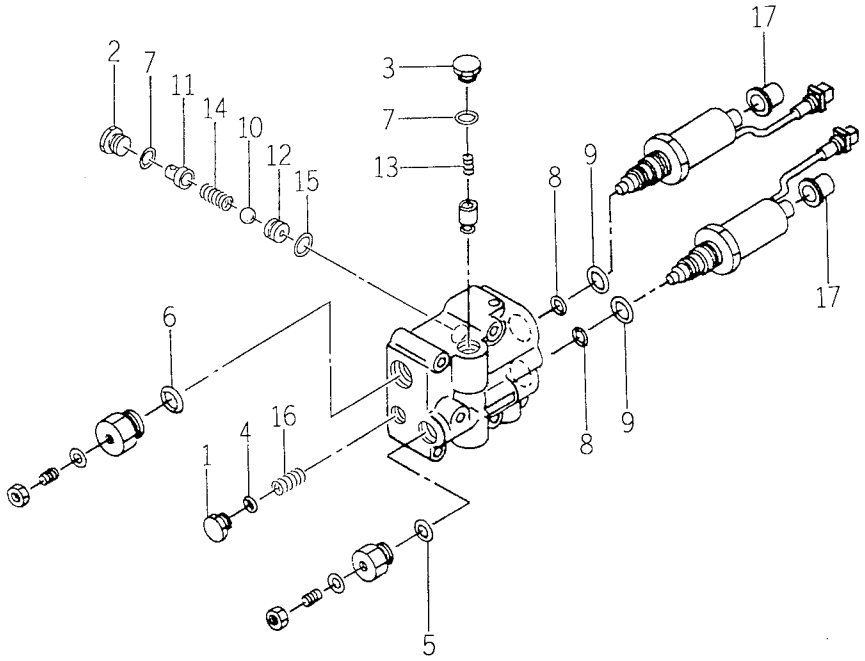

1650-5082

KEY	PART CODE	DESCRIPTION	QTY	TYPE OF MODEL TK529	TYPE OF MODEL TK533	ITC	COL	GRP	REMARKS
1	1650 - 508 - 331 - 00	PLUG	1	*	*				
2	1650 - 508 - 337 - 00	PLUG	1	*	*				
3	1650 - 508 - 338 - 00	PLUG	1	*	*				
4	V720 - 112 - 401 - 20	O - RING/P12	1	*	*				
5	V720 - 112 - 401 - 80	O - RING/P18	1	*	*				
6	V720 - 113 - 502 - 40	O - RING/P24	1	*	*				
7	V720 - 112 - 401 - 40	O - RING/P14	2	*	*				
8	1650 - 508 - 334 - 00	RING/O	2	*	*				
9	1650 - 508 - 335 - 00	RING/O	2	*	*				
10	1650 - 508 - 351 - 00	BALL	1	*	*				
11	1650 - 508 - 352 - 00	SPOOL	1	*	*				
12	1650 - 508 - 353 - 00	SPOOL	1	*	*				
13	1650 - 508 - 354 - 00	SPRING	1	*	*				
14	1650 - 508 - 355 - 00	SPRING	1	*	*				
15	1650 - 508 - 356 - 00	RING/O	1	*	*				
16	1650 - 508 - 357 - 00	SPRING	1	*	*				
17	1650 - 508 - 336 - 00	COVER	2	*	*				

FIG. 120 COMPONENT PARTS FOR 1650-654-270-00 ON Fig. 112

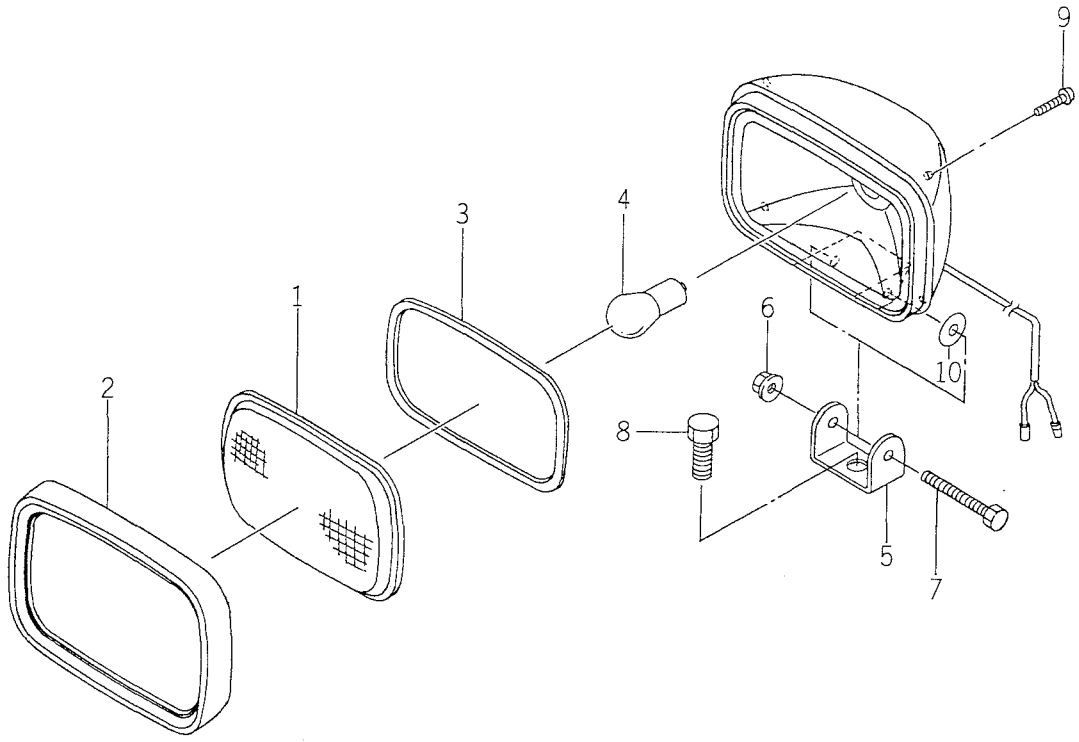

1650-6542

KEY	PART CODE	DESCRIPTION	QTY	TYPE OF MODEL TK529	TYPE OF MODEL TK533	ITC	COL	GRP	REMARKS
1	1650 - 658 - 401 - 00	LENS	1	T	T				
2	3676 - 291 - 212 - 00	RIM	1	T	T				
3	3676 - 291 - 214 - 00	GASKET/LAMP	1	T	T				
4	1650 - 658 - 403 - 00	BULB/12V35W	1	T	T				
5	3676 - 291 - 216 - 00	STAY/LAMP	1	T	T				
6	2500 - 326 - 017 - 00	NUT/FLANGE/M6	1	T	T				
7	V200 - 260 - 605 - 50	BOLT/M 6X55	1	T	T				
8	V203 - 261 - 003 - 00	BOLT M10X30	1	T	T				
9	V195 - 164 - 020 - 40	BOLT	4	T	T				
10	1650 - 658 - 404 - 00	WASHER	1	T	T				

WIRING DIAGRAM (E15)

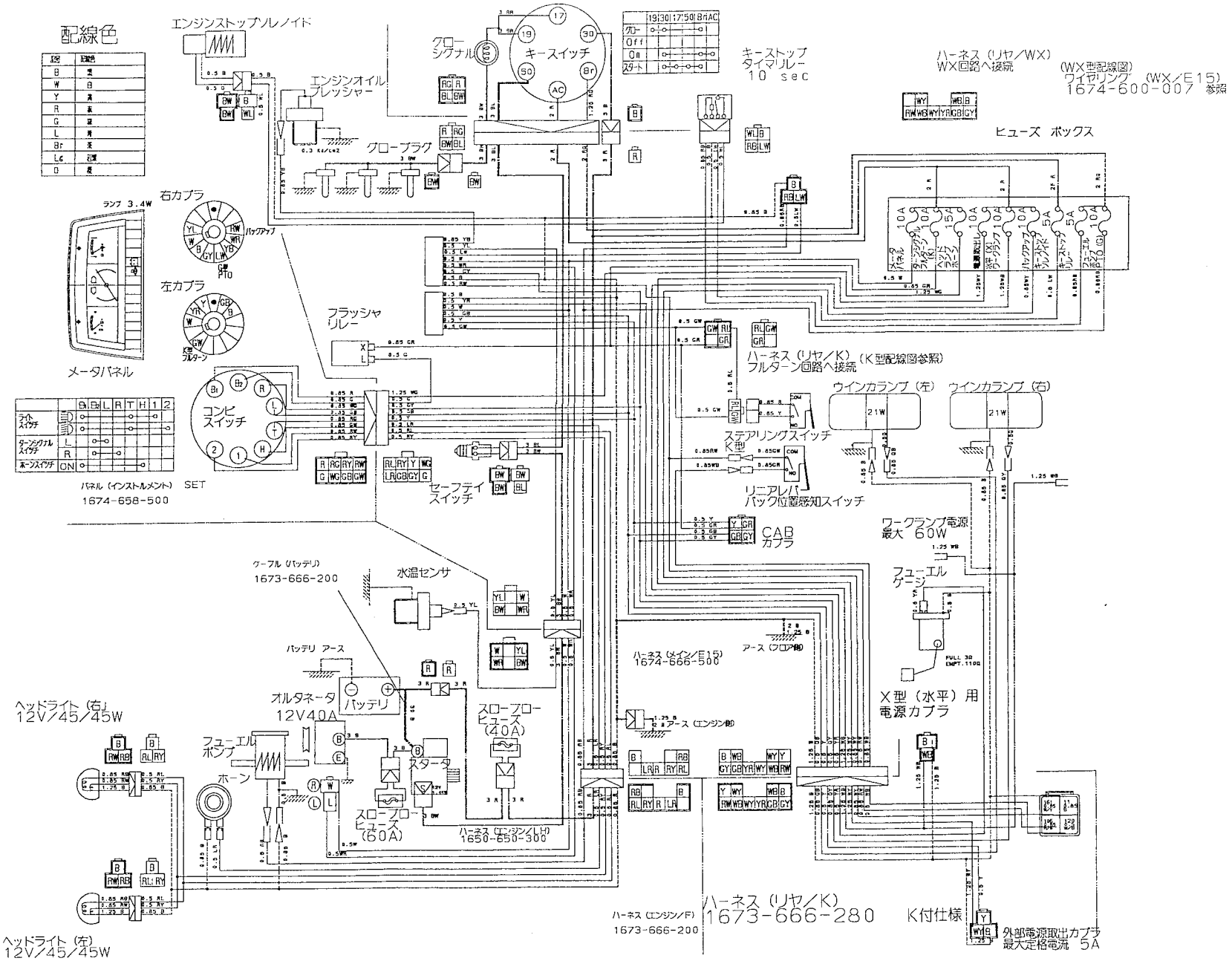

WIRING DIAGRAM (WX／E15)

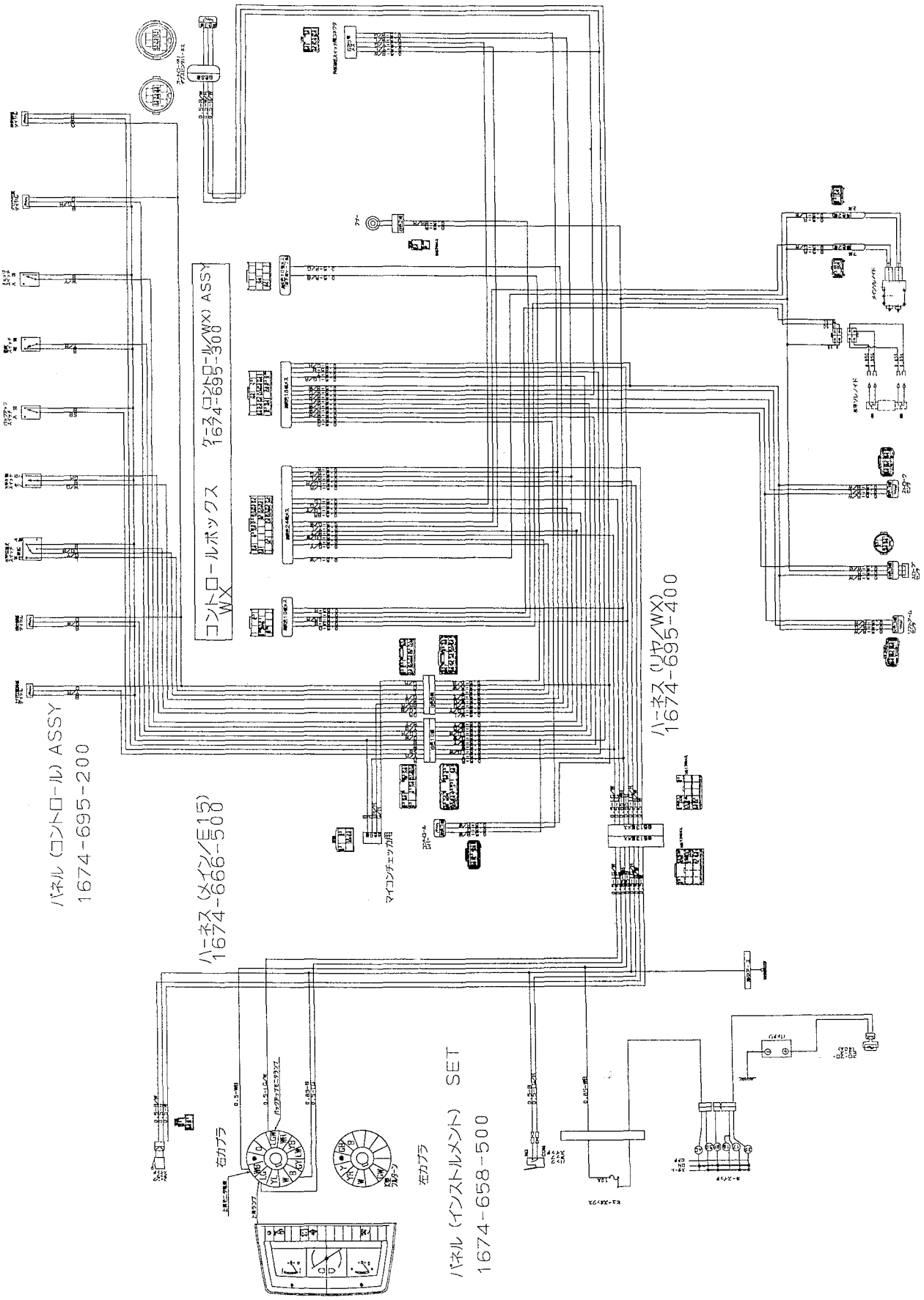

NUMERICAL INDEX

PART CODE	FIG.	KEY	PART CODE	FIG.	KEY	PART CODE	FIG.	KEY
J061-210-015-00	17	23	6209-000-013-00	15	9	6211-258-002-00	5	10
J062-076-082-00	21	4	6209-030-005-00	9	8	6211-291-010-00	2	3
P117-303-003-00	9	23	6209-030-006-00	9	9	6211-291-015-10	5	25
V195-164-008-30	2	4		17	28	6211-292-001-20	5	26
V211-560-802-00	9	12	6209-030-043-00	20	18	6211-310-009-30	9	1
	17	27	6209-030-091-00	8	4	6211-311-013-00	9	40
	20	7	6209-030-092-00	18	4	6211-312-005-10	9	28
	22	3	6209-030-095-00	9	14	6211-312-006-10	9	41
V211-560-802-50	3	3	6209-031-083-00	22	5	6211-319-003-00	9	43
	4	3	6209-046-001-00	9	16	6211-341-030-00	8	1
	17	19	6209-050-001-00	9	33	6211-342-003-10	8	2
V220-540-602-00	16	7	6209-050-002-00	9	34	6211-360-031-10	7	1
V251-340-806-00	5	21	6209-360-011-00	21	3	6211-361-038-10	7	2
V341-120-008-00	9	20	6209-360-031-00	2	9	6211-510-008-00	5	11
V411-260-006-00	20	41	6209-409-001-00	9	19	6211-511-007-00	5	12
V523-101-001-80	8	3	6209-409-003-00	11	18	6211-511-008-00	5	13
	15	2	6209-440-002-10	13	7	6211-530-008-00	6	1
V600-110-600-40	20	14	6209-490-002-00	2	7	6211-540-008-00	6	3
V600-110-600-50	9	48	6209-500-003-00	9	17	6211-599-004-00	5	14
V600-110-620-30	20	13		9	26		6	2
V600-150-600-20	15	7	6209-500-005-00	11	23		6	4
V682-200-000-60	1	10	6209-580-002-10	20	38	6211-711-005-00	1	6
V704-140-016-00	11	16	6209-605-003-00	9	2	6211-715-006-00	1	5
V705-140-012-00	9	32	6209-605-004-10	1	4	6211-721-003-10	1	7
V710-140-004-00	20	23	6209-610-001-00	5	4	6211-721-004-00	1	8
	20	34	6209-610-003-00	1	3	6211-751-001-10	2	5
V720-101-900-80	20	37		5	6	6211-751-002-00	5	31
V720-102-401-80	7	4	6209-610-004-00	9	3	6211-760-020-00	5	29
V720-103-502-50	5	32	6209-625-002-00	9	7	6211-766-006-10	5	30
V720-113-502-20	16	9	6209-625-003-10	5	15	6211-777-007-20	10	1
V721-103-104-00	17	12	6209-630-002-10	23	6	6212-111-039-40	13	1
V721-103-105-00	17	16	6209-740-001-00	9	27	6212-114-039-40	14	1
V723-102-002-40	9	37	6209-740-005-00	5	18	6212-116-039-40	14	3
V723-102-005-00	9	44	6209-749-001-20	5	16	6212-121-013-20	13	2
V723-102-005-50	17	31		9	45	6212-124-013-20	14	2
1373-121-001-00	22	4	6209-920-002-00	9	21	6212-126-013-20	14	4
1650-650-015-00	9	15	6209-940-004-00	11	15	6212-230-005-00	13	5
2145-161-211-00	27	16	6211-110-045-40	1	1	6212-235-002-10	13	6
3625-301-002-00	7	3	6211-141-023-40	1	11	6212-261-009-10	13	8
3625-540-004-00	9	39	6211-150-033-10	1	2	6212-263-009-00	6	5
3640-586-004-00	21	5	6211-170-007-20	2	1	6212-264-009-00	6	6
6115-639-008-00	25	51	6211-173-005-00	2	6	6212-310-011-20	15	1
6209-000-002-00	11	19	6211-179-011-20	2	2	6212-330-029-30	15	5
6209-000-005-00	1	12	6211-210-056-10	5	1	6212-333-002-00	15	6
6209-000-006-00	5	2	6211-258-001-00	5	9	6212-336-001-00	15	8

6005-097-240-00

PART CODE	FIG.	KEY	PART CODE	FIG.	KEY	PART CODE	FIG.	KEY
6212-371-022-00	15	10	6213-619-002-00	17	11	6215-359-006-00	25	53
6212-379-001-00	15	11	6213-619-003-00	17	10	6215-411-067-00	19	6
6212-511-005-00	12	1	6213-619-006-00	17	15	6215-411-068-00	19	7
6212-521-002-00	15	3	6213-621-003-00	17	6	6215-411-069-00	19	8
6212-522-004-00	12	2	6213-622-002-10	17	5	6215-411-080-10	21	2
6212-523-006-30	12	6	6213-631-002-00	17	3	6215-412-004-00	21	1
6212-524-006-00	20	11	6213-631-005-00	17	4	6215-520-001-00	20	17
6212-530-005-10	9	47	6213-641-012-00	18	2	6215-526-001-10	20	19
6212-531-008-20	5	8	6213-642-002-00	17	7	6215-531-010-00	20	35
6212-535-007-00	12	4	6213-660-015-00	18	1	6215-537-002-10	20	44
6212-535-009-00	20	15	6213-669-012-00	18	3	6215-541-001-00	20	20
6212-551-008-00	11	1	6213-674-006-10	22	2	6215-541-016-30	20	25
6212-552-008-00	11	2	6213-711-003-20	17	30	6215-541-024-10	20	36
6212-561-003-00	11	3	6213-716-001-40	17	24	6215-542-004-20	9	22
6212-563-001-00	11	4	6213-721-003-00	17	25	6215-542-005-00	9	24
6212-565-001-00	11	5	6213-721-007-00	5	23	6215-542-006-00	20	22
6212-569-002-00	1	9	6213-729-013-10	17	22	6215-543-002-10	20	21
6212-571-002-20	11	6	6213-743-002-10	17	26	6215-546-003-00	9	18
6212-575-003-00	11	7	6214-110-003-00	3	1	6215-549-006-00	20	29
6212-600-009-10	11	8	6214-115-003-10	3	2	6215-549-007-10	20	39
6212-611-004-10	11	9	6214-141-023-00	4	1	6215-549-009-00	20	30
6212-616-002-00	11	17	6214-145-004-20	4	2	6215-549-010-00	20	31
6212-619-001-20	11	20	6215-300-031-00	19	1	6215-549-012-00	20	43
6212-620-008-10	11	10	6215-311-028-00	24	16	6215-549-013-00	5	28
6212-621-008-10	11	11	6215-315-002-00	19	2	6215-549-023-00	20	32
6212-626-002-10	11	12	6215-315-005-00	19	4	6215-549-024-00	20	33
6212-628-006-00	11	13	6215-315-006-00	19	3	6215-549-031-10	20	24
6212-628-007-00	11	14	6215-315-007-00	19	5	6215-549-035-00	20	28
6213-100-004-20	16	1	6215-330-022-00	24	1	6215-549-037-00	20	27
6213-111-002-20	16	2	6215-332-006-00	24	15	6215-549-038-00	20	26
6213-119-001-00	16	6	6215-339-004-00	24	14	6215-600-104-10	20	1
6213-120-002-20	16	3	6215-342-002-00	24	13	6215-611-009-00	25	1
6213-125-002-10	16	4	6215-343-002-00	24	12	6215-619-023-00	25	50
6213-129-003-00	16	5	6215-345-044-00	24	2	6215-619-024-00	25	52
6213-140-013-00	16	8	6215-345-045-00	24	3	6215-621-017-00	20	10
6213-149-003-20	16	10	6215-345-046-00	24	4	6215-622-003-00	25	11
6213-160-002-00	9	29	6215-345-047-00	24	5	6215-629-017-00	25	12
6213-161-001-00	9	30	6215-345-048-00	24	6	6215-629-035-00	25	13
6213-164-001-00	9	31	6215-345-049-00	24	7	6215-629-036-00	25	25
6213-240-002-00	16	12	6215-345-050-00	24	8	6215-629-037-00	25	26
6213-319-001-00	5	24	6215-345-051-00	24	9	6215-629-038-00	25	27
6213-610-005-40	17	1	6215-345-052-00	24	10	6215-629-039-00	25	28
6213-611-003-20	17	2	6215-345-053-00	24	11	6215-629-040-00	25	29
6213-612-004-00	17	9	6215-359-003-00	24	17	6215-629-041-00	25	30
6213-613-002-10	17	8	6215-359-004-00	24	18	6215-629-042-00	25	31

PART CODE	FIG.	KEY	PART CODE	FIG.	KEY	PART CODE	FIG.	KEY
6215-629-043-00	25	32	6281-100-007-10	22	7	6281-271-002-00	27	26
6215-629-044-00	25	33	6281-111-005-00	26	1	6281-410-010-00	23	3
6215-629-045-00	25	34	6281-115-010-00	26	23	6281-910-003-00	23	5
6215-629-046-00	25	35	6281-115-011-00	26	10	6281-920-001-00	23	8
6215-629-047-00	25	36	6281-115-016-00	26	20	6281-971-003-00	23	1
6215-629-048-00	25	37	6281-116-004-00	26	11	6282-450-004-00	23	2
6215-629-049-00	25	38	6281-121-006-00	26	2	6294-453-002-00	5	22
6215-629-050-00	25	39	6281-123-005-00	26	8	6509-605-019-10	5	7
6215-629-051-00	25	40	6281-124-007-10	26	5	6512-211-018-00	13	3
6215-629-052-00	25	41	6281-129-003-00	26	19	6513-671-138-00	18	5
6215-629-053-00	25	42	6281-129-038-00	26	3	6513-770-022-10	17	29
6215-629-054-00	25	43	6281-129-039-00	26	4	6581-117-007-00	26	12
6215-629-055-00	25	44	6281-129-040-00	26	7	6581-129-092-00	26	17
6215-629-056-00	25	45	6281-129-042-00	26	15	6581-129-099-00	26	6
6215-629-058-00	25	46	6281-129-043-00	26	16	6901-050-850-00	9	13
6215-629-059-00	25	47	6281-129-044-00	26	18	6901-055-855-00	11	21
6215-629-060-00	25	17	6281-129-045-00	26	9	6901-066-645-00	15	12
6215-629-061-00	25	18	6281-129-062-00	26	14	6901-910-612-00	12	5
6215-629-062-00	25	19	6281-151-017-00	26	13		20	16
6215-629-063-00	25	20	6281-200-008-10	22	1		23	7
6215-629-064-00	25	21	6281-213-012-00	27	7	6901-910-614-00	5	27
6215-629-065-00	25	22	6281-214-003-00	27	12	6901-910-616-00	9	38
6215-629-066-00	25	23	6281-214-004-00	27	13	6901-910-635-00	7	5
6215-629-067-00	25	24	6281-215-001-00	27	17	6901-910-816-00	16	11
6215-631-015-00	25	2	6281-216-001-00	27	18	6901-910-828-00	17	32
6215-634-003-00	25	14	6281-221-001-00	27	4	6901-910-845-00	17	18
6215-635-004-00	25	8	6281-222-004-00	27	1	6901-911-020-00	10	2
6215-635-005-00	25	49	6281-229-002-00	27	2	6901-911-025-00	8	5
6215-637-004-00	25	48	6281-229-003-00	27	3	6901-931-240-00	22	8
6215-639-008-00	25	15	6281-229-004-00	27	6	6902-050-816-00	9	42
6215-639-009-00	25	16	6281-229-005-00	27	5	6904-110-822-00	5	20
6215-641-002-00	25	3	6281-229-006-00	27	8		9	4
6215-643-005-00	25	4	6281-229-007-00	27	9		9	46
6215-644-006-00	25	6	6281-229-008-00	27	10	6904-110-840-00	5	19
6215-649-008-00	25	5	6281-229-009-00	27	11		17	17
6215-649-009-00	25	7	6281-229-011-00	27	15	6904-110-850-00	9	6
6215-649-010-00	25	9	6281-229-012-00	27	19	6904-110-855-00	9	5
6215-649-011-00	25	10	6281-229-013-00	27	20	6908-000-716-00	12	3
6219-310-003-10	9	36	6281-229-014-00	27	21		20	12
6219-732-012-00	23	4	6281-229-015-00	27	22	6908-000-750-00	15	4
6219-752-006-00	20	2	6281-229-016-00	27	23	6908-160-816-00	5	17
6219-752-007-00	20	3	6281-229-017-00	27	24	6909-110-406-00	9	35
6219-752-008-00	20	4	6281-229-018-00	27	25		20	40
6219-752-009-00	20	5	6281-229-029-00	27	14	6909-110-408-00	9	49
6219-752-010-00	20	6	6281-229-041-00	26	22		9	51

6005-097-240-00

PART CODE	FIG.	KEY	PART CODE	FIG. KEY	PART CODE	FIG. KEY
6909-110-410-00	22	6				
6909-110-508-00	9	10				
	11	22				
	17	13				
	17	20				
	20	8				
6909-111-508-00	26	21				
6909-150-506-00	20	42				
6909-150-508-00	9	11				
	9	50				
	9	52				
	17	14				
	17	21				
	20	9				
6909-202-308-00	9	25				
6909-572-008-00	2	8				
6909-830-212-00	1	13				
6909-950-115-00	13	4				
6911-129-081-00	5	3				
6911-219-195-00	5	5				

NUMERICAL INDEX

PART CODE	FIG.	KEY	PART CODE	FIG.	KEY	PART CODE	FIG.	KEY
J061-210-015-00	17	23	6209-000-013-00	15	9	6211-258-002-00	5	10
J062-076-082-00	21	4	6209-030-005-00	9	8	6211-291-010-00	2	3
P117-303-003-00	9	23	6209-030-006-00	9	9	6211-291-015-10	5	25
V195-164-008-30	2	4		17	28	6211-292-001-20	5	26
V211-560-802-00	9	12	6209-030-043-00	20	18	6211-310-009-30	9	1
	17	27	6209-030-091-00	8	4	6211-311-013-00	9	40
	20	7	6209-030-092-00	18	4	6211-312-005-10	9	28
	22	3	6209-030-095-00	9	14	6211-312-006-10	9	41
V211-560-802-50	3	3	6209-031-083-00	22	5	6211-319-003-00	9	43
	4	3	6209-046-001-00	9	16	6211-341-030-00	8	1
	17	19	6209-050-001-00	9	33	6211-342-003-10	8	2
V220-540-602-00	16	7	6209-050-002-00	9	34	6211-360-031-10	7	1
V251-340-806-00	5	21	6209-360-011-00	21	3	6211-361-038-10	7	2
V341-120-008-00	9	20	6209-360-031-00	2	9	6211-510-008-00	5	11
V411-260-006-00	20	41	6209-409-001-00	9	19	6211-511-007-00	5	12
V523-101-001-80	8	3	6209-409-003-00	11	18	6211-511-008-00	5	13
	15	2	6209-440-002-10	13	7	6211-530-008-00	6	1
V600-110-600-40	20	14	6209-490-002-00	2	7	6211-540-008-00	6	3
V600-110-600-50	9	48	6209-500-003-00	9	17	6211-599-004-00	5	14
V600-110-620-30	20	13		9	26		6	2
V600-150-600-20	15	7	6209-500-005-00	11	23		6	4
V682-200-000-60	1	10	6209-580-002-10	20	38	6211-711-005-00	1	6
V704-140-016-00	11	16	6209-605-003-00	9	2	6211-715-006-00	1	5
V705-140-012-00	9	32	6209-605-004-10	1	4	6211-721-003-10	1	7
V710-140-004-00	20	23	6209-610-001-00	5	4	6211-721-004-00	1	8
	20	34	6209-610-003-00	1	3	6211-751-001-10	2	5
V720-101-900-80	20	37		5	6	6211-751-002-00	5	31
V720-102-401-80	7	4	6209-610-004-00	9	3	6211-760-020-00	5	29
V720-103-502-50	5	32	6209-625-002-00	9	7	6211-766-006-10	5	30
V720-113-502-20	16	9	6209-625-003-10	5	15	6211-777-007-20	10	1
V721-103-104-00	17	12	6209-630-002-10	23	6	6212-111-039-40	13	1
V721-103-105-00	17	16	6209-740-001-00	9	27	6212-114-039-40	14	1
V723-102-002-40	9	37	6209-740-005-00	5	18	6212-116-039-40	14	3
V723-102-005-00	9	44	6209-749-001-20	5	16	6212-121-013-20	13	2
V723-102-005-50	17	31		9	45	6212-124-013-20	14	2
1373-121-001-00	22	4	6209-920-002-00	9	21	6212-126-013-20	14	4
1650-650-015-00	9	15	6209-940-004-00	11	15	6212-230-005-00	13	5
2145-161-211-00	27	16	6211-110-054-10	1	1	6212-235-002-10	13	6
3625-301-002-00	7	3	6211-141-023-40	1	11	6212-261-009-10	13	8
3625-540-004-00	9	39	6211-150-032-10	1	2	6212-263-009-00	6	5
3640-586-004-00	21	5	6211-170-007-20	2	1	6212-264-009-00	6	6
6115-639-008-00	25	51	6211-173-005-00	2	6	6212-310-011-20	15	1
6209-000-002-00	11	19	6211-179-011-20	2	2	6212-330-029-30	15	5
6209-000-005-00	1	12	6211-210-056-10	5	1	6212-333-002-00	15	6
6209-000-006-00	5	2	6211-258-001-00	5	9	6212-336-001-00	15	8

6005-097-230-00

PART CODE	FIG.	KEY	PART CODE	FIG.	KEY	PART CODE	FIG.	KEY
6212-371-022-00	15	10	6213-619-002-00	17	11	6215-359-006-00	25	53
6212-379-001-00	15	11	6213-619-003-00	17	10	6215-411-067-00	19	6
6212-511-005-00	12	1	6213-619-006-00	17	15	6215-411-068-00	19	7
6212-521-002-00	15	3	6213-621-003-00	17	6	6215-411-069-00	19	8
6212-522-004-00	12	2	6213-622-002-10	17	5	6215-411-080-10	21	2
6212-523-006-30	12	6	6213-631-002-00	17	3	6215-412-004-00	21	1
6212-524-006-00	20	11	6213-631-005-00	17	4	6215-520-001-00	20	17
6212-530-005-10	9	47	6213-641-012-00	18	2	6215-526-001-10	20	19
6212-531-008-20	5	8	6213-642-002-00	17	7	6215-531-010-00	20	35
6212-535-007-00	12	4	6213-660-015-00	18	1	6215-537-002-10	20	44
6212-535-009-00	20	15	6213-669-012-00	18	3	6215-541-001-00	20	20
6212-551-008-00	11	1	6213-674-006-10	22	2	6215-541-016-30	20	25
6212-552-008-00	11	2	6213-711-003-20	17	30	6215-541-024-10	20	36
6212-561-003-00	11	3	6213-716-001-40	17	24	6215-542-004-20	9	22
6212-563-001-00	11	4	6213-721-003-00	17	25	6215-542-005-00	9	24
6212-565-001-00	11	5	6213-721-007-00	5	23	6215-542-006-00	20	22
6212-569-002-00	1	9	6213-729-013-10	17	22	6215-543-002-10	20	21
6212-571-002-20	11	6	6213-743-002-10	17	26	6215-546-003-00	9	18
6212-575-003-00	11	7	6214-110-003-00	3	1	6215-549-006-00	20	29
6212-600-009-10	11	8	6214-115-003-10	3	2	6215-549-007-10	20	39
6212-611-004-10	11	9	6214-141-023-00	4	1	6215-549-009-00	20	30
6212-616-002-00	11	17	6214-145-004-20	4	2	6215-549-010-00	20	31
6212-619-001-20	11	20	6215-300-031-00	19	1	6215-549-012-00	20	43
6212-620-008-10	11	10	6215-311-028-00	24	16	6215-549-013-00	5	28
6212-621-008-10	11	11	6215-315-002-00	19	2	6215-549-023-00	20	32
6212-626-002-10	11	12	6215-315-005-00	19	4	6215-549-024-00	20	33
6212-628-006-00	11	13	6215-315-006-00	19	3	6215-549-031-10	20	24
6212-628-007-00	11	14	6215-315-007-00	19	5	6215-549-032-00	20	28
6213-100-004-20	16	1	6215-330-022-00	24	1	6215-549-037-00	20	27
6213-111-002-20	16	2	6215-332-006-00	24	15	6215-549-038-00	20	26
6213-119-001-00	16	6	6215-339-004-00	24	14	6215-600-104-10	20	1
6213-120-002-20	16	3	6215-342-002-00	24	13	6215-611-009-00	25	1
6213-125-002-10	16	4	6215-343-002-00	24	12	6215-619-023-00	25	50
6213-129-003-00	16	5	6215-345-044-00	24	2	6215-619-024-00	25	52
6213-140-013-00	16	8	6215-345-045-00	24	3	6215-621-017-00	20	10
6213-149-003-20	16	10	6215-345-046-00	24	4	6215-622-003-00	25	11
6213-160-002-00	9	29	6215-345-047-00	24	5	6215-629-017-00	25	12
6213-161-001-00	9	30	6215-345-048-00	24	6	6215-629-035-00	25	13
6213-164-001-00	9	31	6215-345-049-00	24	7	6215-629-036-00	25	25
6213-240-002-00	16	12	6215-345-050-00	24	8	6215-629-037-00	25	26
6213-319-001-00	5	24	6215-345-051-00	24	9	6215-629-038-00	25	27
6213-610-005-40	17	1	6215-345-052-00	24	10	6215-629-039-00	25	28
6213-611-003-20	17	2	6215-345-053-00	24	11	6215-629-040-00	25	29
6213-612-004-00	17	9	6215-359-003-00	24	17	6215-629-041-00	25	30
6213-613-002-10	17	8	6215-359-004-00	24	18	6215-629-042-00	25	31

PART CODE	FIG.	KEY	PART CODE	FIG.	KEY	PART CODE	FIG.	KEY
6215-629-043-00	25	32	6281-100-007-10	22	7	6281-271-002-00	27	26
6215-629-044-00	25	33	6281-111-005-00	26	1	6281-410-010-00	23	3
6215-629-045-00	25	34	6281-115-010-00	26	23	6281-910-003-00	23	5
6215-629-046-00	25	35	6281-115-011-00	26	10	6281-920-001-00	23	8
6215-629-047-00	25	36	6281-115-016-00	26	20	6281-971-003-00	23	1
6215-629-048-00	25	37	6281-116-004-00	26	11	6282-450-004-00	23	2
6215-629-049-00	25	38	6281-121-006-00	26	2	6294-453-002-00	5	22
6215-629-050-00	25	39	6281-123-005-00	26	8	6509-605-019-10	5	7
6215-629-051-00	25	40	6281-124-007-10	26	5	6512-211-018-00	13	3
6215-629-052-00	25	41	6281-129-003-00	26	19	6513-671-138-00	18	5
6215-629-053-00	25	42	6281-129-038-00	26	3	6513-770-022-10	17	29
6215-629-054-00	25	43	6281-129-039-00	26	4	6581-117-007-00	26	12
6215-629-055-00	25	44	6281-129-040-00	26	7	6581-129-092-00	26	17
6215-629-056-00	25	45	6281-129-042-00	26	15	6581-129-099-00	26	6
6215-629-058-00	25	46	6281-129-043-00	26	16	6901-050-850-00	9	13
6215-629-059-00	25	47	6281-129-044-00	26	18	6901-055-855-00	11	21
6215-629-060-00	25	17	6281-129-045-00	26	9	6901-066-645-00	15	12
6215-629-061-00	25	18	6281-129-062-00	26	14	6901-910-612-00	12	5
6215-629-062-00	25	19	6281-151-017-00	26	13		20	16
6215-629-063-00	25	20	6281-200-008-10	22	1		23	7
6215-629-064-00	25	21	6281-213-012-00	27	7	6901-910-614-00	5	27
6215-629-065-00	25	22	6281-214-003-00	27	12	6901-910-616-00	9	38
6215-629-066-00	25	23	6281-214-004-00	27	13	6901-910-635-00	7	5
6215-629-067-00	25	24	6281-215-001-00	27	17	6901-910-816-00	16	11
6215-631-015-00	25	2	6281-216-001-00	27	18	6901-910-828-00	17	32
6215-634-003-00	25	14	6281-221-001-00	27	4	6901-910-845-00	17	18
6215-635-004-00	25	8	6281-222-004-00	27	1	6901-911-020-00	10	2
6215-635-005-00	25	49	6281-229-002-00	27	2	6901-911-025-00	8	5
6215-637-004-00	25	48	6281-229-003-00	27	3	6901-931-240-00	22	8
6215-639-008-00	25	15	6281-229-004-00	27	6	6902-050-816-00	9	42
6215-639-009-00	25	16	6281-229-005-00	27	5	6904-110-822-00	5	20
6215-641-002-00	25	3	6281-229-006-00	27	8		9	4
6215-643-005-00	25	4	6281-229-007-00	27	9		9	46
6215-644-006-00	25	6	6281-229-008-00	27	10	6904-110-840-00	5	19
6215-649-008-00	25	5	6281-229-009-00	27	11		17	17
6215-649-009-00	25	7	6281-229-011-00	27	15	6904-110-850-00	9	6
6215-649-010-00	25	9	6281-229-012-00	27	19	6904-110-855-00	9	5
6215-649-011-00	25	10	6281-229-013-00	27	20	6908-000-716-00	12	3
6219-310-003-10	9	36	6281-229-014-00	27	21		20	12
6219-732-012-00	23	4	6281-229-015-00	27	22	6908-000-750-00	15	4
6219-752-006-00	20	2	6281-229-016-00	27	23	6908-160-816-00	5	17
6219-752-007-00	20	3	6281-229-017-00	27	24	6909-110-406-00	9	35
6219-752-008-00	20	4	6281-229-018-00	27	25		20	40
6219-752-009-00	20	5	6281-229-029-00	27	14	6909-110-408-00	9	49
6219-752-010-00	20	6	6281-229-041-00	26	22		9	51

6005-097-230-00

PART CODE	FIG.	KEY	PART CODE	FIG.	KEY	PART CODE	FIG.	KEY
6909-110-410-00	22	6						
6909-110-508-00	9	10						
	11	22						
	17	13						
	17	20						
	20	8						
6909-111-508-00	26	21						
6909-150-506-00	20	42						
6909-150-508-00	9	11						
	9	50						
	9	52						
	17	14						
	17	21						
	20	9						
6909-202-308-00	9	25						
6909-572-008-00	2	8						
6909-830-212-00	1	13						
6909-950-115-00	13	4						
6911-129-081-00	5	3						
6911-219-195-00	5	5						

NUMERICAL INDEX

PART CODE	FIG.	KEY	PART CODE	FIG.	KEY	PART CODE	FIG.	KEY
A101-251-008-00	54	8	K221-001-002-00	117	19	V195-163-008-30	100	22
J061-108-016-00	1	26	K221-001-003-00	117	20	V195-164-012-30	104	5
J061-116-025-00	5	11	K221-001-004-00	117	22	V195-164-012-40	100	18
	61	37	K221-001-005-10	117	24	V195-164-020-40	120	9
	61	42	K221-001-006-10	117	26	V200-260-501-0B	101	6
	71	25	K221-001-007-00	116	6	V200-260-602-00	91	3
	72	25		117	27	V200-260-603-00	91	4
J061-210-015-00	3	24	K231-004-000-20	74	26	V200-260-603-50	104	90
	52	14	K231-004-006-00	74	29	V200-260-605-50	120	7
J061-211-013-00	1	27	K231-004-007-00	74	31	V200-360-611-00	75	12
J061-230-038-00	3	16	K233-001-004-00	116	8		76	12
J061-232-040-00	3	15	K234-001-000-00	117	1	V201-260-801-20	5	22
	75	27	K234-001-003-00	117	3		37	1
	76	27	K234-001-004-00	117	4		45	1
	77	22	K234-001-005-00	117	5		103	28
J061-234-042-00	3	14	K234-001-100-00	117	2	V201-260-801-60	88	21
J061-249-060-00	2	11	K250-008-000-00	77	12	V201-260-802-00	11	6
J062-076-082-00	5	12	K250-015-000-00	74	23	V201-260-803-00	11	4
J062-104-111-00	5	13	K250-031-000-00	117	7	V201-260-803-50	64	9
K110-001-106-00	116	5	K270-001-003-10	116	15	V201-260-805-0B	84	3
	117	21	K270-001-004-00	116	16	V201-260-808-00	1	15
K135-002-009-00	61	16	K270-001-201-00	116	13		4	19
	77	8	P120-605-031-00	54	5	V201-261-006-00	40	20
K135-012-000-00	77	1	V111-163-000-80	104	16		41	20
K135-012-100-00	77	2	V111-165-001-20	99	12	V201-261-008-50	79	2
K135-013-000-00	61	9	V111-165-005-50	99	8	V201-261-203-00	25	2
K135-013-100-00	61	10		99	11		25	6
K135-017-006-00	61	11	V111-166-003-00	98	4	V201-261-403-00	93	3
	77	3	V111-166-004-00	74	35	V201-261-604-00	114	10
K182-034-002-00	115	8	V120-264-000-80	100	26	V201-261-607-50	114	14
K182-034-003-00	115	9	V120-264-001-00	100	23	V201-261-611-00	114	18
K185-004-000-20	83	1	V120-265-001-00	100	28	V201-261-615-00	114	22
K185-004-001-00	115	2	V120-266-001-60	7	15	V201-360-802-5B	28	8
K185-004-003-00	115	6		8	15	V201-360-805-0B	22	5
K185-004-200-00	115	1	V120-364-001-00	104	28	V201-360-805-00	22	2
K185-004-300-00	115	7	V120-364-001-20	82	14	V201-360-806-50	28	10
K200-014-005-00	116	11		104	59	V201-361-005-50	94	13
K200-014-006-00	116	17		104	86	V201-361-009-00	71	6
K200-016-000-00	84	1		104	97		72	6
K200-016-100-10	116	1	V120-364-003-00	102	6	V201-361-010-00	48	5
K200-016-200-00	116	12		104	44	V201-361-011-00	48	6
K200-019-000-00	79	1	V120-366-001-60	82	15	V201-361-202-50	69	9
K200-019-100-00	117	10		100	48		70	9
K211-008-011-00	116	9	V120-368-002-00	58	8		93	6
K221-001-000-10	117	18		87	14		94	5

1674-097-110-00

PART CODE	FIG.	KEY	PART CODE	FIG.	KEY	PART CODE	FIG.	KEY
V201-361-203-00	12	5	V210-560-602-50	61	31	V211-261-002-00	76	22
	13	5	V210-560-603-00	61	40	V211-261-002-50	55	3
	62	3	V210-560-603-50	75	3		55	7
	62	8		76	3		71	28
V201-361-203-50	24	3	V210-560-604-50	77	19		72	28
	24	9	V211-260-801-20	5	10		75	32
	66	20		64	12		76	32
	67	6		102	4	V211-261-003-00	71	29
	74	18		104	38		72	29
V201-361-204-00	12	4		104	48		75	17
	13	4		104	51		76	17
V201-361-204-50	12	6	V211-260-801-60	5	2	V211-261-003-50	40	2
	13	6		7	10		41	2
	62	4		8	10	V211-360-801-20	83	6
	74	19		43	2	V211-360-801-60	4	11
V201-361-207-00	74	20		52	16		4	17
V201-361-208-00	93	8		54	20		26	11
	94	7		75	24		33	24
V201-361-208-50	24	8		75	35		61	21
V201-361-212-00	63	5		76	24		75	7
V201-361-215-50	80	6		76	35		76	7
V201-361-217-00	63	2		91	16		87	6
V201-361-403-00	80	10		91	20		88	16
V201-361-403-50	80	2		95	9		88	26
	110	2		104	84		88	32
V201-361-603-00	56	19	V211-260-802-00	5	20		89	15
	57	19		19	4		90	3
V201-361-604-50	66	12		31	4		95	7
V201-461-002-50	118	41		52	19		95	11
V201-461-203-00	118	40		60	7		95	15
V203-261-003-00	120	8		67	11		95	19
V203-361-805-00	66	23		82	25		103	30
V210-260-601-20	1	20		87	2		104	82
	101	11		87	4	V211-360-802-00	7	22
V210-260-601-60	101	9		87	8		8	22
V210-360-601-00	3	10		89	10		19	10
V210-360-601-20	104	74		92	8		23	2
V210-360-601-60	61	28		95	4		54	21
	85	10	V211-260-803-50	104	115		59	10
	85	19	V211-260-804-00	75	14		85	15
	88	43		76	14		85	23
	103	16	V211-260-805-00	84	2		86	3
V210-360-602-50	103	31	V211-260-806-00	74	15		89	8
V210-360-603-50	103	32	V211-261-002-00	28	14		104	34
V210-360-604-00	88	38		75	22		104	93

PART CODE	FIG.	KEY	PART CODE	FIG.	KEY	PART CODE	FIG.	KEY
V211-360-802-00	112	9	V211-661-002-00	93	14	V304-260-008-00	44	5
V211-360-802-50	82	17	V211-661-003-50	94	17		44	11
	85	21	V220-540-508-50	117	32		45	14
	104	36	V240-461-608-50	56	3		45	18
	104	64		56	12		52	28
V211-360-803-00	82	6	V251-260-802-0D	12	12		82	8
	88	40		13	12		82	21
V211-360-803-50	78	3		24	5		85	17
	95	12	V251-341-002-5D	67	34		93	11
V211-360-804-00	3	20	V251-341-002-50	66	5		95	26
V211-361-002-50	77	15		67	47		103	9
V211-560-801-60	14	6	V251-341-002-8D	26	3		104	112
	14	12	V251-341-003-5D	26	6		104	116
	22	19	V251-341-202-50	12	2	V304-260-010-00	40	21
	26	9		13	2		41	21
	39	5	V251-341-203-00	62	2		74	37
	40	5	V251-341-203-2D	26	2		87	10
	41	5	V251-341-203-50	12	13	V304-260-012-00	114	3
V211-560-802-00	65	18		13	13	V304-260-016-00	66	13
V211-560-802-50	9	7	V251-440-802-5D	12	10		80	13
	59	6		13	10		80	18
V211-560-803-00	61	8	V271-160-601-20	3	5		105	5
V211-561-002-50	46	9	V290-106-001-20	86	8		114	6
	47	18	V301-260-003-00	104	17	V304-460-008-00	9	9
	52	8	V301-260-006-00	82	11	V304-460-010-00	66	7
	67	36		97	10		67	35
	67	46		104	61		67	49
	91	23		104	91		71	8
V211-561-003-00	48	3		104	99		72	8
	71	7	V302-460-016-00	56	5	V304-460-012-00	12	3
	72	7		56	14		13	3
V211-561-004-00	48	4		57	5		24	2
	71	5		57	14		24	10
	72	5	V304-260-008-00	4	22		66	21
V211-660-801-60	39	7		11	5		80	7
	95	18		11	7		94	9
V211-660-802-00	2	9		11	15		105	11
	2	13		23	3	V304-460-016-00	56	4
	2	20		31	5		56	13
	6	2		40	7		57	4
	9	16		40	19		57	13
V211-660-802-50	3	26		41	7		66	26
	28	7		41	19		83	9
	34	17		42	5	V328-261-110-00	7	6
	60	8		42	11		8	6

1674-097-110-00

PART CODE	FIG.	KEY
V328-262-110-00	58	3
V333-500-010-00	4	5
	4	13
V334-260-010-00	99	5
	112	2
V335-260-008-00	100	44
V350-160-004-00	85	8
V350-160-006-00	85	5
	86	9
V360-260-005-00	99	13
V361-260-006-00	40	27
	41	27
V362-260-008-00	3	29
	44	6
	44	12
	64	10
	88	19
	88	22
	88	27
	88	36
	91	18
V363-260-008-00	2	21
	5	25
	91	8
	91	14
	104	40
V401-160-003-00	104	19
V401-160-006-00	74	36
	75	13
	76	13
	82	12
	91	6
	104	62
	104	100
V401-160-008-00	1	16
	4	21
	9	6
	9	10
	22	3
	23	4
	23	9
	28	11
	30	13
	31	6
	34	4

PART CODE	FIG.	KEY
V401-160-008-00	47	3
	65	29
	100	43
	103	10
	103	29
	104	113
V401-160-010-00	4	14
	48	7
	48	12
	66	6
	67	33
	67	48
	71	9
	72	9
	79	3
	94	15
	99	4
	118	43
V401-160-012-00	12	7
	13	7
	24	4
	24	11
	25	3
	25	7
	62	5
	62	9
	63	3
	63	6
	66	22
	67	7
	69	10
	70	10
	74	21
	80	8
	93	7
	94	6
	94	10
	105	12
	118	42
V401-160-014-00	80	3
	80	11
	93	4
	110	3
V401-160-016-00	56	6
	56	15

PART CODE	FIG.	KEY
V401-160-016-00	56	20
	57	6
	57	15
	57	20
	80	14
	83	7
	105	6
	114	7
	114	11
	114	15
	114	19
	114	23
V401-160-018-00	66	24
V401-170-008-00	61	17
	77	9
V410-260-010-00	7	12
	8	12
V411-260-003-00	104	18
V411-260-004-00	100	25
V411-260-005-00	100	27
V411-260-006-00	7	16
	7	19
	7	25
	7	28
	8	16
	8	19
	8	25
	8	28
	11	19
	91	5
	97	9
V411-260-008-00	1	17
	4	20
	11	11
	23	5
	23	8
	28	12
	39	3
	52	25
	54	12
	64	11
	82	7
	82	22
	88	39
	104	67

1674-097-110-00

PART CODE	FIG.	KEY	PART CODE	FIG.	KEY	PART CODE	FIG.	KEY
V411-260-010-00	4	10	V500-162-502-00	34	20	V600-110-600-70	27	11
	7	4		54	13	V600-110-600-80	65	28
	8	4		91	11	V600-110-601-30	47	20
	19	17	V500-163-002-00	52	12	V600-110-620-50	16	12
	34	19		68	8		20	12
	44	2		68	13		21	12
	44	8		68	18		27	24
	58	5		80	22	V600-110-620-60	30	7
	91	24	V500-163-002-50	34	11		67	43
	94	14	V500-165-005-00	61	4	V600-110-620-70	27	10
	104	55	V511-100-603-60	23	14		67	3
V411-260-012-00	105	13	V511-100-805-00	54	2	V600-110-620-80	67	42
V411-260-016-00	80	15	V522-101-002-20	66	2	V600-110-620-90	67	9
	83	8	V523-100-601-80	37	5	V600-110-621-00	50	9
	105	7		45	5		51	9
	114	8	V523-101-002-40	12	11	V600-110-621-10	47	19
	114	12		13	11	V600-110-630-40	15	3
	114	16		24	6		17	2
	114	20		25	4		18	2
	114	24		25	8		20	11
V411-260-018-00	71	26		26	4	V600-110-630-50	17	3
	72	26		46	2		18	3
V500-162-002-00	7	13		47	7		67	20
	7	20		66	19	V600-130-600-30	60	4
	7	26		67	32	V610-115-110-60	67	16
	7	29		67	45	V654-420-261-10	30	4
	8	13	V580-140-402-50	54	23	V654-420-262-00	46	7
	8	20	V580-140-503-20	104	95	V654-425-301-70	27	2
	8	26	V580-140-602-00	37	9	V654-430-352-40	15	23
	8	29		45	10		17	7
	11	20	V580-140-602-50	19	8		18	7
	19	18		22	9		20	10
	39	4		31	10		21	10
	42	3		54	26	V654-432-372-30	15	9
	42	9	V580-140-604-00	104	88		15	14
	44	3	V580-140-805-00	74	8		15	17
	44	9	V600-110-600-40	16	9		20	5
	52	26		20	17		21	5
	58	4		21	17	V654-435-402-60	17	15
	82	23		27	25		18	15
	104	68		29	2	V654-435-422-00	33	19
V500-162-502-00	7	7		29	12	V654-440-451-70	27	21
	8	7		30	2	V654-440-452-70	33	5
	11	12		30	16		33	10
	34	12	V600-110-600-50	30	24		33	14

1674-097-110-00

PART CODE	FIG.	KEY	PART CODE	FIG.	KEY	PART CODE	FIG.	KEY
V654-445-501-70	27	15	V706-140-040-00	27	12	V720-112-401-40	76	16
V670-200-009-00	50	6		30	29		79	5
	51	6		49	5		116	10
V671-400-009-00	50	7		52	9		116	19
	51	7	V706-140-045-00	73	7		117	9
V682-200-000-80	116	4	V706-140-050-00	15	24		119	7
V682-200-001-00	19	3	V707-140-056-00	65	14	V720-112-401-60	74	33
	22	12	V707-140-062-00	30	8		117	6
	23	12		67	23		117	8
	28	5	V707-140-072-00	33	22	V720-112-401-80	61	35
	31	3	V707-140-080-00	52	17		74	25
	34	8	V707-140-090-00	48	8		116	18
V682-200-001-90	52	5	V710-140-007-00	22	17		117	25
V704-140-014-00	38	4	V710-140-009-00	85	12		119	5
V704-140-016-00	19	12	V720-101-900-80	118	32	V720-112-402-00	61	30
	35	3	V720-102-401-00	34	2		61	39
	36	3	V720-102-401-20	61	26		71	30
	40	15	V720-102-401-40	19	6		72	30
	41	15		31	8		74	13
	43	4	V720-102-401-60	1	11		75	5
V704-140-017-00	59	5		47	24		75	9
V704-140-020-00	54	6	V720-102-402-10	1	5		76	5
	64	2	V720-103-502-20	35	8		76	9
V704-140-025-00	27	8		36	8		77	18
	29	4	V720-103-503-10	61	27		78	2
	29	14	V720-103-503-40	64	7	V720-112-402-20	61	14
	52	23		65	5		74	32
	67	21	V720-103-503-60	64	6		77	6
V704-140-028-00	35	6	V720-111-900-50	117	30	V720-113-502-40	119	6
	36	6	V720-111-900-60	61	15	V720-115-705-00	115	3
V704-140-030-00	14	3		77	7	V720-115-707-00	74	6
	14	8	V720-111-900-80	116	7	V721-103-103-00	75	25
	15	5		117	28		75	34
	67	22	V720-112-401-00	74	11		76	25
V704-140-032-00	30	36		74	27		76	34
V704-140-035-00	16	3	V720-112-401-10	117	31	V721-103-103-50	75	20
V705-140-021-00	74	30	V720-112-401-20	74	24		76	20
V705-140-032-00	37	2		116	20	V721-103-104-50	75	21
	45	2		117	23		76	21
	118	16		117	29		77	14
V705-140-042-00	29	6		119	4	V721-103-106-00	9	17
	29	16	V720-112-401-40	71	12	V721-103-106-50	1	8
	30	3		72	12		118	18
	30	26		74	12	V721-103-107-00	118	29
V705-140-047-00	30	25		75	16	V721-103-109-50	67	4

PART CODE	FIG.	KEY	PART CODE	FIG.	KEY	PART CODE	FIG.	KEY
V721-113-105-00	61	13	V889-000-081-60	70	7	1366-701-202-00	23	16
	77	5	V889-001-242-40	56	8	1376-402-003-00	82	2
V721-113-105-50	115	10		56	17		103	4
V721-113-107-50	74	17	V920-551-001-20	109	5		103	18
V721-113-109-00	74	3	V920-551-401-70	109	6		103	34
V723-102-002-50	118	12	V920-551-902-20	109	7		103	35
V723-102-002-60	30	19	V920-552-402-70	109	8		103	41
V723-102-003-80	118	38	V936-150-015-00	109	3		104	46
V723-102-006-30	115	11	V999-200-003-00	56	9		104	78
V723-111-501-60	115	5		56	18		112	6
V723-112-002-90	116	14		57	9	1401-906-005-00	109	2
V730-101-401-00	74	28		57	18	1402-511-600-00	113	5
V730-106-005-00	115	4		69	4	1404-117-008-00	7	5
V742-116-240-40	35	2		69	8		8	5
	36	2		70	4	1404-312-006-00	52	24
V742-145-600-60	66	11		70	8	1404-402-001-00	68	6
V742-150-720-60	66	16	W201-261-207-50	114	2		68	11
V744-114-250-70	23	15	W201-361-609-00	66	25		68	16
V744-114-280-70	61	12	W296-134-007-00	86	12	1404-402-005-00	68	9
	77	4		88	4		68	14
V744-120-420-80	29	5		88	8	1404-503-006-00	61	18
	29	15	W296-203-206-30	89	3		77	10
V744-130-450-80	14	4	1118-901-006-00	106	4	1404-511-801-10	80	20
	14	10		106	12	1407-111-001-00	5	21
V744-145-600-90	71	4	1302-225-003-00	19	2	1414-312-002-00	7	23
	72	4		22	11		8	23
V761-150-000-00	10	4		28	4	1415-121-009-00	9	5
	66	18		31	2		23	7
	67	31		34	7	1415-205-016-00	17	5
V763-150-000-00	52	20	1305-931-003-00	81	5		18	5
V780-140-000-1T	116	3		83	12	1415-216-006-00	73	4
V780-140-000-2T	116	2		109	11	1415-505-014-00	61	34
V780-140-000-40	71	11		111	5	1416-307-003-00	50	5
	72	11	1326-706-002-10	12	9		51	5
	74	22		13	9	1416-621-037-00	101	5
V780-140-000-60	71	10		30	21	1419-101-010-00	2	5
	72	10		61	22	1421-101-313-00	3	3
V781-160-000-8B	75	11		75	4	1421-400-054-10	68	5
	76	11		75	36	1421-400-055-00	68	10
V782-160-000-4T	78	4		76	4	1421-403-001-00	68	3
V782-160-000-8B	24	7		76	36	1421-403-002-00	68	4
	67	25	1342-402-006-00	103	33	1421-403-003-00	68	7
V883-000-071-60	69	3		103	42		68	12
	69	7		104	80		68	17
V889-000-081-60	70	3		112	7	1421-433-031-00	67	30

PART CODE	FIG.	KEY	PART CODE	FIG.	KEY	PART CODE	FIG.	KEY
1421-502-002-00	80	23	1432-651-028-00	89	13	1444-411-009-00	65	9
	109	10	1434-611-002-10	89	16	1444-411-011-00	65	10
	109	13	1443-452-007-00	47	10	1444-411-012-00	65	11
	110	5	1444-122-002-00	11	13	1444-411-013-00	65	12
	111	3		42	4	1444-412-011-00	65	6
1421-507-015-00	98	5		42	10	1444-514-230-00	80	17
1421-602-005-10	85	16		52	27	1444-601-015-00	85	4
	95	23		82	19		85	7
1421-602-008-00	105	14	1444-218-009-00	45	6	1444-604-009-00	86	4
1421-906-001-00	109	1	1444-314-008-00	67	24	1444-621-002-10	97	7
1422-687-001-00	97	6	1444-314-009-10	26	10	1444-621-008-00	102	8
1423-903-007-00	112	10	1444-318-004-00	47	8	1444-621-240-00	99	1
1424-101-203-00	3	18	1444-318-007-00	47	13	1444-621-242-00	99	2
1424-101-204-00	3	19	1444-318-011-00	47	16	1444-621-243-00	99	3
1425-431-008-00	17	4	1444-318-012-00	47	17	1444-621-311-00	100	29
	18	4	1444-327-001-00	52	6	1444-621-312-00	100	30
1425-433-018-00	26	5	1444-327-003-00	52	11	1444-621-313-00	100	31
1425-621-004-00	88	37	1444-327-202-10	52	3	1444-621-320-00	100	32
	89	12	1444-327-203-00	52	4	1444-952-220-00	114	5
	102	3	1444-404-210-10	68	15	1445-120-002-00	9	13
1426-153-311-00	2	15	1444-408-202-00	61	3	1447-331-213-00	57	3
1426-153-313-00	2	16	1444-408-213-00	118	2		57	12
1426-160-207-00	1	7	1444-408-214-00	118	3	1447-417-212-10	69	2
1426-160-209-00	1	10	1444-408-217-00	118	6		69	6
1426-621-038-00	5	8	1444-408-218-00	118	7	1480-604-204-00	88	3
	102	11	1444-408-219-00	118	8		88	7
1427-111-244-10	3	28	1444-408-301-00	118	9	1488-247-250-00	110	4
1427-301-005-00	65	22	1444-408-302-00	118	10		111	2
1427-317-004-00	12	8	1444-408-303-00	118	11	1488-302-003-00	47	25
	13	8	1444-408-306-00	118	14	1488-310-220-00	52	10
	26	7	1444-408-308-00	118	17	1488-411-009-00	46	4
1427-432-005-00	65	24	1444-408-316-00	118	26	1488-417-211-10	70	2
1427-601-003-00	38	5	1444-408-317-00	118	27		70	6
1427-621-004-00	97	8	1444-408-318-00	118	28	1488-503-002-00	74	5
1427-621-012-00	19	20	1444-408-323-00	118	31	1488-611-001-00	91	9
1429-406-205-00	60	3	1444-408-332-00	118	44	1488-611-003-10	91	10
1432-120-004-00	9	14	1444-408-370-00	118	25	1488-611-210-00	91	12
	54	27	1444-410-002-10	64	8	1488-611-220-10	91	13
1432-242-001-00	11	10	1444-410-210-00	64	5	1488-621-272-00	98	2
	39	2	1444-411-002-00	65	3	1489-317-211-00	57	2
	54	11	1444-411-003-00	65	15		57	11
1432-406-212-00	68	19	1444-411-004-00	65	16	1489-317-220-00	57	1
1432-616-002-00	95	27	1444-411-005-00	65	17		57	10
1432-616-004-00	6	3	1444-411-006-00	65	20	1491-203-006-10	33	2
1432-651-021-00	10	5	1444-411-008-00	65	8	1491-623-222-00	102	14

PART CODE	FIG.	KEY	PART CODE	FIG.	KEY	PART CODE	FIG.	KEY
1491-623-223-00	102	13	1544-219-006-00	43	7	1560-116-008-30	7	18
1501-621-001-00	77	17	1544-304-006-10	65	27		7	30
1502-211-015-00	50	8	1544-623-001-00	100	34		8	18
	51	8	1544-623-232-00	100	35		8	30
1507-323-001-00	49	1	1544-623-233-00	100	36	1560-116-250-50	7	1
1507-323-002-00	49	2	1544-623-234-00	100	37		8	1
1507-323-004-20	49	4	1544-623-235-00	100	38	1560-116-330-30	7	24
1510-103-201-00	2	8	1550-408-321-00	118	4		8	24
1510-103-250-00	2	6		118	24	1560-116-340-10	7	21
1513-102-205-00	3	4	1550-408-324-00	118	22	1560-120-001-50	9	8
1513-102-329-00	1	9	1550-408-325-00	118	21	1560-120-002-30	9	15
1513-102-332-00	1	12	1550-408-326-00	118	23	1560-120-003-00	9	11
1513-111-009-00	5	16	1550-432-002-00	65	19	1560-130-001-00	10	2
1513-408-217-00	118	19	1550-514-290-00	113	4	1560-130-200-60	10	1
1513-408-223-00	118	33	1554-111-210-00	5	14	1560-132-001-10	11	17
1518-306-203-00	61	24	1560-102-002-30	1	22		54	15
	66	4	1560-102-003-20	1	24	1560-132-007-30	11	14
	71	15	1560-102-202-50	1	2		42	6
	72	15	1560-102-203-50	1	3		42	12
1518-407-240-00	61	23	1560-102-204-40	1	4		52	29
1518-432-250-00	66	3	1560-102-205-40	1	6		104	111
	71	14	1560-103-002-40	2	22	1560-132-200-70	11	1
	72	14	1560-103-240-20	2	12	1560-132-240-40	11	8
1518-621-007-00	102	2	1560-103-261-00	2	3	1560-132-260-60	11	9
1518-621-208-00	100	13	1560-104-003-60	3	7	1560-206-002-30	14	5
1518-621-209-00	100	14	1560-104-004-40	88	15		14	11
1518-621-211-00	100	15	1560-104-010-40	3	17	1560-206-003-00	14	2
1518-621-214-00	100	16	1560-104-206-40	3	6		14	9
1519-604-005-00	90	4	1560-104-220-60	3	27		16	2
	104	41	1560-105-004-00	4	9	1560-208-001-60	15	1
1524-103-001-00	2	23		4	15	1560-208-002-00	15	4
1524-122-001-00	11	3	1560-105-251-00	4	18	1560-208-007-60	15	13
	54	9	1560-105-252-00	4	7	1560-208-009-30	15	15
1524-236-005-00	27	7	1560-105-260-00	4	6		15	18
	27	19	1560-111-001-10	5	23	1560-208-010-40	15	19
	33	8	1560-111-002-10	5	24	1560-208-012-30	15	11
	33	17	1560-111-003-20	5	17		15	20
1527-604-002-00	6	6	1560-111-004-20	5	3		20	6
	40	28	1560-111-005-10	5	4		21	6
	41	28	1560-111-007-00	5	6	1560-208-015-50	15	16
	95	25	1560-111-008-00	5	7	1560-208-016-40	15	10
1541-621-210-00	92	2	1560-111-009-00	5	9		20	4
1544-104-205-00	2	7	1560-111-270-50	5	18		21	4
1544-219-006-00	40	23	1560-111-280-50	5	19	1560-208-017-50	15	22
	41	23	1560-112-003-00	87	11	1560-208-018-40	15	6

1674-097-110-00

PART CODE	FIG.	KEY	PART CODE	FIG.	KEY	PART CODE	FIG.	KEY
1560-208-021-40	15	7	1560-223-016-00	41	18	1560-275-012-00	35	5
	20	8	1560-225-001-50	23	1		36	5
	21	8	1560-225-220-00	23	13	1560-275-013-00	35	7
1560-208-022-40	15	12	1560-230-003-00	24	1		36	7
	15	21	1560-240-001-90	26	1	1560-275-021-00	35	1
	20	7	1560-240-004-50	26	8		36	1
	21	7	1560-240-007-40	48	10	1560-275-022-00	34	3
1560-208-023-00	15	2	1560-243-002-30	27	4	1560-275-280-00	34	16
1560-214-003-00	20	16	1560-243-003-50	27	9	1560-275-320-00	34	13
	21	11	1560-243-005-40	27	3	1560-275-330-10	34	14
	21	16	1560-243-008-50	27	1	1560-280-004-40	37	6
1560-218-001-40	16	10	1560-243-011-40	27	6	1560-285-003-40	40	4
1560-220-004-10	20	13	1560-243-012-30	27	14		41	4
	21	13	1560-243-013-40	27	16	1560-285-006-20	40	9
1560-222-001-20	20	1	1560-243-014-30	27	20		40	11
	21	1	1560-243-015-40	27	17		41	9
1560-222-002-20	20	2	1560-243-017-30	27	18		41	11
1560-222-003-10	20	3	1560-243-022-30	27	22	1560-285-008-40	40	22
	21	3	1560-259-001-40	28	6		41	22
1560-222-004-20	20	9	1560-259-004-40	28	3	1560-285-009-40	40	24
	21	9	1560-259-012-30	28	13		41	24
1560-222-007-00	19	1	1560-259-017-00	28	1	1560-285-012-10	40	25
1560-222-008-10	19	15	1560-259-018-00	28	2		41	25
1560-222-009-10	19	16	1560-261-010-00	29	1	1560-285-013-00	40	26
1560-222-200-00	19	5		29	11		41	26
1560-222-210-10	19	7	1560-263-001-00	30	1	1560-285-015-00	40	6
1560-222-220-00	19	9	1560-263-002-30	30	6		41	6
1560-222-230-00	19	13	1560-263-004-00	30	9	1560-285-230-20	40	3
1560-223-001-80	22	6	1560-263-005-00	30	28		41	3
1560-223-005-50	22	13	1560-263-006-10	30	27	1560-285-300-50	40	12
1560-223-007-40	22	18	1560-263-007-00	30	34		41	12
1560-223-008-50	22	4	1560-263-008-00	30	37	1560-285-310-20	40	17
	28	9	1560-263-009-00	30	38		41	17
	37	3	1560-263-011-00	30	39	1560-285-400-00	40	16
	45	3	1560-263-012-00	30	15		41	16
	84	4	1560-263-013-00	30	17	1560-286-200-60	42	1
1560-223-011-40	22	14	1560-263-014-00	30	20	1560-286-210-60	42	2
1560-223-012-40	22	16	1560-263-015-10	30	23		42	8
1560-223-013-00	22	7	1560-263-016-20	30	10	1560-287-002-30	19	14
1560-223-014-00	22	8	1560-263-200-10	30	11		43	6
1560-223-016-00	22	15	1560-265-002-10	31	1	1560-287-250-00	43	1
	34	15	1560-265-220-20	31	7	1560-287-270-00	43	5
	35	10	1560-265-230-00	31	9	1560-290-006-30	37	4
	36	10	1560-275-004-40	34	9		45	4
	40	18	1560-275-005-30	34	10	1560-301-002-00	46	5

PART CODE	FIG.	KEY	PART CODE	FIG.	KEY	PART CODE	FIG.	KEY
1560-301-003-00	46	6	1560-406-001-00	61	7	1560-434-202-00	67	15
1560-301-004-30	46	8	1560-406-002-00	61	5	1560-434-210-60	67	14
1560-301-005-40	46	10	1560-406-003-00	61	6	1560-434-222-00	67	27
1560-301-006-40	46	11	1560-407-260-50	61	1		67	29
1560-303-001-40	47	15	1560-407-261-30	118	34	1560-434-320-00	67	26
1560-303-002-00	47	11	1560-407-262-30	118	35	1560-434-330-00	67	28
1560-303-003-40	47	14	1560-407-263-40	118	36	1560-501-202-00	71	2
1560-303-005-50	47	2	1560-407-264-40	118	37		72	2
1560-303-006-40	47	21	1560-407-265-40	118	39	1560-501-203-00	71	3
1560-303-007-40	47	22	1560-407-270-40	118	1		72	3
1560-303-200-50	47	23	1560-407-280-50	118	5	1560-505-003-50	73	3
1560-304-001-50	48	1	1560-407-290-40	118	13	1560-507-001-30	74	1
1560-304-002-50	48	2	1560-407-292-40	118	15	1560-507-004-30	74	2
1560-304-003-00	48	9	1560-407-293-40	118	20	1560-507-005-00	74	4
1560-306-001-00	49	3	1560-407-300-40	118	30	1560-507-007-00	74	34
1560-307-002-60	50	2	1560-407-320-10	61	32	1560-515-001-40	75	8
	51	2	1560-410-222-30	62	7		76	8
1560-307-003-10	50	3	1560-432-001-60	65	2	1560-515-003-10	75	26
	51	3	1560-432-002-30	65	21		76	26
1560-307-200-40	50	4	1560-432-003-30	65	23		77	21
	51	4	1560-432-004-00	65	26	1560-515-004-40	77	11
1560-310-003-40	52	13	1560-432-005-00	65	25	1560-515-230-60	77	13
1560-310-004-40	52	15	1560-432-200-30	65	1	1560-515-310-00	75	15
1560-310-005-00	52	7	1560-432-210-00	65	7		76	15
1560-310-201-10	52	2	1560-433-001-40	66	10	1560-517-001-40	78	1
1560-310-210-40	52	18	1560-433-002-40	66	17	1560-517-002-60	79	4
	53	1	1560-433-210-40	66	8	1560-519-202-00	117	12
	53	3	1560-433-212-00	66	9	1560-519-203-00	117	14
1560-310-220-50	52	21	1560-433-220-50	66	14	1560-519-205-00	117	15
1560-310-260-40	52	22	1560-433-222-00	66	15	1560-519-206-00	117	13
1560-310-270-00	52	1	1560-434-001-40	67	1	1560-519-207-00	117	17
1560-314-001-00	54	24	1560-434-002-30	67	2	1560-519-208-00	117	16
1560-314-002-00	54	19	1560-434-003-30	67	8	1560-519-230-00	117	11
1560-314-250-30	54	10	1560-434-004-30	67	10	1560-520-900-00	111	1
1560-314-291-00	54	18	1560-434-005-30	67	18	1560-521-200-80	80	1
1560-314-360-20	54	25	1560-434-006-40	67	19	1560-525-003-00	80	12
1560-316-001-50	55	4	1560-434-007-60	67	37	1560-525-200-50	80	4
	55	8	1560-434-008-40	67	38	1560-525-210-50	80	5
1560-316-210-00	55	2	1560-434-011-40	67	40	1560-525-250-40	80	19
	55	6	1560-434-012-30	67	41	1560-525-260-40	80	9
1560-402-001-00	59	9	1560-434-013-50	67	44	1560-525-290-10	113	2
1560-402-210-30	59	7	1560-434-014-30	67	17	1560-526-001-40	81	4
1560-402-220-30	59	8	1560-434-017-00	67	39		83	11
1560-403-001-10	59	4	1560-434-200-60	67	12	1560-527-001-60	83	10
1560-404-210-10	60	5	1560-434-202-00	67	13	1560-541-003-10	83	5

PART CODE	FIG.	KEY	PART CODE	FIG.	KEY	PART CODE	FIG.	KEY
1560-541-240-00	83	3	1560-625-260-10	93	1	1560-695-021-00	44	10
1560-545-003-00	75	18	1560-625-270-10	93	2		104	109
	76	18	1560-625-280-10	93	12	1560-695-022-00	104	110
1560-545-005-00	84	7	1560-625-290-10	93	13	1560-695-390-00	104	81
1560-545-210-00	84	5	1560-625-300-00	93	9	1560-702-102-10	105	10
1560-545-212-00	84	8	1560-630-009-50	95	24	1560-902-003-40	107	4
1560-545-213-00	84	9	1560-630-011-20	96	1	1560-902-005-10	107	1
1560-551-200-30	71	1	1560-630-012-00	96	2	1560-903-003-80	107	8
	72	1	1560-630-020-50	95	2	1560-903-004-80	107	9
1560-555-210-00	73	1	1560-630-021-50	95	3	1560-903-011-10	107	18
1560-601-014-30	86	11	1560-630-024-00	93	10	1560-904-006-40	107	5
1560-601-015-40	98	6	1560-630-027-20	95	20	1560-904-007-40	107	6
1560-601-017-00	86	10	1560-630-028-00	78	5	1560-904-016-00	107	12
1560-601-260-40	85	24		89	17	1560-904-017-00	107	13
1560-601-330-20	85	22		95	13	1560-904-023-00	107	2
1560-602-001-40	86	5	1560-630-029-00	78	6	1560-906-001-00	109	9
1560-602-273-60	87	3		95	28	1560-940-200-40	114	1
1560-603-002-80	87	12	1560-630-321-50	89	5	1560-940-220-40	114	4
1560-603-003-00	87	13	1560-630-360-50	95	8	1560-940-230-40	114	9
	103	15	1560-630-370-30	95	10	1560-940-240-40	114	13
1560-604-001-50	88	2	1560-652-200-00	98	1	1560-940-250-40	114	17
1560-604-002-50	88	6	1560-652-202-00	98	3	1560-940-260-40	114	21
1560-604-005-00	88	14	1560-654-210-40	99	7	1561-111-003-00	5	5
1560-604-009-50	88	9		99	10	1561-111-320-20	5	1
1560-604-017-40	88	24	1560-654-220-30	99	6	1561-121-212-40	9	4
1560-604-018-40	88	25	1560-654-230-30	99	9	1561-220-001-30	20	14
1560-604-022-70	88	20	1560-658-202-00	100	21	1561-223-002-50	22	1
1560-604-024-10	88	13	1560-658-203-50	100	33	1561-232-001-80	25	1
1560-604-031-00	88	28	1560-658-250-40	100	11	1561-261-003-10	29	9
1560-604-032-00	88	29	1560-658-282-40	100	20	1561-281-001-70	38	1
1560-604-361-50	88	33	1560-658-310-30	100	24	1561-284-001-00	39	6
1560-604-362-50	88	35	1560-658-401-00	100	39	1561-284-200-10	39	1
1560-604-371-50	88	34	1560-658-402-00	100	45	1561-285-001-00	40	14
1560-604-380-30	88	23	1560-664-001-00	101	10	1561-285-220-60	40	1
1560-606-013-10	89	14	1560-664-230-10	101	4	1561-285-230-60	40	8
1560-606-240-40	89	7	1560-664-250-00	101	1	1561-285-240-60	40	10
1560-606-330-00	89	4	1560-664-252-00	101	2	1561-307-001-60	50	1
1560-606-340-10	89	2	1560-664-253-00	101	3	1561-310-210-40	53	2
1560-608-220-30	90	2	1560-664-264-00	103	22	1561-316-230-50	55	1
1560-608-260-01	90	1	1560-664-270-00	102	5	1561-433-006-10	66	1
1560-611-006-00	91	19	1560-666-010-00	103	39	1561-435-001-30	67	50
1560-611-007-00	91	15	1560-666-212-00	103	40	1561-436-003-00	68	1
1560-611-250-00	91	7	1560-690-240-00	104	76	1561-436-004-00	68	2
1560-625-011-00	93	5	1560-695-015-00	82	3	1561-515-280-00	75	10
	94	4	1560-695-021-00	44	4	1561-630-200-20	95	16

PART CODE	FIG.	KEY	PART CODE	FIG.	KEY	PART CODE	FIG.	KEY
1561-660-412-00	100	17	1568-668-203-00	103	26	1594-314-210-20	54	16
1562-301-200-40	46	1	1572-103-250-00	2	2	1594-314-230-20	54	7
1563-220-001-30	21	14	1572-103-260-00	2	4	1594-314-250-10	54	22
1563-222-001-20	21	2	1574-417-220-00	69	1	1594-407-201-00	61	2
1563-232-001-80	25	5		69	5	1594-410-200-00	62	6
1563-261-005-10	29	19	1575-261-005-00	30	5	1594-526-200-10	81	3
1563-281-001-90	38	2	1575-261-009-10	30	14	1594-604-260-10	88	17
1563-285-001-00	41	14	1575-261-015-00	30	33	1594-604-270-10	88	18
1563-285-220-60	41	1	1575-261-016-00	30	30	1594-630-001-20	95	21
1563-285-230-60	41	8	1575-261-017-00	30	31	1594-630-002-20	95	22
1563-285-240-60	41	10	1575-261-018-00	30	22	1595-291-200-20	45	15
1563-286-200-60	42	7	1575-261-021-00	30	35	1595-520-230-00	110	1
1563-288-201-60	44	1	1575-261-022-00	30	40	1596-669-107-00	104	42
1563-310-200-40	53	4	1575-261-025-00	30	32	1597-218-001-00	32	3
1563-316-220-50	55	5	1575-261-203-00	30	12	1597-501-001-10	72	13
1563-320-211-00	56	7	1575-511-003-00	83	4	1600-502-003-00	45	13
	56	16	1575-612-223-00	5	15		45	17
1563-507-221-10	73	8	1575-623-010-00	103	23	1600-505-007-00	7	2
1563-515-260-20	76	10	1575-623-011-00	103	24		8	2
1564-116-001-30	7	9	1575-623-250-00	102	12	1600-619-001-10	92	7
	8	9	1575-651-464-00	104	8	1600-619-210-10	92	1
1564-263-002-00	29	3	1575-651-465-00	104	7	1600-619-211-00	92	3
	29	13	1575-651-466-00	104	11	1600-619-212-00	92	4
1564-273-003-20	33	6	1576-408-002-00	61	36	1600-619-213-00	92	5
1564-273-005-20	33	7		61	41	1600-619-214-00	92	6
	33	16	1581-782-111-00	104	56	1600-624-004-00	103	25
1564-273-008-20	33	12	1588-515-008-00	73	2	1611-208-001-00	15	8
	33	20	1588-515-011-00	104	103	1611-212-001-00	16	1
1564-407-290-00	71	32		104	106	1611-212-002-00	16	4
	72	32	1588-515-360-00	104	108	1611-212-003-00	16	5
1564-507-230-10	73	9	1588-651-204-00	104	29	1611-212-004-00	16	6
1564-515-001-20	75	6	1588-651-205-00	104	9	1611-243-001-00	27	5
	76	6	1588-651-322-00	104	87	1611-243-002-10	27	13
1564-531-002-00	82	5	1593-621-230-30	100	46	1611-250-001-00	27	23
1564-560-005-00	104	65	1594-105-001-00	4	3	1611-261-001-10	29	7
1564-667-220-00	102	1		4	4		29	17
1566-283-200-30	38	3		4	8	1611-261-002-10	29	8
1566-658-620-00	100	41	1594-121-211-00	9	3		29	18
1568-116-210-00	7	14	1594-218-001-00	16	11	1611-270-003-10	32	2
	8	14	1594-291-200-20	45	11	1611-273-001-10	33	1
1568-525-300-10	113	3	1594-291-210-40	45	12	1611-273-003-00	33	9
1568-650-004-10	97	4		45	16	1611-273-004-00	33	11
	103	6	1594-303-001-00	47	4	1611-273-005-00	33	13
1568-650-005-10	97	5	1594-303-002-00	47	5	1611-273-006-00	33	15
	103	7	1594-303-003-00	47	6	1611-273-008-00	33	18

PART CODE	FIG.	KEY	PART CODE	FIG.	KEY	PART CODE	FIG.	KEY
1611-275-001-10	34	1	1614-906-003-00	106	5	1643-515-200-20	75	29
1611-275-002-00	34	5		106	11		76	29
1611-275-003-00	34	6		106	13	1643-515-202-10	75	30
1611-275-200-00	34	18	1617-102-006-00	3	21		76	30
1611-275-210-00	36	4	1617-102-007-00	61	19	1643-515-203-00	75	31
1611-275-230-00	36	9	1617-112-213-00	97	2		76	31
1611-301-001-10	46	3	1620-514-005-00	109	12	1643-515-220-20	76	33
1611-307-001-10	51	1	1627-205-223-00	17	11	1643-515-230-10	75	23
1611-431-001-00	64	1		18	11		76	23
1611-437-220-00	70	1	1632-273-003-00	33	26	1643-515-240-00	76	19
	70	5	1632-273-004-00	33	23	1643-551-001-00	71	24
1611-604-001-00	88	44	1632-273-200-00	33	21		72	24
1612-606-001-00	112	3	1632-501-003-10	71	13	1643-551-200-00	71	21
1612-608-003-00	89	9	1632-501-004-00	71	22		72	21
1614-117-001-00	7	8		72	22	1650-102-006-00	3	11
	8	8	1632-501-200-00	71	16	1650-102-219-00	103	14
	38	6		72	16	1650-111-220-00	1	1
1614-205-015-00	30	18	1632-501-202-00	71	17	1650-116-230-00	7	27
1614-222-007-00	65	4		72	17		8	27
1614-262-003-00	104	57	1632-501-203-00	71	18	1650-120-230-00	9	1
1614-407-260-00	61	25		72	18	1650-120-240-00	9	2
1614-432-001-00	65	13	1632-501-204-00	71	19	1650-203-013-00	17	8
1614-505-002-00	104	52		72	19		17	17
1614-505-003-00	104	53	1632-501-205-00	71	20		18	8
1614-505-004-00	104	54		72	20		18	17
1614-509-001-00	84	6	1634-650-200-00	97	3	1650-209-005-00	16	8
1614-520-009-00	82	16	1640-320-211-00	56	2	1650-214-200-10	17	9
1614-520-013-10	82	24		56	11		18	9
1614-520-014-00	104	79	1640-320-220-00	56	1	1650-214-202-00	17	10
1614-520-017-00	82	20		56	10		18	10
1614-520-260-00	82	9	1640-410-200-10	88	41	1650-214-203-00	17	12
	104	58	1640-410-210-00	88	42		18	12
	104	96	1640-525-001-00	109	14	1650-214-204-00	17	13
1614-520-340-00	82	13	1640-658-322-00	100	3		18	13
1614-531-009-00	104	66	1640-658-324-00	100	5	1650-253-003-00	23	11
1614-611-551-00	91	1	1640-658-325-00	100	6	1650-304-001-00	47	1
1614-611-552-00	91	2	1641-112-002-00	6	11	1650-304-007-00	47	12
1614-680-300-00	101	7	1643-103-200-00	2	1	1650-304-008-00	47	9
1614-680-302-00	101	8	1643-103-210-10	2	19	1650-501-002-10	73	6
1614-690-001-00	1	21	1643-103-220-00	2	14	1650-501-008-00	74	7
	103	37	1643-103-221-00	2	17	1650-505-001-00	104	98
1614-695-003-00	104	12	1643-103-222-00	2	18	1650-505-004-10	104	114
1614-695-703-00	104	4	1643-501-001-20	71	23	1650-505-230-00	104	85
1614-903-006-00	107	11		72	23	1650-505-270-20	104	105
1614-906-003-00	106	3	1643-515-001-00	76	28	1650-505-450-00	104	89

PART CODE	FIG.	KEY	PART CODE	FIG.	KEY	PART CODE	FIG.	KEY
1650-505-460-00	82	10	1650-652-561-00	100	8	1673-105-003-00	4	12
	104	60	1650-654-270-00	112	1	1673-105-210-00	4	16
1650-508-210-10	74	10	1650-654-590-00	104	73	1673-112-003-10	6	5
1650-508-331-00	119	1	1650-654-702-00	112	4	1673-112-004-00	6	8
1650-508-334-00	119	8	1650-654-740-00	82	1		88	11
1650-508-335-00	119	9	1650-658-401-00	120	1	1673-112-005-00	6	4
1650-508-336-00	119	17	1650-658-403-00	120	4	1673-112-006-00	6	10
1650-508-337-00	119	2	1650-658-404-00	120	10	1673-112-200-00	6	1
1650-508-338-00	119	3	1650-902-007-00	107	16	1673-116-200-10	7	17
1650-508-351-00	119	10	1650-902-008-10	107	10		8	17
1650-508-352-00	119	11	1650-902-009-00	107	17	1673-116-210-10	7	11
1650-508-353-00	119	12	1650-902-013-00	107	15		8	11
1650-508-354-00	119	13	1650-902-016-00	107	20	1673-120-001-00	9	12
1650-508-355-00	119	14	1650-902-032-10	107	21	1673-201-001-00	12	1
1650-508-356-00	119	15	1650-903-001-10	108	10	1673-201-011-00	13	1
1650-508-357-00	119	16	1650-903-004-10	108	15	1673-206-001-00	14	1
1650-514-510-00	80	16	1659-650-200-00	97	1	1673-206-011-00	14	7
1650-514-900-00	113	1	1668-904-001-10	108	1	1673-214-001-00	16	7
1650-608-013-00	104	22	1668-904-002-10	108	2	1673-216-001-00	17	1
1650-608-014-00	104	24	1668-904-003-10	108	3	1673-216-002-00	18	1
1650-608-015-00	104	25	1668-904-004-10	108	4	1673-216-008-00	17	14
1650-608-016-00	104	26	1668-904-007-10	108	6	1673-216-011-00	18	14
1650-608-017-00	104	27	1668-904-008-10	108	7	1673-216-013-00	17	16
1650-608-221-00	104	33	1668-904-009-10	108	8		18	16
1650-608-223-00	104	32	1668-904-011-20	108	9	1673-216-211-10	17	6
1650-608-502-10	104	2	1668-904-014-10	108	11	1673-216-221-10	18	6
1650-608-503-00	104	3	1672-601-002-00	86	6	1673-222-001-00	20	15
1650-608-560-20	104	6	1672-601-210-00	86	7		21	15
1650-608-561-10	104	13	1672-611-001-00	91	17	1673-225-001-00	23	10
1650-608-562-00	104	15	1672-695-200-00	104	75	1673-225-003-00	23	6
1650-608-580-00	104	14	1673-102-001-10	1	25	1673-270-002-00	32	1
1650-608-600-00	104	20	1673-102-004-10	1	23	1673-273-002-00	33	4
1650-650-012-10	82	4	1673-102-005-00	1	13	1673-275-210-10	35	9
1650-650-017-00	86	2	1673-102-210-10	1	18	1673-275-220-00	35	4
	103	17	1673-103-001-00	2	10	1673-280-001-00	37	8
1650-650-222-00	103	2	1673-104-001-00	3	12		45	9
1650-650-223-10	103	3	1673-104-002-10	3	13	1673-288-001-00	44	7
1650-650-243-00	103	12	1673-104-004-00	3	8	1673-304-001-00	48	11
1650-650-246-00	103	20	1673-104-009-00	3	22	1673-314-001-00	11	16
1650-652-014-00	112	5	1673-104-010-10	3	23		54	14
1650-652-212-00	100	7	1673-104-220-00	3	25	1673-314-200-00	54	1
1650-652-215-00	100	9	1673-104-300-10	3	1	1673-314-220-10	54	3
1650-652-218-00	100	12	1673-104-302-00	3	2	1673-317-211-00	57	7
1650-652-252-10	103	13	1673-105-001-00	4	1		57	16
1650-652-254-00	103	27	1673-105-002-00	4	2	1673-317-212-00	57	8

PART CODE	FIG.	KEY	PART CODE	FIG.	KEY	PART CODE	FIG.	KEY
1673-317-212-00	57	17	1673-611-202-00	91	22	1674-515-001-00	72	27
1673-401-001-00	58	6	1673-626-002-00	94	8	1674-515-002-00	75	28
1673-401-002-00	58	7	1673-626-200-10	94	3	1674-515-300-00	77	16
1673-402-001-00	59	3	1673-626-220-30	94	11	1674-515-310-10	75	33
1673-402-201-00	59	1	1673-626-230-30	94	12	1674-515-340-00	75	19
1673-402-202-00	59	2	1673-626-240-10	94	1	1674-557-001-00	74	16
1673-404-200-10	60	1	1673-626-250-10	94	2	1674-601-300-00	86	1
1673-404-220-00	60	6	1673-626-260-00	94	16	1674-630-005-00	95	17
1673-407-200-00	61	29	1673-630-200-20	95	1	1674-630-200-00	95	14
1673-407-210-10	61	33	1673-630-210-00	95	5	1674-658-501-00	100	40
1673-407-220-10	61	38	1673-630-220-00	95	6	1674-658-502-00	100	47
1673-407-230-10	61	20	1673-654-201-00	112	8	1674-658-520-00	100	1
1673-410-001-00	63	1	1673-658-211-20	100	2	1674-666-290-00	103	11
1673-410-003-00	63	4	1673-658-212-00	100	10	1674-666-500-00	103	19
1673-410-200-10	62	1	1673-658-214-00	100	4	1674-695-001-00	104	92
1673-431-001-10	29	10	1673-658-400-00	100	49	1674-695-002-00	104	50
	29	20	1673-666-200-00	103	1	1674-695-003-00	104	63
	64	3	1673-666-221-00	103	21	1674-695-004-00	104	47
1673-431-200-00	64	4	1673-666-250-00	103	5	1674-695-210-00	104	1
1673-515-240-10	75	1	1673-666-252-00	103	8	1674-695-270-00	104	83
	76	1	1673-666-280-00	103	38	1674-695-280-00	104	35
1673-515-250-10	75	2	1673-690-400-10	104	101	1674-695-290-00	104	39
	76	2	1673-690-430-00	104	94	1674-695-310-00	104	70
1673-525-200-00	81	1	1673-702-001-10	105	4	1674-695-350-00	104	49
1673-525-210-00	81	2	1673-702-300-00	105	1	1674-695-360-00	104	37
1673-601-001-00	85	2	1673-702-310-10	105	2	1674-695-400-00	104	77
1673-601-002-00	85	3	1673-702-320-10	105	3	1675-102-003-00	6	7
1673-601-003-00	85	11	1673-702-330-10	105	8	1675-116-001-00	7	31
1673-601-005-00	85	1	1673-702-351-10	105	9		8	31
1673-601-210-00	85	9	1673-780-011-00	6	9	1675-135-001-00	11	18
1673-601-220-10	85	18	1673-901-003-00	106	9	1675-503-001-00	74	14
1673-601-230-10	85	20	1673-901-004-00	106	10	1675-695-003-00	104	21
1673-601-260-00	85	13	1673-901-005-00	106	1	1675-695-005-00	104	23
1673-601-270-00	85	14	1673-901-006-00	106	2		104	31
1673-602-210-00	87	7	1673-902-001-20	107	14	1675-904-002-00	108	13
1673-602-220-00	87	5	1673-902-004-00	107	3	1675-905-007-00	108	5
1673-602-240-00	87	1	1673-902-005-00	107	7	1675-905-012-00	108	16
1673-604-220-10	88	30	1673-903-002-00	108	12	2130-931-210-00	109	4
1673-604-230-00	88	31	1673-903-004-00	107	19	2144-542-250-00	102	9
1673-604-240-00	88	1	1673-919-005-00	108	18	2145-542-232-10	100	42
1673-604-250-00	88	5		108	20	2161-331-001-00	106	6
1673-604-280-00	88	10	1673-919-013-00	108	17		106	14
1673-606-200-10	89	1	1673-919-023-00	108	19	2161-331-400-10	58	1
1673-606-210-20	89	6	1674-116-500-00	8	21	2161-331-401-10	58	2
1673-611-201-00	91	21	1674-515-001-00	71	27	2161-901-038-00	108	14

PART CODE	FIG.	KEY	PART CODE	FIG.	KEY	PART CODE	FIG.	KEY
2500-326-017-00	120	6	7963-201-003-00	67	5			
3560-203-004-00	54	4	7963-611-003-00	80	21			
3610-201-213-00	84	10	7964-201-008-00	33	25			
3610-440-018-00	7	3						
	8	3						
3621-211-003-00	19	11						
	43	3						
3631-350-201-10	117	33						
3640-109-002-00	87	9						
3640-111-001-10	40	13						
	41	13						
3640-270-200-00	104	43						
3640-585-001-00	19	19						
3646-102-011-10	60	2						
3650-218-002-00	104	10						
3650-270-214-00	100	19						
	102	10						
3652-273-002-00	104	30						
3652-285-001-00	82	18						
3652-311-210-00	1	19						
3653-108-007-00	33	3						
3656-271-001-00	102	7						
	104	45						
3656-631-005-00	104	102						
3670-703-008-00	11	2						
	54	17						
3676-274-001-00	103	36						
3676-274-200-00	104	69						
3676-274-312-00	104	71						
3676-274-313-00	104	72						
3676-291-212-00	120	2						
3676-291-214-00	120	3						
3676-291-216-00	120	5						
3689-902-019-00	85	6						
3737-172-009-00	3	9						
	77	20						
3747-183-002-00	111	4						
3768-185-022-10	71	31						
	72	31						
	83	2						
4101-102-038-00	89	11						
4319-312-004-10	104	104						
	104	107						
4334-311-216-00	88	12						
7932-201-002-00	32	4						

DESCRIPTION	REF	NO	DESCRIPTION	REF	NO	DESCRIPTION	REF	NO	DESCRIPTION	REF	NO
ARM/CONTROL	20	39	BOLT	27	24	CASE/ADAPTER	20	26	GASKET/PLATE	9	41
ARM/TENSION	20	25	BOLT/CONNECTINGROD	13	6	CLAMP	9	15	GASKET,NOZZLE	19	2
ARM,FLOATING	20	20	BOLT/M6	9	33	CLAMP/STRAINER	16	10	GEAR/CAMSHAFT	12	2
ARMATURE/STARTE ASSY	26	2		9	34	CLAMP/WIRE/10-15	17	23	GEAR/IDLE ASSY	12	6
BALL	1	10	BOLT/M6X10	20	18	CLIP/HOSE/7.6-8.2	21	4	GEAR/INJECTIONPUMP	20	11
	26	17	BOLT/M8X20	9	12	CLUTCH/STARTER ASSY	26	5	GEAR/OILPUMP ASSY	16	3
BEARING	26	3		17	27	COLLOR	27	3	GEAR,CRANK SHAFT	15	3
	26	4		20	7	CONNECTINGROD ASSY	13	5	GEARCASE ASSY	9	1
	27	5		22	3	CONNECTOR/FUEL	21	1	GENERATOR ASSY	22	1
	27	11	BOLT/M8X30	9	16	CONNECTOR/GLOWPLUG	23	4	GLOWPLUG	23	3
BEARING/CON ROD	13	8	BOLT/M8X45	9	13	CONNECTOR,OIL FILTER	5	24	GUIDE/LEVELGAGE COMP	5	30
BEARING/CONROD/UNDER	6	5	BOLT/M8X55	11	21	CONTROLRACK	25	48	HANGER	10	1
	6	6	BOLT/M8X75	9	9	CONTROLSLEEVE	25	49	HEATSHILD/NOZZLE	19	3
BEARING/CRANK SET	5	11		17	28	COVER	26	23	HOLDER ASSY	27	14
BEARING/CRANK/LOWER	5	13	BOLT/M8X85	9	8		27	13	HOLDER/BRUSH ASSY	27	16
BEARING/CRANK/UNDER	6	1	BOLT/STUD	5	21	COVER/BLOWBY	2	3	HOLDER/DELIVERYVALVE	25	6
	6	3	BOLT/THROUGH	26	16	COVER/CYLINDER/HEAD	2	1	HOLDER/NOZZLE ASSY	24	1
BEARING/CRANK/UPPER	5	12	BOLT/WS	8	4	COVER/INJECTIONPUMP	5	25	HOLDER/STARTER ASSY	26	11
BEARING/THRUST/CRANK	5	14		9	14	COVER,BEARING	27	6	HOSE/RUBBER	2	9
	6	2		16	6	CRANKSHAFT ASSY	15	1		17	22
	6	4		18	4	CUP/SEALING/20	9	3		21	3
BEARING/WATER PUMP	17	3		26	15	CUP/SEALING/50	1	3	HOTPLUG ASSY	1	2
BEARING/WATERPUMP	17	4	BOLT/WSP	22	5		5	6	HOUSING/PUMP	25	1
BEARING,RB/6002SS	15	7	BOLT,SEMS	17	32	CUTTER,VALVE	11	5	HOUSING/STARTER ASSY	26	9
BEARING,RB/6004	20	14	BOLT,SEMS/M10X20	10	2	CYLINDERBLOCK ASSY	5	1	HOUSING/THERMOSTAT	17	24
BEARING,RB/6005	9	48	BOLT,SEMS/M6X12	12	5	CYLINDERHEAD ASSY	1	1	INJECTIONNOZZLE ASSY	19	1
BEARING,RB/6203	20	13		20	16	DOWEL	5	22	INJECTIONPUMP ASSY	20	1
BELT,COOLING FAN	18	5		23	7	DRIVE/TACHOMETE ASSY	9	36	KEY	12	3
BODY/OILPUMP	16	2	BOLT,SEMS/M6X16	9	38	EYEBOLT	25	50		15	4
BODY/WATERPUMP	17	2	BOLT,SEMS/M8X16	16	11	FAN/COOLING	18	1		20	12
BOLT	1	12	BOLT,SEMS/M8X25 7T	3	3	FLYWEIGHT	20	17	LEVELGAGE	5	29
	5	2		4	3	FLYWHEEL ASSY	15	5	LEVER/CONTROL COMP	20	36
	5	27		17	19	FRAME	27	12	MANIFOLD/EXHAUST	4	1
	7	5	BOLT,SEMS/M8X45	17	18	FRAME/DRIVEEND ASSY	27	7	MANIFOLD/INLET ASSY	3	1
	8	5	BRACKET/ROCKERSHAFT	11	13	FRAME/STARTEREND	26	10	NOZZLE ASSY	24	16
	9	42		11	14	GASHET/EXH MANIFOLD	4	2	NUT	9	35
	11	19	BRUSH	27	17	GASKET	17	8		11	18
	15	9	BUSH	27	15		19	5		20	40
	15	12	BUSHING/DRAIN	26	20		23	6		24	18
	22	8	CAMSHAFT	12	1		24	17		26	21
	25	10	CAMSHAFT/INJPUMP	20	10		25	5		26	22
	25	52	CAP/OILFILLER	5	31		25	51		27	2
	27	9	CAP,BLANK/30	9	39		25	53		27	23
	27	10	CAP,OIL FILLER	2	5	GASKET/COVER	5	26		27	25
	27	19	CAP,SEALING	5	3	GASKET/CYLINDERHEAD	1	11	NUT/FLANGE	13	7
	27	20		5	4	GASKET/GEARCASE	9	28	NUT/M10	22	6
	27	21		5	5	GASKET/HOUSING	17	26	NUT/M8	9	10
	27	22	CARTRIDGE,OIL FILTER	16	12	GASKET/INLETMANIFOLD	3	2		9	19

DESCRIPTION	REF . NO		DESCRIPTION	REF . NO		DESCRIPTION	REF . NO		DESCRIPTION	REF . NO	
NUT/M8	9	49	PIPE/WATER PUMP	17	11	PLUG	11	12	SHAFT/ROCKERARM	11	11
	9	51	PIPE/WATERDRAIN	5	23	PLUG(M14X15)	7	3	SHAFT/ROCKERARM ASSY	11	10
	11	22	PIPE,PUMP HOUSING	17	25	PLUG/PT1/2	1	4	SHIM/ADAPTER	20	32
	17	13	PIPE,WATER OUTLET	17	30	PLUG/PT1/4	9	2		20	33
	17	20	PISTON	13	1	PLUNGER ASSY	25	2	SHIM/PUMP,INJ	20	2
	20	8	PISTON/OV	14	1	POINTER	8	2		20	3
NUT/NOZZLERETAINING	24	15		14	3	PULLEY	27	1		20	4
NUT,CAP	2	7	PISTON/RELIEF VALVE	9	30	PULLEY/CRANK	15	10		20	5
NUT,CAP/M 8	9	20	PLATE	27	8	PULLEY/WATERPUMP	18	2		20	6
O-RING	17	31	PLATE/ADJUST	22	2	PUSHROD	11	7	SHIM/T=0.1	24	2
	25	7	PLATE/FRONT	9	40	REGULATOR ASSY	27	26	SHIM/T=0.2	24	3
	26	19	PLATE/REAR	8	1	RELAY,SOLENOID	23	8	SHIM/T=0.3	24	4
O-RING 1A S50	9	44	PLATE/T=2.60	25	17	RESISTANCE/1.0	21	5	SHIM/T=0.4	24	5
O-RING/G40	17	12	PLATE/T=2.65	25	18	RETAINER	26	7	SHIM/T=0.5	24	6
O-RING/G50	17	16	PLATE/T=2.70	25	19	RING SNAP	13	4	SHIM/T=0.52	24	7
O-RING/P 8	20	37	PLATE/T=2.75	25	20	RING/O	9	37	SHIM/T=0.54	24	8
O-RING/P18	7	4	PLATE/T=2.80	25	21		16	9	SHIM/T=0.56	24	9
O-RING/P25	5	32	PLATE/T=2.85	25	22	RING/PISTON SET	13	2	SHIM/T=0.58	24	10
OILPAN	7	2	PLATE/T=2.90	25	23	RING/PISTON/OV SET	14	2	SHIM/T=0.8	24	11
OILPAN ASSY	7	1	PLATE/T=2.95	25	24		14	4	SHIM,ADAPTER	20	29
OILPUMP ASSY	16	1	PLATE/T=3.00	25	25	RING,SNAP/ 4 E	20	23		20	30
OILSEAL	5	15	PLATE/T=3.05	25	26		20	34		20	31
ORING	25	9	PLATE/T=3.10	25	27	RING,SNAP/12 C	9	32	SLEEVEFLANGE	25	8
PACKING	2	8	PLATE/T=3.15	25	28	RING,SNAP/16 C	11	16	SNAPRING	25	13
	9	21	PLATE/T=3.20	25	29	RINGGEAR	15	6	SOLENOID	23	5
PIECE,THRUST	20	19	PLATE/T=3.25	25	30	RINK/CONTROL	20	21	SPACER	9	43
PIN	5	17	PLATE/T=3.30	25	31	ROCKERARM	11	9		24	14
	5	18	PLATE/T=3.35	25	32	ROCKERSHAFT ASSY	11	8	SPACER/FAN/53	18	3
	5	28	PLATE/T=3.40	25	33	RORA	26	6	SPACER/ROCKERARM	11	20
	8	3	PLATE/T=3.45	25	34	ROTOR ASSY	27	4	SPACER/WATERPUMP	17	15
	9	24	PLATE/T=3.50	25	35	ROTOR/OUTER	16	4	SPRING	11	15
	15	2	PLATE/T=3.55	25	36	ROTOR/WATERPUMP	17	6		27	18
	25	12	PLATE/T=3.60	25	37	RUBBERFLANGE	2	2	SPRING/ADAPTER	20	28
PIN/ADAPTER	20	27	PLATE/T=3.65	25	38	SCREW	26	14	SPRING/DELIVERYVALVE	25	4
PIN/ARM	9	22	PLATE/T=3.70	25	39	SCREW ADJUST	11	17	SPRING/GOVERNOR	20	35
PIN/IDLEGEAR	5	8	PLATE/T=3.75	25	40	SCREW/SOCKET	16	7	SPRING/IDLE	20	44
PIN/SNAP	9	23	PLATE/T=3.80	25	41	SCREW/TAPPING	2	4	SPRING/PLUNGER	25	14
PIN/STRAIGHT	16	5	PLATE/T=3.85	25	42	SCREW/WATER PUMP	17	10	SPRING/RELIEF VALVE	9	31
PIN/TUBE	5	16	PLATE/T=3.90	25	43	SEAL SET/WATER PUMP	17	5	SPRING/RETURN	26	18
	9	45	PLATE/T=3.95	25	44	SEAL/CYL HEAD/UNDER	2	6	SPRING/SETTING	20	24
PIN,CONTROL	20	22	PLATE/T=4.00	25	45	SEAL/WATER PUMPPULLE	17	7	SPRING/VALVE	11	3
PIN,GROOVE	9	27	PLATE/T=4.05	25	46	SEAL,BEARING CAP	5	9	SPRING,BRUSH	26	12
PIN,PISTON	13	3	PLATE/T=4.10	25	47	SEAL,BEARING CAP/7	5	10	SPRING,NOZZLE	24	12
PINION/STARTER	26	8	PLATE/THRUST	12	4	SEAL,OIL	1	9	SPRING,RETURN	20	38
PIPE/FUEL	21	2	PLATE/THRUST/INJPUMP	20	15		9	7	SPRING,STARTING	20	43
PIPE/INJECTION ASSY	19	6	PLATE/WATER PUMP	17	9	SEAT,SPRING	24	13	SPRINGSEAT	25	15
	19	7	PLUG	5	7	SEAT,VALVE SPRING	11	4		25	16
	19	8		9	25	SHAFT/HYDRAULIC ASSY	9	47	STARTER ASSY	22	7

DESCRIPTION	REF . NO		DESCRIPTION	REF . NO	DESCRIPTION	REF . NO	DESCRIPTION	REF . NO
STOPPER/FULLLOAD	9	18						
STRAINER	16	8						
STUD	5	20						
	9	4						
	9	5						
	9	6						
	9	46						
STUD/M8X40	5	19						
	17	17						
STUD,HEAD COVER	1	13						
SWITCH/MAGNETIC ASSY	26	13						
SWITCH/OILPRESSURE	23	1						
TAPPET	11	6						
	25	11						
THERMOMETER	23	2						
THERMOSTAT	17	29						
VALVE/EXHAUST	11	2						
VALVE/INTAKE	11	1						
VALVE/RELIEF ASSY	9	29						
VALVE,DELIVERY	25	3						
VALVEGUIDE	1	7						
	1	8						
VALVESEAT/EXHAUST	1	6						
VALVESEAT/INLET	1	5						
WASHER	9	11						
	9	50						
	9	52						
	15	8						
	15	11						
	17	14						
	17	21						
	20	9						
WASHER / M6	20	41						
WASHER/CORRUGATE	19	4						
WASHER/08X14X01	9	17						
	9	26						
WASHER/08X15.5X1.6	11	23						
WASHER/9X22X2	22	4						
WASHER,SP/M6	20	42						
WATERPUMP ASSY	17	1						
YOKE/STARTER ASSY	26	1						

DESCRIPTION	REF	NO	DESCRIPTION	REF	NO	DESCRIPTION	REF	NO	DESCRIPTION	REF	NO
ARM/CONTROL	20	39	BOLT	27	24	CASE/ADAPTER	20	26	GASKET/PLATE	9	41
ARM/TENSION	20	25	BOLT/CONNECTINGROD	13	6	CLAMP	9	15	GASKET,NOZZLE	19	2
ARM,FLOATING	20	20	BOLT/M6	9	33	CLAMP/STRAINER	16	10	GEAR/CAMSHAFT	12	2
ARMATURE/STARTE ASSY	26	2		9	34	CLAMP/WIRE/10-15	17	23	GEAR/IDLE ASSY	12	6
BALL	1	10	BOLT/M6X10	20	18	CLIP/HOSE/7.6-8.2	21	4	GEAR/INJECTIONPUMP	20	11
	26	17	BOLT/M8X20	9	12	CLUTCH/STARTER ASSY	26	5	GEAR/OILPUMP ASSY	16	3
BEARING	26	3		17	27	COLLOR	27	3	GEAR,CRANK SHAFT	15	3
	26	4		20	7	CONNECTINGROD ASSY	13	5	GEARCASE ASSY	9	1
	27	5		22	3	CONNECTOR/FUEL	21	1	GENERATOR ASSY	22	1
	27	11	BOLT/M8X30	9	16	CONNECTOR/GLOWPLUG	23	4	GLOWPLUG	23	3
BEARING/CON ROD	13	8	BOLT/M8X45	9	13	CONNECTOR,OIL FILTER	5	24	GUIDE/LEVELGAGE COMP	5	30
BEARING/CONROD/UNDER	6	5	BOLT/M8X55	11	21	CONTROLRACK	25	48	HANGER	10	1
	6	6	BOLT/M8X75	9	9	CONTROLSLEEVE	25	49	HEATSHILD/NOZZLE	19	3
BEARING/CRANK SET	5	11		17	28	COVER	26	23	HOLDER ASSY	27	14
BEARING/CRANK/LOWER	5	13	BOLT/M8X85	9	8		27	13	HOLDER/BRUSH ASSY	27	16
BEARING/CRANK/UNDER	6	1	BOLT/STUD	5	21	COVER/BLOWBY	2	3	HOLDER/DELIVERYVALVE	25	6
	6	3	BOLT/THROUGH	26	16	COVER/CYLINDER/HEAD	2	1	HOLDER/NOZZLE ASSY	24	1
BEARING/CRANK/UPPER	5	12	BOLT/WS	8	4	COVER/INJECTIONPUMP	5	25	HOLDER/STARTER ASSY	26	11
BEARING/THRUST/CRANK	5	14		9	14	COVER,BEARING	27	6	HOSE/RUBBER	2	9
	6	2		16	6	CRANKSHAFT ASSY	15	1		17	22
	6	4		18	4	CUP/SEALING/20	9	3		21	3
BEARING/WATER PUMP	17	3		26	15	CUP/SEALING/50	1	3	HOTPLUG ASSY	1	2
BEARING/WATERPUMP	17	4	BOLT/WSP	22	5		5	6	HOUSING/PUMP	25	1
BEARING,RB/6002SS	15	7	BOLT,SEMS	17	32	CUTTER,VALVE	11	5	HOUSING/STARTER ASSY	26	9
BEARING,RB/6004	20	14	BOLT,SEMS/M10X20	10	2	CYLINDERBLOCK ASSY	5	1	HOUSING/THERMOSTAT	17	24
BEARING,RB/6005	9	48	BOLT,SEMS/M6X12	12	5	CYLINDERHEAD ASSY	1	1	INJECTIONNOZZLE ASSY	19	1
BEARING,RB/6203	20	13		20	16	DOWEL	5	22	INJECTIONPUMP ASSY	20	1
BELT,COOLING FAN	18	5		23	7	DRIVE/TACHOMETE ASSY	9	36	KEY	12	3
BODY/OILPUMP	16	2	BOLT,SEMS/M6X16	9	38	EYEBOLT	25	50		15	4
BODY/WATERPUMP	17	2	BOLT,SEMS/M8X16	16	11	FAN/COOLING	18	1		20	12
BOLT	1	12	BOLT,SEMS/M8X25 7T	3	3	FLYWEIGHT	20	17	LEVELGAGE	5	29
	5	2		4	3	FLYWHEEL ASSY	15	5	LEVER/CONTROL COMP	20	36
	5	27		17	19	FRAME	27	12	MANIFOLD/EXHAUST	4	1
	7	5	BOLT,SEMS/M8X45	17	18	FRAME/DRIVEEND ASSY	27	7	MANIFOLD/INLET ASSY	3	1
	8	5	BRACKET/ROCKERSHAFT	11	13	FRAME/STARTEREND	26	10	NOZZLE ASSY	24	16
	9	42		11	14	GASHET/EXH MANIFOLD	4	2	NUT	9	35
	11	19	BRUSH	27	17	GASKET	17	8		11	18
	15	9	BUSH	27	15		19	5		20	40
	15	12	BUSHING/DRAIN	26	20		23	6		24	18
	22	8	CAMSHAFT	12	1		24	17		26	21
	25	10	CAMSHAFT/INJPUMP	20	10		25	5		26	22
	25	52	CAP/OILFILLER	5	31		25	51		27	2
	27	9	CAP,BLANK/30	9	39		25	53		27	23
	27	10	CAP,OIL FILLER	2	5	GASKET/COVER	5	26		27	25
	27	19	CAP,SEALING	5	3	GASKET/CYLINDERHEAD	1	11	NUT/FLANGE	13	7
	27	20		5	4	GASKET/GEARCASE	9	28	NUT/M10	22	6
	27	21		5	5	GASKET/HOUSING	17	26	NUT/M8	9	10
	27	22	CARTRIDGE,OIL FILTER	16	12	GASKET/INLETMANIFOLD	3	2		9	19

DESCRIPTION	REF	NO
NUT/M8	9	49
	9	51
	11	22
	17	13
	17	20
	20	8
NUT/NOZZLERETAINING	24	15
NUT,CAP	2	7
NUT,CAP/M 8	9	20
O-RING	17	31
	25	7
	26	19
O-RING 1A S50	9	44
O-RING/G40	17	12
O-RING/G50	17	16
O-RING/P 8	20	37
O-RING/P18	7	4
O-RING/P25	5	32
OILPAN	7	2
OILPAN ASSY	7	1
OILPUMP ASSY	16	1
OILSEAL	5	15
ORING	25	9
PACKING	2	8
	9	21
PIECE,THRUST	20	19
PIN	5	17
	5	18
	5	28
	8	3
	9	24
	15	2
	25	12
PIN/ADAPTER	20	27
PIN/ARM	9	22
PIN/IDLEGEAR	5	8
PIN/SNAP	9	23
PIN/STRAIGHT	16	5
PIN/TUBE	5	16
	9	45
PIN,CONTROL	20	22
PIN,GROOVE	9	27
PIN,PISTON	13	3
PINION/STARTER	26	8
PIPE/FUEL	21	2
PIPE/INJECTION ASSY	19	6
	19	7
	19	8

DESCRIPTION	REF	NO
PIPE/WATER PUMP	17	11
PIPE/WATERDRAIN	5	23
PIPE,PUMP HOUSING	17	25
PIPE,WATER OUTLET	17	30
PISTON	13	1
PISTON/OV	14	1
	14	3
PISTON/RELIEF VALVE	9	30
PLATE	27	8
PLATE/ADJUST	22	2
PLATE/FRONT	9	40
PLATE/REAR	8	1
PLATE/T=2.60	25	17
PLATE/T=2.65	25	18
PLATE/T=2.70	25	19
PLATE/T=2.75	25	20
PLATE/T=2.80	25	21
PLATE/T=2.85	25	22
PLATE/T=2.90	25	23
PLATE/T=2.95	25	24
PLATE/T=3.00	25	25
PLATE/T=3.05	25	26
PLATE/T=3.10	25	27
PLATE/T=3.15	25	28
PLATE/T=3.20	25	29
PLATE/T=3.25	25	30
PLATE/T=3.30	25	31
PLATE/T=3.35	25	32
PLATE/T=3.40	25	33
PLATE/T=3.45	25	34
PLATE/T=3.50	25	35
PLATE/T=3.55	25	36
PLATE/T=3.60	25	37
PLATE/T=3.65	25	38
PLATE/T=3.70	25	39
PLATE/T=3.75	25	40
PLATE/T=3.80	25	41
PLATE/T=3.85	25	42
PLATE/T=3.90	25	43
PLATE/T=3.95	25	44
PLATE/T=4.00	25	45
PLATE/T=4.05	25	46
PLATE/T=4.10	25	47
PLATE/THRUST	12	4
PLATE/THRUST/INJPUMP	20	15
PLATE/WATER PUMP	17	9
PLUG	5	7
	9	25

DESCRIPTION	REF	NO
PLUG	11	12
PLUG(M14X15)	7	3
PLUG/PT1/2	1	4
PLUG/PT1/4	9	2
PLUNGER ASSY	25	2
POINTER	8	2
PULLEY	27	1
PULLEY/CRANK	15	10
PULLEY/WATERPUMP	18	2
PUSHROD	11	7
REGULATOR ASSY	27	26
RELAY,SOLENOID	23	8
RESISTANCE/1.0	21	5
RETAINER	26	7
RING SNAP	13	4
RING/O	9	37
	16	9
RING/PISTON SET	13	2
RING/PISTON/OV SET	14	2
	14	4
RING,SNAP/ 4 E	20	23
	20	34
RING,SNAP/12 C	9	32
RING,SNAP/16 C	11	16
RINGGEAR	15	6
RINK/CONTROL	20	21
ROCKERARM	11	9
ROCKERSHAFT ASSY	11	8
RORA	26	6
ROTOR ASSY	27	4
ROTOR/OUTER	16	4
ROTOR/WATERPUMP	17	6
RUBBERFLANGE	2	2
SCREW	26	14
SCREW ADJUST	11	17
SCREW/SOCKET	16	7
SCREW/TAPPING	2	4
SCREW/WATER PUMP	17	10
SEAL SET/WATER PUMP	17	5
SEAL/CYL HEAD/UNDER	2	6
SEAL/WATER PUMPPULLE	17	7
SEAL,BEARING CAP	5	9
SEAL,BEARING CAP/7	5	10
SEAL,OIL	1	9
	9	7
SEAT,SPRING	24	13
SEAT,VALVE SPRING	11	4
SHAFT/HYDRAULIC ASSY	9	47

DESCRIPTION	REF	NO
SHAFT/ROCKERARM	11	11
SHAFT/ROCKERARM ASSY	11	10
SHIM/ADAPTER	20	32
	20	33
SHIM/PUMP,INJ	20	2
	20	3
	20	4
	20	5
	20	6
SHIM/T=0.1	24	2
SHIM/T=0.2	24	3
SHIM/T=0.3	24	4
SHIM/T=0.4	24	5
SHIM/T=0.5	24	6
SHIM/T=0.52	24	7
SHIM/T=0.54	24	8
SHIM/T=0.56	24	9
SHIM/T=0.58	24	10
SHIM/T=0.8	24	11
SHIM,ADAPTER	20	29
	20	30
	20	31
SLEEVEFLANGE	25	8
SNAPRING	25	13
SOLENOID	23	5
SPACER	9	43
	24	14
SPACER/FAN/53	18	3
SPACER/ROCKERARM	11	20
SPACER/WATERPUMP	17	15
SPRING	11	15
	27	18
SPRING/ADAPTER	20	28
SPRING/DELIVERYVALVE	25	4
SPRING/GOVERNOR	20	35
SPRING/IDLE	20	44
SPRING/PLUNGER	25	14
SPRING/RELIEF VALVE	9	31
SPRING/RETURN	26	18
SPRING/SETTING	20	24
SPRING/VALVE	11	3
SPRING,BRUSH	26	12
SPRING,NOZZLE	24	12
SPRING,RETURN	20	38
SPRING,STARTING	20	43
SPRINGSEAT	25	15
	25	16
STARTER ASSY	22	7

DESCRIPTION	REF . NO		DESCRIPTION	REF . NO	DESCRIPTION	REF . NO	DESCRIPTION	REF . NO
STOPPER/FULLLOAD	9	18						
STRAINER	16	8						
STUD	5	20						
	9	4						
	9	5						
	9	6						
	9	46						
STUD/M8X40	5	19						
	17	17						
STUD,HEAD COVER	1	13						
SWITCH/MAGNETIC ASSY	26	13						
SWITCH/OILPRESSURE	23	1						
TAPPET	11	6						
	25	11						
THERMOMETER	23	2						
THERMOSTAT	17	29						
VALVE/EXHAUST	11	2						
VALVE/INTAKE	11	1						
VALVE/RELIEF ASSY	9	29						
VALVE,DELIVERY	25	3						
VALVEGUIDE	1	7						
	1	8						
VALVESEAT/EXHAUST	1	6						
VALVESEAT/INLET	1	5						
WASHER	9	11						
	9	50						
	9	52						
	15	8						
	15	11						
	17	14						
	17	21						
	20	9						
WASHER / M6	20	41						
WASHER/CORRUGATE	19	4						
WASHER/08X14X01	9	17						
	9	26						
WASHER/08X15.5X1.6	11	23						
WASHER/9X22X2	22	4						
WASHER,SP/M6	20	42						
WATERPUMP ASSY	17	1						
YOKE/STARTER ASSY	26	1						

DESCRIPTION	REF	NO
	75	19
ADAPTER	117	24
ADAPTER(90°/PUMP)	71	31
	72	31
	83	2
ADAPTER/EXHAUST	4	1
ADAPTER/45°	117	33
ADJUSTER,ROD	87	9
ADJUSTER,SEAT L ASSY	91	12
ADJUSTER,SEAT/RH	91	13
ARM	23	13
	47	22
	61	2
	104	87
ARM ASSY	40	8
	40	10
	41	8
	41	10
ARM COMP	7	11
	8	11
	19	5
	19	7
	31	7
	34	13
	104	94
ARM SET	19	13
ARM COMP	34	14
	52	21
	52	22
ARM/KNUCKLE/LH ASSY	67	26
ARM/KNUCKLE/RH ASSY	67	28
ARM/LEVEL/LH ASSY	104	101
ARM/LEVEL/RH COMP	104	105
ARM/LIFT	73	6
ARM/PARKING	54	25
ARM/PLATE	104	98
ARM/PTO ASSY	35	4
ARM/PTO COMP	36	9
ARM/PTO/IN ASSY	36	4
ARM/SENSOR COMP	82	10
	104	60
ARM/70 COMP	35	9
ARM,PLATE COMP	31	9
BACKPLATE	30	32
BALL	19	3
	22	12
	23	12
	28	5

DESCRIPTION	REF	NO
BALL	31	3
	34	8
	52	5
	59	9
	116	4
	119	10
BAND.470	80	12
BAND,WIRE/140	82	2
	103	4
	103	18
	103	34
	103	35
	103	41
	104	46
	104	78
	112	6
BAND,WIRE/250	103	33
	103	42
	104	80
	112	7
BAR ASSY	73	1
BAR SET	10	1
BAR/04X144	104	3
BATTERY/80D26R-MF	97	1
BEARING	30	4
	33	2
BEARING/BALL	14	2
	14	9
	16	2
	16	8
	32	3
BEARING/BALL 6305SH2	16	11
BEARING/BALL/6304SH2	20	16
	21	11
	21	16
BEARING/NEEDLE	30	18
	118	36
BEARING/25X50X4	27	4
BEARING/46CHI-32205R	65	7
BEARING,BALL	15	4
	29	3
	29	13
	33	3
BEARING,BALL 6208SH2	49	3
BEARING,CLUTCH RS.	9	13
BEARING,KT/323723	15	9
	15	14
	15	17

DESCRIPTION	REF	NO
BEARING,KT/323723	20	5
	21	5
BEARING,KT404517	27	21
BEARING,KT455017	27	15
BEARING,NEEDLE(CAGE)	33	19
BEARING,NR	46	7
	118	14
BEARING,NR/FJL3020	118	2
BEARING,NR/HJ243316	118	26
BEARING,NR/KT253017	27	2
BEARING,NR/KT303524	15	23
	17	7
	18	7
	20	10
	21	10
BEARING,NR/KT354026	17	15
	18	15
BEARING,NR/KT404527	33	5
	33	10
	33	14
BEARING,RB/6003ZZ	60	4
BEARING,RB/6004	16	9
	20	17
	21	17
	27	25
	29	2
	29	12
	30	2
	30	16
BEARING,RB/6005	30	24
BEARING,RB/6007	27	11
BEARING,RB/6008	65	28
BEARING,RB/6013	47	20
BEARING,RB/6205	16	12
	20	12
	21	12
	27	24
BEARING,RB/6206	30	7
	67	43
BEARING,RB/6207	27	10
	67	3
BEARING,RB/6208	67	42
BEARING,RB/6209	67	9
BEARING,RB/6209SH	50	8
	51	8
BEARING,RB/6210	50	9
	51	9
BEARING,RB/6211	47	19

DESCRIPTION	REF	NO
BEARING,RB/6304	15	3
	17	2
	18	2
	20	11
BEARING,RB/6305	17	3
	18	3
	67	20
BEARING,RB/6306SH2	32	4
BEARING,TB	118	33
BEARING,TB/51106	67	16
BELT/BUCKLESIDE ASSY	91	21
BELT/TUNGSIDE ASSY	91	22
BOARD	100	17
BOLT	3	20
	12	13
	13	13
	24	8
	48	6
	56	19
	57	3
	57	12
	57	19
	63	2
	63	5
	66	12
	66	25
	73	4
	75	12
	76	12
	80	2
	80	6
	82	18
	94	13
	110	2
	114	2
	118	21
	120	9
BOLT M10X30	120	8
BOLT W SEMS M8X35	78	3
	95	12
BOLT(S) M10X25	55	3
	55	7
	71	28
	72	28
	75	32
	76	32
BOLT(S) M10X30	71	29
	72	29

DESCRIPTION	REF . NO		DESCRIPTION	REF . NO		DESCRIPTION	REF . NO		DESCRIPTION	REF . NO	
BOLT(S) M10X30	75	17	BOLT/M10X25	118	41	BOLT/M4X12	100	18	BOLT/STUD	67	47
	76	17	BOLT/M10X30	48	3	BOLT/M8X1.0X58	47	4	BOLT/STUD/M10X25	4	12
BOLT(S) M8X35	104	115		71	7	BOLT/M8X16	22	15	BOLT/STUD/M10X35	4	2
BOLT(SP) M8X20	7	22		72	7		34	15	BOLT/STUD/SEAL	12	10
	8	22	BOLT/M10X40	48	4		35	10		12	12
	19	10		71	5		36	10		13	10
	23	2		72	5		39	7		13	12
	54	21	BOLT/M10X60	40	20		40	18		24	5
	59	10		41	20		41	18		26	2
	85	15	BOLT/M10X85	79	2		95	18		26	3
	85	23	BOLT/M10X86	48	11	BOLT/M8X20	34	3		26	6
	86	3	BOLT/M10X90	71	6		58	8		67	34
	89	8		72	6		65	18	BOLT/8X20	2	9
	104	34	BOLT/M12X25	12	2		87	14		2	13
	104	93		13	2	BOLT/M8X25	3	26		2	20
	112	9		69	9		28	7		6	2
BOLT(SP)/M6X16	61	28		70	9		34	17		9	16
	85	10		93	6		60	8	BOLT,BATTERY SET	97	7
	85	19		94	5		65	27	BOLT,BATTERY SET(B)	97	8
	88	43	BOLT/M12X30	12	5	BOLT/M8X28 11T	61	16	BOLT,CONNECTOR	61	34
	103	16		13	5		77	8	BOLT,REAMER/M8X25	9	5
BOLT/A COMP	114	5		25	2	BOLT/M8X30	61	8		23	7
BOLT/M 6X20	91	3		25	6		82	6	BOLT,SEMS	1	20
BOLT/M 6X30	91	4		62	3		88	40		14	6
BOLT/M 6X35	104	90		62	8	BOLT/M8X50	22	2		14	12
BOLT/M 6X55	120	7		118	40		66	23		22	19
BOLT/M 8X12	5	22	BOLT/M12X35	24	3		84	2		26	9
	37	1		24	9	BOLT/M8X65 7T	28	10		28	14
	45	1		66	20	BOLT/REAMER/M8X1.0X5	47	5		39	5
	103	28		67	6	BOLT/S	61	31		40	2
BOLT/M 8X16	88	21		74	18		61	40		40	5
BOLT/M 8X20	11	6	BOLT/M12X40	12	4		75	3		41	2
BOLT/M 8X30	11	4		13	4		76	3		41	5
BOLT/M 8X35	64	9	BOLT/M12X45	12	6		77	19		75	14
BOLT/M 8X80	1	15		13	6	BOLT/SEAL	22	5		75	22
	4	19		62	4		28	8		76	14
BOLT/M08X32	97	4		74	19		84	3		76	22
	103	6	BOLT/M12X70	74	20		101	6		82	17
BOLT/M10X100	48	5	BOLT/M12X80	93	8	BOLT/SET/M16X102	105	4		83	6
BOLT/M10X20	93	14		94	7	BOLT/SM/M14X1.5X35	61	5		85	21
BOLT/M10X25	4	9	BOLT/M14X30	80	10	BOLT/SM/M8X1.25X30	30	12		101	11
	4	15		93	3	BOLT/SP	77	15		104	36
	46	9	BOLT/M16X110	114	18		88	38		104	64
	47	18	BOLT/M16X150	114	22		94	17		104	74
	52	8	BOLT/M16X40	114	10		103	31	BOLT,SEMS (S)	101	9
	67	36	BOLT/M16X75	114	14		103	32	BOLT,SEMS (SP)	4	11
	67	46	BOLT/M16X85	56	3	BOLT/STUD	62	2		4	17
	91	23		56	12		66	5		26	11

DESCRIPTION	REF	NO	DESCRIPTION	REF	NO	DESCRIPTION	REF	NO	DESCRIPTION	REF	NO
BOLT,SEMS (SP)	33	24	BOLT,SEMS (S) M8X16	95	9	BREATHER ASSY	71	16	BUZZER ASSY	104	73
	61	21		104	84		72	16	CABLE/ACCELERATOR	7	17
	75	7	BOLT,SEMS/M6X10	3	10	BULB	100	19		8	17
	76	7	BOLT,SEMS/M8X25 7T	9	7		102	10	CABLE/BATTERY ASSY	103	5
	87	6		59	6	BULB/12V 20W	99	2	CABLE/METER ASSY	100	49
	88	16	BOLT,SET/M8X30	40	6	BULB/12V 45/45W	98	2	CABLE/PEDAL ASSY	7	27
	88	26		41	6	BULB/12V35W	120	4		8	27
	88	32	BOLT,SM/M08X25	45	13	BUSH	60	3	CABLE/REVERSE ASSY	39	1
	89	15		45	17		67	27	CAM	47	23
	90	3	BOLT,WING/M6X12	3	5		67	29	CAM/CLUTCH	30	10
	95	7	BOOT	37	6	BUSH/14X16X20	60	2	CAM/STEERING	59	4
	95	11		52	13	BUSH/15X17X20	104	102	CAP	3	3
	95	15		90	2	BUSH/15X17X25	73	2		97	2
	95	19		100	42	BUSH/16X18X15	40	13		100	29
	103	30		101	3		41	13		104	79
	104	82		102	13		54	18	CAP ASSY	5	14
BOLT,SEMS (S)	5	20	BOOT/HORN	100	38	BUSH/16X18X20	35	5	CAP(M8)	89	16
	19	4	BOOT,CHANGE LEVER	45	6		36	5	CAP/STEERING	58	2
	31	4	BRACKET	62	7	BUSH/16X24X16	19	14	CAP/SWITCH	104	12
	52	19		89	4		43	6	CAP/30	78	5
	60	7		91	19	BUSH/16X24X21	40	9		78	6
	67	11	BRACKET COMP	7	21		40	11		89	17
	74	15		8	21		41	9		95	13
	82	25		19	9		41	11		95	28
	87	2		43	1	BUSH/20X23X20	11	2	CAP,BLANK/M14	12	8
	87	4		80	1		54	8		13	8
	87	8		91	7		54	17		26	7
	89	10		104	35	BUSH/28X32X15	20	3	CAP,BLANK/72	26	5
	92	8		104	75		21	3	CAP,OIL ASSY	66	3
	95	4	BRACKET COMP	89	7	BUSH/28X32X31	15	15		71	14
BOLT,SEMS (S) M8X12	5	10	BRACKET F LH COMP	93	1		15	18		72	14
	64	12	BRACKET F RH COMP	93	2	BUSH/28X46X34	15	10	CAP,OIL(B)ASSY	61	23
	102	4	BRACKET L COMP	80	4		20	4	CAP,PTO SHAFT	26	10
	104	38	BRACKET R COMP	80	5		21	4	CAP,RUBBER (20)	10	5
	104	48	BRACKET/AXLE COMP	62	1	BUSH/30X35X39	17	16	CAP,TIRE VALVE	56	9
	104	51	BRACKET/BATTERY COMP	6	1		18	16		56	18
BOLT,SEMS (S) M8X16	5	2	BRACKET/BUMPER SET	62	6	BUSH/35X40X27	33	11		57	9
	7	10	BRACKET/CLEANER COMP	2	12	BUSH/35X40X32	33	15		57	18
	8	10	BRACKET/FILTER	75	28	BUSH/35X56X30	33	6		69	4
	43	2		76	28	BUSH/40X58X29	27	16		69	8
	52	16	BRACKET/MOUNT COMP	94	1	BUSH/45X50X25	66	9		70	4
	54	20		94	2	BUSH/45X50X42	71	2		70	8
	75	24	BRACKET/PLATE	88	13		72	2	CARTRIDGE/20	75	30
	75	35	BRACKET/RADIATO COMP	3	25	BUSH/50X55X30	67	13		76	30
	76	24	BRACKET/REAR COMP	94	3		67	15	CASE	47	2
	76	35	BRACKET,L COMP	5	18	BUSH/50X55X42	71	3		65	2
	91	16	BRACKET,R COMP	5	19		72	3		67	1
	91	20	BRAKE ASSY	52	1	BUSH/60X65X30	66	15	CASE ASSY	100	9

DESCRIPTION	REF	NO
CASE ASSY	117	11
CASE/CYLINDER ASSY	71	1
	72	1
CASE/DIFF	47	1
CASE/L ASSY	67	12
CASE/R ASSY	67	14
CASE/SENSOR	82	16
CASE/STEERING ASSY	118	1
CASE/TRANSMISSION	24	1
	26	1
CASE/TRANSMISSION/F	12	1
	13	1
CASE,FRONT DIFF	65	19
CASE,GLASS	100	15
CHAIN/CHECK COMP	80	19
CHAIN/CHECK/REAR/A	80	16
CLAMP	4	18
	61	19
	64	8
	82	3
	102	8
	112	5
CLAMP/WIRE/10-15	3	24
	52	14
CLAMP/WIRE/11-13	1	27
CLAMP/WIRE/30-38	3	16
CLAMP/WIRE/32-40	3	15
	75	27
	76	27
	77	22
CLAMP/WIRE/34-42	3	14
CLAMP/WIRE/49-60	2	11
CLAMP/WORM/08-16	1	26
CLAMP/WORM/16-25	5	11
	61	37
	61	42
	71	25
	72	25
CLAMP,HARNESS	5	8
	88	37
	89	12
	102	3
	102	11
CLAMP,MAIN HARNESS	3	9
	77	20
CLEANER/AIR ASSY	2	1
CLIP(B)	6	6
	40	28

DESCRIPTION	REF	NO
CLIP(B)	41	28
	95	25
CLIP/HOSE/10.4-11.1	5	13
CLIP/HOSE/7.6-8.2	5	12
CLIP/PAUSELOCK	82	4
CLUTCH	47	21
COLLAR	116	11
	118	34
	118	35
COLLAR 48X56X4	65	8
COLLAR/07X11X20	103	36
COLLAR/09X14X10	104	65
COLLAR/11X21X3	74	29
COLLAR/20X29X59	30	17
COLLAR/24X38X44	72	13
COLLAR/24X38X72	71	13
COLLAR/26X30X10	27	3
COLLAR/41X55X4	67	40
COLLAR/46X50X8	27	17
COLLAR/50X65X4	50	5
	51	5
COLLAR/52X61X211	50	3
	51	3
COLLAR/6X14X40	48	9
COLLAR,PINION THRUST	65	22
COLLAR,SPUR/37	27	20
COLLAR,THRUST	49	4
	65	24
COLLAR,THRUST (R)	65	3
COLUMN COMP	60	1
CONNECTOR	3	17
	75	18
	76	18
	84	7
CONTROLLER/C ASSY	104	69
COUPLING/51X68X18	15	12
	15	21
	20	7
	21	7
COUPLING,SIDE	27	7
	27	19
	33	8
	33	17
COUPRING/16X27X55	29	10
	29	20
	64	3
COUPRING/21X36X65	20	13
	21	13

DESCRIPTION	REF	NO
COVER	2	15
	4	7
	5	17
	66	17
	67	10
	67	44
	71	17
	71	27
	72	17
	72	27
	79	4
	89	14
	119	17
COVER/COLUMN/FRONT	58	6
COVER/COLUMN/REAR	58	7
COVER/CONTROL/LOCK	104	4
COVER/DASH	87	12
COVER/FRONT	118	37
COVER/FUSE	103	20
COVER/HOOD COMP	86	7
COVER/PLATE	33	23
COVER/ROM	104	71
COVER/SIDE/LH ASSY	88	1
COVER/SIDE/RH ASSY	88	5
COVER/SINGLE/22 ASSY	9	1
COVER/TANK COMP	95	16
COVER/UNDER	71	18
	72	18
COVER/UNDER/LH COMP	88	17
COVER/UNDER/RH COMP	88	18
COVER/WX	104	2
COVER,DUST	68	6
	68	11
	68	16
COVER,LW	2	16
COVER,PUMP	61	11
	77	3
COVER,ROD SET	115	7
COVER,SIDE ASSY	118	25
CRAMP	104	24
	104	25
	104	26
CRANK.LIFT	73	3
CUP	1	6
CUSHION,B/ RUBBER	85	16
	95	23
CUSHION,C/RUBBER	105	14
CYCLONE ASSY	2	14

DESCRIPTION	REF	NO
CYLINDER	74	1
	83	1
DIODE	103	40
DISC,BRAKE	52	2
DISK	56	2
	56	11
DISK/CLUTCH/225 COMP	9	2
DISK,REAR WHEEL	57	2
	57	11
DISKPLATE	30	30
DRAIN/BREATHER	71	22
	72	22
DUST SEAL	115	9
ELEMENT	1	9
ELEMENT ASSY	2	4
ELEMENT,PAPER ASSY	2	2
END,ROD RH ASSY	68	10
END,ROD/L·R ASSY	68	5
END,ROD/R·L ASSY	68	15
ESCUTCHEON	100	11
FACING	9	3
FENDER/LH COMP	89	1
FENDER/RH COMP	89	6
FENDER/SUB/LH COMP	94	11
FENDER/SUB/RH COMP	94	12
FILTER	71	19
	72	19
FILTER/FUEL ASSY	1	1
FILTER/LINE/09X12X15	74	14
FILTER/OIL ASSY	61	25
FILTER/SUCTION ASSY	77	13
FILTER/SUCTION/20	75	29
	76	29
FLANGE	75	8
	76	8
FLASHER ASSY	101	7
FORK/SHIFT/MAIN	22	6
FORK/SHIFT/PTO	34	5
	34	6
FORK/SHIFT/REVERSE/U	23	10
FORK/SHIFT/SUB	28	2
FORK/SHIFT/4WD SET	30	11
FORK,SUB SHIFT	28	3
FRAME ASSY	54	16
FRAME COMP	105	1
FRAME/GRILLE/LOWER	85	20
FRAME/GRILLE/UPPER	85	18
FRAME/HOODCOMP	87	1

DESCRIPTION	REF	NO
FRAME/LH COMP	95	5
FRAME/RH COMP	95	6
FRANGE	78	1
FRO-CON VALVE ASSY	117	1
FUSE/SLOWBLOW	103	2
	103	12
FUSE/15A	103	24
FUSE/32V10A	103	23
FUSE,BLADE	103	22
GASKET	2	3
	2	22
	4	3
	4	4
	4	8
	9	11
GASKET/LAMP	120	3
GAUGE ASSY	101	4
GAUGE,AIR	109	9
GAUGE,OIL LEVEL	48	10
GEAR	100	4
GEAR SET/8X38T	65	1
GEAR(SPUR/20)	29	8
	29	18
GEAR(SPUR/28)	29	7
	29	17
GEAR/BEVEL/17	67	19
GEAR/BEVEL/47	67	38
GEAR/HELICAL/17	16	1
GEAR/HELICAL/18	14	7
GEAR/HELICAL/19	14	1
GEAR/HELICAL/20	16	4
GEAR/HELICAL/21	27	13
GEAR/HELICAL/23	16	5
	17	14
GEAR/HELICAL/24	18	14
GEAR/HELICAL/25	17	6
GEAR/HELICAL/26	18	6
GEAR/HELICAL/27	16	6
GEAR/HELICAL/28	46	3
GEAR/HELICAL/29	15	22
	21	2
GEAR/HELICAL/30	16	7
GEAR/HELICAL/32	15	16
	20	15
	21	15
GEAR/HELICAL/36	15	13
GEAR/HELICAL/39	15	8
GEAR/HERICAL/28	20	2
GEAR/HERICAL/28	20	9
	21	9
GEAR/HERICAL,35	27	14
GEAR/HERICAL,54	50	2
	51	2
GEAR/SPUR/13-20	32	2
GEAR/SPUR/17-22	32	1
GEAR/SPUR/18	30	9
GEAR/SPUR/22	30	28
GEAR/SPUR/26	30	6
GEAR/SPUR/30	30	23
GEAR/SPUR/31	33	9
GEAR/SPUR/33	33	18
GEAR/SPUR/36	33	4
GEAR/SPUR/38	27	5
GEAR/SPUR/40	33	13
GEAR/33-10	27	23
GEAR/9X51 SET	46	1
GEAR,BEVEL	47	10
GEAR,BEVEL/12	67	2
GEAR,BEVEL/16	65	23
GEAR,BEVEL/17	67	8
GEAR,BEVEL/20T	47	11
GEAR,HERICAL/14	15	1
GEAR,HERICAL/31-27	16	10
GEAR,SPUR/16	27	1
GLASS	100	13
GLIP/MAIN	37	8
	45	9
GLIP/YELLOW	19	19
GRILLE	85	1
GRIP/ASSIST	89	9
GRIP/SUB	104	57
GRIP/THROTTLE	7	8
	8	8
	38	6
GROMMET	19	20
	104	22
GROMMET/30	103	39
GROMMET/9X13X2	89	13
GUIDE	2	18
	7	9
	8	9
	22	18
	28	13
	40	26
	41	26
GUIDE COMP	40	3
GUIDE COMP	41	3
GUIDE/LH COMP	90	1
GUIDE/WIRE	82	5
HARNESS	100	45
HARNESS ASSY	100	33
HARNESS COMP	98	3
HARNESS/AUTO/TG ASSY	82	1
HARNESS/BATTERY	103	8
HARNESS/EARTH	1	21
	103	37
HARNESS/ENGINE/ ASSY	103	1
HARNESS/ENGINE/EARTH	103	27
HARNESS/ENGINE/LH	103	11
HARNESS/MAIN/E1 ASSY	103	19
HARNESS/PANEL ASSY	104	20
HARNESS/REAR/K ASSY	103	38
HARNESS/REAR/WX ASSY	104	77
HARNESS/WORKING	112	4
HARNESS,GLOW	103	26
HARNESS,OIL PRESSURE	103	25
HARNESS,SOLENOID	104	76
HEAD/CYLINDER	74	16
HITCH SET	110	1
HOLDER	7	31
	8	31
HOLDER COMP	34	16
	104	81
HOLDER COMP	59	7
	59	8
HOLDER/FRAME/LH COMP	105	2
HOLDER/FRAME/RH COMP	105	3
HOLDER/LAMP COMP	85	9
HOLDER/LH COMP	85	13
HOLDER/PLATE	104	15
HOLDER/RH COMP	85	14
HOLDER/SENSOR COMP	82	13
	104	83
HOOD COMP	86	1
HOOK	11	18
HOOK COMP	85	22
HORN	101	10
HOSE	3	23
HOSE(195) ASSY	61	32
HOSE/OIL	61	36
	61	41
HOSE/RADIATOR/INLET	3	13
HOSE/RADIATOR/OUTLET	3	12
HOSE/RETURN	1	13
HOSE/028	105	9
HOSE/08X13X1250	1	25
HOSE/100	75	26
	76	26
	77	21
HOSE/1000 ASSY	83	3
HOSE/1050	5	7
HOSE/110	1	24
HOSE/1150	1	22
HOSE/180	3	22
HOSE/280 ASSY	71	32
	72	32
HOSE/350	71	24
	72	24
HOSE/430	5	5
HOSE/500	5	6
HOSE,UP/RUBBER	3	4
HOUSING	31	1
HOUSING ASSY	118	13
HOUSING/AXLE	66	1
HOUSING/AXLE,L	48	1
HOUSING/CLUTCH	30	27
HOUSING/GEARBOX ASSY	100	12
HOUSING,AXLE R	48	2
HUB	15	11
	15	20
	20	6
	21	6
	27	6
	27	18
HUB/09X14X20	3	21
HUB/35X62X20	33	7
	33	16
INSULATOR	3	7
	3	11
	6	7
	6	11
	40	25
	41	25
	54	24
	86	5
	88	44
	91	17
	93	5
	93	10
	94	4
	95	2
	95	3

DESCRIPTION	REF . NO		DESCRIPTION	REF . NO		DESCRIPTION	REF . NO		DESCRIPTION	REF . NO	
INSULATOR	95	17	LABEL/INSPECTION/SF	108	18	LEVER/BAR/16 COMP	45	11	NET	85	3
	95	24		108	20		45	12	NET/LH	88	2
	96	1	LABEL/INSPECTION/TK2	108	17		45	15	NET/RH	88	6
	104	23	LABEL/INSPECTION/TK3	108	19		45	16	NET/WIRE COMP	3	2
	104	31	LABEL/MAINTENANCE/OI	107	10	LEVER/POS	104	50	NIPPLE/GREASE	10	4
	112	3		107	14	LEVER/POS/E15 COMP	104	49		66	18
INSULATOR/CORRUGATE/	1	23	LABEL/MAINTENANCE/SE	107	21	LINING/11X30X02	104	53		67	31
INSULATOR/LH	95	21	LABEL/MODEL ASSY	106	7	LINING/13X50X3	7	2	NIPPLE/STRAIGHT	84	6
INSULATOR/RH	95	22		106	8		8	2	NIPPLE,GREASE	68	9
INSULATOR/140	6	8		106	15	LINK	22	13		68	14
	88	11		106	16		22	14	NIPPLE,GREASE/BM6F	68	19
JOINT	61	7	LABEL/POS	104	33	LINK ASSY	40	12	NIPPLE,GREASE/PT1/8	52	20
JOINT BALL M08LH	104	110	LABEL/POSITION/3P	107	16		41	12	NUT	2	8
JOINT BALL M08RH	44	4	LABEL/PTO/R	107	18	LINK/DRAW BAR	111	1		40	21
	44	10	LABEL/PTO,1-2	107	5	LINK/LOWER/LH COMP	81	1		40	27
	104	109	LABEL/PTO,3-4	107	6	LINK/LOWER/RH COMP	81	2		41	21
KEY ASSY	100	32	LABEL/SLOW BLOW/ALTE	103	13	LINK/PTO COMP	34	18		41	27
KNOB	74	34	LABEL/SLOWBLOW/MAIN	103	3	LINK/TOP SET	113	1		57	4
	100	37	LABEL/WARNING/BRAKE	108	15	LINK/TOP/LH COMP	113	2		57	13
	104	9	LABEL/WARNING/FAN	108	2	LINK/TOP/RH COMP	113	3		58	3
	104	29	LABEL/WARNING/MUFFLE	108	5	LOCKPLATE COMP	54	3		68	3
KNOB/12	40	23	LABEL/WARNING/RADIAT	108	6	MARK	107	2		74	37
	41	23	LABEL/WARNING/ROPS	108	11	MARK,WORK LAMP	112	10		84	8
	43	7	LABEL/WARNING/SHIELD	108	4	MAT	95	20		87	10
KNOB,LOCK	104	10		108	7	META/FUEL ASSY	100	7		92	6
LABEL	108	14	LABEL/WARNING/SUPER	107	19	METAL	23	1		100	44
LABEL/CAUTION/BATTER	108	3	LABEL,CONTROL/AWD	107	4		28	6		101	2
LABEL/CAUTION/COVER	108	16	LABEL,KNOB/LH	107	12		46	8		104	17
LABEL/CAUTION/DRIVE	108	1	LABEL,KNOB/RH	107	13		47	14		115	6
LABEL/CAUTION/PARKIN	107	11	LAMP/WORKING ASSY	112	1		47	15		118	23
LABEL/CAUTION/SF	108	12	LAMP,HEAD ASSY	98	1	METAL/BRAKE	52	7		118	31
LABEL/CAUTION/SPEED	108	10	LAMP,TURNSIGNAL ASSY	99	1	METAL/INPUT	9	8	NUT ASSY	118	5
LABEL/CONTROL	104	13	LENS	99	3	METAL/MAIN	22	1	NUT M10	4	5
LABEL/CONTROL/LINEAR	107	8		120	1	METAL/PIVOT ASSY	66	14		4	13
LABEL/CONTROL/PTO	107	7	LEVBER/BAR.10 COMP	7	1	METAL/POT	40	1	NUT (30)	46	4
LABEL/CONTROL/START	107	15		8	1	METAL/PTO	19	1	NUT.U/M10	104	56
LABEL/CONTROL/SUB	107	3	LEVER	1	2		41	1	NUT/FLANGE/M6	120	6
LABEL/CONTROL/THROTT	107	9		19	16	METAL/REVERSE	25	1	NUT/M 6	82	11
LABEL/CONTROL/VISOR	100	40		100	36		25	5		97	10
LABEL/CONTROL/WX	107	20	LEVER COMP	38	3	METAL/SLEEVE	9	15		104	61
LABEL/CONTROL/4WD	107	1	LEVER COMP	88	23	METAL,DIFFERENTIAL	65	15		104	91
LABEL/CONTROL,VISOR	100	39	LEVER/BAR/12	43	5	METAL,PIVOT ASSY	66	8		104	99
LABEL/DANGER/BATTERY	108	9	LEVER/BAR/12 COMP	40	16	METER/TACHO ASSY	100	2	NUT/M 8	4	22
LABEL/DANGER/STARTER	108	8		40	17	METER/TEMP	100	8		11	5
LABEL/DEF	107	17		41	16	MIRROR ASSY	92	1		11	7
LABEL/DEPTH	104	32		41	17	MIRROR ASSY	92	2		11	15
LABEL/DIESELFUEL	108	13	LEVER/BAR/16	38	1	MUFFLER COMP	4	6		23	3
LABEL/FUSE/MAIN	103	21		38	2	NET	85	2		31	5

DESCRIPTION	REF . NO		DESCRIPTION	REF . NO		DESCRIPTION	REF . NO		DESCRIPTION	REF . NO	
NUT/M 8	40	7	NUT/M16	80	18	O-RING	30	19	O-RING/P14	116	10
	40	19		83	9		115	5		116	19
	41	7		105	5		118	7		117	9
	41	19		114	6		118	8		119	7
	42	5	NUT/M20	102	14		118	10	O-RING/P16	1	11
	42	11	NUT/M22	100	35		118	12		47	24
	44	5	NUT/M25	65	13		118	22		74	33
	44	11	NUT/M45X1.5	118	39		118	38		117	6
	45	14	NUT/M5	99	13	O-RING G75 HS90	74	17		117	8
	45	18	NUT/M6	87	13	O-RING HS90 G50	61	13	O-RING/P18	61	35
	52	28		103	15		77	5		74	25
	82	8	NUT/M8	9	9	O-RING P31	61	27		116	18
	82	21		11	14	O-RING P6 HS90	61	15		117	25
	85	17		42	6		77	7		119	5
	93	11		42	12	O-RING/G30	75	25	O-RING/P20	61	30
	95	26		52	29		75	34		61	39
	103	9		77	11		76	25		71	30
	104	112		104	111		76	34		72	30
	104	116	NUT/SM/M8X1.0	47	6	O-RING/G35	75	20		74	13
NUT/M08	97	5	NUT/WASHER	3	29		76	20		75	5
	103	7		44	6	O-RING/G45	75	21		75	9
NUT/M10	66	7		44	12		76	21		76	5
	67	35		64	10		77	14		76	9
	67	49		88	19	O-RING/G55	115	10		77	18
	71	8		88	22	O-RING/G60	9	17		78	2
	72	8		88	27	O-RING/G65	1	8	O-RING/P21	1	5
	99	5		88	36		118	18	O-RING/P22	35	8
	112	2		91	18	O-RING/G70	118	29		36	8
NUT/M10X1.25	7	6	NUT/WING	2	17	O-RING/G90	74	3		61	14
	8	6	NUT,ADAPTER/AN09	50	6	O-RING/G95	67	4		74	32
NUT/M12	12	3		51	6	O-RING/P 8	118	32		77	6
	13	3	NUT,CASTLE/M27X1.5	61	3	O-RING/P10	74	11	O-RING/P24	119	6
	24	2	NUT,LH THREAD/M17	68	4		74	27	O-RING/P34	64	7
	24	10	NUT,LOCK/M8	2	21	O-RING/P10A	34	2		65	5
	66	21		5	25	O-RING/P12	61	26	O-RING/P36	64	6
	80	7		91	8		74	24	O-RING/P5 HS90	117	30
	94	9		91	14		116	20	O-RING/P70 HS90	74	6
	105	11		104	40		117	23	O-RING/P8	116	7
	114	3	NUT,RING	1	7		117	29		117	28
NUT/M16	56	4	NUT,RING/M28X1.0	100	30		119	4	ORNAMENT/I/STEERING	106	6
	56	5	NUT,SLOTTED/M12P1.25	68	7	O-RING/P14	19	6		106	14
	56	13		68	12		31	8	ORNAMENT/ISEKI	85	6
	56	14		68	17		71	12		106	3
	57	5	NUT,SM/M10	87	11		72	12		106	4
	57	14	NUT,SPEED/P4	85	8		74	12		106	5
	66	13	NUT,SPEED/P6	85	5		75	16		106	11
	66	26		86	9		76	16		106	12
	80	13	NUT,TOP LINK LOCK	113	5		79	5		106	13

DESCRIPTION	REF	NO	DESCRIPTION	REF	NO	DESCRIPTION	REF	NO	DESCRIPTION	REF	NO
ORNAMENT/29/LH	106	1	PIN	37	5	PIN,CYL R.	111	4	PIN,SPRING/5 X32 W	104	95
ORNAMENT/29/RH	106	2		39	2	PIN,HAIR	81	5	PIN,SPRING/6 X25 W	19	8
ORNAMENT/33/LH	106	9		45	5		83	12		22	9
ORNAMENT/33/RH	106	10		46	2		109	11		31	10
PACKING	3	19		47	7		111	5		54	26
	61	24		47	25	PIN,KNOK	67	5	PIN,SPRING/6 X40 W	104	88
	66	4		54	11	PIN,LINK	80	23	PIN,SPRING/8 X50 W	74	8
	71	15		66	2		109	10	PIN,TAPER/8X50	54	2
	72	15		66	19		109	13	PIN,TORQUE	52	6
	75	31		67	32		110	5	PIN,YOKE A	52	24
	76	31		67	45		111	3	PINION,BEVEL/11	65	21
PACKING (A)	100	14		80	9	PIN,SEAT SET	91	10	PINION,DIFF/12T	47	8
PACKING (B)	100	16		100	5	PIN,SPLIT/2 X20	7	13	PINION,WHEEL(10)L.H	49	1
PACKING ASSY	2	5	PIN COMP	85	24		7	20	PINION,WHEEL(10)R.H	49	2
PACKING/RUBBER	101	5		105	8		7	26	PIPE	5	4
PACKING,CAP	5	15	PIN ASSY	110	4		7	29	PIPE COMP	71	21
PACKING,OIL PUMP	61	18		111	2		8	13		72	21
	77	10	PIN COMP	52	18		8	20	PIPE(B)COMP	64	5
PACKING,U	118	3		53	1		8	26	PIPE/DELIVERY/MID	75	10
	118	27		53	3		8	29		76	10
PAD	11	3	PIN 19X132	109	14		11	20	PIPE/DELIVERY/REAR	75	15
	54	9	PIN 3/3X08	100	22		19	18		76	15
PANEL/BACK COMP	95	10	PIN(15X30)	52	11		39	4	PIPE/DELIVERY/4WD	84	5
PANEL/DASH COMP	95	1	PIN/FASTENER	85	11		42	3	PIPE/DERIVERY/E COMP	75	1
PANEL/FLOOR COMP	95	8	PIN/INSERT	17	11		42	9		76	1
PANEL/INSTRUMEN SET	100	1		18	11		44	3	PIPE/DERIVERY/F COMP	75	2
PANEL/SWITCH ASSY	104	6	PIN/LH/REAR COMP	88	30		44	9		76	2
PANEL/WX ASSY	104	1	PIN/RH/REAR COMP	88	31		52	26	PIPE/INLET	2	10
PEDAL	55	5	PIN/ST	65	25		58	4	PIPE/INLET COMP	2	19
PEDAL ASSY	7	14		65	26		82	23		75	23
	8	14	PIN/08X37	88	35		104	68		76	23
PEDAL COMP	55	1	PIN/12X48	80	21	PIN,SPLIT/2.5X20	7	7	PIPE/OIL/DEREVERY	61	29
	55	2	PIN/16 COMP	60	6		8	7	PIPE/OIL/SUCTIO COMP	61	38
	55	6	PIN/16X119	40	4		11	12	PIPE/OIL/TANK COMP	61	33
PEDAL/BRAKE/LH SET	54	1		41	4		34	12	PIPE/OUTLET COMP	75	33
PEDAL/BRAKE/RH ASSY	54	7	PIN/16X23 COMP	60	5		34	20		76	33
PEDAL,CLUTCH ASSY	11	1	PIN/16X317	35	1		54	13	PIPE/SUCTION/FE COMP	77	16
PEDAL,PARKING COMP	54	22		36	1		91	11	PIPE/TAIL/UNDER COMP	4	16
PILOT SPOOL	117	19	PIN/16X51	81	4	PIN,SPLIT/3 X20	52	12	PIPE,DELIVERY	5	3
PIN	10	2		83	11		68	8	PISTON	30	34
	11	10	PIN/19X94	109	12		68	13		74	4
	12	11	PIN/22X90	83	10		68	18		115	2
	13	11	PIN/6X16	7	18		80	22	PISTON ROD COMP	115	1
	22	16		7	30	PIN,SPLIT/3 X25	34	11	PIVOT	92	4
	24	6		8	18	PIN,SPLIT/5X50	61	4	PLATE	5	9
	25	4		8	30	PIN,SPRING	37	9		14	5
	25	8	PIN/6X30	23	14		45	10		14	11
	26	4	PIN,BRAKE	84	10	PIN,SPRING/4 X25	54	23		52	15

DESCRIPTION	REF . NO		DESCRIPTION	REF . NO		DESCRIPTION	REF . NO		DESCRIPTION	REF . NO	
PLATE	54	19	PLUG	117	12	RING	118	11	RING,SNAP/25 C	52	23
	71	23		117	22	RING/BACK UP	115	4		67	21
	72	23		117	27	RING/E	100	3	RING,SNAP/28 C	35	6
	75	6		119	1	RING/O	115	3		36	6
	76	6		119	2		115	11	RING,SNAP/30 C	14	3
	83	4		119	3		116	14		14	8
	88	24	PLUG PT 1/4	118	44		117	14		15	5
	89	2	PLUG/M18	117	5		117	31		67	22
	101	8	PLUG/SCREW	71	10		119	8	RING,SNAP/32 C	30	36
	103	14		71	11		119	9		37	2
	104	47		72	10		119	15		45	2
	104	52		72	11	RING/SNAP	15	24		118	16
	112	8		74	22		27	12	RING,SNAP/35 C	16	3
PLATE COMP	88	41	PLUG/SCREW/SEAL	24	7		30	8	RING,SNAP/42 C	29	6
	88	42		67	25		30	29		29	16
	94	16		78	4		33	22		30	3
	95	14		116	2		48	8		30	26
	104	37		116	3		49	5	RING,SNAP/47 C	30	25
	104	39	PLUG,DRAIN	12	9		52	9	RING,SNAP/7 E	22	17
PLATE LH COMP	93	12		13	9		52	17	RIVET	9	4
PLATE RH COMP	93	13		30	21		65	14		86	8
PLATE/HOLDER	83	5		61	22		67	23		96	2
PLATE/I/32X95	104	114		75	4		73	7	RIVET/BLIND	89	3
PLATE/I/44X63	26	8		75	36	RING/SYNCHRONIZER	17	13	RIVET,BLIND	86	12
PLATE/I/50X50	104	63		76	4		18	13		88	4
PLATE/I,13X40	102	7		76	36	RING/20	30	20		88	8
	104	45	PLUG,PT1/8	118	4	RING/25	30	22	ROD	19	15
PLATE/I,16X296	34	9		118	24	RING/33	30	37		44	1
PLATE/I,16X376	34	10	POPET	117	17	RING/88	30	35		44	7
PLATE/L/38X70	82	24		117	20	RING/90	30	40		74	7
PLATE/L/65X108	104	92	POPET/0.9	117	26	RING,BACK UP	74	28		82	20
PLATE/SPRING	116	16	POPPET	118	19	RING,BACK-UP	74	5		104	66
PLATE/Z/60X50	91	15	PROTECTER	6	10	RING,SNAP	15	2		104	108
PLATE,BATTERY SET	97	6	PUMP,FUEL ASSY	1	19	RING,SNAP/ 9 E	85	12		116	13
PLATE,CAUTION	1	12	PUMP,GEAR ASSY	77	2	RING,SNAP/14 C	38	4	ROD COMP	11	8
PLATE,I/25X161	40	14	PUMP,GEAR ASSY	61	9	RING,SNAP/16 C	19	12		11	9
PLATE,I/25X209	41	14		77	1		35	3	ROD COMP	7	24
PLATE,L	5	23	PUMP,GEAR SET	61	10		36	3		8	24
PLATE,R	5	24	RADIATOR ASSY	3	1		40	15		54	10
PLATE,RUBBER	6	3	REFLECTOR/L SET	99	6		41	15	ROD PACKING	115	8
PLATE,SEPARATE	52	3	REFLECTOR/R SET	99	9		43	4	ROD/FORK COMP	53	2
PLIERS/G150	109	3	RIFRECTOR	99	7	RING,SNAP/17 C	59	5		53	4
PLUG	3	18		99	10	RING,SNAP/20C	54	6		81	3
	75	11	RIM	120	2		64	2	ROD/M10 COMP	87	7
	76	11	RING	67	39	RING,SNAP/21 C	74	30	ROD/M10/L COMP	87	5
	116	6		74	2	RING,SNAP/25 C	27	8	ROD/TIE/LH	68	1
	116	9		118	6		29	4	ROD/TIE/RH	68	2
	116	17		118	9		29	14	ROD/105 COMP	42	7

DESCRIPTION	REF	NO
ROD/55 COMP	42	1
ROD,BRAKE COMP	52	10
ROD,LH/55 COMP	42	2
	42	8
ROLLER,BEARING30207C	46	6
ROLLER,BEARING32207-	46	5
ROMPACK/WX ASSY	104	70
RUBBER,CUSHION	95	27
RUBBER,CUSHION (A)	91	9
RUBBER,HOOK	90	4
	104	41
RUBBER,LINE	86	4
RUBBER,SEAL	104	72
S.W	61	17
	77	9
SCREW	1	4
	80	20
	82	15
	99	8
	99	11
	100	21
	100	48
SCREW SEEMS/M6X16	7	15
	8	15
SCREW/M04X06	104	27
SCREW/M06X20	71	20
	72	20
SCREW/M3X0.5X8	104	16
SCREW/M4X30	102	6
	104	44
SCREW/M5X12	99	12
SCREW/M6X30	98	4
SCREW/M6X40	74	35
SCREW/S	100	23
SCREW/SOCKET	117	32
SCREW/SP	104	28
SCREW/TAPPING	104	5
SCREW/0.7	117	3
SCREW,PLUS/M4X8	100	26
SCREW,PLUS/M5X0.8X8	100	28
SCREW,SP/M4X12	82	14
	104	59
	104	86
	104	97
SCREWDRIVER ASSY	109	4
SEAL	1	3
	6	5
	22	4

DESCRIPTION	REF	NO
SEAL	28	9
	37	3
	45	3
	84	4
	88	14
	88	15
	98	6
SEAL(62)	67	24
SEAL/OIL	65	4
	104	103
	104	106
SEAL/OIL/UNITIGHTS	50	4
	51	4
SEAL/PLATE	6	4
SEAL/30X20X215	3	28
SEAL/74	2	23
SEAL,DUST	74	31
SEAL,OIL	33	21
	61	12
	67	17
	67	41
	77	4
	118	15
	118	17
	118	28
SEAL,OIL/OS30374	67	30
SEAL,OIL/TC14257	23	15
SEAL,OIL/TC20428	29	5
	29	15
SEAL,OIL/TC30458	14	4
	14	10
SEAL,OIL/TC45609	71	4
	72	4
SEAL,OIL/VC16244	35	2
	36	2
SEAL,OIL/VC45606	66	11
SEAL,OIL/VC50726	66	16
SEAT/A	91	1
SEAT/B	91	2
SENSOR/ANGLE	82	9
	104	58
	104	96
SENSOR/ANGLE/11 ASSY	104	85
SENSOR/SLOPE ASSY	104	89
SENSOR,VACUUM	77	17
SEPARATERPLATE	30	31
SHAFT	27	9
	29	1

DESCRIPTION	REF	NO
SHAFT	29	9
	29	11
	29	19
	30	1
	30	15
	67	18
	67	50
SHAFT/PTO	20	1
	20	14
	21	1
	21	14
SHAFT/REVERSE/U	17	1
	18	1
SHAFT/SECTOR ASSY	118	30
SHAFT/SLOW RETURN	73	9
SHAFT/STEERING	59	3
SHAFT/STEERING/F	59	2
SHAFT/STEERING/R	59	1
SHAFT/WHEEL	50	1
	51	1
	67	37
SHAFT/4WD	64	1
SHAFT,DIFF PINION	47	13
SHAFT,DIFF. PINION	65	20
SHAFT,PTO	33	1
SHAFT,SLOW RETURN	73	8
SHIFTERPLATE	30	33
SHIM (C)	65	11
SHIM A T=0.2	65	9
SHIM B T=0.1	65	10
SHIM D T=0.1	65	12
SHIM(A)	47	16
	65	16
SHIM(B)	47	17
	65	17
SHIM/0.1	46	11
SHIM/0.2	46	10
SHIM/0.5	33	26
SHIM,A	17	4
	18	4
SHIM,B	17	5
	18	5
	33	25
SHROUD	3	8
SLEEVE	9	12
	17	10
	18	10
	84	9

DESCRIPTION	REF	NO
SOCKET	100	20
SOFT TAPE/10X5X160	88	12
SOLENOID	117	16
SOLENOID SET	116	12
SOLENOID VALVE	117	10
SORING	104	30
SPANNER/10X12	109	5
SPANNER/14X17	109	6
SPANNER/19X22	109	7
SPANNER/24X27	109	8
SPANNER,BOX/22	109	1
SPOOL	119	11
	119	12
SPRING	1	10
	17	12
	18	12
	37	4
	40	22
	41	22
	45	4
	55	4
	55	8
	86	11
	88	20
	88	33
	88	34
	104	104
	104	107
	116	5
	117	21
	118	20
	119	13
	119	14
	119	16
SPRING/HC	117	15
SPRING/HC012	116	15
SPRING/HC022	23	11
SPRING/HC036	116	8
SPRING/HC037	30	14
SPRING/HC040	117	4
SPRING/HC054	30	38
SPRING/HE106	11	16
	54	14
SPRING/WASHER	104	54
SPRING,CONE	54	4
SPRING,PRESS/22	7	5
	8	5
SPRING,PRESS/26	98	5

DESCRIPTION	REF	NO
SPRING,RETURN	52	4
SPRING,SHIFTER	19	2
	22	11
	28	4
	31	2
	34	7
SPRING,TENSION/31	9	14
	54	27
SPRING,TENSION/53	7	23
	8	23
STAY	22	7
	22	8
	39	6
	92	3
STAY/LAMP	120	5
STAY/LH/F	88	28
STAY/PLATE	87	3
STAY/PLATE COMP	3	27
STAY/PLATE/FILTER	1	18
STAY/PLATE/LH	88	9
STAY/PLATE/RH COMP	88	10
STAY/RH/F	88	29
STAY/SHIFT/PTO	34	1
STAY/SHIFT/REVERSE	23	6
STAY/SHIFT/SUB	28	1
STAY,MIRROR	92	7
STEERING/POWER ASSY	61	1
STEERING/2/380 ASSY	58	1
STEP	89	5
STRAINER	5	16
STRAP/GROUND ASSY	97	3
STUD/M12	105	10
SUCTION/OPIPE/R COMP	76	19
SWITCH ASSY	100	34
	102	9
SWITCH SET	100	24
SWITCH/CHECKER ASSY	100	41
SWITCH/LIMIT ASSY	102	5
SWITCH/PUSH ASSY	102	1
	102	12
SWITCH/PUSH SET	101	1
SWITCH/ROTARY	104	8
SWITCH/ROTARY/SMALL	104	7
SWITCH/SEESAW ASSY	104	14
SWITCH/TOGGLE	104	11
SWITCH/VR ASSY	104	21
SWITCH,MOTOR RELAY	100	46
SWITCH,SAFETY ASSY/C	104	43

DESCRIPTION	REF	NO
SYNCHRONIZER/30 ASSY	17	9
	18	9
TANK/FUEL COMP	5	1
TANK/OIL COMP	61	20
TIRE/12.4-24-4	56	7
	56	16
TIRE/12.4-26	57	7
	57	16
TIRE/7-16-4	69	2
	69	6
TIRE/8-16-4	70	2
	70	6
TRIM/20	86	6
TRIM/50	6	9
TRIM/75	104	42
TUBE	11	17
	54	15
	56	8
	56	17
TUBE/ 7-16	69	3
	69	7
TUBE/ 8-16	70	3
	70	7
TUBE/TIRE/12.4-26)	57	8
	57	17
TUBE/120	86	2
	103	17
TUBE/345 COMP	64	4
TURNBUCKLE/A	80	17
TURNBUCKLE/M8	11	13
	42	4
	42	10
	52	27
	82	19
TURNBUCLE COMP	113	4
U-NUT	54	5
VALVE	2	7
	74	23
VALVE SET	116	1
	117	2
VALVE ASSY	79	1
	84	1
VALVE/FRONT ASSY	74	26
VALVE/RELIEF ASSY	117	7
VALVE/SOLENOID/MAIN	74	10
VALVE,CHACK ASSY	117	18
VALVE,RELIEF ASSY	77	12
VISOR	100	10

DESCRIPTION	REF	NO
WASHER	3	6
	7	3
	8	3
	19	11
	43	3
	50	7
	51	7
	88	3
	88	7
	94	8
	100	6
	100	31
	100	47
	117	13
	120	10
WASHER / M16	80	15
	83	8
	105	7
	114	8
	114	12
	114	16
	114	20
	114	24
WASHER / M6	7	16
	7	19
	7	25
	7	28
	8	16
	8	19
	8	25
	8	28
	11	19
	91	5
	97	9
WASHER /M12	105	13
WASHER COMP	93	9
WASHER/LOCK	92	5
WASHER/M10	4	10
	7	4
	8	4
	19	17
	34	19
	44	2
	44	8
	58	5
	91	24
	94	14
	104	55

DESCRIPTION	REF	NO
WASHER/M3	104	18
WASHER/PINION	47	9
WASHER/13X25X02	88	25
WASHER/14X32X2	23	16
WASHER/15X24X2	38	5
WASHER/20X30X03	30	5
WASHER/23X35X2	102	2
WASHER/24X9X3.2	89	11
WASHER/25X46X03	17	8
	17	17
	18	8
	18	17
WASHER/28X37X2	35	7
	36	7
WASHER/28X40X02	40	24
	41	24
WASHER/28X46X3	15	19
WASHER/30X46X2	15	6
WASHER/30X46X5	15	7
	20	8
	21	8
WASHER/33X40X02	30	39
WASHER/35X55X03	33	12
	33	20
WASHER/40X58X3	27	22
WASHER/43X58X01	47	12
WASHER/50X65X5	66	10
WASHER/6X14X2	86	10
WASHER/6X14X3	85	4
	85	7
WASHER/8X12X2	5	21
WASHER,PL/M 5	100	27
WASHER,PL/M 8	1	17
	4	20
	11	11
	23	5
	23	8
	28	12
	39	3
	52	25
	54	12
	64	11
	82	7
	82	22
	88	39
	104	67
WASHER,PL/M10	7	12
	8	12

DESCRIPTION	REF . NO		DESCRIPTION	REF . NO		DESCRIPTION	REF . NO		DESCRIPTION	REF . NO
WASHER,PL/M18	71	26	WASHER,SP/M12	63	3	WIRE	1	14		
	72	26		63	6		10	3		
WASHER,PL/M4	100	25		66	22		22	10		
WASHER,SP/M 3	104	19		67	7		37	7		
WASHER,SP/M 6	74	36		69	10		45	7		
	75	13		70	10		45	8		
	76	13		74	21		73	5		
	82	12		80	8		74	9		
	91	6		93	7	WRENCH,SOCKET/17X19	109	2		
	104	62		94	6	W11-26 WHEEL RIM	57	1		
	104	100		94	10		57	10		
WASHER,SP/M 8	1	16		105	12	X-RING	65	6		
	4	21		118	42					
	9	6	WASHER,SP/M14	61	6					
	9	10		80	3					
	22	3		80	11					
	23	4		93	4					
	23	9		110	3					
	28	11	WASHER,SP/M16	56	6					
	30	13		56	15					
	31	6		56	20					
	34	4		57	6					
	47	3		57	15					
	65	29		57	20					
	100	43		80	14					
	103	10		83	7					
	103	29		105	6					
	104	113		114	7					
WASHER,SP/M10	4	14		114	11					
	48	7		114	15					
	48	12		114	19					
	66	6		114	23					
	67	33	WASHER,SP/M18	66	24					
	67	48	WEIGHT/120 SET	114	13					
	71	9	WEIGHT/15	63	4					
	72	9	WEIGHT/16 SET	114	1					
	79	3	WEIGHT/180 SET	114	17					
	94	15	WEIGHT/240 SET	114	21					
	99	4	WEIGHT/34	63	1					
	118	43	WEIGHT/60 SET	114	9					
WASHER,SP/M12	12	7	WEIGHT/66 SET	114	4					
	13	7	WHEEL/16X5.50F	69	1					
	24	4		69	5					
	24	11	WHEEL/16X5.50F COMP	70	1					
	25	3		70	5					
	25	7	WHEEL/24XW10 COMP	56	1					
	62	5		56	10					
	62	9	WING NUT ASSY	2	6					