ISEKI

Parts Catalogue

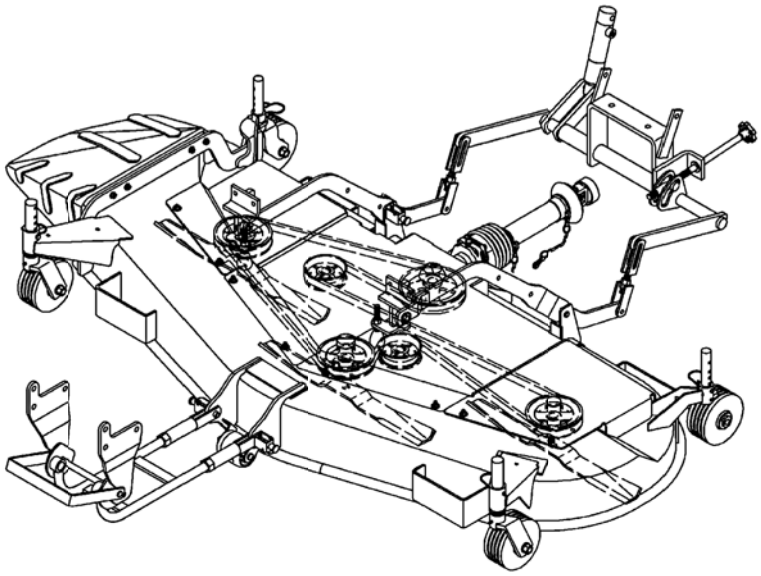

MOWER SSM72

SSM72-TG6400E4,
SHLKE4,SGLKE4

8655-097-240-00

Printed in Japan February, 2015

Directions for use of Parts Catalogue

1. Applicable model of machines

All component and option parts used for SSM72 Mower are listed in this parts catalogue.

NOTES: SSM72-TG6400E4····· FOR TG6370,TG6400

SSM72-SHLKE4····· FOR TG6400H

SSM72-SGLKE4····· FOR TG6370G

2. Explanation for head paragraph

KEY	PART CODE	DESCRIPTION	SPC	TYPE OF MODEL						ITC	COL	GRP	REMARKS
				SSM48M	SSM48F	SSM48G	SRM48M	SRM48F	SRM48G				
1	8595-211-001-20	CASE/UPPER	*	1 -229									
1A	8657-201-081-00	CASE/UPPER	*	1 230-			1						
2	8595-211-002-10	CASE/LOWER	*	1			1						
3	V523-100-801-80	PIN	*	2			2						
4	V211-260-803-00	BOLT, SEMS	*	6			6						
			*	2 -229									
			*	2 230-			2						
				2			2						
				1			1						
										3			

① ② ③ ④ ⑤ ⑥ ⑦ ⑧ ⑨

① KEY shows the location of parts diagramed in the illustration.

② Parts numbers begin with `V´ and `W´ are standard parts of the market.

③ `LH´ and `RH´ on the parts name are described against the moving direction of the machine or are described on the condition how to install parts on the machines.

④ SPC : The following symbol classifies parts to be used for machines.

`*´ means standard parts.

`T´ shows that the parts can be installed as optional parts.

`R´ shows that the parts can be used as applicable parts to replace originally equipped parts.

⑤ Upper column : QTY shows the number of parts to be used for one unit

of machine.

`M´ is indicated for parts supplied by a meter long.

` l ´ is indicated for parts supplied by liter.

`AR´ is indicated for parts need to be adjusted or regulated.

Lower column : serial number

—229 means serial number up to 229.

230— means serial number 230 and after.

⑥ ITC : Interchangeability

`1´…OLD ← NEW

New parts can be used in place of the old parts.

`2´…OLD → NEW

Old parts can be used in place of the new parts.

`3´…OLD →← NEW

Old parts and new parts can not be replaced each other.

⑦ COL : Color code

Color is signified with color code number for colored parts.

Please see the color list shown in the next page.

⑧ GRP : Parts shown in this column can be replaced by SET parts.

Example : Parts marked Ⓐ can be replaced by parts marked Ⓑ, and Ⓓ for Ⓒ, so the rest follow in the same alphabetical order.

⑨ Remarks

＊Other maker's part code number is shown in this column.

＊When Fig. No. is shown in the Remark column of SET parts or ASSY parts, each of their component parts are listed in said Fig. No.

3. Color :

The following colors are used color parts.

COLOR CODE	COLOR	SPRAY TYPE PARTS CODE	PAINTS 4K DRUM PARTS CODE	PAINTS 16K DRUM PARTS CODE
7 F	MIRROR BLACK	1300-954-001-10	1300-954-003-00	1300-954-004-00

NOTE : Color code is signified only for the parts assigned by the maker as color parts.

4. Serial Numbers :

For chassies serial number is shown on the LABEL.

Please see

5. Parts Order

1) When you order parts, please make sure of correct numbers.
2) When substitute parts is available, the part number ordered will be automatically turned to a new part number.
3) Please be sure to use “ISEKI GENUINE PARTS”.
   Any other similar parts other than ISEKI parts when used may cause a trouble that makes us unable to repair or guarantee the warrant.

*** Structure Table of Model ***

MODEL / FIG.	SSM72TG640	SSME47SHLK	SSME47SGLK	E4									
1			*										
2				*									
3	*												
4	*												
5	*												
6	*												
7	*												
8	*												
9	*												
10	*												
11	*												
12	*												
13			*										
14				*									
15			*	*									
16			*	*									
17	*												
18	*												
19	R												
20			*										
21				*									

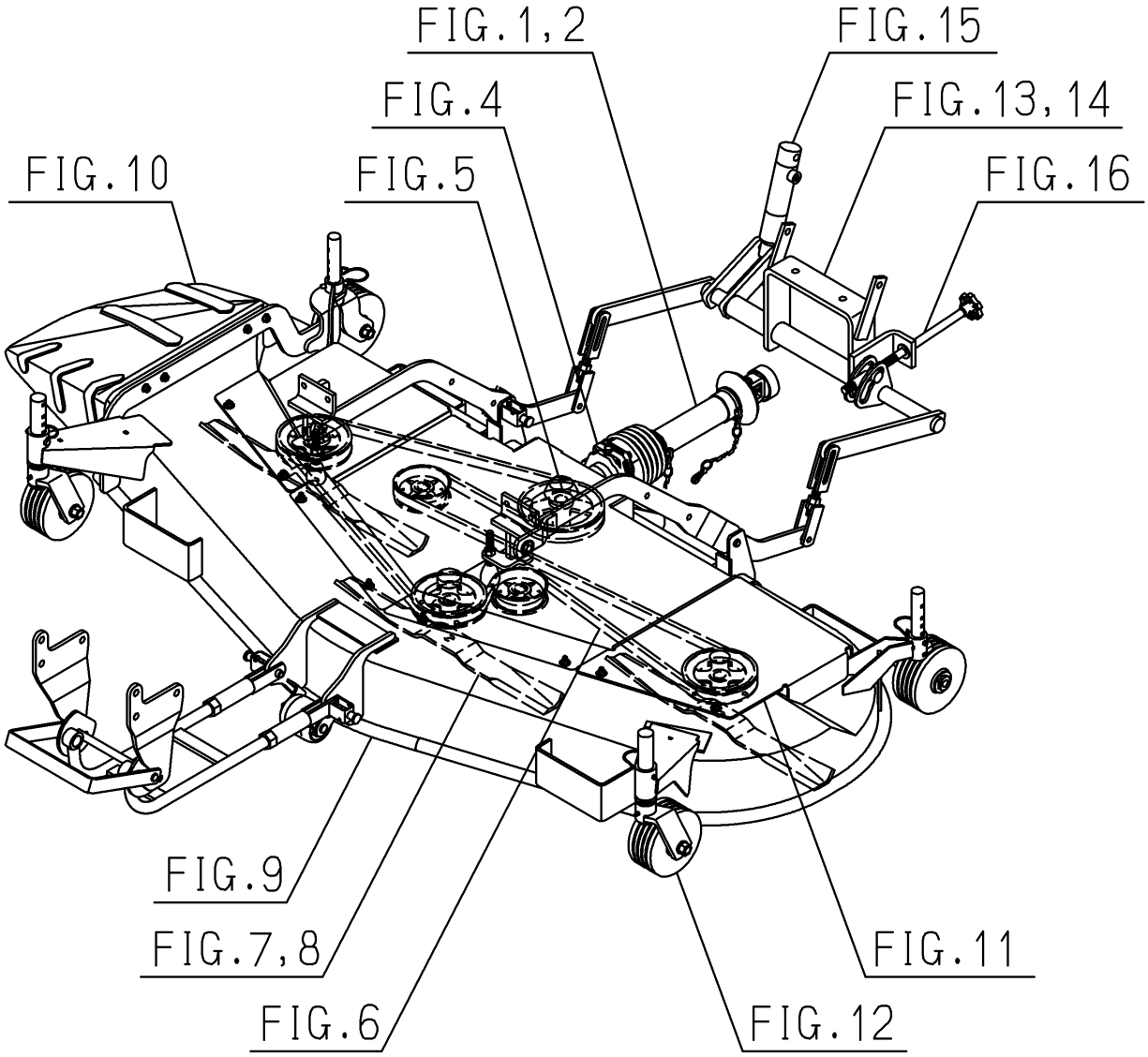
FIG.1,2
FIG.15
FIG.4
FIG.13,14
FIG.10
FIG.5
FIG.16
FIG.9
FIG.7,8
FIG.11
FIG.6
FIG.12

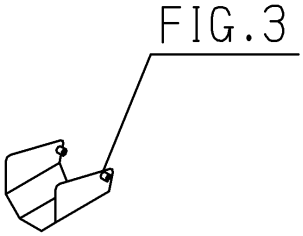
FIG.3

Contents

SSM72

JOINT(UNIVERSAL)SYSTEM(72/SHLK TYPE)····· Fig. 1
JOINT(UNIVERSAL)SYSTEM(72/SGLK TYPE)····· Fig. 2
COVER(JOINT)SYSTEM(72/TG6400 TYPE)····· Fig. 3
CASE(BEVEL)SYSTEM(72/TG6400 TYPE)····· Fig. 4
PULLEY SYSTEM(72/TG6400 TYPE)····· Fig. 5
BELT SYSTEM(72/TG6400 TYPE)····· Fig. 6
SHAFT(BLADE)SYSTEM(72/TG6400 TYPE)····· Fig. 7
BLADE SYSTEM(72/TG6400 TYPE)····· Fig. 8
DECK(MOWER)SYSTEM(72/TG6400 TYPE)····· Fig. 9
COVER(DISCHARGE)SYSTEM
(72/TG6400 TYPE)····· Fig. 10
COVER(BELT)SYSTEM(72/TG6400 TYPE)····· Fig. 11
WHEEL(GAUGE)SYSTEM(72/TG6400 TYPE)····· Fig. 12
LINK SYSTEM(72/SHLK TYPE)(1/2)(2/2)····· Fig. 13
LINK SYSTEM(72/SGLK TYPE)(1/2)(2/2)····· Fig. 14
CYLINDER(LIFT)SYSTEM
(72/SHLK,SGLK TYPE)····· Fig. 15
KNOB(ADJUST/HEIGHT)SYSTEM
(72/SHLK,SGLK TYPE)····· Fig. 16
LABEL
(CONTROL,CAUTION)(72/TG6400 TYPE)····· Fig. 17
LABEL(CE)(72/TG6400 TYPE)····· Fig. 18

OPTIONAL PARTS

CASE(BEVEL)ASSY
(72/TG6400 TYPE)(REPAIR)····· Fig. 19

COMPONENT PARTS

COMPONENT PARTS
FOR 8655-101-450-00 ON Fig.1 ····· Fig. 20
COMPONENT PARTS
FOR 8655-101-910-00 ON Fig.2 ····· Fig. 21

FIG. 1 JOINT(UNIVERSAL)SYSTEM(72/SHLK TYPE)

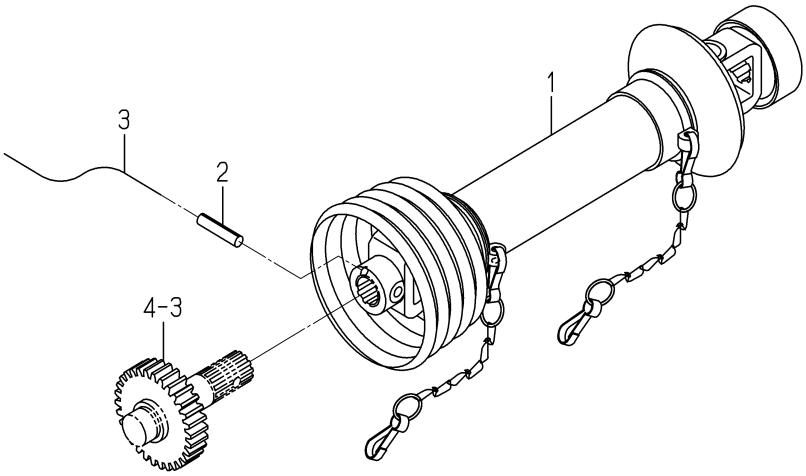

8655-101C-0100

KEY	PART CODE	DESCRIPTION	SPC	TYPE OF MODEL				ITC	COL	GRP	REMARKS
				SSM72 TG6400	SSM72 SHLK	SSM72 SGLK					
1	8655-101-450-00	JOINT/UNIVERSAL SET	*		1						FIG 020
2	V580-140-804-00	PIN,SPRING/8 X40 W	*		1						
3	8674-101-001-00	WIRE/1.6X150	*		1						

FIG. 2 JOINT(UNIVERSAL)SYSTEM(72/SGLK TYPE)

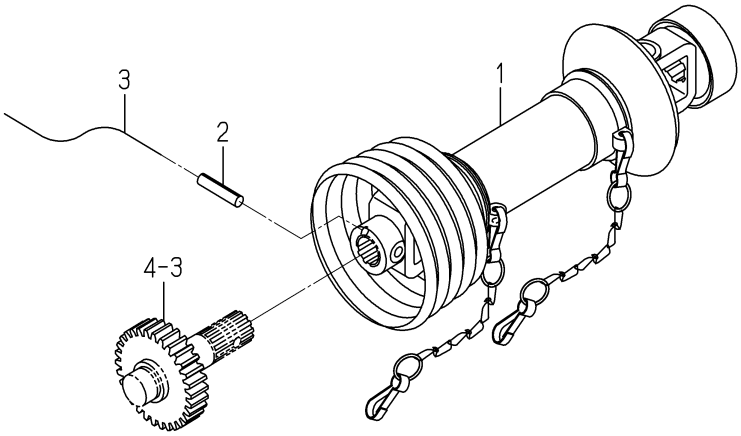

8655-101D-0100

KEY	PART CODE	DESCRIPTION	SPC	TYPE OF MODEL				ITC	COL	GRP	REMARKS
				SSM72 TG6400	SSM72 SHLK	SSM72 SGLK					
1	8655-101-910-00	JOINT/UNIVERSAL SET	*			1					FIG 021
2	V580-140-804-00	PIN,SPRING/8 X40 W	*			1					
3	8674-101-001-00	WIRE/1.6X150	*			1					

FIG. 3 COVER(JOINT)SYSTEM(72/TG6400 TYPE)

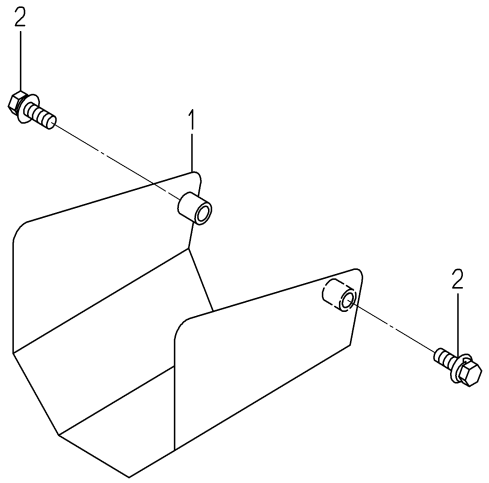

8655-150 -0100

KEY	PART CODE	DESCRIPTION	SPC	TYPE OF MODEL SSM72 TG6400	SSM72 SHLK	SSM72 SGLK		ITC	COL	GRP	REMARKS
1	8655-150-450-00	COVER/JOINT COMP	*	1					7F		
2	V211-360-802-50	BOLT/SP	*	2							

FIG. 4 CASE(BEVEL)SYSTEM(72/TG6400 TYPE)

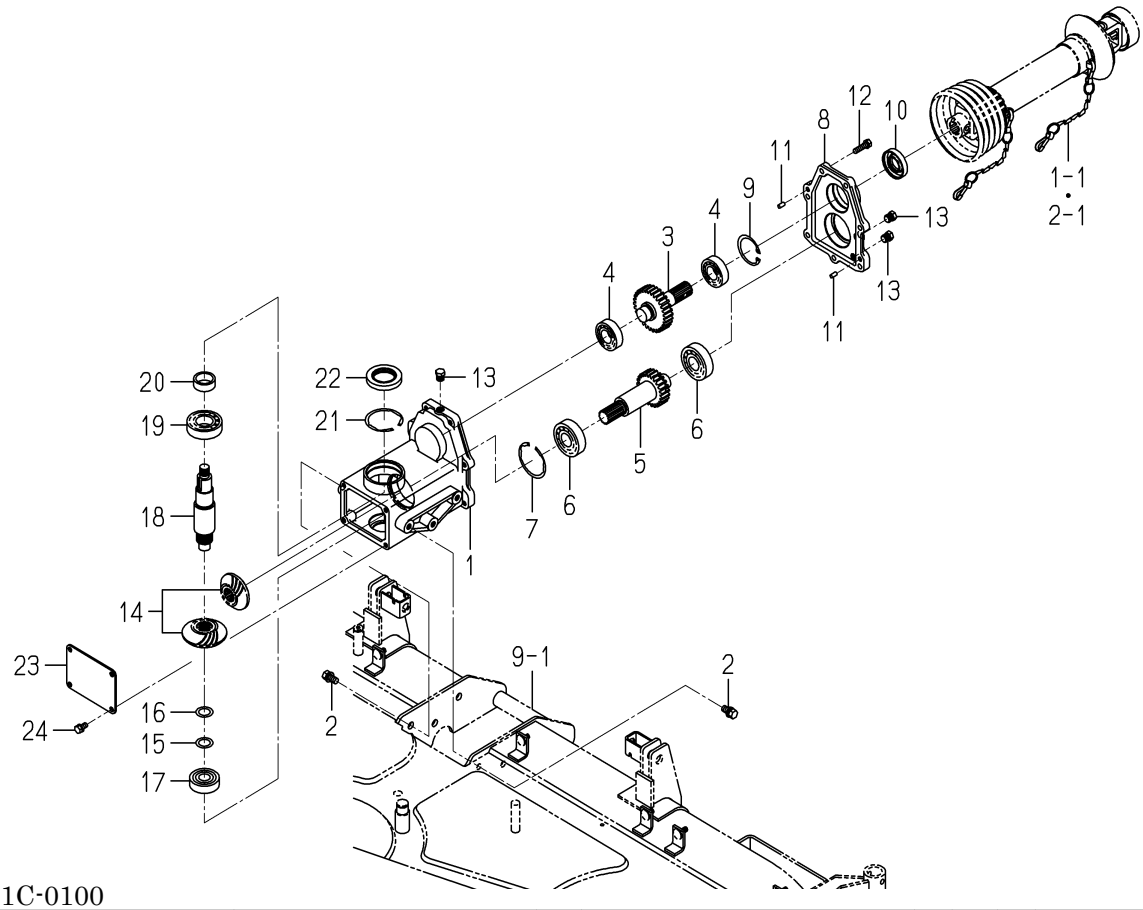

8655-201C-0100

KEY	PART CODE	DESCRIPTION	SPC	TYPE OF MODEL SSM72 TG6400	SSM72 SHLK	SSM72 SGLK		ITC	COL	GRP	REMARKS
1	8655-201-071-00	CASE/BEVEL	*	1							
2	V211-561-002-00	BOLT/M10X20	*	6							
3	8655-201-073-00	GEAR/SPUR/30	*	1							
4	1594-221-001-00	BEARING/BALL 6205SH2	*	2							
5	8655-201-074-00	GEAR/SPUR/23	*	1							
6	1594-218-001-00	BEARING/BALL 6305SH2	*	2							
7	V707-140-062-00	RING,SNAP/R62	*	1							
8	8655-201-072-00	COVER/CASE	*	1							
9	V705-140-052-00	RING,SNAP/52 C	*	1							
10	V744-125-521-00	SEAL,OIL/TC255210	*	1							
11	8658-306-003-00	PIN/PARALLEL	*	2							
12	V211-560-803-00	BOLT/M8X30	*	7							
13	7955-201-026-00	PLUG,DRAIN (1/4)	*	3							
14	8662-201-210-00	GEAR/BEVEL/21-2 SET	*	1							
15	2500-311-018-00	SHIM/0.5	*	1							
16	2500-311-019-00	SHIM/0.3X20X30	*	1							
17	1560-214-003-00	BEARING/BALL/6304SH2	*	1							
18	8655-201-075-00	SHAFT/OUTPUT	*	1							
19	V600-110-620-60	BEARING,RB/6206	*	1							
20	1614-244-002-00	SLEEVE	*	1							
21	V707-140-062-00	RING,SNAP/R62	*	1							
22	1614-244-005-00	SEAL/OIL	*	1							
23	8655-201-076-00	COVER/CASE	*	1							
24	V211-260-801-60	BOLT,SEMS (S) M8X16	*	4							

FIG. 5 PULLEY SYSTEM(72/TG6400 TYPE)

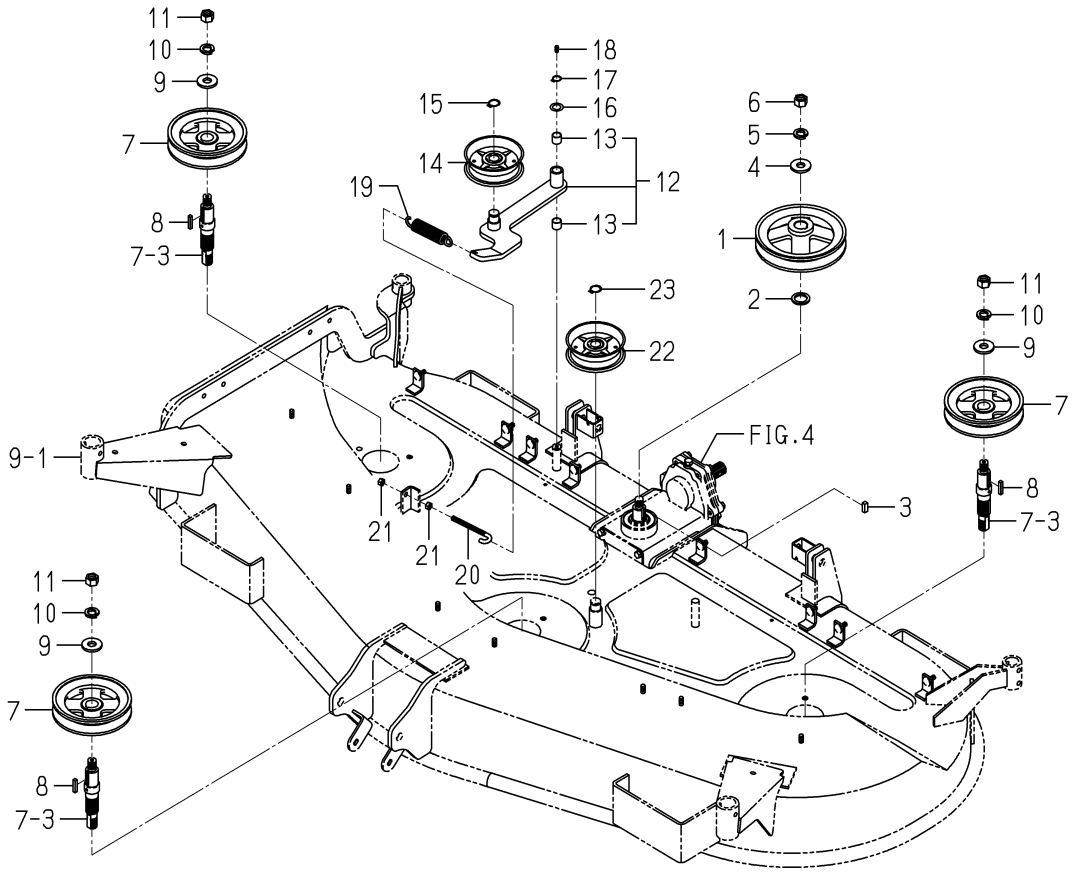

8655-202D-0100

KEY	PART CODE	DESCRIPTION	SPC	TYPE OF MODEL SSM72 TG6400	SSM72 SHLK	SSM72 SGLK		ITC	COL	GRP	REMARKS
1	8655-202-051-00	PULLEY/VC173	*	1							
2	1434-211-004-00	COLLAR/26X36X3	*	1							
3	3670-520-001-00	KEY/08X07X20	*	1							
4	3746-111-011-00	WASHER	*	1							
5	V401-160-016-00	WASHER,SP/M16	*	1							
6	V305-460-016-00	NUT	*	1							
7	8655-202-062-00	PULLEY/VC150	*	3							
8	8654-202-016-00	KEY/06X06X28	*	3							
9	3746-111-011-00	WASHER	*	3							
10	V401-160-016-00	WASHER,SP/M16	*	3							
11	V304-460-016-00	NUT/M16	*	3							
12	8655-202-400-00	ARM/TENSION ASSY	*	1							
13	8597-202-501-00	BUSH/16X18X15	*	2							
14	3100-703-230-11	PULLEY,TENSION/100	*	1					7F		
15	V704-140-020-00	RING,SNAP/20 C	*	1							
16	3621-211-003-00	WASHER	*	1							
17	V704-140-016-00	RING,SNAP/16 C	*	1							
18	V760-150-000-00	NIPPLE,GREASE	*	1							
19	3737-341-006-00	SPRING,CHAIN TENSION	*	1							
20	3737-341-007-00	ROD,CHAIN TENSION	*	1							
21	V304-260-008-00	NUT	*	2							
22	3100-703-230-11	PULLEY,TENSION/100	*	1					7F		
23	V704-140-020-00	RING,SNAP/20 C	*	1							

FIG. 6 BELT SYSTEM(72/TG6400 TYPE)

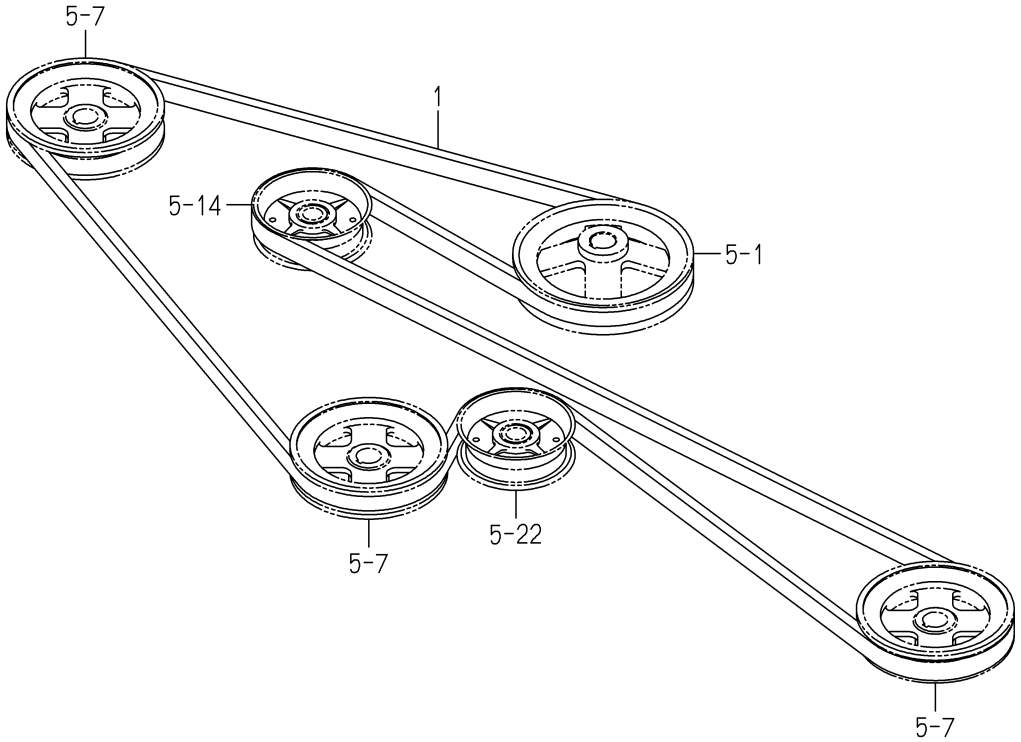

8655-203C-0100

KEY	PART CODE	DESCRIPTION	SPC	TYPE OF MODEL				ITC	COL	GRP	REMARKS
				SSM72 TG6400	SSM72 SHLK	SSM72 SGLK					
1	8655-203-051-00	BELT/VC164	*	1							

FIG. 7 SHAFT(BLADE)SYSTEM(72/TG6400 TYPE)

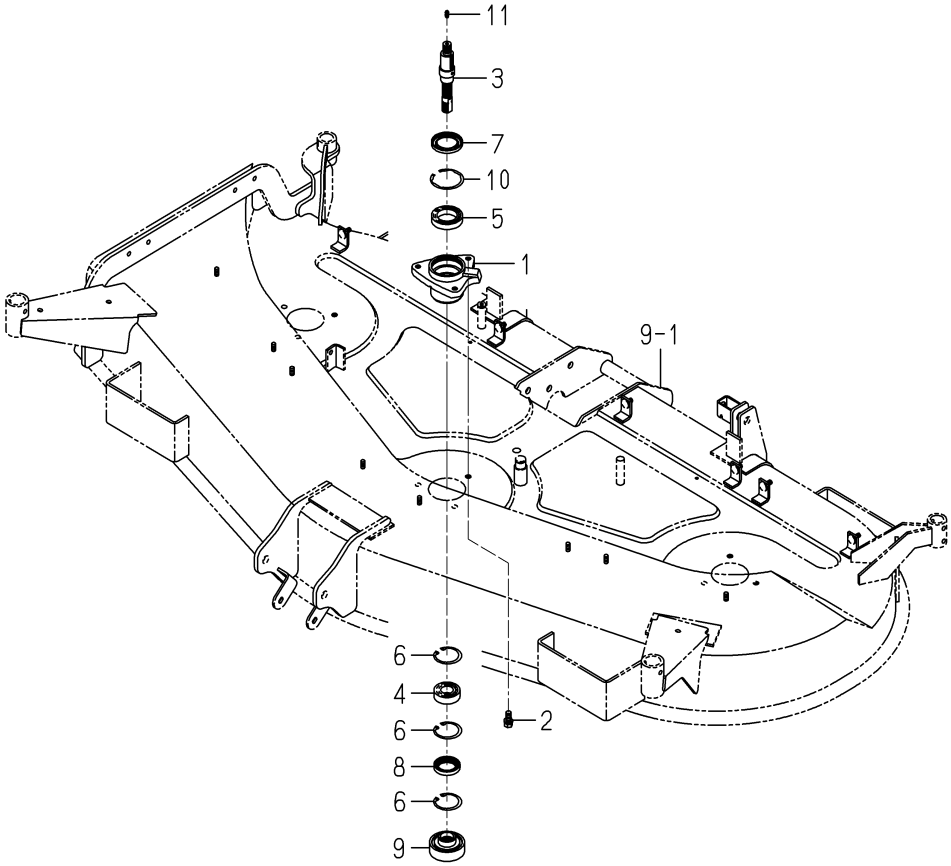

8662-301 -0100

KEY	PART CODE	DESCRIPTION	SPC	TYPE OF MODEL SSM72 TG6400	SSM72 SHLK	SSM72 SGLK		ITC	COL	GRP	REMARKS
1	8657-301-004-00	METAL/SIDE	*	3							
2	V211-261-002-50	BOLT(S) M10X25	*	9							
3	8654-301-085-00	SHAFT/SIDE	*	3							
4	1594-221-001-00	BEARING/BALL 6205SH2	*	3							
5	V600-110-690-80	BEARING	*	3							
6	V705-140-052-00	RING,SNAP/52 C	*	9							
7	8654-301-004-00	SEAL/OIL	*	3							
8	V744-135-520-80	SEAL,OIL/TC35528	*	3							
9	8658-301-001-00	COLLAR/BRADE	*	3							
10	V707-140-062-00	RING,SNAP/R62	*	3							
11	V760-150-000-00	NIPPLE,GREASE	*	3							

FIG. 8 BLADE SYSTEM(72/TG6400 TYPE)

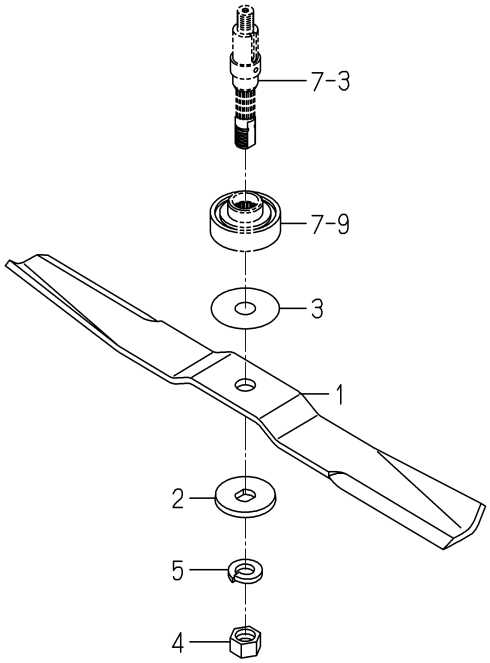

8655-306 -0100

KEY	PART CODE	DESCRIPTION	SPC	TYPE OF MODEL				ITC	COL	GRP	REMARKS
				SSM72 TG6400	SSM72 SHLK	SSM72 SGLK					
1	8655-306-003-10	BLADE/60X630/C	*	3							
2	8595-306-005-10	WASHER/20X60X06	*	3							
3	8595-306-006-00	SHIM/1.2	*	6							
4	8595-306-007-00	NUT/M20X1.5	*	3							
5	V401-160-020-00	WASHER,SP/M20	*	3							

FIG. 9 DECK(MOWER)SYSTEM(72/TG6400 TYPE)

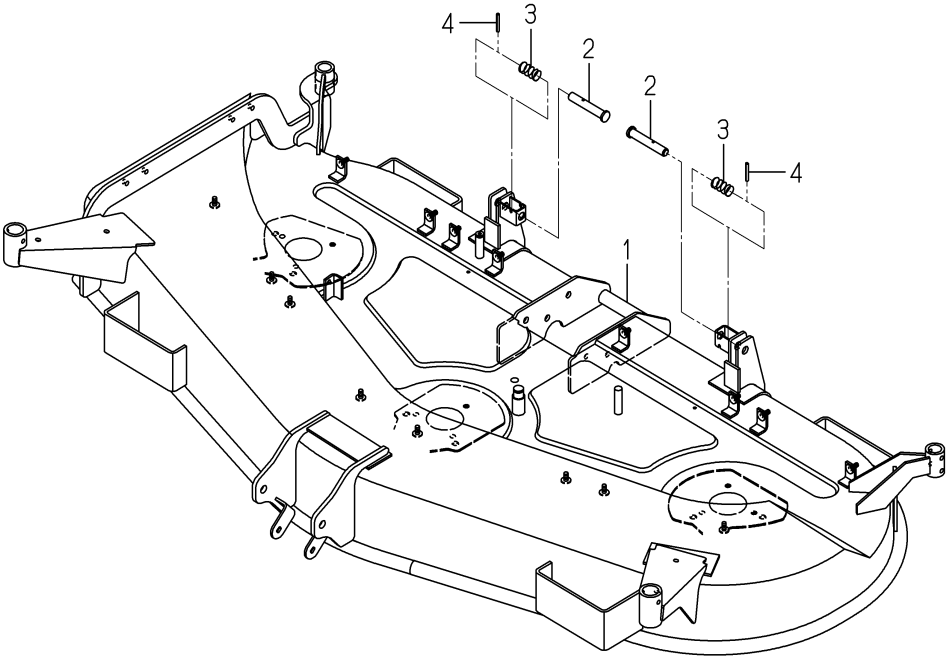

8655-403I-0100

KEY	PART CODE	DESCRIPTION	SPC	TYPE OF MODEL SSM72 TG6400	SSM72 SHLK	SSM72 SGLK		ITC	COL	GRP	REMARKS
1	8655-403-860-00	DECK/MOWER/72/TG3	*	1					7F		
2	8595-608-082-10	PIN/16X96	*	2							
3	1560-601-028-00	SPRING/HC042	*	2							
4	V580-140-504-00	PIN,SPRING/5 X40 W	*	2							

FIG. 10 COVER(DISCHARGE)SYSTEM (72/TG6400 TYPE)

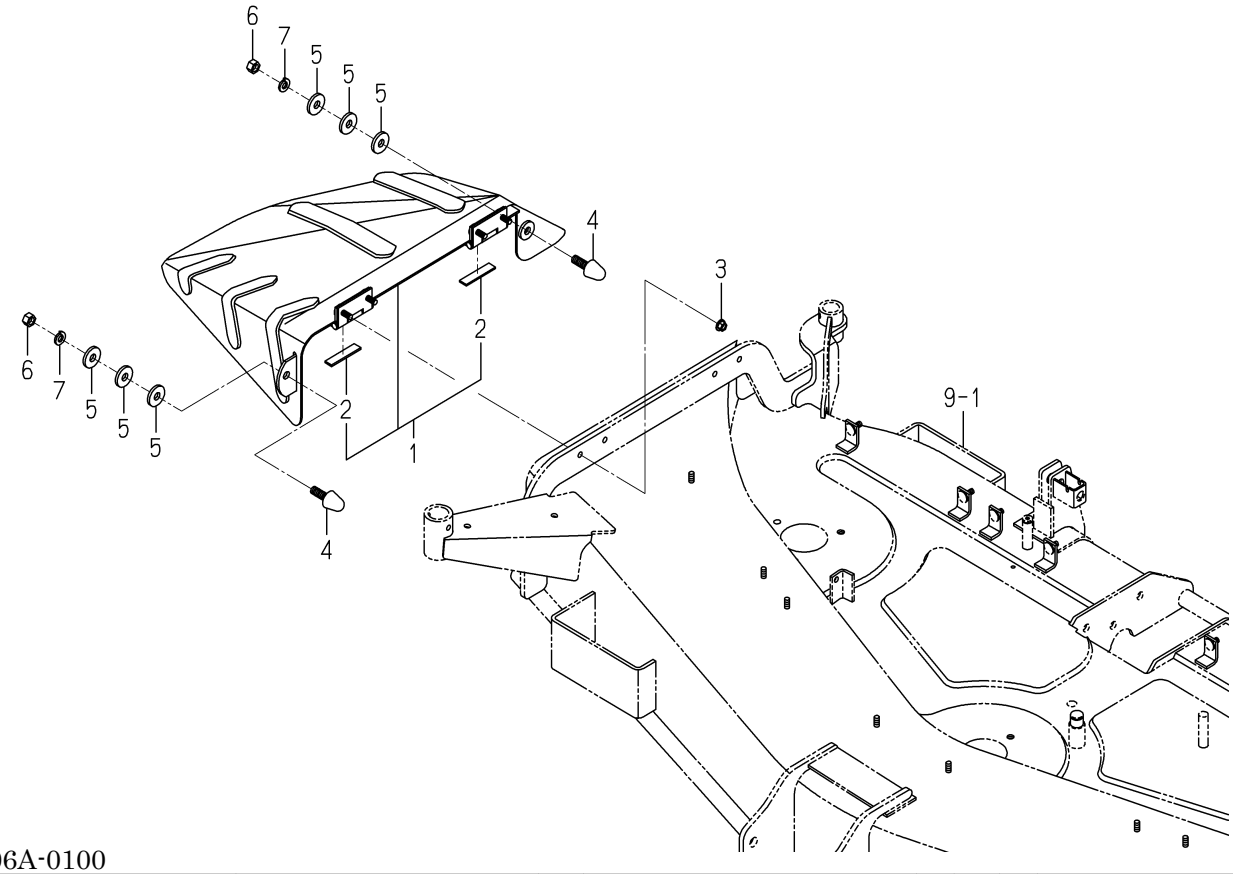

8655-406A-0100

KEY	PART CODE	DESCRIPTION	SPC	TYPE OF MODEL SSM72 TG6400	SSM72 SHLK	SSM72 SGLK		ITC	COL	GRP	REMARKS
1	8655-406-210-22	COVER/DISCHARGE COMP	*	1					7F		
2	P115-810-011-00	PLATE/03X15X65	*	2							
3	V363-260-008-00	NUT/WASHER	*	4							
4	8654-406-001-00	STOPPER/COVER	*	2							
5	3805-701-018-10	WASHER(13X34X05)	*	6							
6	V304-260-012-00	NUT/M12	*	2							
7	V401-160-012-00	WASHER,SP/M12	*	2							

FIG. 11 COVER(BELT)SYSTEM(72/TG6400 TYPE)

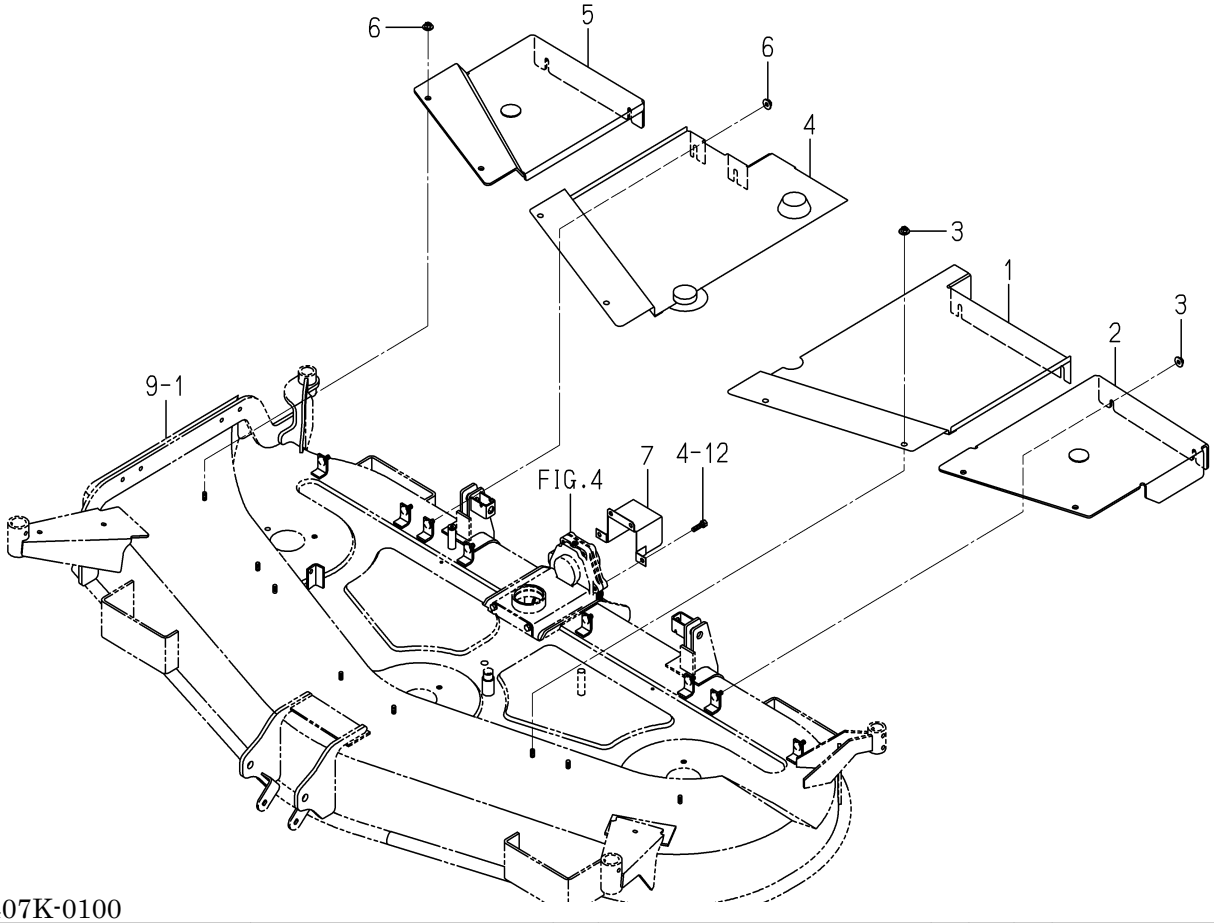

8655-407K-0100

KEY	PART CODE	DESCRIPTION	SPC	TYPE OF MODEL SSM72 TG6400	SSM72 SHLK	SSM72 SGLK		ITC	COL	GRP	REMARKS
1	8655-407-860-00	COVER/BELT/LH/T COMP	*	1					7F		
2	8655-407-880-00	COVER/STEP/LH COMP	*	1					7F		
3	V363-260-008-00	NUT/WASHER	*	8							
4	8655-407-870-00	COVER/BELT/RH/T COMP	*	1					7F		
5	8655-407-890-00	COVER/STEP/RH COMP	*	1					7F		
6	V363-260-008-00	NUT/WASHER	*	8							
7	8654-407-960-00	COVER/UNIVERSAL COMP	*	1					7F		

FIG. 12 WHEEL(GAUGE)SYSTEM(72/TG6400 TYPE)

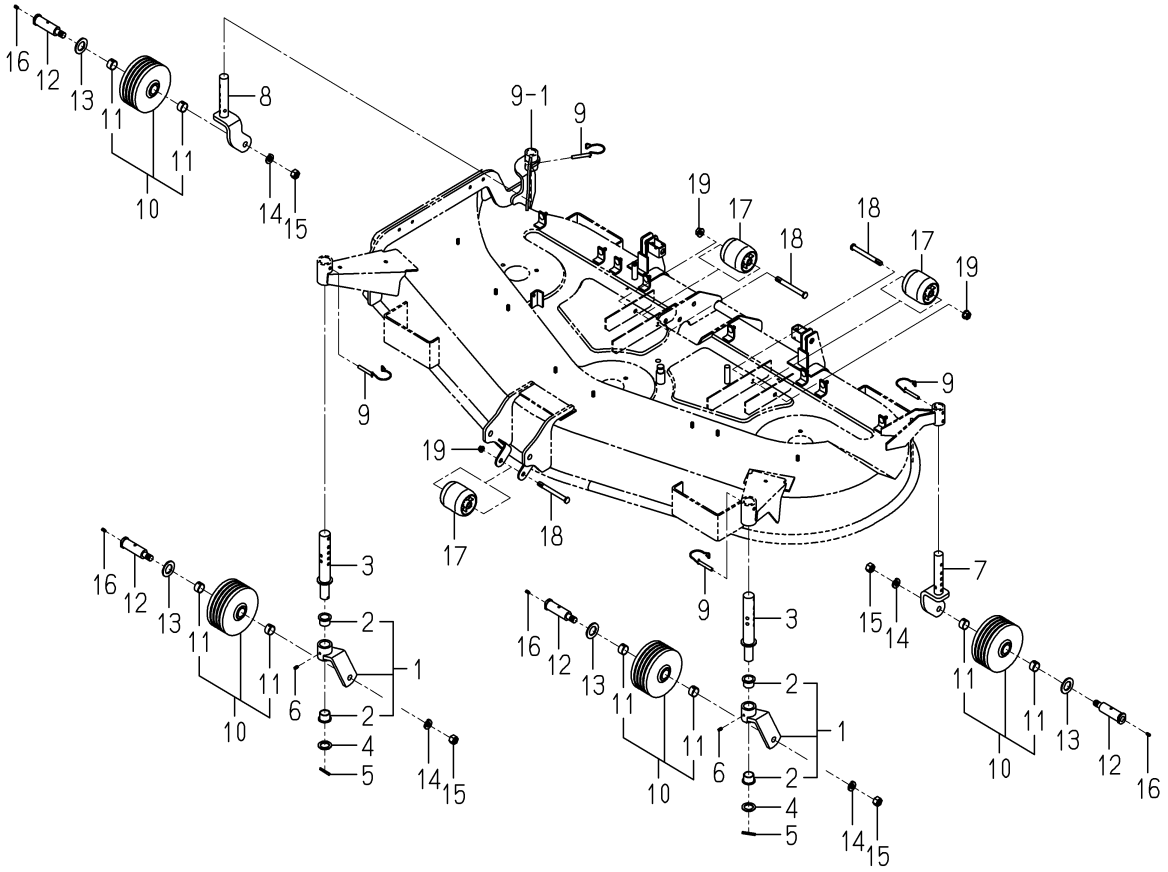

8655-501H-0100

KEY	PART CODE	DESCRIPTION	SPC	TYPE OF MODEL SSM72 TG6400	SSM72 SHLK	SSM72 SGLK		ITC	COL	GRP	REMARKS
1	8655-501-400-00	FORK/WHEEL/FRON ASSY	*	2							
2	8657-501-501-00	BUSH/26X30X20	*	4							
3	8655-501-820-00	PIN/GAUGE COMP	*	2							
4	1564-275-007-00	WASHER/27X40X2	*	2							
5	V580-140-504-00	PIN,SPRING/5 X40 W	*	2							
6	V760-150-000-00	NIPPLE,GREASE	*	2							
7	8655-501-880-00	FORK/WHEEL/R/LH COMP	*	1							
8	8655-501-890-00	FORK/WHEEL/R/RH COMP	*	1							
9	8663-501-240-00	PIN/08X60 COMP	*	4							
10	8654-501-720-10	WHEEL/GAUGE ASSY	*	4							
11	8654-203-201-00	BUSH/25X28X15	*	8							
12	8655-501-041-00	PIN/25X109	*	4							
13	3670-780-004-00	WASHER/28X48X03	*	4							
14	V401-160-016-00	WASHER,SP/M16	*	4							
15	V304-460-016-00	NUT/M16	*	4							
16	V760-150-000-00	NIPPLE,GREASE	*	4							
17	8595-501-001-20	WHEEL/GAUGE/FRONT	*	3							
18	8663-501-051-00	PIN/12X117	*	3							
19	V360-260-012-00	NUT/WASHER	*	3							

FIG. 13 LINK SYSTEM(72/SHLK TYPE)(1/2)

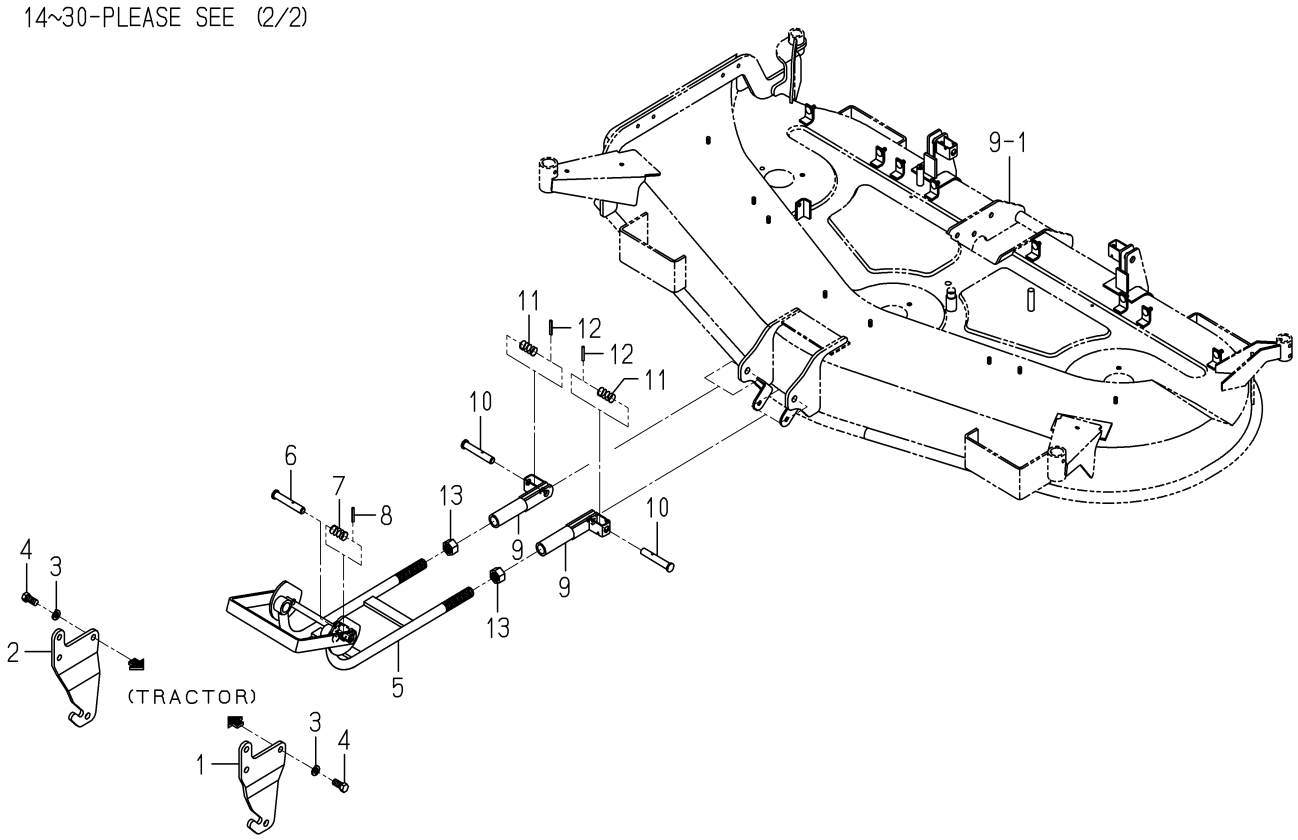

8655-608E-0100

KEY	PART CODE	DESCRIPTION	SPC	TYPE OF MODEL				ITC	COL	GRP	REMARKS
				SSM72 TG6400	SSM72 SHLK	SSM72 SGLK					
1	8655-608-086-00	BRACKET/FRONT/LH/TG3	*	1	1						
2	8655-608-087-00	BRACKET/FRONT/RH/TG3	*	1	1						
3	V401-160-014-00	WASHER,SP/M14	*	6	6						
4	V201-361-403-00	BOLT/M14X30	*	6	6						
5	8655-608-860-00	ARM/FRONT COMP	*	1	1						
6	8595-608-082-10	PIN/16X96	*	1	1						
7	1560-601-028-00	SPRING/HC042	*	1	1						
8	V580-140-504-00	PIN,SPRING/5 X40 W	*	1	1						
9	8655-608-360-00	HITCH/ARM COMP	*	2	2						
10	8595-608-082-10	PIN/16X96	*	2	2						
11	1560-601-028-00	SPRING/HC042	*	2	2						
12	V580-140-504-00	PIN,SPRING/5 X40 W	*	2	2						
13	8654-608-066-00	NUT/M24X1.5	*	2	2						
14	8655-608-320-00	BRACKET/MID/LH COMP	*	1	1						
15	8655-608-330-00	BRACKET/MID/RH COMP	*	1	1						
16	V201-361-203-00	BOLT/M12X30	*	4	4						
17	V401-160-012-00	WASHER,SP/M12	*	4	4						
18	V304-460-012-00	NUT/M12	*	4	4						
19	8655-608-045-00	SCREW/M14X115	*	2	2						
20	1602-215-001-00	KNOB	*	2	2						
21	V304-260-014-00	NUT/M14	*	2	2						
22	8655-608-340-00	ARM/MID/LH COMP	*	1	1						
23	8655-608-350-00	ARM/MID/RH COMP	*	1	1						
24	8657-608-052-00	PIN/16X43	*	2	2						
25	1427-317-003-00	CLIP,PIN	*	2	2						
26	8655-608-810-00	LINK/REAR COMP	*	1	1						
27	V760-150-000-00	NIPPLE,GREASE	*	1	1						
28	V401-160-014-00	WASHER,SP/M14	*	2	2						
29	V201-361-403-00	BOLT/M14X30	*	2	2						
30	V401-160-012-00	WASHER,SP/M12	*	2	2						

FIG. 13 LINK SYSTEM(72/SHLK TYPE)(2/2)

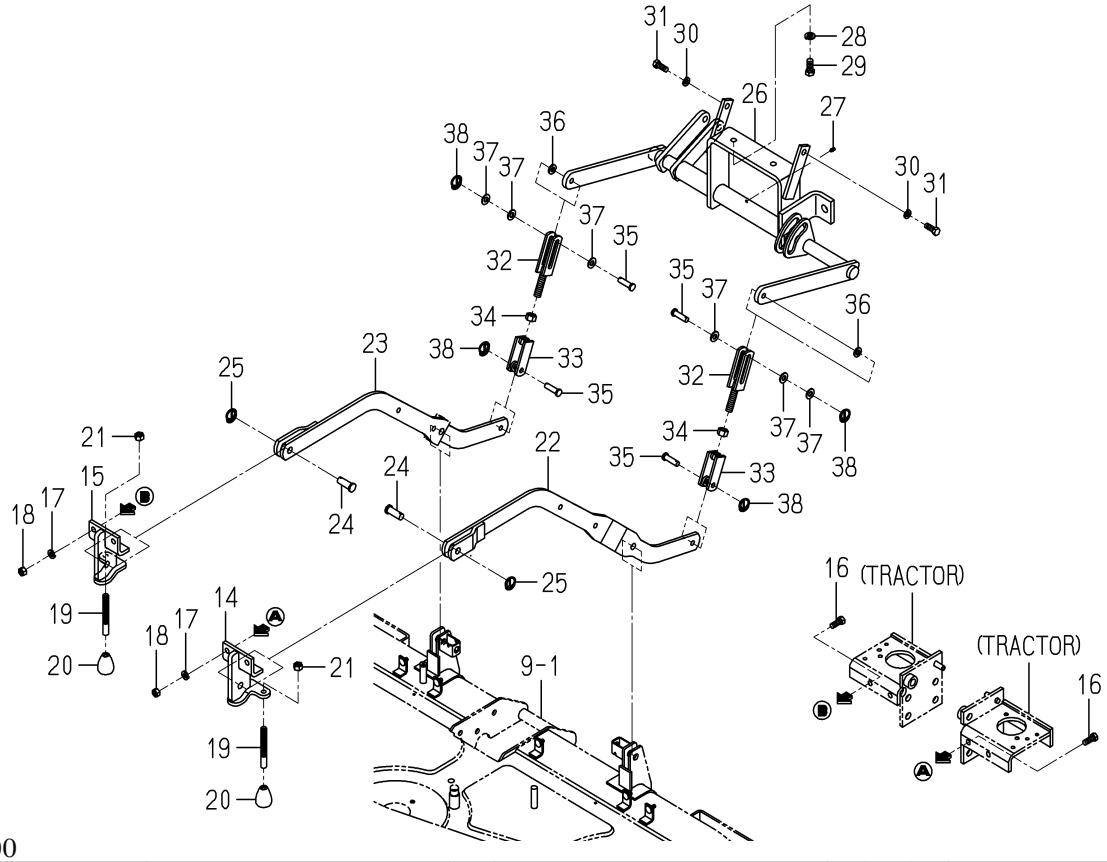

8655-608E-0100

KEY	PART CODE	DESCRIPTION	SPC	TYPE OF MODEL SSM72 TG6400	SSM72 SHLK	SSM72 SGLK		ITC	COL	GRP	REMARKS
31	V201-361-203-00	BOLT/M12X30	*	2	2						
32	8657-608-590-10	FORK/A COMP	*	2	2						
33	8657-608-610-10	FORK/B COMP	*	2	2						
34	V304-260-016-00	NUT/M16	*	2	2						
35	8657-608-053-10	PIN/12X42	*	4	4						
36	3504-418-007-10	WASHER,SUPPORT	*	2	2						
37	V411-260-012-00	WASHER /M12	*	6	6						
38	1427-317-003-00	CLIP,PIN	*	4	4						

FIG. 14 LINK SYSTEM(72/SGLK TYPE)(1/2)

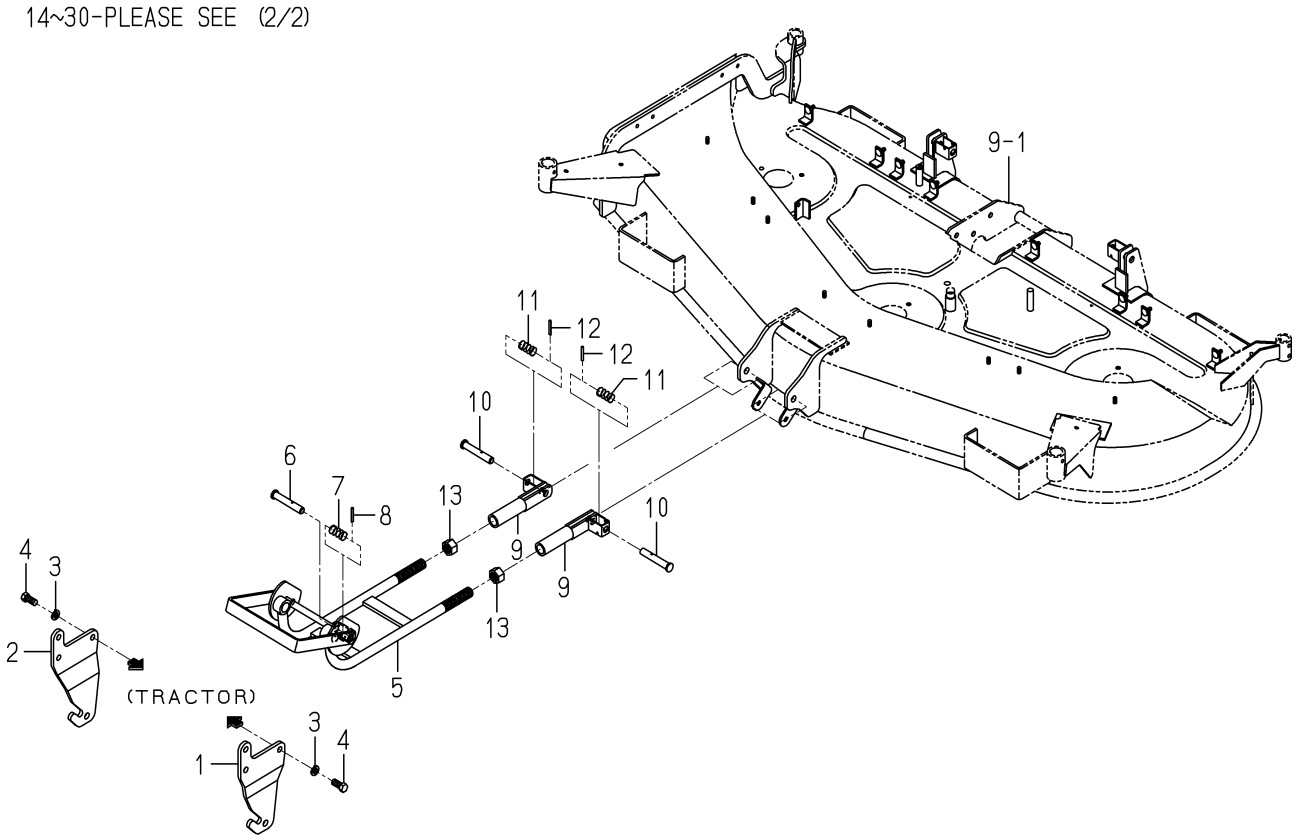

8655-608F-0100

KEY	PART CODE	DESCRIPTION	SPC	TYPE OF MODEL SSM72 TG6400	SSM72 SHLK	SSM72 SGLK		ITC	COL	GRP	REMARKS
1	8655-608-086-00	BRACKET/FRONT/LH/TG3	*	1		1					
2	8655-608-087-00	BRACKET/FRONT/RH/TG3	*	1		1					
3	V401-160-014-00	WASHER,SP/M14	*	6		6					
4	V201-361-403-00	BOLT/M14X30	*	6		6					
5	8655-608-860-00	ARM/FRONT COMP	*	1		1					
6	8595-608-082-10	PIN/16X96	*	1		1					
7	1560-601-028-00	SPRING/HC042	*	1		1					
8	V580-140-504-00	PIN,SPRING/5 X40 W	*	1		1					
9	8655-608-360-00	HITCH/ARM COMP	*	2		2					
10	8595-608-082-10	PIN/16X96	*	2		2					
11	1560-601-028-00	SPRING/HC042	*	2		2					
12	V580-140-504-00	PIN,SPRING/5 X40 W	*	2		2					
13	8654-608-066-00	NUT/M24X1.5	*	2		2					
14	8655-608-320-00	BRACKET/MID/LH COMP	*	1		1					
15	8655-608-330-00	BRACKET/MID/RH COMP	*	1		1					
16	V201-361-203-00	BOLT/M12X30	*	4		4					
17	V401-160-012-00	WASHER,SP/M12	*	4		4					
18	V304-460-012-00	NUT/M12	*	4		4					
19	8655-608-045-00	SCREW/M14X115	*	2		2					
20	1602-215-001-00	KNOB	*	2		2					
21	V304-260-014-00	NUT/M14	*	2		2					
22	8655-608-340-00	ARM/MID/LH COMP	*	1		1					
23	8655-608-350-00	ARM/MID/RH COMP	*	1		1					
24	8657-608-052-00	PIN/16X43	*	2		2					
25	1427-317-003-00	CLIP,PIN	*	2		2					
26	8655-608-910-00	LINK/REAR/TG3/G COMP	*	1		1					
27	V760-150-000-00	NIPPLE,GREASE	*	1		1					
28	V401-160-014-00	WASHER,SP/M14	*	2		2					
29	V201-361-403-00	BOLT/M14X30	*	2		2					
30	8657-608-590-10	FORK/A COMP	*	2		2					

FIG. 14 LINK SYSTEM(72/SGLK TYPE)(2/2)

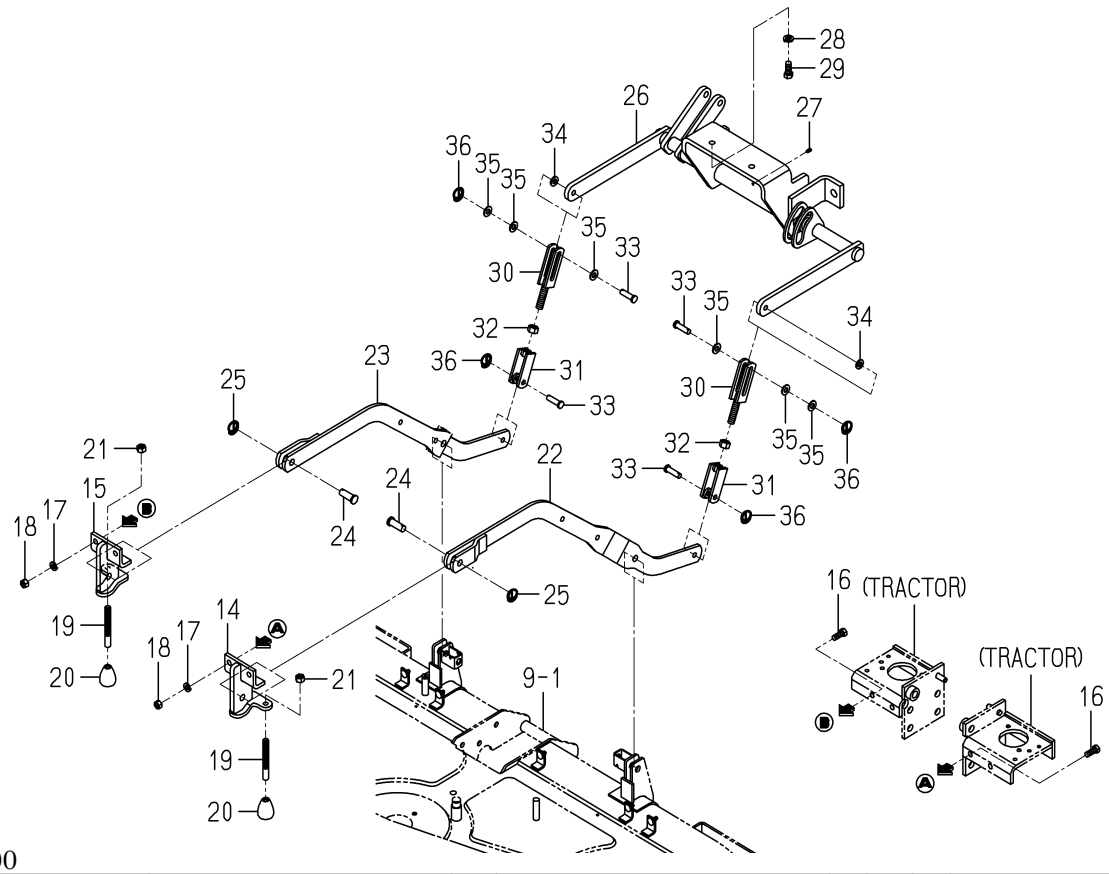

8655-608F-0100

KEY	PART CODE	DESCRIPTION	SPC	TYPE OF MODEL SSM72 TG6400	SSM72 SHLK	SSM72 SGLK		ITC	COL	GRP	REMARKS
31	8657-608-610-10	FORK/B COMP	*	2		2					
32	V304-260-016-00	NUT/M16	*	2		2					
33	8657-608-053-10	PIN/12X42	*	4		4					
34	3504-418-007-10	WASHER,SUPPORT	*	2		2					
35	V411-260-012-00	WASHER /M12	*	6		6					
36	1427-317-003-00	CLIP,PIN	*	4		4					

FIG. 15 CYLINDER(LIFT)SYSTEM (72/SHLK,SGLK TYPE)

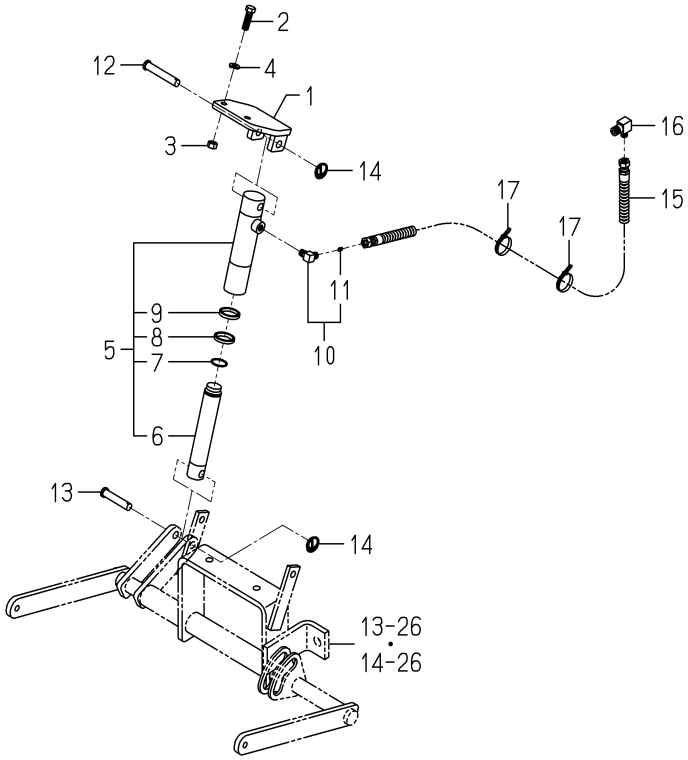

8655-610A-0100

KEY	PART CODE	DESCRIPTION	SPC	TYPE OF MODEL SSM72 TG6400	SSM72 SHLK	SSM72 SGLK		ITC	COL	GRP	REMARKS
1	8655-610-810-00	BRACKET/CYLINDE COMP	*	1	1	1					
2	V201-361-204-00	BOLT/M12X40	*	2	2	2					
3	V304-460-012-00	NUT/M12	*	2	2	2					
4	V401-160-012-00	WASHER,SP/M12	*	2	2	2					
5	K182-032-000-00	CYLINDER ASSY	*	1	1	1					
6	K182-032-001-00	PISTON	*	1	1	1					
7	K182-002-002-00	STOPPER,PISTON	*	1	1	1					
8	K182-032-002-00	ROD PACKING	*	1	1	1					
9	K182-032-003-00	DUST/SEAL	*	1	1	1					
10	8655-610-520-00	ADAPTER/L/ORI/1.3	*	1	1	1					
11	K211-004-014-00	SCREW,ORIFICE	*	1	1	1					
12	8657-610-051-00	PIN/15X88	*	1	1	1					
13	8654-610-001-00	PIN/15X71	*	1	1	1					
14	1427-317-003-00	CLIP,PIN	*	2	2	2					
15	3650-380-220-20	HOSE/HYDRAULIC/900	*	1	1	1					
16	1683-273-054-00	ELBOW/1/4-PT3/8	*	1	1	1					
17	1342-402-006-00	BAND/WIRE/250	*	2	2	2					

FIG. 16 KNOB(ADJUST/HEIGHT)SYSTEM (72/SHLK,SGLK TYPE)

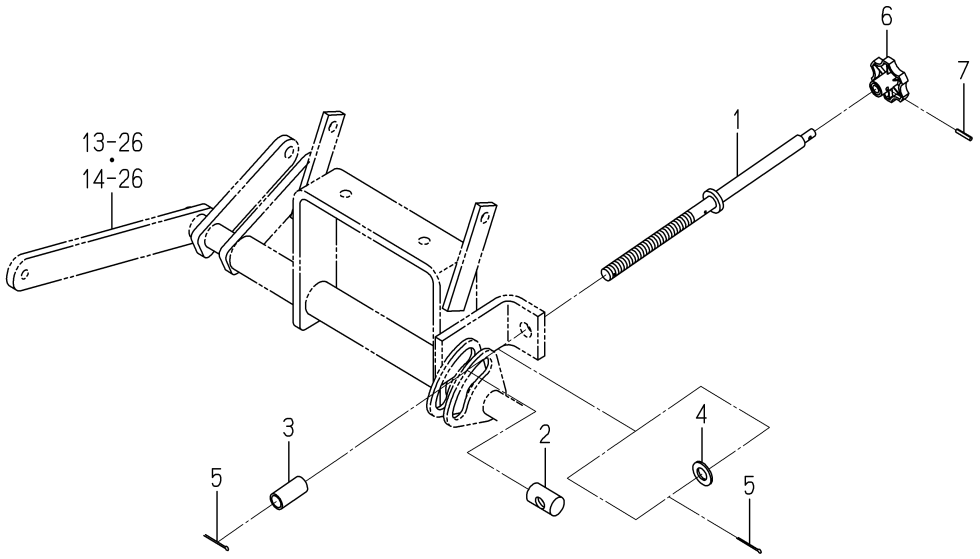

8655-611A-0100

KEY	PART CODE	DESCRIPTION	SPC	TYPE OF MODEL				ITC	COL	GRP	REMARKS
				SSM72 TG6400	SSM72 SHLK	SSM72 SGLK					
1	8655-611-810-00	SHAFT/ADJUST COMP	*	1	1	1					
2	8655-611-081-00	NUT/ADJUST	*	1	1	1					
3	8655-611-082-00	COLLAR/17X22X45	*	1	1	1					
4	V411-260-016-00	WASHER / M16	*	1	1	1					
5	V500-163-003-50	PIN,SPLIT/3 X35	*	2	2	2					
6	1719-611-624-00	KNOB ASSY	*	1	1	1					
7	V580-140-402-50	PIN,SPRING/4 X25 W	*	1	1	1					

FIG. 17 LABEL (CONTROL,CAUTION)(72/TG6400 TYPE)

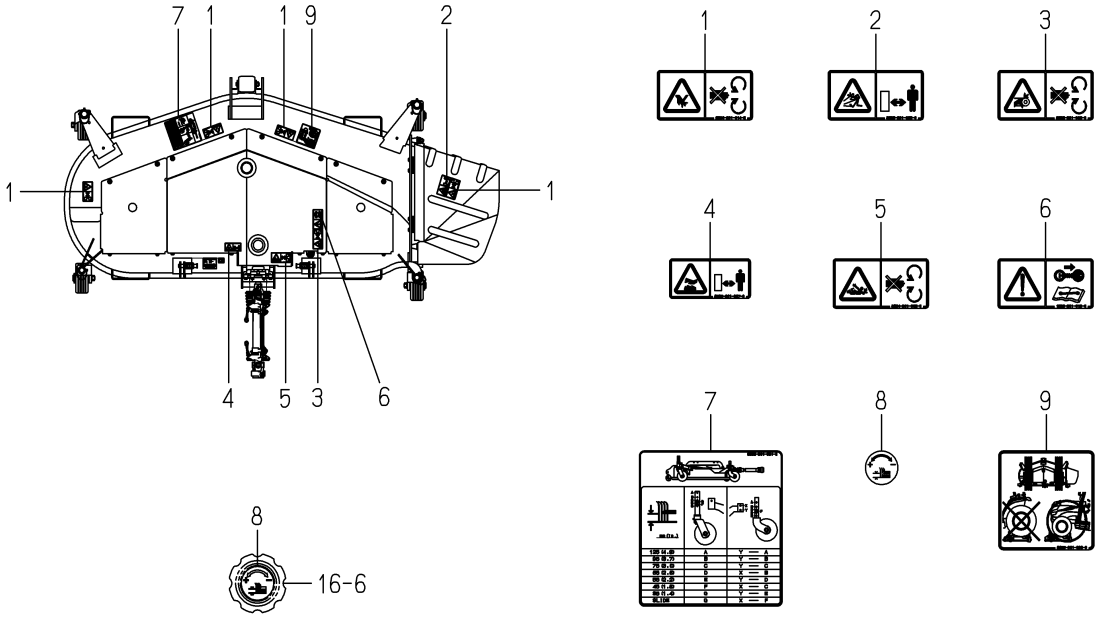

8655-901I-0100

KEY	PART CODE	DESCRIPTION	SPC	TYPE OF MODEL SSM72 TG6400	SSM72 SHLK	SSM72 SGLK		ITC	COL	GRP	REMARKS
1	2500-901-014-30	LABEL/DANGER	*	4							
2	8595-901-005-00	LABEL/DANGER/DISCHAR	*	1							
3	8595-901-006-00	LABEL/WARNING/BELT	*	1							
4	8595-901-007-00	LABEL/WARNING/HOT	*	1							
5	8654-901-002-00	LABEL/PTO	*	1							
6	1593-901-015-00	LABEL/MAINTENANCE	*	1							
7	8655-901-081-00	LABEL/GAUGEWHEEL	*	1							
8	8657-901-001-00	LABEL/ADJUST	*	1							
9	8655-901-086-00	LABEL/SURMOUNT/TG	*	1							

FIG. 18 LABEL(CE)(72/TG6400 TYPE)

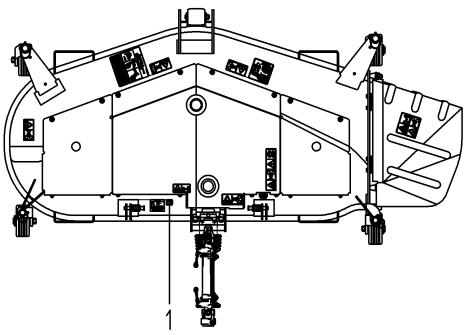

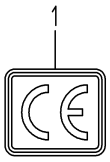

1709-905 -0100

KEY	PART CODE	DESCRIPTION	SPC	TYPE OF MODEL				ITC	COL	GRP	REMARKS
				SSM72 TG6400	SSM72 SHLK	SSM72 SGLK					
1	2500-901-027-00	LABEL/CE	*	1							

FIG. 19 CASE(BEVEL)ASSY (72/TG6400 TYPE)(REPAIR)

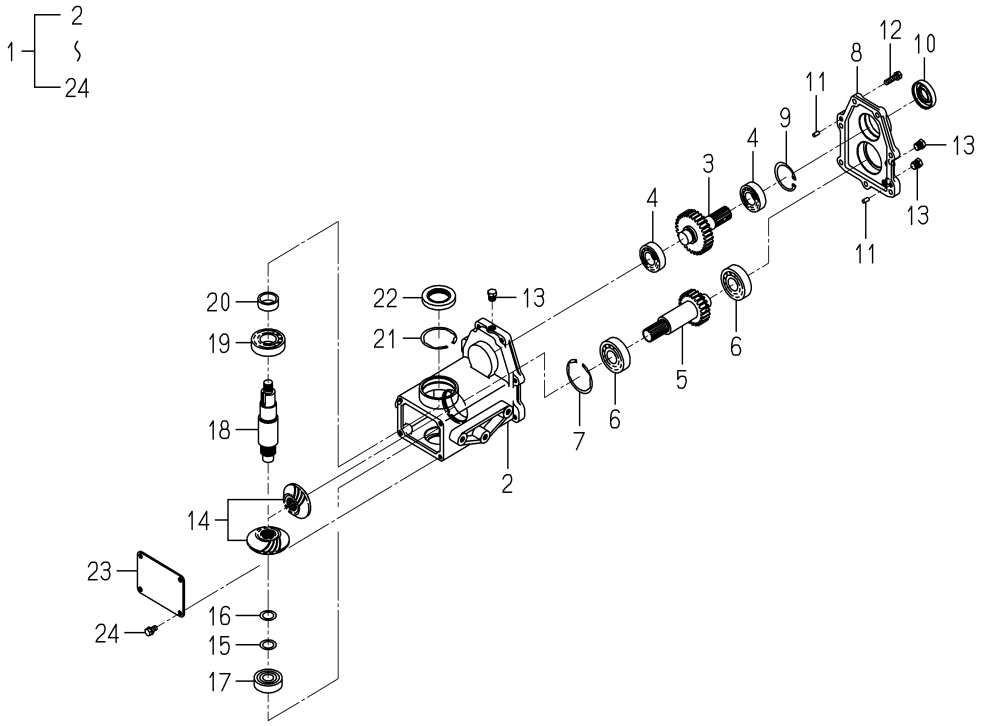

8655-201Z-0100

KEY	PART CODE	DESCRIPTION	SPC	TYPE OF MODEL SSM72 TG6400	SSM72 SHLK	SSM72 SGLK		ITC	COL	GRP	REMARKS
1	8655-201-400-00	CASE/BEVEL ASSY	R	1							
2	8655-201-071-00	CASE/BEVEL	R	1							
3	8655-201-073-00	GEAR/SPUR/30	R	1							
4	1594-221-001-00	BEARING/BALL 6205SH2	R	2							
5	8655-201-074-00	GEAR/SPUR/23	R	1							
6	1594-218-001-00	BEARING/BALL 6305SH2	R	2							
7	V707-140-062-00	RING,SNAP/R62	R	1							
8	8655-201-072-00	COVER/CASE	R	1							
9	V705-140-052-00	RING,SNAP/52 C	R	1							
10	V744-125-521-00	SEAL,OIL/TC255210	R	1							
11	8658-306-003-00	PIN/PARALLEL	R	2							
12	V211-560-803-00	BOLT/M8X30	R	7							
13	7955-201-026-00	PLUG,DRAIN (1/4)	R	3							
14	8662-201-210-00	GEAR/BEVEL/21-2 SET	R	1							
15	2500-311-018-00	SHIM/0.5	R	1							
16	2500-311-019-00	SHIM/0.3X20X30	R	1							
17	1560-214-003-00	BEARING/BALL/6304SH2	R	1							
18	8655-201-075-00	SHAFT/OUTPUT	R	1							
19	V600-110-620-60	BEARING,RB/6206	R	1							
20	1614-244-002-00	SLEEVE	R	1							
21	V707-140-062-00	RING,SNAP/R62	R	1							
22	1614-244-005-00	SEAL/OIL	R	1							
23	8655-201-076-00	COVER/CASE	R	1							
24	V211-260-801-60	BOLT,SEMS (S) M8X16	R	4							

FIG. 20 COMPONENT PARTS FOR 8655-101-450-00 ON Fig.1

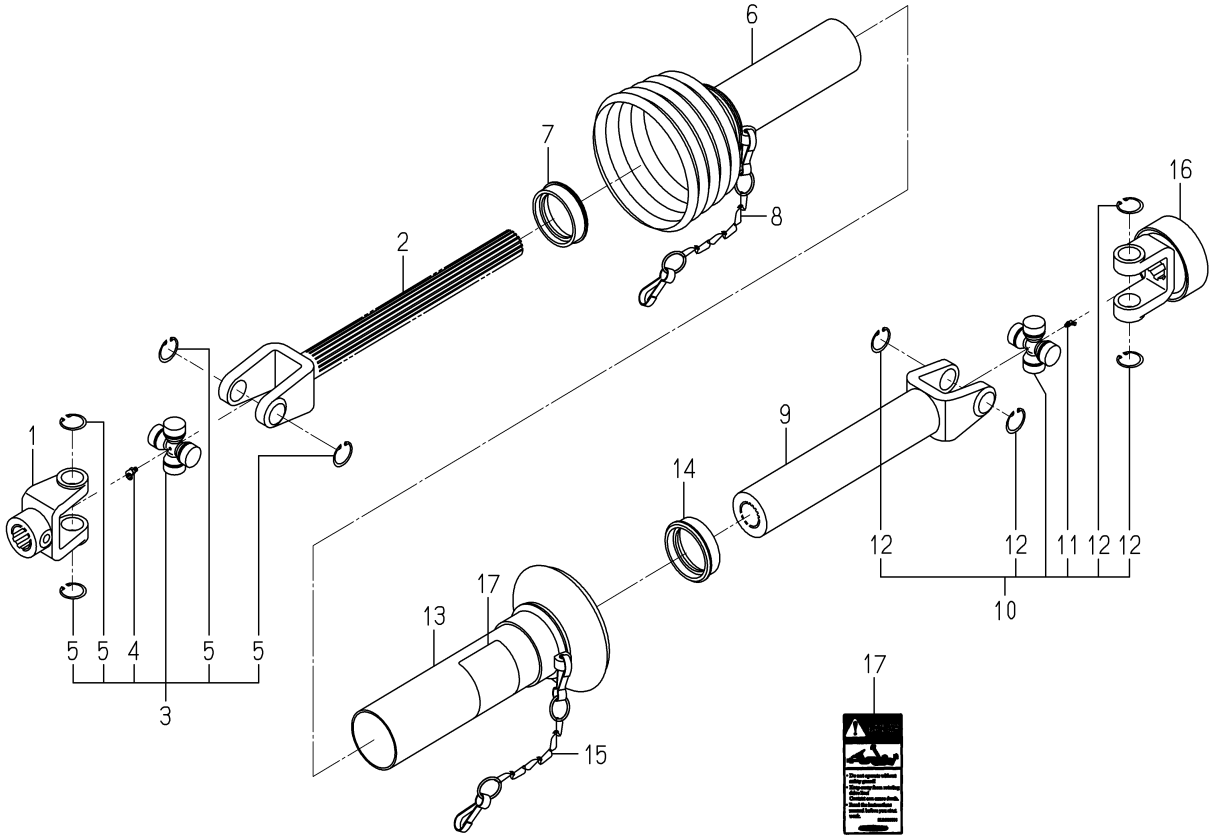

8655-101-450-0B

KEY	PART CODE	DESCRIPTION	SPC	TYPE OF MODEL SSM72 TG6400	SSM72 SHLK	SSM72 SGLK		ITC	COL	GRP	REMARKS
1	8654-101-221-00	FITTINGYOKE	*		1						
2	8663-101-211-00	SHAFTYOKE	*		1						
3	8654-101-230-00	JOURNALCROSSE ASSY	*		1						
4	8654-101-232-00	GREASENIPPLE	*		1						
5	8654-101-233-00	SURCLIP/HOLE	*		4						
6	8655-101-461-00	SAFETYGUARD/IN	*		1						
7	7821-102-008-00	RING/SLIDE	*		1						
8	7821-102-220-00	CHAIN ASSY	*		1						
9	8654-101-471-00	SLEEVEYOKE	*		1						
10	8654-101-230-00	JOURNALCROSSE ASSY	*		1						
11	8654-101-232-00	GREASENIPPLE	*		1						
12	8654-101-233-00	SURCLIP/HOLE	*		4						
13	8655-101-471-00	SAFETYGUARD/OUT	*		1						
14	7821-102-008-00	RING/SLIDE	*		1						
15	7821-102-220-00	CHAIN ASSY	*		1						
16	8657-101-501-00	AS YOKE ASSY	*		1						
17	8658-101-674-00	LABEL/DANGER/JOINT/G	*		1						

FIG. 21 COMPONENT PARTS FOR 8655-101-910-00 ON Fig.2

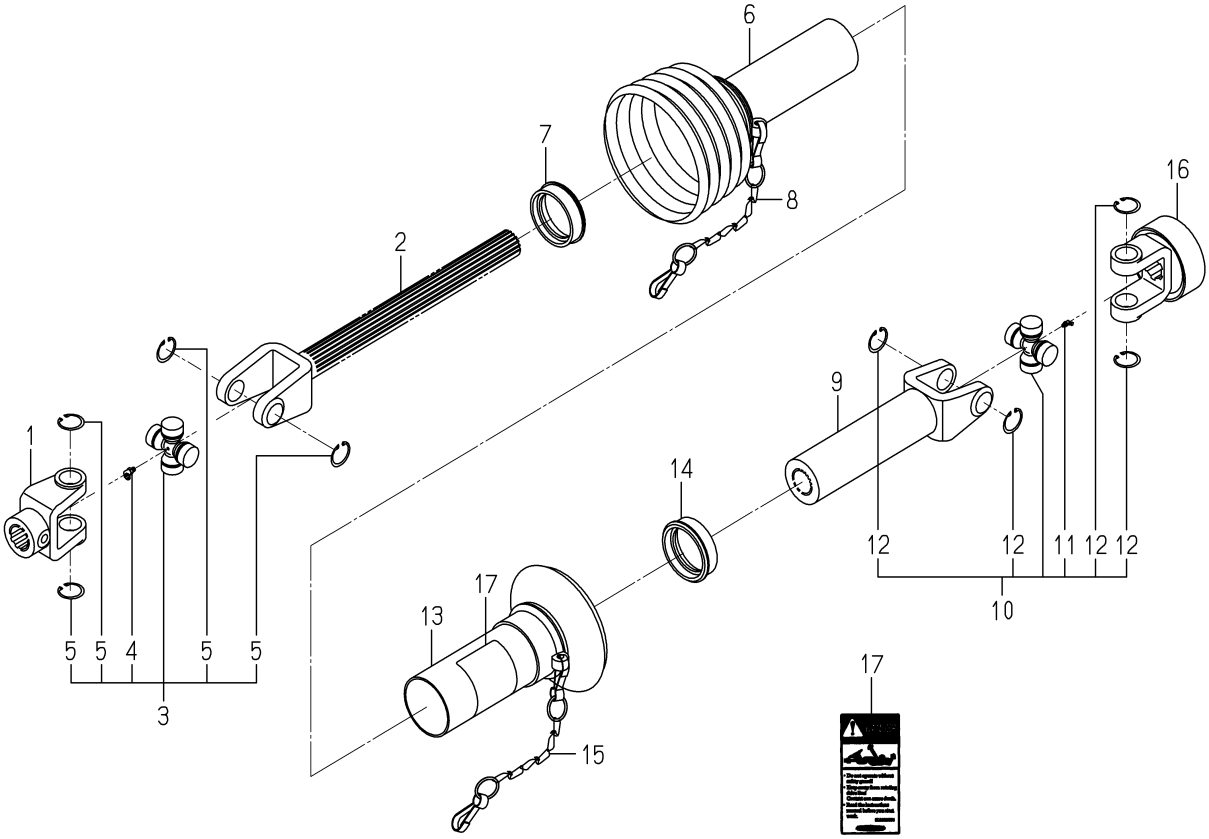

8655-101-910-0

KEY	PART CODE	DESCRIPTION	SPC	TYPE OF MODEL SSM72 TG6400	SSM72 SHLK	SSM72 SGLK		ITC	COL	GRP	REMARKS
1	8654-101-221-00	FITTINGYOKE	*			1					
2	8665-101-211-00	SHAFTYOKE	*			1					
3	8654-101-230-00	JOURNALCROSSE ASSY	*			1					
4	8654-101-232-00	GREASENIPPLE	*			1					
5	8654-101-233-00	SURCLIP/HOLE	*			4					
6	8655-101-921-00	SAFETYGUARD/IN	*			1					
7	7821-102-008-00	RING/SLIDE	*			1					
8	7821-102-220-00	CHAIN ASSY	*			1					
9	8655-101-931-00	SLEEVYOKE	*			1					
10	8654-101-230-00	JOURNALCROSSE ASSY	*			1					
11	8654-101-232-00	GREASENIPPLE	*			1					
12	8654-101-233-00	SURCLIP/HOLE	*			4					
13	8655-101-932-00	SAFETYGUARD/OUT	*			1					
14	7821-102-008-00	RING/SLIDE	*			1					
15	7821-102-220-00	CHAIN ASSY	*			1					
16	8657-101-501-00	AS YOKE ASSY	*			1					
17	8658-101-674-00	LABEL/DANGER/JOINT/G	*			1					

Numerical Index

Part Code	Fig.	Key	Part Code	Fig.	Key	Part Code	Fig.	Key
1342-402-006-00	15	17	3746-111-011-00	5	4	8654-406-001-00	10	4
1427-317-003-00	13	25		5	9	8654-407-960-00	11	7
	13	38	3805-701-018-10	10	5	8654-501-720-10	12	10
	14	25	7821-102-008-00	20	7	8654-608-066-00	13	13
	14	36		20	14		14	13
	15	14		21	7	8654-610-001-00	15	13
1434-211-004-00	5	2		21	14	8654-901-002-00	17	5
1560-214-003-00	4	17	7821-102-220-00	20	8	8655-101-450-00	1	1
	19	17		20	15	8655-101-461-00	20	6
1560-601-028-00	9	3		21	8	8655-101-471-00	20	13
	13	7		21	15	8655-101-910-00	2	1
	13	11	7955-201-026-00	4	13	8655-101-921-00	21	6
	14	7		19	13	8655-101-931-00	21	9
	14	11	8595-306-005-10	8	2	8655-101-932-00	21	13
1564-275-007-00	12	4	8595-306-006-00	8	3	8655-150-450-00	3	1
1593-901-015-00	17	6	8595-306-007-00	8	4	8655-201-071-00	4	1
1594-218-001-00	4	6	8595-501-001-20	12	17		19	2
	19	6	8595-608-082-10	9	2	8655-201-072-00	4	8
1594-221-001-00	4	4		13	6		19	8
	7	4		13	10	8655-201-073-00	4	3
	19	4		14	6		19	3
1602-215-001-00	13	20		14	10	8655-201-074-00	4	5
	14	20	8595-901-005-00	17	2		19	5
1614-244-002-00	4	20	8595-901-006-00	17	3	8655-201-075-00	4	18
	19	20	8595-901-007-00	17	4		19	18
1614-244-005-00	4	22	8597-202-501-00	5	13	8655-201-076-00	4	23
	19	22	8654-101-221-00	20	1		19	23
1683-273-054-00	15	16		21	1	8655-201-400-00	19	1
1719-611-624-00	16	6	8654-101-230-00	20	3	8655-202-051-00	5	1
2500-311-018-00	4	15		20	10	8655-202-062-00	5	7
	19	15		21	3	8655-202-400-00	5	12
2500-311-019-00	4	16		21	10	8655-203-051-00	6	1
	19	16	8654-101-232-00	20	4	8655-306-003-10	8	1
2500-901-014-30	17	1		20	11	8655-403-860-00	9	1
2500-901-027-00	18	1		21	4	8655-406-210-22	10	1
3100-703-230-11	5	14		21	11	8655-407-860-00	11	1
	5	22	8654-101-233-00	20	5	8655-407-870-00	11	4
3504-418-007-10	13	36		20	12	8655-407-880-00	11	2
	14	34		21	5	8655-407-890-00	11	5
3621-211-003-00	5	16		21	12	8655-501-041-00	12	12
3650-380-220-20	15	15	8654-101-471-00	20	9	8655-501-400-00	12	1
3670-520-001-00	5	3	8654-202-016-00	5	8	8655-501-820-00	12	3
3670-780-004-00	12	13	8654-203-201-00	12	11	8655-501-880-00	12	7
3737-341-006-00	5	19	8654-301-004-00	7	7	8655-501-890-00	12	8
3737-341-007-00	5	20	8654-301-085-00	7	3	8655-608-045-00	13	19

Numerical Index

Part Code	Fig.	Key	Part Code	Fig.	Key	Part Code	Fig.	Key
8655-608-045-00	14	19	8662-201-210-00	4	14	V363-260-008-00	11	6
8655-608-086-00	13	1		19	14	V401-160-012-00	10	7
	14	1	8663-101-211-00	20	2		13	17
8655-608-087-00	13	2	8663-501-051-00	12	18		13	30
	14	2	8663-501-240-00	12	9		14	17
8655-608-320-00	13	14	8665-101-211-00	21	2		15	4
	14	14	8674-101-001-00	1	3	V401-160-014-00	13	3
8655-608-330-00	13	15		2	3		13	28
	14	15	K182-002-002-00	15	7		14	3
8655-608-340-00	13	22	K182-032-000-00	15	5		14	28
	14	22	K182-032-001-00	15	6	V401-160-016-00	5	5
8655-608-350-00	13	23	K182-032-002-00	15	8		5	10
	14	23	K182-032-003-00	15	9		12	14
8655-608-360-00	13	9	K211-004-014-00	15	11	V401-160-020-00	8	5
	14	9	P115-810-011-00	10	2	V411-260-012-00	13	37
8655-608-810-00	13	26	V201-361-203-00	13	16		14	35
8655-608-860-00	13	5		13	31	V411-260-016-00	16	4
	14	5		14	16	V500-163-003-50	16	5
8655-608-910-00	14	26	V201-361-204-00	15	2	V580-140-402-50	16	7
8655-610-520-00	15	10	V201-361-403-00	13	4	V580-140-504-00	9	4
8655-610-810-00	15	1		13	29		12	5
8655-611-081-00	16	2		14	4		13	8
8655-611-082-00	16	3		14	29		13	12
8655-611-810-00	16	1	V211-260-801-60	4	24		14	8
8655-901-081-00	17	7		19	24		14	12
8655-901-086-00	17	9	V211-261-002-50	7	2	V580-140-804-00	1	2
8657-101-501-00	20	16	V211-360-802-50	3	2		2	2
	21	16	V211-560-803-00	4	12	V600-110-620-60	4	19
8657-301-004-00	7	1		19	12		19	19
8657-501-501-00	12	2	V211-561-002-00	4	2	V600-110-690-80	7	5
8657-608-052-00	13	24	V304-260-008-00	5	21	V704-140-016-00	5	17
	14	24	V304-260-012-00	10	6	V704-140-020-00	5	15
8657-608-053-10	13	35	V304-260-014-00	13	21		5	23
	14	33		14	21	V705-140-052-00	4	9
8657-608-590-10	13	32	V304-260-016-00	13	34		7	6
	14	30		14	32		19	9
8657-608-610-10	13	33	V304-460-012-00	13	18	V707-140-062-00	4	7
	14	31		14	18		4	21
8657-610-051-00	15	12		15	3		7	10
8657-901-001-00	17	8	V304-460-016-00	5	11		19	7
8658-101-674-00	20	17		12	15		19	21
	21	17	V305-460-016-00	5	6	V744-125-521-00	4	10
8658-301-001-00	7	9	V360-260-012-00	12	19		19	10
8658-306-003-00	4	11	V363-260-008-00	10	3	V744-135-520-80	7	8
	19	11		11	3	V760-150-000-00	5	18

Numerical Index

8655-097-240-00

Part Code	Fig. Key	Part Code	Fig. Key	Part Code	Fig. Key
V760-150-000-00	7 11				
	12 6				
	12 16				
	13 27				
	14 27				

Alpabetical Index

8655-097-240-00

Description	Fig.	Key
ADAPTER/L/ORI/1.3	15	10
ARM/FRONT COMP	13	5
	14	5
ARM/MID/LH COMP	13	22
	14	22
ARM/MID/RH COMP	13	23
	14	23
ARM/TENSION ASSY	5	12
AS YOKE ASSY	20	16
	21	16
BAND/WIRE/250	15	17
BEARING	7	5
BEARING,RB/6206	4	19
	19	19
BEARING/BALL 6205SH2	4	4
	7	4
	19	4
BEARING/BALL 6305SH2	4	6
	19	6
BEARING/BALL/6304SH2	4	17
	19	17
BELT/VC164	6	1
BLADE/60X630/C	8	1
BOLT(S) M10X25	7	2
BOLT,SEMS (S) M8X16	4	24
	19	24
BOLT/M10X20	4	2
BOLT/M12X30	13	16
	13	31
	14	16
BOLT/M12X40	15	2
BOLT/M14X30	13	4
	13	29
	14	4
	14	29
BOLT/M8X30	4	12
	19	12
BOLT/SP	3	2
BRACKET/CYLINDE COMP	15	1
BRACKET/FRONT/LH/TG3	13	1
	14	1
BRACKET/FRONT/RH/TG3	13	2
	14	2
BRACKET/MID/LH COMP	13	14
	14	14
BRACKET/MID/RH COMP	13	15
	14	15
BUSH/16X18X15	5	13
BUSH/25X28X15	12	11
BUSH/26X30X20	12	2
CASE/BEVEL	4	1
	19	2
CASE/BEVEL ASSY	19	1
CHAIN ASSY	20	8
	20	15
	21	8
	21	15
CLIP,PIN	13	25
	13	38
	14	25
	14	36
	15	14
COLLAR/17X22X45	16	3
COLLAR/26X36X3	5	2
COLLAR/BRADE	7	9
COVER/BELT/LH/T COMP	11	1
COVER/BELT/RH/T COMP	11	4
COVER/CASE	4	8
	4	23
	19	8
	19	23
COVER/DISCHARGE COMP	10	1
COVER/JOINT COMP	3	1
COVER/STEP/LH COMP	11	2
COVER/STEP/RH COMP	11	5
COVER/UNIVERSAL COMP	11	7
CYLINDER ASSY	15	5
DECK/MOWER/72/TG3	9	1
DUST/SEAL	15	9
ELBOW/1/4-PT3/8	15	16
FITTINGYOKE	20	1
	21	1
FORK/A COMP	13	32
	14	30
FORK/B COMP	13	33
	14	31
FORK/WHEEL/FRON ASSY	12	1
FORK/WHEEL/R/LH COMP	12	7
FORK/WHEEL/R/RH COMP	12	8
GEAR/BEVEL/21-2 SET	4	14
GEAR/BEVEL/21-2 SET	19	14
GEAR/SPUR/23	4	5
	19	5
GEAR/SPUR/30	4	3
	19	3
GREASENIPPLE	20	4
	20	11
	21	4
	21	11
HITCH/ARM COMP	13	9
	14	9
HOSE/HYDRAULIC/900	15	15
JOINT/UNIVERSAL SET	1	1
	2	1
JOURNALCROSSE ASSY	20	3
	20	10
	21	3
	21	10
KEY/06X06X28	5	8
KEY/08X07X20	5	3
KNOB	13	20
	14	20
KNOB ASSY	16	6
LABEL/ADJUST	17	8
LABEL/CE	18	1
LABEL/DANGER	17	1
LABEL/DANGER/DISCHAR	17	2
LABEL/DANGER/JOINT/G	20	17
	21	17
LABEL/GAUGEWHEEL	17	7
LABEL/MAINTENANCE	17	6
LABEL/PTO	17	5
LABEL/SURMOUNT/TG	17	9
LABEL/WARNING/BELT	17	3
LABEL/WARNING/HOT	17	4
LINK/REAR COMP	13	26
LINK/REAR/TG3/G COMP	14	26
METAL/SIDE	7	1
NIPPLE,GREASE	5	18
	7	11
	12	6
	12	16
	13	27
	14	27
NUT	5	6

Alpabetical Index

8655-097-240-00

Description	Fig.	Key
NUT	5	21
NUT/ADJUST	16	2
NUT/M12	10	6
	13	18
	14	18
	15	3
NUT/M14	13	21
	14	21
NUT/M16	5	11
	12	15
	13	34
	14	32
NUT/M20X1.5	8	4
NUT/M24X1.5	13	13
	14	13
NUT/WASHER	10	3
	11	3
	11	6
	12	19
PIN,SPLIT/3 X35	16	5
PIN,SPRING/4 X25 W	16	7
PIN,SPRING/5 X40 W	9	4
	12	5
	13	8
	13	12
	14	8
	14	12
PIN,SPRING/8 X40 W	1	2
	2	2
PIN/08X60 COMP	12	9
PIN/12X117	12	18
PIN/12X42	13	35
	14	33
PIN/15X71	15	13
PIN/15X88	15	12
PIN/16X43	13	24
	14	24
PIN/16X96	9	2
	13	6
	13	10
	14	6
	14	10
PIN/25X109	12	12
PIN/GAUGE COMP	12	3
PIN/PARALLEL	4	11
PIN/PARALLEL	19	11
PISTON	15	6
PLATE/03X15X65	10	2
PLUG,DRAIN (1/4)	4	13
	19	13
PULLEY,TENSION/100	5	14
	5	22
PULLEY/VC150	5	7
PULLEY/VC173	5	1
RING,SNAP/16 C	5	17
RING,SNAP/20 C	5	15
	5	23
RING,SNAP/52 C	4	9
	7	6
	19	9
RING,SNAP/R62	4	7
	4	21
	7	10
	19	7
	19	21
RING/SLIDE	20	7
	20	14
	21	7
	21	14
ROD PACKING	15	8
ROD,CHAIN TENSION	5	20
SAFETYGUARD/IN	20	6
	21	6
SAFETYGUARD/OUT	20	13
	21	13
SCREW,ORIFICE	15	11
SCREW/M14X115	13	19
	14	19
SEAL,OIL/TC255210	4	10
	19	10
SEAL,OIL/TC35528	7	8
SEAL/OIL	4	22
	7	7
	19	22
SHAFT/ADJUST COMP	16	1
SHAFT/OUTPUT	4	18
	19	18
SHAFT/SIDE	7	3
SHAFTYOKE	20	2
	21	2
SHIM/0.3X20X30	4	16
	19	16
SHIM/0.5	4	15
	19	15
SHIM/1.2	8	3
SLEEVE	4	20
	19	20
SLEEVEYOKE	20	9
SLEEVYOKE	21	9
SPRING,CHAIN TENSION	5	19
SPRING/HC042	9	3
	13	7
	13	11
	14	7
	14	11
STOPPER,PISTON	15	7
STOPPER/COVER	10	4
SURCLIP/HOLE	20	5
	20	12
	21	5
	21	12
WASHER	5	4
	5	9
	5	16
WASHER / M16	16	4
WASHER /M12	13	37
	14	35
WASHER(13X34X05)	10	5
WASHER,SP/M12	10	7
	13	17
	13	30
	14	17
	15	4
WASHER,SP/M14	13	3
	13	28
	14	3
	14	28
WASHER,SP/M16	5	5
	5	10
	12	14
WASHER,SP/M20	8	5
WASHER,SUPPORT	13	36
	14	34
WASHER/20X60X06	8	2
WASHER/27X40X2	12	4

Alpabetical Index

8655-097-240-00

Description	Fig.	Key	Description	Fig.	Key	Description	Fig.	Key
WASHER/28X48X03	12	13						
WHEEL/GAUGE ASSY	12	10						
WHEEL/GAUGE/FRONT	12	17						
WIRE/1.6X150	1	3						
	2	3						