Directions for use of Parts Catalogue

1. Applicable model of machines

All component and option parts used for TG5330,5390 tractors are listed in this parts catalogue.

1) MODEL TYPE

F····· FOUR WHEEL DRIVE

H····· HST

Q····· IQ SHIFT

S····· STANDARD MECHANICAL

D····· DOUBLE CLUTCH

M····· MID PTO

H-3····· HST ASSIST

P····· POWER REVERSER

W····· DOUBLE AUXILIARY HYDRAULIC VALVES

J····· JOY STICK VALVE

R····· FRONT/REAR HITCH & ROPS

C····· CABIN

A····· CENTER ROPS

2) AREA CODE

E4····· EUROPE

E4D····· GERMANY

E6····· OCEANIA

2. Explanation for head paragraph

KEY	PART CODE	DESCRIPTION	SPC	TYPE OF MODEL						ITC	COL	GRP	REMARKS
				SSM48M	SSM48F	SSM48G	SRM48M	SRM48F	SRM48G				
1	8595-211-001-20	CASE/UPPER	*	1 -229									
1A	8657-201-081-00	CASE/UPPER	*	1 230-			1						
2	8595-211-002-10	CASE/LOWER	*	1			1						
3	V523-100-801-80	PIN	*	2			2						
4	V211-260-803-00	BOLT, SEMS	*	6			6						
			*	2 -229									
			*	2 230-			3						
				2			2						
				1			1						

① ② ③ ④ ⑤ ⑥ ⑦ ⑧ ⑨

① KEY shows the location of parts diagramed in the illustration.

② Parts numbers begin with `V´ and `W´ are standard parts of the market.

③ `LH´ and `RH´ on the parts name are described against the moving direction of the machine or are described on the condition how to install parts on the machines.

④ SPC : The following symbol classifies parts to be used for machines.

`*´ means standard parts.

`T´ shows that the parts can be installed as optional parts.

`R´ shows that the parts can be used as applicable parts to replace originally equipped parts.

⑤ Upper column : QTY shows the number of parts to be used for one unit of machine.

`M´ is indicated for parts supplied by a meter long.

`l´ is indicated for parts supplied by liter.

`AR´ is indicated for parts need to be adjusted or regulated.

Lower column : serial number

—229 means serial number up to 229.

230— means serial number 230 and after.

⑥ ITC : Interchangeability

`1´…OLD ← NEW

New parts can be used in place of the old parts.

`2´…OLD → NEW

Old parts can be used in place of the new parts.

`3´…OLD →← NEW

Old parts and new parts can not be replaced each other.

⑦ COL : Color code

Color is signified with color code number for colored parts.

Please see the color list shown in the next page.

⑧ GRP : Parts shown in this column can be replaced by SET parts.

Example : Parts marked Ⓐ can be replaced by parts marked Ⓑ, and Ⓓ for Ⓒ, so the rest follow in the same alphabetical order.

⑨ Remarks

＊Other maker's part code number is shown in this column.

＊When Fig. No. is shown in the Remark column of SET parts or ASSY parts, each of their component parts are listed in said Fig. No.

3. Color :

The following colors are used color parts.

COLOR CODE	COLOR	SPRAY TYPE PARTS CODE	PAINTS 4K DRUM PARTS CODE	PAINTS 16K DRUM PARTS CODE
4 L	NEO BLUE	1300-985-001-10	1300-985-003-00	――――
5 I	SUNSET GRAY	1300-959-001-10	1300-959-003-00	1300-959-004-00
6 G	SUMMER WHITE	1300-958-001-10	1300-958-003-00	1300-958-004-00
7 F	MIRROR BLACK	1300-954-001-10	1300-954-003-00	1300-954-004-00

NOTE : Color code is signified only for the parts assigned by the maker as color parts.

4. Serial Numbers :

1) For engines serial number is stamped on CYLINDER BLOCK ASSY.

Please see Fig. No. 5－1.

2) For chassies serial number is shown on the LABEL.

Please see

5. Parts Order

1) When you order parts, please make sure of correct numbers.

2) When substitute parts is available, the part number ordered will be automatically turned to a new part number.

3) Please be sure to use "ISEKI GENUINE PARTS".
Any other similar parts other than ISEKI parts when used may cause a trouble that makes us unable to repair or guarantee the warrant.

*** Structure Table of Model ***

MODEL / FIG.	TG530E4	FFFFQQQQCCCCRRRREEEE4444D D	FFSSDDRREE44A	TG5F3W0JE6	TG5F3P0RE4	FFFFFHHHHMMMMCCRREEEEEEEE4444D	FFFFFHHHH333MMMCCREE44D	FFFFFHHQQQCCMEEEE4444D	FFFQQQRRRDDDEEEE44D	TG5F3S9W0JERE6A	FFPWJRE6					
1			**						**							
2						******	**				*					
3	****				*			****	*		*					
4											*					
5	*****		**		*											
6						******	******	***			*	*				
7	*****		**													
8					*											
9											*	*				
10						******	******	***								
11					*											
12											*	*				
13	*****		**													
14						******	******	***								
15	*****		**		*			***	***			*				
16						******	**				*					
17	*****		**		*			***	***			*				
18	*****		**					***	***							
19					*							*				
20					*							*				
21						******	**				*					
22	****							****	*							
23			**						**							
24	****				*			****	*			*				
25						******	**				*					
26			**						**							
27	*****		*		*			***	***			*				
28						******	**				*					
29	*****		**		*											
30						******	**				*					
31			**		*				**			*				
32						******	**				*					
33	****							****	*							
34			**		*				**			*				
35						******	**				*					
36	****							****	*							
37	*****		**		*	******	******	***			*	*				
38					*						*	*				
39	*****		**			******	******	***								
40	*****		**		*			***	***		*	*				
41			TT		T	****			TT		T	T				
42						******	**									
43	*****		**		*	******	******	***			*	*				
44			**						**							
45						******	**				*					

*** Structure Table of Model ***

MODEL / FIG.	TG53QCE44E4	FFFFQCEE44D	FFSDRE44A	TG5F3R0EE6	TG5F3W9J0E4	FFHMCE44D	FFHMCE44D	FFHMCE44D	FFHMCE44D	3MCE44D	FFHMCE44D	FFHMCE44D	FFHMCE44D	3MCE44D	FFQCE44D	FFQCE44D	FFQCE44D	RE44D	FFQRE44D	FFSDRE44A	TG5F3R0EE6	FHWJRE6	F P W J R E 6
46			**		*														**				*
47	****														***								
48	****		**		*	*****	*****	*****	*****		*****	*****	*****		***				***		*		*
49	****		**		*	*****	*****	*****	*****		*****	*****	*****		***				***		*		*
50					*																*		*
51	****		**		*	*****	*****	*****	*****		*****	*****	*****		***				***		*		*
52			**																**				
53	****				*										***								*
54			**		*														**				*
55	****														***								
56			**		*	*****	**												**		*		*
57	****														***								
58	****		**		*	*****	*****	*****	*****		*****	*****	*****		***				***		*		*
59					*																*		*
60			**		*														**		*		*
61					*																*		*
62	****		**			*****	*****	*****	*****		*****	*****	*****						***				
63	****		**		*	*****	*****	*****	*****		*****	*****	*****		***				***		*		*
64	****		**		*	*****	*****	*****	*****		*****	*****	*****		***				***		*		*
65	****		**		*	****									***				***		*		*
66						*****	**														*		
67	****		**		*										***				***				*
68						*****	**														*		
69					*																		*
70																					*		
71										*	**												
72	****		**												***				***				
73						****																	
74					*																		*
75	****		**												***				***				
76						*****	**																
77																					*		
78					*																*		*
79	****		**			*****	*****	*****	*****		*****	*****	*****						***				
80	****		**		*	*****	*****	*****	*****		*****	*****	*****						***		*		*
81			**																**				
82						*****	**														*		
83	****				*										***								*
84	****		**		*	*****	*****	*****	*****		*****	*****	*****		***				***		*		*
85	****		*												***				**				
86						*****	**																
87					*																		*
88																					*		
89	TTTT		T*		T	TTTTT	TTTTT	TTTTT	TTTTT		TTTTT	TTTTT	TTTTT		TT				*		T		T
90			*																*				

*** Structure Table of Model ***

MODEL / FIG.	TG53OE4	FQCE4D	FQCE4	FQRE4	FQRE4D	FSDRE4A	FSDRE46	F5F3OE6	T5P3RE6	TG59JE4	FHMCE4D	FHMCE44	FHMRE4	FHMRE4D	FHMCE4	FHM3E4D	FH33MCE44D	FHQCE4	FHQCE4D	FHQCR	FQRE4D	FSDRE4A	FSDRE46	F5F3OE6	TG59JE6	FHWJRE6	FPWJRE6
91	*	*	*	*	*	*	*		*	*	*	*	*	*	*	*	*	*	*	*	*	*	*		*	*	*
92	*	*	*	*	*	*	*		*	*	*	*	*	*	*	*	*	*	*	*	*	*	*		*	*	*
93	*	*	*	*	*	*	*		*	*	*	*	*	*	*	*	*	*	*	*	*	*	*		*	*	*
94									*																*	*	
95	*	*	*	*	*	*	*		*	*	*	*	*	*	*	*	*	*	*	*	*	*	*		*	*	*
96	*	*	*	*	*	*			*	*	*	*				*	*	*	*	*	*	*			*	*	*
97	*	*	*	*	*	*	*		*	*	*	*	*	*	*	*	*	*	*	*	*	*	*		*	*	*
98	*	*	*	*	*	*	*				*	*	*	*	*	*	*	*	*	*	*	*	*				
99							*		*	*													*		*	*	*
100	*	*	*	*	*	*	*		*	*	*	*	*	*	*	*	*	*	*	*	*	*	*		*	*	*
101	T	T	T	T	*	*			T	T	T	T	T	T	T	T	T	T	T	T	T	*	*		T	T	
102					*	*																*	*				
103											*	*	*	*											*		
104	*	*	*	*					*									*	*	*	*					*	
105											*	*	*	*													
106					*	*																*	*				
107																*	*	*									
108	*	*	*	*	*	*					*	*	*	*	*	*	*	*	*	*	*	*					
109	*	*	*	*														*	*	*	*						
110	R	R	R	R	R	R			R									R	R	R	R	R	R			R	
111					*	*																*	*				
112											*	*	*	*											*		
113									*																	*	
114																									*		
115	*	*	*	*														*	*	*	*						
116																*	*	*									
117	T	T	T	T	T				*		T	T	T	T	T	T	T	T	T	T	T	T			*	*	
118									*																*	*	
119									*																*	*	
120				T	T	T	*						T	T			T			T	T	T	*				
121						*																	*				
122									*																*	*	
123				*	*	*	*						*	*			*			*	*	*	*				
124	*	*									*	*			*	*		*	*								
125									*																*	*	
126	*	*	*	*	*	*			*	*	*	*	*	*	*	*	*	*	*	*	*	*					
127									*																*	*	
128		*		*							*		*		*			*		*		*					
129	*		*								*		*		*		*	*		*							
130					*	*																*	*				
131									*																*	*	
132	*		*		*	*					*		*		*		*	*		*		*	*				
133				*	*	*	*					*	*				*			*		*	*	*		*	*	
134	*	*									*	*			*		*	*		*	*						
135	*	*	*	*	*	*	*		*	*	*	*	*	*	*	*	*	*	*	*	*	*	*		*	*	*

*** Structure Table of Model ***

MODEL / FIG.	TG53034	FQCE4	FQCE4D	FQRE4	FQRE4D	FSDRE4	FSDRE4A	T G 5 3 3 0 E 4	T G 5 P 3 W J R E 6	T G 5 9 0 E 4 6	FHMCE4	FHMCE4D	FHMCE4	FHMCE4D	FHMCE4	FHMCE4D	FHMCE4	FHMCE4D	FHMCE4	FHMCE4D	FHMCE4	FHMCE4D	FQRE4D	FQSDRE4A	T G 5 3 0 E 4	T G 5 9 W J R E 6	FPWJRE6						
136		**									**				*		**																
137				**		**		*				**				*			*		**		**				**						
138				**		**		*				**				*			*		**		**				**						
139								*																			*						
140																										*							
141						**																		**									
142											****					*																	
143		****																**	**				*										
144		**																**															
145											**				*																		
146									*																	*	*						
147				**		*			*			**				*			*		**		**			*	*						
148		**									**				*		**																
149		**									**						**																
150							*																	*									
151									*																		*						
152																										*							
153				**		**															*		***										
154												**				*																	
155		**															**																
156											**				*																		
157												**				*										*							
158									*																		*						
159						**																		**									
160												**																					
161									*																	*	*						
162											**				*																		
163				**																	*		*										
164																										*							
165		**															**																
166																*																	
167											****																						
168																										*							
169															*	*	*																
170											****															*							
171															*	*	*																
172						**																		**									
173															*	*	*																
174									*																	*	*						
175		****									****							**	**				*										
176						**																		**									
177											****																						
178		****																**	**				*										
179																										*							
180									*																		*						

*** Structure Table of Model ***

MODEL FIG.	TG5330E4	FQCE4	FQCE4D	FQRE4	FQRE4D	FSDRE4	FSDRE4A	TG5330E6	FPWJRE6	TG5390E4	FHMCE4	FHMCE4D	FHMRE4	FHMRE4D	FH3MCE4	FH3MCE4D	FH3MRE4	FQCE4	FQCE4D	FQRE4	FQRE4D	FSDRE4	FSDRE4A	TG5390E6	FHWJRE6	FPWJRE6
181															＊	＊	＊									
182									＊																＊	＊
183				＊	＊	＊	＊						＊	＊			＊			＊	＊	＊	＊			
184		＊	＊								＊	＊			＊	＊		＊	＊							
185		＊	＊															＊	＊							
186						＊	＊		＊													＊	＊		＊	＊
187		＊	＊	＊	＊						＊	＊	＊	＊	＊	＊	＊	＊	＊	＊	＊					
188		＊	＊								＊	＊			＊	＊		＊	＊							
189									＊																	＊
190																									＊	
191		＊	＊	＊	＊													＊	＊	＊	＊					
192											＊	＊	＊	＊												
193						＊	＊															＊	＊			
194																	＊									
195		＊	＊															＊	＊							
196															＊	＊										
197									＊																＊	＊
198		＊	＊	＊	＊	＊	＊				＊	＊	＊	＊	＊	＊	＊	＊	＊	＊	＊	＊	＊			
199									＊																＊	＊
200				＊	＊	＊	＊						＊	＊			＊			＊	＊	＊	＊			
201									＊																＊	＊
202				＊	＊	＊							＊	＊			＊			＊	＊	＊				
203							＊																＊			
204		＊	＊								＊	＊			＊	＊		＊	＊							
205		＊	＊															＊	＊							
206											＊	＊														
207		＊	＊								＊	＊			＊	＊		＊	＊							
208															＊	＊										
209		＊	＊								＊	＊						＊	＊							
210		＊	＊								＊	＊			＊	＊		＊	＊							
211		＊	＊								＊	＊			＊	＊		＊	＊							
212		＊	＊								＊	＊			＊	＊		＊	＊							
213		＊	＊								＊	＊			＊	＊		＊	＊							
214		＊	＊								＊	＊			＊	＊		＊	＊							
215		＊	＊								＊	＊			＊	＊		＊	＊							
216						＊	＊																			
217																						＊	＊			
218		＊	＊	＊	＊																					
219																		＊	＊	＊	＊					
220									＊																	
221																										＊
222											＊	＊	＊	＊	＊	＊	＊								＊	
223											＊	＊	＊	＊												
224						＊	＊															＊	＊			
225		＊	＊	＊	＊													＊	＊	＊	＊					

*** Structure Table of Model ***

MODEL / FIG.	T G 5 3 3 0 E 4	F Q C E 4 D	F Q C E 4 D	F Q R E 4 D	F S D R E 4	F S D R E 4	T G 5 3 3 0 E 4 A	T G F P W J E 6	F H M C E 4	F H M C E 4	F H M R E 4	F H M R E 4 D	F H 3 M C E 4 D	F H 3 M R E 4 D	F Q C E 4 D	F Q C E 4 D	R E 4 D	F Q R E 4 D	F S D R E 4 A	5 3 9 0 E 4 6	F H W J R E 6	F P W J R E 6
226																					*	
227								*														*
228												*	*	*								
229									*	*	*	*		*							*	
230	*	*	*	*	*	*		*							*	*	*	*	*			*
231	*	*							*	*		*	*		*	*						
232	*	*							*	*		*	*		*	*						
233	*	*	*	*	*	*		*	*	*	*	*	*	*	*	*	*	*		*	*	*
234	*	*	*	*	*	*			*	*	*	*	*	*	*	*	*	*				
235	*	*	*	*	*	*		*	*	*	*	*	*	*	*	*	*	*		*	*	*
236	T	T	T	T										T	T	T	T					
237	T	T	T	T	T	T		T	T	T	T	T	T	T	T	T	T	T		T		T
238									T	T	T	T	T	T	T	T	T	T		T		T
239	T	T	T	T	T	T		T	T	T	T	T	T	T	T	T	T	T		T		T
240									T	T	T	T	T	T	T	T	T	T		T		T
241	T	T	T	T	T	T		T	T	T	T	T	T	T	T	T	T	T		T		T
242	T	T	T	T	T	T		T	T	T	T	T	T	T	T	T	T	T		T		T
243	T	T	T	T	T	T		T	T	T	T	T	T	T	T	T	T	T		T		T
244	T	T	T	T	T	T		T	T	T	T	T	T	T	T	T	T	T		T		T
245									R	R	R	R	R	R						R		
246			T	T	T					T	T			T			T	T	T			
247	T	T							T	T			T		T	T						
248	T	T							T	T			T		T	T						
249							T												T			
250		T		T						T		T		T			T	T				
251	T	T							T	T			T		T	T						
252	R	R							R	R			R		R	R						
253	T	T							T	T			T		T	T						
254	T	T	T	T	T	T		T														
255									T	T	T	T	T	T	T	T	T	T		T		T
256					*	*			*	*	*	*							*	*		
257	*	*	*	*				*				*	*	*	*	*	*	*				*
258	R	R	R	R	R	R		R	R	R	R	R	R	R	R	R	R	R		R		R
259	*	*	*	*											*	*	*	*				
260												*	*	*								
261	*	*	*	*				*							*	*	*	*				*
262									*	*	*	*								*		
263	*	*	*	*	*	*		*	*	*	*	*	*	*	*	*	*	*		*		*
264	T	T	T	T	T			*	T	T	T	T	T	T	T	T	T	T		*		*
265	*	*	*	*				*							*	*	*	*		*		*
266	*	*	*	*	*	*		*	*	*	*	*	*	*	*	*	*	*		*		*
267	T	T	T	T	T	T		*	T	T	T	T	T	T	T	T	T	T		*		*
268	T	T							T	T			T		T	T						
269							*	*											*	*		*
270	*	*	*	*	*	*		*	*	*	*	*	*	*	*	*	*	*		*		*

*** Structure Table of Model ***

MODEL / FIG.	T G 5 3 3 0 E 4	F Q C E 4 D	F Q C E 4 D	F Q R E 4 D	F S D R E 4	F S D R E 4	T G 5 3 0 E 4 6 A	F P W J R E 6	T G 5 3 9 0 E 4	F H M C E 4	F H M C E 4	F H M C E 4	F H M C E 4 D	F H M C E 4 D	F H 3 M C E 4 D	F H 3 M R E 4 D	F Q C E 4 D	F Q C E 4 D	F Q R E 4 D	F Q R E 4 D	F S D R E 4	F S D R E 4	T G 5 3 9 0 E 4 6 A	F H W J R E 6	F P W J R E 6
271	*	*	*	*				*								*	*	*	*	*					*
272	*	*	*	*	*	*		*																	
273	*	*								*	*				*		*	*							
274	T	T								T	T				T		T	T							
275	*	*	*	*	*			*		*	*	*	*	*	*	*	*	*	*	*	*			*	*
276					*	*		*													*	*		*	*
277										*	*	*	*	*	*	*									*
278	*	*								*	*				*		*	*							
279	T	T	T	T	T	T		T		T	T	T	T	T	T	T	T	T	T	T	T	T		T	T

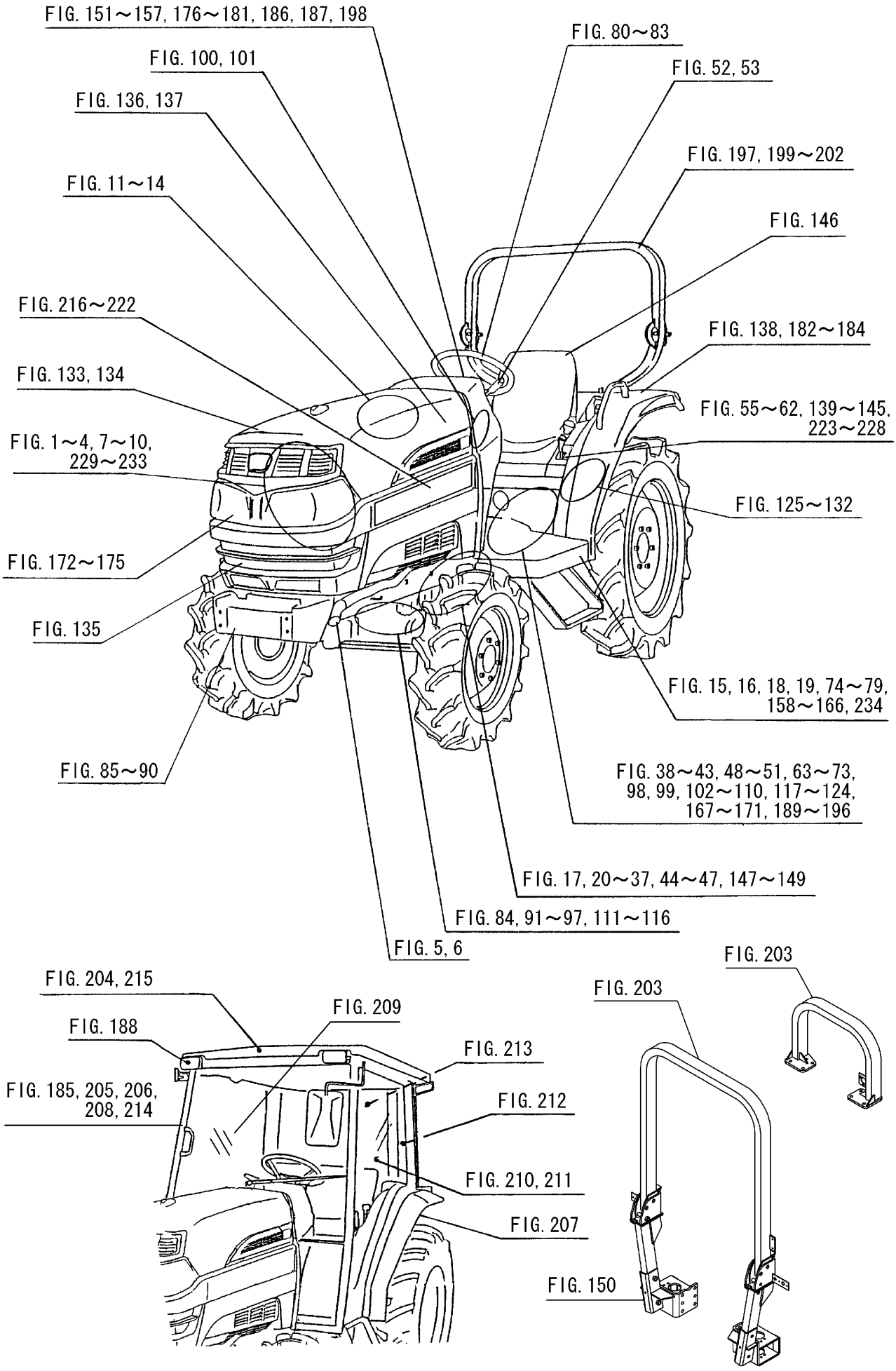
FIG. 151～157, 176～181, 186, 187, 198
FIG. 80～83
FIG. 100, 101
FIG. 52, 53
FIG. 136, 137
FIG. 197, 199～202
FIG. 11～14
FIG. 146
FIG. 216～222
FIG. 138, 182～184
FIG. 133, 134
FIG. 55～62, 139～145, 223～228
FIG. 1～4, 7～10, 229～233
FIG. 125～132
FIG. 172～175
FIG. 135
FIG. 15, 16, 18, 19, 74～79, 158～166, 234
FIG. 85～90
FIG. 38～43, 48～51, 63～73, 98, 99, 102～110, 117～124, 167～171, 189～196
FIG. 17, 20～37, 44～47, 147～149
FIG. 84, 91～97, 111～116
FIG. 5, 6
FIG. 203
FIG. 204, 215
FIG. 203
FIG. 209
FIG. 188
FIG. 213
FIG. 185, 205, 206, 208, 214
FIG. 212
FIG. 210, 211
FIG. 207
FIG. 150

Contents

TG5330E4(S-TYPE)

ENGINE(E3CDVB39)

Contents

TG5330E4(R-TYPE)

ENGINE(E3CDVB41)

Contents

TG5330E4(C-TYPE)

ENGINE(E3CDVB45)

Contents

TG5330E6

ENGINE(E3CDVB40)

Contents

TG5390E4(S-TYPE)

ENGINE(E3CDVTB09)

Contents

TG5390E4(R-TYPE)

ENGINE(E3CDVTB11)

Contents

TG5390E4(C-TYPE)

ENGINE(E3CDVTB12)

Contents

TG5390E6

ENGINE(E3CDVTB10)

Contents

CHASSIS

OPTIONAL PARTS

COMPONENT PARTS

WIRING DIAGRAM (E4/CY) (1)

WIRING DIAGRAM (E4/CY) (2)

WIRING DIAGRAM (E4/A) (1)

WIRING DIAGRAM (E4/A) (2)

E N G I N E

E3CDVB39···TG5330E4 (S-TYPE)

6005-097-570-30

FIG. 1 SHORT BLOCK ENGIASSY

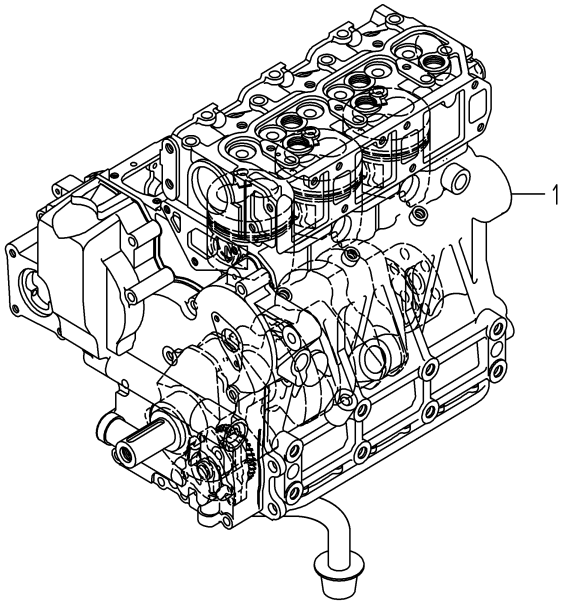

6005-015A-0100

KEY	PART CODE	DESCRIPTION	SPC	TYPE OF MODEL E3CD VB39		ITC	COL	GRP	REMARKS
1	6005-010-139-00	SHORTBLOCKENGIN ASSY	T	1					

FIG. 2 CYLINDER HEAD

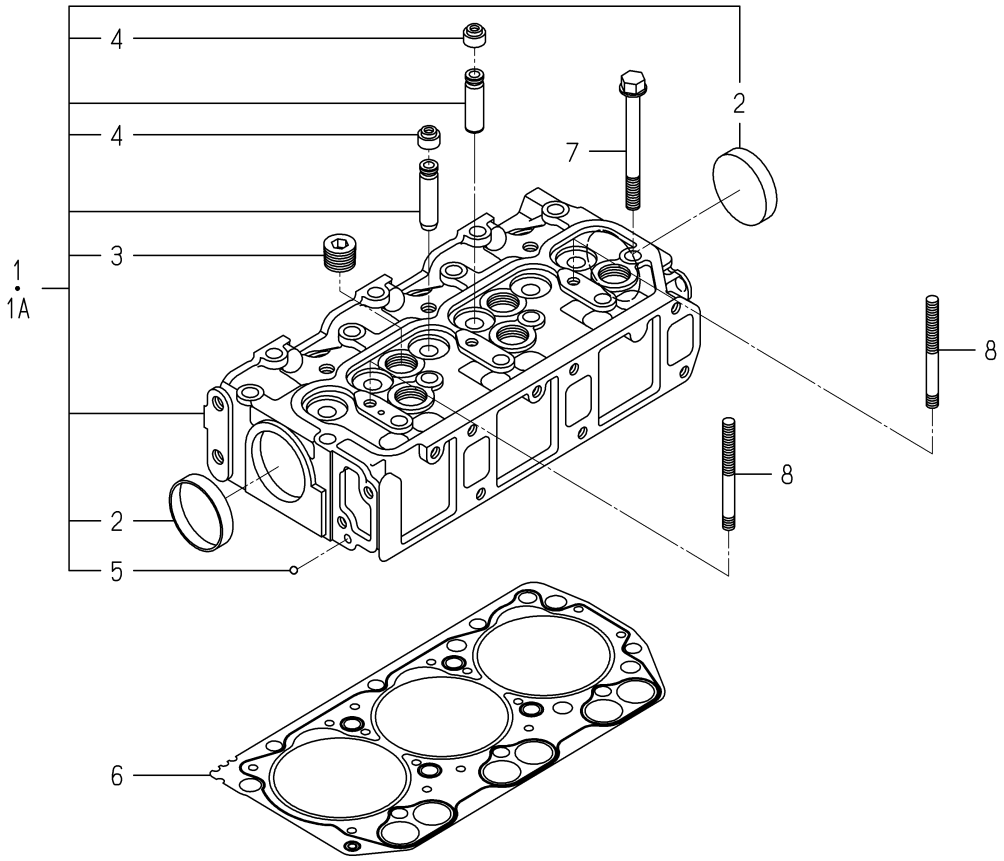

6005-101S-0100,6005-101S-0200

KEY	PART CODE	DESCRIPTION	SPC	TYPE OF MODEL E3CD VB39		ITC	COL	GRP	REMARKS
1	6211-110-084-10	CYLINDERHEAD ASSY	*	1 -195944					
1A	6211-110-084-20	CYLINDERHEAD ASSY	*	1 195945-		1			
2	6209-610-003-00	CUP/SEALING/50	*	2					
3	6209-605-004-10	PLUG/PT1/2	*	5					
4	6212-569-002-00	SEAL,OIL	*	6					
5	V682-200-000-60	BALL	*	1					
6	6211-141-057-10	GASKET/CYLINDERHEAD	*	1					
7	6209-000-005-00	BOLT	*	14					
8	6209-300-014-00	STUD	*	2					

FIG. 3 CYLINDER HEAD COVER

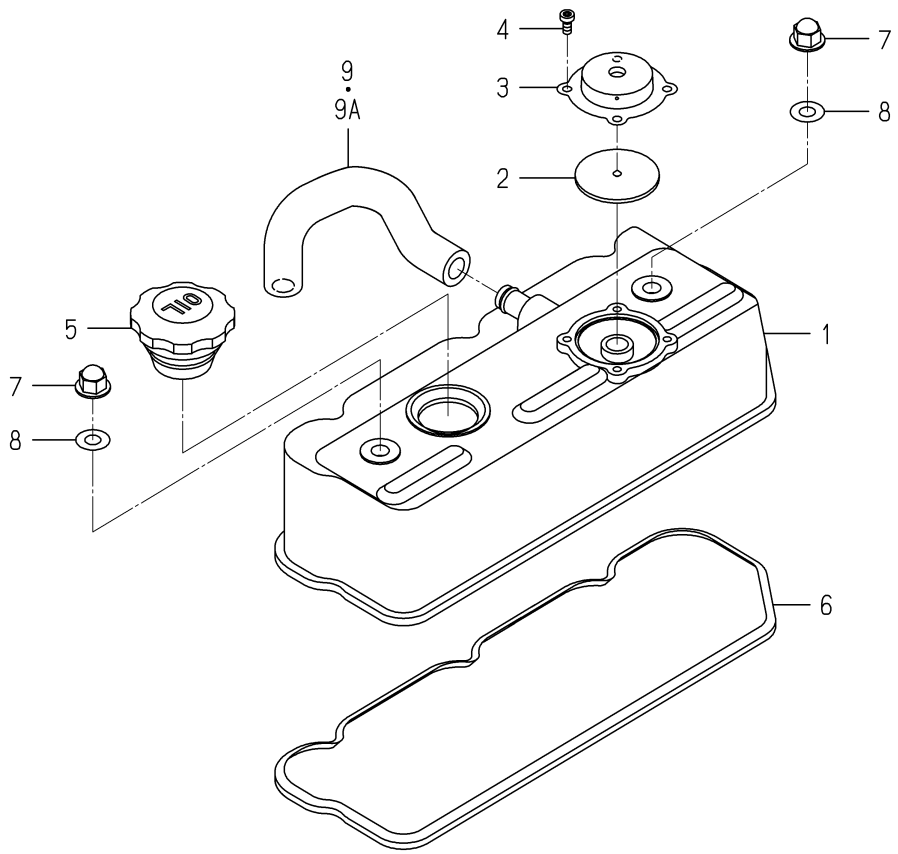

6005-110F-0100

KEY	PART CODE	DESCRIPTION	SPC	TYPE OF MODEL E3CD VB39		ITC	COL	GRP	REMARKS
1	6211-170-007-30	COVER/CYLINDER HEAD	*	1					
2	6211-179-011-20	RUBBERFLANGE	*	1					
3	6211-291-010-00	COVER/BLOWBY	*	1					
4	V195-164-008-30	SCREW/TAPPING	*	4					
5	6211-751-001-10	CAP,OIL FILLER	*	1					
6	6211-173-005-00	SEAL/CYL HEAD/UNDER	*	1					
7	6209-490-002-10	NUT/CAP	*	2					
8	6209-572-003-00	GASKET	*	2					
9	6209-360-109-00	HOSE/RUBBER	*	1 -177886					
9A	6209-360-109-10	HOSE/RUBBER	*	1 177887-		1			

FIG. 4 INLET MANIFOLD

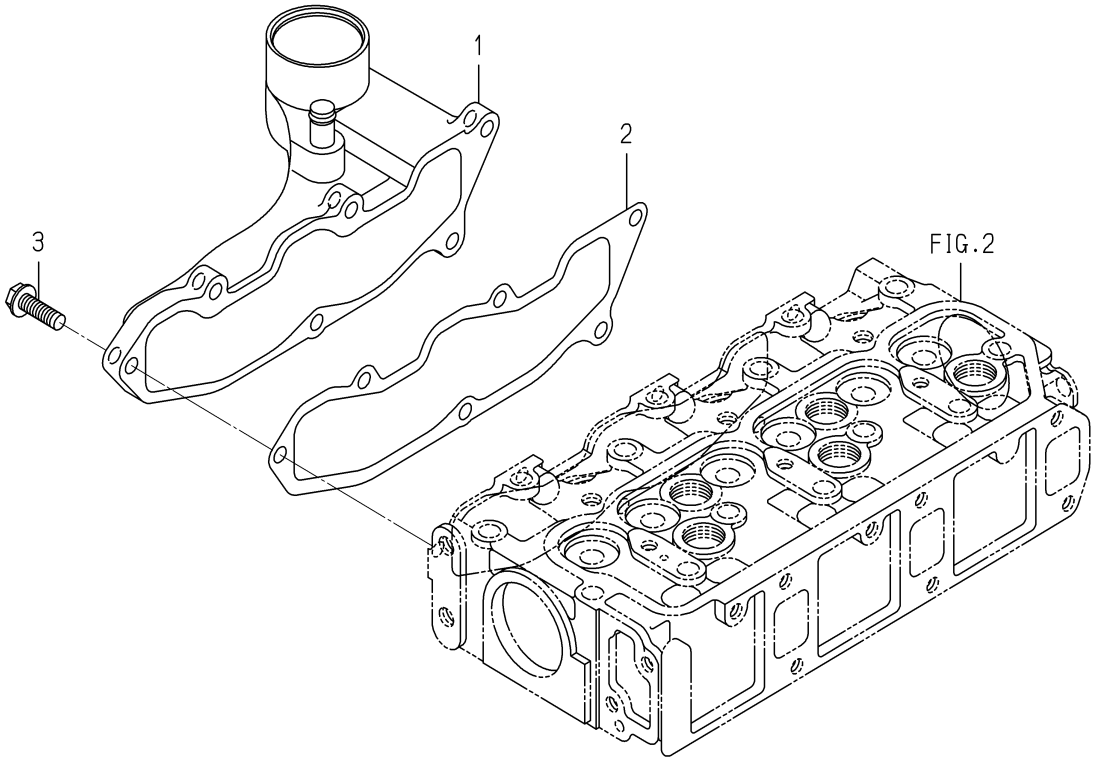

6005-120 -0100

KEY	PART CODE	DESCRIPTION	SPC	TYPE OF MODEL E3CD VB39		ITC	COL	GRP	REMARKS
1	6214-110-003-00	MANIFOLD/INLET ASSY	*	1					
2	6214-115-003-10	GASKET/INLETMANIFOLD	*	1					
3	V231-360-802-50	FLANGEBOLT	*	6					

FIG. 5 EXHAUST MANIFOLD

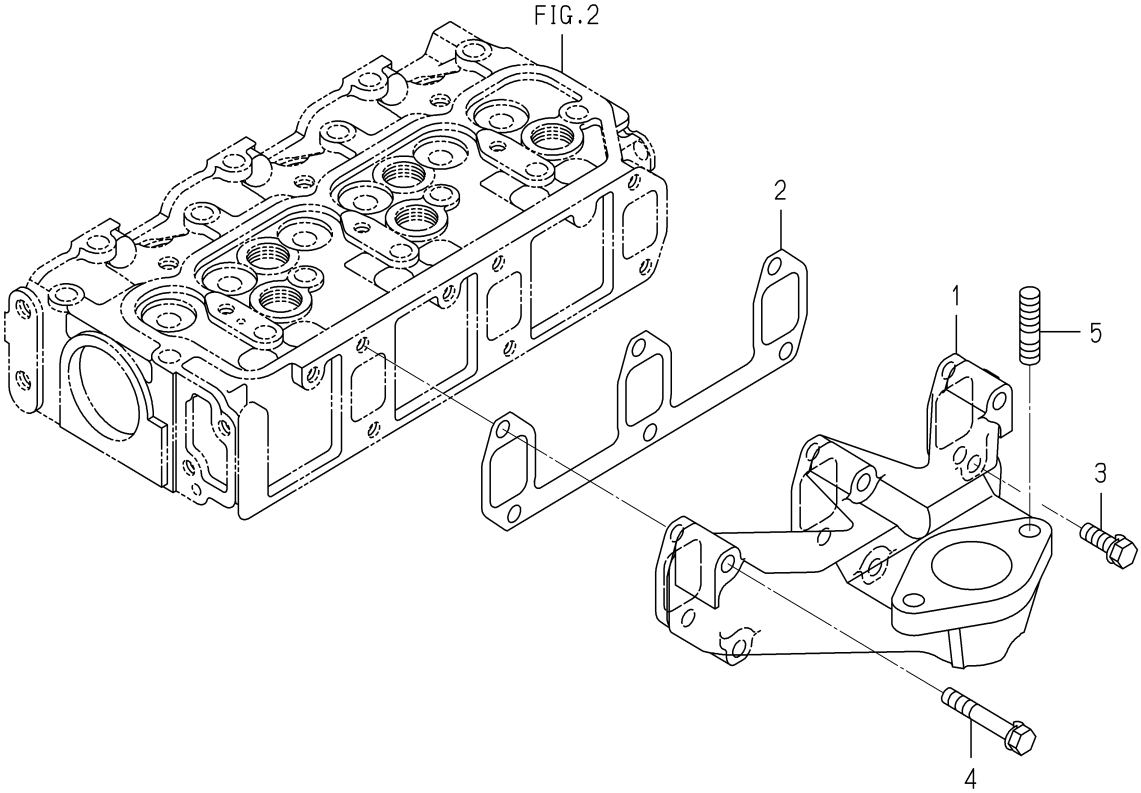

6005-140E-0100

KEY	PART CODE	DESCRIPTION	SPC	TYPE OF MODEL E3CD VB39		ITC	COL	GRP	REMARKS
1	6214-141-044-00	MANIFOLD/EXHAUST	*	1					
2	6214-145-004-20	GASHET/EXH MANIFOLD	*	1					
3	V211-560-802-50	BOLT,SEMS/M8X25 7T	*	1					
4	6509-030-037-00	BOLT	*	5					
5	6904-411-025-00	STUD	*	2					

FIG. 6 CYLINDER BLOCK

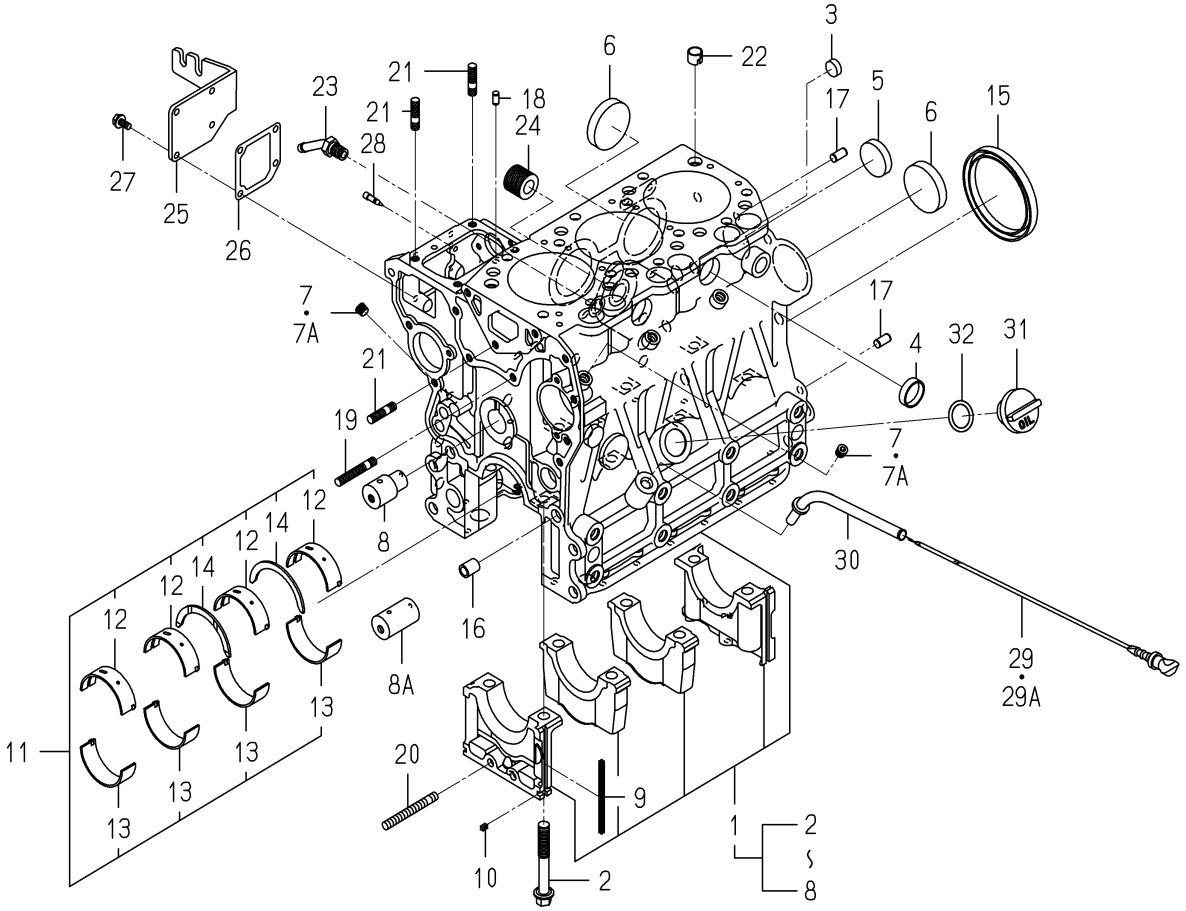

6005-203A-0100

KEY	PART CODE	DESCRIPTION	SPC	TYPE OF MODEL E3CD VB39		ITC	COL	GRP	REMARKS
1	6211-210-081-00	CYLINDERBLOCK ASSY	*	1					
2	6209-000-006-00	BOLT	*	8					
3	6209-610-007-00	CUP/SEALING/16	*	2					
4	6209-610-001-10	CUP/SEALING/28	*	2					
5	6209-610-009-00	CUP/SEALING/36	*	1					
6	6209-610-003-00	CUP/SEALING/50	*	3					
7	6509-605-019-10	PLUG	*	8 -199498					
7A	6209-605-007-00	PLUG/PT1/8	*	8 199499-					
8	6212-531-008-20	PIN/IDLEGEAR	*	1 -168830					
8A	6212-531-008-30	PIN/IDLEGEAR	*	1 168831-		3			
9	6211-258-001-00	SEAL,BEARING CAP	*	4					
10	6211-258-002-00	SEAL,BEARING CAP/7	*	2					
11	6211-510-008-00	BEARING/CRANK SET	*	1					
12	6211-511-007-00	BEARING/CRANK/UPPER	*	4					
13	6211-511-008-00	BEARING/CRANK/LOWER	*	4					
14	6211-599-004-00	BEARING/THRUST/CRANK	*	2					
15	6209-625-003-20	OILSEAL	*	1					
16	6209-749-001-20	PIN/TUBE	*	2					
17	6213-129-006-00	PIN/STRAIGHT	*	2					
18	6209-740-005-00	PIN	*	2					
19	6904-110-840-00	STUD/M8X40	*	1					
20	V251-340-806-00	BOLT/STUD	*	1					
21	6904-110-822-00	STUD	*	3					
22	6294-453-002-00	DOWEL	*	2					
23	6213-721-007-00	PIPE/WATERDRAIN	*	1					
24	6213-319-001-00	CONNECTOR,OIL FILTER	*	1					
25	6211-291-015-20	COVER/INJECTIONPUMP	*	1					
26	6211-292-001-20	GASKET/COVER	*	1					
27	V230-360-601-20	FLANGEBOLT	*	4					
28	6215-549-013-00	PIN	*	1					

FIG. 6 CYLINDER BLOCK

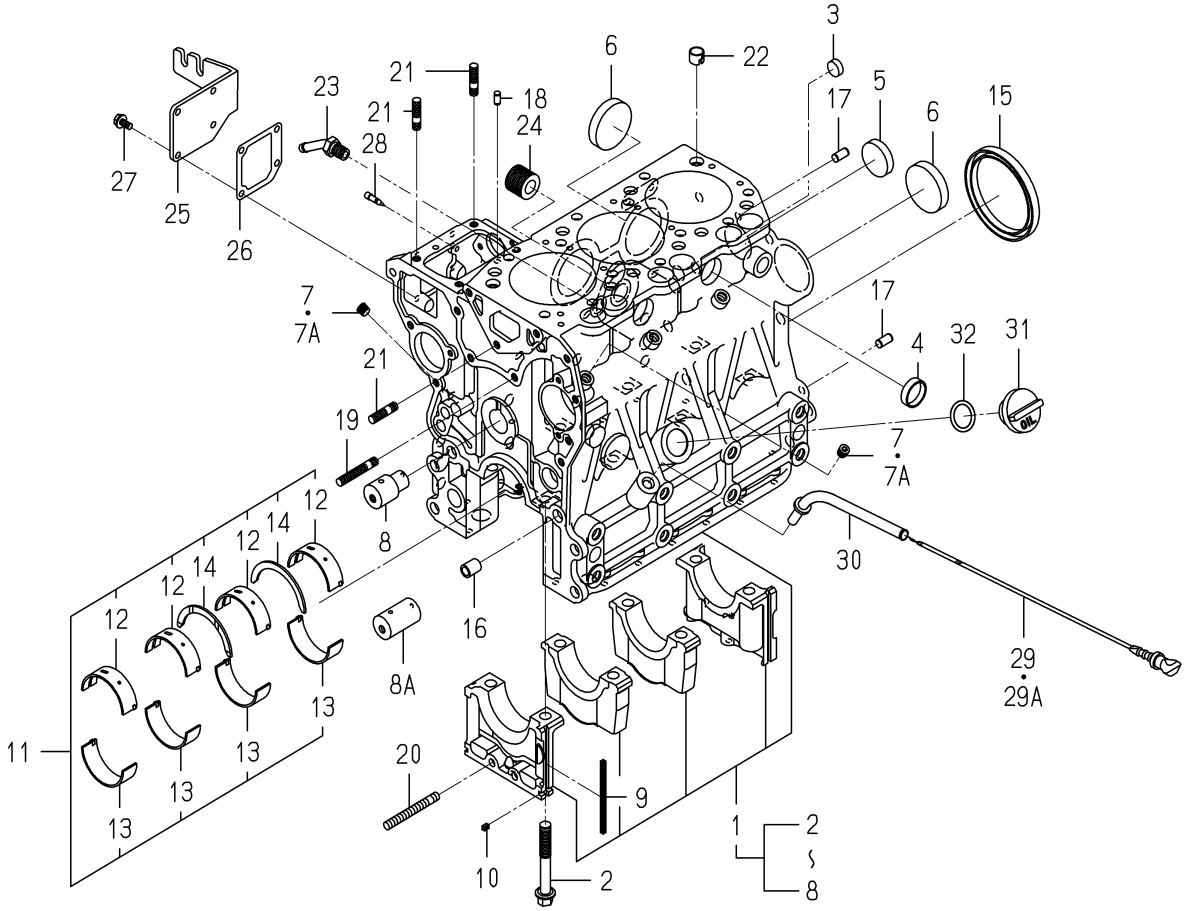

6005-203A-0100

KEY	PART CODE	DESCRIPTION	SPC	TYPE OF MODEL E3CD VB39		ITC	COL	GRP	REMARKS
29	6211-760-046-00	LEVELGAGE	*	1 -171504					
29A	6211-760-046-10	LEVELGAGE	*	1 171505-		1			
30	6211-766-033-00	GUIDE/LEVELGAGE COMP	*	1					
31	6211-751-002-00	CAP/OILFILLER	*	1					
32	V720-103-502-50	O-RING/P25	*	1					

FIG. 7 BEARING/UNDER SIZE (OPTION)

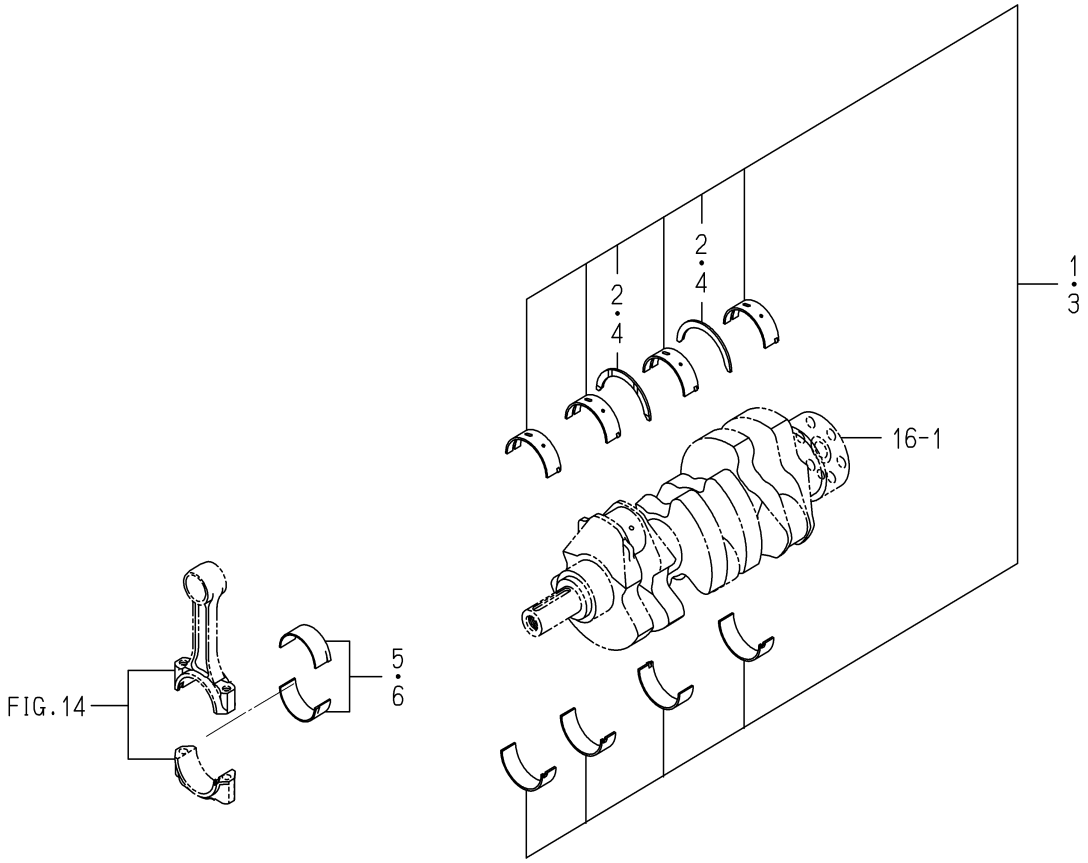

6005-209 -0100

KEY	PART CODE	DESCRIPTION	SPC	TYPE OF MODEL E3CD VB39		ITC	COL	GRP	REMARKS
1	6211-530-008-00	BEARING/CRANK/UNDER	T	1					
2	6211-599-004-00	BEARING/THRUST/CRANK	T	2					
3	6211-540-008-00	BEARING/CRANK/UNDER	T	1					
4	6211-599-004-00	BEARING/THRUST/CRANK	T	2					
5	6212-273-009-00	BEARING/CONNECTING R	T	3					
6	6212-274-009-00	BEARING/CONNECTING R	T	3					

FIG. 8 OIL PAN

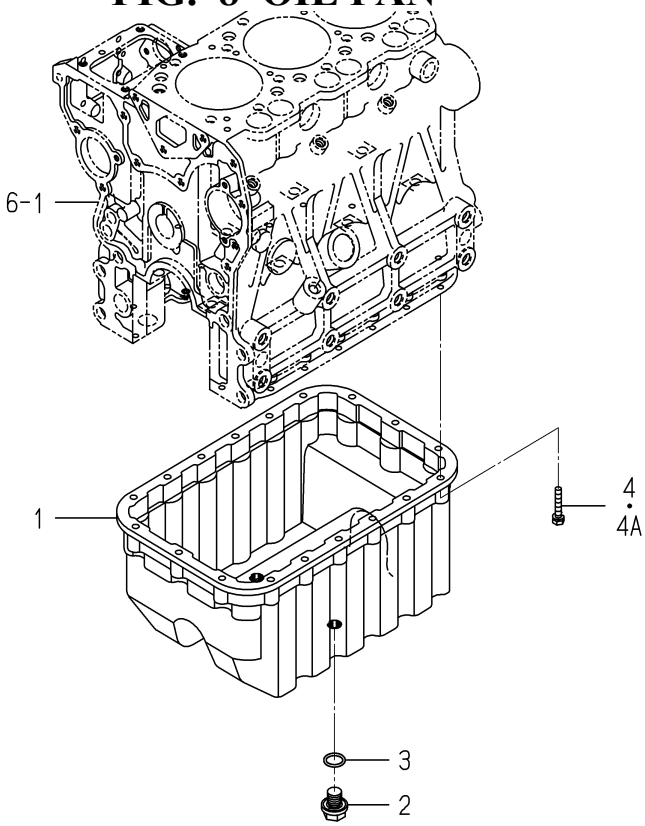

6005-210D-0100

KEY	PART CODE	DESCRIPTION	SPC	TYPE OF MODEL E3CD VB39		ITC	COL	GRP	REMARKS
1	6211-361-038-10	OILPAN	*	1					
2	3805-355-002-20	PLUG/M14X1.5	*	2					
3	V720-102-401-80	O-RING/P18	*	2					
4	6901-910-635-00	BOLT	*	18 -173475					
4A	V210-560-603-50	BOLT/S	*	18 173476-					

FIG. 9 REAR PLATE

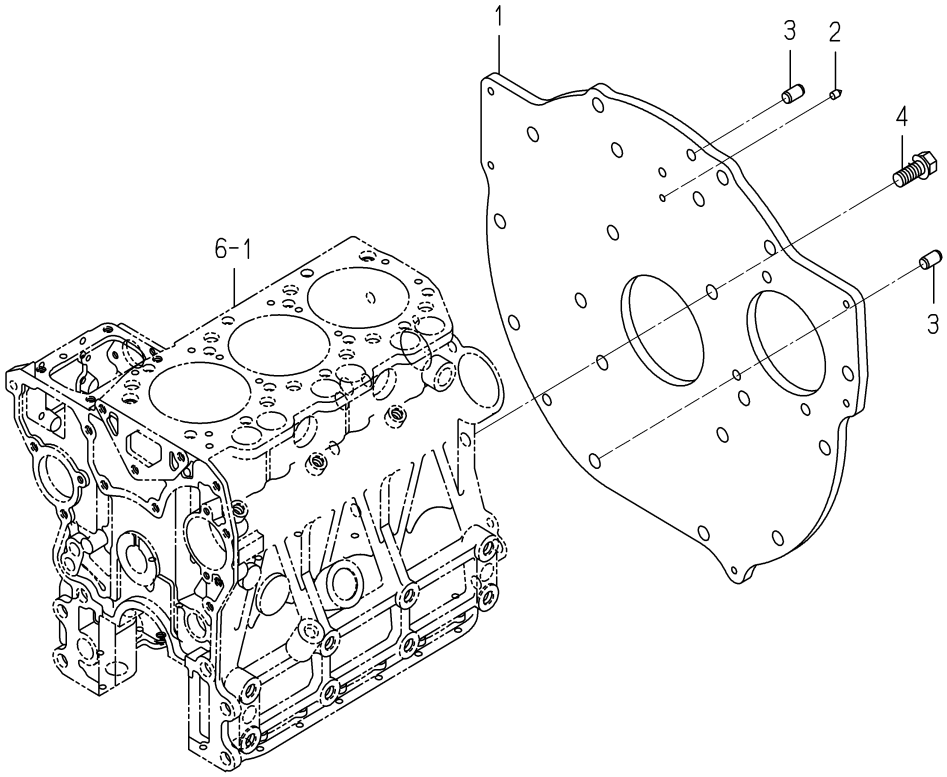

6005-220N-0100

KEY	PART CODE	DESCRIPTION	SPC	TYPE OF MODEL E3CD VB39		ITC	COL	GRP	REMARKS
1	6211-341-073-00	PLATE/REAR	*	1					
2	6211-342-003-10	POINTER	*	1					
3	V523-101-001-80	PIN	*	2					
4	6209-030-091-00	BOLT/WS	*	8					

FIG. 10 TIMING GEAR CASE

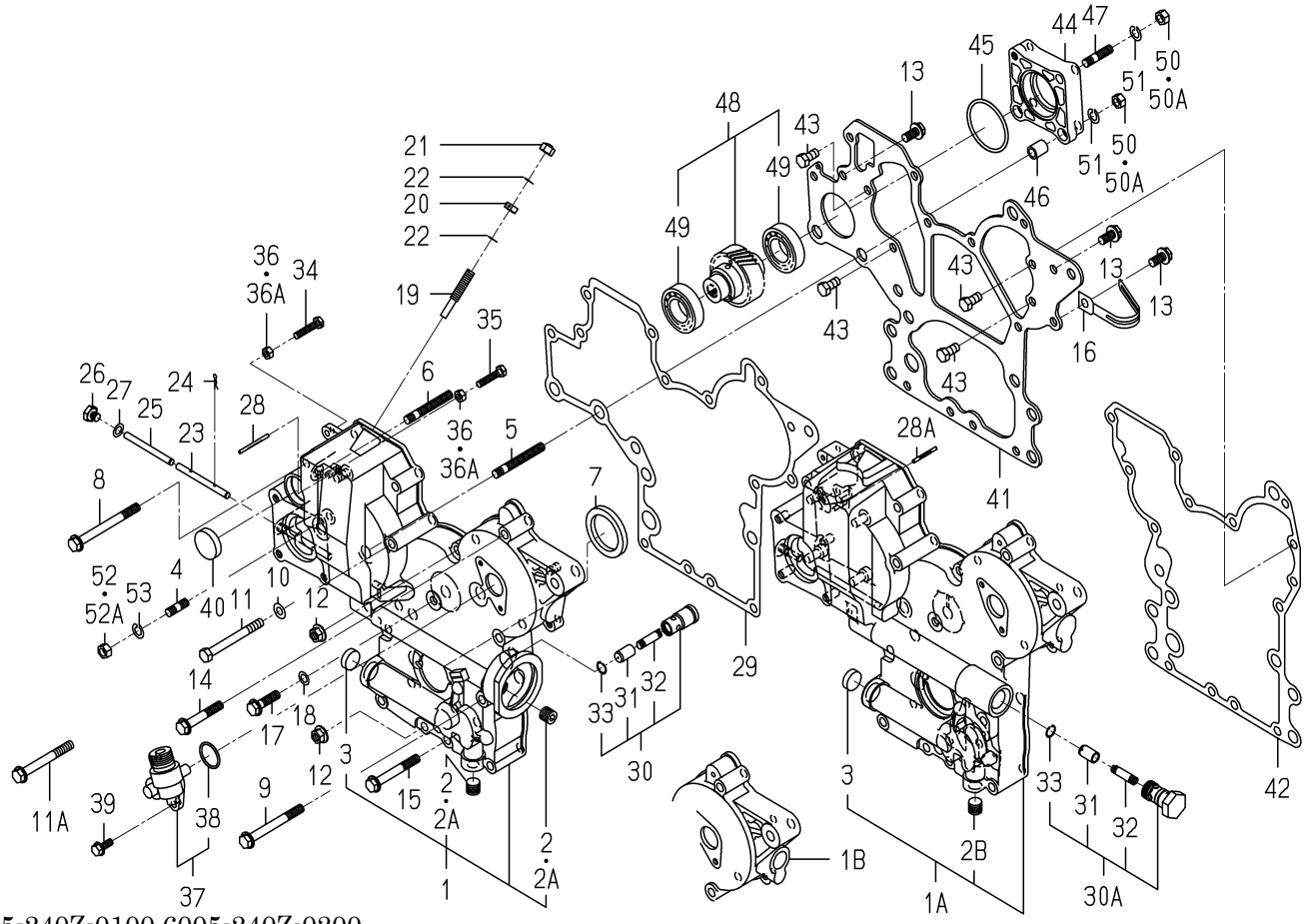

6005-240Z-0100,6005-240Z-0200

KEY	PART CODE	DESCRIPTION	SPC	TYPE OF MODEL E3CD VB39		ITC	COL	GRP	REMARKS
1	6211-310-009-60	GEARCASE ASSY	*	1 -180883					
1A	6211-310-009-70	GEARCASE ASSY	*	1 -192032		3			
1B	6211-310-009-80	GEARCASE ASSY	*	1 192033-		1			
2	6209-605-003-00	PLUG/PT1/4	*	2 -160372					
2A	6209-605-003-10	PLUG/PT1/4	*	2 -180883		1			
2B	6209-605-003-10	PLUG/PT1/4	*	1 180884-					
3	6209-610-004-00	CUP/SEALING/20	*	1					
4	6904-110-822-00	STUD	*	4					
5	6904-110-855-00	STUD	*	2					
6	6904-110-850-00	STUD	*	1					
7	6209-625-002-00	SEAL,OIL	*	1					
8	V231-360-808-50	FLANGEBOLT	*	1					
9	V231-360-807-50	FLANGEBOLT	*	1					
10	6209-500-006-00	WASHER/08X16X1.2	*	1 -181192					
11	V201-360-807-50	BOLT	*	1 -181192					
11A	V231-360-807-00	FLANGEBOLT	*	1 181193-					
12	3817-401-001-00	NUT/M08	*	2					
13	V231-360-801-60	FLANGEBOLT	*	3					
14	V231-360-805-00	FLANGEBOLT	*	3					
15	V231-360-806-00	FLANGEBOLT	*	4					
16	1650-650-015-00	CLAMP	*	1					
17	V231-360-803-00	FLANGEBOLT	*	1					
18	6209-500-003-00	WASHER/08X14X01	*	1					
19	6215-546-003-10	STOPPER/FULLLOAD	*	1					
20	6209-409-001-00	NUT/M8	*	1					
21	V341-120-008-00	NUT,CAP/M 8	*	1					
22	6209-920-002-00	PACKING	*	2					
23	6215-542-004-20	PIN/ARM	*	1					
24	P117-303-003-00	PIN/SNAP	*	2					
25	6215-542-005-10	PIN	*	1					

FIG. 10 TIMING GEAR CASE

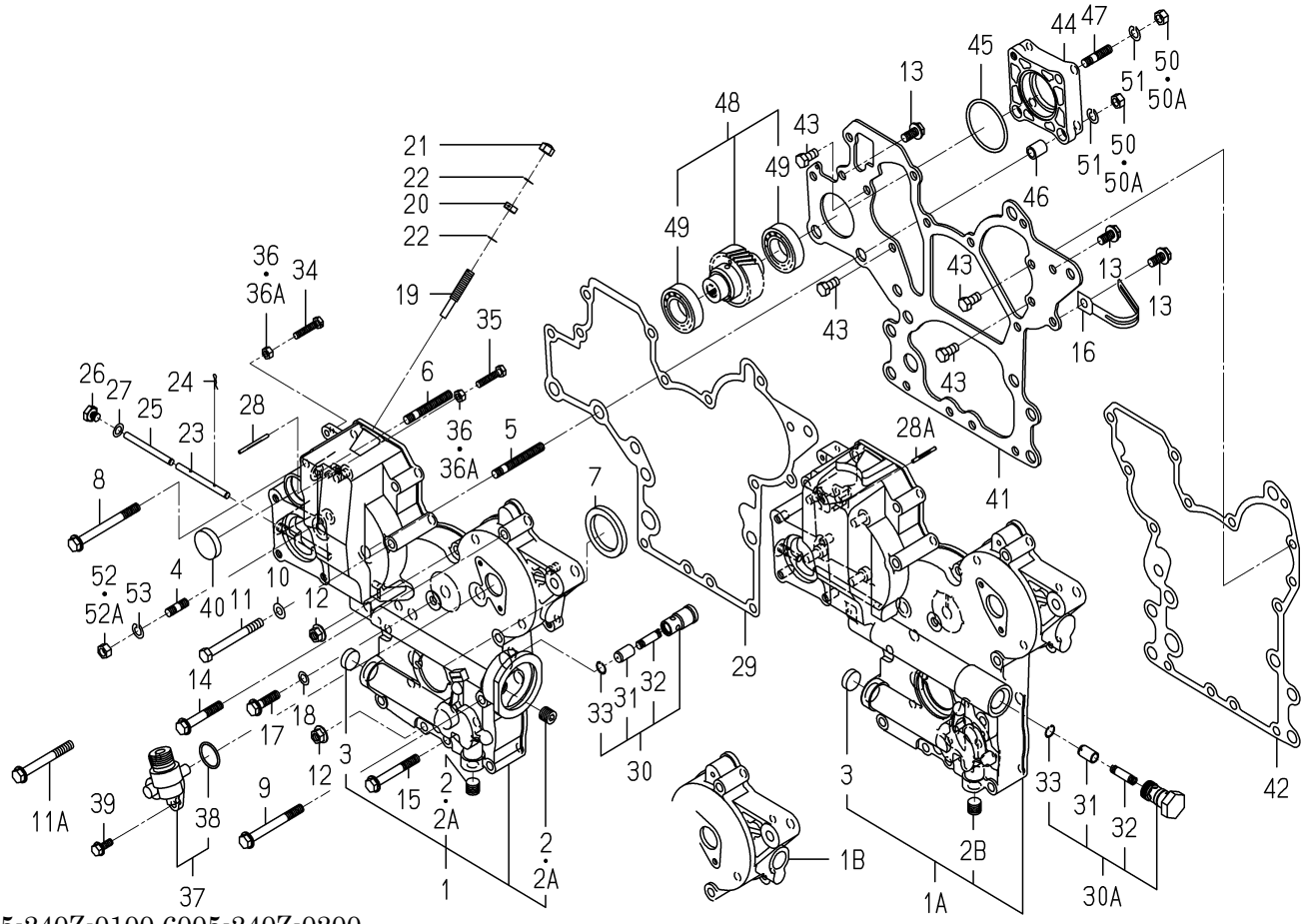

6005-240Z-0100,6005-240Z-0200

KEY	PART CODE	DESCRIPTION	SPC	TYPE OF MODEL E3CD VB39		ITC	COL	GRP	REMARKS
26	6209-600-004-00	PLUG/SCREW	*	1					
27	6209-500-003-00	WASHER/08X14X01	*	1					
28	6209-740-001-00	PIN,GROOVE	*	1 -181035					
28A	6209-740-006-00	PIN/GROOVE	*	1 181036-					
29	6211-312-005-10	GASKET/GEARCASE	*	1					
30	6213-160-003-10	VALVE/RELIEF ASSY	*	1 -181192					
30A	6213-160-005-00	VALVE/RELIEF ASSY	*	1 181193-					
31	6213-161-003-10	PISTON/VALVE/RELIEF	*	1					
32	6213-164-001-00	SPRING/RELIEF VALVE	*	1					
33	V705-140-012-00	RING,SNAP/12 C	*	1					
34	6209-050-001-00	BOLT/M6	*	1					
35	6209-050-002-00	BOLT/M6	*	1					
36	6909-110-406-00	NUT	*	2 -178577					
36A	V301-260-006-00	NUT/M6	*	2 178578-					
37	6219-310-003-20	DRIVE/TACHOMETE ASSY	*	1					
38	V723-102-002-40	RING/O	*	1					
39	V230-360-601-60	FLANGEBOLT	*	2					
40	3625-540-004-00	CAP,BLANK/30	*	1 -181192					
41	6211-311-013-20	PLATE/FRONT	*	1					
42	6211-312-006-10	GASKET/PLATE	*	1					
43	6902-050-816-00	BOLT	*	4					
44	6211-319-003-00	SPACER	*	1					
45	V723-102-005-00	O-RING 1A S50	*	1					
46	6209-749-001-20	PIN/TUBE	*	2					
47	6904-110-822-00	STUD	*	1					
48	6212-530-017-00	SHAFT/HYDRAULIC ASSY	*	1					
49	6209-800-011-00	BEARING	*	2					
50	6909-110-408-00	NUT/M8	*	4 -178577					
50A	V304-260-008-00	NUT	*	4 178578-					
51	V401-160-008-00	WASHER,SP/M 8	*	4					

FIG. 10 TIMING GEAR CASE

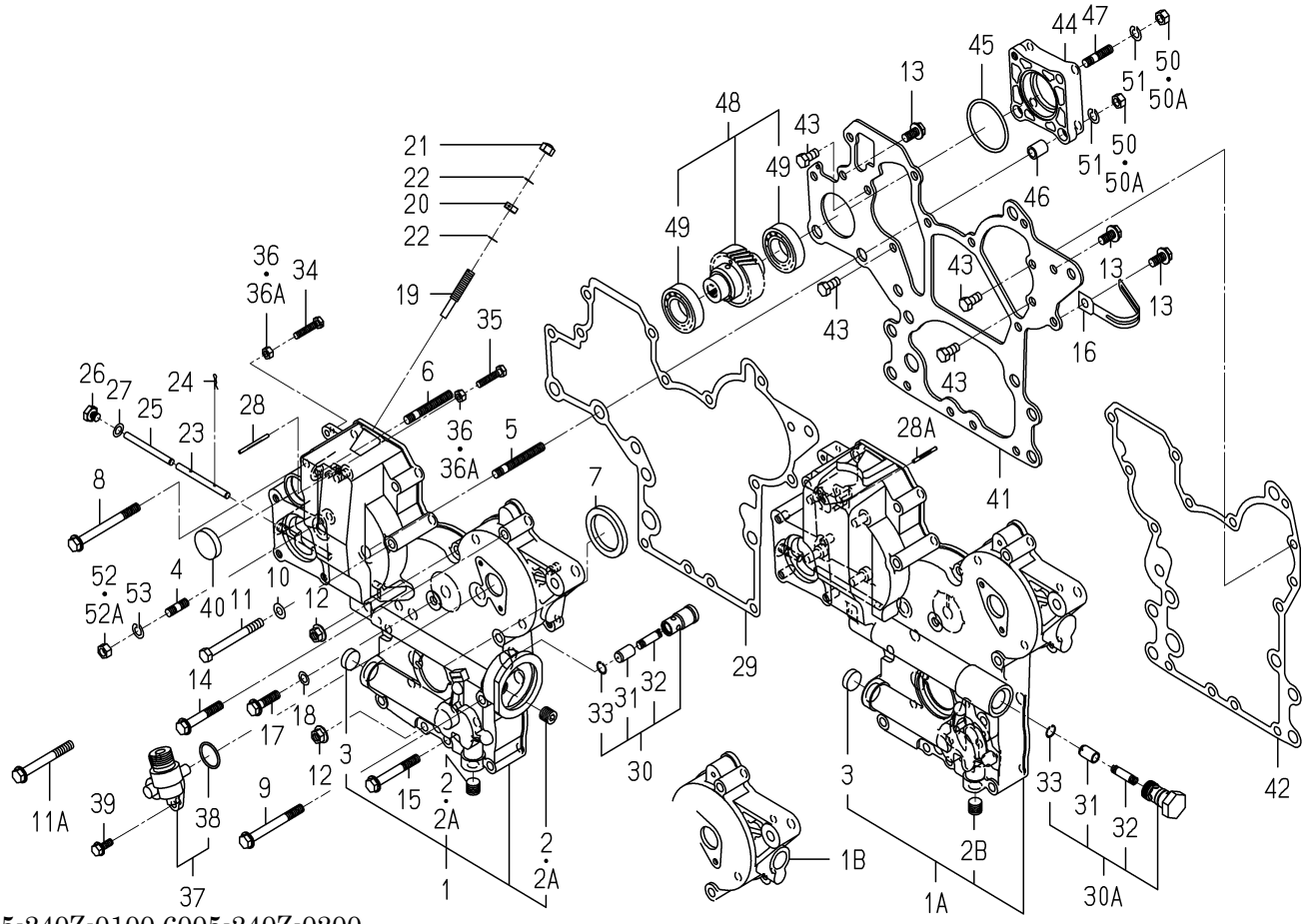

6005-240Z-0100,6005-240Z-0200

KEY	PART CODE	DESCRIPTION	SPC	TYPE OF MODEL E3CD VB39		ITC	COL	GRP	REMARKS
52	6909-110-408-00	NUT/M8	*	4 -178577					
52A	V304-260-008-00	NUT	*	4 178578-					
53	V401-160-008-00	WASHER,SP/M 8	*	4					

FIG. 11 HANGER

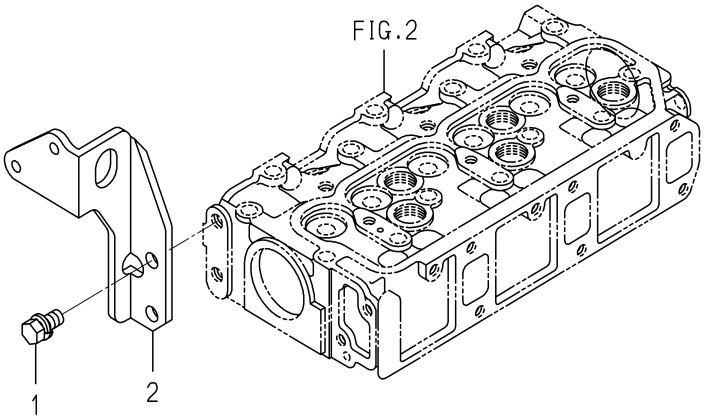

6005-290D-0100

KEY	PART CODE	DESCRIPTION	SPC	TYPE OF MODEL E3CD VB39		ITC	COL	GRP	REMARKS
1	6901-911-020-00	BOLT,SEMS/M10X20	*	2					
2	6211-777-021-00	HANGER/F	*	1					

FIG. 12 VALVE

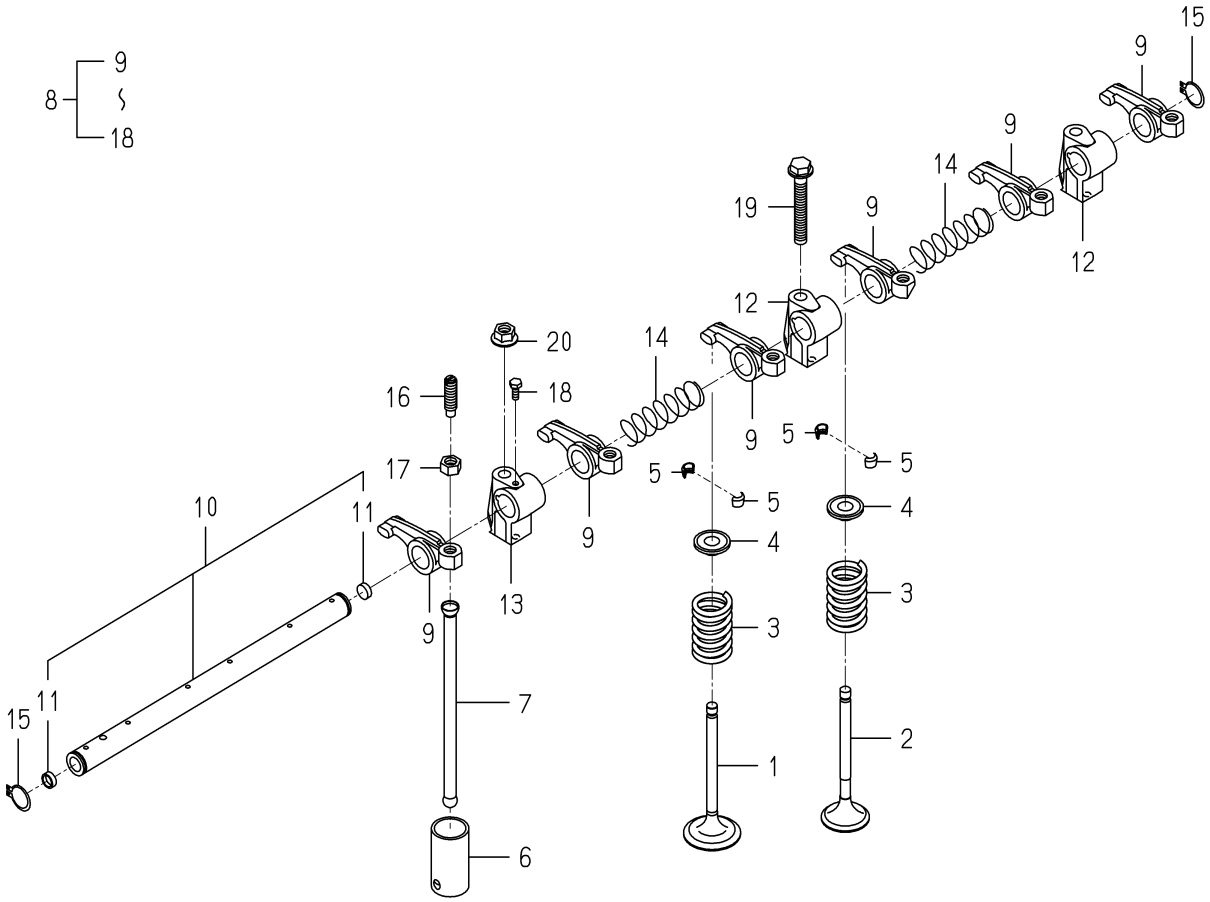

6005-301B-0100

KEY	PART CODE	DESCRIPTION	SPC	TYPE OF MODEL E3CD VB39		ITC	COL	GRP	REMARKS
1	6212-551-020-10	VALVE/INTAKE	*	3					
2	6212-552-008-00	VALVE/EXHAUST	*	3					
3	6212-561-003-00	SPRING/VALVE	*	6					
4	6212-563-001-00	SEAT,VALVE SPRING	*	6					
5	6212-565-001-00	CUTTER,VALVE	*	12					
6	6212-571-002-30	TAPPET	*	6					
7	6212-575-003-00	PUSHROD	*	6					
8	6212-600-009-20	ROCKERSHAFT ASSY	*	1					
9	6212-611-004-10	ROCKERARM	*	6					
10	6212-620-008-20	SHAFT/ROCKERARM ASSY	*	1					
11	6212-626-002-10	PLUG	*	2					
12	6212-628-010-10	BRACKET/ROCKERSHAFT	*	2					
13	6212-628-011-10	BRACKET/ROCKERSHAFT	*	1					
14	6209-940-004-00	SPRING	*	2					
15	V704-140-016-00	RING,SNAP/16 C	*	2					
16	6212-616-002-00	SCREW ADJUST	*	6					
17	6209-409-003-00	NUT	*	6					
18	6209-000-002-00	BOLT	*	1					
19	V231-360-805-50	FLANGEBOLT	*	1					
20	3817-401-001-00	NUT/M08	*	2					

FIG. 13 CAM SHAFT

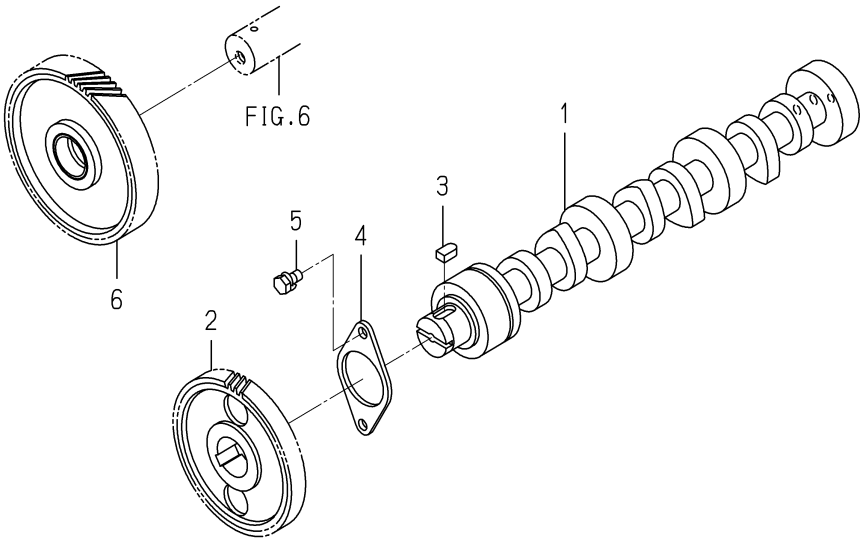

6005-310A-0100

KEY	PART CODE	DESCRIPTION	SPC	TYPE OF MODEL E3CD VB39		ITC	COL	GRP	REMARKS
1	6212-511-005-00	CAMSHAFT	*	1					
2	6212-522-004-10	GEAR/CAMSHAFT	*	1					
3	6209-730-005-00	KEY/07X05X09	*	1					
4	6212-535-007-00	PLATE/THRUST	*	1					
5	6901-910-612-00	BOLT,SEMS/M6X12	*	2					
6	6212-523-021-00	GEAR/IDLE ASSY	*	1					

FIG. 14 PISTON

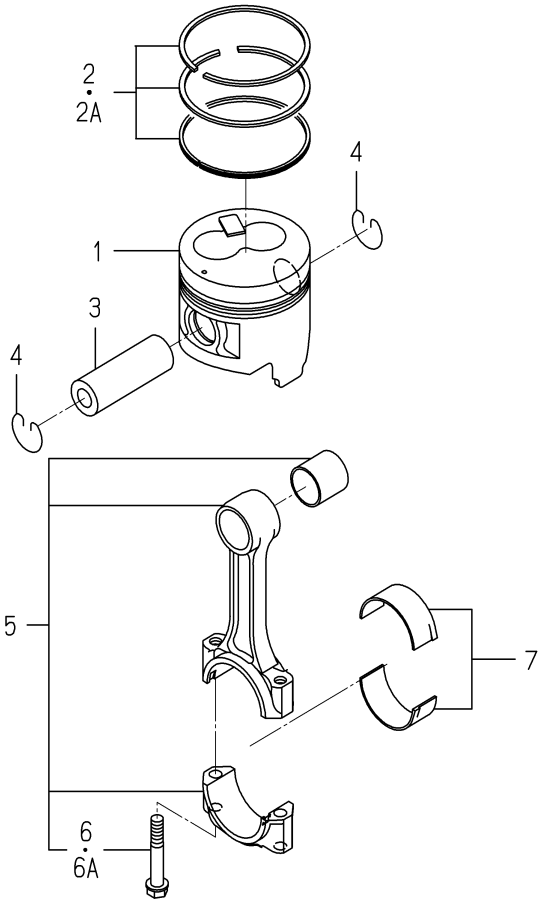

6005-340P-0100

KEY	PART CODE	DESCRIPTION	SPC	TYPE OF MODEL E3CD VB39		ITC	COL	GRP	REMARKS
1	6212-111-095-30	PISTON	*	3					
2	6212-121-028-00	RING/PISTONSET	*	3 -193231					
2A	6212-121-028-10	RING/PISTONSET	*	3 193232-		1			
3	6212-211-002-00	PIN/PISTON	*	3					
4	6909-950-115-00	RING SNAP	*	6					
5	6212-230-011-30	CONNECTINGROD ASSY	*	3					
6	6212-235-004-00	BOLT/CONNECTINGROD	*	6 -150480					
6A	6212-235-004-10	BOLT/CONNECTINGROD	*	6 150481-		1			
7	6212-271-009-00	BEARING/CONNECTING R	*	3					

FIG. 15 PISTON/OVER SIZE (OPTION)

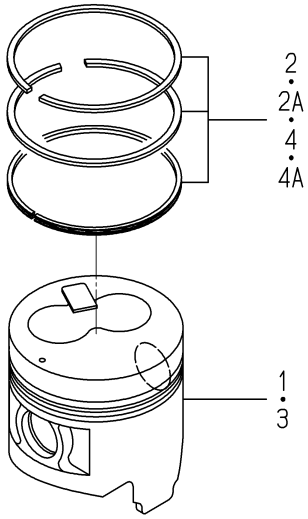

6005-349P-0100

KEY	PART CODE	DESCRIPTION	SPC	TYPE OF MODEL E3CD VB39		ITC	COL	GRP	REMARKS
1	6212-114-095-30	PISTON/OV	T	3					
2	6212-124-028-00	RING/PISTON/OVSET	T	3 -193231					
2A	6212-124-028-10	RING/PISTON/OVSET	T	3 193232-		1			
3	6212-116-095-30	PISTON/OV	T	3					
4	6212-126-028-00	RING/PISTON/OVSET	T	3 -193231					
4A	6212-126-028-10	RING/PISTON/OVSET	T	3 193232-		1			

FIG. 16 CRANK SHAFT

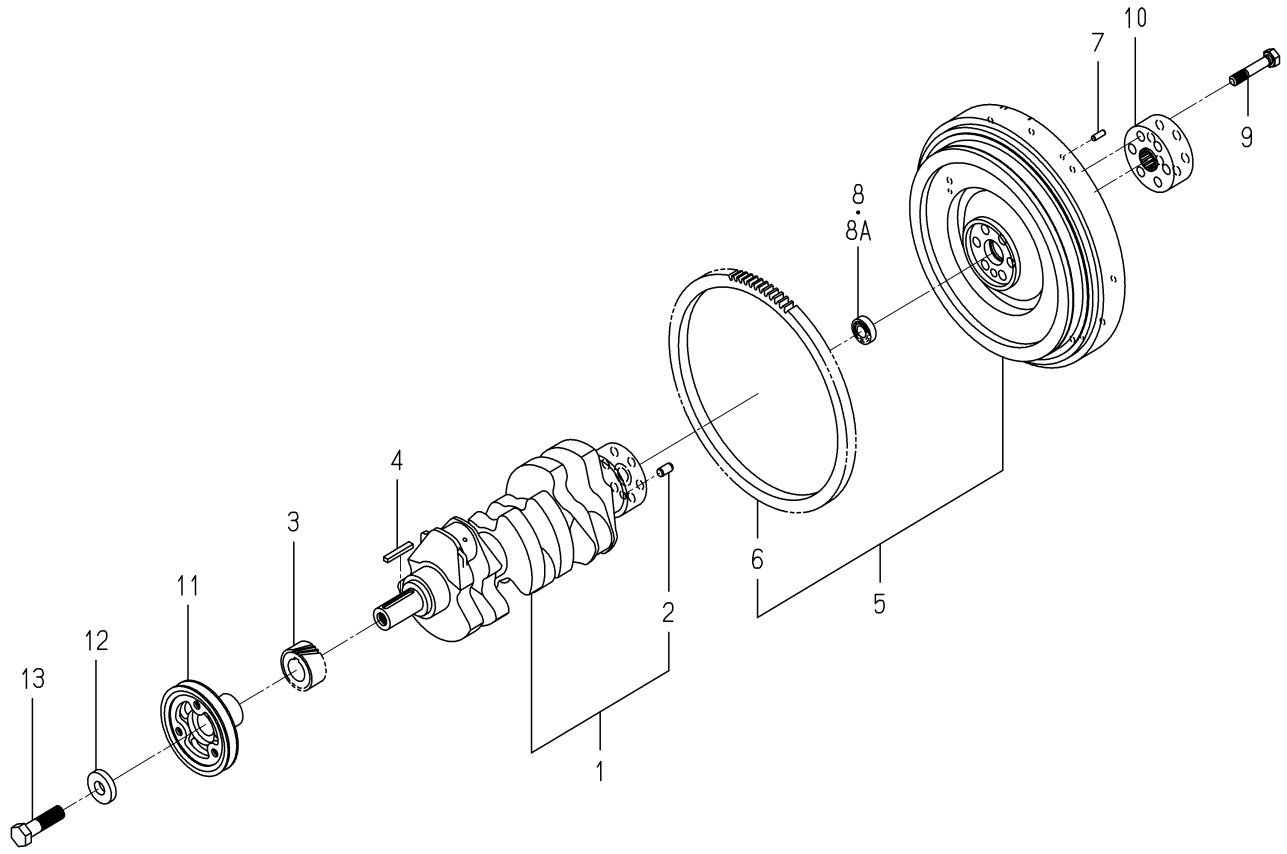

6005-351E-0100

KEY	PART CODE	DESCRIPTION	SPC	TYPE OF MODEL E3CD VB39		ITC	COL	GRP	REMARKS
1	6212-310-011-40	CRANKSHAFT ASSY	*	1 -174168					
2	V523-101-001-80	PIN	*	1 -174168					
3	6212-521-008-00	GEAR/CRANK	*	1 -174168					
4	6209-730-006-00	KEY/07X05X43	*	1 -174168					
5	6212-330-075-10	FLYWHEEL ASSY	*	1 -174168					
6	6212-333-002-00	RINGGEAR	*	1 -174168					
7	V523-100-601-80	PIN	*	3 -174168					
8	V600-150-600-20	BEARING,RB/6002SS	*	1 -155547					
8A	V600-350-600-20	BEARING/BALL	*	1 -174168					
9	6209-000-041-00	BOLT	*	6 -174168					
10	6212-339-009-10	BOSS/SPLINE	*	1 -174168					
11	6212-371-034-10	PULLEY/CRANK	*	1 -174168					
12	6212-379-001-00	WASHER	*	1 -174168					
13	6901-066-645-00	BOLT	*	1 -174168					

FIG. 17 CRANK SHAFT

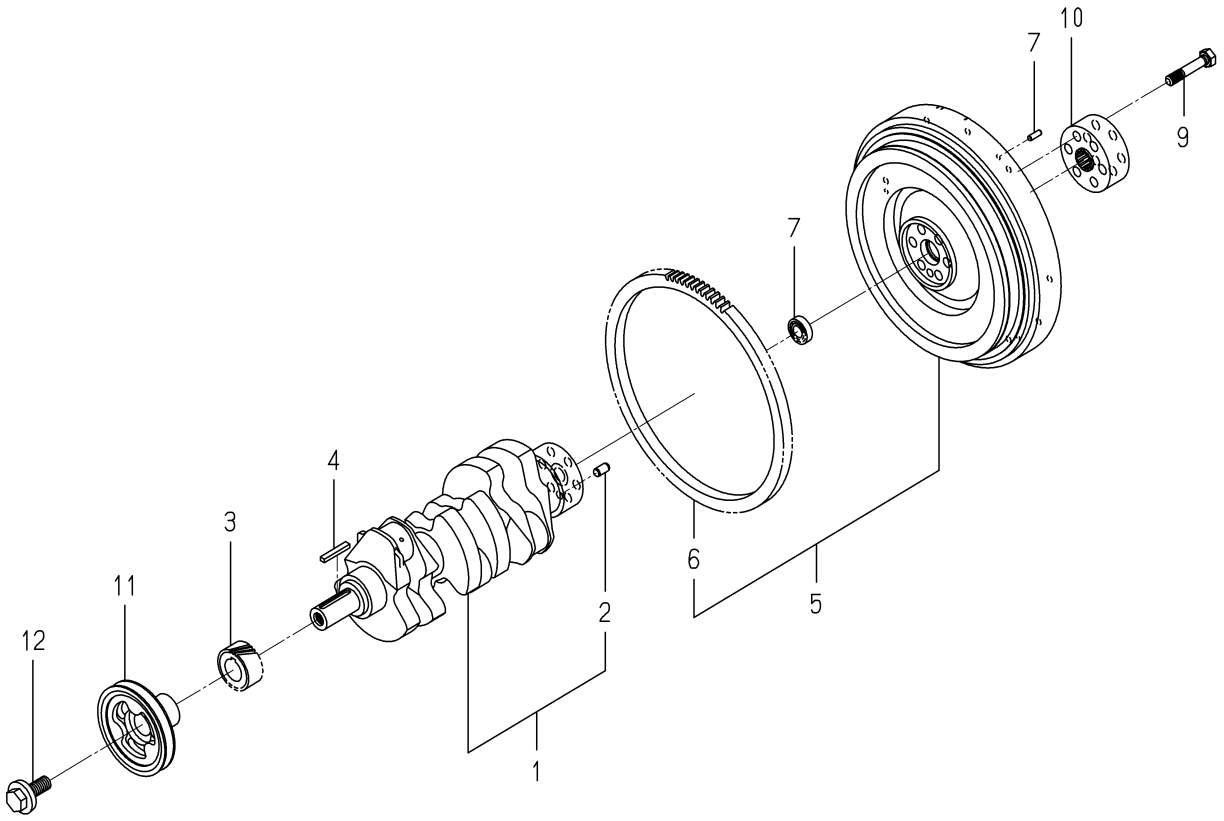

6005-351L-0100

KEY	PART CODE	DESCRIPTION	SPC	TYPE OF MODEL E3CD VB39		ITC	COL	GRP	REMARKS
1	6212-310-011-40	CRANKSHAFT ASSY	*	1 174169-					
2	V523-101-001-80	PIN	*	1 174169-					
3	6212-521-008-00	GEAR/CRANK	*	1 174169-					
4	6209-730-006-00	KEY/07X05X43	*	1 174169-					
5	6212-330-075-10	FLYWHEEL ASSY	*	1 174169-					
6	6212-333-002-00	RINGGEAR	*	1 174169-					
7	V523-100-601-80	PIN	*	3 174169-					
8	V600-350-600-20	BEARING/BALL	*	1 174169-					
9	6209-000-041-00	BOLT	*	6 174169-					
10	6212-339-009-10	BOSS/SPLINE	*	1 174169-					
11	6212-371-056-00	PULLEY/CRANK	*	1 174169-					
12	6209-000-043-00	BOLT/CRANK	*	1 174169-					

FIG. 18 OIL PUMP

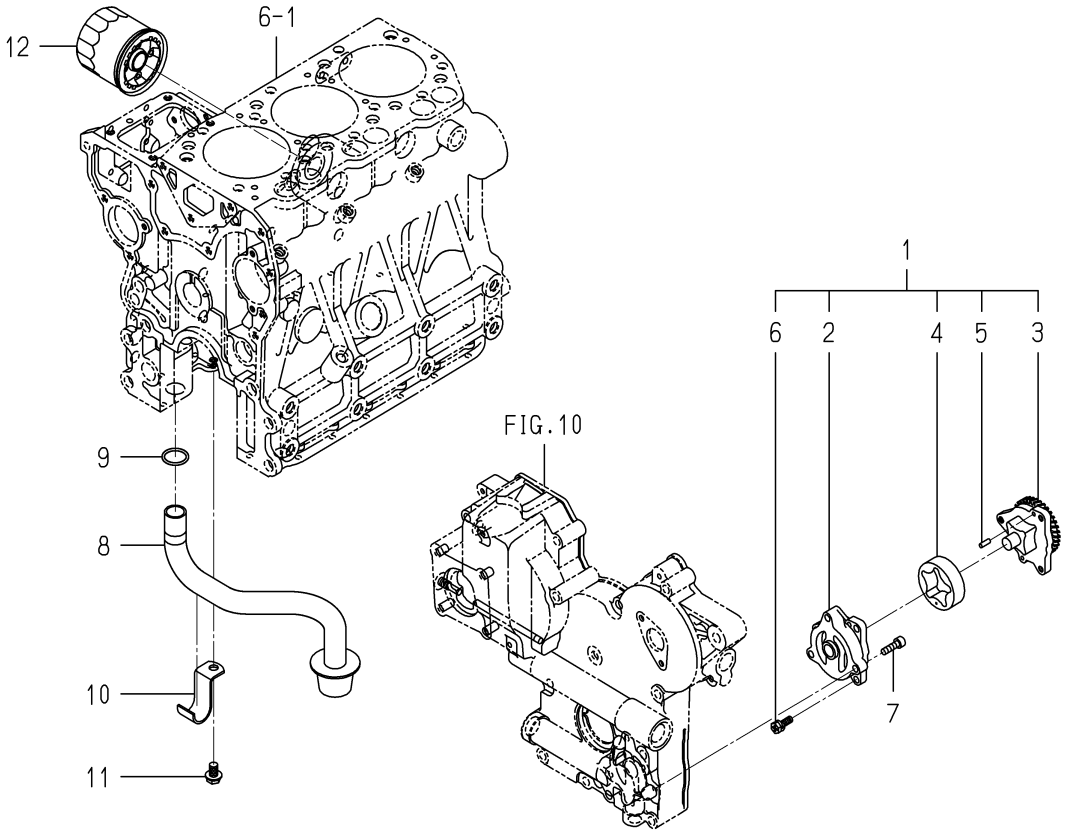

6005-401D-0100

KEY	PART CODE	DESCRIPTION	SPC	TYPE OF MODEL E3CD VB39		ITC	COL	GRP	REMARKS
1	6213-100-004-30	OILPUMP ASSY	*	1					
2	6213-111-002-20	BODY/OILPUMP	*	1					
3	6213-120-002-30	GEAR/OILPUMP ASSY	*	1					
4	6213-125-002-10	ROTOR/OUTER	*	1					
5	6213-129-003-00	PIN/STRAIGHT	*	2					
6	6213-119-001-00	BOLT/WS	*	3					
7	V220-540-602-00	SCREW/SOCKET	*	3					
8	6213-140-013-00	STRAINER	*	1					
9	V720-103-502-20	O-RING/P22	*	1					
10	6213-149-003-20	CLAMP/STRAINER	*	1					
11	V231-360-801-60	FLANGEBOLT	*	1					
12	6213-240-002-10	CARTRIDGE/OILFILTER	*	1					

FIG. 19 WATER PUMP

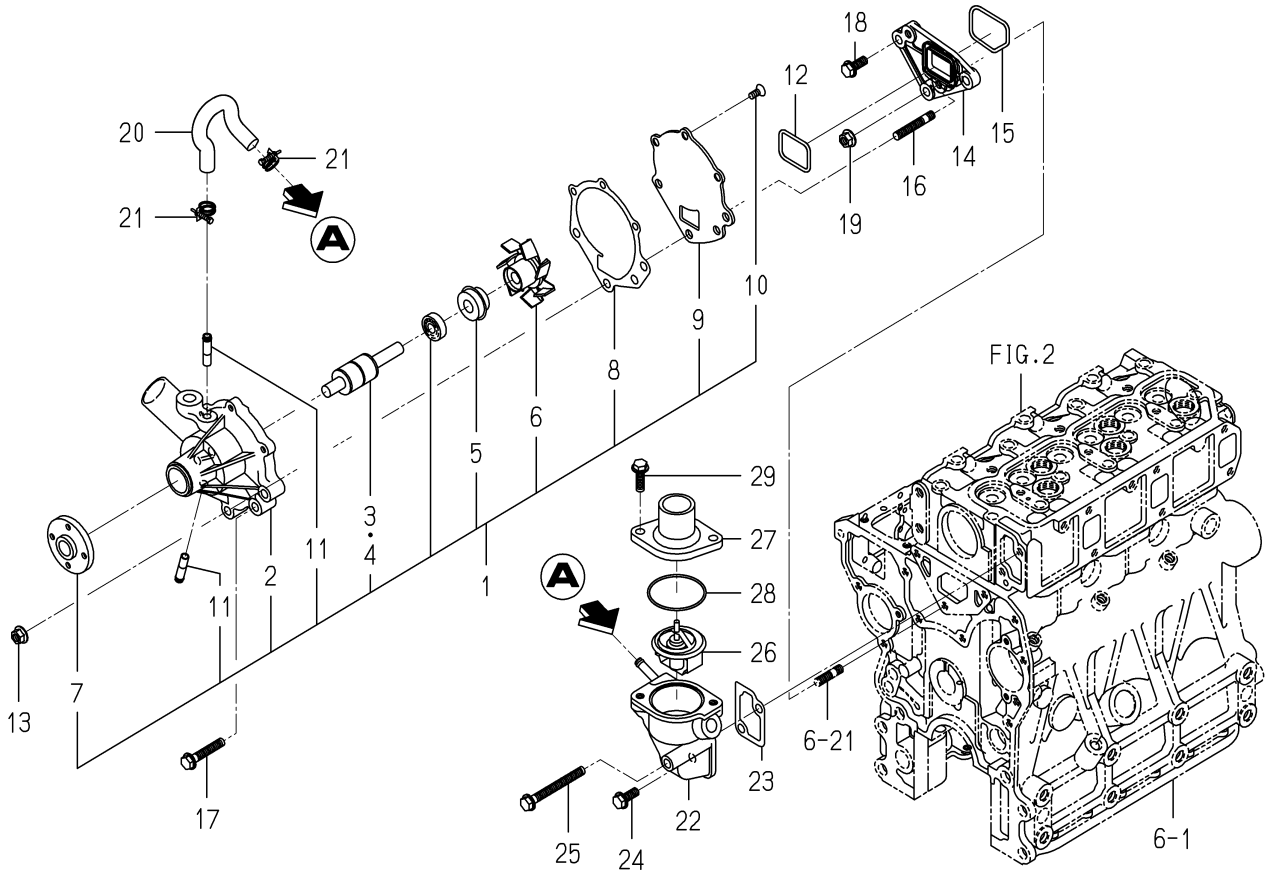

6005-420B-0100

KEY	PART CODE	DESCRIPTION	SPC	TYPE OF MODEL E3CD VB39		ITC	COL	GRP	REMARKS
1	6213-610-005-40	WATERPUMP ASSY	*	1 -139037					
2	6213-611-003-20	BODY/WATERPUMP	*	1 -139037					
3	6213-631-002-00	BEARING/WATER PUMP	*	1 -139037					
4	6213-631-005-00	BEARING/WATERPUMP	*	1 -139037					
5	6213-622-002-10	SEAL SET/WATER PUMP	*	1 -139037					
6	6213-621-003-00	ROTOR/WATERPUMP	*	1 -139037					
7	6213-642-002-00	SEAL/WATER PUMPPULLE	*	1 -139037					
8	6213-613-002-10	GASKET	*	1 -139037					
9	6213-612-004-00	PLATE/WATER PUMP	*	1 -139037					
10	6213-619-003-00	SCREW/WATER PUMP	*	3 -139037					
11	6213-619-002-00	PIPE/WATER PUMP	*	2 -139037					
12	V721-103-104-00	O-RING/G40	*	1 -139037					
13	3817-401-001-00	NUT/M08	*	2 -139037					
14	6213-619-006-00	SPACER/WATERPUMP	*	1 -139037					
15	V721-113-105-00	O-RING HS90 G50	*	1 -139037					
16	6904-110-840-00	STUD/M8X40	*	2 -139037					
17	V231-360-804-50	FLANGEBOLT	*	1 -139037					
18	V231-360-802-00	FLANGEBOLT	*	1 -139037					
19	3817-401-001-00	NUT/M08	*	1 -139037					
20	6213-729-013-10	HOSE/RUBBER	*	1 -139037					
21	J061-210-015-00	CLAMP/WIRE/10-15	*	2 -139037					
22	6213-716-001-50	HOUSING/THERMOSTAT	*	1 -139037					
23	6213-743-002-10	GASKET/HOUSING	*	1 -139037					
24	V231-360-802-00	FLANGEBOLT	*	1 -139037					
25	V231-360-807-50	FLANGEBOLT	*	1 -139037					
26	6513-770-022-10	THERMOSTAT	*	1 -139037					
27	6213-711-003-20	PIPE,WATER OUTLET	*	1 -139037					
28	V723-102-005-50	O-RING	*	1 -139037					
29	V231-360-802-50	FLANGEBOLT	*	2 -139037					

FIG. 20 WATER PUMP

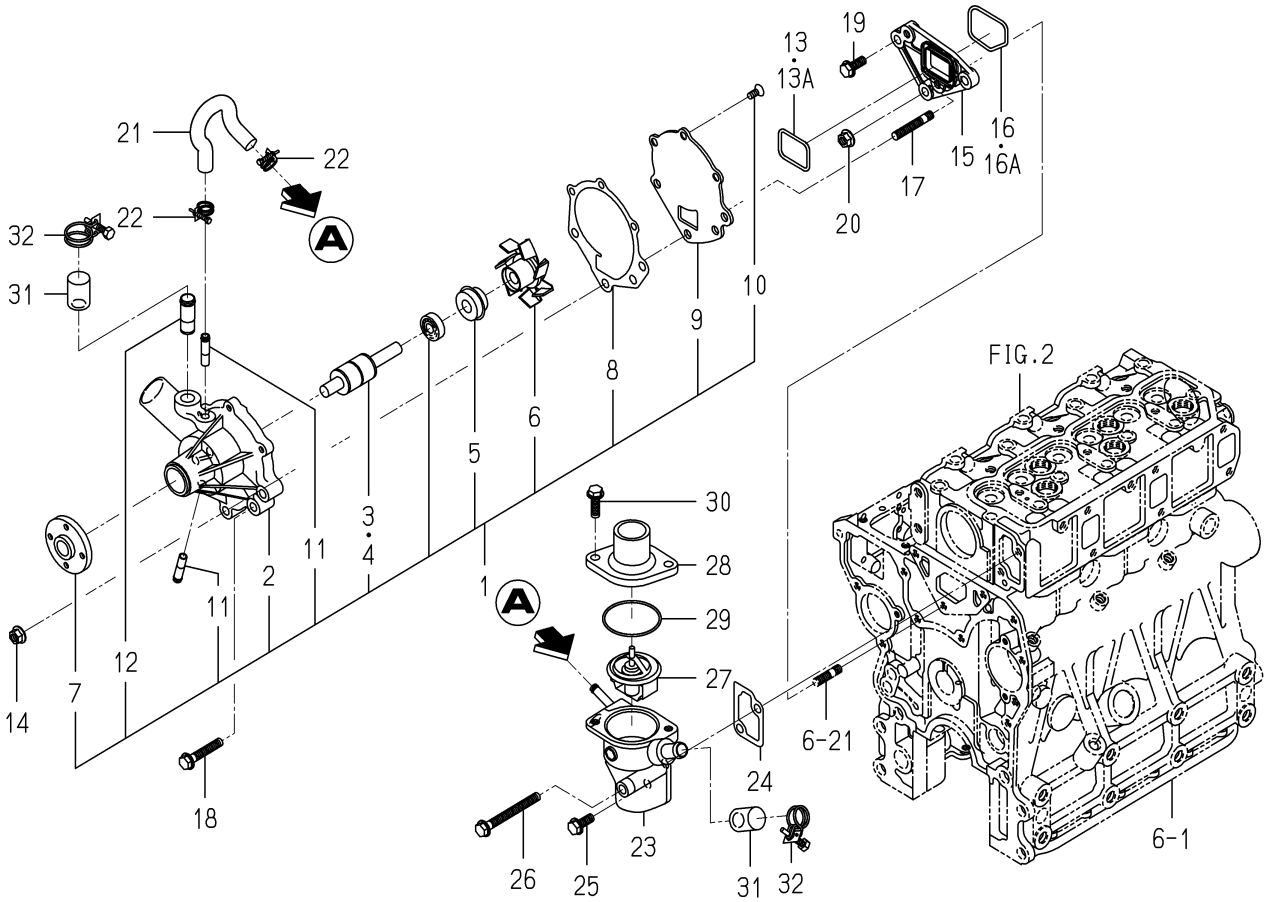

6005-420F-0100

KEY	PART CODE	DESCRIPTION	SPC	TYPE OF MODEL E3CD VB39		ITC	COL	GRP	REMARKS
1	6213-610-011-10	WATERPUMP ASSY	*	1 139038-					
2	6213-611-006-00	BODY/WATERPUMP	*	1 139038-					
3	6213-631-002-00	BEARING/WATER PUMP	*	1 139038-					
4	6213-631-005-00	BEARING/WATERPUMP	*	1 139038-					
5	6213-622-002-10	SEAL SET/WATER PUMP	*	1 139038-					
6	6213-621-003-00	ROTOR/WATERPUMP	*	1 139038-					
7	6213-642-002-00	SEAL/WATER PUMPPULLE	*	1 139038-					
8	6213-613-002-10	GASKET	*	1 139038-					
9	6213-612-004-00	PLATE/WATER PUMP	*	1 139038-					
10	6213-619-003-00	SCREW/WATER PUMP	*	3 139038-					
11	6213-619-002-00	PIPE/WATER PUMP	*	2 139038-					
12	6213-619-009-00	PIPE/WATERPUMP	*	1 139038-					
13	V721-103-104-00	O-RING/G40	*	1 -149415					
13A	6213-614-013-00	GASKET/WATERPUMP	*	1 149416-					
14	3817-401-001-00	NUT/M08	*	2 139038-					
15	6213-619-006-00	SPACER/WATERPUMP	*	1 139038-					
16	V721-113-105-00	O-RING HS90 G50	*	1 -149415					
16A	6213-614-014-00	GASKET/SPACER	*	1 149416-					
17	6904-110-840-00	STUD/M8X40	*	2 139038-					
18	V231-360-804-50	FLANGEBOLT	*	1 139038-					
19	V231-360-802-00	FLANGEBOLT	*	1 139038-					
20	3817-401-001-00	NUT/M08	*	1 139038-					
21	6213-729-013-10	HOSE/RUBBER	*	1 139038-					
22	J061-210-015-00	CLAMP/WIRE/10-15	*	2 139038-					
23	6213-716-004-10	HOUSING/THERMOSTAT	*	1 139038-					
24	6213-743-002-10	GASKET/HOUSING	*	1 139038-					
25	V231-360-802-00	FLANGEBOLT	*	1 139038-					
26	V231-360-807-50	FLANGEBOLT	*	1 139038-					
27	6513-770-022-10	THERMOSTAT	*	1 139038-					
28	6213-711-003-20	PIPE,WATER OUTLET	*	1 139038-					

FIG. 20 WATER PUMP

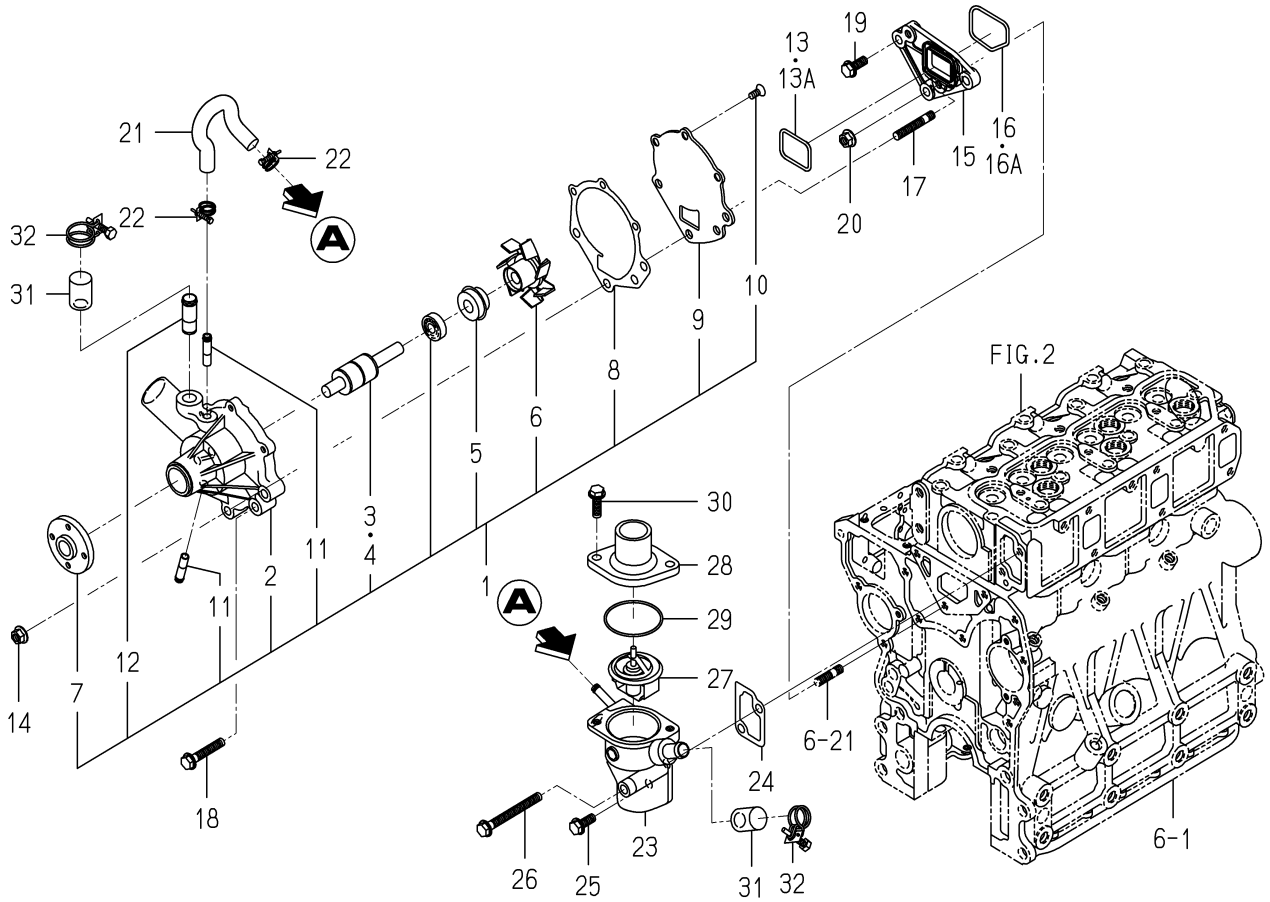

6005-420F-0100

KEY	PART CODE	DESCRIPTION	SPC	TYPE OF MODEL E3CD VB39		ITC	COL	GRP	REMARKS
29	V723-102-005-50	O-RING	*	1 139038-					
30	V231-360-802-50	FLANGEBOLT	*	2 139038-					
31	6213-729-011-00	CAP	*	2 139038-					
32	J061-220-024-00	CLAMP/WIRE/20-24	*	2 139038-					

FIG. 21 COOLING FAN

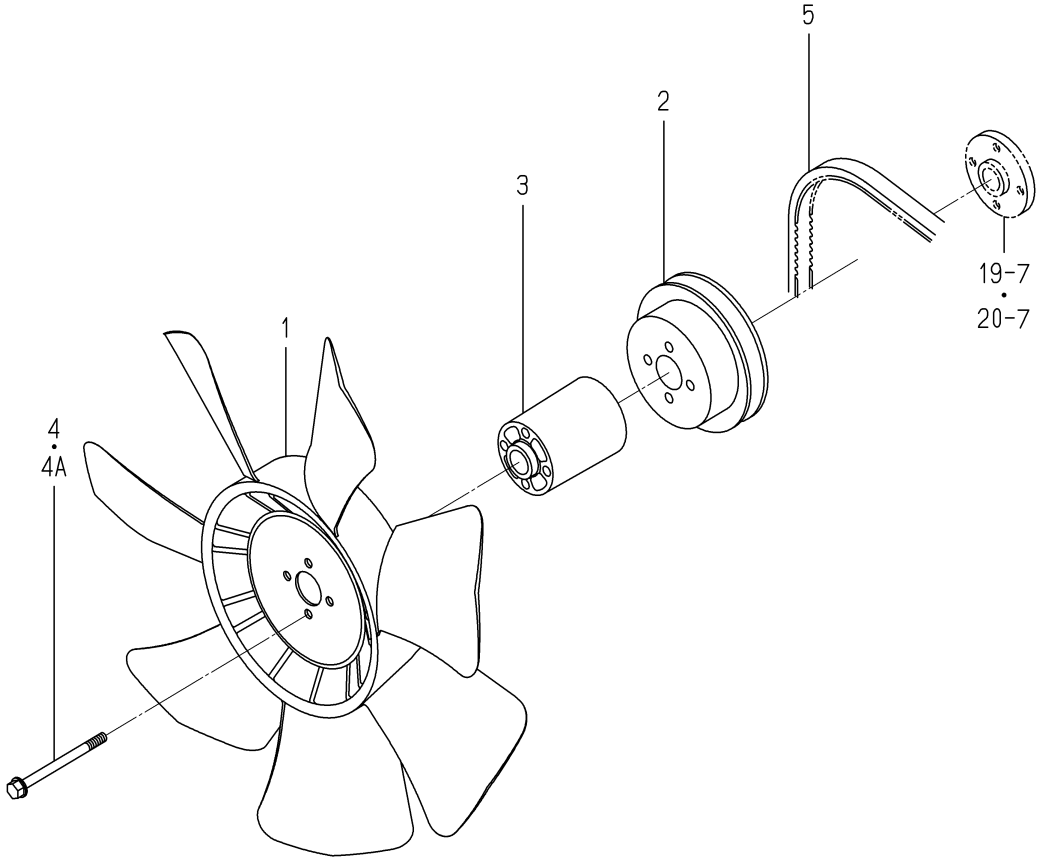

6005-480N-0100

KEY	PART CODE	DESCRIPTION	SPC	TYPE OF MODEL E3CD VB39		ITC	COL	GRP	REMARKS
1	6213-660-015-00	FAN/COOLING	*	1					
2	6213-641-022-10	PULLEY/WATERPUMP	*	1					
3	6213-669-009-00	SPACER/FAN/68	*	1					
4	6209-030-048-00	BOLT/WS	*	4 -194658					
4A	6209-046-007-00	BOLT/FLANGE	*	4 194659-					
5	6213-671-029-00	BELT/V R5 A38.5	*	1					

FIG. 22 INJECTION NOZZLE

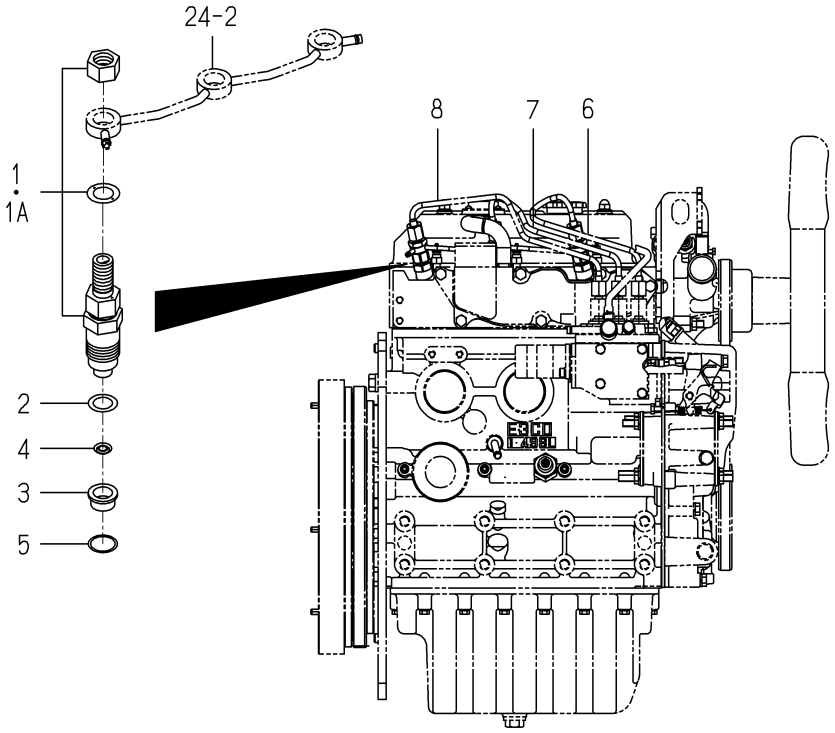

6005-501E-0100

KEY	PART CODE	DESCRIPTION	SPC	TYPE OF MODEL E3CD VB39		ITC	COL	GRP	REMARKS
1	6215-300-045-00	INJECTIONNOZZLE ASSY	*	3 -179743					FIG 031
1A	6215-300-045-10	INJECTIONNOZZLE ASSY	*	3 179744-		1			FIG 031
2	6215-315-002-00	GASKET,NOZZLE	*	3					
3	6215-315-006-00	HEATSHILD/NOZZLE	*	3					
4	6215-315-005-00	WASHER/CORRUGATE	*	3					
5	6215-315-007-00	GASKET	*	3					
6	6215-411-133-00	PIPE/INJECTION ASSY	*	1					
7	6215-411-134-00	PIPE/INJECTION ASSY	*	1					
8	6215-411-135-00	PIPE/INJECTION ASSY	*	1					

FIG. 23 INJECTION PUMP

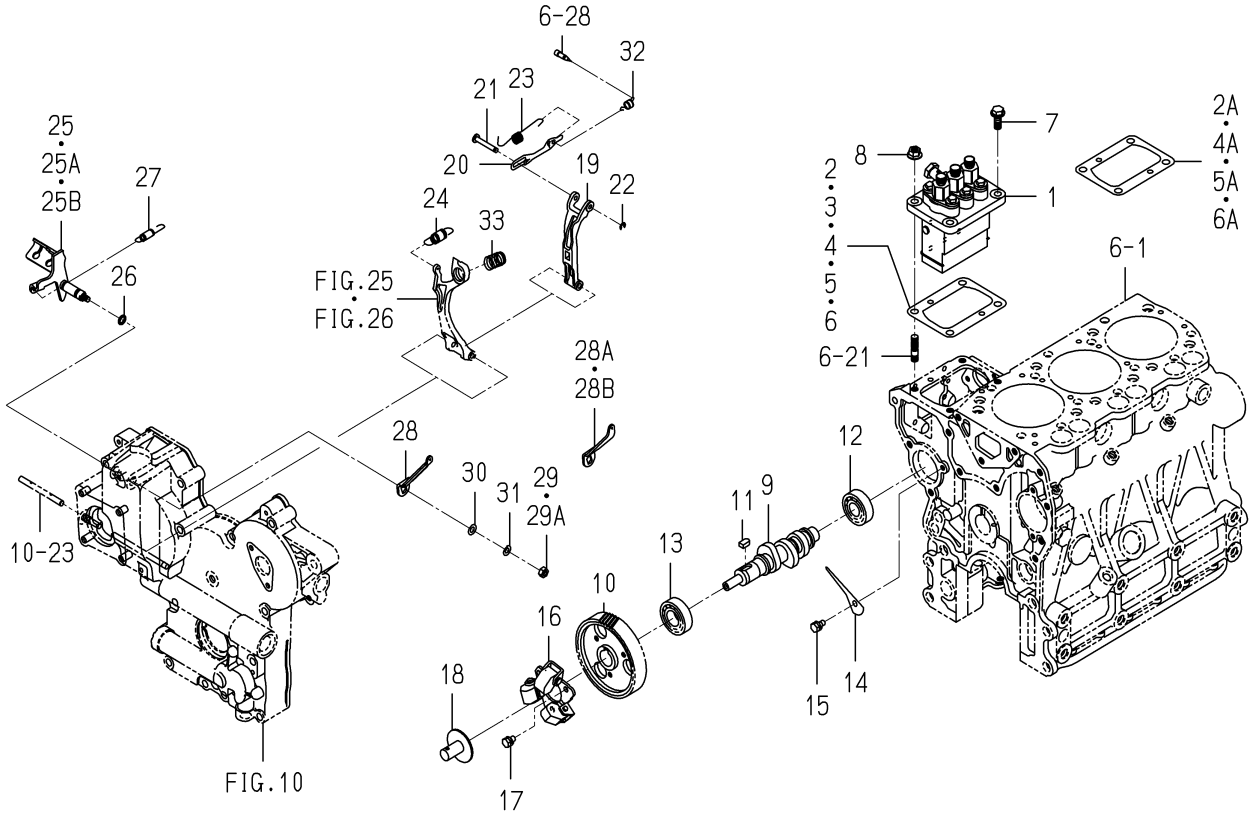

6005-511E-0100

KEY	PART CODE	DESCRIPTION	SPC	TYPE OF MODEL E3CD VB39		ITC	COL	GRP	REMARKS
1	6215-600-104-20	INJECTIONPUMP ASSY	*	1					FIG 032
2	6219-752-006-00	SHIM/INJECTION P/0.3	*	1 -143554					
2A	6219-752-045-00	SHIM/INJECTIONPUMP	*	1 143555-					
3	6219-752-007-00	SHIM/INJECTION P/0.1	*	1 -143554					
4	6219-752-008-00	SHIM/INJECTION P/0.2	*	1 -143554					
4A	6219-752-044-00	SHIM/INJECTIONPUMP	*	1 143555-					
5	6219-752-009-00	SHIM/INJECTION P/0.4	*	1 -143554					
5A	6219-752-046-00	SHIM/INJECTIONPUMP	*	1 143555-					
6	6219-752-010-00	SHIM/INJECTION P/0.5	*	1 -136378					
6A	6219-752-047-00	SHIM/INJECTIONPUMP	*	1 143555-					
7	V231-360-802-00	FLANGEBOLT	*	2					
8	3817-401-001-00	NUT/M08	*	2					
9	6215-621-017-10	CAMSHAFT/INJPUMP	*	1					
10	6212-524-012-30	GEAR/INJECTIONPUMP	*	1					
11	6209-730-005-00	KEY/07X05X09	*	1					
12	V600-110-620-30	BEARING,RB/6203	*	1					
13	6209-800-010-00	BEARING	*	1					
14	6212-535-009-00	PLATE/THRUST/INJPUMP	*	1					
15	6901-910-612-00	BOLT,SEMS/M6X12	*	1					
16	6215-520-007-10	FLYWEIGHT ASSY	*	1					
17	6209-030-043-00	BOLT/M6X10	*	3					
18	6215-526-004-00	THRUSTPIECE	*	1					
19	6215-541-001-10	ARM/FLOATING COMP	*	1					
20	6215-543-002-10	RINK/CONTROL	*	1					
21	6215-542-006-00	PIN,CONTROL	*	1					
22	V710-140-004-00	RING,SNAP/ 4 E	*	1					
23	6215-549-031-10	SPRING/SETTING	*	1					
24	6215-531-010-00	SPRING/GOVERNOR	*	1					
25	6215-541-024-30	LEVER/CONTROL COMP	*	1 -180963					
25A	6215-541-045-00	LEVER/CONTROL COMP	*	1 -191056					

FIG. 23 INJECTION PUMP

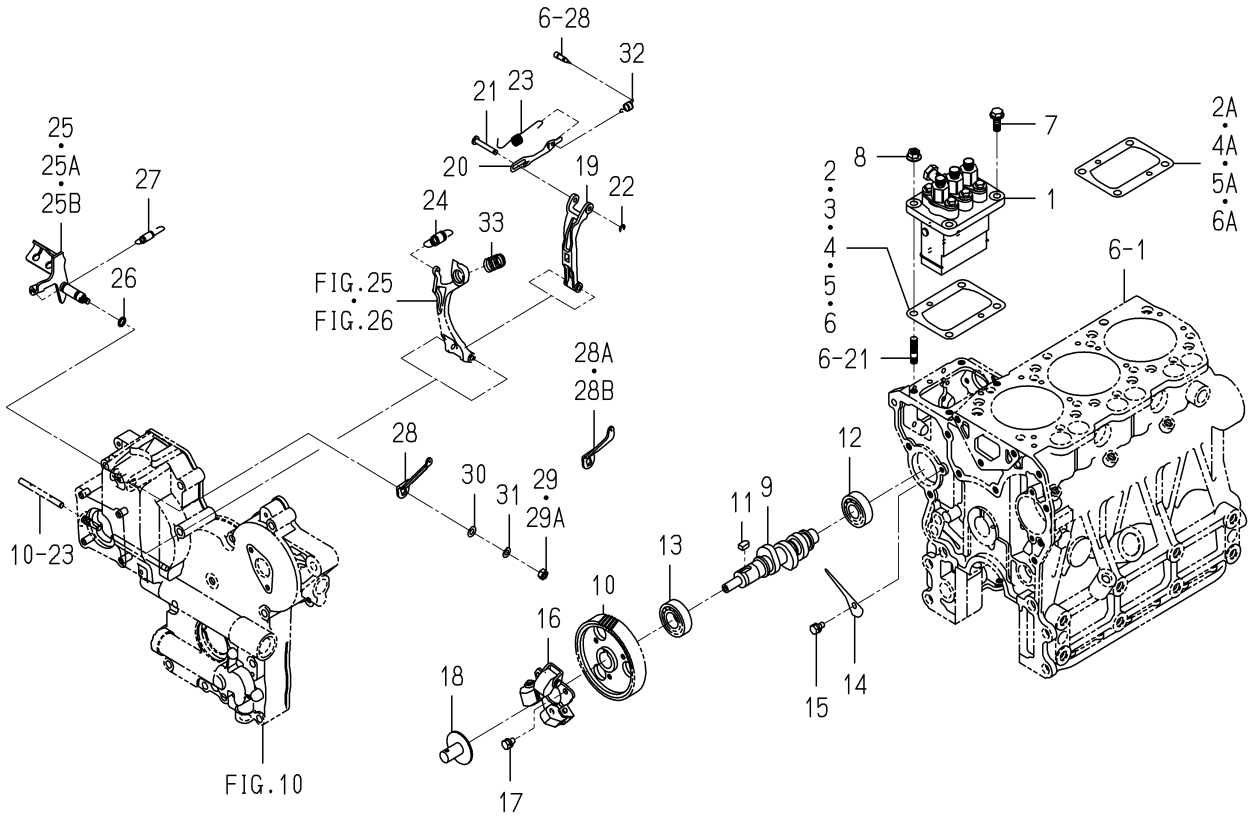

6005-511E-0100

KEY	PART CODE	DESCRIPTION	SPC	TYPE OF MODEL E3CD VB39		ITC	COL	GRP	REMARKS
25B	6215-541-045-10	LEVER/CONTROL COMP	*	1 191057-		3			
26	V720-101-900-80	O-RING/P 8	*	1					
27	6209-580-002-10	SPRING,RETURN	*	1					
28	6215-549-007-10	ARM/CONTROL	*	1 -180963					
28A	6215-549-076-00	ARM/CONTROL	*	1 -183522					
28B	6215-549-076-10	ARM/CONTROL	*	1 183523-		3			
29	6909-110-406-00	NUT	*	1 -178626					
29A	V301-260-006-00	NUT/M6	*	1 178627-					
30	V411-260-006-00	WASHER / M6	*	1					
31	V401-160-006-00	WASHER,SP/M 6	*	1					
32	6215-549-039-00	SPRING/STARTING	*	1					
33	6215-537-002-10	SPRING/IDLE	*	1					

FIG. 24 FUEL PIPE

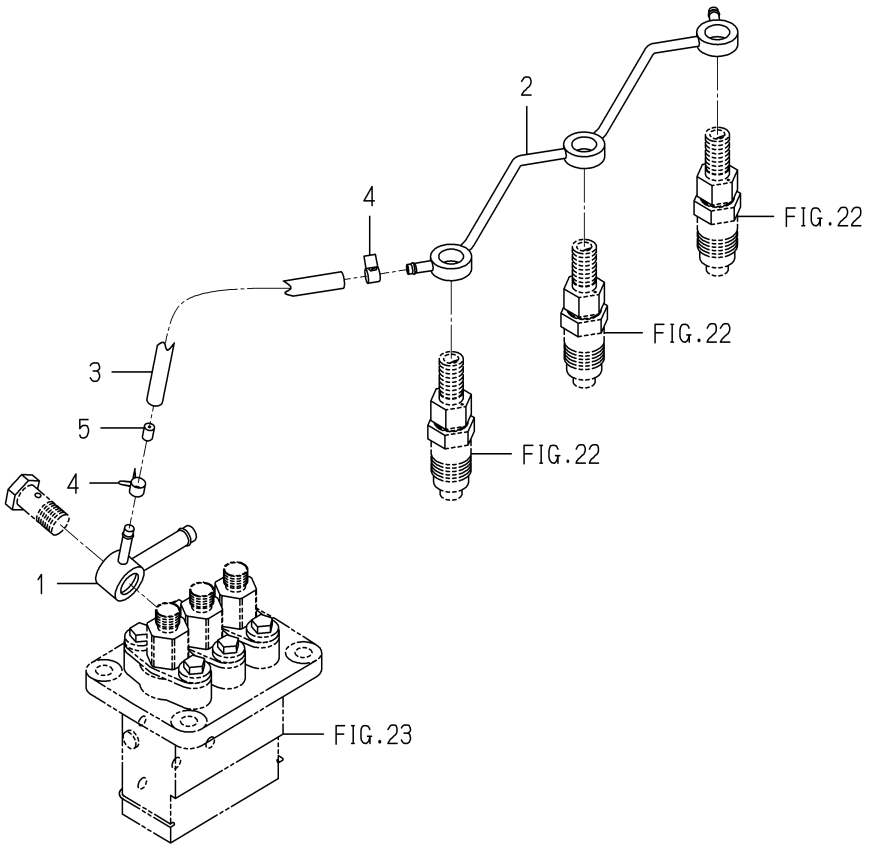

6005-550F-0100

KEY	PART CODE	DESCRIPTION	SPC	TYPE OF MODEL E3CD VB39		ITC	COL	GRP	REMARKS
1	6215-412-004-00	CONNECTOR/FUEL	*	1					
2	6215-411-136-00	PIPE/FUEL	*	1					
3	6209-360-011-00	HOSE/RUBBER	*	1					
4	J062-076-082-00	CLIP/HOSE/7.6-8.2	*	2					
5	3640-586-004-00	RESISTANCE/1.0	*	1					

FIG. 25 ADAPTER

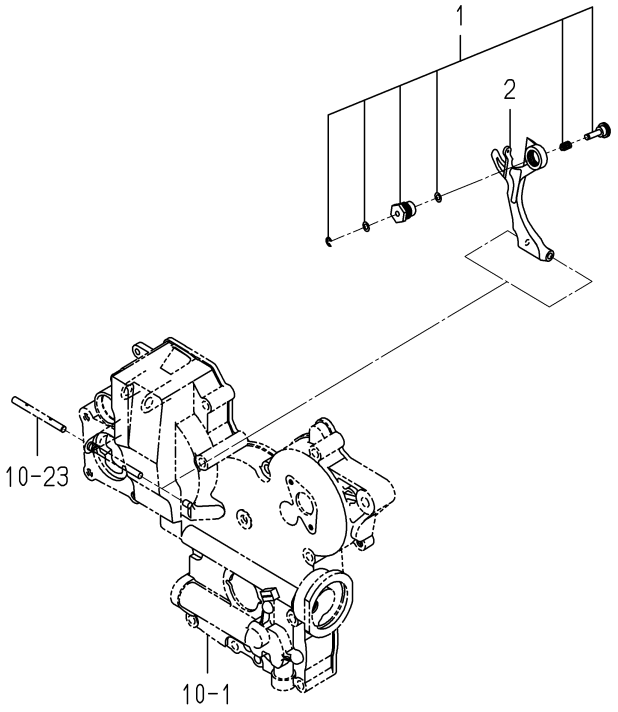

6005-560S-0100

KEY	PART CODE	DESCRIPTION	SPC	TYPE OF MODEL E3CD VB39		ITC	COL	GRP	REMARKS
1	6215-548-058-00	ADAPTER/260X135 ASSY	*	1 -147657					
2	6215-541-016-30	ARM/TENSION	*	1 -147657					

FIG. 26 ADAPTER

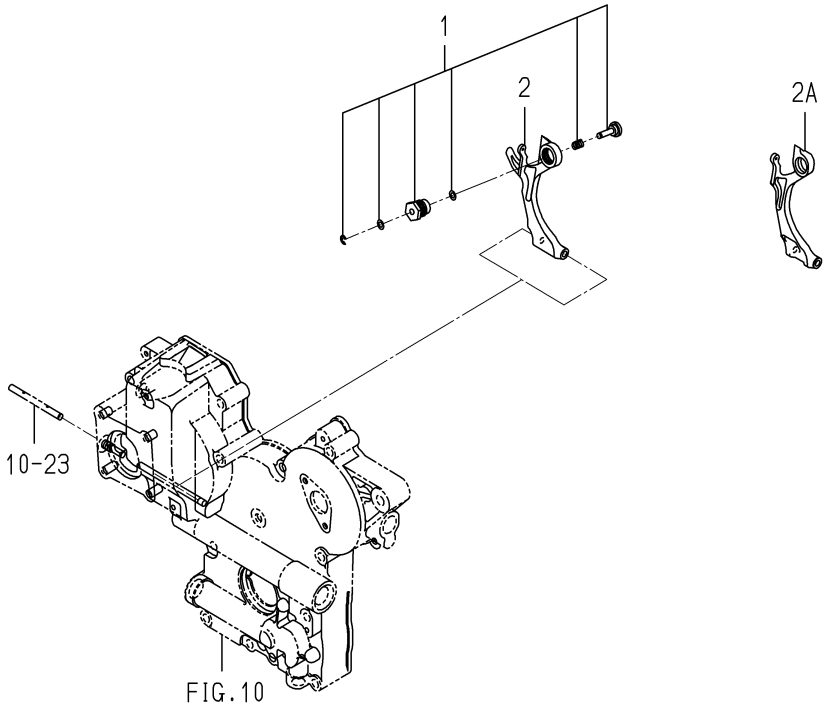

6005-560X-0100

KEY	PART CODE	DESCRIPTION	SPC	TYPE OF MODEL E3CD VB39		ITC	COL	GRP	REMARKS
1	6215-548-069-00	ADAPTER/260X120 ASSY	*	1 147658-					
2	6215-541-016-30	ARM/TENSION	*	1 -168197					
2A	6215-541-016-40	ARM/TENSION	*	1 168198-		1			

FIG. 27 ELECTRIC (1)

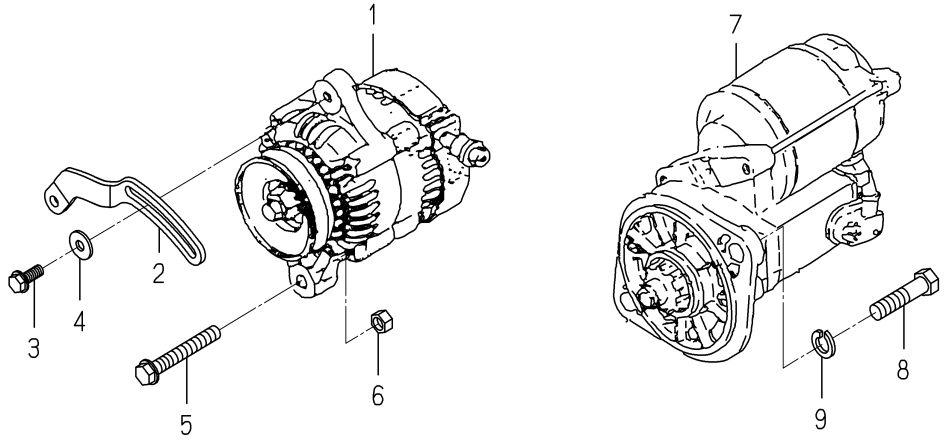

6005-801N-0100,6005-801N-0200

KEY	PART CODE	DESCRIPTION	SPC	TYPE OF MODEL E3CD VB39		ITC	COL	GRP	REMARKS
1	6281-200-020-00	GENERATOR ASSY	*	1 -147657					FIG 034
2	6213-674-006-20	PLATE/ADJUST	*	1 -147657					
3	V231-360-802-00	FLANGEBOLT	*	1 -147657					
4	1373-121-001-00	WASHER/9X22X2	*	1 -147657					
5	V233-361-007-00	FLANGEBOLT	*	1 -147657					
6	6909-110-410-00	NUT/M10	*	1 -147657					
7	6281-100-007-20	STARTER ASSY	*	1 -147657					FIG 033
8	V201-361-205-00	BOLT	*	2 -147657					
9	V401-160-012-00	WASHER,SP/M12	*	2 -147657					

FIG. 28 ELECTRIC (1)

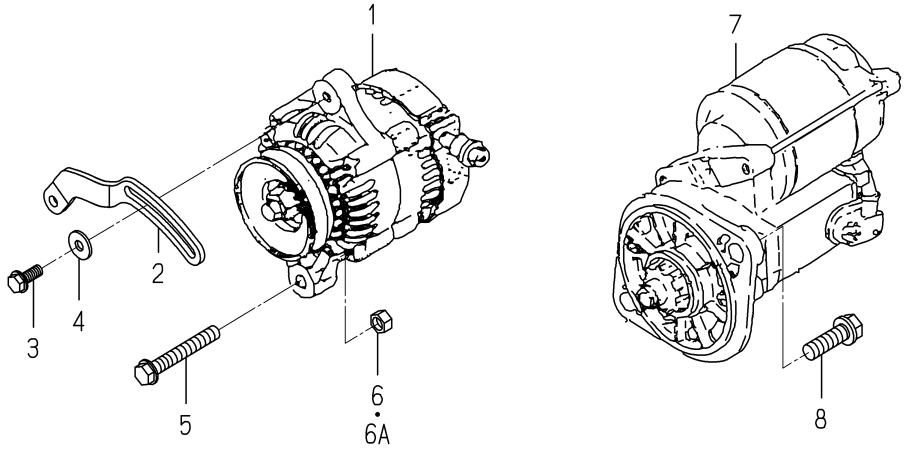

6005-801P-0100,6005-801P-0200

KEY	PART CODE	DESCRIPTION	SPC	TYPE OF MODEL E3CD VB39		ITC	COL	GRP	REMARKS
1	6281-200-020-00	GENERATOR ASSY	*	1 147658-					FIG 034
2	6213-674-006-20	PLATE/ADJUST	*	1 147658-					
3	V231-360-802-00	FLANGEBOLT	*	1 147658-					
4	1373-121-001-00	WASHER/9X22X2	*	1 147658-					
5	V233-361-007-00	FLANGEBOLT	*	1 147658-					
6	6909-110-410-00	NUT/M10	*	1 -171495					
6A	V334-260-010-00	NUT/M10	*	1 171496-					
7	6281-100-007-20	STARTER ASSY	*	1 147658-					FIG 033
8	6901-931-240-00	BOLT	*	2 147658-					

FIG. 29 ELECTRIC (2)

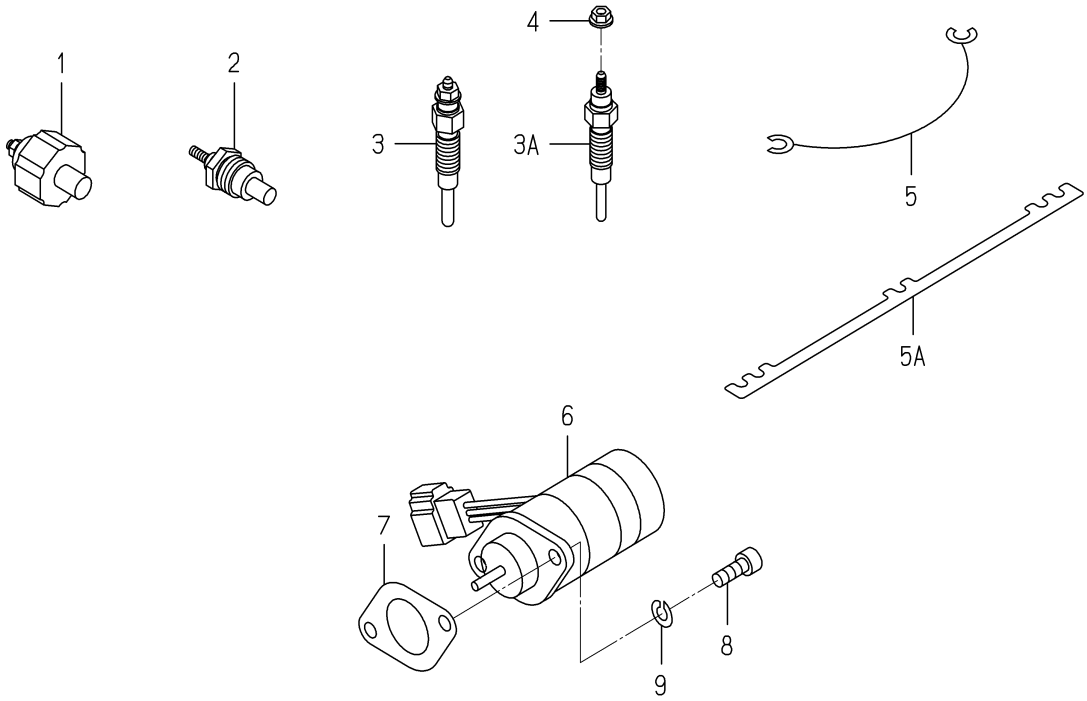

6005-820O-0100,6005-820O-0200

KEY	PART CODE	DESCRIPTION	SPC	TYPE OF MODEL E3CD VB39		ITC	COL	GRP	REMARKS
1	6281-971-003-00	SWITCH/OILPRESSURE	*	1					
2	6282-450-006-00	THERMOMETER	*	1					
3	6281-410-023-00	GLOWPLUG	*	3 -170197					
3A	6281-410-023-10	GLOWPLUG	*	3 170198-		3			
4	6209-440-005-00	NUT/FLANGE	*	3 170202-					
5	6219-732-012-00	CONNECTOR/GLOWPLUG	*	2 -150020					
5A	6219-732-017-00	CONNECTOR/GLOWPLUG	*	1 150021-					
6	6281-910-011-00	SOLENOID	*	1					
7	6209-630-002-10	GASKET	*	1					
8	V220-540-601-60	BOLT	*	2					
9	V401-160-006-00	WASHER,SP/M 6	*	2					

FIG. 30 REPAIR PARTS(OPTION)

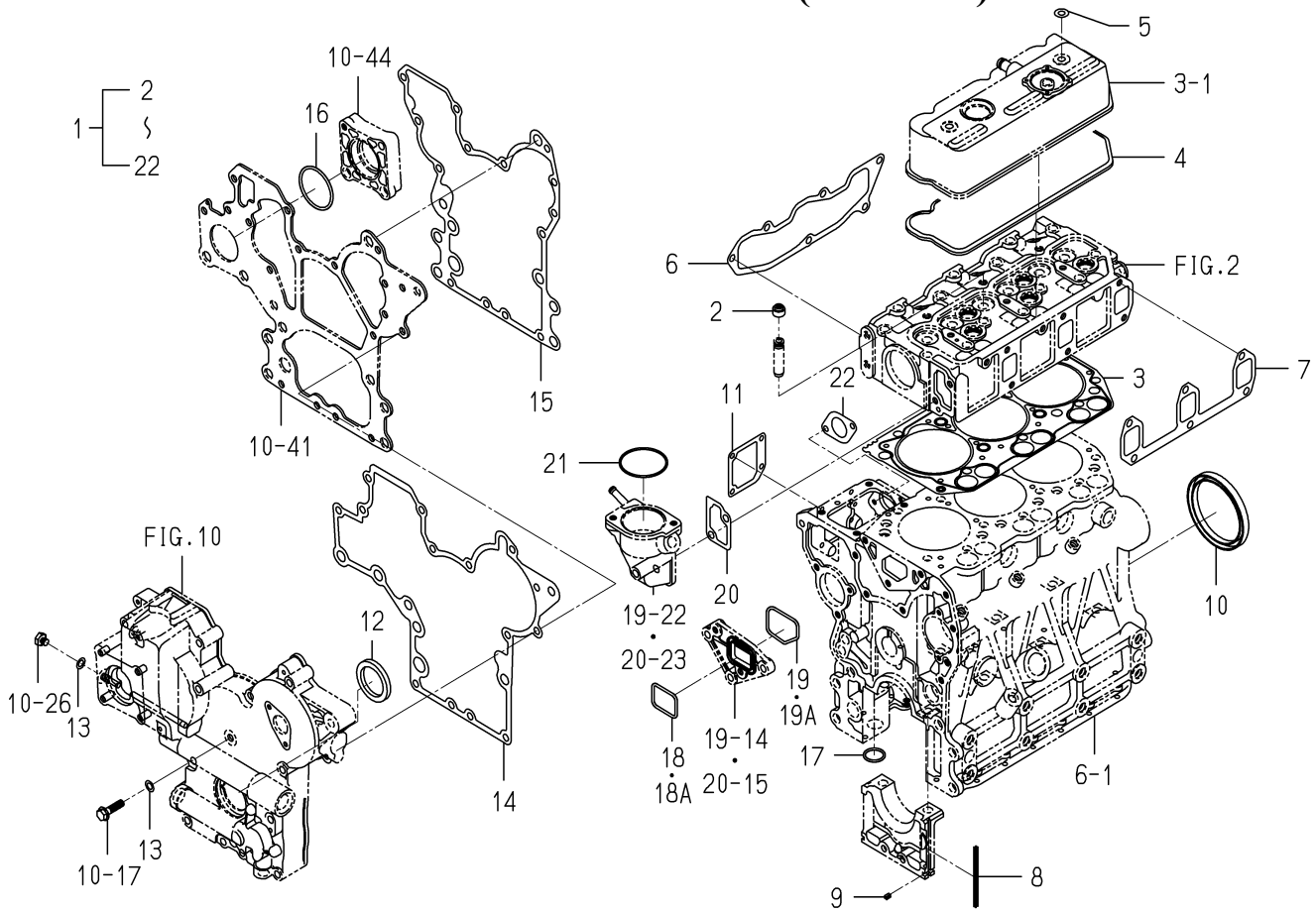

6005-999J-0100

KEY	PART CODE	DESCRIPTION	SPC	TYPE OF MODEL E3CD VB39		ITC	COL	GRP	REMARKS
1	6287-810-040-00	REPAIR/ENGINESET	T	1					
2	6212-569-002-00	SEAL,OIL	T	6					
3	6211-141-057-10	GASKET/CYLINDERHEAD	T	1					
4	6211-173-005-00	SEAL/CYL HEAD/UNDER	T	1					
5	6209-572-003-00	GASKET	T	2					
6	6214-115-003-10	GASKET/INLETMANIFOLD	T	1					
7	6214-145-004-20	GASHET/EXH MANIFOLD	T	1					
8	6211-258-001-00	SEAL,BEARING CAP	T	4					
9	6211-258-002-00	SEAL,BEARING CAP/7	T	2					
10	6209-625-003-20	OILSEAL	T	1					
11	6211-292-001-20	GASKET/COVER	T	1					
12	6209-625-002-00	SEAL,OIL	T	1					
13	6209-500-003-00	WASHER/08X14X01	T	2					
14	6211-312-005-10	GASKET/GEARCASE	T	1					
15	6211-312-006-10	GASKET/PLATE	T	1					
16	V723-102-005-00	O-RING 1A S50	T	1					
17	V720-103-502-20	O-RING/P22	T	1					
18	V721-103-104-00	O-RING/G40	T	1 -149656					
18A	6213-614-013-00	GASKET/WATERPUMP	T	1 149657-					
19	V721-113-105-00	O-RING HS90 G50	T	1 -149656					
19A	6213-614-014-00	GASKET/SPACER	T	1 149657-					
20	6213-743-002-10	GASKET/HOUSING	T	1					
21	V723-102-005-50	O-RING	T	1					
22	6209-630-002-10	GASKET	T	1					

FIG. 31 COMPONENT PARTS FOR 6215-300-045-10 ON Fig.22

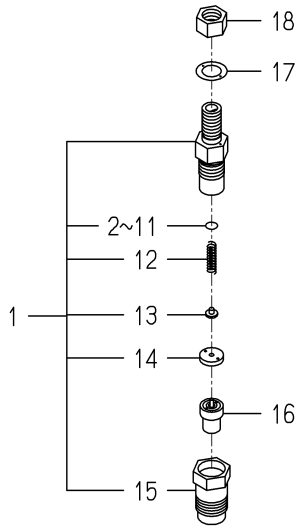

6215-300-045-1B

KEY	PART CODE	DESCRIPTION	SPC	TYPE OF MODEL E3CD VB39		ITC	COL	GRP	REMARKS
1	6215-330-028-00	HOLDER/NOZZLEASSY	*	3					
2	6215-345-044-00	SHIM/0.10	*	3					
3	6215-345-045-00	SHIM/0.20	*	3					
4	6215-345-046-00	SHIM/0.30	*	3					
5	6215-345-047-00	SHIM/0.40	*	3					
6	6215-345-048-00	SHIM/0.50	*	3					
7	6215-345-049-00	SHIM/0.52	*	3					
8	6215-345-050-00	SHIM/0.54	*	3					
9	6215-345-051-00	SHIM/0.56	*	3					
10	6215-345-052-00	SHIM/0.58	*	3					
11	6215-345-053-00	SHIM/0.80	*	3					
12	6215-343-010-00	SPRINGNOZZLE	*	3					
13	6215-342-013-00	SPRINGSEAT	*	3					
14	6215-339-004-00	SPACER	*	3					
15	6215-332-014-00	NUT/NOZZLERETAINING	*	3					
16	6215-311-036-00	NOZZLE	*	3					
17	6215-359-003-00	GASKET	*	3					
18	6215-359-004-00	NUT	*	3					

FIG. 32 COMPONENT PARTS FOR 6215-600-104-20 ON Fig.23

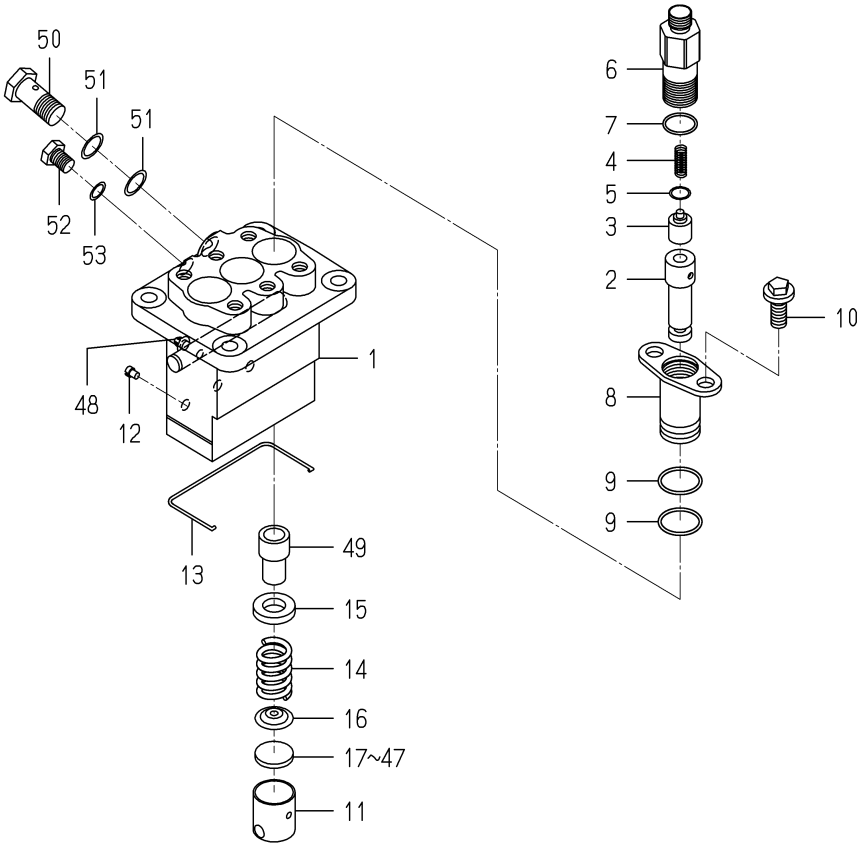

6215-600-104-2E

KEY	PART CODE	DESCRIPTION	SPC	TYPE OF MODEL E3CD VB39		ITC	COL	GRP	REMARKS
1	6215-611-015-00	HOUSING/PUMP	*	1					
2	6215-631-015-00	PLUNGER ASSY	*	3					
3	6215-641-002-00	VALVE,DELIVERY	*	3					
4	6215-643-005-00	SPRING/DELIVERYVALVE	*	3					
5	6215-649-008-00	GASKET	*	3					
6	6215-644-009-00	HOLDER/DELIVERYVALVE	*	3					
7	6215-649-014-00	ORING	*	3					
8	6215-635-004-00	SLEEVEFLANGE	*	3					
9	6215-649-013-00	ORING	*	6					
10	6215-649-011-00	BOLT	*	6					
11	6215-622-003-00	TAPPET	*	3					
12	6215-629-017-00	PIN	*	3					
13	6215-629-035-00	SNAPRING	*	1					
14	6215-634-003-00	SPRING/PLUNGER	*	3					
15	6215-639-008-00	SPRINGSEAT	*	3					
16	6215-639-009-00	SPRINGSEAT	*	3					
17	6215-629-060-00	PLATE/T=2.60	*	1					
18	6215-629-061-00	PLATE/T=2.65	*	1					
19	6215-629-062-00	PLATE/T=2.70	*	1					
20	6215-629-063-00	PLATE/T=2.75	*	1					
21	6215-629-064-00	PLATE/T=2.80	*	1					
22	6215-629-065-00	PLATE/T=2.85	*	1					
23	6215-629-066-00	PLATE/T=2.90	*	1					
24	6215-629-067-00	PLATE/T=2.95	*	1					
25	6215-629-036-00	PLATE/T=3.00	*	1					
26	6215-629-037-00	PLATE/T=3.05	*	1					
27	6215-629-038-00	PLATE/T=3.10	*	1					
28	6215-629-039-00	PLATE/T=3.15	*	1					
29	6215-629-040-00	PLATE/T=3.20	*	1					
30	6215-629-041-00	PLATE/T=3.25	*	1					

FIG. 32 COMPONENT PARTS FOR 6215-600-104-20 ON Fig.23

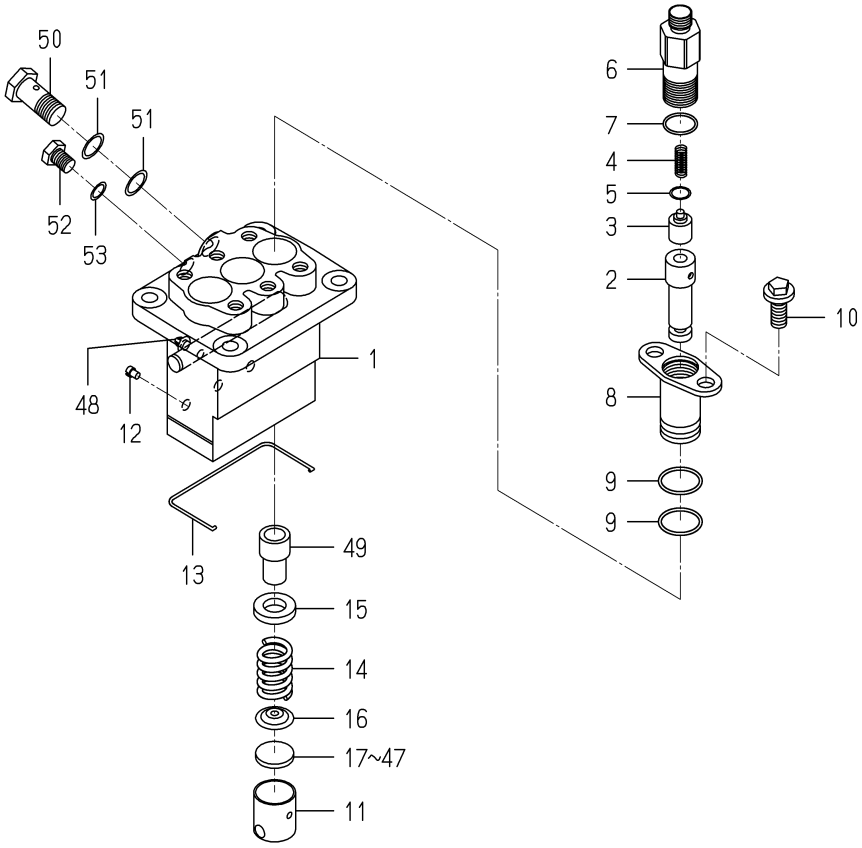

6215-600-104-2E

KEY	PART CODE	DESCRIPTION	SPC	TYPE OF MODEL E3CD VB39		ITC	COL	GRP	REMARKS
31	6215-629-042-00	PLATE/T=3.30	*	1					
32	6215-629-043-00	PLATE/T=3.35	*	3 -146336					
32	6215-629-043-00	PLATE/T=3.35	*	1 146337-					
33	6215-629-044-00	PLATE/T=3.40	*	1					
34	6215-629-045-00	PLATE/T=3.45	*	1					
35	6215-629-046-00	PLATE/T=3.50	*	1					
36	6215-629-047-00	PLATE/T=3.55	*	1					
37	6215-629-048-00	PLATE/T=3.60	*	1					
38	6215-629-049-00	PLATE/T=3.65	*	1					
39	6215-629-050-00	PLATE/T=3.70	*	1					
40	6215-629-051-00	PLATE/T=3.75	*	1					
41	6215-629-052-00	PLATE/T=3.80	*	1					
42	6215-629-053-00	PLATE/T=3.85	*	1					
43	6215-629-054-00	PLATE/T=3.90	*	1					
44	6215-629-055-00	PLATE/T=3.95	*	1					
45	6215-629-056-00	PLATE/T=4.00	*	1					
46	6215-629-058-00	PLATE/T=4.05	*	1					
47	6215-629-059-00	PLATE/T=4.10	*	1					
48	6215-637-004-00	CONTROLRACK	*	1					
49	6215-635-005-00	CONTROLSLEEVE	*	3					
50	6215-619-023-00	EYEBOLT	*	1					
51	6115-639-008-00	GASKET	*	2					
52	6215-619-024-00	BOLT	*	1					
53	6215-359-006-00	GASKET	*	1					

FIG. 33 COMPONENT PARTS FOR 6281-100-007-20 ON Fig.27

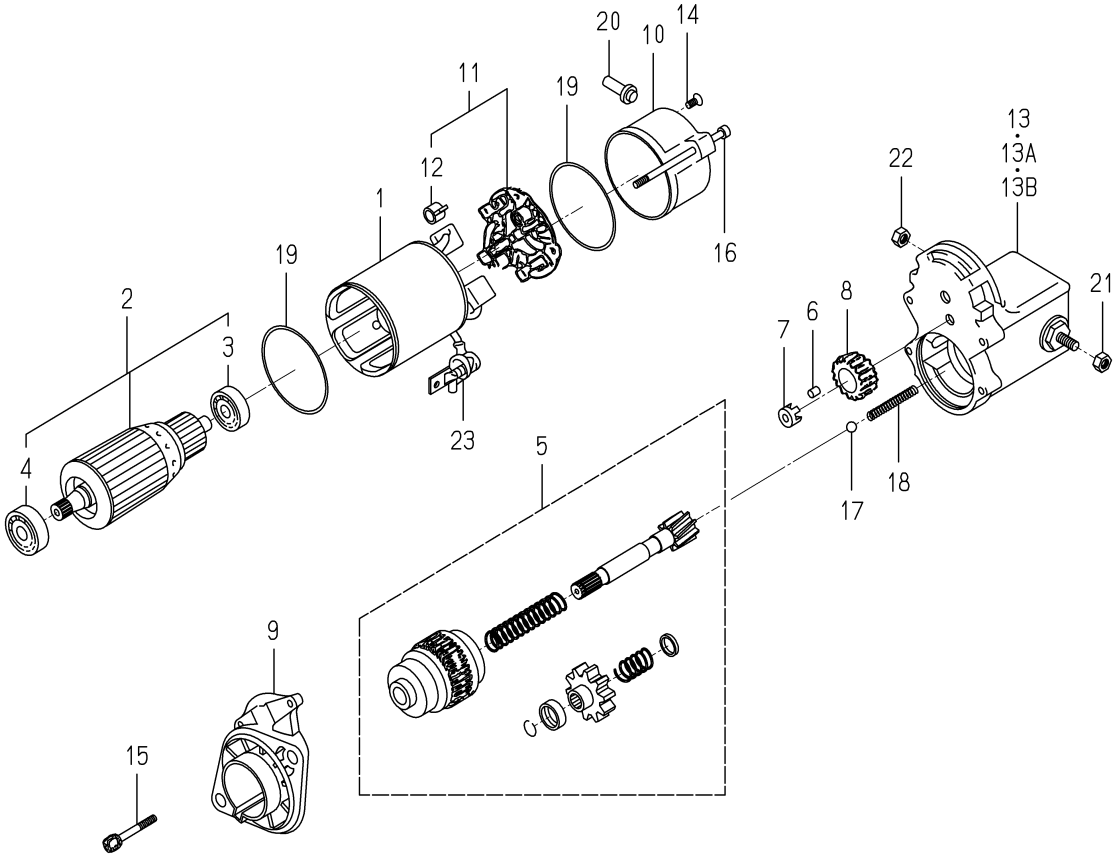

6281-100-007-2H

KEY	PART CODE	DESCRIPTION	SPC	TYPE OF MODEL E3CD VB39		ITC	COL	GRP	REMARKS
1	6281-111-005-00	YOKE/STARTER ASSY	*	1					
2	6281-121-006-00	ARMATURE/STARTE ASSY	*	1					
3	6281-129-038-00	BEARING	*	1					
4	6281-129-039-00	BEARING	*	1					
5	6281-124-007-10	CLUTCH/STARTER ASSY	*	1					
6	6581-129-099-00	RORA	*	5					
7	6281-129-040-00	RETAINER	*	1					
8	6281-123-005-00	PINION/STARTER	*	1					
9	6281-129-045-10	HOUSING/STARTER ASSY	*	1					
10	6281-115-011-00	FRAME/STARTEREND	*	1					
11	6281-116-004-00	HOLDER/STARTER ASSY	*	1					
12	6581-117-007-00	SPRING,BRUSH	*	4					
13	6281-151-017-10	SWITCH/MAGNETIC ASSY	*	1 -147657					
13A	6281-151-020-00	SWITCH/MAGNETIC ASSY	*	1 -153398					
13B	6281-151-023-00	SWITCH/MAGNETIC ASSY	*	1 153399-					
14	6281-129-062-00	SCREW	*	2					
15	6281-129-042-00	BOLT/WS	*	2					
16	6281-129-043-00	BOLT/THROUGH	*	2					
17	6581-129-092-00	BALL	*	1					
18	6281-129-044-00	SPRING/RETURN	*	1					
19	6281-129-003-00	O-RING	*	2					
20	6281-115-016-00	BUSHING/DRAIN	*	1					
21	6909-111-508-00	NUT	*	1					
22	6281-229-041-00	NUT	*	1					
23	6281-115-010-00	COVER	*	1					

FIG. 34 COMPONENT PARTS FOR 6281-200-020-00 ON Fig.27

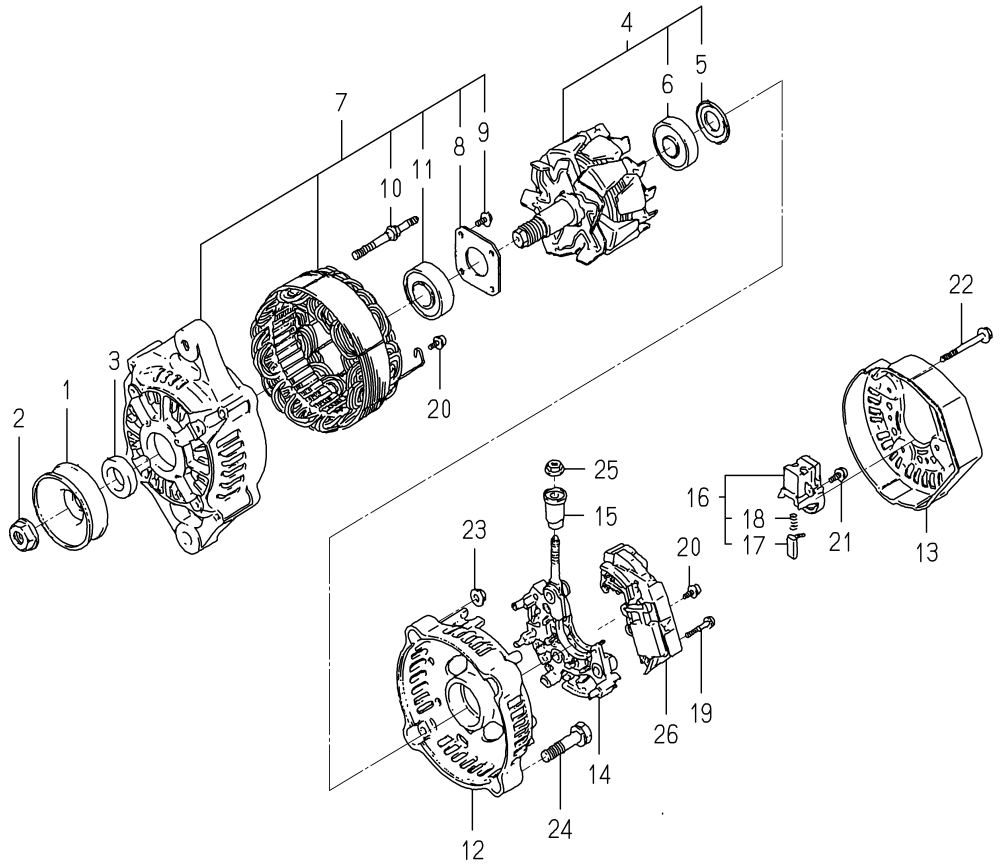

6281-200-020-0B

KEY	PART CODE	DESCRIPTION	SPC	TYPE OF MODEL E3CD VB39		ITC	COL	GRP	REMARKS
1	6281-222-012-00	PULLEY	*	1					
2	6281-229-002-00	NUT	*	1					
3	6281-229-003-00	COLLOR	*	1					
4	6281-221-007-00	ROTOR ASSY	*	1					
5	6281-229-004-00	COVER,BEARING	*	1					
6	6281-229-032-00	BEARING/BALL	*	1					
7	6281-213-017-00	FRAME/DRIVEEND ASSY	*	1					
8	6281-229-006-00	PLATE	*	1					
9	6281-229-007-00	BOLT	*	4					
10	6281-229-008-00	BOLT	*	2					
11	6281-229-033-00	BEARING/BALL	*	1					
12	6281-214-003-00	FRAME	*	1					
13	6281-214-004-00	COVER	*	1					
14	6281-229-029-00	HOLDER ASSY	*	1					
15	6281-229-011-00	BUSH	*	1					
16	6281-217-003-00	HOLDER/BRUSH ASSY	*	1					
17	6281-215-001-00	BRUSH	*	2					
18	6281-216-001-00	SPRING	*	2					
19	6281-229-012-00	BOLT	*	2					
20	6281-229-013-00	BOLT	*	6					
21	6281-229-014-00	BOLT	*	1					
22	6281-229-015-00	BOLT	*	3					
23	6281-229-016-00	NUT	*	2					
24	6281-229-017-00	BOLT	*	2					
25	6281-229-018-00	NUT	*	1					
26	6281-271-002-00	REGULATOR ASSY	*	1					

E N G I N E

E3CDVB41···TG5330E4 (R-TYPE)

6005-097-580-30

FIG. 1 SHORT BLOCK ENGIASSY

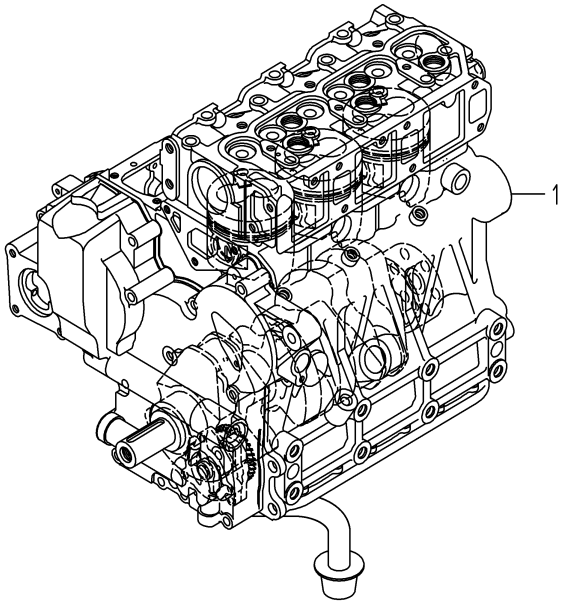

6005-015A-0100

KEY	PART CODE	DESCRIPTION	SPC	TYPE OF MODEL E3CD VB41		ITC	COL	GRP	REMARKS
1	6005-010-139-00	SHORTBLOCKENGIN ASSY	T	1					

FIG. 2 CYLINDER HEAD

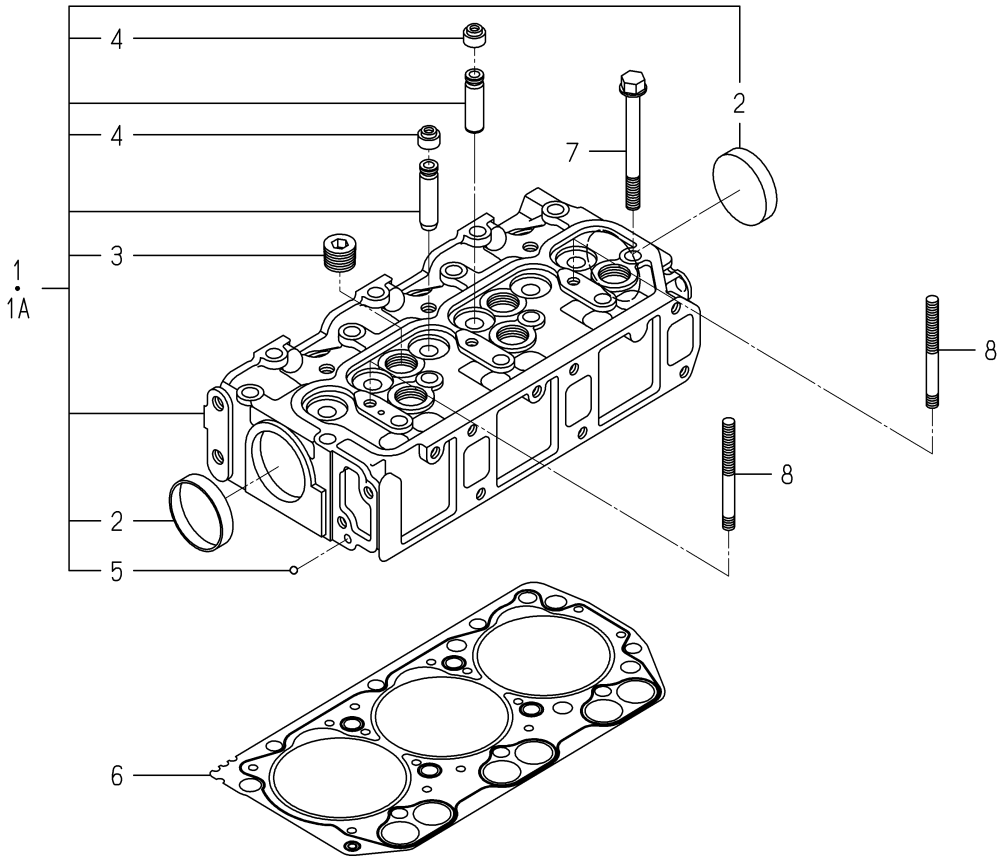

6005-101S-0100,6005-101S-0200

KEY	PART CODE	DESCRIPTION	SPC	TYPE OF MODEL E3CD VB41		ITC	COL	GRP	REMARKS
1	6211-110-084-10	CYLINDERHEAD ASSY	*	1 -195944					
1A	6211-110-084-20	CYLINDERHEAD ASSY	*	1 195945-		1			
2	6209-610-003-00	CUP/SEALING/50	*	2					
3	6209-605-004-10	PLUG/PT1/2	*	5					
4	6212-569-002-00	SEAL,OIL	*	6					
5	V682-200-000-60	BALL	*	1					
6	6211-141-057-10	GASKET/CYLINDERHEAD	*	1					
7	6209-000-005-00	BOLT	*	14					
8	6209-300-014-00	STUD	*	2					

FIG. 3 CYLINDER HEAD COVER

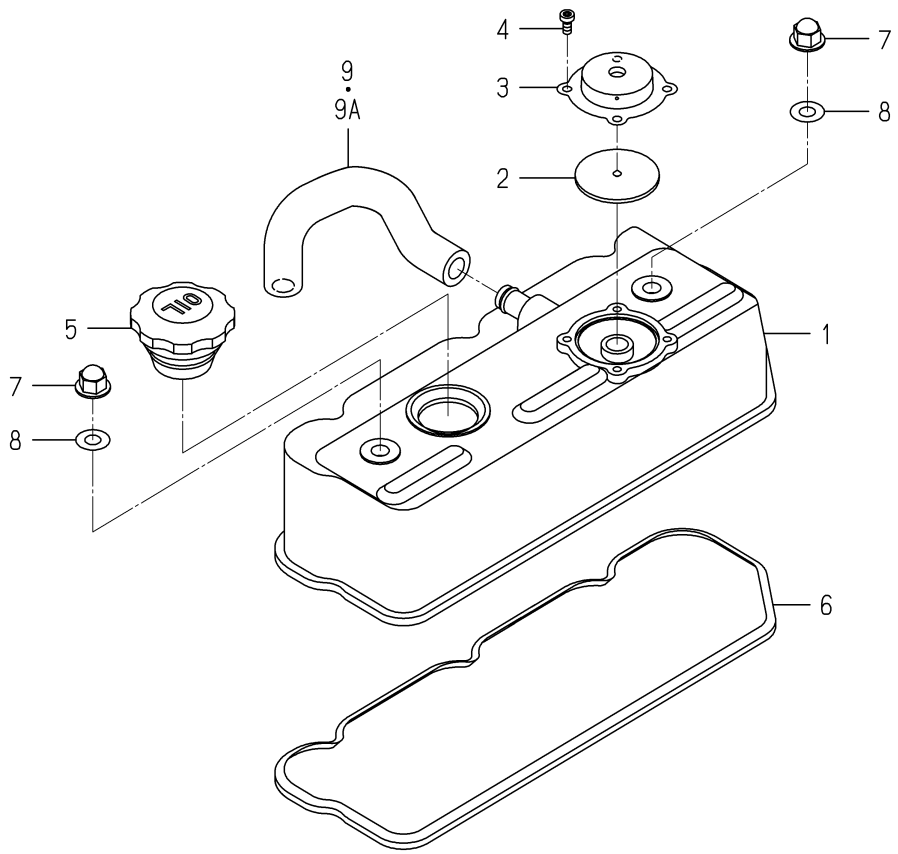

6005-110F-0100

KEY	PART CODE	DESCRIPTION	SPC	TYPE OF MODEL E3CD VB41		ITC	COL	GRP	REMARKS
1	6211-170-007-30	COVER/CYLINDER HEAD	*	1					
2	6211-179-011-20	RUBBERFLANGE	*	1					
3	6211-291-010-00	COVER/BLOWBY	*	1					
4	V195-164-008-30	SCREW/TAPPING	*	4					
5	6211-751-001-10	CAP,OIL FILLER	*	1					
6	6211-173-005-00	SEAL/CYL HEAD/UNDER	*	1					
7	6209-490-002-10	NUT/CAP	*	2					
8	6209-572-003-00	GASKET	*	2					
9	6209-360-109-00	HOSE/RUBBER	*	1 -177886					
9A	6209-360-109-10	HOSE/RUBBER	*	1 177887-		1			

FIG. 4 INLET MANIFOLD

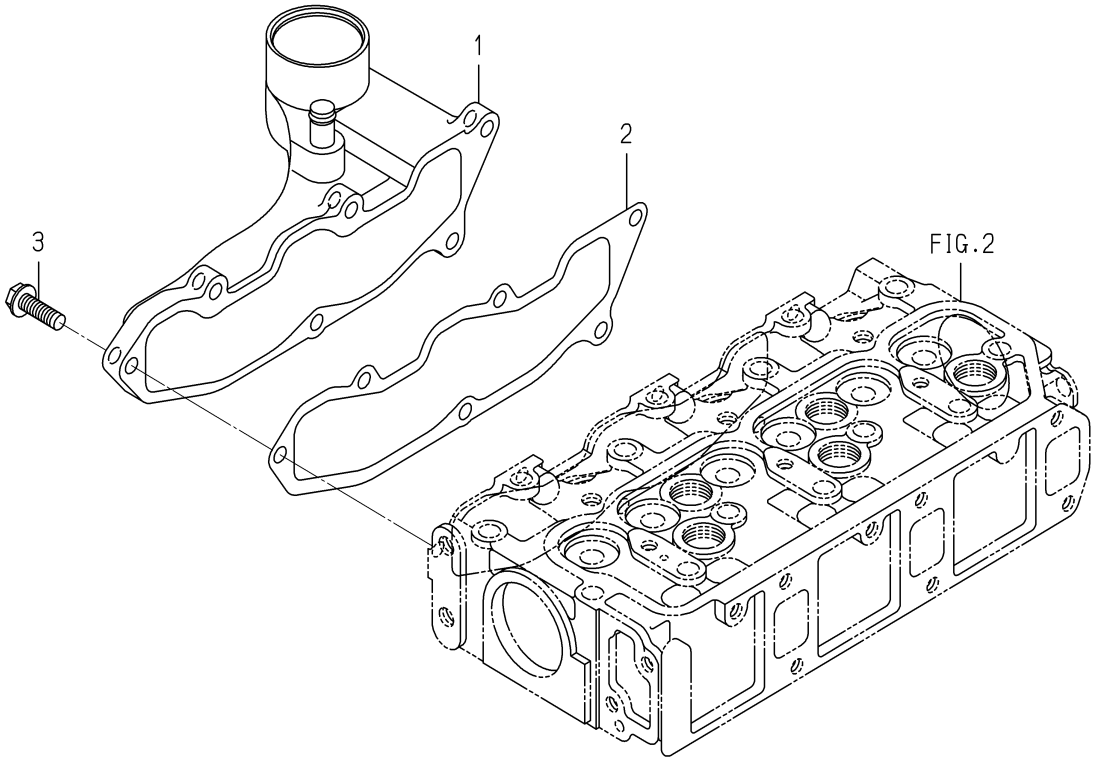

6005-120 -0100

KEY	PART CODE	DESCRIPTION	SPC	TYPE OF MODEL E3CD VB41		ITC	COL	GRP	REMARKS
1	6214-110-003-00	MANIFOLD/INLET ASSY	*	1					
2	6214-115-003-10	GASKET/INLETMANIFOLD	*	1					
3	V231-360-802-50	FLANGEBOLT	*	6					

FIG. 5 EXHAUST MANIFOLD

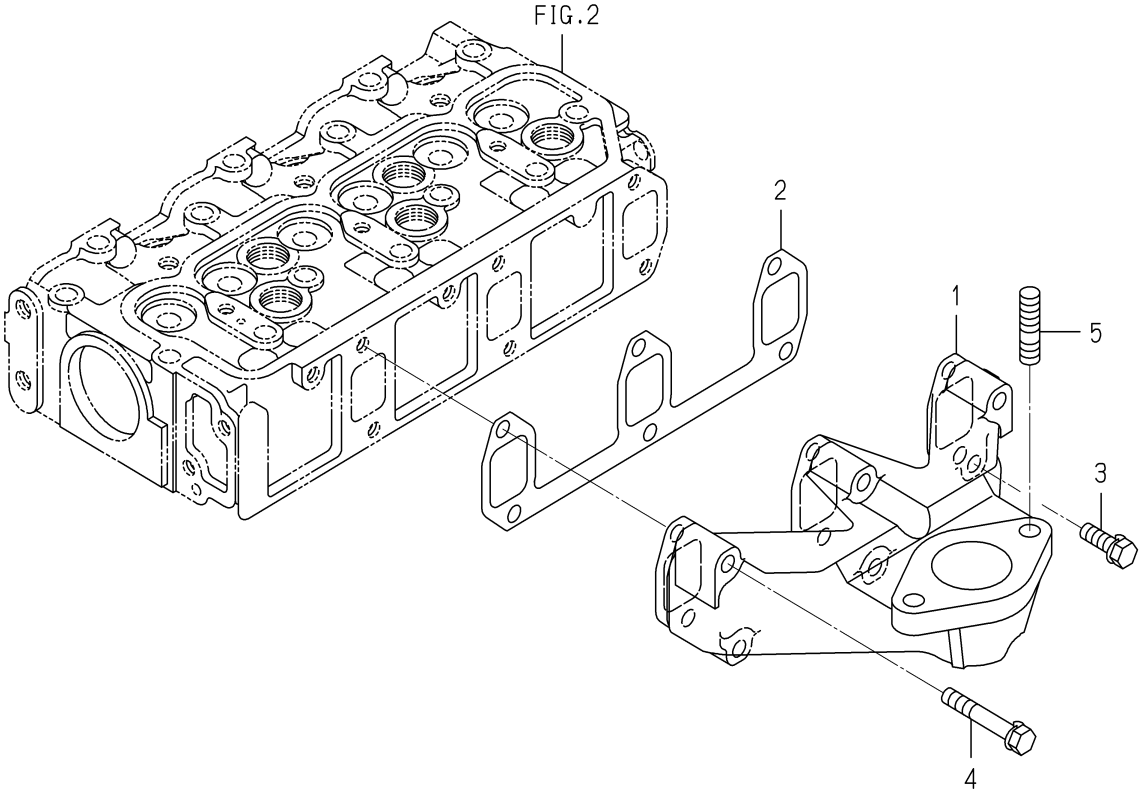

6005-140E-0100

KEY	PART CODE	DESCRIPTION	SPC	TYPE OF MODEL E3CD VB41		ITC	COL	GRP	REMARKS
1	6214-141-044-00	MANIFOLD/EXHAUST	*	1					
2	6214-145-004-20	GASHET/EXH MANIFOLD	*	1					
3	V211-560-802-50	BOLT,SEMS/M8X25 7T	*	1					
4	6509-030-037-00	BOLT	*	5					
5	6904-411-025-00	STUD	*	2					

FIG. 6 CYLINDER BLOCK

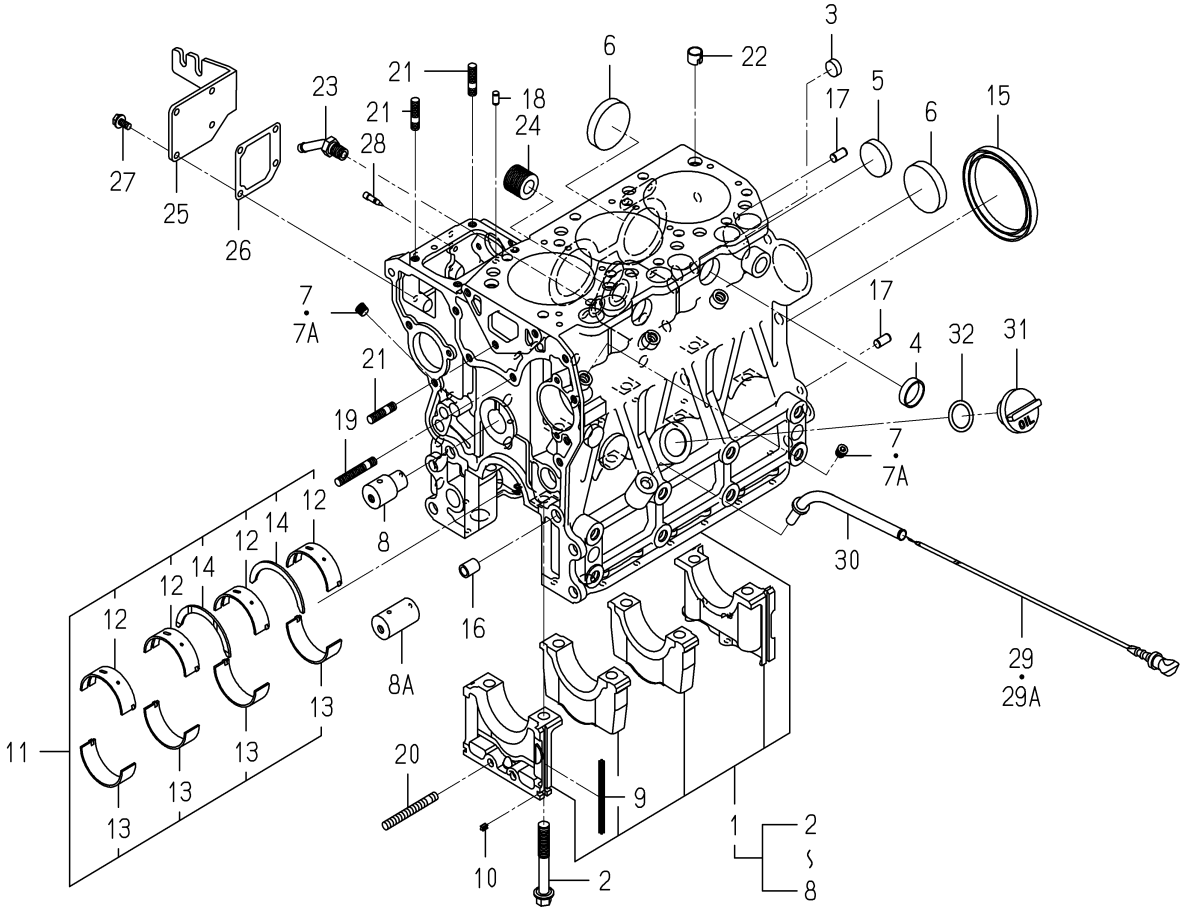

6005-203A-0100

KEY	PART CODE	DESCRIPTION	SPC	TYPE OF MODEL E3CD VB41		ITC	COL	GRP	REMARKS
1	6211-210-081-00	CYLINDERBLOCK ASSY	*	1					
2	6209-000-006-00	BOLT	*	8					
3	6209-610-007-00	CUP/SEALING/16	*	2					
4	6209-610-001-10	CUP/SEALING/28	*	2					
5	6209-610-009-00	CUP/SEALING/36	*	1					
6	6209-610-003-00	CUP/SEALING/50	*	3					
7	6509-605-019-10	PLUG	*	8 -199498					
7A	6209-605-007-00	PLUG/PT1/8	*	8 199499-					
8	6212-531-008-20	PIN/IDLEGEAR	*	1 -168830					
8A	6212-531-008-30	PIN/IDLEGEAR	*	1 168831-		3			
9	6211-258-001-00	SEAL,BEARING CAP	*	4					
10	6211-258-002-00	SEAL,BEARING CAP/7	*	2					
11	6211-510-008-00	BEARING/CRANK SET	*	1					
12	6211-511-007-00	BEARING/CRANK/UPPER	*	4					
13	6211-511-008-00	BEARING/CRANK/LOWER	*	4					
14	6211-599-004-00	BEARING/THRUST/CRANK	*	2					
15	6209-625-003-20	OILSEAL	*	1					
16	6209-749-001-20	PIN/TUBE	*	2					
17	6213-129-006-00	PIN/STRAIGHT	*	2					
18	6209-740-005-00	PIN	*	2					
19	6904-110-840-00	STUD/M8X40	*	1					
20	V251-340-806-00	BOLT/STUD	*	1					
21	6904-110-822-00	STUD	*	3					
22	6294-453-002-00	DOWEL	*	2					
23	6213-721-007-00	PIPE/WATERDRAIN	*	1					
24	6213-319-001-00	CONNECTOR,OIL FILTER	*	1					
25	6211-291-015-20	COVER/INJECTIONPUMP	*	1					
26	6211-292-001-20	GASKET/COVER	*	1					
27	V230-360-601-20	FLANGEBOLT	*	4					
28	6215-549-013-00	PIN	*	1					

FIG. 6 CYLINDER BLOCK

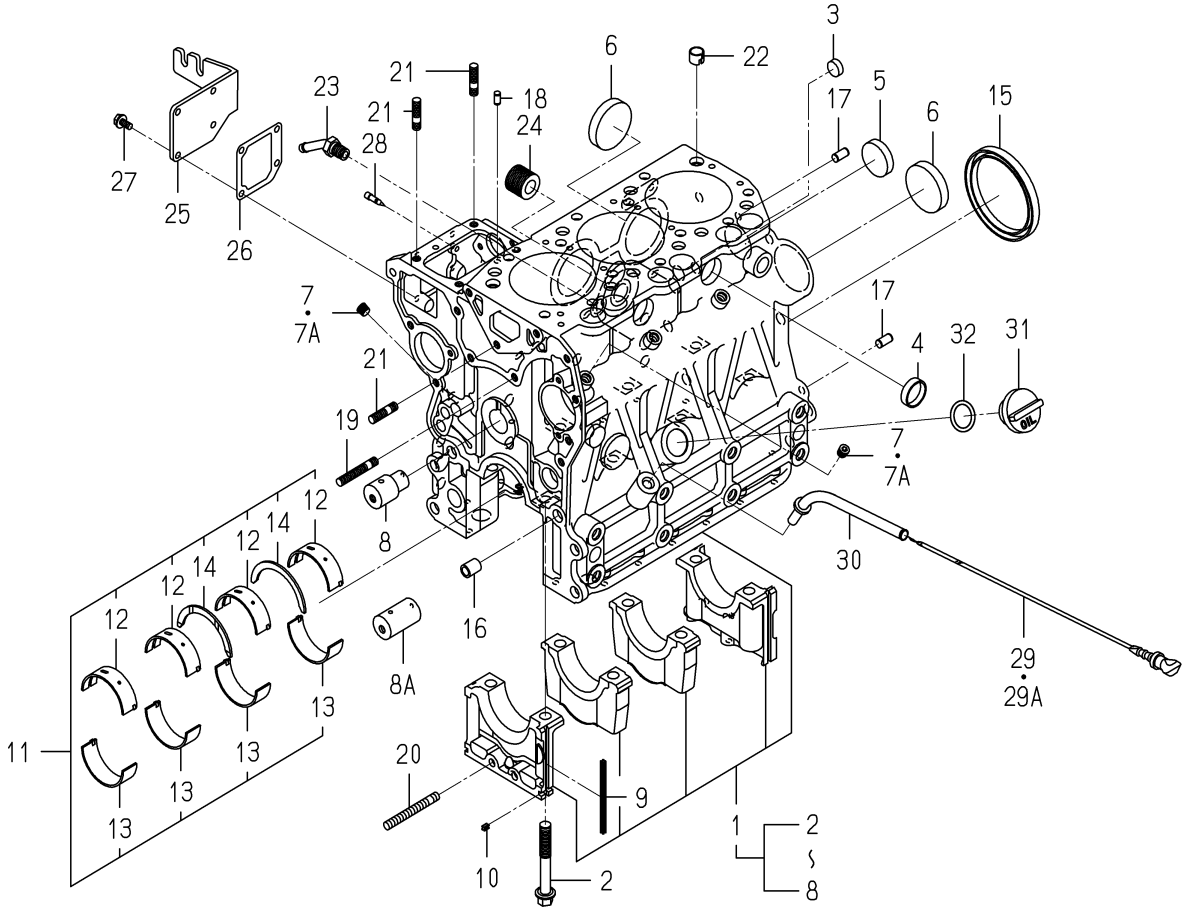

6005-203A-0100

KEY	PART CODE	DESCRIPTION	SPC	TYPE OF MODEL E3CD VB41		ITC	COL	GRP	REMARKS
29	6211-760-046-00	LEVELGAGE	*	1 -171504					
29A	6211-760-046-10	LEVELGAGE	*	1 171505-		1			
30	6211-766-033-00	GUIDE/LEVELGAGE COMP	*	1					
31	6211-751-002-00	CAP/OILFILLER	*	1					
32	V720-103-502-50	O-RING/P25	*	1					

FIG. 7 BEARING/UNDER SIZE (OPTION)

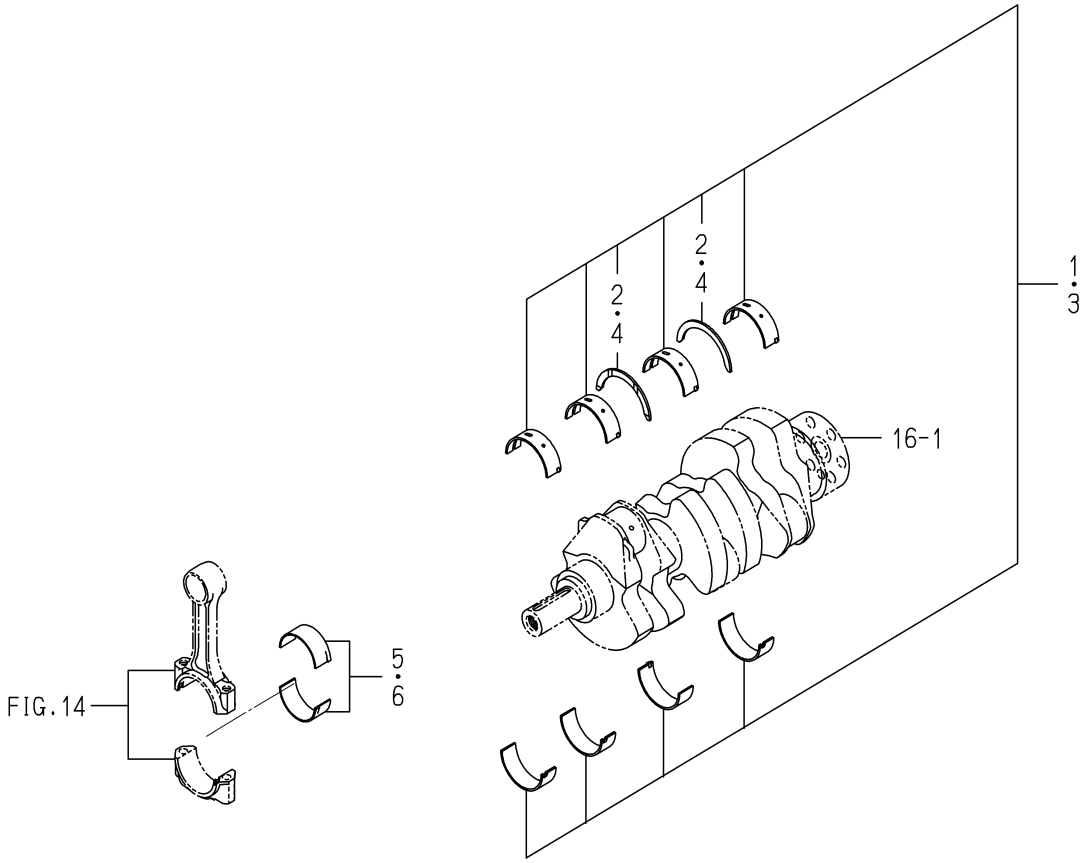

6005-209 -0100

KEY	PART CODE	DESCRIPTION	SPC	TYPE OF MODEL E3CD VB41		ITC	COL	GRP	REMARKS
1	6211-530-008-00	BEARING/CRANK/UNDER	T	1					
2	6211-599-004-00	BEARING/THRUST/CRANK	T	2					
3	6211-540-008-00	BEARING/CRANK/UNDER	T	1					
4	6211-599-004-00	BEARING/THRUST/CRANK	T	2					
5	6212-273-009-00	BEARING/CONNECTING R	T	3					
6	6212-274-009-00	BEARING/CONNECTING R	T	3					

FIG. 8 OIL PAN

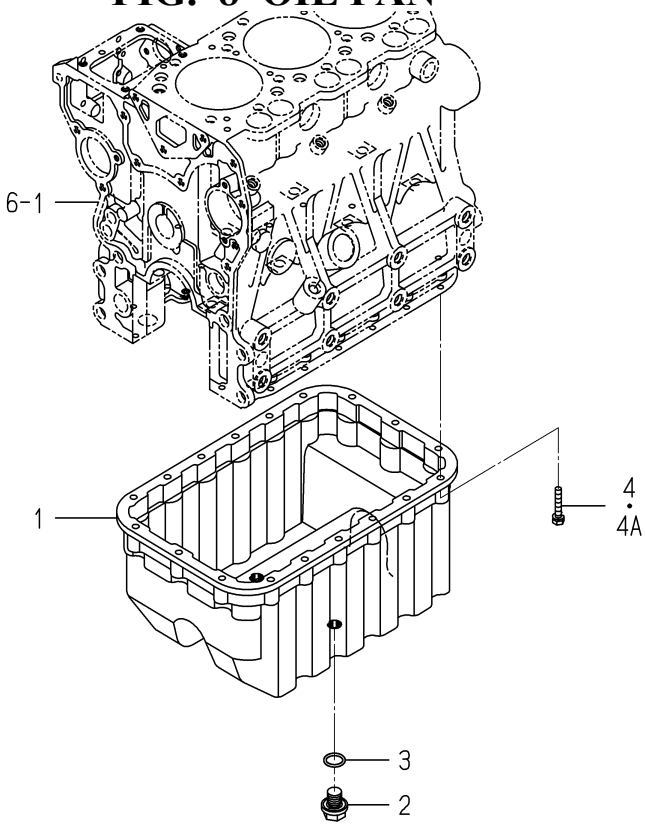

6005-210D-0100

KEY	PART CODE	DESCRIPTION	SPC	TYPE OF MODEL E3CD VB41		ITC	COL	GRP	REMARKS
1	6211-361-038-10	OILPAN	*	1					
2	3805-355-002-20	PLUG/M14X1.5	*	2					
3	V720-102-401-80	O-RING/P18	*	2					
4	6901-910-635-00	BOLT	*	18 -173475					
4A	V210-560-603-50	BOLT/S	*	18 173476-					

FIG. 9 REAR PLATE

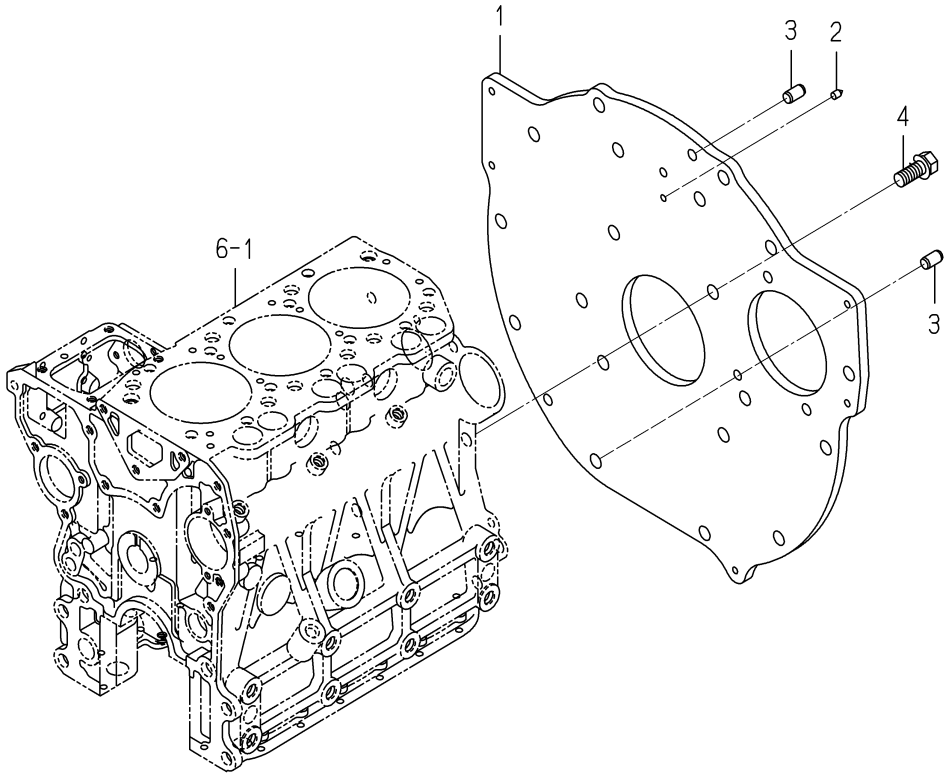

6005-220N-0100

KEY	PART CODE	DESCRIPTION	SPC	TYPE OF MODEL E3CD VB41		ITC	COL	GRP	REMARKS
1	6211-341-073-00	PLATE/REAR	*	1					
2	6211-342-003-10	POINTER	*	1					
3	V523-101-001-80	PIN	*	2					
4	6209-030-091-00	BOLT/WS	*	8					

FIG. 10 TIMING GEAR CASE

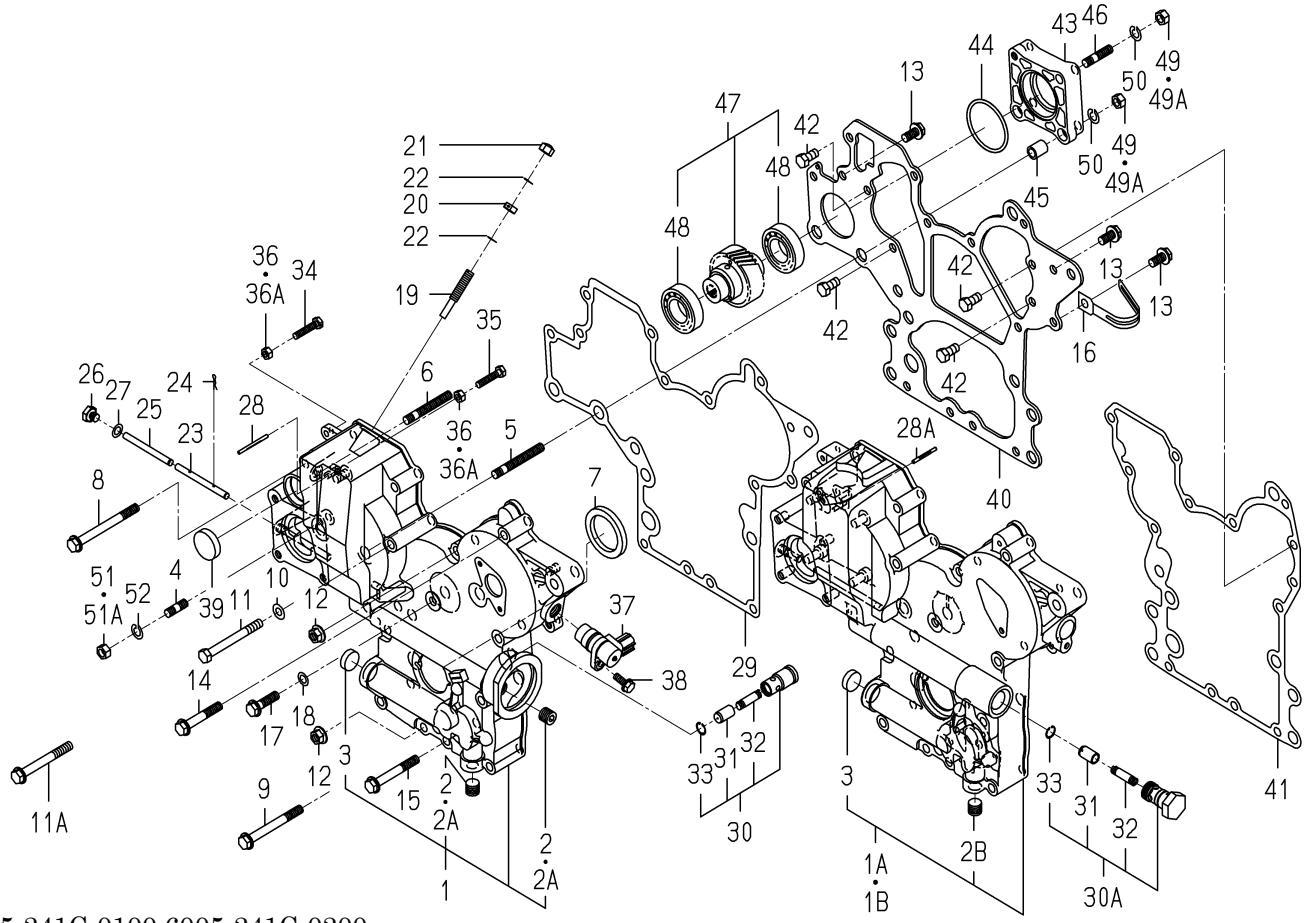

6005-241C-0100,6005-241C-0200

KEY	PART CODE	DESCRIPTION	SPC	TYPE OF MODEL E3CD VB41		ITC	COL	GRP	REMARKS
1	6211-310-040-00	GEARCASE ASSY	*	1 -180974					
1A	6211-310-040-10	GEARCASE ASSY	*	1 -192021		3			
1B	6211-310-040-20	GEARCASE ASSY	*	1 192022-		1			
2	6209-605-003-00	PLUG/PT1/4	*	2 -160372					
2A	6209-605-003-10	PLUG/PT1/4	*	2 -180974		1			
2B	6209-605-003-10	PLUG/PT1/4	*	1 180975-					
3	6209-610-004-00	CUP/SEALING/20	*	1					
4	6904-110-822-00	STUD	*	4					
5	6904-110-855-00	STUD	*	2					
6	6904-110-850-00	STUD	*	1					
7	6209-625-002-00	SEAL,OIL	*	1					
8	V231-360-808-50	FLANGEBOLT	*	1					
9	V231-360-807-50	FLANGEBOLT	*	1					
10	6209-500-006-00	WASHER/08X16X1.2	*	1 -180974					
11	V201-360-807-50	BOLT	*	1 -180974					
11A	V231-360-807-00	FLANGEBOLT	*	1 180975-					
12	3817-401-001-00	NUT/M08	*	2					
13	V231-360-801-60	FLANGEBOLT	*	3					
14	V231-360-805-00	FLANGEBOLT	*	3					
15	V231-360-806-00	FLANGEBOLT	*	4					
16	1650-650-015-00	CLAMP	*	1					
17	V231-360-803-00	FLANGEBOLT	*	1					
18	6209-500-003-00	WASHER/08X14X01	*	1					
19	6215-546-003-10	STOPPER/FULLLOAD	*	1					
20	6209-409-001-00	NUT/M8	*	1					
21	V341-120-008-00	NUT,CAP/M 8	*	1					
22	6209-920-002-00	PACKING	*	2					
23	6215-542-004-20	PIN/ARM	*	1					
24	P117-303-003-00	PIN/SNAP	*	2					
25	6215-542-005-10	PIN	*	1					

FIG. 10 TIMING GEAR CASE

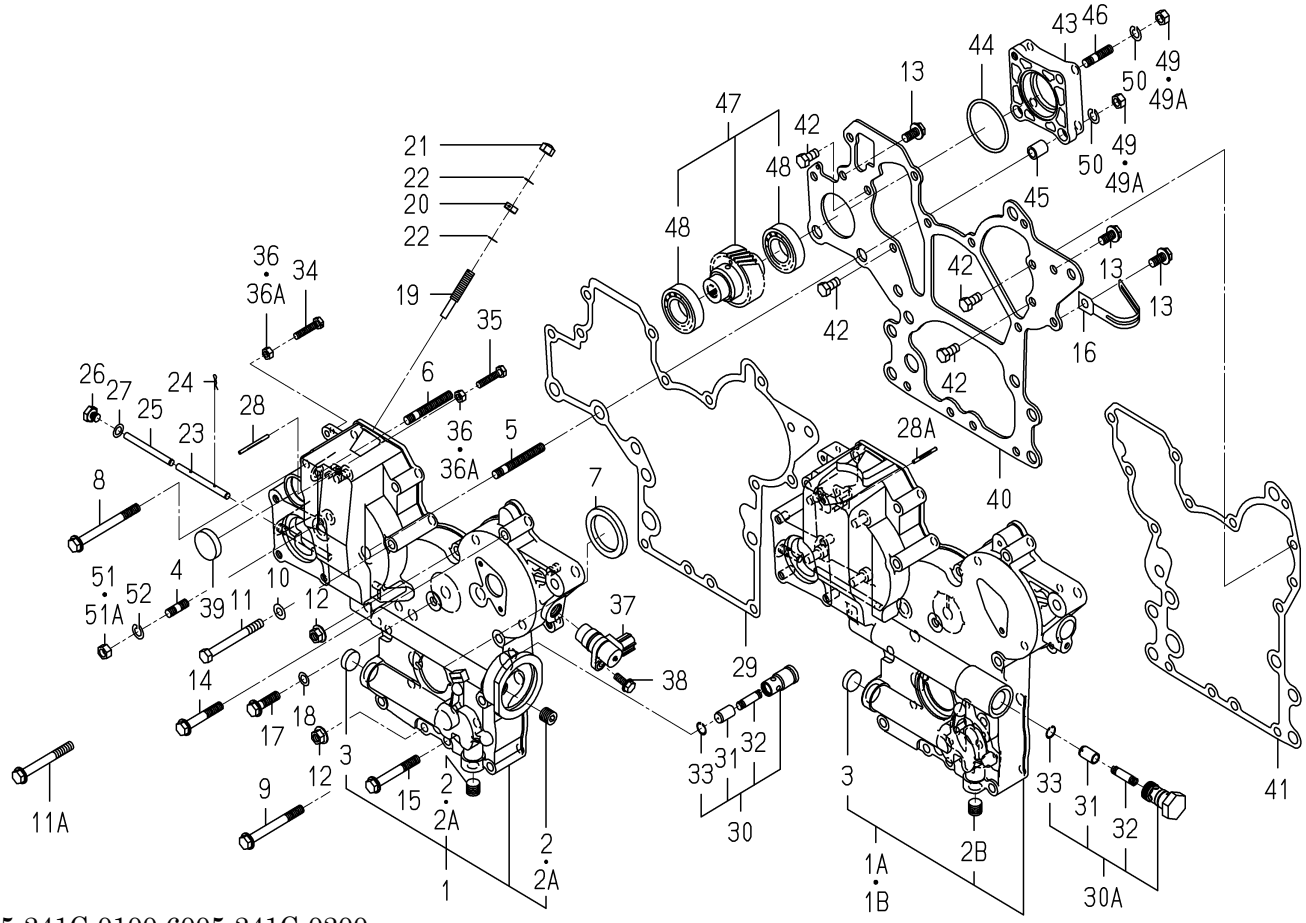

6005-241C-0100,6005-241C-0200

KEY	PART CODE	DESCRIPTION	SPC	TYPE OF MODEL E3CD VB41		ITC	COL	GRP	REMARKS
26	6209-600-004-00	PLUG/SCREW	*	1					
27	6209-500-003-00	WASHER/08X14X01	*	1					
28	6209-740-001-00	PIN,GROOVE	*	1 -181471					
28A	6209-740-006-00	PIN/GROOVE	*	1 181472-					
29	6211-312-005-10	GASKET/GEARCASE	*	1					
30	6213-160-003-10	VALVE/RELIEF ASSY	*	1 -180974					
30A	6213-160-005-00	VALVE/RELIEF ASSY	*	1 180975-					
31	6213-161-003-10	PISTON/VALVE/RELIEF	*	1					
32	6213-164-001-00	SPRING/RELIEF VALVE	*	1					
33	V705-140-012-00	RING,SNAP/12 C	*	1					
34	6209-050-001-00	BOLT/M6	*	1					
35	6209-050-002-00	BOLT/M6	*	1					
36	6909-110-406-00	NUT	*	2 -179012					
36A	V301-260-006-00	NUT/M6	*	2 179013-					
37	1690-654-200-00	SENSOR/REVOLUTION/R	*	1					
38	V230-360-601-60	FLANGEBOLT	*	1					
39	3625-540-004-00	CAP,BLANK/30	*	1 -180974					
40	6211-311-013-20	PLATE/FRONT	*	1					
41	6211-312-006-10	GASKET/PLATE	*	1					
42	6902-050-816-00	BOLT	*	4					
43	6211-319-003-00	SPACER	*	1					
44	V723-102-005-00	O-RING 1A S50	*	1					
45	6209-749-001-20	PIN/TUBE	*	2					
46	6904-110-822-00	STUD	*	1					
47	6212-530-017-00	SHAFT/HYDRAULIC ASSY	*	1					
48	6209-800-011-00	BEARING	*	2					
49	6909-110-408-00	NUT/M8	*	4 -179012					
49A	V304-260-008-00	NUT	*	4 179013-					
50	V401-160-008-00	WASHER,SP/M 8	*	4					
51	6909-110-408-00	NUT/M8	*	4 -179012					

FIG. 10 TIMING GEAR CASE

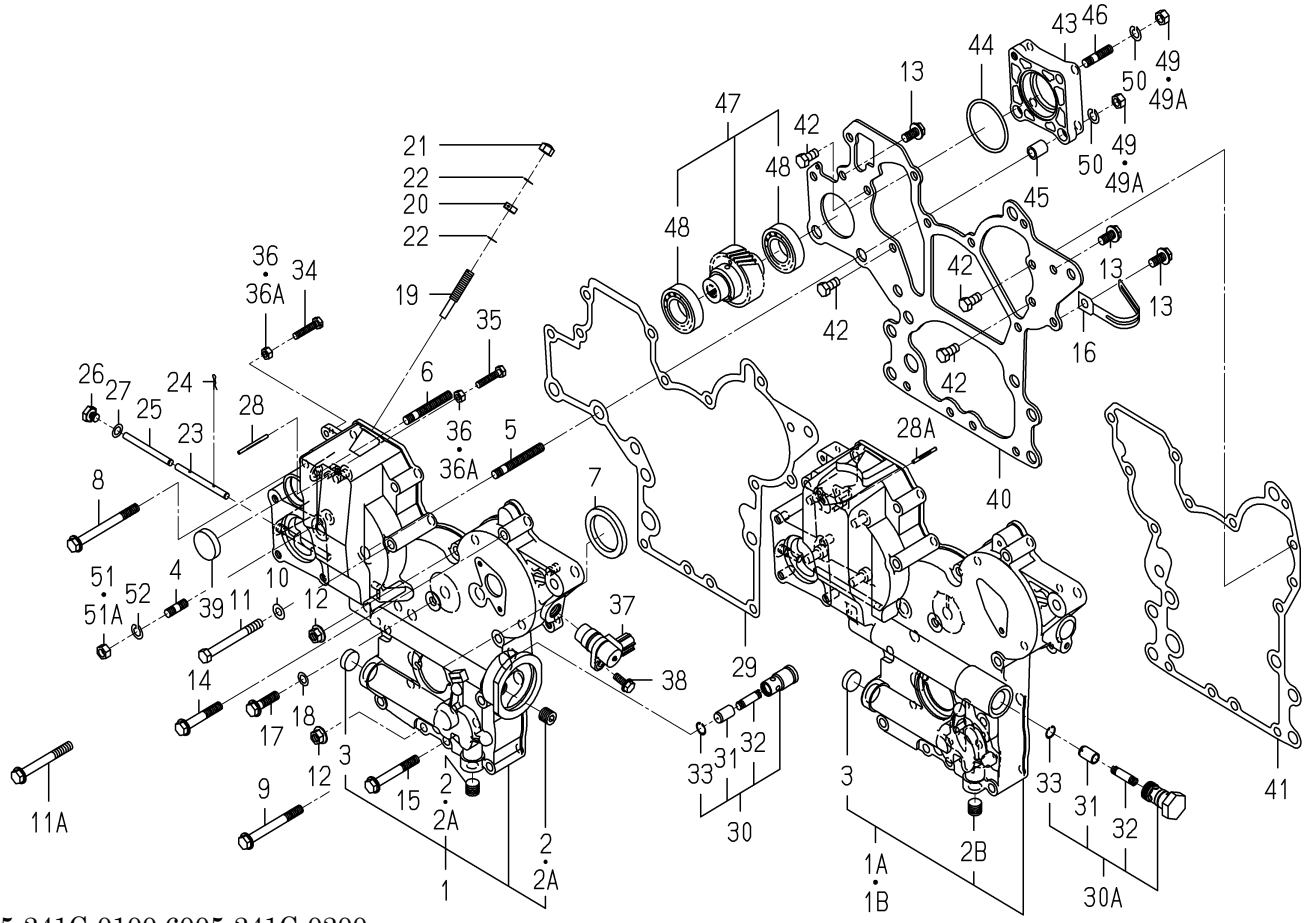

6005-241C-0100,6005-241C-0200

KEY	PART CODE	DESCRIPTION	SPC	TYPE OF MODEL E3CD VB41	TYPE OF MODEL	ITC	COL	GRP	REMARKS
51A	V304-260-008-00	NUT	*	4 179013-4					
52	V401-160-008-00	WASHER,SP/M 8	*						

FIG. 11 HANGER

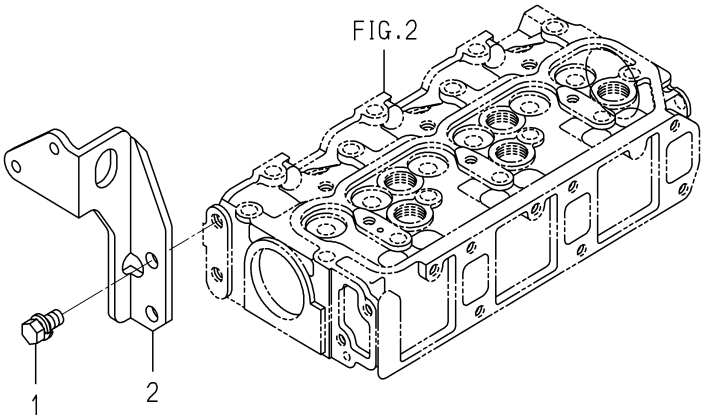

6005-290D-0100

KEY	PART CODE	DESCRIPTION	SPC	TYPE OF MODEL E3CD VB41		ITC	COL	GRP	REMARKS
1	6901-911-020-00	BOLT,SEMS/M10X20	*	2					
2	6211-777-021-00	HANGER/F	*	1					

FIG. 12 VALVE

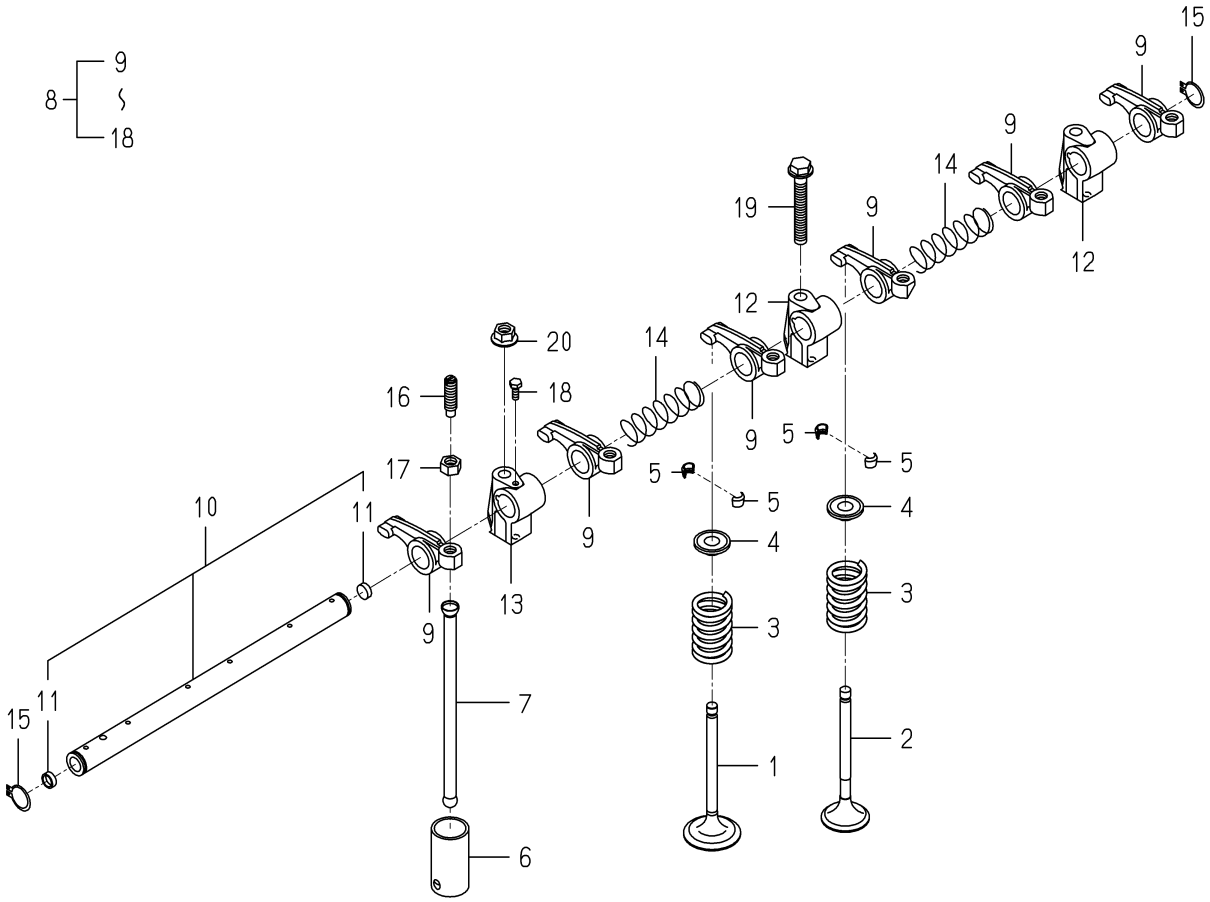

6005-301B-0100

KEY	PART CODE	DESCRIPTION	SPC	TYPE OF MODEL E3CD VB41		ITC	COL	GRP	REMARKS
1	6212-551-020-10	VALVE/INTAKE	*	3					
2	6212-552-008-00	VALVE/EXHAUST	*	3					
3	6212-561-003-00	SPRING/VALVE	*	6					
4	6212-563-001-00	SEAT,VALVE SPRING	*	6					
5	6212-565-001-00	CUTTER,VALVE	*	12					
6	6212-571-002-30	TAPPET	*	6					
7	6212-575-003-00	PUSHROD	*	6					
8	6212-600-009-20	ROCKERSHAFT ASSY	*	1					
9	6212-611-004-10	ROCKERARM	*	6					
10	6212-620-008-20	SHAFT/ROCKERARM ASSY	*	1					
11	6212-626-002-10	PLUG	*	2					
12	6212-628-010-10	BRACKET/ROCKERSHAFT	*	2					
13	6212-628-011-10	BRACKET/ROCKERSHAFT	*	1					
14	6209-940-004-00	SPRING	*	2					
15	V704-140-016-00	RING,SNAP/16 C	*	2					
16	6212-616-002-00	SCREW ADJUST	*	6					
17	6209-409-003-00	NUT	*	6					
18	6209-000-002-00	BOLT	*	1					
19	V231-360-805-50	FLANGEBOLT	*	1					
20	3817-401-001-00	NUT/M08	*	2					

FIG. 13 CAM SHAFT

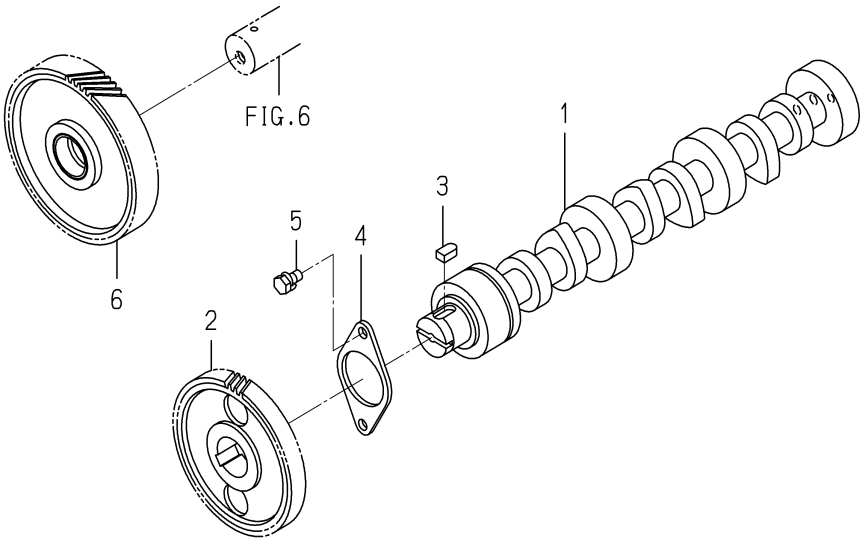

6005-310A-0100

KEY	PART CODE	DESCRIPTION	SPC	TYPE OF MODEL E3CD VB41		ITC	COL	GRP	REMARKS
1	6212-511-005-00	CAMSHAFT	*	1					
2	6212-522-004-10	GEAR/CAMSHAFT	*	1					
3	6209-730-005-00	KEY/07X05X09	*	1					
4	6212-535-007-00	PLATE/THRUST	*	1					
5	6901-910-612-00	BOLT,SEMS/M6X12	*	2					
6	6212-523-021-00	GEAR/IDLE ASSY	*	1					

FIG. 14 PISTON

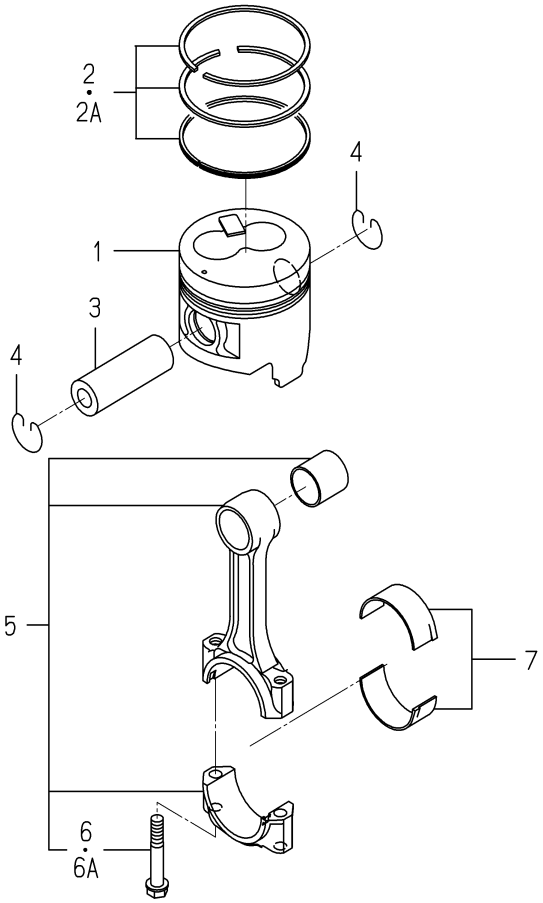

6005-340P-0100

KEY	PART CODE	DESCRIPTION	SPC	TYPE OF MODEL E3CD VB41		ITC	COL	GRP	REMARKS
1	6212-111-095-30	PISTON	*	3					
2	6212-121-028-00	RING/PISTONSET	*	3 -193231					
2A	6212-121-028-10	RING/PISTONSET	*	3 193232-		1			
3	6212-211-002-00	PIN/PISTON	*	3					
4	6909-950-115-00	RING SNAP	*	6					
5	6212-230-011-30	CONNECTINGROD ASSY	*	3					
6	6212-235-004-00	BOLT/CONNECTINGROD	*	6 -150480					
6A	6212-235-004-10	BOLT/CONNECTINGROD	*	6 150481-		1			
7	6212-271-009-00	BEARING/CONNECTING R	*	3					

FIG. 15 PISTON/OVER SIZE (OPTION)

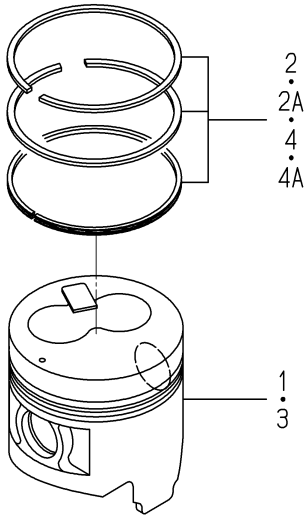

6005-349P-0100

KEY	PART CODE	DESCRIPTION	SPC	TYPE OF MODEL E3CD VB41		ITC	COL	GRP	REMARKS
1	6212-114-095-30	PISTON/OV	T	3					
2	6212-124-028-00	RING/PISTON/OVSET	T	3 -193231					
2A	6212-124-028-10	RING/PISTON/OVSET	T	3 193232-		1			
3	6212-116-095-30	PISTON/OV	T	3					
4	6212-126-028-00	RING/PISTON/OVSET	T	3 -193231					
4A	6212-126-028-10	RING/PISTON/OVSET	T	3 193232-		1			

FIG. 16 CRANK SHAFT

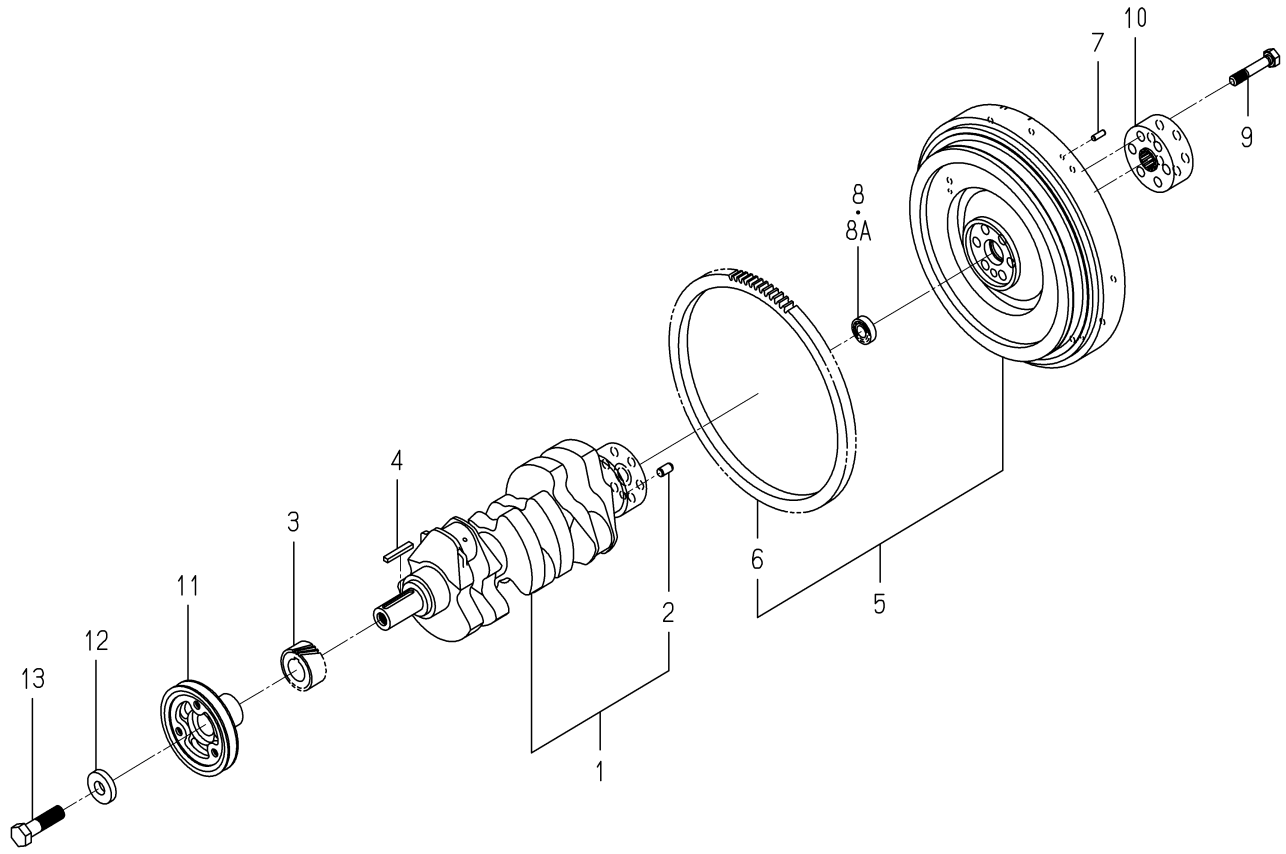

6005-351E-0100

KEY	PART CODE	DESCRIPTION	SPC	TYPE OF MODEL E3CD VB41		ITC	COL	GRP	REMARKS
1	6212-310-011-40	CRANKSHAFT ASSY	*	1 -175337					
2	V523-101-001-80	PIN	*	1 -175337					
3	6212-521-008-00	GEAR/CRANK	*	1 -175337					
4	6209-730-006-00	KEY/07X05X43	*	1 -175337					
5	6212-330-075-10	FLYWHEEL ASSY	*	1 -175337					
6	6212-333-002-00	RINGGEAR	*	1 -175337					
7	V523-100-601-80	PIN	*	3 -175337					
8	V600-150-600-20	BEARING,RB/6002SS	*	1 -155547					
8A	V600-350-600-20	BEARING/BALL	*	1 -175337					
9	6209-000-041-00	BOLT	*	6 -175337					
10	6212-339-009-10	BOSS/SPLINE	*	1 -175337					
11	6212-371-034-10	PULLEY/CRANK	*	1 -175337					
12	6212-379-001-00	WASHER	*	1 -175337					
13	6901-066-645-00	BOLT	*	1 -175337					

FIG. 17 CRANK SHAFT

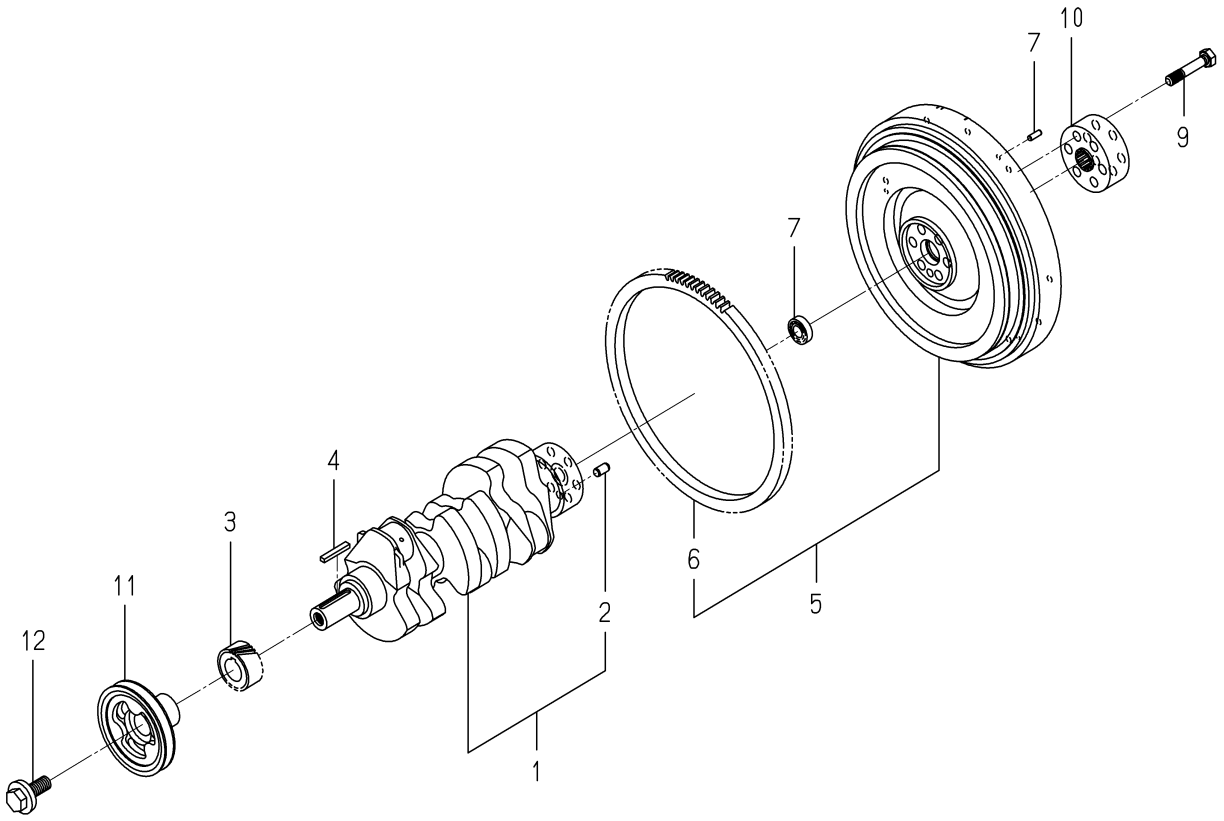

6005-351L-0100

KEY	PART CODE	DESCRIPTION	SPC	TYPE OF MODEL E3CD VB41		ITC	COL	GRP	REMARKS
1	6212-310-011-40	CRANKSHAFT ASSY	*	1 175338-					
2	V523-101-001-80	PIN	*	1 175338-					
3	6212-521-008-00	GEAR/CRANK	*	1 175338-					
4	6209-730-006-00	KEY/07X05X43	*	1 175338-					
5	6212-330-075-10	FLYWHEEL ASSY	*	1 175338-					
6	6212-333-002-00	RINGGEAR	*	1 175338-					
7	V523-100-601-80	PIN	*	3 175338-					
8	V600-350-600-20	BEARING/BALL	*	1 175338-					
9	6209-000-041-00	BOLT	*	6 175338-					
10	6212-339-009-10	BOSS/SPLINE	*	1 175338-					
11	6212-371-056-00	PULLEY/CRANK	*	1 175338-					
12	6209-000-043-00	BOLT/CRANK	*	1 175338-					

FIG. 18 OIL PUMP

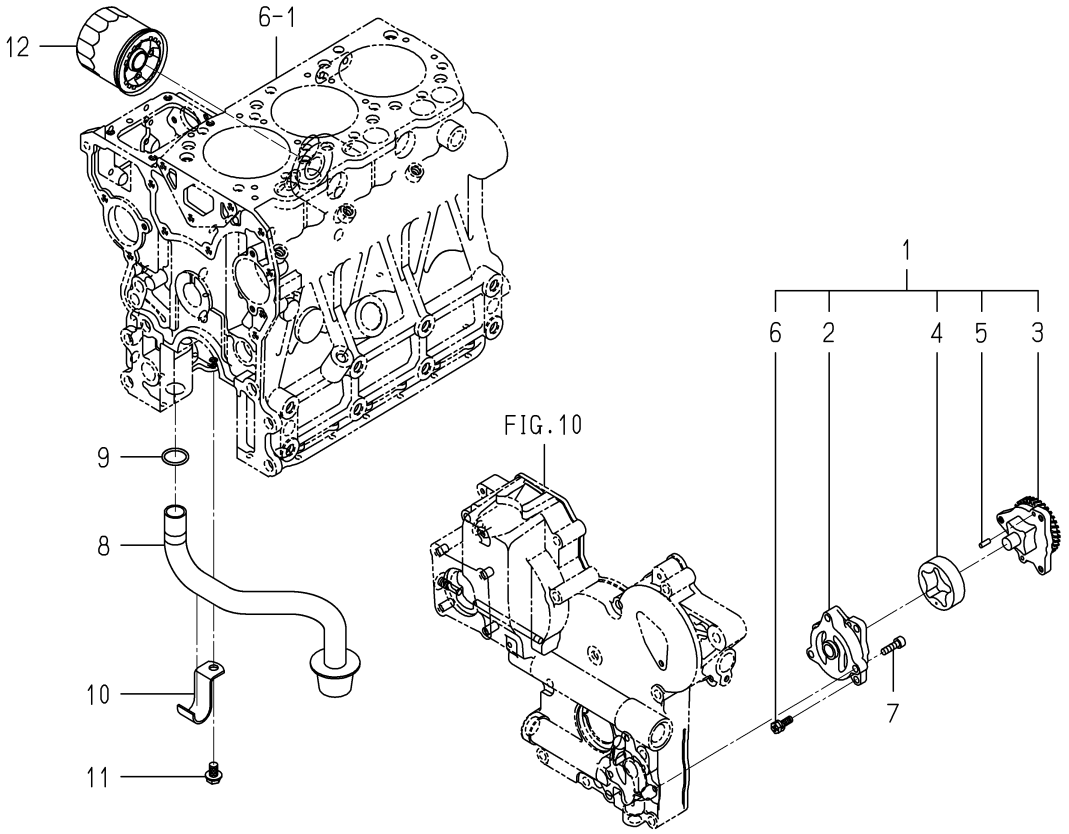

6005-401D-0100

KEY	PART CODE	DESCRIPTION	SPC	TYPE OF MODEL E3CD VB41		ITC	COL	GRP	REMARKS
1	6213-100-004-30	OILPUMP ASSY	*	1					
2	6213-111-002-20	BODY/OILPUMP	*	1					
3	6213-120-002-30	GEAR/OILPUMP ASSY	*	1					
4	6213-125-002-10	ROTOR/OUTER	*	1					
5	6213-129-003-00	PIN/STRAIGHT	*	2					
6	6213-119-001-00	BOLT/WS	*	3					
7	V220-540-602-00	SCREW/SOCKET	*	3					
8	6213-140-013-00	STRAINER	*	1					
9	V720-103-502-20	O-RING/P22	*	1					
10	6213-149-003-20	CLAMP/STRAINER	*	1					
11	V231-360-801-60	FLANGEBOLT	*	1					
12	6213-240-002-10	CARTRIDGE/OILFILTER	*	1					

FIG. 19 WATER PUMP

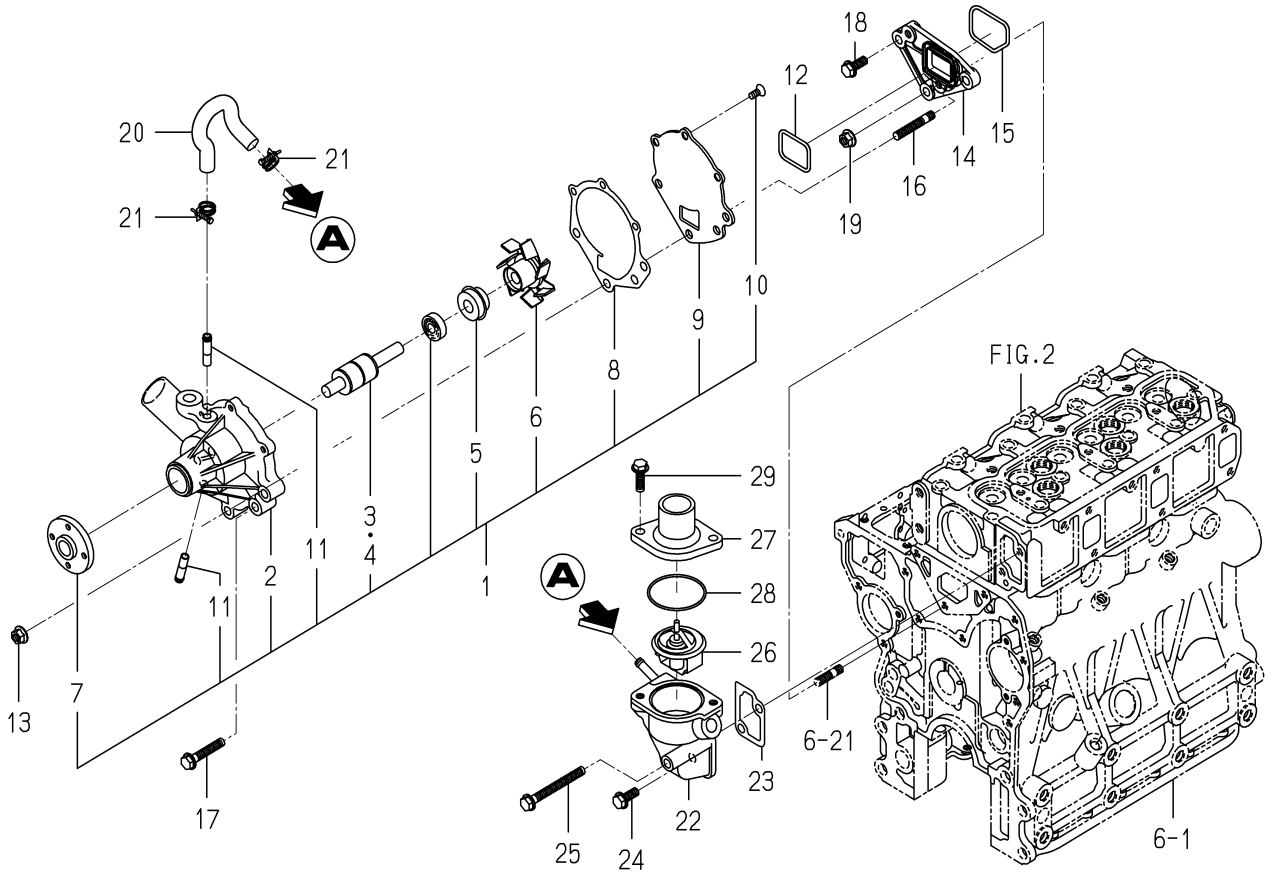

6005-420B-0100

KEY	PART CODE	DESCRIPTION	SPC	TYPE OF MODEL E3CD VB41		ITC	COL	GRP	REMARKS
1	6213-610-005-40	WATERPUMP ASSY	*	1 -138383					
2	6213-611-003-20	BODY/WATERPUMP	*	1 -138383					
3	6213-631-002-00	BEARING/WATER PUMP	*	1 -138383					
4	6213-631-005-00	BEARING/WATERPUMP	*	1 -138383					
5	6213-622-002-10	SEAL SET/WATER PUMP	*	1 -138383					
6	6213-621-003-00	ROTOR/WATERPUMP	*	1 -138383					
7	6213-642-002-00	SEAL/WATER PUMPPULLE	*	1 -138383					
8	6213-613-002-10	GASKET	*	1 -138383					
9	6213-612-004-00	PLATE/WATER PUMP	*	1 -138383					
10	6213-619-003-00	SCREW/WATER PUMP	*	3 -138383					
11	6213-619-002-00	PIPE/WATER PUMP	*	2 -138383					
12	V721-103-104-00	O-RING/G40	*	1 -138383					
13	3817-401-001-00	NUT/M08	*	2 -138383					
14	6213-619-006-00	SPACER/WATERPUMP	*	1 -138383					
15	V721-113-105-00	O-RING HS90 G50	*	1 -138383					
16	6904-110-840-00	STUD/M8X40	*	2 -138383					
17	V231-360-804-50	FLANGEBOLT	*	1 -138383					
18	V231-360-802-00	FLANGEBOLT	*	1 -138383					
19	3817-401-001-00	NUT/M08	*	1 -138383					
20	6213-729-013-10	HOSE/RUBBER	*	1 -138383					
21	J061-210-015-00	CLAMP/WIRE/10-15	*	2 -138383					
22	6213-716-001-50	HOUSING/THERMOSTAT	*	1 -138383					
23	6213-743-002-10	GASKET/HOUSING	*	1 -138383					
24	V231-360-802-00	FLANGEBOLT	*	1 -138383					
25	V231-360-807-50	FLANGEBOLT	*	1 -138383					
26	6513-770-022-10	THERMOSTAT	*	1 -138383					
27	6213-711-003-20	PIPE,WATER OUTLET	*	1 -138383					
28	V723-102-005-50	O-RING	*	1 -138383					
29	V231-360-802-50	FLANGEBOLT	*	2 -138383					

FIG. 20 WATER PUMP

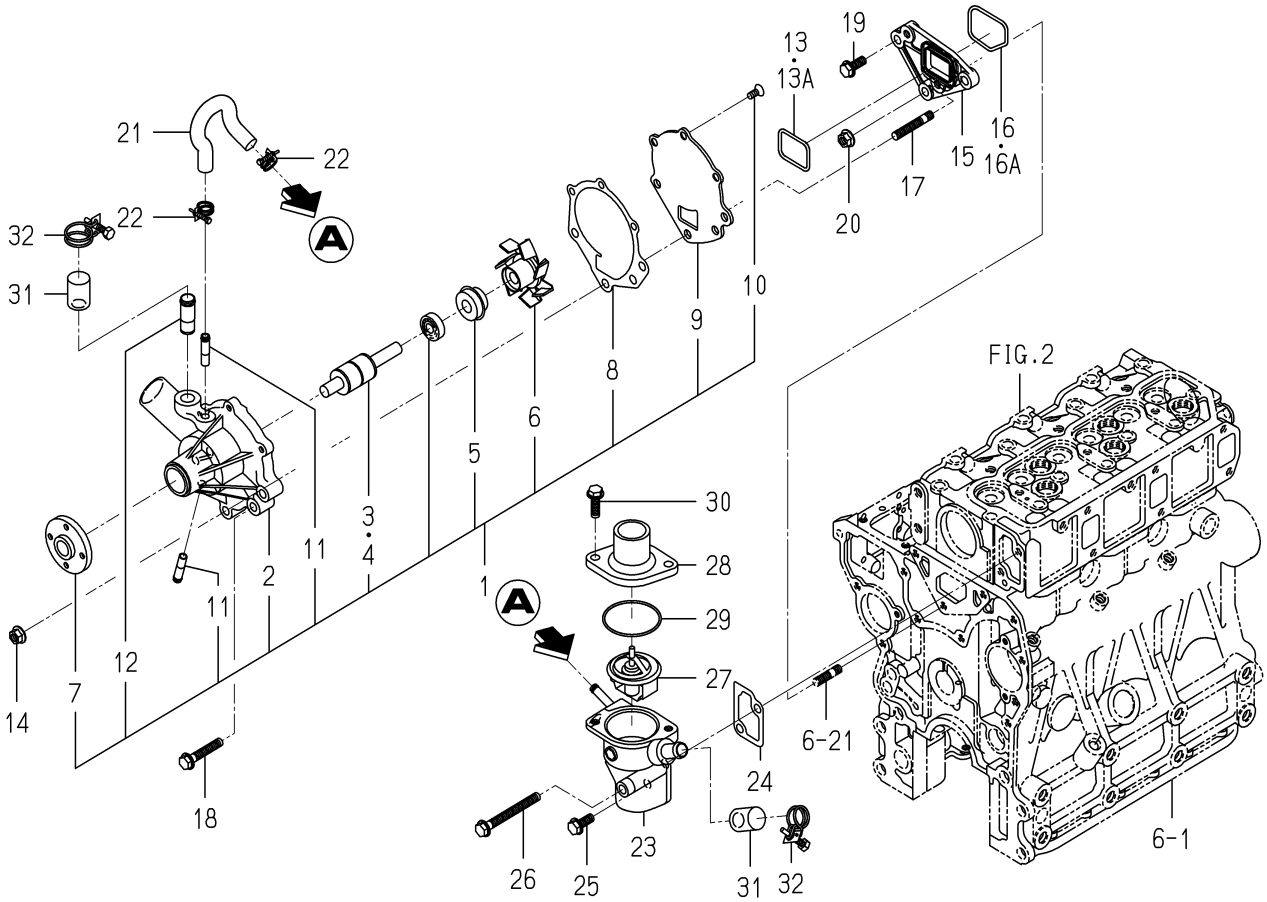

6005-420F-0100

KEY	PART CODE	DESCRIPTION	SPC	TYPE OF MODEL E3CD VB41		ITC	COL	GRP	REMARKS
1	6213-610-011-10	WATERPUMP ASSY	*	1 138384-					
2	6213-611-006-00	BODY/WATERPUMP	*	1 138384-					
3	6213-631-002-00	BEARING/WATER PUMP	*	1 138384-					
4	6213-631-005-00	BEARING/WATERPUMP	*	1 138384-					
5	6213-622-002-10	SEAL SET/WATER PUMP	*	1 138384-					
6	6213-621-003-00	ROTOR/WATERPUMP	*	1 138384-					
7	6213-642-002-00	SEAL/WATER PUMPPULLE	*	1 138384-					
8	6213-613-002-10	GASKET	*	1 138384-					
9	6213-612-004-00	PLATE/WATER PUMP	*	1 138384-					
10	6213-619-003-00	SCREW/WATER PUMP	*	3 138384-					
11	6213-619-002-00	PIPE/WATER PUMP	*	2 138384-					
12	6213-619-009-00	PIPE/WATERPUMP	*	1 138384-					
13	V721-103-104-00	O-RING/G40	*	1 -149415					
13A	6213-614-013-00	GASKET/WATERPUMP	*	1 149416-					
14	3817-401-001-00	NUT/M08	*	2 138384-					
15	6213-619-006-00	SPACER/WATERPUMP	*	1 138384-					
16	V721-113-105-00	O-RING HS90 G50	*	1 -149415					
16A	6213-614-014-00	GASKET/SPACER	*	1 149416-					
17	6904-110-840-00	STUD/M8X40	*	2 138384-					
18	V231-360-804-50	FLANGEBOLT	*	1 138384-					
19	V231-360-802-00	FLANGEBOLT	*	1 138384-					
20	3817-401-001-00	NUT/M08	*	1 138384-					
21	6213-729-013-10	HOSE/RUBBER	*	1 138384-					
22	J061-210-015-00	CLAMP/WIRE/10-15	*	2 138384-					
23	6213-716-004-10	HOUSING/THERMOSTAT	*	1 138384-					
24	6213-743-002-10	GASKET/HOUSING	*	1 138384-					
25	V231-360-802-00	FLANGEBOLT	*	1 138384-					
26	V231-360-807-50	FLANGEBOLT	*	1 138384-					
27	6513-770-022-10	THERMOSTAT	*	1 138384-					
28	6213-711-003-20	PIPE,WATER OUTLET	*	1 138384-					

FIG. 20 WATER PUMP

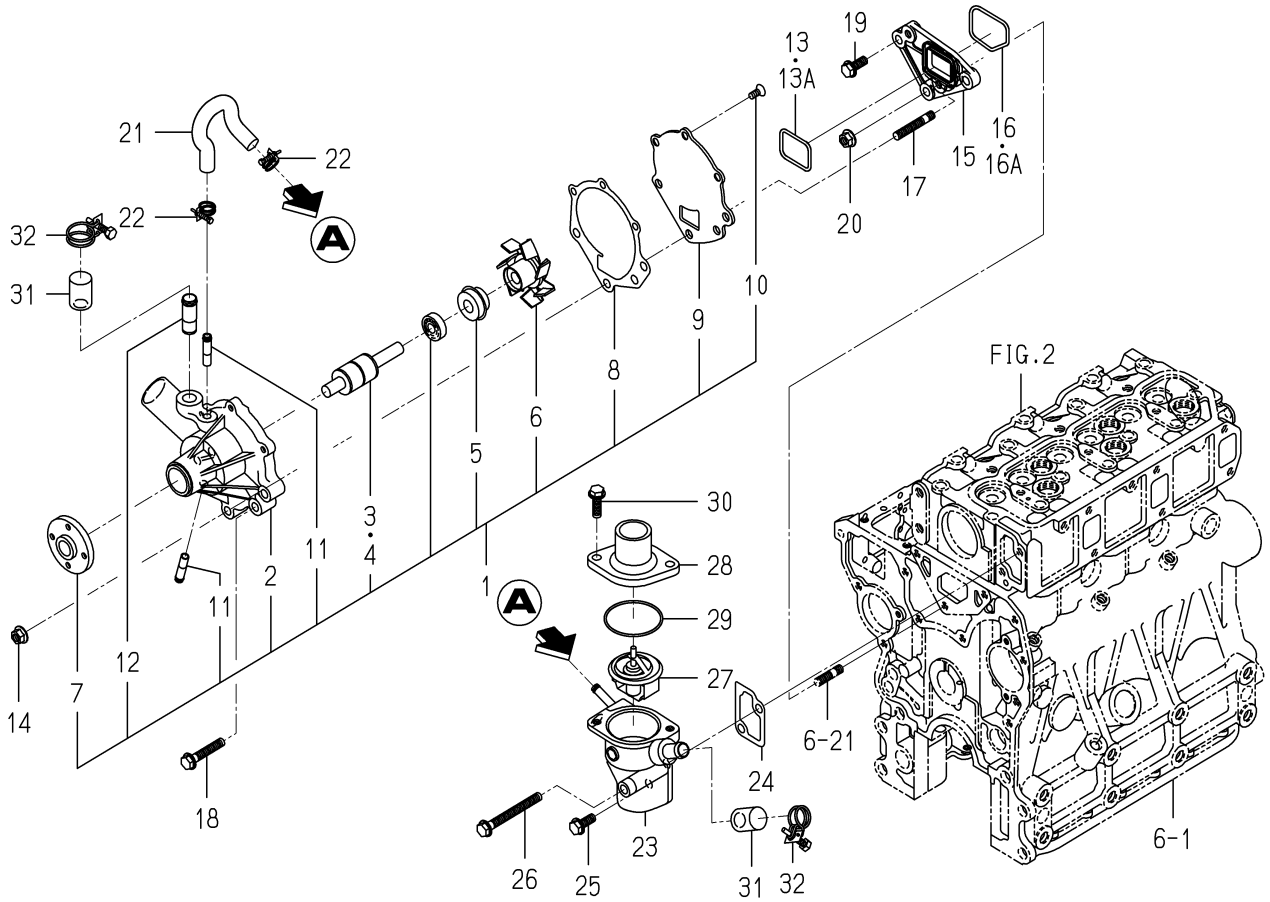

6005-420F-0100

KEY	PART CODE	DESCRIPTION	SPC	TYPE OF MODEL E3CD VB41		ITC	COL	GRP	REMARKS
29	V723-102-005-50	O-RING	*	1 138384-					
30	V231-360-802-50	FLANGEBOLT	*	2 138384-					
31	6213-729-011-00	CAP	*	2 138384-					
32	J061-220-024-00	CLAMP/WIRE/20-24	*	2 138384-					

FIG. 21 COOLING FAN

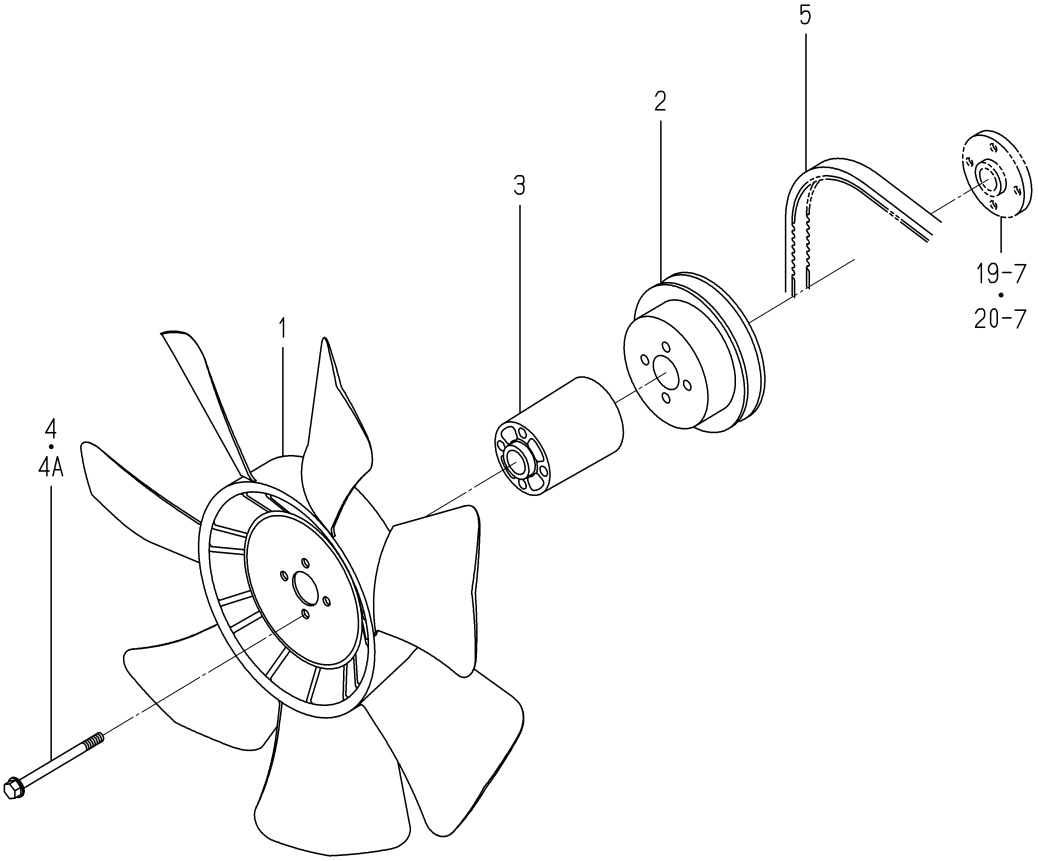

6005-480N-0100

KEY	PART CODE	DESCRIPTION	SPC	TYPE OF MODEL E3CD VB41		ITC	COL	GRP	REMARKS
1	6213-660-015-00	FAN/COOLING	*	1					
2	6213-641-022-10	PULLEY/WATERPUMP	*	1					
3	6213-669-009-00	SPACER/FAN/68	*	1					
4	6209-030-048-00	BOLT/WS	*	4 -194658					
4A	6209-046-007-00	BOLT/FLANGE	*	4 194659-					
5	6213-671-029-00	BELT/V R5 A38.5	*	1					

FIG. 22 INJECTION NOZZLE

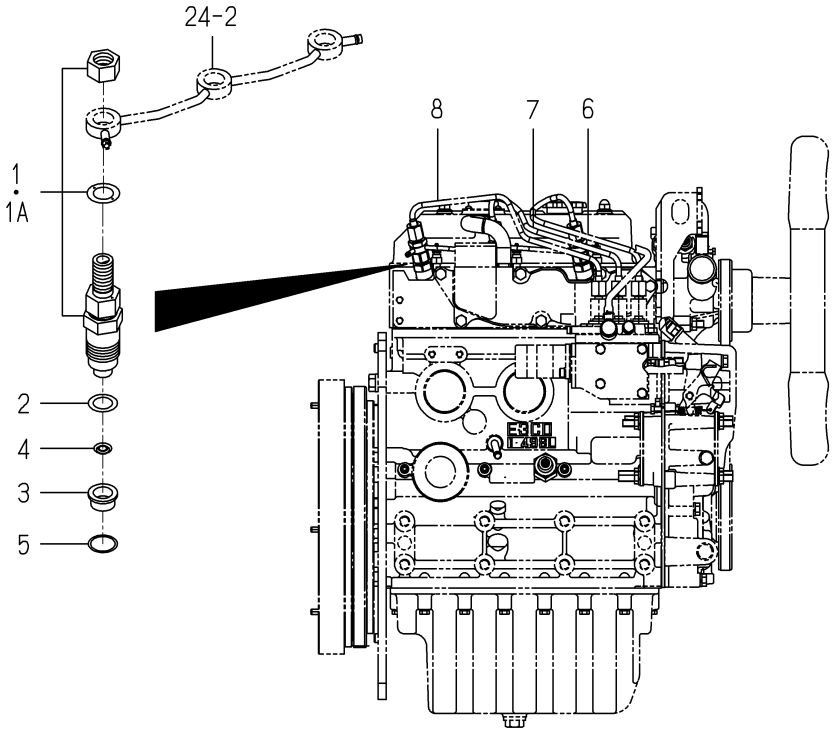

6005-501E-0100

KEY	PART CODE	DESCRIPTION	SPC	TYPE OF MODEL E3CD VB41		ITC	COL	GRP	REMARKS
1	6215-300-045-00	INJECTIONNOZZLE ASSY	*	3 -179743					FIG 031
1A	6215-300-045-10	INJECTIONNOZZLE ASSY	*	3 179744-		1			FIG 031
2	6215-315-002-00	GASKET,NOZZLE	*	3					
3	6215-315-006-00	HEATSHILD/NOZZLE	*	3					
4	6215-315-005-00	WASHER/CORRUGATE	*	3					
5	6215-315-007-00	GASKET	*	3					
6	6215-411-133-00	PIPE/INJECTION ASSY	*	1					
7	6215-411-134-00	PIPE/INJECTION ASSY	*	1					
8	6215-411-135-00	PIPE/INJECTION ASSY	*	1					

FIG. 23 INJECTION PUMP

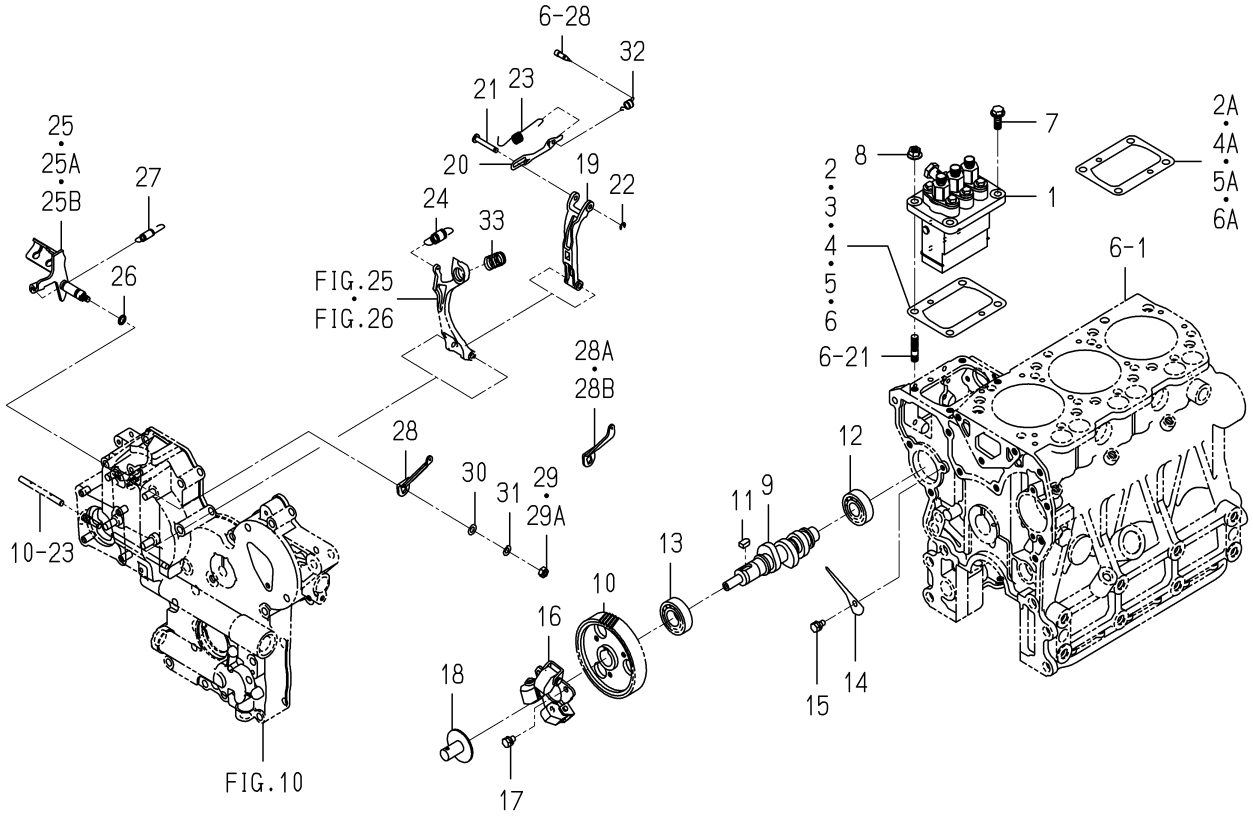

6005-511E-0100

KEY	PART CODE	DESCRIPTION	SPC	TYPE OF MODEL E3CD VB41		ITC	COL	GRP	REMARKS
1	6215-600-104-20	INJECTIONPUMP ASSY	*	1					FIG 032
2	6219-752-006-00	SHIM/INJECTION P/0.3	*	1 -143554					
2A	6219-752-045-00	SHIM/INJECTIONPUMP	*	1 143555-					
3	6219-752-007-00	SHIM/INJECTION P/0.1	*	1 -143554					
4	6219-752-008-00	SHIM/INJECTION P/0.2	*	1 -143554					
4A	6219-752-044-00	SHIM/INJECTIONPUMP	*	1 143555-					
5	6219-752-009-00	SHIM/INJECTION P/0.4	*	1 -143554					
5A	6219-752-046-00	SHIM/INJECTIONPUMP	*	1 143555-					
6	6219-752-010-00	SHIM/INJECTION P/0.5	*	1 -136378					
6A	6219-752-047-00	SHIM/INJECTIONPUMP	*	1 143555-					
7	V231-360-802-00	FLANGEBOLT	*	2					
8	3817-401-001-00	NUT/M08	*	2					
9	6215-621-017-10	CAMSHAFT/INJPUMP	*	1					
10	6212-524-012-30	GEAR/INJECTIONPUMP	*	1					
11	6209-730-005-00	KEY/07X05X09	*	1					
12	V600-110-620-30	BEARING,RB/6203	*	1					
13	6209-800-010-00	BEARING	*	1					
14	6212-535-009-00	PLATE/THRUST/INJPUMP	*	1					
15	6901-910-612-00	BOLT,SEMS/M6X12	*	1					
16	6215-520-007-10	FLYWEIGHT ASSY	*	1					
17	6209-030-043-00	BOLT/M6X10	*	3					
18	6215-526-004-00	THRUSTPIECE	*	1					
19	6215-541-001-10	ARM/FLOATING COMP	*	1					
20	6215-543-002-10	RINK/CONTROL	*	1					
21	6215-542-006-00	PIN,CONTROL	*	1					
22	V710-140-004-00	RING,SNAP/ 4 E	*	1					
23	6215-549-031-10	SPRING/SETTING	*	1					
24	6215-531-010-00	SPRING/GOVERNOR	*	1					
25	6215-541-024-30	LEVER/CONTROL COMP	*	1 -180963					
25A	6215-541-045-00	LEVER/CONTROL COMP	*	1 -191056					

FIG. 23 INJECTION PUMP

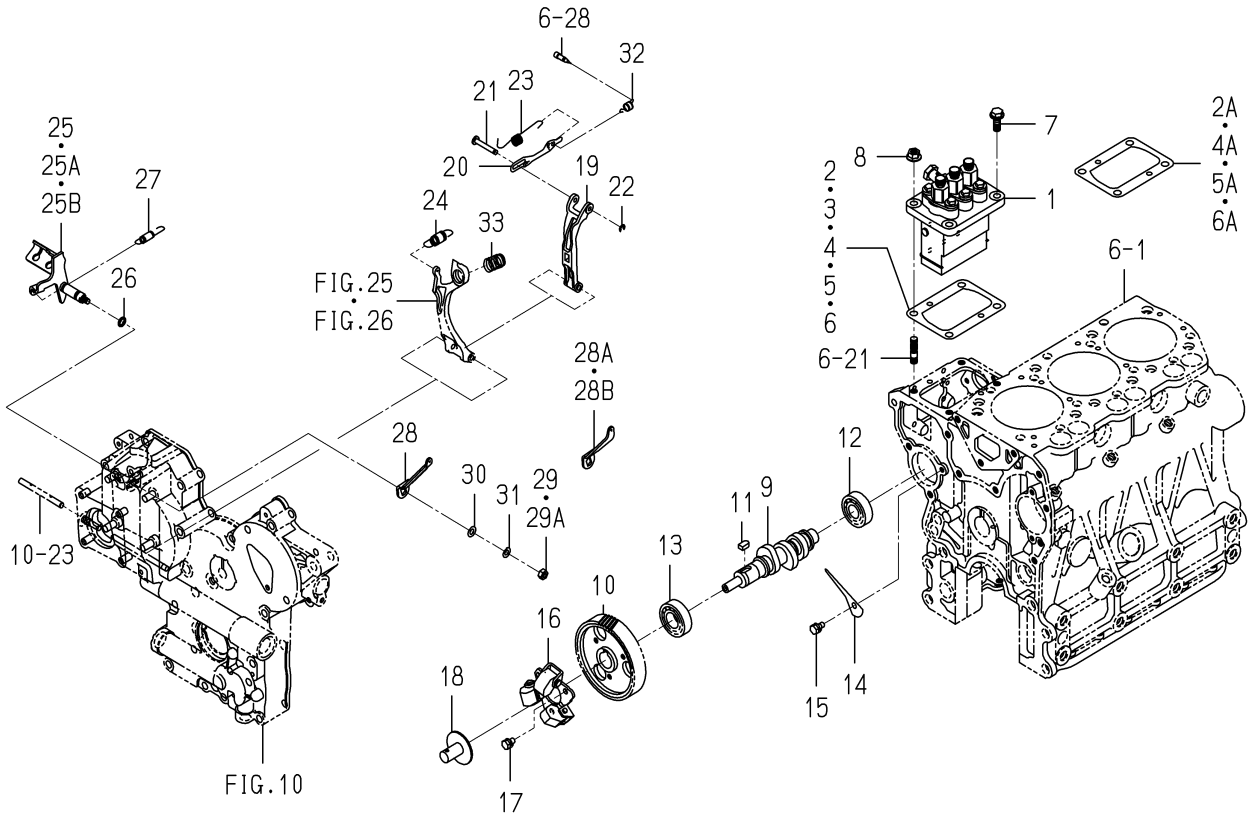

6005-511E-0100

KEY	PART CODE	DESCRIPTION	SPC	TYPE OF MODEL E3CD VB41		ITC	COL	GRP	REMARKS
25B	6215-541-045-10	LEVER/CONTROL COMP	*	1 191057-		3			
26	V720-101-900-80	O-RING/P 8	*	1					
27	6209-580-002-10	SPRING,RETURN	*	1					
28	6215-549-007-10	ARM/CONTROL	*	1 -180963					
28A	6215-549-076-00	ARM/CONTROL	*	1 -183522					
28B	6215-549-076-10	ARM/CONTROL	*	1 183523-		3			
29	6909-110-406-00	NUT	*	1 -178626					
29A	V301-260-006-00	NUT/M6	*	1 178627-					
30	V411-260-006-00	WASHER / M6	*	1					
31	V401-160-006-00	WASHER,SP/M 6	*	1					
32	6215-549-039-00	SPRING/STARTING	*	1					
33	6215-537-002-10	SPRING/IDLE	*	1					

FIG. 24 FUEL PIPE

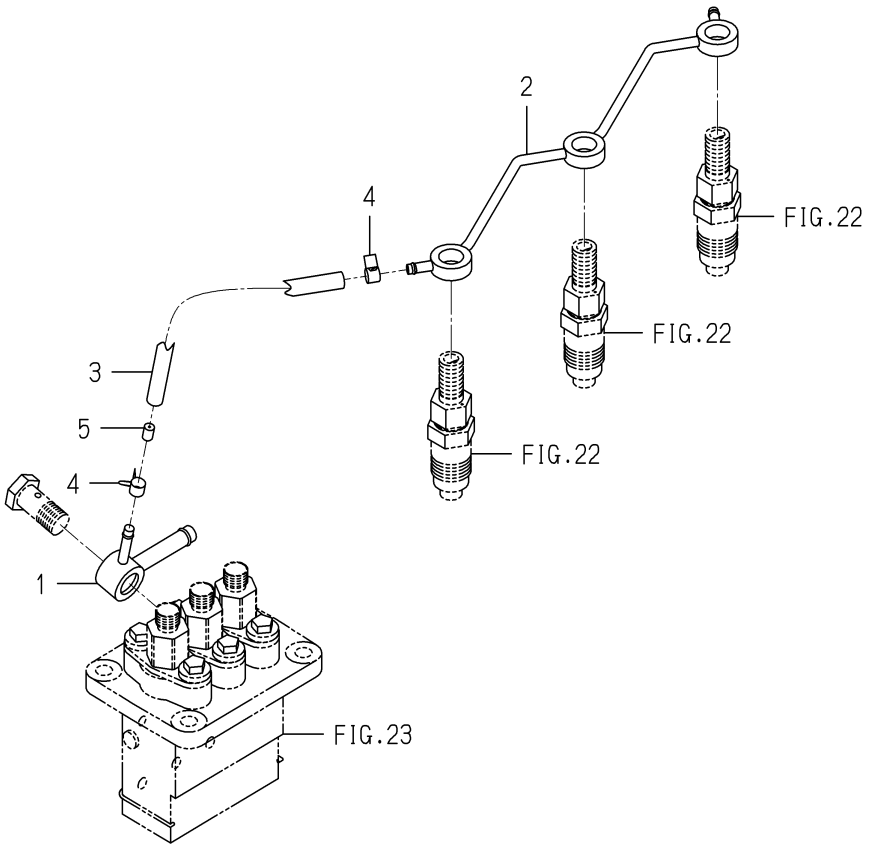

6005-550F-0100

KEY	PART CODE	DESCRIPTION	SPC	TYPE OF MODEL E3CD VB41		ITC	COL	GRP	REMARKS
1	6215-412-004-00	CONNECTOR/FUEL	*	1					
2	6215-411-136-00	PIPE/FUEL	*	1					
3	6209-360-011-00	HOSE/RUBBER	*	1					
4	J062-076-082-00	CLIP/HOSE/7.6-8.2	*	2					
5	3640-586-004-00	RESISTANCE/1.0	*	1					

FIG. 25 ADAPTER

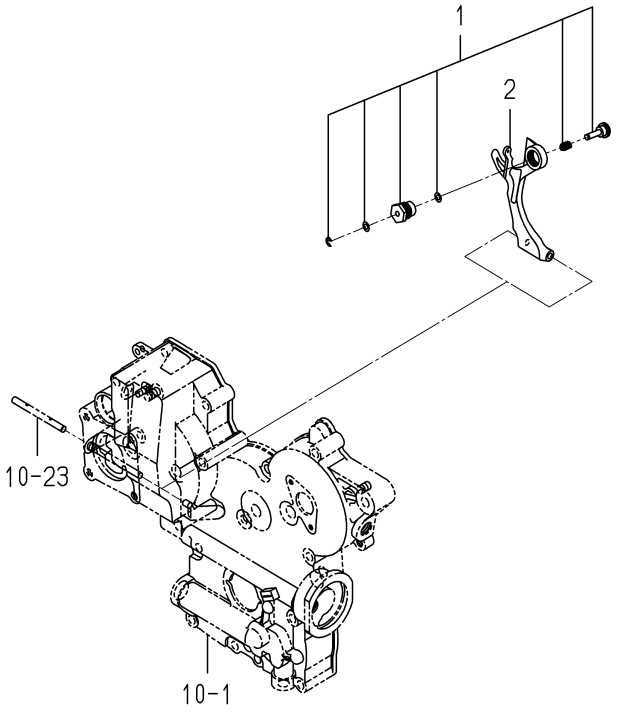

6005-560S-0100

KEY	PART CODE	DESCRIPTION	SPC	TYPE OF MODEL E3CD VB41		ITC	COL	GRP	REMARKS
1	6215-548-058-00	ADAPTER/260X135 ASSY	*	1 -146336					
2	6215-541-016-30	ARM/TENSION	*	1 -146336					

FIG. 26 ADAPTER

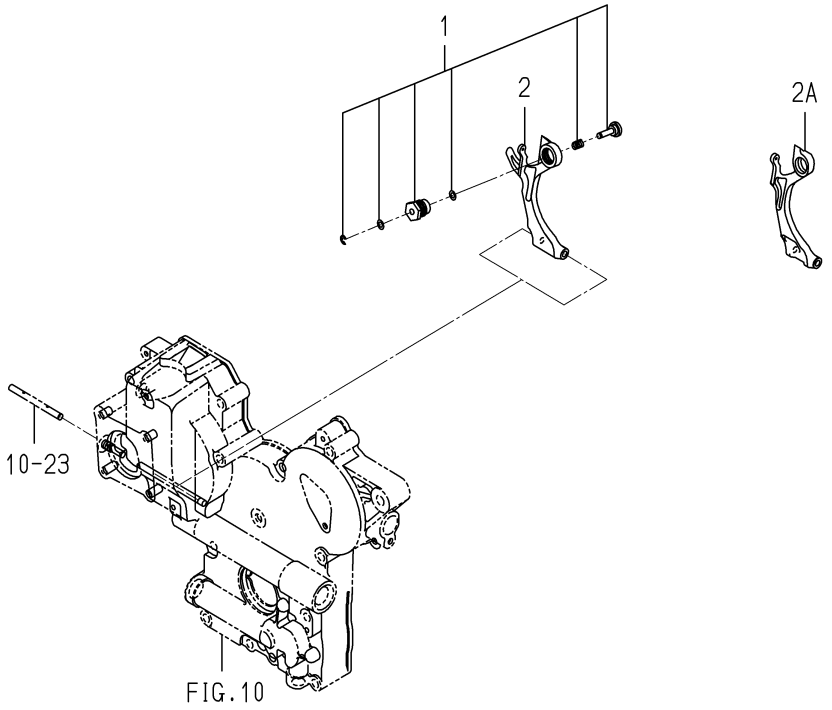

6005-560X-0100

KEY	PART CODE	DESCRIPTION	SPC	TYPE OF MODEL E3CD VB41		ITC	COL	GRP	REMARKS
1	6215-548-069-00	ADAPTER/260X120 ASSY	*	1 146337-					
2	6215-541-016-30	ARM/TENSION	*	1 -168197					
2A	6215-541-016-40	ARM/TENSION	*	1 168198-		1			

FIG. 27 ELECTRIC (1)

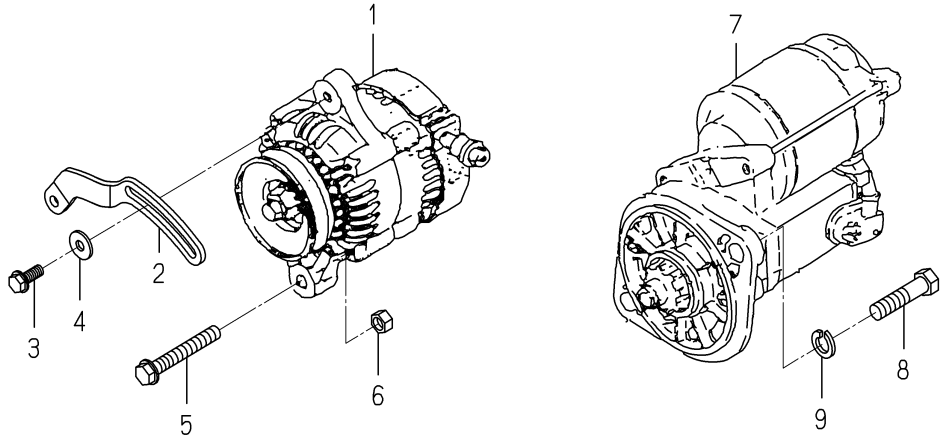

6005-801N-0100,6005-801N-0200

KEY	PART CODE	DESCRIPTION	SPC	TYPE OF MODEL E3CD VB41		ITC	COL	GRP	REMARKS
1	6281-200-020-00	GENERATOR ASSY	*	1 -146336					FIG 034
2	6213-674-006-20	PLATE/ADJUST	*	1 -146336					
3	V231-360-802-00	FLANGEBOLT	*	1 -146336					
4	1373-121-001-00	WASHER/9X22X2	*	1 -146336					
5	V233-361-007-00	FLANGEBOLT	*	1 -146336					
6	6909-110-410-00	NUT/M10	*	1 -146336					
7	6281-100-007-20	STARTER ASSY	*	1 -146336					FIG 033
8	V201-361-205-00	BOLT	*	2 -146336					
9	V401-160-012-00	WASHER,SP/M12	*	2 -146336					

FIG. 28 ELECTRIC (1)

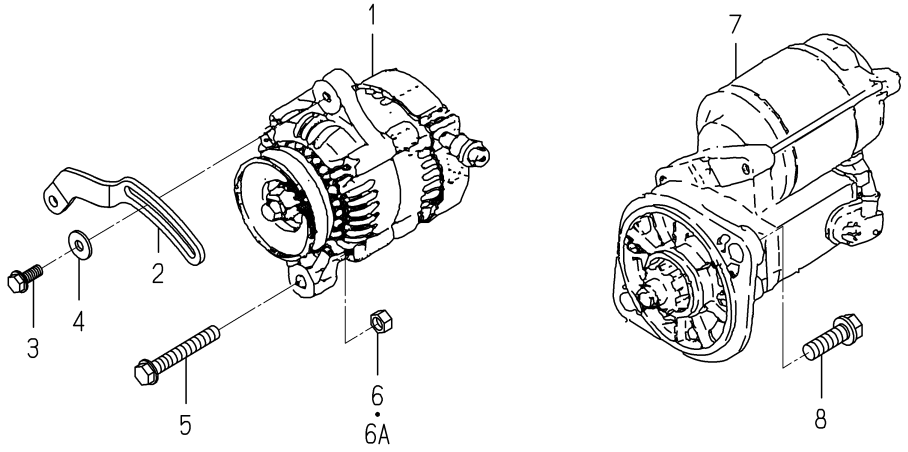

6005-801P-0100,6005-801P-0200

KEY	PART CODE	DESCRIPTION	SPC	TYPE OF MODEL E3CD VB41		ITC	COL	GRP	REMARKS
1	6281-200-020-00	GENERATOR ASSY	*	1 146337-					FIG 034
2	6213-674-006-20	PLATE/ADJUST	*	1 146337-					
3	V231-360-802-00	FLANGEBOLT	*	1 146337-					
4	1373-121-001-00	WASHER/9X22X2	*	1 146337-					
5	V233-361-007-00	FLANGEBOLT	*	1 146337-					
6	6909-110-410-00	NUT/M10	*	1 -171495					
6A	V334-260-010-00	NUT/M10	*	1 171496-					
7	6281-100-007-20	STARTER ASSY	*	1 146337-					FIG 033
8	6901-931-240-00	BOLT	*	2 146337-					

FIG. 29 ELECTRIC (2)

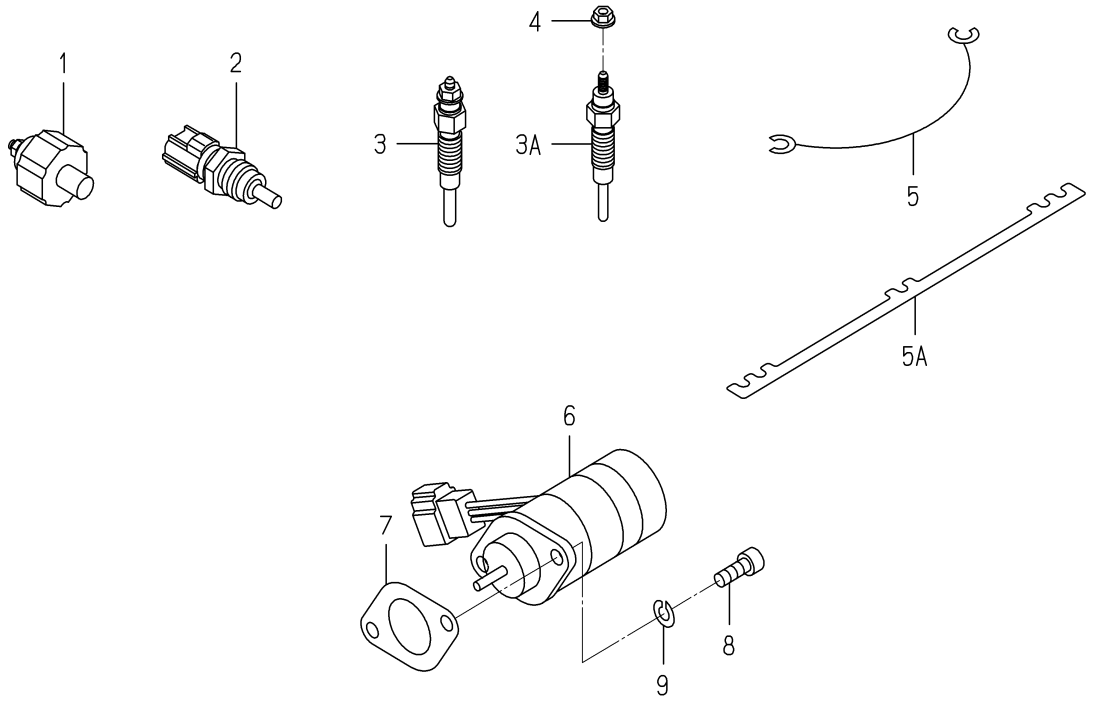

6005-820S-0100,6005-820S-0200

KEY	PART CODE	DESCRIPTION	SPC	TYPE OF MODEL E3CD VB41		ITC	COL	GRP	REMARKS
1	6281-971-003-00	SWITCH/OILPRESSURE	*	1					
2	6282-450-007-00	THERMOMETER	*	1					
3	6281-410-023-00	GLOWPLUG	*	3 -170197					
3A	6281-410-023-10	GLOWPLUG	*	3 170198-		3			
4	6209-440-005-00	NUT/FLANGE	*	3 170224-					
5	6219-732-012-00	CONNECTOR/GLOWPLUG	*	2 -150159					
5A	6219-732-017-00	CONNECTOR/GLOWPLUG	*	1 150160-					
6	6281-910-011-00	SOLENOID	*	1					
7	6209-630-002-10	GASKET	*	1					
8	V220-540-601-60	BOLT	*	2					
9	V401-160-006-00	WASHER,SP/M 6	*	2					

FIG. 30 REPAIR PARTS(OPTION)

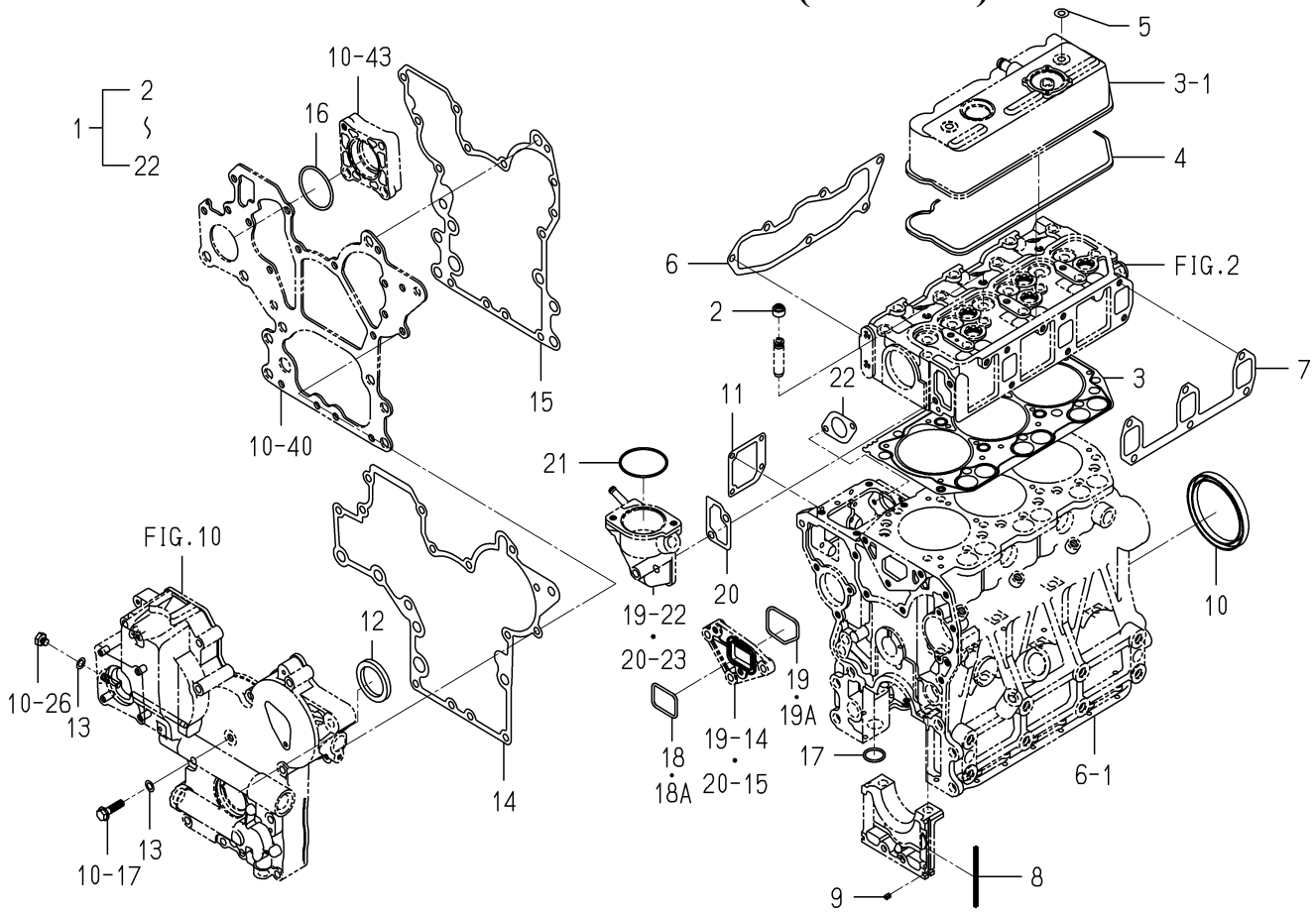

6005-999J-0100

KEY	PART CODE	DESCRIPTION	SPC	TYPE OF MODEL E3CD VB41		ITC	COL	GRP	REMARKS
1	6287-810-040-00	REPAIR/ENGINESET	T	1					
2	6212-569-002-00	SEAL,OIL	T	6					
3	6211-141-057-10	GASKET/CYLINDERHEAD	T	1					
4	6211-173-005-00	SEAL/CYL HEAD/UNDER	T	1					
5	6209-572-003-00	GASKET	T	2					
6	6214-115-003-10	GASKET/INLETMANIFOLD	T	1					
7	6214-145-004-20	GASHET/EXH MANIFOLD	T	1					
8	6211-258-001-00	SEAL,BEARING CAP	T	4					
9	6211-258-002-00	SEAL,BEARING CAP/7	T	2					
10	6209-625-003-20	OILSEAL	T	1					
11	6211-292-001-20	GASKET/COVER	T	1					
12	6209-625-002-00	SEAL,OIL	T	1					
13	6209-500-003-00	WASHER/08X14X01	T	2					
14	6211-312-005-10	GASKET/GEARCASE	T	1					
15	6211-312-006-10	GASKET/PLATE	T	1					
16	V723-102-005-00	O-RING 1A S50	T	1					
17	V720-103-502-20	O-RING/P22	T	1					
18	V721-103-104-00	O-RING/G40	T	1 -149656					
18A	6213-614-013-00	GASKET/WATERPUMP	T	1 149657-					
19	V721-113-105-00	O-RING HS90 G50	T	1 -149656					
19A	6213-614-014-00	GASKET/SPACER	T	1 149657-					
20	6213-743-002-10	GASKET/HOUSING	T	1					
21	V723-102-005-50	O-RING	T	1					
22	6209-630-002-10	GASKET	T	1					

FIG. 31 COMPONENT PARTS FOR 6215-300-045-10 ON Fig.22

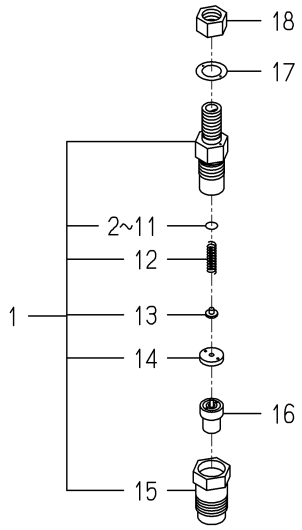

6215-300-045-1B

KEY	PART CODE	DESCRIPTION	SPC	TYPE OF MODEL E3CD VB41		ITC	COL	GRP	REMARKS
1	6215-330-028-00	HOLDER/NOZZLEASSY	*	3					
2	6215-345-044-00	SHIM/0.10	*	3					
3	6215-345-045-00	SHIM/0.20	*	3					
4	6215-345-046-00	SHIM/0.30	*	3					
5	6215-345-047-00	SHIM/0.40	*	3					
6	6215-345-048-00	SHIM/0.50	*	3					
7	6215-345-049-00	SHIM/0.52	*	3					
8	6215-345-050-00	SHIM/0.54	*	3					
9	6215-345-051-00	SHIM/0.56	*	3					
10	6215-345-052-00	SHIM/0.58	*	3					
11	6215-345-053-00	SHIM/0.80	*	3					
12	6215-343-010-00	SPRINGNOZZLE	*	3					
13	6215-342-013-00	SPRINGSEAT	*	3					
14	6215-339-004-00	SPACER	*	3					
15	6215-332-014-00	NUT/NOZZLERETAINING	*	3					
16	6215-311-036-00	NOZZLE	*	3					
17	6215-359-003-00	GASKET	*	3					
18	6215-359-004-00	NUT	*	3					

FIG. 32 COMPONENT PARTS FOR 6215-600-104-20 ON Fig.23

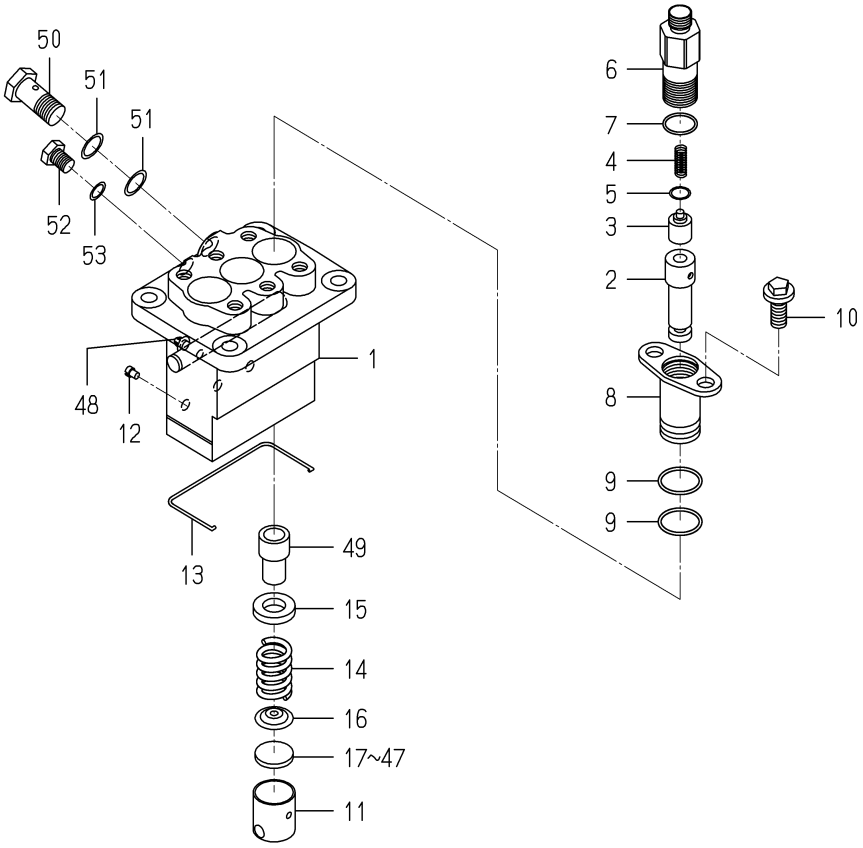

6215-600-104-2E

KEY	PART CODE	DESCRIPTION	SPC	TYPE OF MODEL E3CD VB41		ITC	COL	GRP	REMARKS
1	6215-611-015-00	HOUSING/PUMP	*	1					
2	6215-631-015-00	PLUNGER ASSY	*	3					
3	6215-641-002-00	VALVE,DELIVERY	*	3					
4	6215-643-005-00	SPRING/DELIVERYVALVE	*	3					
5	6215-649-008-00	GASKET	*	3					
6	6215-644-009-00	HOLDER/DELIVERYVALVE	*	3					
7	6215-649-014-00	ORING	*	3					
8	6215-635-004-00	SLEEVEFLANGE	*	3					
9	6215-649-013-00	ORING	*	6					
10	6215-649-011-00	BOLT	*	6					
11	6215-622-003-00	TAPPET	*	3					
12	6215-629-017-00	PIN	*	3					
13	6215-629-035-00	SNAPRING	*	1					
14	6215-634-003-00	SPRING/PLUNGER	*	3					
15	6215-639-008-00	SPRINGSEAT	*	3					
16	6215-639-009-00	SPRINGSEAT	*	3					
17	6215-629-060-00	PLATE/T=2.60	*	1					
18	6215-629-061-00	PLATE/T=2.65	*	1					
19	6215-629-062-00	PLATE/T=2.70	*	1					
20	6215-629-063-00	PLATE/T=2.75	*	1					
21	6215-629-064-00	PLATE/T=2.80	*	1					
22	6215-629-065-00	PLATE/T=2.85	*	1					
23	6215-629-066-00	PLATE/T=2.90	*	1					
24	6215-629-067-00	PLATE/T=2.95	*	1					
25	6215-629-036-00	PLATE/T=3.00	*	1					
26	6215-629-037-00	PLATE/T=3.05	*	1					
27	6215-629-038-00	PLATE/T=3.10	*	1					
28	6215-629-039-00	PLATE/T=3.15	*	1					
29	6215-629-040-00	PLATE/T=3.20	*	1					
30	6215-629-041-00	PLATE/T=3.25	*	1					

FIG. 32 COMPONENT PARTS FOR 6215-600-104-20 ON Fig.23

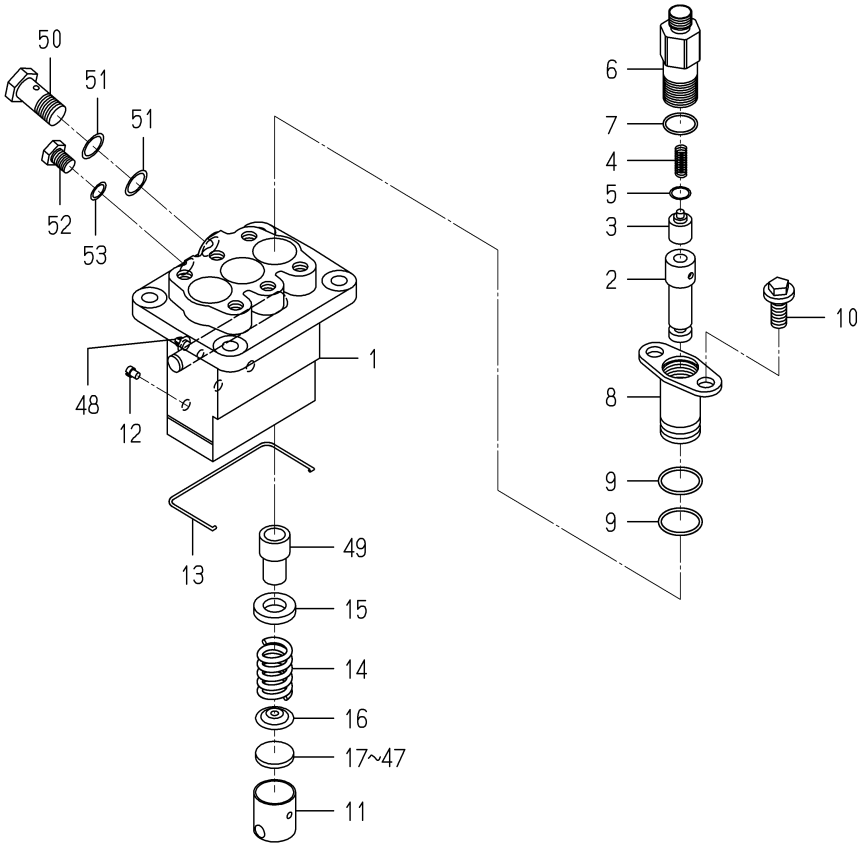

6215-600-104-2E

KEY	PART CODE	DESCRIPTION	SPC	TYPE OF MODEL E3CD VB41		ITC	COL	GRP	REMARKS
31	6215-629-042-00	PLATE/T=3.30	*	1					
32	6215-629-043-00	PLATE/T=3.35	*	3 -146336					
32	6215-629-043-00	PLATE/T=3.35	*	1 146337-					
33	6215-629-044-00	PLATE/T=3.40	*	1					
34	6215-629-045-00	PLATE/T=3.45	*	1					
35	6215-629-046-00	PLATE/T=3.50	*	1					
36	6215-629-047-00	PLATE/T=3.55	*	1					
37	6215-629-048-00	PLATE/T=3.60	*	1					
38	6215-629-049-00	PLATE/T=3.65	*	1					
39	6215-629-050-00	PLATE/T=3.70	*	1					
40	6215-629-051-00	PLATE/T=3.75	*	1					
41	6215-629-052-00	PLATE/T=3.80	*	1					
42	6215-629-053-00	PLATE/T=3.85	*	1					
43	6215-629-054-00	PLATE/T=3.90	*	1					
44	6215-629-055-00	PLATE/T=3.95	*	1					
45	6215-629-056-00	PLATE/T=4.00	*	1					
46	6215-629-058-00	PLATE/T=4.05	*	1					
47	6215-629-059-00	PLATE/T=4.10	*	1					
48	6215-637-004-00	CONTROLRACK	*	1					
49	6215-635-005-00	CONTROLSLEEVE	*	3					
50	6215-619-023-00	EYEBOLT	*	1					
51	6115-639-008-00	GASKET	*	2					
52	6215-619-024-00	BOLT	*	1					
53	6215-359-006-00	GASKET	*	1					

FIG. 33 COMPONENT PARTS FOR 6281-100-007-20 ON Fig.27

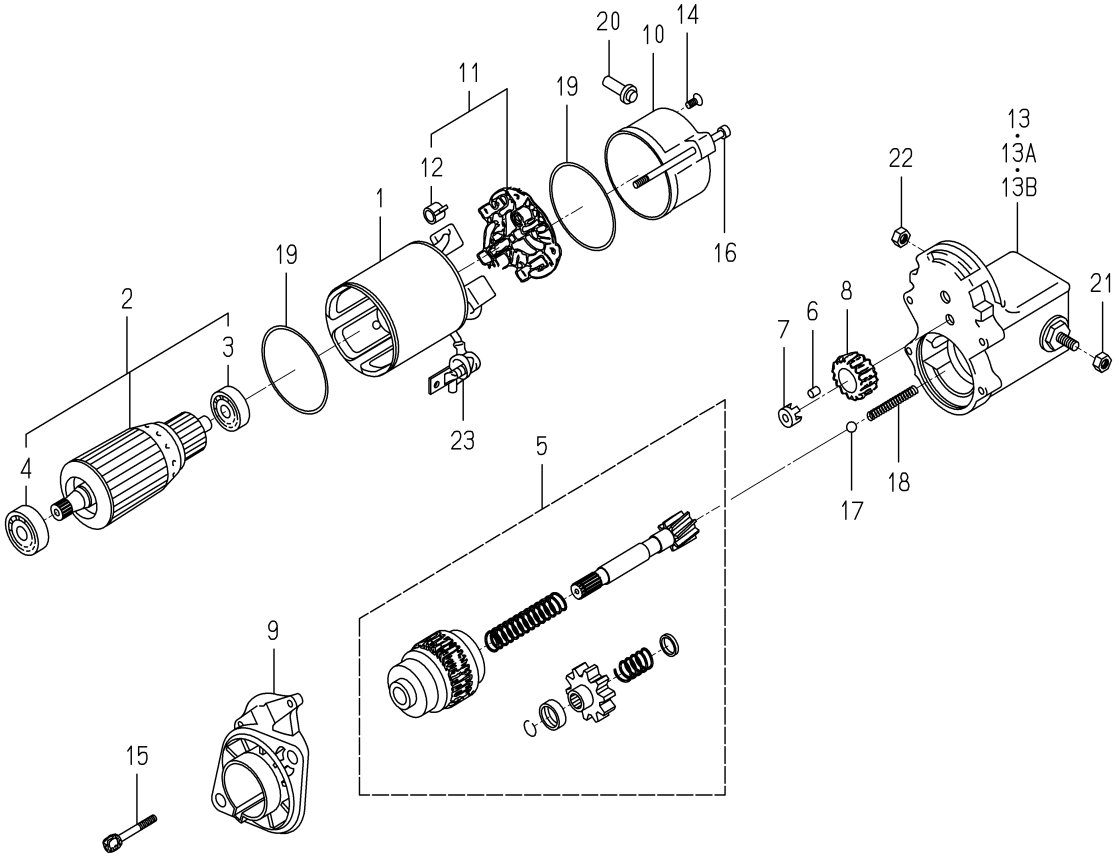

6281-100-007-2H

KEY	PART CODE	DESCRIPTION	SPC	TYPE OF MODEL E3CD VB41		ITC	COL	GRP	REMARKS
1	6281-111-005-00	YOKE/STARTER ASSY	*	1					
2	6281-121-006-00	ARMATURE/STARTE ASSY	*	1					
3	6281-129-038-00	BEARING	*	1					
4	6281-129-039-00	BEARING	*	1					
5	6281-124-007-10	CLUTCH/STARTER ASSY	*	1					
6	6581-129-099-00	RORA	*	5					
7	6281-129-040-00	RETAINER	*	1					
8	6281-123-005-00	PINION/STARTER	*	1					
9	6281-129-045-10	HOUSING/STARTER ASSY	*	1					
10	6281-115-011-00	FRAME/STARTEREND	*	1					
11	6281-116-004-00	HOLDER/STARTER ASSY	*	1					
12	6581-117-007-00	SPRING,BRUSH	*	4					
13	6281-151-017-10	SWITCH/MAGNETIC ASSY	*	1 -146336					
13A	6281-151-020-00	SWITCH/MAGNETIC ASSY	*	1 -153398					
13B	6281-151-023-00	SWITCH/MAGNETIC ASSY	*	1 153399-					
14	6281-129-062-00	SCREW	*	2					
15	6281-129-042-00	BOLT/WS	*	2					
16	6281-129-043-00	BOLT/THROUGH	*	2					
17	6581-129-092-00	BALL	*	1					
18	6281-129-044-00	SPRING/RETURN	*	1					
19	6281-129-003-00	O-RING	*	2					
20	6281-115-016-00	BUSHING/DRAIN	*	1					
21	6909-111-508-00	NUT	*	1					
22	6281-229-041-00	NUT	*	1					
23	6281-115-010-00	COVER	*	1					

FIG. 34 COMPONENT PARTS FOR 6281-200-020-00 ON Fig.27

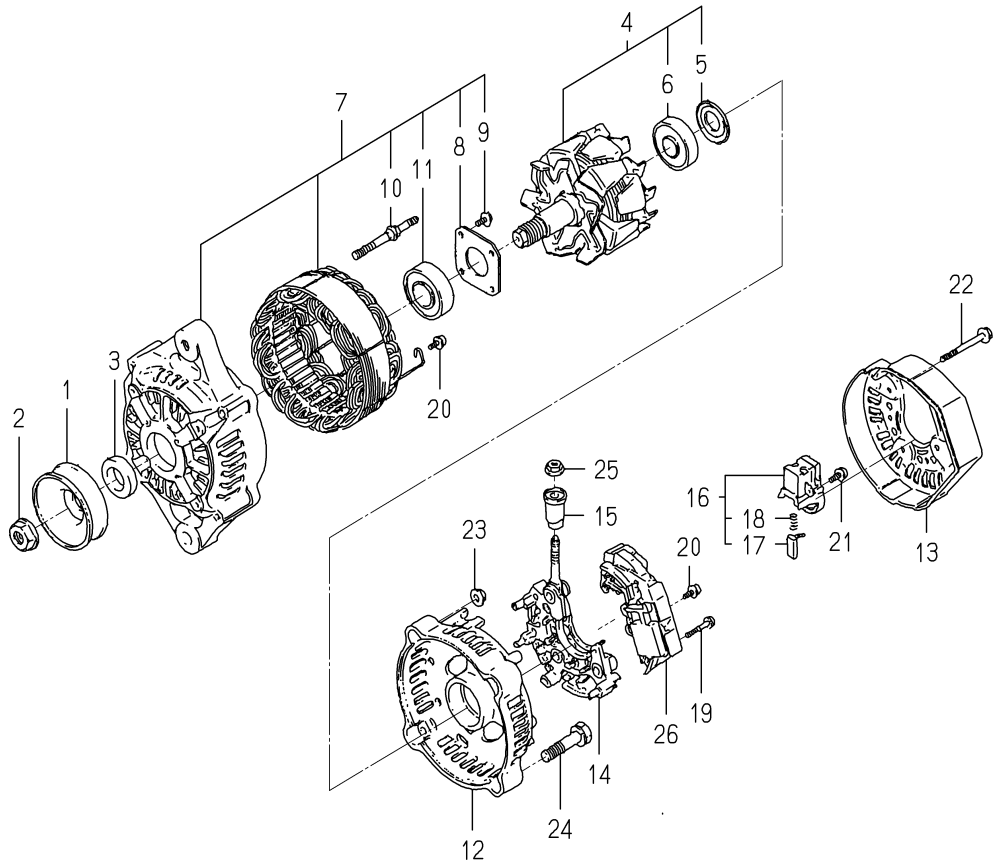

6281-200-020-0B

KEY	PART CODE	DESCRIPTION	SPC	TYPE OF MODEL E3CD VB41		ITC	COL	GRP	REMARKS
1	6281-222-012-00	PULLEY	*	1					
2	6281-229-002-00	NUT	*	1					
3	6281-229-003-00	COLLOR	*	1					
4	6281-221-007-00	ROTOR ASSY	*	1					
5	6281-229-004-00	COVER,BEARING	*	1					
6	6281-229-032-00	BEARING/BALL	*	1					
7	6281-213-017-00	FRAME/DRIVEEND ASSY	*	1					
8	6281-229-006-00	PLATE	*	1					
9	6281-229-007-00	BOLT	*	4					
10	6281-229-008-00	BOLT	*	2					
11	6281-229-033-00	BEARING/BALL	*	1					
12	6281-214-003-00	FRAME	*	1					
13	6281-214-004-00	COVER	*	1					
14	6281-229-029-00	HOLDER ASSY	*	1					
15	6281-229-011-00	BUSH	*	1					
16	6281-217-003-00	HOLDER/BRUSH ASSY	*	1					
17	6281-215-001-00	BRUSH	*	2					
18	6281-216-001-00	SPRING	*	2					
19	6281-229-012-00	BOLT	*	2					
20	6281-229-013-00	BOLT	*	6					
21	6281-229-014-00	BOLT	*	1					
22	6281-229-015-00	BOLT	*	3					
23	6281-229-016-00	NUT	*	2					
24	6281-229-017-00	BOLT	*	2					
25	6281-229-018-00	NUT	*	1					
26	6281-271-002-00	REGULATOR ASSY	*	1					

E N G I N E

E3CDVB45···TG5330E4 (C-TYPE)

6005-097-680-20

FIG. 1 SHORT BLOCK ENGIASSY

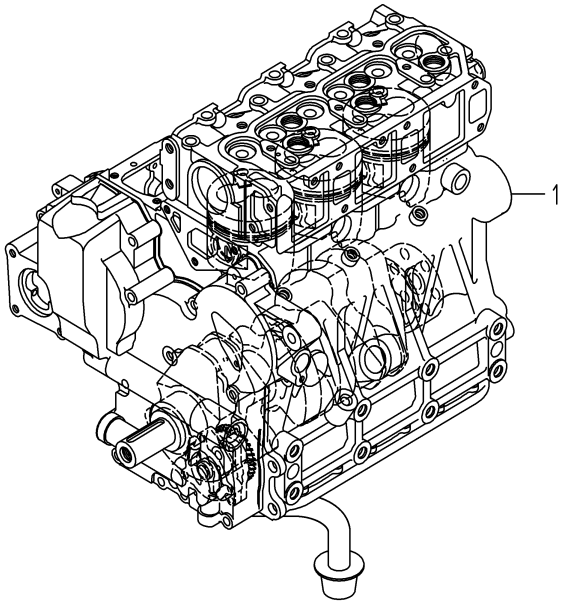

6005-015A-0100

KEY	PART CODE	DESCRIPTION	SPC	TYPE OF MODEL E3CD VB45		ITC	COL	GRP	REMARKS
1	6005-010-139-00	SHORTBLOCKENGIN ASSY	T	1					

FIG. 2 CYLINDER HEAD

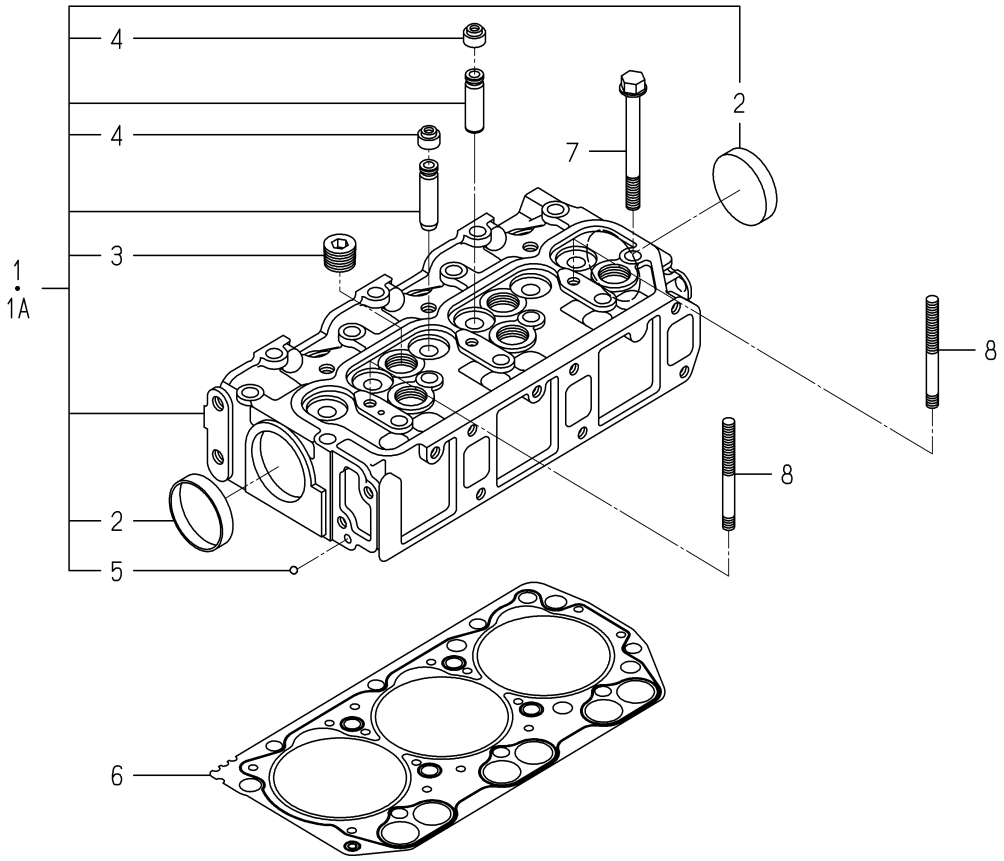

6005-101S-0100,6005-101S-0200

KEY	PART CODE	DESCRIPTION	SPC	TYPE OF MODEL E3CD VB45		ITC	COL	GRP	REMARKS
1	6211-110-084-10	CYLINDERHEAD ASSY	*	1 -195944					
1A	6211-110-084-20	CYLINDERHEAD ASSY	*	1 195945-		1			
2	6209-610-003-00	CUP/SEALING/50	*	2					
3	6209-605-004-10	PLUG/PT1/2	*	5					
4	6212-569-002-00	SEAL,OIL	*	6					
5	V682-200-000-60	BALL	*	1					
6	6211-141-057-10	GASKET/CYLINDERHEAD	*	1					
7	6209-000-005-00	BOLT	*	14					
8	6209-300-014-00	STUD	*	2					

FIG. 3 CYLINDER HEAD COVER

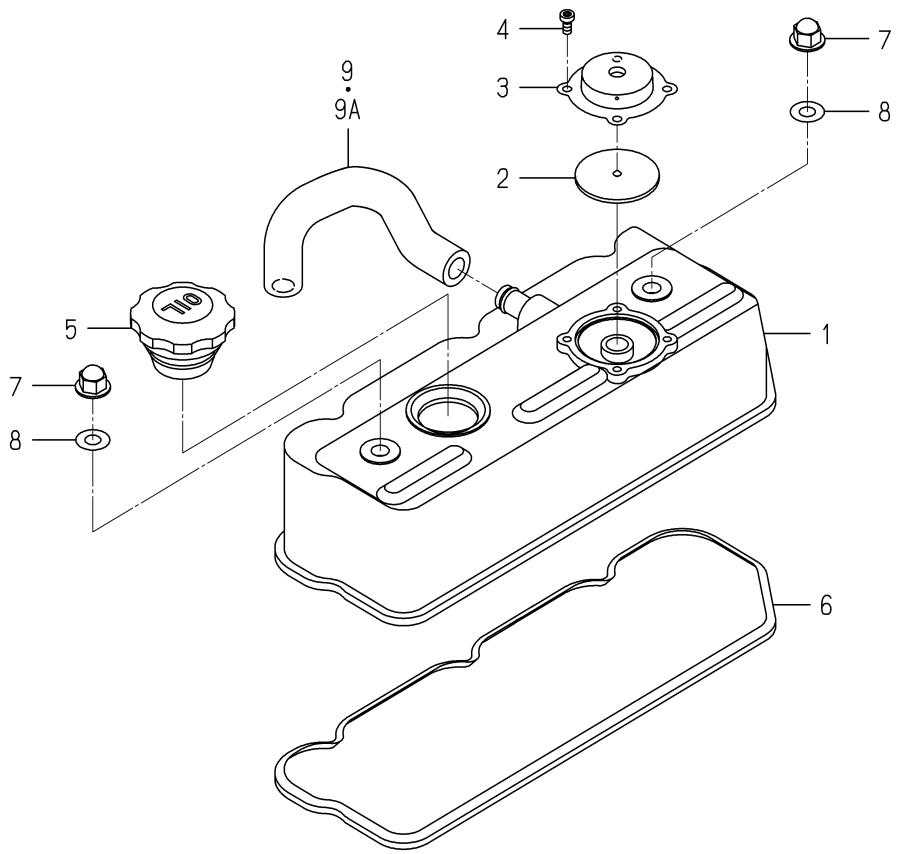

6005-110F-0100

KEY	PART CODE	DESCRIPTION	SPC	TYPE OF MODEL E3CD VB45		ITC	COL	GRP	REMARKS
1	6211-170-007-30	COVER/CYLINDER HEAD	*	1					
2	6211-179-011-20	RUBBERFLANGE	*	1					
3	6211-291-010-00	COVER/BLOWBY	*	1					
4	V195-164-008-30	SCREW/TAPPING	*	4					
5	6211-751-001-10	CAP,OIL FILLER	*	1					
6	6211-173-005-00	SEAL/CYL HEAD/UNDER	*	1					
7	6209-490-002-10	NUT/CAP	*	2					
8	6209-572-003-00	GASKET	*	2					
9	6209-360-109-00	HOSE/RUBBER	*	1 -177886					
9A	6209-360-109-10	HOSE/RUBBER	*	1 177887-		1			

FIG. 4 INLET MANIFOLD

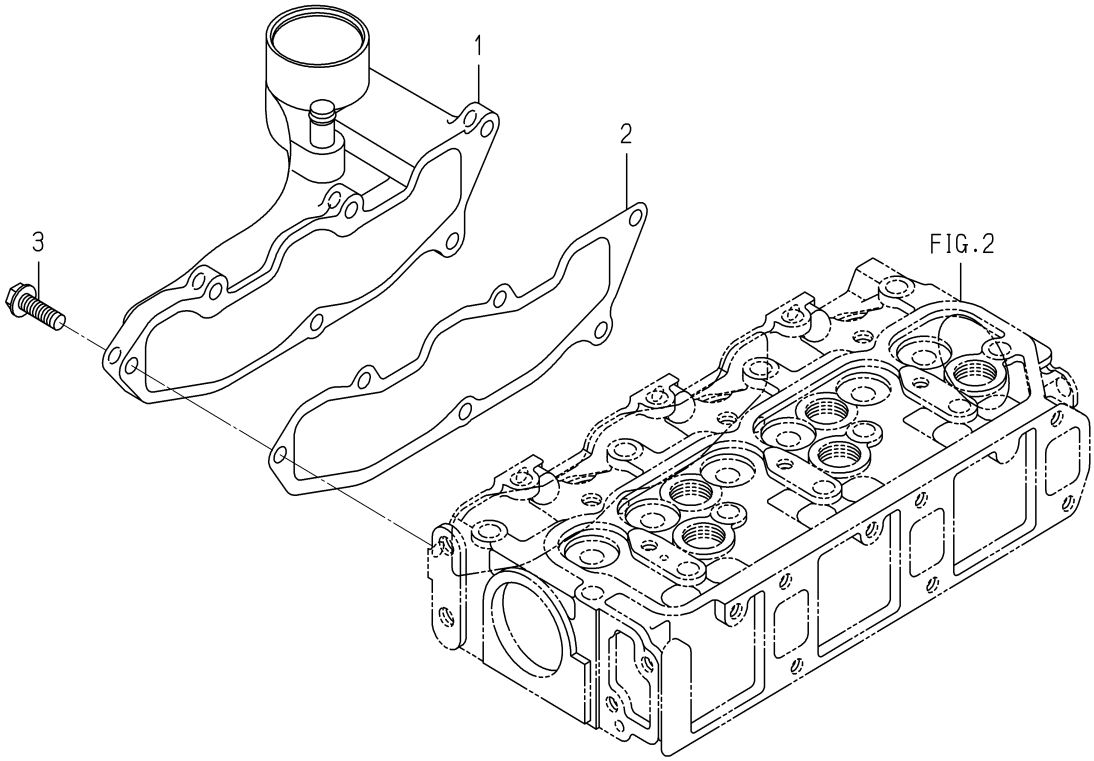

6005-120 -0100

KEY	PART CODE	DESCRIPTION	SPC	TYPE OF MODEL E3CD VB45		ITC	COL	GRP	REMARKS
1	6214-110-003-00	MANIFOLD/INLET ASSY	*	1					
2	6214-115-003-10	GASKET/INLETMANIFOLD	*	1					
3	V231-360-802-50	FLANGEBOLT	*	6					

FIG. 5 EXHAUST MANIFOLD

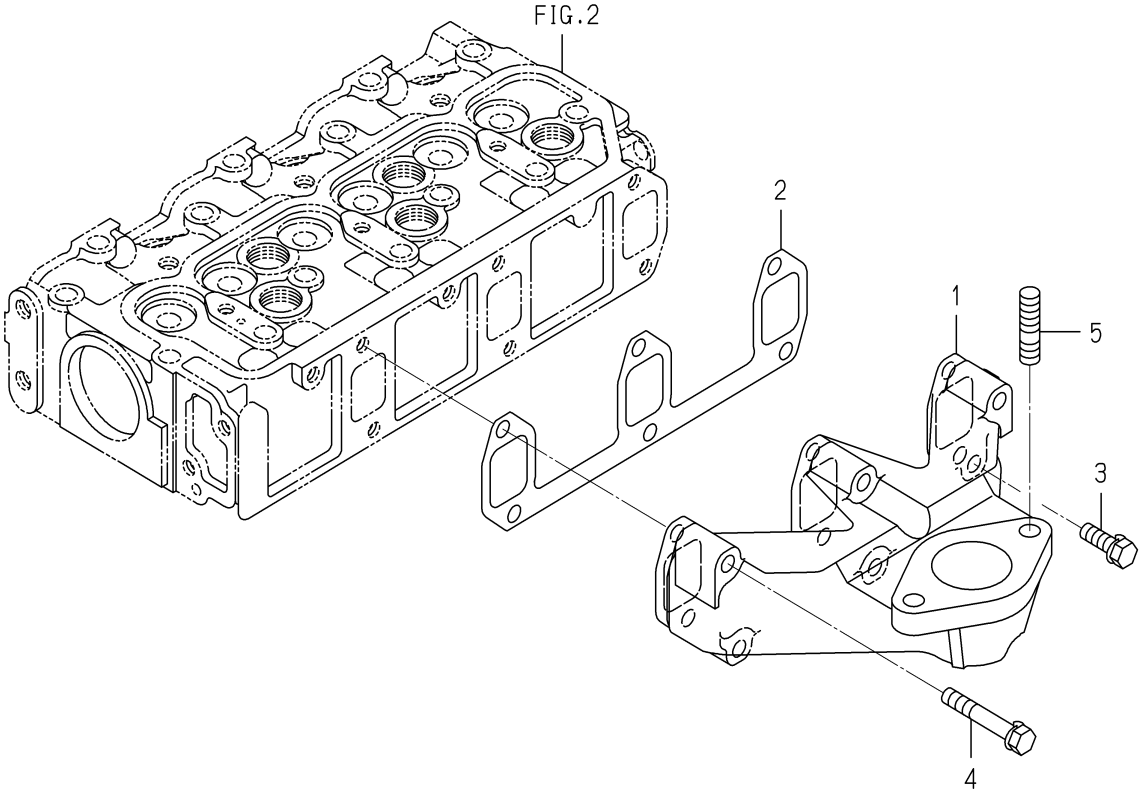

6005-140E-0100

KEY	PART CODE	DESCRIPTION	SPC	TYPE OF MODEL E3CD VB45		ITC	COL	GRP	REMARKS
1	6214-141-044-00	MANIFOLD/EXHAUST	*	1					
2	6214-145-004-20	GASHET/EXH MANIFOLD	*	1					
3	V211-560-802-50	BOLT,SEMS/M8X25 7T	*	1					
4	6509-030-037-00	BOLT	*	5					
5	6904-411-025-00	STUD	*	2					

FIG. 6 CYLINDER BLOCK

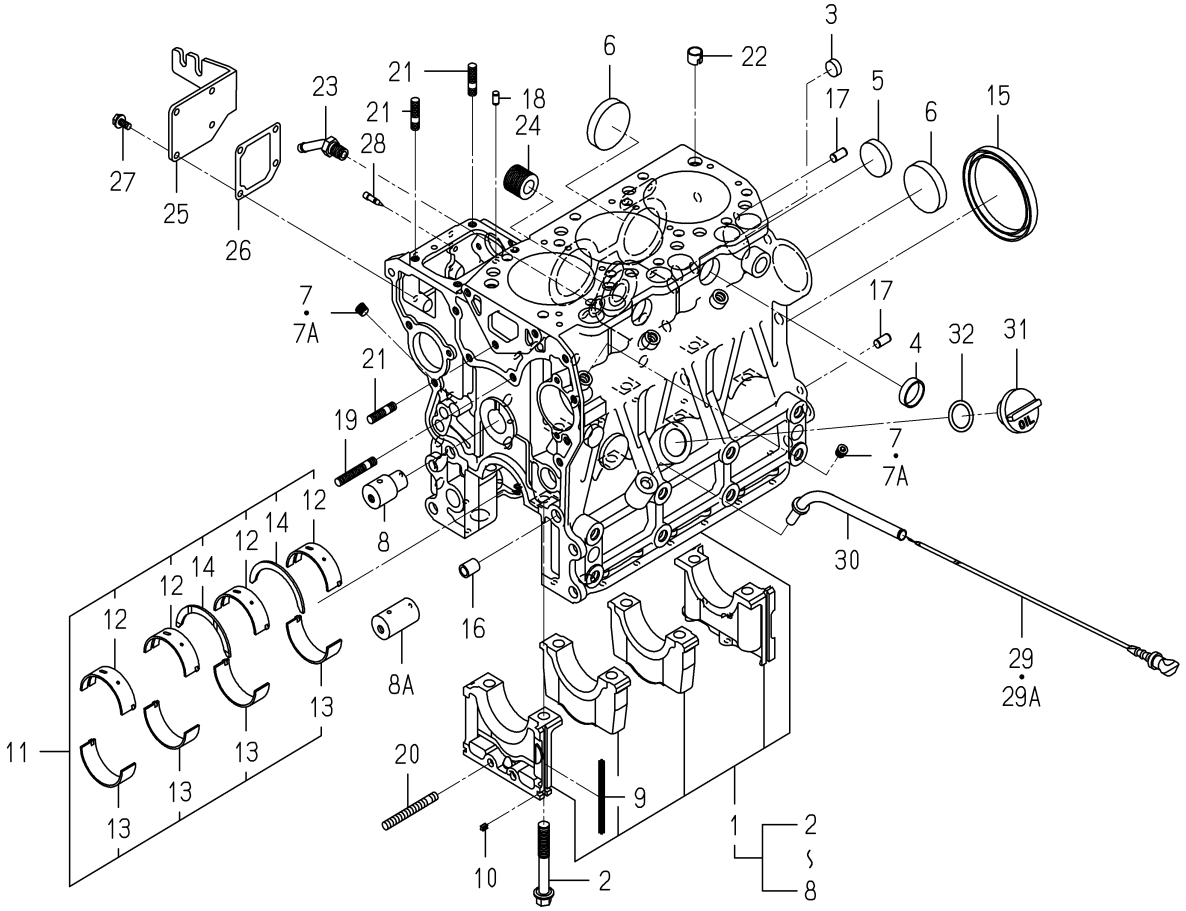

6005-203A-0100

KEY	PART CODE	DESCRIPTION	SPC	TYPE OF MODEL E3CD VB45		ITC	COL	GRP	REMARKS
1	6211-210-081-00	CYLINDERBLOCK ASSY	*	1					
2	6209-000-006-00	BOLT	*	8					
3	6209-610-007-00	CUP/SEALING/16	*	2					
4	6209-610-001-10	CUP/SEALING/28	*	2					
5	6209-610-009-00	CUP/SEALING/36	*	1					
6	6209-610-003-00	CUP/SEALING/50	*	3					
7	6509-605-019-10	PLUG	*	8 -199498					
7A	6209-605-007-00	PLUG/PT1/8	*	8 199499-					
8	6212-531-008-20	PIN/IDLEGEAR	*	1 -168830					
8A	6212-531-008-30	PIN/IDLEGEAR	*	1 168831-		3			
9	6211-258-001-00	SEAL,BEARING CAP	*	4					
10	6211-258-002-00	SEAL,BEARING CAP/7	*	2					
11	6211-510-008-00	BEARING/CRANK SET	*	1					
12	6211-511-007-00	BEARING/CRANK/UPPER	*	4					
13	6211-511-008-00	BEARING/CRANK/LOWER	*	4					
14	6211-599-004-00	BEARING/THRUST/CRANK	*	2					
15	6209-625-003-20	OILSEAL	*	1					
16	6209-749-001-20	PIN/TUBE	*	2					
17	6213-129-006-00	PIN/STRAIGHT	*	2					
18	6209-740-005-00	PIN	*	2					
19	6904-110-840-00	STUD/M8X40	*	1					
20	V251-340-806-00	BOLT/STUD	*	1					
21	6904-110-822-00	STUD	*	3					
22	6294-453-002-00	DOWEL	*	2					
23	6213-721-007-00	PIPE/WATERDRAIN	*	1					
24	6213-319-001-00	CONNECTOR,OIL FILTER	*	1					
25	6211-291-015-20	COVER/INJECTIONPUMP	*	1					
26	6211-292-001-20	GASKET/COVER	*	1					
27	V230-360-601-20	FLANGEBOLT	*	4					
28	6215-549-013-00	PIN	*	1					

FIG. 6 CYLINDER BLOCK

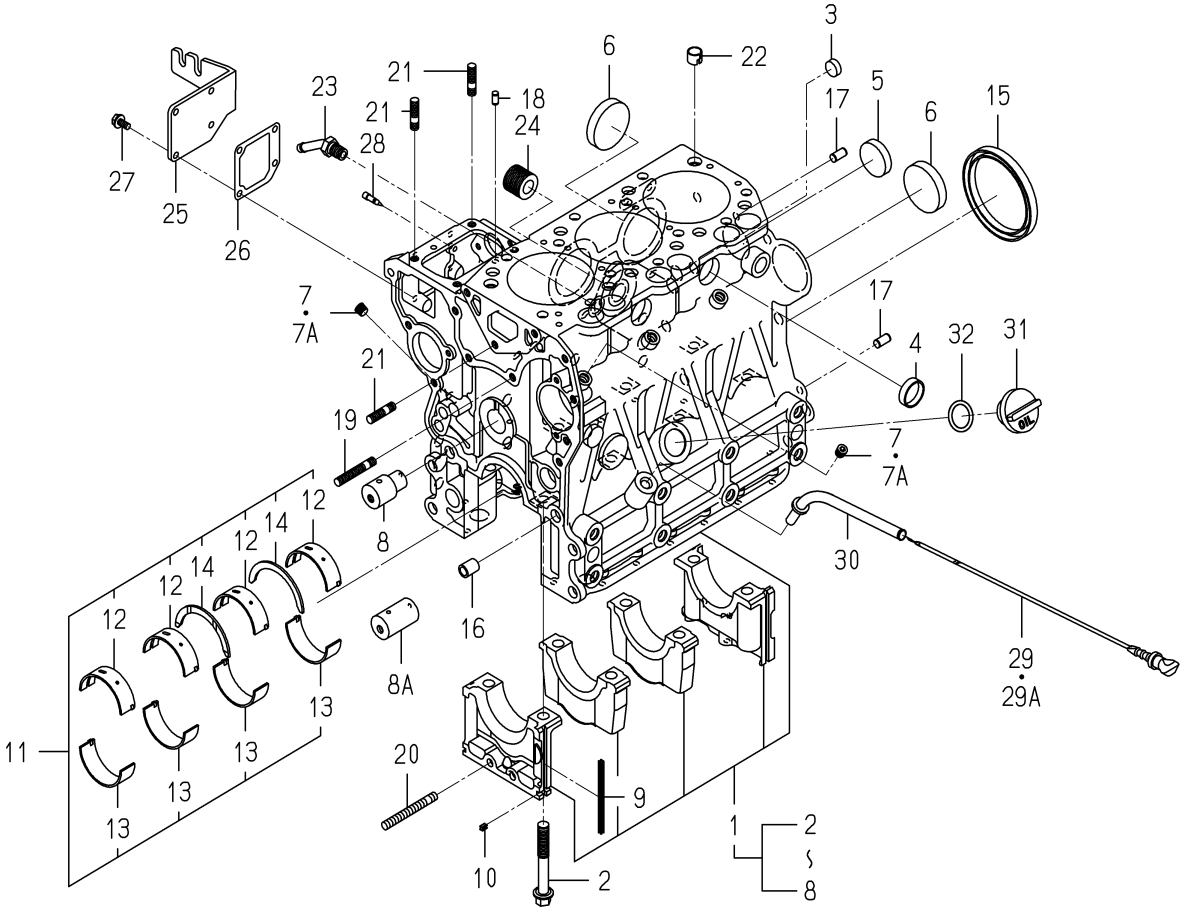

6005-203A-0100

KEY	PART CODE	DESCRIPTION	SPC	TYPE OF MODEL E3CD VB45		ITC	COL	GRP	REMARKS
29	6211-760-046-00	LEVELGAGE	*	1 -171504					
29A	6211-760-046-10	LEVELGAGE	*	1 171505-		1			
30	6211-766-033-00	GUIDE/LEVELGAGE COMP	*	1					
31	6211-751-002-00	CAP/OILFILLER	*	1					
32	V720-103-502-50	O-RING/P25	*	1					

FIG. 7 BEARING/UNDER SIZE (OPTION)

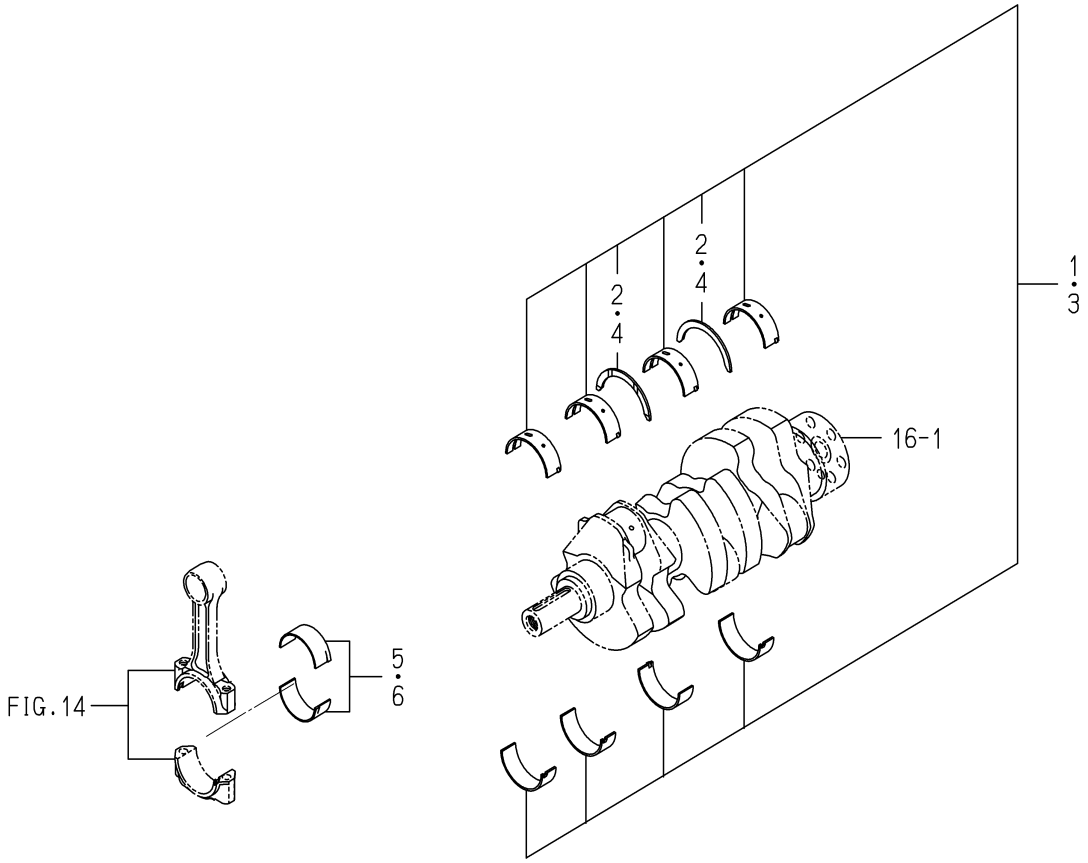

6005-209 -0100

KEY	PART CODE	DESCRIPTION	SPC	TYPE OF MODEL E3CD VB45		ITC	COL	GRP	REMARKS
1	6211-530-008-00	BEARING/CRANK/UNDER	T	1					
2	6211-599-004-00	BEARING/THRUST/CRANK	T	2					
3	6211-540-008-00	BEARING/CRANK/UNDER	T	1					
4	6211-599-004-00	BEARING/THRUST/CRANK	T	2					
5	6212-273-009-00	BEARING/CONNECTING R	T	3					
6	6212-274-009-00	BEARING/CONNECTING R	T	3					

FIG. 8 OIL PAN

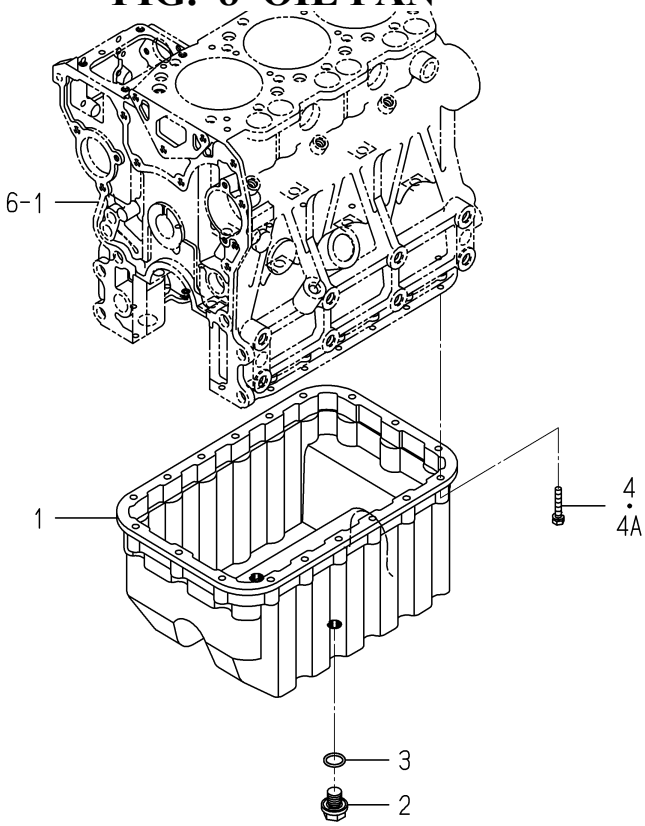

6005-210D-0100

KEY	PART CODE	DESCRIPTION	SPC	TYPE OF MODEL E3CD VB45		ITC	COL	GRP	REMARKS
1	6211-361-038-10	OILPAN	*	1					
2	3805-355-002-20	PLUG/M14X1.5	*	2					
3	V720-102-401-80	O-RING/P18	*	2					
4	6901-910-635-00	BOLT	*	18 -173475					
4A	V210-560-603-50	BOLT/S	*	18 173476-					

FIG. 9 REAR PLATE

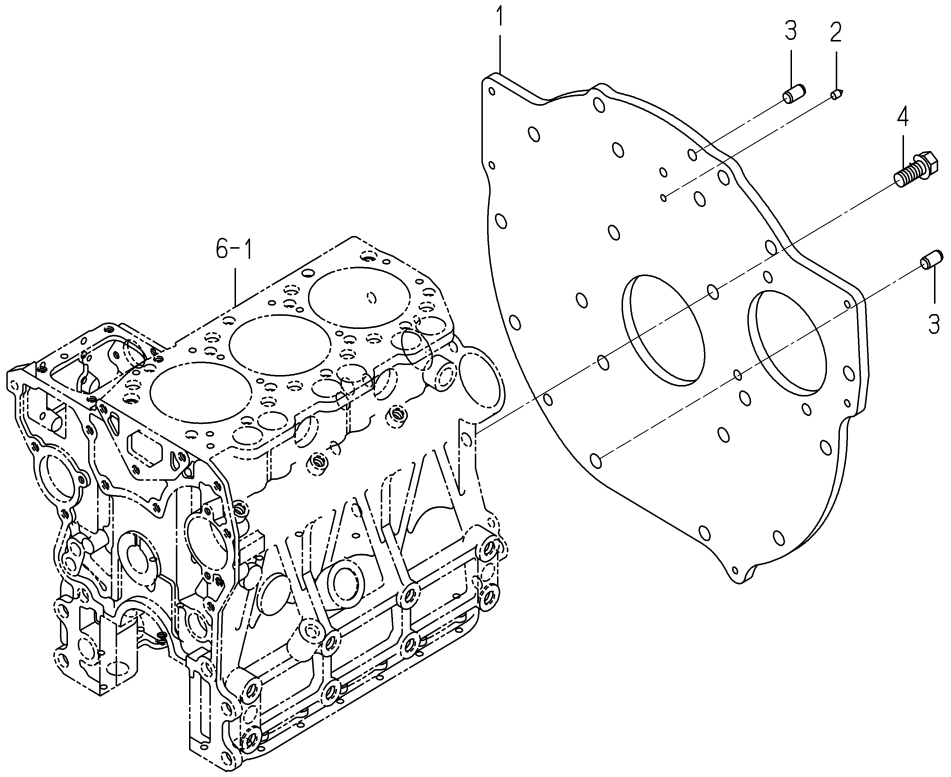

6005-220N-0100

KEY	PART CODE	DESCRIPTION	SPC	TYPE OF MODEL E3CD VB45		ITC	COL	GRP	REMARKS
1	6211-341-073-00	PLATE/REAR	*	1					
2	6211-342-003-10	POINTER	*	1					
3	V523-101-001-80	PIN	*	2					
4	6209-030-091-00	BOLT/WS	*	8					

FIG. 10 TIMING GEAR CASE

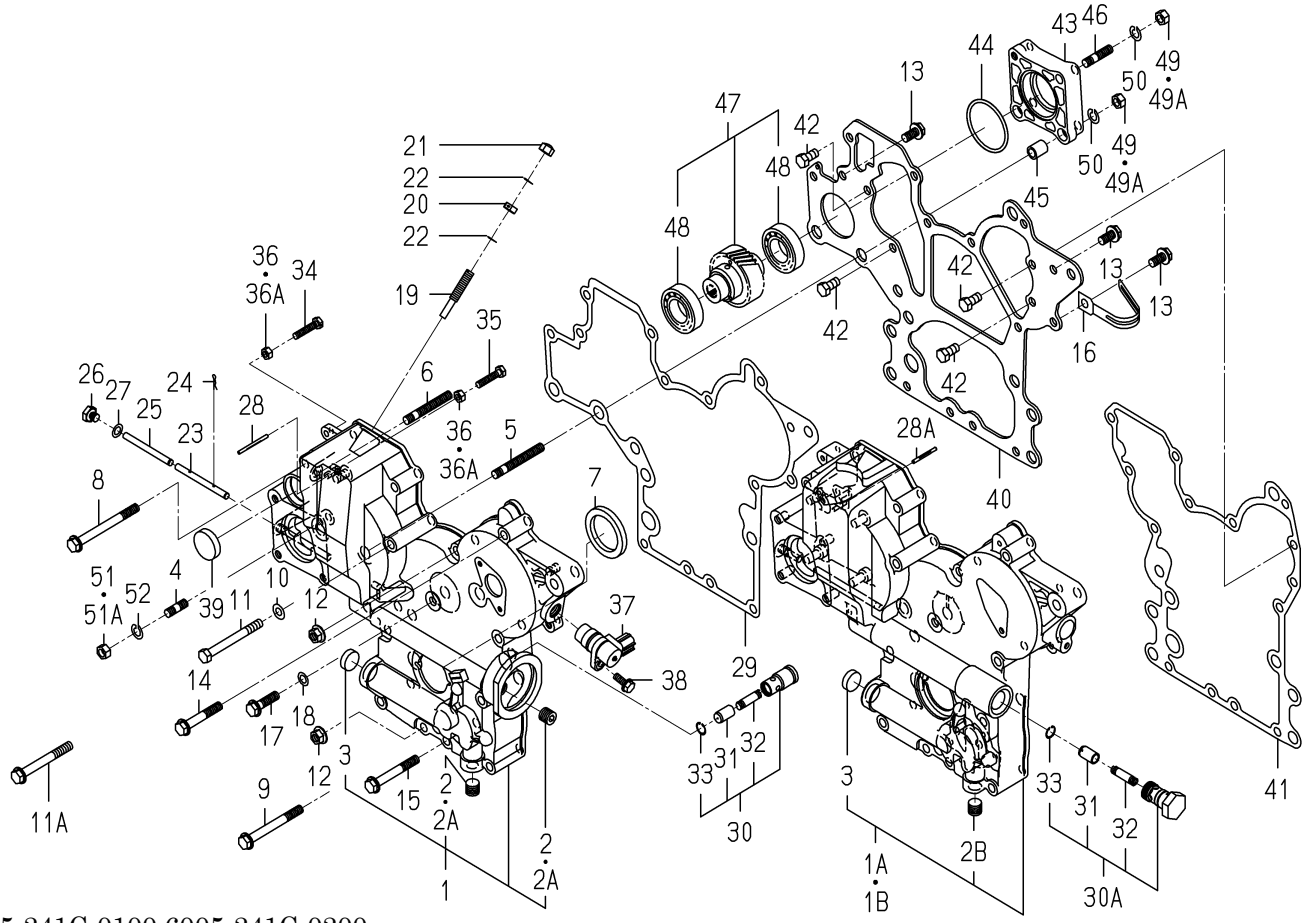

6005-241C-0100,6005-241C-0200

KEY	PART CODE	DESCRIPTION	SPC	TYPE OF MODEL E3CD VB45		ITC	COL	GRP	REMARKS
1	6211-310-040-00	GEARCASE ASSY	*	1 -180974					
1A	6211-310-040-10	GEARCASE ASSY	*	1 -192021		3			
1B	6211-310-040-20	GEARCASE ASSY	*	1 192022-		1			
2	6209-605-003-00	PLUG/PT1/4	*	2 -160372					
2A	6209-605-003-10	PLUG/PT1/4	*	2 -180974		1			
2B	6209-605-003-10	PLUG/PT1/4	*	1 180975-					
3	6209-610-004-00	CUP/SEALING/20	*	1					
4	6904-110-822-00	STUD	*	4					
5	6904-110-855-00	STUD	*	2					
6	6904-110-850-00	STUD	*	1					
7	6209-625-002-00	SEAL,OIL	*	1					
8	V231-360-808-50	FLANGEBOLT	*	1					
9	V231-360-807-50	FLANGEBOLT	*	1					
10	6209-500-006-00	WASHER/08X16X1.2	*	1 -180974					
11	V201-360-807-50	BOLT	*	1 -180974					
11A	V231-360-807-00	FLANGEBOLT	*	1 180975-					
12	3817-401-001-00	NUT/M08	*	2					
13	V231-360-801-60	FLANGEBOLT	*	3					
14	V231-360-805-00	FLANGEBOLT	*	3					
15	V231-360-806-00	FLANGEBOLT	*	4					
16	1650-650-015-00	CLAMP	*	1					
17	V231-360-803-00	FLANGEBOLT	*	1					
18	6209-500-003-00	WASHER/08X14X01	*	1					
19	6215-546-003-10	STOPPER/FULLLOAD	*	1					
20	6209-409-001-00	NUT/M8	*	1					
21	V341-120-008-00	NUT,CAP/M 8	*	1					
22	6209-920-002-00	PACKING	*	2					
23	6215-542-004-20	PIN/ARM	*	1					
24	P117-303-003-00	PIN/SNAP	*	2					
25	6215-542-005-10	PIN	*	1					

FIG. 10 TIMING GEAR CASE

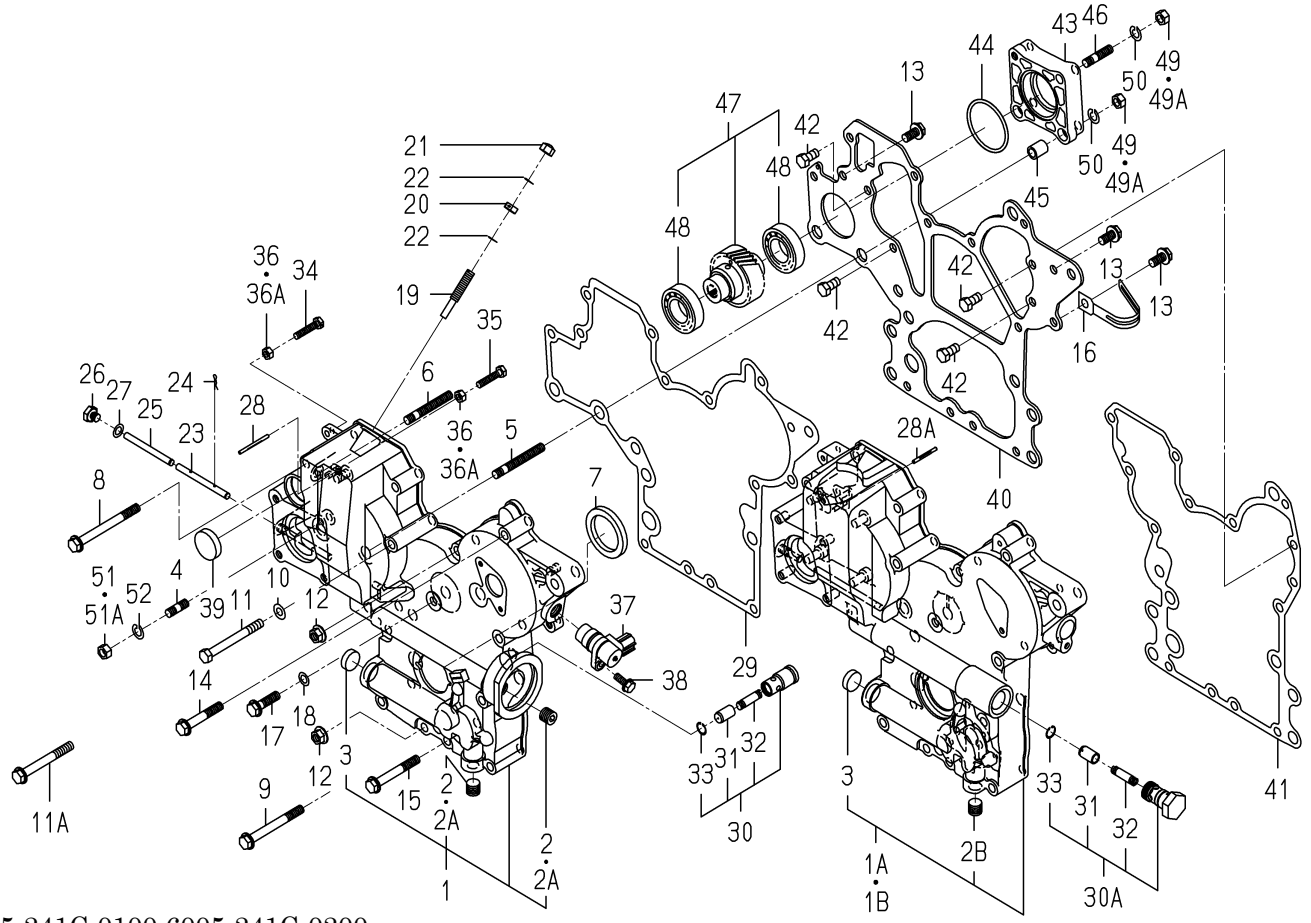

6005-241C-0100,6005-241C-0200

KEY	PART CODE	DESCRIPTION	SPC	TYPE OF MODEL E3CD VB45		ITC	COL	GRP	REMARKS
26	6209-600-004-00	PLUG/SCREW	*	1					
27	6209-500-003-00	WASHER/08X14X01	*	1					
28	6209-740-001-00	PIN,GROOVE	*	1 -181471					
28A	6209-740-006-00	PIN/GROOVE	*	1 181472-					
29	6211-312-005-10	GASKET/GEARCASE	*	1					
30	6213-160-003-10	VALVE/RELIEF ASSY	*	1 -180974					
30A	6213-160-005-00	VALVE/RELIEF ASSY	*	1 180975-					
31	6213-161-003-10	PISTON/VALVE/RELIEF	*	1					
32	6213-164-001-00	SPRING/RELIEF VALVE	*	1					
33	V705-140-012-00	RING,SNAP/12 C	*	1					
34	6209-050-001-00	BOLT/M6	*	1					
35	6209-050-002-00	BOLT/M6	*	1					
36	6909-110-406-00	NUT	*	2 -179012					
36A	V301-260-006-00	NUT/M6	*	2 179013-					
37	1690-654-200-00	SENSOR/REVOLUTION/R	*	1					
38	V230-360-601-60	FLANGEBOLT	*	1					
39	3625-540-004-00	CAP,BLANK/30	*	1 -180974					
40	6211-311-013-20	PLATE/FRONT	*	1					
41	6211-312-006-10	GASKET/PLATE	*	1					
42	6902-050-816-00	BOLT	*	4					
43	6211-319-003-00	SPACER	*	1					
44	V723-102-005-00	O-RING 1A S50	*	1					
45	6209-749-001-20	PIN/TUBE	*	2					
46	6904-110-822-00	STUD	*	1					
47	6212-530-017-00	SHAFT/HYDRAULIC ASSY	*	1					
48	6209-800-011-00	BEARING	*	2					
49	6909-110-408-00	NUT/M8	*	4 -179012					
49A	V304-260-008-00	NUT	*	4 179013-					
50	V401-160-008-00	WASHER,SP/M 8	*	4					
51	6909-110-408-00	NUT/M8	*	4 -179012					

FIG. 10 TIMING GEAR CASE

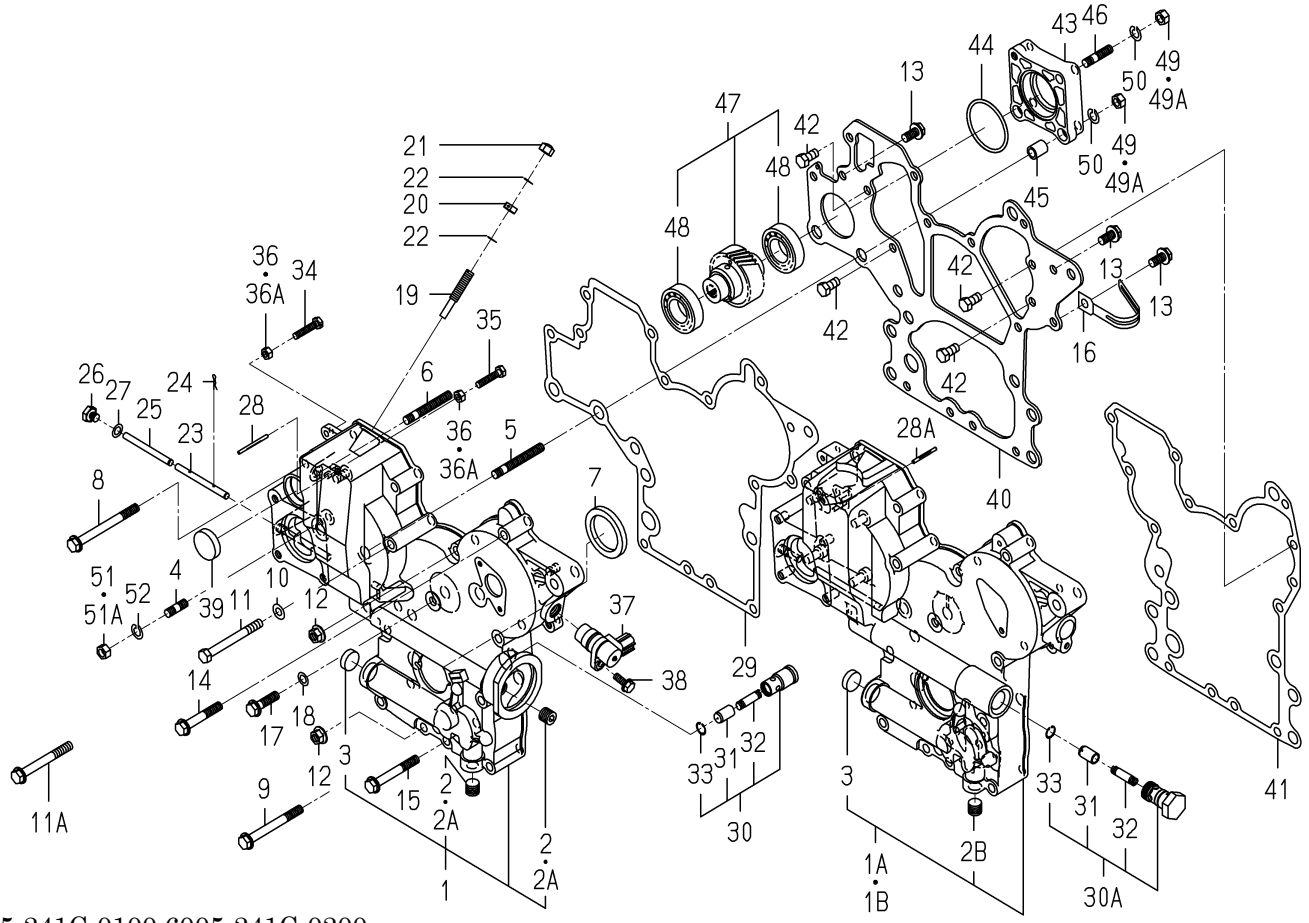

6005-241C-0100,6005-241C-0200

KEY	PART CODE	DESCRIPTION	SPC	TYPE OF MODEL E3CD VB45	TYPE OF MODEL	ITC	COL	GRP	REMARKS
51A	V304-260-008-00	NUT	*	4 179013-4					
52	V401-160-008-00	WASHER,SP/M 8	*						

FIG. 11 HANGER

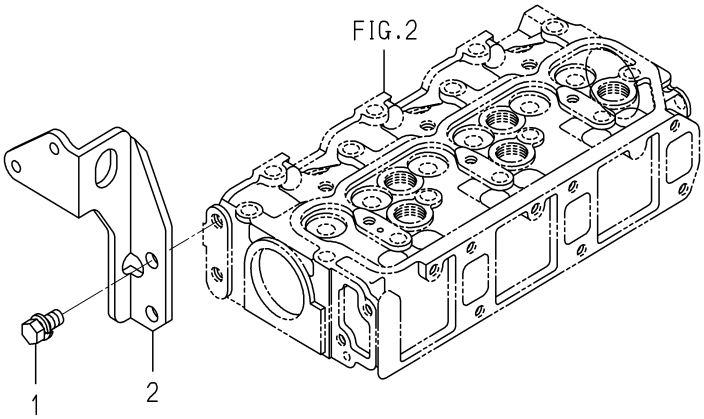

6005-290D-0100

KEY	PART CODE	DESCRIPTION	SPC	TYPE OF MODEL E3CD VB45		ITC	COL	GRP	REMARKS
1	6901-911-020-00	BOLT,SEMS/M10X20	*	2					
2	6211-777-021-00	HANGER/F	*	1					

FIG. 12 VALVE

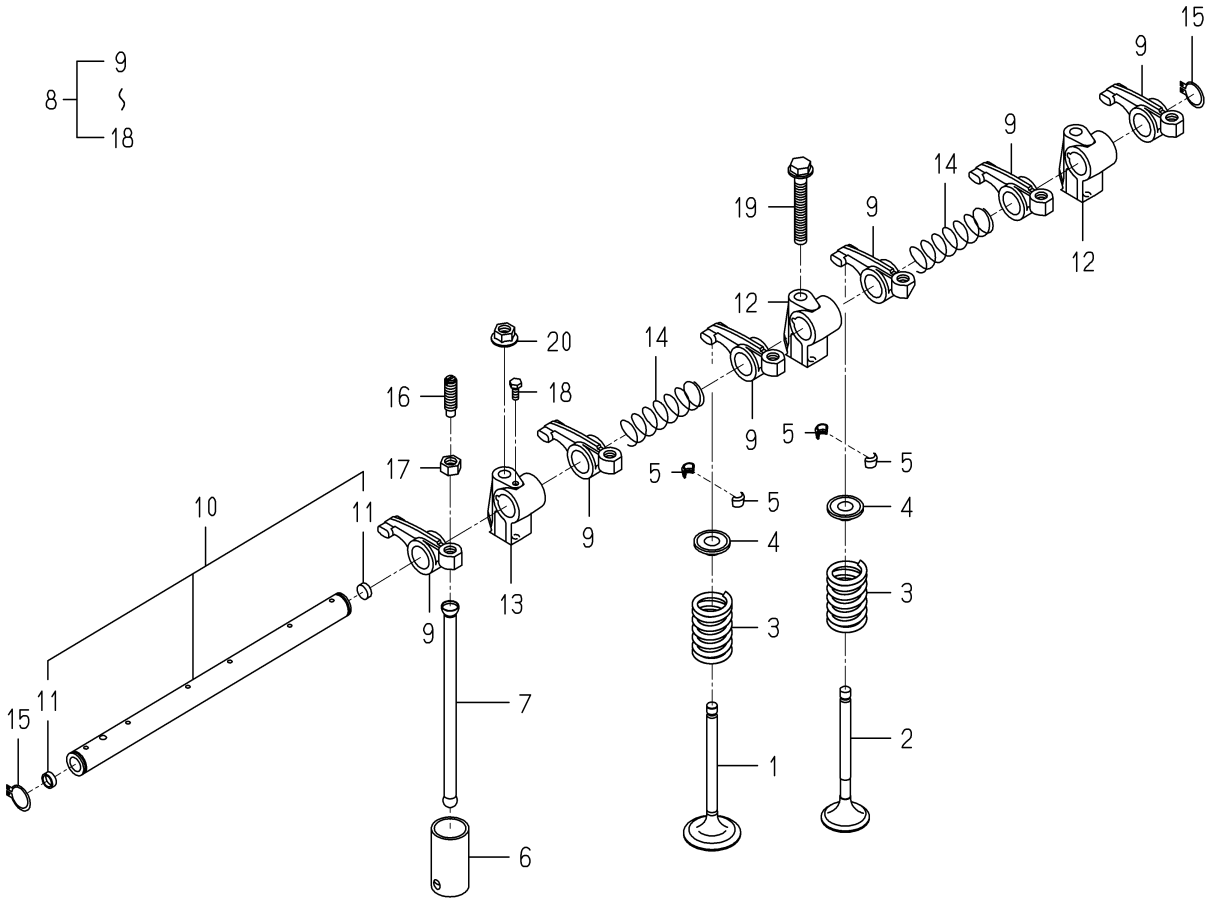

6005-301B-0100

KEY	PART CODE	DESCRIPTION	SPC	TYPE OF MODEL E3CD VB45		ITC	COL	GRP	REMARKS
1	6212-551-020-10	VALVE/INTAKE	*	3					
2	6212-552-008-00	VALVE/EXHAUST	*	3					
3	6212-561-003-00	SPRING/VALVE	*	6					
4	6212-563-001-00	SEAT,VALVE SPRING	*	6					
5	6212-565-001-00	CUTTER,VALVE	*	12					
6	6212-571-002-30	TAPPET	*	6					
7	6212-575-003-00	PUSHROD	*	6					
8	6212-600-009-20	ROCKERSHAFT ASSY	*	1					
9	6212-611-004-10	ROCKERARM	*	6					
10	6212-620-008-20	SHAFT/ROCKERARM ASSY	*	1					
11	6212-626-002-10	PLUG	*	2					
12	6212-628-010-10	BRACKET/ROCKERSHAFT	*	2					
13	6212-628-011-10	BRACKET/ROCKERSHAFT	*	1					
14	6209-940-004-00	SPRING	*	2					
15	V704-140-016-00	RING,SNAP/16 C	*	2					
16	6212-616-002-00	SCREW ADJUST	*	6					
17	6209-409-003-00	NUT	*	6					
18	6209-000-002-00	BOLT	*	1					
19	V231-360-805-50	FLANGEBOLT	*	1					
20	3817-401-001-00	NUT/M08	*	2					

FIG. 13 CAM SHAFT

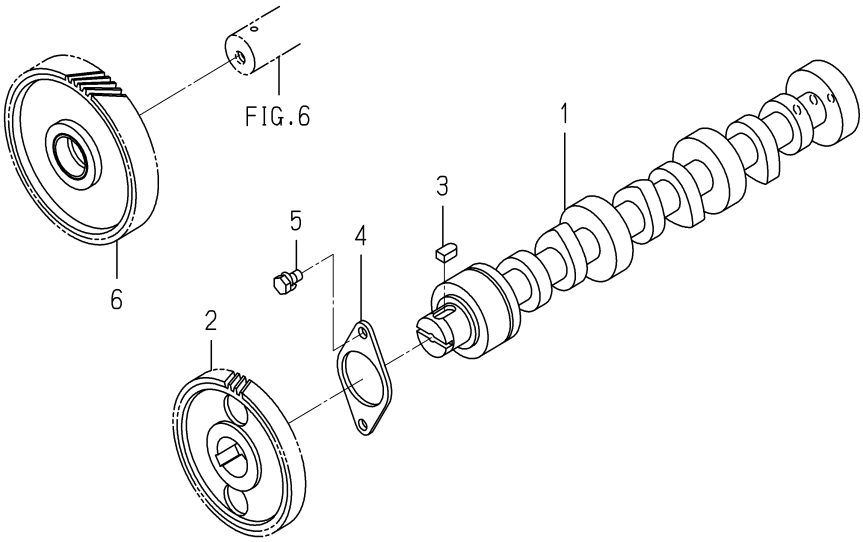

6005-310A-0100

KEY	PART CODE	DESCRIPTION	SPC	TYPE OF MODEL E3CD VB45		ITC	COL	GRP	REMARKS
1	6212-511-005-00	CAMSHAFT	*	1					
2	6212-522-004-10	GEAR/CAMSHAFT	*	1					
3	6209-730-005-00	KEY/07X05X09	*	1					
4	6212-535-007-00	PLATE/THRUST	*	1					
5	6901-910-612-00	BOLT,SEMS/M6X12	*	2					
6	6212-523-021-00	GEAR/IDLE ASSY	*	1					

FIG. 14 PISTON

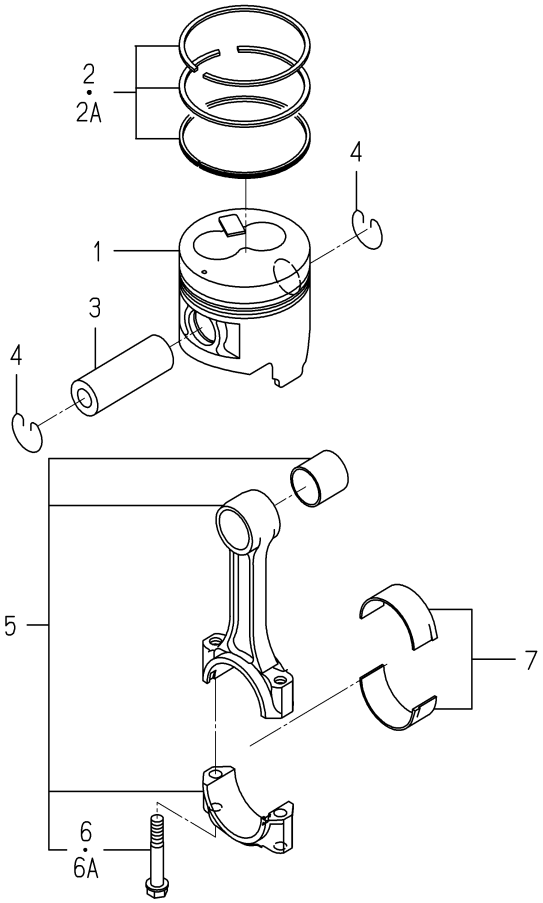

6005-340P-0100

KEY	PART CODE	DESCRIPTION	SPC	TYPE OF MODEL E3CD VB45		ITC	COL	GRP	REMARKS
1	6212-111-095-30	PISTON	*	3					
2	6212-121-028-00	RING/PISTONSET	*	3 -193231					
2A	6212-121-028-10	RING/PISTONSET	*	3 193232-		1			
3	6212-211-002-00	PIN/PISTON	*	3					
4	6909-950-115-00	RING SNAP	*	6					
5	6212-230-011-30	CONNECTINGROD ASSY	*	3					
6	6212-235-004-00	BOLT/CONNECTINGROD	*	6 -150480					
6A	6212-235-004-10	BOLT/CONNECTINGROD	*	6 150481-		1			
7	6212-271-009-00	BEARING/CONNECTING R	*	3					

FIG. 15 PISTON/OVER SIZE (OPTION)

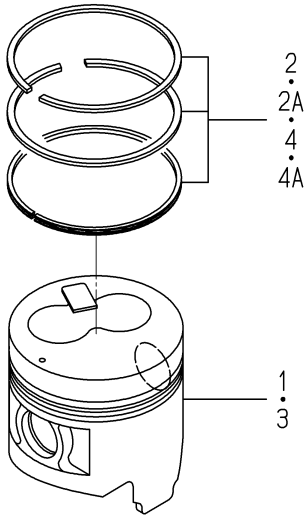

6005-349P-0100

KEY	PART CODE	DESCRIPTION	SPC	TYPE OF MODEL E3CD VB45		ITC	COL	GRP	REMARKS
1	6212-114-095-30	PISTON/OV	T	3					
2	6212-124-028-00	RING/PISTON/OVSET	T	3 -193231					
2A	6212-124-028-10	RING/PISTON/OVSET	T	3 193232-		1			
3	6212-116-095-30	PISTON/OV	T	3					
4	6212-126-028-00	RING/PISTON/OVSET	T	3 -193231					
4A	6212-126-028-10	RING/PISTON/OVSET	T	3 193232-		1			

FIG. 16 CRANK SHAFT

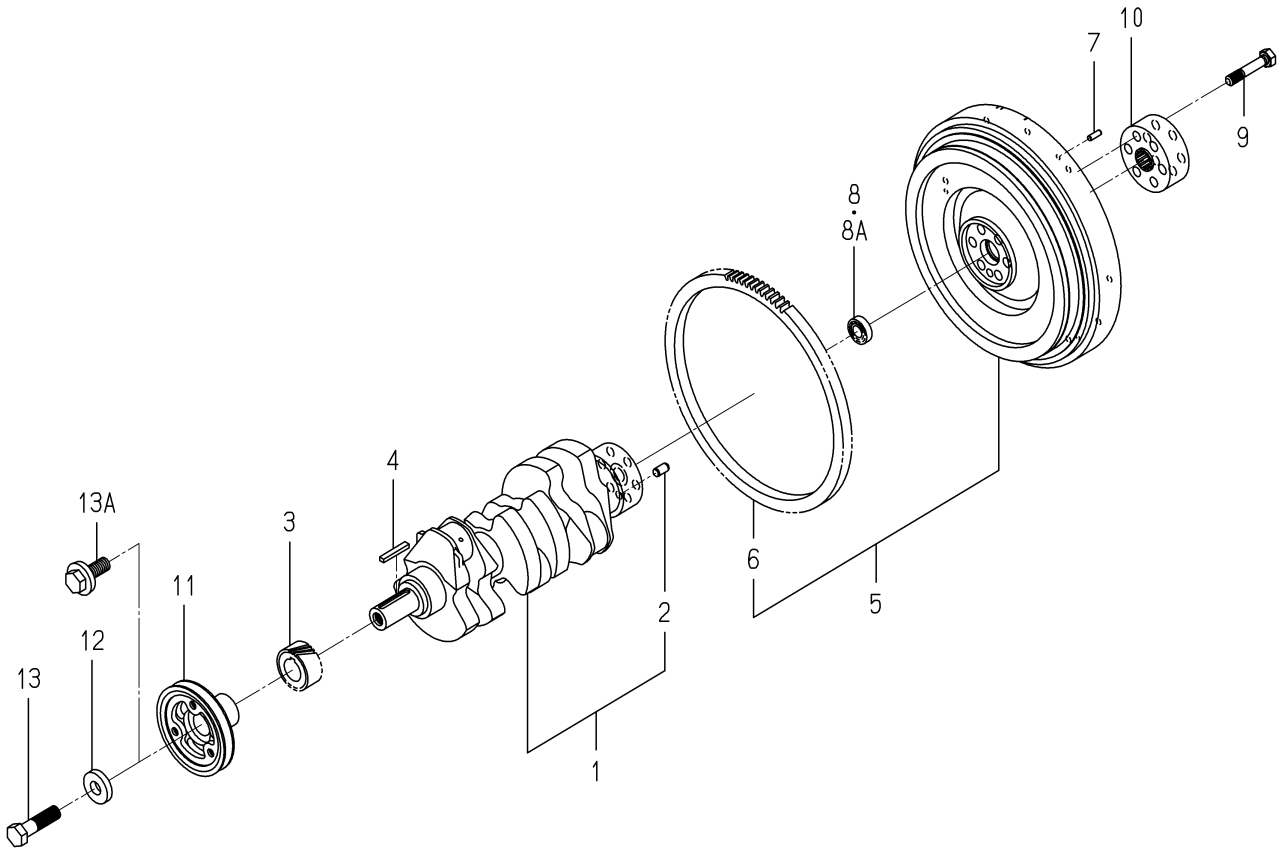

6005-351E-0100

KEY	PART CODE	DESCRIPTION	SPC	TYPE OF MODEL E3CD VB45		ITC	COL	GRP	REMARKS
1	6212-310-011-40	CRANKSHAFT ASSY	*	1					
2	V523-101-001-80	PIN	*	1					
3	6212-521-008-00	GEAR/CRANK	*	1					
4	6209-730-006-00	KEY/07X05X43	*	1					
5	6212-330-075-10	FLYWHEEL ASSY	*	1					
6	6212-333-002-00	RINGGEAR	*	1					
7	V523-100-601-80	PIN	*	3					
8	V600-150-600-20	BEARING,RB/6002SS	*	1 -155547					
8A	V600-350-600-20	BEARING/BALL	*	1 155548-					
9	6209-000-041-00	BOLT	*	6					
10	6212-339-009-10	BOSS/SPLINE	*	1					
11	6212-371-034-10	PULLEY/CRANK	*	1					
12	6212-379-001-00	WASHER	*	1 -165252					
13	6901-066-645-00	BOLT	*	1 -165252					
13A	6209-000-043-00	BOLT/CRANK	*	1 165253-					

FIG. 17 OIL PUMP

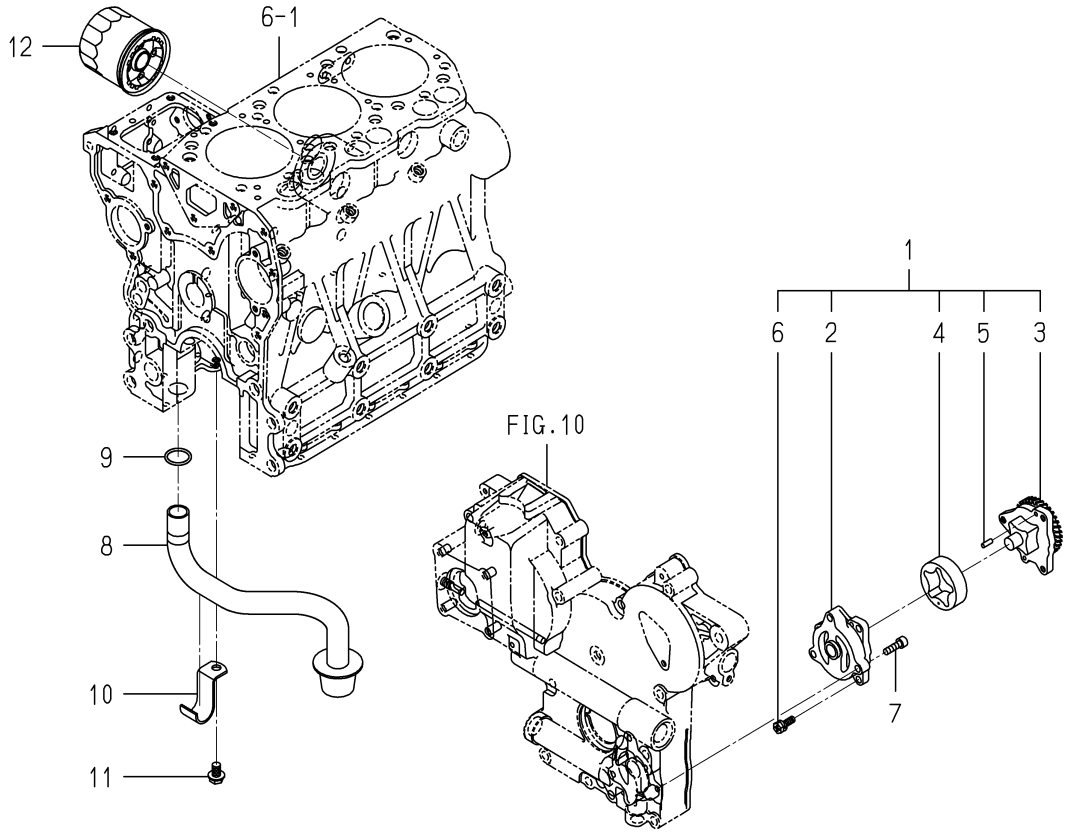

6005-401D-0100

KEY	PART CODE	DESCRIPTION	SPC	TYPE OF MODEL E3CD VB45		ITC	COL	GRP	REMARKS
1	6213-100-004-30	OILPUMP ASSY	*	1					
2	6213-111-002-20	BODY/OILPUMP	*	1					
3	6213-120-002-30	GEAR/OILPUMP ASSY	*	1					
4	6213-125-002-10	ROTOR/OUTER	*	1					
5	6213-129-003-00	PIN/STRAIGHT	*	2					
6	6213-119-001-00	BOLT/WS	*	3					
7	V220-540-602-00	SCREW/SOCKET	*	3					
8	6213-140-013-00	STRAINER	*	1					
9	V720-103-502-20	O-RING/P22	*	1					
10	6213-149-003-20	CLAMP/STRAINER	*	1					
11	V231-360-801-60	FLANGEBOLT	*	1					
12	6213-240-002-10	CARTRIDGE/OILFILTER	*	1					

FIG. 18 WATER PUMP

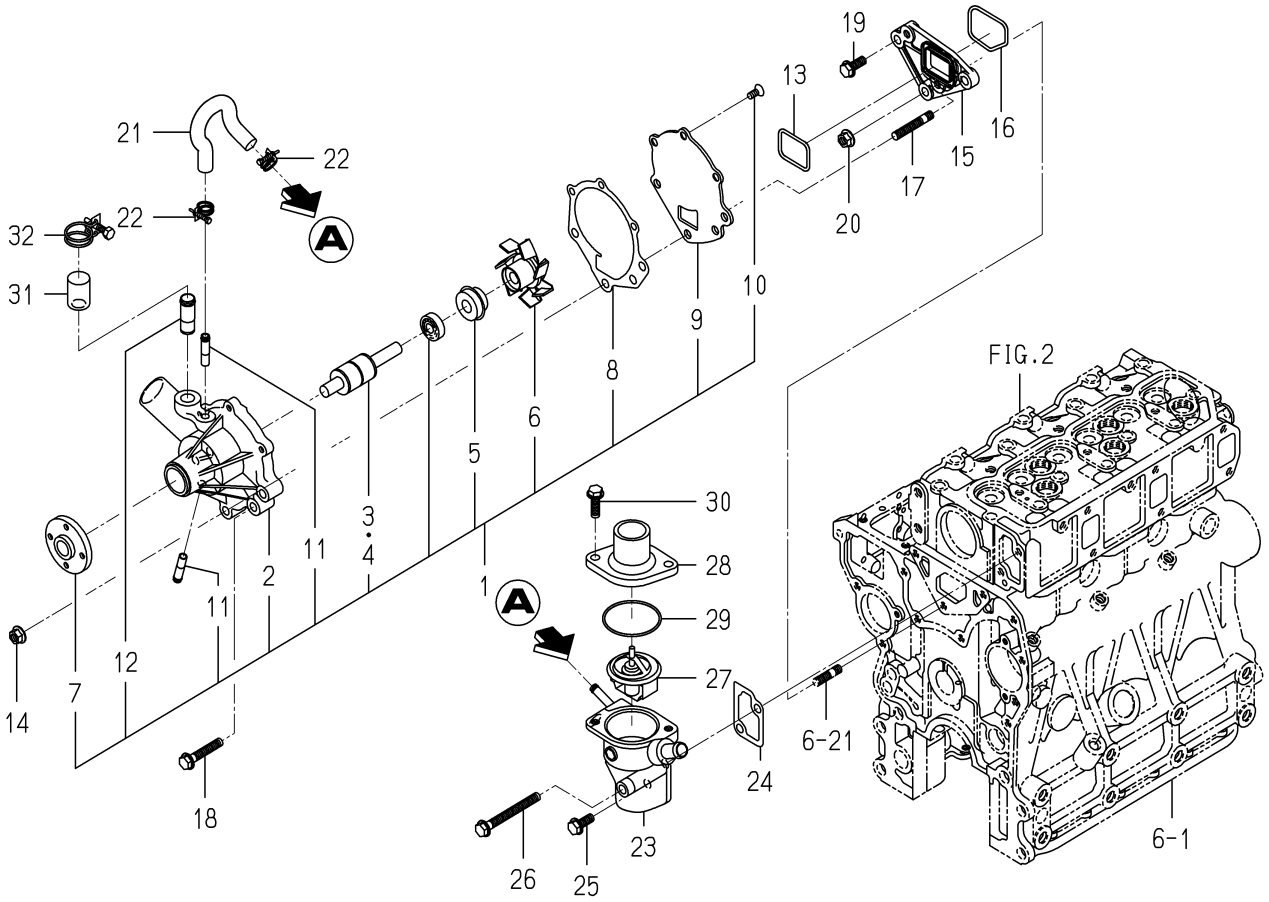

6005-420D-0100

KEY	PART CODE	DESCRIPTION	SPC	TYPE OF MODEL E3CD VB45		ITC	COL	GRP	REMARKS
1	6213-610-011-10	WATERPUMP ASSY	*	1					
2	6213-611-006-00	BODY/WATERPUMP	*	1					
3	6213-631-002-00	BEARING/WATER PUMP	*	1					
4	6213-631-005-00	BEARING/WATERPUMP	*	1					
5	6213-622-002-10	SEAL SET/WATER PUMP	*	1					
6	6213-621-003-00	ROTOR/WATERPUMP	*	1					
7	6213-642-002-00	SEAL/WATER PUMPPULLE	*	1					
8	6213-613-002-10	GASKET	*	1					
9	6213-612-004-00	PLATE/WATER PUMP	*	1					
10	6213-619-003-00	SCREW/WATER PUMP	*	3					
11	6213-619-002-00	PIPE/WATER PUMP	*	2					
12	6213-619-009-00	PIPE/WATERPUMP	*	1					
13	6213-614-013-00	GASKET/WATERPUMP	*	1					
14	3817-401-001-00	NUT/M08	*	2					
15	6213-619-006-00	SPACER/WATERPUMP	*	1					
16	6213-614-014-00	GASKET/SPACER	*	1					
17	6904-110-840-00	STUD/M8X40	*	2					
18	V231-360-804-50	FLANGEBOLT	*	1					
19	V231-360-802-00	FLANGEBOLT	*	1					
20	3817-401-001-00	NUT/M08	*	1					
21	6213-729-013-10	HOSE/RUBBER	*	1					
22	J061-210-015-00	CLAMP/WIRE/10-15	*	2					
23	6213-716-004-10	HOUSING/THERMOSTAT	*	1					
24	6213-743-002-10	GASKET/HOUSING	*	1					
25	V231-360-802-00	FLANGEBOLT	*	1					
26	V231-360-807-50	FLANGEBOLT	*	1					
27	6513-770-022-10	THERMOSTAT	*	1					
28	6213-711-003-20	PIPE,WATER OUTLET	*	1					
29	V723-102-005-50	O-RING	*	1					
30	V231-360-802-50	FLANGEBOLT	*	2					

FIG. 19 COOLING FAN

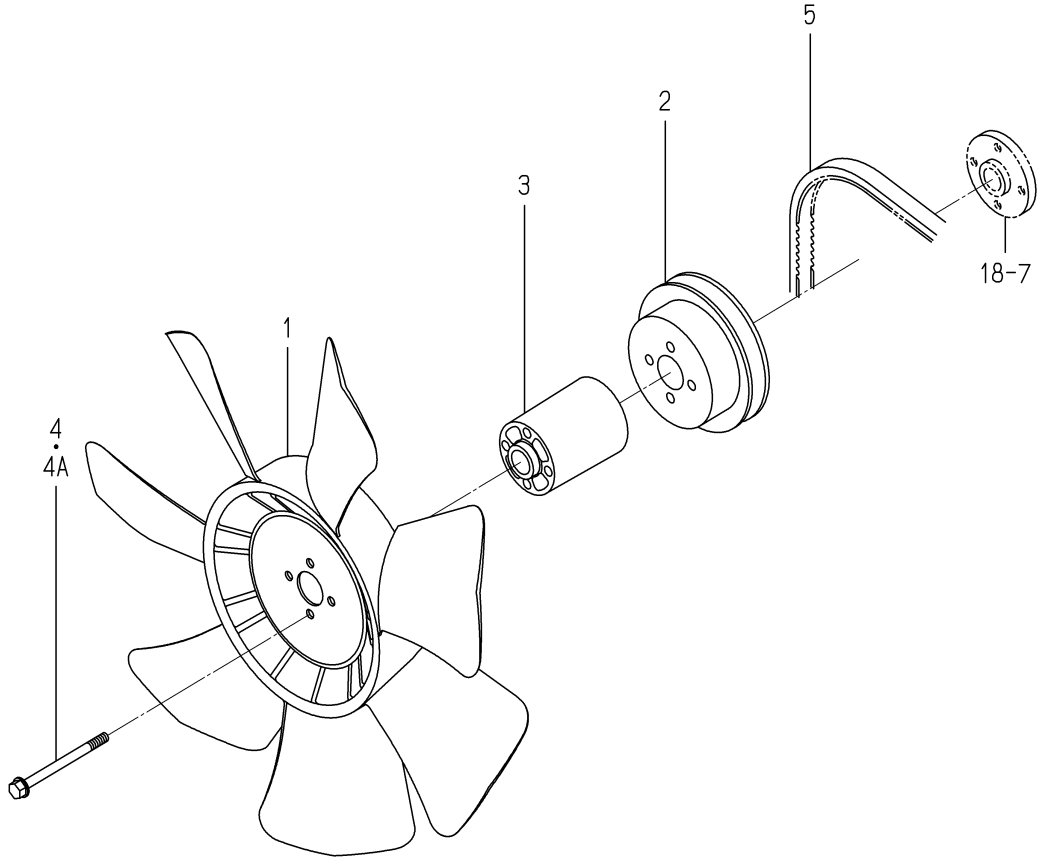

6005-480N-0100

KEY	PART CODE	DESCRIPTION	SPC	TYPE OF MODEL E3CD VB45		ITC	COL	GRP	REMARKS
1	6213-660-015-00	FAN/COOLING	*	1					
2	6213-641-022-10	PULLEY/WATERPUMP	*	1					
3	6213-669-009-00	SPACER/FAN/68	*	1					
4	6209-030-048-00	BOLT/WS	*	4 -194658					
4A	6209-046-007-00	BOLT/FLANGE	*	4 194659-					
5	6213-671-029-00	BELT/V R5 A38.5	*	1					

FIG. 20 INJECTION NOZZLE

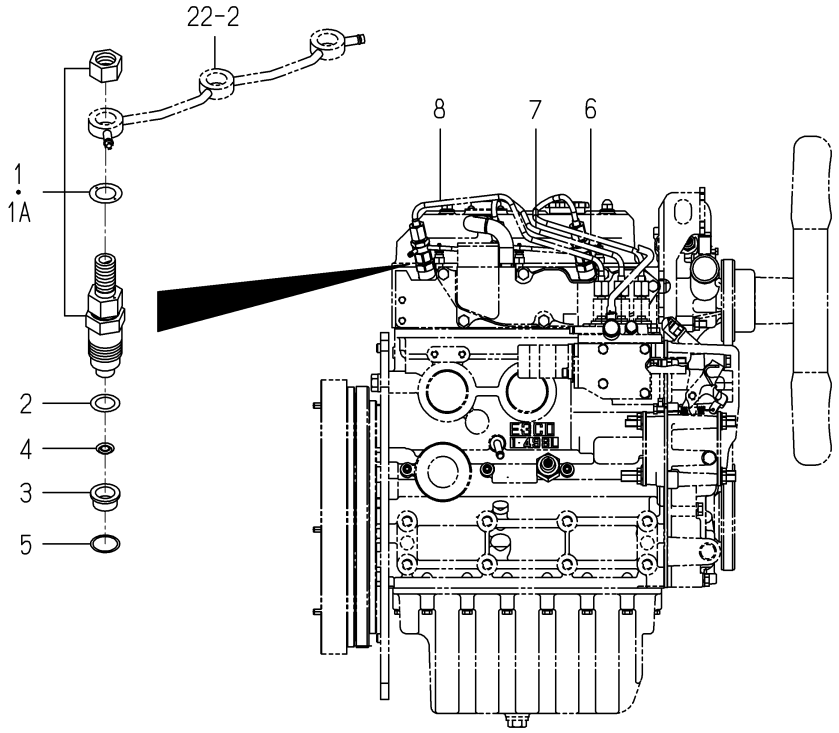

6005-501E-0100

KEY	PART CODE	DESCRIPTION	SPC	TYPE OF MODEL E3CD VB45		ITC	COL	GRP	REMARKS
1	6215-300-045-00	INJECTIONNOZZLE ASSY	*	3 -179743					FIG 028
1A	6215-300-045-10	INJECTIONNOZZLE ASSY	*	3 179744-		1			FIG 028
2	6215-315-002-00	GASKET,NOZZLE	*	3					
3	6215-315-006-00	HEATSHILD/NOZZLE	*	3					
4	6215-315-005-00	WASHER/CORRUGATE	*	3					
5	6215-315-007-00	GASKET	*	3					
6	6215-411-133-00	PIPE/INJECTION ASSY	*	1					
7	6215-411-134-00	PIPE/INJECTION ASSY	*	1					
8	6215-411-135-00	PIPE/INJECTION ASSY	*	1					

FIG. 21 INJECTION PUMP

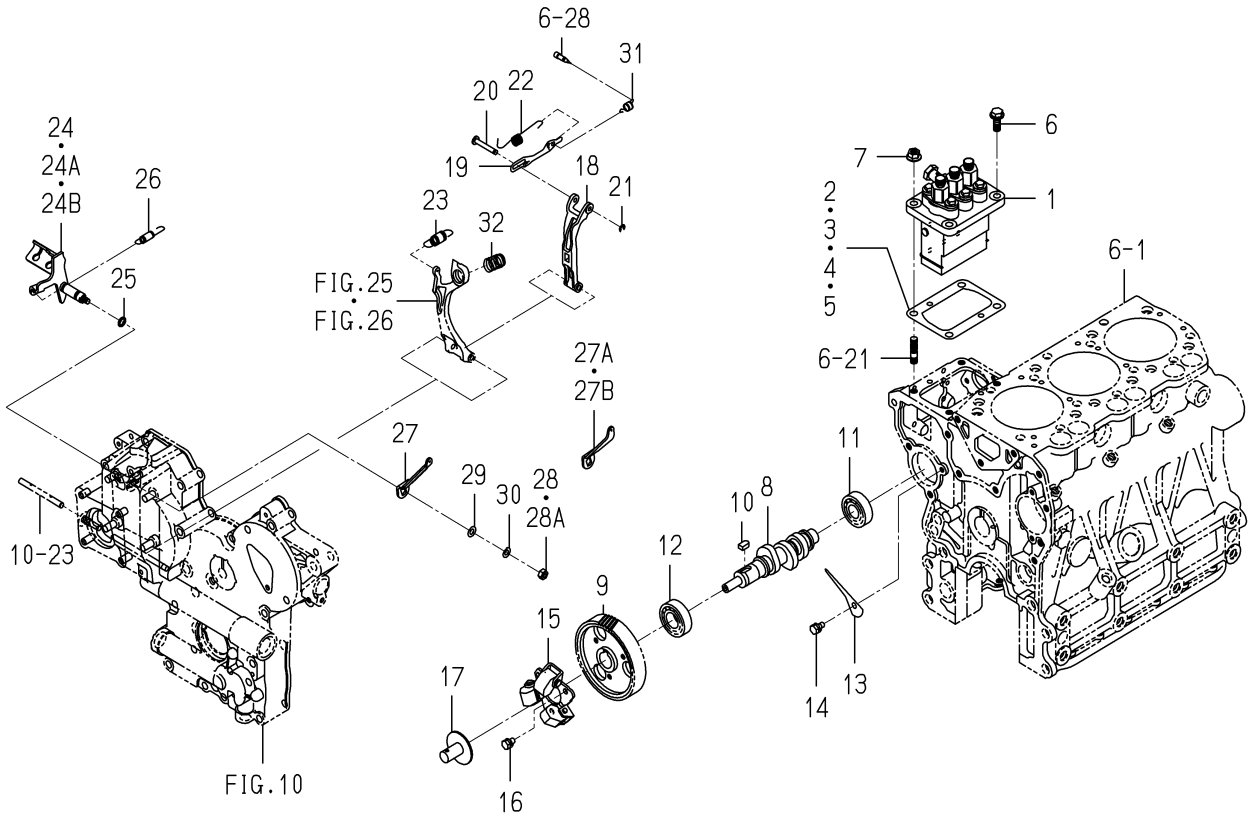

6005-511E-0100

KEY	PART CODE	DESCRIPTION	SPC	TYPE OF MODEL E3CD VB45		ITC	COL	GRP	REMARKS
1	6215-600-104-20	INJECTIONPUMP ASSY	*	1					FIG 029
2	6219-752-045-00	SHIM/INJECTIONPUMP	*	1					
3	6219-752-044-00	SHIM/INJECTIONPUMP	*	1					
4	6219-752-046-00	SHIM/INJECTIONPUMP	*	1					
5	6219-752-047-00	SHIM/INJECTIONPUMP	*	1					
6	V231-360-802-00	FLANGEBOLT	*	2					
7	3817-401-001-00	NUT/M08	*	2					
8	6215-621-017-10	CAMSHAFT/INJPUMP	*	1					
9	6212-524-012-30	GEAR/INJECTIONPUMP	*	1					
10	6209-730-005-00	KEY/07X05X09	*	1					
11	V600-110-620-30	BEARING,RB/6203	*	1					
12	6209-800-010-00	BEARING	*	1					
13	6212-535-009-00	PLATE/THRUST/INJPUMP	*	1					
14	6901-910-612-00	BOLT,SEMS/M6X12	*	1					
15	6215-520-007-10	FLYWEIGHT ASSY	*	1					
16	6209-030-043-00	BOLT/M6X10	*	3					
17	6215-526-004-00	THRUSTPIECE	*	1					
18	6215-541-001-10	ARM/FLOATING COMP	*	1					
19	6215-543-002-10	RINK/CONTROL	*	1					
20	6215-542-006-00	PIN,CONTROL	*	1					
21	V710-140-004-00	RING,SNAP/ 4 E	*	1					
22	6215-549-031-10	SPRING/SETTING	*	1					
23	6215-531-010-00	SPRING/GOVERNOR	*	1					
24	6215-541-024-30	LEVER/CONTROL COMP	*	1 -180963					
24A	6215-541-045-00	LEVER/CONTROL COMP	*	1 -191056					
24B	6215-541-045-10	LEVER/CONTROL COMP	*	1 191057-		3			
25	V720-101-900-80	O-RING/P 8	*	1					
26	6209-580-002-10	SPRING,RETURN	*	1					
27	6215-549-007-10	ARM/CONTROL	*	1 -180963					
27A	6215-549-076-00	ARM/CONTROL	*	1 -183522					

FIG. 21 INJECTION PUMP

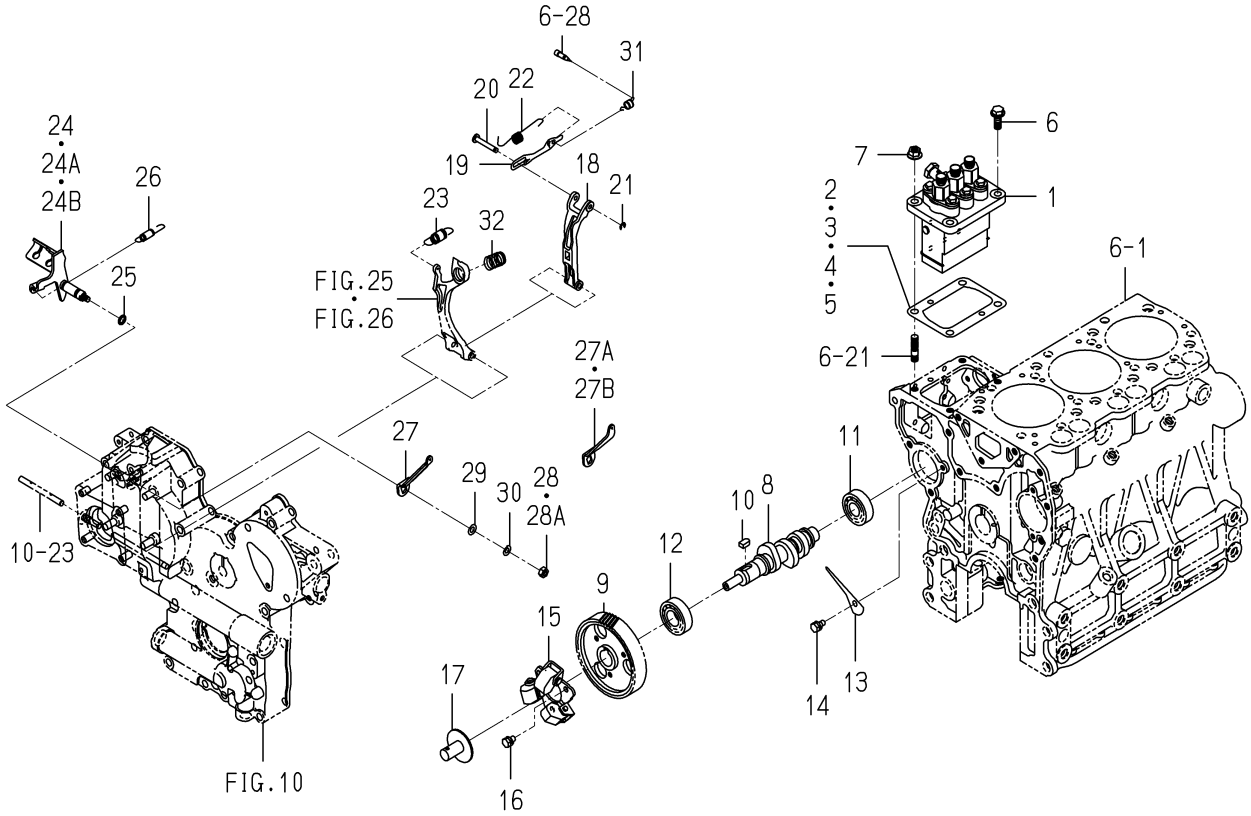

6005-511E-0100

KEY	PART CODE	DESCRIPTION	SPC	TYPE OF MODEL E3CD VB45		ITC	COL	GRP	REMARKS
27B	6215-549-076-10	ARM/CONTROL	*	1 183523-		3			
28	6909-110-406-00	NUT	*	1 -178626					
28A	V301-260-006-00	NUT/M6	*	1 178627-					
29	V411-260-006-00	WASHER / M6	*	1					
30	V401-160-006-00	WASHER,SP/M 6	*	1					
31	6215-549-039-00	SPRING/STARTING	*	1					
32	6215-537-002-10	SPRING/IDLE	*	1					

FIG. 22 FUEL PIPE

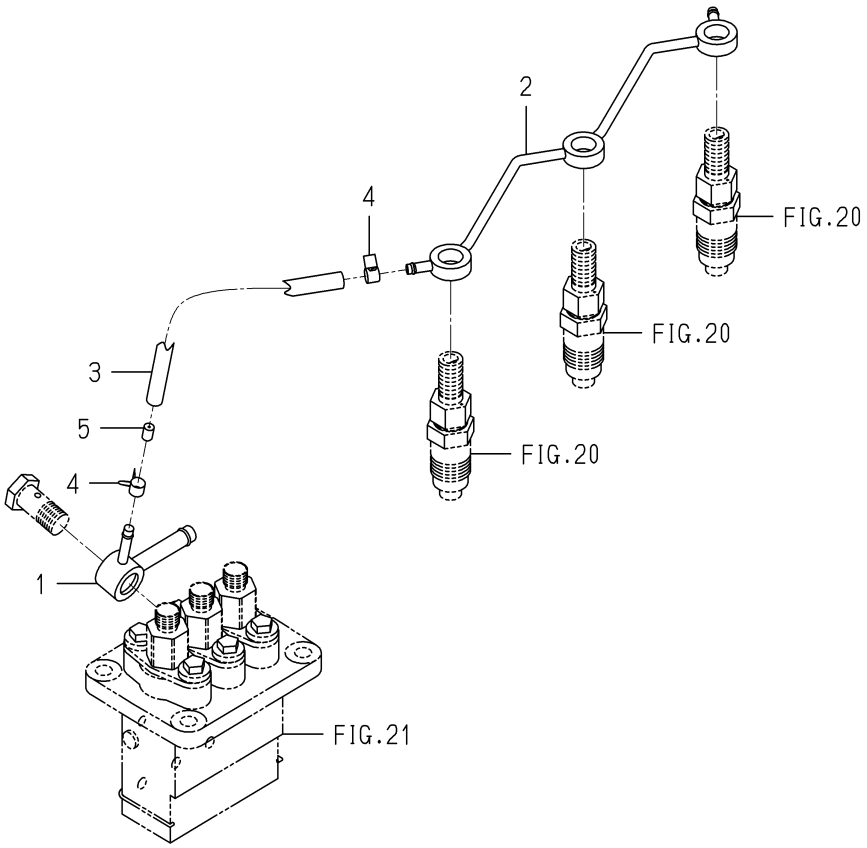

6005-550F-0100

KEY	PART CODE	DESCRIPTION	SPC	TYPE OF MODEL E3CD VB45		ITC	COL	GRP	REMARKS
1	6215-412-004-00	CONNECTOR/FUEL	*	1					
2	6215-411-136-00	PIPE/FUEL	*	1					
3	6209-360-011-00	HOSE/RUBBER	*	1					
4	J062-076-082-00	CLIP/HOSE/7.6-8.2	*	2					
5	3640-586-004-00	RESISTANCE/1.0	*	1					

FIG. 23 ADAPTER

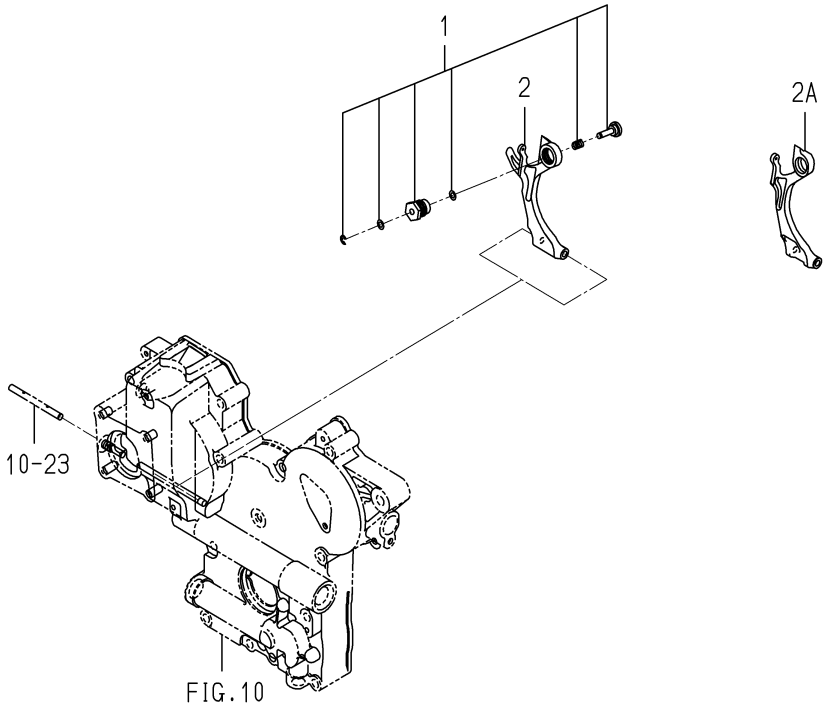

6005-560X-0100

KEY	PART CODE	DESCRIPTION	SPC	TYPE OF MODEL E3CD VB45		ITC	COL	GRP	REMARKS
1	6215-548-069-00	ADAPTER/260X120 ASSY	*	1					
2	6215-541-016-30	ARM/TENSION	*	1 -168197					
2A	6215-541-016-40	ARM/TENSION	*	1 168198-		1			

FIG. 24 ELECTRIC (1)

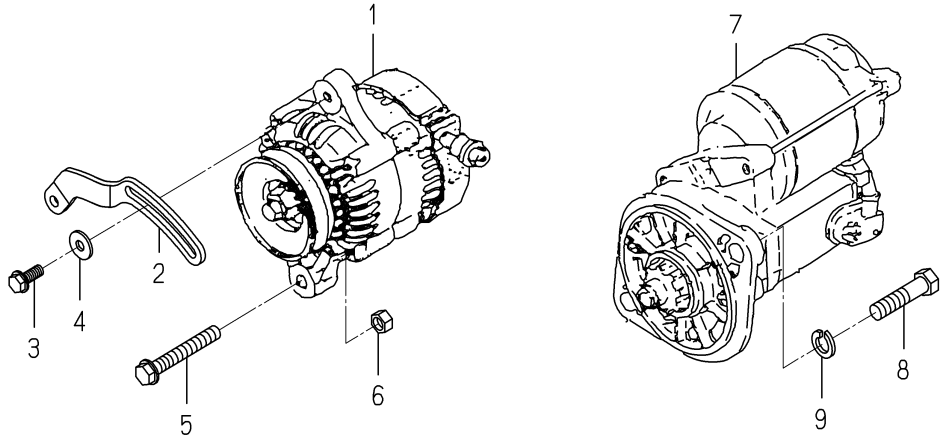

6005-801N-0100,6005-801N-0200

KEY	PART CODE	DESCRIPTION	SPC	TYPE OF MODEL E3CD VB45		ITC	COL	GRP	REMARKS
1	6281-200-020-00	GENERATOR ASSY	*	1 -146559					FIG 031
2	6213-674-006-20	PLATE/ADJUST	*	1 -146559					
3	V231-360-802-00	FLANGEBOLT	*	1 -146559					
4	1373-121-001-00	WASHER/9X22X2	*	1 -146559					
5	V233-361-007-00	FLANGEBOLT	*	1 -146559					
6	6909-110-410-00	NUT/M10	*	1 -146559					
7	6281-100-007-20	STARTER ASSY	*	1 -146599					FIG 030
8	V201-361-205-00	BOLT	*	2 -146599					
9	V401-160-012-00	WASHER,SP/M12	*	2 -146599					

FIG. 25 ELECTRIC (1)

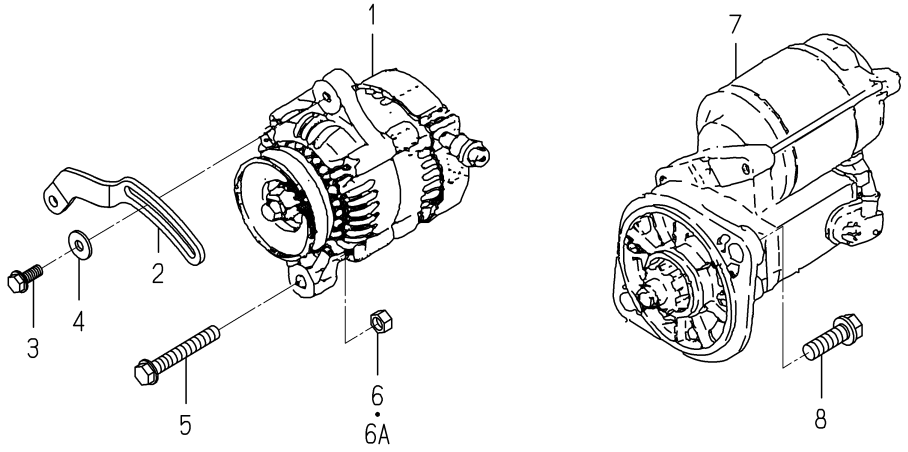

6005-801P-0100,6005-801P-0200

KEY	PART CODE	DESCRIPTION	SPC	TYPE OF MODEL E3CD VB45		ITC	COL	GRP	REMARKS
1	6281-200-020-00	GENERATOR ASSY	*	1 146560-					FIG 031
2	6213-674-006-20	PLATE/ADJUST	*	1 146560-					
3	V231-360-802-00	FLANGEBOLT	*	1 146560-					
4	1373-121-001-00	WASHER/9X22X2	*	1 146560-					
5	V233-361-007-00	FLANGEBOLT	*	1 146560-					
6	6909-110-410-00	NUT/M10	*	1 -171495					
6A	V334-260-010-00	NUT/M10	*	1 171496-					
7	6281-100-007-20	STARTER ASSY	*	1 146560-					FIG 030
8	6901-931-240-00	BOLT	*	2 146560-					

FIG. 26 ELECTRIC (2)

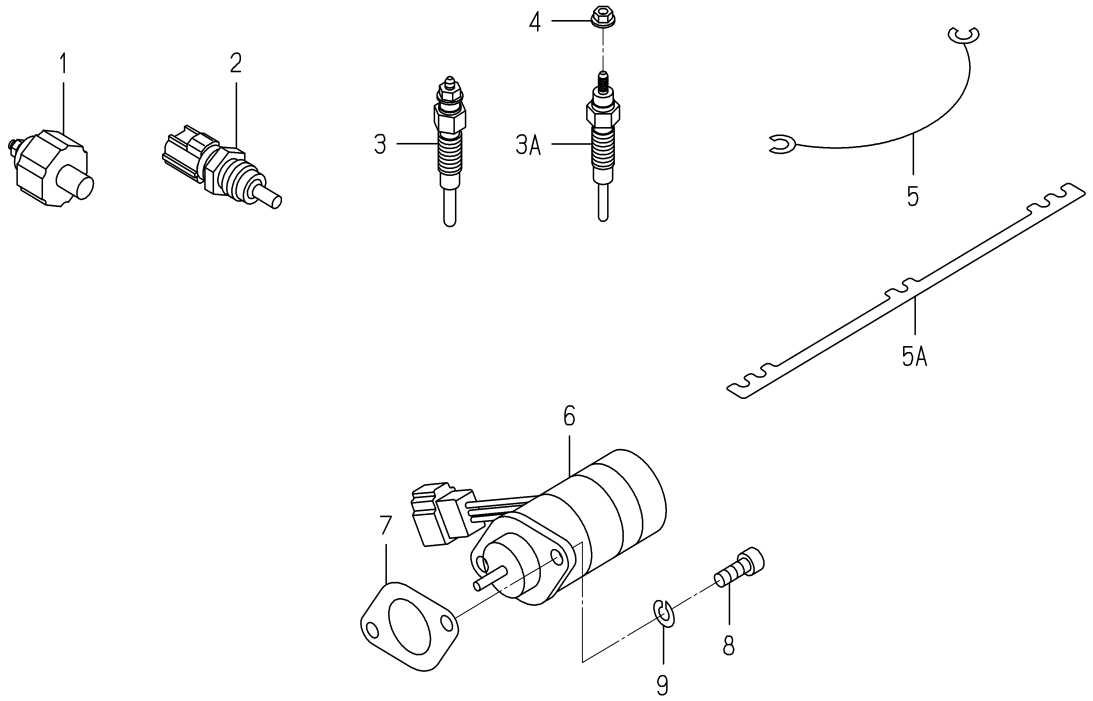

6005-820S-0100,6005-820S-0200

KEY	PART CODE	DESCRIPTION	SPC	TYPE OF MODEL E3CD VB45		ITC	COL	GRP	REMARKS
1	6281-971-003-00	SWITCH/OILPRESSURE	*	1					
2	6282-450-007-00	THERMOMETER	*	1					
3	6281-410-023-00	GLOWPLUG	*	3 -170197					
3A	6281-410-023-10	GLOWPLUG	*	3 170198-		3			
4	6209-440-005-00	NUT/FLANGE	*	3 170224-					
5	6219-732-012-00	CONNECTOR/GLOWPLUG	*	2 -150159					
5A	6219-732-017-00	CONNECTOR/GLOWPLUG	*	1 150160-					
6	6281-910-011-00	SOLENOID	*	1					
7	6209-630-002-10	GASKET	*	1					
8	V220-540-601-60	BOLT	*	2					
9	V401-160-006-00	WASHER,SP/M 6	*	2					

FIG. 27 REPAIR PARTS(OPTION)

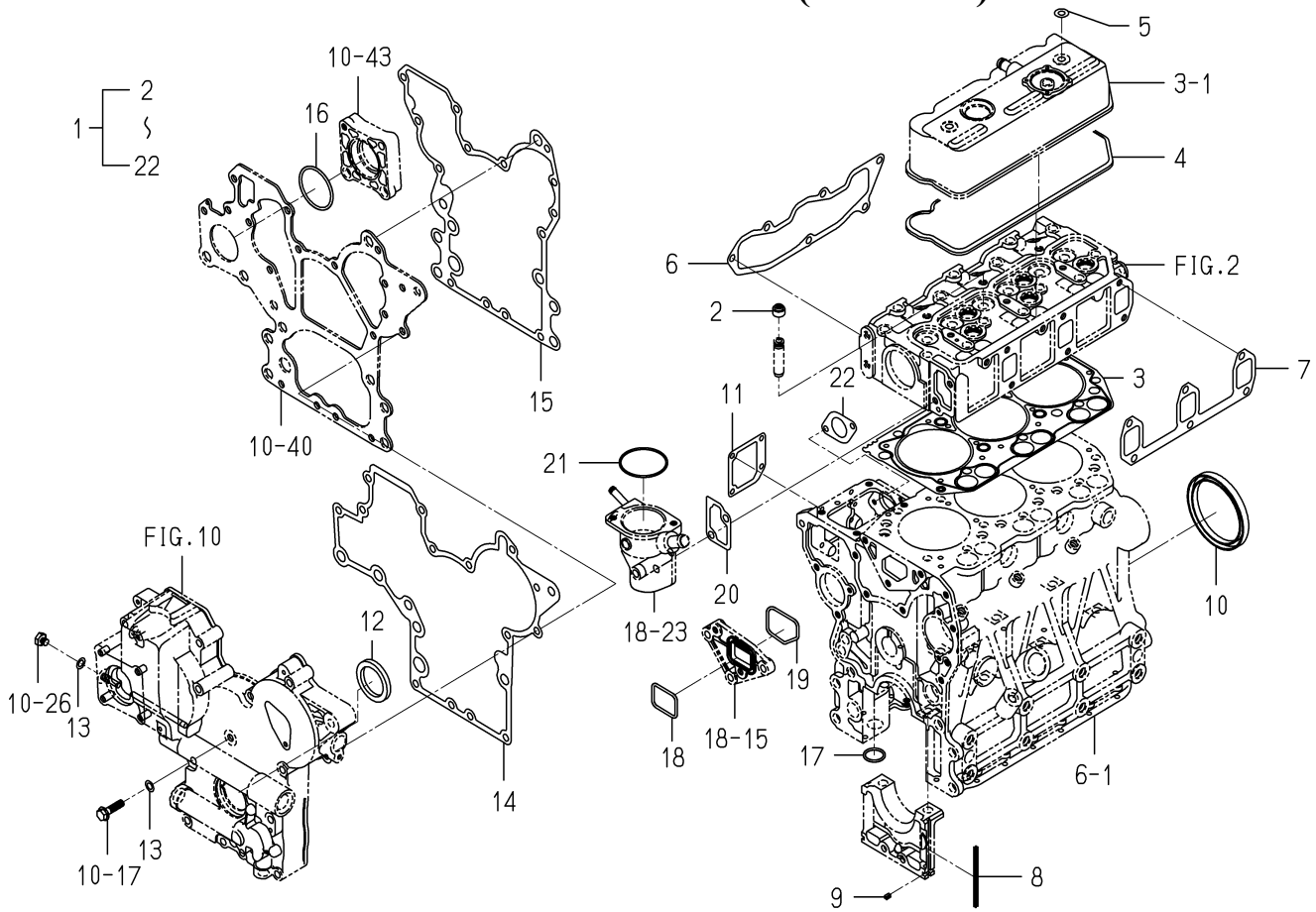

6005-999J-0100

KEY	PART CODE	DESCRIPTION	SPC	TYPE OF MODEL E3CD VB45		ITC	COL	GRP	REMARKS
1	6287-810-040-00	REPAIR/ENGINESET	T	1					
2	6212-569-002-00	SEAL,OIL	T	6					
3	6211-141-057-10	GASKET/CYLINDERHEAD	T	1					
4	6211-173-005-00	SEAL/CYL HEAD/UNDER	T	1					
5	6209-572-003-00	GASKET	T	2					
6	6214-115-003-10	GASKET/INLETMANIFOLD	T	1					
7	6214-145-004-20	GASHET/EXH MANIFOLD	T	1					
8	6211-258-001-00	SEAL,BEARING CAP	T	4					
9	6211-258-002-00	SEAL,BEARING CAP/7	T	2					
10	6209-625-003-20	OILSEAL	T	1					
11	6211-292-001-20	GASKET/COVER	T	1					
12	6209-625-002-00	SEAL,OIL	T	1					
13	6209-500-003-00	WASHER/08X14X01	T	2					
14	6211-312-005-10	GASKET/GEARCASE	T	1					
15	6211-312-006-10	GASKET/PLATE	T	1					
16	V723-102-005-00	O-RING 1A S50	T	1					
17	V720-103-502-20	O-RING/P22	T	1					
18	6213-614-013-00	GASKET/WATERPUMP	T	1					
19	6213-614-014-00	GASKET/SPACER	T	1					
20	6213-743-002-10	GASKET/HOUSING	T	1					
21	V723-102-005-50	O-RING	T	1					
22	6209-630-002-10	GASKET	T	1					

FIG. 28 COMPONENT PARTS FOR 6215-300-045-10 ON Fig.20

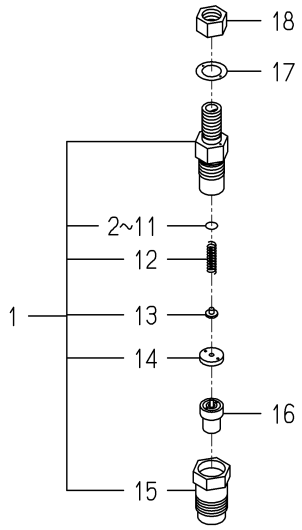

6215-300-045-1B

KEY	PART CODE	DESCRIPTION	SPC	TYPE OF MODEL E3CD VB45		ITC	COL	GRP	REMARKS
1	6215-330-028-00	HOLDER/NOZZLEASSY	*	3					
2	6215-345-044-00	SHIM/0.10	*	3					
3	6215-345-045-00	SHIM/0.20	*	3					
4	6215-345-046-00	SHIM/0.30	*	3					
5	6215-345-047-00	SHIM/0.40	*	3					
6	6215-345-048-00	SHIM/0.50	*	3					
7	6215-345-049-00	SHIM/0.52	*	3					
8	6215-345-050-00	SHIM/0.54	*	3					
9	6215-345-051-00	SHIM/0.56	*	3					
10	6215-345-052-00	SHIM/0.58	*	3					
11	6215-345-053-00	SHIM/0.80	*	3					
12	6215-343-010-00	SPRINGNOZZLE	*	3					
13	6215-342-013-00	SPRINGSEAT	*	3					
14	6215-339-004-00	SPACER	*	3					
15	6215-332-014-00	NUT/NOZZLERETAINING	*	3					
16	6215-311-036-00	NOZZLE	*	3					
17	6215-359-003-00	GASKET	*	3					
18	6215-359-004-00	NUT	*	3					

FIG. 29 COMPONENT PARTS FOR 6215-600-104-20 ON Fig.21

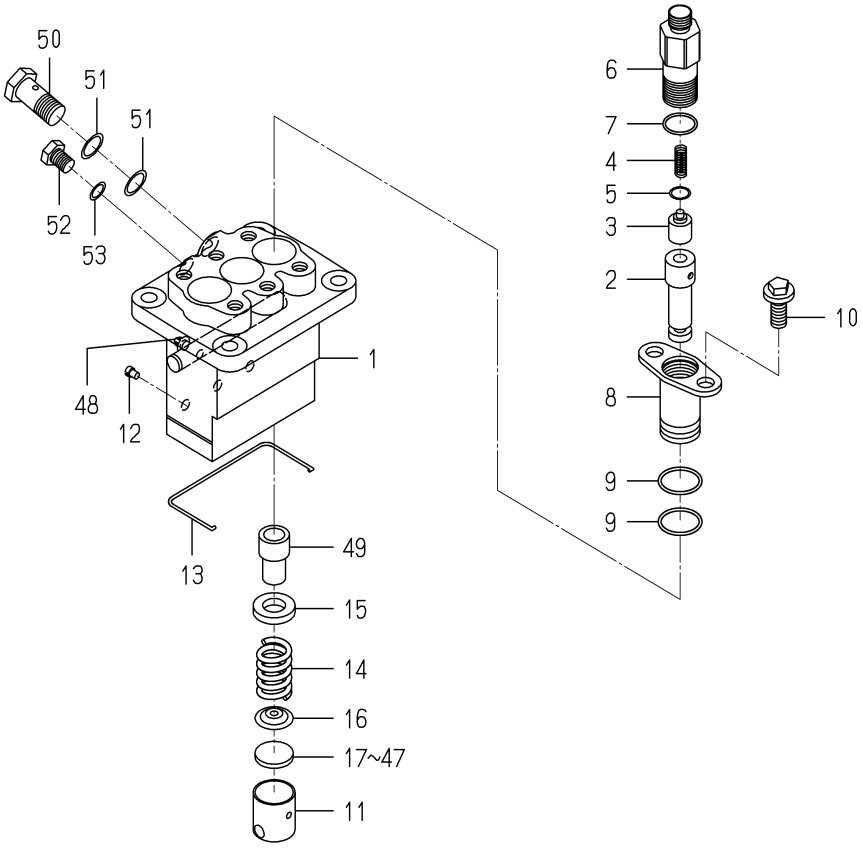

6215-600-104-2E

KEY	PART CODE	DESCRIPTION	SPC	TYPE OF MODEL E3CD VB45		ITC	COL	GRP	REMARKS
1	6215-611-015-00	HOUSING/PUMP	*	1					
2	6215-631-015-00	PLUNGER ASSY	*	3					
3	6215-641-002-00	VALVE,DELIVERY	*	3					
4	6215-643-005-00	SPRING/DELIVERYVALVE	*	3					
5	6215-649-008-00	GASKET	*	3					
6	6215-644-009-00	HOLDER/DELIVERYVALVE	*	3					
7	6215-649-014-00	ORING	*	3					
8	6215-635-004-00	SLEEVEFLANGE	*	3					
9	6215-649-013-00	ORING	*	6					
10	6215-649-011-00	BOLT	*	6					
11	6215-622-003-00	TAPPET	*	3					
12	6215-629-017-00	PIN	*	3					
13	6215-629-035-00	SNAPRING	*	1					
14	6215-634-003-00	SPRING/PLUNGER	*	3					
15	6215-639-008-00	SPRINGSEAT	*	3					
16	6215-639-009-00	SPRINGSEAT	*	3					
17	6215-629-060-00	PLATE/T=2.60	*	1					
18	6215-629-061-00	PLATE/T=2.65	*	1					
19	6215-629-062-00	PLATE/T=2.70	*	1					
20	6215-629-063-00	PLATE/T=2.75	*	1					
21	6215-629-064-00	PLATE/T=2.80	*	1					
22	6215-629-065-00	PLATE/T=2.85	*	1					
23	6215-629-066-00	PLATE/T=2.90	*	1					
24	6215-629-067-00	PLATE/T=2.95	*	1					
25	6215-629-036-00	PLATE/T=3.00	*	1					
26	6215-629-037-00	PLATE/T=3.05	*	1					
27	6215-629-038-00	PLATE/T=3.10	*	1					
28	6215-629-039-00	PLATE/T=3.15	*	1					
29	6215-629-040-00	PLATE/T=3.20	*	1					
30	6215-629-041-00	PLATE/T=3.25	*	1					

FIG. 29 COMPONENT PARTS FOR 6215-600-104-20 ON Fig.21

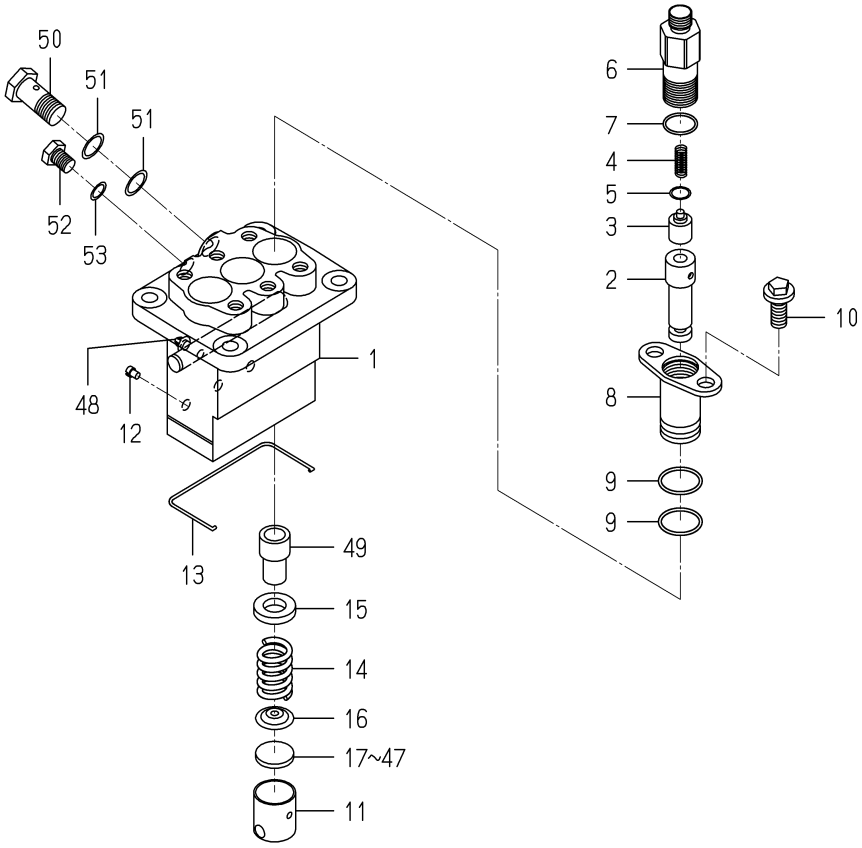

6215-600-104-2E

KEY	PART CODE	DESCRIPTION	SPC	TYPE OF MODEL E3CD VB45		ITC	COL	GRP	REMARKS
31	6215-629-042-00	PLATE/T=3.30	*	1					
32	6215-629-043-00	PLATE/T=3.35	*	3 -146336					
32	6215-629-043-00	PLATE/T=3.35	*	1 146337-					
33	6215-629-044-00	PLATE/T=3.40	*	1					
34	6215-629-045-00	PLATE/T=3.45	*	1					
35	6215-629-046-00	PLATE/T=3.50	*	1					
36	6215-629-047-00	PLATE/T=3.55	*	1					
37	6215-629-048-00	PLATE/T=3.60	*	1					
38	6215-629-049-00	PLATE/T=3.65	*	1					
39	6215-629-050-00	PLATE/T=3.70	*	1					
40	6215-629-051-00	PLATE/T=3.75	*	1					
41	6215-629-052-00	PLATE/T=3.80	*	1					
42	6215-629-053-00	PLATE/T=3.85	*	1					
43	6215-629-054-00	PLATE/T=3.90	*	1					
44	6215-629-055-00	PLATE/T=3.95	*	1					
45	6215-629-056-00	PLATE/T=4.00	*	1					
46	6215-629-058-00	PLATE/T=4.05	*	1					
47	6215-629-059-00	PLATE/T=4.10	*	1					
48	6215-637-004-00	CONTROLRACK	*	1					
49	6215-635-005-00	CONTROLSLEEVE	*	3					
50	6215-619-023-00	EYEBOLT	*	1					
51	6115-639-008-00	GASKET	*	2					
52	6215-619-024-00	BOLT	*	1					
53	6215-359-006-00	GASKET	*	1					

FIG. 30 COMPONENT PARTS FOR 6281-100-007-20 ON Fig.24

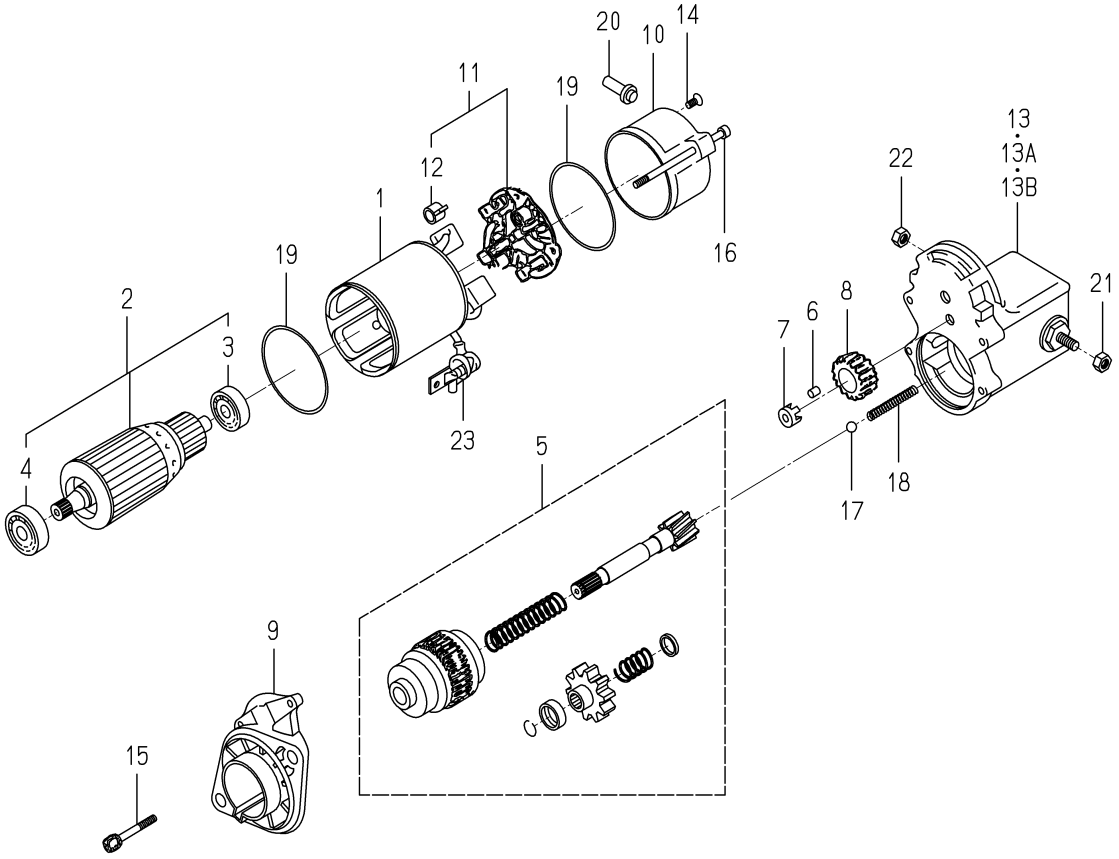

6281-100-007-2H

KEY	PART CODE	DESCRIPTION	SPC	TYPE OF MODEL E3CD VB45		ITC	COL	GRP	REMARKS
1	6281-111-005-00	YOKE/STARTER ASSY	*	1					
2	6281-121-006-00	ARMATURE/STARTE ASSY	*	1					
3	6281-129-038-00	BEARING	*	1					
4	6281-129-039-00	BEARING	*	1					
5	6281-124-007-10	CLUTCH/STARTER ASSY	*	1					
6	6581-129-099-00	RORA	*	5					
7	6281-129-040-00	RETAINER	*	1					
8	6281-123-005-00	PINION/STARTER	*	1					
9	6281-129-045-10	HOUSING/STARTER ASSY	*	1					
10	6281-115-011-00	FRAME/STARTEREND	*	1					
11	6281-116-004-00	HOLDER/STARTER ASSY	*	1					
12	6581-117-007-00	SPRING,BRUSH	*	4					
13	6281-151-017-10	SWITCH/MAGNETIC ASSY	*	1 -146599					
13A	6281-151-020-00	SWITCH/MAGNETIC ASSY	*	1 -153398					
13B	6281-151-023-00	SWITCH/MAGNETIC ASSY	*	1 153399-					
14	6281-129-062-00	SCREW	*	2					
15	6281-129-042-00	BOLT/WS	*	2					
16	6281-129-043-00	BOLT/THROUGH	*	2					
17	6581-129-092-00	BALL	*	1					
18	6281-129-044-00	SPRING/RETURN	*	1					
19	6281-129-003-00	O-RING	*	2					
20	6281-115-016-00	BUSHING/DRAIN	*	1					
21	6909-111-508-00	NUT	*	1					
22	6281-229-041-00	NUT	*	1					
23	6281-115-010-00	COVER	*	1					

FIG. 31 COMPONENT PARTS FOR 6281-200-020-00 ON Fig.24

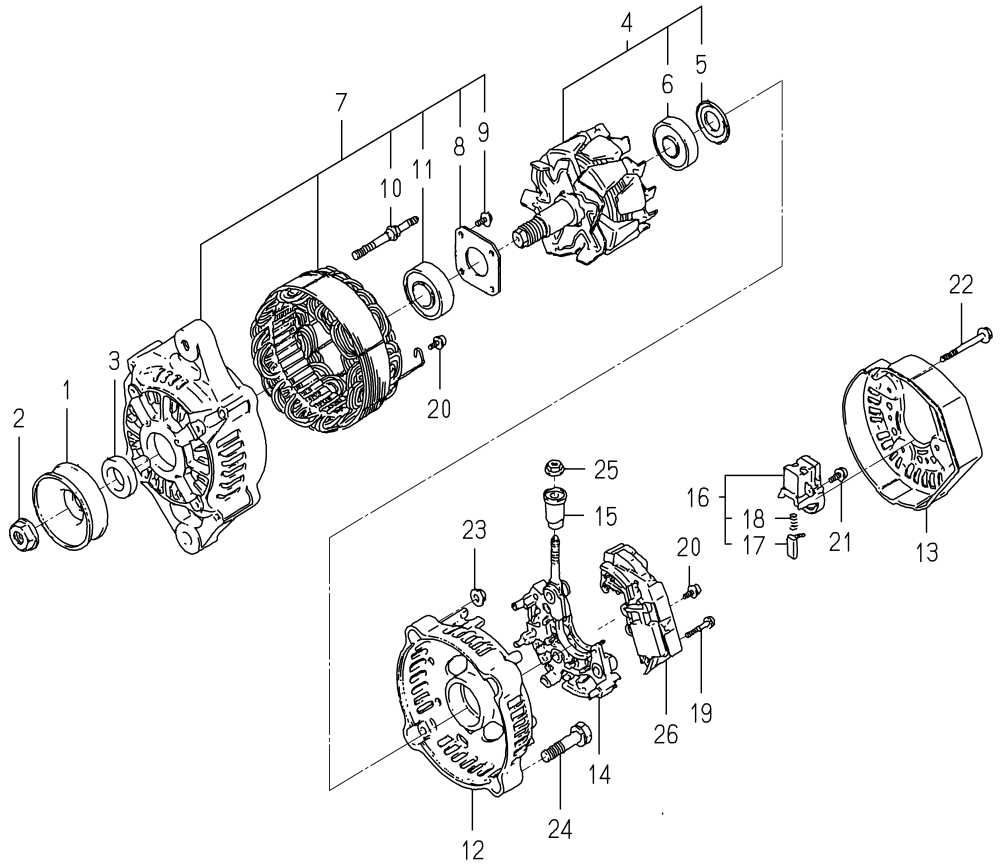

6281-200-020-0B

KEY	PART CODE	DESCRIPTION	SPC	TYPE OF MODEL E3CD VB45		ITC	COL	GRP	REMARKS
1	6281-222-012-00	PULLEY	*	1					
2	6281-229-002-00	NUT	*	1					
3	6281-229-003-00	COLLOR	*	1					
4	6281-221-007-00	ROTOR ASSY	*	1					
5	6281-229-004-00	COVER,BEARING	*	1					
6	6281-229-032-00	BEARING/BALL	*	1					
7	6281-213-017-00	FRAME/DRIVEEND ASSY	*	1					
8	6281-229-006-00	PLATE	*	1					
9	6281-229-007-00	BOLT	*	4					
10	6281-229-008-00	BOLT	*	2					
11	6281-229-033-00	BEARING/BALL	*	1					
12	6281-214-003-00	FRAME	*	1					
13	6281-214-004-00	COVER	*	1					
14	6281-229-029-00	HOLDER ASSY	*	1					
15	6281-229-011-00	BUSH	*	1					
16	6281-217-003-00	HOLDER/BRUSH ASSY	*	1					
17	6281-215-001-00	BRUSH	*	2					
18	6281-216-001-00	SPRING	*	2					
19	6281-229-012-00	BOLT	*	2					
20	6281-229-013-00	BOLT	*	6					
21	6281-229-014-00	BOLT	*	1					
22	6281-229-015-00	BOLT	*	3					
23	6281-229-016-00	NUT	*	2					
24	6281-229-017-00	BOLT	*	2					
25	6281-229-018-00	NUT	*	1					
26	6281-271-002-00	REGULATOR ASSY	*	1					

E N G I N E

E3CDVB40···TG5330E6

E
N
G
I
N
E

6005-097-610-30

FIG. 1 SHORT BLOCK ENGIASSY

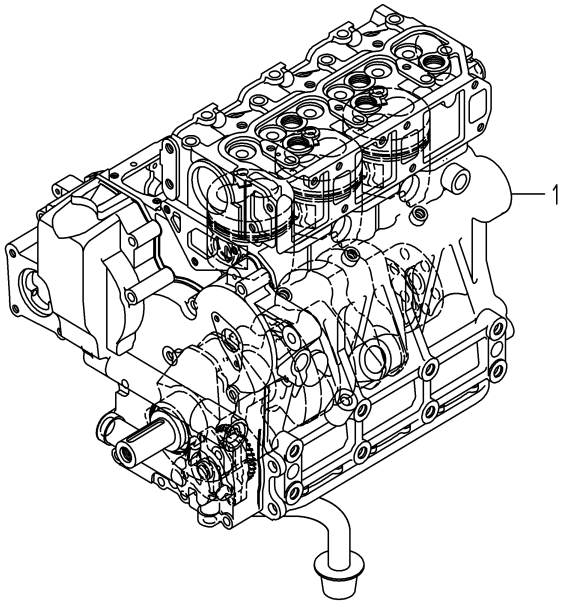

6005-015A-0100

KEY	PART CODE	DESCRIPTION	SPC	TYPE OF MODEL E3CD VB40		ITC	COL	GRP	REMARKS
1	6005-010-139-00	SHORTBLOCKENGIN ASSY	T	1					

FIG. 2 CYLINDER HEAD

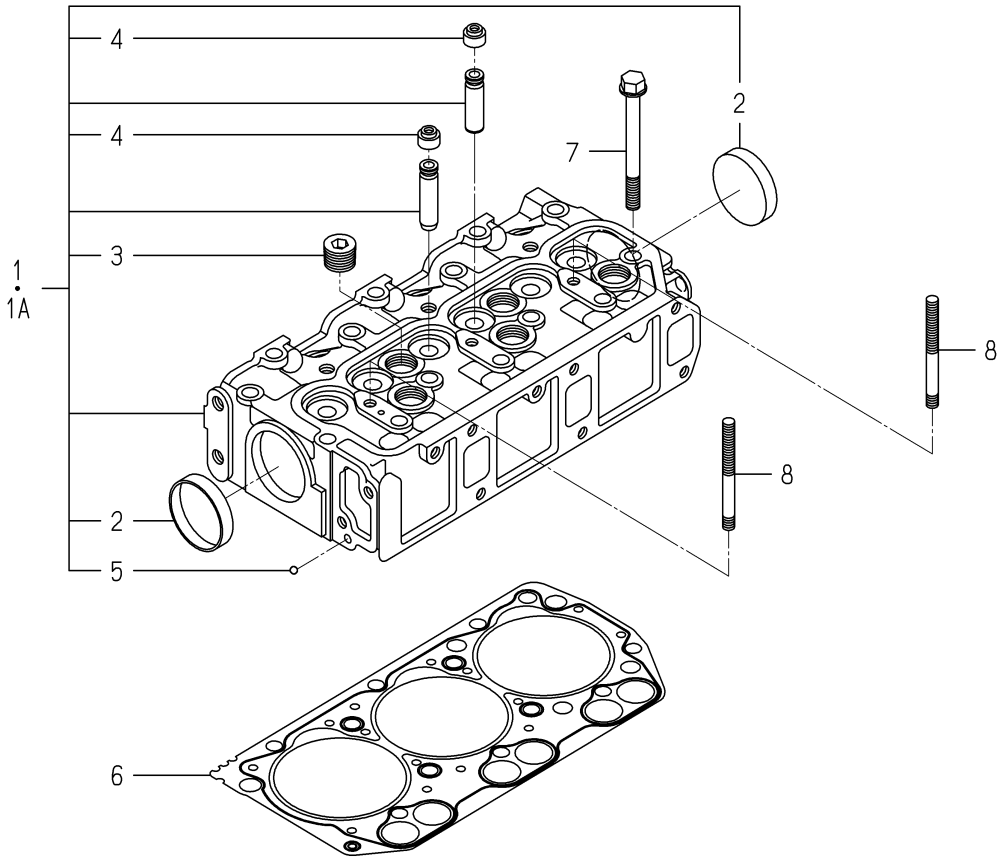

6005-101S-0100,6005-101S-0200

KEY	PART CODE	DESCRIPTION	SPC	TYPE OF MODEL E3CD VB40		ITC	COL	GRP	REMARKS
1	6211-110-084-10	CYLINDERHEAD ASSY	*	1 -195944					
1A	6211-110-084-20	CYLINDERHEAD ASSY	*	1 195945-		1			
2	6209-610-003-00	CUP/SEALING/50	*	2					
3	6209-605-004-10	PLUG/PT1/2	*	5					
4	6212-569-002-00	SEAL,OIL	*	6					
5	V682-200-000-60	BALL	*	1					
6	6211-141-057-10	GASKET/CYLINDERHEAD	*	1					
7	6209-000-005-00	BOLT	*	14					
8	6209-300-014-00	STUD	*	2					

FIG. 3 CYLINDER HEAD COVER

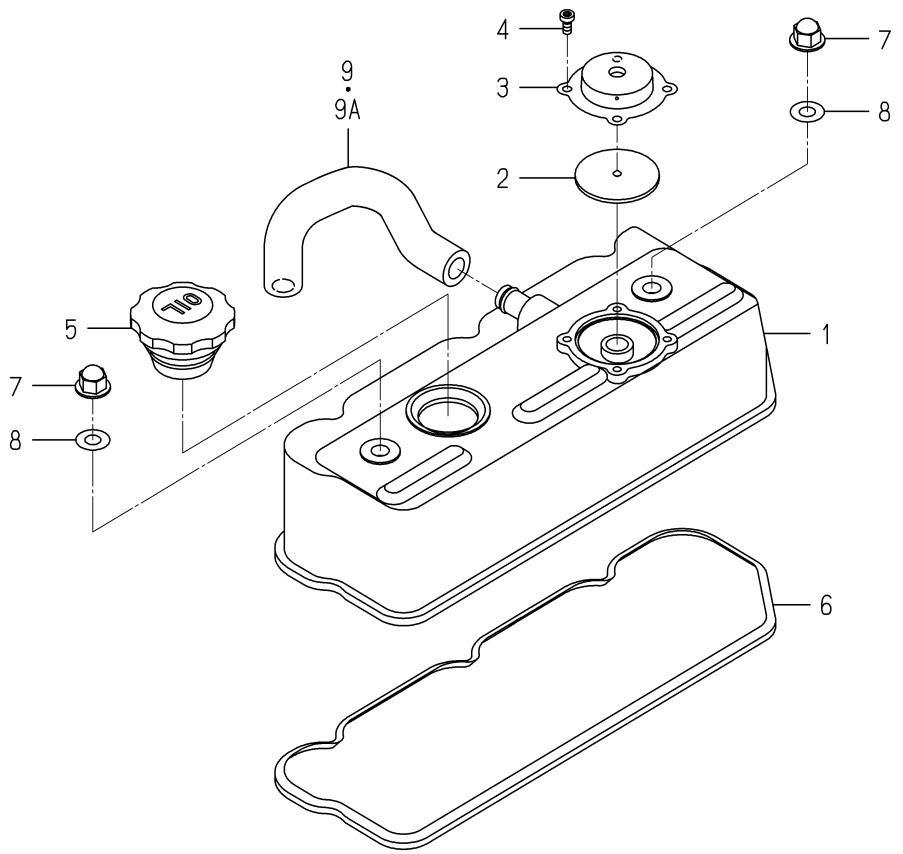

6005-110F-0100

KEY	PART CODE	DESCRIPTION	SPC	TYPE OF MODEL E3CD VB40		ITC	COL	GRP	REMARKS
1	6211-170-007-30	COVER/CYLINDER HEAD	*	1					
2	6211-179-011-20	RUBBERFLANGE	*	1					
3	6211-291-010-00	COVER/BLOWBY	*	1					
4	V195-164-008-30	SCREW/TAPPING	*	4					
5	6211-751-001-10	CAP,OIL FILLER	*	1					
6	6211-173-005-00	SEAL/CYL HEAD/UNDER	*	1					
7	6209-490-002-10	NUT/CAP	*	2					
8	6209-572-003-00	GASKET	*	2					
9	6209-360-109-00	HOSE/RUBBER	*	1 -177886					
9A	6209-360-109-10	HOSE/RUBBER	*	1 177887-		1			

FIG. 4 INLET MANIFOLD

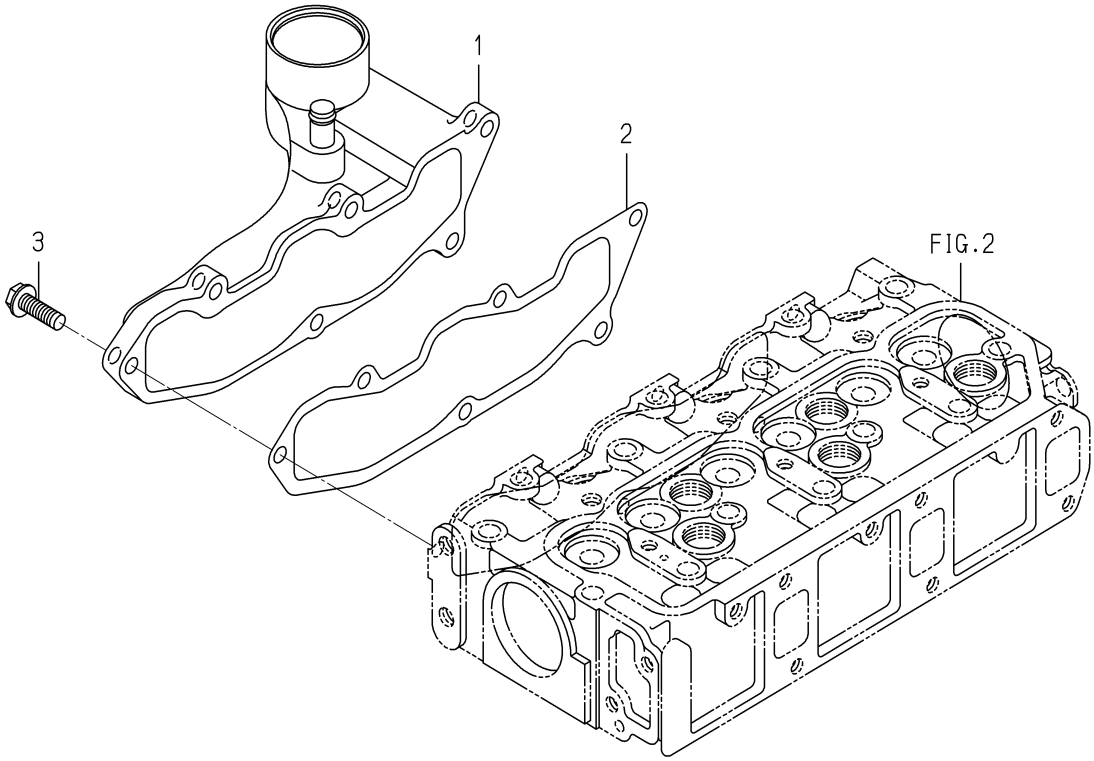

6005-120 -0100

KEY	PART CODE	DESCRIPTION	SPC	TYPE OF MODEL E3CD VB40		ITC	COL	GRP	REMARKS
1	6214-110-003-00	MANIFOLD/INLET ASSY	*	1					
2	6214-115-003-10	GASKET/INLETMANIFOLD	*	1					
3	V231-360-802-50	FLANGEBOLT	*	6					

FIG. 5 EXHAUST MANIFOLD

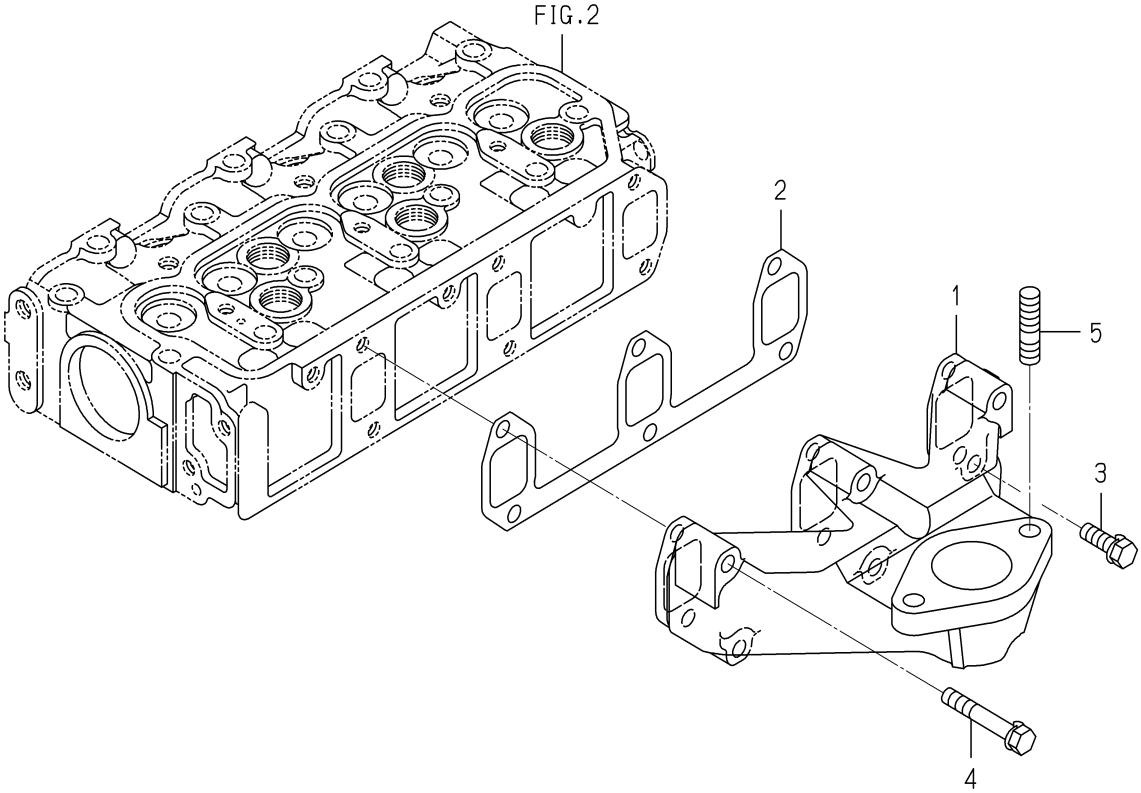

6005-140E-0100

KEY	PART CODE	DESCRIPTION	SPC	TYPE OF MODEL E3CD VB40		ITC	COL	GRP	REMARKS
1	6214-141-044-00	MANIFOLD/EXHAUST	*	1					
2	6214-145-004-20	GASHET/EXH MANIFOLD	*	1					
3	V211-560-802-50	BOLT,SEMS/M8X25 7T	*	1					
4	6509-030-037-00	BOLT	*	5					
5	6904-411-025-00	STUD	*	2					

FIG. 6 CYLINDER BLOCK

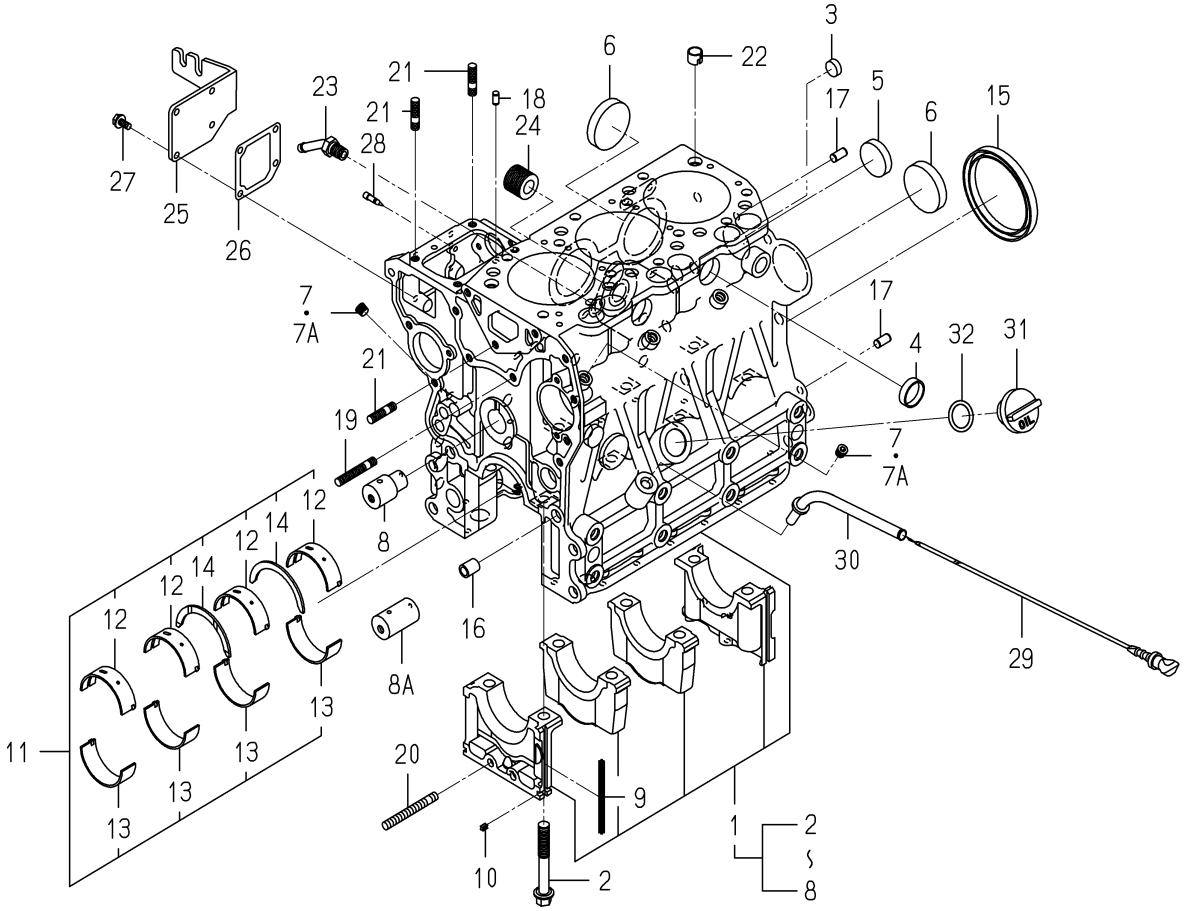

6005-203A-0100

KEY	PART CODE	DESCRIPTION	SPC	TYPE OF MODEL E3CD VB40		ITC	COL	GRP	REMARKS
1	6211-210-081-00	CYLINDERBLOCK ASSY	*	1 -155705					
2	6209-000-006-00	BOLT	*	8 -155705					
3	6209-610-007-00	CUP/SEALING/16	*	2 -155705					
4	6209-610-001-10	CUP/SEALING/28	*	2 -155705					
5	6209-610-009-00	CUP/SEALING/36	*	1 -155705					
6	6209-610-003-00	CUP/SEALING/50	*	3 -155705					
7	6509-605-019-10	PLUG	*	8 -199498					
7A	6209-605-007-00	PLUG/PT1/8	*	8 199499-					
8	6212-531-008-20	PIN/IDLEGEAR	*	1 -168830					
8A	6212-531-008-30	PIN/IDLEGEAR	*	1 168831-		3			
9	6211-258-001-00	SEAL,BEARING CAP	*	4 -155705					
10	6211-258-002-00	SEAL,BEARING CAP/7	*	2 -155705					
11	6211-510-008-00	BEARING/CRANK SET	*	1 -155705					
12	6211-511-007-00	BEARING/CRANK/UPPER	*	4 -155705					
13	6211-511-008-00	BEARING/CRANK/LOWER	*	4 -155705					
14	6211-599-004-00	BEARING/THRUST/CRANK	*	2 -155705					
15	6209-625-003-20	OILSEAL	*	1 -155705					
16	6209-749-001-20	PIN/TUBE	*	2 -155705					
17	6213-129-006-00	PIN/STRAIGHT	*	2 -155705					
18	6209-740-005-00	PIN	*	2 -155705					
19	6904-110-840-00	STUD/M8X40	*	1 -155705					
20	V251-340-806-00	BOLT/STUD	*	1 -155705					
21	6904-110-822-00	STUD	*	3 -155705					
22	6294-453-002-00	DOWEL	*	2 -155705					
23	6213-721-007-00	PIPE/WATERDRAIN	*	1 -155705					
24	6213-319-001-00	CONNECTOR,OIL FILTER	*	1 -155705					
25	6211-291-015-20	COVER/INJECTIONPUMP	*	1 -155705					
26	6211-292-001-20	GASKET/COVER	*	1 -155705					
27	V230-360-601-20	FLANGEBOLT	*	4 -155705					
28	6215-549-013-00	PIN	*	1 -155705					

FIG. 6 CYLINDER BLOCK

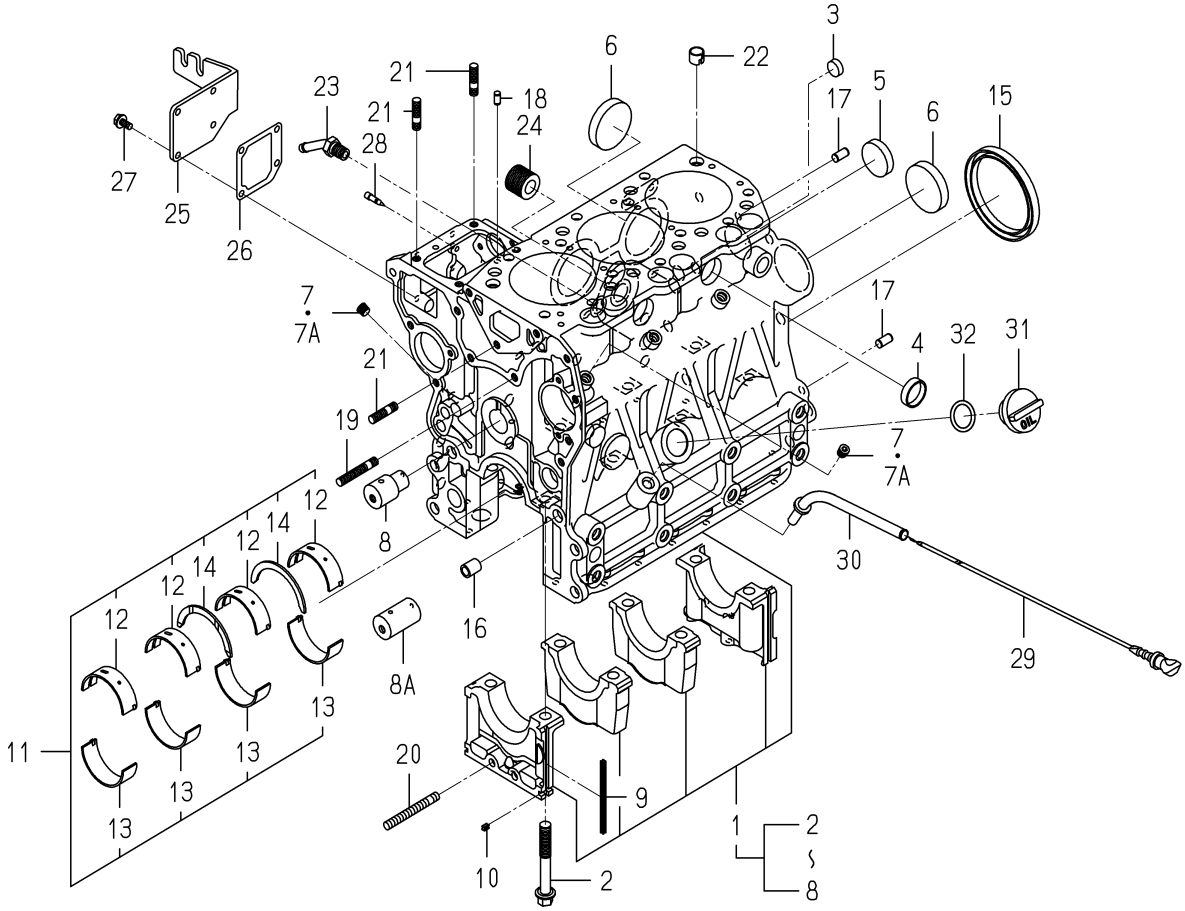

6005-203A-0100

KEY	PART CODE	DESCRIPTION	SPC	TYPE OF MODEL E3CD VB40		ITC	COL	GRP	REMARKS
29	6211-760-046-00	LEVELGAGE	*	1 -155705					
30	6211-766-033-00	GUIDE/LEVELGAGE COMP	*	1 -155705					
31	6211-751-002-00	CAP/OILFILLER	*	1 -155705					
32	V720-103-502-50	O-RING/P25	*	1 -155705					

FIG. 7 CYLINDER BLOCK

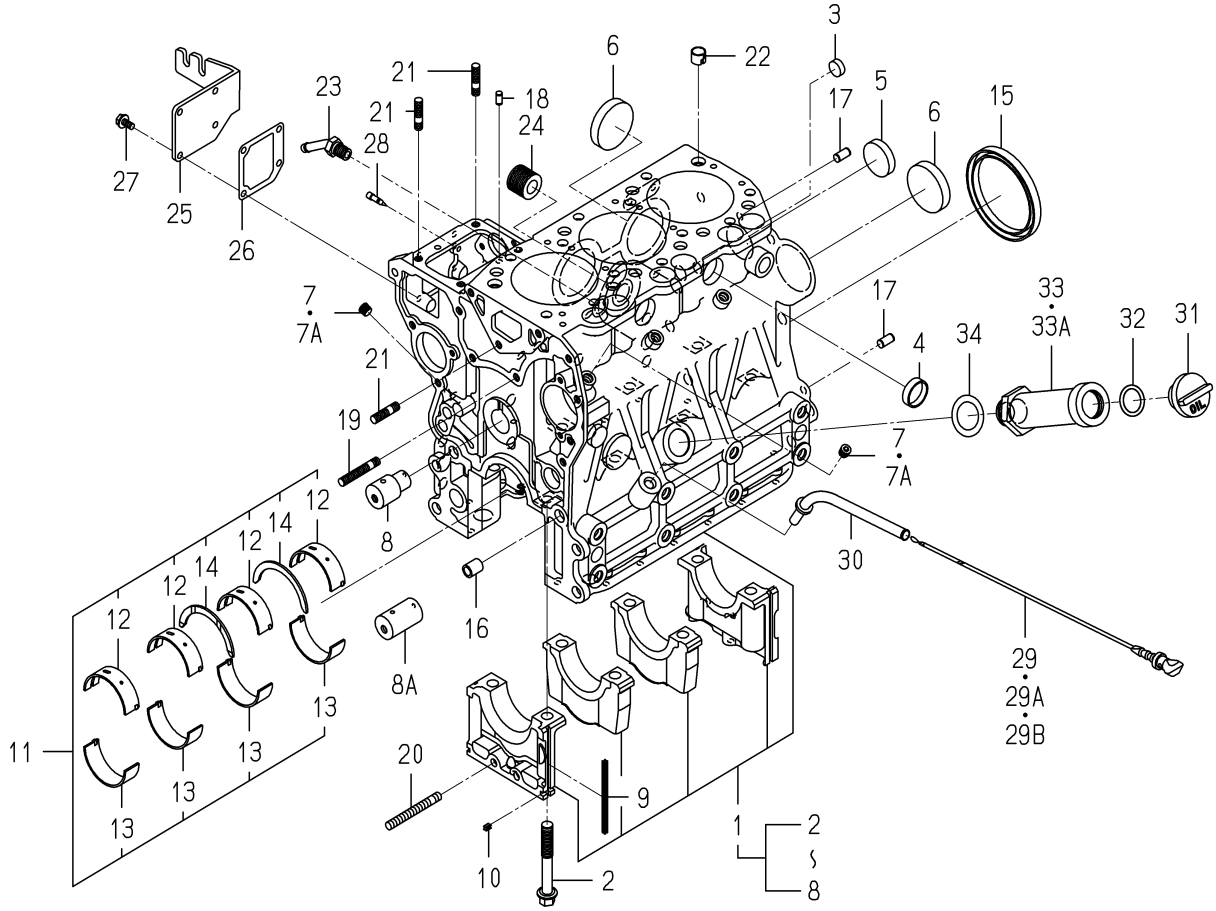

6005-203M-0100

KEY	PART CODE	DESCRIPTION	SPC	TYPE OF MODEL E3CD VB40		ITC	COL	GRP	REMARKS
1	6211-210-081-00	CYLINDERBLOCK ASSY	*	1 155706-					
2	6209-000-006-00	BOLT	*	8 155706-					
3	6209-610-007-00	CUP/SEALING/16	*	2 155706-					
4	6209-610-001-10	CUP/SEALING/28	*	2 155706-					
5	6209-610-009-00	CUP/SEALING/36	*	1 155706-					
6	6209-610-003-00	CUP/SEALING/50	*	3 155706-					
7	6509-605-019-10	PLUG	*	8 -199498					
7A	6209-605-007-00	PLUG/PT1/8	*	8 199499-					
8	6212-531-008-20	PIN/IDLEGEAR	*	1 -168830					
8A	6212-531-008-30	PIN/IDLEGEAR	*	1 168831-		3			
9	6211-258-001-00	SEAL,BEARING CAP	*	4 155706-					
10	6211-258-002-00	SEAL,BEARING CAP/7	*	2 155706-					
11	6211-510-008-00	BEARING/CRANK SET	*	1 155706-					
12	6211-511-007-00	BEARING/CRANK/UPPER	*	4 155706-					
13	6211-511-008-00	BEARING/CRANK/LOWER	*	4 155706-					
14	6211-599-004-00	BEARING/THRUST/CRANK	*	2 155706-					
15	6209-625-003-20	OILSEAL	*	1 155706-					
16	6209-749-001-20	PIN/TUBE	*	2 155706-					
17	6213-129-006-00	PIN/STRAIGHT	*	2 155706-					
18	6209-740-005-00	PIN	*	2 155706-					
19	6904-110-840-00	STUD/M8X40	*	1 155706-					
20	V251-340-806-00	BOLT/STUD	*	1 155706-					
21	6904-110-822-00	STUD	*	3 155706-					
22	6294-453-002-00	DOWEL	*	2 155706-					
23	6213-721-007-00	PIPE/WATERDRAIN	*	1 155706-					
24	6213-319-001-00	CONNECTOR,OIL FILTER	*	1 155706-					
25	6211-291-015-20	COVER/INJECTIONPUMP	*	1 155706-					
26	6211-292-001-20	GASKET/COVER	*	1 155706-					
27	V230-360-601-20	FLANGEBOLT	*	4 155706-					
28	6215-549-013-00	PIN	*	1 155706-					

FIG. 7 CYLINDER BLOCK

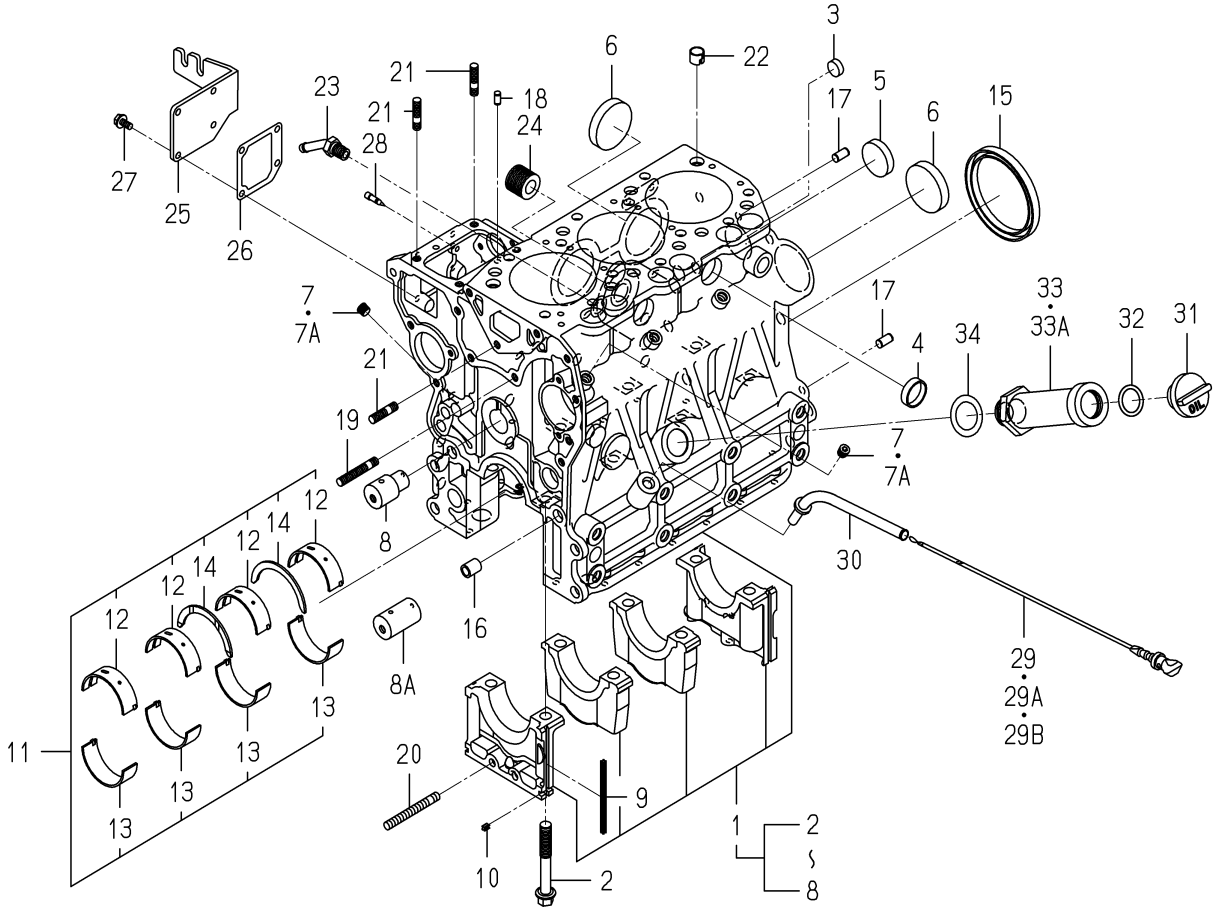

6005-203M-0100

KEY	PART CODE	DESCRIPTION	SPC	TYPE OF MODEL E3CD VB40		ITC	COL	GRP	REMARKS
29	6211-760-046-00	LEVELGAGE	*	1 -171504					
29A	6211-760-046-10	LEVELGAGE	*	1 -202383		1			
29B	6211-760-041-20	LEVELGAGE	*	1 202384-					
30	6211-766-033-00	GUIDE/LEVELGAGE COMP	*	1 155706-					
31	6211-751-002-00	CAP/OILFILLER	*	1 155706-					
32	V720-103-502-50	O-RING/P25	*	1 155706-					
33	6211-749-016-10	OILFILLER COMP	*	1 -157446					
33A	6211-749-016-20	OILFILLER COMP	*	1 157447-		3			
34	6211-759-001-00	GASKET/OILFILLER	*	1 155706-					

FIG. 8 BEARING/UNDER SIZE (OPTION)

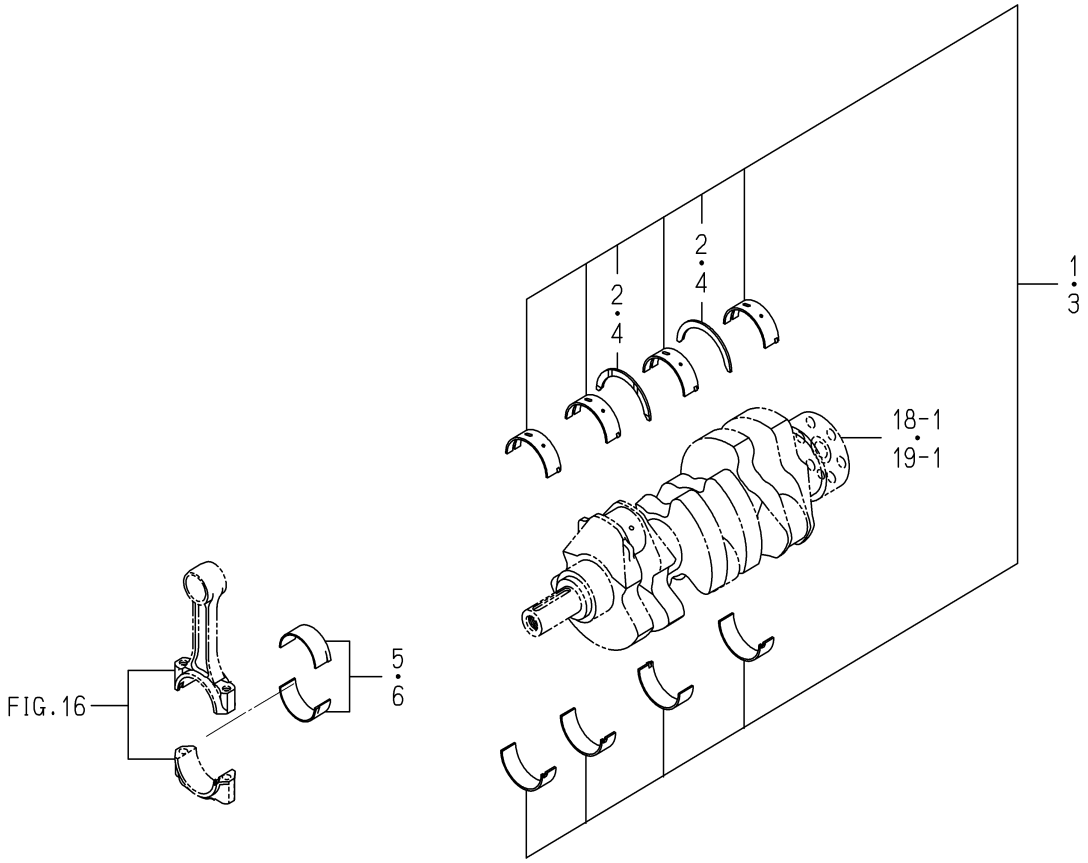

6005-209 -0100

KEY	PART CODE	DESCRIPTION	SPC	TYPE OF MODEL E3CD VB40		ITC	COL	GRP	REMARKS
1	6211-530-008-00	BEARING/CRANK/UNDER	T	1					
2	6211-599-004-00	BEARING/THRUST/CRANK	T	2					
3	6211-540-008-00	BEARING/CRANK/UNDER	T	1					
4	6211-599-004-00	BEARING/THRUST/CRANK	T	2					
5	6212-273-009-00	BEARING/CONNECTING R	T	3					
6	6212-274-009-00	BEARING/CONNECTING R	T	3					

FIG. 9 OIL PAN

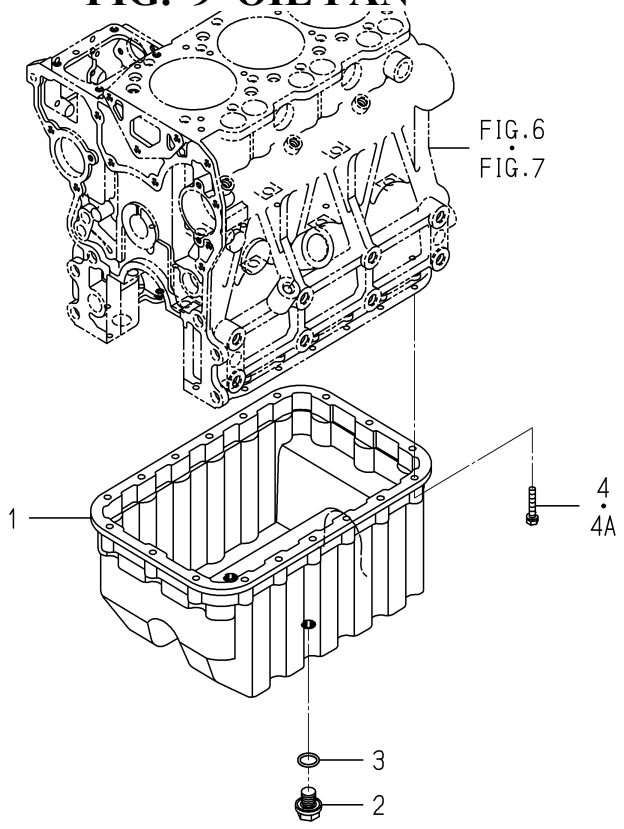

6005-210D-0100

KEY	PART CODE	DESCRIPTION	SPC	TYPE OF MODEL E3CD VB40		ITC	COL	GRP	REMARKS
1	6211-361-038-10	OILPAN	*	1					
2	3805-355-002-20	PLUG/M14X1.5	*	2					
3	V720-102-401-80	O-RING/P18	*	2					
4	6901-910-635-00	BOLT	*	18 -173475					
4A	V210-560-603-50	BOLT/S	*	18 173476-					

FIG. 10 REAR PLATE

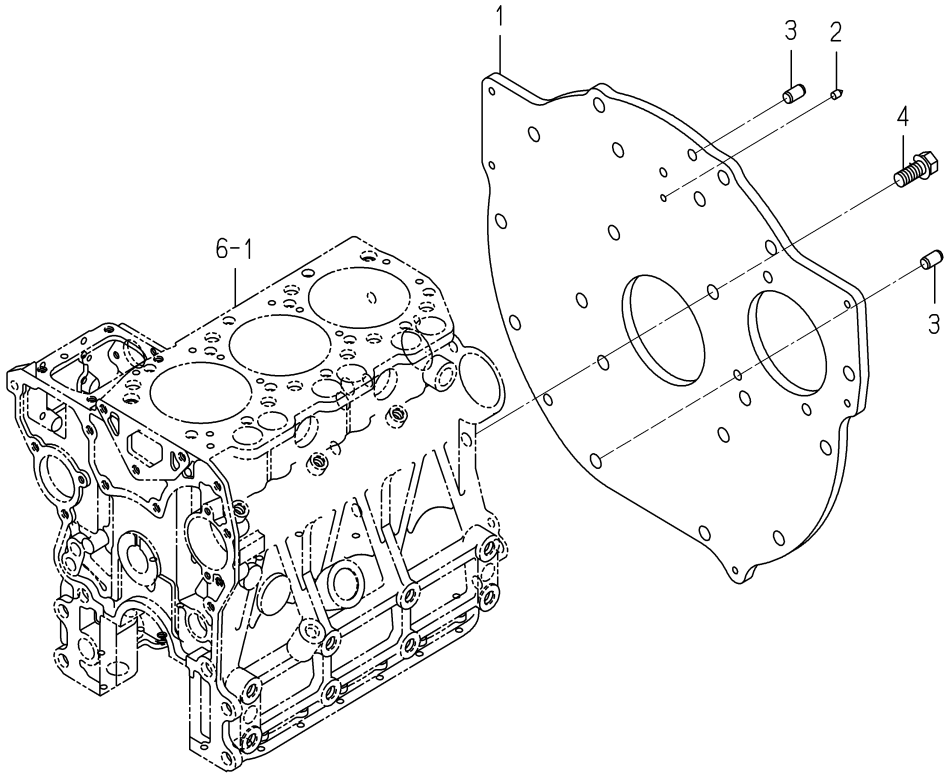

6005-220N-0100

KEY	PART CODE	DESCRIPTION	SPC	TYPE OF MODEL E3CD VB40		ITC	COL	GRP	REMARKS
1	6211-341-073-00	PLATE/REAR	*	1					
2	6211-342-003-10	POINTER	*	1					
3	V523-101-001-80	PIN	*	2					
4	6209-030-091-00	BOLT/WS	*	8					

FIG. 11 TIMING GEAR CASE

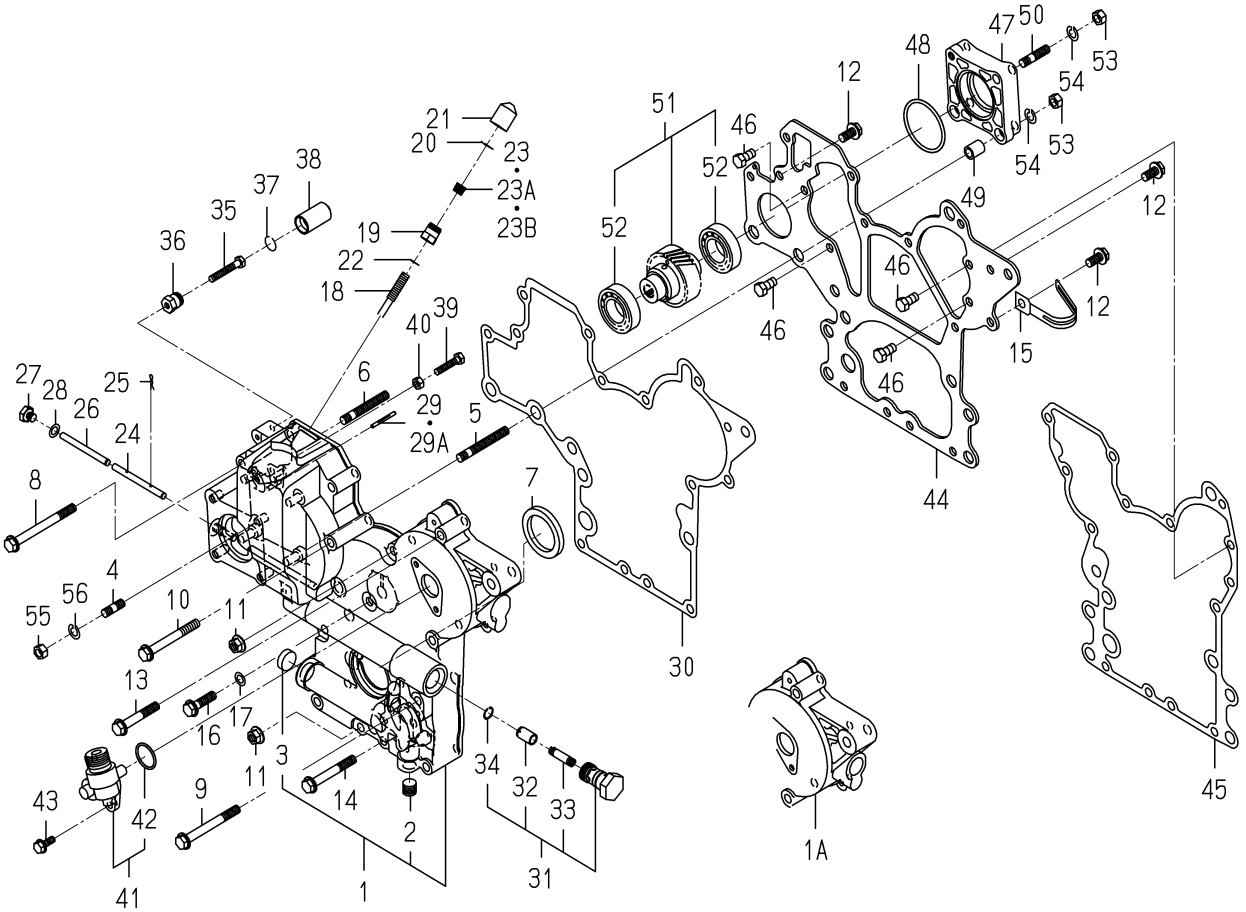

6005-241A-0100,6005-241A-0200

KEY	PART CODE	DESCRIPTION	SPC	TYPE OF MODEL E3CD VB40		ITC	COL	GRP	REMARKS
1	6211-310-009-70	GEARCASE ASSY	*	1 -192032					
1A	6211-310-009-80	GEARCASE ASSY	*	1 192033-		1			
2	6209-605-003-10	PLUG/PT1/4	*	1 180964-					
3	6209-610-004-00	CUP/SEALING/20	*	1 180964-					
4	6904-110-822-00	STUD	*	4 180964-					
5	6904-110-855-00	STUD	*	2 180964-					
6	6904-110-850-00	STUD	*	1 180964-					
7	6209-625-002-00	SEAL,OIL	*	1 180964-					
8	V231-360-808-50	FLANGEBOLT	*	1 180964-					
9	V231-360-807-50	FLANGEBOLT	*	1 180964-					
10	V231-360-807-00	FLANGEBOLT	*	1 180964-					
11	3817-401-001-00	NUT/M08	*	2 180964-					
12	V231-360-801-60	FLANGEBOLT	*	3 180964-					
13	V231-360-805-00	FLANGEBOLT	*	3 180964-					
14	V231-360-806-00	FLANGEBOLT	*	4 180964-					
15	1650-650-015-00	CLAMP	*	1 180964-					
16	V231-360-803-00	FLANGEBOLT	*	1 180964-					
17	6209-500-003-00	WASHER/08X14X01	*	1 180964-					
18	6215-546-006-00	STOPPER/MAX POWER ST	*	1 180964-					
19	6215-549-057-00	NUT/MAXPOWERSTOPPER	*	1 180964-					
20	6209-587-006-10	RING/TAMPER REGISTAN	*	1 180964-					
21	6215-549-058-10	CAP/MAXPOWERSTOPPER	*	1 180964-					
22	6209-920-002-00	PACKING	*	1 180964-					
23	6509-605-019-10	PLUG	*	1 -183779					
23A	6209-605-007-00	PLUG/PT1/8	*	1 -183847					
23B	V780-140-000-2B	PLUG/SCREW/SEAL	*	1 183848-					
24	6215-542-004-20	PIN/ARM	*	1 180964-					
25	P117-303-003-00	PIN/SNAP	*	2 180964-					
26	6215-542-005-10	PIN	*	1 180964-					
27	6209-600-004-00	PLUG/SCREW	*	1 180964-					

FIG. 11 TIMING GEAR CASE

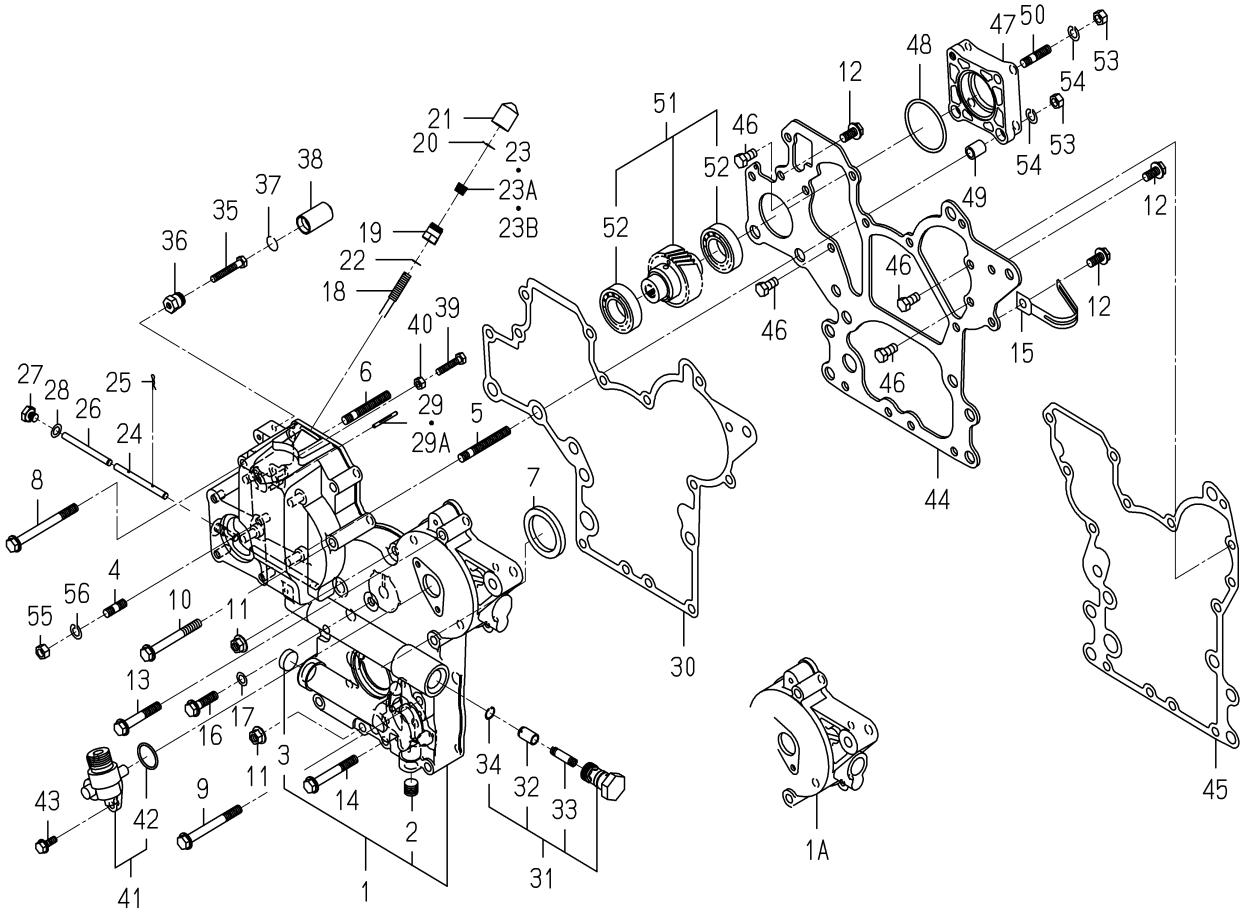

6005-241A-0100,6005-241A-0200

KEY	PART CODE	DESCRIPTION	SPC	TYPE OF MODEL E3CD VB40		ITC	COL	GRP	REMARKS
28	6209-500-003-00	WASHER/08X14X01	*	1 180964-					
29	6209-740-001-00	PIN,GROOVE	*	1 -181036					
29A	6209-740-006-00	PIN/GROOVE	*	1 181037-					
30	6211-312-005-10	GASKET/GEARCASE	*	1 180964-					
31	6213-160-005-00	VALVE/RELIEF ASSY	*	1 180964-					
32	6213-161-003-10	PISTON/VALVE/RELIEF	*	1 180964-					
33	6213-164-001-00	SPRING/RELIEF VALVE	*	1 180964-					
34	V705-140-012-00	RING,SNAP/12 C	*	1 180964-					
35	6209-050-003-00	BOLT/HI-IDLESTOPPER	*	1 180964-					
36	6215-549-059-00	NUT/HI-IDLESTOPPER	*	1 180964-					
37	6209-587-006-10	RING/TAMPER REGISTAN	*	1 180964-					
38	6215-549-060-10	CAP/MAXPOWERSTOPPER	*	1 180964-					
39	6209-050-002-00	BOLT/M6	*	1 180964-					
40	V301-260-006-00	NUT/M6	*	1 180964-					
41	6219-310-003-20	DRIVE/TACHOMETE ASSY	*	1 180964-					
42	V723-102-002-40	RING/O	*	1 180964-					
43	V230-360-601-60	FLANGEBOLT	*	2 180964-					
44	6211-311-013-20	PLATE/FRONT	*	1 180964-					
45	6211-312-006-10	GASKET/PLATE	*	1 180964-					
46	6902-050-816-00	BOLT	*	4 180964-					
47	6211-319-003-00	SPACER	*	1 180964-					
48	V723-102-005-00	O-RING 1A S50	*	1 180964-					
49	6209-749-001-20	PIN/TUBE	*	2 180964-					
50	6904-110-822-00	STUD	*	1 180964-					
51	6212-530-017-00	SHAFT/HYDRAULIC ASSY	*	1 180964-					
52	6209-800-011-00	BEARING	*	2 180964-					
53	V304-260-008-00	NUT	*	4 180964-					
54	V401-160-008-00	WASHER,SP/M 8	*	4 180964-					
55	V304-260-008-00	NUT	*	4 180964-					
56	V401-160-008-00	WASHER,SP/M 8	*	4 180964-					

FIG. 12 TIMING GEAR CASE

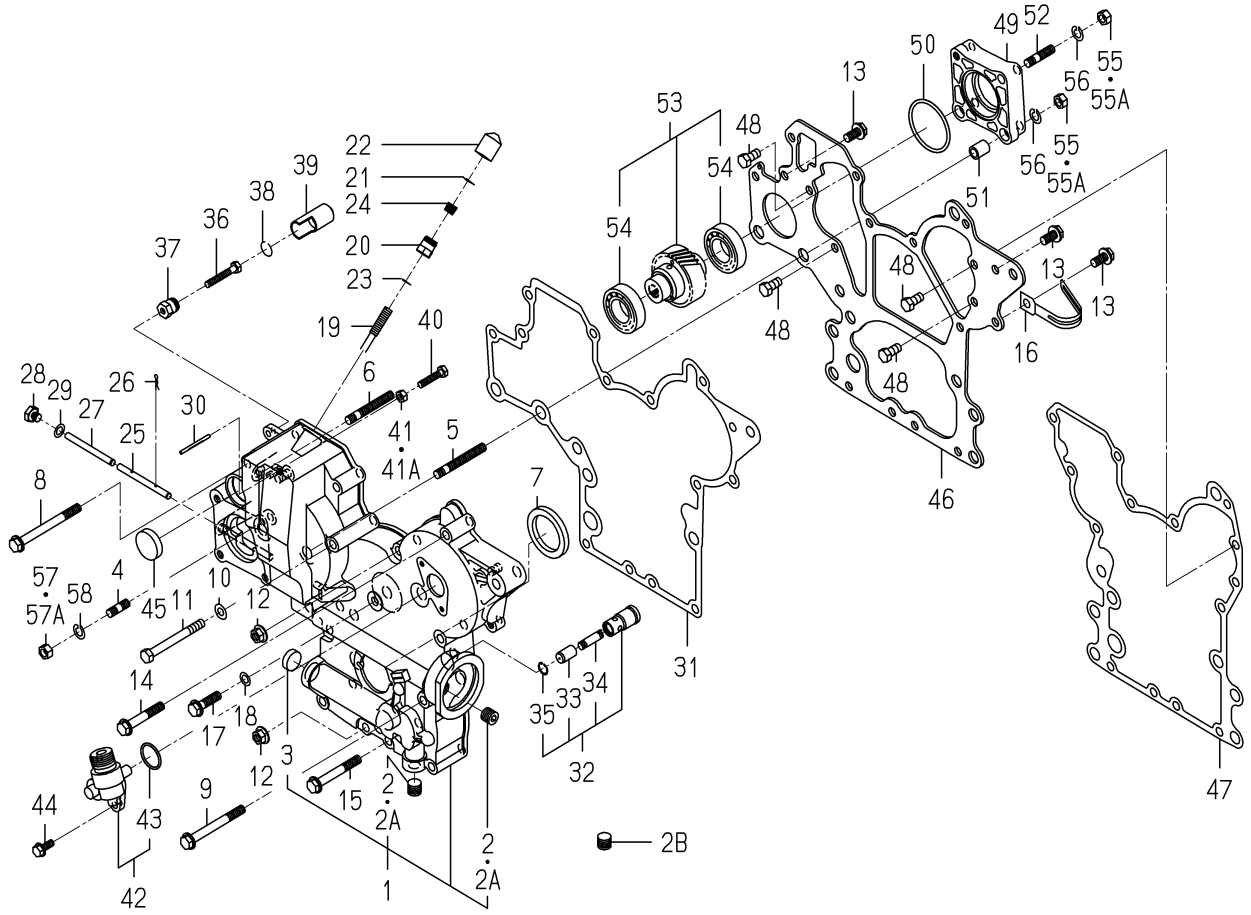

6005-241B-0100,6005-241B-0200

KEY	PART CODE	DESCRIPTION	SPC	TYPE OF MODEL E3CD VB40		ITC	COL	GRP	REMARKS
1	6211-310-009-60	GEARCASE ASSY	*	1 -180963					
2	6209-605-003-00	PLUG/PT1/4	*	2 -160372					
2A	6209-605-003-10	PLUG/PT1/4	*	2 -180963		1			
2B	6209-605-003-10	PLUG/PT1/4	*	1 180964-					
3	6209-610-004-00	CUP/SEALING/20	*	1 -180963					
4	6904-110-822-00	STUD	*	4 -180963					
5	6904-110-855-00	STUD	*	2 -180963					
6	6904-110-850-00	STUD	*	1 -180963					
7	6209-625-002-00	SEAL,OIL	*	1 -180963					
8	V231-360-808-50	FLANGEBOLT	*	1 -180963					
9	V231-360-807-50	FLANGEBOLT	*	1 -180963					
10	6209-500-006-00	WASHER/08X16X1.2	*	1 -180963					
11	V201-360-807-50	BOLT	*	1 -180963					
12	3817-401-001-00	NUT/M08	*	2 -180963					
13	V231-360-801-60	FLANGEBOLT	*	3 -180963					
14	V231-360-805-00	FLANGEBOLT	*	3 -180963					
15	V231-360-806-00	FLANGEBOLT	*	4 -180963					
16	1650-650-015-00	CLAMP	*	1 -180963					
17	V231-360-803-00	FLANGEBOLT	*	1 -180963					
18	6209-500-003-00	WASHER/08X14X01	*	1 -180963					
19	6215-546-006-00	STOPPER/MAX POWER ST	*	1 -180963					
20	6215-549-057-00	NUT/MAXPOWERSTOPPER	*	1 -180963					
21	6209-587-006-10	RING/TAMPER REGISTAN	*	1 -180963					
22	6215-549-058-10	CAP/MAXPOWERSTOPPER	*	1 -180963					
23	6209-920-002-00	PACKING	*	1 -180963					
24	6509-605-019-10	PLUG	*	1 -180963					
25	6215-542-004-20	PIN/ARM	*	1 -180963					
26	P117-303-003-00	PIN/SNAP	*	2 -180963					
27	6215-542-005-10	PIN	*	1 -180963					
28	6209-600-004-00	PLUG/SCREW	*	1 -180963					

FIG. 12 TIMING GEAR CASE

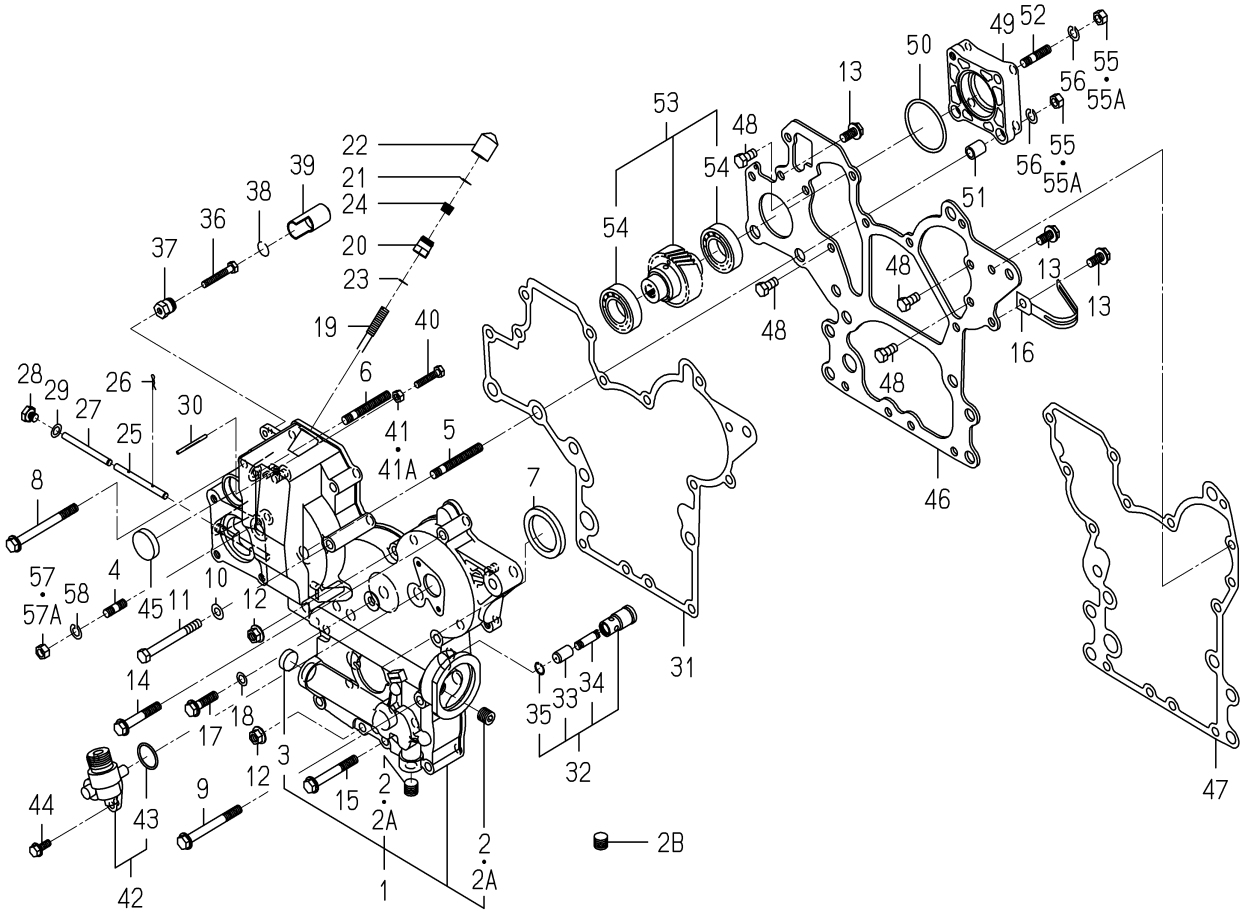

6005-241B-0100,6005-241B-0200

KEY	PART CODE	DESCRIPTION	SPC	TYPE OF MODEL E3CD VB40		ITC	COL	GRP	REMARKS
29	6209-500-003-00	WASHER/08X14X01	*	1 -180963					
30	6209-740-001-00	PIN,GROOVE	*	1 -180963					
31	6211-312-005-10	GASKET/GEARCASE	*	1 -180963					
32	6213-160-003-10	VALVE/RELIEF ASSY	*	1 -180963					
33	6213-161-003-10	PISTON/VALVE/RELIEF	*	1 -180963					
34	6213-164-001-00	SPRING/RELIEF VALVE	*	1 -180963					
35	V705-140-012-00	RING,SNAP/12 C	*	1 -180963					
36	6209-050-003-00	BOLT/HI-IDLESTOPPER	*	1 -180963					
37	6215-549-059-00	NUT/HI-IDLESTOPPER	*	1 -180963					
38	6209-587-006-10	RING/TAMPER REGISTAN	*	1 -180963					
39	6215-549-068-10	CAP/HI-IDLESTOPPER	*	1 -180963					
40	6209-050-002-00	BOLT/M6	*	1 -180963					
41	6909-110-406-00	NUT	*	1 -178996					
41A	V301-260-006-00	NUT/M6	*	1 -180963					
42	6219-310-003-20	DRIVE/TACHOMETE ASSY	*	1 -180963					
43	V723-102-002-40	RING/O	*	1 -180963					
44	V230-360-601-60	FLANGEBOLT	*	2 -180963					
45	3625-540-004-00	CAP,BLANK/30	*	1 -180963					
46	6211-311-013-20	PLATE/FRONT	*	1 -180963					
47	6211-312-006-10	GASKET/PLATE	*	1 -180963					
48	6902-050-816-00	BOLT	*	4 -180963					
49	6211-319-003-00	SPACER	*	1 -180963					
50	V723-102-005-00	O-RING 1A S50	*	1 -180963					
51	6209-749-001-20	PIN/TUBE	*	2 -180963					
52	6904-110-822-00	STUD	*	1 -180963					
53	6212-530-017-00	SHAFT/HYDRAULIC ASSY	*	1 -180963					
54	6209-800-011-00	BEARING	*	2 -180963					
55	6909-110-408-00	NUT/M8	*	4 -178996					
55A	V304-260-008-00	NUT	*	4 -180963					
56	V401-160-008-00	WASHER,SP/M 8	*	4 -180963					

FIG. 12 TIMING GEAR CASE

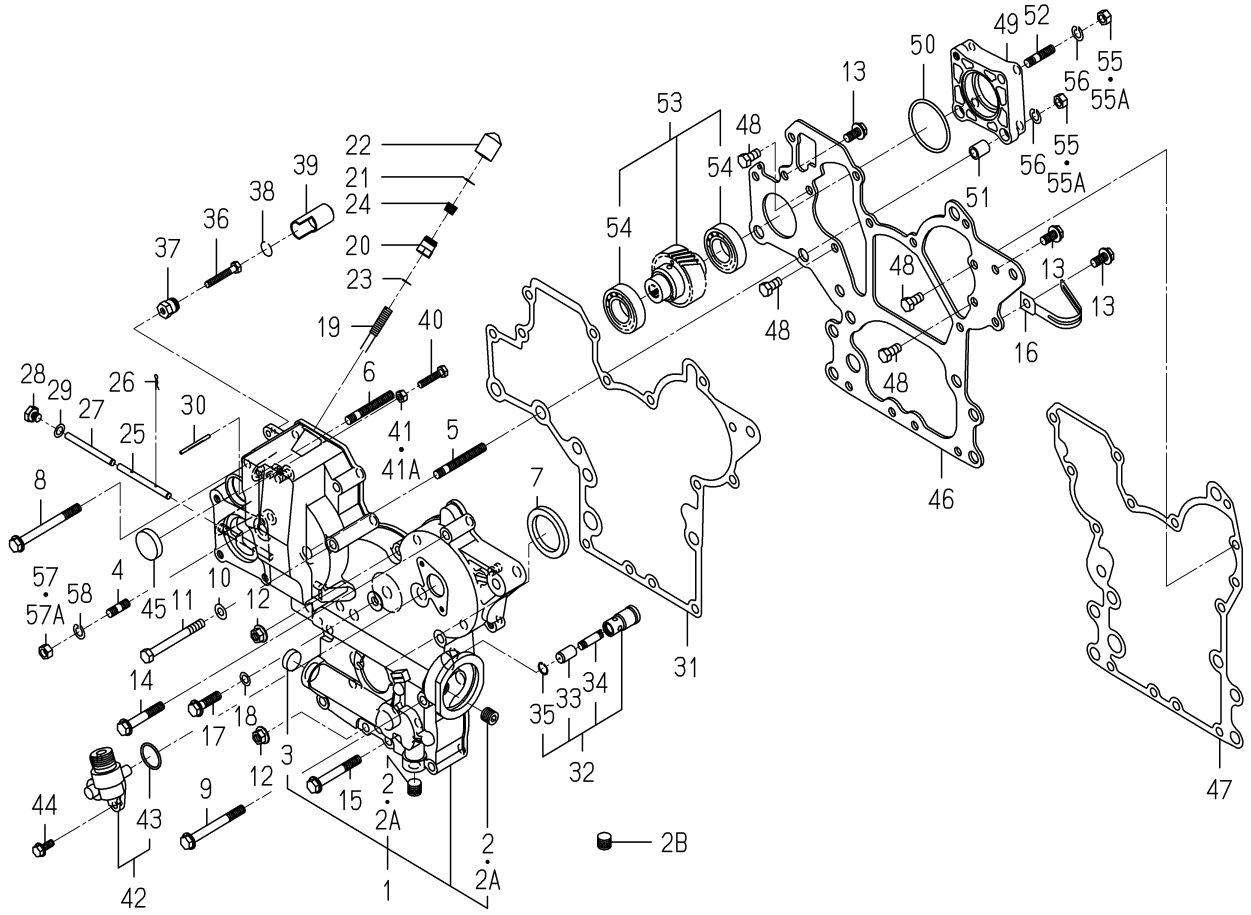

6005-241B-0100,6005-241B-0200

KEY	PART CODE	DESCRIPTION	SPC	TYPE OF MODEL E3CD VB40		ITC	COL	GRP	REMARKS
57	6909-110-408-00	NUT/M8	*	4 -178996					
57A	V304-260-008-00	NUT	*	4 -180963					
58	V401-160-008-00	WASHER,SP/M 8	*	4 -180963					

FIG. 13 HANGER

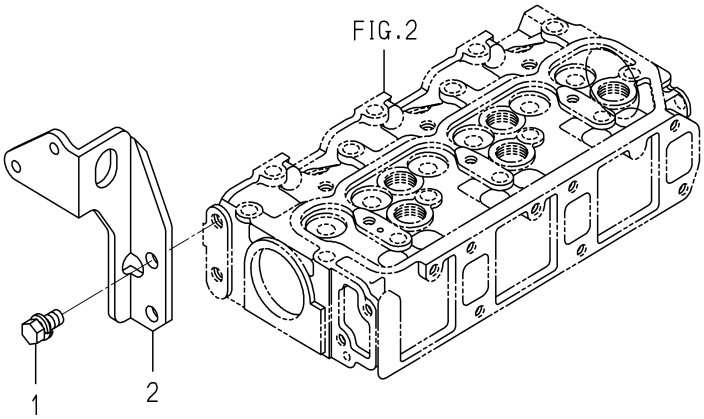

6005-290D-0100

KEY	PART CODE	DESCRIPTION	SPC	TYPE OF MODEL E3CD VB40		ITC	COL	GRP	REMARKS
1	6901-911-020-00	BOLT,SEMS/M10X20	*	2					
2	6211-777-021-00	HANGER/F	*	1					

FIG. 14 VALVE

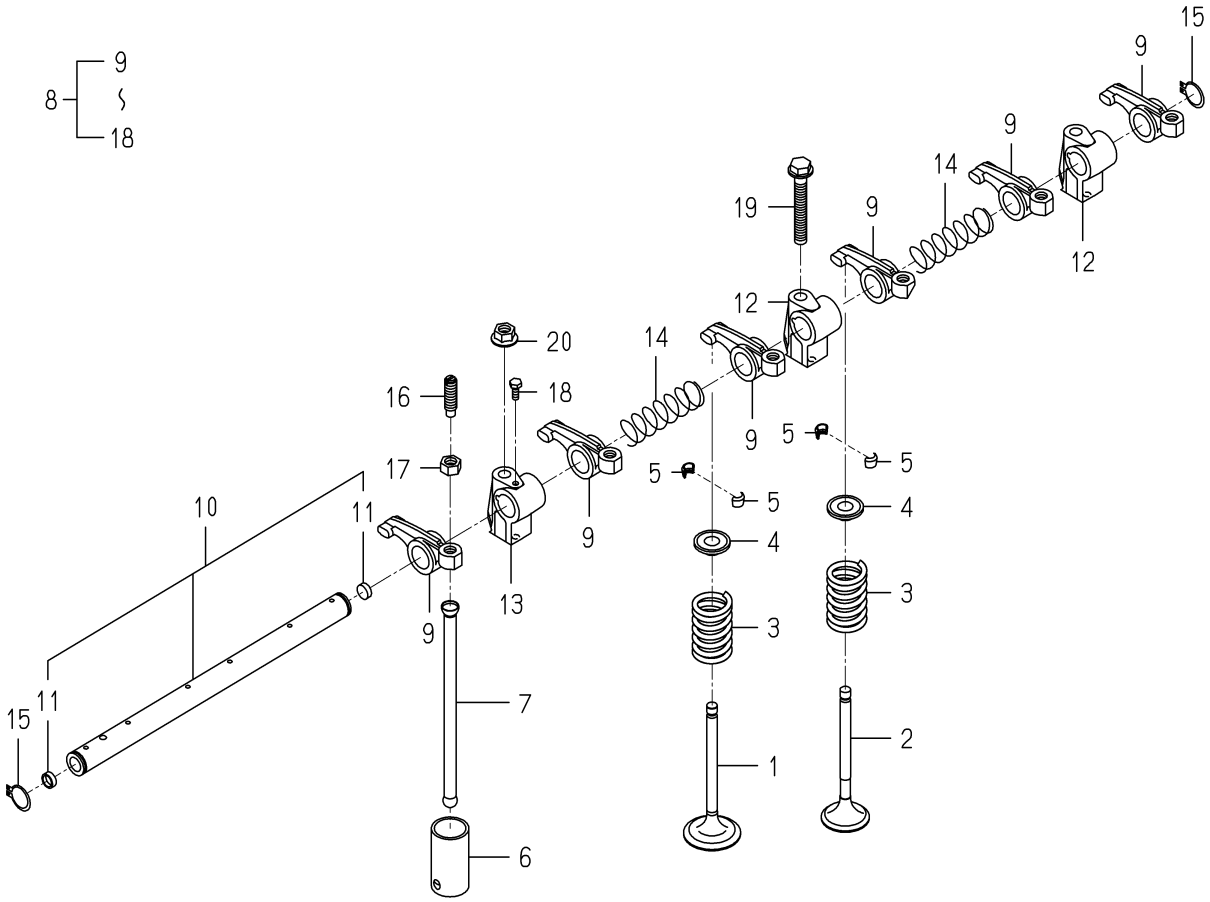

6005-301B-0100

KEY	PART CODE	DESCRIPTION	SPC	TYPE OF MODEL E3CD VB40		ITC	COL	GRP	REMARKS
1	6212-551-020-10	VALVE/INTAKE	*	3					
2	6212-552-008-00	VALVE/EXHAUST	*	3					
3	6212-561-003-00	SPRING/VALVE	*	6					
4	6212-563-001-00	SEAT,VALVE SPRING	*	6					
5	6212-565-001-00	CUTTER,VALVE	*	12					
6	6212-571-002-30	TAPPET	*	6					
7	6212-575-003-00	PUSHROD	*	6					
8	6212-600-009-20	ROCKERSHAFT ASSY	*	1					
9	6212-611-004-10	ROCKERARM	*	6					
10	6212-620-008-20	SHAFT/ROCKERARM ASSY	*	1					
11	6212-626-002-10	PLUG	*	2					
12	6212-628-010-10	BRACKET/ROCKERSHAFT	*	2					
13	6212-628-011-10	BRACKET/ROCKERSHAFT	*	1					
14	6209-940-004-00	SPRING	*	2					
15	V704-140-016-00	RING,SNAP/16 C	*	2					
16	6212-616-002-00	SCREW ADJUST	*	6					
17	6209-409-003-00	NUT	*	6					
18	6209-000-002-00	BOLT	*	1					
19	V231-360-805-50	FLANGEBOLT	*	1					
20	3817-401-001-00	NUT/M08	*	2					

FIG. 15 CAM SHAFT

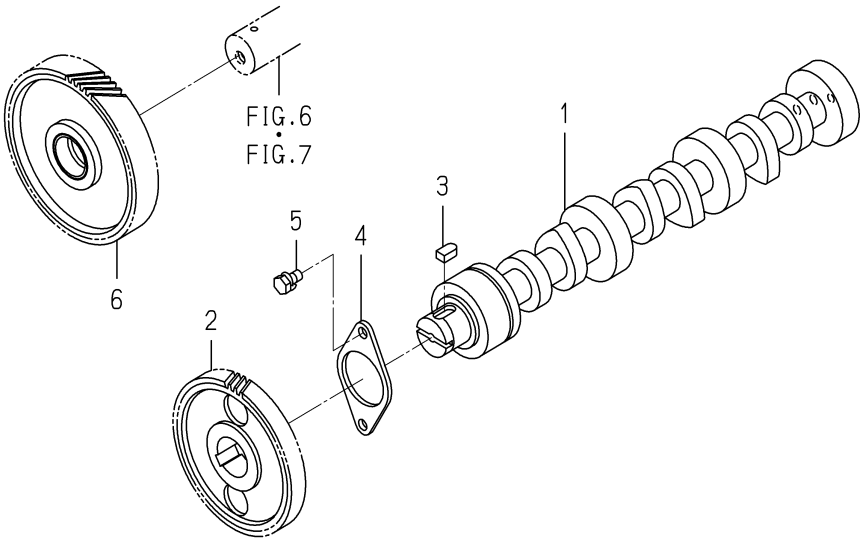

6005-310A-0100

KEY	PART CODE	DESCRIPTION	SPC	TYPE OF MODEL E3CD VB40		ITC	COL	GRP	REMARKS
1	6212-511-005-00	CAMSHAFT	*	1					
2	6212-522-004-10	GEAR/CAMSHAFT	*	1					
3	6209-730-005-00	KEY/07X05X09	*	1					
4	6212-535-007-00	PLATE/THRUST	*	1					
5	6901-910-612-00	BOLT,SEMS/M6X12	*	2					
6	6212-523-021-00	GEAR/IDLE ASSY	*	1					

FIG. 16 PISTON

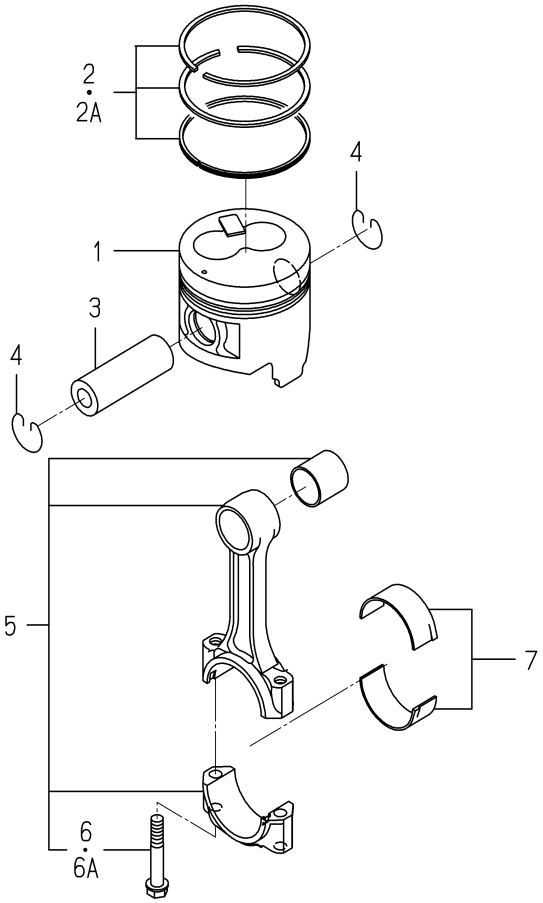

6005-340P-0100

KEY	PART CODE	DESCRIPTION	SPC	TYPE OF MODEL E3CD VB40		ITC	COL	GRP	REMARKS
1	6212-111-095-30	PISTON	*	3					
2	6212-121-028-00	RING/PISTONSET	*	3 -193231					
2A	6212-121-028-10	RING/PISTONSET	*	3 193232-		1			
3	6212-211-002-00	PIN/PISTON	*	3					
4	6909-950-115-00	RING SNAP	*	6					
5	6212-230-011-30	CONNECTINGROD ASSY	*	3					
6	6212-235-004-00	BOLT/CONNECTINGROD	*	6 -150480					
6A	6212-235-004-10	BOLT/CONNECTINGROD	*	6 150481-		1			
7	6212-271-009-00	BEARING/CONNECTING R	*	3					

FIG. 17 PISTON/OVER SIZE (OPTION)

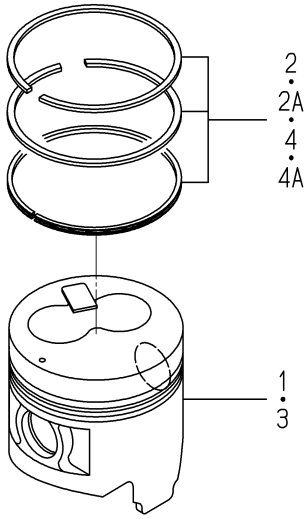

6005-349P-0100

KEY	PART CODE	DESCRIPTION	SPC	TYPE OF MODEL E3CD VB40		ITC	COL	GRP	REMARKS
1	6212-114-095-30	PISTON/OV	T	3					
2	6212-124-028-00	RING/PISTON/OVSET	T	3 -193231					
2A	6212-124-028-10	RING/PISTON/OVSET	T	3 193232-		1			
3	6212-116-095-30	PISTON/OV	T	3					
4	6212-126-028-00	RING/PISTON/OVSET	T	3 -193231					
4A	6212-126-028-10	RING/PISTON/OVSET	T	3 193232-		1			

FIG. 18 CRANK SHAFT

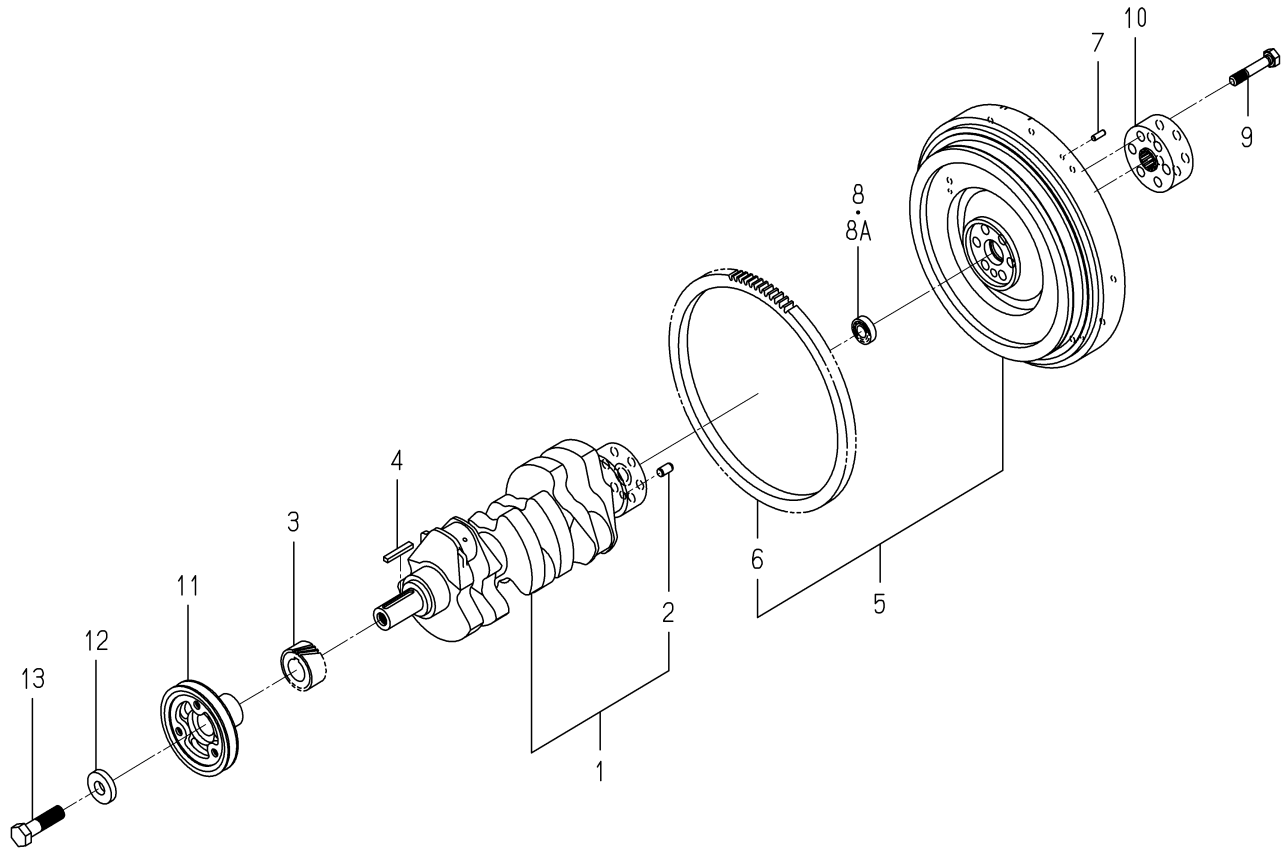

6005-351E-0100

KEY	PART CODE	DESCRIPTION	SPC	TYPE OF MODEL E3CD VB40		ITC	COL	GRP	REMARKS
1	6212-310-011-40	CRANKSHAFT ASSY	*	1 -174367					
2	V523-101-001-80	PIN	*	1 -174367					
3	6212-521-008-00	GEAR/CRANK	*	1 -174367					
4	6209-730-006-00	KEY/07X05X43	*	1 -174367					
5	6212-330-075-10	FLYWHEEL ASSY	*	1 -174367					
6	6212-333-002-00	RINGGEAR	*	1 -174367					
7	V523-100-601-80	PIN	*	3 -174367					
8	V600-150-600-20	BEARING,RB/6002SS	*	1 -155547					
8A	V600-350-600-20	BEARING/BALL	*	1 -174367					
9	6209-000-041-00	BOLT	*	6 -174367					
10	6212-339-009-10	BOSS/SPLINE	*	1 -174367					
11	6212-371-034-10	PULLEY/CRANK	*	1 -174367					
12	6212-379-001-00	WASHER	*	1 -174367					
13	6901-066-645-00	BOLT	*	1 -174367					

FIG. 19 CRANK SHAFT

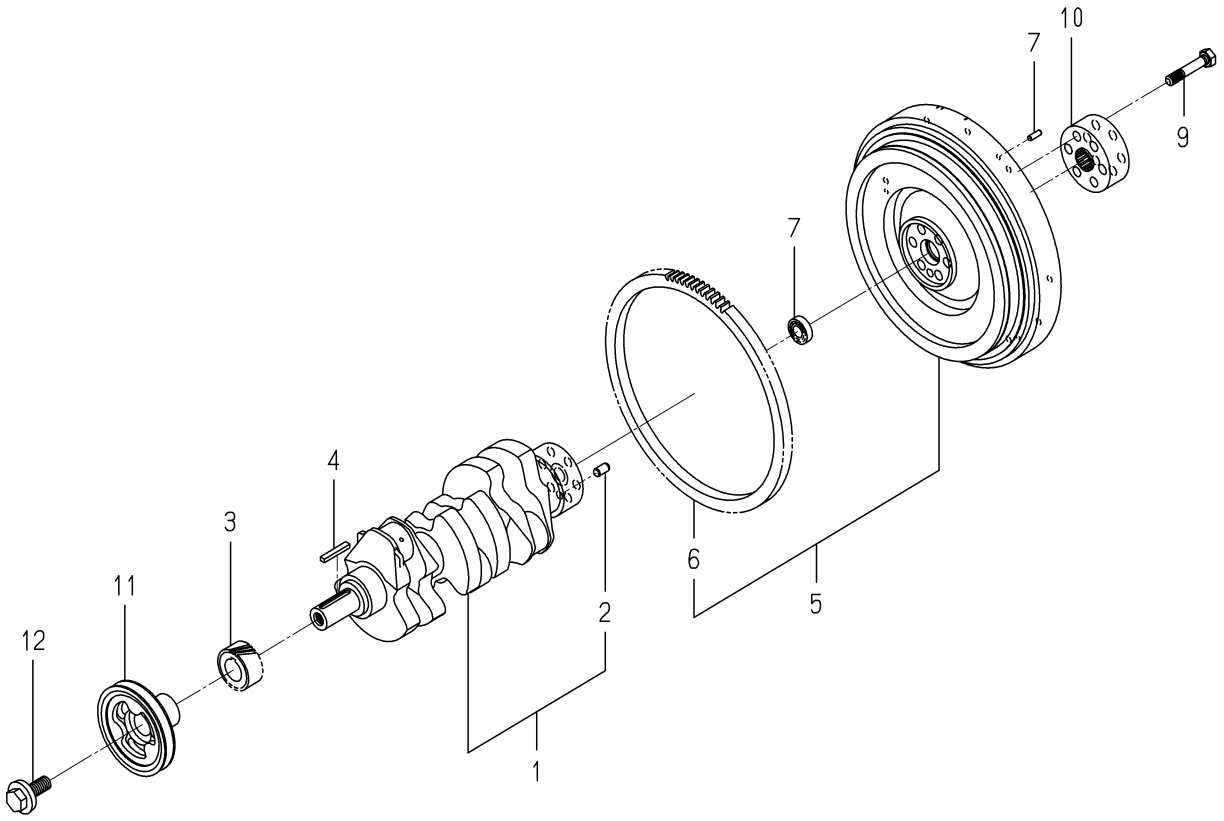

6005-351L-0100

KEY	PART CODE	DESCRIPTION	SPC	TYPE OF MODEL E3CD VB40		ITC	COL	GRP	REMARKS
1	6212-310-011-40	CRANKSHAFT ASSY	*	1 174368-					
2	V523-101-001-80	PIN	*	1 174368-					
3	6212-521-008-00	GEAR/CRANK	*	1 174368-					
4	6209-730-006-00	KEY/07X05X43	*	1 174368-					
5	6212-330-075-10	FLYWHEEL ASSY	*	1 174368-					
6	6212-333-002-00	RINGGEAR	*	1 174368-					
7	V523-100-601-80	PIN	*	3 174368-					
8	V600-350-600-20	BEARING/BALL	*	1 174368-					
9	6209-000-041-00	BOLT	*	6 174368-					
10	6212-339-009-10	BOSS/SPLINE	*	1 174368-					
11	6212-371-056-00	PULLEY/CRANK	*	1 174368-					
12	6209-000-043-00	BOLT/CRANK	*	1 174368-					

FIG. 20 OIL PUMP

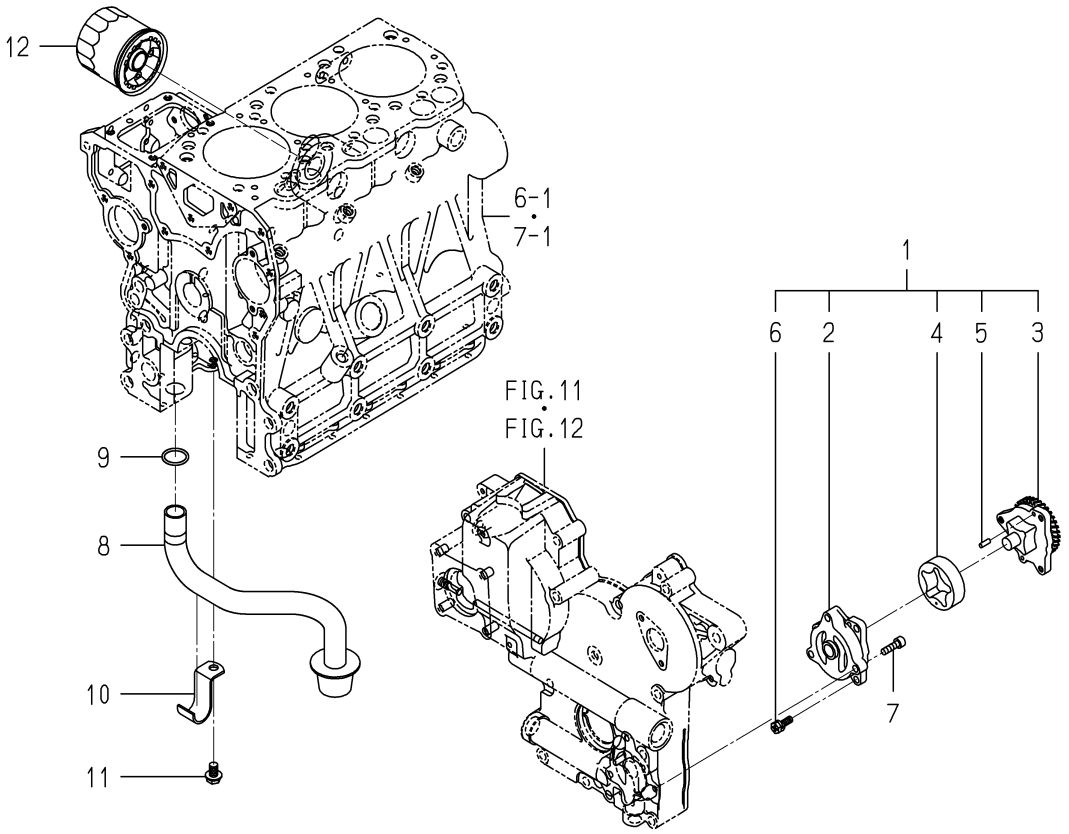

6005-401D-0100

KEY	PART CODE	DESCRIPTION	SPC	TYPE OF MODEL E3CD VB40		ITC	COL	GRP	REMARKS
1	6213-100-004-30	OILPUMP ASSY	*	1					
2	6213-111-002-20	BODY/OILPUMP	*	1					
3	6213-120-002-30	GEAR/OILPUMP ASSY	*	1					
4	6213-125-002-10	ROTOR/OUTER	*	1					
5	6213-129-003-00	PIN/STRAIGHT	*	2					
6	6213-119-001-00	BOLT/WS	*	3					
7	V220-540-602-00	SCREW/SOCKET	*	3					
8	6213-140-013-00	STRAINER	*	1					
9	V720-103-502-20	O-RING/P22	*	1					
10	6213-149-003-20	CLAMP/STRAINER	*	1					
11	V231-360-801-60	FLANGEBOLT	*	1					
12	6213-240-002-10	CARTRIDGE/OILFILTER	*	1					

FIG. 21 WATER PUMP

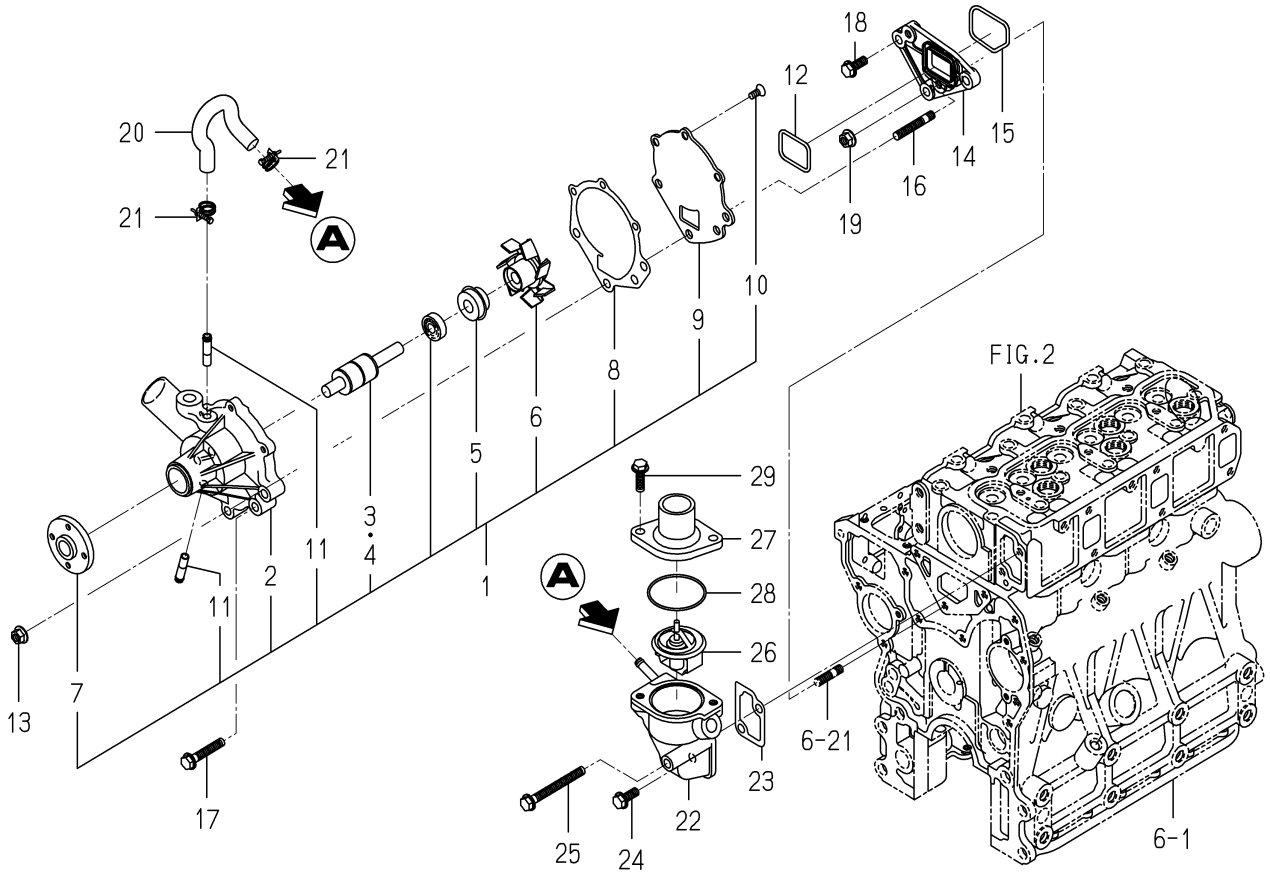

6005-420B-0100

KEY	PART CODE	DESCRIPTION	SPC	TYPE OF MODEL E3CD VB40		ITC	COL	GRP	REMARKS
1	6213-610-005-40	WATERPUMP ASSY	*	1 -138384					
2	6213-611-003-20	BODY/WATERPUMP	*	1 -138384					
3	6213-631-002-00	BEARING/WATER PUMP	*	1 -138384					
4	6213-631-005-00	BEARING/WATERPUMP	*	1 -138384					
5	6213-622-002-10	SEAL SET/WATER PUMP	*	1 -138384					
6	6213-621-003-00	ROTOR/WATERPUMP	*	1 -138384					
7	6213-642-002-00	SEAL/WATER PUMPPULLE	*	1 -138384					
8	6213-613-002-10	GASKET	*	1 -138384					
9	6213-612-004-00	PLATE/WATER PUMP	*	1 -138384					
10	6213-619-003-00	SCREW/WATER PUMP	*	3 -138384					
11	6213-619-002-00	PIPE/WATER PUMP	*	2 -138384					
12	V721-103-104-00	O-RING/G40	*	1 -138384					
13	3817-401-001-00	NUT/M08	*	2 -138384					
14	6213-619-006-00	SPACER/WATERPUMP	*	1 -138384					
15	V721-113-105-00	O-RING HS90 G50	*	1 -138384					
16	6904-110-840-00	STUD/M8X40	*	2 -138384					
17	V231-360-804-50	FLANGEBOLT	*	1 -138384					
18	V231-360-802-00	FLANGEBOLT	*	1 -138384					
19	3817-401-001-00	NUT/M08	*	1 -138384					
20	6213-729-013-10	HOSE/RUBBER	*	1 -138384					
21	J061-210-015-00	CLAMP/WIRE/10-15	*	2 -138384					
22	6213-716-001-50	HOUSING/THERMOSTAT	*	1 -138384					
23	6213-743-002-10	GASKET/HOUSING	*	1 -138384					
24	V231-360-802-00	FLANGEBOLT	*	1 -138384					
25	V231-360-807-50	FLANGEBOLT	*	1 -138384					
26	6513-770-022-10	THERMOSTAT	*	1 -138384					
27	6213-711-003-20	PIPE,WATER OUTLET	*	1 -138384					
28	V723-102-005-50	O-RING	*	1 -138384					
29	V231-360-802-50	FLANGEBOLT	*	2 -138384					

FIG. 22 WATER PUMP

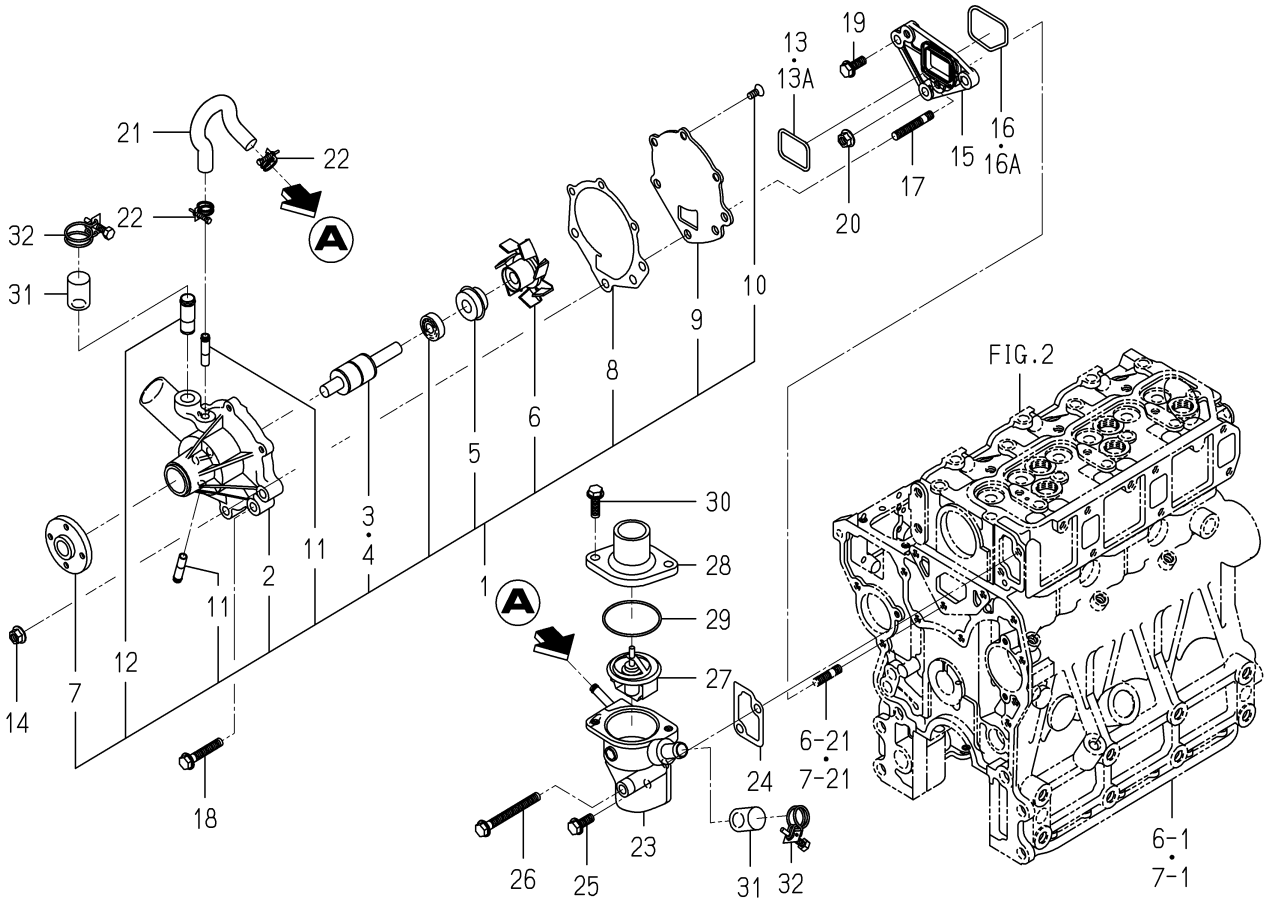

6005-420F-0100

KEY	PART CODE	DESCRIPTION	SPC	TYPE OF MODEL E3CD VB40		ITC	COL	GRP	REMARKS
1	6213-610-011-10	WATERPUMP ASSY	*	1 138385-					
2	6213-611-006-00	BODY/WATERPUMP	*	1 138385-					
3	6213-631-002-00	BEARING/WATER PUMP	*	1 138385-					
4	6213-631-005-00	BEARING/WATERPUMP	*	1 138385-					
5	6213-622-002-10	SEAL SET/WATER PUMP	*	1 138385-					
6	6213-621-003-00	ROTOR/WATERPUMP	*	1 138385-					
7	6213-642-002-00	SEAL/WATER PUMPPULLE	*	1 138385-					
8	6213-613-002-10	GASKET	*	1 138385-					
9	6213-612-004-00	PLATE/WATER PUMP	*	1 138385-					
10	6213-619-003-00	SCREW/WATER PUMP	*	3 138385-					
11	6213-619-002-00	PIPE/WATER PUMP	*	2 138385-					
12	6213-619-009-00	PIPE/WATERPUMP	*	1 138385-					
13	V721-103-104-00	O-RING/G40	*	1 -149415					
13A	6213-614-013-00	GASKET/WATERPUMP	*	1 149416-					
14	3817-401-001-00	NUT/M08	*	2 138385-					
15	6213-619-006-00	SPACER/WATERPUMP	*	1 138385-					
16	V721-113-105-00	O-RING HS90 G50	*	1 -149415					
16A	6213-614-014-00	GASKET/SPACER	*	1 149416-					
17	6904-110-840-00	STUD/M8X40	*	2 138385-					
18	V231-360-804-50	FLANGEBOLT	*	1 138385-					
19	V231-360-802-00	FLANGEBOLT	*	1 138385-					
20	3817-401-001-00	NUT/M08	*	1 138385-					
21	6213-729-013-10	HOSE/RUBBER	*	1 138385-					
22	J061-210-015-00	CLAMP/WIRE/10-15	*	2 138385-					
23	6213-716-004-10	HOUSING/THERMOSTAT	*	1 138385-					
24	6213-743-002-10	GASKET/HOUSING	*	1 138385-					
25	V231-360-802-00	FLANGEBOLT	*	1 138385-					
26	V231-360-807-50	FLANGEBOLT	*	1 138385-					
27	6513-770-022-10	THERMOSTAT	*	1 138385-					
28	6213-711-003-20	PIPE,WATER OUTLET	*	1 138385-					

FIG. 22 WATER PUMP

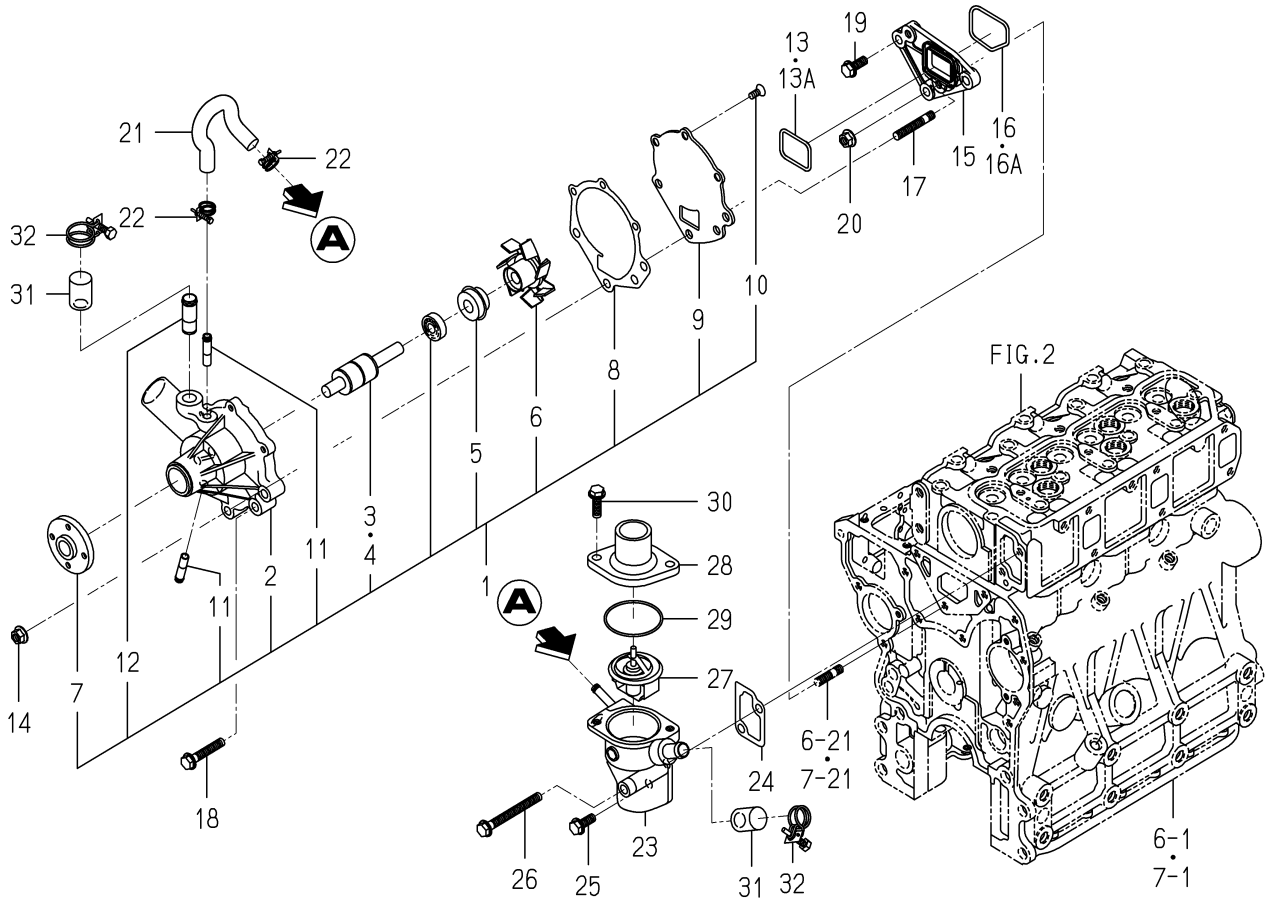

6005-420F-0100

KEY	PART CODE	DESCRIPTION	SPC	TYPE OF MODEL E3CD VB40		ITC	COL	GRP	REMARKS
29	V723-102-005-50	O-RING	*	1 138385-					
30	V231-360-802-50	FLANGEBOLT	*	2 138385-					
31	6213-729-011-00	CAP	*	2 138385-					
32	J061-220-024-00	CLAMP/WIRE/20-24	*	2 138385-					

FIG. 23 COOLING FAN

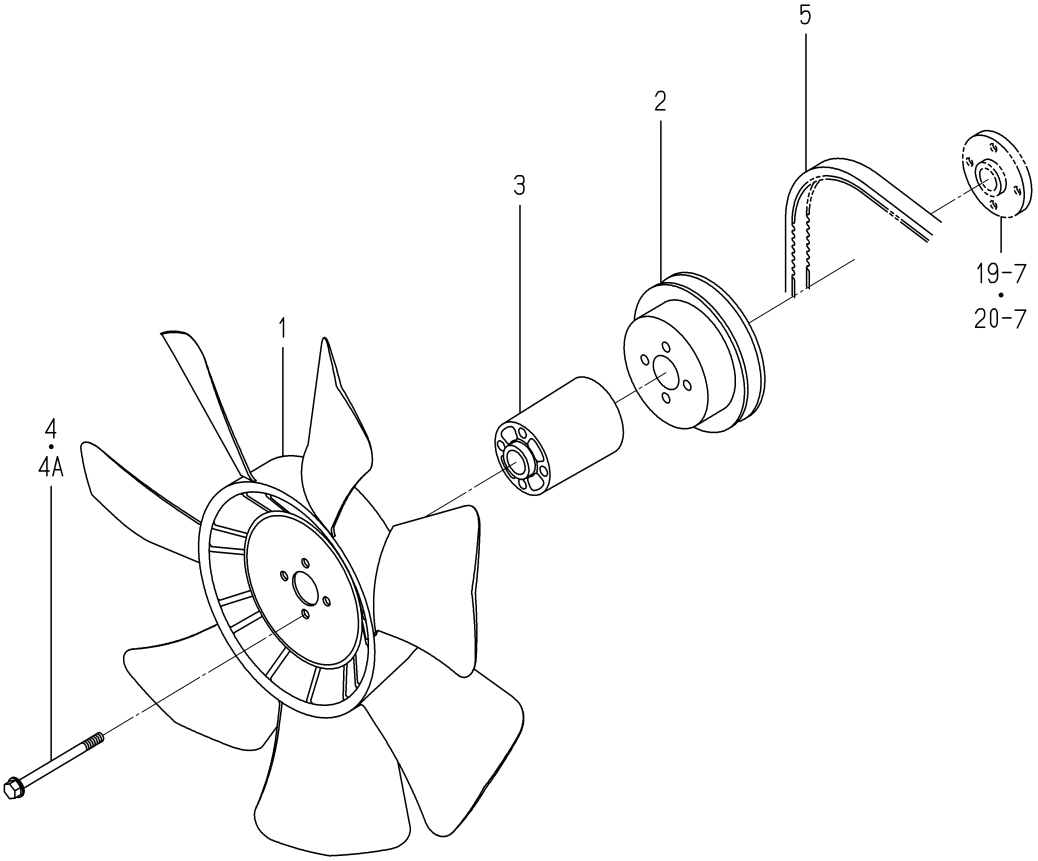

6005-480N-0100

KEY	PART CODE	DESCRIPTION	SPC	TYPE OF MODEL E3CD VB40		ITC	COL	GRP	REMARKS
1	6213-660-015-00	FAN/COOLING	*	1					
2	6213-641-022-10	PULLEY/WATERPUMP	*	1					
3	6213-669-009-00	SPACER/FAN/68	*	1					
4	6209-030-048-00	BOLT/WS	*	4 -194658					
4A	6209-046-007-00	BOLT/FLANGE	*	4 194659-					
5	6213-671-029-00	BELT/V R5 A38.5	*	1					

FIG. 24 INJECTION NOZZLE

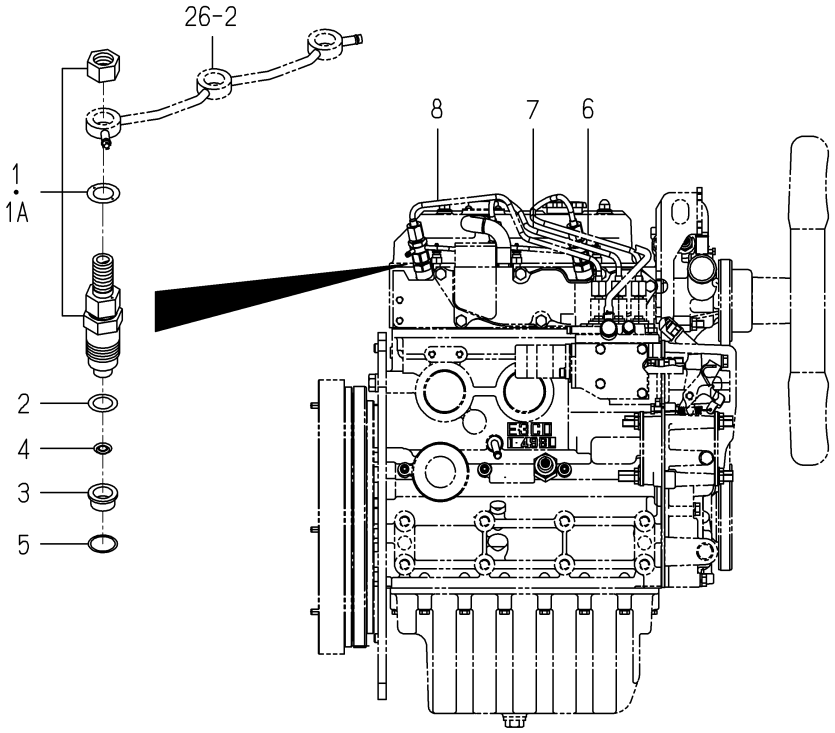

6005-501E-0100

KEY	PART CODE	DESCRIPTION	SPC	TYPE OF MODEL E3CD VB40		ITC	COL	GRP	REMARKS
1	6215-300-045-00	INJECTIONNOZZLE ASSY	*	3 -179743					FIG 033
1A	6215-300-045-10	INJECTIONNOZZLE ASSY	*	3 179744-		1			FIG 033
2	6215-315-002-00	GASKET,NOZZLE	*	3					
3	6215-315-006-00	HEATSHILD/NOZZLE	*	3					
4	6215-315-005-00	WASHER/CORRUGATE	*	3					
5	6215-315-007-00	GASKET	*	3					
6	6215-411-133-00	PIPE/INJECTION ASSY	*	1					
7	6215-411-134-00	PIPE/INJECTION ASSY	*	1					
8	6215-411-135-00	PIPE/INJECTION ASSY	*	1					

FIG. 25 INJECTION PUMP

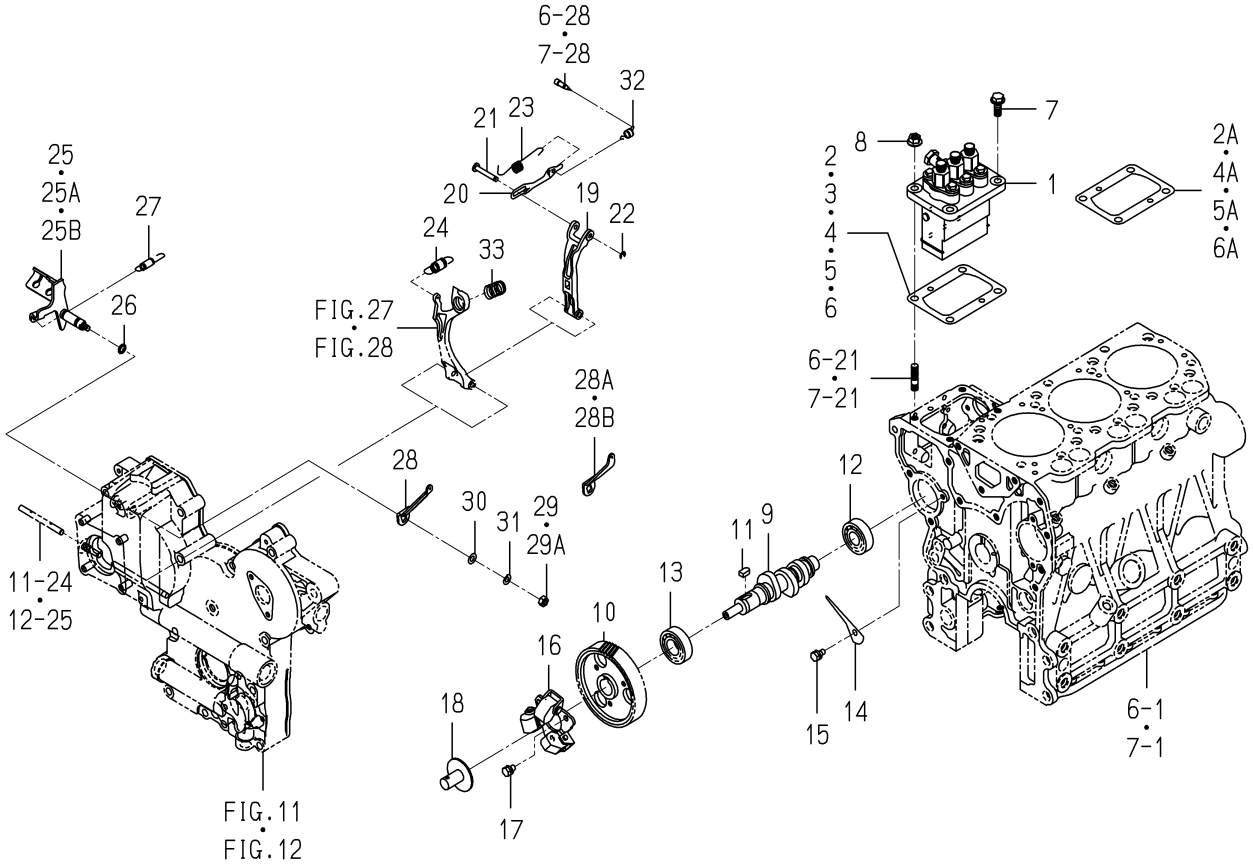

6005-511E-0100

KEY	PART CODE	DESCRIPTION	SPC	TYPE OF MODEL E3CD VB40		ITC	COL	GRP	REMARKS
1	6215-600-104-20	INJECTIONPUMP ASSY	*	1					FIG 034
2	6219-752-006-00	SHIM/INJECTION P/0.3	*	1 -143554					
2A	6219-752-045-00	SHIM/INJECTIONPUMP	*	1 143555-					
3	6219-752-007-00	SHIM/INJECTION P/0.1	*	1 -143554					
4	6219-752-008-00	SHIM/INJECTION P/0.2	*	1 -143554					
4A	6219-752-044-00	SHIM/INJECTIONPUMP	*	1 143555-					
5	6219-752-009-00	SHIM/INJECTION P/0.4	*	1 -143554					
5A	6219-752-046-00	SHIM/INJECTIONPUMP	*	1 143555-					
6	6219-752-010-00	SHIM/INJECTION P/0.5	*	1 -136378					
6A	6219-752-047-00	SHIM/INJECTIONPUMP	*	1 143555-					
7	V231-360-802-00	FLANGEBOLT	*	2					
8	3817-401-001-00	NUT/M08	*	2					
9	6215-621-017-10	CAMSHAFT/INJPUMP	*	1					
10	6212-524-012-30	GEAR/INJECTIONPUMP	*	1					
11	6209-730-005-00	KEY/07X05X09	*	1					
12	V600-110-620-30	BEARING,RB/6203	*	1					
13	6209-800-010-00	BEARING	*	1					
14	6212-535-009-00	PLATE/THRUST/INJPUMP	*	1					
15	6901-910-612-00	BOLT,SEMS/M6X12	*	1					
16	6215-520-007-10	FLYWEIGHT ASSY	*	1					
17	6209-030-043-00	BOLT/M6X10	*	3					
18	6215-526-004-00	THRUSTPIECE	*	1					
19	6215-541-001-10	ARM/FLOATING COMP	*	1					
20	6215-543-002-10	RINK/CONTROL	*	1					
21	6215-542-006-00	PIN,CONTROL	*	1					
22	V710-140-004-00	RING,SNAP/ 4 E	*	1					
23	6215-549-031-10	SPRING/SETTING	*	1					
24	6215-531-010-00	SPRING/GOVERNOR	*	1					
25	6215-541-024-30	LEVER/CONTROL COMP	*	1 -180963					
25A	6215-541-045-00	LEVER/CONTROL COMP	*	1 -191056					

FIG. 25 INJECTION PUMP

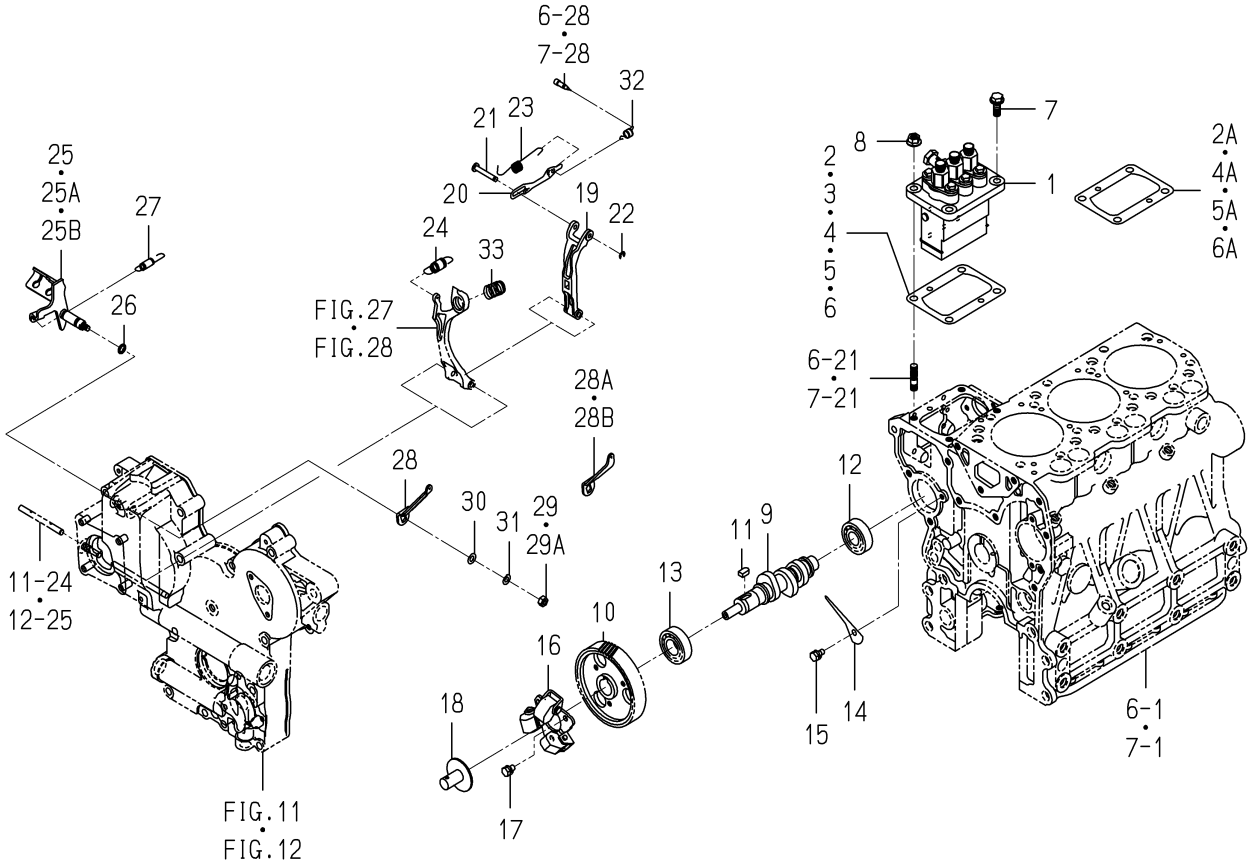

6005-511E-0100

KEY	PART CODE	DESCRIPTION	SPC	TYPE OF MODEL E3CD VB40		ITC	COL	GRP	REMARKS
25B	6215-541-045-10	LEVER/CONTROL COMP	*	1 191057-		3			
26	V720-101-900-80	O-RING/P 8	*	1					
27	6209-580-002-10	SPRING,RETURN	*	1					
28	6215-549-007-10	ARM/CONTROL	*	1 -180963					
28A	6215-549-076-00	ARM/CONTROL	*	1 -183522					
28B	6215-549-076-10	ARM/CONTROL	*	1 183523-		3			
29	6909-110-406-00	NUT	*	1 -178626					
29A	V301-260-006-00	NUT/M6	*	1 178627-					
30	V411-260-006-00	WASHER / M6	*	1					
31	V401-160-006-00	WASHER,SP/M 6	*	1					
32	6215-549-039-00	SPRING/STARTING	*	1					
33	6215-537-002-10	SPRING/IDLE	*	1					

FIG. 26 FUEL PIPE

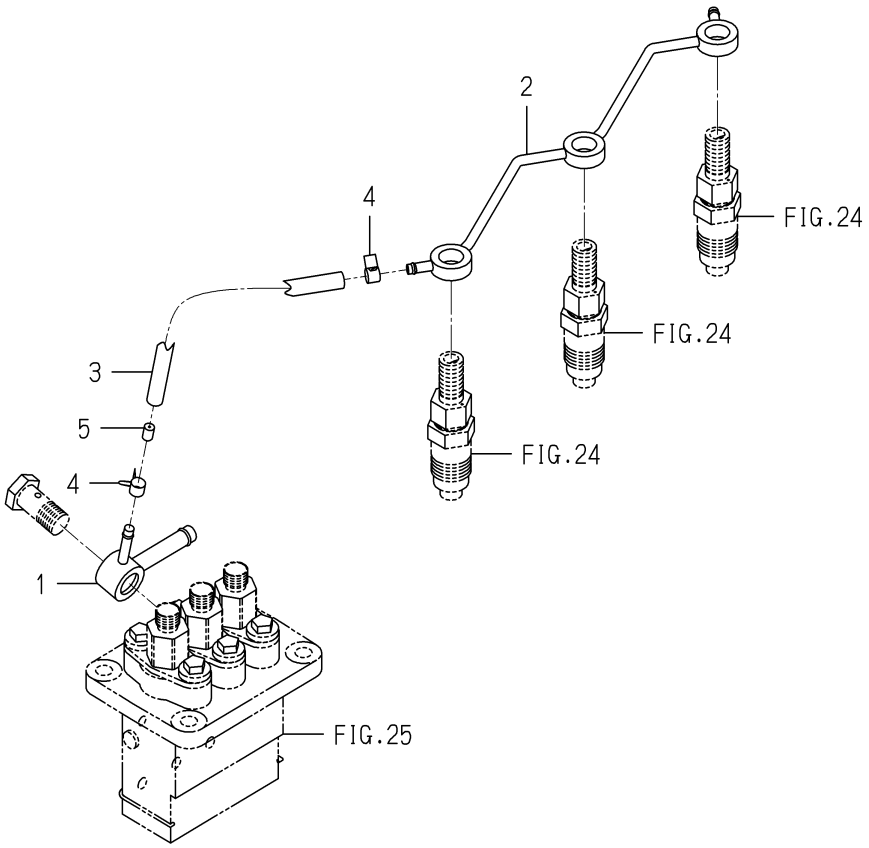

6005-550F-0100

KEY	PART CODE	DESCRIPTION	SPC	TYPE OF MODEL E3CD VB40		ITC	COL	GRP	REMARKS
1	6215-412-004-00	CONNECTOR/FUEL	*	1					
2	6215-411-136-00	PIPE/FUEL	*	1					
3	6209-360-011-00	HOSE/RUBBER	*	1					
4	J062-076-082-00	CLIP/HOSE/7.6-8.2	*	2					
5	3640-586-004-00	RESISTANCE/1.0	*	1					

FIG. 27 ADAPTER

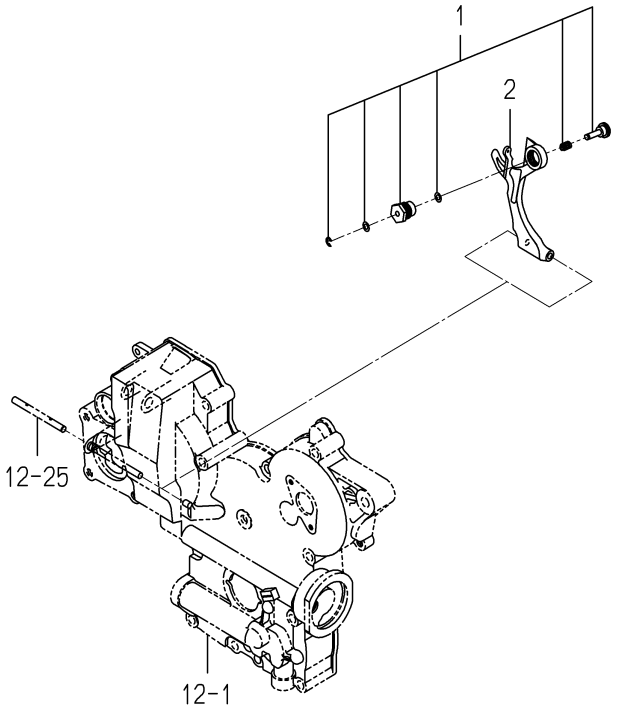

6005-560S-0100

KEY	PART CODE	DESCRIPTION	SPC	TYPE OF MODEL E3CD VB40		ITC	COL	GRP	REMARKS
1	6215-548-058-00	ADAPTER/260X135 ASSY	*	1 -145825					
2	6215-541-016-30	ARM/TENSION	*	1 -145825					

FIG. 28 ADAPTER

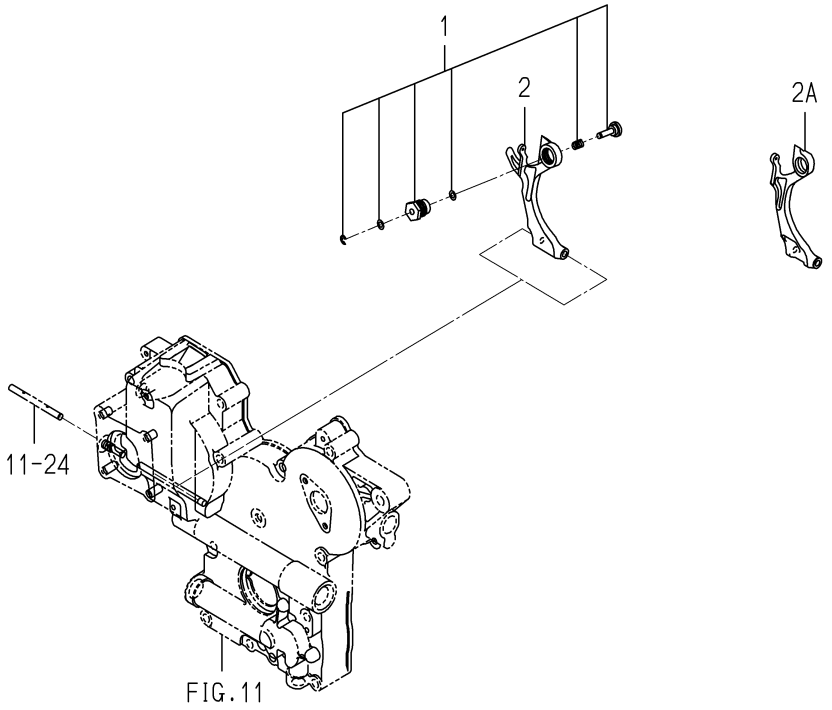

6005-560X-0100

KEY	PART CODE	DESCRIPTION	SPC	TYPE OF MODEL E3CD VB40		ITC	COL	GRP	REMARKS
1	6215-548-069-00	ADAPTER/260X120 ASSY	*	1 145826-					
2	6215-541-016-30	ARM/TENSION	*	1 -168197					
2A	6215-541-016-40	ARM/TENSION	*	1 168198-		1			

FIG. 29 ELECTRIC (1)

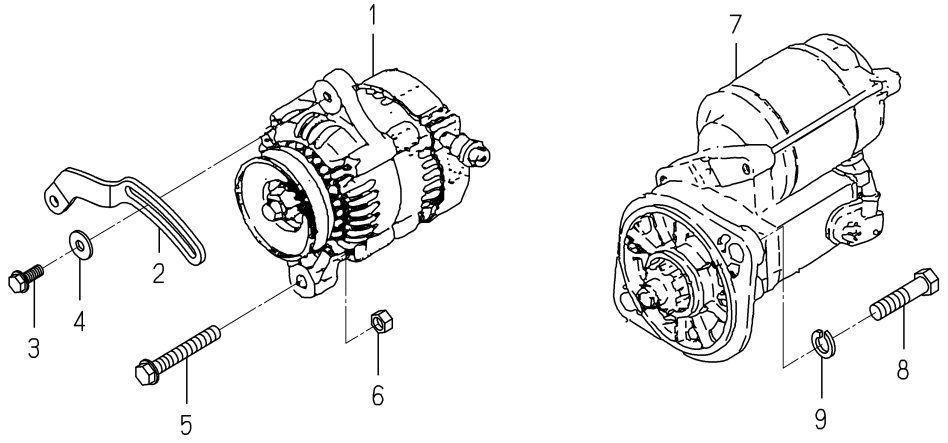

6005-801N-0100,6005-801N-0200

KEY	PART CODE	DESCRIPTION	SPC	TYPE OF MODEL E3CD VB40		ITC	COL	GRP	REMARKS
1	6281-200-020-00	GENERATOR ASSY	*	1 -146194					FIG 036
2	6213-674-006-20	PLATE/ADJUST	*	1 -146194					
3	V231-360-802-00	FLANGEBOLT	*	1 -146194					
4	1373-121-001-00	WASHER/9X22X2	*	1 -146194					
5	V233-361-007-00	FLANGEBOLT	*	1 -146194					
6	6909-110-410-00	NUT/M10	*	1 -146194					
7	6281-100-007-20	STARTER ASSY	*	1 -146194					FIG 035
8	V201-361-205-00	BOLT	*	2 -146194					
9	V401-160-012-00	WASHER,SP/M12	*	2 -146194					

FIG. 30 ELECTRIC (1)

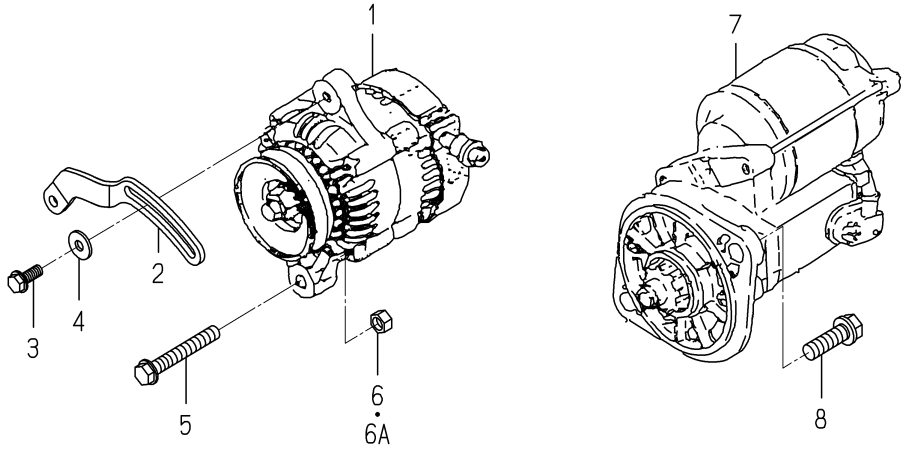

6005-801P-0100,6005-801P-0200

KEY	PART CODE	DESCRIPTION	SPC	TYPE OF MODEL E3CD VB40		ITC	COL	GRP	REMARKS
1	6281-200-020-00	GENERATOR ASSY	*	1 146195-					FIG 036
2	6213-674-006-20	PLATE/ADJUST	*	1 146195-					
3	V231-360-802-00	FLANGEBOLT	*	1 146195-					
4	1373-121-001-00	WASHER/9X22X2	*	1 146195-					
5	V233-361-007-00	FLANGEBOLT	*	1 146195-					
6	6909-110-410-00	NUT/M10	*	1 -171495					
6A	V334-260-010-00	NUT/M10	*	1 171496-					
7	6281-100-007-20	STARTER ASSY	*	1 146195-					FIG 035
8	6901-931-240-00	BOLT	*	2 146195-					

FIG. 31 ELECTRIC (2)

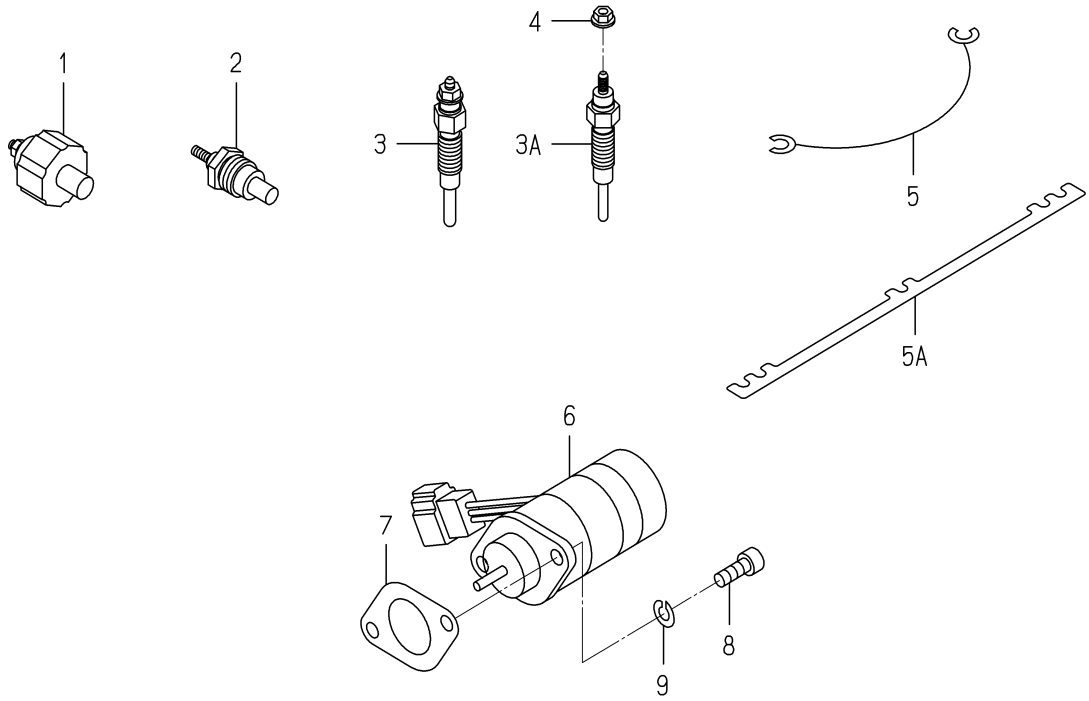

6005-820O-0100,6005-820O-0200

KEY	PART CODE	DESCRIPTION	SPC	TYPE OF MODEL E3CD VB40		ITC	COL	GRP	REMARKS
1	6281-971-003-00	SWITCH/OILPRESSURE	*	1					
2	6282-450-006-00	THERMOMETER	*	1					
3	6281-410-023-00	GLOWPLUG	*	3 -170197					
3A	6281-410-023-10	GLOWPLUG	*	3 170198-		3			
4	6209-440-005-00	NUT/FLANGE	*	3 170202-					
5	6219-732-012-00	CONNECTOR/GLOWPLUG	*	2 -150020					
5A	6219-732-017-00	CONNECTOR/GLOWPLUG	*	1 150021-					
6	6281-910-011-00	SOLENOID	*	1					
7	6209-630-002-10	GASKET	*	1					
8	V220-540-601-60	BOLT	*	2					
9	V401-160-006-00	WASHER,SP/M 6	*	2					

FIG. 32 REPAIR PARTS(OPTION)

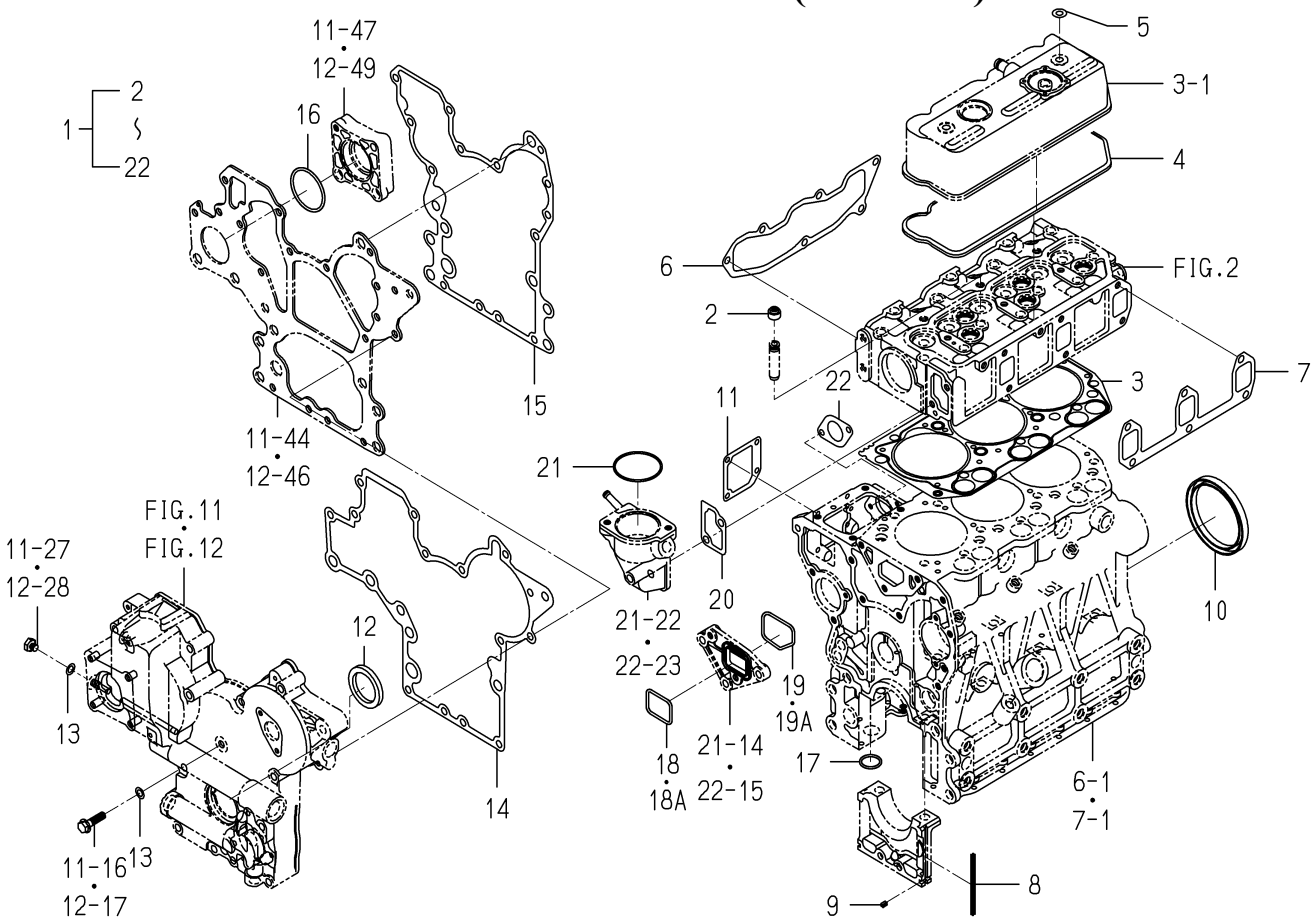

6005-999K-0100

KEY	PART CODE	DESCRIPTION	SPC	TYPE OF MODEL E3CD VB40		ITC	COL	GRP	REMARKS
1	6287-810-040-00	REPAIR/ENGINESET	T	1					
2	6212-569-002-00	SEAL,OIL	T	6					
3	6211-141-057-10	GASKET/CYLINDERHEAD	T	1					
4	6211-173-005-00	SEAL/CYL HEAD/UNDER	T	1					
5	6209-572-003-00	GASKET	T	2					
6	6214-115-003-10	GASKET/INLETMANIFOLD	T	1					
7	6214-145-004-20	GASHET/EXH MANIFOLD	T	1					
8	6211-258-001-00	SEAL,BEARING CAP	T	4					
9	6211-258-002-00	SEAL,BEARING CAP/7	T	2					
10	6209-625-003-20	OILSEAL	T	1					
11	6211-292-001-20	GASKET/COVER	T	1					
12	6209-625-002-00	SEAL,OIL	T	1					
13	6209-500-003-00	WASHER/08X14X01	T	2					
14	6211-312-005-10	GASKET/GEARCASE	T	1					
15	6211-312-006-10	GASKET/PLATE	T	1					
16	V723-102-005-00	O-RING 1A S50	T	1					
17	V720-103-502-20	O-RING/P22	T	1					
18	V721-103-104-00	O-RING/G40	T	1 -149656					
18A	6213-614-013-00	GASKET/WATERPUMP	T	1 149657-					
19	V721-113-105-00	O-RING HS90 G50	T	1 -149656					
19A	6213-614-014-00	GASKET/SPACER	T	1 149657-					
20	6213-743-002-10	GASKET/HOUSING	T	1					
21	V723-102-005-50	O-RING	T	1					
22	6209-630-002-10	GASKET	T	1					

FIG. 33 COMPONENT PARTS FOR 6215-300-045-10 ON Fig.24

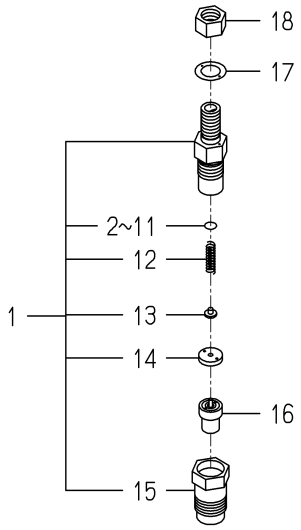

6215-300-045-1B

KEY	PART CODE	DESCRIPTION	SPC	TYPE OF MODEL E3CD VB40		ITC	COL	GRP	REMARKS
1	6215-330-028-00	HOLDER/NOZZLEASSY	*	3					
2	6215-345-044-00	SHIM/0.10	*	3					
3	6215-345-045-00	SHIM/0.20	*	3					
4	6215-345-046-00	SHIM/0.30	*	3					
5	6215-345-047-00	SHIM/0.40	*	3					
6	6215-345-048-00	SHIM/0.50	*	3					
7	6215-345-049-00	SHIM/0.52	*	3					
8	6215-345-050-00	SHIM/0.54	*	3					
9	6215-345-051-00	SHIM/0.56	*	3					
10	6215-345-052-00	SHIM/0.58	*	3					
11	6215-345-053-00	SHIM/0.80	*	3					
12	6215-343-010-00	SPRINGNOZZLE	*	3					
13	6215-342-013-00	SPRINGSEAT	*	3					
14	6215-339-004-00	SPACER	*	3					
15	6215-332-014-00	NUT/NOZZLERETAINING	*	3					
16	6215-311-036-00	NOZZLE	*	3					
17	6215-359-003-00	GASKET	*	3					
18	6215-359-004-00	NUT	*	3					

FIG. 34 COMPONENT PARTS FOR 6215-600-104-20 ON Fig.25

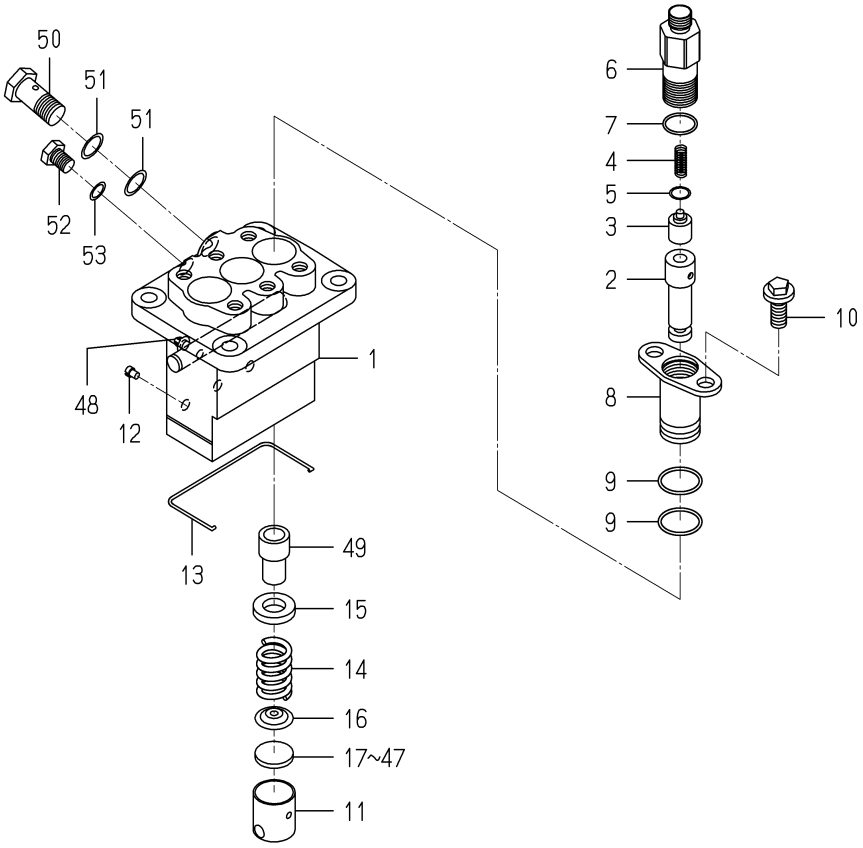

6215-600-104-2E

KEY	PART CODE	DESCRIPTION	SPC	TYPE OF MODEL E3CD VB40		ITC	COL	GRP	REMARKS
1	6215-611-015-00	HOUSING/PUMP	*	1					
2	6215-631-015-00	PLUNGER ASSY	*	3					
3	6215-641-002-00	VALVE,DELIVERY	*	3					
4	6215-643-005-00	SPRING/DELIVERYVALVE	*	3					
5	6215-649-008-00	GASKET	*	3					
6	6215-644-009-00	HOLDER/DELIVERYVALVE	*	3					
7	6215-649-014-00	ORING	*	3					
8	6215-635-004-00	SLEEVEFLANGE	*	3					
9	6215-649-013-00	ORING	*	6					
10	6215-649-011-00	BOLT	*	6					
11	6215-622-003-00	TAPPET	*	3					
12	6215-629-017-00	PIN	*	3					
13	6215-629-035-00	SNAPRING	*	1					
14	6215-634-003-00	SPRING/PLUNGER	*	3					
15	6215-639-008-00	SPRINGSEAT	*	3					
16	6215-639-009-00	SPRINGSEAT	*	3					
17	6215-629-060-00	PLATE/T=2.60	*	1					
18	6215-629-061-00	PLATE/T=2.65	*	1					
19	6215-629-062-00	PLATE/T=2.70	*	1					
20	6215-629-063-00	PLATE/T=2.75	*	1					
21	6215-629-064-00	PLATE/T=2.80	*	1					
22	6215-629-065-00	PLATE/T=2.85	*	1					
23	6215-629-066-00	PLATE/T=2.90	*	1					
24	6215-629-067-00	PLATE/T=2.95	*	1					
25	6215-629-036-00	PLATE/T=3.00	*	1					
26	6215-629-037-00	PLATE/T=3.05	*	1					
27	6215-629-038-00	PLATE/T=3.10	*	1					
28	6215-629-039-00	PLATE/T=3.15	*	1					
29	6215-629-040-00	PLATE/T=3.20	*	1					
30	6215-629-041-00	PLATE/T=3.25	*	1					

FIG. 34 COMPONENT PARTS FOR 6215-600-104-20 ON Fig.25

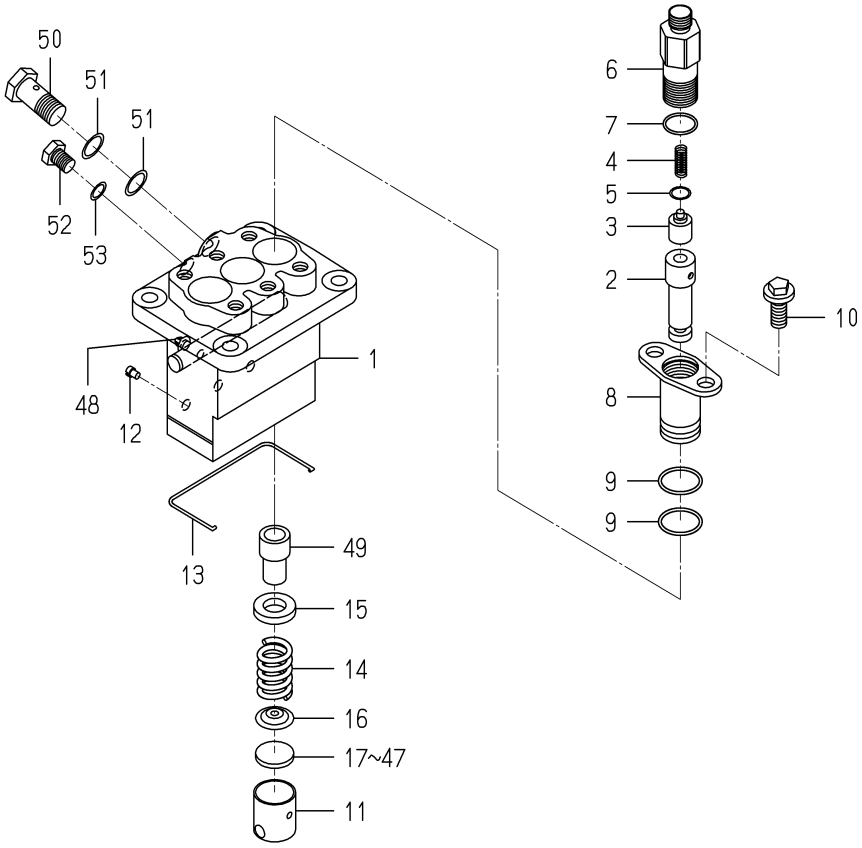

6215-600-104-2E

KEY	PART CODE	DESCRIPTION	SPC	TYPE OF MODEL E3CD VB40		ITC	COL	GRP	REMARKS
31	6215-629-042-00	PLATE/T=3.30	*	1					
32	6215-629-043-00	PLATE/T=3.35	*	3 -146336					
32	6215-629-043-00	PLATE/T=3.35	*	1 146337-					
33	6215-629-044-00	PLATE/T=3.40	*	1					
34	6215-629-045-00	PLATE/T=3.45	*	1					
35	6215-629-046-00	PLATE/T=3.50	*	1					
36	6215-629-047-00	PLATE/T=3.55	*	1					
37	6215-629-048-00	PLATE/T=3.60	*	1					
38	6215-629-049-00	PLATE/T=3.65	*	1					
39	6215-629-050-00	PLATE/T=3.70	*	1					
40	6215-629-051-00	PLATE/T=3.75	*	1					
41	6215-629-052-00	PLATE/T=3.80	*	1					
42	6215-629-053-00	PLATE/T=3.85	*	1					
43	6215-629-054-00	PLATE/T=3.90	*	1					
44	6215-629-055-00	PLATE/T=3.95	*	1					
45	6215-629-056-00	PLATE/T=4.00	*	1					
46	6215-629-058-00	PLATE/T=4.05	*	1					
47	6215-629-059-00	PLATE/T=4.10	*	1					
48	6215-637-004-00	CONTROLRACK	*	1					
49	6215-635-005-00	CONTROLSLEEVE	*	3					
50	6215-619-023-00	EYEBOLT	*	1					
51	6115-639-008-00	GASKET	*	2					
52	6215-619-024-00	BOLT	*	1					
53	6215-359-006-00	GASKET	*	1					

FIG. 35 COMPONENT PARTS FOR 6281-100-007-20 ON Fig.29

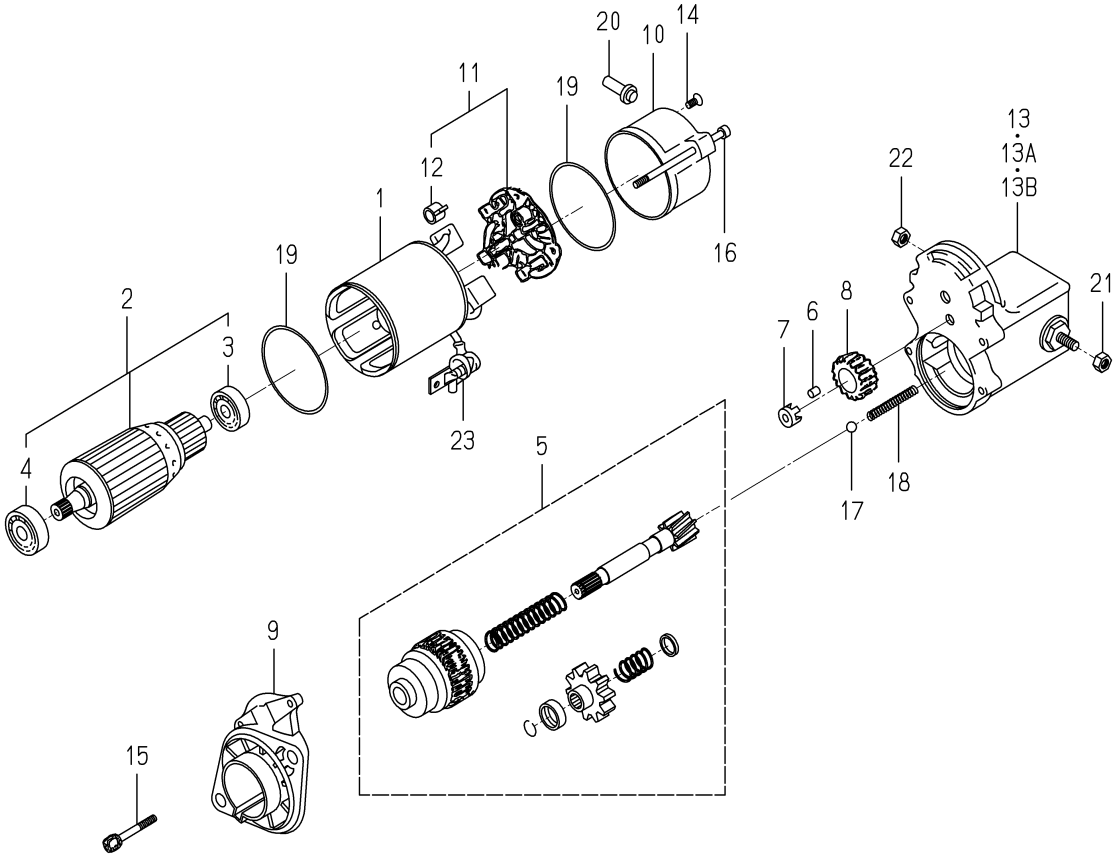

6281-100-007-2H

KEY	PART CODE	DESCRIPTION	SPC	TYPE OF MODEL E3CD VB40		ITC	COL	GRP	REMARKS
1	6281-111-005-00	YOKE/STARTER ASSY	*	1					
2	6281-121-006-00	ARMATURE/STARTE ASSY	*	1					
3	6281-129-038-00	BEARING	*	1					
4	6281-129-039-00	BEARING	*	1					
5	6281-124-007-10	CLUTCH/STARTER ASSY	*	1					
6	6581-129-099-00	RORA	*	5					
7	6281-129-040-00	RETAINER	*	1					
8	6281-123-005-00	PINION/STARTER	*	1					
9	6281-129-045-10	HOUSING/STARTER ASSY	*	1					
10	6281-115-011-00	FRAME/STARTEREND	*	1					
11	6281-116-004-00	HOLDER/STARTER ASSY	*	1					
12	6581-117-007-00	SPRING,BRUSH	*	4					
13	6281-151-017-10	SWITCH/MAGNETIC ASSY	*	1 -146194					
13A	6281-151-020-00	SWITCH/MAGNETIC ASSY	*	1 -153398					
13B	6281-151-023-00	SWITCH/MAGNETIC ASSY	*	1 153399-					
14	6281-129-062-00	SCREW	*	2					
15	6281-129-042-00	BOLT/WS	*	2					
16	6281-129-043-00	BOLT/THROUGH	*	2					
17	6581-129-092-00	BALL	*	1					
18	6281-129-044-00	SPRING/RETURN	*	1					
19	6281-129-003-00	O-RING	*	2					
20	6281-115-016-00	BUSHING/DRAIN	*	1					
21	6909-111-508-00	NUT	*	1					
22	6281-229-041-00	NUT	*	1					
23	6281-115-010-00	COVER	*	1					

FIG. 36 COMPONENT PARTS FOR 6281-200-020-00 ON Fig.29

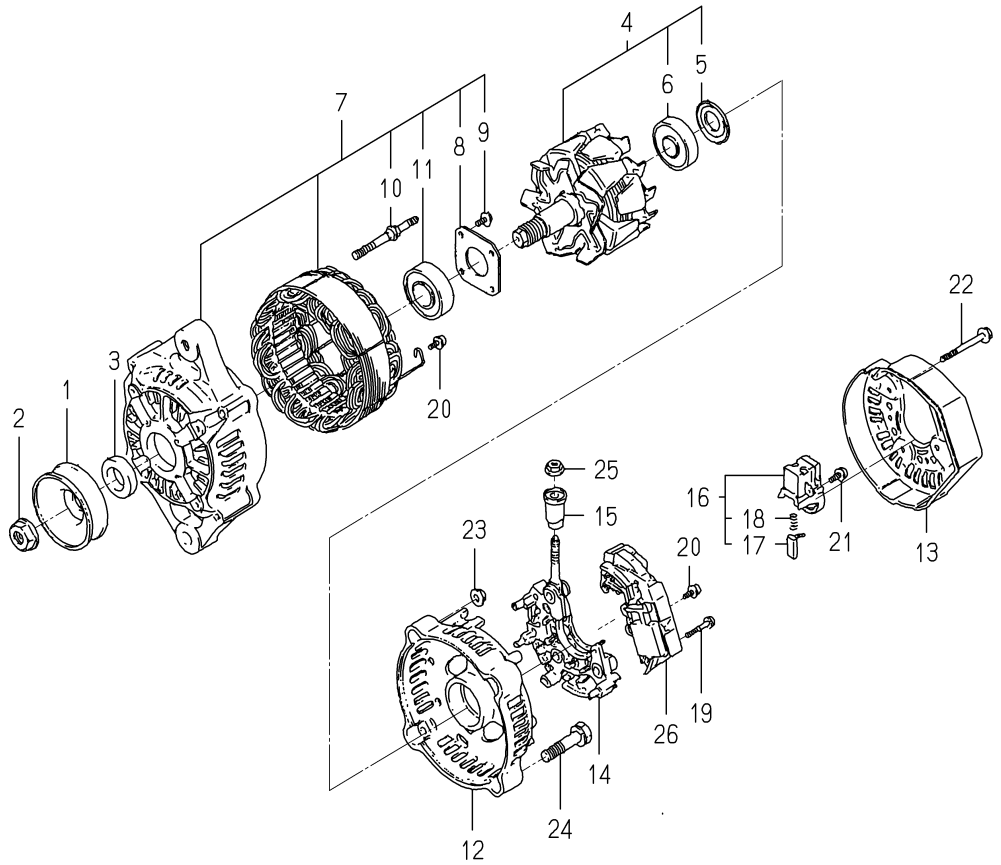

6281-200-020-0B

KEY	PART CODE	DESCRIPTION	SPC	TYPE OF MODEL E3CD VB40		ITC	COL	GRP	REMARKS
1	6281-222-012-00	PULLEY	*	1					
2	6281-229-002-00	NUT	*	1					
3	6281-229-003-00	COLLOR	*	1					
4	6281-221-007-00	ROTOR ASSY	*	1					
5	6281-229-004-00	COVER,BEARING	*	1					
6	6281-229-032-00	BEARING/BALL	*	1					
7	6281-213-017-00	FRAME/DRIVEEND ASSY	*	1					
8	6281-229-006-00	PLATE	*	1					
9	6281-229-007-00	BOLT	*	4					
10	6281-229-008-00	BOLT	*	2					
11	6281-229-033-00	BEARING/BALL	*	1					
12	6281-214-003-00	FRAME	*	1					
13	6281-214-004-00	COVER	*	1					
14	6281-229-029-00	HOLDER ASSY	*	1					
15	6281-229-011-00	BUSH	*	1					
16	6281-217-003-00	HOLDER/BRUSH ASSY	*	1					
17	6281-215-001-00	BRUSH	*	2					
18	6281-216-001-00	SPRING	*	2					
19	6281-229-012-00	BOLT	*	2					
20	6281-229-013-00	BOLT	*	6					
21	6281-229-014-00	BOLT	*	1					
22	6281-229-015-00	BOLT	*	3					
23	6281-229-016-00	NUT	*	2					
24	6281-229-017-00	BOLT	*	2					
25	6281-229-018-00	NUT	*	1					
26	6281-271-002-00	REGULATOR ASSY	*	1					

E N G I N E

E3CDVTB09···TG5390E4 (S-TYPE)

E
N
G
I
N
E

6005-097-590-30

FIG. 1 SHORT BLOCK ENGIASSY

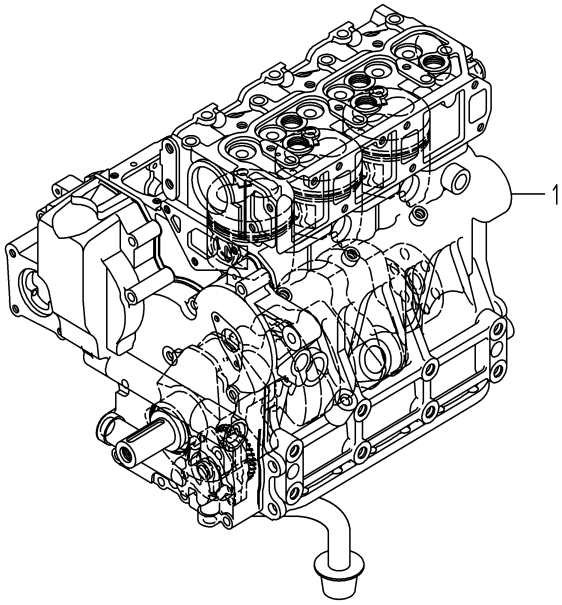

6005-015B-0100

KEY	PART CODE	DESCRIPTION	SPC	TYPE OF MODEL E3CD VTB09		ITC	COL	GRP	REMARKS
1	6005-010-140-00	SHORTBLOCKENGIN ASSY	T	1					

FIG. 2 CYLINDER HEAD

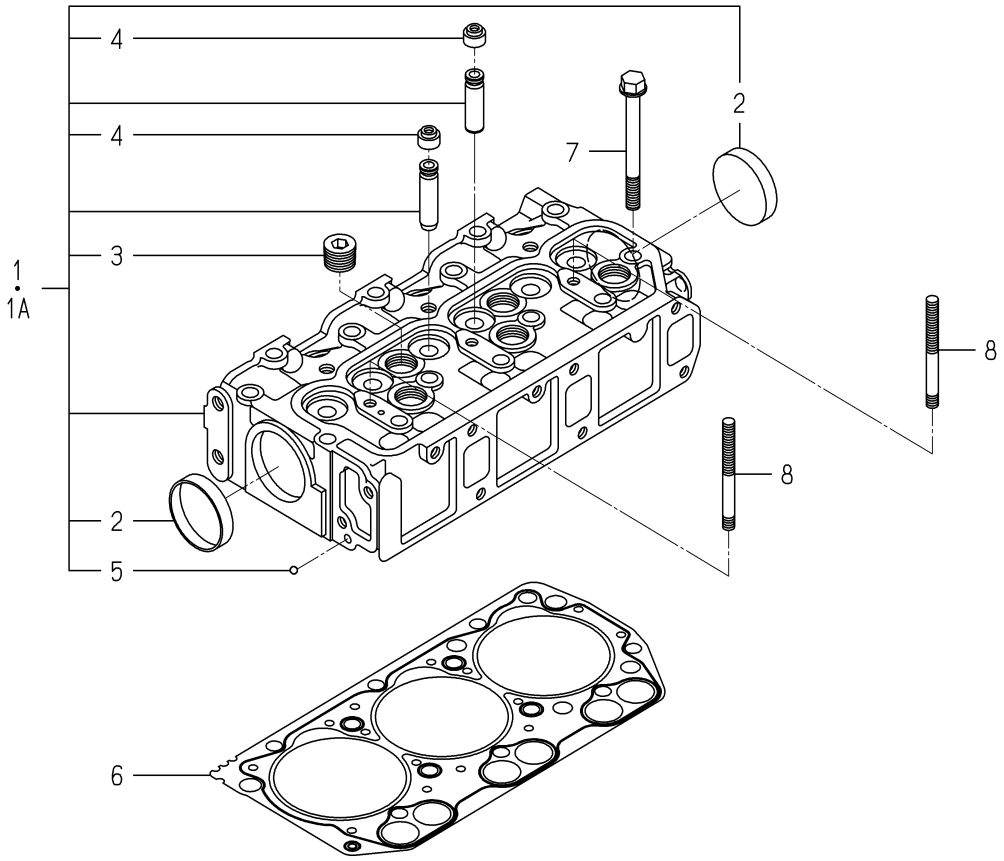

6005-101T-0100,6005-101T-0200

KEY	PART CODE	DESCRIPTION	SPC	TYPE OF MODEL E3CD VTB09		ITC	COL	GRP	REMARKS
1	6211-110-088-10	CYLINDERHEAD ASSY	*	1 -197018					
1A	6211-110-088-20	CYLINDERHEAD ASSY	*	1 197019-		1			
2	6209-610-003-00	CUP/SEALING/50	*	2					
3	6209-605-004-10	PLUG/PT1/2	*	5					
4	6212-569-002-00	SEAL,OIL	*	6					
5	V682-200-000-60	BALL	*	1					
6	6211-141-057-10	GASKET/CYLINDERHEAD	*	1					
7	6209-000-005-00	BOLT	*	14					
8	6209-300-014-00	STUD	*	2					

FIG. 3 CYLINDER HEAD COVER

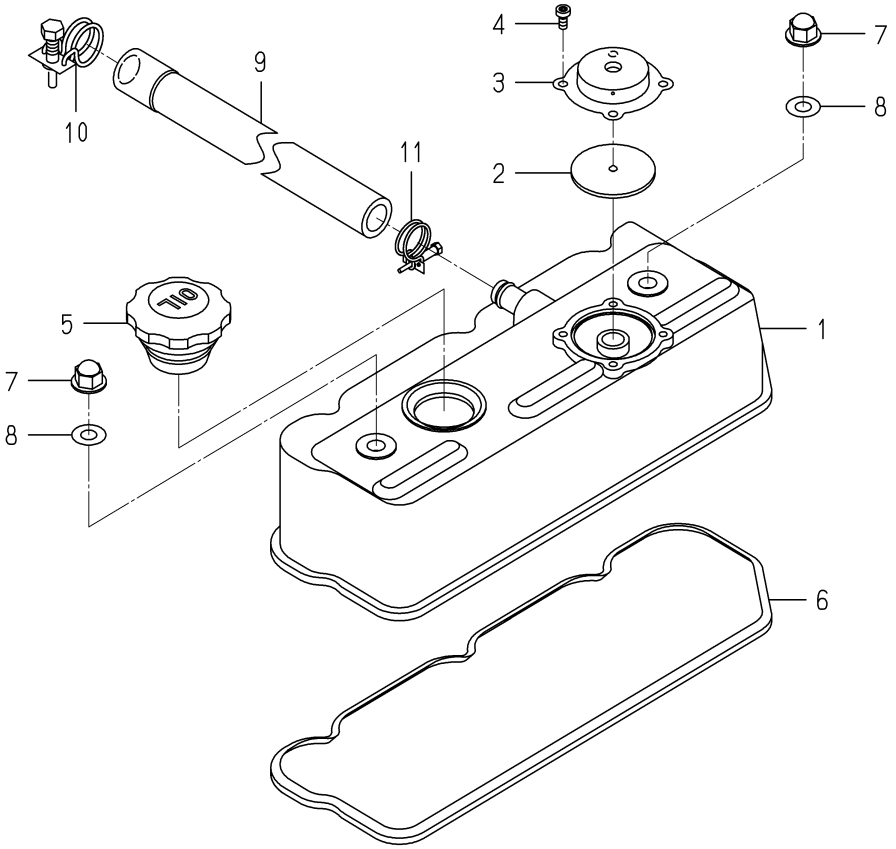

6005-110G-0100

KEY	PART CODE	DESCRIPTION	SPC	TYPE OF MODEL E3CD VTB09		ITC	COL	GRP	REMARKS
1	6211-170-007-30	COVER/CYLINDER HEAD	*	1					
2	6211-179-026-00	COVER/BLOWBY	*	1					
3	V195-164-008-30	SCREW/TAPPING	*	4					
4	6211-173-017-00	PACKING/PCV	*	1					
5	6211-751-001-10	CAP,OIL FILLER	*	1					
6	6211-173-005-00	SEAL/CYL HEAD/UNDER	*	1					
7	6209-490-002-10	NUT/CAP	*	2					
8	6209-572-003-00	GASKET	*	2					
9	6209-366-010-00	HOSE/BREATHER	*	1					
10	J061-216-020-00	CLAMP/WIRE/16-20	*	1					
11	J061-213-018-00	CLAMP/WIRE/13-18	*	1					

FIG. 4 INLET MANIFOLD

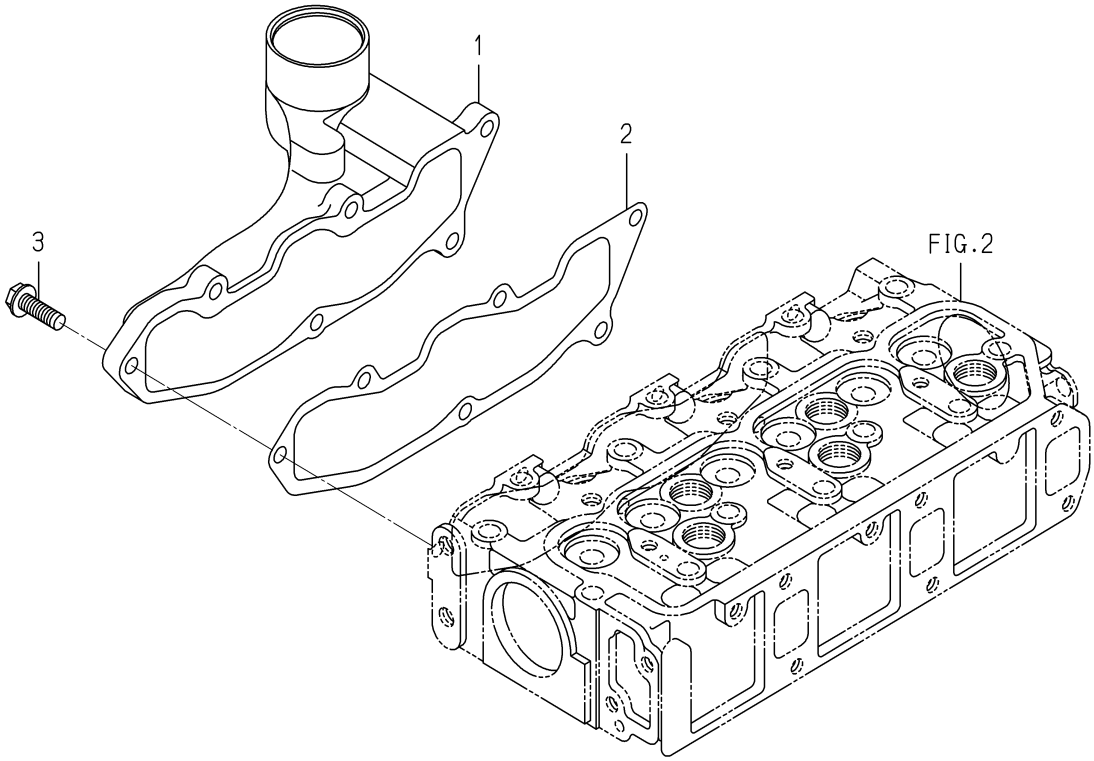

6005-120B-0100

KEY	PART CODE	DESCRIPTION	SPC	TYPE OF MODEL E3CD VTB09		ITC	COL	GRP	REMARKS
1	6214-111-023-00	MANIFOLD/INLET	*	1					
2	6214-115-003-10	GASKET/INLETMANIFOLD	*	1					
3	V231-360-802-50	FLANGEBOLT	*	6					

FIG. 5 EXHAUST MANIFOLD

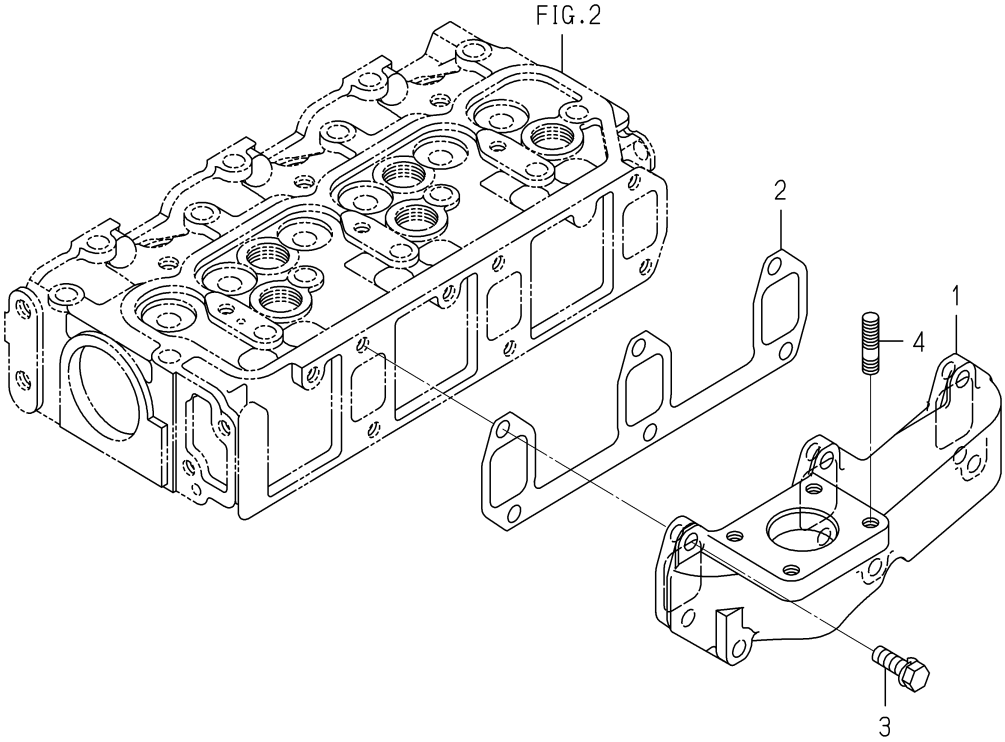

6005-140F-0100

KEY	PART CODE	DESCRIPTION	SPC	TYPE OF MODEL E3CD VTB09		ITC	COL	GRP	REMARKS
1	6214-141-048-00	MANIFOLD/EXHAUST	*	1					
2	6214-145-004-20	GASHET/EXH MANIFOLD	*	1					
3	V211-560-802-50	BOLT,SEMS/M8X25 7T	*	6					
4	6209-300-026-00	STUD	*	4					

FIG. 6 TURBOCHARGER

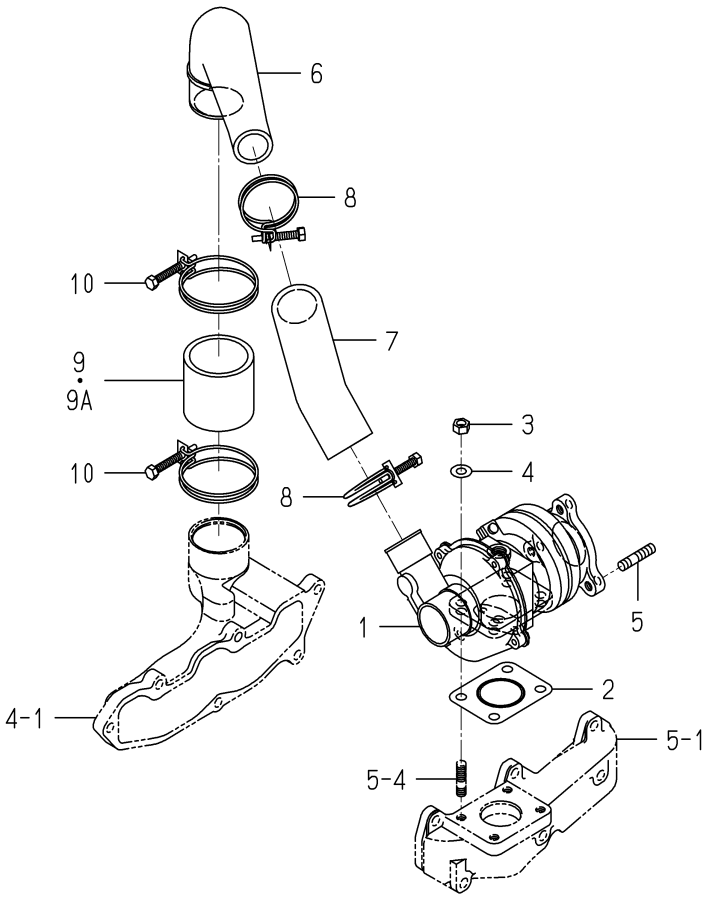

6005-160B-0100

KEY	PART CODE	DESCRIPTION	SPC	TYPE OF MODEL E3CD VTB09		ITC	COL	GRP	REMARKS
1	6214-400-009-10	TURBOCHARGER ASSY	*	1					
2	6214-145-009-00	GASKET	*	1					
3	V304-700-008-00	NUT	*	4					
4	V411-700-008-00	WASHER	*	4					
5	V251-340-802-50	BOLT/STUD	*	3					
6	6214-435-026-00	PIPE/INLET	*	1					
7	6209-360-112-00	HOSE/RUBBER	*	1					
8	J061-238-046-00	CLAMP/WIRE/38-46	*	2					
9	6209-360-114-00	HOSE/RUBBER	*	1 -184275					
9A	6209-360-108-00	HOSE/RUBBER	*	1 184276-					
10	J061-252-063-00	CLAMP/WIRE/52-63	*	2					

FIG. 7 CYLINDER BLOCK(1/2)

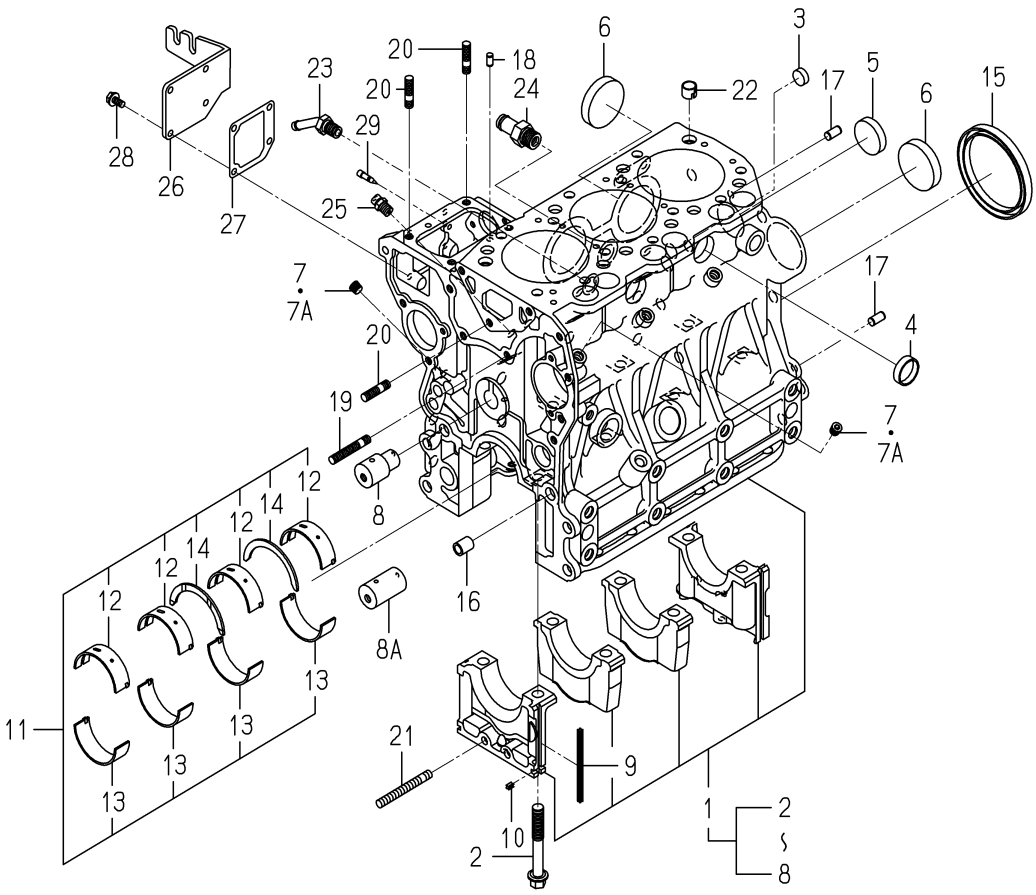

6005-202S-0100

KEY	PART CODE	DESCRIPTION	SPC	TYPE OF MODEL E3CD VTB09		ITC	COL	GRP	REMARKS
1	6211-210-084-00	CYLINDERBLOCK ASSY	*	1					
2	6209-000-006-00	BOLT	*	8					
3	6209-610-007-00	CUP/SEALING/16	*	2					
4	6209-610-001-10	CUP/SEALING/28	*	2					
5	6209-610-009-00	CUP/SEALING/36	*	1					
6	6209-610-003-00	CUP/SEALING/50	*	3					
7	6509-605-019-10	PLUG	*	8 -199533					
7A	6209-605-007-00	PLUG/PT1/8	*	8 199534-					
8	6212-531-008-20	PIN/IDLEGEAR	*	1 -168830					
8A	6212-531-008-30	PIN/IDLEGEAR	*	1 168831-		3			
9	6211-258-001-00	SEAL,BEARING CAP	*	4					
10	6211-258-002-00	SEAL,BEARING CAP/7	*	2					
11	6211-510-008-00	BEARING/CRANK SET	*	1					
12	6211-511-007-00	BEARING/CRANK/UPPER	*	4					
13	6211-511-008-00	BEARING/CRANK/LOWER	*	4					
14	6211-599-004-00	BEARING/THRUST/CRANK	*	2					
15	6209-625-003-20	OILSEAL	*	1					
16	6209-749-001-20	PIN/TUBE	*	2					
17	6213-129-006-00	PIN/STRAIGHT	*	2					
18	6209-740-005-00	PIN	*	2					
19	6904-110-840-00	STUD/M8X40	*	1					
20	6904-110-822-00	STUD	*	3					
21	V251-340-806-00	BOLT/STUD	*	1					
22	6294-453-002-00	DOWEL	*	2					
23	6213-721-007-00	PIPE/WATERDRAIN	*	1					
24	6213-721-005-00	PIPE/WATER/HOUSING	*	1					
25	6909-902-299-00	NIPPLE	*	1					
26	6211-291-015-20	COVER/INJECTIONPUMP	*	1					
27	6211-292-001-20	GASKET/COVER	*	1					
28	V230-360-601-20	FLANGEBOLT	*	4					

FIG. 7 CYLINDER BLOCK(2/2)

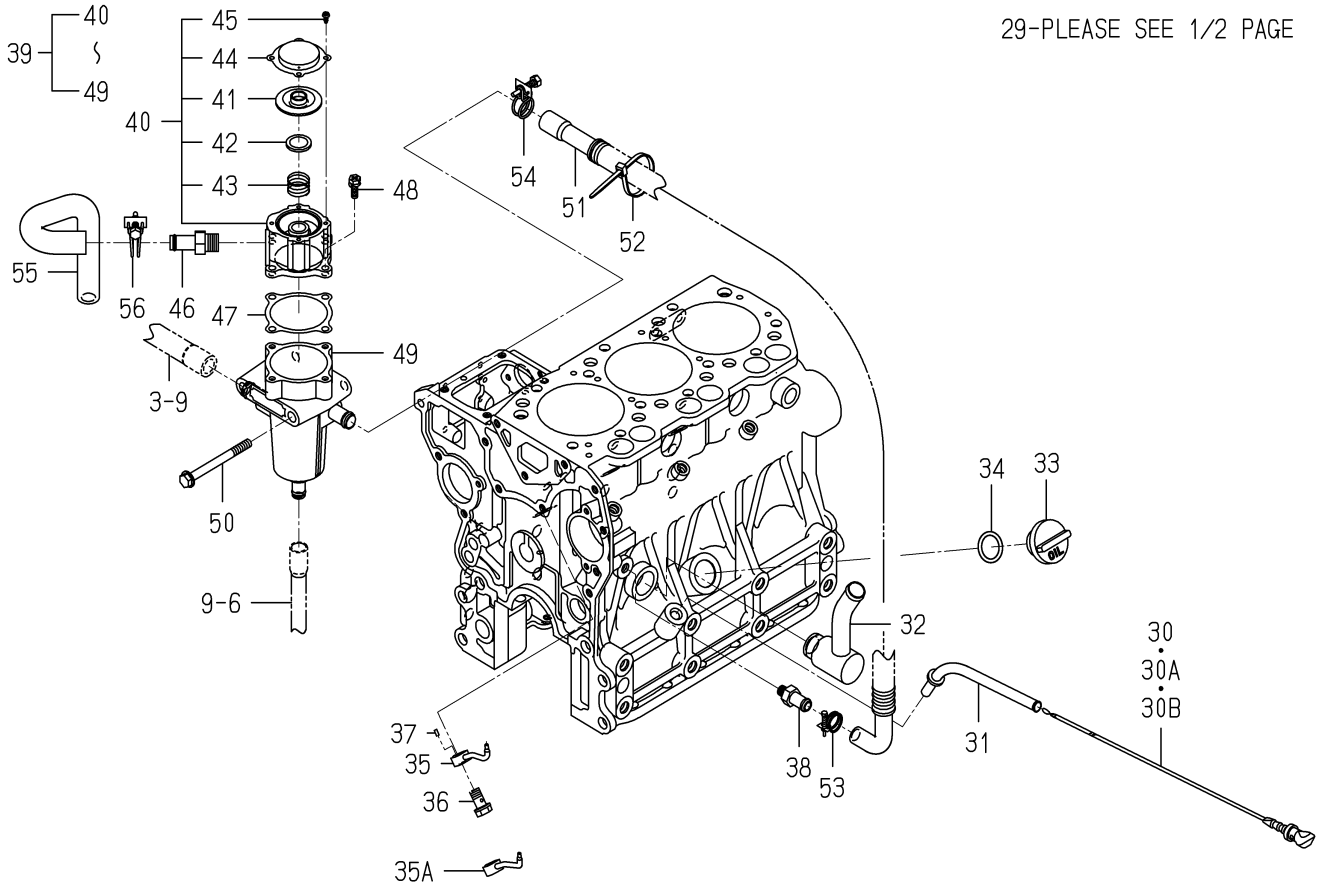

6005-202S-0100

KEY	PART CODE	DESCRIPTION	SPC	TYPE OF MODEL E3CD VTB09		ITC	COL	GRP	REMARKS
29	6215-549-013-00	PIN	*	1					
30	6211-760-046-00	LEVELGAGE	*	1 -171504					
30A	6211-760-046-10	LEVELGAGE	*	1 -202397		1			
30B	6211-760-041-20	LEVELGAGE	*	1 202398-					
31	6211-766-033-00	GUIDE/LEVELGAGE COMP	*	1					
32	6213-311-061-00	PIPE/OIL COMP	*	1					
33	6211-751-002-00	CAP/OILFILLER	*	1					
34	V720-103-502-50	O-RING/P25	*	1					
35	6213-342-008-00	PIPE/OILJET	*	3 -194379					
35A	6213-342-008-10	PIPE/OILJET	*	3 194380-		1			
36	6213-342-007-00	EYEBOLT/OILJET ASSY	*	3					
37	6209-740-008-00	PIN/SPRING	*	3					
38	6211-742-014-00	ADAPTER/R1/8	*	1					
39	6211-740-008-00	BREATHER ASSY	*	1					
40	6211-740-009-00	COVER/BREATHER ASSY	*	1					
41	6211-179-013-10	RUBBERFLANGE	*	1					
42	6211-179-018-00	SEAT/SPRING	*	1					
43	6211-740-007-00	SPRING	*	1					
44	6211-179-019-00	COVER/BLOWBY	*	1					
45	V195-164-008-30	SCREW/TAPPING	*	4					
46	6213-721-005-00	PIPE/WATER/HOUSING	*	1					
47	6211-744-001-00	GASKET	*	1					
48	6213-119-001-00	BOLT/WS	*	4					
49	6211-740-010-00	BREATHER COMP	*	1					
50	V231-360-808-50	FLANGEBOLT	*	2					
51	6209-366-011-00	HOSE/BREATHER	*	1					
52	3737-172-010-00	BAND/202	*	1					
53	J061-213-018-00	CLAMP/WIRE/13-18	*	1					
54	J061-216-020-00	CLAMP/WIRE/16-20	*	1					
55	6209-360-116-10	HOSE/RUBBER	*	1					

FIG. 7 CYLINDER BLOCK(2/2)

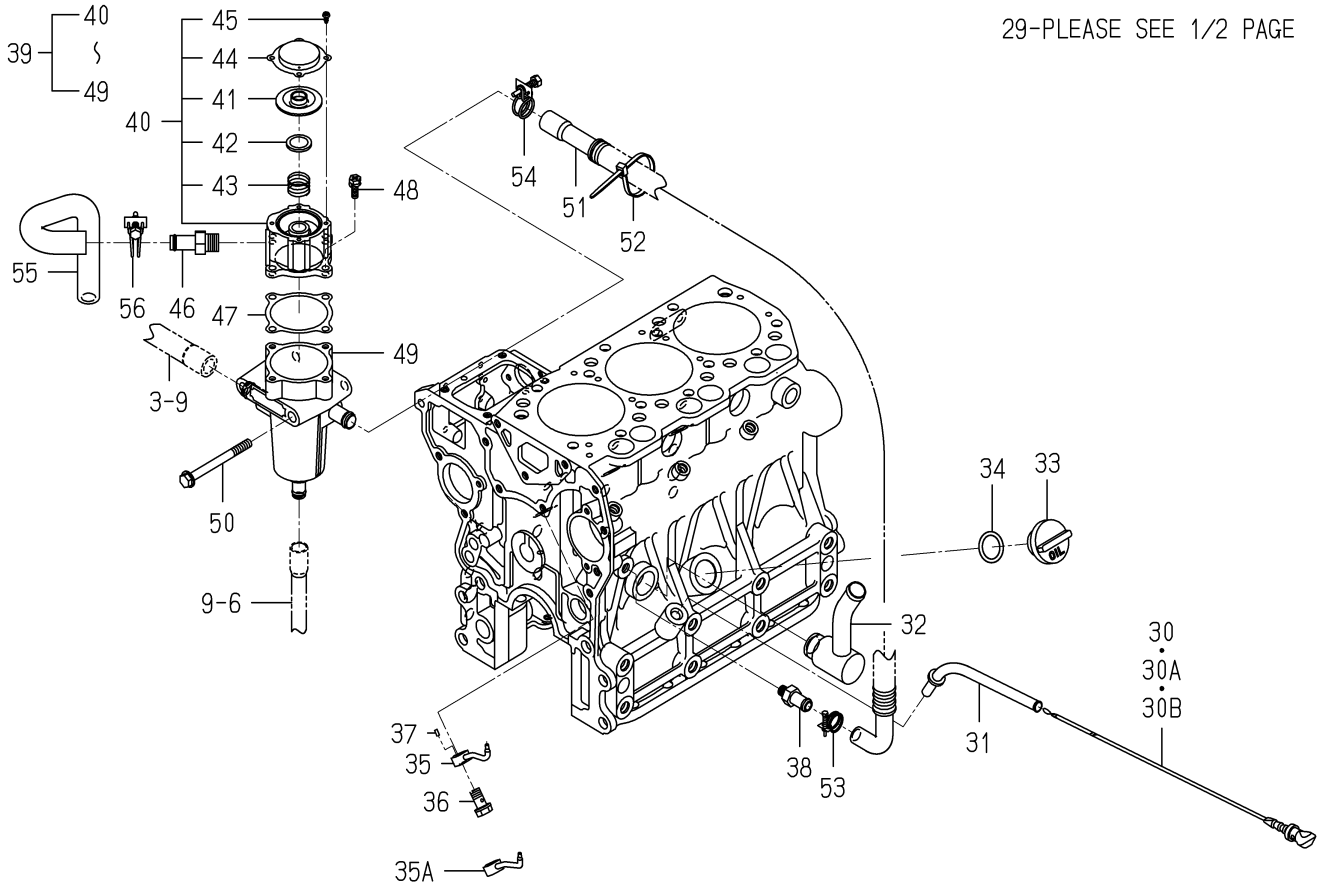

6005-202S-0100

KEY	PART CODE	DESCRIPTION	SPC	TYPE OF MODEL E3CD VTB09		ITC	COL	GRP	REMARKS
56	J061-220-024-00	CLAMP/WIRE/20-24	*	1					

FIG. 8 BEARING/UNDER SIZE (OPTION)

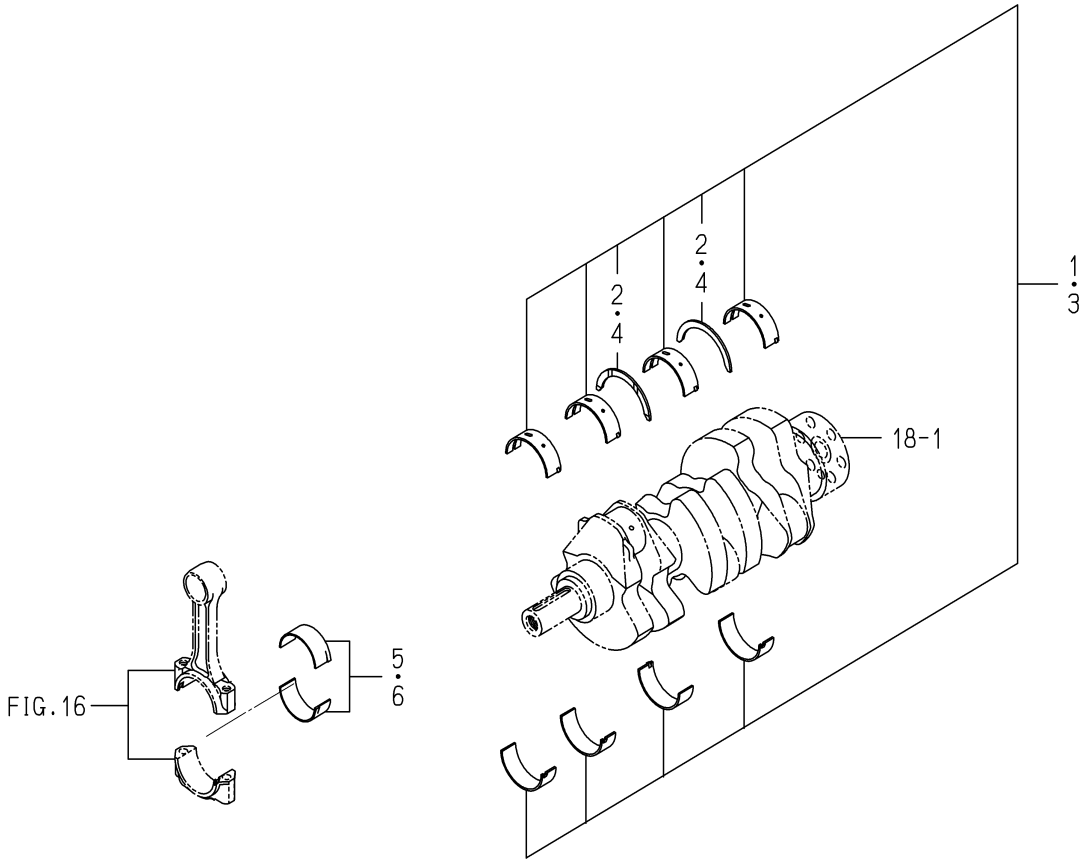

6005-209 -0100

KEY	PART CODE	DESCRIPTION	SPC	TYPE OF MODEL E3CD VTB09		ITC	COL	GRP	REMARKS
1	6211-530-008-00	BEARING/CRANK/UNDER	T	1					
2	6211-599-004-00	BEARING/THRUST/CRANK	T	2					
3	6211-540-008-00	BEARING/CRANK/UNDER	T	1					
4	6211-599-004-00	BEARING/THRUST/CRANK	T	2					
5	6212-273-009-00	BEARING/CONNECTING R	T	3					
6	6212-274-009-00	BEARING/CONNECTING R	T	3					

FIG. 9 OIL PAN

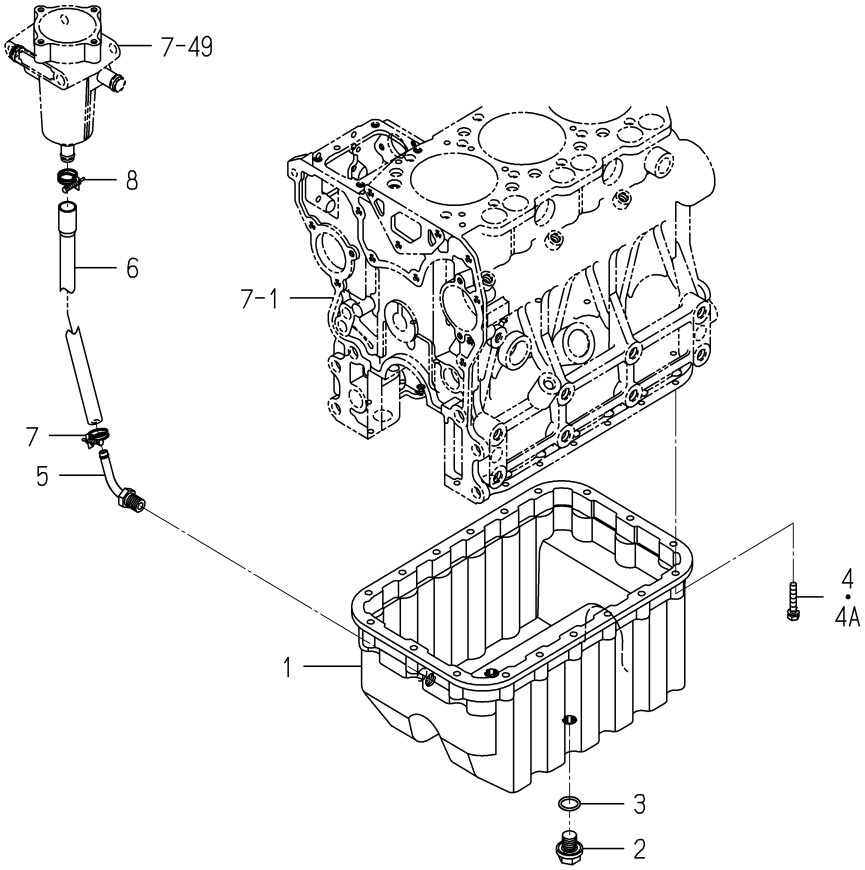

6005-210H-0100

KEY	PART CODE	DESCRIPTION	SPC	TYPE OF MODEL E3CD VTB09		ITC	COL	GRP	REMARKS
1	6211-361-074-00	OILPAN	*	1					
2	3805-355-002-20	PLUG/M14X1.5	*	2					
3	V720-102-401-80	O-RING/P18	*	2					
4	6901-910-635-00	BOLT	*	18 -173467					
4A	V210-560-603-50	BOLT/S	*	18 173468-					
5	6213-721-001-00	PIPE,WATER DRAIN	*	1					
6	6209-360-113-00	HOSE/RUBBER	*	1					
7	J061-210-015-00	CLAMP/WIRE/10-15	*	1					
8	J061-213-018-00	CLAMP/WIRE/13-18	*	1					

FIG. 10 REAR PLATE

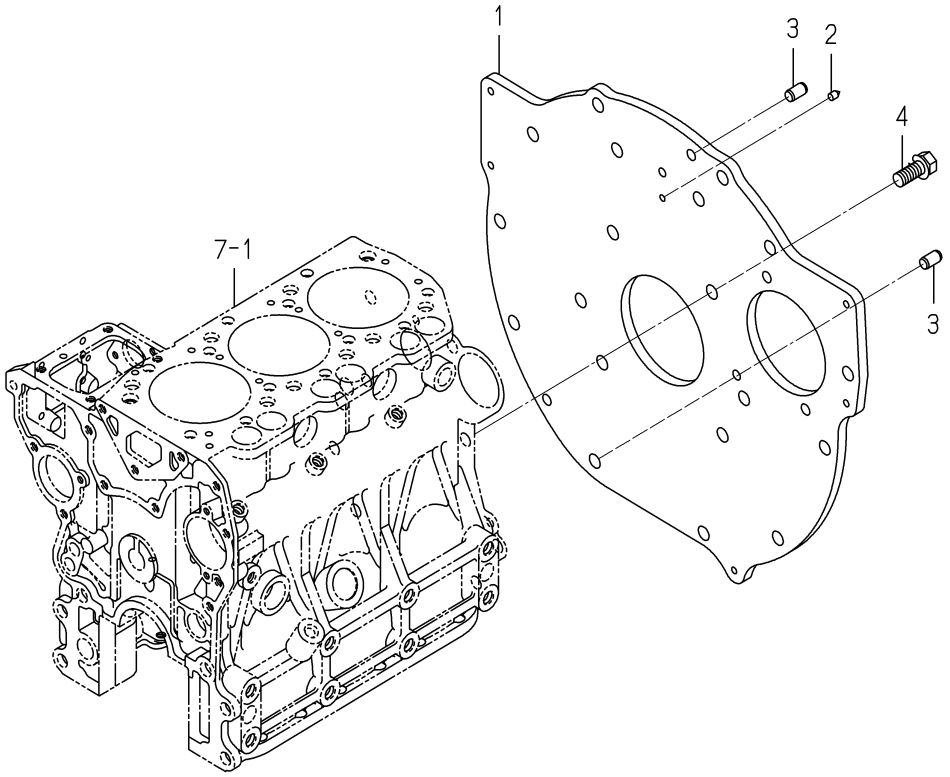

6005-220N-0100

KEY	PART CODE	DESCRIPTION	SPC	TYPE OF MODEL E3CD VTB09		ITC	COL	GRP	REMARKS
1	6211-341-073-00	PLATE/REAR	*	1					
2	6211-342-003-10	POINTER	*	1					
3	V523-101-001-80	PIN	*	2					
4	6209-030-091-00	BOLT/WS	*	8					

FIG. 11 TIMING GEAR CASE

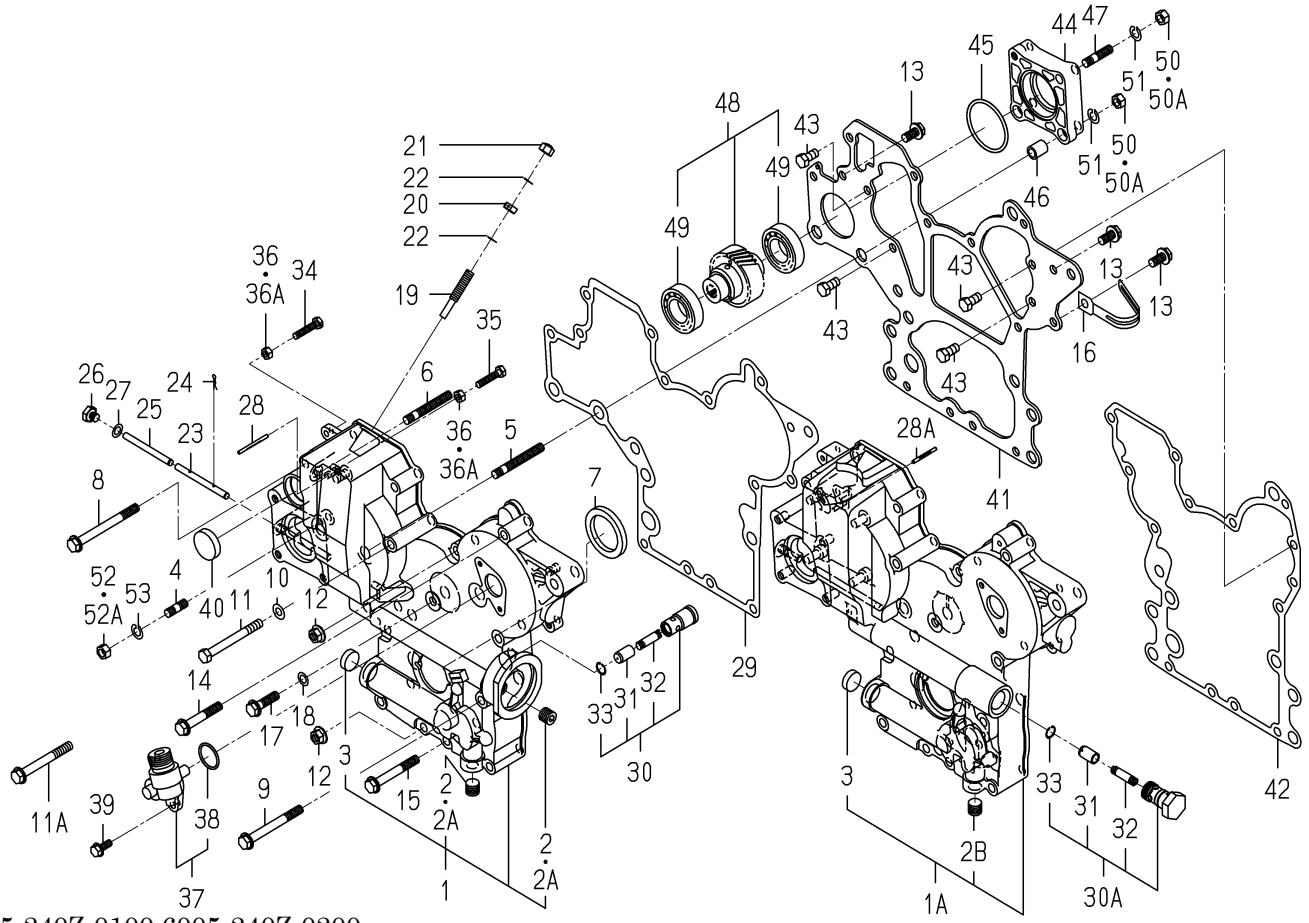

6005-240Z-0100,6005-240Z-0200

KEY	PART CODE	DESCRIPTION	SPC	TYPE OF MODEL E3CD VTB09		ITC	COL	GRP	REMARKS
1	6211-310-009-60	GEARCASE ASSY	*	1 -180883					
1A	6211-310-009-70	GEARCASE ASSY	*	1 -186845		3			
2	6209-605-003-00	PLUG/PT1/4	*	2 -160372					
2A	6209-605-003-10	PLUG/PT1/4	*	2 -180883		1			
2B	6209-605-003-10	PLUG/PT1/4	*	1 -186845					
3	6209-610-004-00	CUP/SEALING/20	*	1 -186845					
4	6904-110-822-00	STUD	*	4 -186845					
5	6904-110-855-00	STUD	*	2 -186845					
6	6904-110-850-00	STUD	*	1 -186845					
7	6209-625-002-00	SEAL,OIL	*	1 -186845					
8	V231-360-808-50	FLANGEBOLT	*	1 -186845					
9	V231-360-807-50	FLANGEBOLT	*	1 -186845					
10	6209-500-006-00	WASHER/08X16X1.2	*	1 -181192					
11	V201-360-807-50	BOLT	*	1 -181192					
11A	V231-360-807-00	FLANGEBOLT	*	1 -186845					
12	3817-401-001-00	NUT/M08	*	2 -186845					
13	V231-360-801-60	FLANGEBOLT	*	3 -186845					
14	V231-360-805-00	FLANGEBOLT	*	3 -186845					
15	V231-360-806-00	FLANGEBOLT	*	4 -186845					
16	1650-650-015-00	CLAMP	*	1 -186845					
17	V231-360-803-00	FLANGEBOLT	*	1 -186845					
18	6209-500-003-00	WASHER/08X14X01	*	1 -186845					
19	6215-546-003-10	STOPPER/FULLLOAD	*	1 -186845					
20	6209-409-001-00	NUT/M8	*	1 -186845					
21	V341-120-008-00	NUT,CAP/M 8	*	1 -186845					
22	6209-920-002-00	PACKING	*	2 -186845					
23	6215-542-004-20	PIN/ARM	*	1 -186845					
24	P117-303-003-00	PIN/SNAP	*	2 -186845					
25	6215-542-005-10	PIN	*	1 -186845					
26	6209-600-004-00	PLUG/SCREW	*	1 -186845					

FIG. 11 TIMING GEAR CASE

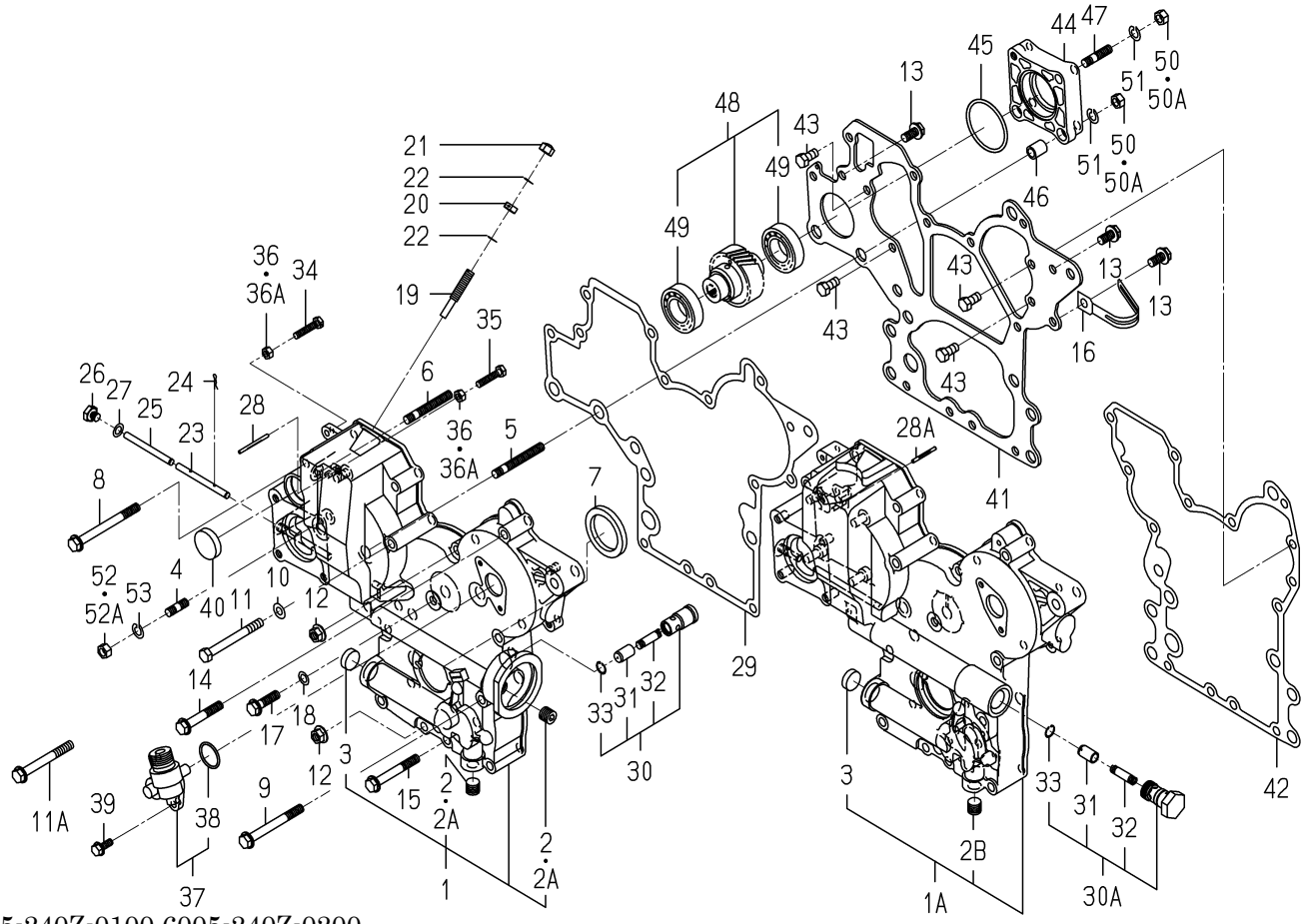

6005-240Z-0100,6005-240Z-0200

KEY	PART CODE	DESCRIPTION	SPC	TYPE OF MODEL E3CD VTB09		ITC	COL	GRP	REMARKS
27	6209-500-003-00	WASHER/08X14X01	*	1 -186845					
28	6209-740-001-00	PIN,GROOVE	*	1 -181035					
28A	6209-740-006-00	PIN/GROOVE	*	1 -186845					
29	6211-312-005-10	GASKET/GEARCASE	*	1 -186845					
30	6213-160-003-10	VALVE/RELIEF ASSY	*	1 -181192					
30A	6213-160-005-00	VALVE/RELIEF ASSY	*	1 -186845					
31	6213-161-003-10	PISTON/VALVE/RELIEF	*	1 -186845					
32	6213-164-001-00	SPRING/RELIEF VALVE	*	1 -186845					
33	V705-140-012-00	RING,SNAP/12 C	*	1 -186845					
34	6209-050-001-00	BOLT/M6	*	1 -186845					
35	6209-050-002-00	BOLT/M6	*	1 -186845					
36	6909-110-406-00	NUT	*	2 -178577					
36A	V301-260-006-00	NUT/M6	*	2 -186845					
37	6219-310-003-20	DRIVE/TACHOMETE ASSY	*	1 -186845					
38	V723-102-002-40	RING/O	*	1 -186845					
39	V230-360-601-60	FLANGEBOLT	*	2 -186845					
40	3625-540-004-00	CAP,BLANK/30	*	1 -181192					
41	6211-311-013-20	PLATE/FRONT	*	1 -186845					
42	6211-312-006-10	GASKET/PLATE	*	1 -186845					
43	6902-050-816-00	BOLT	*	4 -186845					
44	6211-319-003-00	SPACER	*	1 -186845					
45	V723-102-005-00	O-RING 1A S50	*	1 -186845					
46	6209-749-001-20	PIN/TUBE	*	2 -186845					
47	6904-110-822-00	STUD	*	1 -186845					
48	6212-530-017-00	SHAFT/HYDRAULIC ASSY	*	1 -186845					
49	6209-800-011-00	BEARING	*	2 -186845					
50	6909-110-408-00	NUT/M8	*	4 -178577					
50A	V304-260-008-00	NUT	*	4 -186845					
51	V401-160-008-00	WASHER,SP/M 8	*	4 -186845					
52	6909-110-408-00	NUT/M8	*	4 -178577					

FIG. 11 TIMING GEAR CASE

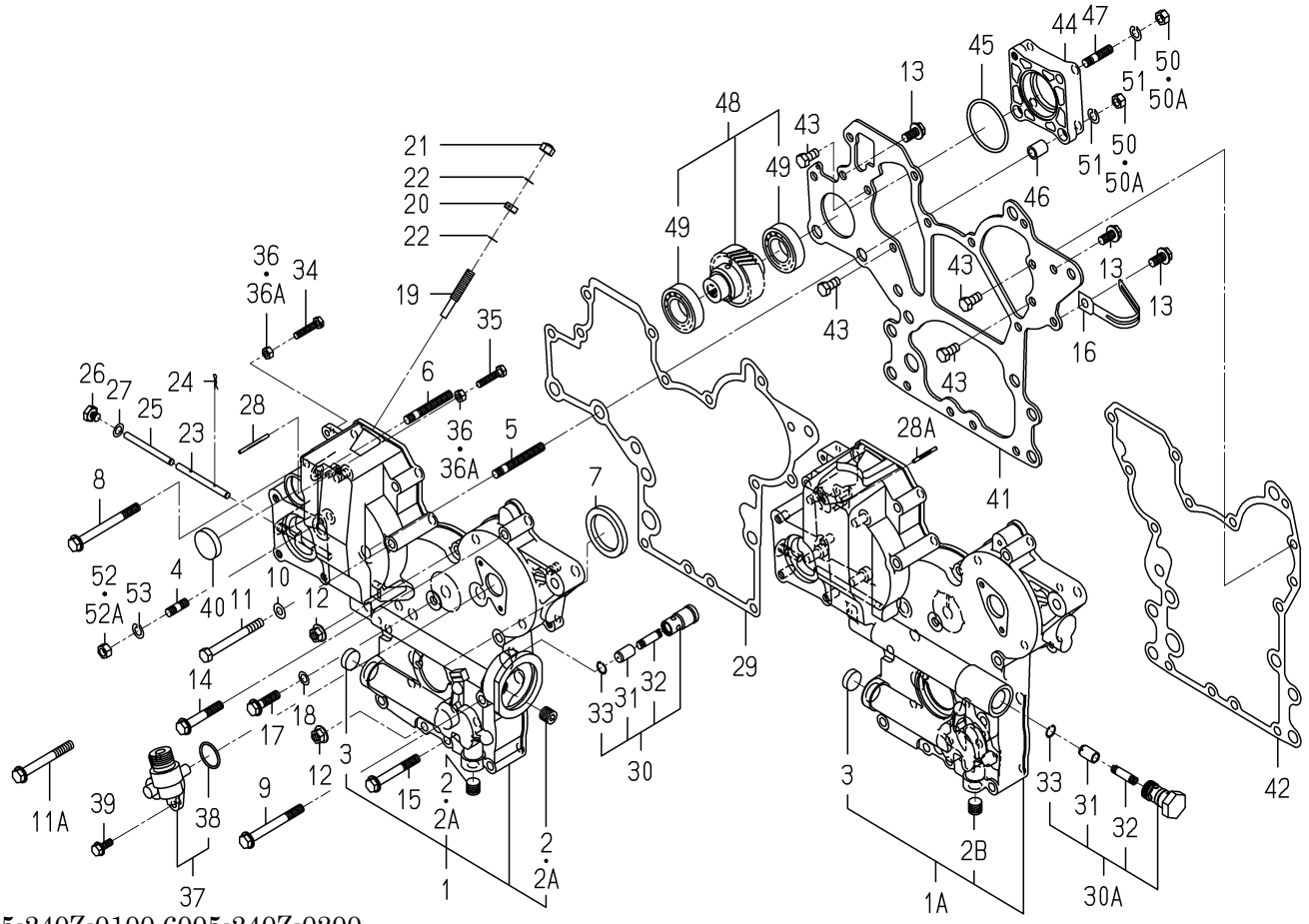

6005-240Z-0100,6005-240Z-0200

KEY	PART CODE	DESCRIPTION	SPC	TYPE OF MODEL E3CD VTB09		ITC	COL	GRP	REMARKS
52A	V304-260-008-00	NUT	*	4 -186845					
53	V401-160-008-00	WASHER,SP/M 8	*	4 -186845					

FIG. 12 TIMING GEAR CASE

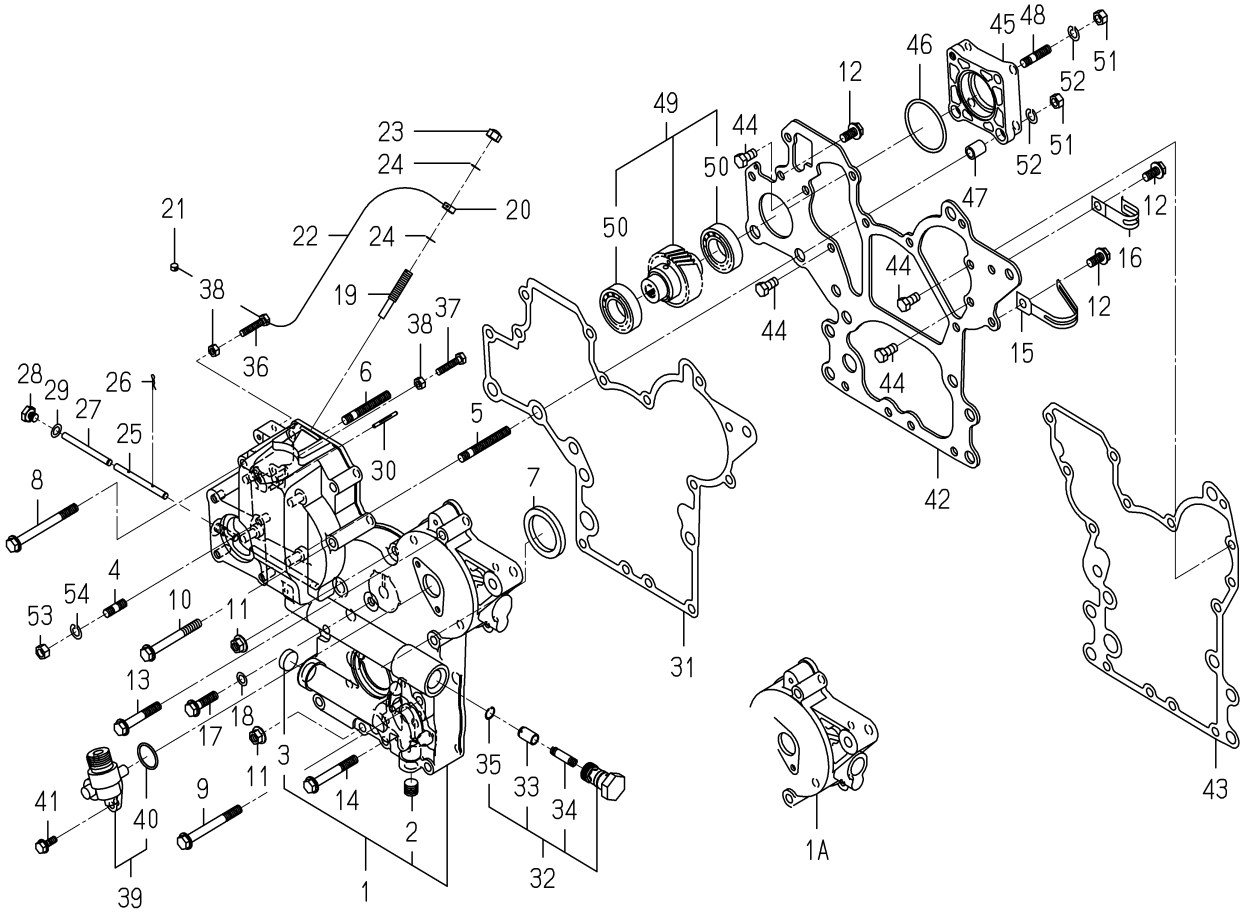

6005-241G-0100,6005-241G-0200

KEY	PART CODE	DESCRIPTION	SPC	TYPE OF MODEL E3CD VTB09		ITC	COL	GRP	REMARKS
1	6211-310-009-70	GEARCASE ASSY	*	1 -192032					
1A	6211-310-009-80	GEARCASE ASSY	*	1 192033-		1			
2	6209-605-003-10	PLUG/PT1/4	*	1 186846-					
3	6209-610-004-00	CUP/SEALING/20	*	1 186846-					
4	6904-110-822-00	STUD	*	4 186846-					
5	6904-110-855-00	STUD	*	2 186846-					
6	6904-110-850-00	STUD	*	1 186846-					
7	6209-625-002-00	SEAL,OIL	*	1 186846-					
8	V231-360-808-50	FLANGEBOLT	*	1 186846-					
9	V231-360-807-50	FLANGEBOLT	*	1 186846-					
10	V231-360-807-00	FLANGEBOLT	*	1 186846-					
11	3817-401-001-00	NUT/M08	*	2 186846-					
12	V231-360-801-60	FLANGEBOLT	*	3 186846-					
13	V231-360-805-00	FLANGEBOLT	*	3 186846-					
14	V231-360-806-00	FLANGEBOLT	*	4 186846-					
15	1650-650-015-00	CLAMP	*	1 186846-					
16	1425-621-004-00	HOLDER/JE/9-9	*	1 186846-					
17	V231-360-803-00	FLANGEBOLT	*	1 186846-					
18	6209-500-003-00	WASHER/08X14X01	*	1 186846-					
19	6215-546-003-10	STOPPER/FULLLOAD	*	1 186846-					
20	6209-409-001-00	NUT/M8	*	1 186846-					
21	6215-549-073-00	LEADSEAL	*	1 186846-					
22	6215-549-074-00	WIRE	*	1 186846-					
23	V341-120-008-00	NUT,CAP/M 8	*	1 186846-					
24	6209-920-002-00	PACKING	*	2 186846-					
25	6215-542-004-20	PIN/ARM	*	1 186846-					
26	P117-303-003-00	PIN/SNAP	*	2 186846-					
27	6215-542-005-10	PIN	*	1 186846-					
28	6209-600-004-00	PLUG/SCREW	*	1 186846-					
29	6209-500-003-00	WASHER/08X14X01	*	1 186846-					

FIG. 12 TIMING GEAR CASE

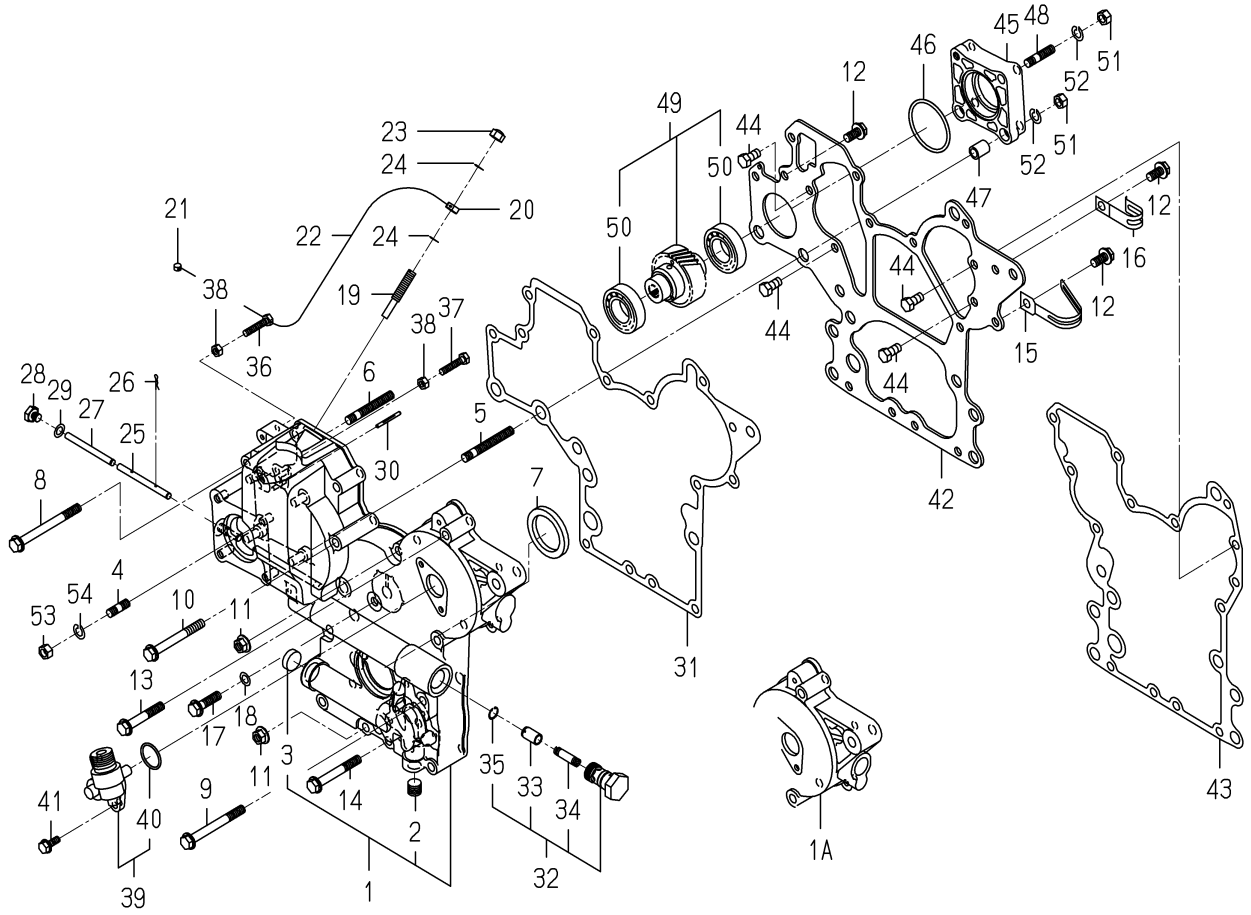

6005-241G-0100,6005-241G-0200

KEY	PART CODE	DESCRIPTION	SPC	TYPE OF MODEL E3CD VTB09		ITC	COL	GRP	REMARKS
30	6209-740-006-00	PIN/GROOVE	*	1 186846-					
31	6211-312-005-10	GASKET/GEARCASE	*	1 186846-					
32	6213-160-005-00	VALVE/RELIEF ASSY	*	1 186846-					
33	6213-161-003-10	PISTON/VALVE/RELIEF	*	1 186846-					
34	6213-164-001-00	SPRING/RELIEF VALVE	*	1 186846-					
35	V705-140-012-00	RING,SNAP/12 C	*	1 186846-					
36	6209-050-001-00	BOLT/M6	*	1 186846-					
37	6209-050-002-00	BOLT/M6	*	1 186846-					
38	V301-260-006-00	NUT/M6	*	2 186846-					
39	6219-310-003-20	DRIVE/TACHOMETE ASSY	*	1 186846-					
40	V723-102-002-40	RING/O	*	1 186846-					
41	V230-360-601-60	FLANGEBOLT	*	2 186846-					
42	6211-311-013-20	PLATE/FRONT	*	1 186846-					
43	6211-312-006-10	GASKET/PLATE	*	1 186846-					
44	6902-050-816-00	BOLT	*	4 186846-					
45	6211-319-003-00	SPACER	*	1 186846-					
46	V723-102-005-00	O-RING 1A S50	*	1 186846-					
47	6209-749-001-20	PIN/TUBE	*	2 186846-					
48	6904-110-822-00	STUD	*	1 186846-					
49	6212-530-017-00	SHAFT/HYDRAULIC ASSY	*	1 186846-					
50	6209-800-011-00	BEARING	*	2 186846-					
51	V304-260-008-00	NUT	*	4 186846-					
52	V401-160-008-00	WASHER,SP/M 8	*	4 186846-					
53	V304-260-008-00	NUT	*	4 186846-					
54	V401-160-008-00	WASHER,SP/M 8	*	4 186846-					

FIG. 13 HANGER

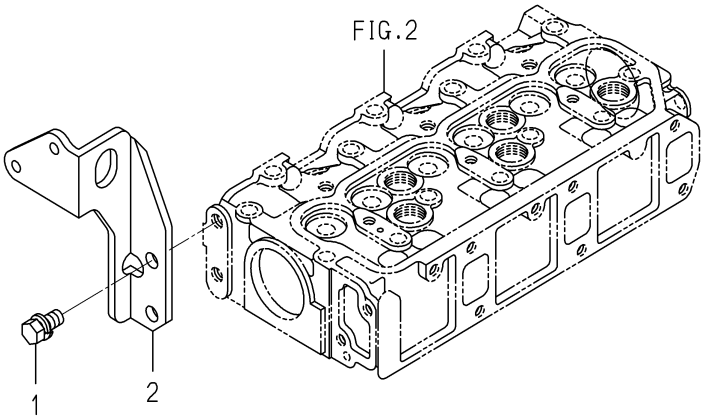

6005-290D-0100

KEY	PART CODE	DESCRIPTION	SPC	TYPE OF MODEL E3CD VTB09		ITC	COL	GRP	REMARKS
1	6901-911-020-00	BOLT,SEMS/M10X20	*	2					
2	6211-777-021-00	HANGER/F	*	1					

FIG. 14 VALVE

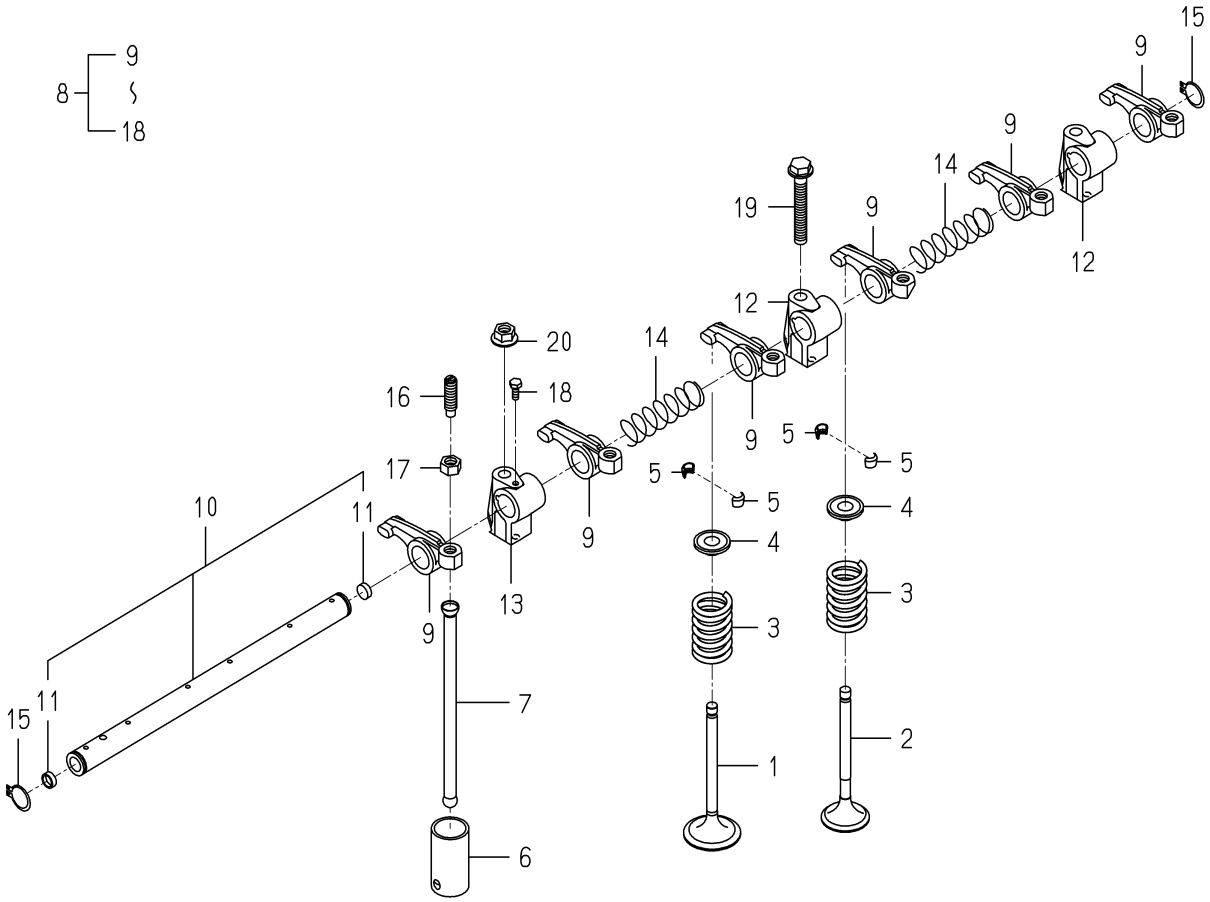

6005-301D-0100

KEY	PART CODE	DESCRIPTION	SPC	TYPE OF MODEL E3CD VTB09		ITC	COL	GRP	REMARKS
1	6212-551-019-00	VALVE/INTAKE	*	3					
2	6212-552-008-00	VALVE/EXHAUST	*	3					
3	6212-561-003-00	SPRING/VALVE	*	6					
4	6212-563-001-00	SEAT,VALVE SPRING	*	6					
5	6212-565-001-00	CUTTER,VALVE	*	12					
6	6212-571-002-30	TAPPET	*	6					
7	6212-575-003-00	PUSHROD	*	6					
8	6212-600-009-20	ROCKERSHAFT ASSY	*	1					
9	6212-611-004-10	ROCKERARM	*	6					
10	6212-620-008-20	SHAFT/ROCKERARM ASSY	*	1					
11	6212-626-002-10	PLUG	*	2					
12	6212-628-010-10	BRACKET/ROCKERSHAFT	*	2					
13	6212-628-011-10	BRACKET/ROCKERSHAFT	*	1					
14	6209-940-004-00	SPRING	*	2					
15	V704-140-016-00	RING,SNAP/16 C	*	2					
16	6212-616-002-00	SCREW ADJUST	*	6					
17	6209-409-003-00	NUT	*	6					
18	6209-000-002-00	BOLT	*	1					
19	V231-360-805-50	FLANGEBOLT	*	1					
20	3817-401-001-00	NUT/M08	*	2					

FIG. 15 CAM SHAFT

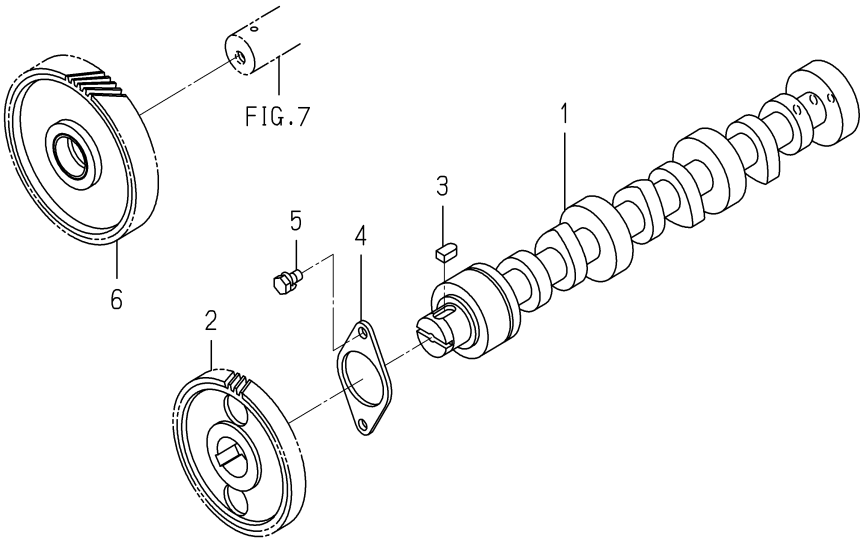

6005-310A-0100

KEY	PART CODE	DESCRIPTION	SPC	TYPE OF MODEL E3CD VTB09		ITC	COL	GRP	REMARKS
1	6212-511-005-00	CAMSHAFT	*	1					
2	6212-522-004-10	GEAR/CAMSHAFT	*	1					
3	6209-730-005-00	KEY/07X05X09	*	1					
4	6212-535-007-00	PLATE/THRUST	*	1					
5	6901-910-612-00	BOLT,SEMS/M6X12	*	2					
6	6212-523-021-00	GEAR/IDLE ASSY	*	1					

FIG. 16 PISTON

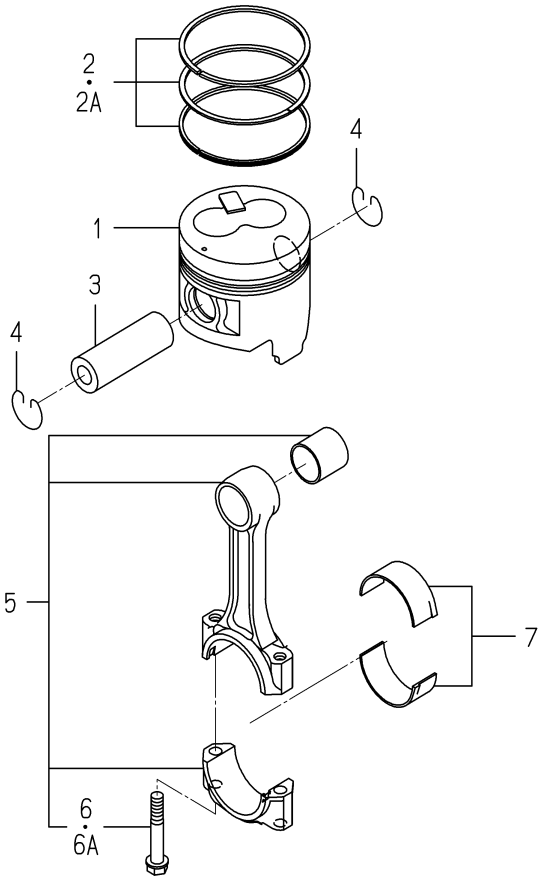

6005-340Q-0100

KEY	PART CODE	DESCRIPTION	SPC	TYPE OF MODEL E3CD VTB09		ITC	COL	GRP	REMARKS
1	6212-111-095-30	PISTON	*	3					
2	6212-121-029-10	RING/PISTONSET	*	3 -193488					
2A	6212-121-029-20	RING/PISTONSET	*	3 193489-		1			
3	6212-211-002-00	PIN/PISTON	*	3					
4	6909-950-115-00	RING SNAP	*	6					
5	6212-230-011-30	CONNECTINGROD ASSY	*	3					
6	6212-235-004-00	BOLT/CONNECTINGROD	*	6 -150480					
6A	6212-235-004-10	BOLT/CONNECTINGROD	*	6 150481-		1			
7	6212-271-009-00	BEARING/CONNECTING R	*	3					

FIG. 17 PISTON/OVER SIZE (OPTION)

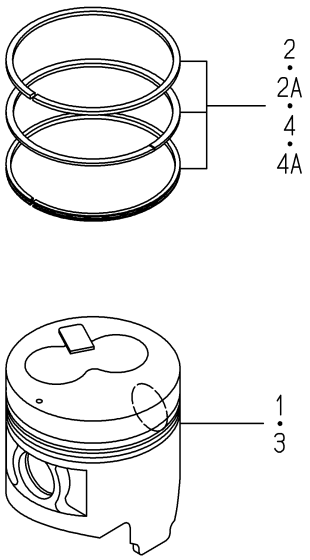

6005-349Q-0100

KEY	PART CODE	DESCRIPTION	SPC	TYPE OF MODEL E3CD VTB09		ITC	COL	GRP	REMARKS
1	6212-114-095-30	PISTON/OV	T	3					
2	6212-124-029-10	RING/PISTON/OVSET	T	3 -193488					
2A	6212-124-029-20	RING/PISTON/OVSET	T	3 193489-		1			
3	6212-116-095-30	PISTON/OV	T	3					
4	6212-126-029-10	RING/PISTON/OVSET	T	3 -193488					
4A	6212-126-029-20	RING/PISTON/OVSET	T	3 193489-		1			

FIG. 18 CRANK SHAFT

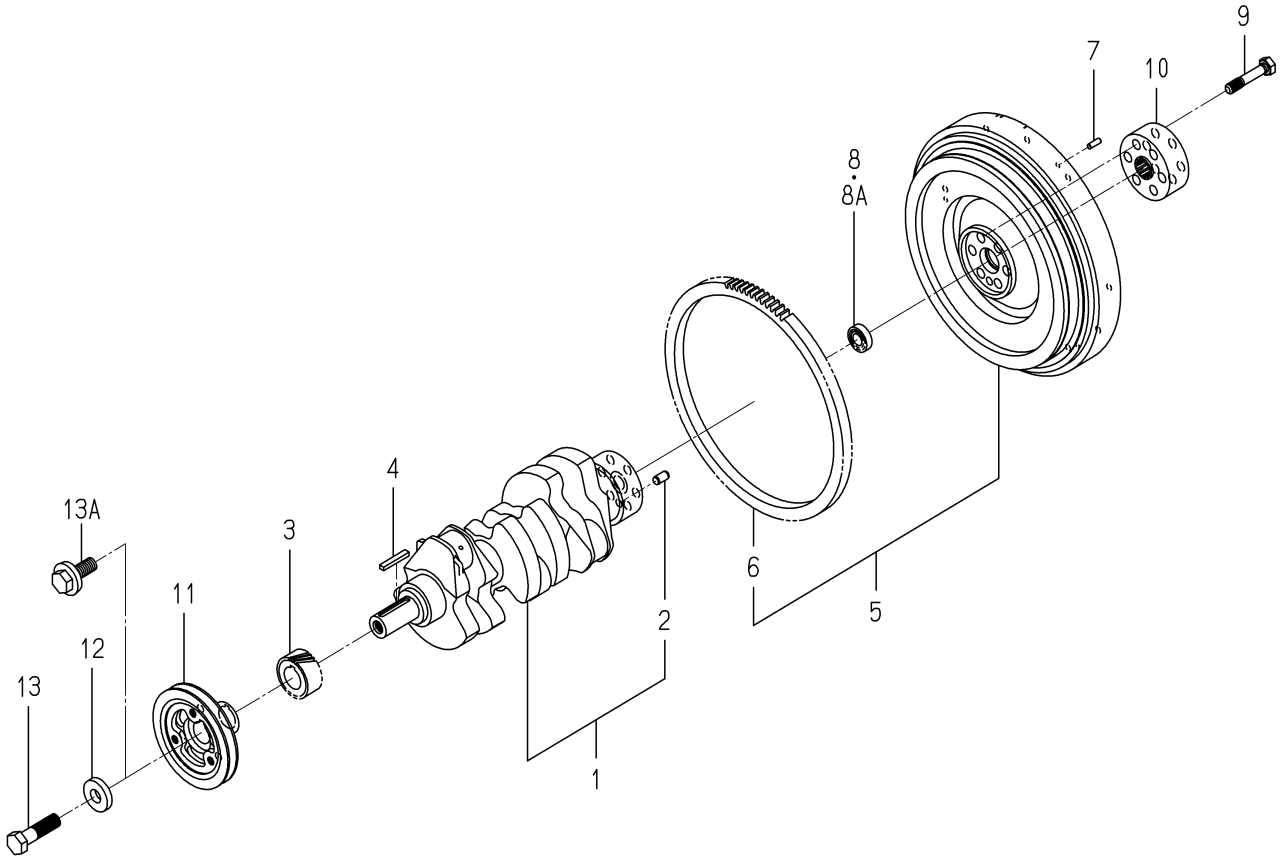

6005-351D-0100

KEY	PART CODE	DESCRIPTION	SPC	TYPE OF MODEL E3CD VTB09		ITC	COL	GRP	REMARKS
1	6212-310-011-40	CRANKSHAFT ASSY	*	1					
2	V523-101-001-80	PIN	*	1					
3	6212-521-008-00	GEAR/CRANK	*	1					
4	6209-730-006-00	KEY/07X05X43	*	1					
5	6212-330-075-10	FLYWHEEL ASSY	*	1					
6	6212-333-002-00	RINGGEAR	*	1					
7	V523-100-601-80	PIN	*	3					
8	V600-150-600-20	BEARING,RB/6002SS	*	1 -156430					
8A	V600-350-600-20	BEARING/BALL	*	1 156431-					
9	6209-000-041-00	BOLT	*	6					
10	6212-339-009-10	BOSS/SPLINE	*	1					
11	6212-371-035-10	PULLEY/CRANK	*	1					
12	6212-379-001-00	WASHER	*	1 -165260					
13	6901-066-645-00	BOLT	*	1 -165260					
13A	6209-000-043-00	BOLT/CRANK	*	1 165261-					

FIG. 19 OIL PUMP

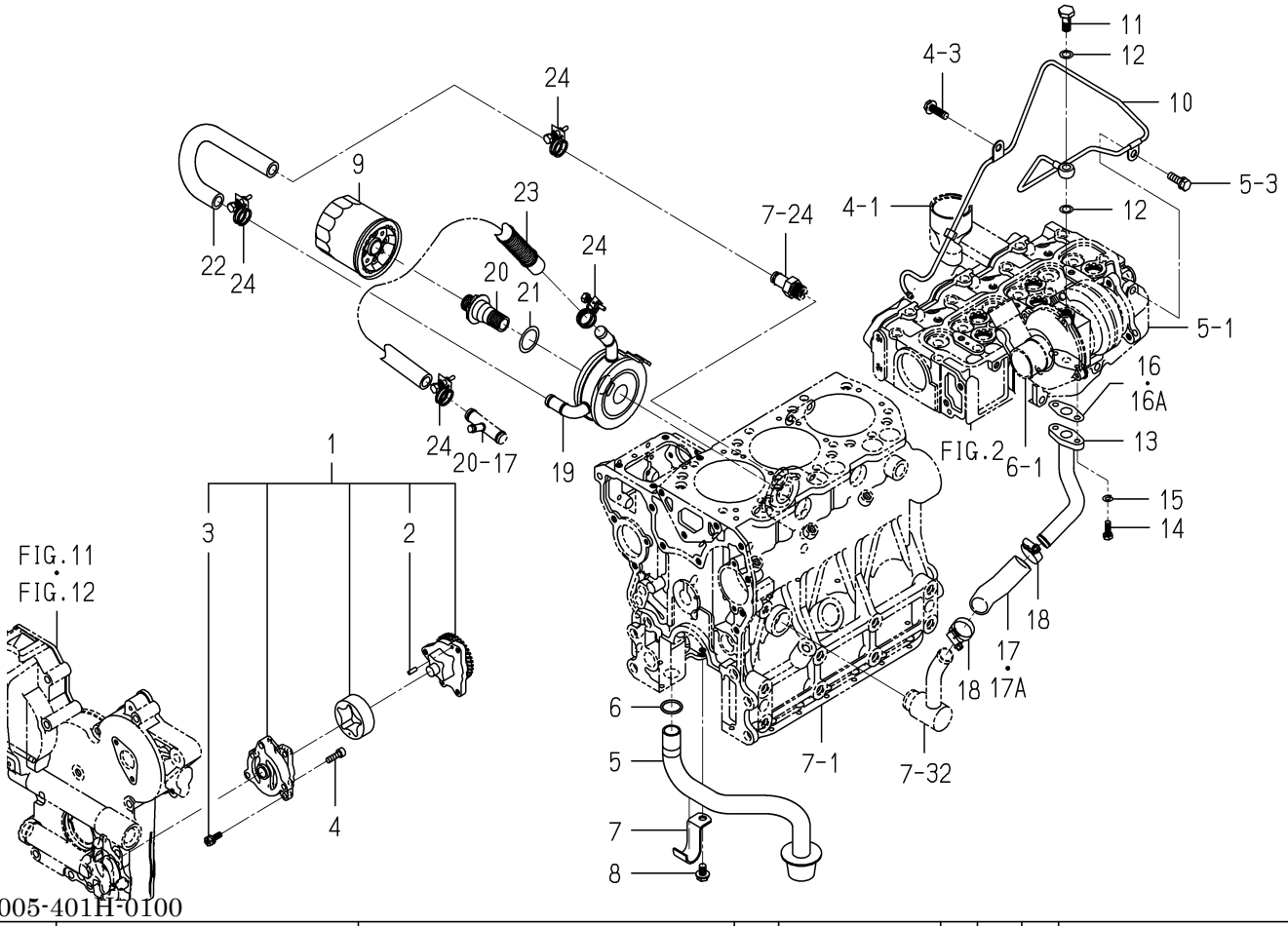

6005-401H-0100

KEY	PART CODE	DESCRIPTION	SPC	TYPE OF MODEL E3CD VTB09		ITC	COL	GRP	REMARKS
1	6213-100-010-00	OILPUMP ASSY	*	1					
2	6213-129-003-00	PIN/STRAIGHT	*	2					
3	6213-119-001-00	BOLT/WS	*	3					
4	V220-540-602-00	SCREW/SOCKET	*	3					
5	6213-140-013-00	STRAINER	*	1					
6	V720-103-502-20	O-RING/P22	*	1					
7	6213-149-003-20	CLAMP/STRAINER	*	1					
8	V231-360-801-60	FLANGEBOLT	*	1					
9	6213-240-005-10	CARTRIDGE/OILFILTER	*	1					
10	6213-311-057-00	PIPE/OIL ASSY	*	1					
11	6209-060-004-00	BOLT/EYE	*	1					
12	6209-920-003-00	GASKET	*	2					
13	6213-311-055-00	PIPE/OIL COMP	*	1					
14	6209-030-094-00	BOLT	*	2					
15	V401-160-006-00	WASHER,SP/M 6	*	2					
16	6209-630-004-10	GASKET	*	1 -159416					
16A	6209-630-004-20	GASKET	*	1 159417-		1			
17	6209-360-076-10	HOSE/RUBBER	*	1 -188129					
17A	6209-360-076-20	HOSE/RUBBER	*	1 188130-		1			
18	J061-116-025-00	CLAMP/WORM/16-25	*	2					
19	6221-700-004-00	OILCOOLER	*	1					
20	6221-726-006-00	CONNECTOR/OILCOOLER	*	1					
21	6221-726-008-00	WASHER/OILCOOLER	*	1					
22	6209-360-071-10	HOSE/OILCOOLER/IN	*	1					
23	6209-360-072-20	HOSE/OILCOOLER/OUT	*	1					
24	J061-216-020-00	CLAMP/WIRE/16-20	*	4					

FIG. 20 WATER PUMP

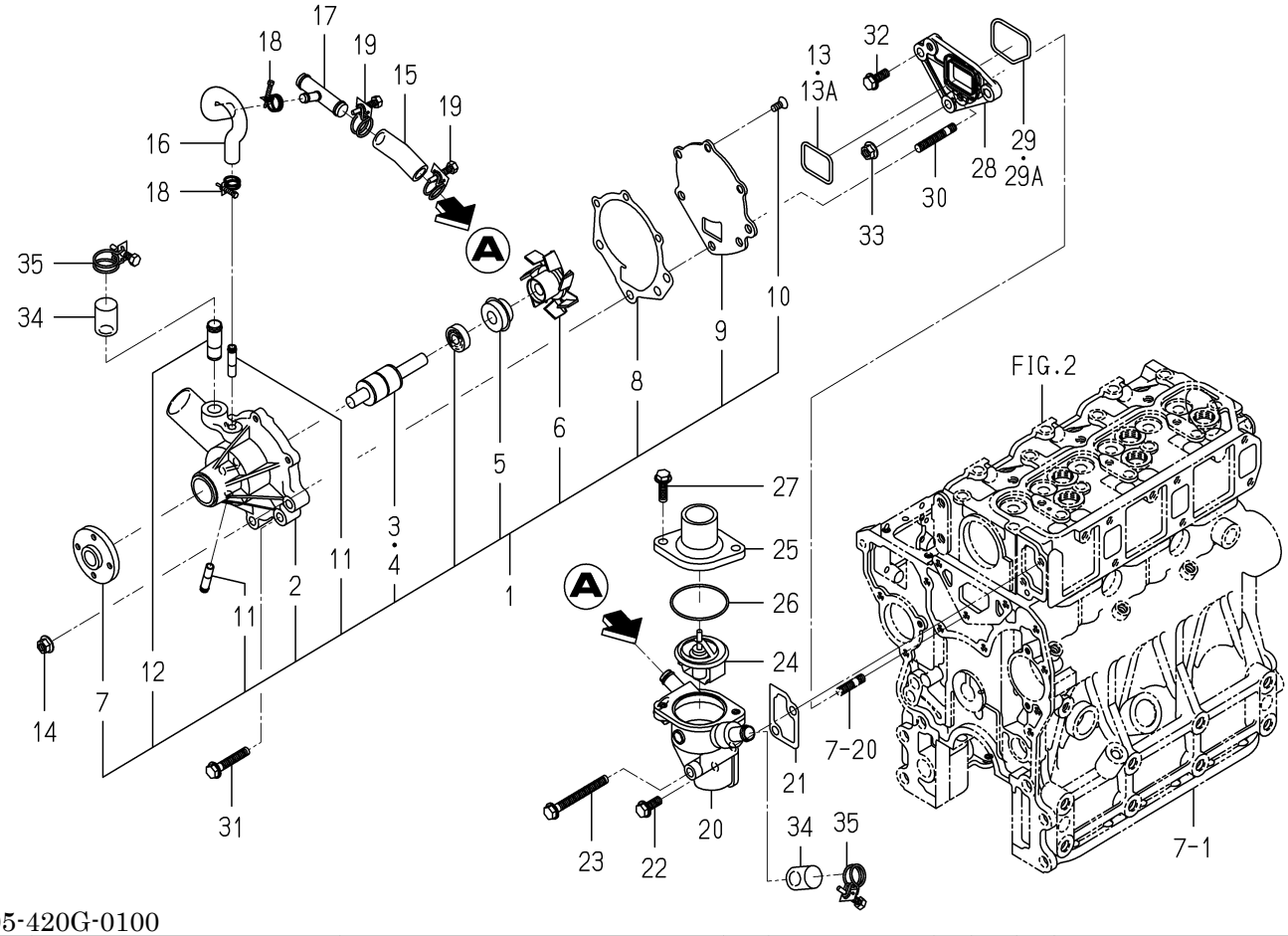

6005-420G-0100

KEY	PART CODE	DESCRIPTION	SPC	TYPE OF MODEL E3CD VTB09		ITC	COL	GRP	REMARKS
1	6213-610-011-10	WATERPUMP ASSY	*	1					
2	6213-611-006-00	BODY/WATERPUMP	*	1					
3	6213-631-002-00	BEARING/WATER PUMP	*	1					
4	6213-631-005-00	BEARING/WATERPUMP	*	1					
5	6213-622-002-10	SEAL SET/WATER PUMP	*	1					
6	6213-621-003-00	ROTOR/WATERPUMP	*	1					
7	6213-642-002-00	SEAL/WATER PUMPPULLE	*	1					
8	6213-613-002-10	GASKET	*	1					
9	6213-612-004-00	PLATE/WATER PUMP	*	1					
10	6213-619-003-00	SCREW/WATER PUMP	*	3					
11	6213-619-002-00	PIPE/WATER PUMP	*	2					
12	6213-619-009-00	PIPE/WATERPUMP	*	1					
13	V721-103-104-00	O-RING/G40	*	1 -150480					
13A	6213-614-013-00	GASKET/WATERPUMP	*	1 150481-					
14	3817-401-001-00	NUT/M08	*	2					
15	6213-729-004-10	HOSE/RUBBER	*	1					
16	6213-729-013-10	HOSE/RUBBER	*	1					
17	6213-719-002-00	JOINT	*	1					
18	J061-210-015-00	CLAMP/WIRE/10-15	*	2					
19	J061-216-020-00	CLAMP/WIRE/16-20	*	2					
20	6213-716-003-10	HOUSING/THERMOSTAT	*	1					
21	6213-743-002-10	GASKET/HOUSING	*	1					
22	V231-360-802-00	FLANGEBOLT	*	1					
23	V231-360-807-50	FLANGEBOLT	*	1					
24	6513-770-022-10	THERMOSTAT	*	1					
25	6213-711-003-20	PIPE,WATER OUTLET	*	1					
26	V723-102-005-50	O-RING	*	1					
27	V231-360-802-50	FLANGEBOLT	*	2					
28	6213-619-006-00	SPACER/WATERPUMP	*	1					
29	V721-113-105-00	O-RING HS90 G50	*	1 -150480					

FIG. 20 WATER PUMP

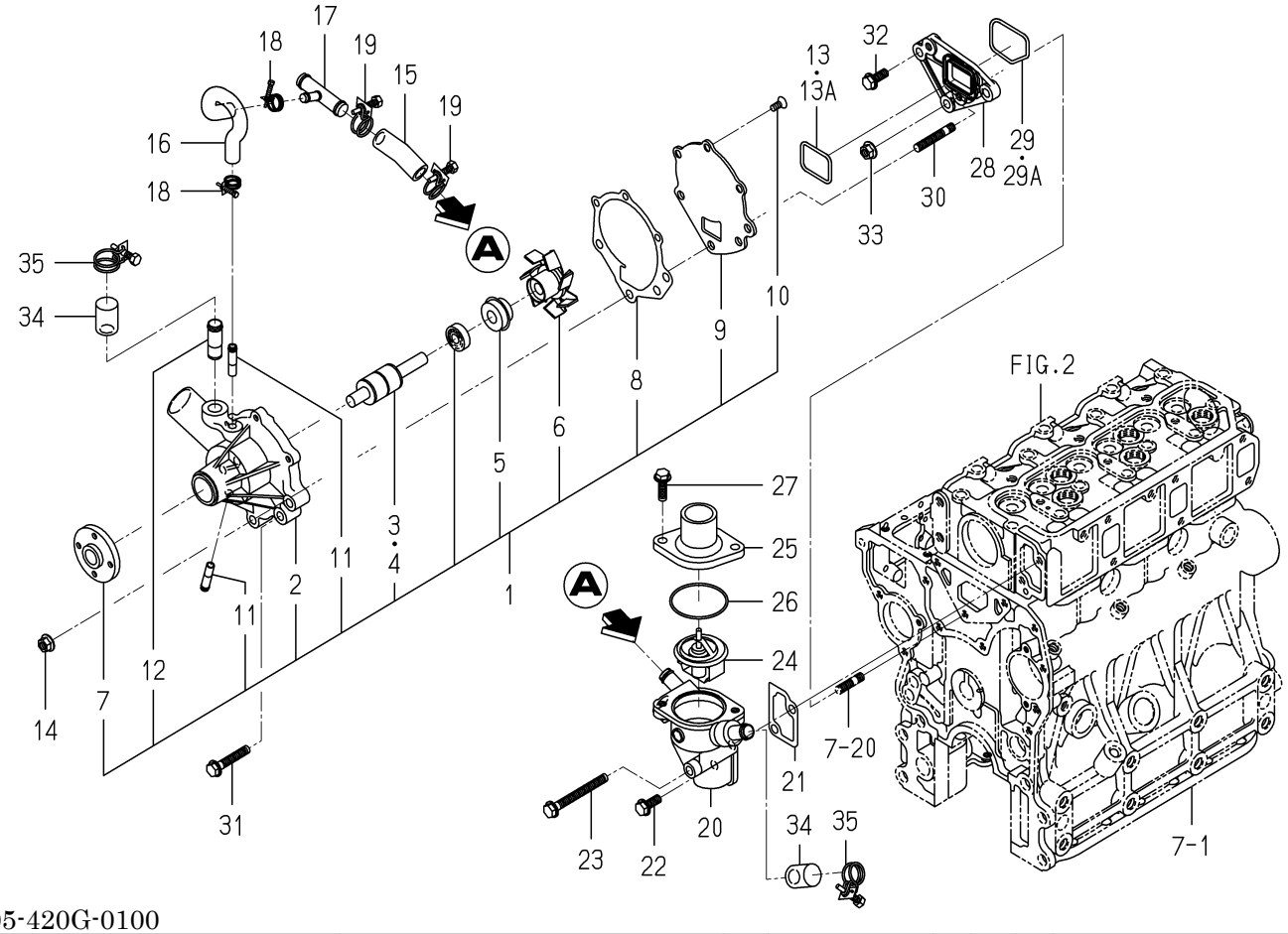

6005-420G-0100

KEY	PART CODE	DESCRIPTION	SPC	TYPE OF MODEL E3CD VTB09		ITC	COL	GRP	REMARKS
29A	6213-614-014-00	GASKET/SPACER	*	1 150481-					
30	6904-110-840-00	STUD/M8X40	*	2					
31	V231-360-804-50	FLANGEBOLT	*	1					
32	V231-360-802-00	FLANGEBOLT	*	1					
33	3817-401-001-00	NUT/M08	*	1					
34	6213-729-011-00	CAP	*	2					
35	J061-220-024-00	CLAMP/WIRE/20-24	*	2					

FIG. 21 COOLING FAN

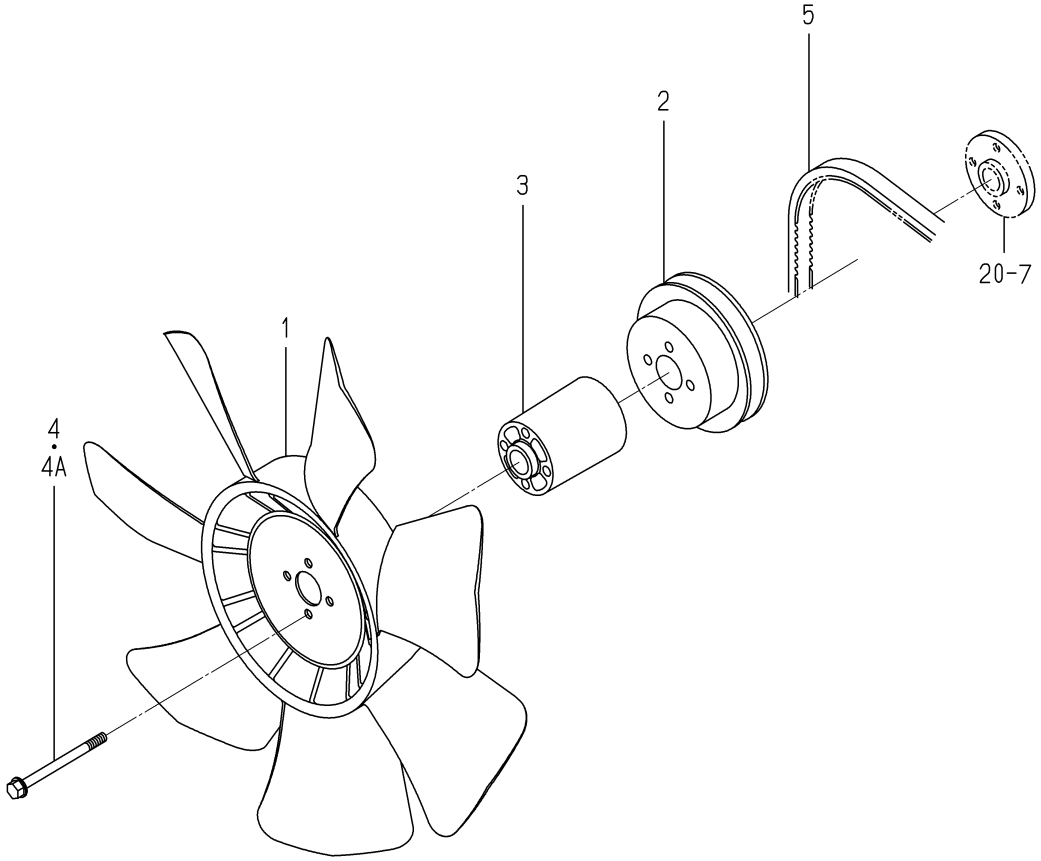

6005-480Z-0100

KEY	PART CODE	DESCRIPTION	SPC	TYPE OF MODEL E3CD VTB09		ITC	COL	GRP	REMARKS
1	6213-660-015-00	FAN/COOLING	*	1					
2	6213-641-022-10	PULLEY/WATERPUMP	*	1					
3	6213-669-009-00	SPACER/FAN/68	*	1					
4	6209-030-048-00	BOLT/WS	*	4 -194674					
4A	6209-046-007-00	BOLT/FLANGE	*	4 194675-					
5	6213-671-031-00	BELT/VR5A39.5	*	1					

FIG. 22 INJECTION NOZZLE

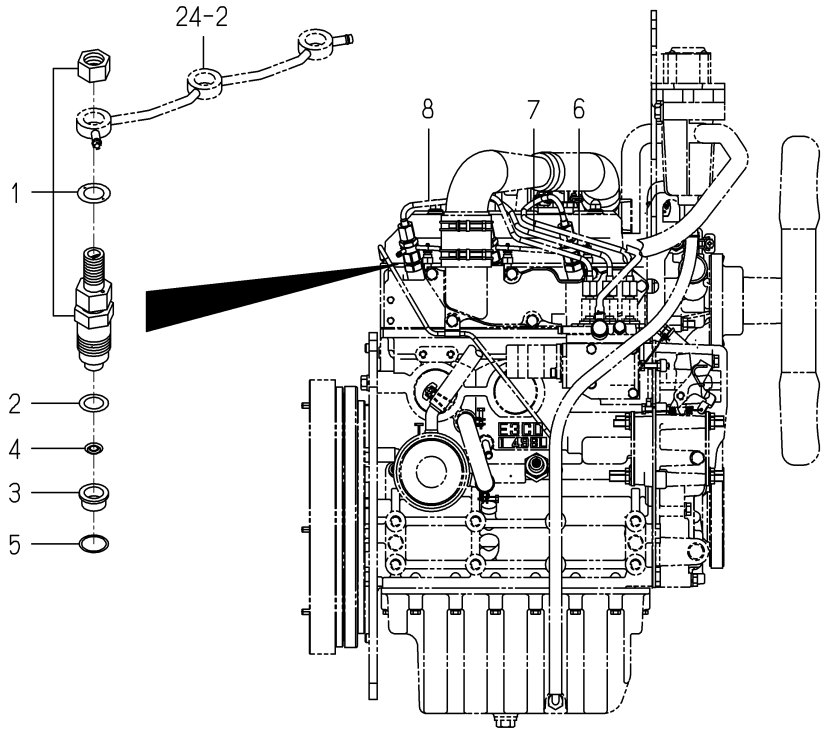

6005-501F-0100

KEY	PART CODE	DESCRIPTION	SPC	TYPE OF MODEL E3CD VTB09		ITC	COL	GRP	REMARKS
1	6215-300-037-00	INJECTIONNOZZLE ASSY	*	3					FIG 030
2	6215-315-002-00	GASKET,NOZZLE	*	3					
3	6215-315-006-00	HEATSHILD/NOZZLE	*	3					
4	6215-315-005-00	WASHER/CORRUGATE	*	3					
5	6215-315-007-00	GASKET	*	3					
6	6215-411-137-00	PIPE/INJECTION ASSY	*	1					
7	6215-411-138-00	PIPE/INJECTION ASSY	*	1					
8	6215-411-139-00	PIPE/INJECTION ASSY	*	1					

FIG. 23 INJECTION PUMP

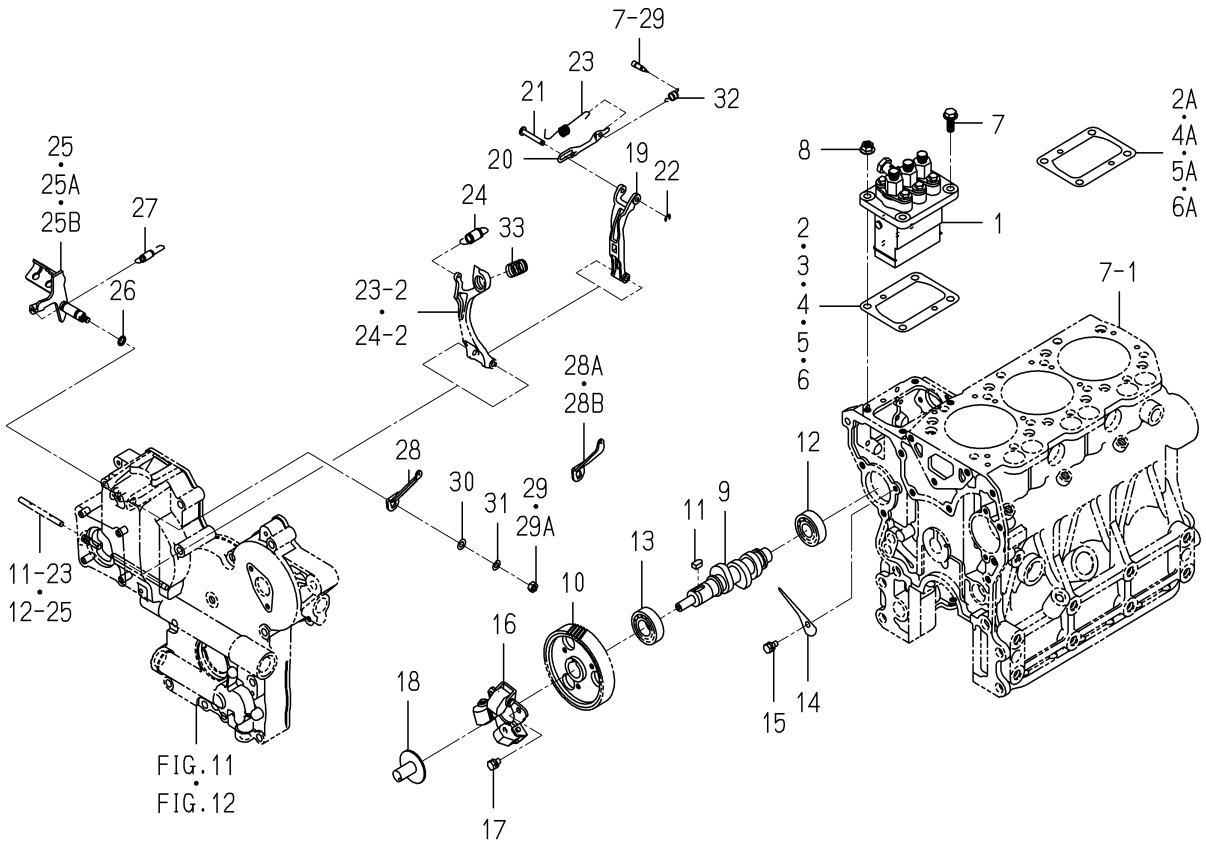

6005-511D-0100

KEY	PART CODE	DESCRIPTION	SPC	TYPE OF MODEL E3CD VTB09		ITC	COL	GRP	REMARKS
1	6215-600-078-10	INJECTIONPUMP ASSY	*	1					FIG 031
2	6219-752-006-00	SHIM/INJECTION P/0.3	*	1 -143634					
2A	6219-752-045-00	SHIM/INJECTIONPUMP	*	1 143635-					
3	6219-752-007-00	SHIM/INJECTION P/0.1	*	1 -143634					
4	6219-752-008-00	SHIM/INJECTION P/0.2	*	1 -143634					
4A	6219-752-044-00	SHIM/INJECTIONPUMP	*	1 143635-					
5	6219-752-009-00	SHIM/INJECTION P/0.4	*	1 -143634					
5A	6219-752-046-00	SHIM/INJECTIONPUMP	*	1 143635-					
6	6219-752-010-00	SHIM/INJECTION P/0.5	*	1 -135590					
6A	6219-752-047-00	SHIM/INJECTIONPUMP	*	1 143635-					
7	V231-360-802-00	FLANGEBOLT	*	2					
8	3817-401-001-00	NUT/M08	*	2					
9	6215-621-018-10	CAMSHAFT/INJPUMP	*	1					
10	6212-524-012-30	GEAR/INJECTIONPUMP	*	1					
11	6209-730-005-00	KEY/07X05X09	*	1					
12	V600-110-620-30	BEARING,RB/6203	*	1					
13	6209-800-010-00	BEARING	*	1					
14	6212-535-009-00	PLATE/THRUST/INJPUMP	*	1					
15	6901-910-612-00	BOLT,SEMS/M6X12	*	1					
16	6215-520-007-10	FLYWEIGHT ASSY	*	1					
17	6209-030-043-00	BOLT/M6X10	*	3					
18	6215-526-004-00	THRUSTPIECE	*	1					
19	6215-541-001-10	ARM/FLOATING COMP	*	1					
20	6215-543-002-10	RINK/CONTROL	*	1					
21	6215-542-006-00	PIN,CONTROL	*	1					
22	V710-140-004-00	RING,SNAP/ 4 E	*	1					
23	6215-549-031-10	SPRING/SETTING	*	1					
24	6215-531-019-00	SPRING/GOVERNOR	*	1					
25	6215-541-024-30	LEVER/CONTROL COMP	*	1 -180974					
25A	6215-541-045-00	LEVER/CONTROL COMP	*	1 -191056					

FIG. 23 INJECTION PUMP

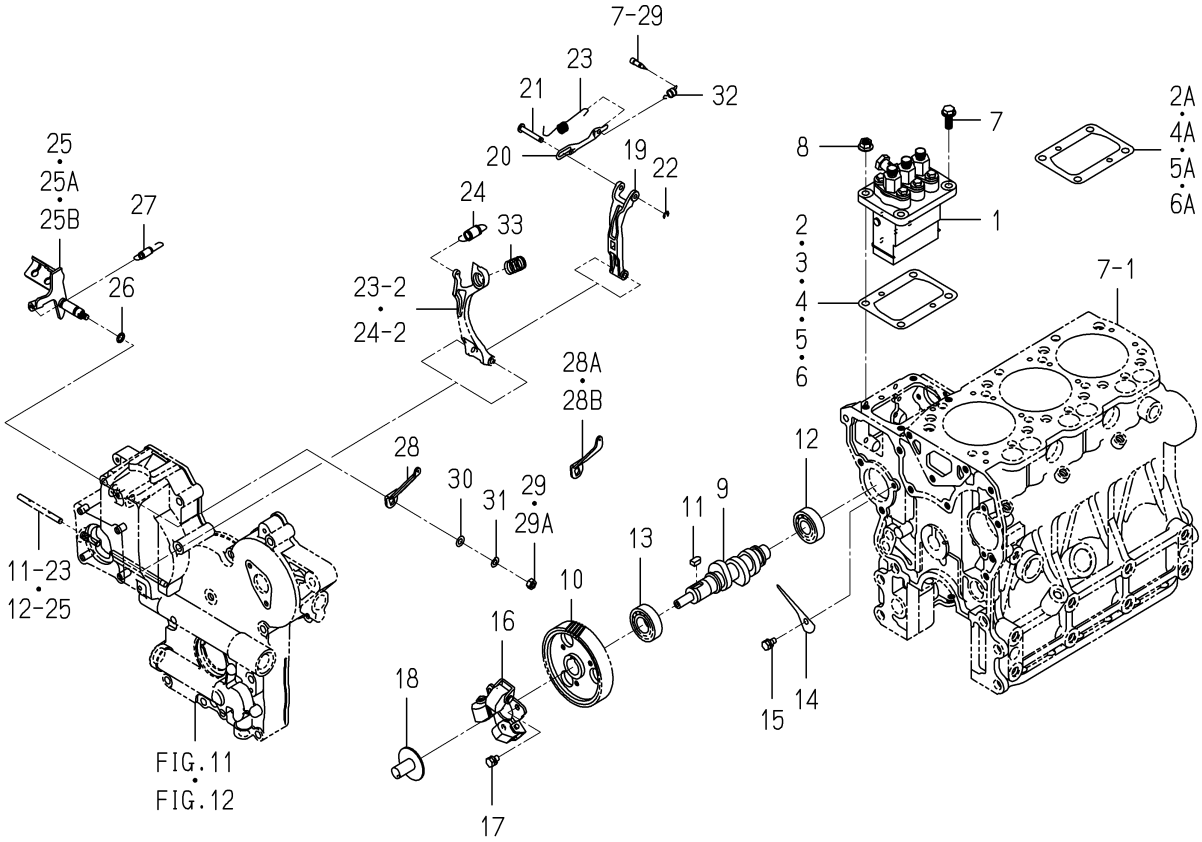

6005-511D-0100

KEY	PART CODE	DESCRIPTION	SPC	TYPE OF MODEL E3CD VTB09		ITC	COL	GRP	REMARKS
25B	6215-541-045-10	LEVER/CONTROL COMP	*	1 191057-		3			
26	V720-101-900-80	O-RING/P 8	*	1					
27	6209-580-002-10	SPRING,RETURN	*	1					
28	6215-549-007-10	ARM/CONTROL	*	1 -180974					
28A	6215-549-076-00	ARM/CONTROL	*	1 -183522					
28B	6215-549-076-10	ARM/CONTROL	*	1 183523-		3			
29	6909-110-406-00	NUT	*	1 -178577					
29A	V301-260-006-00	NUT/M6	*	1 178578-					
30	V411-260-006-00	WASHER / M6	*	1					
31	V401-160-006-00	WASHER,SP/M 6	*	1					
32	6215-549-039-00	SPRING/STARTING	*	1					
33	6215-537-002-10	SPRING/IDLE	*	1					

FIG. 24 FUEL PIPE

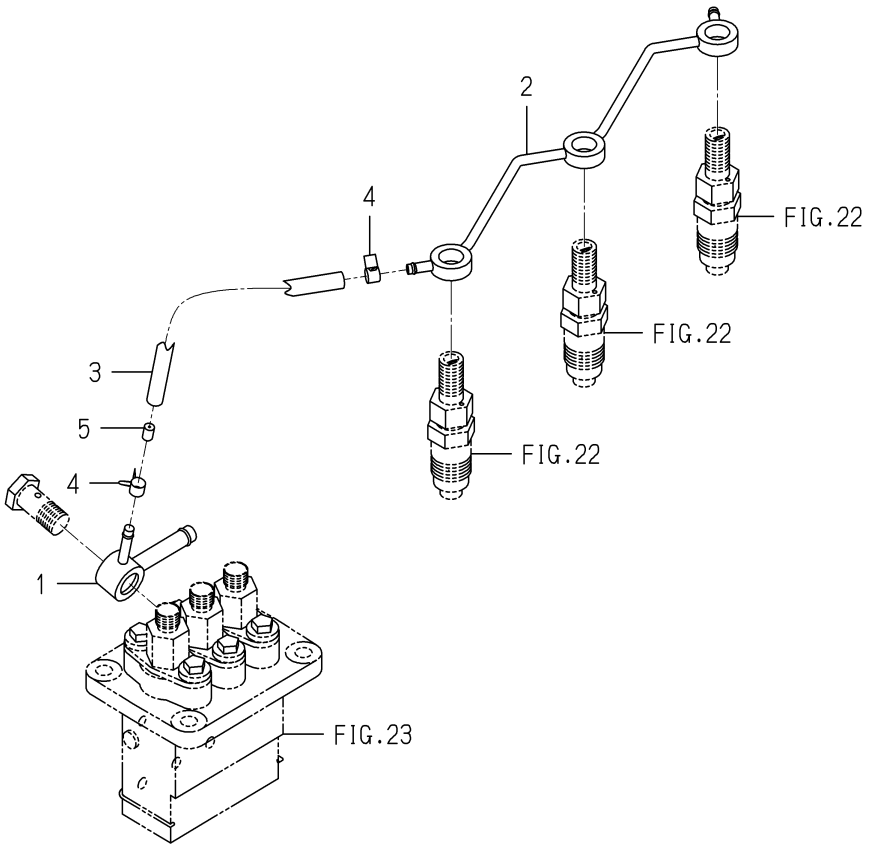

6005-550F-0100

KEY	PART CODE	DESCRIPTION	SPC	TYPE OF MODEL E3CD VTB09		ITC	COL	GRP	REMARKS
1	6215-412-004-00	CONNECTOR/FUEL	*	1					
2	6215-411-136-00	PIPE/FUEL	*	1					
3	6209-360-011-00	HOSE/RUBBER	*	1					
4	J062-076-082-00	CLIP/HOSE/7.6-8.2	*	2					
5	3640-586-004-00	RESISTANCE/1.0	*	1					

FIG. 25 ADAPTER

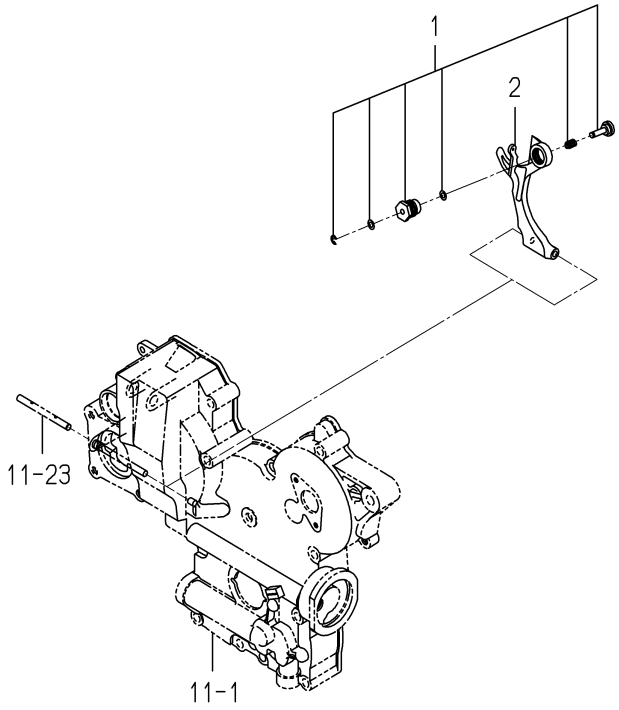

6005-560 -0100

KEY	PART CODE	DESCRIPTION	SPC	TYPE OF MODEL E3CD VTB09		ITC	COL	GRP	REMARKS
1	6215-548-029-00	ADAPTER/255X065 ASSY	*	1 -148754					
2	6215-541-016-30	ARM/TENSION	*	1 -148754					

FIG. 26 ADAPTER

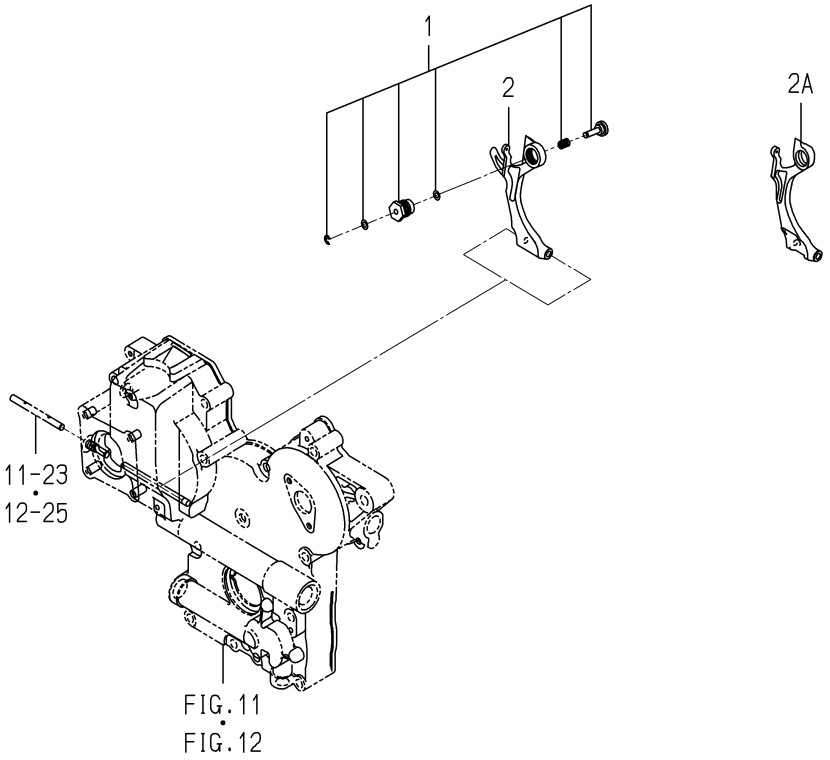

6005-560Y-0100

KEY	PART CODE	DESCRIPTION	SPC	TYPE OF MODEL E3CD VTB09		ITC	COL	GRP	REMARKS
1	6215-548-070-00	ADAPTER/250X090 ASSY	*	1 148755-					
2	6215-541-016-30	ARM/TENSION	*	1 -168197					
2A	6215-541-016-40	ARM/TENSION	*	1 168198-		1			

FIG. 27 ELECTRIC (1)

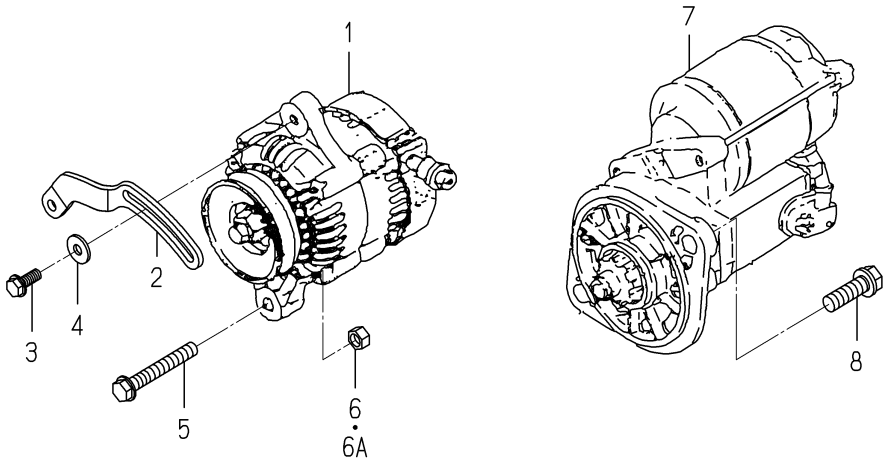

6005-801W-0100,6005-801W-0200

KEY	PART CODE	DESCRIPTION	SPC	TYPE OF MODEL E3CD VTB09		ITC	COL	GRP	REMARKS
1	6281-200-021-00	GENERATOR ASSY	*	1					FIG 033
2	6213-674-006-20	PLATE/ADJUST	*	1					
3	V231-360-802-00	FLANGEBOLT	*	1					
4	1373-121-001-00	WASHER/9X22X2	*	1					
5	V233-361-007-00	FLANGEBOLT	*	1					
6	6909-110-410-00	NUT/M10	*	1 -171486					
6A	V334-260-010-00	NUT/M10	*	1 171487-					
7	6281-100-007-20	STARTER ASSY	*	1					FIG 032
8	6901-931-240-00	BOLT	*	2					

FIG. 28 ELECTRIC (2)

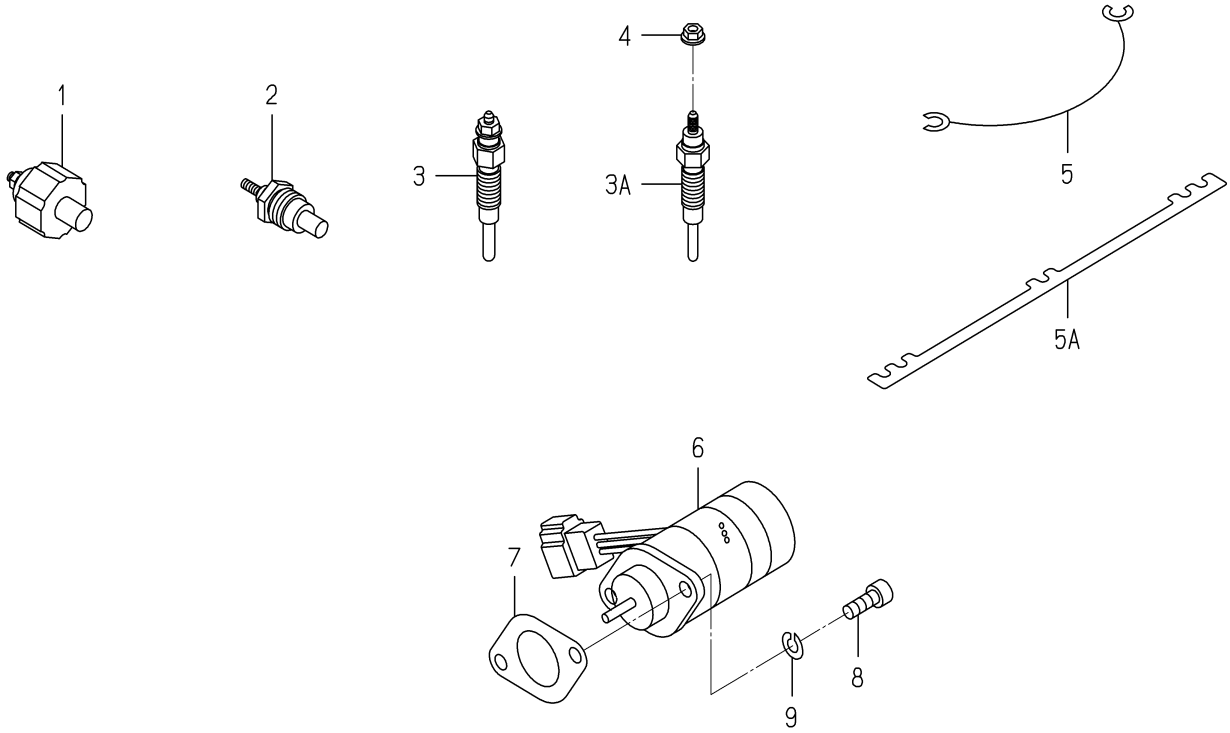

6005-820O-0100,6005-820O-0200

KEY	PART CODE	DESCRIPTION	SPC	TYPE OF MODEL E3CD VTB09		ITC	COL	GRP	REMARKS
1	6281-971-003-00	SWITCH/OILPRESSURE	*	1					
2	6282-450-006-00	THERMOMETER	*	1					
3	6281-410-023-00	GLOWPLUG	*	3 -170197					
3A	6281-410-023-10	GLOWPLUG	*	3 170198-		3			
4	6209-440-005-00	NUT/FLANGE	*	3 170202-					
5	6219-732-012-00	CONNECTOR/GLOWPLUG	*	2 -150020					
5A	6219-732-017-00	CONNECTOR/GLOWPLUG	*	1 150021-					
6	6281-910-011-00	SOLENOID	*	1					
7	6209-630-002-10	GASKET	*	1					
8	V220-540-601-60	BOLT	*	2					
9	V401-160-006-00	WASHER,SP/M 6	*	2					

FIG. 29 REPAIR PARTS(OPTION)

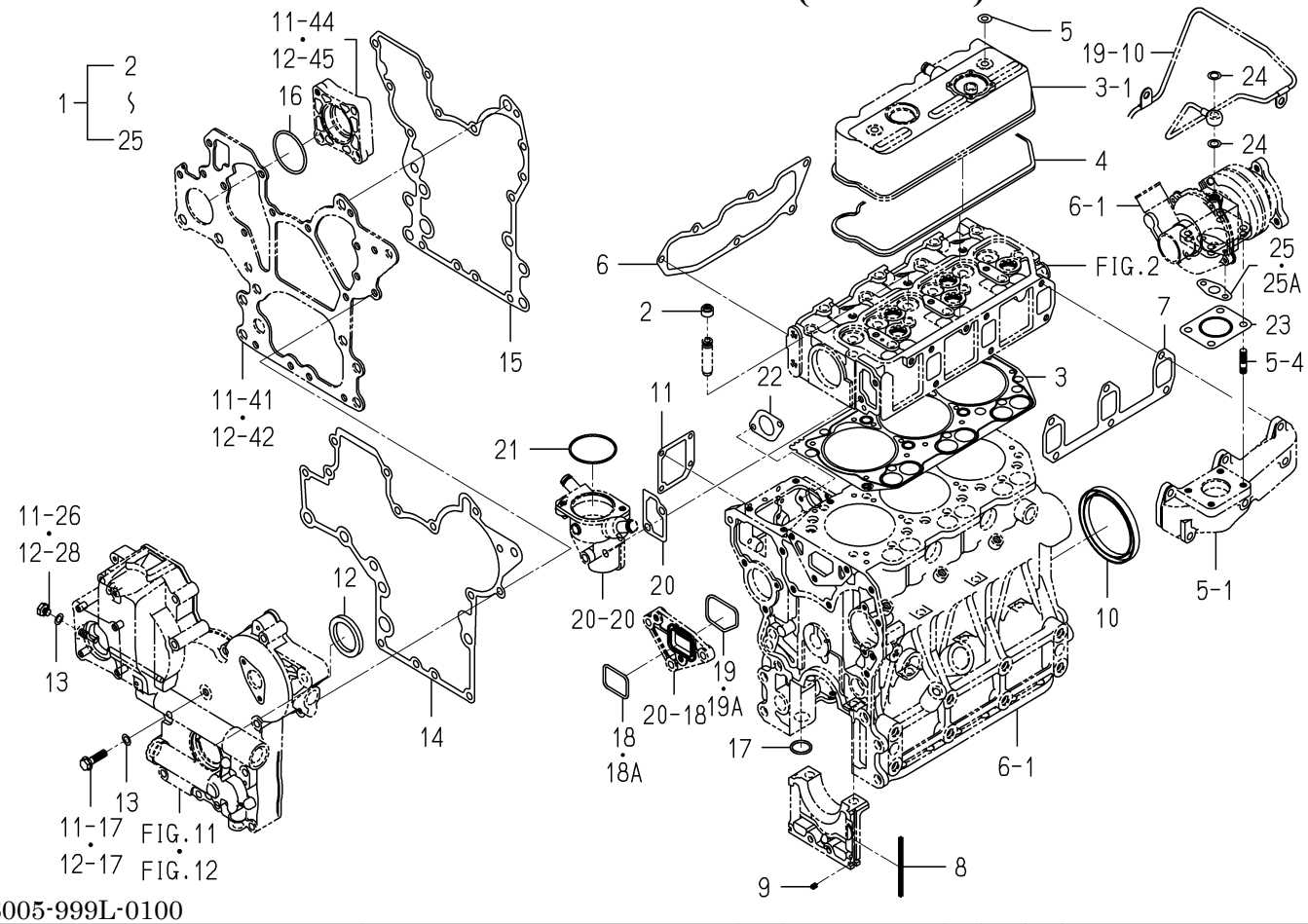

6005-999L-0100

KEY	PART CODE	DESCRIPTION	SPC	TYPE OF MODEL E3CD VTB09		ITC	COL	GRP	REMARKS
1	6287-810-041-10	REPAIR/ENGINESET	T	1					
2	6212-569-002-00	SEAL,OIL	T	6					
3	6211-141-057-10	GASKET/CYLINDERHEAD	T	1					
4	6211-173-005-00	SEAL/CYL HEAD/UNDER	T	1					
5	6209-572-003-00	GASKET	T	2					
6	6214-115-003-10	GASKET/INLETMANIFOLD	T	1					
7	6214-145-004-20	GASHET/EXH MANIFOLD	T	1					
8	6211-258-001-00	SEAL,BEARING CAP	T	4					
9	6211-258-002-00	SEAL,BEARING CAP/7	T	2					
10	6209-625-003-20	OILSEAL	T	1					
11	6211-292-001-20	GASKET/COVER	T	1					
12	6209-625-002-00	SEAL,OIL	T	1					
13	6209-500-003-00	WASHER/08X14X01	T	2					
14	6211-312-005-10	GASKET/GEARCASE	T	1					
15	6211-312-006-10	GASKET/PLATE	T	1					
16	V723-102-005-00	O-RING 1A S50	T	1					
17	V720-103-502-20	O-RING/P22	T	1					
18	V721-103-104-00	O-RING/G40	T	1 -150350					
18A	6213-614-013-00	GASKET/WATERPUMP	T	1 150351-					
19	V721-113-105-00	O-RING HS90 G50	T	1 -150350					
19A	6213-614-014-00	GASKET/SPACER	T	1 150351-					
20	6213-743-002-10	GASKET/HOUSING	T	1					
21	V723-102-005-50	O-RING	T	1					
22	6209-630-002-10	GASKET	T	1					
23	6214-145-009-00	GASKET	T	1					
24	6209-920-003-00	GASKET	T	2					
25	6209-630-004-10	GASKET	T	1 -159416					
25A	6209-630-004-20	GASKET	T	1 159417-		1			

FIG. 30 COMPONENT PARTS FOR 6215-300-037-00 ON Fig.22

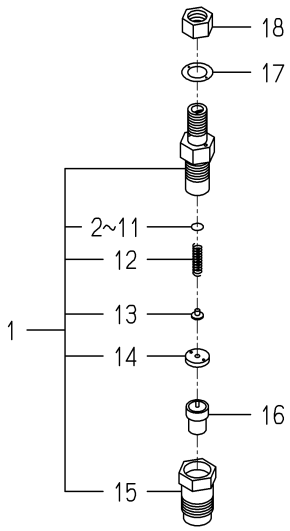

6215-300-037-0E

KEY	PART CODE	DESCRIPTION	SPC	TYPE OF MODEL E3CD VTB09		ITC	COL	GRP	REMARKS
1	6215-330-022-00	HOLDER/NOZZLE ASSY	*	3					
2	6215-345-044-00	SHIM/0.10	*	3					
3	6215-345-045-00	SHIM/0.20	*	3					
4	6215-345-046-00	SHIM/0.30	*	3					
5	6215-345-047-00	SHIM/0.40	*	3					
6	6215-345-048-00	SHIM/0.50	*	3					
7	6215-345-049-00	SHIM/0.52	*	3					
8	6215-345-050-00	SHIM/0.54	*	3					
9	6215-345-051-00	SHIM/0.56	*	3					
10	6215-345-052-00	SHIM/0.58	*	3					
11	6215-345-053-00	SHIM/0.80	*	3					
12	6215-343-002-00	SPRING,NOZZLE	*	3					
13	6215-342-002-00	SPRINGSEAT	*	3					
14	6215-339-004-00	SPACER	*	3					
15	6215-332-006-00	NUT/NOZZLERETAINING	*	3					
16	6215-311-005-00	NOZZLE	*	3					
17	6215-359-003-00	GASKET	*	3					
18	6215-359-004-00	NUT	*	3					

FIG. 31 COMPONENT PARTS FOR 6215-600-078-10 ON Fig.23

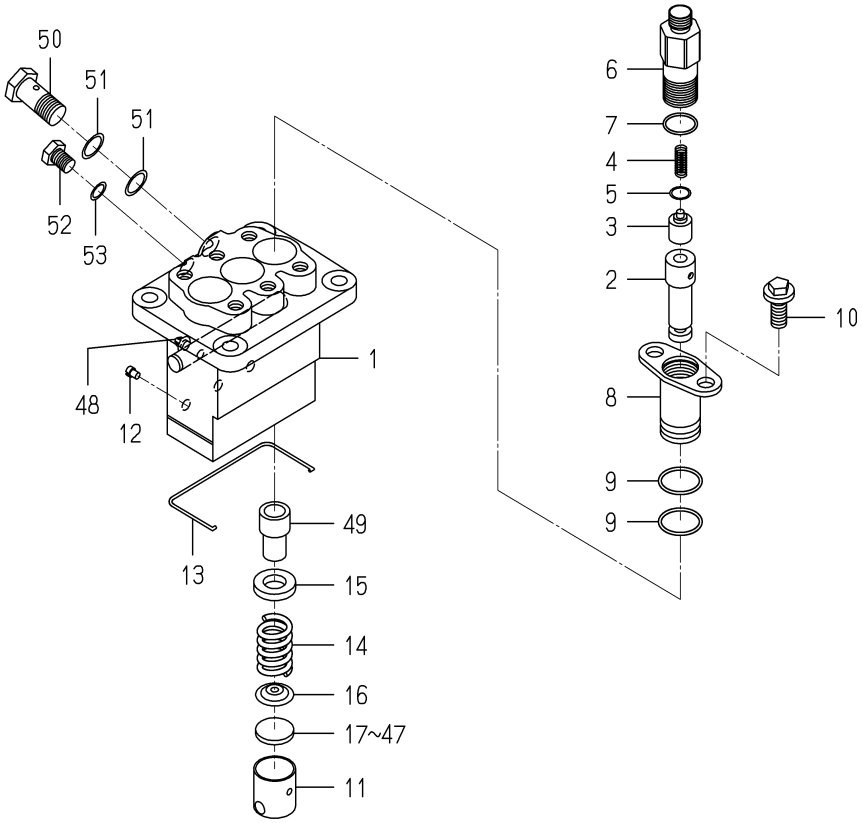

6215-600-078-1H

KEY	PART CODE	DESCRIPTION	SPC	TYPE OF MODEL E3CD VTB09		ITC	COL	GRP	REMARKS
1	6215-611-015-00	HOUSING/PUMP	*	1					
2	6215-631-008-00	PLUNGER ASSY	*	3					
3	6215-641-002-00	VALVE,DELIVERY	*	3					
4	6215-643-005-00	SPRING/DELIVERYVALVE	*	3					
5	6215-649-008-00	GASKET	*	3					
6	6215-644-009-00	HOLDER/DELIVERYVALVE	*	3					
7	6215-649-014-00	ORING	*	3					
8	6215-635-004-00	SLEEVEFLANGE	*	3					
9	6215-649-013-00	ORING	*	6					
10	6215-649-011-00	BOLT	*	6					
11	6215-622-003-00	TAPPET	*	3					
12	6215-629-017-00	PIN	*	3					
13	6215-629-035-00	SNAPRING	*	1					
14	6215-634-003-00	SPRING/PLUNGER	*	3					
15	6215-639-008-00	SPRINGSEAT	*	3					
16	6215-639-009-00	SPRINGSEAT	*	3					
17	6215-629-060-00	PLATE/T=2.60	*	1					
18	6215-629-061-00	PLATE/T=2.65	*	1					
19	6215-629-062-00	PLATE/T=2.70	*	1					
20	6215-629-063-00	PLATE/T=2.75	*	1					
21	6215-629-064-00	PLATE/T=2.80	*	1					
22	6215-629-065-00	PLATE/T=2.85	*	1					
23	6215-629-066-00	PLATE/T=2.90	*	1					
24	6215-629-067-00	PLATE/T=2.95	*	1					
25	6215-629-036-00	PLATE/T=3.00	*	1					
26	6215-629-037-00	PLATE/T=3.05	*	1					
27	6215-629-038-00	PLATE/T=3.10	*	1					
28	6215-629-039-00	PLATE/T=3.15	*	1					
29	6215-629-040-00	PLATE/T=3.20	*	1					
30	6215-629-041-00	PLATE/T=3.25	*	1					

FIG. 31 COMPONENT PARTS FOR 6215-600-078-10 ON Fig.23

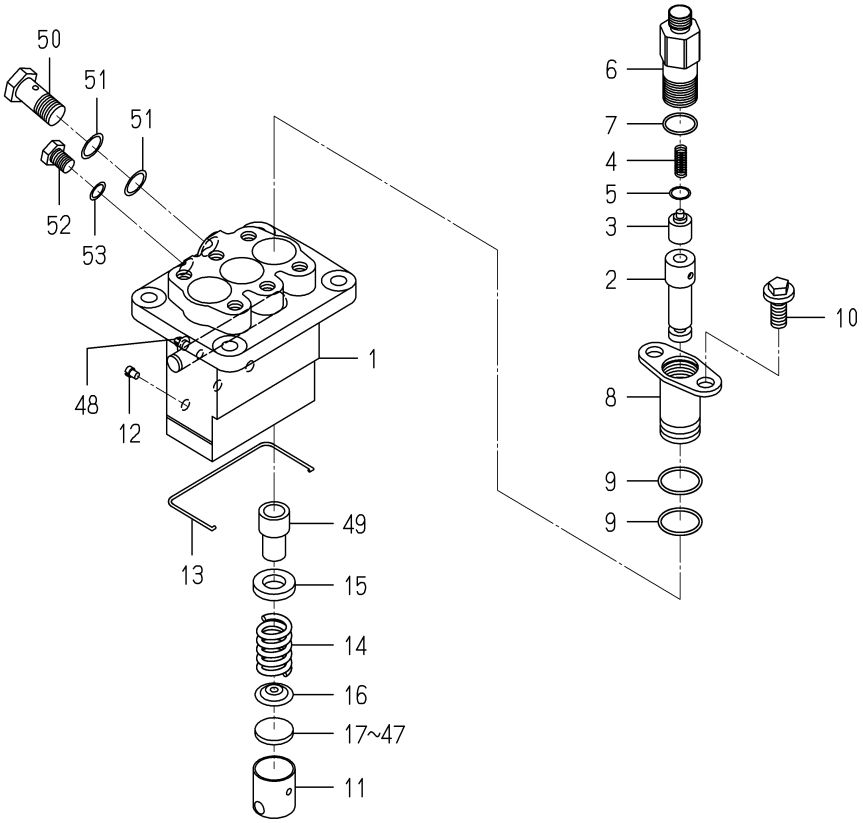

6215-600-078-1H

KEY	PART CODE	DESCRIPTION	SPC	TYPE OF MODEL E3CD VTB09		ITC	COL	GRP	REMARKS
31	6215-629-042-00	PLATE/T=3.30	*	1					
32	6215-629-043-00	PLATE/T=3.35	*	3 -147382					
32	6215-629-043-00	PLATE/T=3.35	*	1 147383-					
33	6215-629-044-00	PLATE/T=3.40	*	1					
34	6215-629-045-00	PLATE/T=3.45	*	1					
35	6215-629-046-00	PLATE/T=3.50	*	1					
36	6215-629-047-00	PLATE/T=3.55	*	1					
37	6215-629-048-00	PLATE/T=3.60	*	1					
38	6215-629-049-00	PLATE/T=3.65	*	1					
39	6215-629-050-00	PLATE/T=3.70	*	1					
40	6215-629-051-00	PLATE/T=3.75	*	1					
41	6215-629-052-00	PLATE/T=3.80	*	1					
42	6215-629-053-00	PLATE/T=3.85	*	1					
43	6215-629-054-00	PLATE/T=3.90	*	1					
44	6215-629-055-00	PLATE/T=3.95	*	1					
45	6215-629-056-00	PLATE/T=4.00	*	1					
46	6215-629-058-00	PLATE/T=4.05	*	1					
47	6215-629-059-00	PLATE/T=4.10	*	1					
48	6215-637-004-00	CONTROLRACK	*	1					
49	6215-635-005-00	CONTROLSLEEVE	*	3					
50	6215-619-023-00	EYEBOLT	*	1					
51	6115-639-008-00	GASKET	*	2					
52	6215-619-024-00	BOLT	*	1					
53	6215-359-006-00	GASKET	*	1					

FIG. 32 COMPONENT PARTS FOR 6281-100-007-20 ON Fig.27

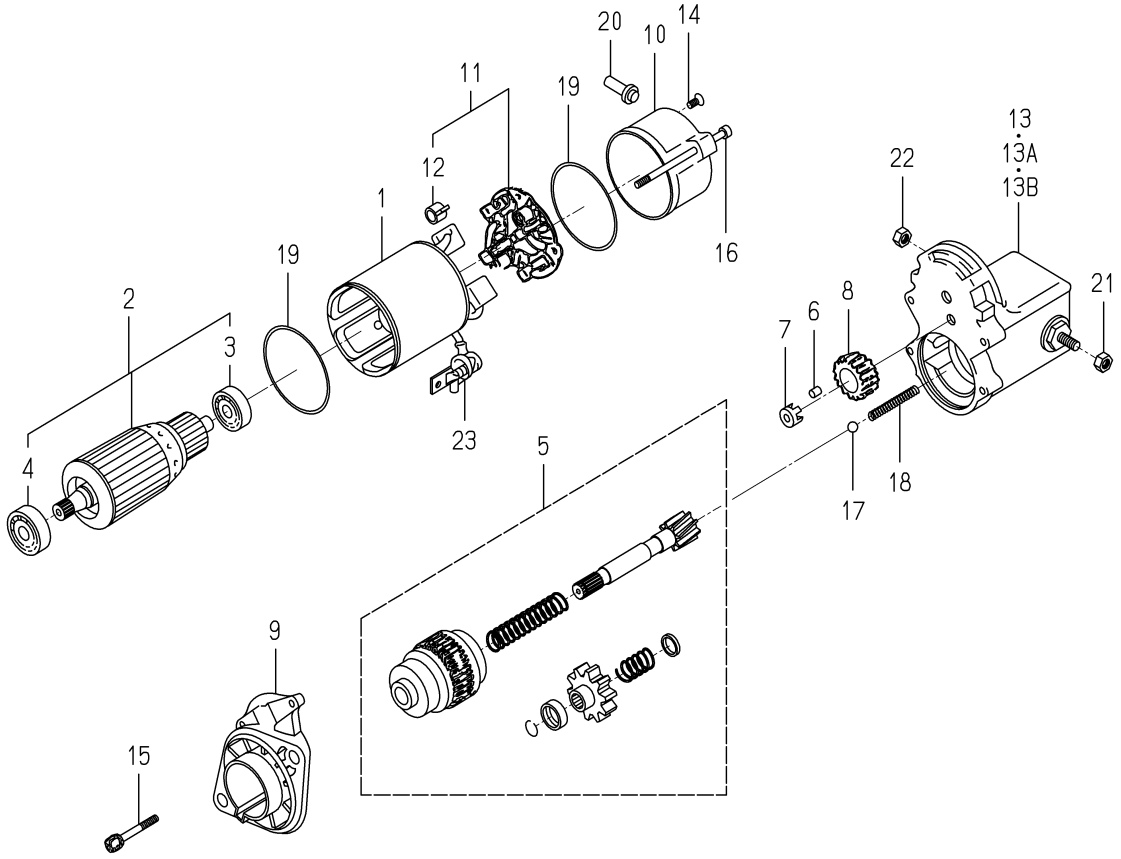

6281-100-007-2H

KEY	PART CODE	DESCRIPTION	SPC	TYPE OF MODEL E3CD VTB09		ITC	COL	GRP	REMARKS
1	6281-111-005-00	YOKE/STARTER ASSY	*	1					
2	6281-121-006-00	ARMATURE/STARTE ASSY	*	1					
3	6281-129-038-00	BEARING	*	1					
4	6281-129-039-00	BEARING	*	1					
5	6281-124-007-10	CLUTCH/STARTER ASSY	*	1					
6	6581-129-099-00	RORA	*	5					
7	6281-129-040-00	RETAINER	*	1					
8	6281-123-005-00	PINION/STARTER	*	1					
9	6281-129-045-10	HOUSING/STARTER ASSY	*	1					
10	6281-115-011-00	FRAME/STARTEREND	*	1					
11	6281-116-004-00	HOLDER/STARTER ASSY	*	1					
12	6581-117-007-00	SPRING,BRUSH	*	4					
13	6281-151-017-10	SWITCH/MAGNETIC ASSY	*	1 -152046					
13A	6281-151-020-00	SWITCH/MAGNETIC ASSY	*	1 -153398					
13B	6281-151-023-00	SWITCH/MAGNETIC ASSY	*	1 153399-					
14	6281-129-062-00	SCREW	*	2					
15	6281-129-042-00	BOLT/WS	*	2					
16	6281-129-043-00	BOLT/THROUGH	*	2					
17	6581-129-092-00	BALL	*	1					
18	6281-129-044-00	SPRING/RETURN	*	1					
19	6281-129-003-00	O-RING	*	2					
20	6281-115-016-00	BUSHING/DRAIN	*	1					
21	6909-111-508-00	NUT	*	1					
22	6281-229-041-00	NUT	*	1					
23	6281-115-010-00	COVER	*	1					

FIG. 33 COMPONENT PARTS FOR 6281-200-021-00 ON Fig.27

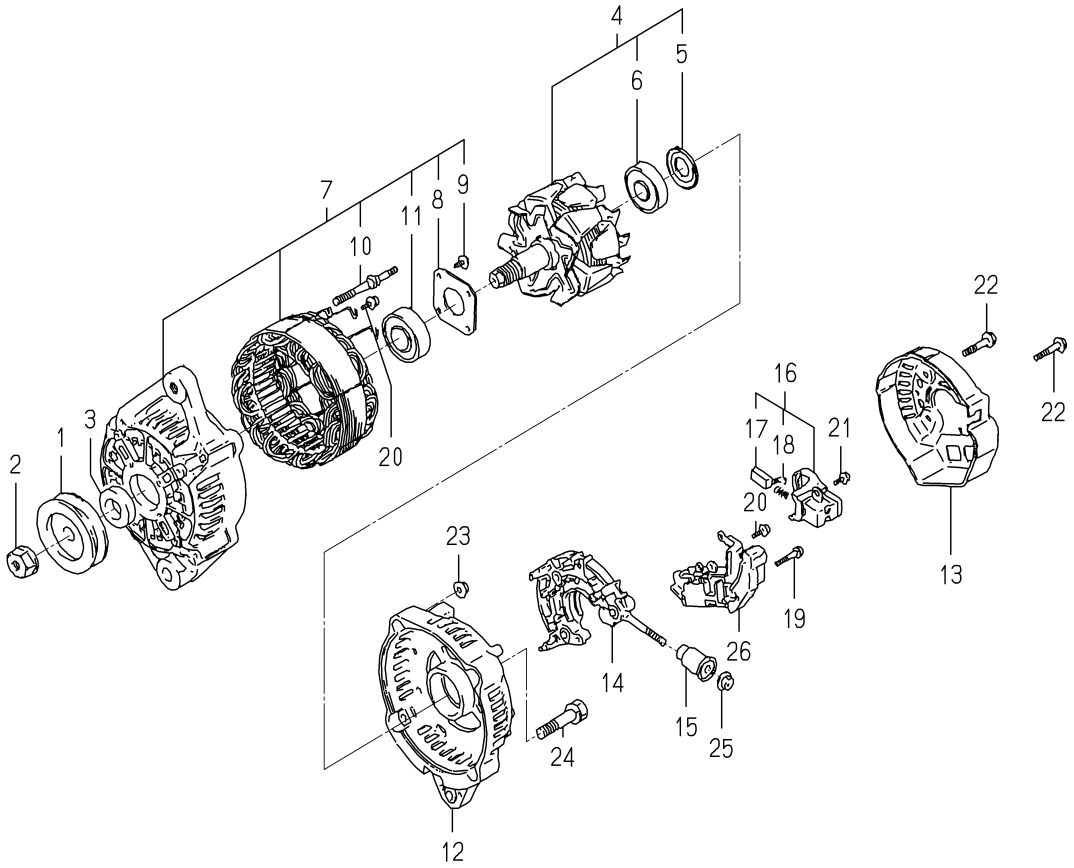

6281-200-021-0A

KEY	PART CODE	DESCRIPTION	SPC	TYPE OF MODEL E3CD VTB09		ITC	COL	GRP	REMARKS
1	6281-222-012-00	PULLEY	*	1					
2	6281-229-002-00	NUT	*	1					
3	6281-229-003-00	COLLOR	*	1					
4	6281-221-007-00	ROTOR ASSY	*	1					
5	6281-229-004-00	COVER,BEARING	*	1					
6	6281-229-032-00	BEARING/BALL	*	1					
7	6281-213-018-00	FRAME/DRIVEEND ASSY	*	1					
8	6281-229-006-00	PLATE	*	1					
9	6281-229-007-00	BOLT	*	4					
10	6281-229-008-00	BOLT	*	2					
11	6281-229-033-00	BEARING/BALL	*	1					
12	6281-214-003-00	FRAME	*	1					
13	6281-214-004-00	COVER	*	1					
14	6281-229-029-00	HOLDER ASSY	*	1					
15	6281-229-011-00	BUSH	*	1					
16	6281-217-002-00	HOLDER/BRUSH ASSY	*	1					
17	6281-215-001-00	BRUSH	*	2					
18	6281-216-001-00	SPRING	*	2					
19	6281-229-012-00	BOLT	*	2					
20	6281-229-013-00	BOLT	*	6					
21	6281-229-014-00	BOLT	*	1					
22	6281-229-015-00	BOLT	*	3					
23	6281-229-016-00	NUT	*	2					
24	6281-229-017-00	BOLT	*	2					
25	6281-229-018-00	NUT	*	1					
26	6281-271-002-00	REGULATOR ASSY	*	1					

E N G I N E

E3CDVTB11···TG5390E4 (R-TYPE)

E
N
G
I
N
E

6005-097-600-30

FIG. 1 SHORT BLOCK ENGIASSY

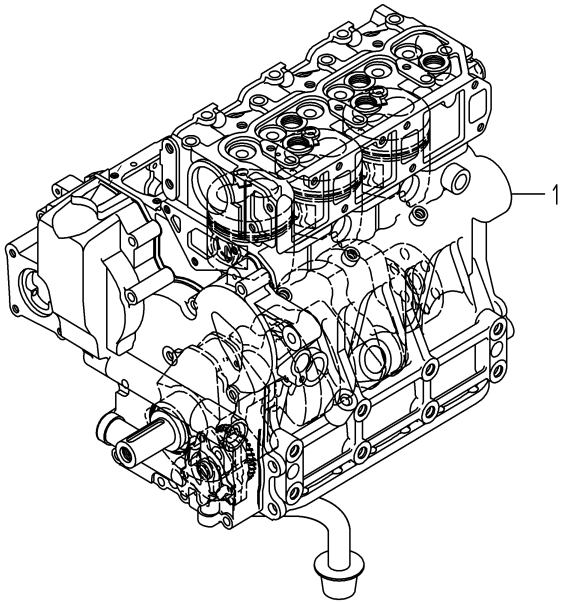

6005-015B-0100

KEY	PART CODE	DESCRIPTION	SPC	TYPE OF MODEL E3CD VTB11		ITC	COL	GRP	REMARKS
1	6005-010-140-00	SHORTBLOCKENGIN ASSY	T	1					

FIG. 2 CYLINDER HEAD

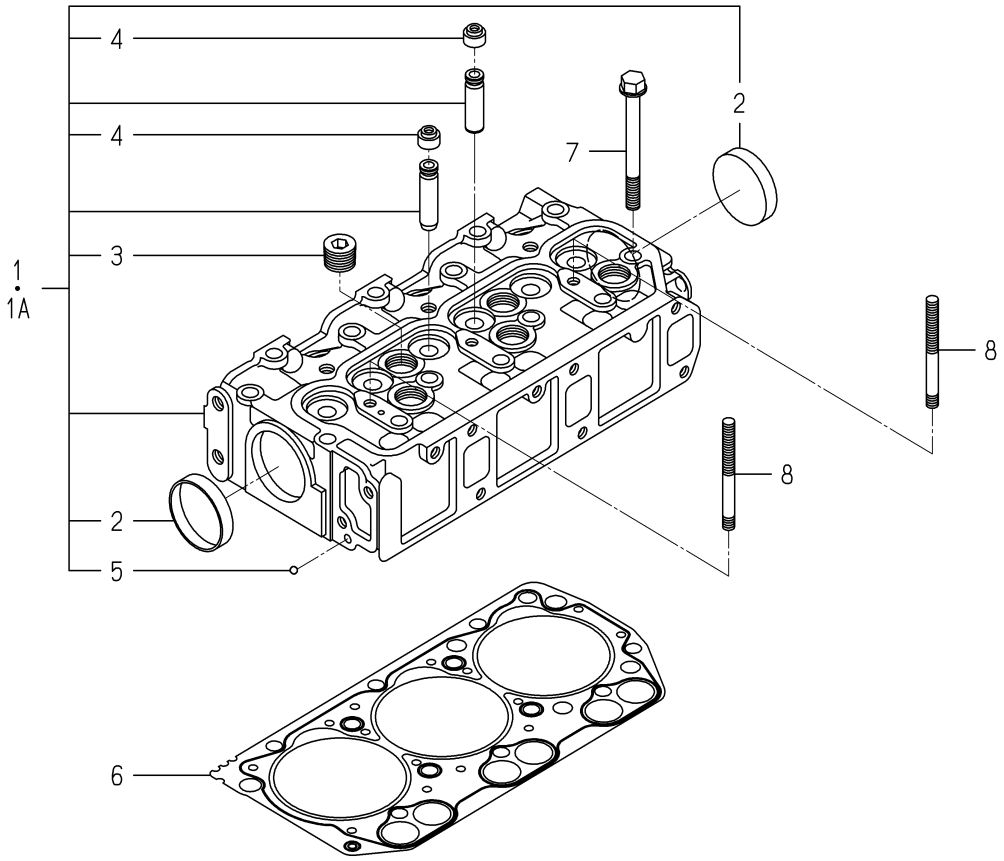

6005-101T-0100,6005-101T-0200

KEY	PART CODE	DESCRIPTION	SPC	TYPE OF MODEL E3CD VTB11		ITC	COL	GRP	REMARKS
1	6211-110-088-10	CYLINDERHEAD ASSY	*	1 -197018					
1A	6211-110-088-20	CYLINDERHEAD ASSY	*	1 197019-		1			
2	6209-610-003-00	CUP/SEALING/50	*	2					
3	6209-605-004-10	PLUG/PT1/2	*	5					
4	6212-569-002-00	SEAL,OIL	*	6					
5	V682-200-000-60	BALL	*	1					
6	6211-141-057-10	GASKET/CYLINDERHEAD	*	1					
7	6209-000-005-00	BOLT	*	14					
8	6209-300-014-00	STUD	*	2					

FIG. 3 CYLINDER HEAD COVER

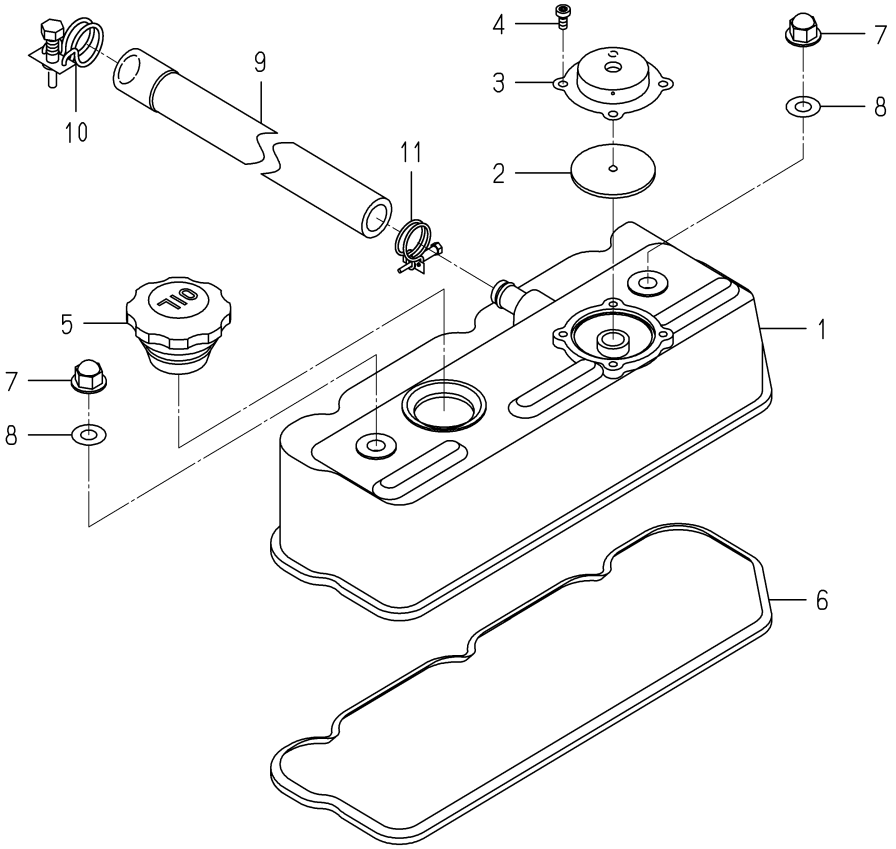

6005-110G-0100

KEY	PART CODE	DESCRIPTION	SPC	TYPE OF MODEL E3CD VTB11		ITC	COL	GRP	REMARKS
1	6211-170-007-30	COVER/CYLINDER HEAD	*	1					
2	6211-179-026-00	COVER/BLOWBY	*	1					
3	V195-164-008-30	SCREW/TAPPING	*	4					
4	6211-173-017-00	PACKING/PCV	*	1					
5	6211-751-001-10	CAP,OIL FILLER	*	1					
6	6211-173-005-00	SEAL/CYL HEAD/UNDER	*	1					
7	6209-490-002-10	NUT/CAP	*	2					
8	6209-572-003-00	GASKET	*	2					
9	6209-366-010-00	HOSE/BREATHER	*	1					
10	J061-216-020-00	CLAMP/WIRE/16-20	*	1					
11	J061-213-018-00	CLAMP/WIRE/13-18	*	1					

FIG. 4 INLET MANIFOLD

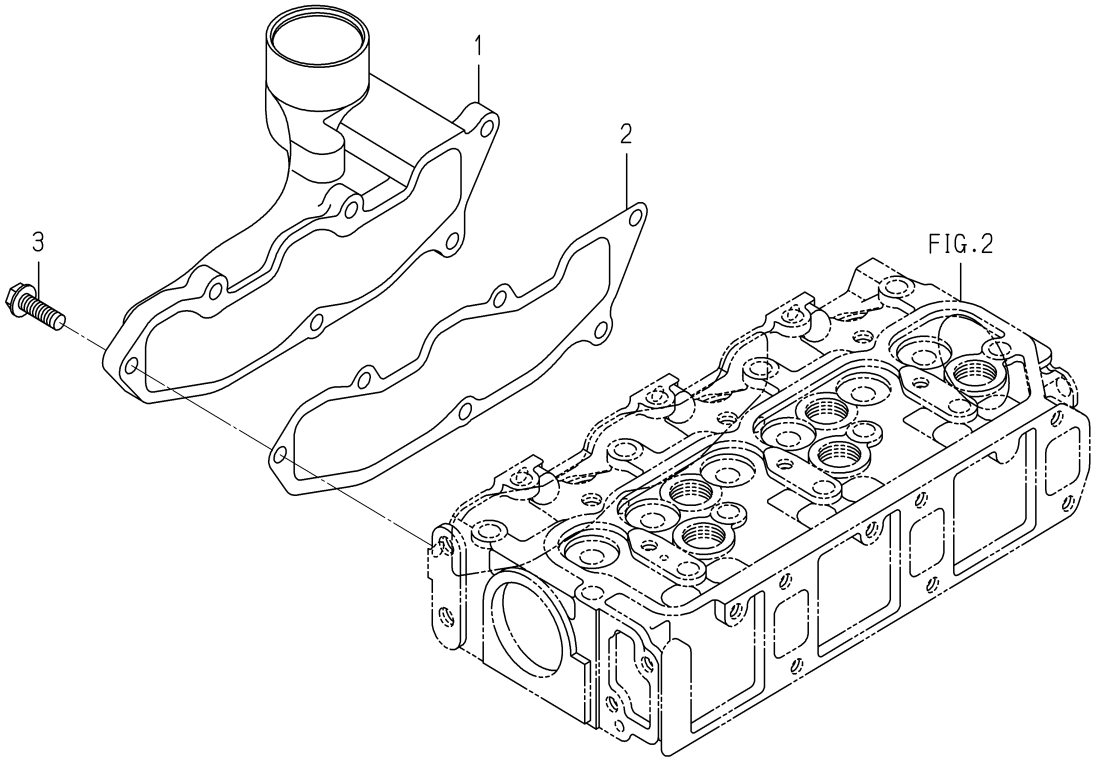

6005-120B-0100

KEY	PART CODE	DESCRIPTION	SPC	TYPE OF MODEL E3CD VTB11		ITC	COL	GRP	REMARKS
1	6214-111-023-00	MANIFOLD/INLET	*	1					
2	6214-115-003-10	GASKET/INLETMANIFOLD	*	1					
3	V231-360-802-50	FLANGEBOLT	*	6					

FIG. 5 EXHAUST MANIFOLD

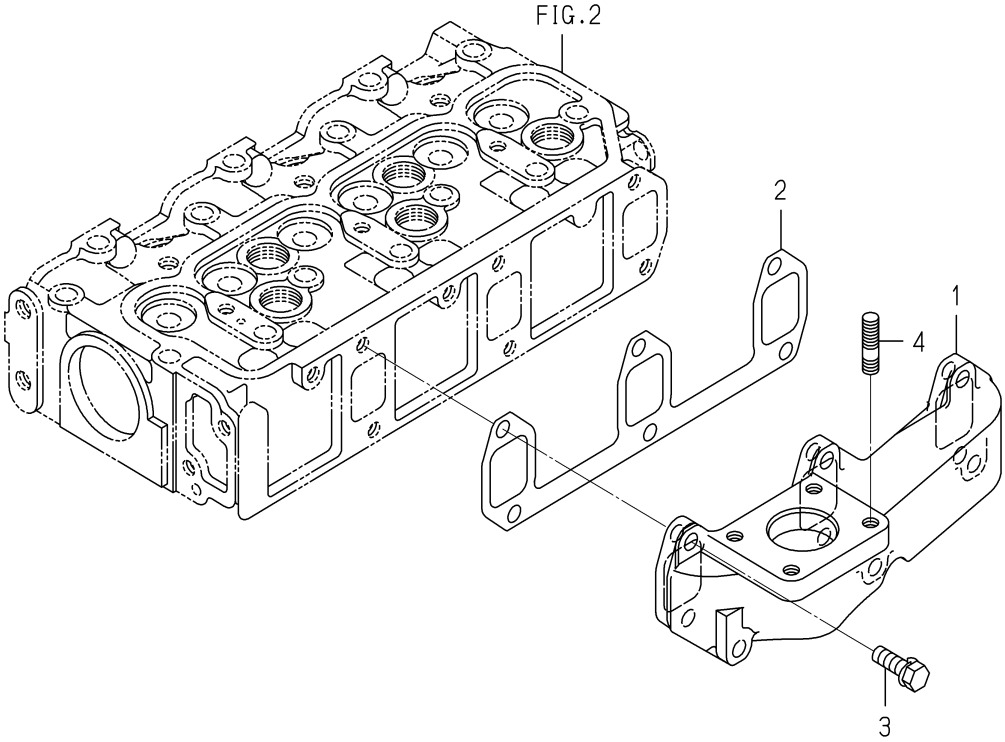

6005-140F-0100

KEY	PART CODE	DESCRIPTION	SPC	TYPE OF MODEL E3CD VTB11		ITC	COL	GRP	REMARKS
1	6214-141-048-00	MANIFOLD/EXHAUST	*	1					
2	6214-145-004-20	GASHET/EXH MANIFOLD	*	1					
3	V211-560-802-50	BOLT,SEMS/M8X25 7T	*	6					
4	6209-300-026-00	STUD	*	4					

FIG. 6 TURBOCHARGER

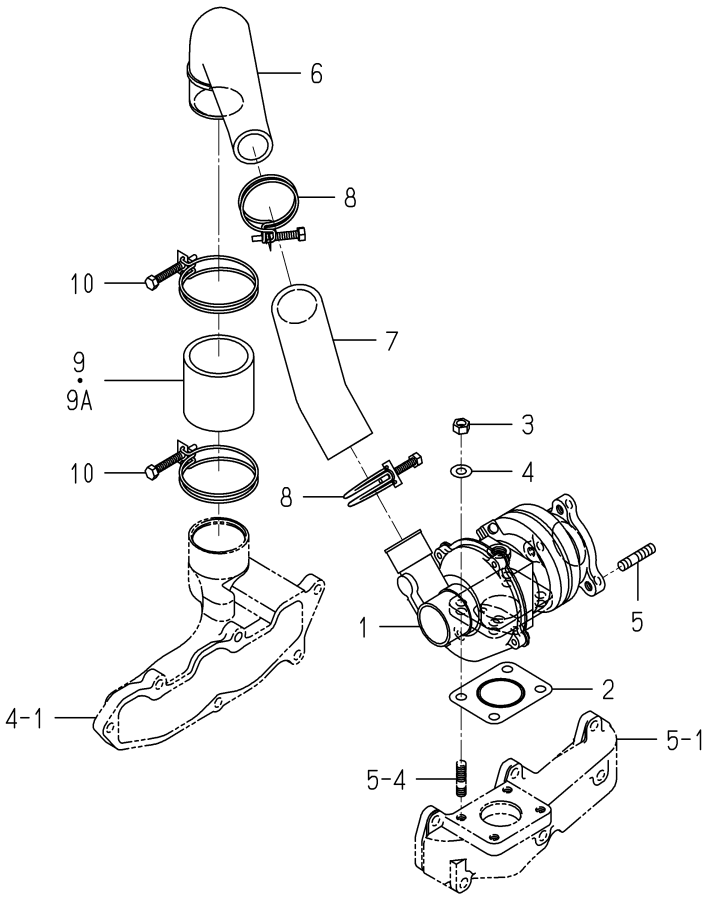

6005-160B-0100

KEY	PART CODE	DESCRIPTION	SPC	TYPE OF MODEL E3CD VTB11		ITC	COL	GRP	REMARKS
1	6214-400-009-10	TURBOCHARGER ASSY	*	1					
2	6214-145-009-00	GASKET	*	1					
3	V304-700-008-00	NUT	*	4					
4	V411-700-008-00	WASHER	*	4					
5	V251-340-802-50	BOLT/STUD	*	3					
6	6214-435-026-00	PIPE/INLET	*	1					
7	6209-360-112-00	HOSE/RUBBER	*	1					
8	J061-238-046-00	CLAMP/WIRE/38-46	*	2					
9	6209-360-114-00	HOSE/RUBBER	*	1 -184275					
9A	6209-360-108-00	HOSE/RUBBER	*	1 184276-					
10	J061-252-063-00	CLAMP/WIRE/52-63	*	2					

FIG. 7 CYLINDER BLOCK(1/2)

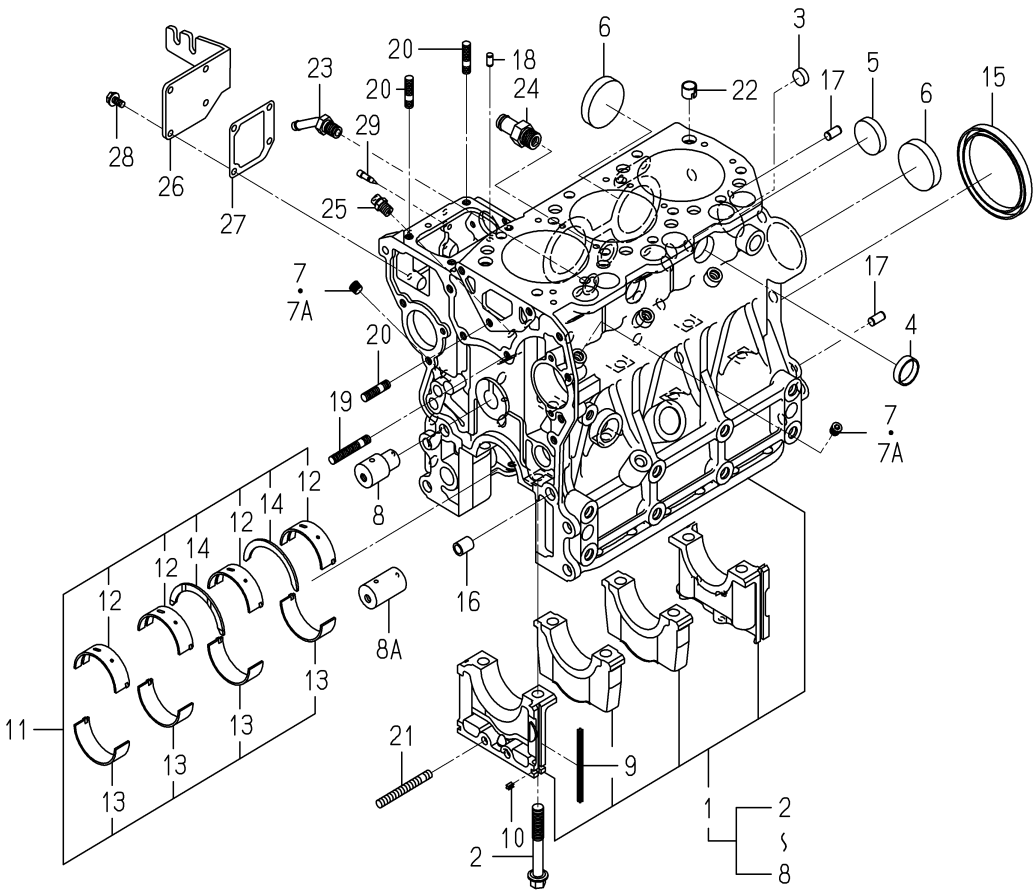

6005-202S-0100

KEY	PART CODE	DESCRIPTION	SPC	TYPE OF MODEL E3CD VTB11		ITC	COL	GRP	REMARKS
1	6211-210-084-00	CYLINDERBLOCK ASSY	*	1					
2	6209-000-006-00	BOLT	*	8					
3	6209-610-007-00	CUP/SEALING/16	*	2					
4	6209-610-001-10	CUP/SEALING/28	*	2					
5	6209-610-009-00	CUP/SEALING/36	*	1					
6	6209-610-003-00	CUP/SEALING/50	*	3					
7	6509-605-019-10	PLUG	*	8 -199533					
7A	6209-605-007-00	PLUG/PT1/8	*	8 199534-					
8	6212-531-008-20	PIN/IDLEGEAR	*	1 -168830					
8A	6212-531-008-30	PIN/IDLEGEAR	*	1 168831-		3			
9	6211-258-001-00	SEAL,BEARING CAP	*	4					
10	6211-258-002-00	SEAL,BEARING CAP/7	*	2					
11	6211-510-008-00	BEARING/CRANK SET	*	1					
12	6211-511-007-00	BEARING/CRANK/UPPER	*	4					
13	6211-511-008-00	BEARING/CRANK/LOWER	*	4					
14	6211-599-004-00	BEARING/THRUST/CRANK	*	2					
15	6209-625-003-20	OILSEAL	*	1					
16	6209-749-001-20	PIN/TUBE	*	2					
17	6213-129-006-00	PIN/STRAIGHT	*	2					
18	6209-740-005-00	PIN	*	2					
19	6904-110-840-00	STUD/M8X40	*	1					
20	6904-110-822-00	STUD	*	3					
21	V251-340-806-00	BOLT/STUD	*	1					
22	6294-453-002-00	DOWEL	*	2					
23	6213-721-007-00	PIPE/WATERDRAIN	*	1					
24	6213-721-005-00	PIPE/WATER/HOUSING	*	1					
25	6909-902-299-00	NIPPLE	*	1					
26	6211-291-015-20	COVER/INJECTIONPUMP	*	1					
27	6211-292-001-20	GASKET/COVER	*	1					
28	V230-360-601-20	FLANGEBOLT	*	4					

FIG. 7 CYLINDER BLOCK(2/2)

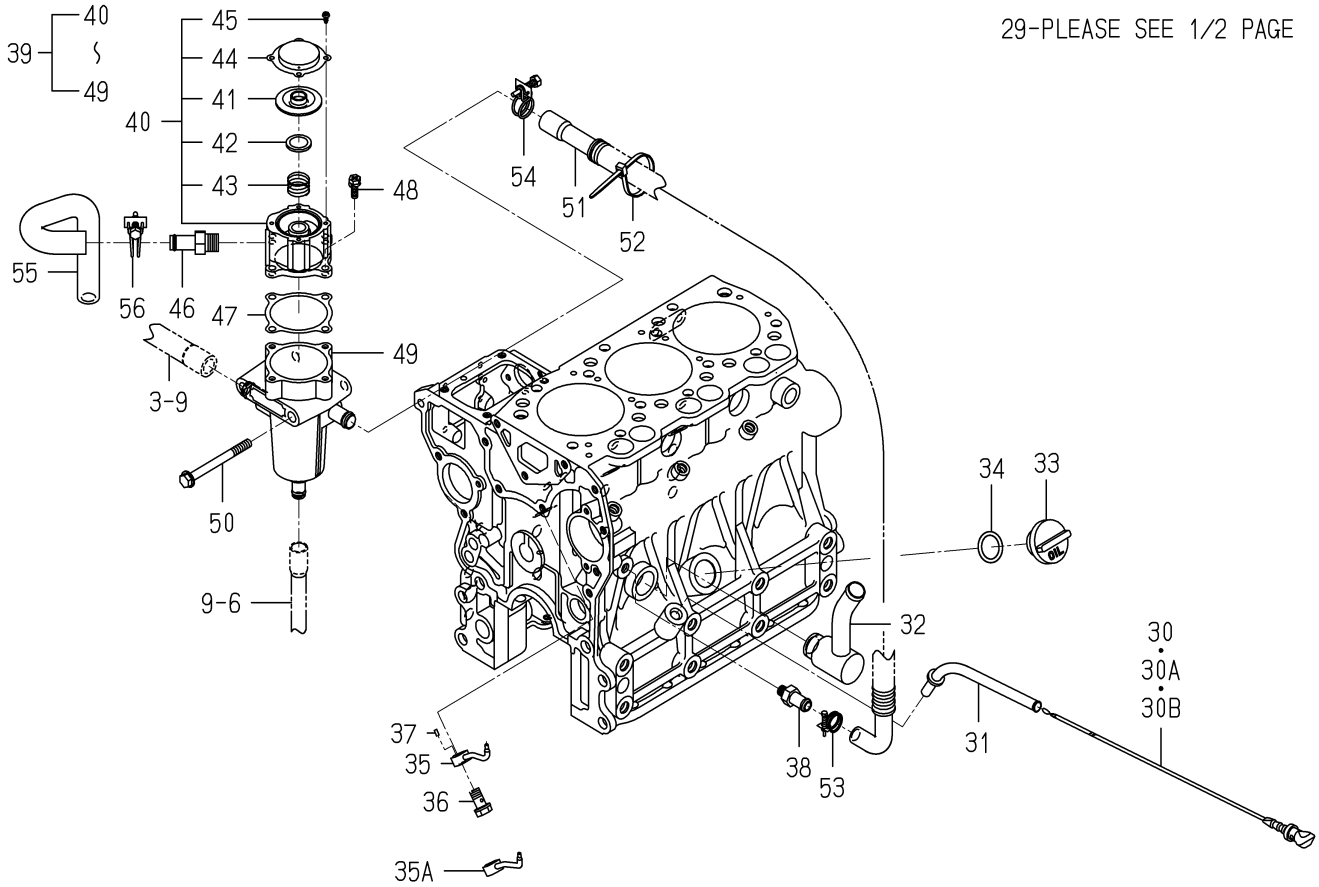

6005-202S-0100

KEY	PART CODE	DESCRIPTION	SPC	TYPE OF MODEL E3CD VTB11		ITC	COL	GRP	REMARKS
29	6215-549-013-00	PIN	*	1					
30	6211-760-046-00	LEVELGAGE	*	1 -171504					
30A	6211-760-046-10	LEVELGAGE	*	1 -202397		1			
30B	6211-760-041-20	LEVELGAGE	*	1 202398-					
31	6211-766-033-00	GUIDE/LEVELGAGE COMP	*	1					
32	6213-311-061-00	PIPE/OIL COMP	*	1					
33	6211-751-002-00	CAP/OILFILLER	*	1					
34	V720-103-502-50	O-RING/P25	*	1					
35	6213-342-008-00	PIPE/OILJET	*	3 -194379					
35A	6213-342-008-10	PIPE/OILJET	*	3 194380-		1			
36	6213-342-007-00	EYEBOLT/OILJET ASSY	*	3					
37	6209-740-008-00	PIN/SPRING	*	3					
38	6211-742-014-00	ADAPTER/R1/8	*	1					
39	6211-740-008-00	BREATHER ASSY	*	1					
40	6211-740-009-00	COVER/BREATHER ASSY	*	1					
41	6211-179-013-10	RUBBERFLANGE	*	1					
42	6211-179-018-00	SEAT/SPRING	*	1					
43	6211-740-007-00	SPRING	*	1					
44	6211-179-019-00	COVER/BLOWBY	*	1					
45	V195-164-008-30	SCREW/TAPPING	*	4					
46	6213-721-005-00	PIPE/WATER/HOUSING	*	1					
47	6211-744-001-00	GASKET	*	1					
48	6213-119-001-00	BOLT/WS	*	4					
49	6211-740-010-00	BREATHER COMP	*	1					
50	V231-360-808-50	FLANGEBOLT	*	2					
51	6209-366-011-00	HOSE/BREATHER	*	1					
52	3737-172-010-00	BAND/202	*	1					
53	J061-213-018-00	CLAMP/WIRE/13-18	*	1					
54	J061-216-020-00	CLAMP/WIRE/16-20	*	1					
55	6209-360-116-10	HOSE/RUBBER	*	1					

FIG. 7 CYLINDER BLOCK(2/2)

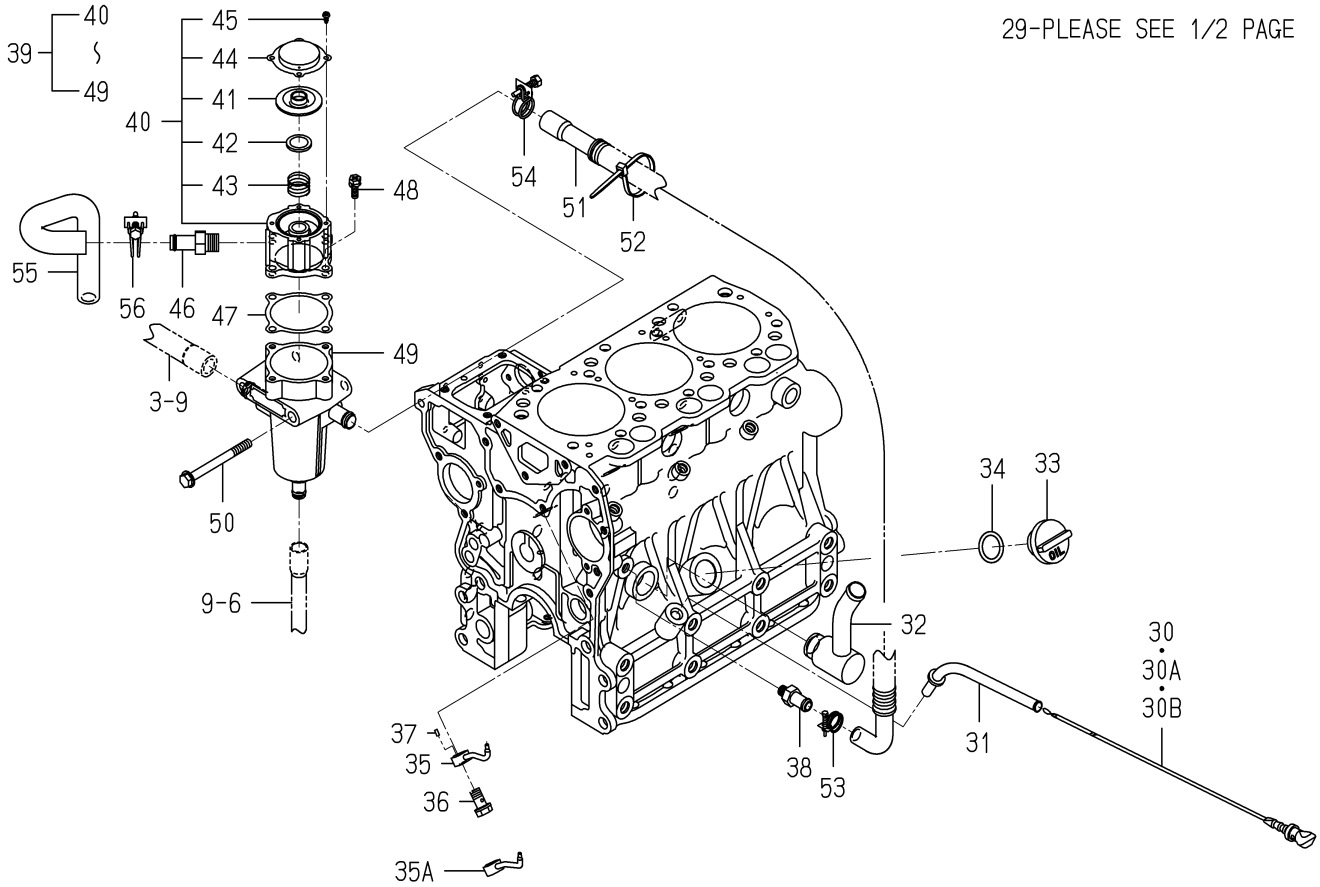

6005-202S-0100

KEY	PART CODE	DESCRIPTION	SPC	TYPE OF MODEL E3CD VTB11		ITC	COL	GRP	REMARKS
56	J061-220-024-00	CLAMP/WIRE/20-24	*	1					

FIG. 8 BEARING/UNDER SIZE (OPTION)

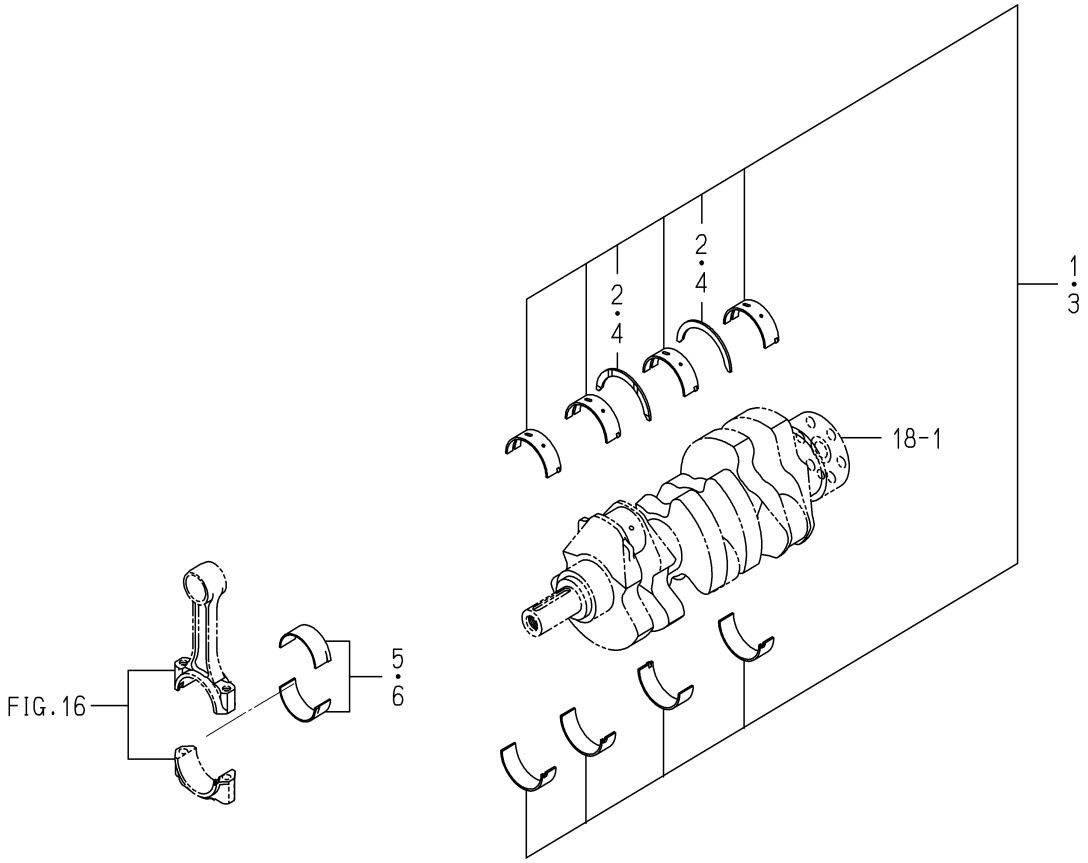

6005-209 -0100

KEY	PART CODE	DESCRIPTION	SPC	TYPE OF MODEL E3CD VTB11		ITC	COL	GRP	REMARKS
1	6211-530-008-00	BEARING/CRANK/UNDER	T	1					
2	6211-599-004-00	BEARING/THRUST/CRANK	T	2					
3	6211-540-008-00	BEARING/CRANK/UNDER	T	1					
4	6211-599-004-00	BEARING/THRUST/CRANK	T	2					
5	6212-273-009-00	BEARING/CONNECTING R	T	3					
6	6212-274-009-00	BEARING/CONNECTING R	T	3					

FIG. 9 OIL PAN

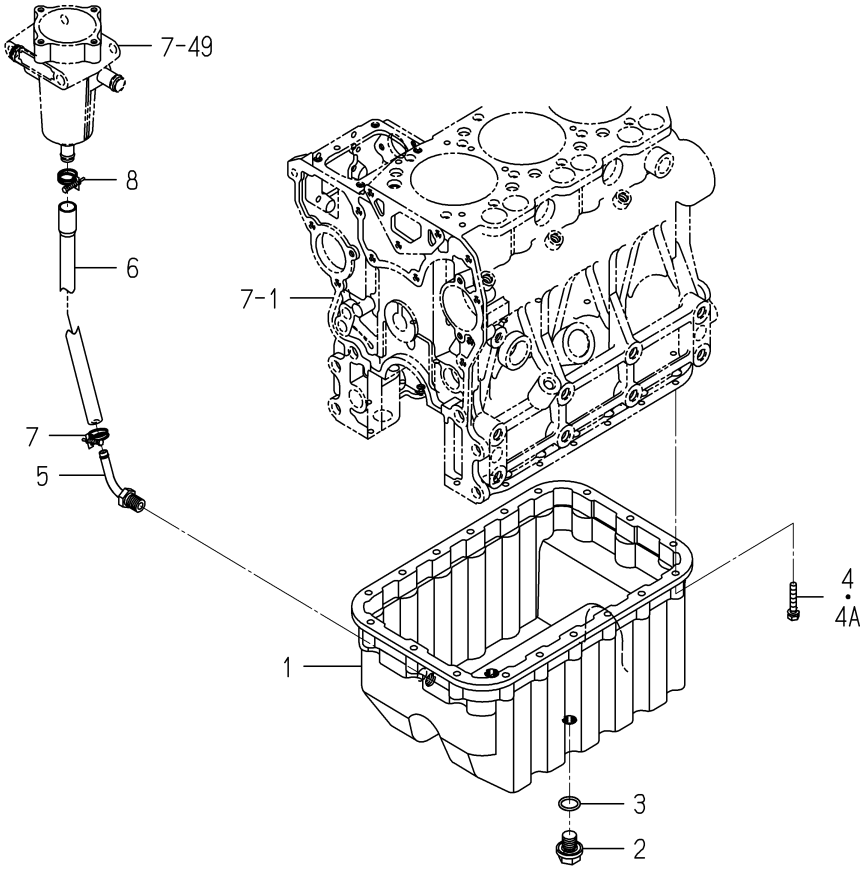

6005-210H-0100

KEY	PART CODE	DESCRIPTION	SPC	TYPE OF MODEL E3CD VTB11		ITC	COL	GRP	REMARKS
1	6211-361-074-00	OILPAN	*	1					
2	3805-355-002-20	PLUG/M14X1.5	*	2					
3	V720-102-401-80	O-RING/P18	*	2					
4	6901-910-635-00	BOLT	*	18 -173467					
4A	V210-560-603-50	BOLT/S	*	18 173468-					
5	6213-721-001-00	PIPE,WATER DRAIN	*	1					
6	6209-360-113-00	HOSE/RUBBER	*	1					
7	J061-210-015-00	CLAMP/WIRE/10-15	*	1					
8	J061-213-018-00	CLAMP/WIRE/13-18	*	1					

FIG. 10 REAR PLATE

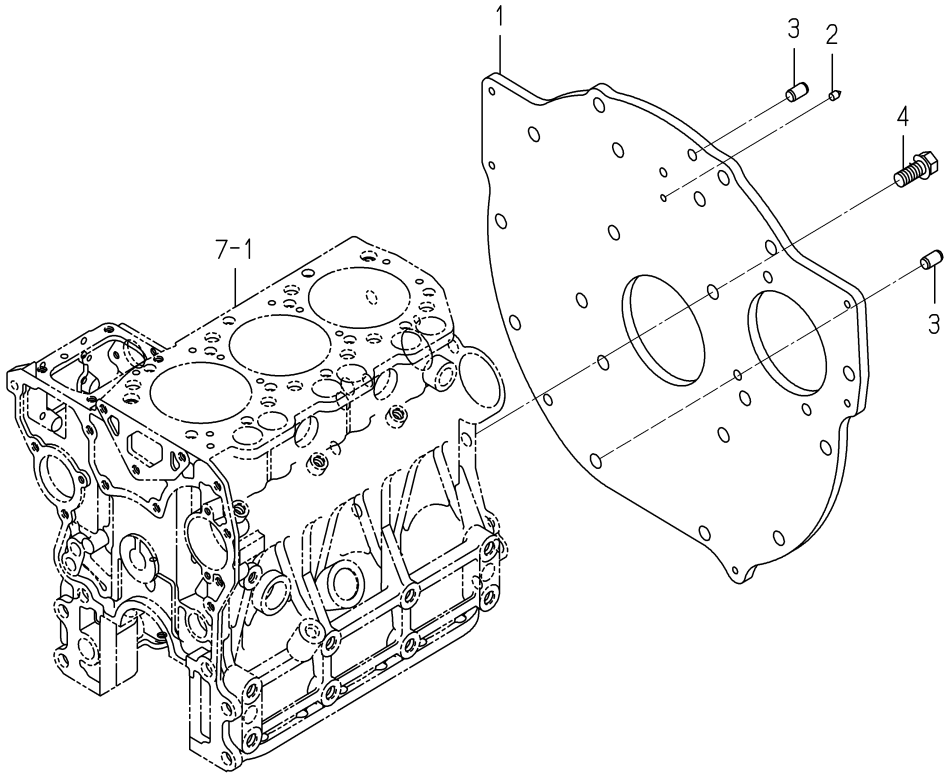

6005-220N-0100

KEY	PART CODE	DESCRIPTION	SPC	TYPE OF MODEL E3CD VTB11		ITC	COL	GRP	REMARKS
1	6211-341-073-00	PLATE/REAR	*	1					
2	6211-342-003-10	POINTER	*	1					
3	V523-101-001-80	PIN	*	2					
4	6209-030-091-00	BOLT/WS	*	8					

FIG. 11 TIMING GEAR CASE

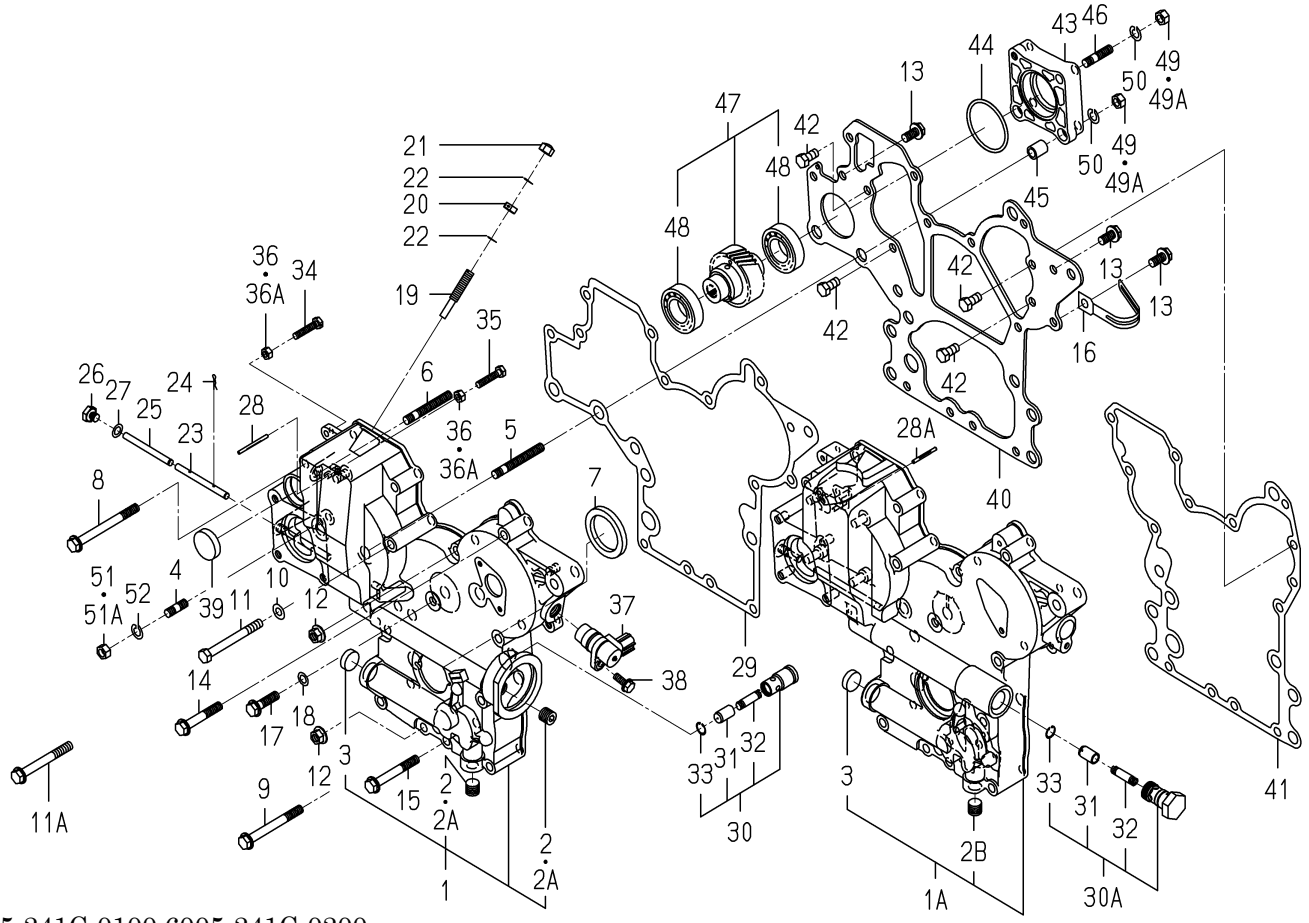

6005-241C-0100,6005-241C-0200

KEY	PART CODE	DESCRIPTION	SPC	TYPE OF MODEL E3CD VTB11		ITC	COL	GRP	REMARKS
1	6211-310-040-00	GEARCASE ASSY	*	1 -180974					
1A	6211-310-040-10	GEARCASE ASSY	*	1 -186830		3			
2	6209-605-003-00	PLUG/PT1/4	*	2 -160372					
2A	6209-605-003-10	PLUG/PT1/4	*	2 -180974		1			
2B	6209-605-003-10	PLUG/PT1/4	*	1 -186830					
3	6209-610-004-00	CUP/SEALING/20	*	1 -186830					
4	6904-110-822-00	STUD	*	4 -186830					
5	6904-110-855-00	STUD	*	2 -186830					
6	6904-110-850-00	STUD	*	1 -186830					
7	6209-625-002-00	SEAL,OIL	*	1 -186830					
8	V231-360-808-50	FLANGEBOLT	*	1 -186830					
9	V231-360-807-50	FLANGEBOLT	*	1 -186830					
10	6209-500-006-00	WASHER/08X16X1.2	*	1 -180974					
11	V201-360-807-50	BOLT	*	1 -180974					
11A	V231-360-807-00	FLANGEBOLT	*	1 -186830					
12	3817-401-001-00	NUT/M08	*	2 -186830					
13	V231-360-801-60	FLANGEBOLT	*	3 -186830					
14	V231-360-805-00	FLANGEBOLT	*	3 -186830					
15	V231-360-806-00	FLANGEBOLT	*	4 -186830					
16	1650-650-015-00	CLAMP	*	1 -186830					
17	V231-360-803-00	FLANGEBOLT	*	1 -186830					
18	6209-500-003-00	WASHER/08X14X01	*	1 -186830					
19	6215-546-003-10	STOPPER/FULLLOAD	*	1 -186830					
20	6209-409-001-00	NUT/M8	*	1 -186830					
21	V341-120-008-00	NUT,CAP/M 8	*	1 -186830					
22	6209-920-002-00	PACKING	*	2 -186830					
23	6215-542-004-20	PIN/ARM	*	1 -186830					
24	P117-303-003-00	PIN/SNAP	*	2 -186830					
25	6215-542-005-10	PIN	*	1 -186830					
26	6209-600-004-00	PLUG/SCREW	*	1 -186830					

FIG. 11 TIMING GEAR CASE

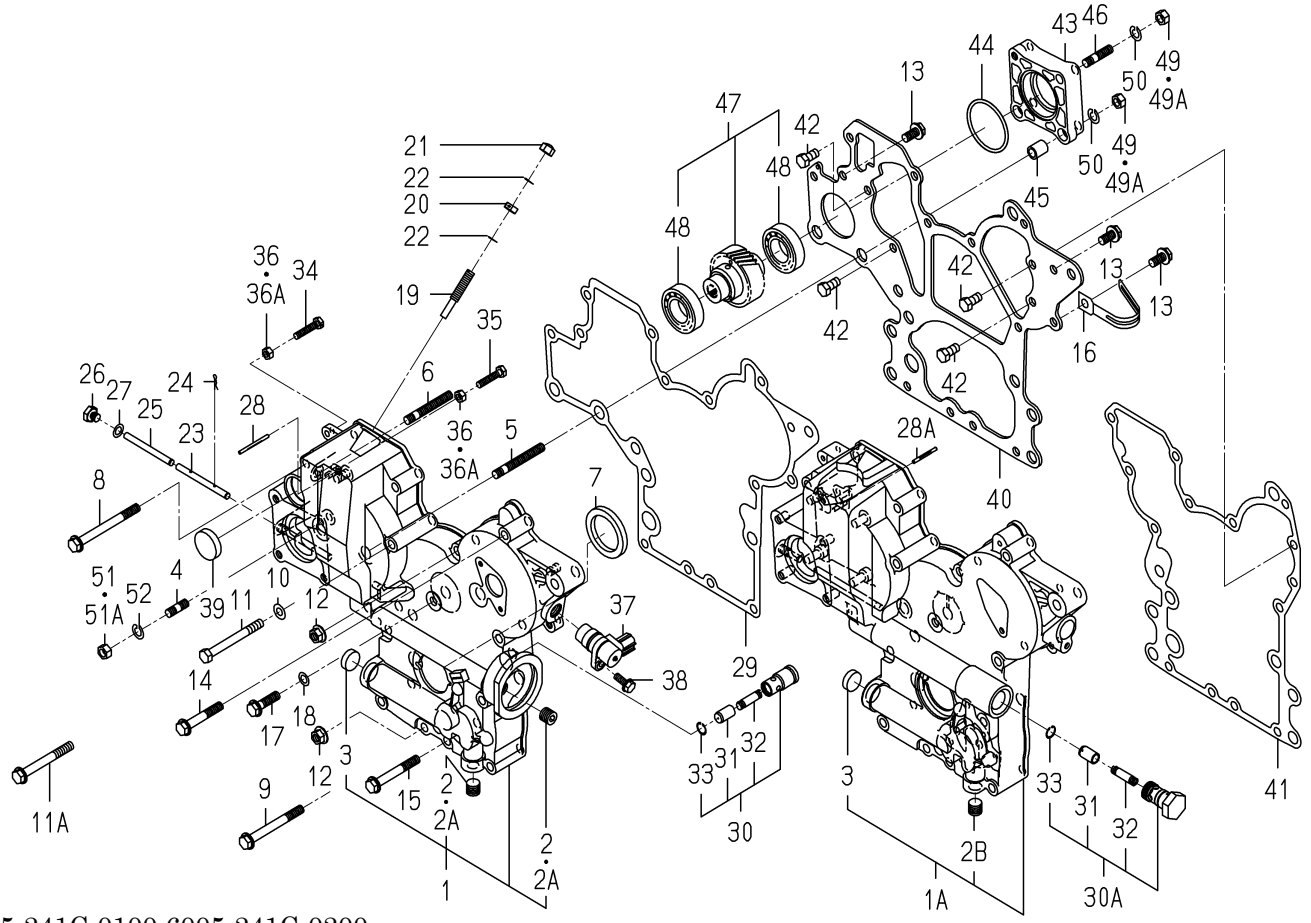

6005-241C-0100,6005-241C-0200

KEY	PART CODE	DESCRIPTION	SPC	TYPE OF MODEL E3CD VTB11		ITC	COL	GRP	REMARKS
27	6209-500-003-00	WASHER/08X14X01	*	1 -186830					
28	6209-740-001-00	PIN,GROOVE	*	1 -181471					
28A	6209-740-006-00	PIN/GROOVE	*	1 -186830					
29	6211-312-005-10	GASKET/GEARCASE	*	1 -186830					
30	6213-160-003-10	VALVE/RELIEF ASSY	*	1 -180974					
30A	6213-160-005-00	VALVE/RELIEF ASSY	*	1 -186830					
31	6213-161-003-10	PISTON/VALVE/RELIEF	*	1 -186830					
32	6213-164-001-00	SPRING/RELIEF VALVE	*	1 -186830					
33	V705-140-012-00	RING,SNAP/12 C	*	1 -186830					
34	6209-050-001-00	BOLT/M6	*	1 -186830					
35	6209-050-002-00	BOLT/M6	*	1 -186830					
36	6909-110-406-00	NUT	*	2 -179012					
36A	V301-260-006-00	NUT/M6	*	2 -186830					
37	1690-654-200-00	SENSOR/REVOLUTION/R	*	1 -186830					
38	V230-360-601-60	FLANGEBOLT	*	1 -186830					
39	3625-540-004-00	CAP,BLANK/30	*	1 -180974					
40	6211-311-013-20	PLATE/FRONT	*	1 -186830					
41	6211-312-006-10	GASKET/PLATE	*	1 -186830					
42	6902-050-816-00	BOLT	*	4 -186830					
43	6211-319-003-00	SPACER	*	1 -186830					
44	V723-102-005-00	O-RING 1A S50	*	1 -186830					
45	6209-749-001-20	PIN/TUBE	*	2 -186830					
46	6904-110-822-00	STUD	*	1 -186830					
47	6212-530-017-00	SHAFT/HYDRAULIC ASSY	*	1 -186830					
48	6209-800-011-00	BEARING	*	2 -186830					
49	6909-110-408-00	NUT/M8	*	4 -179012					
49A	V304-260-008-00	NUT	*	4 -186830					
50	V401-160-008-00	WASHER,SP/M 8	*	4 -186830					
51	6909-110-408-00	NUT/M8	*	4 -179012					
51A	V304-260-008-00	NUT	*	4 -186830					

FIG. 11 TIMING GEAR CASE

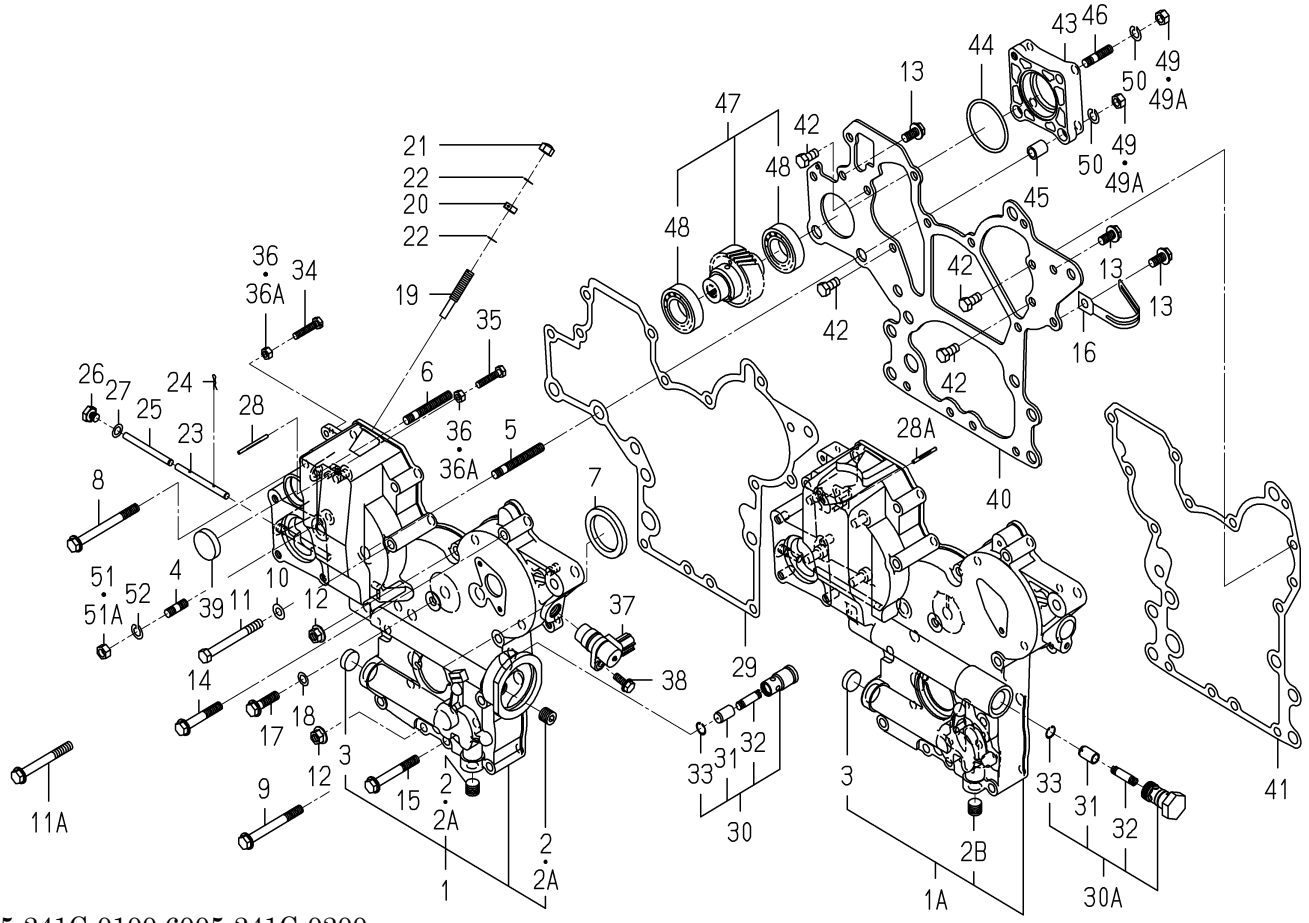

6005-241C-0100,6005-241C-0200

KEY	PART CODE	DESCRIPTION	SPC	TYPE OF MODEL E3CD VTB11		ITC	COL	GRP	REMARKS
52	V401-160-008-00	WASHER,SP/M 8	*	4 -186830					

FIG. 12 TIMING GEAR CASE

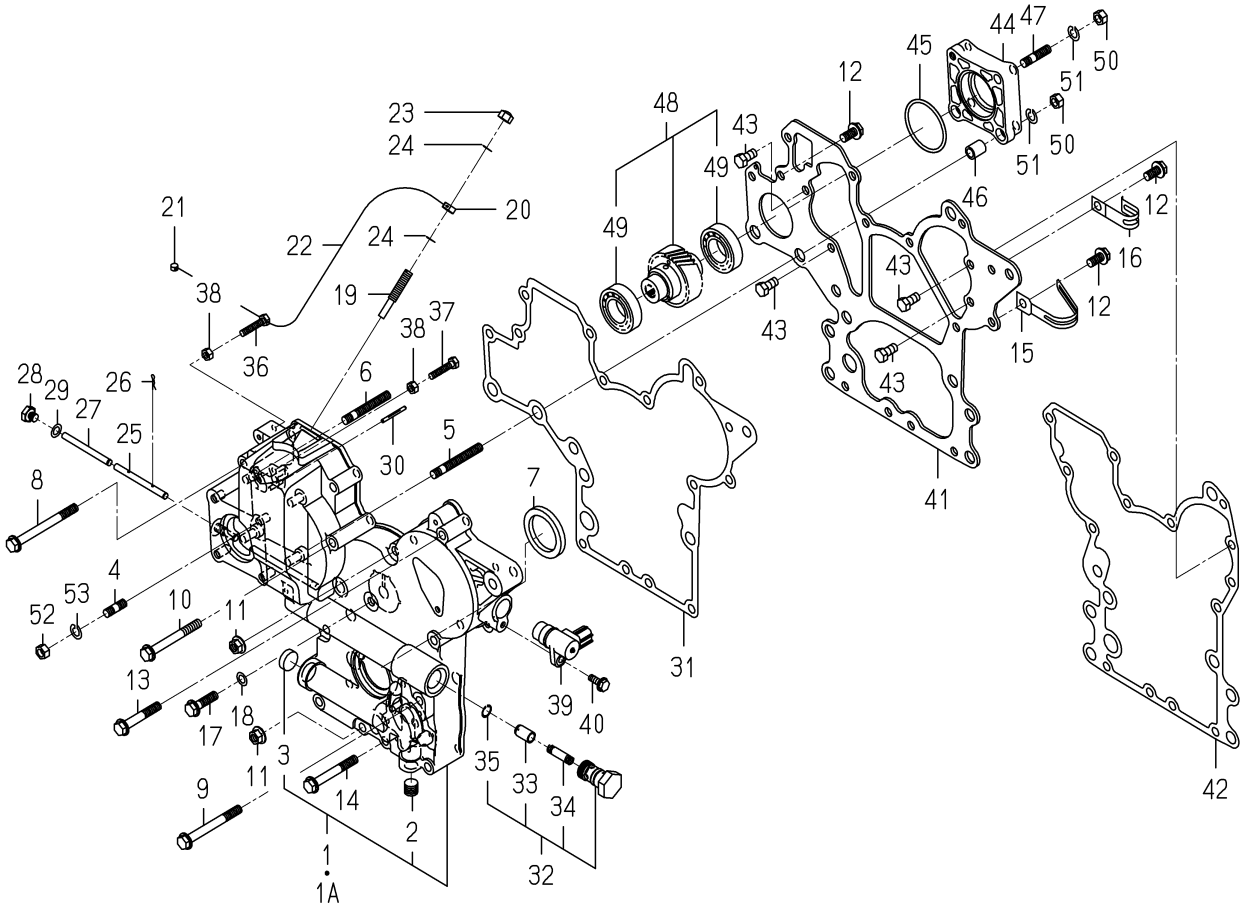

6005-241I-0100,6005-241I-0200

KEY	PART CODE	DESCRIPTION	SPC	TYPE OF MODEL E3CD VTB11		ITC	COL	GRP	REMARKS
1	6211-310-040-10	GEARCASE ASSY	*	1 -192021					
1A	6211-310-040-20	GEARCASE ASSY	*	1 192022-		1			
2	6209-605-003-10	PLUG/PT1/4	*	1 186831-					
3	6209-610-004-00	CUP/SEALING/20	*	1 186831-					
4	6904-110-822-00	STUD	*	4 186831-					
5	6904-110-855-00	STUD	*	2 186831-					
6	6904-110-850-00	STUD	*	1 186831-					
7	6209-625-002-00	SEAL,OIL	*	1 186831-					
8	V231-360-808-50	FLANGEBOLT	*	1 186831-					
9	V231-360-807-50	FLANGEBOLT	*	1 186831-					
10	V231-360-807-00	FLANGEBOLT	*	1 186831-					
11	3817-401-001-00	NUT/M08	*	2 186831-					
12	V231-360-801-60	FLANGEBOLT	*	3 186831-					
13	V231-360-805-00	FLANGEBOLT	*	3 186831-					
14	V231-360-806-00	FLANGEBOLT	*	4 186831-					
15	1650-650-015-00	CLAMP	*	1 186831-					
16	1425-621-004-00	HOLDER/JE/9-9	*	1 186831-					
17	V231-360-803-00	FLANGEBOLT	*	1 186831-					
18	6209-500-003-00	WASHER/08X14X01	*	1 186831-					
19	6215-546-003-10	STOPPER/FULLLOAD	*	1 186831-					
20	6209-409-001-00	NUT/M8	*	1 186831-					
21	6215-549-073-00	LEADSEAL	*	1 186831-					
22	6215-549-074-00	WIRE	*	1 186831-					
23	V341-120-008-00	NUT,CAP/M 8	*	1 186831-					
24	6209-920-002-00	PACKING	*	2 186831-					
25	6215-542-004-20	PIN/ARM	*	1 186831-					
26	P117-303-003-00	PIN/SNAP	*	2 186831-					
27	6215-542-005-10	PIN	*	1 186831-					
28	6209-600-004-00	PLUG/SCREW	*	1 186831-					
29	6209-500-003-00	WASHER/08X14X01	*	1 186831-					

FIG. 12 TIMING GEAR CASE

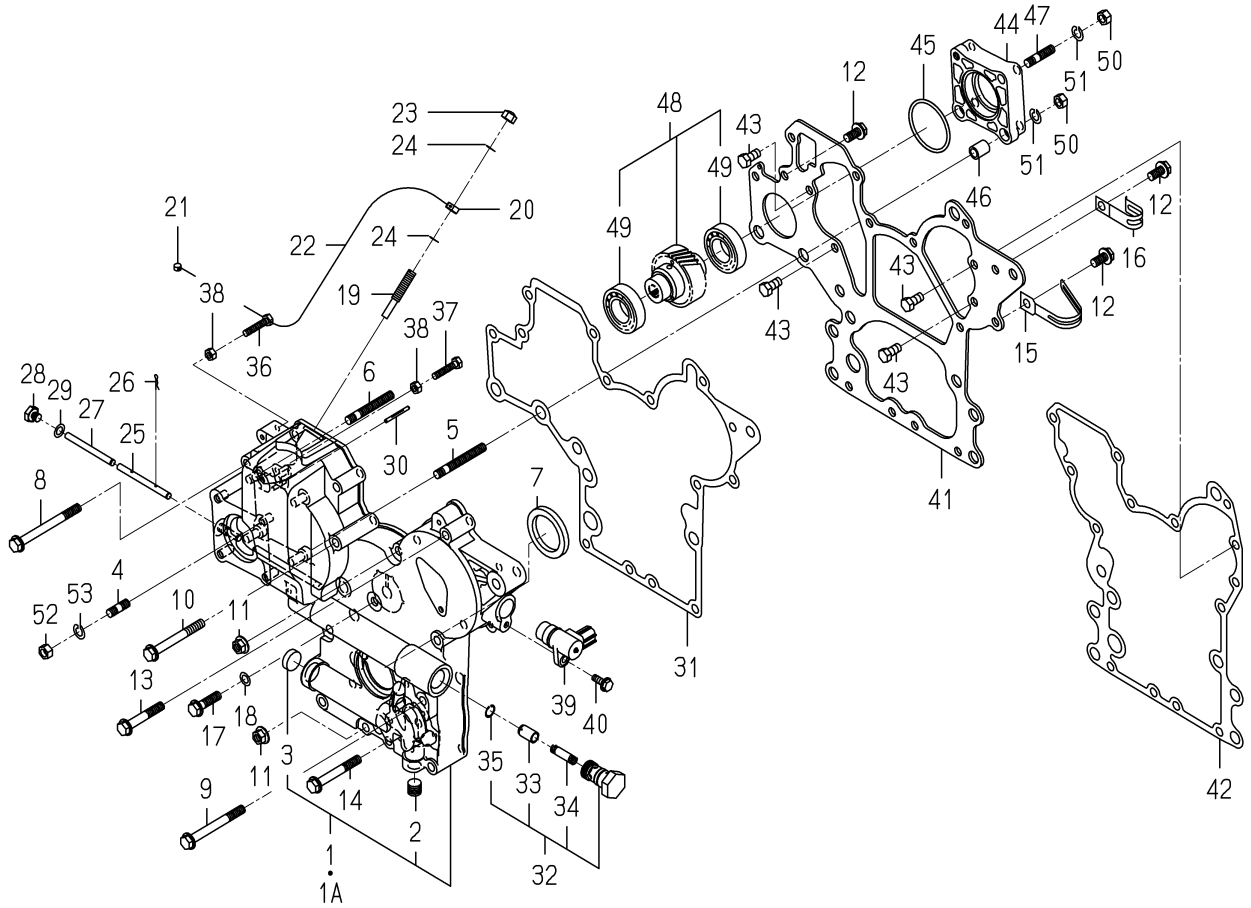

6005-241I-0100,6005-241I-0200

KEY	PART CODE	DESCRIPTION	SPC	TYPE OF MODEL E3CD VTB11		ITC	COL	GRP	REMARKS
30	6209-740-006-00	PIN/GROOVE	*	1 186831-					
31	6211-312-005-10	GASKET/GEARCASE	*	1 186831-					
32	6213-160-005-00	VALVE/RELIEF ASSY	*	1 186831-					
33	6213-161-003-10	PISTON/VALVE/RELIEF	*	1 186831-					
34	6213-164-001-00	SPRING/RELIEF VALVE	*	1 186831-					
35	V705-140-012-00	RING,SNAP/12 C	*	1 186831-					
36	6209-050-001-00	BOLT/M6	*	1 186831-					
37	6209-050-002-00	BOLT/M6	*	1 186831-					
38	V301-260-006-00	NUT/M6	*	2 186831-					
39	1690-654-200-00	SENSOR/REVOLUTION/R	*	1 186831-					
40	V230-360-601-60	FLANGEBOLT	*	1 186831-					
41	6211-311-013-20	PLATE/FRONT	*	1 186831-					
42	6211-312-006-10	GASKET/PLATE	*	1 186831-					
43	6902-050-816-00	BOLT	*	4 186831-					
44	6211-319-003-00	SPACER	*	1 186831-					
45	V723-102-005-00	O-RING 1A S50	*	1 186831-					
46	6209-749-001-20	PIN/TUBE	*	2 186831-					
47	6904-110-822-00	STUD	*	1 186831-					
48	6212-530-017-00	SHAFT/HYDRAULIC ASSY	*	1 186831-					
49	6209-800-011-00	BEARING	*	2 186831-					
50	V304-260-008-00	NUT	*	4 186831-					
51	V401-160-008-00	WASHER,SP/M 8	*	4 186831-					
52	V304-260-008-00	NUT	*	4 186831-					
53	V401-160-008-00	WASHER,SP/M 8	*	4 186831-					

FIG. 13 HANGER

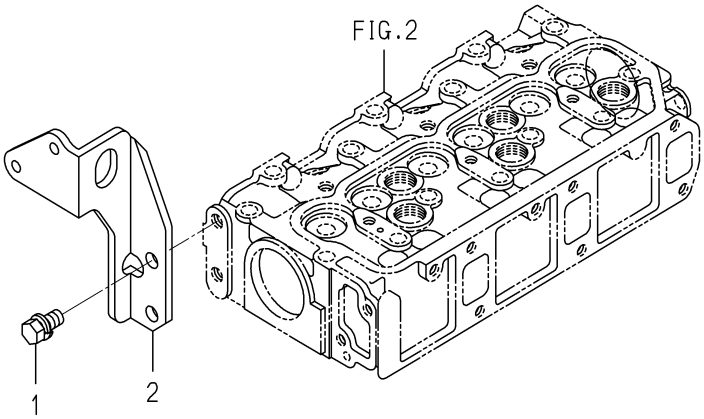

6005-290D-0100

KEY	PART CODE	DESCRIPTION	SPC	TYPE OF MODEL E3CD VTB11		ITC	COL	GRP	REMARKS
1	6901-911-020-00	BOLT,SEMS/M10X20	*	2					
2	6211-777-021-00	HANGER/F	*	1					

FIG. 14 VALVE

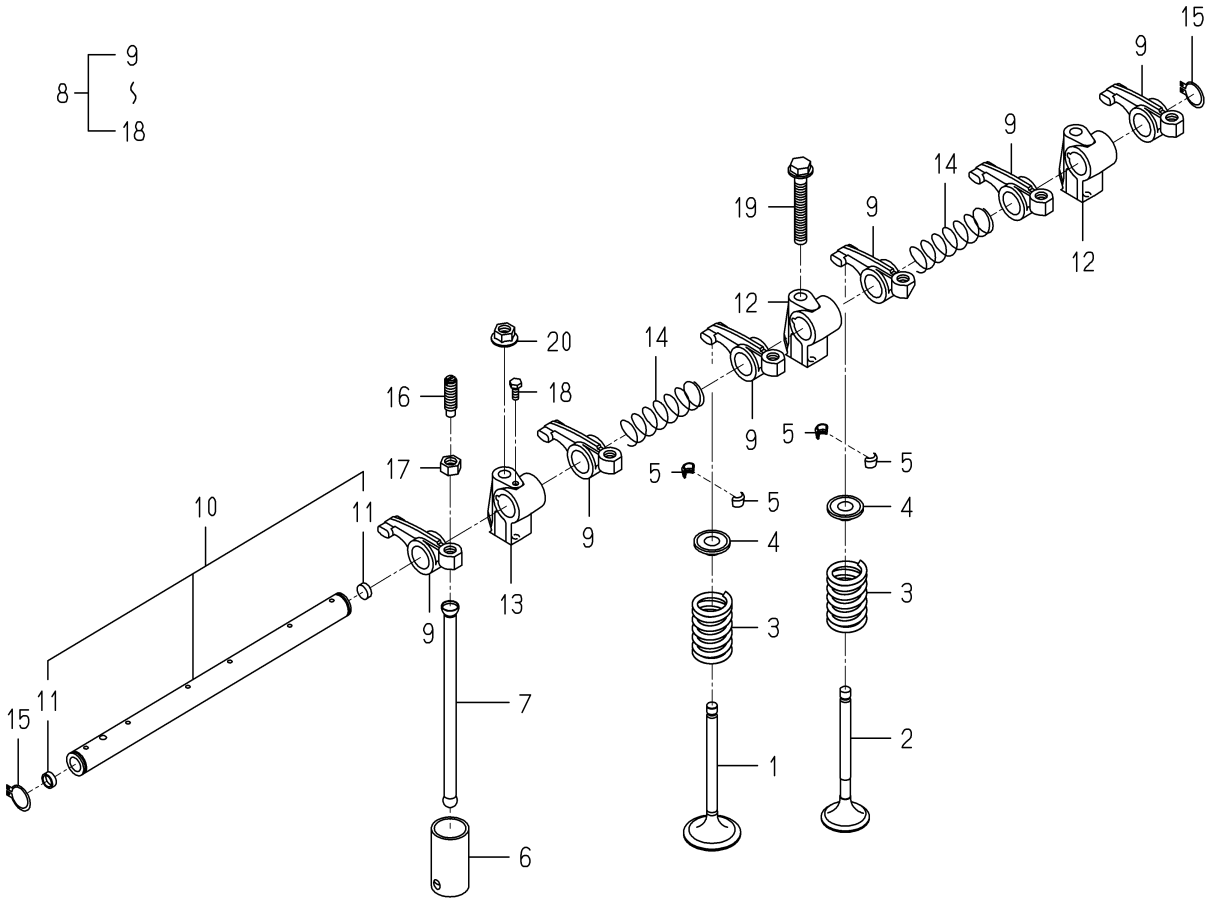

6005-301D-0100

KEY	PART CODE	DESCRIPTION	SPC	TYPE OF MODEL E3CD VTB11		ITC	COL	GRP	REMARKS
1	6212-551-019-00	VALVE/INTAKE	*	3					
2	6212-552-008-00	VALVE/EXHAUST	*	3					
3	6212-561-003-00	SPRING/VALVE	*	6					
4	6212-563-001-00	SEAT,VALVE SPRING	*	6					
5	6212-565-001-00	CUTTER,VALVE	*	12					
6	6212-571-002-30	TAPPET	*	6					
7	6212-575-003-00	PUSHROD	*	6					
8	6212-600-009-20	ROCKERSHAFT ASSY	*	1					
9	6212-611-004-10	ROCKERARM	*	6					
10	6212-620-008-20	SHAFT/ROCKERARM ASSY	*	1					
11	6212-626-002-10	PLUG	*	2					
12	6212-628-010-10	BRACKET/ROCKERSHAFT	*	2					
13	6212-628-011-10	BRACKET/ROCKERSHAFT	*	1					
14	6209-940-004-00	SPRING	*	2					
15	V704-140-016-00	RING,SNAP/16 C	*	2					
16	6212-616-002-00	SCREW ADJUST	*	6					
17	6209-409-003-00	NUT	*	6					
18	6209-000-002-00	BOLT	*	1					
19	V231-360-805-50	FLANGEBOLT	*	1					
20	3817-401-001-00	NUT/M08	*	2					

FIG. 15 CAM SHAFT

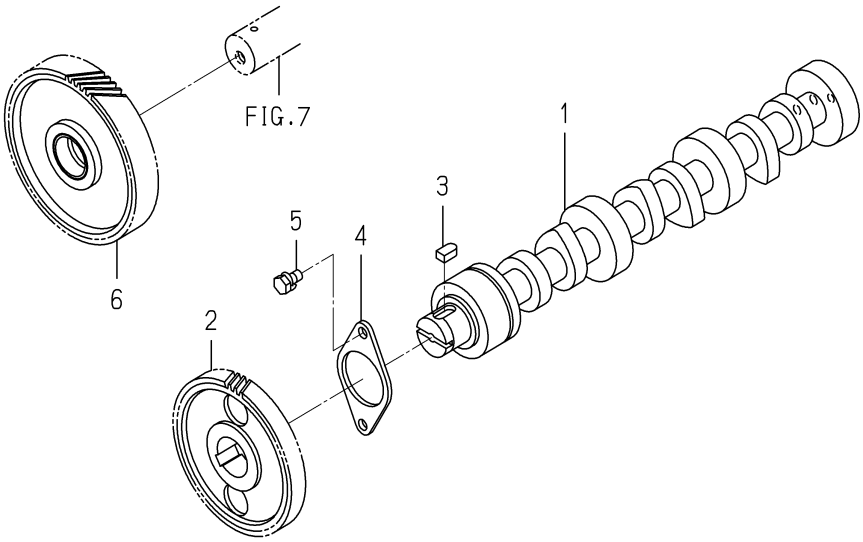

6005-310A-0100

KEY	PART CODE	DESCRIPTION	SPC	TYPE OF MODEL E3CD VTB11		ITC	COL	GRP	REMARKS
1	6212-511-005-00	CAMSHAFT	*	1					
2	6212-522-004-10	GEAR/CAMSHAFT	*	1					
3	6209-730-005-00	KEY/07X05X09	*	1					
4	6212-535-007-00	PLATE/THRUST	*	1					
5	6901-910-612-00	BOLT,SEMS/M6X12	*	2					
6	6212-523-021-00	GEAR/IDLE ASSY	*	1					

FIG. 16 PISTON

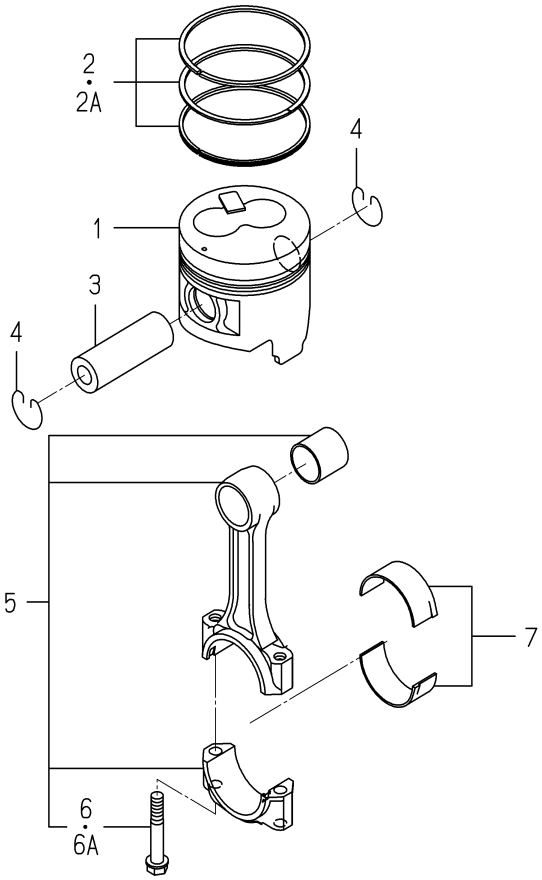

6005-340Q-0100

KEY	PART CODE	DESCRIPTION	SPC	TYPE OF MODEL E3CD VTB11		ITC	COL	GRP	REMARKS
1	6212-111-095-30	PISTON	*	3					
2	6212-121-029-10	RING/PISTONSET	*	3 -193488					
2A	6212-121-029-20	RING/PISTONSET	*	3 193489-		1			
3	6212-211-002-00	PIN/PISTON	*	3					
4	6909-950-115-00	RING SNAP	*	6					
5	6212-230-011-30	CONNECTINGROD ASSY	*	3					
6	6212-235-004-00	BOLT/CONNECTINGROD	*	6 -150480					
6A	6212-235-004-10	BOLT/CONNECTINGROD	*	6 150481-		1			
7	6212-271-009-00	BEARING/CONNECTING R	*	3					

FIG. 17 PISTON/OVER SIZE (OPTION)

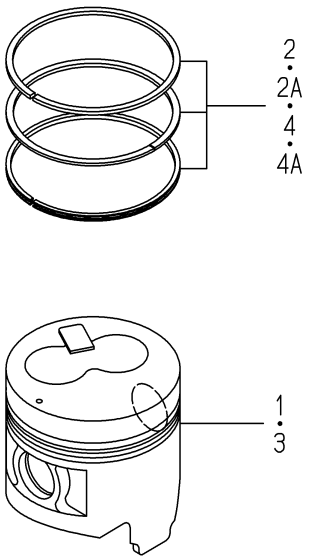

6005-349Q-0100

KEY	PART CODE	DESCRIPTION	SPC	TYPE OF MODEL E3CD VTB11		ITC	COL	GRP	REMARKS
1	6212-114-095-30	PISTON/OV	T	3					
2	6212-124-029-10	RING/PISTON/OVSET	T	3 -193488					
2A	6212-124-029-20	RING/PISTON/OVSET	T	3 193489-		1			
3	6212-116-095-30	PISTON/OV	T	3					
4	6212-126-029-10	RING/PISTON/OVSET	T	3 -193488					
4A	6212-126-029-20	RING/PISTON/OVSET	T	3 193489-		1			

FIG. 18 CRANK SHAFT

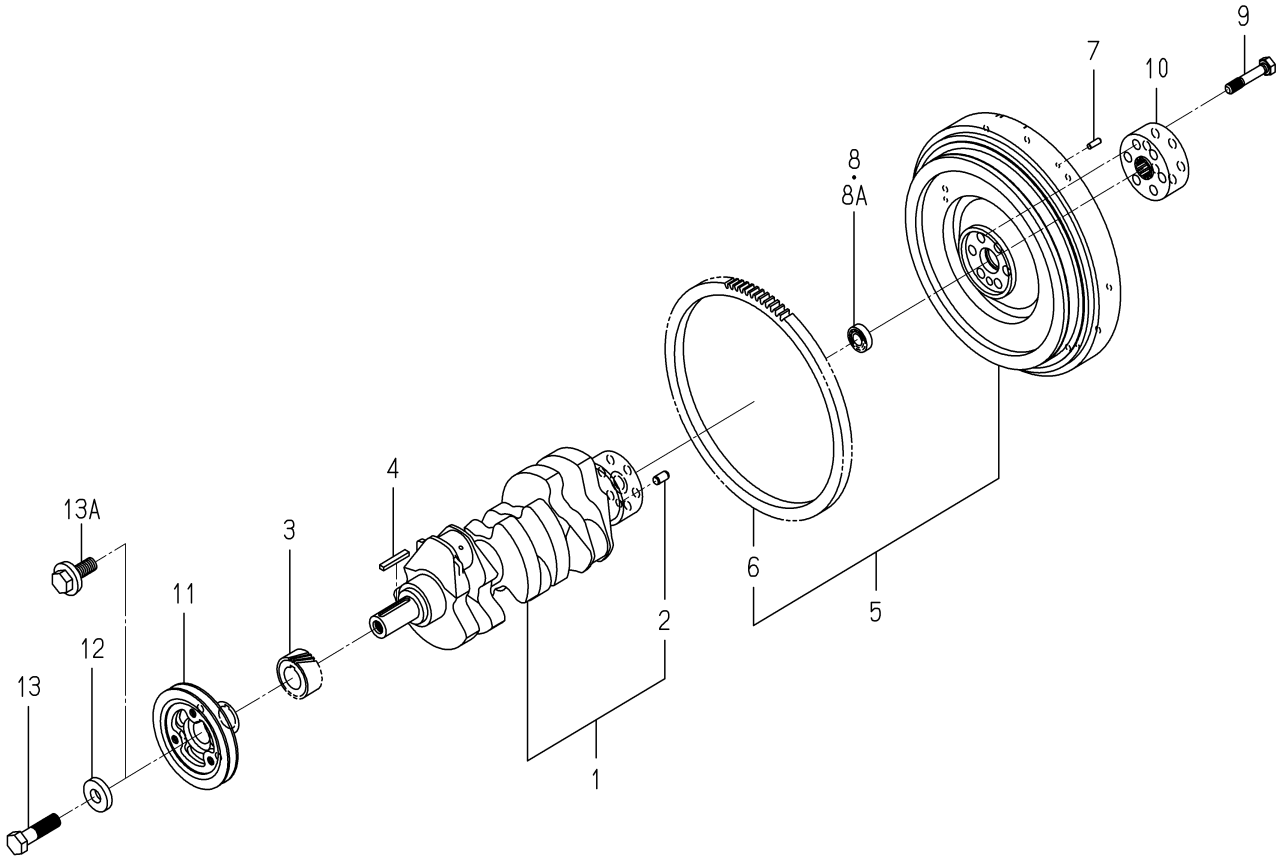

6005-351D-0100

KEY	PART CODE	DESCRIPTION	SPC	TYPE OF MODEL E3CD VTB11		ITC	COL	GRP	REMARKS
1	6212-310-011-40	CRANKSHAFT ASSY	*	1					
2	V523-101-001-80	PIN	*	1					
3	6212-521-008-00	GEAR/CRANK	*	1					
4	6209-730-006-00	KEY/07X05X43	*	1					
5	6212-330-075-10	FLYWHEEL ASSY	*	1					
6	6212-333-002-00	RINGGEAR	*	1					
7	V523-100-601-80	PIN	*	3					
8	V600-150-600-20	BEARING,RB/6002SS	*	1 -156430					
8A	V600-350-600-20	BEARING/BALL	*	1 156431-					
9	6209-000-041-00	BOLT	*	6					
10	6212-339-009-10	BOSS/SPLINE	*	1					
11	6212-371-035-10	PULLEY/CRANK	*	1					
12	6212-379-001-00	WASHER	*	1 -165260					
13	6901-066-645-00	BOLT	*	1 -165260					
13A	6209-000-043-00	BOLT/CRANK	*	1 165261-					

FIG. 19 OIL PUMP

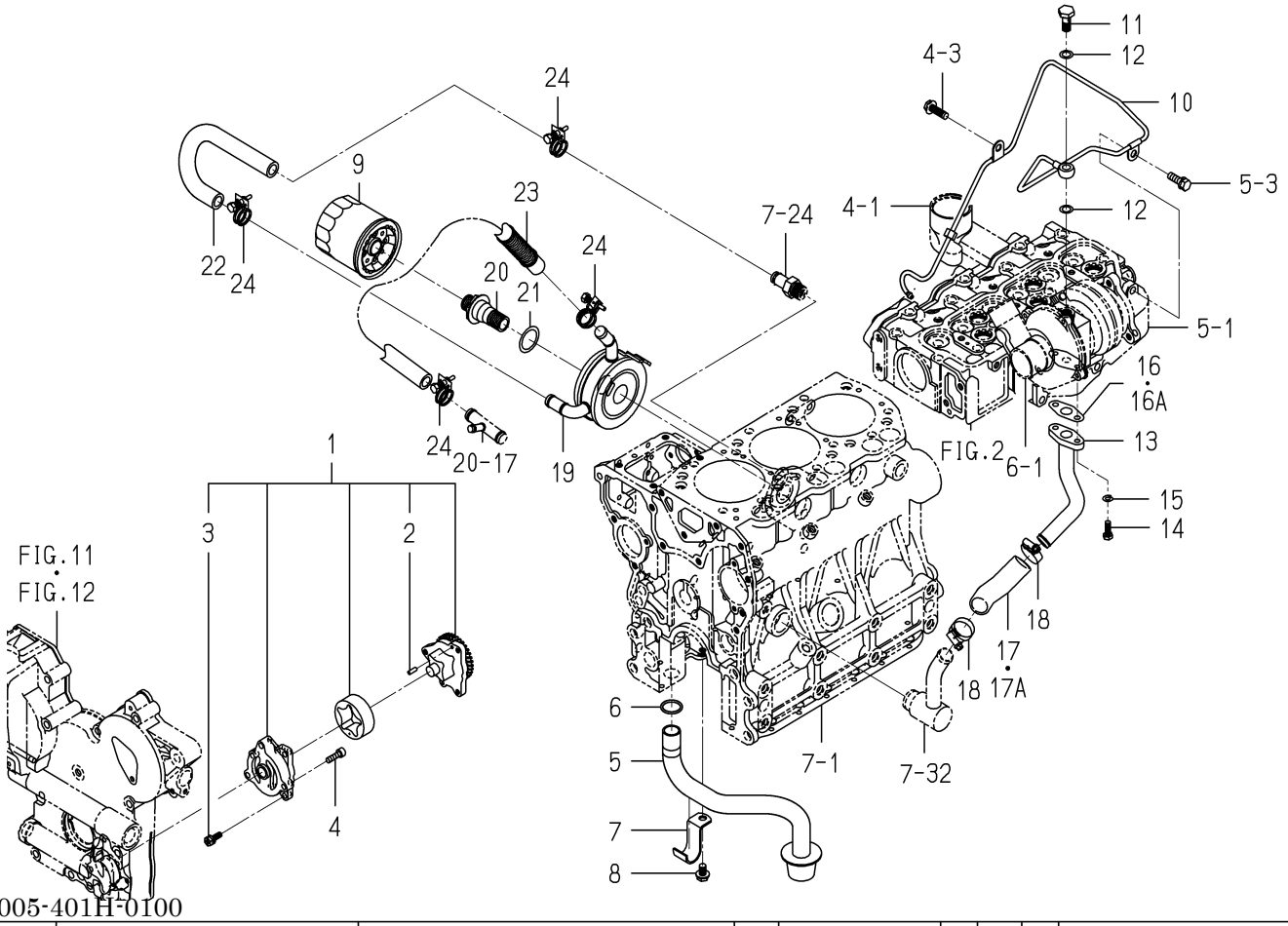

6005-401H-0100

KEY	PART CODE	DESCRIPTION	SPC	TYPE OF MODEL E3CD VTB11		ITC	COL	GRP	REMARKS
1	6213-100-010-00	OILPUMP ASSY	*	1					
2	6213-129-003-00	PIN/STRAIGHT	*	2					
3	6213-119-001-00	BOLT/WS	*	3					
4	V220-540-602-00	SCREW/SOCKET	*	3					
5	6213-140-013-00	STRAINER	*	1					
6	V720-103-502-20	O-RING/P22	*	1					
7	6213-149-003-20	CLAMP/STRAINER	*	1					
8	V231-360-801-60	FLANGEBOLT	*	1					
9	6213-240-005-10	CARTRIDGE/OILFILTER	*	1					
10	6213-311-057-00	PIPE/OIL ASSY	*	1					
11	6209-060-004-00	BOLT/EYE	*	1					
12	6209-920-003-00	GASKET	*	2					
13	6213-311-055-00	PIPE/OIL COMP	*	1					
14	6209-030-094-00	BOLT	*	2					
15	V401-160-006-00	WASHER,SP/M 6	*	2					
16	6209-630-004-10	GASKET	*	1 -159416					
16A	6209-630-004-20	GASKET	*	1 159417-		1			
17	6209-360-076-10	HOSE/RUBBER	*	1 -188129					
17A	6209-360-076-20	HOSE/RUBBER	*	1 188130-		1			
18	J061-116-025-00	CLAMP/WORM/16-25	*	2					
19	6221-700-004-00	OILCOOLER	*	1					
20	6221-726-006-00	CONNECTOR/OILCOOLER	*	1					
21	6221-726-008-00	WASHER/OILCOOLER	*	1					
22	6209-360-071-10	HOSE/OILCOOLER/IN	*	1					
23	6209-360-072-20	HOSE/OILCOOLER/OUT	*	1					
24	J061-216-020-00	CLAMP/WIRE/16-20	*	4					

FIG. 20 WATER PUMP

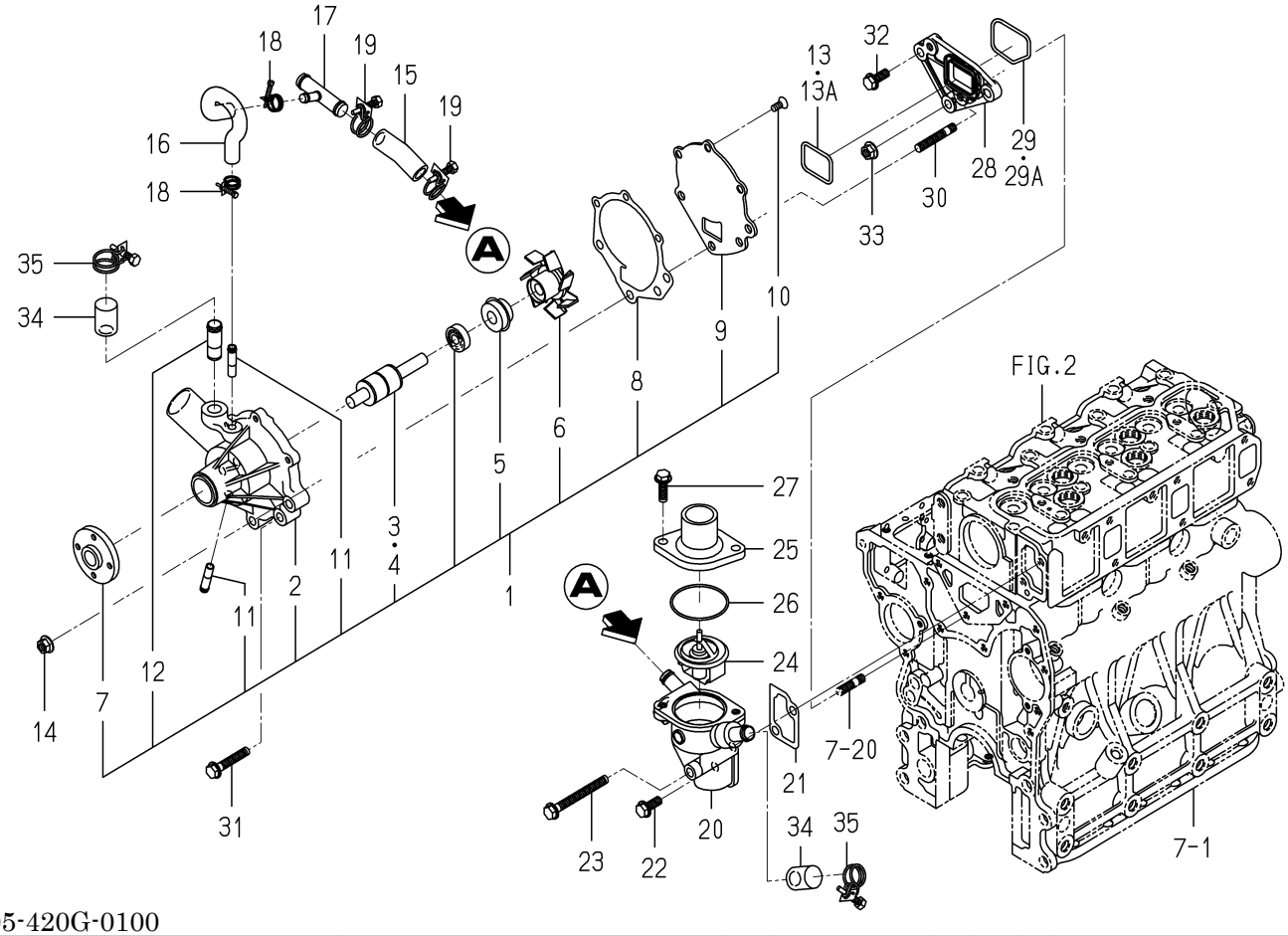

6005-420G-0100

KEY	PART CODE	DESCRIPTION	SPC	TYPE OF MODEL E3CD VTB11		ITC	COL	GRP	REMARKS
1	6213-610-011-10	WATERPUMP ASSY	*	1					
2	6213-611-006-00	BODY/WATERPUMP	*	1					
3	6213-631-002-00	BEARING/WATER PUMP	*	1					
4	6213-631-005-00	BEARING/WATERPUMP	*	1					
5	6213-622-002-10	SEAL SET/WATER PUMP	*	1					
6	6213-621-003-00	ROTOR/WATERPUMP	*	1					
7	6213-642-002-00	SEAL/WATER PUMPPULLE	*	1					
8	6213-613-002-10	GASKET	*	1					
9	6213-612-004-00	PLATE/WATER PUMP	*	1					
10	6213-619-003-00	SCREW/WATER PUMP	*	3					
11	6213-619-002-00	PIPE/WATER PUMP	*	2					
12	6213-619-009-00	PIPE/WATERPUMP	*	1					
13	V721-103-104-00	O-RING/G40	*	1 -150480					
13A	6213-614-013-00	GASKET/WATERPUMP	*	1 150481-					
14	3817-401-001-00	NUT/M08	*	2					
15	6213-729-004-10	HOSE/RUBBER	*	1					
16	6213-729-013-10	HOSE/RUBBER	*	1					
17	6213-719-002-00	JOINT	*	1					
18	J061-210-015-00	CLAMP/WIRE/10-15	*	2					
19	J061-216-020-00	CLAMP/WIRE/16-20	*	2					
20	6213-716-003-10	HOUSING/THERMOSTAT	*	1					
21	6213-743-002-10	GASKET/HOUSING	*	1					
22	V231-360-802-00	FLANGEBOLT	*	1					
23	V231-360-807-50	FLANGEBOLT	*	1					
24	6513-770-022-10	THERMOSTAT	*	1					
25	6213-711-003-20	PIPE,WATER OUTLET	*	1					
26	V723-102-005-50	O-RING	*	1					
27	V231-360-802-50	FLANGEBOLT	*	2					
28	6213-619-006-00	SPACER/WATERPUMP	*	1					
29	V721-113-105-00	O-RING HS90 G50	*	1 -150480					

FIG. 20 WATER PUMP

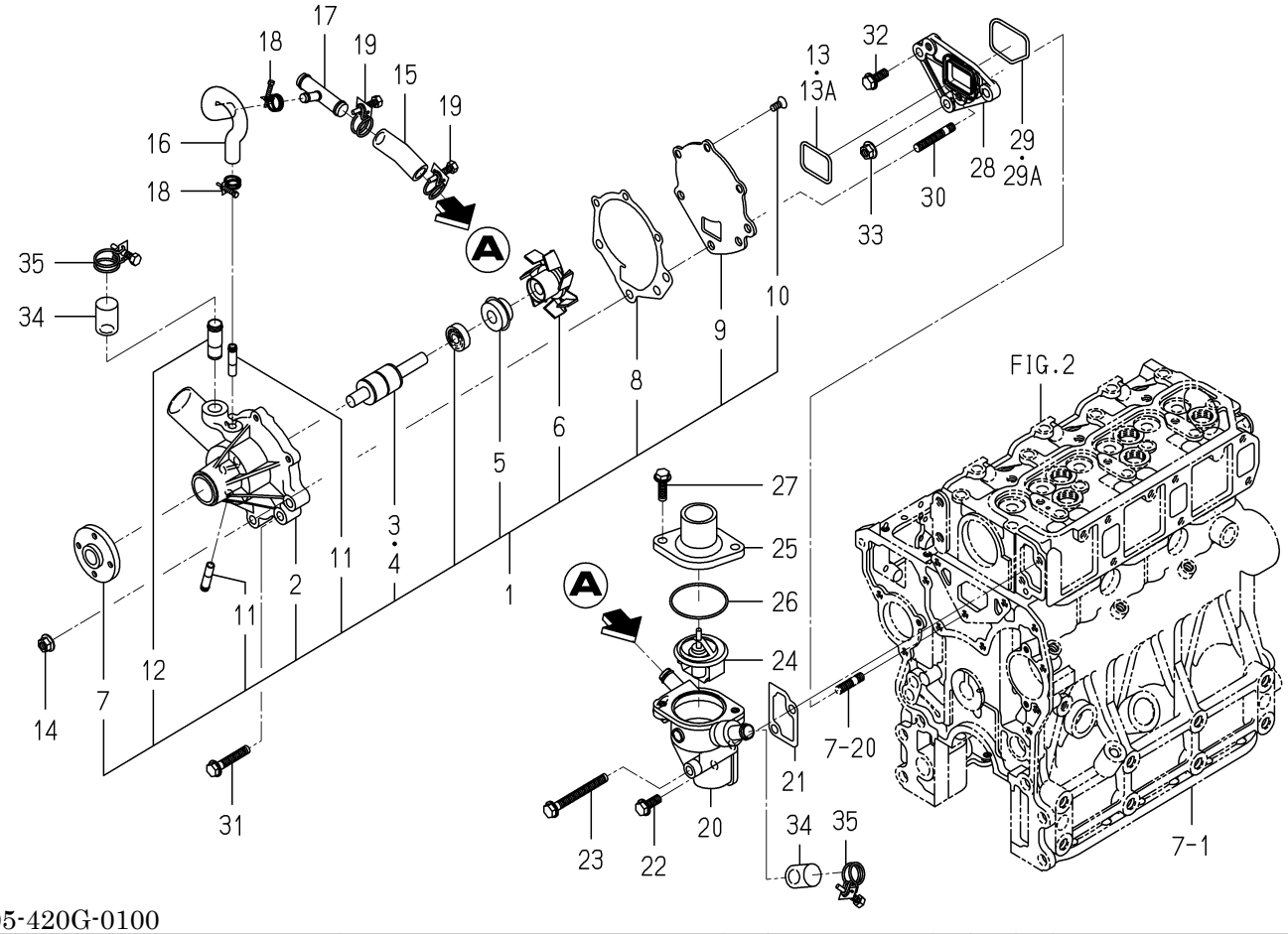

6005-420G-0100

KEY	PART CODE	DESCRIPTION	SPC	TYPE OF MODEL E3CD VTB11		ITC	COL	GRP	REMARKS
29A	6213-614-014-00	GASKET/SPACER	*	1 150481-					
30	6904-110-840-00	STUD/M8X40	*	2					
31	V231-360-804-50	FLANGEBOLT	*	1					
32	V231-360-802-00	FLANGEBOLT	*	1					
33	3817-401-001-00	NUT/M08	*	1					
34	6213-729-011-00	CAP	*	2					
35	J061-220-024-00	CLAMP/WIRE/20-24	*	2					

FIG. 21 COOLING FAN

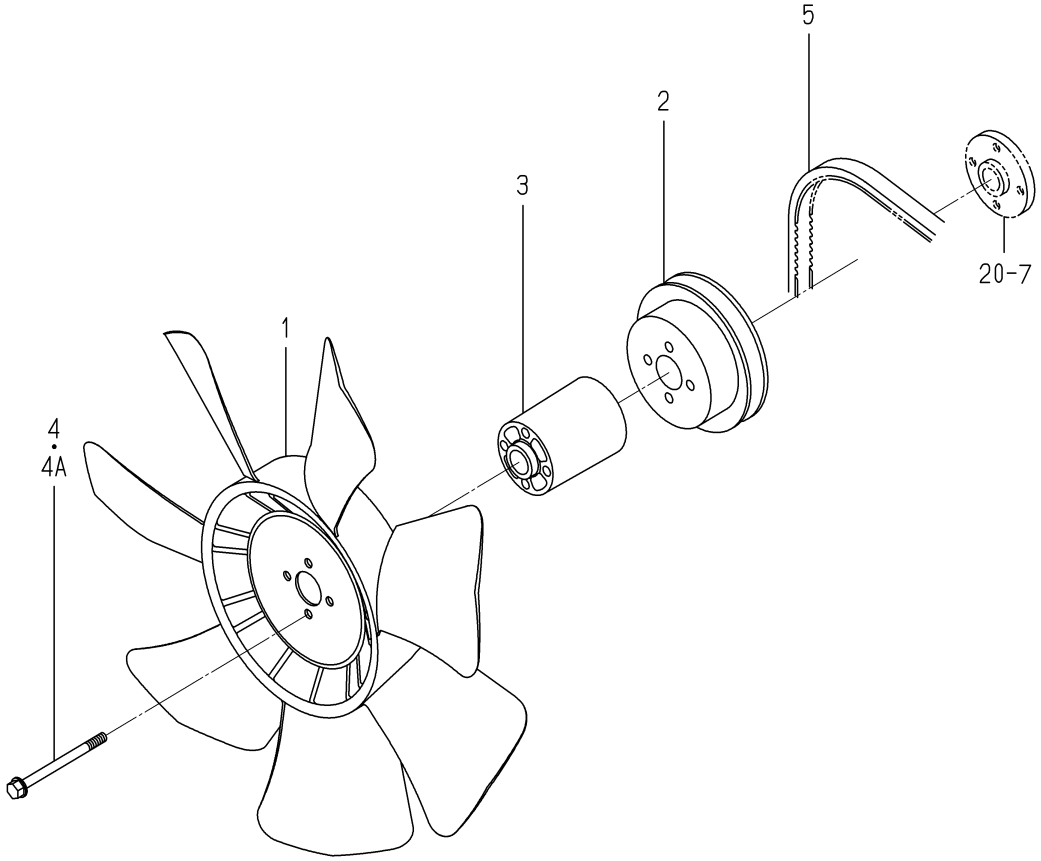

6005-480Z-0100

KEY	PART CODE	DESCRIPTION	SPC	TYPE OF MODEL E3CD VTB11		ITC	COL	GRP	REMARKS
1	6213-660-015-00	FAN/COOLING	*	1					
2	6213-641-022-10	PULLEY/WATERPUMP	*	1					
3	6213-669-009-00	SPACER/FAN/68	*	1					
4	6209-030-048-00	BOLT/WS	*	4 -194674					
4A	6209-046-007-00	BOLT/FLANGE	*	4 194675-					
5	6213-671-031-00	BELT/VR5A39.5	*	1					

FIG. 22 INJECTION NOZZLE

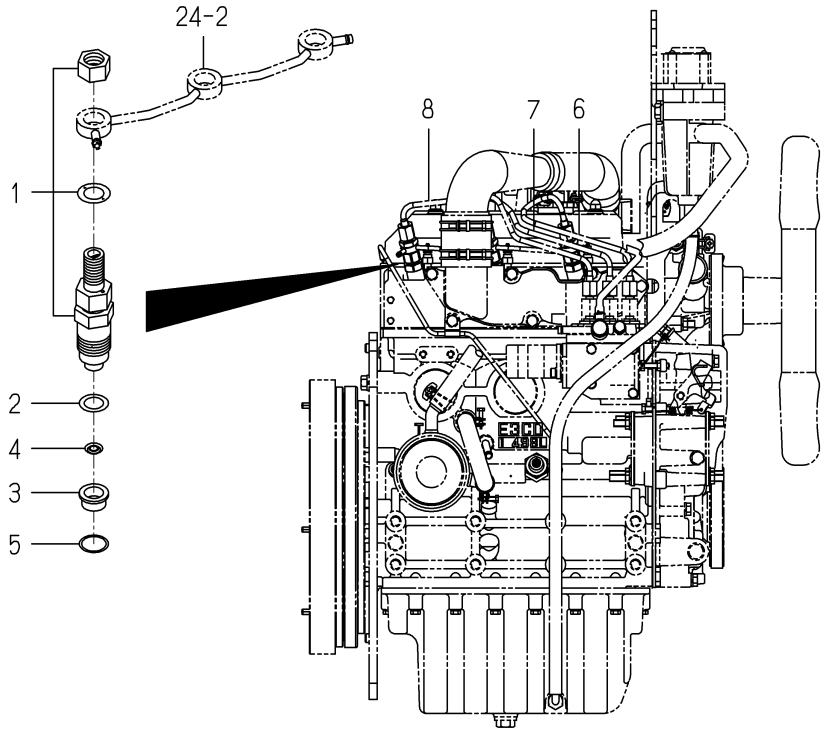

6005-501F-0100

KEY	PART CODE	DESCRIPTION	SPC	TYPE OF MODEL E3CD VTB11		ITC	COL	GRP	REMARKS
1	6215-300-037-00	INJECTIONNOZZLE ASSY	*	3					FIG 030
2	6215-315-002-00	GASKET,NOZZLE	*	3					
3	6215-315-006-00	HEATSHILD/NOZZLE	*	3					
4	6215-315-005-00	WASHER/CORRUGATE	*	3					
5	6215-315-007-00	GASKET	*	3					
6	6215-411-137-00	PIPE/INJECTION ASSY	*	1					
7	6215-411-138-00	PIPE/INJECTION ASSY	*	1					
8	6215-411-139-00	PIPE/INJECTION ASSY	*	1					

FIG. 23 INJECTION PUMP

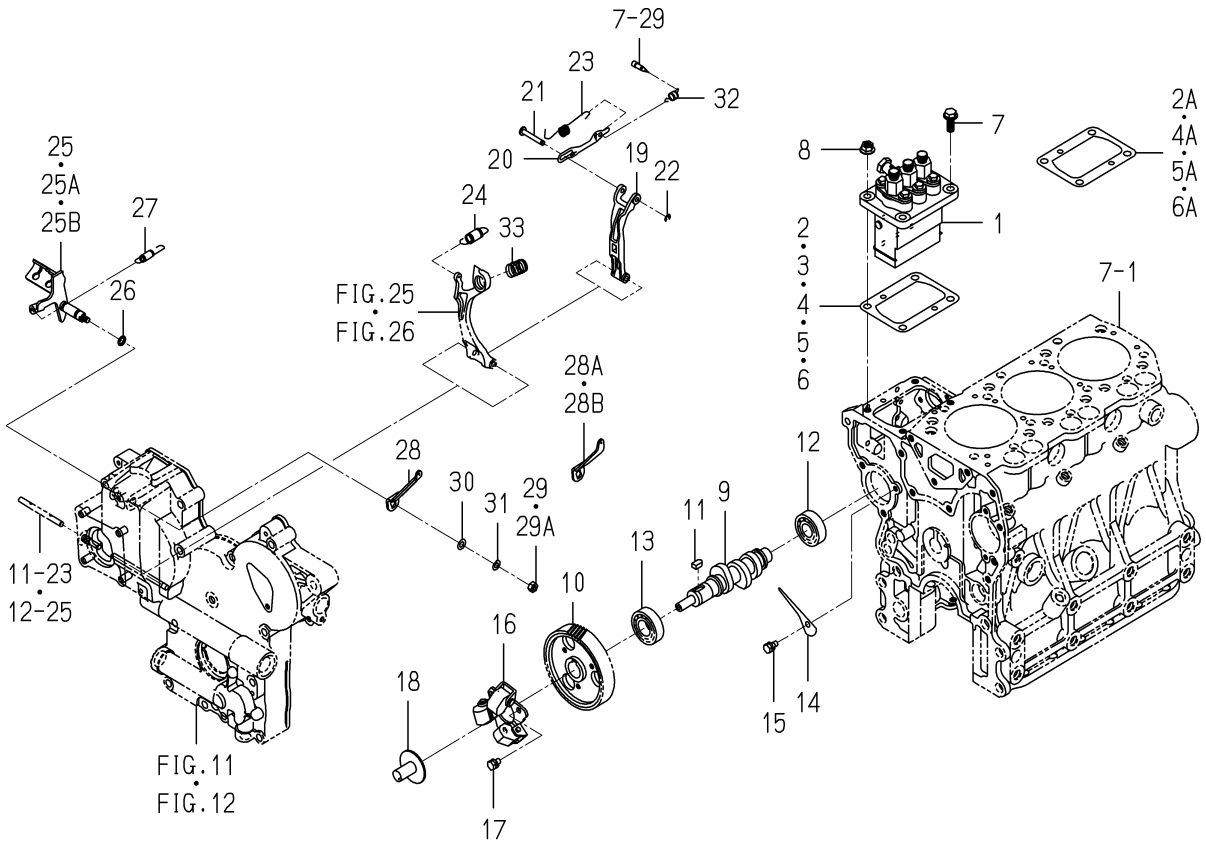

6005-511D-0100

KEY	PART CODE	DESCRIPTION	SPC	TYPE OF MODEL E3CD VTB11		ITC	COL	GRP	REMARKS
1	6215-600-078-10	INJECTIONPUMP ASSY	*	1					FIG 031
2	6219-752-006-00	SHIM/INJECTION P/0.3	*	1 -143634					
2A	6219-752-045-00	SHIM/INJECTIONPUMP	*	1 143635-					
3	6219-752-007-00	SHIM/INJECTION P/0.1	*	1 -143634					
4	6219-752-008-00	SHIM/INJECTION P/0.2	*	1 -143634					
4A	6219-752-044-00	SHIM/INJECTIONPUMP	*	1 143635-					
5	6219-752-009-00	SHIM/INJECTION P/0.4	*	1 -143634					
5A	6219-752-046-00	SHIM/INJECTIONPUMP	*	1 143635-					
6	6219-752-010-00	SHIM/INJECTION P/0.5	*	1 -135590					
6A	6219-752-047-00	SHIM/INJECTIONPUMP	*	1 143635-					
7	V231-360-802-00	FLANGEBOLT	*	2					
8	3817-401-001-00	NUT/M08	*	2					
9	6215-621-018-10	CAMSHAFT/INJPUMP	*	1					
10	6212-524-012-30	GEAR/INJECTIONPUMP	*	1					
11	6209-730-005-00	KEY/07X05X09	*	1					
12	V600-110-620-30	BEARING,RB/6203	*	1					
13	6209-800-010-00	BEARING	*	1					
14	6212-535-009-00	PLATE/THRUST/INJPUMP	*	1					
15	6901-910-612-00	BOLT,SEMS/M6X12	*	1					
16	6215-520-007-10	FLYWEIGHT ASSY	*	1					
17	6209-030-043-00	BOLT/M6X10	*	3					
18	6215-526-004-00	THRUSTPIECE	*	1					
19	6215-541-001-10	ARM/FLOATING COMP	*	1					
20	6215-543-002-10	RINK/CONTROL	*	1					
21	6215-542-006-00	PIN,CONTROL	*	1					
22	V710-140-004-00	RING,SNAP/ 4 E	*	1					
23	6215-549-031-10	SPRING/SETTING	*	1					
24	6215-531-019-00	SPRING/GOVERNOR	*	1					
25	6215-541-024-30	LEVER/CONTROL COMP	*	1 -180974					
25A	6215-541-045-00	LEVER/CONTROL COMP	*	1 -191056					

FIG. 23 INJECTION PUMP

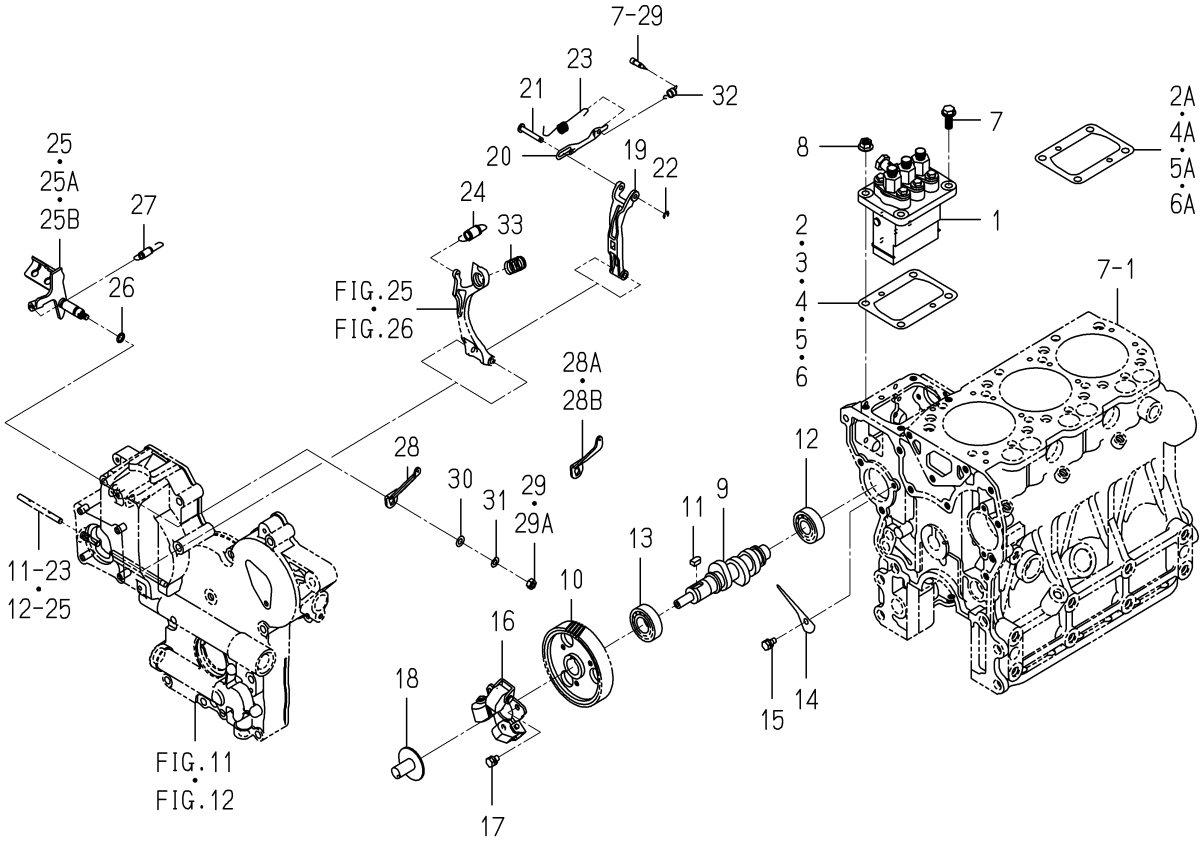

6005-511D-0100

KEY	PART CODE	DESCRIPTION	SPC	TYPE OF MODEL E3CD VTB11		ITC	COL	GRP	REMARKS
25B	6215-541-045-10	LEVER/CONTROL COMP	*	1 191057-		3			
26	V720-101-900-80	O-RING/P 8	*	1					
27	6209-580-002-10	SPRING,RETURN	*	1					
28	6215-549-007-10	ARM/CONTROL	*	1 -180974					
28A	6215-549-076-00	ARM/CONTROL	*	1 -183522					
28B	6215-549-076-10	ARM/CONTROL	*	1 183523-		3			
29	6909-110-406-00	NUT	*	1 -178577					
29A	V301-260-006-00	NUT/M6	*	1 178578-					
30	V411-260-006-00	WASHER / M6	*	1					
31	V401-160-006-00	WASHER,SP/M 6	*	1					
32	6215-549-039-00	SPRING/STARTING	*	1					
33	6215-537-002-10	SPRING/IDLE	*	1					

FIG. 24 FUEL PIPE

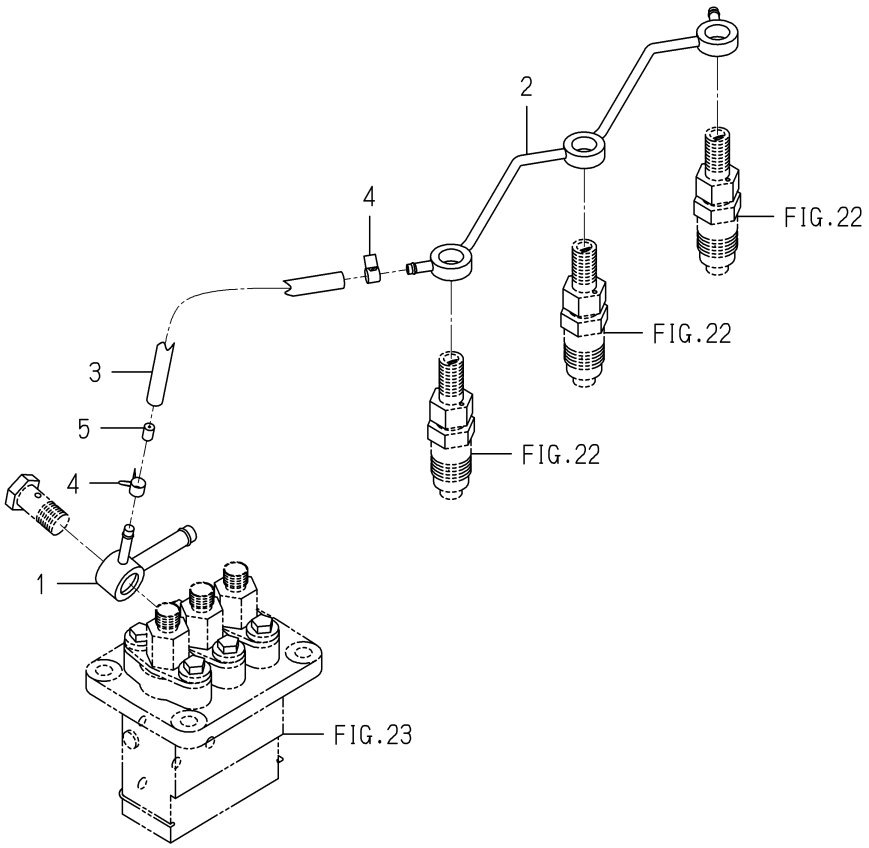

6005-550F-0100

KEY	PART CODE	DESCRIPTION	SPC	TYPE OF MODEL E3CD VTB11		ITC	COL	GRP	REMARKS
1	6215-412-004-00	CONNECTOR/FUEL	*	1					
2	6215-411-136-00	PIPE/FUEL	*	1					
3	6209-360-011-00	HOSE/RUBBER	*	1					
4	J062-076-082-00	CLIP/HOSE/7.6-8.2	*	2					
5	3640-586-004-00	RESISTANCE/1.0	*	1					

FIG. 25 ADAPTER

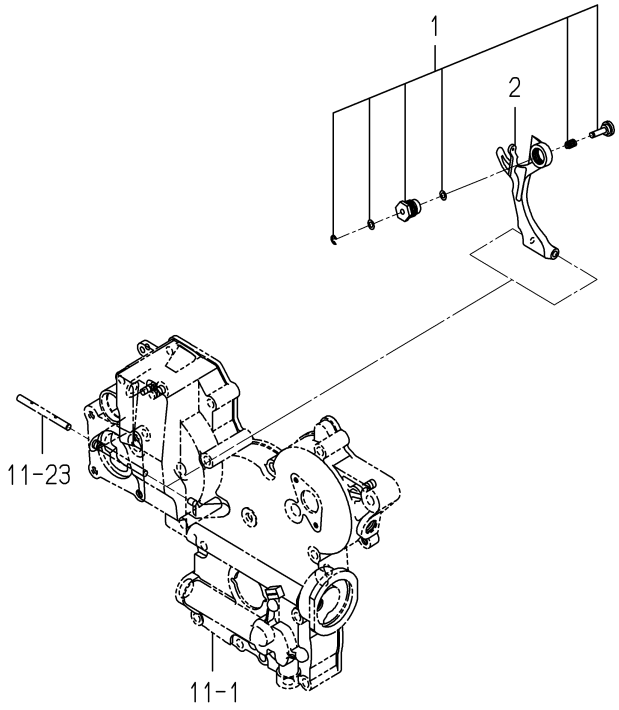

6005-560 -0100

KEY	PART CODE	DESCRIPTION	SPC	TYPE OF MODEL E3CD VTB11		ITC	COL	GRP	REMARKS
1	6215-548-029-00	ADAPTER/255X065 ASSY	*	1 -148515					
2	6215-541-016-30	ARM/TENSION	*	1 -148515					

FIG. 26 ADAPTER

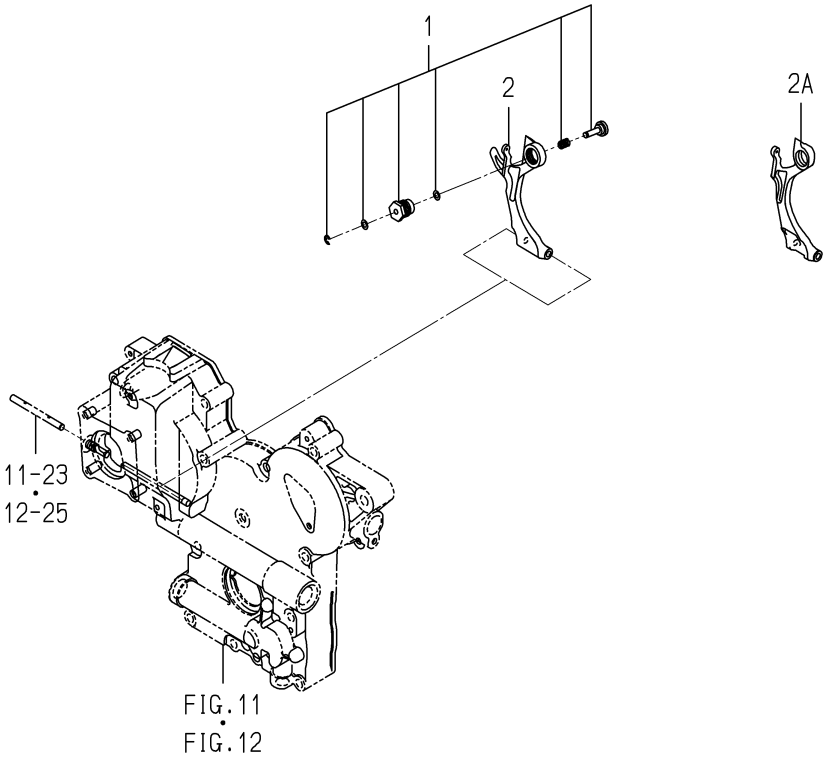

6005-560Y-0100

KEY	PART CODE	DESCRIPTION	SPC	TYPE OF MODEL E3CD VTB11		ITC	COL	GRP	REMARKS
1	6215-548-070-00	ADAPTER/250X090 ASSY	*	1 148516-					
2	6215-541-016-30	ARM/TENSION	*	1 -168197					
2A	6215-541-016-40	ARM/TENSION	*	1 168198-		1			

FIG. 27 ELECTRIC (1)

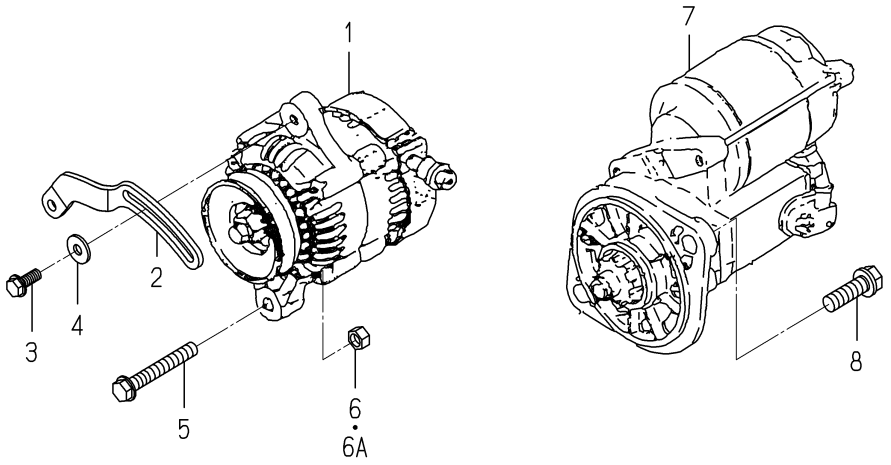

6005-801W-0100,6005-801W-0200

KEY	PART CODE	DESCRIPTION	SPC	TYPE OF MODEL E3CD VTB11		ITC	COL	GRP	REMARKS
1	6281-200-021-00	GENERATOR ASSY	*	1					FIG 033
2	6213-674-006-20	PLATE/ADJUST	*	1					
3	V231-360-802-00	FLANGEBOLT	*	1					
4	1373-121-001-00	WASHER/9X22X2	*	1					
5	V233-361-007-00	FLANGEBOLT	*	1					
6	6909-110-410-00	NUT/M10	*	1 -171486					
6A	V334-260-010-00	NUT/M10	*	1 171487-					
7	6281-100-007-20	STARTER ASSY	*	1					FIG 032
8	6901-931-240-00	BOLT	*	2					

FIG. 28 ELECTRIC (2)

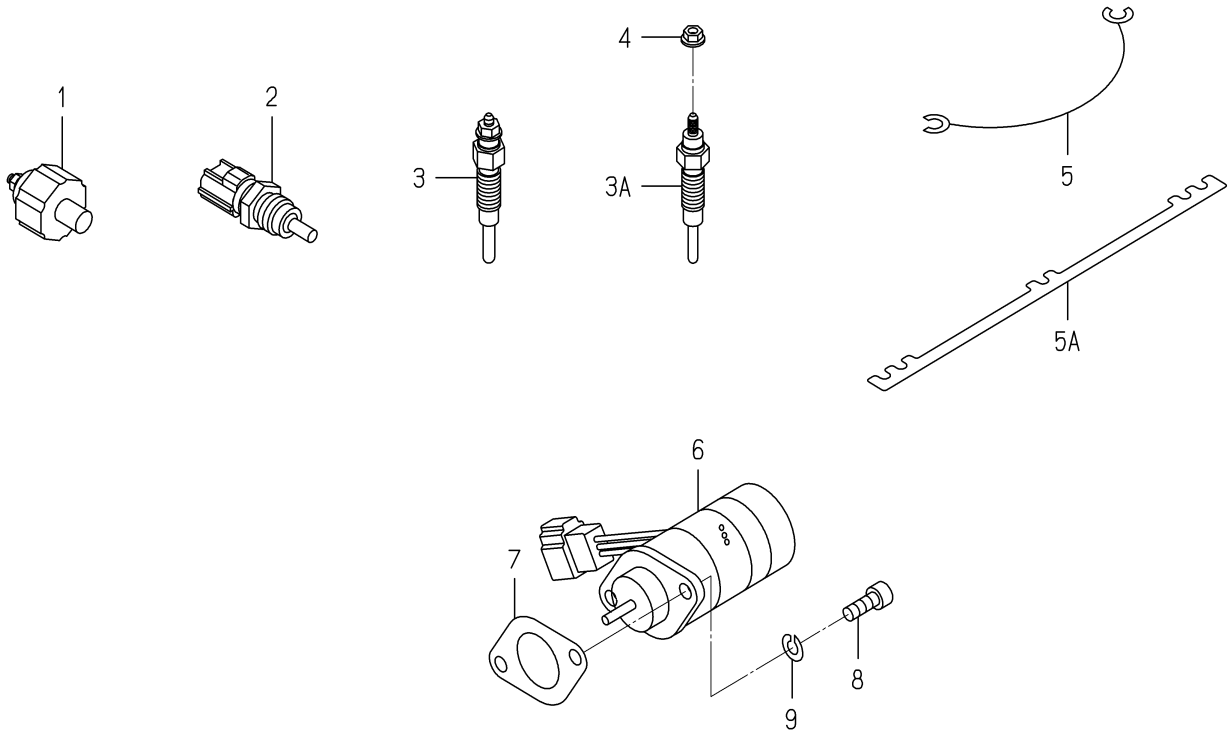

6005-820S-0100,6005-820S-0200

KEY	PART CODE	DESCRIPTION	SPC	TYPE OF MODEL E3CD VTB11		ITC	COL	GRP	REMARKS
1	6281-971-003-00	SWITCH/OILPRESSURE	*	1					
2	6282-450-007-00	THERMOMETER	*	1					
3	6281-410-023-00	GLOWPLUG	*	3 -170197					
3A	6281-410-023-10	GLOWPLUG	*	3 170198-		3			
4	6209-440-005-00	NUT/FLANGE	*	3 170224-					
5	6219-732-012-00	CONNECTOR/GLOWPLUG	*	2 -150159					
5A	6219-732-017-00	CONNECTOR/GLOWPLUG	*	1 150160-					
6	6281-910-011-00	SOLENOID	*	1					
7	6209-630-002-10	GASKET	*	1					
8	V220-540-601-60	BOLT	*	2					
9	V401-160-006-00	WASHER,SP/M 6	*	2					

FIG. 29 REPAIR PARTS(OPTION)

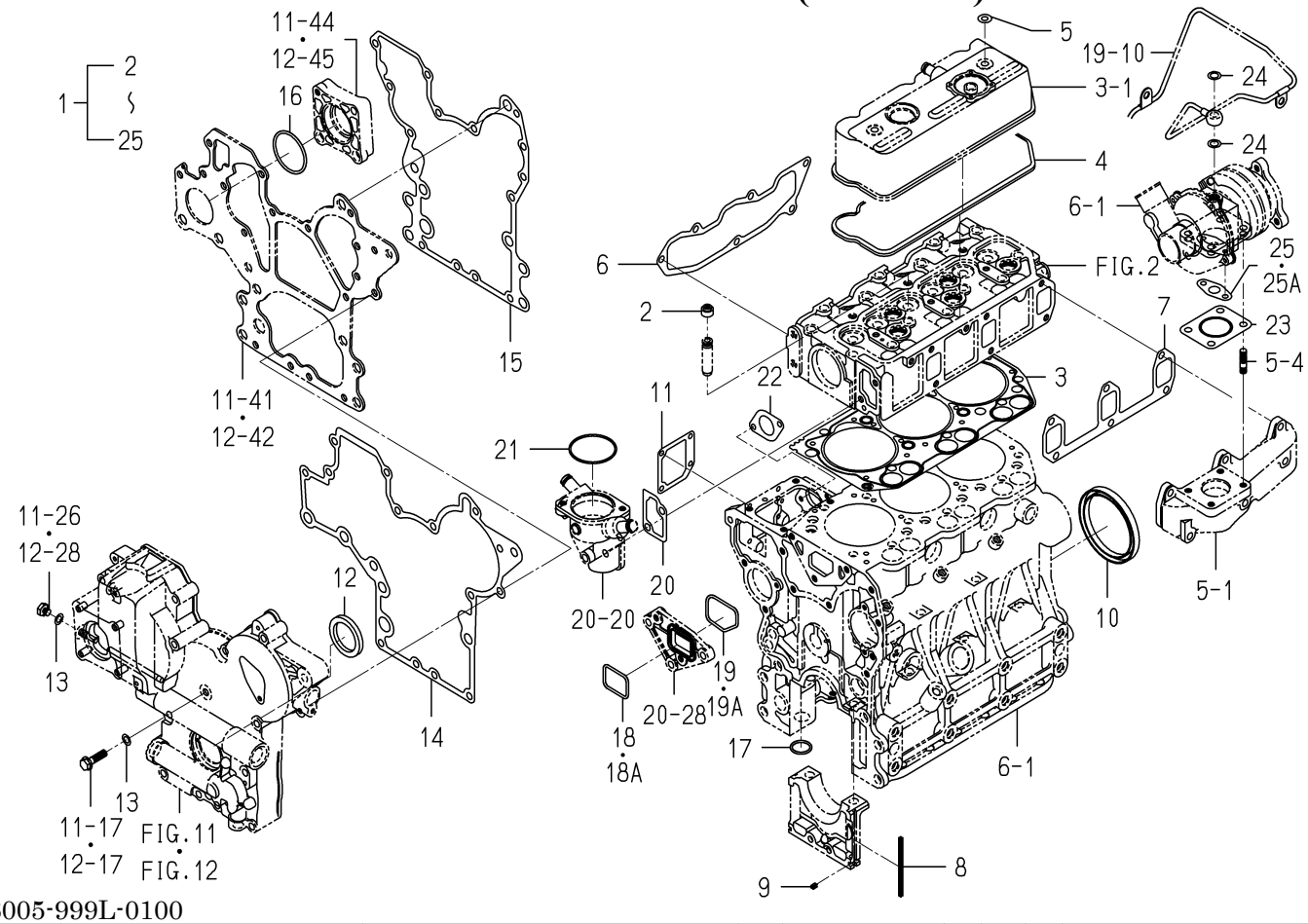

6005-999L-0100

KEY	PART CODE	DESCRIPTION	SPC	TYPE OF MODEL E3CD VTB11		ITC	COL	GRP	REMARKS
1	6287-810-041-10	REPAIR/ENGINESET	T	1					
2	6212-569-002-00	SEAL,OIL	T	6					
3	6211-141-057-10	GASKET/CYLINDERHEAD	T	1					
4	6211-173-005-00	SEAL/CYL HEAD/UNDER	T	1					
5	6209-572-003-00	GASKET	T	2					
6	6214-115-003-10	GASKET/INLETMANIFOLD	T	1					
7	6214-145-004-20	GASHET/EXH MANIFOLD	T	1					
8	6211-258-001-00	SEAL,BEARING CAP	T	4					
9	6211-258-002-00	SEAL,BEARING CAP/7	T	2					
10	6209-625-003-20	OILSEAL	T	1					
11	6211-292-001-20	GASKET/COVER	T	1					
12	6209-625-002-00	SEAL,OIL	T	1					
13	6209-500-003-00	WASHER/08X14X01	T	2					
14	6211-312-005-10	GASKET/GEARCASE	T	1					
15	6211-312-006-10	GASKET/PLATE	T	1					
16	V723-102-005-00	O-RING 1A S50	T	1					
17	V720-103-502-20	O-RING/P22	T	1					
18	V721-103-104-00	O-RING/G40	T	1 -150350					
18A	6213-614-013-00	GASKET/WATERPUMP	T	1 150351-					
19	V721-113-105-00	O-RING HS90 G50	T	1 -150350					
19A	6213-614-014-00	GASKET/SPACER	T	1 150351-					
20	6213-743-002-10	GASKET/HOUSING	T	1					
21	V723-102-005-50	O-RING	T	1					
22	6209-630-002-10	GASKET	T	1					
23	6214-145-009-00	GASKET	T	1					
24	6209-920-003-00	GASKET	T	2					
25	6209-630-004-10	GASKET	T	1 -159416					
25A	6209-630-004-20	GASKET	T	1 159417-		1			

FIG. 30 COMPONENT PARTS FOR 6215-300-037-00 ON Fig.22

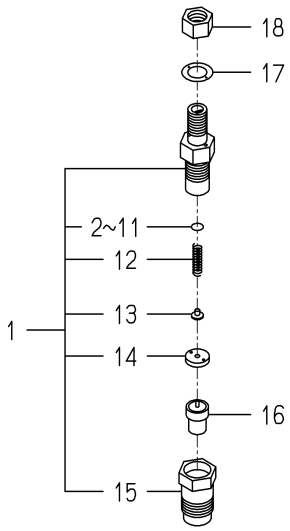

6215-300-037-0E

KEY	PART CODE	DESCRIPTION	SPC	TYPE OF MODEL E3CD VTB11		ITC	COL	GRP	REMARKS
1	6215-330-022-00	HOLDER/NOZZLE ASSY	*	3					
2	6215-345-044-00	SHIM/0.10	*	3					
3	6215-345-045-00	SHIM/0.20	*	3					
4	6215-345-046-00	SHIM/0.30	*	3					
5	6215-345-047-00	SHIM/0.40	*	3					
6	6215-345-048-00	SHIM/0.50	*	3					
7	6215-345-049-00	SHIM/0.52	*	3					
8	6215-345-050-00	SHIM/0.54	*	3					
9	6215-345-051-00	SHIM/0.56	*	3					
10	6215-345-052-00	SHIM/0.58	*	3					
11	6215-345-053-00	SHIM/0.80	*	3					
12	6215-343-002-00	SPRING,NOZZLE	*	3					
13	6215-342-002-00	SPRINGSEAT	*	3					
14	6215-339-004-00	SPACER	*	3					
15	6215-332-006-00	NUT/NOZZLERETAINING	*	3					
16	6215-311-005-00	NOZZLE	*	3					
17	6215-359-003-00	GASKET	*	3					
18	6215-359-004-00	NUT	*	3					

FIG. 31 COMPONENT PARTS FOR 6215-600-078-10 ON Fig.23

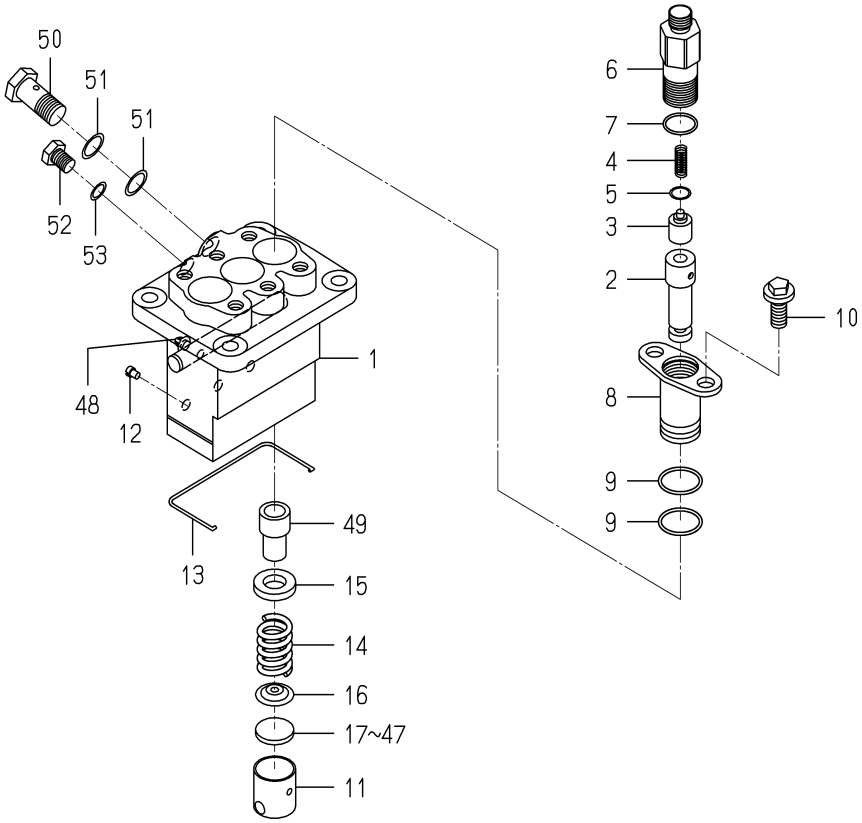

6215-600-078-1H

KEY	PART CODE	DESCRIPTION	SPC	TYPE OF MODEL E3CD VTB11		ITC	COL	GRP	REMARKS
1	6215-611-015-00	HOUSING/PUMP	*	1					
2	6215-631-008-00	PLUNGER ASSY	*	3					
3	6215-641-002-00	VALVE,DELIVERY	*	3					
4	6215-643-005-00	SPRING/DELIVERYVALVE	*	3					
5	6215-649-008-00	GASKET	*	3					
6	6215-644-009-00	HOLDER/DELIVERYVALVE	*	3					
7	6215-649-014-00	ORING	*	3					
8	6215-635-004-00	SLEEVEFLANGE	*	3					
9	6215-649-013-00	ORING	*	6					
10	6215-649-011-00	BOLT	*	6					
11	6215-622-003-00	TAPPET	*	3					
12	6215-629-017-00	PIN	*	3					
13	6215-629-035-00	SNAPRING	*	1					
14	6215-634-003-00	SPRING/PLUNGER	*	3					
15	6215-639-008-00	SPRINGSEAT	*	3					
16	6215-639-009-00	SPRINGSEAT	*	3					
17	6215-629-060-00	PLATE/T=2.60	*	1					
18	6215-629-061-00	PLATE/T=2.65	*	1					
19	6215-629-062-00	PLATE/T=2.70	*	1					
20	6215-629-063-00	PLATE/T=2.75	*	1					
21	6215-629-064-00	PLATE/T=2.80	*	1					
22	6215-629-065-00	PLATE/T=2.85	*	1					
23	6215-629-066-00	PLATE/T=2.90	*	1					
24	6215-629-067-00	PLATE/T=2.95	*	1					
25	6215-629-036-00	PLATE/T=3.00	*	1					
26	6215-629-037-00	PLATE/T=3.05	*	1					
27	6215-629-038-00	PLATE/T=3.10	*	1					
28	6215-629-039-00	PLATE/T=3.15	*	1					
29	6215-629-040-00	PLATE/T=3.20	*	1					
30	6215-629-041-00	PLATE/T=3.25	*	1					

FIG. 31 COMPONENT PARTS FOR 6215-600-078-10 ON Fig.23

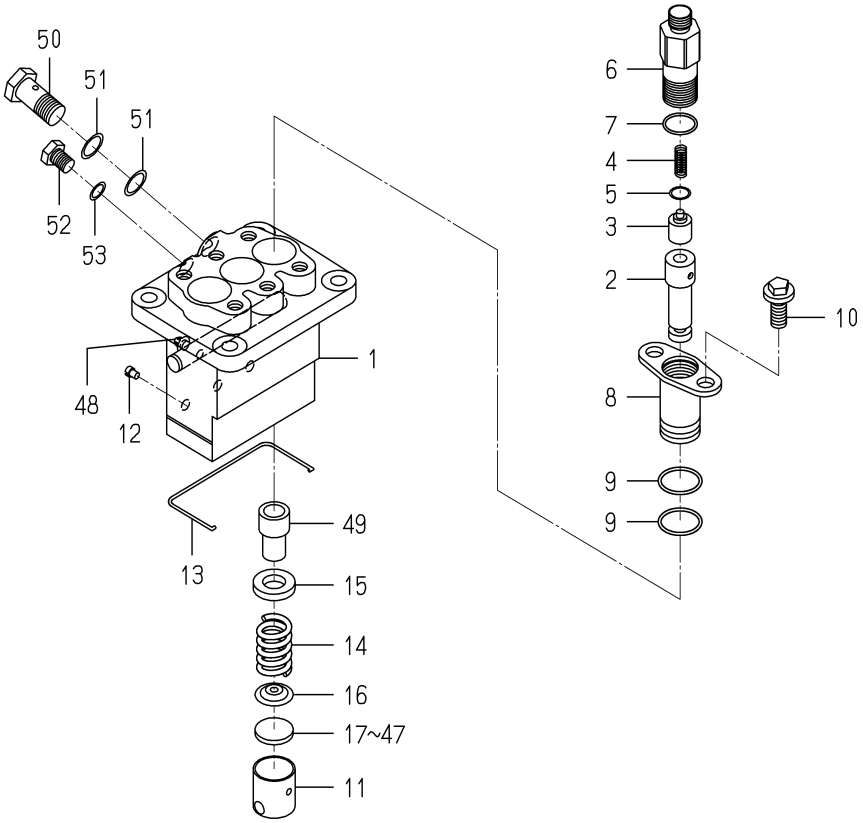

6215-600-078-1H

KEY	PART CODE	DESCRIPTION	SPC	TYPE OF MODEL E3CD VTB11		ITC	COL	GRP	REMARKS
31	6215-629-042-00	PLATE/T=3.30	*	1					
32	6215-629-043-00	PLATE/T=3.35	*	3 -147382					
32	6215-629-043-00	PLATE/T=3.35	*	1 147383-					
33	6215-629-044-00	PLATE/T=3.40	*	1					
34	6215-629-045-00	PLATE/T=3.45	*	1					
35	6215-629-046-00	PLATE/T=3.50	*	1					
36	6215-629-047-00	PLATE/T=3.55	*	1					
37	6215-629-048-00	PLATE/T=3.60	*	1					
38	6215-629-049-00	PLATE/T=3.65	*	1					
39	6215-629-050-00	PLATE/T=3.70	*	1					
40	6215-629-051-00	PLATE/T=3.75	*	1					
41	6215-629-052-00	PLATE/T=3.80	*	1					
42	6215-629-053-00	PLATE/T=3.85	*	1					
43	6215-629-054-00	PLATE/T=3.90	*	1					
44	6215-629-055-00	PLATE/T=3.95	*	1					
45	6215-629-056-00	PLATE/T=4.00	*	1					
46	6215-629-058-00	PLATE/T=4.05	*	1					
47	6215-629-059-00	PLATE/T=4.10	*	1					
48	6215-637-004-00	CONTROLRACK	*	1					
49	6215-635-005-00	CONTROLSLEEVE	*	3					
50	6215-619-023-00	EYEBOLT	*	1					
51	6115-639-008-00	GASKET	*	2					
52	6215-619-024-00	BOLT	*	1					
53	6215-359-006-00	GASKET	*	1					

FIG. 32 COMPONENT PARTS FOR 6281-100-007-20 ON Fig.27

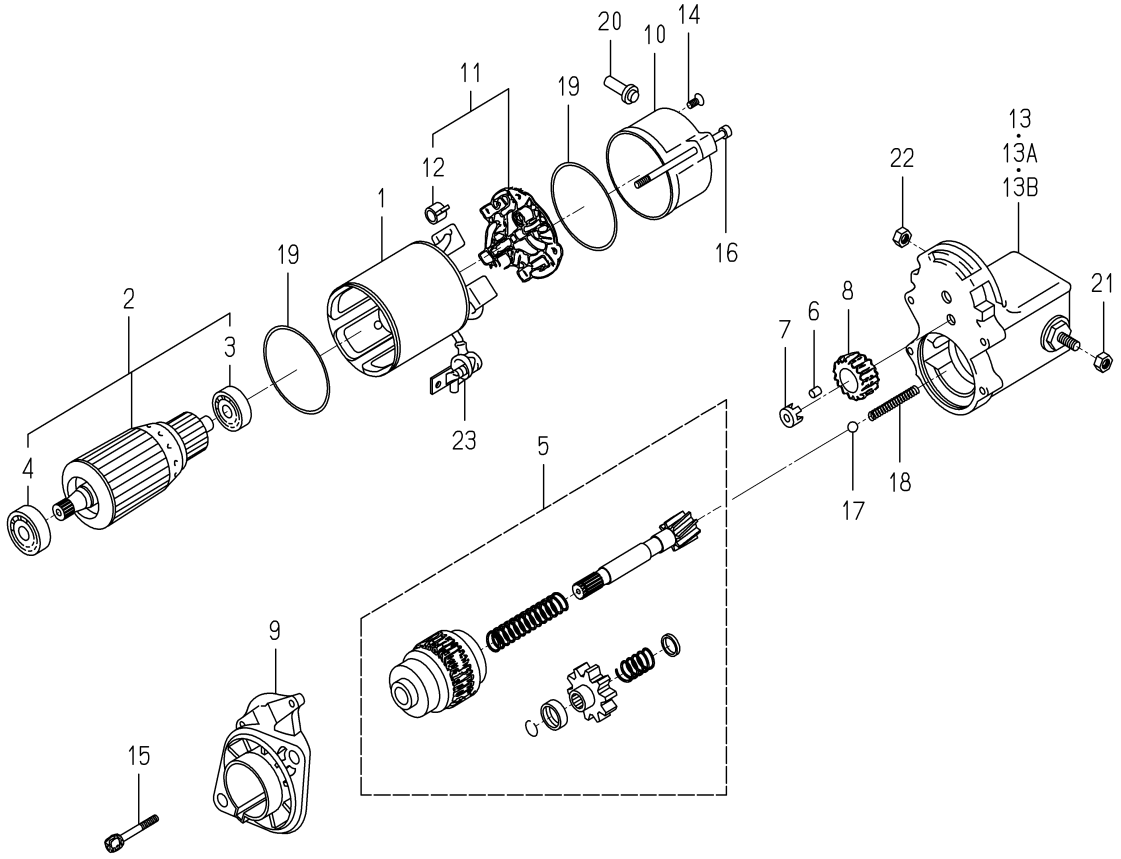

6281-100-007-2H

KEY	PART CODE	DESCRIPTION	SPC	TYPE OF MODEL E3CD VTB11		ITC	COL	GRP	REMARKS
1	6281-111-005-00	YOKE/STARTER ASSY	*	1					
2	6281-121-006-00	ARMATURE/STARTE ASSY	*	1					
3	6281-129-038-00	BEARING	*	1					
4	6281-129-039-00	BEARING	*	1					
5	6281-124-007-10	CLUTCH/STARTER ASSY	*	1					
6	6581-129-099-00	RORA	*	5					
7	6281-129-040-00	RETAINER	*	1					
8	6281-123-005-00	PINION/STARTER	*	1					
9	6281-129-045-10	HOUSING/STARTER ASSY	*	1					
10	6281-115-011-00	FRAME/STARTEREND	*	1					
11	6281-116-004-00	HOLDER/STARTER ASSY	*	1					
12	6581-117-007-00	SPRING,BRUSH	*	4					
13	6281-151-017-10	SWITCH/MAGNETIC ASSY	*	1 -152046					
13A	6281-151-020-00	SWITCH/MAGNETIC ASSY	*	1 -153398					
13B	6281-151-023-00	SWITCH/MAGNETIC ASSY	*	1 153399-					
14	6281-129-062-00	SCREW	*	2					
15	6281-129-042-00	BOLT/WS	*	2					
16	6281-129-043-00	BOLT/THROUGH	*	2					
17	6581-129-092-00	BALL	*	1					
18	6281-129-044-00	SPRING/RETURN	*	1					
19	6281-129-003-00	O-RING	*	2					
20	6281-115-016-00	BUSHING/DRAIN	*	1					
21	6909-111-508-00	NUT	*	1					
22	6281-229-041-00	NUT	*	1					
23	6281-115-010-00	COVER	*	1					

FIG. 33 COMPONENT PARTS FOR 6281-200-021-00 ON Fig.27

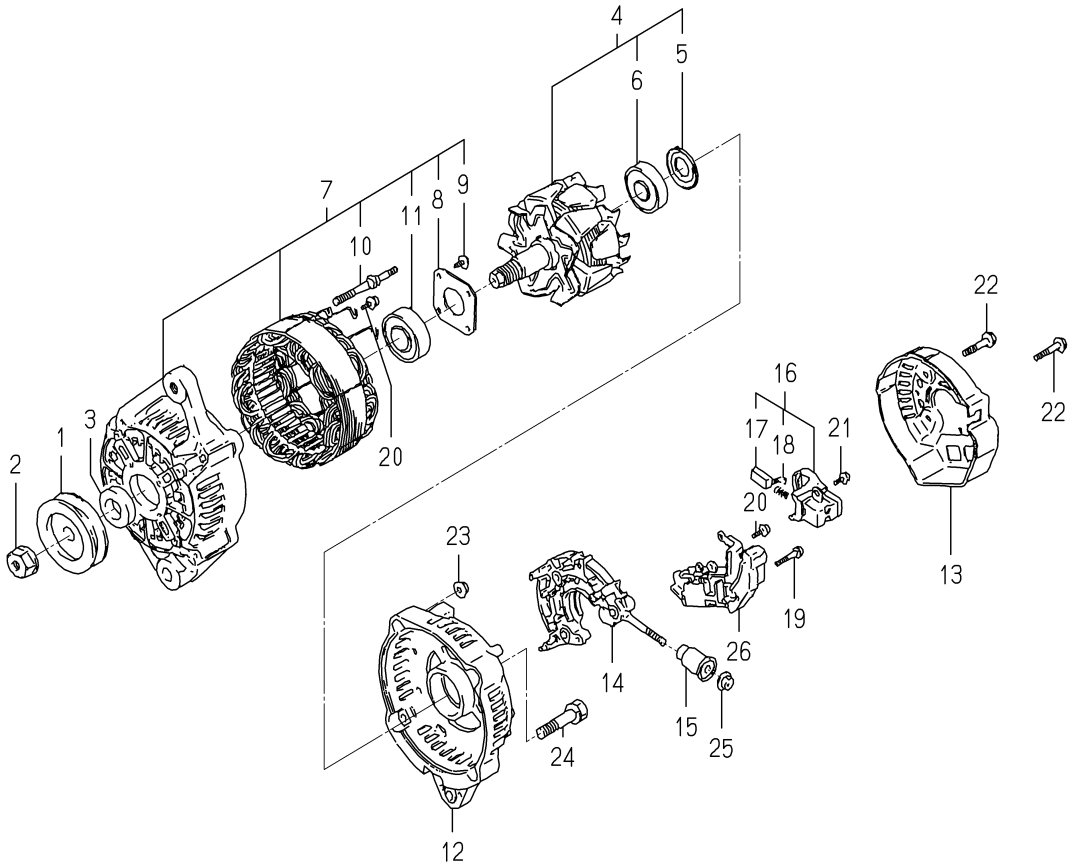

6281-200-021-0A

KEY	PART CODE	DESCRIPTION	SPC	TYPE OF MODEL E3CD VTB11		ITC	COL	GRP	REMARKS
1	6281-222-012-00	PULLEY	*	1					
2	6281-229-002-00	NUT	*	1					
3	6281-229-003-00	COLLOR	*	1					
4	6281-221-007-00	ROTOR ASSY	*	1					
5	6281-229-004-00	COVER,BEARING	*	1					
6	6281-229-032-00	BEARING/BALL	*	1					
7	6281-213-018-00	FRAME/DRIVEEND ASSY	*	1					
8	6281-229-006-00	PLATE	*	1					
9	6281-229-007-00	BOLT	*	4					
10	6281-229-008-00	BOLT	*	2					
11	6281-229-033-00	BEARING/BALL	*	1					
12	6281-214-003-00	FRAME	*	1					
13	6281-214-004-00	COVER	*	1					
14	6281-229-029-00	HOLDER ASSY	*	1					
15	6281-229-011-00	BUSH	*	1					
16	6281-217-002-00	HOLDER/BRUSH ASSY	*	1					
17	6281-215-001-00	BRUSH	*	2					
18	6281-216-001-00	SPRING	*	2					
19	6281-229-012-00	BOLT	*	2					
20	6281-229-013-00	BOLT	*	6					
21	6281-229-014-00	BOLT	*	1					
22	6281-229-015-00	BOLT	*	3					
23	6281-229-016-00	NUT	*	2					
24	6281-229-017-00	BOLT	*	2					
25	6281-229-018-00	NUT	*	1					
26	6281-271-002-00	REGULATOR ASSY	*	1					

E N G I N E

E3CDVTB12···TG5390E4 (C-TYPE)

6005-097-690-20

FIG. 1 SHORT BLOCK ENGIASSY

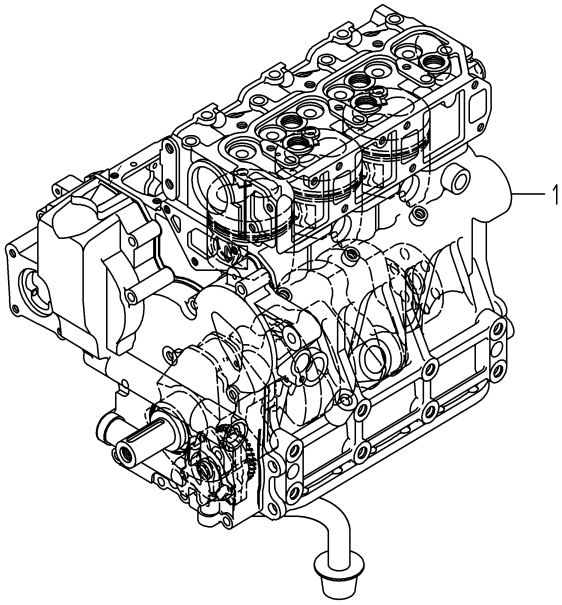

6005-015B-0100

KEY	PART CODE	DESCRIPTION	SPC	TYPE OF MODEL E3CD VTB12		ITC	COL	GRP	REMARKS
1	6005-010-140-00	SHORTBLOCKENGIN ASSY	T	1					

FIG. 2 CYLINDER HEAD

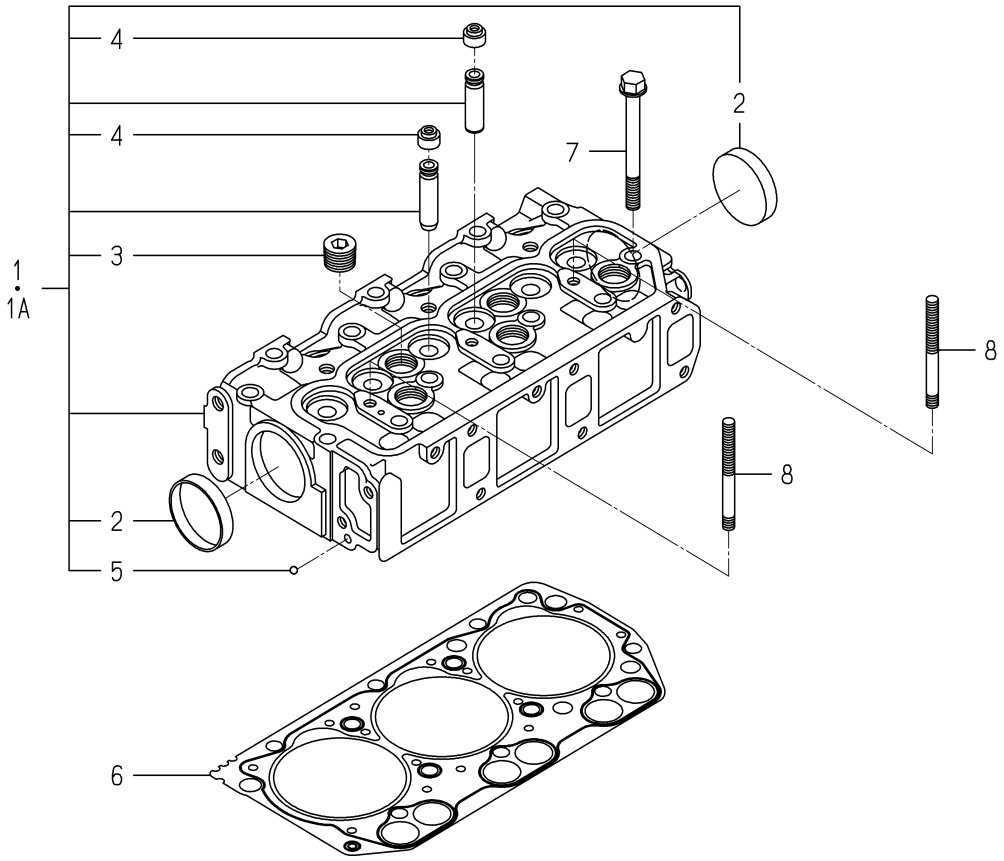

6005-101T-0100,6005-101T-0200

KEY	PART CODE	DESCRIPTION	SPC	TYPE OF MODEL E3CD VTB12		ITC	COL	GRP	REMARKS
1	6211-110-088-10	CYLINDERHEAD ASSY	*	1 -197018					
1A	6211-110-088-20	CYLINDERHEAD ASSY	*	1 197019-		1			
2	6209-610-003-00	CUP/SEALING/50	*	2					
3	6209-605-004-10	PLUG/PT1/2	*	5					
4	6212-569-002-00	SEAL,OIL	*	6					
5	V682-200-000-60	BALL	*	1					
6	6211-141-057-10	GASKET/CYLINDERHEAD	*	1					
7	6209-000-005-00	BOLT	*	14					
8	6209-300-014-00	STUD	*	2					

FIG. 3 CYLINDER HEAD COVER

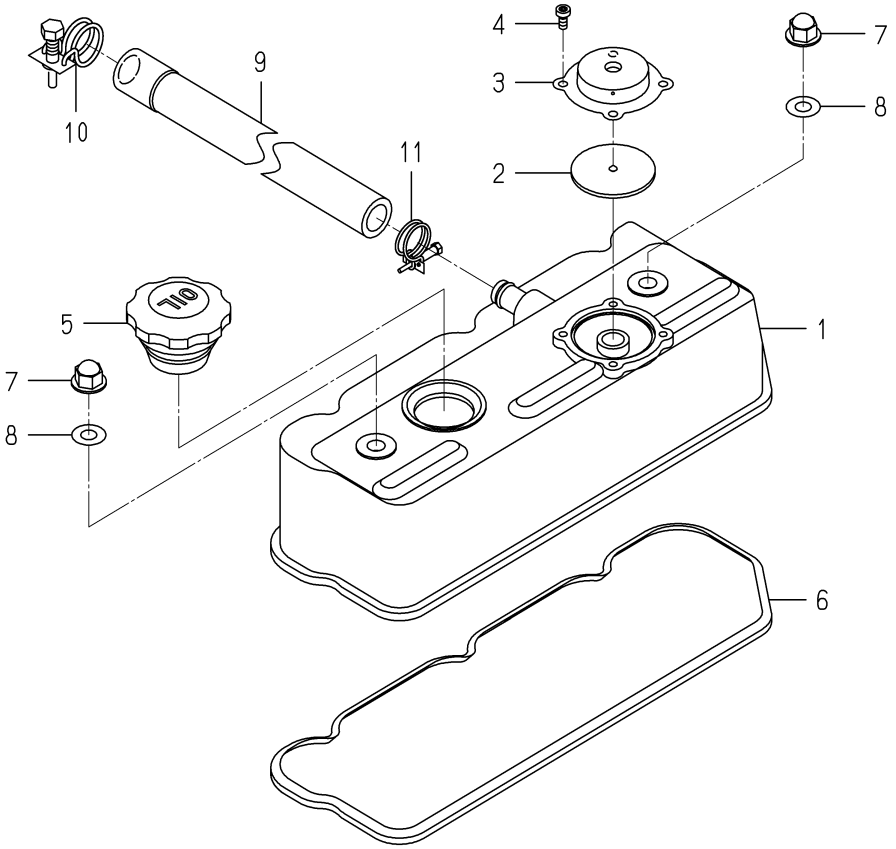

6005-110G-0100

KEY	PART CODE	DESCRIPTION	SPC	TYPE OF MODEL E3CD VTB12		ITC	COL	GRP	REMARKS
1	6211-170-007-30	COVER/CYLINDER HEAD	*	1					
2	6211-179-026-00	COVER/BLOWBY	*	1					
3	V195-164-008-30	SCREW/TAPPING	*	4					
4	6211-173-017-00	PACKING/PCV	*	1					
5	6211-751-001-10	CAP,OIL FILLER	*	1					
6	6211-173-005-00	SEAL/CYL HEAD/UNDER	*	1					
7	6209-490-002-10	NUT/CAP	*	2					
8	6209-572-003-00	GASKET	*	2					
9	6209-366-010-00	HOSE/BREATHER	*	1					
10	J061-216-020-00	CLAMP/WIRE/16-20	*	1					
11	J061-213-018-00	CLAMP/WIRE/13-18	*	1					

FIG. 4 INLET MANIFOLD

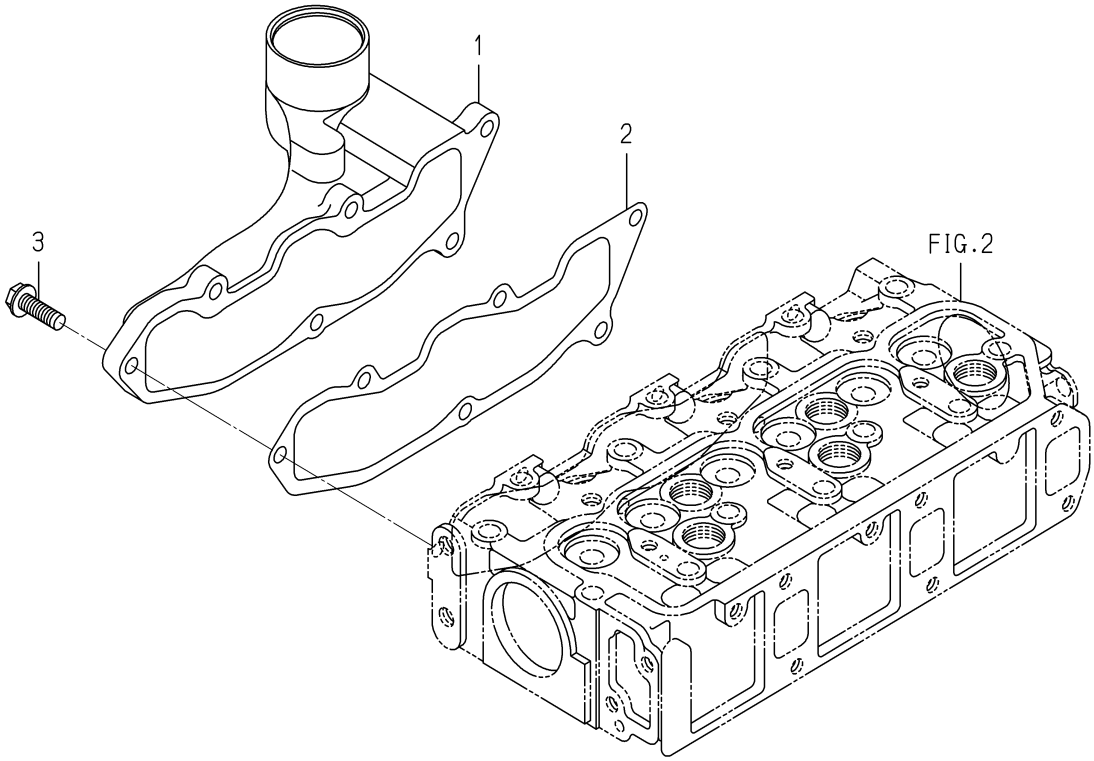

6005-120B-0100

KEY	PART CODE	DESCRIPTION	SPC	TYPE OF MODEL E3CD VTB12		ITC	COL	GRP	REMARKS
1	6214-111-023-00	MANIFOLD/INLET	*	1					
2	6214-115-003-10	GASKET/INLETMANIFOLD	*	1					
3	V231-360-802-50	FLANGEBOLT	*	6					

FIG. 5 EXHAUST MANIFOLD

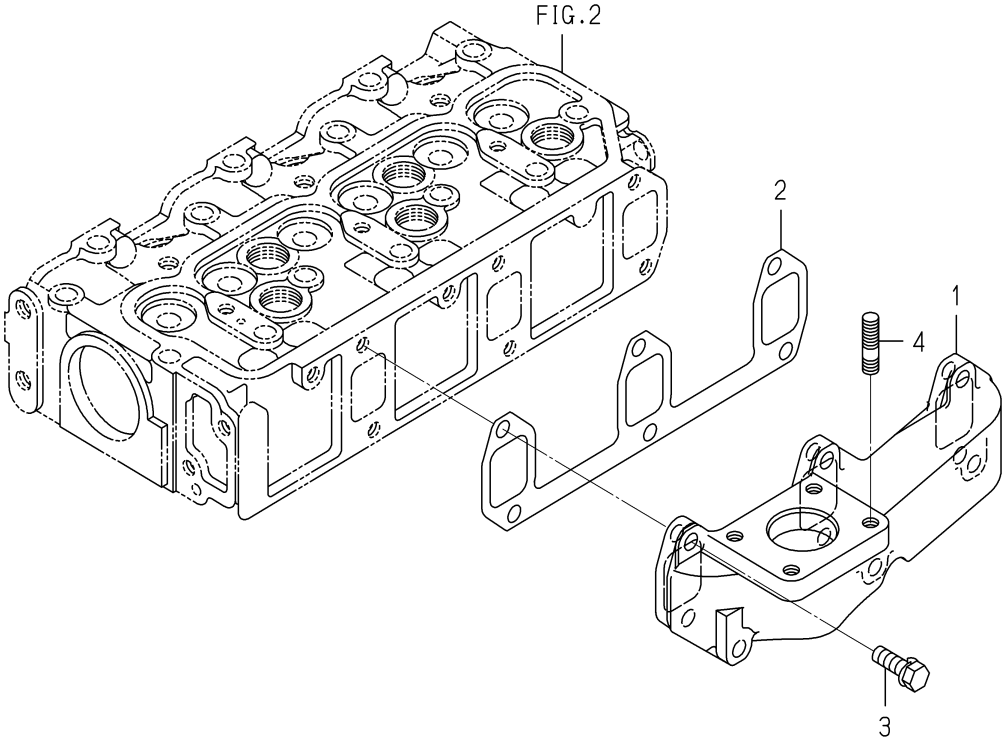

6005-140F-0100

KEY	PART CODE	DESCRIPTION	SPC	TYPE OF MODEL E3CD VTB12		ITC	COL	GRP	REMARKS
1	6214-141-048-00	MANIFOLD/EXHAUST	*	1					
2	6214-145-004-20	GASHET/EXH MANIFOLD	*	1					
3	V211-560-802-50	BOLT,SEMS/M8X25 7T	*	6					
4	6209-300-026-00	STUD	*	4					

FIG. 6 TURBOCHARGER

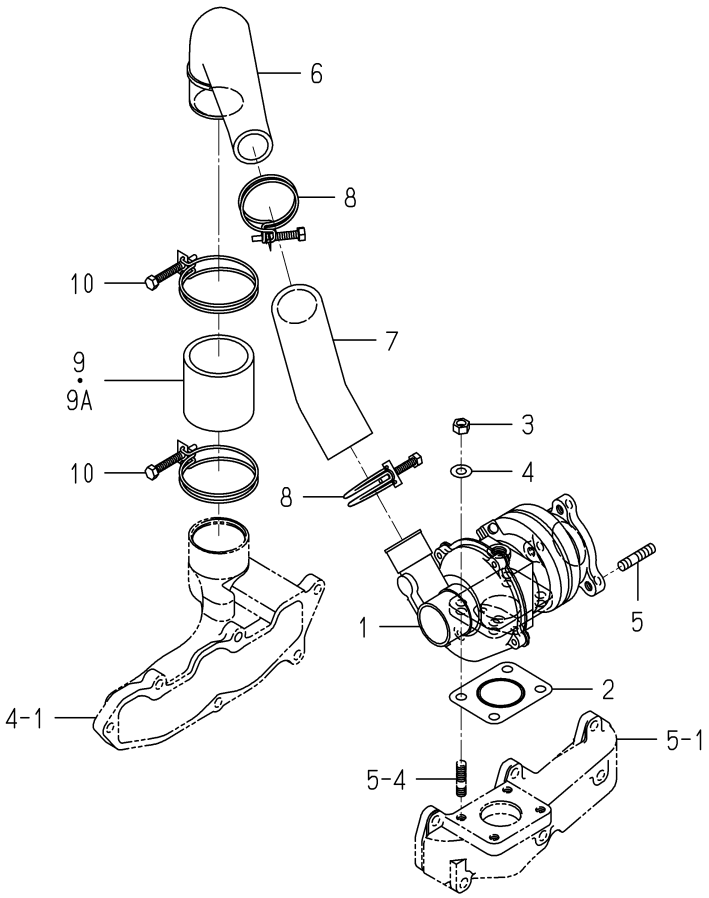

6005-160B-0100

KEY	PART CODE	DESCRIPTION	SPC	TYPE OF MODEL E3CD VTB12		ITC	COL	GRP	REMARKS
1	6214-400-009-10	TURBOCHARGER ASSY	*	1					
2	6214-145-009-00	GASKET	*	1					
3	V304-700-008-00	NUT	*	4					
4	V411-700-008-00	WASHER	*	4					
5	V251-340-802-50	BOLT/STUD	*	3					
6	6214-435-026-00	PIPE/INLET	*	1					
7	6209-360-112-00	HOSE/RUBBER	*	1					
8	J061-238-046-00	CLAMP/WIRE/38-46	*	2					
9	6209-360-114-00	HOSE/RUBBER	*	1 -184275					
9A	6209-360-108-00	HOSE/RUBBER	*	1 184276-					
10	J061-252-063-00	CLAMP/WIRE/52-63	*	2					

FIG. 7 CYLINDER BLOCK(1/2)

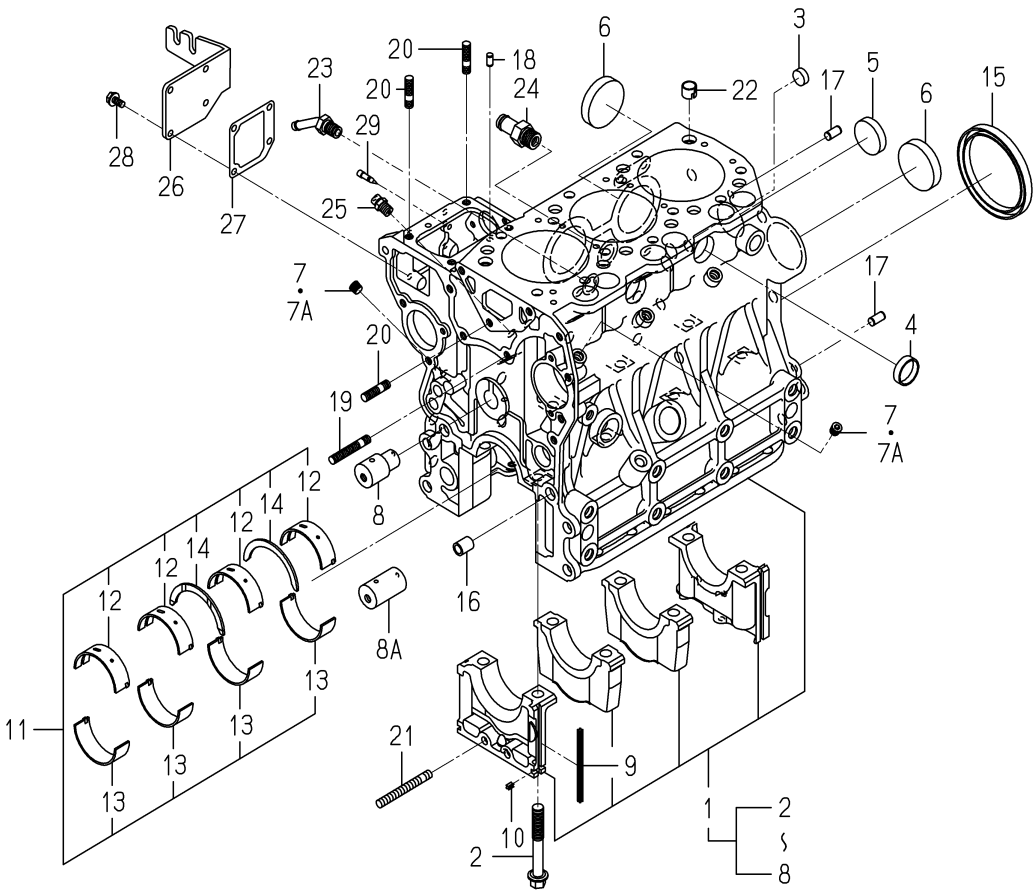

6005-202S-0100

KEY	PART CODE	DESCRIPTION	SPC	TYPE OF MODEL E3CD VTB12		ITC	COL	GRP	REMARKS
1	6211-210-084-00	CYLINDERBLOCK ASSY	*	1					
2	6209-000-006-00	BOLT	*	8					
3	6209-610-007-00	CUP/SEALING/16	*	2					
4	6209-610-001-10	CUP/SEALING/28	*	2					
5	6209-610-009-00	CUP/SEALING/36	*	1					
6	6209-610-003-00	CUP/SEALING/50	*	3					
7	6509-605-019-10	PLUG	*	8 -199533					
7A	6209-605-007-00	PLUG/PT1/8	*	8 199534-					
8	6212-531-008-20	PIN/IDLEGEAR	*	1 -168830					
8A	6212-531-008-30	PIN/IDLEGEAR	*	1 168831-		3			
9	6211-258-001-00	SEAL,BEARING CAP	*	4					
10	6211-258-002-00	SEAL,BEARING CAP/7	*	2					
11	6211-510-008-00	BEARING/CRANK SET	*	1					
12	6211-511-007-00	BEARING/CRANK/UPPER	*	4					
13	6211-511-008-00	BEARING/CRANK/LOWER	*	4					
14	6211-599-004-00	BEARING/THRUST/CRANK	*	2					
15	6209-625-003-20	OILSEAL	*	1					
16	6209-749-001-20	PIN/TUBE	*	2					
17	6213-129-006-00	PIN/STRAIGHT	*	2					
18	6209-740-005-00	PIN	*	2					
19	6904-110-840-00	STUD/M8X40	*	1					
20	6904-110-822-00	STUD	*	3					
21	V251-340-806-00	BOLT/STUD	*	1					
22	6294-453-002-00	DOWEL	*	2					
23	6213-721-007-00	PIPE/WATERDRAIN	*	1					
24	6213-721-005-00	PIPE/WATER/HOUSING	*	1					
25	6909-902-299-00	NIPPLE	*	1					
26	6211-291-015-20	COVER/INJECTIONPUMP	*	1					
27	6211-292-001-20	GASKET/COVER	*	1					
28	V230-360-601-20	FLANGEBOLT	*	4					

FIG. 7 CYLINDER BLOCK(2/2)

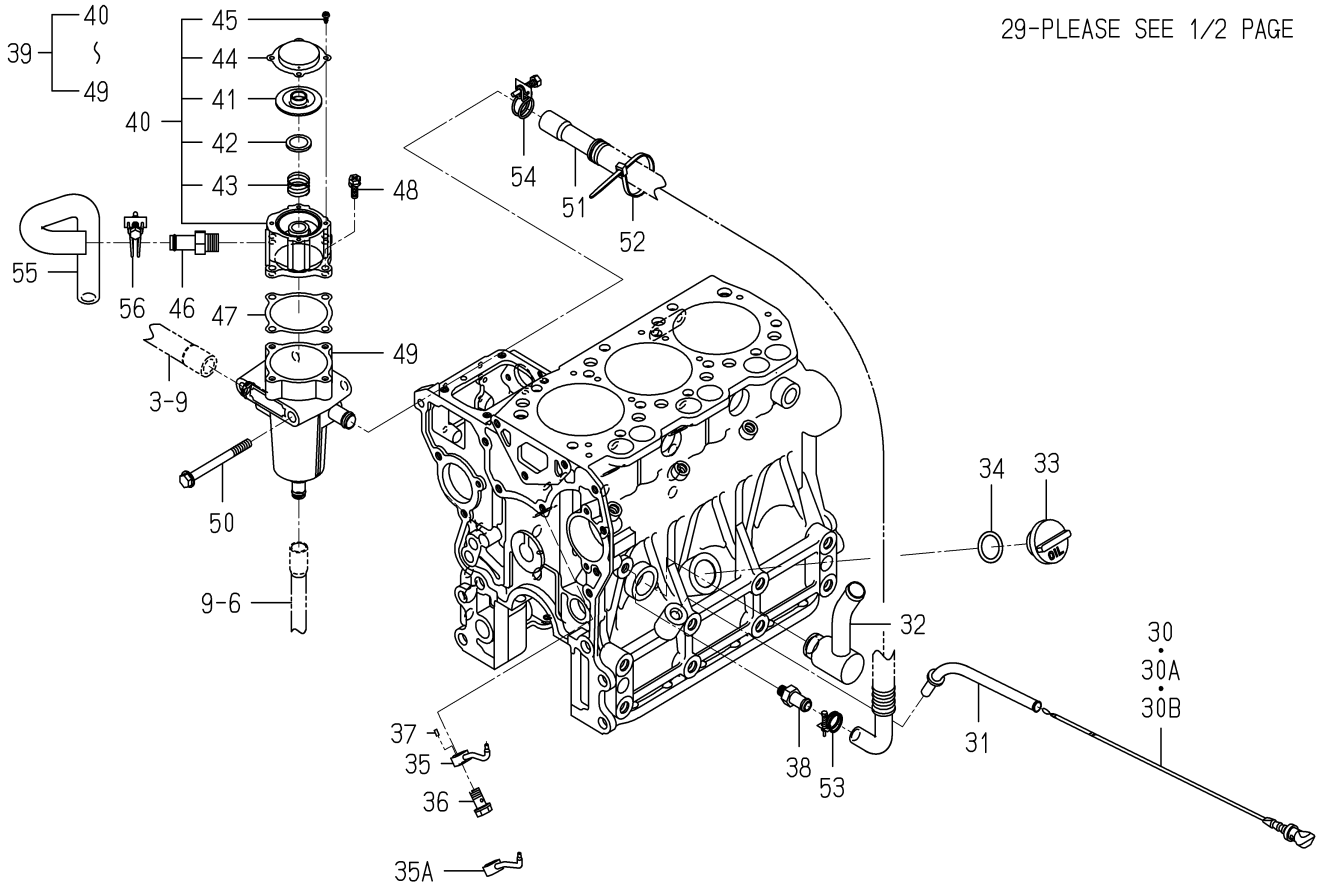

6005-202S-0100

KEY	PART CODE	DESCRIPTION	SPC	TYPE OF MODEL E3CD VTB12		ITC	COL	GRP	REMARKS
29	6215-549-013-00	PIN	*	1					
30	6211-760-046-00	LEVELGAGE	*	1 -171504					
30A	6211-760-046-10	LEVELGAGE	*	1 -202397		1			
30B	6211-760-041-20	LEVELGAGE	*	1 202398-					
31	6211-766-033-00	GUIDE/LEVELGAGE COMP	*	1					
32	6213-311-061-00	PIPE/OIL COMP	*	1					
33	6211-751-002-00	CAP/OILFILLER	*	1					
34	V720-103-502-50	O-RING/P25	*	1					
35	6213-342-008-00	PIPE/OILJET	*	3 -194379					
35A	6213-342-008-10	PIPE/OILJET	*	3 194380-		1			
36	6213-342-007-00	EYEBOLT/OILJET ASSY	*	3					
37	6209-740-008-00	PIN/SPRING	*	3					
38	6211-742-014-00	ADAPTER/R1/8	*	1					
39	6211-740-008-00	BREATHER ASSY	*	1					
40	6211-740-009-00	COVER/BREATHER ASSY	*	1					
41	6211-179-013-10	RUBBERFLANGE	*	1					
42	6211-179-018-00	SEAT/SPRING	*	1					
43	6211-740-007-00	SPRING	*	1					
44	6211-179-019-00	COVER/BLOWBY	*	1					
45	V195-164-008-30	SCREW/TAPPING	*	4					
46	6213-721-005-00	PIPE/WATER/HOUSING	*	1					
47	6211-744-001-00	GASKET	*	1					
48	6213-119-001-00	BOLT/WS	*	4					
49	6211-740-010-00	BREATHER COMP	*	1					
50	V231-360-808-50	FLANGEBOLT	*	2					
51	6209-366-011-00	HOSE/BREATHER	*	1					
52	3737-172-010-00	BAND/202	*	1					
53	J061-213-018-00	CLAMP/WIRE/13-18	*	1					
54	J061-216-020-00	CLAMP/WIRE/16-20	*	1					
55	6209-360-116-10	HOSE/RUBBER	*	1					

FIG. 7 CYLINDER BLOCK(2/2)

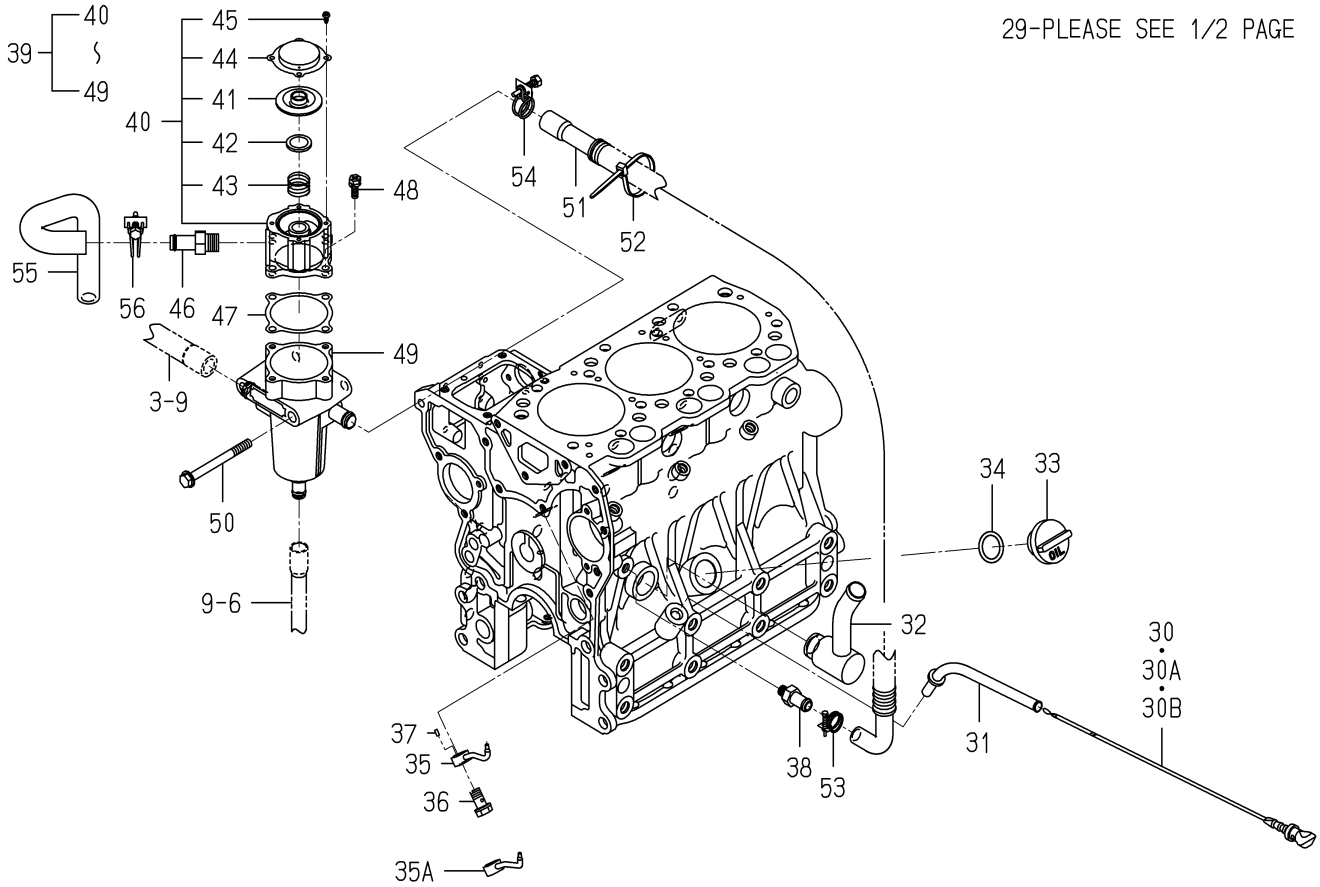

6005-202S-0100

KEY	PART CODE	DESCRIPTION	SPC	TYPE OF MODEL E3CD VTB12		ITC	COL	GRP	REMARKS
56	J061-220-024-00	CLAMP/WIRE/20-24	*	1					

FIG. 8 BEARING/UNDER SIZE (OPTION)

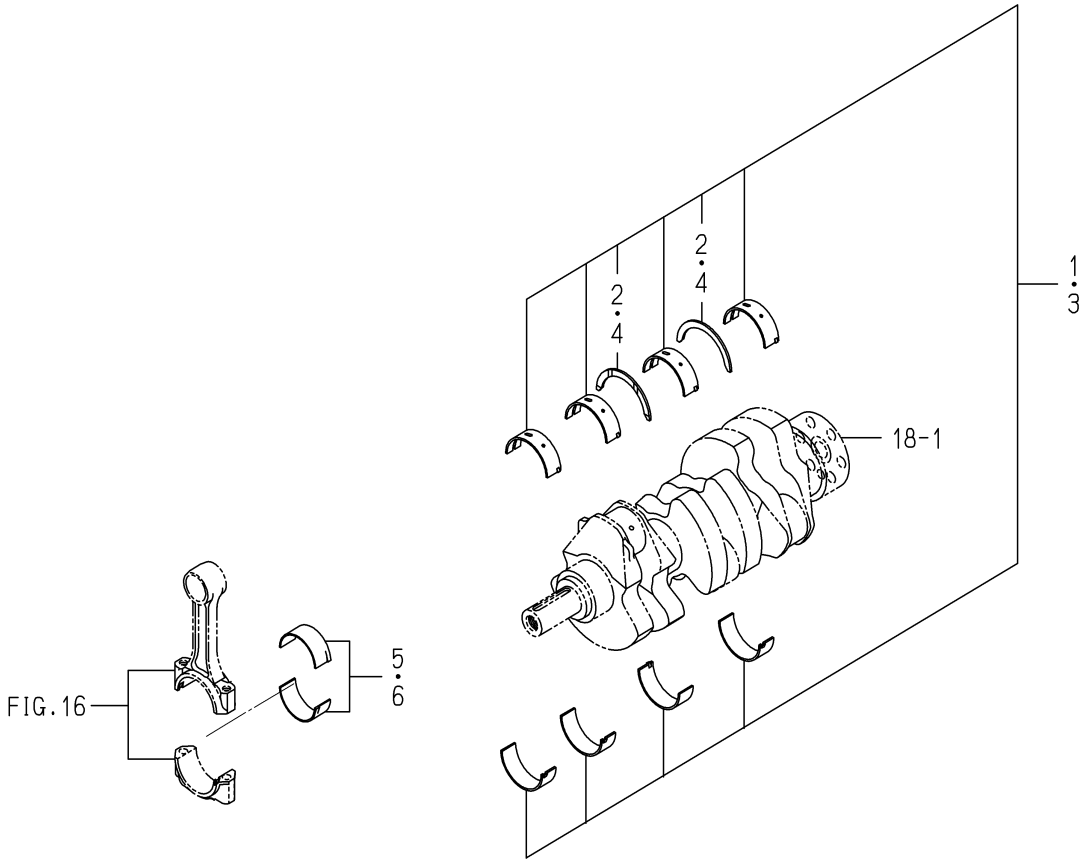

6005-209 -0100

KEY	PART CODE	DESCRIPTION	SPC	TYPE OF MODEL E3CD VTB12		ITC	COL	GRP	REMARKS
1	6211-530-008-00	BEARING/CRANK/UNDER	T	1					
2	6211-599-004-00	BEARING/THRUST/CRANK	T	2					
3	6211-540-008-00	BEARING/CRANK/UNDER	T	1					
4	6211-599-004-00	BEARING/THRUST/CRANK	T	2					
5	6212-273-009-00	BEARING/CONNECTING R	T	3					
6	6212-274-009-00	BEARING/CONNECTING R	T	3					

FIG. 9 OIL PAN

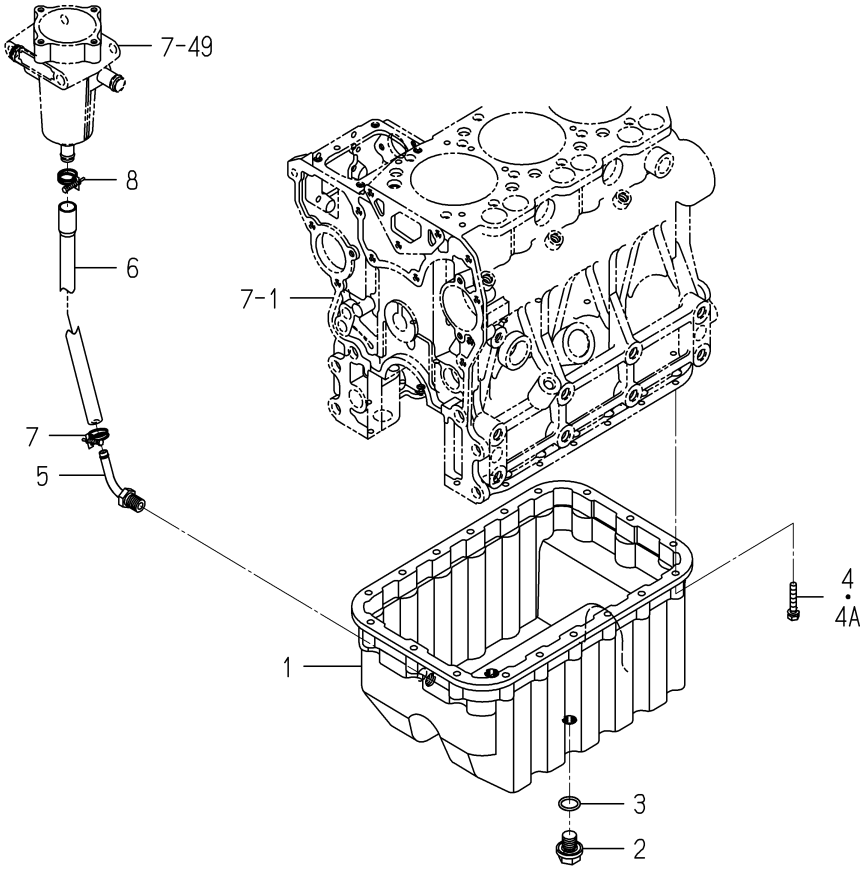

6005-210H-0100

KEY	PART CODE	DESCRIPTION	SPC	TYPE OF MODEL E3CD VTB12		ITC	COL	GRP	REMARKS
1	6211-361-074-00	OILPAN	*	1					
2	3805-355-002-20	PLUG/M14X1.5	*	2					
3	V720-102-401-80	O-RING/P18	*	2					
4	6901-910-635-00	BOLT	*	18 -173467					
4A	V210-560-603-50	BOLT/S	*	18 173468-					
5	6213-721-001-00	PIPE,WATER DRAIN	*	1					
6	6209-360-113-00	HOSE/RUBBER	*	1					
7	J061-210-015-00	CLAMP/WIRE/10-15	*	1					
8	J061-213-018-00	CLAMP/WIRE/13-18	*	1					

FIG. 10 REAR PLATE

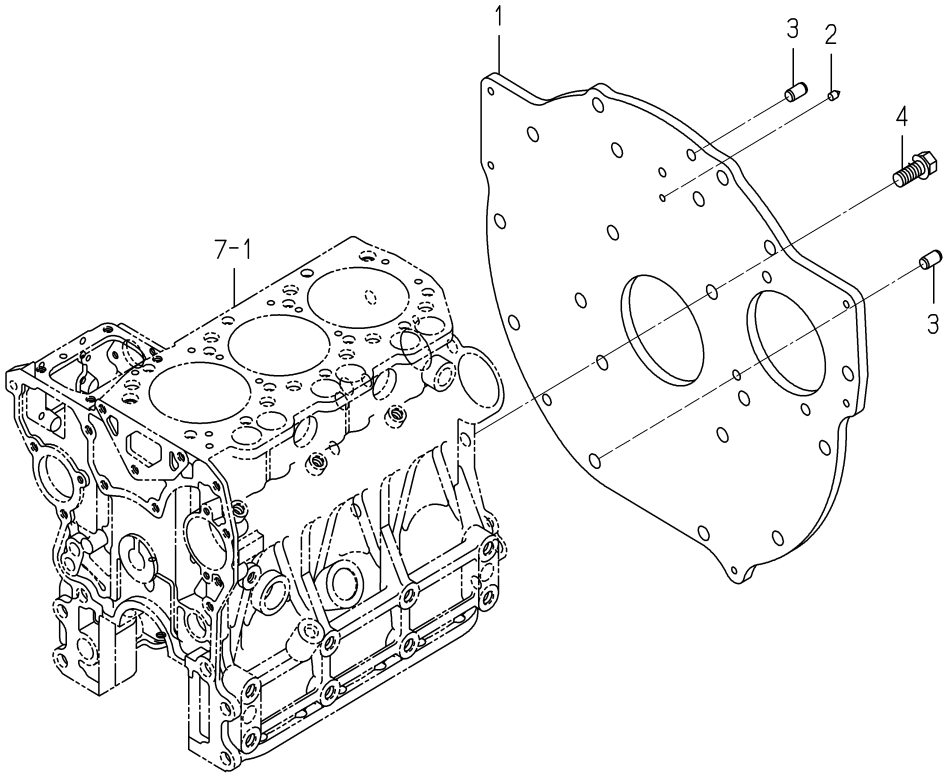

6005-220N-0100

KEY	PART CODE	DESCRIPTION	SPC	TYPE OF MODEL E3CD VTB12		ITC	COL	GRP	REMARKS
1	6211-341-073-00	PLATE/REAR	*	1					
2	6211-342-003-10	POINTER	*	1					
3	V523-101-001-80	PIN	*	2					
4	6209-030-091-00	BOLT/WS	*	8					

FIG. 11 TIMING GEAR CASE

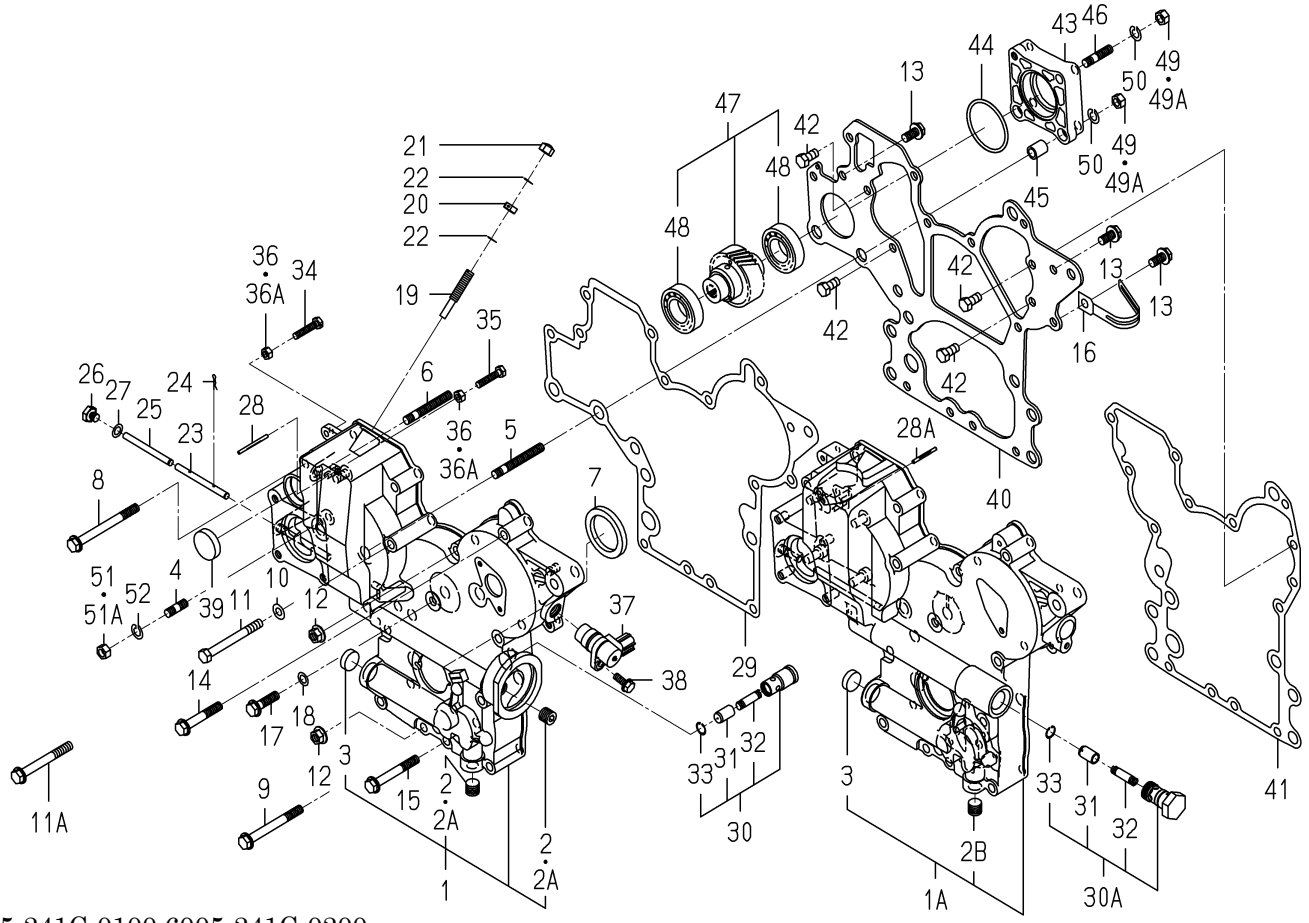

6005-241C-0100,6005-241C-0200

KEY	PART CODE	DESCRIPTION	SPC	TYPE OF MODEL E3CD VTB12		ITC	COL	GRP	REMARKS
1	6211-310-040-00	GEARCASE ASSY	*	1 -180974					
1A	6211-310-040-10	GEARCASE ASSY	*	1 -186881		3			
2	6209-605-003-00	PLUG/PT1/4	*	2 -160372					
2A	6209-605-003-10	PLUG/PT1/4	*	2 -180974		1			
2B	6209-605-003-10	PLUG/PT1/4	*	1 -186881					
3	6209-610-004-00	CUP/SEALING/20	*	1 -186881					
4	6904-110-822-00	STUD	*	4 -186881					
5	6904-110-855-00	STUD	*	2 -186881					
6	6904-110-850-00	STUD	*	1 -186881					
7	6209-625-002-00	SEAL,OIL	*	1 -186881					
8	V231-360-808-50	FLANGEBOLT	*	1 -186881					
9	V231-360-807-50	FLANGEBOLT	*	1 -186881					
10	6209-500-006-00	WASHER/08X16X1.2	*	1 -180974					
11	V201-360-807-50	BOLT	*	1 -180974					
11A	V231-360-807-00	FLANGEBOLT	*	1 -186881					
12	3817-401-001-00	NUT/M08	*	2 -186881					
13	V231-360-801-60	FLANGEBOLT	*	3 -186881					
14	V231-360-805-00	FLANGEBOLT	*	3 -186881					
15	V231-360-806-00	FLANGEBOLT	*	4 -186881					
16	1650-650-015-00	CLAMP	*	1 -186881					
17	V231-360-803-00	FLANGEBOLT	*	1 -186881					
18	6209-500-003-00	WASHER/08X14X01	*	1 -186881					
19	6215-546-003-10	STOPPER/FULLLOAD	*	1 -186881					
20	6209-409-001-00	NUT/M8	*	1 -186881					
21	V341-120-008-00	NUT,CAP/M 8	*	1 -186881					
22	6209-920-002-00	PACKING	*	2 -186881					
23	6215-542-004-20	PIN/ARM	*	1 -186881					
24	P117-303-003-00	PIN/SNAP	*	2 -186881					
25	6215-542-005-10	PIN	*	1 -186881					
26	6209-600-004-00	PLUG/SCREW	*	1 -186881					

FIG. 11 TIMING GEAR CASE

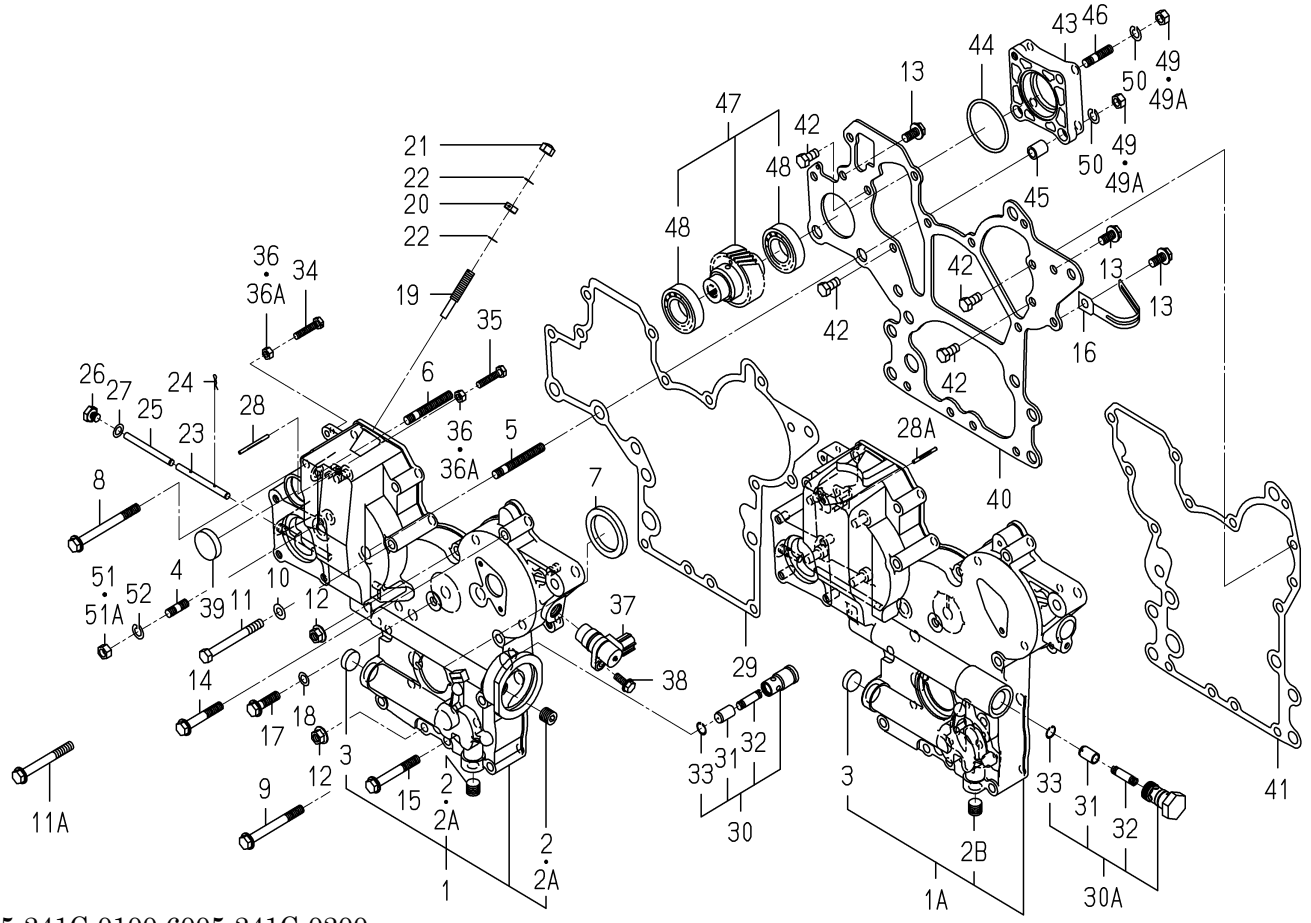

6005-241C-0100,6005-241C-0200

KEY	PART CODE	DESCRIPTION	SPC	TYPE OF MODEL E3CD VTB12		ITC	COL	GRP	REMARKS
27	6209-500-003-00	WASHER/08X14X01	*	1 -186881					
28	6209-740-001-00	PIN,GROOVE	*	1 -181471					
28A	6209-740-006-00	PIN/GROOVE	*	1 -186881					
29	6211-312-005-10	GASKET/GEARCASE	*	1 -186881					
30	6213-160-003-10	VALVE/RELIEF ASSY	*	1 -180974					
30A	6213-160-005-00	VALVE/RELIEF ASSY	*	1 -186881					
31	6213-161-003-10	PISTON/VALVE/RELIEF	*	1 -186881					
32	6213-164-001-00	SPRING/RELIEF VALVE	*	1 -186881					
33	V705-140-012-00	RING,SNAP/12 C	*	1 -186881					
34	6209-050-001-00	BOLT/M6	*	1 -186881					
35	6209-050-002-00	BOLT/M6	*	1 -186881					
36	6909-110-406-00	NUT	*	2 -179012					
36A	V301-260-006-00	NUT/M6	*	2 -186881					
37	1690-654-200-00	SENSOR/REVOLUTION/R	*	1 -186881					
38	V230-360-601-60	FLANGEBOLT	*	1 -186881					
39	3625-540-004-00	CAP,BLANK/30	*	1 -180974					
40	6211-311-013-20	PLATE/FRONT	*	1 -186881					
41	6211-312-006-10	GASKET/PLATE	*	1 -186881					
42	6902-050-816-00	BOLT	*	4 -186881					
43	6211-319-003-00	SPACER	*	1 -186881					
44	V723-102-005-00	O-RING 1A S50	*	1 -186881					
45	6209-749-001-20	PIN/TUBE	*	2 -186881					
46	6904-110-822-00	STUD	*	1 -186881					
47	6212-530-017-00	SHAFT/HYDRAULIC ASSY	*	1 -186881					
48	6209-800-011-00	BEARING	*	2 -186881					
49	6909-110-408-00	NUT/M8	*	4 -179012					
49A	V304-260-008-00	NUT	*	4 -186881					
50	V401-160-008-00	WASHER,SP/M 8	*	4 -186881					
51	6909-110-408-00	NUT/M8	*	4 -179012					
51A	V304-260-008-00	NUT	*	4 -186881					

FIG. 11 TIMING GEAR CASE

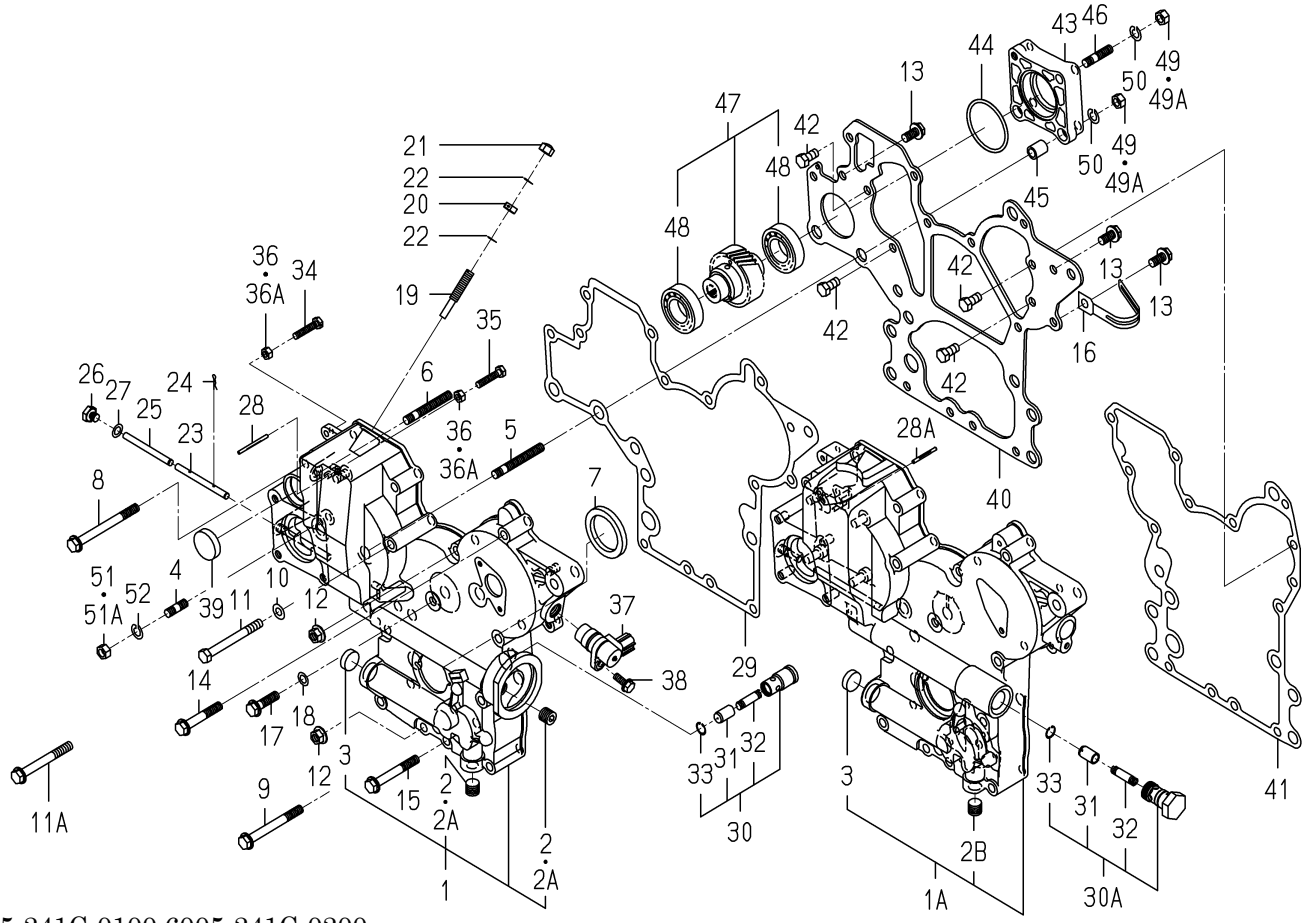

6005-241C-0100,6005-241C-0200

KEY	PART CODE	DESCRIPTION	SPC	TYPE OF MODEL E3CD VTB12		ITC	COL	GRP	REMARKS
52	V401-160-008-00	WASHER,SP/M 8	*	4 -186881					

FIG. 12 TIMING GEAR CASE

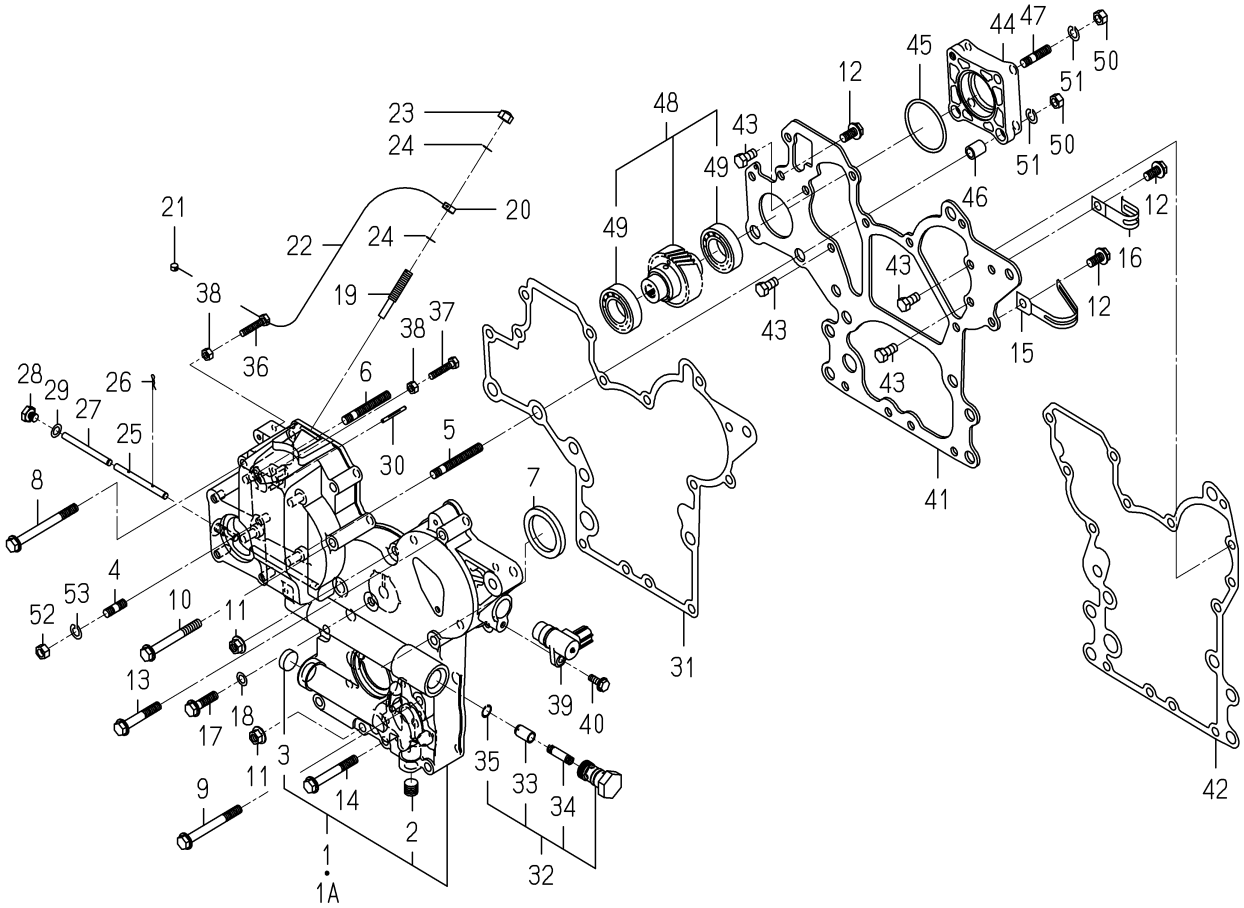

6005-241I-0100,6005-241I-0200

KEY	PART CODE	DESCRIPTION	SPC	TYPE OF MODEL E3CD VTB12		ITC	COL	GRP	REMARKS
1	6211-310-040-10	GEARCASE ASSY	*	1 -192021					
1A	6211-310-040-20	GEARCASE ASSY	*	1 192022-		1			
2	6209-605-003-10	PLUG/PT1/4	*	1 186882-					
3	6209-610-004-00	CUP/SEALING/20	*	1 186882-					
4	6904-110-822-00	STUD	*	4 186882-					
5	6904-110-855-00	STUD	*	2 186882-					
6	6904-110-850-00	STUD	*	1 186882-					
7	6209-625-002-00	SEAL,OIL	*	1 186882-					
8	V231-360-808-50	FLANGEBOLT	*	1 186882-					
9	V231-360-807-50	FLANGEBOLT	*	1 186882-					
10	V231-360-807-00	FLANGEBOLT	*	1 186882-					
11	3817-401-001-00	NUT/M08	*	2 186882-					
12	V231-360-801-60	FLANGEBOLT	*	3 186882-					
13	V231-360-805-00	FLANGEBOLT	*	3 186882-					
14	V231-360-806-00	FLANGEBOLT	*	4 186882-					
15	1650-650-015-00	CLAMP	*	1 186882-					
16	1425-621-004-00	HOLDER/JE/9-9	*	1 186882-					
17	V231-360-803-00	FLANGEBOLT	*	1 186882-					
18	6209-500-003-00	WASHER/08X14X01	*	1 186882-					
19	6215-546-003-10	STOPPER/FULLLOAD	*	1 186882-					
20	6209-409-001-00	NUT/M8	*	1 186882-					
21	6215-549-073-00	LEADSEAL	*	1 186882-					
22	6215-549-074-00	WIRE	*	1 186882-					
23	V341-120-008-00	NUT,CAP/M 8	*	1 186882-					
24	6209-920-002-00	PACKING	*	2 186882-					
25	6215-542-004-20	PIN/ARM	*	1 186882-					
26	P117-303-003-00	PIN/SNAP	*	2 186882-					
27	6215-542-005-10	PIN	*	1 186882-					
28	6209-600-004-00	PLUG/SCREW	*	1 186882-					
29	6209-500-003-00	WASHER/08X14X01	*	1 186882-					

FIG. 12 TIMING GEAR CASE

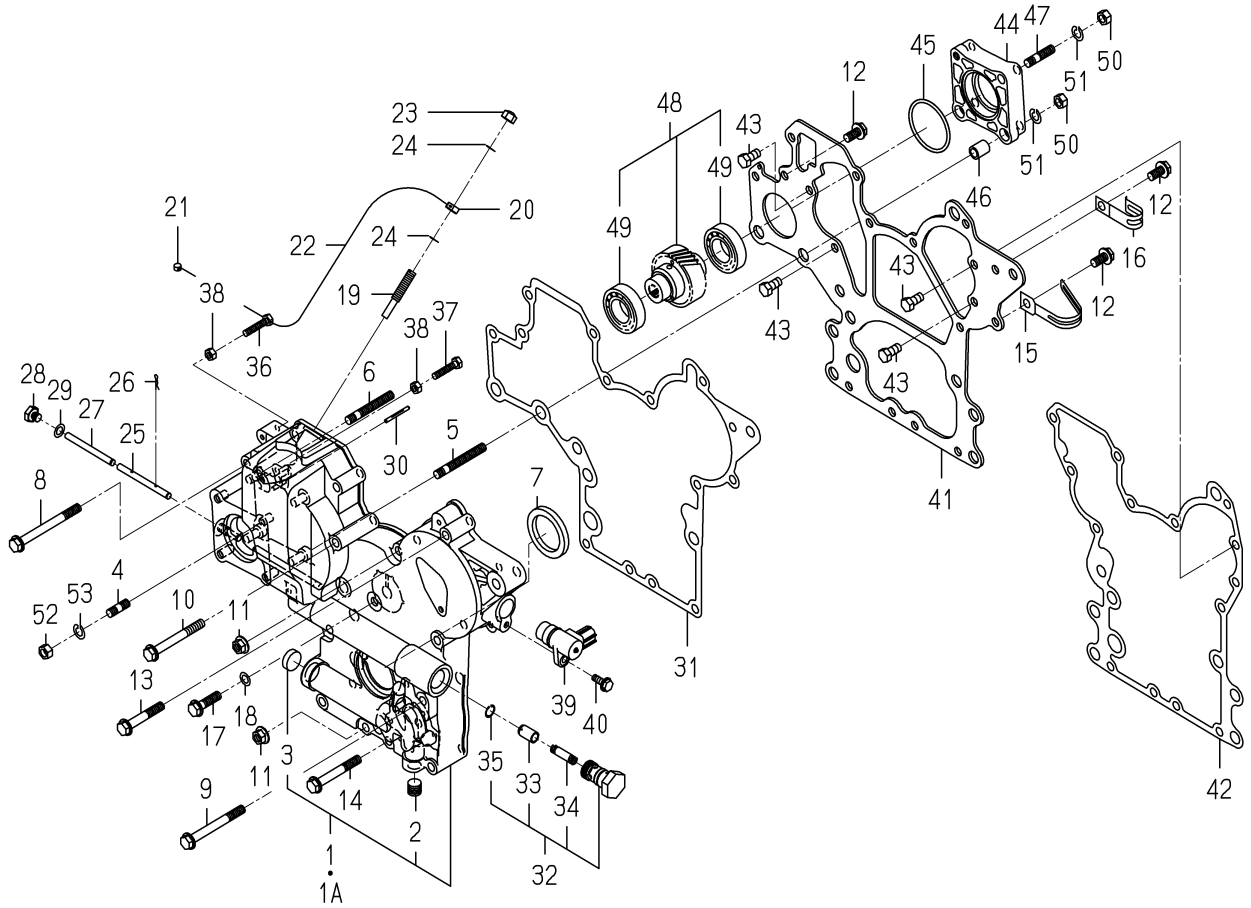

6005-241I-0100,6005-241I-0200

KEY	PART CODE	DESCRIPTION	SPC	TYPE OF MODEL E3CD VTB12		ITC	COL	GRP	REMARKS
30	6209-740-006-00	PIN/GROOVE	*	1 186882-					
31	6211-312-005-10	GASKET/GEARCASE	*	1 186882-					
32	6213-160-005-00	VALVE/RELIEF ASSY	*	1 186882-					
33	6213-161-003-10	PISTON/VALVE/RELIEF	*	1 186882-					
34	6213-164-001-00	SPRING/RELIEF VALVE	*	1 186882-					
35	V705-140-012-00	RING,SNAP/12 C	*	1 186882-					
36	6209-050-001-00	BOLT/M6	*	1 186882-					
37	6209-050-002-00	BOLT/M6	*	1 186882-					
38	V301-260-006-00	NUT/M6	*	2 186882-					
39	1690-654-200-00	SENSOR/REVOLUTION/R	*	1 186882-					
40	V230-360-601-60	FLANGEBOLT	*	1 186882-					
41	6211-311-013-20	PLATE/FRONT	*	1 186882-					
42	6211-312-006-10	GASKET/PLATE	*	1 186882-					
43	6902-050-816-00	BOLT	*	4 186882-					
44	6211-319-003-00	SPACER	*	1 186882-					
45	V723-102-005-00	O-RING 1A S50	*	1 186882-					
46	6209-749-001-20	PIN/TUBE	*	2 186882-					
47	6904-110-822-00	STUD	*	1 186882-					
48	6212-530-017-00	SHAFT/HYDRAULIC ASSY	*	1 186882-					
49	6209-800-011-00	BEARING	*	2 186882-					
50	V304-260-008-00	NUT	*	4 186882-					
51	V401-160-008-00	WASHER,SP/M 8	*	4 186882-					
52	V304-260-008-00	NUT	*	4 186882-					
53	V401-160-008-00	WASHER,SP/M 8	*	4 186882-					

FIG. 13 HANGER

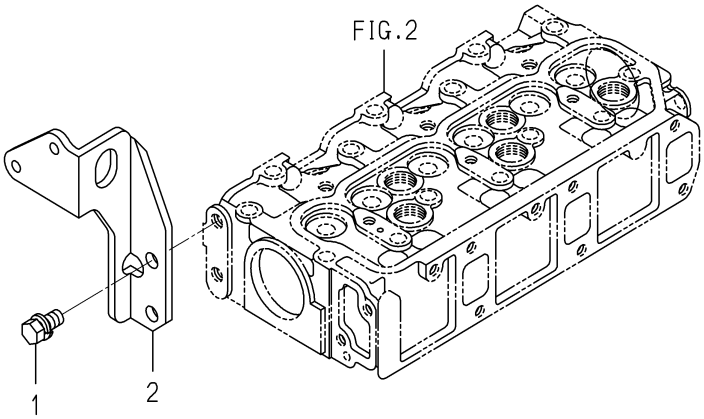

6005-290D-0100

KEY	PART CODE	DESCRIPTION	SPC	TYPE OF MODEL E3CD VTB12		ITC	COL	GRP	REMARKS
1	6901-911-020-00	BOLT,SEMS/M10X20	*	2					
2	6211-777-021-00	HANGER/F	*	1					

FIG. 14 VALVE

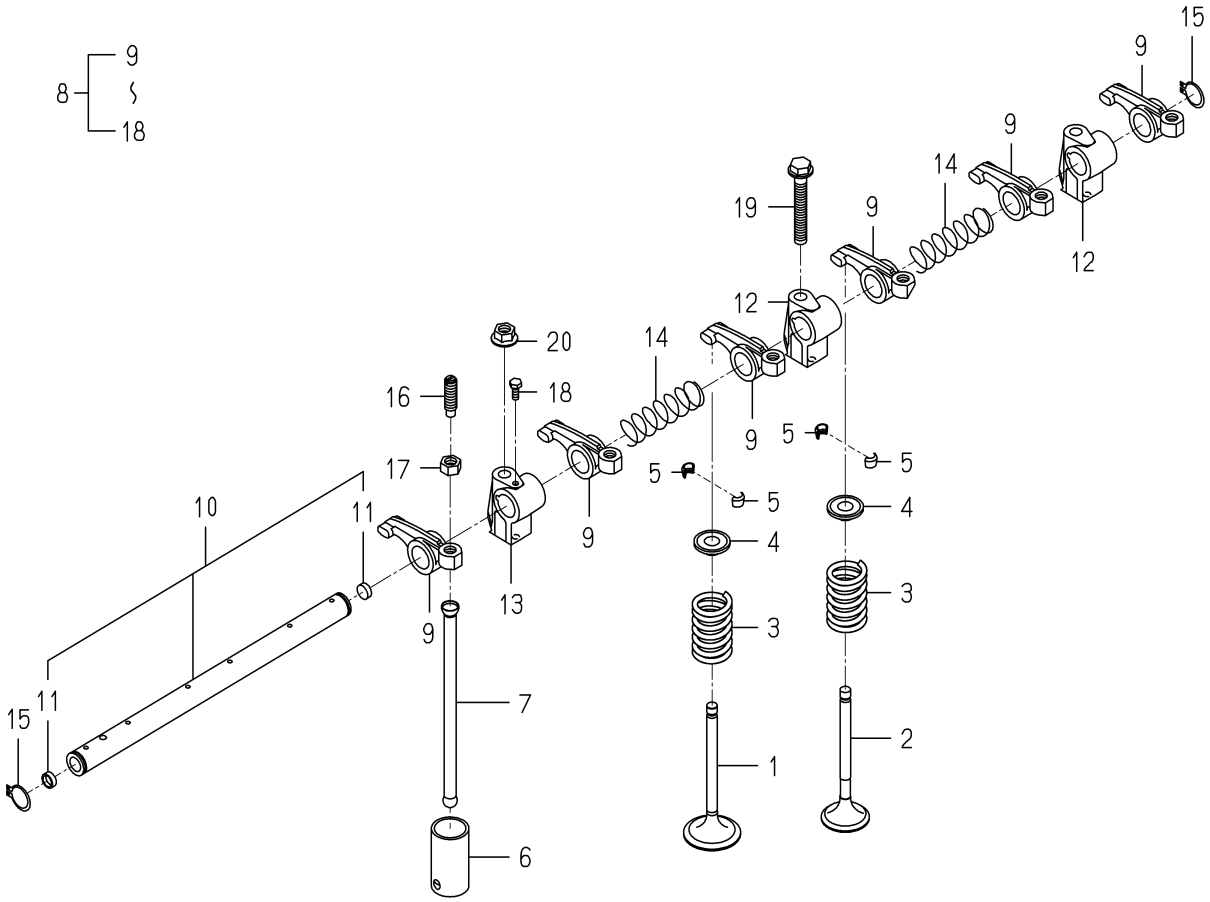

6005-301D-0100

KEY	PART CODE	DESCRIPTION	SPC	TYPE OF MODEL E3CD VTB12		ITC	COL	GRP	REMARKS
1	6212-551-019-00	VALVE/INTAKE	*	3					
2	6212-552-008-00	VALVE/EXHAUST	*	3					
3	6212-561-003-00	SPRING/VALVE	*	6					
4	6212-563-001-00	SEAT,VALVE SPRING	*	6					
5	6212-565-001-00	CUTTER,VALVE	*	12					
6	6212-571-002-30	TAPPET	*	6					
7	6212-575-003-00	PUSHROD	*	6					
8	6212-600-009-20	ROCKERSHAFT ASSY	*	1					
9	6212-611-004-10	ROCKERARM	*	6					
10	6212-620-008-20	SHAFT/ROCKERARM ASSY	*	1					
11	6212-626-002-10	PLUG	*	2					
12	6212-628-010-10	BRACKET/ROCKERSHAFT	*	2					
13	6212-628-011-10	BRACKET/ROCKERSHAFT	*	1					
14	6209-940-004-00	SPRING	*	2					
15	V704-140-016-00	RING,SNAP/16 C	*	2					
16	6212-616-002-00	SCREW ADJUST	*	6					
17	6209-409-003-00	NUT	*	6					
18	6209-000-002-00	BOLT	*	1					
19	V231-360-805-50	FLANGEBOLT	*	1					
20	3817-401-001-00	NUT/M08	*	2					

FIG. 15 CAM SHAFT

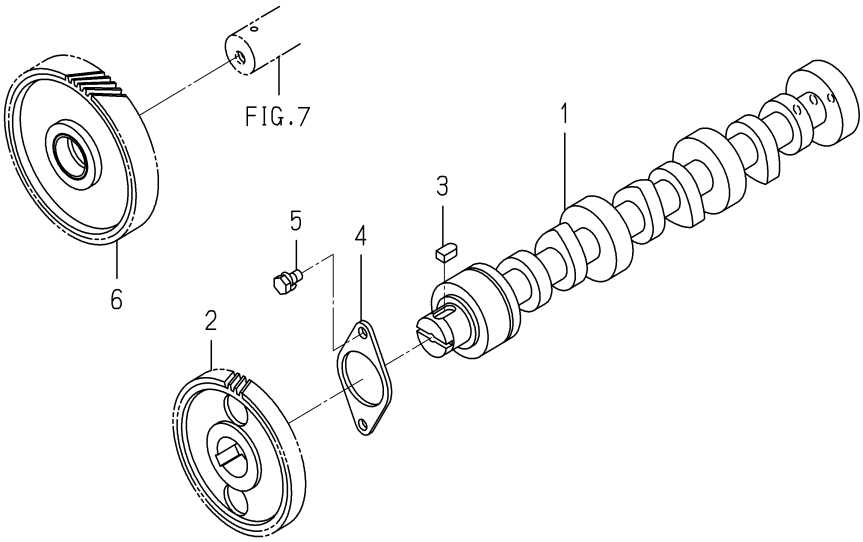

6005-310A-0100

KEY	PART CODE	DESCRIPTION	SPC	TYPE OF MODEL E3CD VTB12		ITC	COL	GRP	REMARKS
1	6212-511-005-00	CAMSHAFT	*	1					
2	6212-522-004-10	GEAR/CAMSHAFT	*	1					
3	6209-730-005-00	KEY/07X05X09	*	1					
4	6212-535-007-00	PLATE/THRUST	*	1					
5	6901-910-612-00	BOLT,SEMS/M6X12	*	2					
6	6212-523-021-00	GEAR/IDLE ASSY	*	1					

FIG. 16 PISTON

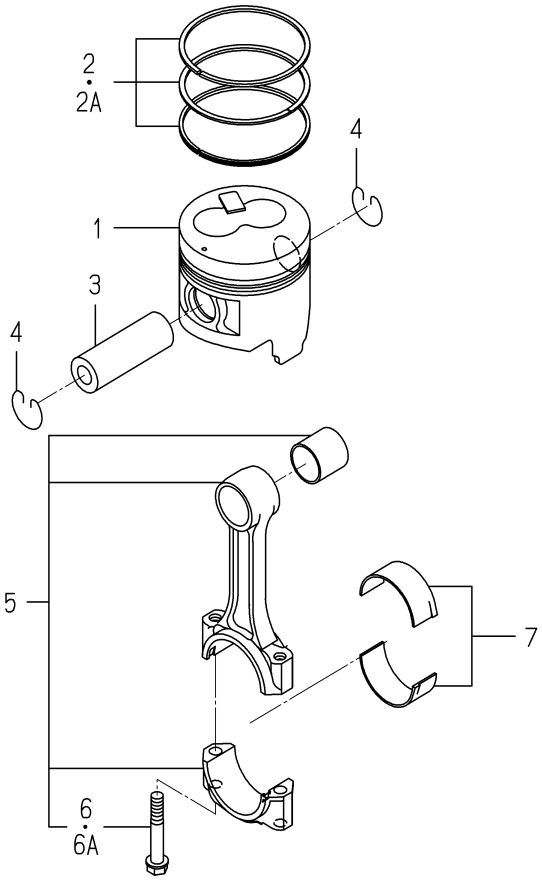

6005-340Q-0100

KEY	PART CODE	DESCRIPTION	SPC	TYPE OF MODEL E3CD VTB12		ITC	COL	GRP	REMARKS
1	6212-111-095-30	PISTON	*	3					
2	6212-121-029-10	RING/PISTONSET	*	3 -193488					
2A	6212-121-029-20	RING/PISTONSET	*	3 193489-		1			
3	6212-211-002-00	PIN/PISTON	*	3					
4	6909-950-115-00	RING SNAP	*	6					
5	6212-230-011-30	CONNECTINGROD ASSY	*	3					
6	6212-235-004-00	BOLT/CONNECTINGROD	*	6 -150480					
6A	6212-235-004-10	BOLT/CONNECTINGROD	*	6 150481-		1			
7	6212-271-009-00	BEARING/CONNECTING R	*	3					

FIG. 17 PISTON/OVER SIZE (OPTION)

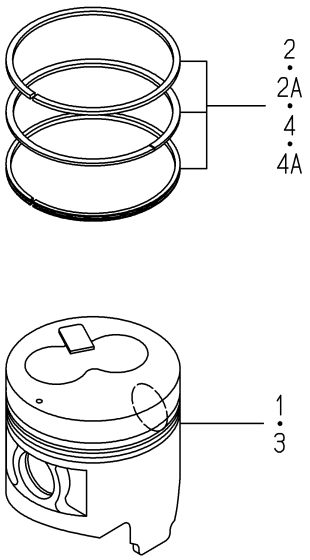

6005-349Q-0100

KEY	PART CODE	DESCRIPTION	SPC	TYPE OF MODEL E3CD VTB12		ITC	COL	GRP	REMARKS
1	6212-114-095-30	PISTON/OV	T	3					
2	6212-124-029-10	RING/PISTON/OVSET	T	3 -193488					
2A	6212-124-029-20	RING/PISTON/OVSET	T	3 193489-		1			
3	6212-116-095-30	PISTON/OV	T	3					
4	6212-126-029-10	RING/PISTON/OVSET	T	3 -193488					
4A	6212-126-029-20	RING/PISTON/OVSET	T	3 193489-		1			

FIG. 18 CRANK SHAFT

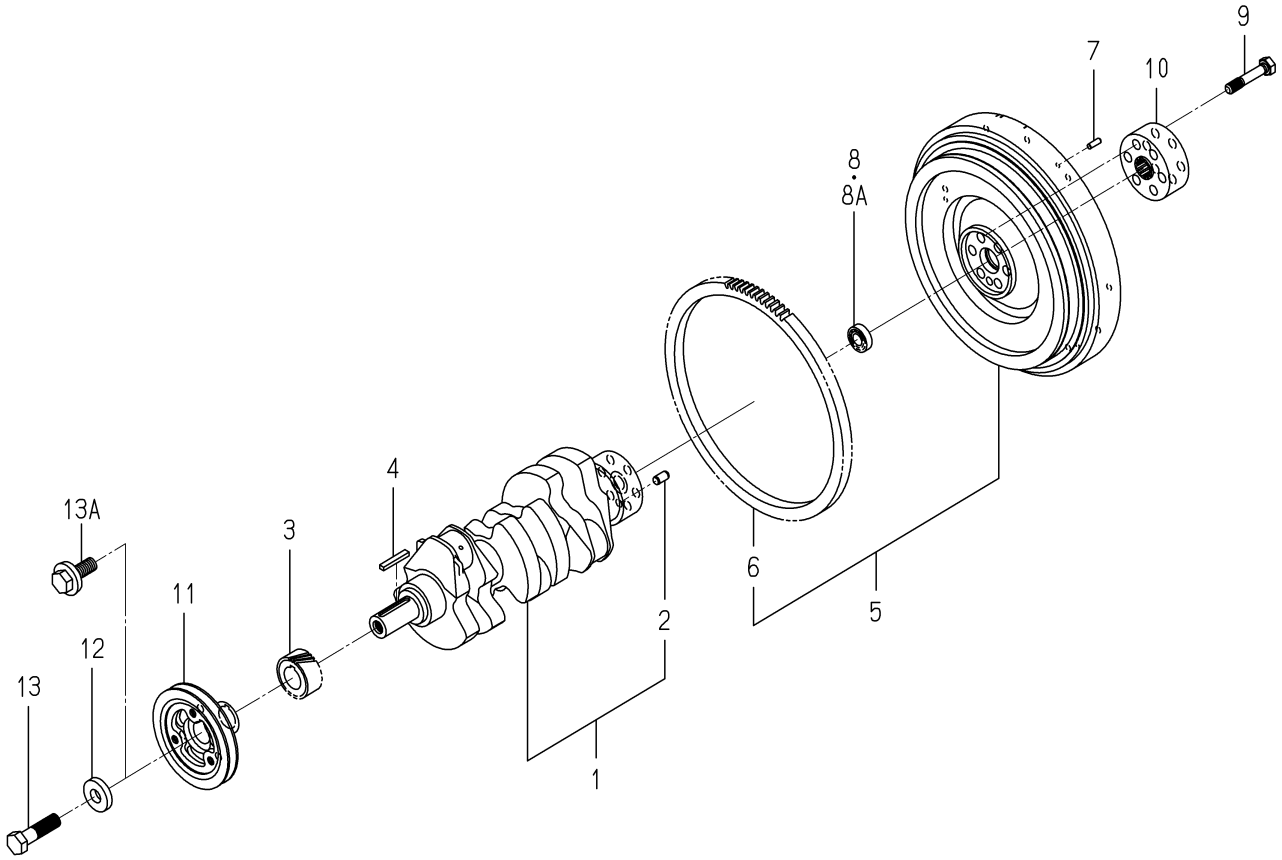

6005-351D-0100

KEY	PART CODE	DESCRIPTION	SPC	TYPE OF MODEL E3CD VTB12		ITC	COL	GRP	REMARKS
1	6212-310-011-40	CRANKSHAFT ASSY	*	1					
2	V523-101-001-80	PIN	*	1					
3	6212-521-008-00	GEAR/CRANK	*	1					
4	6209-730-006-00	KEY/07X05X43	*	1					
5	6212-330-075-10	FLYWHEEL ASSY	*	1					
6	6212-333-002-00	RINGGEAR	*	1					
7	V523-100-601-80	PIN	*	3					
8	V600-150-600-20	BEARING,RB/6002SS	*	1 -156430					
8A	V600-350-600-20	BEARING/BALL	*	1 156431-					
9	6209-000-041-00	BOLT	*	6					
10	6212-339-009-10	BOSS/SPLINE	*	1					
11	6212-371-035-10	PULLEY/CRANK	*	1					
12	6212-379-001-00	WASHER	*	1 -165260					
13	6901-066-645-00	BOLT	*	1 -165260					
13A	6209-000-043-00	BOLT/CRANK	*	1 165261-					

FIG. 19 OIL PUMP

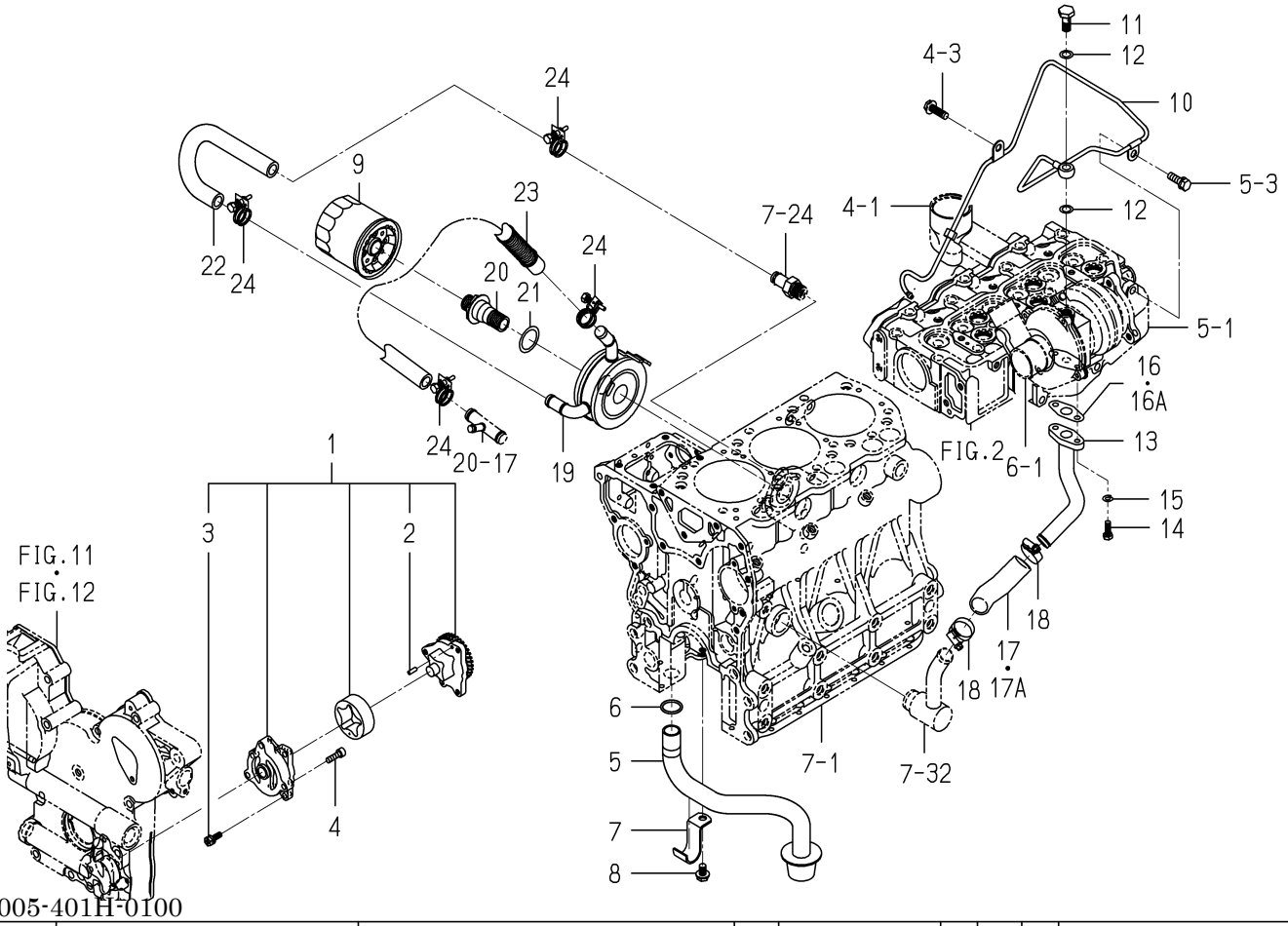

6005-401H-0100

KEY	PART CODE	DESCRIPTION	SPC	TYPE OF MODEL E3CD VTB12		ITC	COL	GRP	REMARKS
1	6213-100-010-00	OILPUMP ASSY	*	1					
2	6213-129-003-00	PIN/STRAIGHT	*	2					
3	6213-119-001-00	BOLT/WS	*	3					
4	V220-540-602-00	SCREW/SOCKET	*	3					
5	6213-140-013-00	STRAINER	*	1					
6	V720-103-502-20	O-RING/P22	*	1					
7	6213-149-003-20	CLAMP/STRAINER	*	1					
8	V231-360-801-60	FLANGEBOLT	*	1					
9	6213-240-005-10	CARTRIDGE/OILFILTER	*	1					
10	6213-311-057-00	PIPE/OIL ASSY	*	1					
11	6209-060-004-00	BOLT/EYE	*	1					
12	6209-920-003-00	GASKET	*	2					
13	6213-311-055-00	PIPE/OIL COMP	*	1					
14	6209-030-094-00	BOLT	*	2					
15	V401-160-006-00	WASHER,SP/M 6	*	2					
16	6209-630-004-10	GASKET	*	1 -159416					
16A	6209-630-004-20	GASKET	*	1 159417-		1			
17	6209-360-076-10	HOSE/RUBBER	*	1 -188129					
17A	6209-360-076-20	HOSE/RUBBER	*	1 188130-		1			
18	J061-116-025-00	CLAMP/WORM/16-25	*	2					
19	6221-700-004-00	OILCOOLER	*	1					
20	6221-726-006-00	CONNECTOR/OILCOOLER	*	1					
21	6221-726-008-00	WASHER/OILCOOLER	*	1					
22	6209-360-071-10	HOSE/OILCOOLER/IN	*	1					
23	6209-360-072-20	HOSE/OILCOOLER/OUT	*	1					
24	J061-216-020-00	CLAMP/WIRE/16-20	*	4					

FIG. 20 WATER PUMP

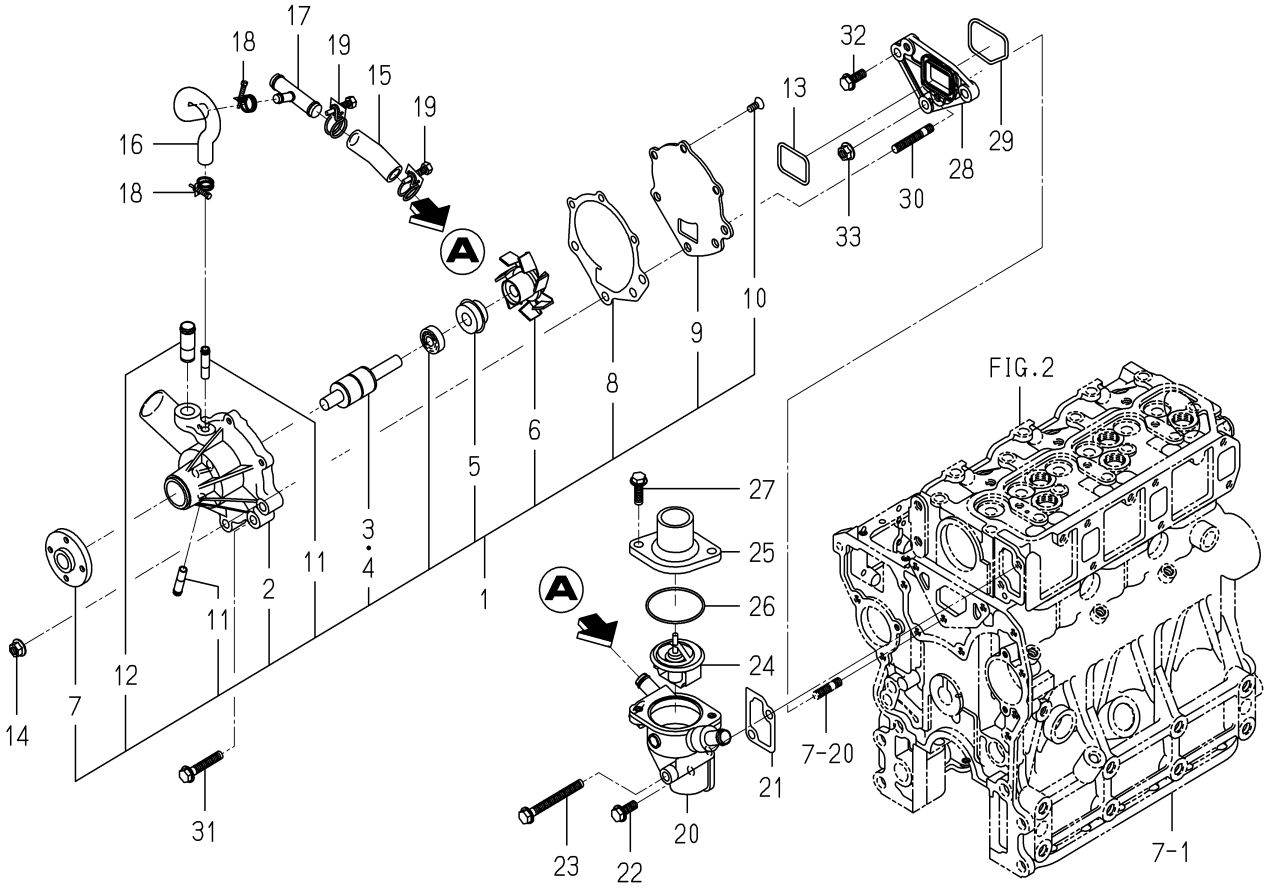

6005-420P-0100

KEY	PART CODE	DESCRIPTION	SPC	TYPE OF MODEL E3CD VTB12		ITC	COL	GRP	REMARKS
1	6213-610-011-10	WATERPUMP ASSY	*	1					
2	6213-611-006-00	BODY/WATERPUMP	*	1					
3	6213-631-002-00	BEARING/WATER PUMP	*	1					
4	6213-631-005-00	BEARING/WATERPUMP	*	1					
5	6213-622-002-10	SEAL SET/WATER PUMP	*	1					
6	6213-621-003-00	ROTOR/WATERPUMP	*	1					
7	6213-642-002-00	SEAL/WATER PUMPPULLE	*	1					
8	6213-613-002-10	GASKET	*	1					
9	6213-612-004-00	PLATE/WATER PUMP	*	1					
10	6213-619-003-00	SCREW/WATER PUMP	*	3					
11	6213-619-002-00	PIPE/WATER PUMP	*	2					
12	6213-619-009-00	PIPE/WATERPUMP	*	1					
13	6213-614-013-00	GASKET/WATERPUMP	*	1					
14	3817-401-001-00	NUT/M08	*	2					
15	6213-729-004-10	HOSE/RUBBER	*	1					
16	6213-729-013-10	HOSE/RUBBER	*	1					
17	6213-719-002-00	JOINT	*	1					
18	J061-210-015-00	CLAMP/WIRE/10-15	*	2					
19	J061-216-020-00	CLAMP/WIRE/16-20	*	2					
20	6213-716-003-10	HOUSING/THERMOSTAT	*	1					
21	6213-743-002-10	GASKET/HOUSING	*	1					
22	V231-360-802-00	FLANGEBOLT	*	1					
23	V231-360-807-50	FLANGEBOLT	*	1					
24	6513-770-022-10	THERMOSTAT	*	1					
25	6213-711-003-20	PIPE,WATER OUTLET	*	1					
26	V723-102-005-50	O-RING	*	1					
27	V231-360-802-50	FLANGEBOLT	*	2					
28	6213-619-006-00	SPACER/WATERPUMP	*	1					
29	6213-614-014-00	GASKET/SPACER	*	1					
30	6904-110-840-00	STUD/M8X40	*	2					

FIG. 20 WATER PUMP

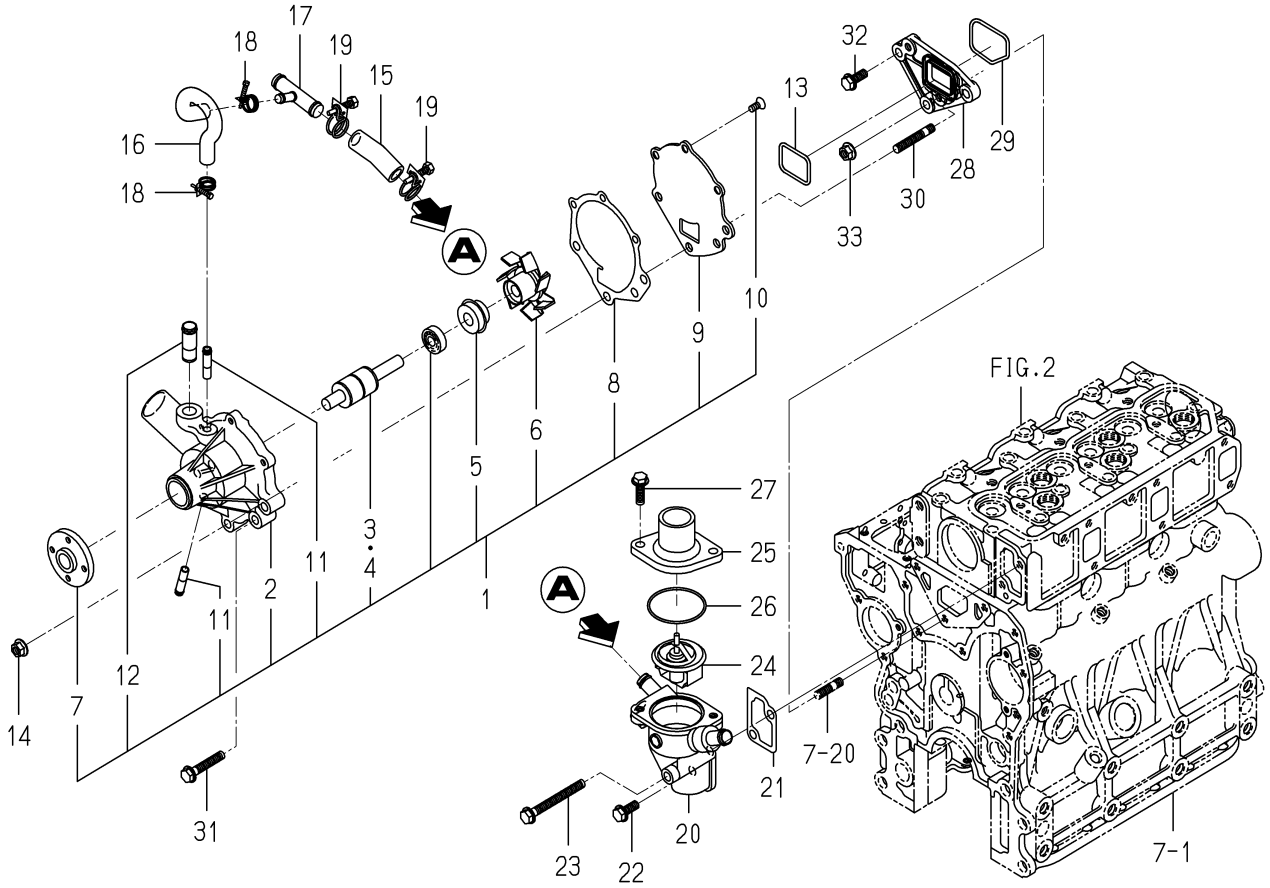

6005-420P-0100

KEY	PART CODE	DESCRIPTION	SPC	TYPE OF MODEL E3CD VTB12		ITC	COL	GRP	REMARKS
31	V231-360-804-50	FLANGEBOLT	*	1					
32	V231-360-802-00	FLANGEBOLT	*	1					
33	3817-401-001-00	NUT/M08	*	1					

FIG. 21 COOLING FAN

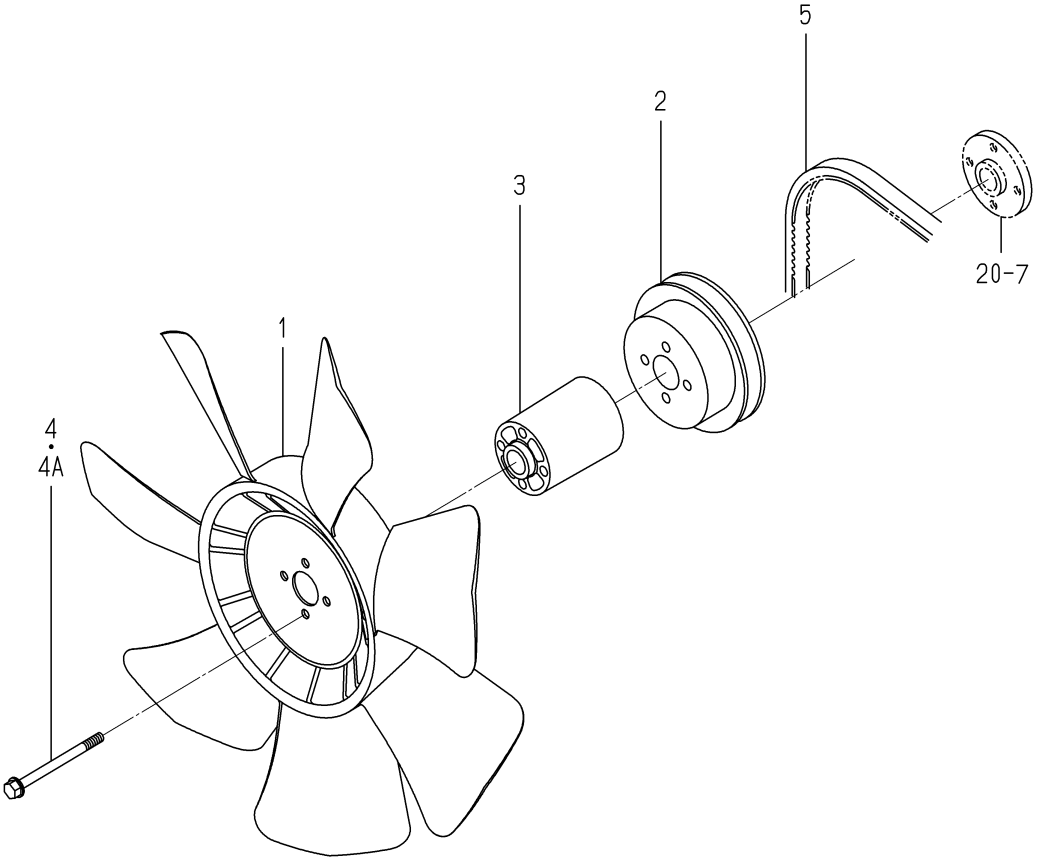

6005-480Z-0100

KEY	PART CODE	DESCRIPTION	SPC	TYPE OF MODEL E3CD VTB12		ITC	COL	GRP	REMARKS
1	6213-660-015-00	FAN/COOLING	*	1					
2	6213-641-022-10	PULLEY/WATERPUMP	*	1					
3	6213-669-009-00	SPACER/FAN/68	*	1					
4	6209-030-048-00	BOLT/WS	*	4 -194674					
4A	6209-046-007-00	BOLT/FLANGE	*	4 194675-					
5	6213-671-031-00	BELT/VR5A39.5	*	1					

FIG. 22 INJECTION NOZZLE

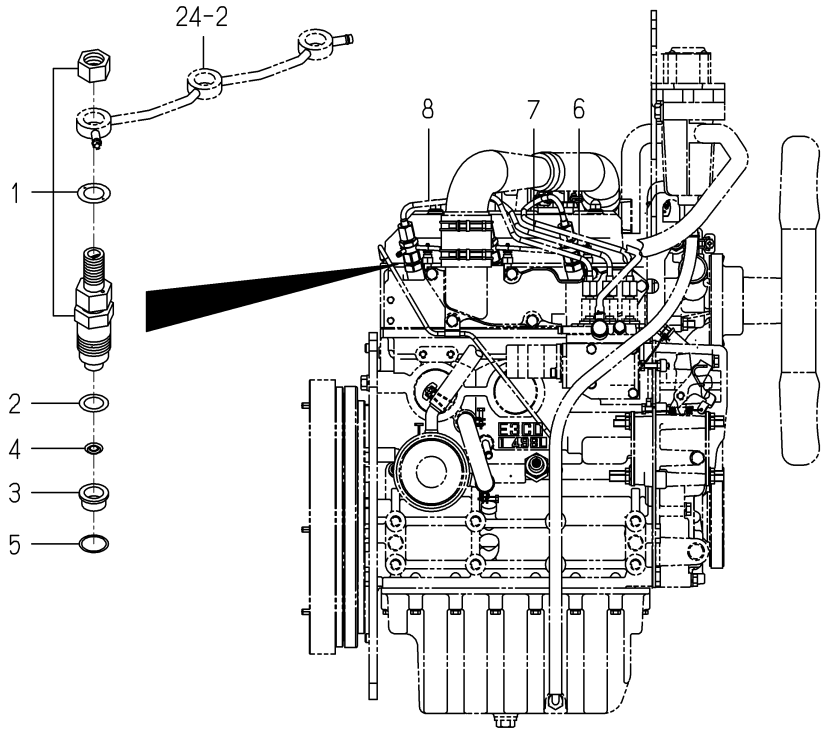

6005-501F-0100

KEY	PART CODE	DESCRIPTION	SPC	TYPE OF MODEL E3CD VTB12		ITC	COL	GRP	REMARKS
1	6215-300-037-00	INJECTIONNOZZLE ASSY	*	3					FIG 030
2	6215-315-002-00	GASKET,NOZZLE	*	3					
3	6215-315-006-00	HEATSHILD/NOZZLE	*	3					
4	6215-315-005-00	WASHER/CORRUGATE	*	3					
5	6215-315-007-00	GASKET	*	3					
6	6215-411-137-00	PIPE/INJECTION ASSY	*	1					
7	6215-411-138-00	PIPE/INJECTION ASSY	*	1					
8	6215-411-139-00	PIPE/INJECTION ASSY	*	1					

FIG. 23 INJECTION PUMP

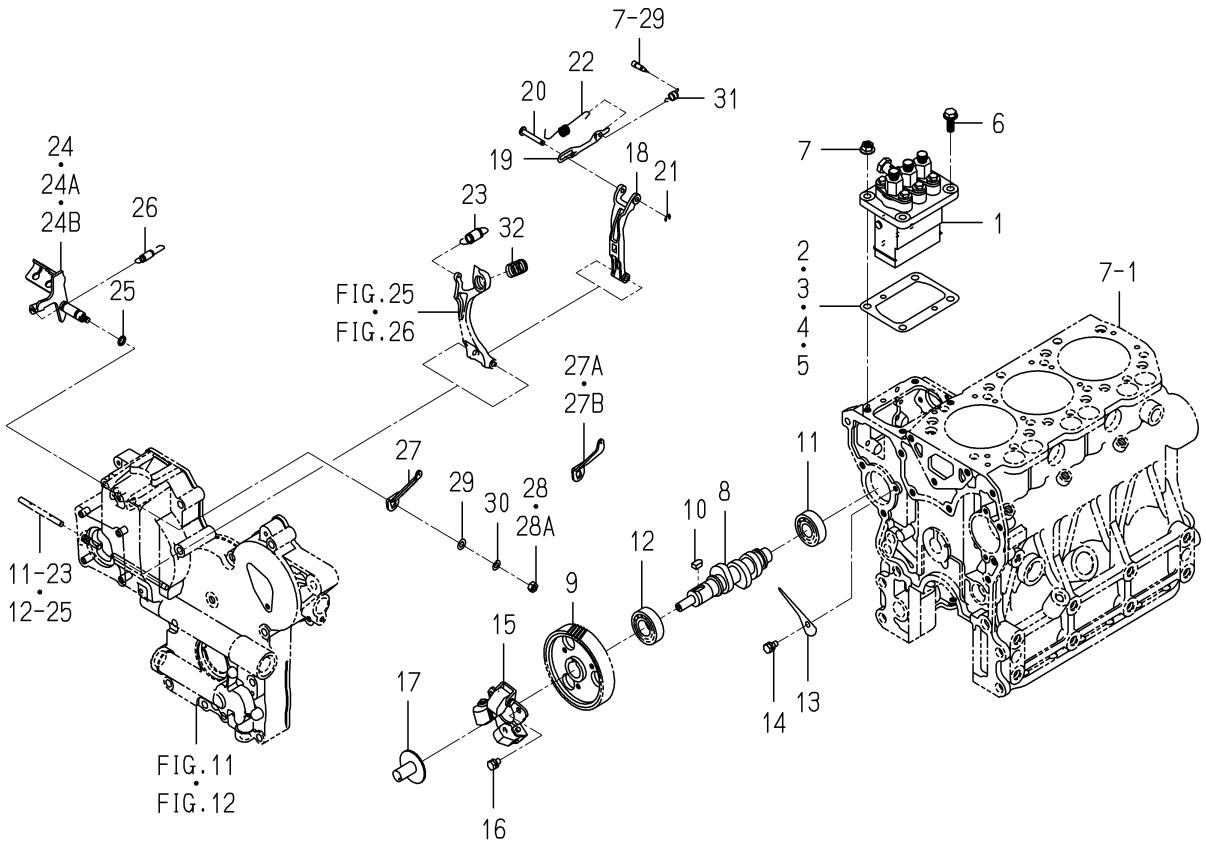

6005-511D-0100

KEY	PART CODE	DESCRIPTION	SPC	TYPE OF MODEL E3CD VTB12		ITC	COL	GRP	REMARKS
1	6215-600-078-10	INJECTIONPUMP ASSY	*	1					FIG 031
2	6219-752-045-00	SHIM/INJECTIONPUMP	*	1					
3	6219-752-044-00	SHIM/INJECTIONPUMP	*	1					
4	6219-752-046-00	SHIM/INJECTIONPUMP	*	1					
5	6219-752-047-00	SHIM/INJECTIONPUMP	*	1					
6	V231-360-802-00	FLANGEBOLT	*	2					
7	3817-401-001-00	NUT/M08	*	2					
8	6215-621-018-10	CAMSHAFT/INJPUMP	*	1					
9	6212-524-012-30	GEAR/INJECTIONPUMP	*	1					
10	6209-730-005-00	KEY/07X05X09	*	1					
11	V600-110-620-30	BEARING,RB/6203	*	1					
12	6209-800-010-00	BEARING	*	1					
13	6212-535-009-00	PLATE/THRUST/INJPUMP	*	1					
14	6901-910-612-00	BOLT,SEMS/M6X12	*	1					
15	6215-520-007-10	FLYWEIGHT ASSY	*	1					
16	6209-030-043-00	BOLT/M6X10	*	3					
17	6215-526-004-00	THRUSTPIECE	*	1					
18	6215-541-001-10	ARM/FLOATING COMP	*	1					
19	6215-543-002-10	RINK/CONTROL	*	1					
20	6215-542-006-00	PIN,CONTROL	*	1					
21	V710-140-004-00	RING,SNAP/ 4 E	*	1					
22	6215-549-031-10	SPRING/SETTING	*	1					
23	6215-531-019-00	SPRING/GOVERNOR	*	1					
24	6215-541-024-30	LEVER/CONTROL COMP	*	1 -180974					
24A	6215-541-045-00	LEVER/CONTROL COMP	*	1 -191056					
24B	6215-541-045-10	LEVER/CONTROL COMP	*	1 191057-		3			
25	V720-101-900-80	O-RING/P 8	*	1					
26	6209-580-002-10	SPRING,RETURN	*	1					
27	6215-549-007-10	ARM/CONTROL	*	1 -180974					
27A	6215-549-076-00	ARM/CONTROL	*	1 -183522					

FIG. 23 INJECTION PUMP

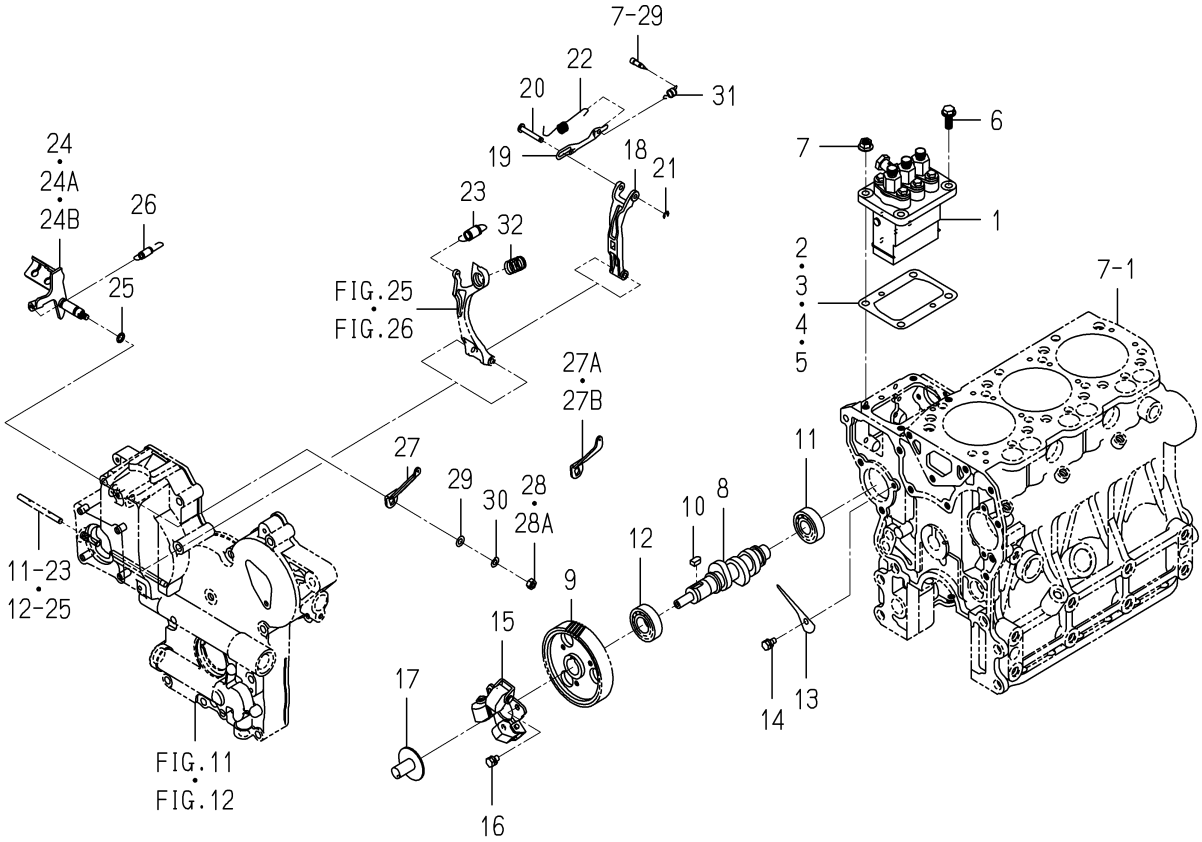

6005-511D-0100

KEY	PART CODE	DESCRIPTION	SPC	TYPE OF MODEL E3CD VTB12		ITC	COL	GRP	REMARKS
27B	6215-549-076-10	ARM/CONTROL	*	1 183523-		3			
28	6909-110-406-00	NUT	*	1 -178577					
28A	V301-260-006-00	NUT/M6	*	1 178578-					
29	V411-260-006-00	WASHER / M6	*	1					
30	V401-160-006-00	WASHER,SP/M 6	*	1					
31	6215-549-039-00	SPRING/STARTING	*	1					
32	6215-537-002-10	SPRING/IDLE	*	1					

FIG. 24 FUEL PIPE

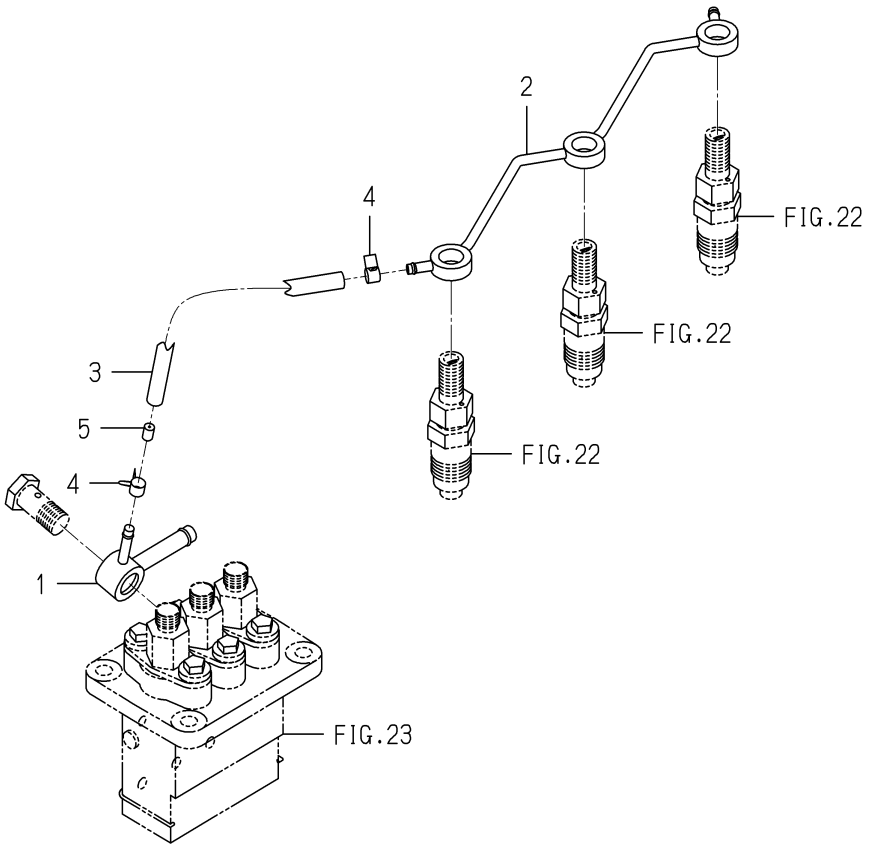

6005-550F-0100

KEY	PART CODE	DESCRIPTION	SPC	TYPE OF MODEL E3CD VTB12		ITC	COL	GRP	REMARKS
1	6215-412-004-00	CONNECTOR/FUEL	*	1					
2	6215-411-136-00	PIPE/FUEL	*	1					
3	6209-360-011-00	HOSE/RUBBER	*	1					
4	J062-076-082-00	CLIP/HOSE/7.6-8.2	*	2					
5	3640-586-004-00	RESISTANCE/1.0	*	1					

FIG. 25 ADAPTER

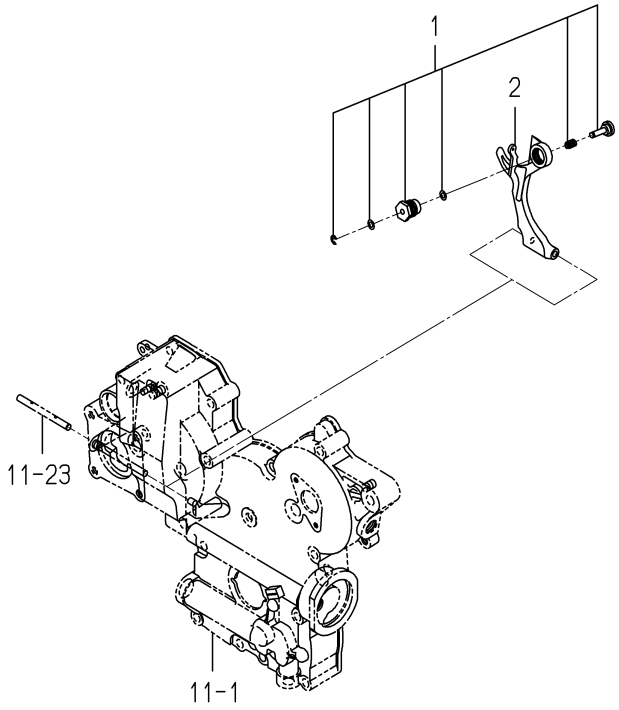

6005-560 -0100

KEY	PART CODE	DESCRIPTION	SPC	TYPE OF MODEL E3CD VTB12		ITC	COL	GRP	REMARKS
1	6215-548-029-00	ADAPTER/255X065 ASSY	*	1 -148496					
2	6215-541-016-30	ARM/TENSION	*	1 -148496					

FIG. 26 ADAPTER

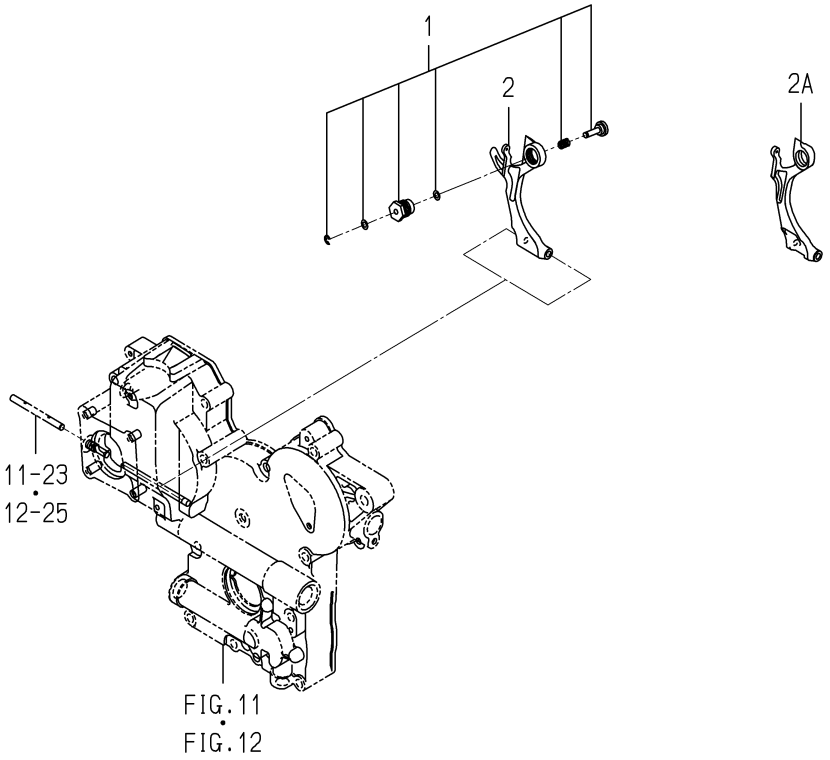

6005-560Y-0100

KEY	PART CODE	DESCRIPTION	SPC	TYPE OF MODEL E3CD VTB12		ITC	COL	GRP	REMARKS
1	6215-548-070-00	ADAPTER/250X090 ASSY	*	1 148497-					
2	6215-541-016-30	ARM/TENSION	*	1 -168197					
2A	6215-541-016-40	ARM/TENSION	*	1 168198-		1			

FIG. 27 ELECTRIC (1)

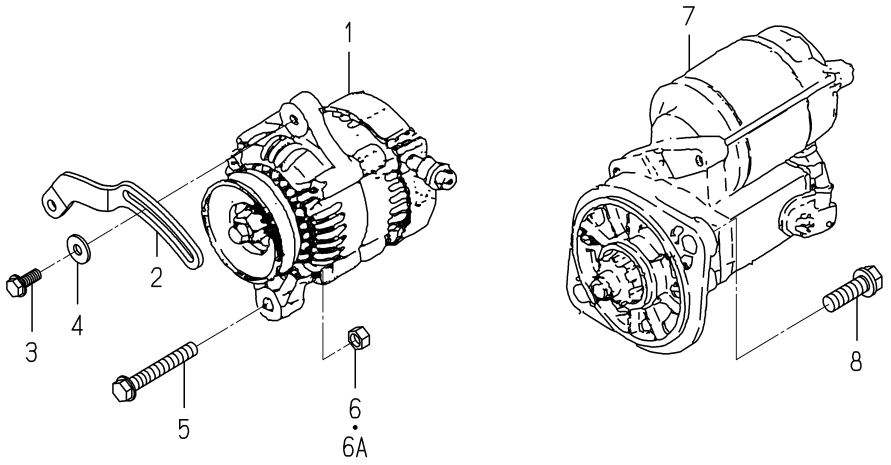

6005-801W-0100,6005-801W-0200

KEY	PART CODE	DESCRIPTION	SPC	TYPE OF MODEL E3CD VTB12		ITC	COL	GRP	REMARKS
1	6281-200-021-00	GENERATOR ASSY	*	1					FIG 033
2	6213-674-006-20	PLATE/ADJUST	*	1					
3	V231-360-802-00	FLANGEBOLT	*	1					
4	1373-121-001-00	WASHER/9X22X2	*	1					
5	V233-361-007-00	FLANGEBOLT	*	1					
6	6909-110-410-00	NUT/M10	*	1 -171486					
6A	V334-260-010-00	NUT/M10	*	1 171487-					
7	6281-100-007-20	STARTER ASSY	*	1					FIG 032
8	6901-931-240-00	BOLT	*	2					

FIG. 28 ELECTRIC (2)

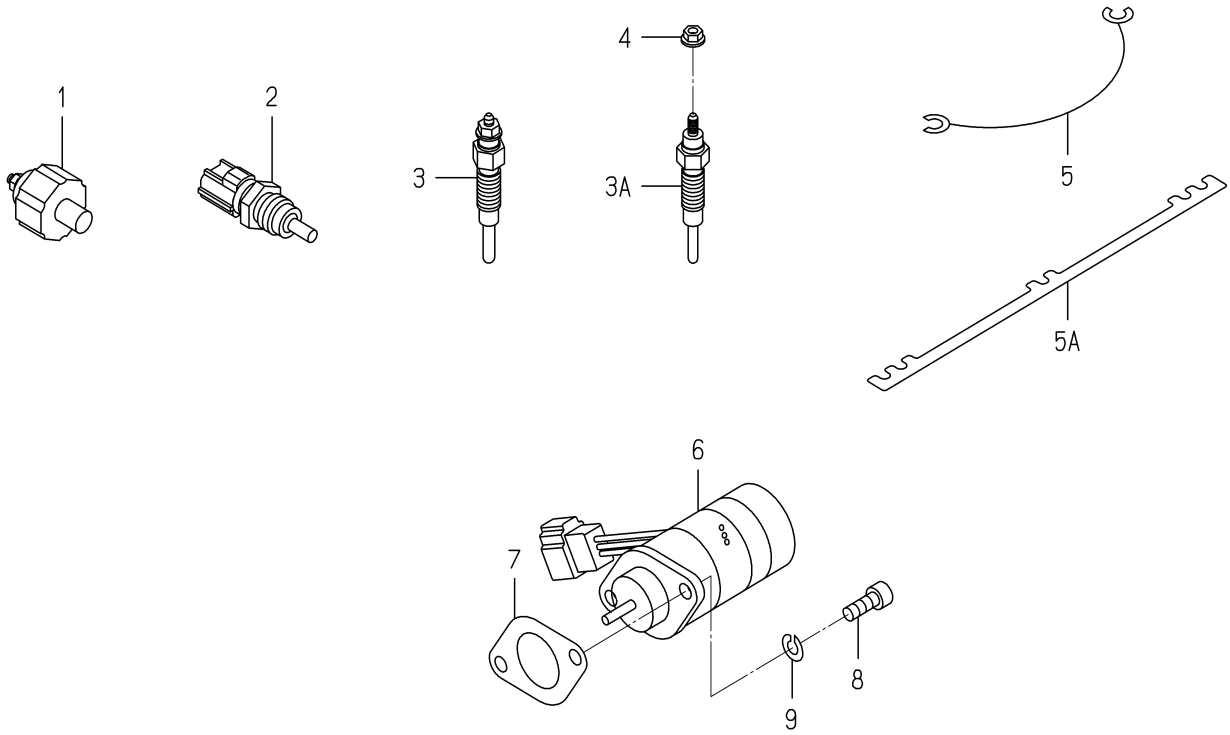

6005-820S-0100,6005-820S-0200

KEY	PART CODE	DESCRIPTION	SPC	TYPE OF MODEL E3CD VTB12		ITC	COL	GRP	REMARKS
1	6281-971-003-00	SWITCH/OILPRESSURE	*	1					
2	6282-450-007-00	THERMOMETER	*	1					
3	6281-410-023-00	GLOWPLUG	*	3 -170197					
3A	6281-410-023-10	GLOWPLUG	*	3 170198-		3			
4	6209-440-005-00	NUT/FLANGE	*	3 170224-					
5	6219-732-012-00	CONNECTOR/GLOWPLUG	*	2 -150159					
5A	6219-732-017-00	CONNECTOR/GLOWPLUG	*	1 150160-					
6	6281-910-011-00	SOLENOID	*	1					
7	6209-630-002-10	GASKET	*	1					
8	V220-540-601-60	BOLT	*	2					
9	V401-160-006-00	WASHER,SP/M 6	*	2					

FIG. 29 REPAIR PARTS(OPTION)

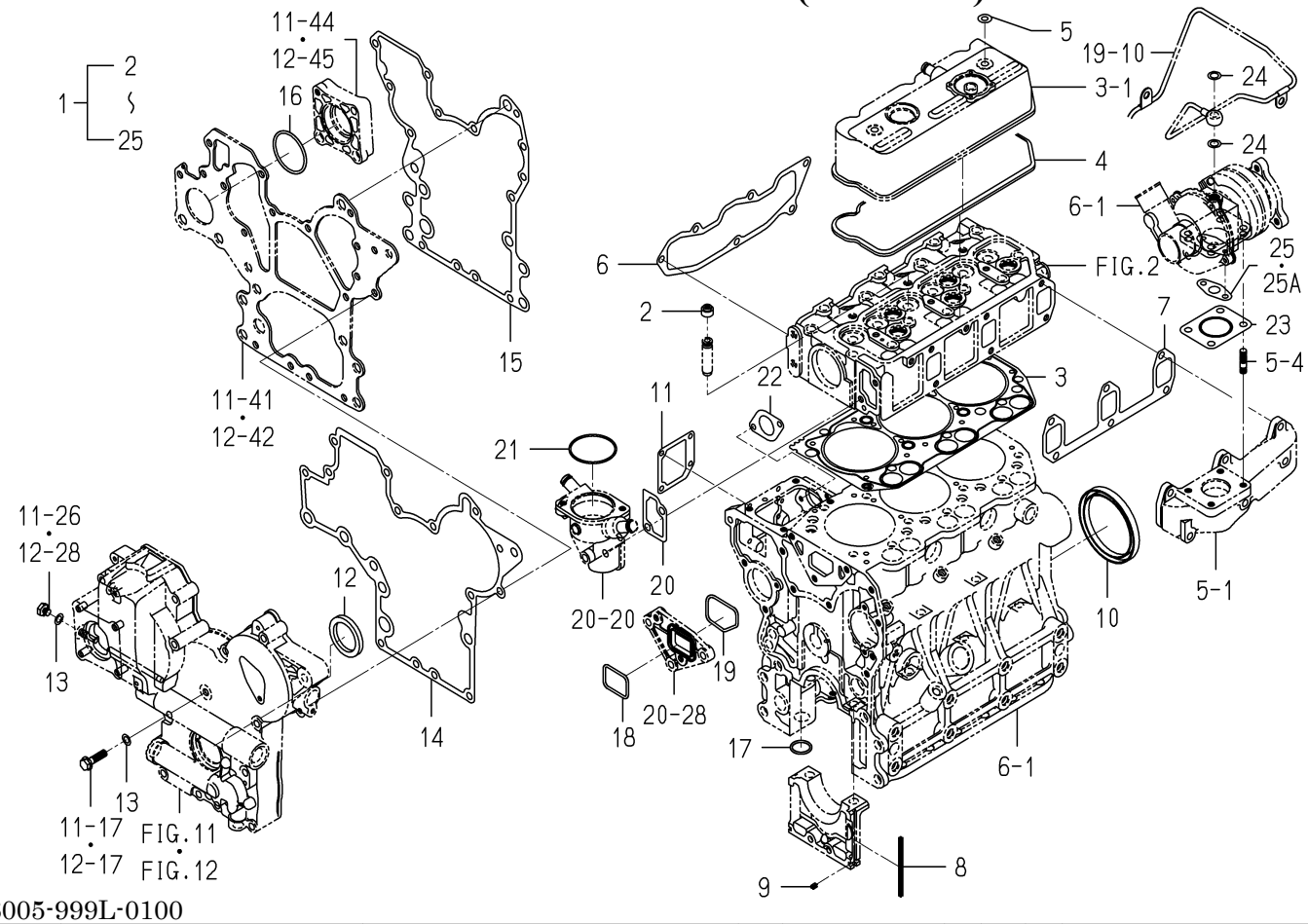

6005-999L-0100

KEY	PART CODE	DESCRIPTION	SPC	TYPE OF MODEL E3CD VTB12		ITC	COL	GRP	REMARKS
1	6287-810-041-10	REPAIR/ENGINESET	T	1					
2	6212-569-002-00	SEAL,OIL	T	6					
3	6211-141-057-10	GASKET/CYLINDERHEAD	T	1					
4	6211-173-005-00	SEAL/CYL HEAD/UNDER	T	1					
5	6209-572-003-00	GASKET	T	2					
6	6214-115-003-10	GASKET/INLETMANIFOLD	T	1					
7	6214-145-004-20	GASHET/EXH MANIFOLD	T	1					
8	6211-258-001-00	SEAL,BEARING CAP	T	4					
9	6211-258-002-00	SEAL,BEARING CAP/7	T	2					
10	6209-625-003-20	OILSEAL	T	1					
11	6211-292-001-20	GASKET/COVER	T	1					
12	6209-625-002-00	SEAL,OIL	T	1					
13	6209-500-003-00	WASHER/08X14X01	T	2					
14	6211-312-005-10	GASKET/GEARCASE	T	1					
15	6211-312-006-10	GASKET/PLATE	T	1					
16	V723-102-005-00	O-RING 1A S50	T	1					
17	V720-103-502-20	O-RING/P22	T	1					
18	6213-614-013-00	GASKET/WATERPUMP	T	1					
19	6213-614-014-00	GASKET/SPACER	T	1					
20	6213-743-002-10	GASKET/HOUSING	T	1					
21	V723-102-005-50	O-RING	T	1					
22	6209-630-002-10	GASKET	T	1					
23	6214-145-009-00	GASKET	T	1					
24	6209-920-003-00	GASKET	T	2					
25	6209-630-004-10	GASKET	T	1 -159416					
25A	6209-630-004-20	GASKET	T	1 159417-		1			

FIG. 30 COMPONENT PARTS FOR 6215-300-037-00 ON Fig.22

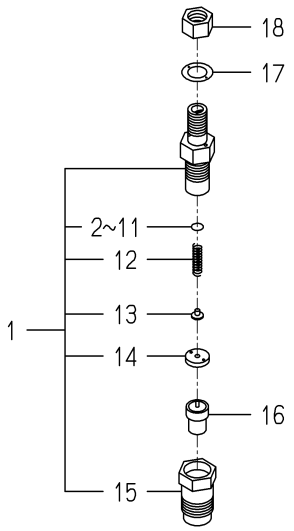

6215-300-037-0E

KEY	PART CODE	DESCRIPTION	SPC	TYPE OF MODEL E3CD VTB12		ITC	COL	GRP	REMARKS
1	6215-330-022-00	HOLDER/NOZZLE ASSY	*	3					
2	6215-345-044-00	SHIM/0.10	*	3					
3	6215-345-045-00	SHIM/0.20	*	3					
4	6215-345-046-00	SHIM/0.30	*	3					
5	6215-345-047-00	SHIM/0.40	*	3					
6	6215-345-048-00	SHIM/0.50	*	3					
7	6215-345-049-00	SHIM/0.52	*	3					
8	6215-345-050-00	SHIM/0.54	*	3					
9	6215-345-051-00	SHIM/0.56	*	3					
10	6215-345-052-00	SHIM/0.58	*	3					
11	6215-345-053-00	SHIM/0.80	*	3					
12	6215-343-002-00	SPRING,NOZZLE	*	3					
13	6215-342-002-00	SPRINGSEAT	*	3					
14	6215-339-004-00	SPACER	*	3					
15	6215-332-006-00	NUT/NOZZLERETAINING	*	3					
16	6215-311-005-00	NOZZLE	*	3					
17	6215-359-003-00	GASKET	*	3					
18	6215-359-004-00	NUT	*	3					

FIG. 31 COMPONENT PARTS FOR 6215-600-078-10 ON Fig.23

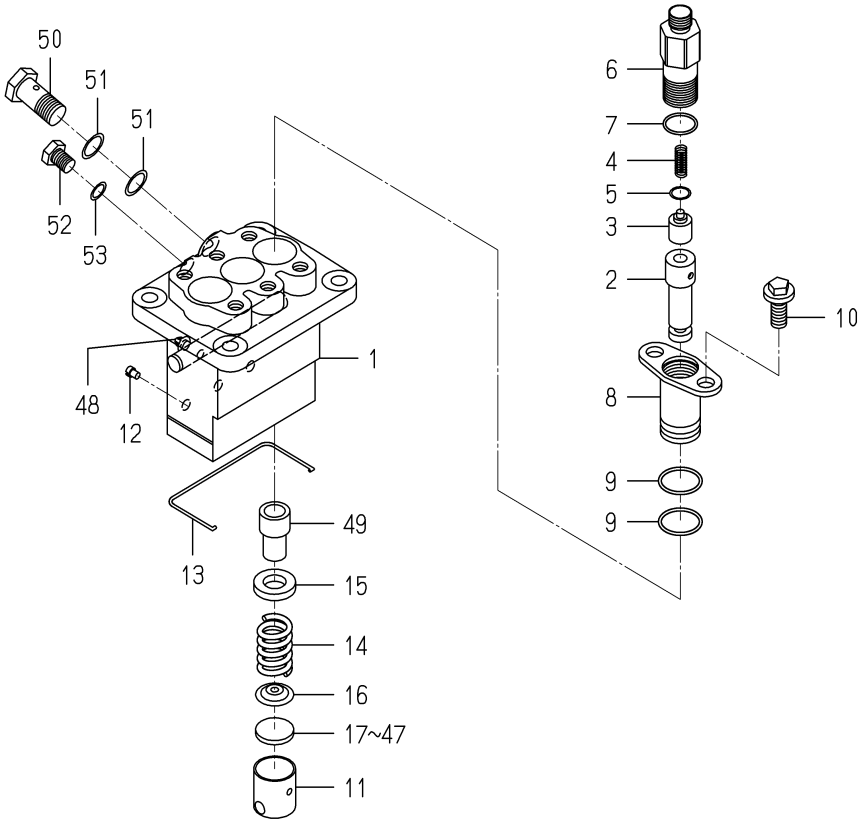

6215-600-078-1H

KEY	PART CODE	DESCRIPTION	SPC	TYPE OF MODEL E3CD VTB12		ITC	COL	GRP	REMARKS
1	6215-611-015-00	HOUSING/PUMP	*	1					
2	6215-631-008-00	PLUNGER ASSY	*	3					
3	6215-641-002-00	VALVE,DELIVERY	*	3					
4	6215-643-005-00	SPRING/DELIVERYVALVE	*	3					
5	6215-649-008-00	GASKET	*	3					
6	6215-644-009-00	HOLDER/DELIVERYVALVE	*	3					
7	6215-649-014-00	ORING	*	3					
8	6215-635-004-00	SLEEVEFLANGE	*	3					
9	6215-649-013-00	ORING	*	6					
10	6215-649-011-00	BOLT	*	6					
11	6215-622-003-00	TAPPET	*	3					
12	6215-629-017-00	PIN	*	3					
13	6215-629-035-00	SNAPRING	*	1					
14	6215-634-003-00	SPRING/PLUNGER	*	3					
15	6215-639-008-00	SPRINGSEAT	*	3					
16	6215-639-009-00	SPRINGSEAT	*	3					
17	6215-629-060-00	PLATE/T=2.60	*	1					
18	6215-629-061-00	PLATE/T=2.65	*	1					
19	6215-629-062-00	PLATE/T=2.70	*	1					
20	6215-629-063-00	PLATE/T=2.75	*	1					
21	6215-629-064-00	PLATE/T=2.80	*	1					
22	6215-629-065-00	PLATE/T=2.85	*	1					
23	6215-629-066-00	PLATE/T=2.90	*	1					
24	6215-629-067-00	PLATE/T=2.95	*	1					
25	6215-629-036-00	PLATE/T=3.00	*	1					
26	6215-629-037-00	PLATE/T=3.05	*	1					
27	6215-629-038-00	PLATE/T=3.10	*	1					
28	6215-629-039-00	PLATE/T=3.15	*	1					
29	6215-629-040-00	PLATE/T=3.20	*	1					
30	6215-629-041-00	PLATE/T=3.25	*	1					

FIG. 31 COMPONENT PARTS FOR 6215-600-078-10 ON Fig.23

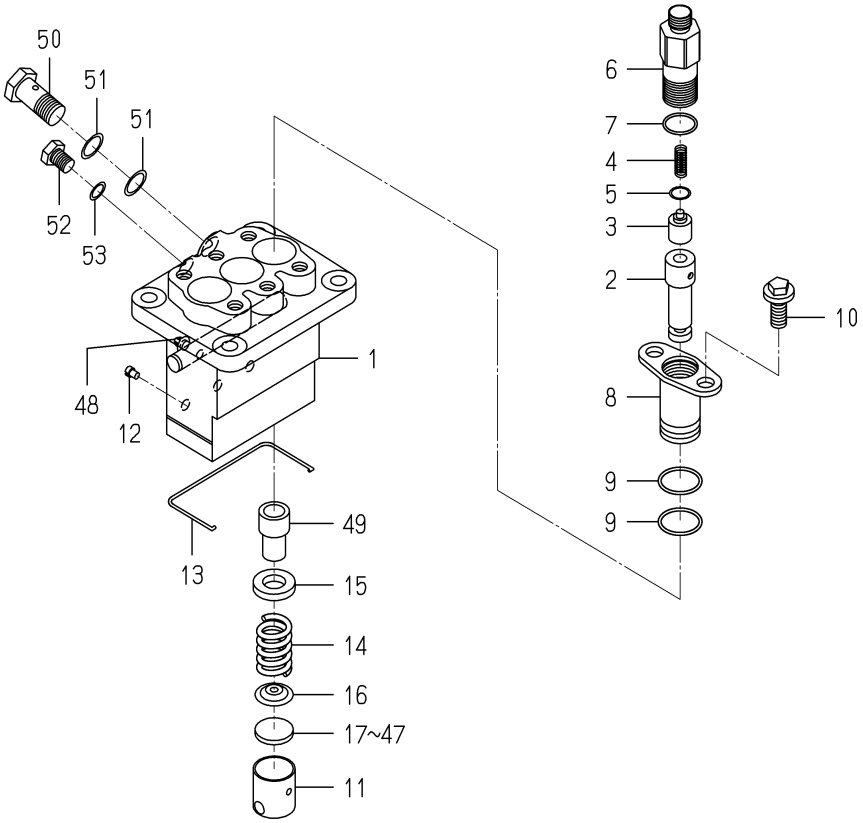

6215-600-078-1H

KEY	PART CODE	DESCRIPTION	SPC	TYPE OF MODEL E3CD VTB12		ITC	COL	GRP	REMARKS
31	6215-629-042-00	PLATE/T=3.30	*	1					
32	6215-629-043-00	PLATE/T=3.35	*	3 -147382					
32	6215-629-043-00	PLATE/T=3.35	*	1 147383-					
33	6215-629-044-00	PLATE/T=3.40	*	1					
34	6215-629-045-00	PLATE/T=3.45	*	1					
35	6215-629-046-00	PLATE/T=3.50	*	1					
36	6215-629-047-00	PLATE/T=3.55	*	1					
37	6215-629-048-00	PLATE/T=3.60	*	1					
38	6215-629-049-00	PLATE/T=3.65	*	1					
39	6215-629-050-00	PLATE/T=3.70	*	1					
40	6215-629-051-00	PLATE/T=3.75	*	1					
41	6215-629-052-00	PLATE/T=3.80	*	1					
42	6215-629-053-00	PLATE/T=3.85	*	1					
43	6215-629-054-00	PLATE/T=3.90	*	1					
44	6215-629-055-00	PLATE/T=3.95	*	1					
45	6215-629-056-00	PLATE/T=4.00	*	1					
46	6215-629-058-00	PLATE/T=4.05	*	1					
47	6215-629-059-00	PLATE/T=4.10	*	1					
48	6215-637-004-00	CONTROLRACK	*	1					
49	6215-635-005-00	CONTROLSLEEVE	*	3					
50	6215-619-023-00	EYEBOLT	*	1					
51	6115-639-008-00	GASKET	*	2					
52	6215-619-024-00	BOLT	*	1					
53	6215-359-006-00	GASKET	*	1					

FIG. 32 COMPONENT PARTS FOR 6281-100-007-20 ON Fig.27

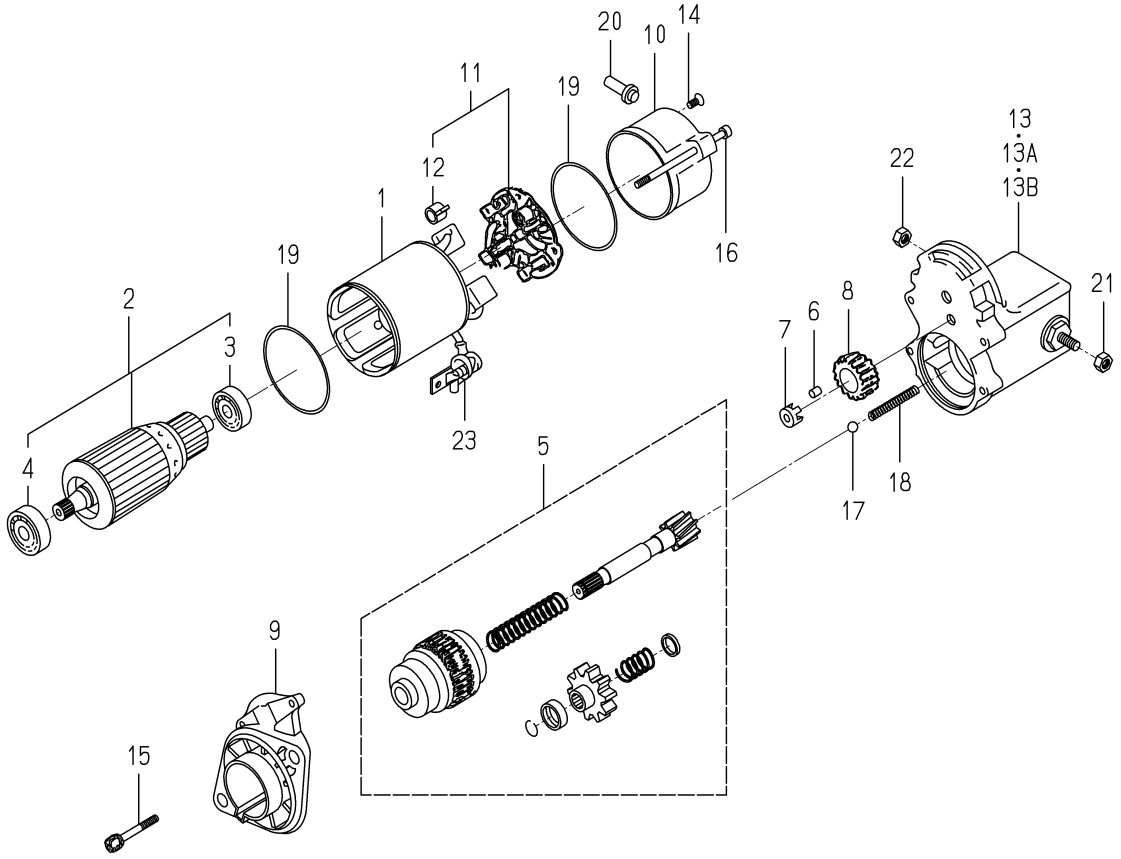

6281-100-007-2H

KEY	PART CODE	DESCRIPTION	SPC	TYPE OF MODEL E3CD VTB12		ITC	COL	GRP	REMARKS
1	6281-111-005-00	YOKE/STARTER ASSY	*	1					
2	6281-121-006-00	ARMATURE/STARTE ASSY	*	1					
3	6281-129-038-00	BEARING	*	1					
4	6281-129-039-00	BEARING	*	1					
5	6281-124-007-10	CLUTCH/STARTER ASSY	*	1					
6	6581-129-099-00	RORA	*	5					
7	6281-129-040-00	RETAINER	*	1					
8	6281-123-005-00	PINION/STARTER	*	1					
9	6281-129-045-10	HOUSING/STARTER ASSY	*	1					
10	6281-115-011-00	FRAME/STARTEREND	*	1					
11	6281-116-004-00	HOLDER/STARTER ASSY	*	1					
12	6581-117-007-00	SPRING,BRUSH	*	4					
13	6281-151-017-10	SWITCH/MAGNETIC ASSY	*	1 -152046					
13A	6281-151-020-00	SWITCH/MAGNETIC ASSY	*	1 -153398					
13B	6281-151-023-00	SWITCH/MAGNETIC ASSY	*	1 153399-					
14	6281-129-062-00	SCREW	*	2					
15	6281-129-042-00	BOLT/WS	*	2					
16	6281-129-043-00	BOLT/THROUGH	*	2					
17	6581-129-092-00	BALL	*	1					
18	6281-129-044-00	SPRING/RETURN	*	1					
19	6281-129-003-00	O-RING	*	2					
20	6281-115-016-00	BUSHING/DRAIN	*	1					
21	6909-111-508-00	NUT	*	1					
22	6281-229-041-00	NUT	*	1					
23	6281-115-010-00	COVER	*	1					

FIG. 33 COMPONENT PARTS FOR 6281-200-021-00 ON Fig.27

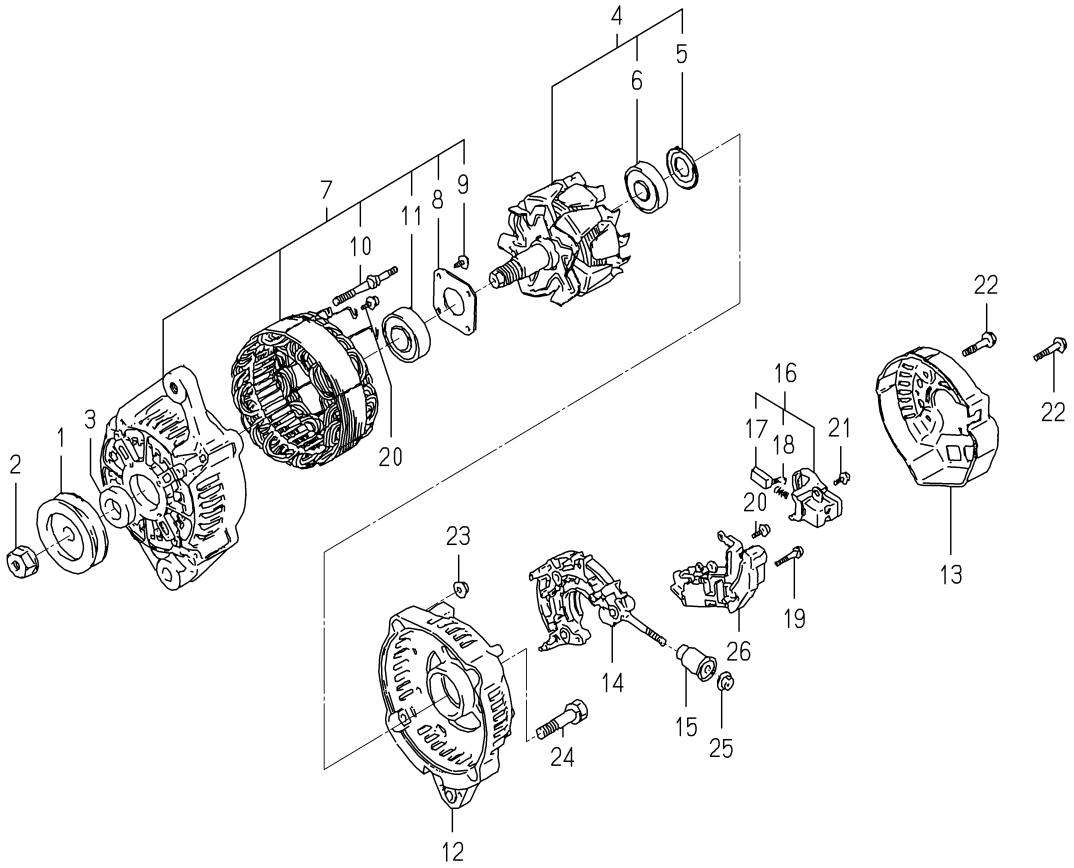

6281-200-021-0A

KEY	PART CODE	DESCRIPTION	SPC	TYPE OF MODEL E3CD VTB12		ITC	COL	GRP	REMARKS
1	6281-222-012-00	PULLEY	*	1					
2	6281-229-002-00	NUT	*	1					
3	6281-229-003-00	COLLOR	*	1					
4	6281-221-007-00	ROTOR ASSY	*	1					
5	6281-229-004-00	COVER,BEARING	*	1					
6	6281-229-032-00	BEARING/BALL	*	1					
7	6281-213-018-00	FRAME/DRIVEEND ASSY	*	1					
8	6281-229-006-00	PLATE	*	1					
9	6281-229-007-00	BOLT	*	4					
10	6281-229-008-00	BOLT	*	2					
11	6281-229-033-00	BEARING/BALL	*	1					
12	6281-214-003-00	FRAME	*	1					
13	6281-214-004-00	COVER	*	1					
14	6281-229-029-00	HOLDER ASSY	*	1					
15	6281-229-011-00	BUSH	*	1					
16	6281-217-002-00	HOLDER/BRUSH ASSY	*	1					
17	6281-215-001-00	BRUSH	*	2					
18	6281-216-001-00	SPRING	*	2					
19	6281-229-012-00	BOLT	*	2					
20	6281-229-013-00	BOLT	*	6					
21	6281-229-014-00	BOLT	*	1					
22	6281-229-015-00	BOLT	*	3					
23	6281-229-016-00	NUT	*	2					
24	6281-229-017-00	BOLT	*	2					
25	6281-229-018-00	NUT	*	1					
26	6281-271-002-00	REGULATOR ASSY	*	1					

E N G I N E

E3CDVTB10···TG5390E6

6005-097-620-30

FIG. 1 SHORT BLOCK ENGIASSY

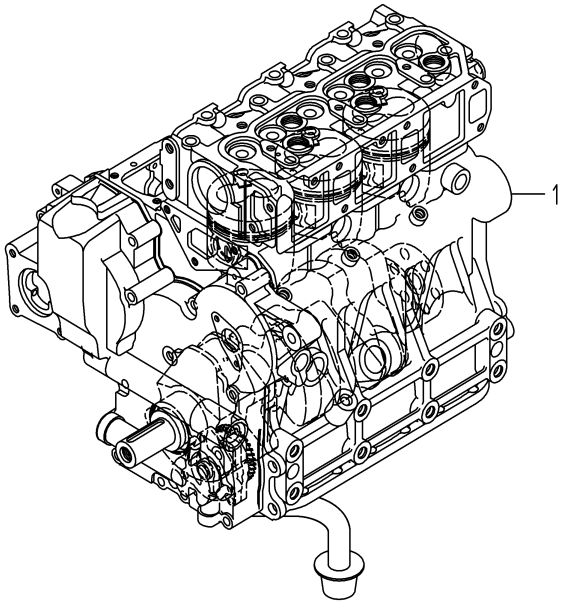

6005-015B-0100

KEY	PART CODE	DESCRIPTION	SPC	TYPE OF MODEL E3CD VTB10		ITC	COL	GRP	REMARKS
1	6005-010-140-00	SHORTBLOCKENGIN ASSY	T	1					

FIG. 2 CYLINDER HEAD

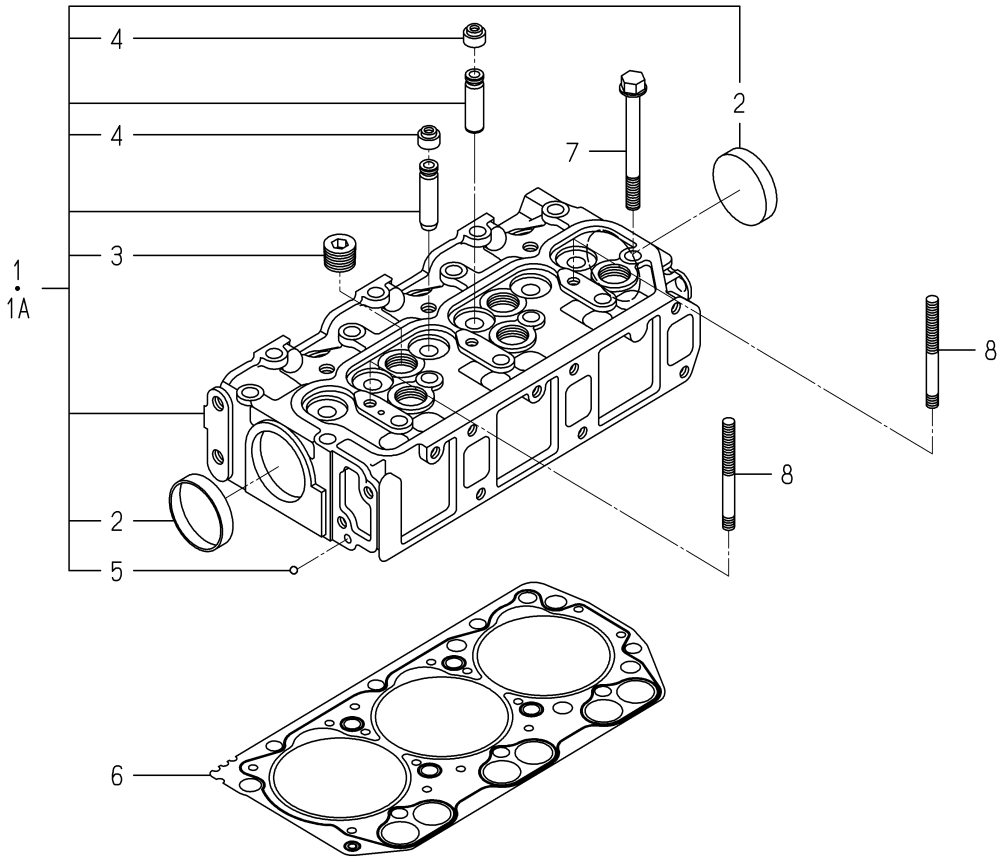

6005-101T-0100,6005-101T-0200

KEY	PART CODE	DESCRIPTION	SPC	TYPE OF MODEL E3CD VTB10		ITC	COL	GRP	REMARKS
1	6211-110-088-10	CYLINDERHEAD ASSY	*	1 -197018					
1A	6211-110-088-20	CYLINDERHEAD ASSY	*	1 197019-		1			
2	6209-610-003-00	CUP/SEALING/50	*	2					
3	6209-605-004-10	PLUG/PT1/2	*	5					
4	6212-569-002-00	SEAL,OIL	*	6					
5	V682-200-000-60	BALL	*	1					
6	6211-141-057-10	GASKET/CYLINDERHEAD	*	1					
7	6209-000-005-00	BOLT	*	14					
8	6209-300-014-00	STUD	*	2					

FIG. 3 CYLINDER HEAD COVER

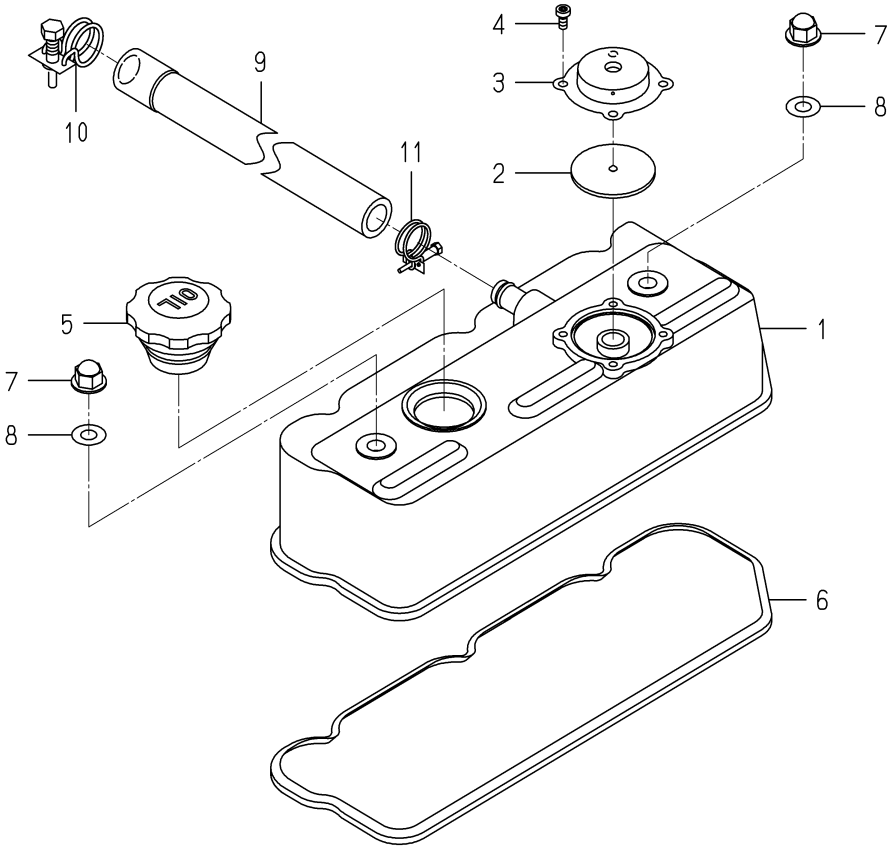

6005-110G-0100

KEY	PART CODE	DESCRIPTION	SPC	TYPE OF MODEL E3CD VTB10		ITC	COL	GRP	REMARKS
1	6211-170-007-30	COVER/CYLINDER HEAD	*	1					
2	6211-179-026-00	COVER/BLOWBY	*	1					
3	V195-164-008-30	SCREW/TAPPING	*	4					
4	6211-173-017-00	PACKING/PCV	*	1					
5	6211-751-001-10	CAP,OIL FILLER	*	1					
6	6211-173-005-00	SEAL/CYL HEAD/UNDER	*	1					
7	6209-490-002-10	NUT/CAP	*	2					
8	6209-572-003-00	GASKET	*	2					
9	6209-366-010-00	HOSE/BREATHER	*	1					
10	J061-216-020-00	CLAMP/WIRE/16-20	*	1					
11	J061-213-018-00	CLAMP/WIRE/13-18	*	1					

FIG. 4 INLET MANIFOLD

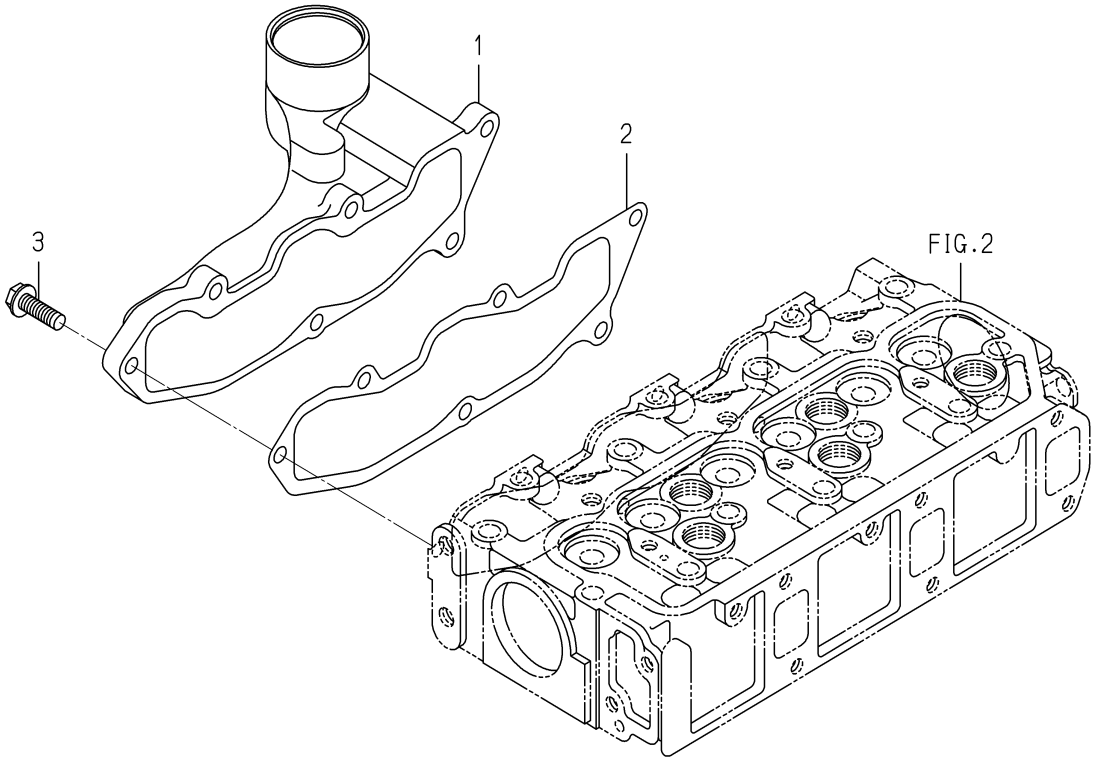

6005-120B-0100

KEY	PART CODE	DESCRIPTION	SPC	TYPE OF MODEL E3CD VTB10		ITC	COL	GRP	REMARKS
1	6214-111-023-00	MANIFOLD/INLET	*	1					
2	6214-115-003-10	GASKET/INLETMANIFOLD	*	1					
3	V231-360-802-50	FLANGEBOLT	*	6					

FIG. 5 EXHAUST MANIFOLD

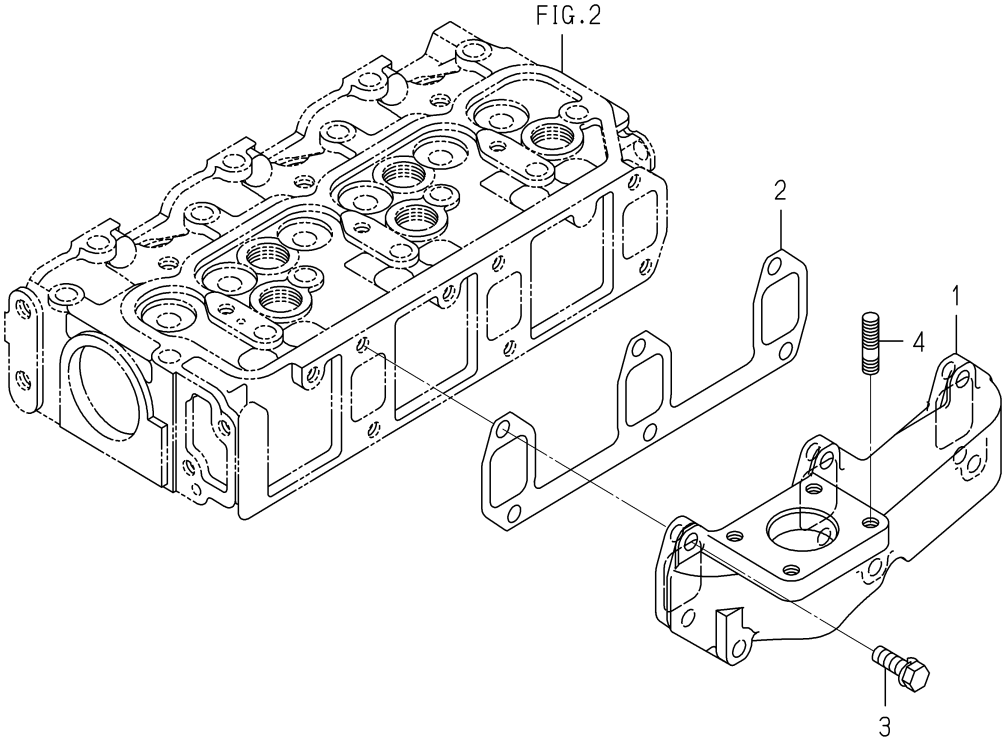

6005-140F-0100

KEY	PART CODE	DESCRIPTION	SPC	TYPE OF MODEL E3CD VTB10		ITC	COL	GRP	REMARKS
1	6214-141-048-00	MANIFOLD/EXHAUST	*	1					
2	6214-145-004-20	GASHET/EXH MANIFOLD	*	1					
3	V211-560-802-50	BOLT,SEMS/M8X25 7T	*	6					
4	6209-300-026-00	STUD	*	4					

FIG. 6 TURBOCHARGER

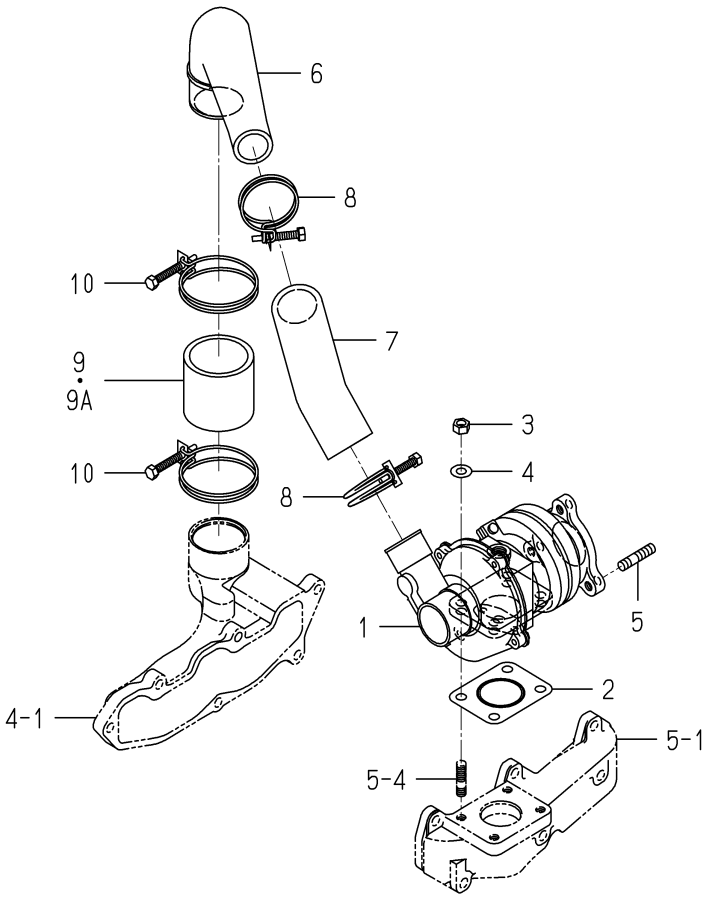

6005-160B-0100

KEY	PART CODE	DESCRIPTION	SPC	TYPE OF MODEL E3CD VTB10		ITC	COL	GRP	REMARKS
1	6214-400-009-10	TURBOCHARGER ASSY	*	1					
2	6214-145-009-00	GASKET	*	1					
3	V304-700-008-00	NUT	*	4					
4	V411-700-008-00	WASHER	*	4					
5	V251-340-802-50	BOLT/STUD	*	3					
6	6214-435-026-00	PIPE/INLET	*	1					
7	6209-360-112-00	HOSE/RUBBER	*	1					
8	J061-238-046-00	CLAMP/WIRE/38-46	*	2					
9	6209-360-114-00	HOSE/RUBBER	*	1 -184275					
9A	6209-360-108-00	HOSE/RUBBER	*	1 184276-					
10	J061-252-063-00	CLAMP/WIRE/52-63	*	2					

FIG. 7 CYLINDER BLOCK(1/2)

30-PLEASE SEE 2/2 PAGE

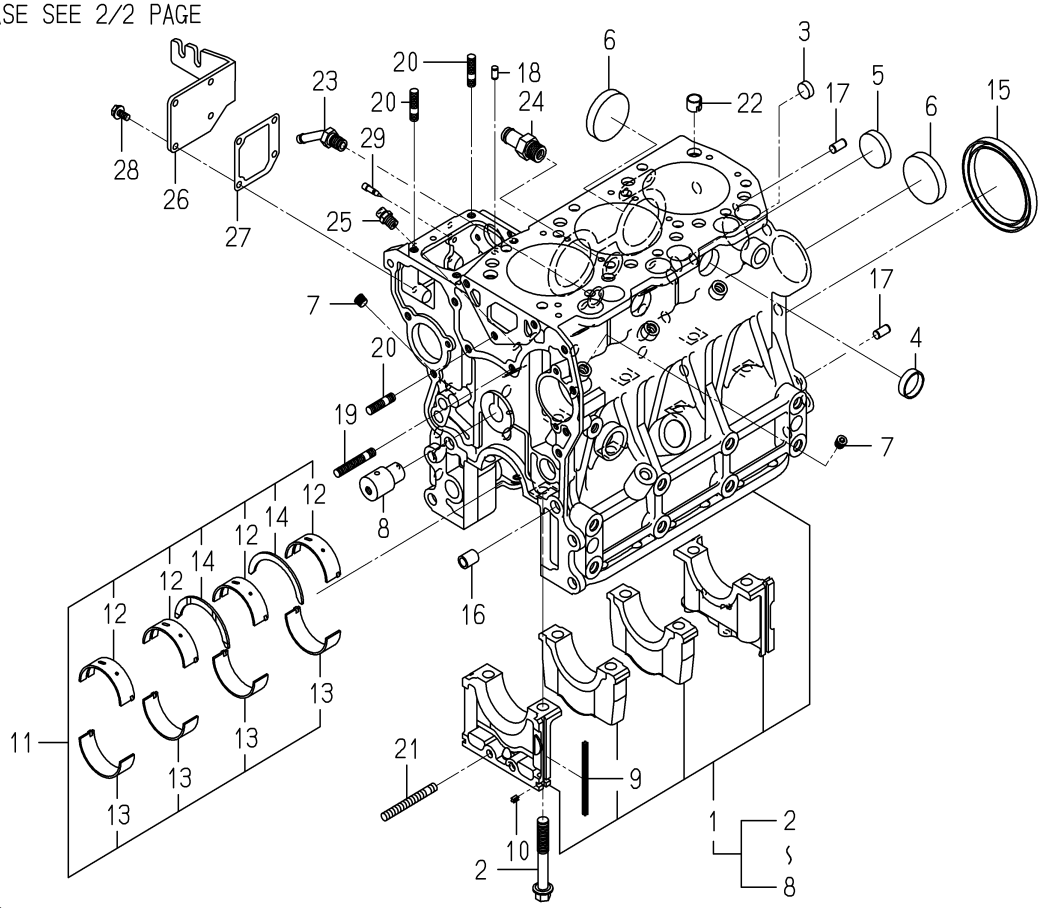

6005-202S-0100

KEY	PART CODE	DESCRIPTION	SPC	TYPE OF MODEL E3CD VTB10		ITC	COL	GRP	REMARKS
1	6211-210-084-00	CYLINDERBLOCK ASSY	*	1 -155706					
2	6209-000-006-00	BOLT	*	8 -155706					
3	6209-610-007-00	CUP/SEALING/16	*	2 -155706					
4	6209-610-001-10	CUP/SEALING/28	*	2 -155706					
5	6209-610-009-00	CUP/SEALING/36	*	1 -155706					
6	6209-610-003-00	CUP/SEALING/50	*	3 -155706					
7	6509-605-019-10	PLUG	*	8 -155706					
8	6212-531-008-20	PIN/IDLEGEAR	*	1 -155706					
9	6211-258-001-00	SEAL,BEARING CAP	*	4 -155706					
10	6211-258-002-00	SEAL,BEARING CAP/7	*	2 -155706					
11	6211-510-008-00	BEARING/CRANK SET	*	1 -155706					
12	6211-511-007-00	BEARING/CRANK/UPPER	*	4 -155706					
13	6211-511-008-00	BEARING/CRANK/LOWER	*	4 -155706					
14	6211-599-004-00	BEARING/THRUST/CRANK	*	2 -155706					
15	6209-625-003-20	OILSEAL	*	1 -155706					
16	6209-749-001-20	PIN/TUBE	*	2 -155706					
17	6213-129-006-00	PIN/STRAIGHT	*	2 -155706					
18	6209-740-005-00	PIN	*	2 -155706					
19	6904-110-840-00	STUD/M8X40	*	1 -155706					
20	6904-110-822-00	STUD	*	3 -155706					
21	V251-340-806-00	BOLT/STUD	*	1 -155706					
22	6294-453-002-00	DOWEL	*	2 -155706					
23	6213-721-007-00	PIPE/WATERDRAIN	*	1 -155706					
24	6213-721-005-00	PIPE/WATER/HOUSING	*	1 -155706					
25	6909-902-299-00	NIPPLE	*	1 -155706					
26	6211-291-015-20	COVER/INJECTIONPUMP	*	1 -155706					
27	6211-292-001-20	GASKET/COVER	*	1 -155706					
28	V230-360-601-20	FLANGEBOLT	*	4 -155706					
29	6215-549-013-00	PIN	*	1 -155706					
30	6211-760-046-00	LEVELGAGE	*	1 -155706					

FIG. 7 CYLINDER BLOCK(2/2)

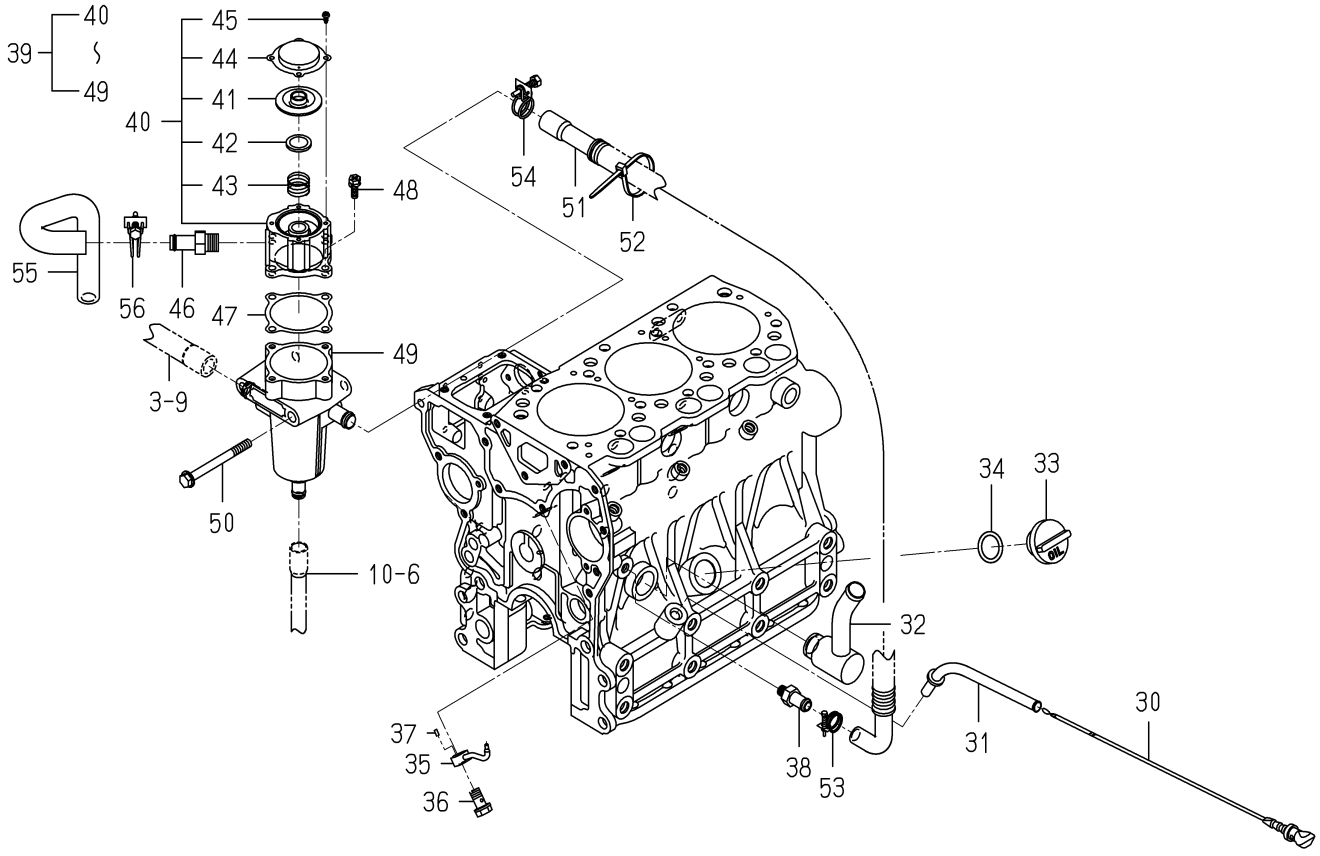

6005-202S-0100

KEY	PART CODE	DESCRIPTION	SPC	TYPE OF MODEL E3CD VTB10		ITC	COL	GRP	REMARKS
31	6211-766-033-00	GUIDE/LEVELGAGE COMP	*	1 -155706					
32	6213-311-061-00	PIPE/OIL COMP	*	1 -155706					
33	6211-751-002-00	CAP/OILFILLER	*	1 -155706					
34	V720-103-502-50	O-RING/P25	*	1 -155706					
35	6213-342-008-00	PIPE/OILJET	*	3 -155706					
36	6213-342-007-00	EYEBOLT/OILJET ASSY	*	3 -155706					
37	6209-740-008-00	PIN/SPRING	*	3 -155706					
38	6211-742-014-00	ADAPTER/R1/8	*	1 -155706					
39	6211-740-008-00	BREATHER ASSY	*	1 -155706					
40	6211-740-009-00	COVER/BREATHER ASSY	*	1 -155706					
41	6211-179-013-10	RUBBERFLANGE	*	1 -155706					
42	6211-179-018-00	SEAT/SPRING	*	1 -155706					
43	6211-740-007-00	SPRING	*	1 -155706					
44	6211-179-019-00	COVER/BLOWBY	*	1 -155706					
45	V195-164-008-30	SCREW/TAPPING	*	4 -155706					
46	6213-721-005-00	PIPE/WATER/HOUSING	*	1 -155706					
47	6211-744-001-00	GASKET	*	1 -155706					
48	6213-119-001-00	BOLT/WS	*	4 -155706					
49	6211-740-010-00	BREATHER COMP	*	1 -155706					
50	V231-360-808-50	FLANGEBOLT	*	2 -155706					
51	6209-366-011-00	HOSE/BREATHER	*	1 -155706					
52	3737-172-010-00	BAND/202	*	1 -155706					
53	J061-213-018-00	CLAMP/WIRE/13-18	*	1 -155706					
54	J061-216-020-00	CLAMP/WIRE/16-20	*	1 -155706					
55	6209-360-116-10	HOSE/RUBBER	*	1 -155706					
56	J061-220-024-00	CLAMP/WIRE/20-24	*	1 -155706					

FIG. 8 CYLINDER BLOCK(1/2)

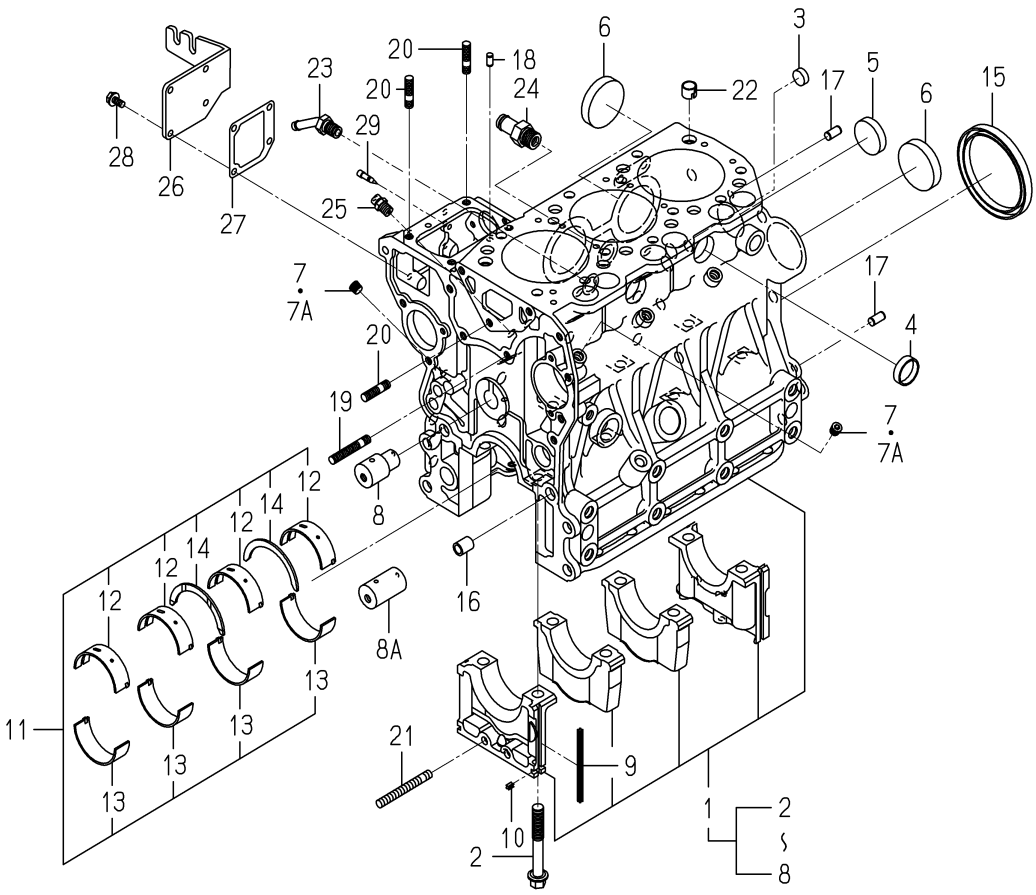

6005-203L-0100

KEY	PART CODE	DESCRIPTION	SPC	TYPE OF MODEL E3CD VTB10		ITC	COL	GRP	REMARKS
1	6211-210-084-00	CYLINDERBLOCK ASSY	*	1 155707-					
2	6209-000-006-00	BOLT	*	8 155707-					
3	6209-610-007-00	CUP/SEALING/16	*	2 155707-					
4	6209-610-001-10	CUP/SEALING/28	*	2 155707-					
5	6209-610-009-00	CUP/SEALING/36	*	1 155707-					
6	6209-610-003-00	CUP/SEALING/50	*	3 155707-					
7	6509-605-019-10	PLUG	*	8 -199533					
7A	6209-605-007-00	PLUG/PT1/8	*	8 199534-					
8	6212-531-008-20	PIN/IDLEGEAR	*	1 -168830					
8A	6212-531-008-30	PIN/IDLEGEAR	*	1 168831-		3			
9	6211-258-001-00	SEAL,BEARING CAP	*	4 155707-					
10	6211-258-002-00	SEAL,BEARING CAP/7	*	2 155707-					
11	6211-510-008-00	BEARING/CRANK SET	*	1 155707-					
12	6211-511-007-00	BEARING/CRANK/UPPER	*	4 155707-					
13	6211-511-008-00	BEARING/CRANK/LOWER	*	4 155707-					
14	6211-599-004-00	BEARING/THRUST/CRANK	*	2 155707-					
15	6209-625-003-20	OILSEAL	*	1 155707-					
16	6209-749-001-20	PIN/TUBE	*	2 155707-					
17	6213-129-006-00	PIN/STRAIGHT	*	2 155707-					
18	6209-740-005-00	PIN	*	2 155707-					
19	6904-110-840-00	STUD/M8X40	*	1 155707-					
20	6904-110-822-00	STUD	*	3 155707-					
21	V251-340-806-00	BOLT/STUD	*	1 155707-					
22	6294-453-002-00	DOWEL	*	2 155707-					
23	6213-721-007-00	PIPE/WATERDRAIN	*	1 155707-					
24	6213-721-005-00	PIPE/WATER/HOUSING	*	1 155707-					
25	6909-902-299-00	NIPPLE	*	1 155707-					
26	6211-291-015-20	COVER/INJECTIONPUMP	*	1 155707-					
27	6211-292-001-20	GASKET/COVER	*	1 155707-					
28	V230-360-601-20	FLANGEBOLT	*	4 155707-					

FIG. 8 CYLINDER BLOCK(2/2)

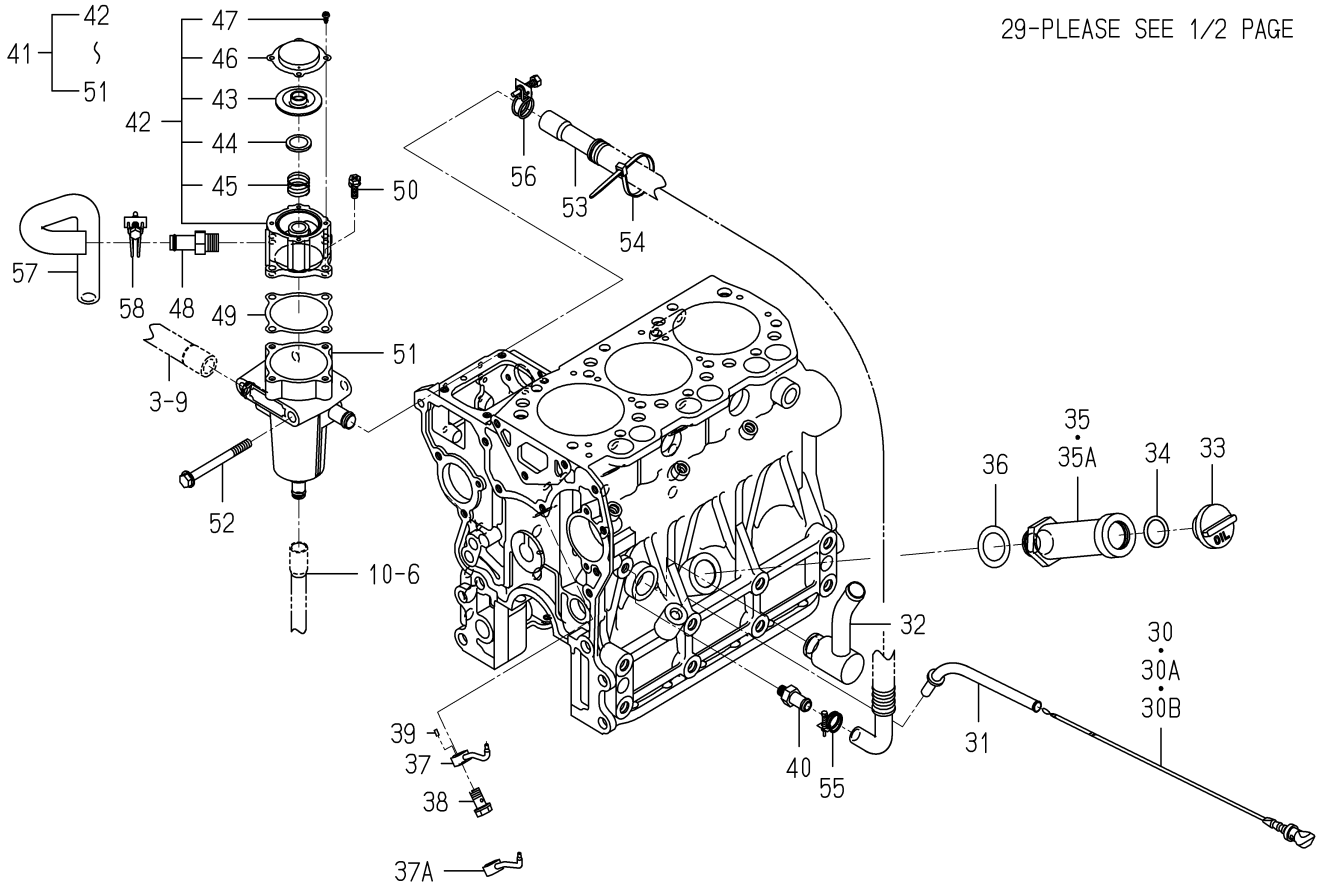

6005-203L-0100

KEY	PART CODE	DESCRIPTION	SPC	TYPE OF MODEL E3CD VTB10		ITC	COL	GRP	REMARKS
29	6215-549-013-00	PIN	*	1 155707-					
30	6211-760-046-00	LEVELGAGE	*	1 -171504					
30A	6211-760-046-10	LEVELGAGE	*	1 -202445		1			
30B	6211-760-041-20	LEVELGAGE	*	1 202446-					
31	6211-766-033-00	GUIDE/LEVELGAGE COMP	*	1 155707-					
32	6213-311-061-00	PIPE/OIL COMP	*	1 155707-					
33	6211-751-002-00	CAP/OILFILLER	*	1 155707-					
34	V720-103-502-50	O-RING/P25	*	1 155707-					
35	6211-749-016-10	OILFILLER COMP	*	1 -157446					
35A	6211-749-016-20	OILFILLER COMP	*	1 157447-		3			
36	6211-759-001-00	GASKET/OILFILLER	*	1 155707-					
37	6213-342-008-00	PIPE/OILJET	*	3 -194379					
37A	6213-342-008-10	PIPE/OILJET	*	3 194380-		1			
38	6213-342-007-00	EYEBOLT/OILJET ASSY	*	3 155707-					
39	6209-740-008-00	PIN/SPRING	*	3 155707-					
40	6211-742-014-00	ADAPTER/R1/8	*	1 155707-					
41	6211-740-008-00	BREATHER ASSY	*	1 155707-					
42	6211-740-009-00	COVER/BREATHER ASSY	*	1 155707-					
43	6211-179-013-10	RUBBERFLANGE	*	1 155707-					
44	6211-179-018-00	SEAT/SPRING	*	1 155707-					
45	6211-740-007-00	SPRING	*	1 155707-					
46	6211-179-019-00	COVER/BLOWBY	*	1 155707-					
47	V195-164-008-30	SCREW/TAPPING	*	4 155707-					
48	6213-721-005-00	PIPE/WATER/HOUSING	*	1 155707-					
49	6211-744-001-00	GASKET	*	1 155707-					
50	6213-119-001-00	BOLT/WS	*	4 155707-					
51	6211-740-010-00	BREATHER COMP	*	1 155707-					
52	V231-360-808-50	FLANGEBOLT	*	2 155707-					
53	6209-366-011-00	HOSE/BREATHER	*	1 155707-					
54	3737-172-010-00	BAND/202	*	1 155707-					

FIG. 8 CYLINDER BLOCK(2/2)

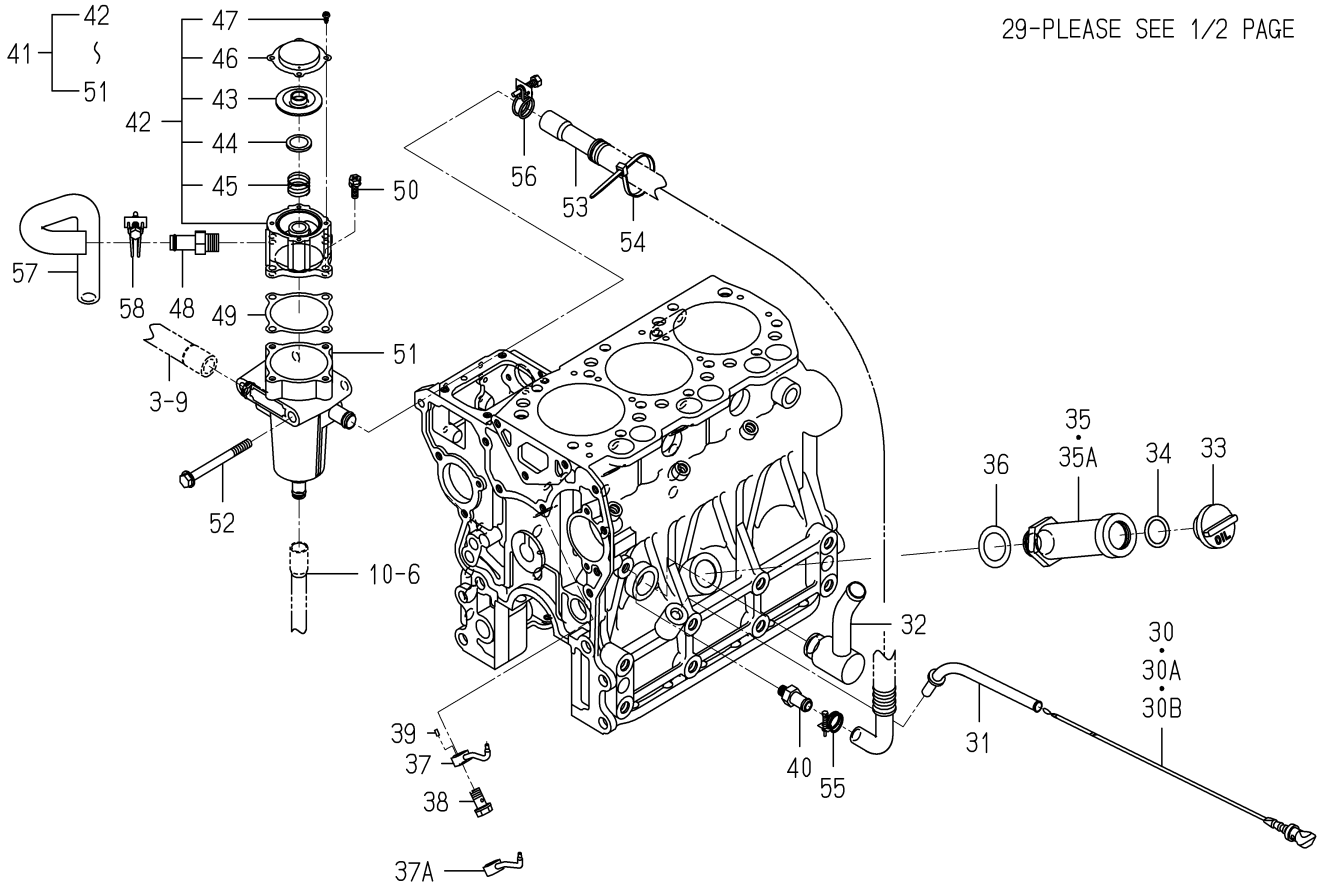

6005-203L-0100

KEY	PART CODE	DESCRIPTION	SPC	TYPE OF MODEL E3CD VTB10		ITC	COL	GRP	REMARKS
55	J061-213-018-00	CLAMP/WIRE/13-18	*	1 155707-					
56	J061-216-020-00	CLAMP/WIRE/16-20	*	1 155707-					
57	6209-360-116-10	HOSE/RUBBER	*	1 155707-					
58	J061-220-024-00	CLAMP/WIRE/20-24	*	1 155707-					

FIG. 9 BEARING/UNDER SIZE (OPTION)

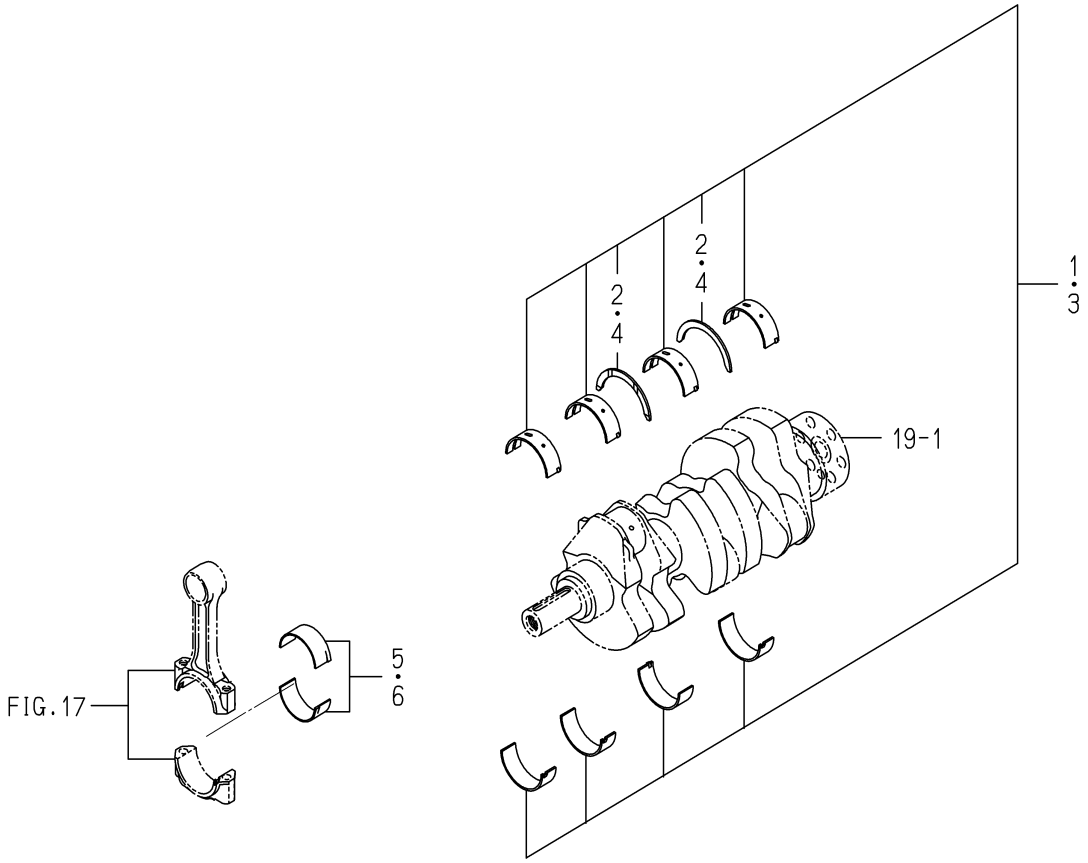

6005-209 -0100

KEY	PART CODE	DESCRIPTION	SPC	TYPE OF MODEL E3CD VTB10		ITC	COL	GRP	REMARKS
1	6211-530-008-00	BEARING/CRANK/UNDER	T	1					
2	6211-599-004-00	BEARING/THRUST/CRANK	T	2					
3	6211-540-008-00	BEARING/CRANK/UNDER	T	1					
4	6211-599-004-00	BEARING/THRUST/CRANK	T	2					
5	6212-273-009-00	BEARING/CONNECTING R	T	3					
6	6212-274-009-00	BEARING/CONNECTING R	T	3					

FIG. 10 OIL PAN

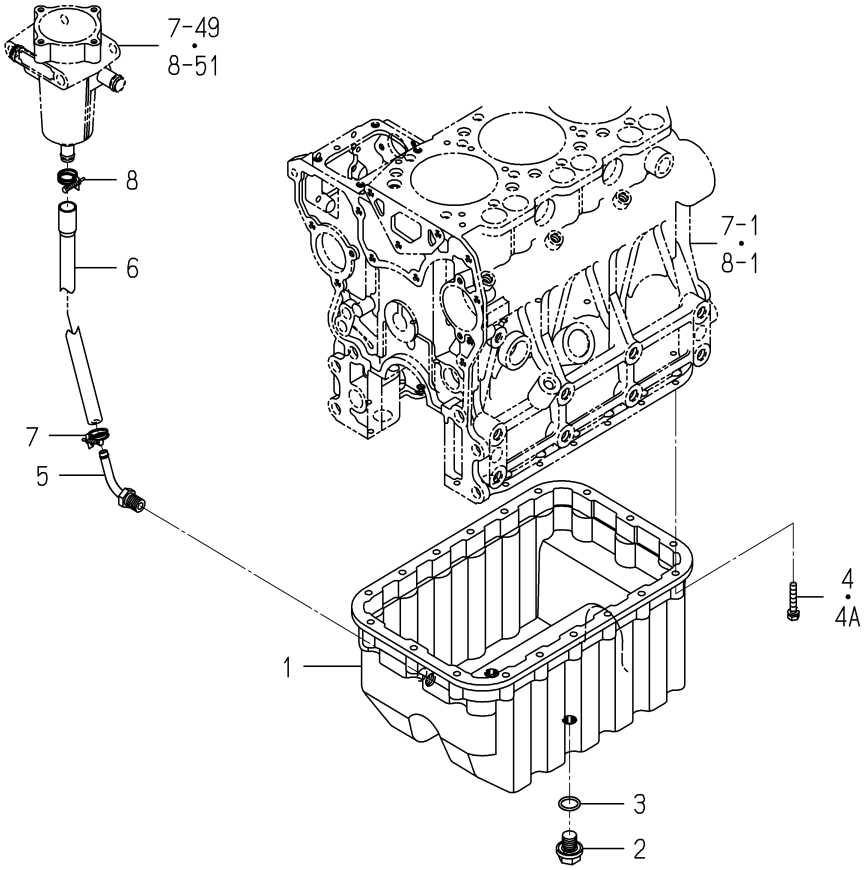

6005-210H-0100

KEY	PART CODE	DESCRIPTION	SPC	TYPE OF MODEL E3CD VTB10		ITC	COL	GRP	REMARKS
1	6211-361-074-00	OILPAN	*	1					
2	3805-355-002-20	PLUG/M14X1.5	*	2					
3	V720-102-401-80	O-RING/P18	*	2					
4	6901-910-635-00	BOLT	*	18 -173467					
4A	V210-560-603-50	BOLT/S	*	18 173468-					
5	6213-721-001-00	PIPE,WATER DRAIN	*	1					
6	6209-360-113-00	HOSE/RUBBER	*	1					
7	J061-210-015-00	CLAMP/WIRE/10-15	*	1					
8	J061-213-018-00	CLAMP/WIRE/13-18	*	1					

FIG. 11 REAR PLATE

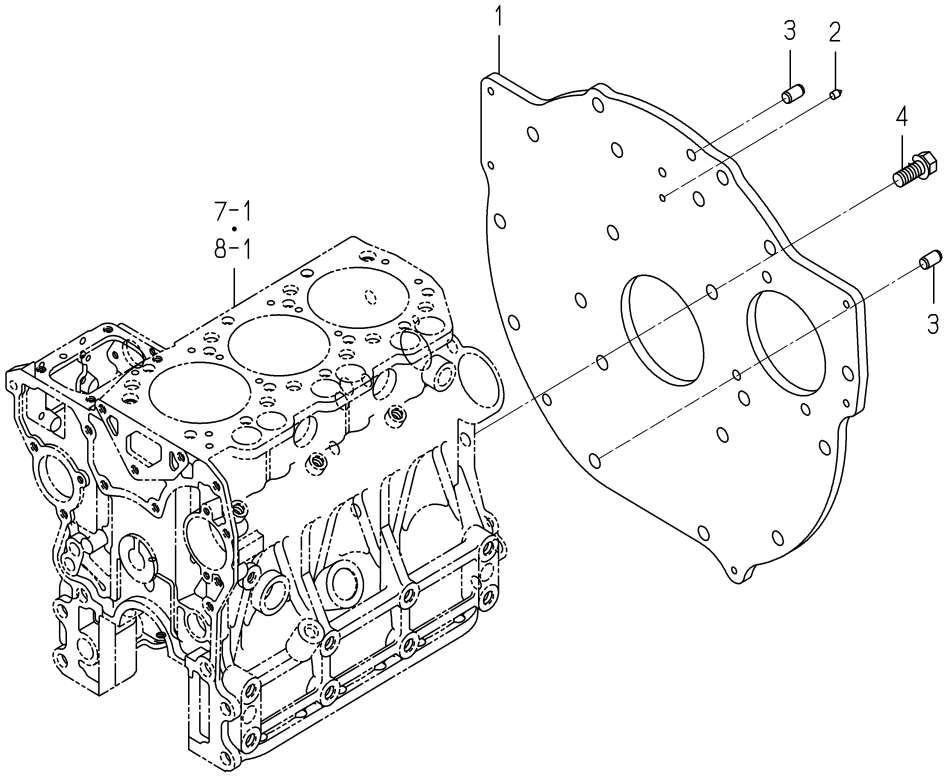

6005-220N-0100

KEY	PART CODE	DESCRIPTION	SPC	TYPE OF MODEL E3CD VTB10		ITC	COL	GRP	REMARKS
1	6211-341-073-00	PLATE/REAR	*	1					
2	6211-342-003-10	POINTER	*	1					
3	V523-101-001-80	PIN	*	2					
4	6209-030-091-00	BOLT/WS	*	8					

FIG. 12 TIMING GEAR CASE

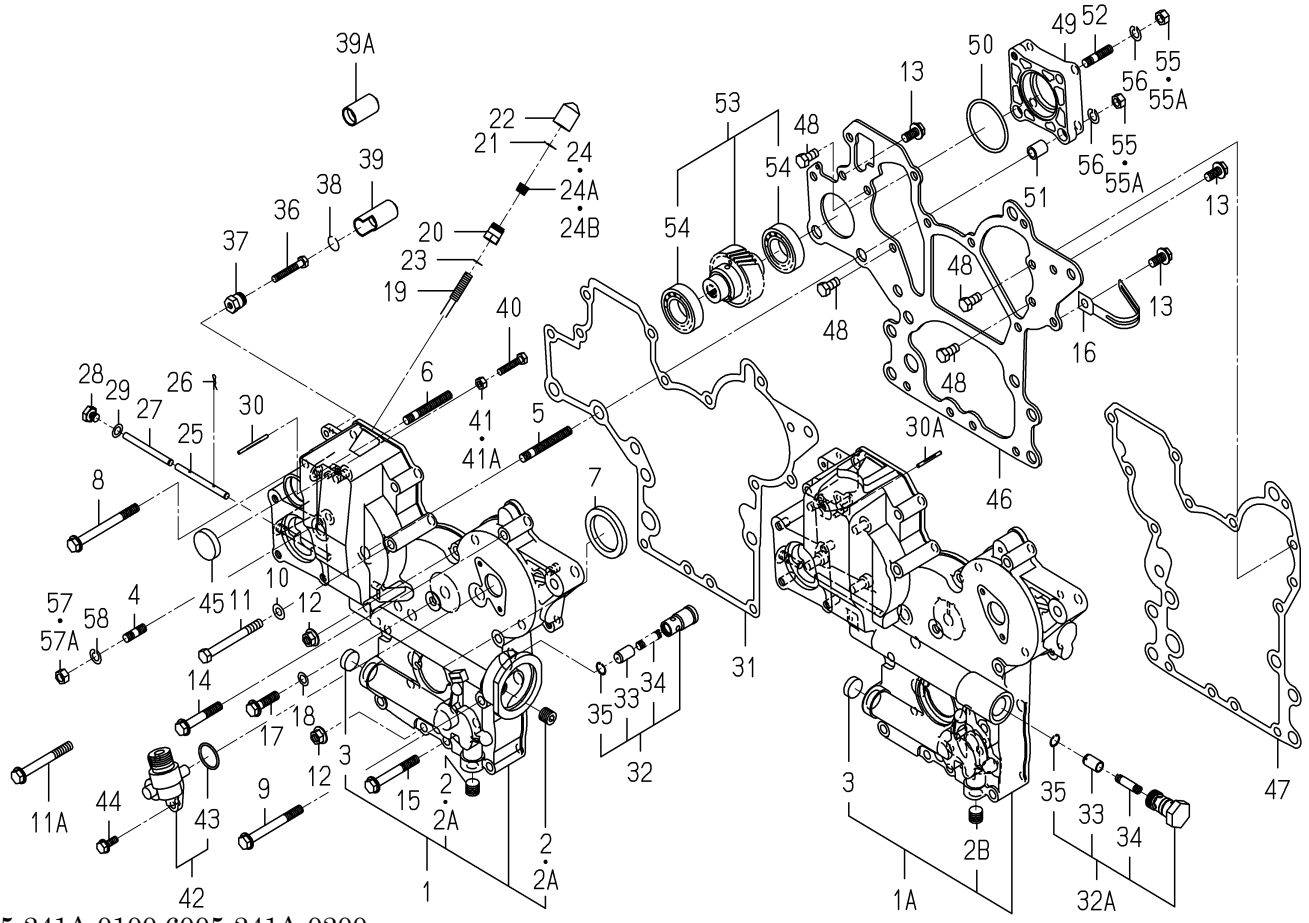

6005-241A-0100,6005-241A-0200

KEY	PART CODE	DESCRIPTION	SPC	TYPE OF MODEL E3CD VTB10		ITC	COL	GRP	REMARKS
1	6211-310-009-60	GEARCASE ASSY	*	1 -180883					
1A	6211-310-009-70	GEARCASE ASSY	*	1 -186237		3			
2	6209-605-003-00	PLUG/PT1/4	*	2 -160372					
2A	6209-605-003-10	PLUG/PT1/4	*	2 -180963		1			
2B	6209-605-003-10	PLUG/PT1/4	*	1 -186237					
3	6209-610-004-00	CUP/SEALING/20	*	1 -186237					
4	6904-110-822-00	STUD	*	4 -186237					
5	6904-110-855-00	STUD	*	2 -186237					
6	6904-110-850-00	STUD	*	1 -186237					
7	6209-625-002-00	SEAL,OIL	*	1 -186237					
8	V231-360-808-50	FLANGEBOLT	*	1 -186237					
9	V231-360-807-50	FLANGEBOLT	*	1 -186237					
10	6209-500-006-00	WASHER/08X16X1.2	*	1 -180963					
11	V201-360-807-50	BOLT	*	1 -180963					
11A	V231-360-807-00	FLANGEBOLT	*	1 -186237					
12	3817-401-001-00	NUT/M08	*	2 -186237					
13	V231-360-801-60	FLANGEBOLT	*	3 -186237					
14	V231-360-805-00	FLANGEBOLT	*	3 -186237					
15	V231-360-806-00	FLANGEBOLT	*	4 -186237					
16	1650-650-015-00	CLAMP	*	1 -186237					
17	V231-360-803-00	FLANGEBOLT	*	1 -186237					
18	6209-500-003-00	WASHER/08X14X01	*	1 -186237					
19	6215-546-006-00	STOPPER/MAX POWER ST	*	1 -186237					
20	6215-549-057-00	NUT/MAXPOWERSTOPPER	*	1 -186237					
21	6209-587-006-10	RING/TAMPER REGISTAN	*	1 -186237					
22	6215-549-058-10	CAP/MAXPOWERSTOPPER	*	1 -186237					
23	6209-920-002-00	PACKING	*	1 -186237					
24	6509-605-019-10	PLUG	*	1 -183779					
24A	6209-605-007-00	PLUG/PT1/8	*	1 -183847					
24B	V780-140-000-2B	PLUG/SCREW/SEAL	*	1 -186237					

FIG. 12 TIMING GEAR CASE

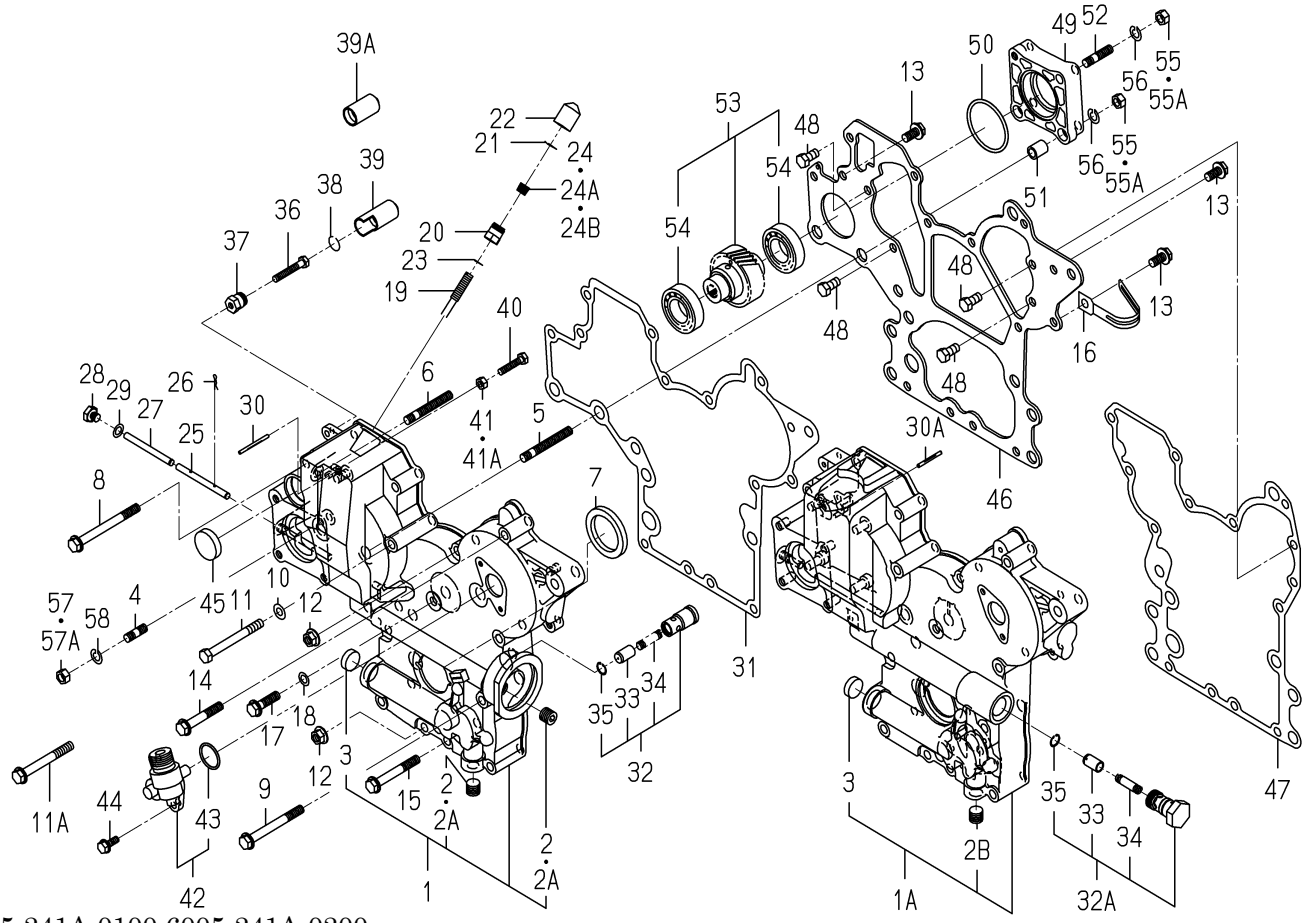

6005-241A-0100,6005-241A-0200

KEY	PART CODE	DESCRIPTION	SPC	TYPE OF MODEL E3CD VTB10		ITC	COL	GRP	REMARKS
25	6215-542-004-20	PIN/ARM	*	1 -186237					
26	P117-303-003-00	PIN/SNAP	*	2 -186237					
27	6215-542-005-10	PIN	*	1 -186237					
28	6209-600-004-00	PLUG/SCREW	*	1 -186237					
29	6209-500-003-00	WASHER/08X14X01	*	1 -186237					
30	6209-740-001-00	PIN,GROOVE	*	1 -181036					
30A	6209-740-006-00	PIN/GROOVE	*	1 -186237					
31	6211-312-005-10	GASKET/GEARCASE	*	1 -186237					
32	6213-160-003-10	VALVE/RELIEF ASSY	*	1 -180963					
32A	6213-160-005-00	VALVE/RELIEF ASSY	*	1 -186237					
33	6213-161-003-10	PISTON/VALVE/RELIEF	*	1 -186237					
34	6213-164-001-00	SPRING/RELIEF VALVE	*	1 -186237					
35	V705-140-012-00	RING,SNAP/12 C	*	1 -186237					
36	6209-050-003-00	BOLT/HI-IDLESTOPPER	*	1 -186237					
37	6215-549-059-00	NUT/HI-IDLESTOPPER	*	1 -186237					
38	6209-587-006-10	RING/TAMPER REGISTAN	*	1 -186237					
39	6215-549-067-00	CAP/HI-IDLESTOPPER	*	1 -180963					
39A	6215-549-060-10	CAP/MAXPOWERSTOPPER	*	1 -186237					
40	6209-050-002-00	BOLT/M6	*	1 -186237					
41	6909-110-406-00	NUT	*	1 -178986					
41A	V301-260-006-00	NUT/M6	*	1 -186237					
42	6219-310-003-20	DRIVE/TACHOMETE ASSY	*	1 -186237					
43	V723-102-002-40	RING/O	*	1 -186237					
44	V230-360-601-60	FLANGEBOLT	*	2 -186237					
45	3625-540-004-00	CAP,BLANK/30	*	1 -180963					
46	6211-311-013-20	PLATE/FRONT	*	1 -186237					
47	6211-312-006-10	GASKET/PLATE	*	1 -186237					
48	6902-050-816-00	BOLT	*	4 -186237					
49	6211-319-003-00	SPACER	*	1 -186237					
50	V723-102-005-00	O-RING 1A S50	*	1 -186237					

FIG. 12 TIMING GEAR CASE

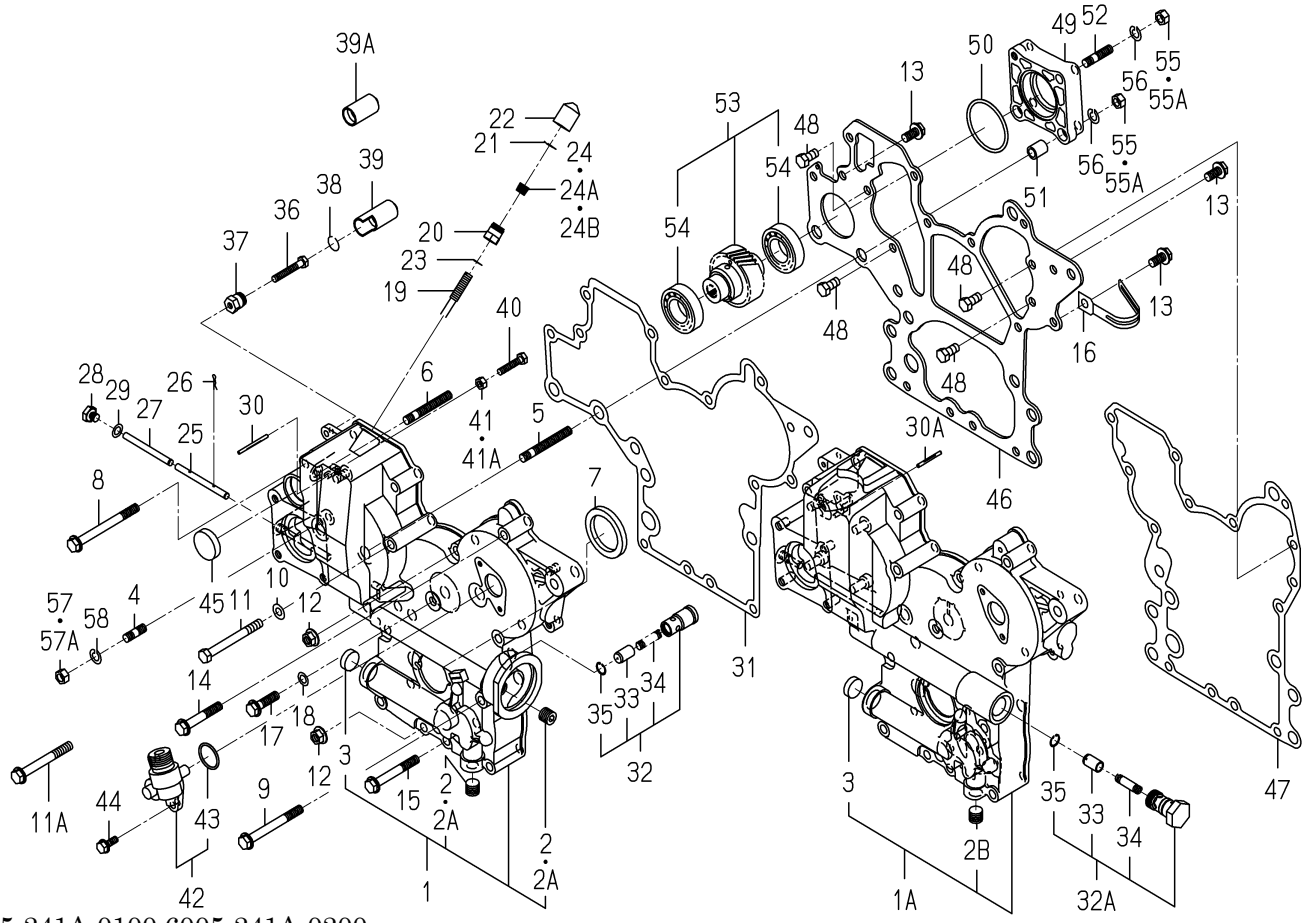

6005-241A-0100,6005-241A-0200

KEY	PART CODE	DESCRIPTION	SPC	TYPE OF MODEL E3CD VTB10		ITC	COL	GRP	REMARKS
51	6209-749-001-20	PIN/TUBE	*	2 -186237					
52	6904-110-822-00	STUD	*	1 -186237					
53	6212-530-017-00	SHAFT/HYDRAULIC ASSY	*	1 -186237					
54	6209-800-011-00	BEARING	*	2 -186237					
55	6909-110-408-00	NUT/M8	*	4 -178986					
55A	V304-260-008-00	NUT	*	4 -186237					
56	V401-160-008-00	WASHER,SP/M 8	*	4 -186237					
57	6909-110-408-00	NUT/M8	*	4 -178986					
57A	V304-260-008-00	NUT	*	4 -186237					
58	V401-160-008-00	WASHER,SP/M 8	*	4 -186237					

FIG. 13 TIMING GEAR CASE

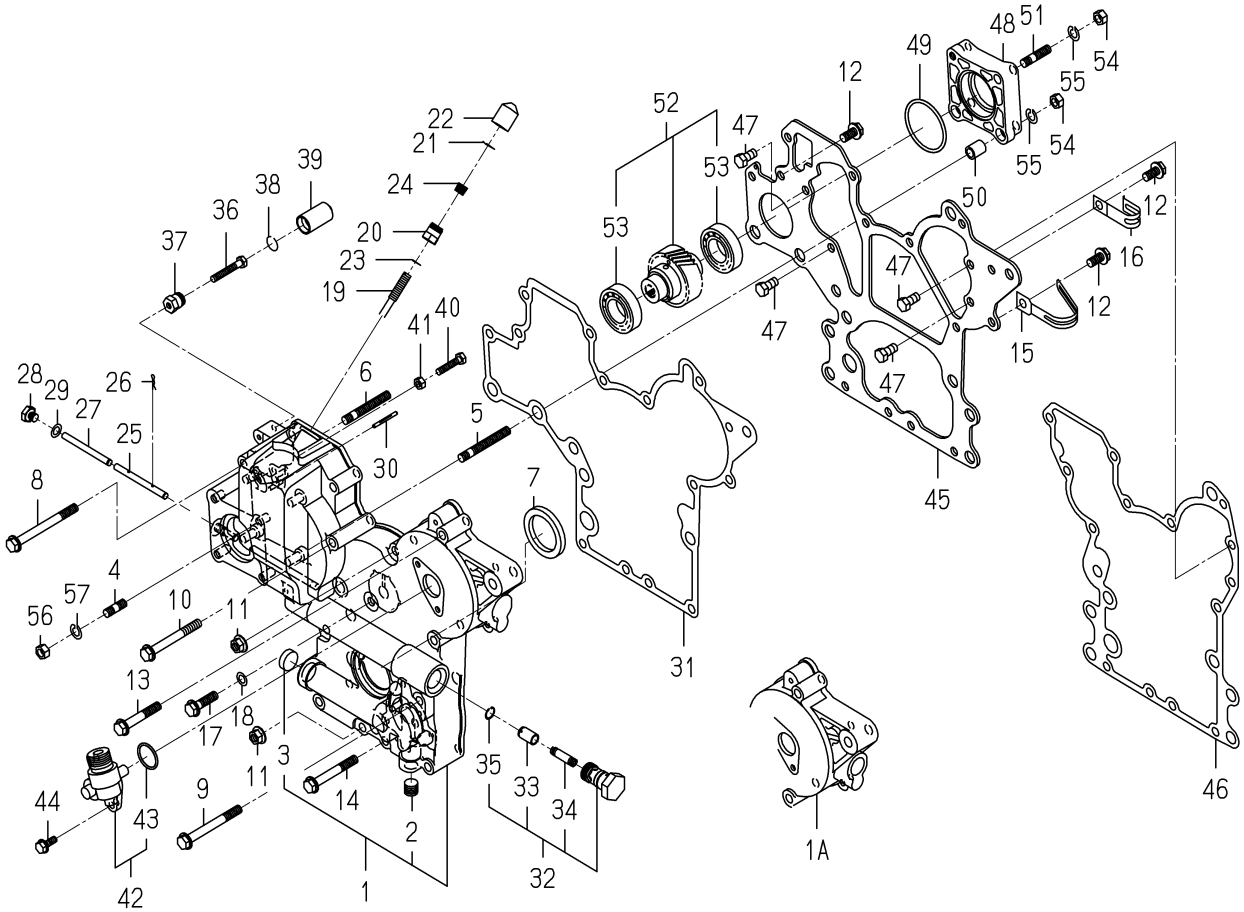

6005-241H-0100,6005-241H-0200

KEY	PART CODE	DESCRIPTION	SPC	TYPE OF MODEL E3CD VTB10		ITC	COL	GRP	REMARKS
1	6211-310-009-70	GEARCASE ASSY	*	1 -192032					
1A	6211-310-009-80	GEARCASE ASSY	*	1 192033-		1			
2	6209-605-003-10	PLUG/PT1/4	*	1 186238-					
3	6209-610-004-00	CUP/SEALING/20	*	1 186238-					
4	6904-110-822-00	STUD	*	4 186238-					
5	6904-110-855-00	STUD	*	2 186238-					
6	6904-110-850-00	STUD	*	1 186238-					
7	6209-625-002-00	SEAL,OIL	*	1 186238-					
8	V231-360-808-50	FLANGEBOLT	*	1 186238-					
9	V231-360-807-50	FLANGEBOLT	*	1 186238-					
10	V231-360-807-00	FLANGEBOLT	*	1 186238-					
11	3817-401-001-00	NUT/M08	*	2 186238-					
12	V231-360-801-60	FLANGEBOLT	*	3 186238-					
13	V231-360-805-00	FLANGEBOLT	*	3 186238-					
14	V231-360-806-00	FLANGEBOLT	*	4 186238-					
15	1650-650-015-00	CLAMP	*	1 186238-					
16	1425-621-004-00	HOLDER/JE/9-9	*	1 186238-					
17	V231-360-803-00	FLANGEBOLT	*	1 186238-					
18	6209-500-003-00	WASHER/08X14X01	*	1 186238-					
19	6215-546-006-00	STOPPER/MAX POWER ST	*	1 186238-					
20	6215-549-057-00	NUT/MAXPOWERSTOPPER	*	1 186238-					
21	6209-587-006-10	RING/TAMPER REGISTAN	*	1 186238-					
22	6215-549-058-10	CAP/MAXPOWERSTOPPER	*	1 186238-					
23	6209-920-002-00	PACKING	*	1 186238-					
24	V780-140-000-2B	PLUG/SCREW/SEAL	*	1 186238-					
25	6215-542-004-20	PIN/ARM	*	1 186238-					
26	P117-303-003-00	PIN/SNAP	*	2 186238-					
27	6215-542-005-10	PIN	*	1 186238-					
28	6209-600-004-00	PLUG/SCREW	*	1 186238-					
29	6209-500-003-00	WASHER/08X14X01	*	1 186238-					

FIG. 13 TIMING GEAR CASE

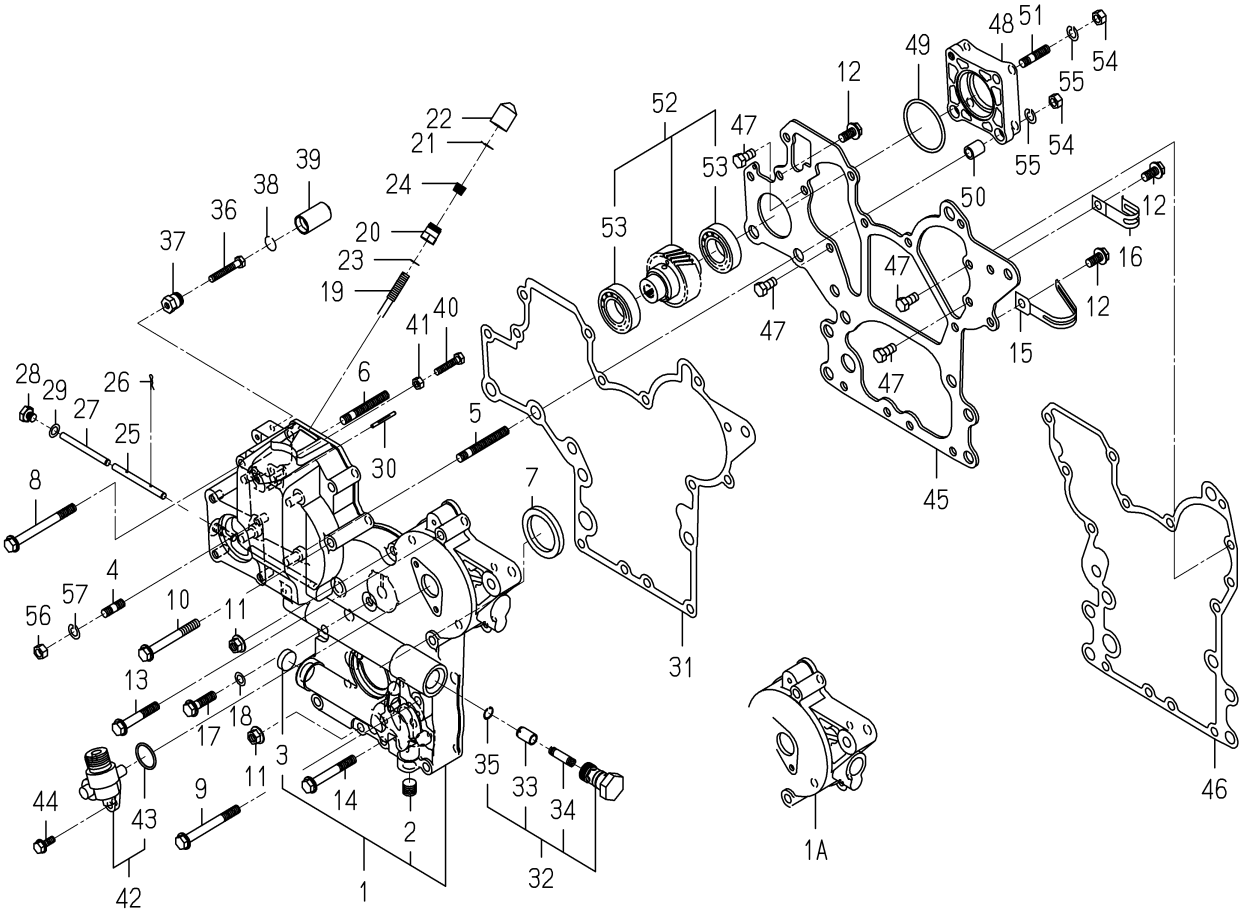

6005-241H-0100,6005-241H-0200

KEY	PART CODE	DESCRIPTION	SPC	TYPE OF MODEL E3CD VTB10		ITC	COL	GRP	REMARKS
30	6209-740-006-00	PIN/GROOVE	*	1 186238-					
31	6211-312-005-10	GASKET/GEARCASE	*	1 186238-					
32	6213-160-005-00	VALVE/RELIEF ASSY	*	1 186238-					
33	6213-161-003-10	PISTON/VALVE/RELIEF	*	1 186238-					
34	6213-164-001-00	SPRING/RELIEF VALVE	*	1 186238-					
35	V705-140-012-00	RING,SNAP/12 C	*	1 186238-					
36	6209-050-003-00	BOLT/HI-IDLESTOPPER	*	1 186238-					
37	6215-549-059-00	NUT/HI-IDLESTOPPER	*	1 186238-					
38	6209-587-006-10	RING/TAMPER REGISTAN	*	1 186238-					
39	6215-549-060-10	CAP/MAXPOWERSTOPPER	*	1 186238-					
40	6209-050-002-00	BOLT/M6	*	1 186238-					
41	V301-260-006-00	NUT/M6	*	1 186238-					
42	6219-310-003-20	DRIVE/TACHOMETE ASSY	*	1 186238-					
43	V723-102-002-40	RING/O	*	1 186238-					
44	V230-360-601-60	FLANGEBOLT	*	2 186238-					
45	6211-311-013-20	PLATE/FRONT	*	1 186238-					
46	6211-312-006-10	GASKET/PLATE	*	1 186238-					
47	6902-050-816-00	BOLT	*	4 186238-					
48	6211-319-003-00	SPACER	*	1 186238-					
49	V723-102-005-00	O-RING 1A S50	*	1 186238-					
50	6209-749-001-20	PIN/TUBE	*	2 186238-					
51	6904-110-822-00	STUD	*	1 186238-					
52	6212-530-017-00	SHAFT/HYDRAULIC ASSY	*	1 186238-					
53	6209-800-011-00	BEARING	*	2 186238-					
54	V304-260-008-00	NUT	*	4 186238-					
55	V401-160-008-00	WASHER,SP/M 8	*	4 186238-					
56	V304-260-008-00	NUT	*	4 186238-					
57	V401-160-008-00	WASHER,SP/M 8	*	4 186238-					

FIG. 14 HANGER

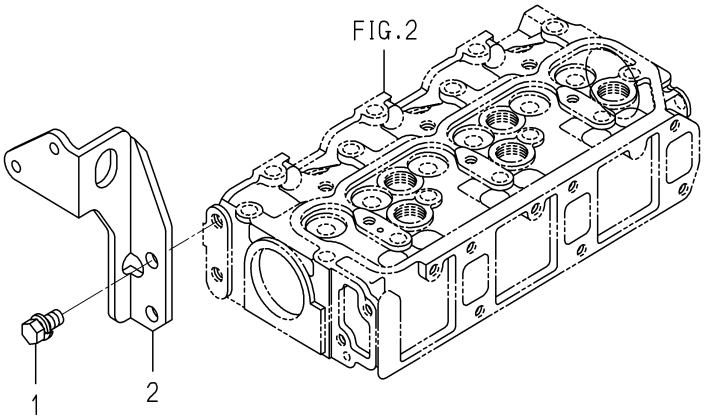

6005-290D-0100

KEY	PART CODE	DESCRIPTION	SPC	TYPE OF MODEL E3CD VTB10		ITC	COL	GRP	REMARKS
1	6901-911-020-00	BOLT,SEMS/M10X20	*	2					
2	6211-777-021-00	HANGER/F	*	1					

FIG. 15 VALVE

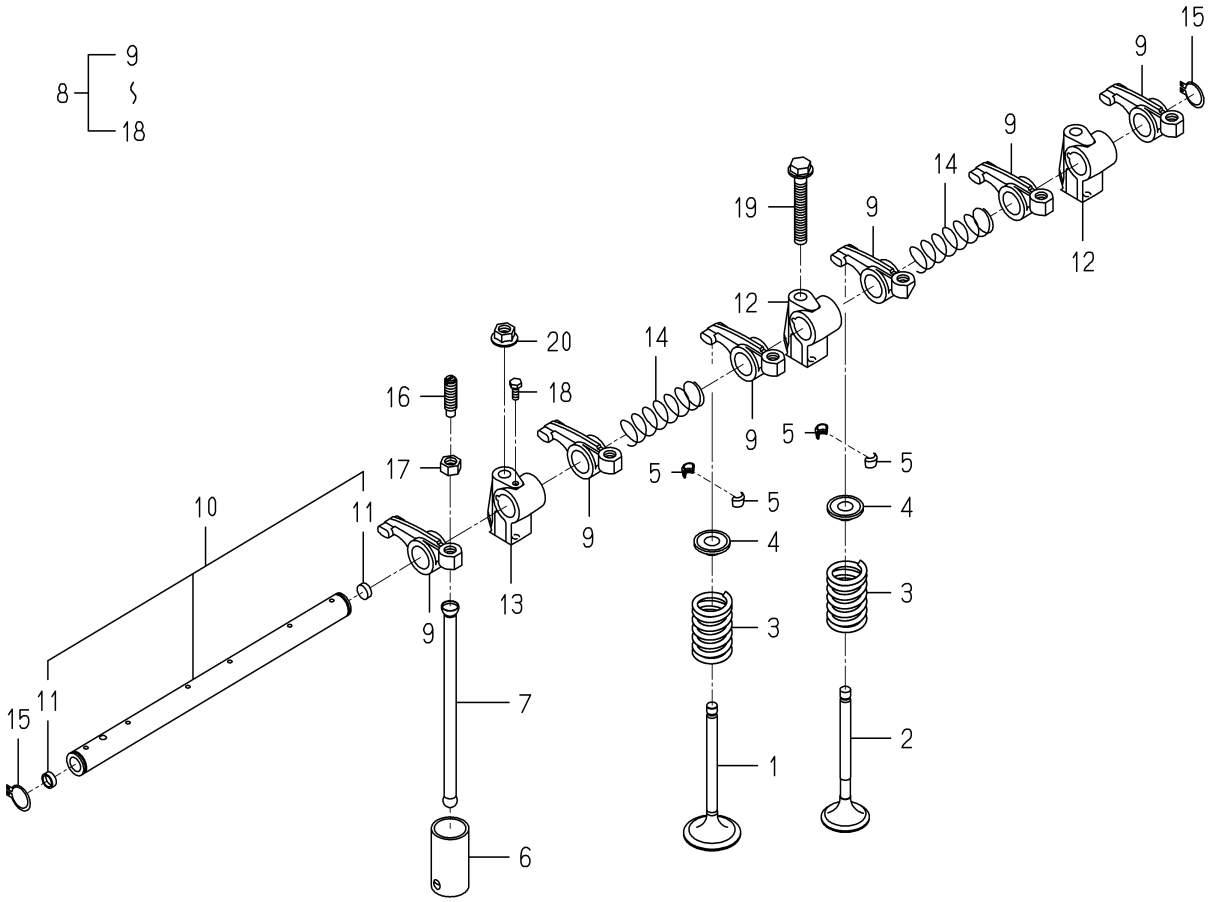

6005-301D-0100

KEY	PART CODE	DESCRIPTION	SPC	TYPE OF MODEL E3CD VTB10		ITC	COL	GRP	REMARKS
1	6212-551-019-00	VALVE/INTAKE	*	3					
2	6212-552-008-00	VALVE/EXHAUST	*	3					
3	6212-561-003-00	SPRING/VALVE	*	6					
4	6212-563-001-00	SEAT,VALVE SPRING	*	6					
5	6212-565-001-00	CUTTER,VALVE	*	12					
6	6212-571-002-30	TAPPET	*	6					
7	6212-575-003-00	PUSHROD	*	6					
8	6212-600-009-20	ROCKERSHAFT ASSY	*	1					
9	6212-611-004-10	ROCKERARM	*	6					
10	6212-620-008-20	SHAFT/ROCKERARM ASSY	*	1					
11	6212-626-002-10	PLUG	*	2					
12	6212-628-010-10	BRACKET/ROCKERSHAFT	*	2					
13	6212-628-011-10	BRACKET/ROCKERSHAFT	*	1					
14	6209-940-004-00	SPRING	*	2					
15	V704-140-016-00	RING,SNAP/16 C	*	2					
16	6212-616-002-00	SCREW ADJUST	*	6					
17	6209-409-003-00	NUT	*	6					
18	6209-000-002-00	BOLT	*	1					
19	V231-360-805-50	FLANGEBOLT	*	1					
20	3817-401-001-00	NUT/M08	*	2					

FIG. 16 CAM SHAFT

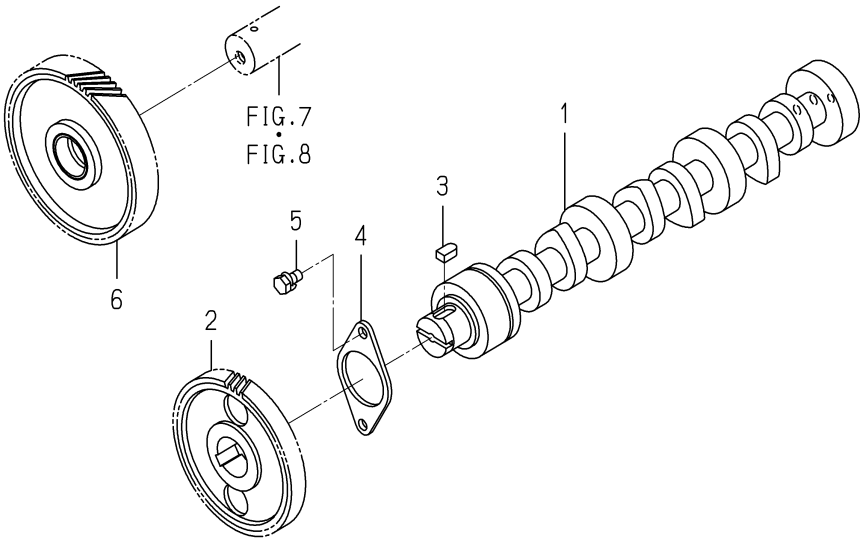

6005-310A-0100

KEY	PART CODE	DESCRIPTION	SPC	TYPE OF MODEL E3CD VTB10		ITC	COL	GRP	REMARKS
1	6212-511-005-00	CAMSHAFT	*	1					
2	6212-522-004-10	GEAR/CAMSHAFT	*	1					
3	6209-730-005-00	KEY/07X05X09	*	1					
4	6212-535-007-00	PLATE/THRUST	*	1					
5	6901-910-612-00	BOLT,SEMS/M6X12	*	2					
6	6212-523-021-00	GEAR/IDLE ASSY	*	1					

FIG. 17 PISTON

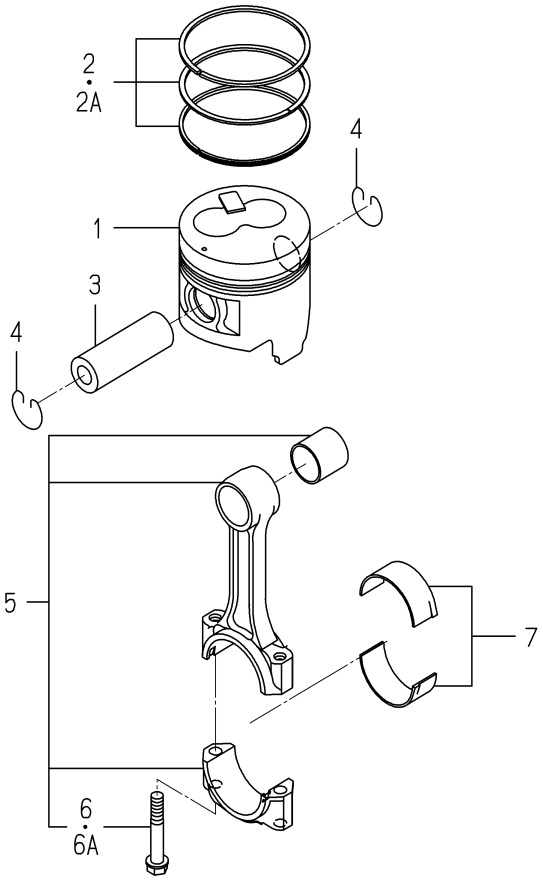

6005-340Q-0100

KEY	PART CODE	DESCRIPTION	SPC	TYPE OF MODEL E3CD	TYPE OF MODEL VTB10	ITC	COL	GRP	REMARKS
1	6212-111-095-30	PISTON	*	3					
2	6212-121-029-10	RING/PISTONSET	*	3 -193488					
2A	6212-121-029-20	RING/PISTONSET	*	3 193489-		1			
3	6212-211-002-00	PIN/PISTON	*	3					
4	6909-950-115-00	RING SNAP	*	6					
5	6212-230-011-30	CONNECTINGROD ASSY	*	3					
6	6212-235-004-00	BOLT/CONNECTINGROD	*	6 -150480					
6A	6212-235-004-10	BOLT/CONNECTINGROD	*	6 150481-		1			
7	6212-271-009-00	BEARING/CONNECTING R	*	3					

FIG. 18 PISTON/OVER SIZE (OPTION)

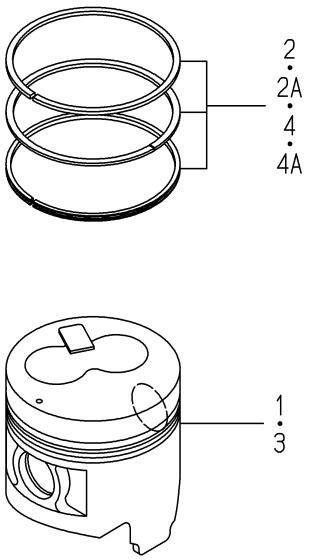

6005-349Q-0100

KEY	PART CODE	DESCRIPTION	SPC	TYPE OF MODEL E3CD VTB10		ITC	COL	GRP	REMARKS
1	6212-114-095-30	PISTON/OV	T	3					
2	6212-124-029-10	RING/PISTON/OVSET	T	3 -193488					
2A	6212-124-029-20	RING/PISTON/OVSET	T	3 193489-		1			
3	6212-116-095-30	PISTON/OV	T	3					
4	6212-126-029-10	RING/PISTON/OVSET	T	3 -193488					
4A	6212-126-029-20	RING/PISTON/OVSET	T	3 193489-		1			

FIG. 19 CRANK SHAFT

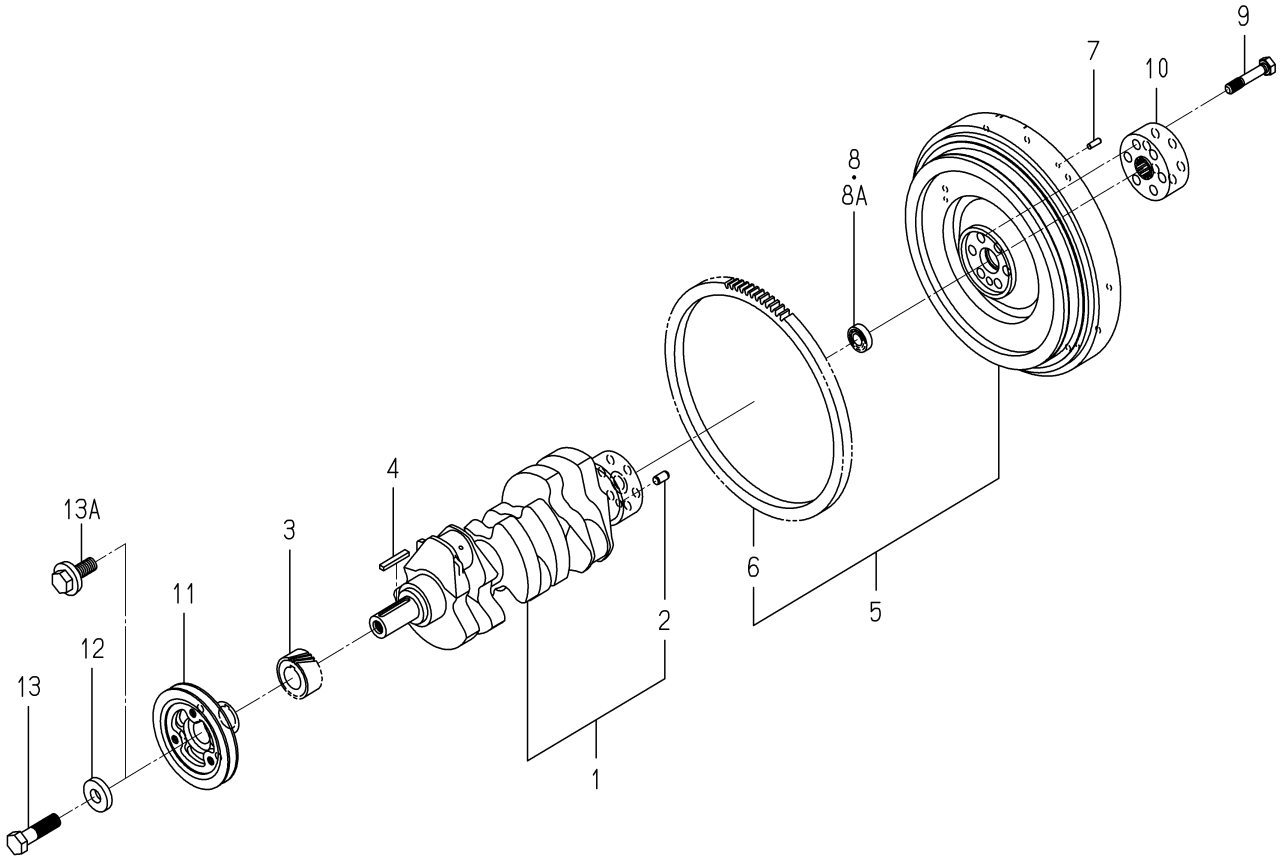

6005-351D-0100

KEY	PART CODE	DESCRIPTION	SPC	TYPE OF MODEL E3CD VTB10		ITC	COL	GRP	REMARKS
1	6212-310-011-40	CRANKSHAFT ASSY	*	1					
2	V523-101-001-80	PIN	*	1					
3	6212-521-008-00	GEAR/CRANK	*	1					
4	6209-730-006-00	KEY/07X05X43	*	1					
5	6212-330-075-10	FLYWHEEL ASSY	*	1					
6	6212-333-002-00	RINGGEAR	*	1					
7	V523-100-601-80	PIN	*	3					
8	V600-150-600-20	BEARING,RB/6002SS	*	1 -156430					
8A	V600-350-600-20	BEARING/BALL	*	1 156431-					
9	6209-000-041-00	BOLT	*	6					
10	6212-339-009-10	BOSS/SPLINE	*	1					
11	6212-371-035-10	PULLEY/CRANK	*	1					
12	6212-379-001-00	WASHER	*	1 -165260					
13	6901-066-645-00	BOLT	*	1 -165260					
13A	6209-000-043-00	BOLT/CRANK	*	1 165261-					

FIG. 20 OIL PUMP

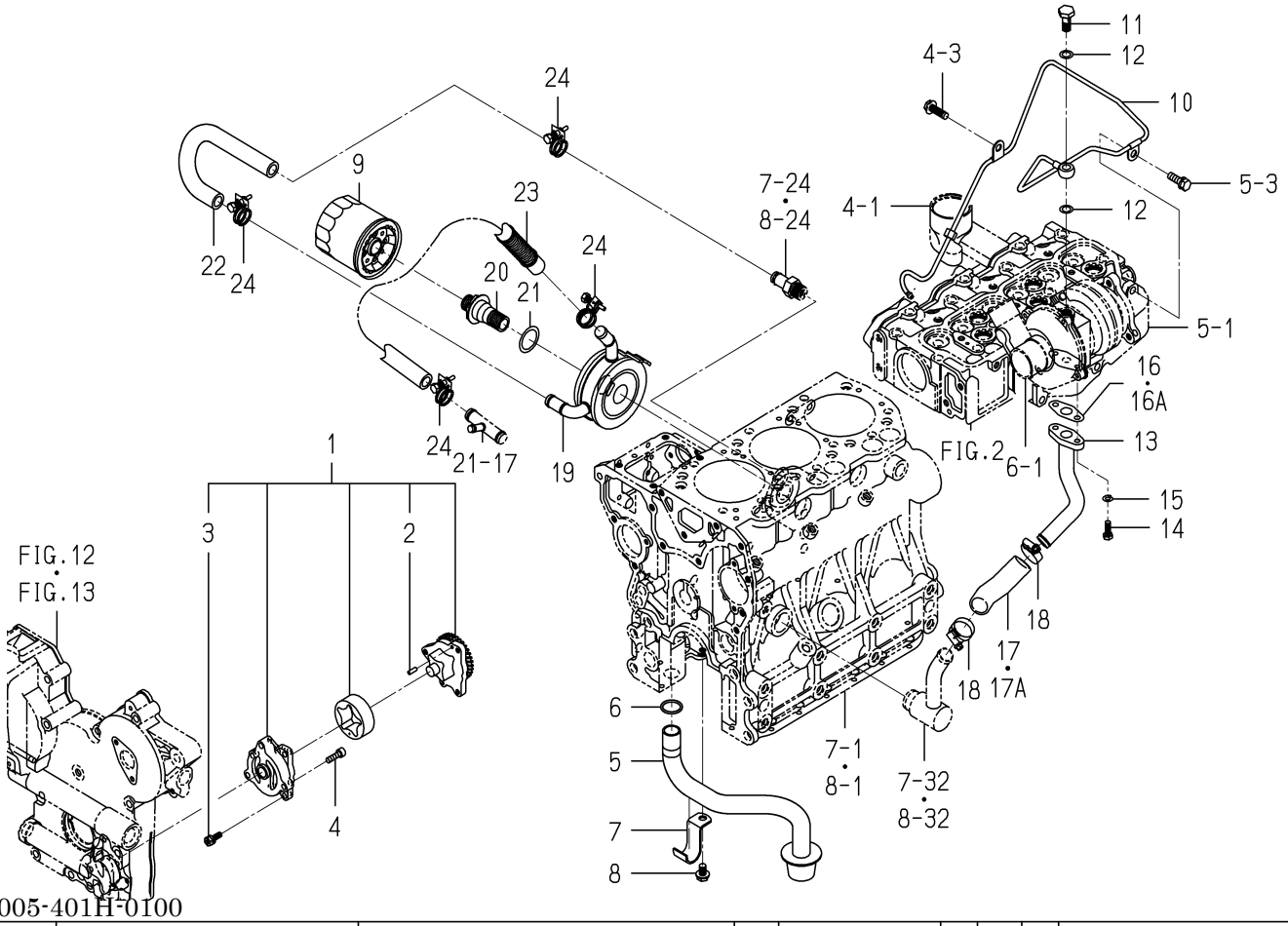

6005-401H-0100

KEY	PART CODE	DESCRIPTION	SPC	TYPE OF MODEL E3CD VTB10		ITC	COL	GRP	REMARKS
1	6213-100-010-00	OILPUMP ASSY	*	1					
2	6213-129-003-00	PIN/STRAIGHT	*	2					
3	6213-119-001-00	BOLT/WS	*	3					
4	V220-540-602-00	SCREW/SOCKET	*	3					
5	6213-140-013-00	STRAINER	*	1					
6	V720-103-502-20	O-RING/P22	*	1					
7	6213-149-003-20	CLAMP/STRAINER	*	1					
8	V231-360-801-60	FLANGEBOLT	*	1					
9	6213-240-005-10	CARTRIDGE/OILFILTER	*	1					
10	6213-311-057-00	PIPE/OIL ASSY	*	1					
11	6209-060-004-00	BOLT/EYE	*	1					
12	6209-920-003-00	GASKET	*	2					
13	6213-311-055-00	PIPE/OIL COMP	*	1					
14	6209-030-094-00	BOLT	*	2					
15	V401-160-006-00	WASHER,SP/M 6	*	2					
16	6209-630-004-10	GASKET	*	1 -159416					
16A	6209-630-004-20	GASKET	*	1 159417-		1			
17	6209-360-076-10	HOSE/RUBBER	*	1 -188129					
17A	6209-360-076-20	HOSE/RUBBER	*	1 188130-		1			
18	J061-116-025-00	CLAMP/WORM/16-25	*	2					
19	6221-700-004-00	OILCOOLER	*	1					
20	6221-726-006-00	CONNECTOR/OILCOOLER	*	1					
21	6221-726-008-00	WASHER/OILCOOLER	*	1					
22	6209-360-071-10	HOSE/OILCOOLER/IN	*	1					
23	6209-360-072-20	HOSE/OILCOOLER/OUT	*	1					
24	J061-216-020-00	CLAMP/WIRE/16-20	*	4					

FIG. 21 WATER PUMP

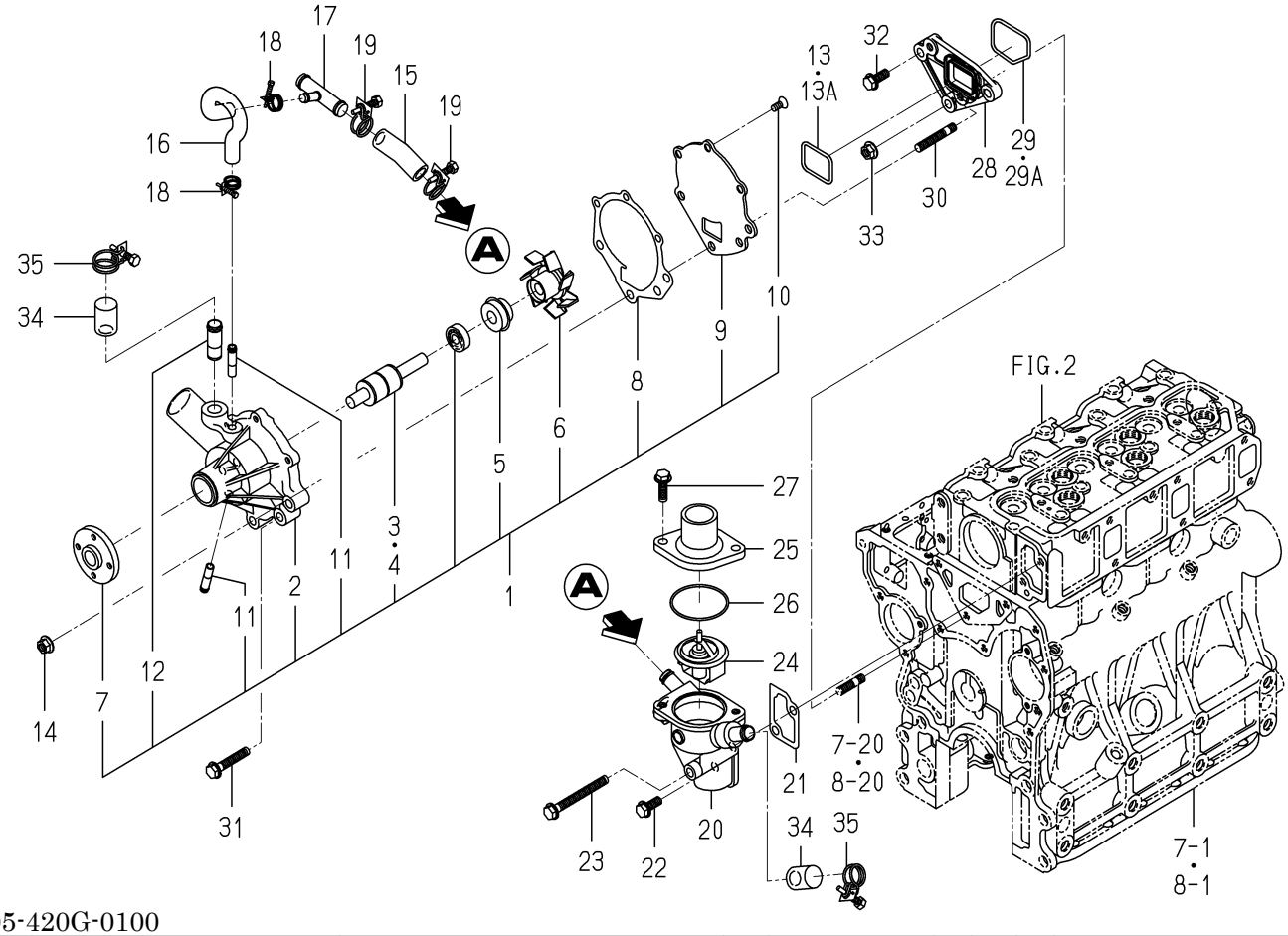

6005-420G-0100

KEY	PART CODE	DESCRIPTION	SPC	TYPE OF MODEL E3CD VTB10		ITC	COL	GRP	REMARKS
1	6213-610-011-10	WATERPUMP ASSY	*	1					
2	6213-611-006-00	BODY/WATERPUMP	*	1					
3	6213-631-002-00	BEARING/WATER PUMP	*	1					
4	6213-631-005-00	BEARING/WATERPUMP	*	1					
5	6213-622-002-10	SEAL SET/WATER PUMP	*	1					
6	6213-621-003-00	ROTOR/WATERPUMP	*	1					
7	6213-642-002-00	SEAL/WATER PUMPPULLE	*	1					
8	6213-613-002-10	GASKET	*	1					
9	6213-612-004-00	PLATE/WATER PUMP	*	1					
10	6213-619-003-00	SCREW/WATER PUMP	*	3					
11	6213-619-002-00	PIPE/WATER PUMP	*	2					
12	6213-619-009-00	PIPE/WATERPUMP	*	1					
13	V721-103-104-00	O-RING/G40	*	1 -150480					
13A	6213-614-013-00	GASKET/WATERPUMP	*	1 150481-					
14	3817-401-001-00	NUT/M08	*	2					
15	6213-729-004-10	HOSE/RUBBER	*	1					
16	6213-729-013-10	HOSE/RUBBER	*	1					
17	6213-719-002-00	JOINT	*	1					
18	J061-210-015-00	CLAMP/WIRE/10-15	*	2					
19	J061-216-020-00	CLAMP/WIRE/16-20	*	2					
20	6213-716-003-10	HOUSING/THERMOSTAT	*	1					
21	6213-743-002-10	GASKET/HOUSING	*	1					
22	V231-360-802-00	FLANGEBOLT	*	1					
23	V231-360-807-50	FLANGEBOLT	*	1					
24	6513-770-022-10	THERMOSTAT	*	1					
25	6213-711-003-20	PIPE,WATER OUTLET	*	1					
26	V723-102-005-50	O-RING	*	1					
27	V231-360-802-50	FLANGEBOLT	*	2					
28	6213-619-006-00	SPACER/WATERPUMP	*	1					
29	V721-113-105-00	O-RING HS90 G50	*	1 -150480					

FIG. 21 WATER PUMP

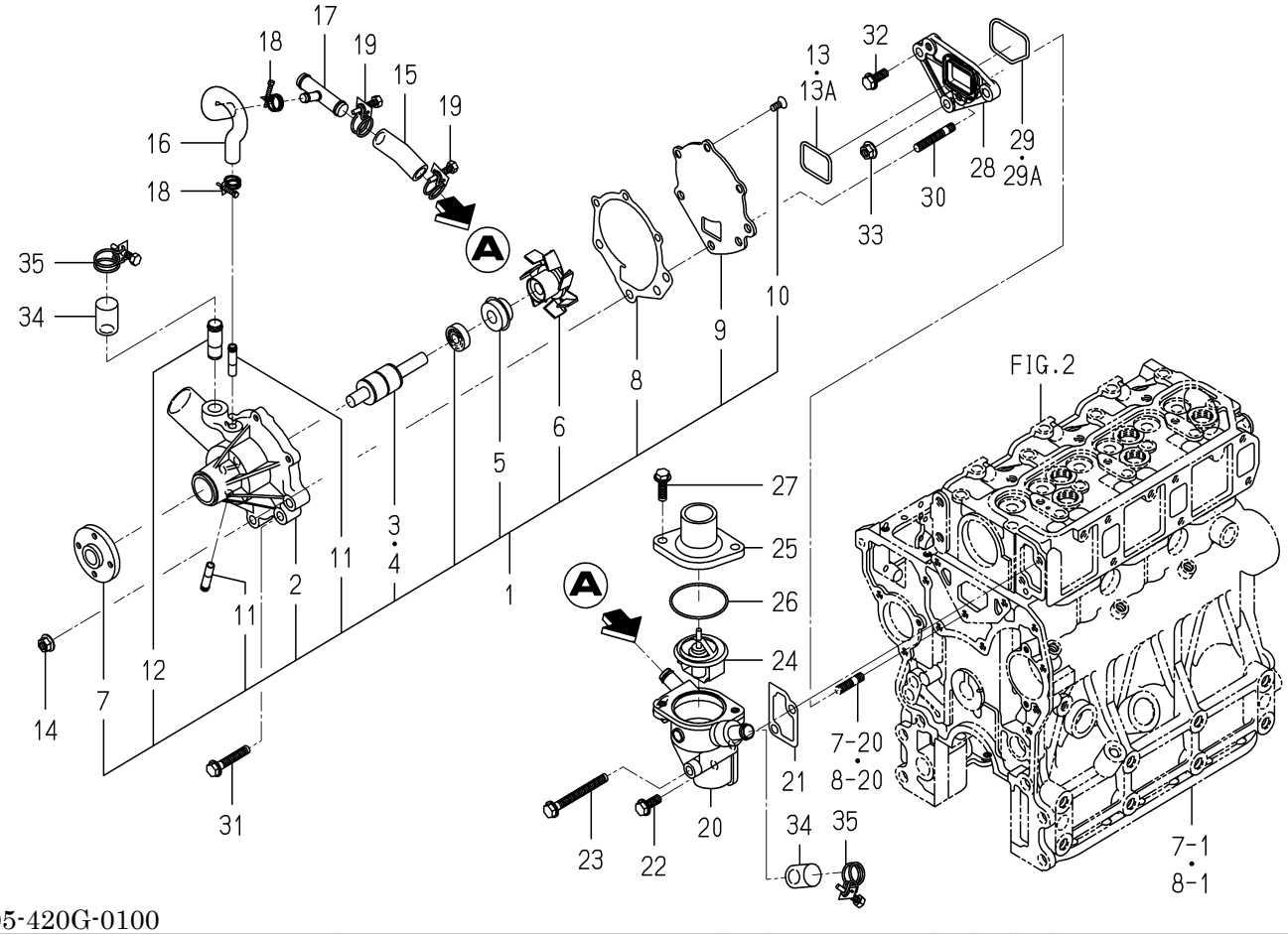

6005-420G-0100

KEY	PART CODE	DESCRIPTION	SPC	TYPE OF MODEL E3CD VTB10		ITC	COL	GRP	REMARKS
29A	6213-614-014-00	GASKET/SPACER	*	1 150481-					
30	6904-110-840-00	STUD/M8X40	*	2					
31	V231-360-804-50	FLANGEBOLT	*	1					
32	V231-360-802-00	FLANGEBOLT	*	1					
33	3817-401-001-00	NUT/M08	*	1					
34	6213-729-011-00	CAP	*	2					
35	J061-220-024-00	CLAMP/WIRE/20-24	*	2					

FIG. 22 COOLING FAN

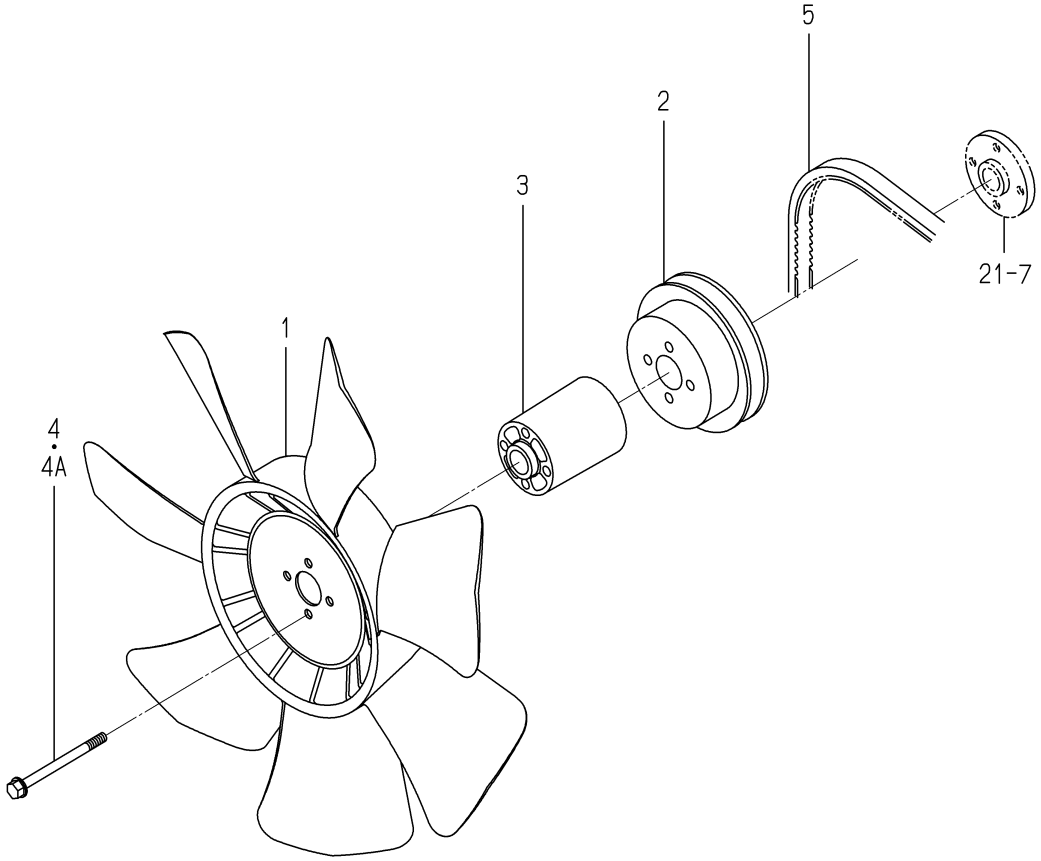

6005-480Z-0100

KEY	PART CODE	DESCRIPTION	SPC	TYPE OF MODEL E3CD VTB10		ITC	COL	GRP	REMARKS
1	6213-660-015-00	FAN/COOLING	*	1					
2	6213-641-022-10	PULLEY/WATERPUMP	*	1					
3	6213-669-009-00	SPACER/FAN/68	*	1					
4	6209-030-048-00	BOLT/WS	*	4 -194674					
4A	6209-046-007-00	BOLT/FLANGE	*	4 194675-					
5	6213-671-031-00	BELT/VR5A39.5	*	1					

FIG. 23 INJECTION NOZZLE

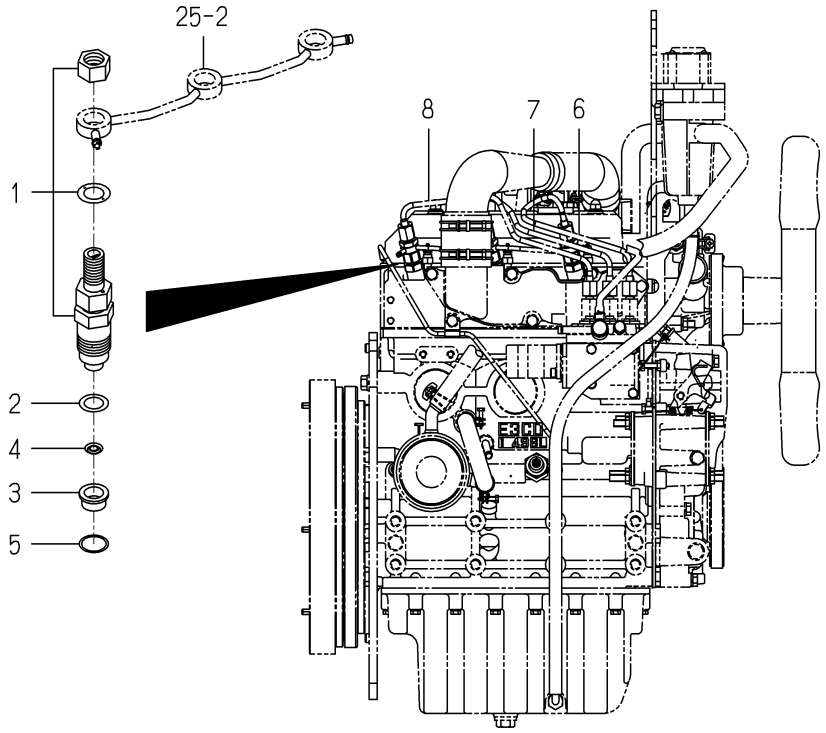

6005-501F-0100

KEY	PART CODE	DESCRIPTION	SPC	TYPE OF MODEL E3CD VTB10		ITC	COL	GRP	REMARKS
1	6215-300-037-00	INJECTIONNOZZLE ASSY	*	3					FIG 031
2	6215-315-002-00	GASKET,NOZZLE	*	3					
3	6215-315-006-00	HEATSHILD/NOZZLE	*	3					
4	6215-315-005-00	WASHER/CORRUGATE	*	3					
5	6215-315-007-00	GASKET	*	3					
6	6215-411-137-00	PIPE/INJECTION ASSY	*	1					
7	6215-411-138-00	PIPE/INJECTION ASSY	*	1					
8	6215-411-139-00	PIPE/INJECTION ASSY	*	1					

FIG. 24 INJECTION PUMP

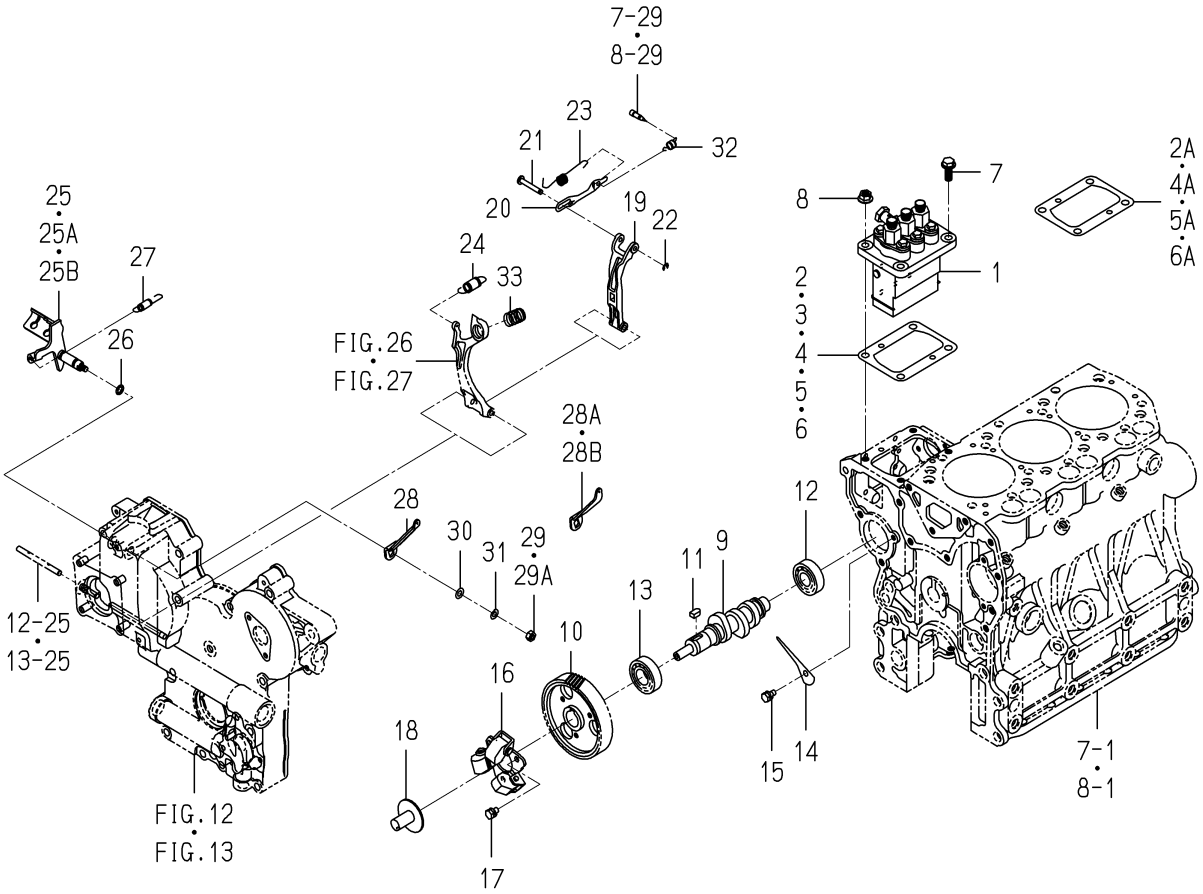

6005-511D-0100

KEY	PART CODE	DESCRIPTION	SPC	TYPE OF MODEL E3CD VTB10		ITC	COL	GRP	REMARKS
1	6215-600-078-10	INJECTIONPUMP ASSY	*	1					FIG 032
2	6219-752-006-00	SHIM/INJECTION P/0.3	*	1 -143634					
2A	6219-752-045-00	SHIM/INJECTIONPUMP	*	1 143635-					
3	6219-752-007-00	SHIM/INJECTION P/0.1	*	1 -143634					
4	6219-752-008-00	SHIM/INJECTION P/0.2	*	1 -143634					
4A	6219-752-044-00	SHIM/INJECTIONPUMP	*	1 143635-					
5	6219-752-009-00	SHIM/INJECTION P/0.4	*	1 -143634					
5A	6219-752-046-00	SHIM/INJECTIONPUMP	*	1 143635-					
6	6219-752-010-00	SHIM/INJECTION P/0.5	*	1 -135590					
6A	6219-752-047-00	SHIM/INJECTIONPUMP	*	1 143635-					
7	V231-360-802-00	FLANGEBOLT	*	2					
8	3817-401-001-00	NUT/M08	*	2					
9	6215-621-018-10	CAMSHAFT/INJPUMP	*	1					
10	6212-524-012-30	GEAR/INJECTIONPUMP	*	1					
11	6209-730-005-00	KEY/07X05X09	*	1					
12	V600-110-620-30	BEARING,RB/6203	*	1					
13	6209-800-010-00	BEARING	*	1					
14	6212-535-009-00	PLATE/THRUST/INJPUMP	*	1					
15	6901-910-612-00	BOLT,SEMS/M6X12	*	1					
16	6215-520-007-10	FLYWEIGHT ASSY	*	1					
17	6209-030-043-00	BOLT/M6X10	*	3					
18	6215-526-004-00	THRUSTPIECE	*	1					
19	6215-541-001-10	ARM/FLOATING COMP	*	1					
20	6215-543-002-10	RINK/CONTROL	*	1					
21	6215-542-006-00	PIN,CONTROL	*	1					
22	V710-140-004-00	RING,SNAP/ 4 E	*	1					
23	6215-549-031-10	SPRING/SETTING	*	1					
24	6215-531-019-00	SPRING/GOVERNOR	*	1					
25	6215-541-024-30	LEVER/CONTROL COMP	*	1 -180974					
25A	6215-541-045-00	LEVER/CONTROL COMP	*	1 -191056					

FIG. 24 INJECTION PUMP

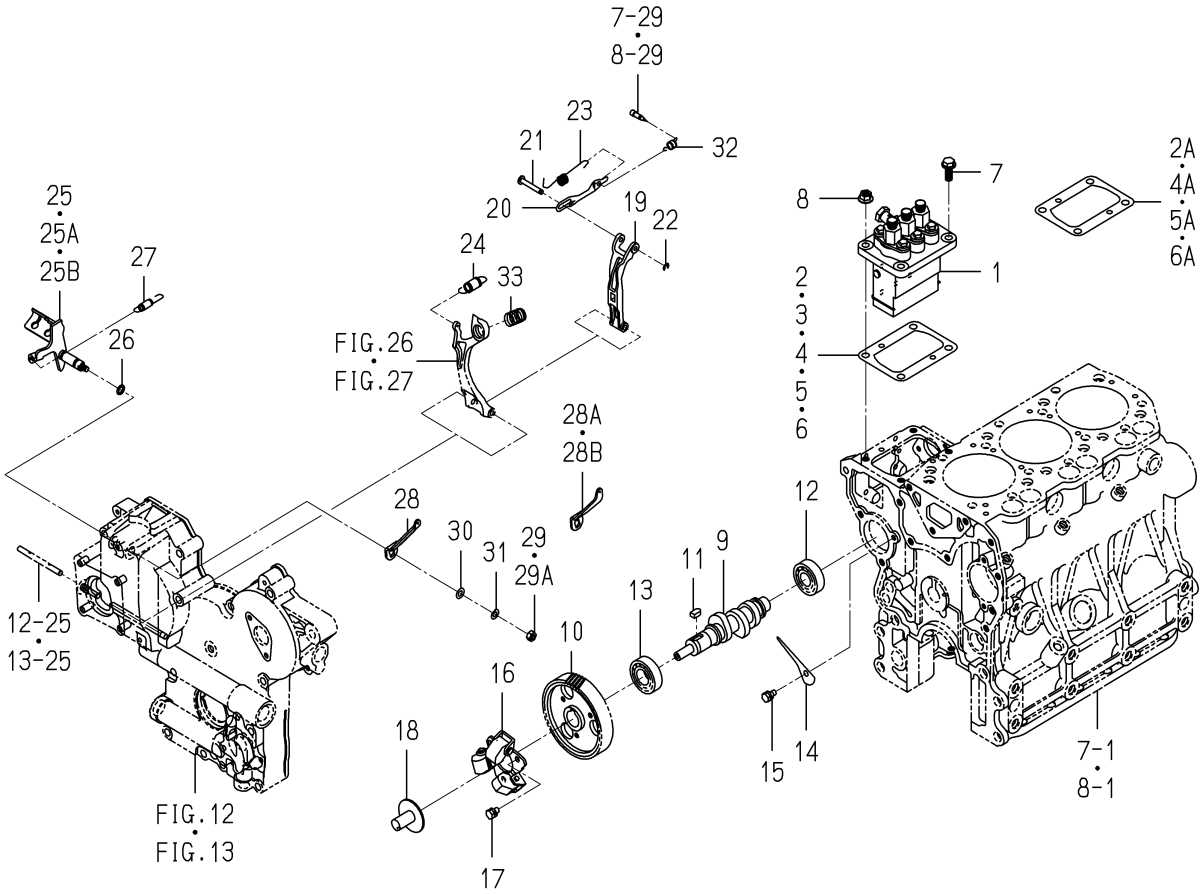

6005-511D-0100

KEY	PART CODE	DESCRIPTION	SPC	TYPE OF MODEL E3CD VTB10		ITC	COL	GRP	REMARKS
25B	6215-541-045-10	LEVER/CONTROL COMP	*	1 191057-		3			
26	V720-101-900-80	O-RING/P 8	*	1					
27	6209-580-002-10	SPRING,RETURN	*	1					
28	6215-549-007-10	ARM/CONTROL	*	1 -180974					
28A	6215-549-076-00	ARM/CONTROL	*	1 -183522					
28B	6215-549-076-10	ARM/CONTROL	*	1 183523-		3			
29	6909-110-406-00	NUT	*	1 -178577					
29A	V301-260-006-00	NUT/M6	*	1 178578-					
30	V411-260-006-00	WASHER / M6	*	1					
31	V401-160-006-00	WASHER,SP/M 6	*	1					
32	6215-549-039-00	SPRING/STARTING	*	1					
33	6215-537-002-10	SPRING/IDLE	*	1					

FIG. 25 FUEL PIPE

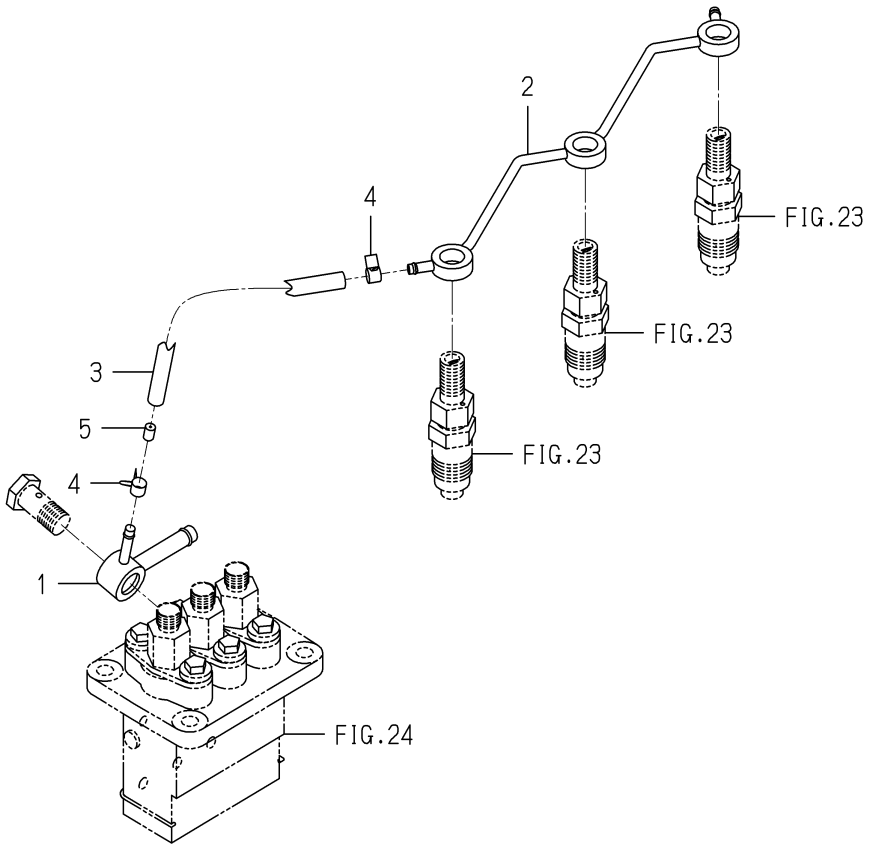

6005-550F-0100

KEY	PART CODE	DESCRIPTION	SPC	TYPE OF MODEL E3CD VTB10		ITC	COL	GRP	REMARKS
1	6215-412-004-00	CONNECTOR/FUEL	*	1					
2	6215-411-136-00	PIPE/FUEL	*	1					
3	6209-360-011-00	HOSE/RUBBER	*	1					
4	J062-076-082-00	CLIP/HOSE/7.6-8.2	*	2					
5	3640-586-004-00	RESISTANCE/1.0	*	1					

FIG. 26 ADAPTER

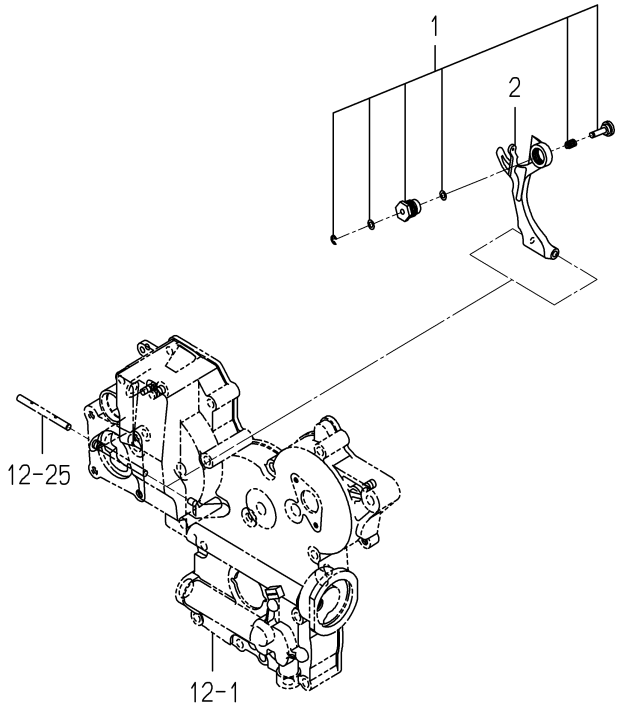

6005-560 -0100

KEY	PART CODE	DESCRIPTION	SPC	TYPE OF MODEL E3CD VTB10		ITC	COL	GRP	REMARKS
1	6215-548-029-00	ADAPTER/255X065 ASSY	*	1 -148504					
2	6215-541-016-30	ARM/TENSION	*	1 -148504					

FIG. 27 ADAPTER

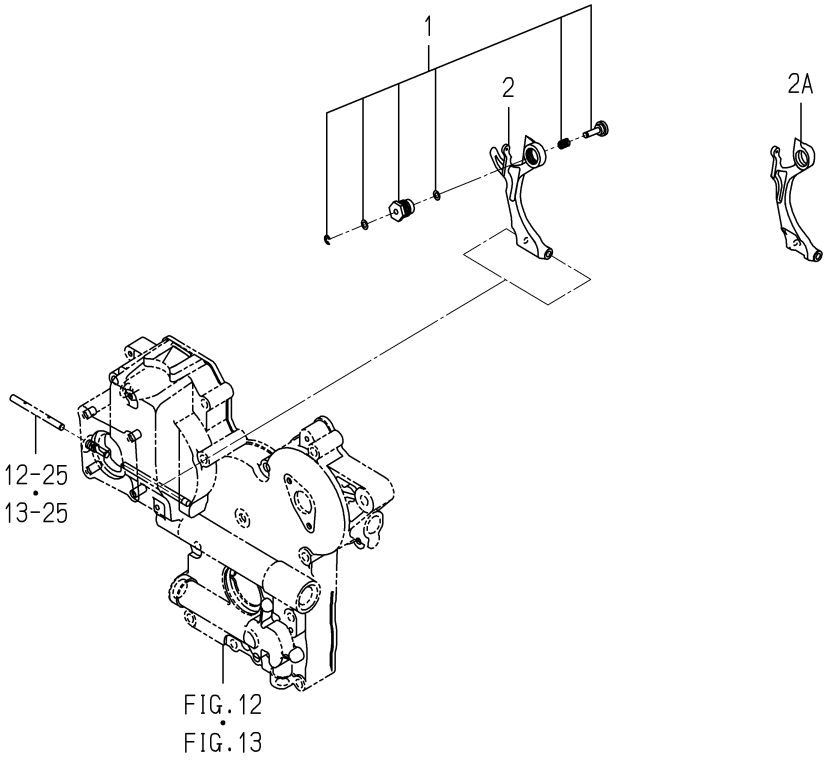

6005-560Y-0100

KEY	PART CODE	DESCRIPTION	SPC	TYPE OF MODEL E3CD VTB10		ITC	COL	GRP	REMARKS
1	6215-548-070-00	ADAPTER/250X090 ASSY	*	1 148505-					
2	6215-541-016-30	ARM/TENSION	*	1 -168197					
2A	6215-541-016-40	ARM/TENSION	*	1 168198-		1			

FIG. 28 ELECTRIC (1)

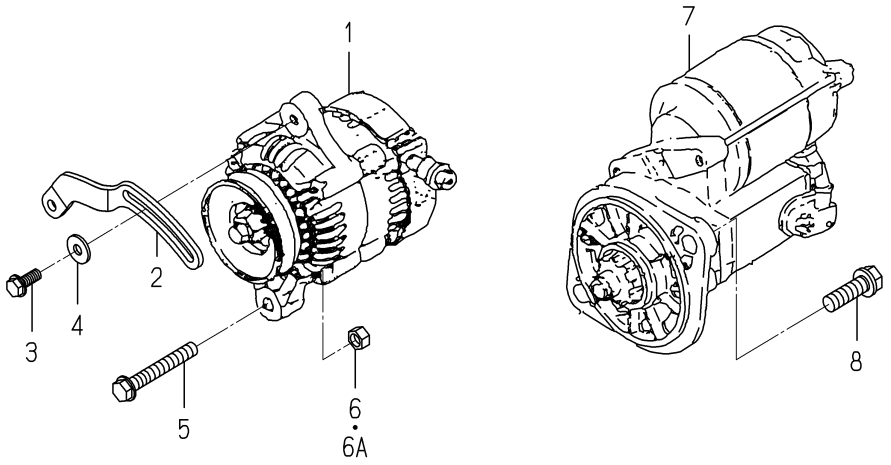

6005-801W-0100,6005-801W-0200

KEY	PART CODE	DESCRIPTION	SPC	TYPE OF MODEL E3CD VTB10		ITC	COL	GRP	REMARKS
1	6281-200-021-00	GENERATOR ASSY	*	1					FIG 034
2	6213-674-006-20	PLATE/ADJUST	*	1					
3	V231-360-802-00	FLANGEBOLT	*	1					
4	1373-121-001-00	WASHER/9X22X2	*	1					
5	V233-361-007-00	FLANGEBOLT	*	1					
6	6909-110-410-00	NUT/M10	*	1 -171486					
6A	V334-260-010-00	NUT/M10	*	1 171487-					
7	6281-100-007-20	STARTER ASSY	*	1					FIG 033
8	6901-931-240-00	BOLT	*	2					

FIG. 29 ELECTRIC (2)

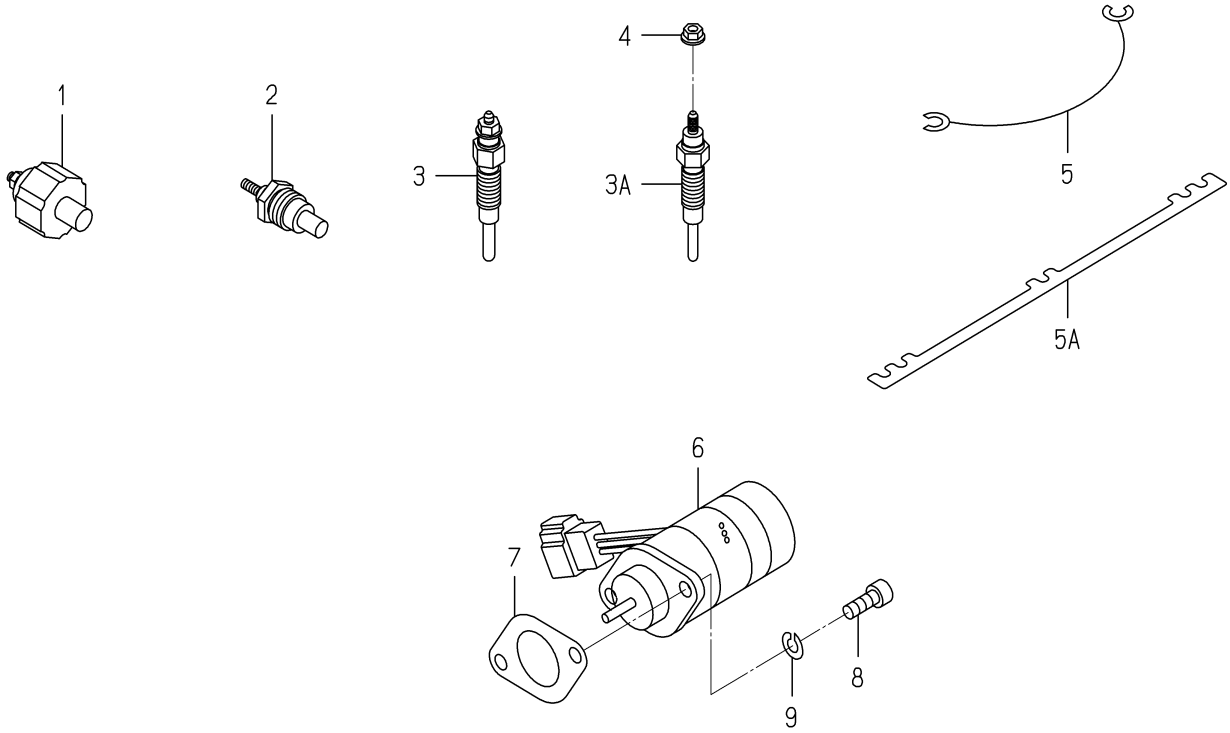

6005-820O-0100,6005-820O-0200

KEY	PART CODE	DESCRIPTION	SPC	TYPE OF MODEL E3CD VTB10		ITC	COL	GRP	REMARKS
1	6281-971-003-00	SWITCH/OILPRESSURE	*	1					
2	6282-450-006-00	THERMOMETER	*	1					
3	6281-410-023-00	GLOWPLUG	*	3 -170197					
3A	6281-410-023-10	GLOWPLUG	*	3 170198-		3			
4	6209-440-005-00	NUT/FLANGE	*	3 170202-					
5	6219-732-012-00	CONNECTOR/GLOWPLUG	*	2 -150020					
5A	6219-732-017-00	CONNECTOR/GLOWPLUG	*	1 150021-					
6	6281-910-011-00	SOLENOID	*	1					
7	6209-630-002-10	GASKET	*	1					
8	V220-540-601-60	BOLT	*	2					
9	V401-160-006-00	WASHER,SP/M 6	*	2					

FIG. 30 REPAIR PARTS(OPTION)

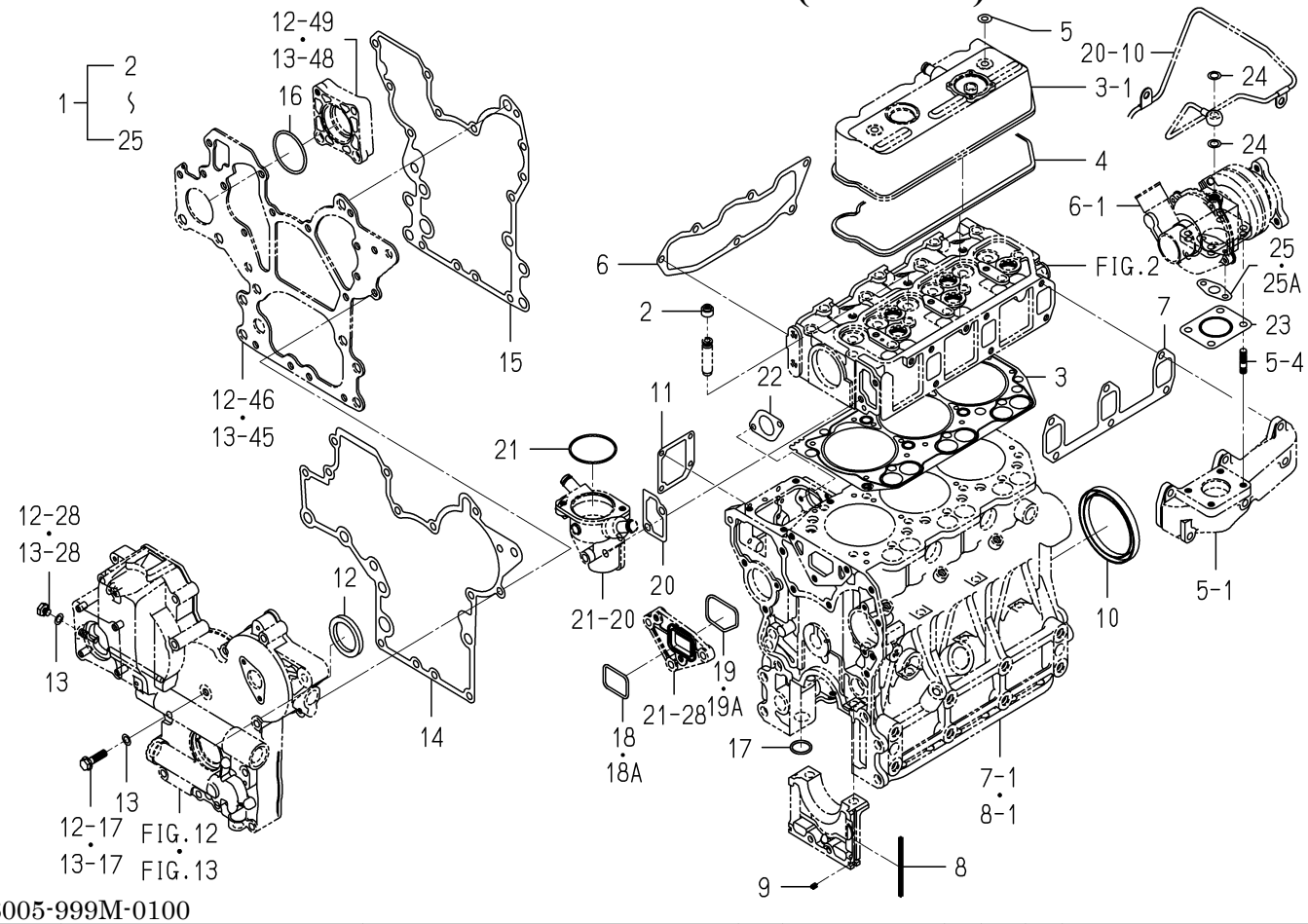

6005-999M-0100

KEY	PART CODE	DESCRIPTION	SPC	TYPE OF MODEL E3CD VTB10		ITC	COL	GRP	REMARKS
1	6287-810-041-10	REPAIR/ENGINESET	T	1					
2	6212-569-002-00	SEAL,OIL	T	6					
3	6211-141-057-10	GASKET/CYLINDERHEAD	T	1					
4	6211-173-005-00	SEAL/CYL HEAD/UNDER	T	1					
5	6209-572-003-00	GASKET	T	2					
6	6214-115-003-10	GASKET/INLETMANIFOLD	T	1					
7	6214-145-004-20	GASHET/EXH MANIFOLD	T	1					
8	6211-258-001-00	SEAL,BEARING CAP	T	4					
9	6211-258-002-00	SEAL,BEARING CAP/7	T	2					
10	6209-625-003-20	OILSEAL	T	1					
11	6211-292-001-20	GASKET/COVER	T	1					
12	6209-625-002-00	SEAL,OIL	T	1					
13	6209-500-003-00	WASHER/08X14X01	T	2					
14	6211-312-005-10	GASKET/GEARCASE	T	1					
15	6211-312-006-10	GASKET/PLATE	T	1					
16	V723-102-005-00	O-RING 1A S50	T	1					
17	V720-103-502-20	O-RING/P22	T	1					
18	V721-103-104-00	O-RING/G40	T	1 -150350					
18A	6213-614-013-00	GASKET/WATERPUMP	T	1 150351-					
19	V721-113-105-00	O-RING HS90 G50	T	1 -150350					
19A	6213-614-014-00	GASKET/SPACER	T	1 150351-					
20	6213-743-002-10	GASKET/HOUSING	T	1					
21	V723-102-005-50	O-RING	T	1					
22	6209-630-002-10	GASKET	T	1					
23	6214-145-009-00	GASKET	T	1					
24	6209-920-003-00	GASKET	T	2					
25	6209-630-004-10	GASKET	T	1 -159416					
25A	6209-630-004-20	GASKET	T	1 159417-		1			

FIG. 31 COMPONENT PARTS FOR 6215-300-037-00 ON Fig.23

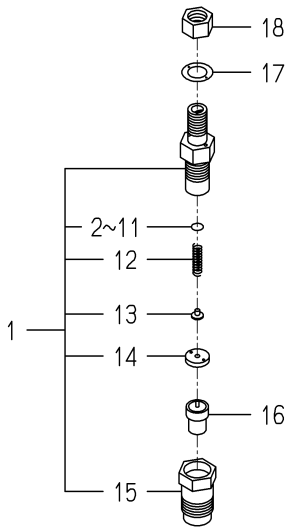

6215-300-037-0E

KEY	PART CODE	DESCRIPTION	SPC	TYPE OF MODEL E3CD VTB10		ITC	COL	GRP	REMARKS
1	6215-330-022-00	HOLDER/NOZZLE ASSY	*	3					
2	6215-345-044-00	SHIM/0.10	*	3					
3	6215-345-045-00	SHIM/0.20	*	3					
4	6215-345-046-00	SHIM/0.30	*	3					
5	6215-345-047-00	SHIM/0.40	*	3					
6	6215-345-048-00	SHIM/0.50	*	3					
7	6215-345-049-00	SHIM/0.52	*	3					
8	6215-345-050-00	SHIM/0.54	*	3					
9	6215-345-051-00	SHIM/0.56	*	3					
10	6215-345-052-00	SHIM/0.58	*	3					
11	6215-345-053-00	SHIM/0.80	*	3					
12	6215-343-002-00	SPRING,NOZZLE	*	3					
13	6215-342-002-00	SPRINGSEAT	*	3					
14	6215-339-004-00	SPACER	*	3					
15	6215-332-006-00	NUT/NOZZLERETAINING	*	3					
16	6215-311-005-00	NOZZLE	*	3					
17	6215-359-003-00	GASKET	*	3					
18	6215-359-004-00	NUT	*	3					

FIG. 32 COMPONENT PARTS FOR 6215-600-078-10 ON Fig.24

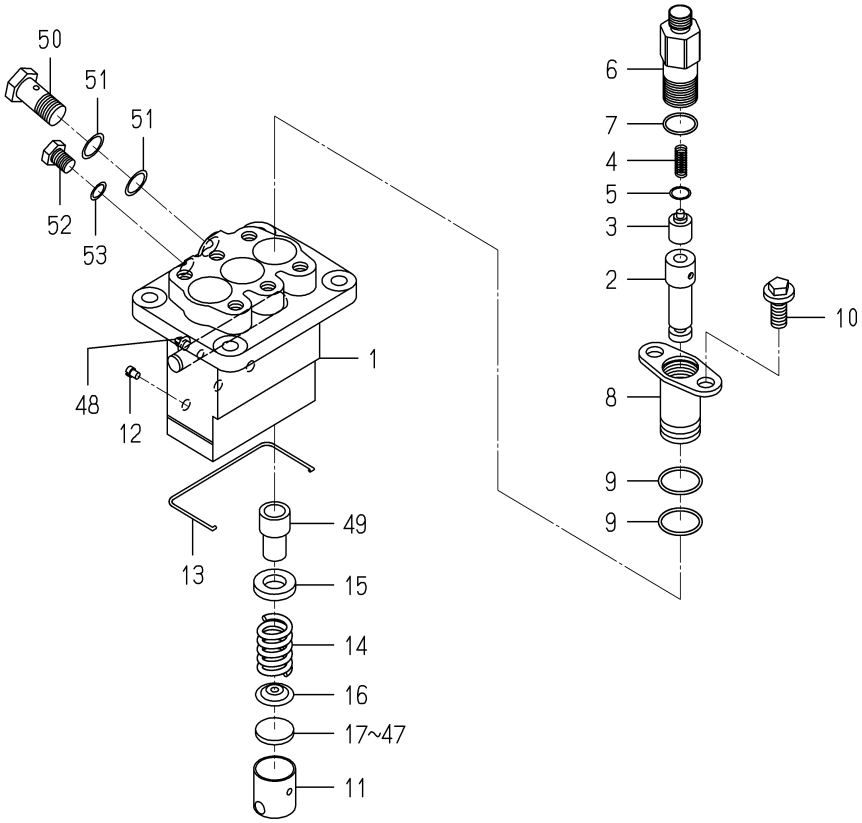

6215-600-078-1H

KEY	PART CODE	DESCRIPTION	SPC	TYPE OF MODEL E3CD VTB10		ITC	COL	GRP	REMARKS
1	6215-611-015-00	HOUSING/PUMP	*	1					
2	6215-631-008-00	PLUNGER ASSY	*	3					
3	6215-641-002-00	VALVE,DELIVERY	*	3					
4	6215-643-005-00	SPRING/DELIVERYVALVE	*	3					
5	6215-649-008-00	GASKET	*	3					
6	6215-644-009-00	HOLDER/DELIVERYVALVE	*	3					
7	6215-649-014-00	ORING	*	3					
8	6215-635-004-00	SLEEVEFLANGE	*	3					
9	6215-649-013-00	ORING	*	6					
10	6215-649-011-00	BOLT	*	6					
11	6215-622-003-00	TAPPET	*	3					
12	6215-629-017-00	PIN	*	3					
13	6215-629-035-00	SNAPRING	*	1					
14	6215-634-003-00	SPRING/PLUNGER	*	3					
15	6215-639-008-00	SPRINGSEAT	*	3					
16	6215-639-009-00	SPRINGSEAT	*	3					
17	6215-629-060-00	PLATE/T=2.60	*	1					
18	6215-629-061-00	PLATE/T=2.65	*	1					
19	6215-629-062-00	PLATE/T=2.70	*	1					
20	6215-629-063-00	PLATE/T=2.75	*	1					
21	6215-629-064-00	PLATE/T=2.80	*	1					
22	6215-629-065-00	PLATE/T=2.85	*	1					
23	6215-629-066-00	PLATE/T=2.90	*	1					
24	6215-629-067-00	PLATE/T=2.95	*	1					
25	6215-629-036-00	PLATE/T=3.00	*	1					
26	6215-629-037-00	PLATE/T=3.05	*	1					
27	6215-629-038-00	PLATE/T=3.10	*	1					
28	6215-629-039-00	PLATE/T=3.15	*	1					
29	6215-629-040-00	PLATE/T=3.20	*	1					
30	6215-629-041-00	PLATE/T=3.25	*	1					

FIG. 32 COMPONENT PARTS FOR 6215-600-078-10 ON Fig.24

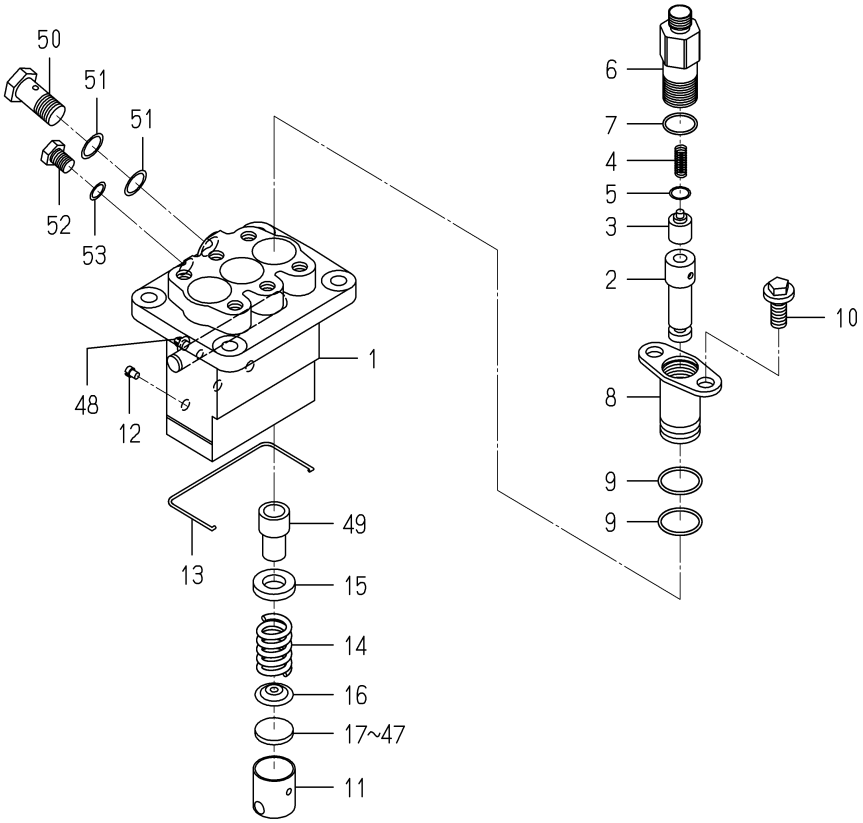

6215-600-078-1H

KEY	PART CODE	DESCRIPTION	SPC	TYPE OF MODEL E3CD VTB10		ITC	COL	GRP	REMARKS
31	6215-629-042-00	PLATE/T=3.30	*	1					
32	6215-629-043-00	PLATE/T=3.35	*	3 -147382					
32	6215-629-043-00	PLATE/T=3.35	*	1 147383-					
33	6215-629-044-00	PLATE/T=3.40	*	1					
34	6215-629-045-00	PLATE/T=3.45	*	1					
35	6215-629-046-00	PLATE/T=3.50	*	1					
36	6215-629-047-00	PLATE/T=3.55	*	1					
37	6215-629-048-00	PLATE/T=3.60	*	1					
38	6215-629-049-00	PLATE/T=3.65	*	1					
39	6215-629-050-00	PLATE/T=3.70	*	1					
40	6215-629-051-00	PLATE/T=3.75	*	1					
41	6215-629-052-00	PLATE/T=3.80	*	1					
42	6215-629-053-00	PLATE/T=3.85	*	1					
43	6215-629-054-00	PLATE/T=3.90	*	1					
44	6215-629-055-00	PLATE/T=3.95	*	1					
45	6215-629-056-00	PLATE/T=4.00	*	1					
46	6215-629-058-00	PLATE/T=4.05	*	1					
47	6215-629-059-00	PLATE/T=4.10	*	1					
48	6215-637-004-00	CONTROLRACK	*	1					
49	6215-635-005-00	CONTROLSLEEVE	*	3					
50	6215-619-023-00	EYEBOLT	*	1					
51	6115-639-008-00	GASKET	*	2					
52	6215-619-024-00	BOLT	*	1					
53	6215-359-006-00	GASKET	*	1					

FIG. 33 COMPONENT PARTS FOR 6281-100-007-20 ON Fig.28

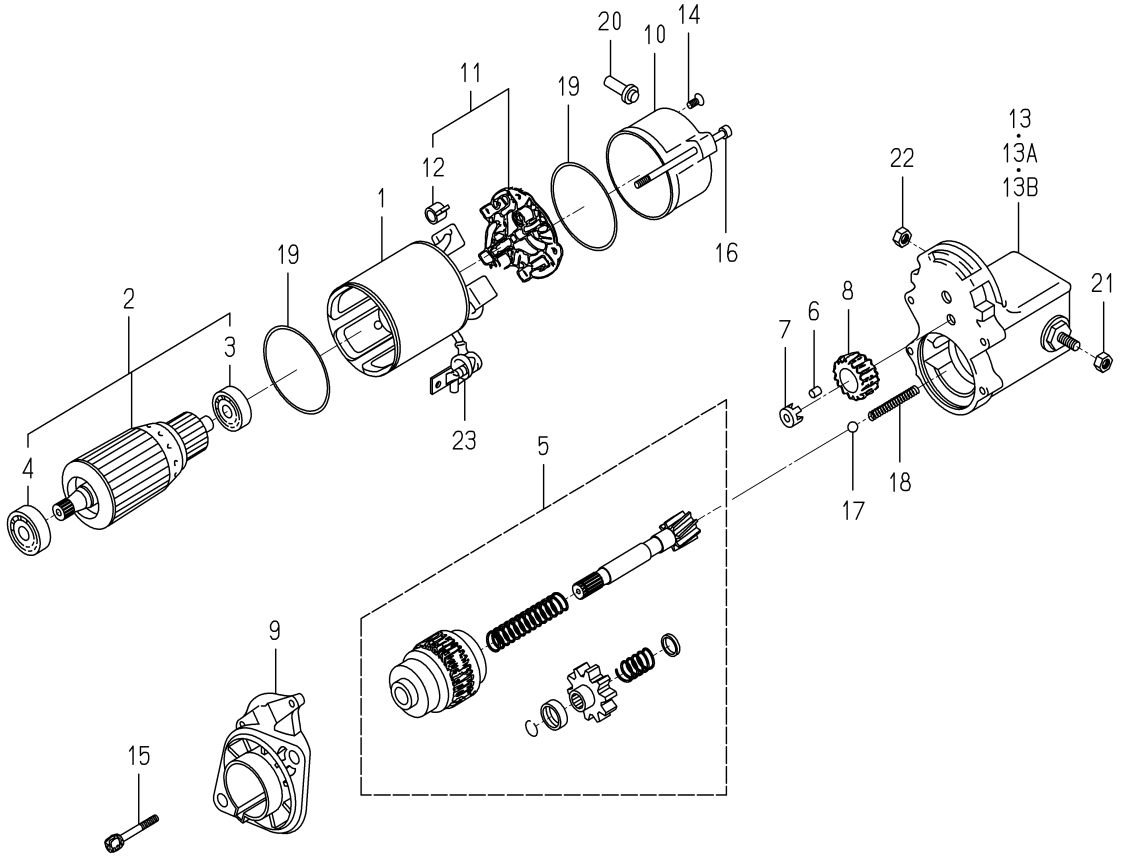

6281-100-007-2H

KEY	PART CODE	DESCRIPTION	SPC	TYPE OF MODEL E3CD VTB10		ITC	COL	GRP	REMARKS
1	6281-111-005-00	YOKE/STARTER ASSY	*	1					
2	6281-121-006-00	ARMATURE/STARTE ASSY	*	1					
3	6281-129-038-00	BEARING	*	1					
4	6281-129-039-00	BEARING	*	1					
5	6281-124-007-10	CLUTCH/STARTER ASSY	*	1					
6	6581-129-099-00	RORA	*	5					
7	6281-129-040-00	RETAINER	*	1					
8	6281-123-005-00	PINION/STARTER	*	1					
9	6281-129-045-10	HOUSING/STARTER ASSY	*	1					
10	6281-115-011-00	FRAME/STARTEREND	*	1					
11	6281-116-004-00	HOLDER/STARTER ASSY	*	1					
12	6581-117-007-00	SPRING,BRUSH	*	4					
13	6281-151-017-10	SWITCH/MAGNETIC ASSY	*	1 -152046					
13A	6281-151-020-00	SWITCH/MAGNETIC ASSY	*	1 -153398					
13B	6281-151-023-00	SWITCH/MAGNETIC ASSY	*	1 153399-					
14	6281-129-062-00	SCREW	*	2					
15	6281-129-042-00	BOLT/WS	*	2					
16	6281-129-043-00	BOLT/THROUGH	*	2					
17	6581-129-092-00	BALL	*	1					
18	6281-129-044-00	SPRING/RETURN	*	1					
19	6281-129-003-00	O-RING	*	2					
20	6281-115-016-00	BUSHING/DRAIN	*	1					
21	6909-111-508-00	NUT	*	1					
22	6281-229-041-00	NUT	*	1					
23	6281-115-010-00	COVER	*	1					

FIG. 34 COMPONENT PARTS FOR 6281-200-021-00 ON Fig.28

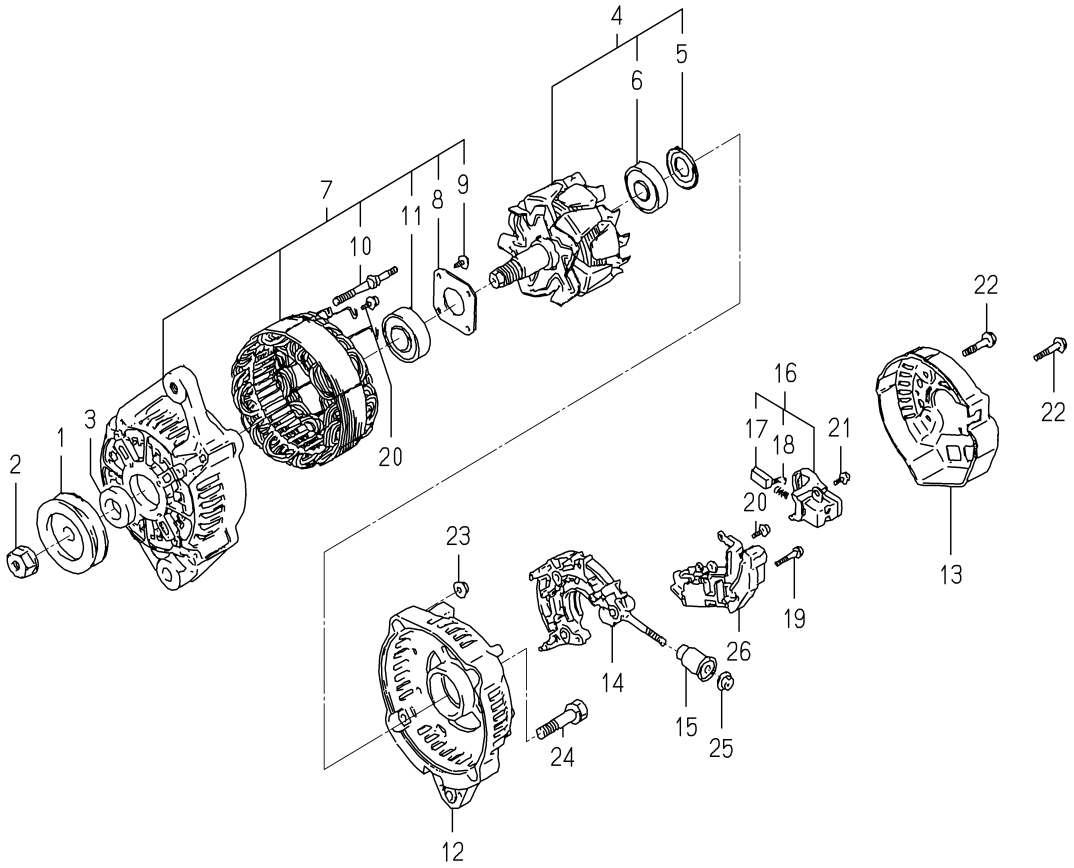

6281-200-021-0A

KEY	PART CODE	DESCRIPTION	SPC	TYPE OF MODEL E3CD VTB10		ITC	COL	GRP	REMARKS
1	6281-222-012-00	PULLEY	*	1					
2	6281-229-002-00	NUT	*	1					
3	6281-229-003-00	COLLOR	*	1					
4	6281-221-007-00	ROTOR ASSY	*	1					
5	6281-229-004-00	COVER,BEARING	*	1					
6	6281-229-032-00	BEARING/BALL	*	1					
7	6281-213-018-00	FRAME/DRIVEEND ASSY	*	1					
8	6281-229-006-00	PLATE	*	1					
9	6281-229-007-00	BOLT	*	4					
10	6281-229-008-00	BOLT	*	2					
11	6281-229-033-00	BEARING/BALL	*	1					
12	6281-214-003-00	FRAME	*	1					
13	6281-214-004-00	COVER	*	1					
14	6281-229-029-00	HOLDER ASSY	*	1					
15	6281-229-011-00	BUSH	*	1					
16	6281-217-002-00	HOLDER/BRUSH ASSY	*	1					
17	6281-215-001-00	BRUSH	*	2					
18	6281-216-001-00	SPRING	*	2					
19	6281-229-012-00	BOLT	*	2					
20	6281-229-013-00	BOLT	*	6					
21	6281-229-014-00	BOLT	*	1					
22	6281-229-015-00	BOLT	*	3					
23	6281-229-016-00	NUT	*	2					
24	6281-229-017-00	BOLT	*	2					
25	6281-229-018-00	NUT	*	1					
26	6281-271-002-00	REGULATOR ASSY	*	1					

C H A S S I S

FIG. 1 RADIATOR SYSTEM (S TYPE)(1/2)

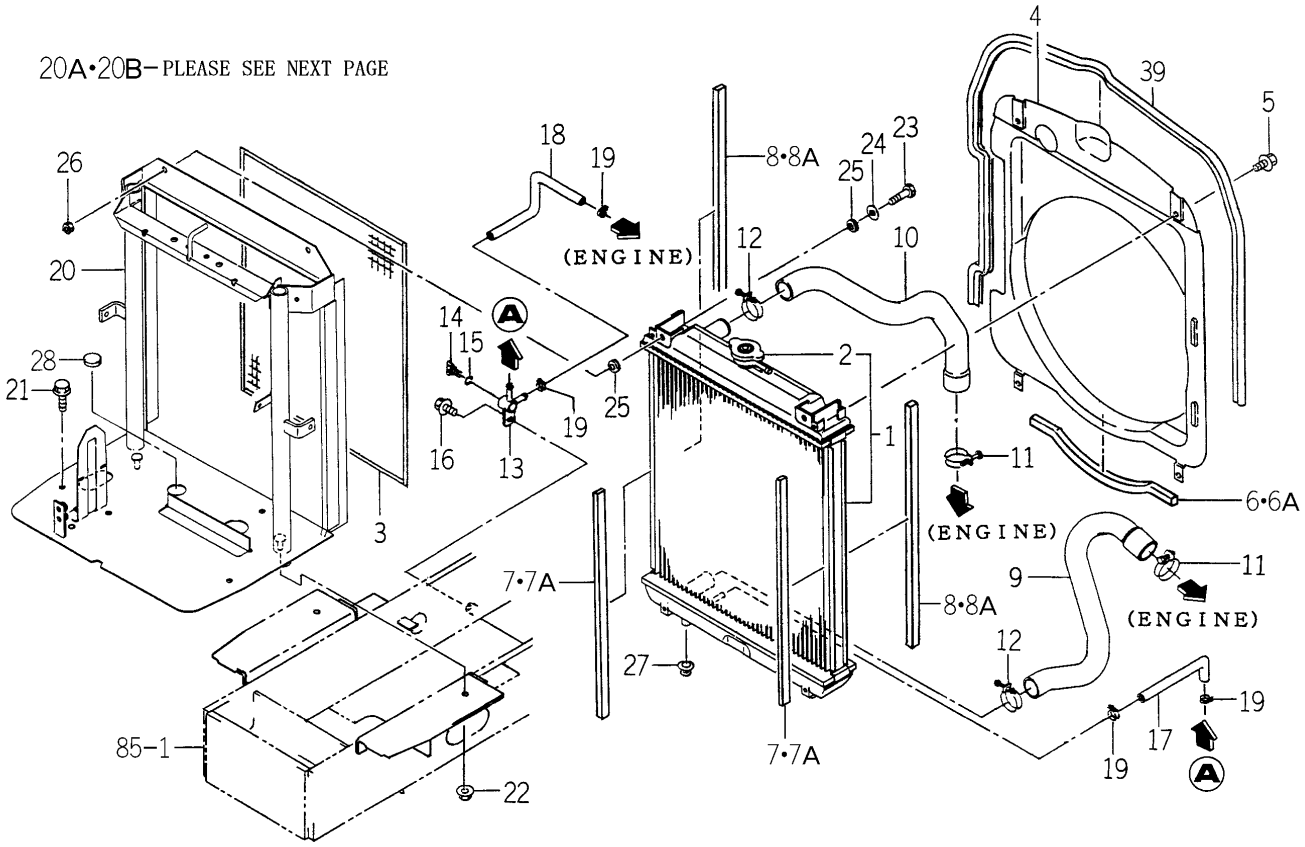

1746-102 -0100

KEY	PART CODE	DESCRIPTION	SPC	TYPE OF MODEL TG5330 E4	TG5330 E6	TG5390 E4	TG5390 E6	ITC	COL	GRP	REMARKS
1	1742-102-210-00	RADIATOR ASSY	*	1		1					
2	1650-102-202-10	CAP	*	1		1					
3	1650-102-004-00	NET	*	1		1					
4	1729-102-009-10	SHROUD	*	1		1					
5	V230-360-601-20	FLANGEBOLT	*	4		4					
6	1650-102-006-00	INSULATOR	*	1 -75		1 -242					
6A	1650-102-006-10	INSULATOR	*	1 76-		1 243-		1			
7	1650-102-007-00	INSULATOR	*	2 -70		2 -232					
7A	1650-102-007-10	INSULATOR	*	2 71-		2 233-		1			
8	1729-102-014-00	INSULATOR	*	2 -27		2 -155					
8A	1729-102-014-10	INSULATOR	*	2 28-		2 156-		1			
9	1729-102-015-00	HOSE/RADIATOR/OUTLET	*	1		1					
10	1729-102-002-00	HOSE/RADIATOR/INLET	*	1		1					
11	J061-236-044-00	CLAMP/WIRE/36-44	*	2		2					
12	J061-230-038-00	CLAMP/WIRE/30-38	*	2		2					
13	1560-104-010-40	CONNECTOR	*	1		1					
14	1424-101-203-00	PLUG	*	1		1					
15	1424-101-204-00	PACKING	*	1		1					
16	V231-360-801-60	FLANGEBOLT	*	1		1					
17	1593-102-003-20	HOSE/270	*	1		1					
18	1488-102-001-00	HOSE,DRAIN	*	1		1					
19	J062-147-159-00	CLIP/HOSE/14.7-15.9	*	4		4					
20	1729-102-210-30	BRACKET/RADIATO COMP	*	1 -54		1 -136					
20A	1729-102-500-30	BRACKET/RADIATOR/CY	*	1 -451		1 -803					
20B	1729-102-500-40	BRACKET/RADIATOR/CY	*	1 452-		1 804-		1			
21	V231-360-801-60	FLANGEBOLT	*	1		1					
22	V362-260-008-00	NUT/WASHER	*	2		2					
23	V201-260-802-50	BOLT/M 8X25	*	2		2					
24	4101-102-038-00	WASHER/24X9X3.2	*	2		2					
25	1423-616-004-00	CUSHION/RUBBER/10X25	*	4		4					

FIG. 1 RADIATOR SYSTEM (S TYPE)(2/2)

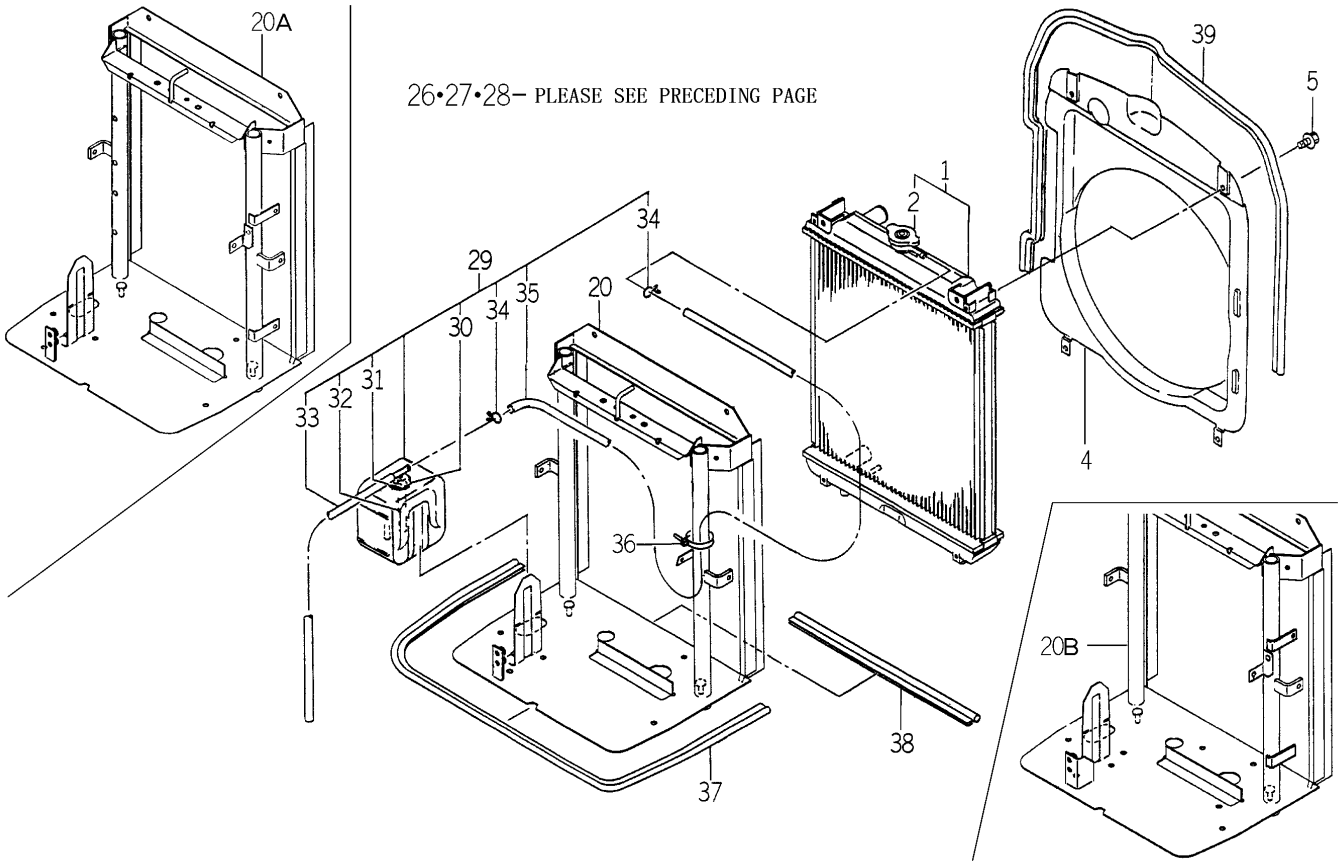

1746-102 -0100

KEY	PART CODE	DESCRIPTION	SPC	TYPE OF MODEL TG5330 E4	TG5330 E6	TG5390 E4	TG5390 E6	ITC	COL	GRP	REMARKS
26	1719-312-001-00	U-NUT	*	2		2					
27	1421-603-004-00	BUSH,LEVER	*	2		2					
28	1560-630-028-00	CAP/30	*	1		1					
29	1690-102-210-00	RESERVETANK ASSY	*	1		1					
30	1690-102-212-00	CAP	*	1		1					
31	1690-102-213-00	PACKING	*	1		1					
32	1690-102-214-00	HOSE/RUBBER	*	1		1					
33	1690-102-215-00	HOSE/RUBBER	*	1		1					
34	1690-102-216-00	CLUMP	*	2		2					
35	1690-102-217-00	HOSE/RUBBER	*	1		1					
36	1376-402-003-00	BAND,WIRE/140	*	2		2					
37	1729-102-011-00	TRIM/980	*	1		1					
38	1729-102-012-00	TRIM/420	*	1		1					
39	1729-102-013-10	TRIM/1430	*	1		1					

FIG. 2 RADIATOR SYSTEM(1/2)
(HE4 TYPE-No.1-/HE6 TYPE-TG5390E6-No.1-877)

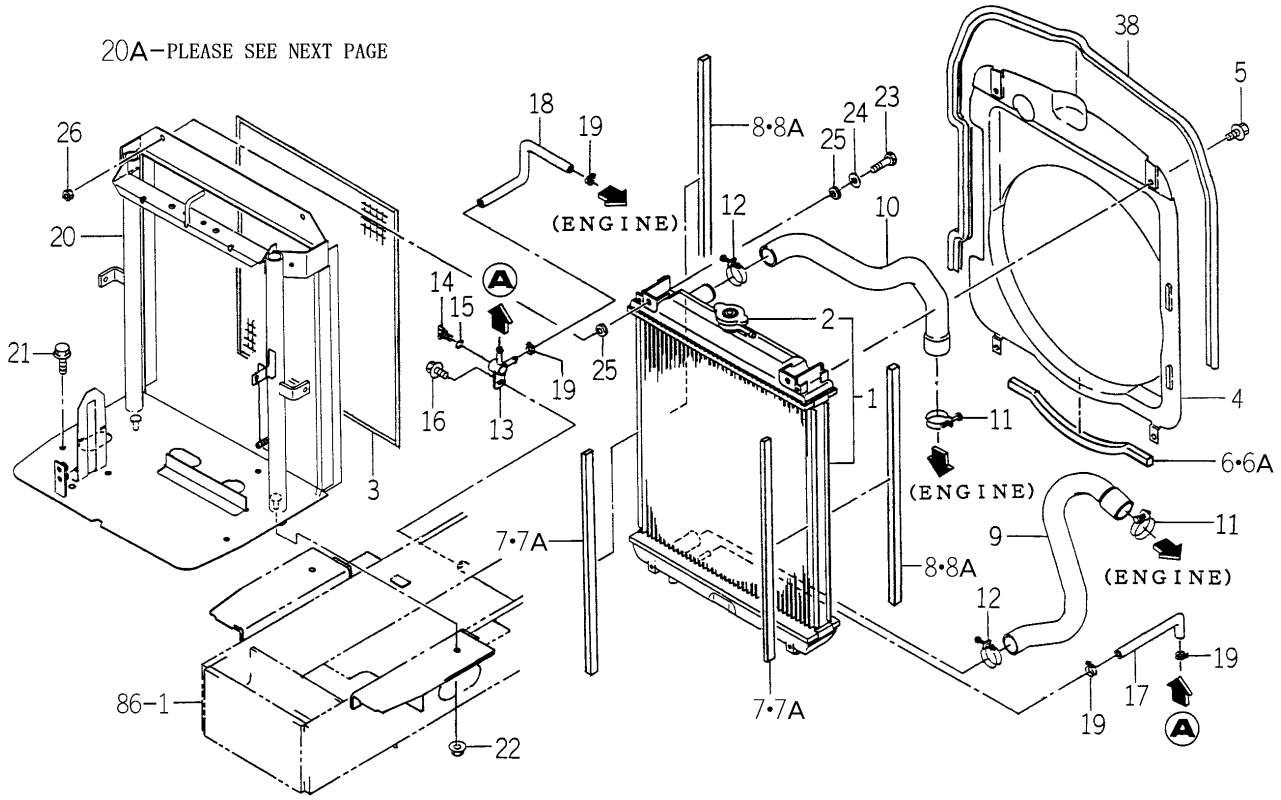

1747-102 -0100

KEY	PART CODE	DESCRIPTION	SPC	TYPE OF MODEL TG5330 E4	TG5330 E6	TG5390 E4	TG5390 E6	ITC	COL	GRP	REMARKS
1	1742-102-210-00	RADIATOR ASSY	*			1	1 -877				
2	1650-102-202-10	CAP	*			1	1 -877				
3	1650-102-004-00	NET	*			1	1 -877				
4	1729-102-009-10	SHROUD	*			1	1 -877				
5	V230-360-601-20	FLANGEBOLT	*			4	4 -877				
6	1650-102-006-00	INSULATOR	*			1 -242	1 -242				
6A	1650-102-006-10	INSULATOR	*			1 243-	1 -877	1			
7	1650-102-007-00	INSULATOR	*			2 -232	2 -232				
7A	1650-102-007-10	INSULATOR	*			2 233-	2 -877	1			
8	1729-102-014-00	INSULATOR	*			2 -155	2 -155				
8A	1729-102-014-10	INSULATOR	*			2 156-	2 -877	1			
9	1729-102-015-00	HOSE/RADIATOR/OUTLET	*			1	1 -877				
10	1729-102-002-00	HOSE/RADIATOR/INLET	*			1	1 -877				
11	J061-236-044-00	CLAMP/WIRE/36-44	*			2	2 -877				
12	J061-230-038-00	CLAMP/WIRE/30-38	*			2	2 -877				
13	1560-104-010-40	CONNECTOR	*			1	1 -877				
14	1424-101-203-00	PLUG	*			1	1 -877				
15	1424-101-204-00	PACKING	*			1	1 -877				
16	V231-360-801-60	FLANGEBOLT	*			1	1 -877				
17	1593-102-003-20	HOSE/270	*			1	1 -877				
18	1488-102-001-00	HOSE,DRAIN	*			1	1 -877				
19	J062-147-159-00	CLIP/HOSE/14.7-15.9	*			4	4 -877				
20	1747-102-700-00	BRACKET/RADIATOR/HST	*			1 -823	1 -823				
20A	1747-102-700-10	BRACKET/RADIATOR/HST	*			1 824-	1 -877	1			
21	V231-360-801-60	FLANGEBOLT	*			1	1 -877				
22	V362-260-008-00	NUT/WASHER	*			2	2 -877				
23	V201-260-802-50	BOLT/M 8X25	*			2	2 -877				
24	4101-102-038-00	WASHER/24X9X3.2	*			2	2 -877				
25	1423-616-004-00	CUSHION/RUBBER/10X25	*			4	4 -877				
26	1719-312-001-00	U-NUT	*			2	2 -877				

FIG. 2 RADIATOR SYSTEM(2/2)
(HE4 TYPE-No.1-/HE6 TYPE-TG5390E6-No.1-877)

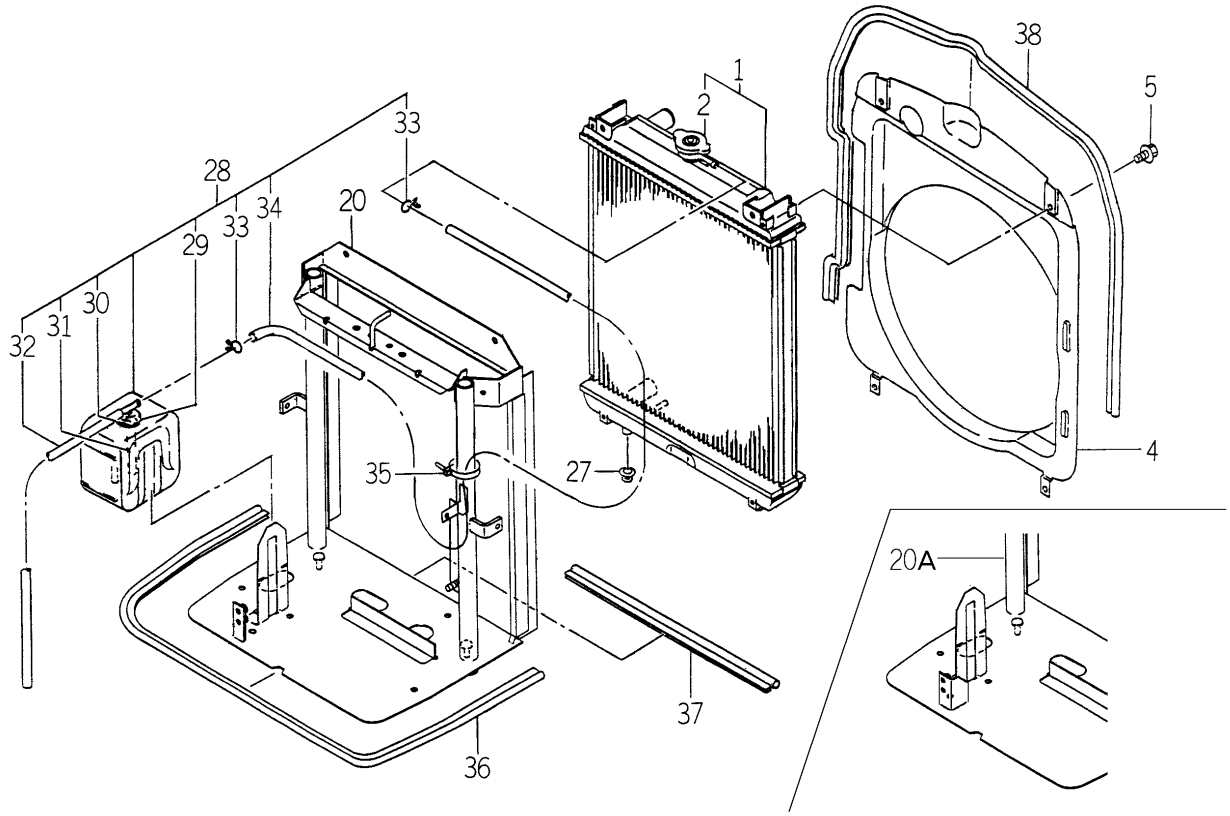

1747-102 -0100

KEY	PART CODE	DESCRIPTION	SPC	TYPE OF MODEL TG5330 E4	TG5330 E6	TG5390 E4	TG5390 E6	ITC	COL	GRP	REMARKS
27	1421-603-004-00	BUSH,LEVER	*			2	2 -877				
28	1690-102-210-00	RESERVETANK ASSY	*			1	1 -877				
29	1690-102-212-00	CAP	*			1	1 -877				
30	1690-102-213-00	PACKING	*			1	1 -877				
31	1690-102-214-00	HOSE/RUBBER	*			1	1 -877				
32	1690-102-215-00	HOSE/RUBBER	*			1	1 -877				
33	1690-102-216-00	CLUMP	*			2	2 -877				
34	1690-102-217-00	HOSE/RUBBER	*			1	1 -877				
35	1376-402-003-00	BAND,WIRE/140	*			2	2 -877				
36	1729-102-011-00	TRIM/980	*			1	1 -877				
37	1729-102-012-00	TRIM/420	*			1	1 -877				
38	1729-102-013-10	TRIM/1430	*			1	1 -877				

FIG. 3 RADIATOR SYSTEM (P,Q TYPE)(1/2)

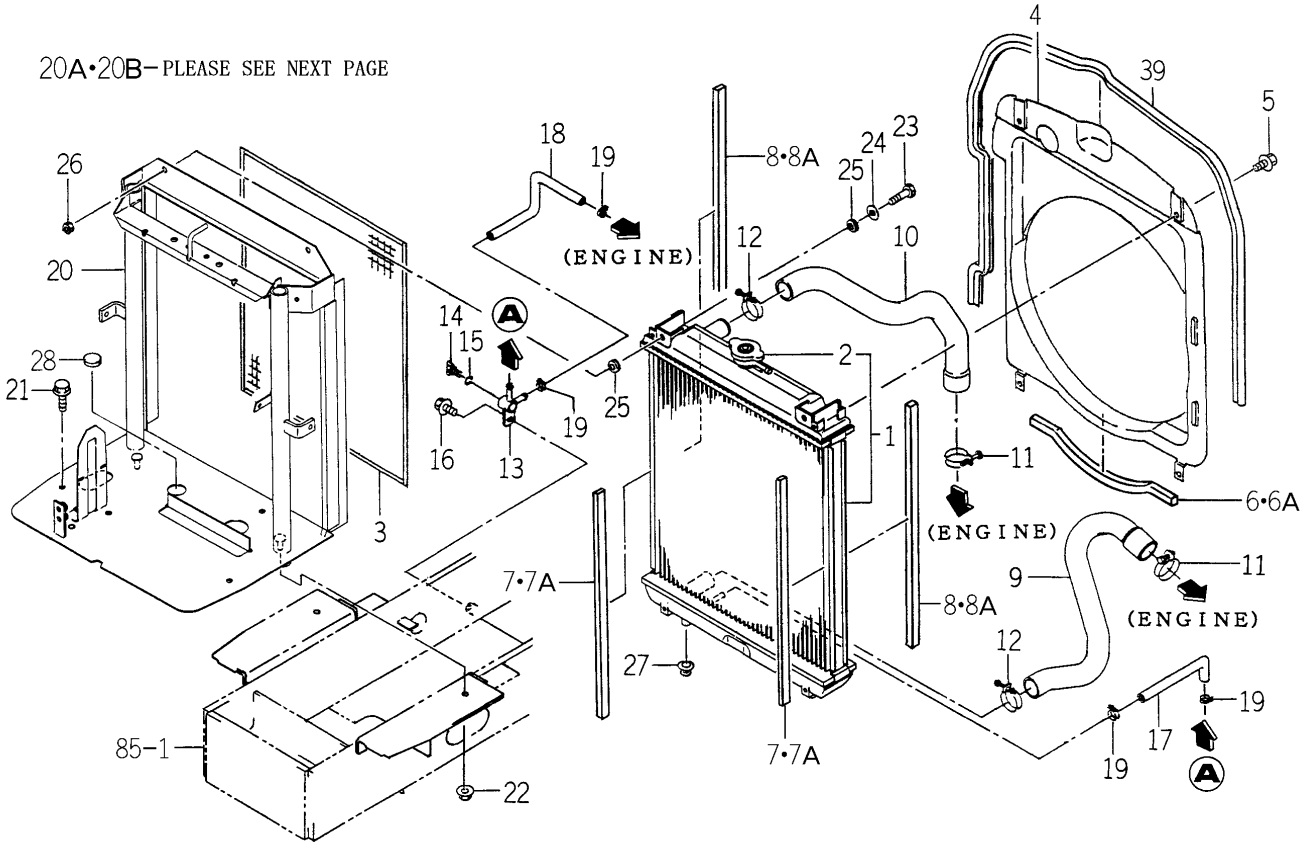

1746-102B-0100

KEY	PART CODE	DESCRIPTION	SPC	TYPE OF MODEL TG5330 E4	TG5330 E6	TG5390 E4	TG5390 E6	ITC	COL	GRP	REMARKS
1	1742-102-210-00	RADIATOR ASSY	*	1	1	1	1				
2	1650-102-202-10	CAP	*	1	1	1	1				
3	1650-102-004-00	NET	*	1	1	1	1				
4	1742-102-006-00	SHROUD/PQ	*	1	1	1	1				
5	V230-360-601-20	FLANGEBOLT	*	4	4	4	4				
6	1650-102-006-00	INSULATOR	*	1 -75	1 -75	1 -242	1 -242				
6A	1650-102-006-10	INSULATOR	*	1 76-	1 76-	1 243-	1 243-	1			
7	1650-102-007-00	INSULATOR	*	2 -70	2 -70	2 -232	2 -232				
7A	1650-102-007-10	INSULATOR	*	2 71-	2 71-	2 233-	2 233-	1			
8	1729-102-014-00	INSULATOR	*	2 -27	2 -27	2 -155	2 -155				
8A	1729-102-014-10	INSULATOR	*	2 28-	2 28-	2 156-	2 156-	1			
9	1729-102-015-00	HOSE/RADIATOR/OUTLET	*	1	1	1	1				
10	1729-102-002-00	HOSE/RADIATOR/INLET	*	1	1	1	1				
11	J061-236-044-00	CLAMP/WIRE/36-44	*	2	2	2	2				
12	J061-230-038-00	CLAMP/WIRE/30-38	*	2	2	2	2				
13	1560-104-010-40	CONNECTOR	*	1	1	1	1				
14	1424-101-203-00	PLUG	*	1	1	1	1				
15	1424-101-204-00	PACKING	*	1	1	1	1				
16	V231-360-801-60	FLANGEBOLT	*	1	1	1	1				
17	1593-102-003-20	HOSE/270	*	1	1	1	1				
18	1488-102-001-00	HOSE,DRAIN	*	1	1	1	1				
19	J062-147-159-00	CLIP/HOSE/14.7-15.9	*	4	4	4	4				
20	1729-102-210-30	BRACKET/RADIATO COMP	*	1 -54	1 -54	1 -114	1 -114				
20A	1729-102-500-30	BRACKET/RADIATOR/CY	*	1 -451	1 -451	1 -803	1 -803				
20B	1729-102-500-40	BRACKET/RADIATOR/CY	*	1 452-	1 452-	1 804-	1 804-	1			
21	V231-360-801-60	FLANGEBOLT	*	1	1	1	1				
22	V362-260-008-00	NUT/WASHER	*	2	2	2	2				
23	V201-260-802-50	BOLT/M 8X25	*	2	2	2	2				
24	4101-102-038-00	WASHER/24X9X3.2	*	2	2	2	2				
25	1423-616-004-00	CUSHION/RUBBER/10X25	*	4	4	4	4				

FIG. 3 RADIATOR SYSTEM (P,Q TYPE)(2/2)

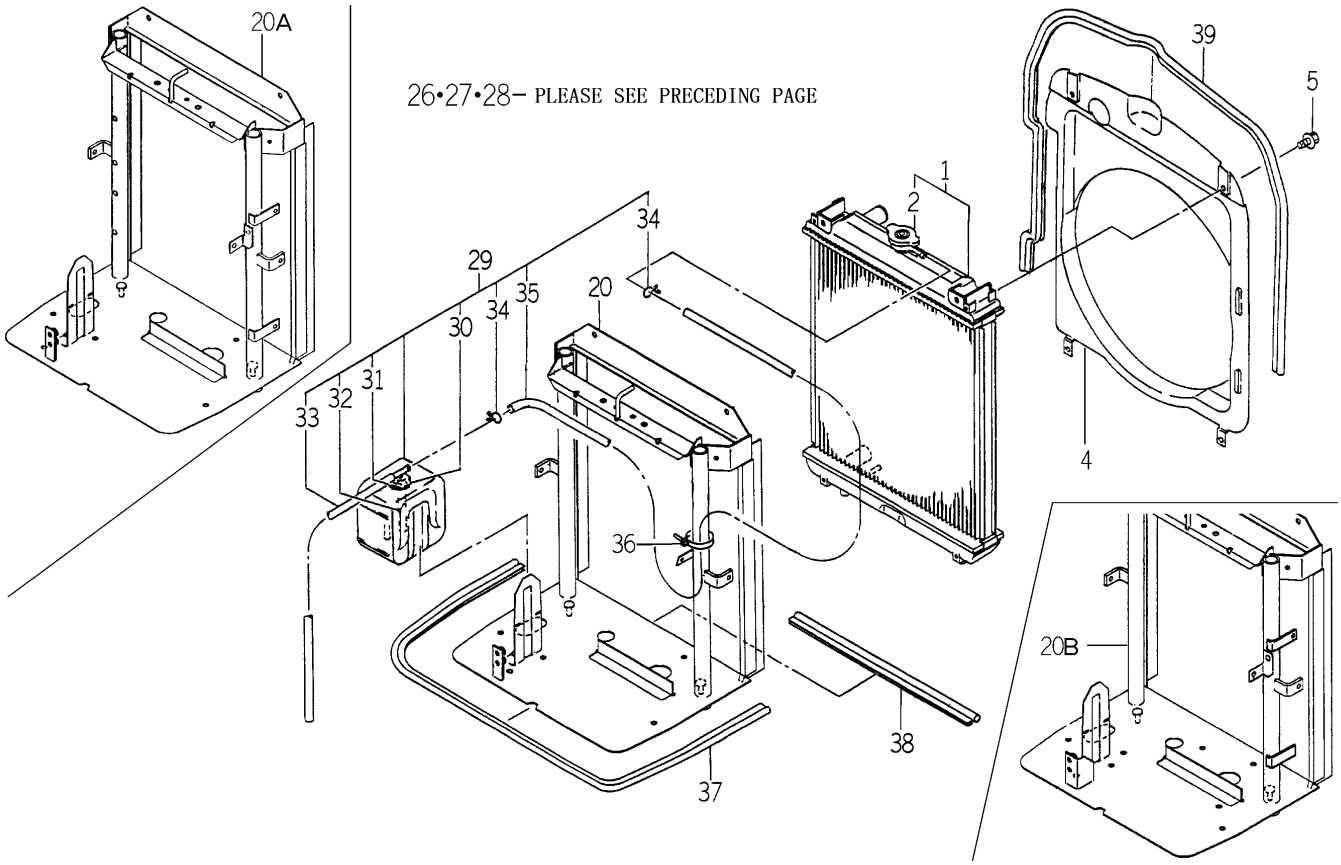

1746-102B-0100

KEY	PART CODE	DESCRIPTION	SPC	TYPE OF MODEL TG5330 E4	TG5330 E6	TG5390 E4	TG5390 E6	ITC	COL	GRP	REMARKS
26	1719-312-001-00	U-NUT	*	2	2	2	2				
27	1421-603-004-00	BUSH,LEVER	*	2	2	2	2				
28	1560-630-028-00	CAP/30	*	1	1	1	1				
29	1690-102-210-00	RESERVETANK ASSY	*	1	1	1	1				
30	1690-102-212-00	CAP	*	1	1	1	1				
31	1690-102-213-00	PACKING	*	1	1	1	1				
32	1690-102-214-00	HOSE/RUBBER	*	1	1	1	1				
33	1690-102-215-00	HOSE/RUBBER	*	1	1	1	1				
34	1690-102-216-00	CLUMP	*	2	2	2	2				
35	1690-102-217-00	HOSE/RUBBER	*	1	1	1	1				
36	1376-402-003-00	BAND,WIRE/140	*	2	2	2	2				
37	1729-102-011-00	TRIM/980	*	1	1	1	1				
38	1729-102-012-00	TRIM/420	*	1	1	1	1				
39	1729-102-013-10	TRIM/1430	*	1	1	1	1				

FIG. 4 RADIATOR SYSTEM(1/2)
(HE6 TYPE-TG5390E6-No.878-)

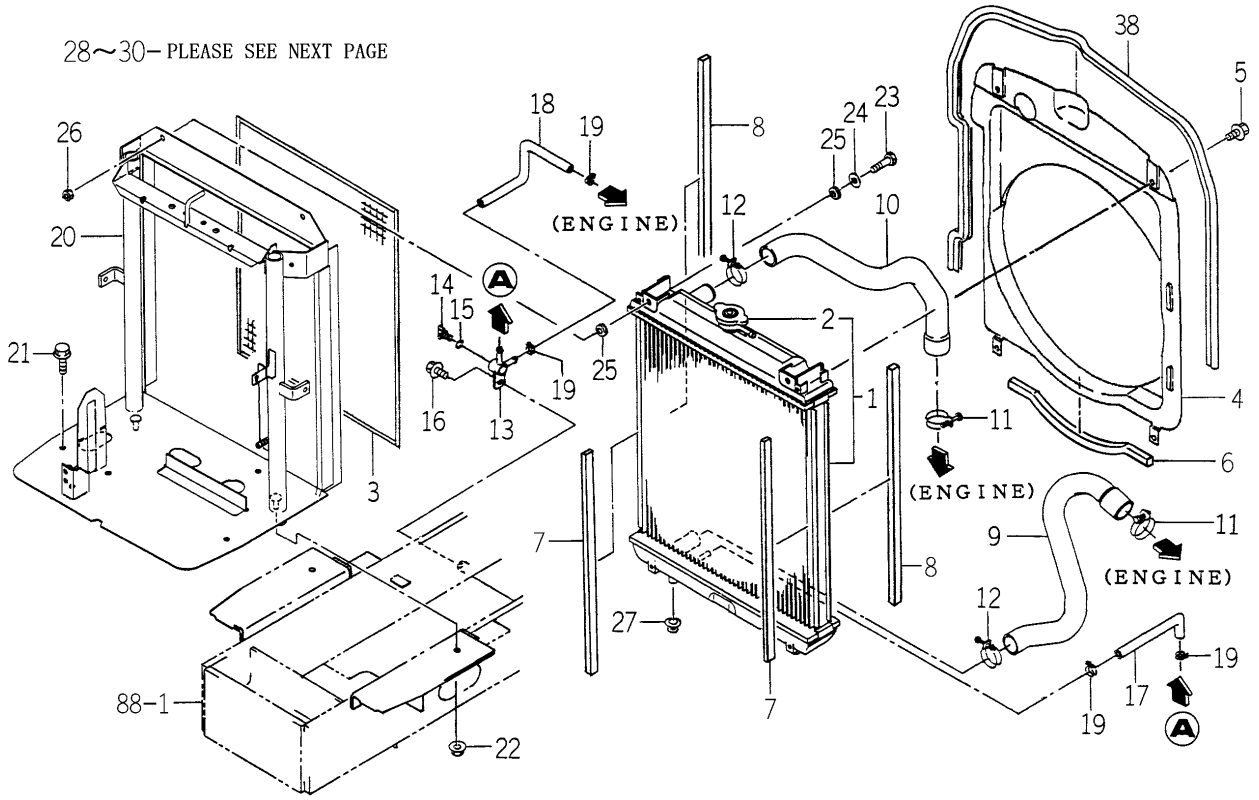

1747-102B-0100

KEY	PART CODE	DESCRIPTION	SPC	TYPE OF MODEL TG5330 E4	TG5330 E6	TG5390 E4	TG5390 E6	ITC	COL	GRP	REMARKS
1	1742-102-210-00	RADIATOR ASSY	*				1 878-				
2	1650-102-202-10	CAP	*				1 878-				
3	1650-102-004-00	NET	*				1 878-				
4	1742-102-006-00	SHROUD/PQ	*				1 878-				
5	V230-360-601-20	FLANGEBOLT	*				4 878-				
6	1650-102-006-10	INSULATOR	*				1 878-				
7	1650-102-007-10	INSULATOR	*				2 878-				
8	1729-102-014-10	INSULATOR	*				2 878-				
9	1729-102-015-00	HOSE/RADIATOR/OUTLET	*				1 878-				
10	1729-102-002-00	HOSE/RADIATOR/INLET	*				1 878-				
11	J061-236-044-00	CLAMP/WIRE/36-44	*				2 878-				
12	J061-230-038-00	CLAMP/WIRE/30-38	*				2 878-				
13	1560-104-010-40	CONNECTOR	*				1 878-				
14	1424-101-203-00	PLUG	*				1 878-				
15	1424-101-204-00	PACKING	*				1 878-				
16	V231-360-801-60	FLANGEBOLT	*				1 878-				
17	1593-102-003-20	HOSE/270	*				1 878-				
18	1488-102-001-00	HOSE,DRAIN	*				1 878-				
19	J062-147-159-00	CLIP/HOSE/14.7-15.9	*				4 878-				
20	1747-102-700-10	BRACKET/RADIATOR/HST	*				1 878-				
21	V231-360-801-60	FLANGEBOLT	*				1 878-				
22	V362-260-008-00	NUT/WASHER	*				2 878-				
23	V201-260-802-50	BOLT/M 8X25	*				2 878-				
24	4101-102-038-00	WASHER/24X9X3.2	*				2 878-				
25	1423-616-004-00	CUSHION/RUBBER/10X25	*				4 878-				
26	1719-312-001-00	U-NUT	*				2 878-				
27	1421-603-004-00	BUSH,LEVER	*				2 878-				
28	1690-102-210-00	RESERVETANK ASSY	*				1 878-				
29	1690-102-212-00	CAP	*				1 878-				
30	1690-102-213-00	PACKING	*				1 878-				

FIG. 4 RADIATOR SYSTEM(2/2)
(HE6 TYPE-TG5390E6-No.878-)

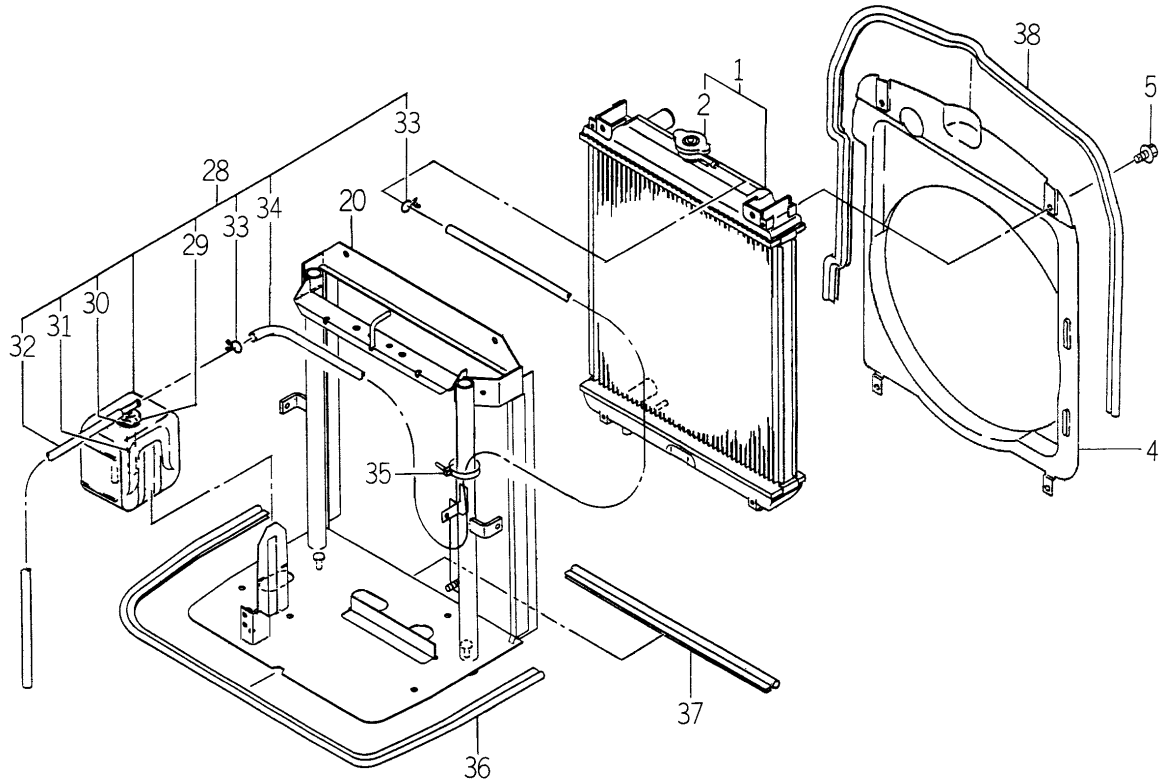

1747-102B-0100

KEY	PART CODE	DESCRIPTION	SPC	TYPE OF MODEL TG5330 E4	TG5330 E6	TG5390 E4	TG5390 E6	ITC	COL	GRP	REMARKS
31	1690-102-214-00	HOSE/RUBBER	*				1 878-				
32	1690-102-215-00	HOSE/RUBBER	*				1 878-				
33	1690-102-216-00	CLUMP	*				2 878-				
34	1690-102-217-00	HOSE/RUBBER	*				1 878-				
35	1376-402-003-00	BAND,WIRE/140	*				2 878-				
36	1729-102-011-00	TRIM/980	*				1 878-				
37	1729-102-012-00	TRIM/420	*				1 878-				
38	1729-102-013-10	TRIM/1430	*				1 878-				

FIG. 5 MUFFLER SYSTEM (TG5330)

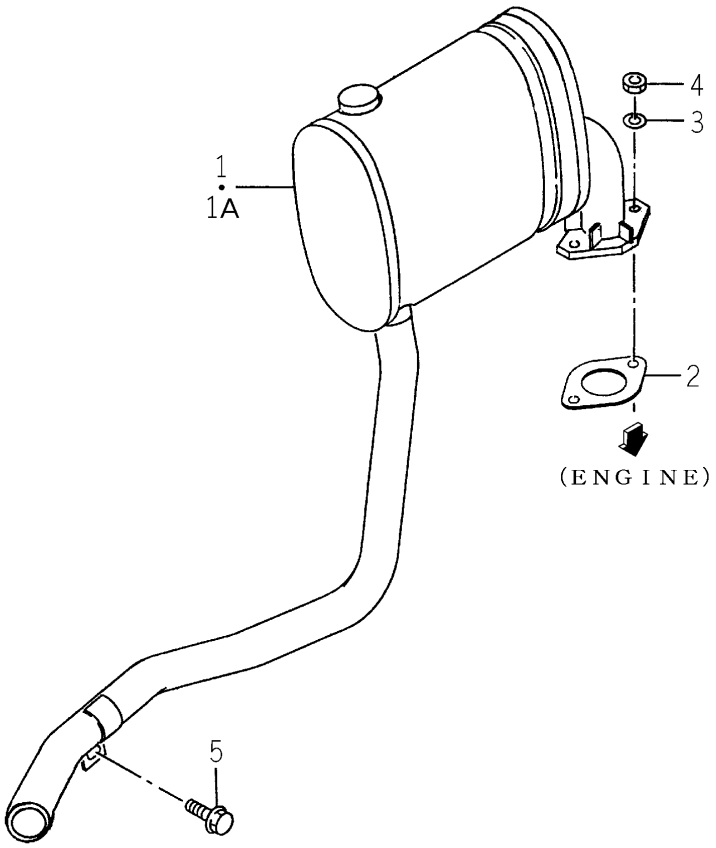

1742-103 -0100

KEY	PART CODE	DESCRIPTION	SPC	TYPE OF MODEL TG5330 E4	TG5330 E6	TG5390 E4	TG5390 E6	ITC	COL	GRP	REMARKS
1	1742-103-200-00	MUFFLER COMP	*	1 -805	1 -805						
1A	1742-103-200-10	MUFFLER COMP	*	1 806-	1 806-			1			
2	1596-105-001-00	GASKET	*	1	1						
3	V401-160-010-00	WASHER,SP/M10	*	2	2						
4	V330-700-010-00	NUT	*	2	2						
5	V231-361-002-50	FLANGEBOLT	*	1	1						

FIG. 6 MUFFLER SYSTEM (TG5390)

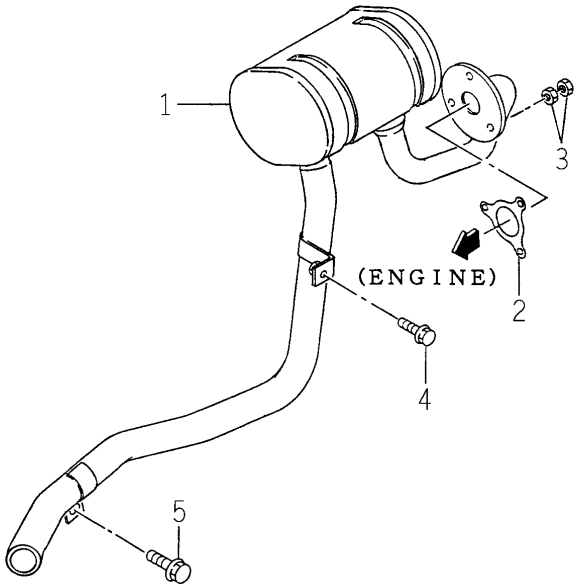

1743-103 -0100

KEY	PART CODE	DESCRIPTION	SPC	TYPE OF MODEL TG5330 E4	TG5330 E6	TG5390 E4	TG5390 E6	ITC	COL	GRP	REMARKS
1	1743-103-210-10	MUFFLER COMP	*			1	1	3			
2	3678-332-001-00	GASKET	*			1	1				
3	1544-103-004-00	NUT/M8	*			6	6				
4	V231-360-802-00	FLANGEBOLT	*			1	1				
5	V231-361-002-50	FLANGEBOLT	*			1	1				

FIG. 7 CLEANER (AIR) SYSTEM (TG5330-E4 TYPE)

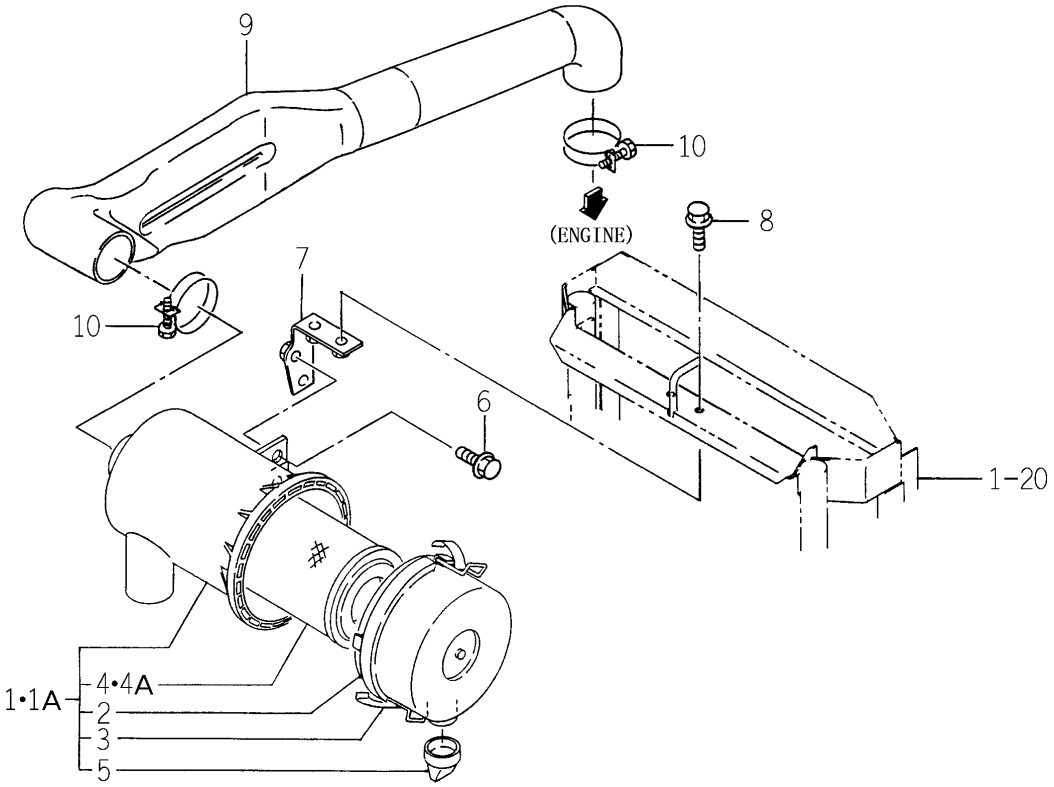

1729-104 -0100

KEY	PART CODE	DESCRIPTION	SPC	TYPE OF MODEL TG5330 E4	TG5330 E6	TG5390 E4	TG5390 E6	ITC	COL	GRP	REMARKS
1	1650-104-200-00	CLEANER AIR ASSY	*	1 -54							
1A	1650-104-200-10	CLEANER/AIR ASSY	*	1 55-				1			
2	1650-104-210-00	COVER ASSY	*	1							
3	1650-104-201-00	CLIP	*	2							
4	1650-104-203-00	ELEMENT ASSY	*	1 -54							
4A	1650-104-203-10	ELEMENT ASSY	*	1 55-				1			
5	1544-104-205-00	VALVE	*	1							
6	V231-360-802-00	FLANGEBOLT	*	2							
7	1729-104-210-10	BRACKET/CLEANER COMP	*	1							
8	V231-360-802-00	FLANGEBOLT	*	2							
9	1729-104-001-00	PIPE/INLET	*	1							
10	J061-249-060-00	CLAMP/WIRE/49-60	*	2							

FIG. 8 CLEANER (AIR) SYSTEM (TG5330-E6 TYPE)

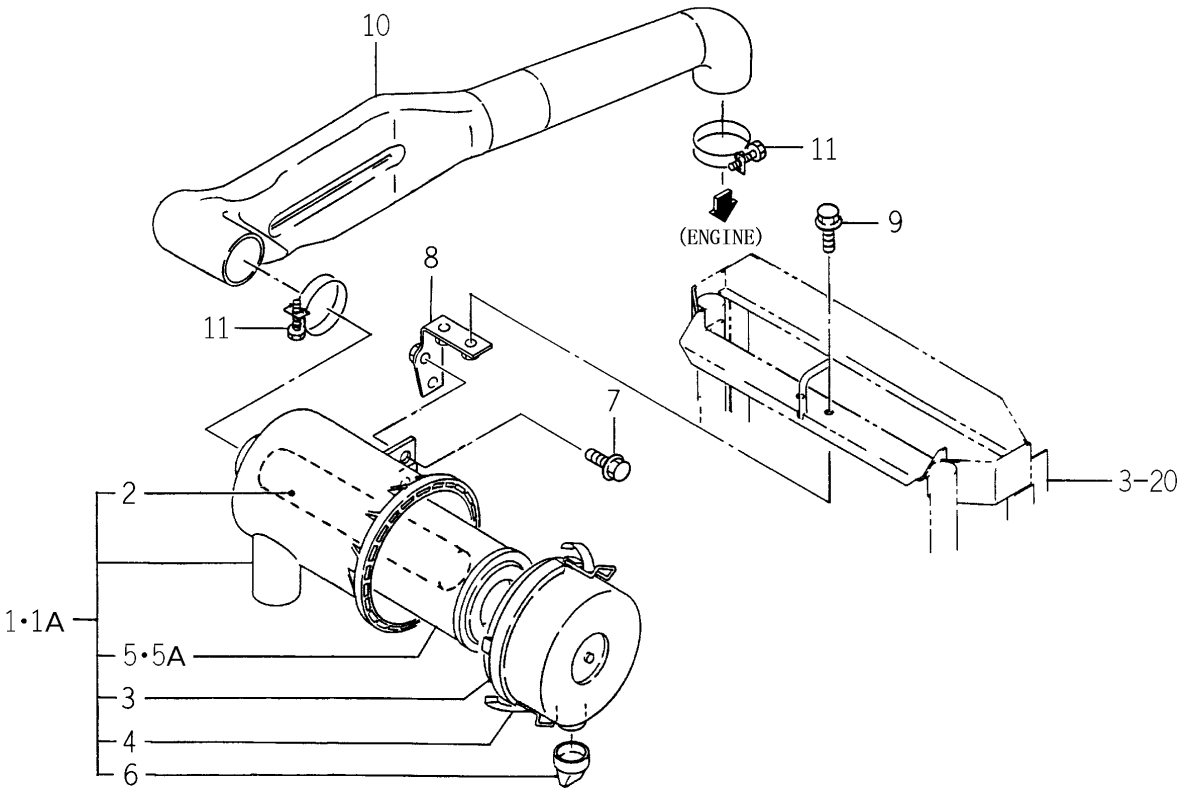

1742-104 -0100

KEY	PART CODE	DESCRIPTION	SPC	TYPE OF MODEL TG5330 E4	TG5330 E6	TG5390 E4	TG5390 E6	ITC	COL	GRP	REMARKS
1	1742-104-210-00	CLEANER/AIR/W ASSY	*		1 -60						
1A	1742-104-210-10	CLEANER/AIR/W ASSY	*		1 61-			1			
2	1742-104-211-00	ELEMENT/INNER ASSY	*		1						
3	1650-104-210-00	COVER ASSY	*		1						
4	1650-104-201-00	CLIP	*		2						
5	1650-104-203-00	ELEMENT ASSY	*		1 -54						
5A	1650-104-203-10	ELEMENT ASSY	*		1 55-			1			
6	1544-104-205-00	VALVE	*		1						
7	V231-360-802-00	FLANGEBOLT	*		2						
8	1729-104-210-10	BRACKET/CLEANER COMP	*		1						
9	V231-360-802-00	FLANGEBOLT	*		2						
10	1729-104-001-00	PIPE/INLET	*		1						
11	J061-249-060-00	CLAMP/WIRE/49-60	*		2						

FIG. 9 CLEANER (AIR) SYSTEM (TG5390-E6 TYPE)

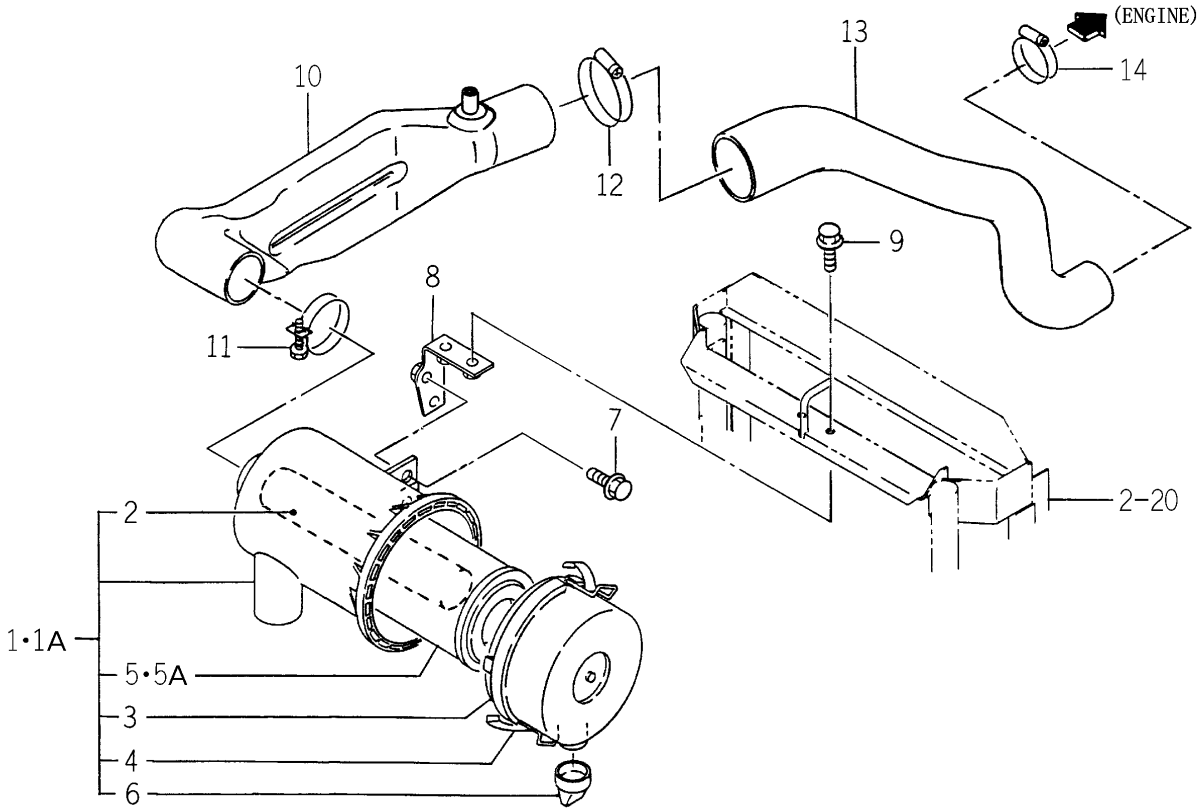

1743-104 -0100

KEY	PART CODE	DESCRIPTION	SPC	TYPE OF MODEL TG5330 E4	TG5330 E6	TG5390 E4	TG5390 E6	ITC	COL	GRP	REMARKS
1	1742-104-210-00	CLEANER/AIR/W ASSY	*				1 -152				
1A	1742-104-210-10	CLEANER/AIR/W ASSY	*				1 153-	1			
2	1742-104-211-00	ELEMENT/INNER ASSY	*				1				
3	1650-104-210-00	COVER ASSY	*				1				
4	1650-104-201-00	CLIP	*				2				
5	1650-104-203-00	ELEMENT ASSY	*				1 -103				
5A	1650-104-203-10	ELEMENT ASSY	*				1 104-	1			
6	1544-104-205-00	VALVE	*				1				
7	V231-360-802-00	FLANGEBOLT	*				2				
8	1729-104-210-10	BRACKET/CLEANER COMP	*				1				
9	V231-360-802-00	FLANGEBOLT	*				2				
10	1743-104-002-10	PIPE/INLET	*				1				
11	J061-249-060-00	CLAMP/WIRE/49-60	*				1				
12	J061-165-090-00	CLANP/WORM/65-90	*				1				
13	1743-104-001-00	HOSE/INLET	*				1				
14	J061-140-057-00	CLANP/WORM/40-57	*				1				

FIG. 10 CLEANER (AIR) SYSTEM (TG5390-E4 TYPE)

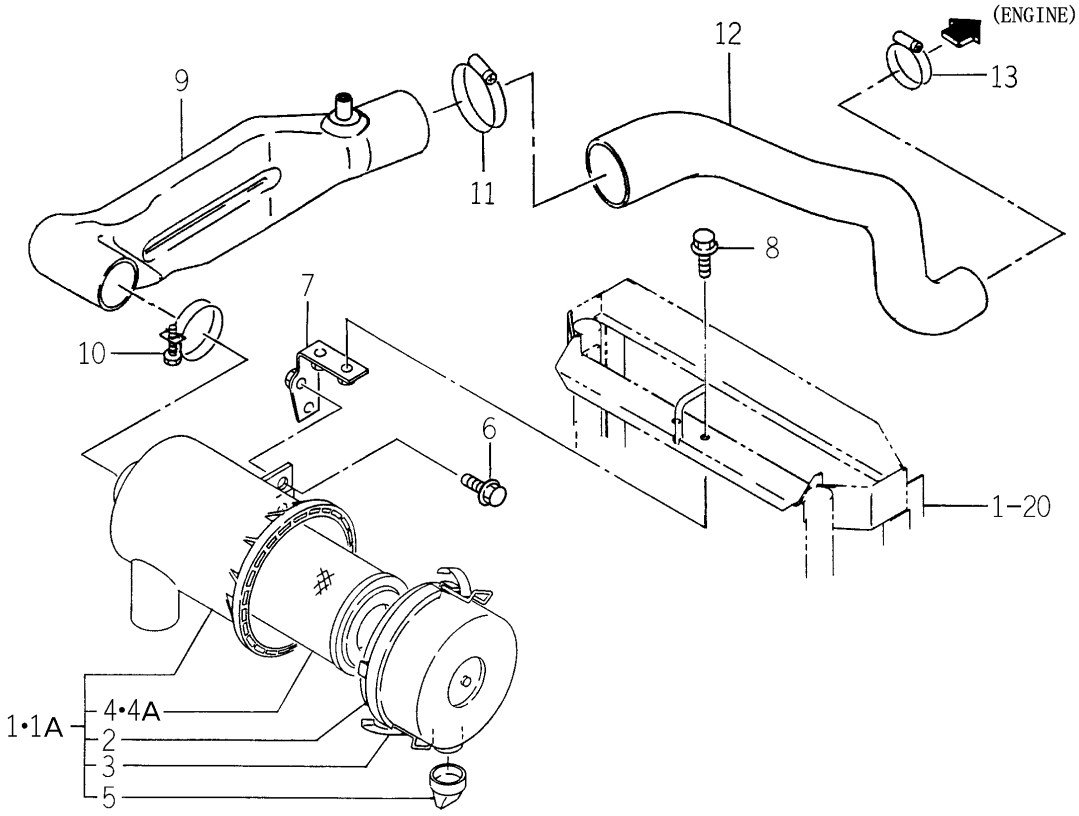

1747-104 -0100

KEY	PART CODE	DESCRIPTION	SPC	TYPE OF MODEL TG5330 E4	TG5330 E6	TG5390 E4	TG5390 E6	ITC	COL	GRP	REMARKS
1	1650-104-200-00	CLEANER AIR ASSY	*			1 -103					
1A	1650-104-200-10	CLEANER/AIR ASSY	*			1 104-		1			
2	1650-104-210-00	COVER ASSY	*			1					
3	1650-104-201-00	CLIP	*			2					
4	1650-104-203-00	ELEMENT ASSY	*			1 -103					
4A	1650-104-203-10	ELEMENT ASSY	*			1 104-		1			
5	1544-104-205-00	VALVE	*			1					
6	V231-360-802-00	FLANGEBOLT	*			2					
7	1729-104-210-10	BRACKET/CLEANER COMP	*			1					
8	V231-360-802-00	FLANGEBOLT	*			2					
9	1743-104-002-10	PIPE/INLET	*			1					
10	J061-249-060-00	CLAMP/WIRE/49-60	*			1					
11	J061-165-090-00	CLANP/WORM/65-90	*			1					
12	1743-104-001-00	HOSE/INLET	*			1					
13	J061-140-057-00	CLANP/WORM/40-57	*			1					

FIG. 11 TANK (FUEL) SYSTEM (TG5330-E6 TYPE)(1/2)

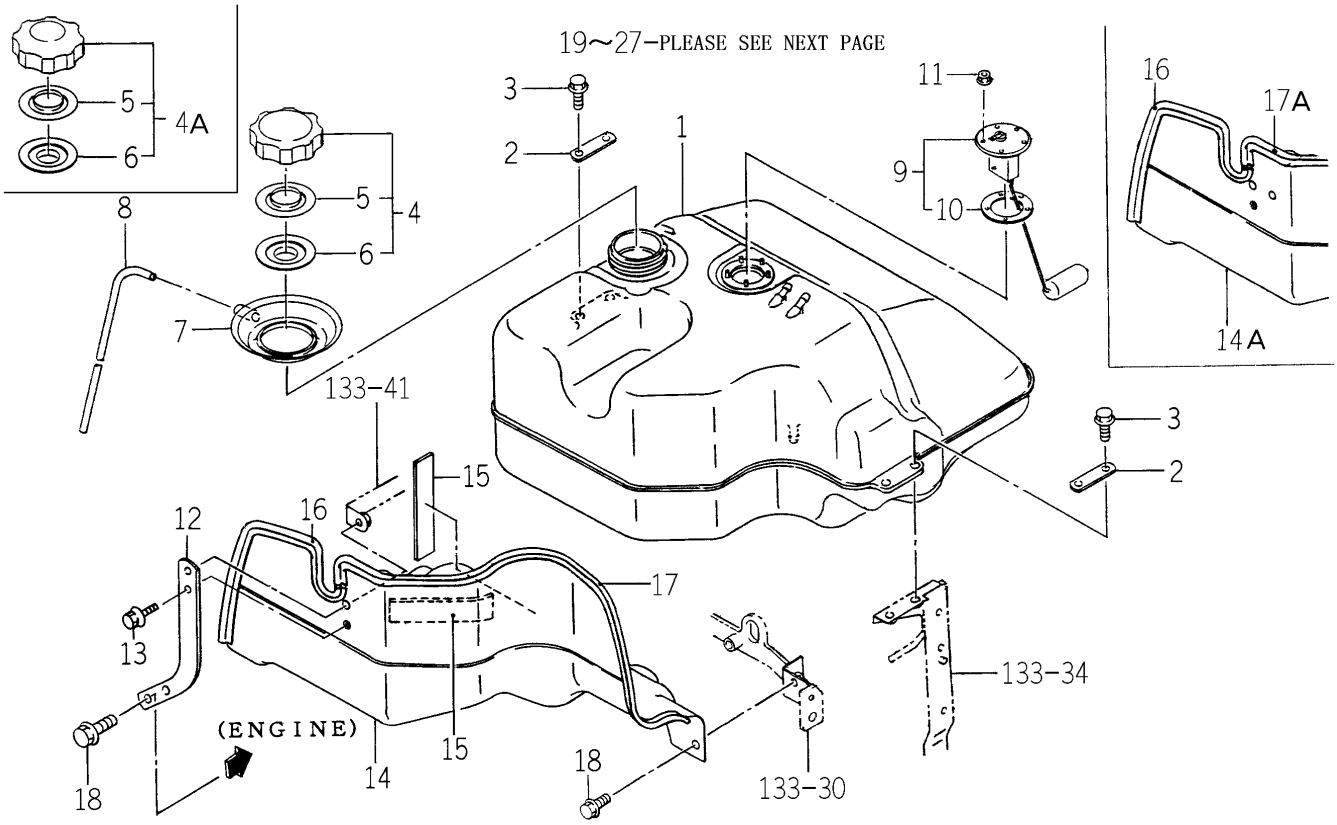

1742-111 -0100

KEY	PART CODE	DESCRIPTION	SPC	TYPE OF MODEL TG5330 E4	TG5330 E6	TG5390 E4	TG5390 E6	ITC	COL	GRP	REMARKS
1	1742-111-001-00	TANK/FUEL	*		1						
2	1729-111-007-00	PLATE/IR/19X65	*		2						
3	V231-360-802-00	FLANGEBOLT	*		4						
4	1742-111-220-00	CAP/TANK/NONLEA ASSY	*		1 -66						
4A	1729-111-280-10	CAP/TANK/NONLEA ASSY	*		1 67-						
5	1729-111-283-00	PLATE	*		1						
6	1729-111-284-00	PACKING	*		1						
7	1729-111-005-00	CUP/FUEL	*		1						
8	P103-112-003-20	HOSE/700	*		1						
9	1729-111-270-00	GAUGE/FUEL ASSY	*		1						
10	1416-621-037-00	PACKING/RUBBER	*		1						
11	1617-730-005-00	NUT/WASHER	*		5						
12	1742-111-002-00	BRACKET/TANK	*		1						
13	V231-361-002-00	FLANGEBOLT	*		2						
14	1742-111-210-10	COVER/TANK COMP	*		1 -18						
14A	1742-111-210-30	COVER/TANK COMP	*		1 19-			1			
15	1432-616-004-00	PLATE,RUBBER	*		2						
16	1614-102-006-00	INSULATOR	*		1						
17	3814-212-003-00	PAD/720	*		1 -57						
17A	3814-212-003-10	PAD/720	*		1 58-			1			
18	V231-360-802-00	FLANGEBOLT	*		3						
19	1614-105-200-00	FILTER ASSY	*		1						
20	1444-102-202-00	LEVER	*		1						
21	1415-102-007-00	SPRING,VALVE	*		1						
22	V720-102-401-00	O-RING/P10A	*		1						
23	1415-102-008-00	VIS	*		1						
24	1415-102-009-00	CUP	*		1						
25	1444-102-204-00	NUT,RING	*		1						
26	V720-103-504-40	O-RING/P44	*		1						
27	1672-105-211-00	ELEMENT	*		1						

FIG. 11 TANK (FUEL) SYSTEM (TG5330-E6 TYPE)(2/2)

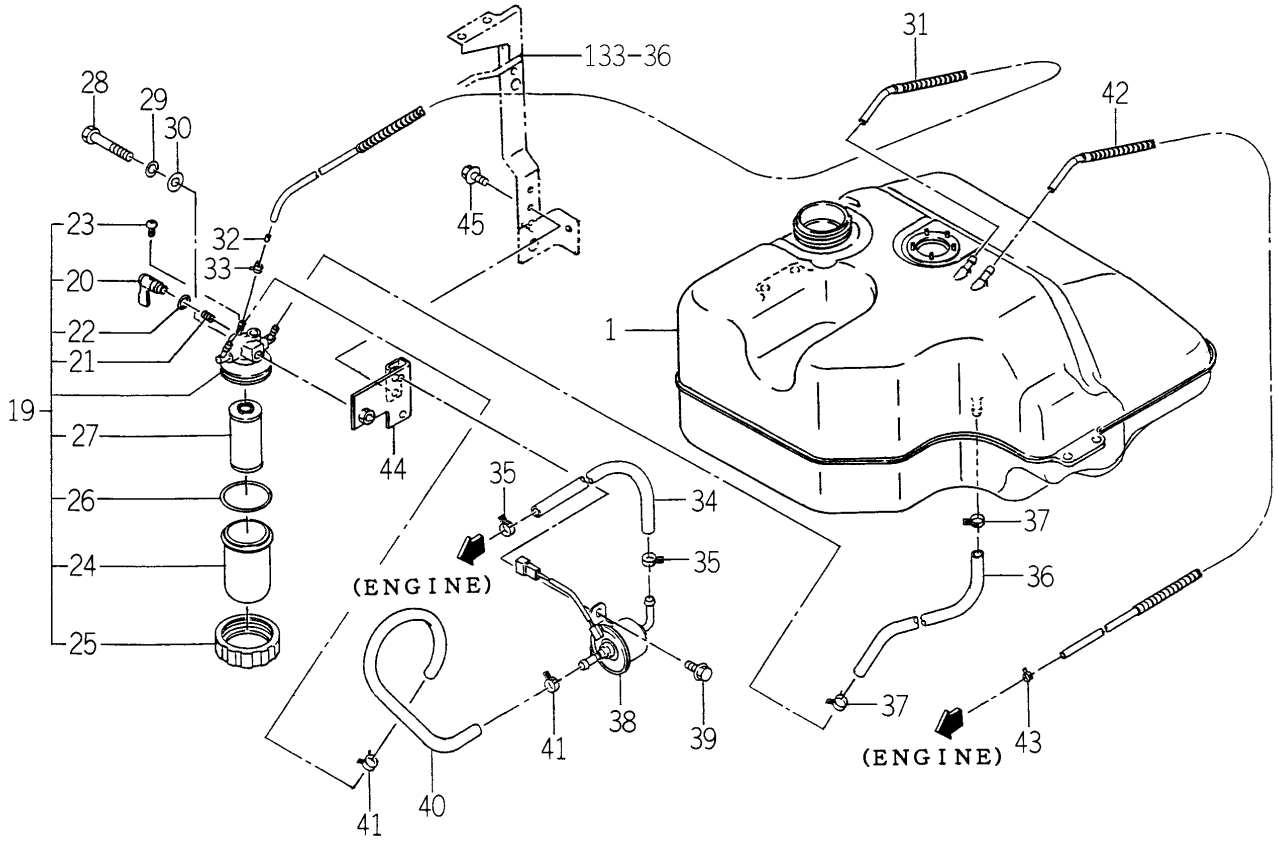

1742-111 -0100

KEY	PART CODE	DESCRIPTION	SPC	TYPE OF MODEL TG5330 E4	TG5330 E6	TG5390 E4	TG5390 E6	ITC	COL	GRP	REMARKS
28	V201-260-806-50	BOLT/M 8X65	*		1						
29	V401-160-008-00	WASHER,SP/M 8	*		1						
30	V411-260-008-00	WASHER,PL/M 8	*		1						
31	1729-111-300-00	HOSE/FUEL/900 ASSY	*		1						
32	3640-586-004-00	RESISTANCE/1.0	*		1						
33	J062-087-093-00	CLIP/HOSE/8.7-9.3	*		1						
34	1716-105-001-00	HOSE/08X13X300	*		1						
35	1650-111-034-00	CLIP/HOSE/11-13	*		2						
36	1716-105-001-00	HOSE/08X13X300	*		1						
37	1650-111-034-00	CLIP/HOSE/11-13	*		2						
38	1703-105-210-00	PUMP/FUEL ASSY	*		1						
39	V230-360-601-60	FLANGEBOLT	*		2						
40	1716-105-001-00	HOSE/08X13X300	*		1						
41	1650-111-034-00	CLIP/HOSE/11-13	*		2						
42	1729-111-300-00	HOSE/FUEL/900 ASSY	*		1						
43	J062-076-082-00	CLIP/HOSE/7.6-8.2	*		1						
44	1742-111-240-00	BRACKET/FILTER COMP	*		1						
45	V230-360-602-00	FLANGEBOLT	*		2						

FIG. 12 TANK (FUEL) SYSTEM (TG5390-E6 TYPE)(1/2)

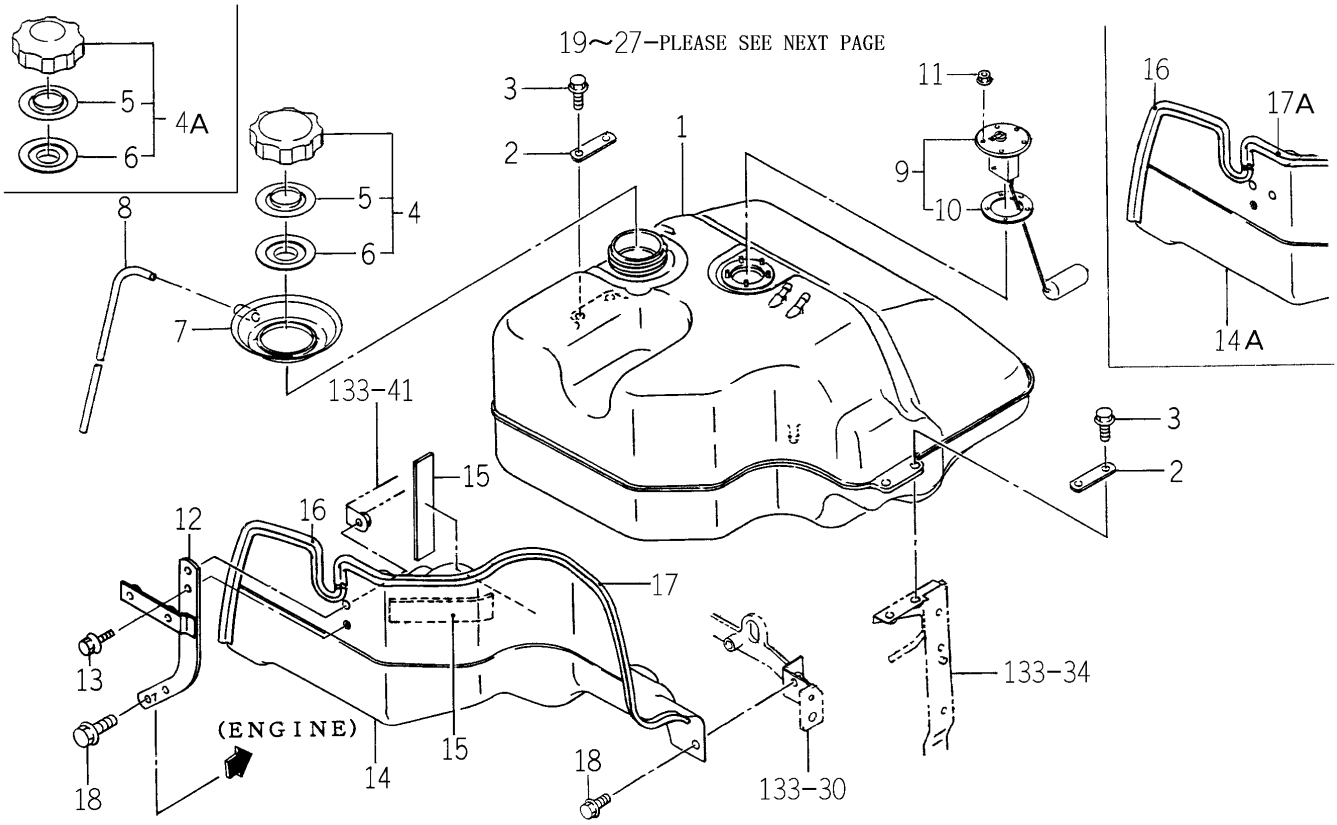

1743-111 -0100

KEY	PART CODE	DESCRIPTION	SPC	TYPE OF MODEL TG5330 E4	TG5330 E6	TG5390 E4	TG5390 E6	ITC	COL	GRP	REMARKS
1	1742-111-001-00	TANK/FUEL	*				1				
2	1729-111-007-00	PLATE/IR/19X65	*				2				
3	V231-360-802-00	FLANGEBOLT	*				4				
4	1742-111-220-00	CAP/TANK/NONLEA ASSY	*				1 -222				
4A	1729-111-280-10	CAP/TANK/NONLEA ASSY	*				1 223-				
5	1729-111-283-00	PLATE	*				1				
6	1729-111-284-00	PACKING	*				1				
7	1729-111-005-00	CUP/FUEL	*				1				
8	P103-112-003-20	HOSE/700	*				1				
9	1729-111-270-00	GAUGE/FUEL ASSY	*				1				
10	1416-621-037-00	PACKING/RUBBER	*				1				
11	1617-730-005-00	NUT/WASHER	*				5				
12	1743-111-200-00	BRACKET/TANK COMP	*				1				
13	V231-361-002-00	FLANGEBOLT	*				2				
14	1742-111-210-10	COVER/TANK COMP	*				1 -16				
14A	1742-111-210-30	COVER/TANK COMP	*				1 17-	1			
15	1432-616-004-00	PLATE,RUBBER	*				2				
16	1614-102-006-00	INSULATOR	*				1				
17	3814-212-003-00	PAD/720	*				1 -150				
17A	3814-212-003-10	PAD/720	*				1 151-	1			
18	V231-360-802-00	FLANGEBOLT	*				3				
19	1614-105-200-00	FILTER ASSY	*				1				
20	1444-102-202-00	LEVER	*				1				
21	1415-102-007-00	SPRING,VALVE	*				1				
22	V720-102-401-00	O-RING/P10A	*				1				
23	1415-102-008-00	VIS	*				1				
24	1415-102-009-00	CUP	*				1				
25	1444-102-204-00	NUT,RING	*				1				
26	V720-103-504-40	O-RING/P44	*				1				
27	1672-105-211-00	ELEMENT	*				1				

FIG. 12 TANK (FUEL) SYSTEM (TG5390-E6 TYPE)(2/2)

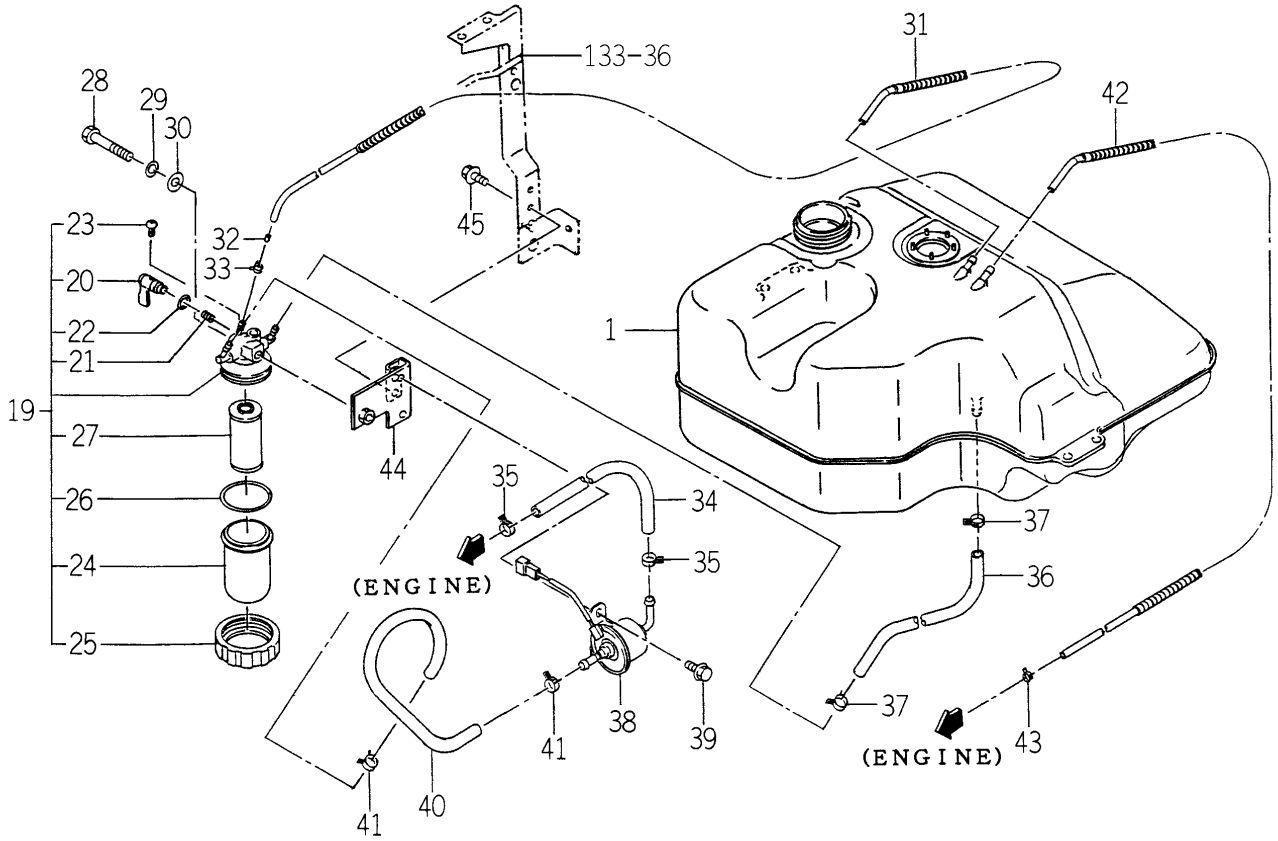

1743-111 -0100

KEY	PART CODE	DESCRIPTION	SPC	TYPE OF MODEL TG5330 E4	TG5330 E6	TG5390 E4	TG5390 E6	ITC	COL	GRP	REMARKS
28	V201-260-806-50	BOLT/M 8X65	*				1				
29	V401-160-008-00	WASHER,SP/M 8	*				1				
30	V411-260-008-00	WASHER,PL/M 8	*				1				
31	1729-111-300-00	HOSE/FUEL/900 ASSY	*				1				
32	3640-586-004-00	RESISTANCE/1.0	*				1				
33	J062-087-093-00	CLIP/HOSE/8.7-9.3	*				1				
34	1716-105-001-00	HOSE/08X13X300	*				1				
35	1650-111-034-00	CLIP/HOSE/11-13	*				2				
36	1716-105-001-00	HOSE/08X13X300	*				1				
37	1650-111-034-00	CLIP/HOSE/11-13	*				2				
38	1703-105-210-00	PUMP/FUEL ASSY	*				1				
39	V230-360-601-60	FLANGEBOLT	*				2				
40	1716-105-001-00	HOSE/08X13X300	*				1				
41	1650-111-034-00	CLIP/HOSE/11-13	*				2				
42	1729-111-300-00	HOSE/FUEL/900 ASSY	*				1				
43	J062-076-082-00	CLIP/HOSE/7.6-8.2	*				1				
44	1742-111-240-00	BRACKET/FILTER COMP	*				1				
45	V230-360-602-00	FLANGEBOLT	*				2				

FIG. 13 TANK (FUEL) SYSTEM (TG5330-E4 TYPE)(1/2)

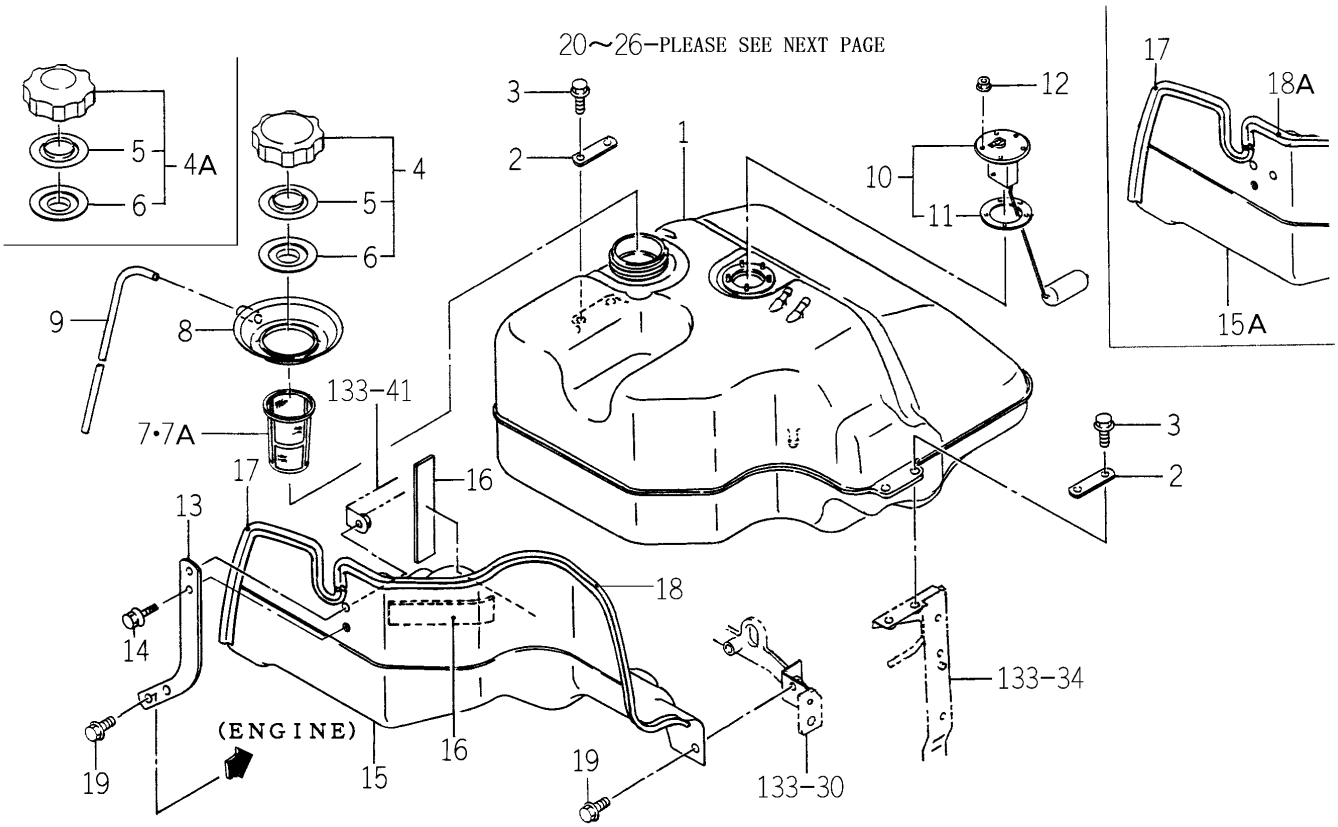

1742-111A-0100

KEY	PART CODE	DESCRIPTION	SPC	TYPE OF MODEL TG5330 E4	TG5330 E6	TG5390 E4	TG5390 E6	ITC	COL	GRP	REMARKS
1	1742-111-001-00	TANK/FUEL	*	1							
2	1729-111-007-00	PLATE/IR/19X65	*	2							
3	V231-360-802-00	FLANGEBOLT	*	4							
4	1742-111-220-00	CAP/TANK/NONLEA ASSY	*	1 -70							
4A	1729-111-280-10	CAP/TANK/NONLEA ASSY	*	1 71-							
5	1729-111-283-00	PLATE	*	1							
6	1729-111-284-00	PACKING	*	1							
7	1729-111-006-00	FILTER/FUEL	*	1 -70							
7A	1729-111-006-10	FILTER/FUEL	*	1 71-				1			
8	1729-111-005-00	CUP/FUEL	*	1							
9	P103-112-003-20	HOSE/700	*	1							
10	1729-111-270-00	GAUGE/FUEL ASSY	*	1							
11	1416-621-037-00	PACKING/RUBBER	*	1							
12	1617-730-005-00	NUT/WASHER	*	5							
13	1742-111-002-00	BRACKET/TANK	*	1							
14	V231-361-002-00	FLANGEBOLT	*	2							
15	1742-111-210-10	COVER/TANK COMP	*	1 -18							
15A	1742-111-210-30	COVER/TANK COMP	*	1 19-				1			
16	1432-616-004-00	PLATE,RUBBER	*	2							
17	1614-102-006-00	INSULATOR	*	1							
18	3814-212-003-00	PAD/720	*	1 -57							
18A	3814-212-003-10	PAD/720	*	1 58-				1			
19	V231-360-802-00	FLANGEBOLT	*	3							
20	1614-105-200-00	FILTER ASSY	*	1							
21	1444-102-202-00	LEVER	*	1							
22	1415-102-007-00	SPRING,VALVE	*	1							
23	V720-102-401-00	O-RING/P10A	*	1							
24	1415-102-008-00	VIS	*	1							
25	1415-102-009-00	CUP	*	1							
26	1444-102-204-00	NUT,RING	*	1							

FIG. 13 TANK (FUEL) SYSTEM (TG5330-E4 TYPE)(2/2)

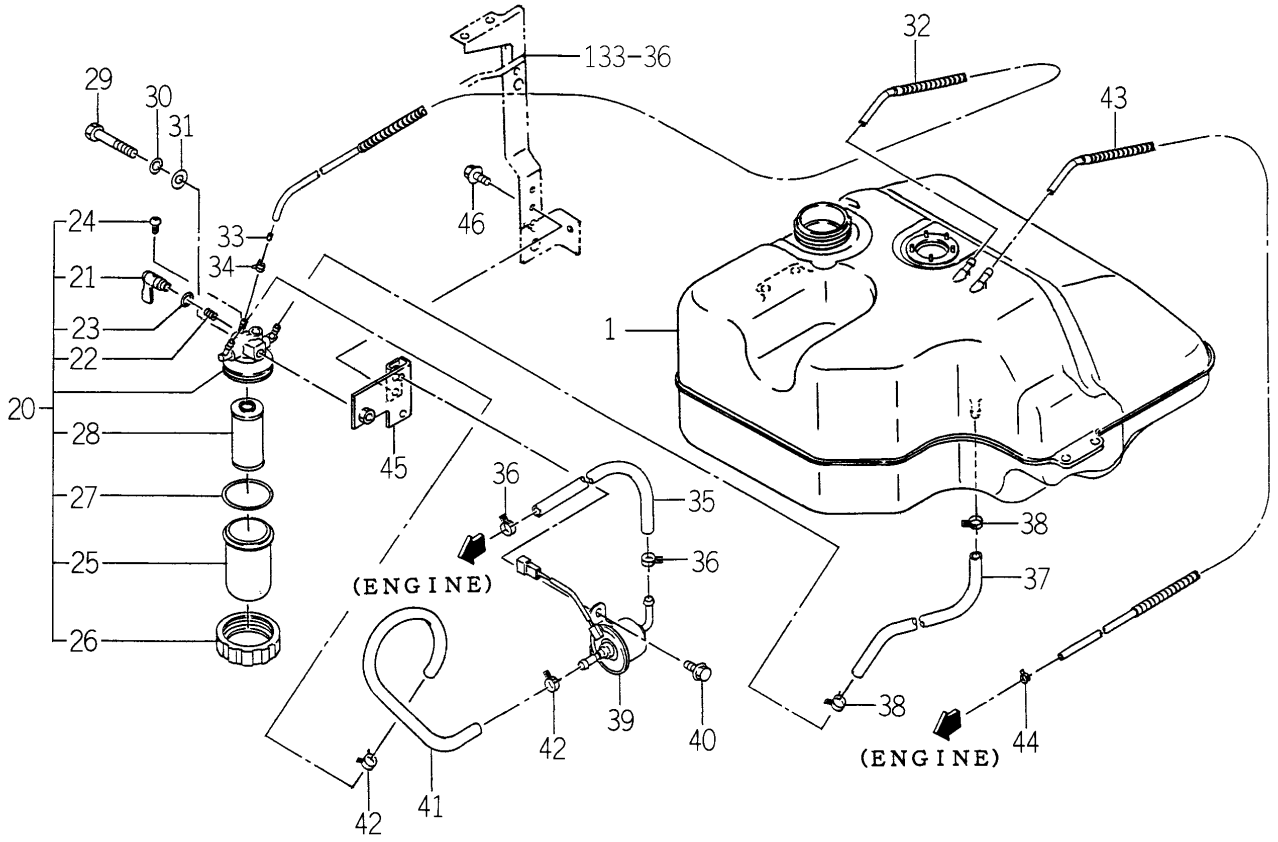

1742-111A-0100

KEY	PART CODE	DESCRIPTION	SPC	TYPE OF MODEL TG5330 E4	TG5330 E6	TG5390 E4	TG5390 E6	ITC	COL	GRP	REMARKS
27	V720-103-504-40	O-RING/P44	*	1							
28	1672-105-211-00	ELEMENT	*	1							
29	V201-260-806-50	BOLT/M 8X65	*	1							
30	V401-160-008-00	WASHER,SP/M 8	*	1							
31	V411-260-008-00	WASHER,PL/M 8	*	1							
32	1729-111-300-00	HOSE/FUEL/900 ASSY	*	1							
33	3640-586-004-00	RESISTANCE/1.0	*	1							
34	J062-087-093-00	CLIP/HOSE/8.7-9.3	*	1							
35	1716-105-001-00	HOSE/08X13X300	*	1							
36	1650-111-034-00	CLIP/HOSE/11-13	*	2							
37	1716-105-001-00	HOSE/08X13X300	*	1							
38	1650-111-034-00	CLIP/HOSE/11-13	*	2							
39	1703-105-210-00	PUMP/FUEL ASSY	*	1							
40	V230-360-601-60	FLANGEBOLT	*	2							
41	1716-105-001-00	HOSE/08X13X300	*	1							
42	1650-111-034-00	CLIP/HOSE/11-13	*	2							
43	1729-111-300-00	HOSE/FUEL/900 ASSY	*	1							
44	J062-076-082-00	CLIP/HOSE/7.6-8.2	*	1							
45	1742-111-240-00	BRACKET/FILTER COMP	*	1							
46	V230-360-602-00	FLANGEBOLT	*	2							

FIG. 14 TANK (FUEL) SYSTEM (TG5390-E4 TYPE)(1/2)

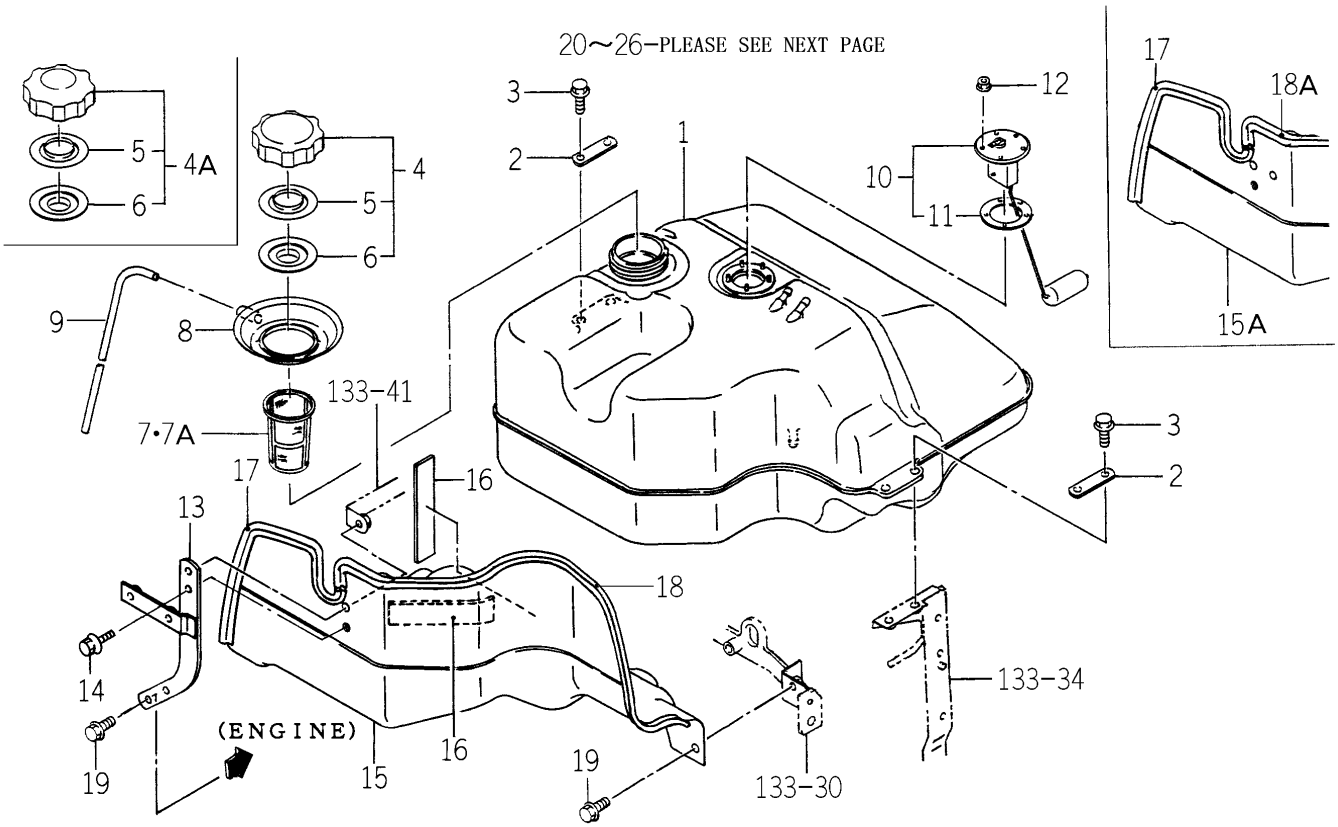

1743-111A-0100

KEY	PART CODE	DESCRIPTION	SPC	TYPE OF MODEL TG5330 E4	TG5330 E6	TG5390 E4	TG5390 E6	ITC	COL	GRP	REMARKS
1	1742-111-001-00	TANK/FUEL	*			1					
2	1729-111-007-00	PLATE/IR/19X65	*			2					
3	V231-360-802-00	FLANGEBOLT	*			4					
4	1742-111-220-00	CAP/TANK/NONLEA ASSY	*			1 -228					
4A	1729-111-280-10	CAP/TANK/NONLEA ASSY	*			1 229-					
5	1729-111-283-00	PLATE	*			1					
6	1729-111-284-00	PACKING	*			1					
7	1729-111-006-00	FILTER/FUEL	*			1 -210					
7A	1729-111-006-10	FILTER/FUEL	*			1 211-		1			
8	1729-111-005-00	CUP/FUEL	*			1					
9	P103-112-003-20	HOSE/700	*			1					
10	1729-111-270-00	GAUGE/FUEL ASSY	*			1					
11	1416-621-037-00	PACKING/RUBBER	*			1					
12	1617-730-005-00	NUT/WASHER	*			5					
13	1743-111-200-00	BRACKET/TANK COMP	*			1					
14	V231-361-002-00	FLANGEBOLT	*			2					
15	1742-111-210-10	COVER/TANK COMP	*			1 -16					
15A	1742-111-210-30	COVER/TANK COMP	*			1 17-		1			
16	1432-616-004-00	PLATE,RUBBER	*			2					
17	1614-102-006-00	INSULATOR	*			1					
18	3814-212-003-00	PAD/720	*			1 -150					
18A	3814-212-003-10	PAD/720	*			1 151-		1			
19	V231-360-802-00	FLANGEBOLT	*			3					
20	1614-105-200-00	FILTER ASSY	*			1					
21	1444-102-202-00	LEVER	*			1					
22	1415-102-007-00	SPRING,VALVE	*			1					
23	V720-102-401-00	O-RING/P10A	*			1					
24	1415-102-008-00	VIS	*			1					
25	1415-102-009-00	CUP	*			1					
26	1444-102-204-00	NUT,RING	*			1					

FIG. 14 TANK (FUEL) SYSTEM (TG5390-E4 TYPE)(2/2)

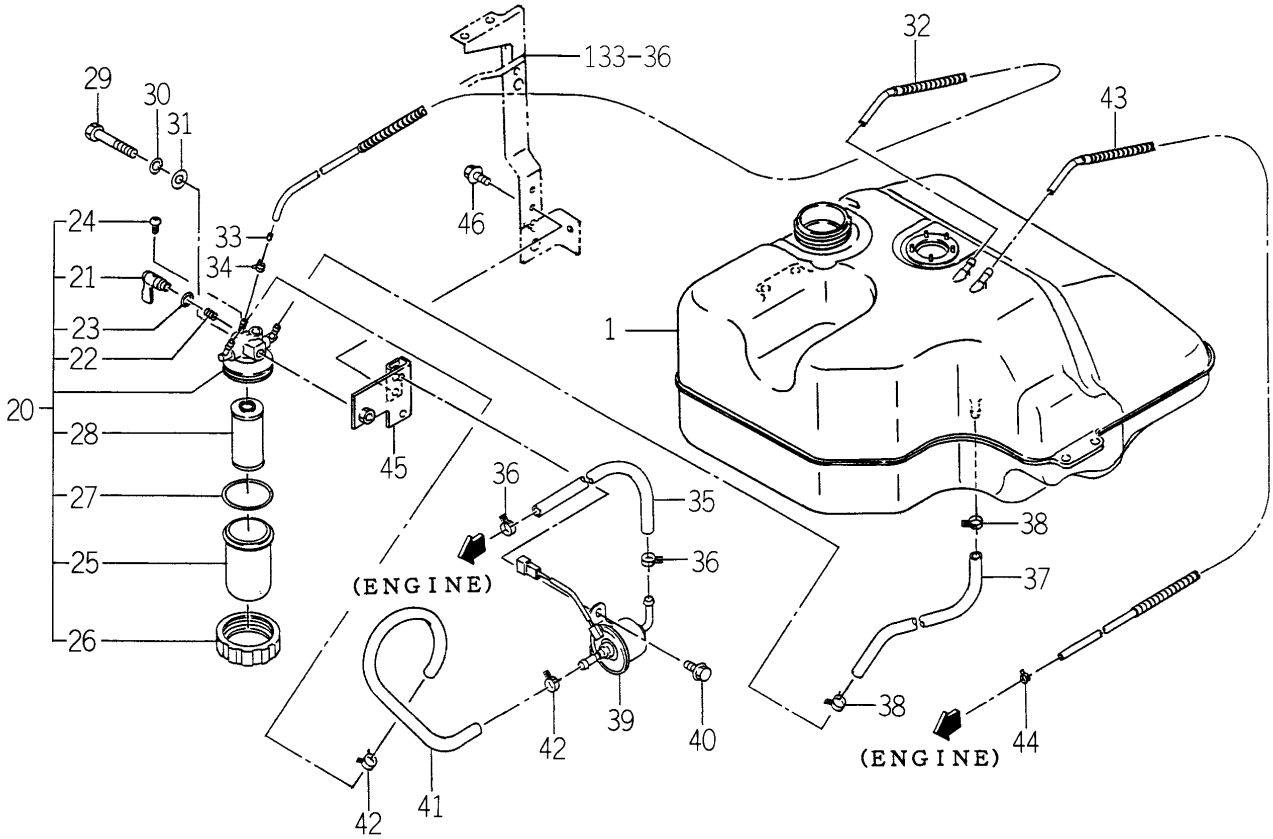

1743-111A-0100

KEY	PART CODE	DESCRIPTION	SPC	TYPE OF MODEL TG5330 E4	TG5330 E6	TG5390 E4	TG5390 E6	ITC	COL	GRP	REMARKS
27	V720-103-504-40	O-RING/P44	*			1					
28	1672-105-211-00	ELEMENT	*			1					
29	V201-260-806-50	BOLT/M 8X65	*			1					
30	V401-160-008-00	WASHER,SP/M 8	*			1					
31	V411-260-008-00	WASHER,PL/M 8	*			1					
32	1729-111-300-00	HOSE/FUEL/900 ASSY	*			1					
33	3640-586-004-00	RESISTANCE/1.0	*			1					
34	J062-087-093-00	CLIP/HOSE/8.7-9.3	*			1					
35	1716-105-001-00	HOSE/08X13X300	*			1					
36	1650-111-034-00	CLIP/HOSE/11-13	*			2					
37	1716-105-001-00	HOSE/08X13X300	*			1					
38	1650-111-034-00	CLIP/HOSE/11-13	*			2					
39	1703-105-210-00	PUMP/FUEL ASSY	*			1					
40	V230-360-601-60	FLANGEBOLT	*			2					
41	1716-105-001-00	HOSE/08X13X300	*			1					
42	1650-111-034-00	CLIP/HOSE/11-13	*			2					
43	1729-111-300-00	HOSE/FUEL/900 ASSY	*			1					
44	J062-076-082-00	CLIP/HOSE/7.6-8.2	*			1					
45	1742-111-240-00	BRACKET/FILTER COMP	*			1					
46	V230-360-602-00	FLANGEBOLT	*			2					

FIG. 15 ACCELERATOR SYSTEM (EXCEPT H TYPE)

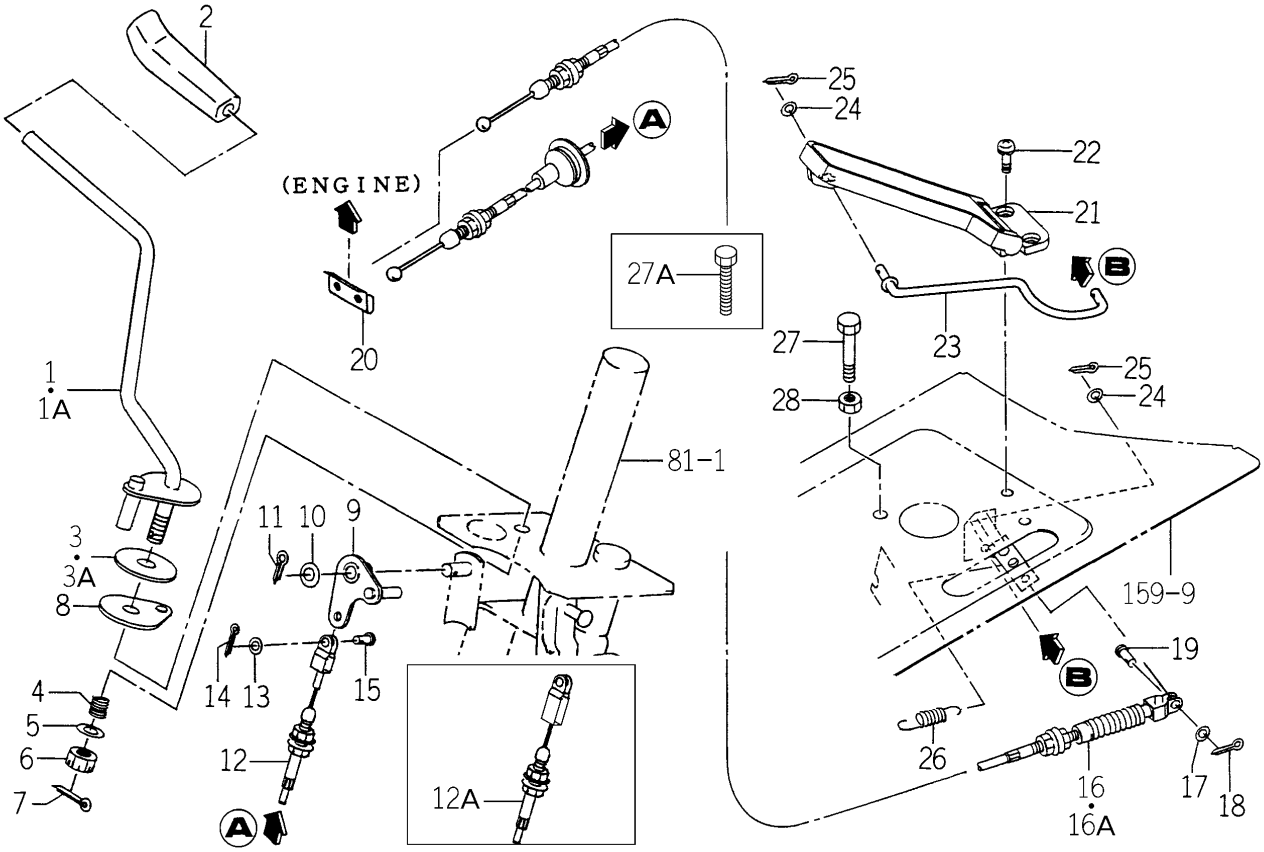

1742-116 -0100

KEY	PART CODE	DESCRIPTION	SPC	TYPE OF MODEL TG5330 E4	TG5330 E6	TG5390 E4	TG5390 E6	ITC	COL	GRP	REMARKS
1	1742-116-210-00	LEVER COMP	*	1 -154	1 -154	1 -498	1 -498				
1A	1742-116-210-10	LEVER COMP	*	1 155-	1 155-	1 499-	1 499-	1			
2	1646-116-051-10	GRIP/THROTTLE	*	1	1	1	1				
3	1600-505-007-00	LINING/13X50X3	*	1 -952	1 -952	1 -1310	1 -1310				
3A	1600-505-007-10	LINING/13X50X03	*	1 953-	1 953-	1 1311-	1 1311-	1			
4	1404-117-008-00	SPRING,PRESS/22	*	1	1	1	1				
5	V411-260-010-00	WASHER/M10	*	1	1	1	1				
6	V328-261-110-00	NUT/M10X1.25	*	1	1	1	1				
7	V500-162-502-50	PIN,SPLIT/2.5X25	*	1	1	1	1				
8	1729-116-001-00	PLATE	*	1	1	1	1				
9	1650-116-210-10	ARM COMP	*	1	1	1	1				
10	V411-260-010-00	WASHER/M10	*	1	1	1	1				
11	V500-162-502-00	PIN,SPLIT/2.5X20	*	1	1	1	1				
12	1742-116-220-00	CABLE/ACCELERATOR	*	1 -121	1 -121	1 -412	1 -412				
12A	1742-116-220-10	CABLE/ACCELERATOR	*	1 122-	1 122-	1 413-	1 413-	1			
13	V411-260-006-00	WASHER / M6	*	1	1	1	1				
14	V500-162-001-50	PIN,SPLIT/2 X15	*	1	1	1	1				
15	1560-116-008-30	PIN/6X16	*	1	1	1	1				
16	1742-116-230-00	CABLE/PEDAL ASSY	*	1 -476	1 -476	1 -849	1 -849				
16A	1742-116-230-10	CABLE/PEDAL ASSY	*	1 477-	1 477-	1 850-	1 850-	1			
17	V411-260-006-00	WASHER / M6	*	1	1	1	1				
18	V500-162-001-50	PIN,SPLIT/2 X15	*	1	1	1	1				
19	1560-116-008-30	PIN/6X16	*	1	1	1	1				
20	1675-116-001-00	HOLDER	*	1	1	1	1				
21	1568-116-210-00	PEDAL ASSY	*	1	1	1	1				
22	V120-266-001-60	SCREW SEEMS/M6X16	*	2	2	2	2				
23	1729-116-250-00	ROD COMP	*	1	1	1	1				
24	V411-260-006-00	WASHER / M6	*	2	2	2	2				
25	V500-162-001-50	PIN,SPLIT/2 X15	*	2	2	2	2				
26	2143-744-001-00	SPRING/HE060	*	1	1	1	1				

FIG. 15 ACCELERATOR SYSTEM (EXCEPT H TYPE)

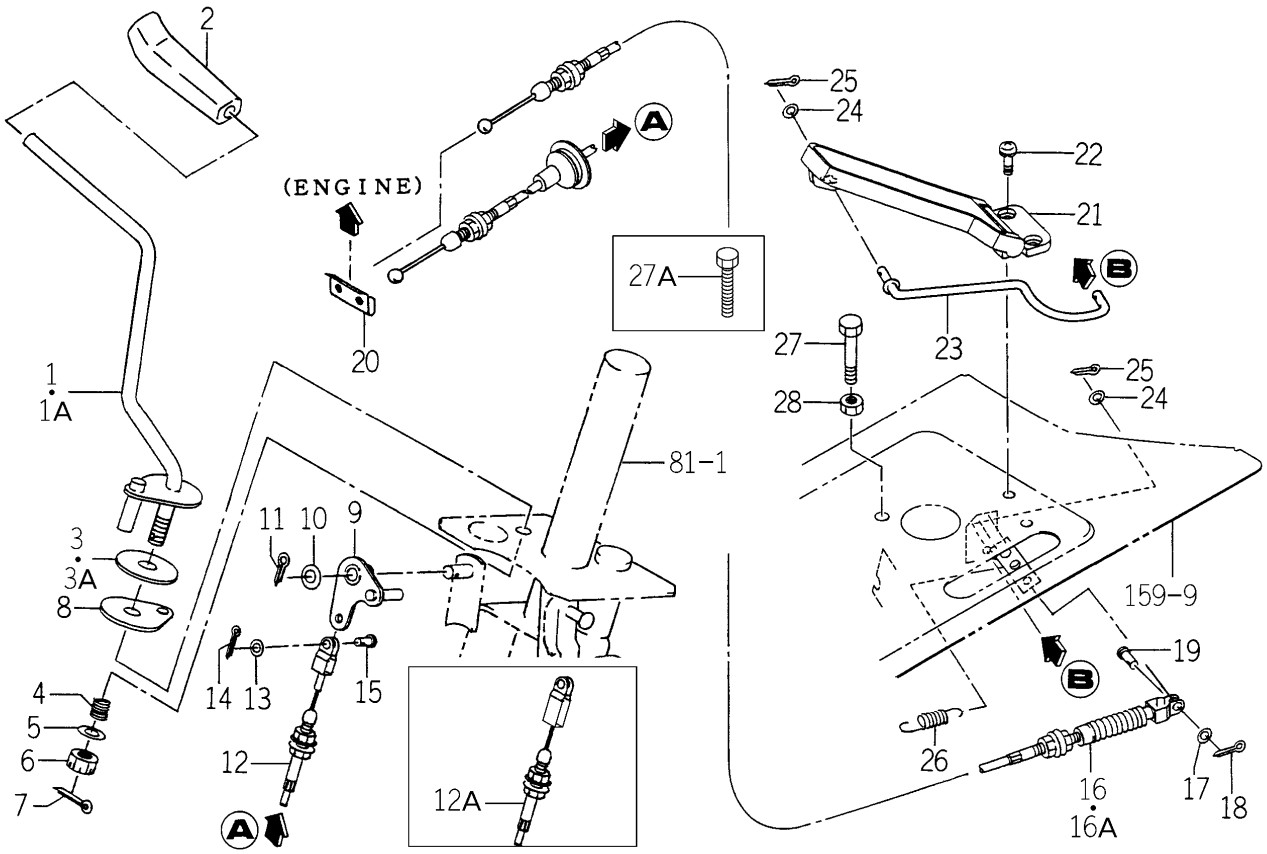

1742-116 -0100

KEY	PART CODE	DESCRIPTION	SPC	TYPE OF MODEL TG5330 E4	TG5330 E6	TG5390 E4	TG5390 E6	ITC	COL	GRP	REMARKS
27	V201-260-805-50	BOLT/M 8X55	*	1 -94	1 -94	1 -296	1 -296				
27A	W201-260-805-50	BOLT/M8XX55	*	1 95-	1 95-	1 297-	1 297-				
28	V304-260-008-00	NUT	*	1	1	1	1				

FIG. 16 ACCELERATOR SYSTEM (H TYPE)

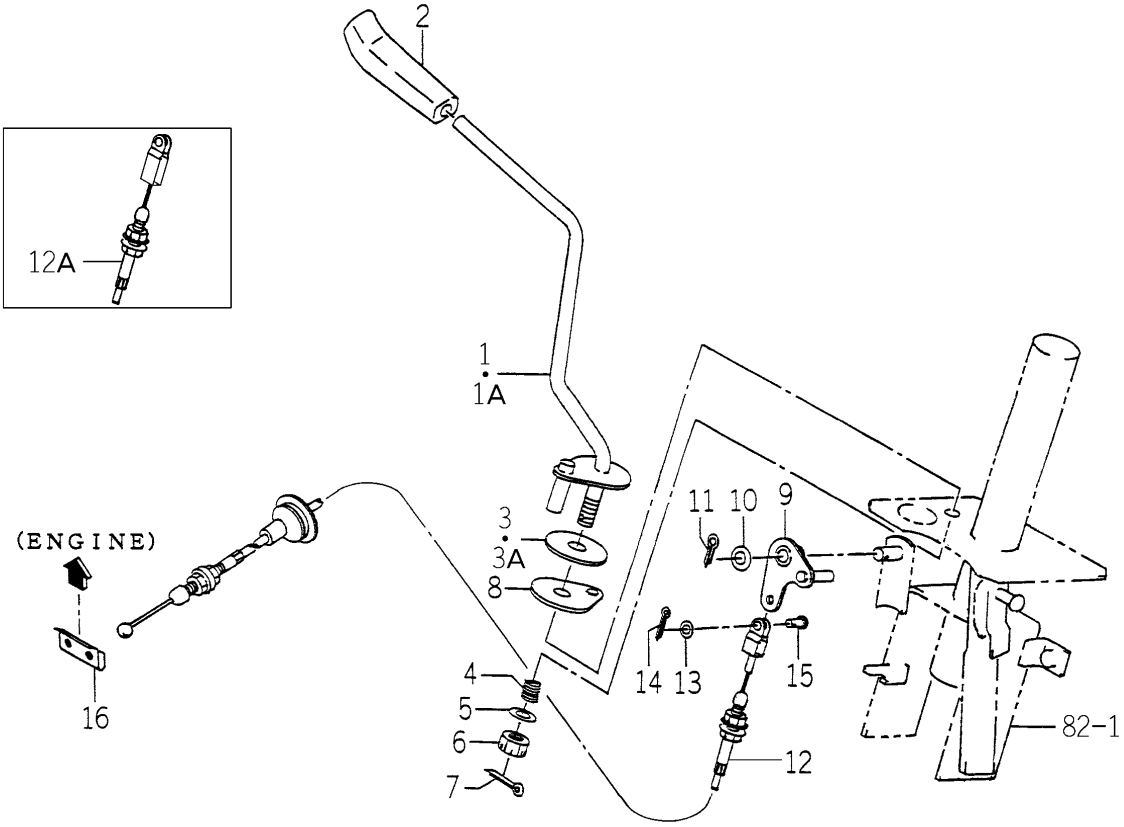

1743-116 -0100

KEY	PART CODE	DESCRIPTION	SPC	TYPE OF MODEL TG5330 E4	TG5330 E6	TG5390 E4	TG5390 E6	ITC	COL	GRP	REMARKS
1	1742-116-210-00	LEVER COMP	*			1 -498	1 -498				
1A	1742-116-210-10	LEVER COMP	*			1 499-	1 499-	1			
2	1646-116-051-10	GRIP/THROTTLE	*			1	1				
3	1600-505-007-00	LINING/13X50X3	*			1 -1310	1 -1310				
3A	1600-505-007-10	LINING/13X50X03	*			1 1311-	1 1311-	1			
4	1404-117-008-00	SPRING,PRESS/22	*			1	1				
5	V411-260-010-00	WASHER/M10	*			1	1				
6	V328-261-110-00	NUT/M10X1.25	*			1	1				
7	V500-162-502-50	PIN,SPLIT/2.5X25	*			1	1				
8	1729-116-001-00	PLATE	*			1	1				
9	1650-116-210-10	ARM COMP	*			1	1				
10	V411-260-010-00	WASHER/M10	*			1	1				
11	V500-162-502-00	PIN,SPLIT/2.5X20	*			1	1				
12	1742-116-220-00	CABLE/ACCELERATOR	*			1 -412	1 -412				
12A	1742-116-220-10	CABLE/ACCELERATOR	*			1 413-	1 413-	1			
13	V411-260-006-00	WASHER / M6	*			1	1				
14	V500-162-001-50	PIN,SPLIT/2 X15	*			1	1				
15	1560-116-008-30	PIN/6X16	*			1	1				
16	1675-116-001-00	HOLDER	*			1	1				

FIG. 17 CLUTCH (MAIN) SYSTEM (EXCEPT H TYPE)

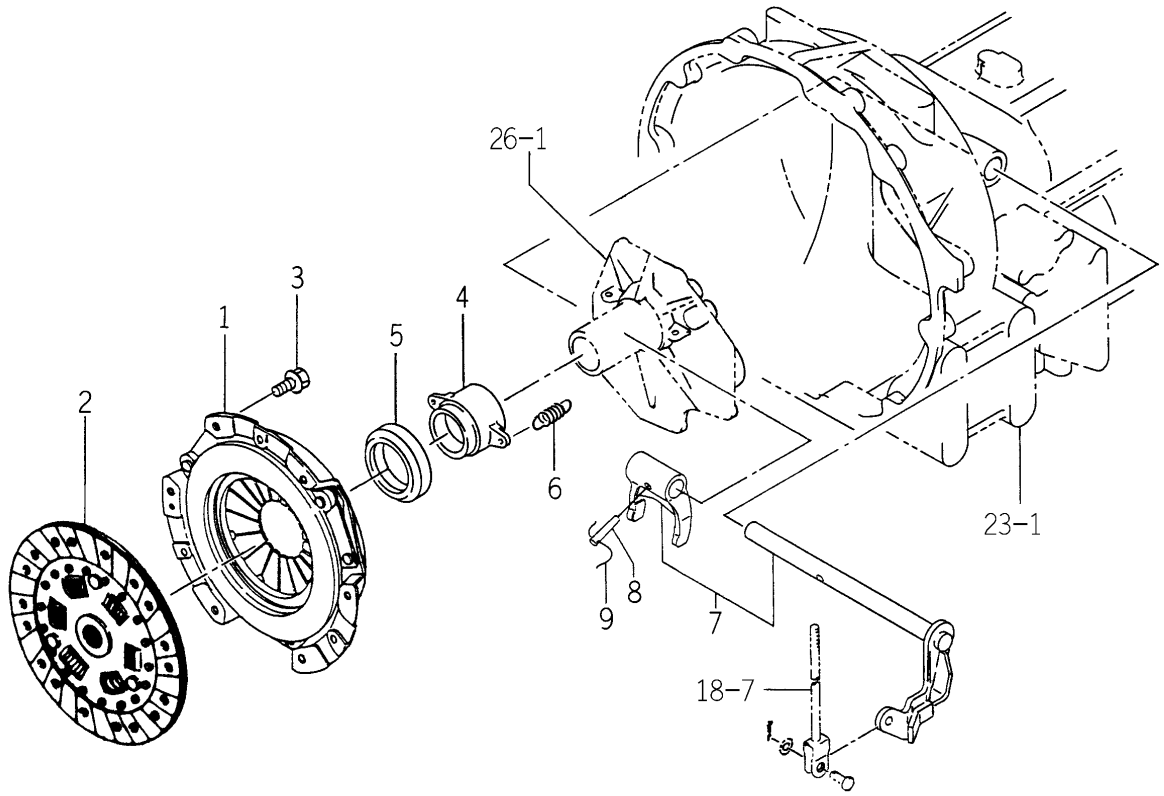

1742-120B-0100

KEY	PART CODE	DESCRIPTION	SPC	TYPE OF MODEL TG5330 E4	TG5330 E6	TG5390 E4	TG5390 E6	ITC	COL	GRP	REMARKS
1	1742-120-200-00	COVER/CLUTCH/24 ASSY	*	1	1	1	1				
2	1742-120-250-00	DISK/CLUTCH/240 COMP	*	1	1	1	1				
3	V231-360-802-00	FLANGEBOLT	*	9	9	9	9				
4	1744-120-001-00	SLEEVE	*	1	1	1	1				
5	1742-120-002-00	BEARING/RELEASE	*	1	1	1	1				
6	1432-120-004-00	SPRING,TENSION/31	*	2	2	2	2				
7	1729-120-200-00	BAR SET	*	1	1	1	1				
8	1560-130-001-00	PIN	*	1	1	1	1				
9		WIRE	*	1	1	1	1				

FIG. 18 PEDAL (CLUTCH) SYSTEM (S,Q TYPE)

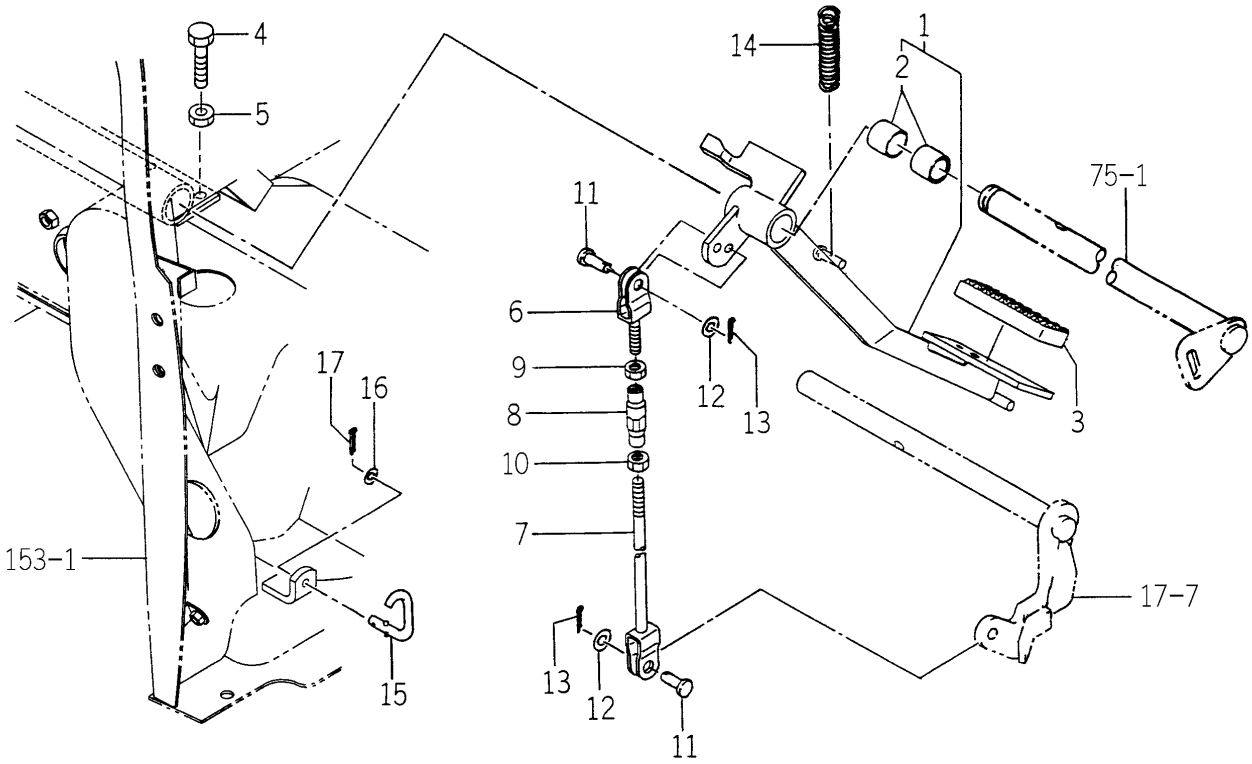

1746-135 -0100

KEY	PART CODE	DESCRIPTION	SPC	TYPE OF MODEL TG5330 E4	TG5330 E6	TG5390 E4	TG5390 E6	ITC	COL	GRP	REMARKS
1	1729-135-200-10	PEDAL/CLUTCH ASSY	*	1		1					
2	3670-703-008-00	BUSH/20X23X20	*	2		2					
3	1636-313-011-10	PAD/BRAKE	*	1		1					
4	V201-260-803-00	BOLT/M 8X30	*	1		1					
5	V304-260-008-00	NUT	*	1		1					
6	1729-135-220-00	ROD/65 COMP	*	1		1					
7	1734-135-230-00	ROD/LH/200 COMP	*	1		1					
8	1444-122-002-00	TURNBUCKLE/M8	*	1		1					
9	V304-260-008-00	NUT	*	1		1					
10	1560-132-007-30	NUT/M8	*	1		1					
11	1432-242-001-00	PIN	*	2		2					
12	V411-260-008-00	WASHER,PL/M 8	*	2		2					
13	V500-162-002-00	PIN,SPLIT/2 X20	*	2		2					
14	1650-135-002-00	SPRING/HE095	*	1		1					
15	1675-135-001-00	HOOK	*	1		1					
16	V411-260-006-00	WASHER / M6	*	1		1					
17	V500-162-002-00	PIN,SPLIT/2 X20	*	1		1					

FIG. 19 PEDAL (CLUTCH) SYSTEM (P TYPE)

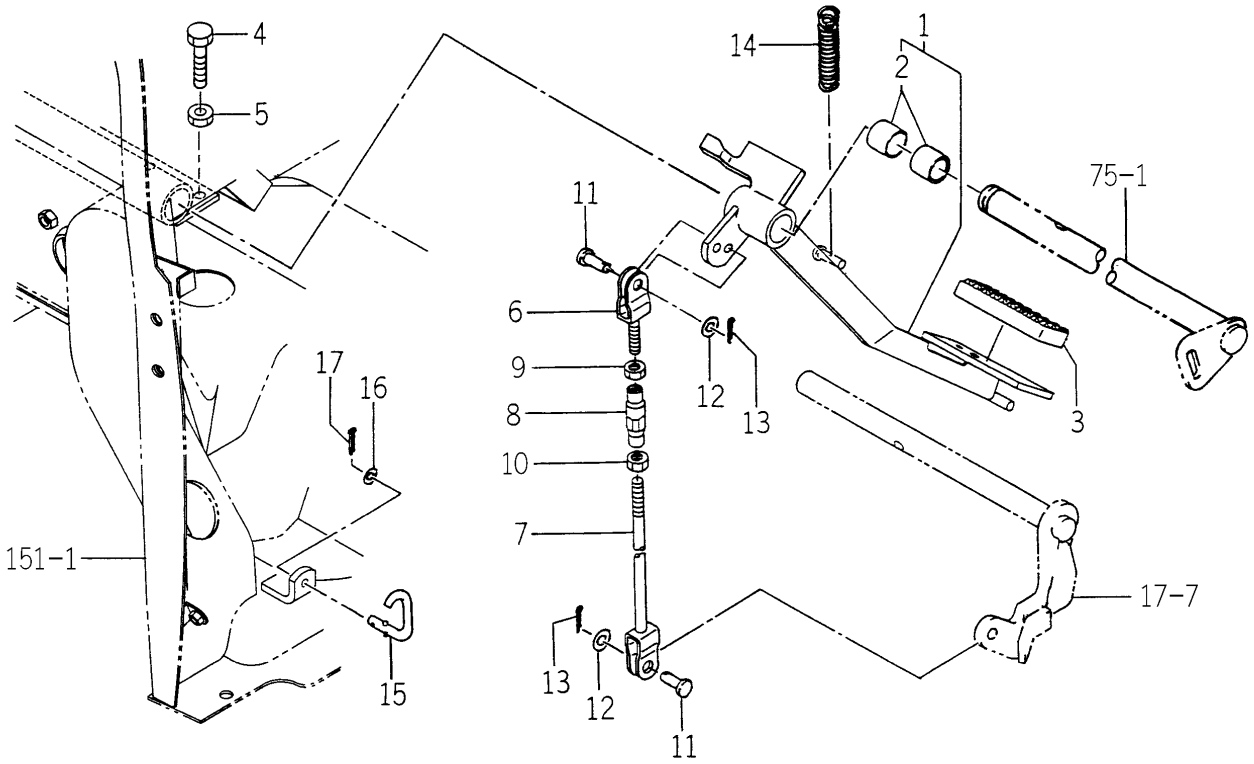

1742-135A-0100

KEY	PART CODE	DESCRIPTION	SPC	TYPE OF MODEL TG5330 E4	TG5330 E6	TG5390 E4	TG5390 E6	ITC	COL	GRP	REMARKS
1	1729-135-200-10	PEDAL/CLUTCH ASSY	*		1		1				
2	3670-703-008-00	BUSH/20X23X20	*		2		2				
3	1524-122-001-00	PAD	*		1		1				
4	V201-260-803-00	BOLT/M 8X30	*		1		1				
5	V304-260-008-00	NUT	*		1		1				
6	1729-135-220-00	ROD/65 COMP	*		1		1				
7	1734-135-230-00	ROD/LH/200 COMP	*		1		1				
8	1444-122-002-00	TURNBUCKLE/M8	*		1		1				
9	V304-260-008-00	NUT	*		1		1				
10	1560-132-007-30	NUT/M8	*		1		1				
11	1432-242-001-00	PIN	*		2		2				
12	V411-260-008-00	WASHER,PL/M 8	*		2		2				
13	V500-162-002-00	PIN,SPLIT/2 X20	*		2		2				
14	1650-135-002-00	SPRING/HE095	*		1		1				
15	1675-135-001-00	HOOK	*		1		1				
16	V411-260-006-00	WASHER / M6	*		1		1				
17	V500-162-002-00	PIN,SPLIT/2 X20	*		1		1				

FIG. 20 CASE (TRANSMISSION/FRONT) SYSTEM (P TYPE)

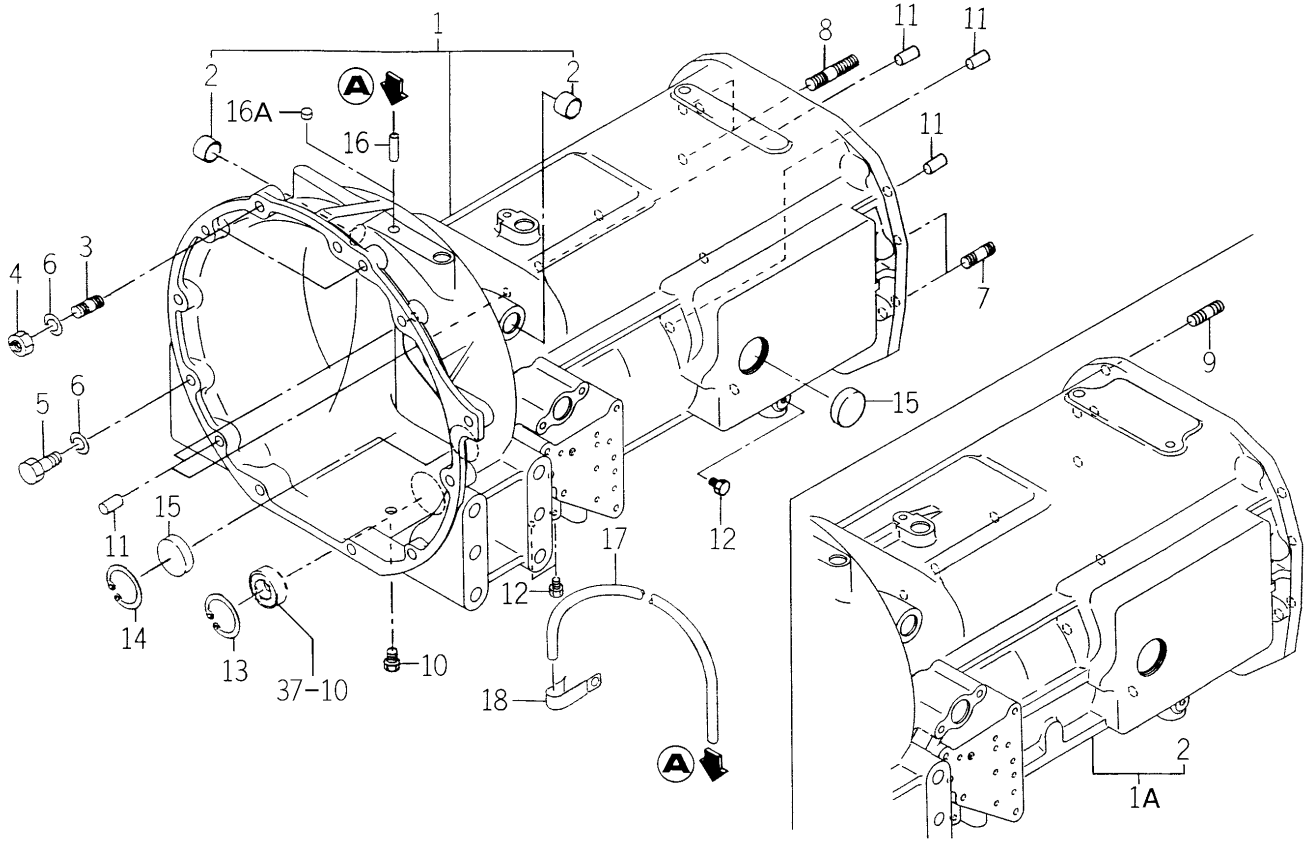

1742-201 -0100

KEY	PART CODE	DESCRIPTION	SPC	TYPE OF MODEL TG5330 E4	TG5330 E6	TG5390 E4	TG5390 E6	ITC	COL	GRP	REMARKS
1	1742-201-200-00	CASE/TRANSMISSION/P	*		1 -36		1 -47				
1A	1742-201-200-10	CASE/TRANSMISSION/P	*		1 37-		1 48-	1			
2	1650-201-202-00	BUSH/19X22X15	*		2		2				
3	V251-341-202-50	BOLT/M12X25	*		2		2				
4	V304-460-012-00	NUT/M12	*		2		2				
5	V201-361-203-00	BOLT/M12X30	*		9		9				
6	V401-160-012-00	WASHER,SP/M12	*		11		11				
7	V251-341-205-00	BOLT/STUD	*		2		2				
8	V251-341-206-00	BOLT/STUD	*		2		2				
9	V251-341-203-50	BOLT	*		1 44-		1 62-				
10	V782-160-000-2B	PLUG/SCREW/SEAL	*		1		1				
11	V523-101-002-40	PIN	*		10		10				
12	V782-160-000-2T	PLUG/SCREW/SEAL	*		3		3				
13	V705-140-047-00	RING,SNAP/47 C	*		1		1				
14	V705-140-040-00	RING,SNAP/40 C	*		1		1				
15	1337-708-007-00	COVER,METAL	*		2		2				
16	1544-120-008-10	PIPE,BREATHER	*		1 -60		1 -173				
16A	1427-251-004-00	CAP,BLANK/M10	*		1 61-		1 174-				
17	3664-310-005-10	HOSE/08X13X420	*		1 -60		1 -173				
18	1425-621-004-00	HOLDER/JE/9-9	*		1 -60		1 -173				

FIG. 21 CASE (TRANSMISSION/FRONT) SYSTEM (H TYPE)

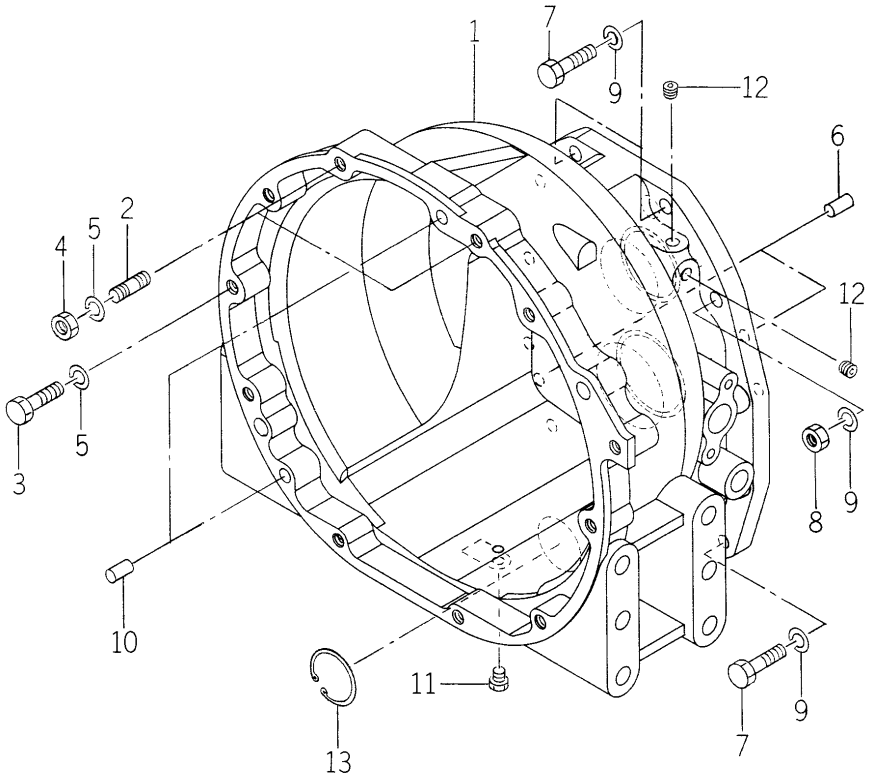

1743-201 -0100

KEY	PART CODE	DESCRIPTION	SPC	TYPE OF MODEL TG5330 E4	TG5330 E6	TG5390 E4	TG5390 E6	ITC	COL	GRP	REMARKS
1	1743-201-051-00	CASE/TRANSMISSION/FR	*			1	1				
2	V251-341-202-50	BOLT/M12X25	*			2	2				
3	V201-361-203-00	BOLT/M12X30	*			9	9				
4	V304-460-012-00	NUT/M12	*			2	2				
5	V401-160-012-00	WASHER,SP/M12	*			11	11				
6	V523-101-002-40	PIN	*			2	2				
7	V201-361-203-50	BOLT/M12X35	*			3	3				
8	V304-460-012-00	NUT/M12	*			2	2				
9	V401-160-012-00	WASHER,SP/M12	*			5	5				
10	V523-101-002-40	PIN	*			2	2				
11	V782-160-000-2B	PLUG/SCREW/SEAL	*			1	1				
12	V780-140-000-4T	PLUG/SCREW/SEAL	*			2	2				
13	V705-140-047-00	RING,SNAP/47 C	*			1	1				

FIG. 22 CASE (TRANSMISSION/FRONT) SYSTEM (Q TYPE)

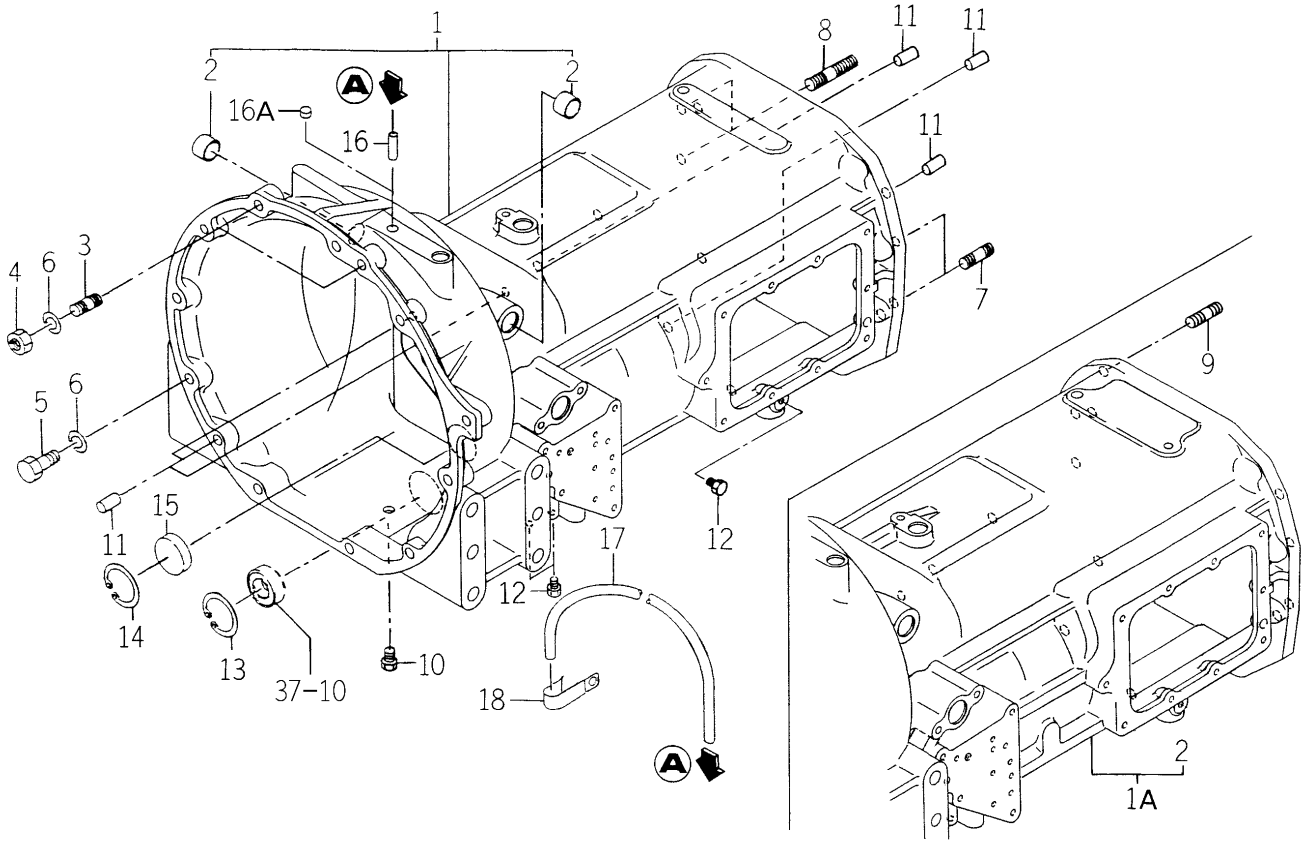

1746-201 -0100

KEY	PART CODE	DESCRIPTION	SPC	TYPE OF MODEL TG5330 E4	TG5330 E6	TG5390 E4	TG5390 E6	ITC	COL	GRP	REMARKS
1	1746-201-200-00	CASE/TRANSMISSION/Q	*	1 -33		1 -37					
1A	1746-201-200-10	CASE/TRANSMISSION/Q	*	1 34-		1 38-		1			
2	1650-201-202-00	BUSH/19X22X15	*	2		2					
3	V251-341-202-50	BOLT/M12X25	*	2		2					
4	V304-460-012-00	NUT/M12	*	2		2					
5	V201-361-203-00	BOLT/M12X30	*	9		9					
6	V401-160-012-00	WASHER,SP/M12	*	11		11					
7	V251-341-205-00	BOLT/STUD	*	2		2					
8	V251-341-206-00	BOLT/STUD	*	2		2					
9	V251-341-203-50	BOLT	*	1 35-		1 41-					
10	V782-160-000-2B	PLUG/SCREW/SEAL	*	1		1					
11	V523-101-002-40	PIN	*	10		10					
12	V782-160-000-2T	PLUG/SCREW/SEAL	*	3		3					
13	V705-140-047-00	RING,SNAP/47 C	*	1		1					
14	V705-140-040-00	RING,SNAP/40 C	*	1		1					
15	1337-708-007-00	COVER,METAL	*	1		1					
16	1544-120-008-10	PIPE,BREATHER	*	1 -27		1 -25					
16A	1427-251-004-00	CAP,BLANK/M10	*	1 28-		1 26-					
17	3664-310-005-10	HOSE/08X13X420	*	1 -27		1 -25					
18	1425-621-004-00	HOLDER/JE/9-9	*	1 -27		1 -25					

FIG. 23 CASE (TRANSMISSION/FRONT) SYSTEM (S TYPE)

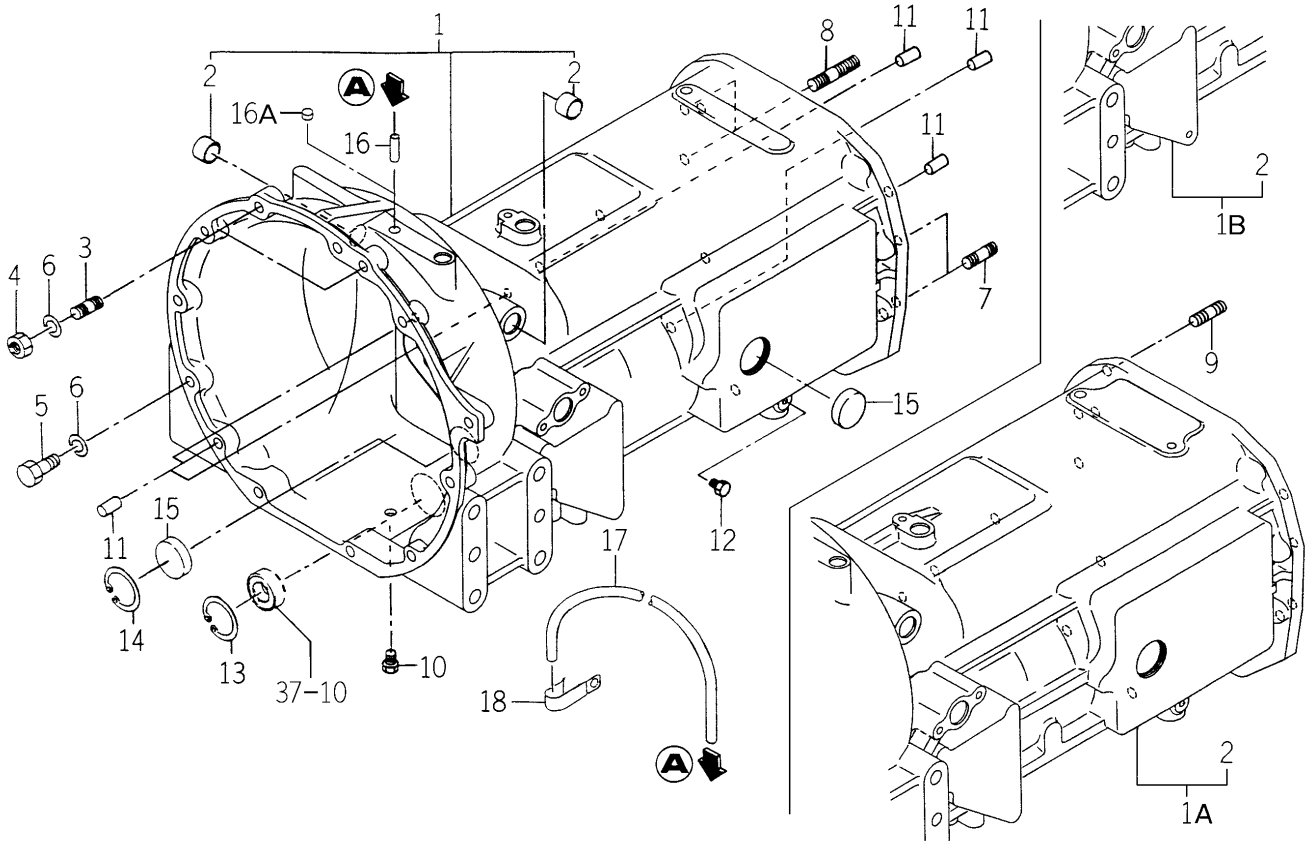

1742-201A-0100

KEY	PART CODE	DESCRIPTION	SPC	TYPE OF MODEL TG5330 E4	TG5330 E6	TG5390 E4	TG5390 E6	ITC	COL	GRP	REMARKS
1	1742-201-210-00	CASE/TRANSMISSION/S	*	1 -29		1 -29					
1A	1742-201-210-10	CASE/TRANSMISSION/S	*	1 -765		1 -1152		1			
1B	1742-201-210-20	CASE/TRANSMISSION/S	*	1 766-		1 1153-		1			
2	1650-201-202-00	BUSH/19X22X15	*	2		2					
3	V251-341-202-50	BOLT/M12X25	*	2		2					
4	V304-460-012-00	NUT/M12	*	2		2					
5	V201-361-203-00	BOLT/M12X30	*	9		9					
6	V401-160-012-00	WASHER,SP/M12	*	11		11					
7	V251-341-205-00	BOLT/STUD	*	2		2					
8	V251-341-206-00	BOLT/STUD	*	2		2					
9	V251-341-203-50	BOLT	*	1 51-		1 62-					
10	V782-160-000-2B	PLUG/SCREW/SEAL	*	1		1					
11	V523-101-002-40	PIN	*	10		10					
12	V782-160-000-2T	PLUG/SCREW/SEAL	*	1		1					
13	V705-140-047-00	RING,SNAP/47 C	*	1		1					
14	V705-140-040-00	RING,SNAP/40 C	*	1		1					
15	1337-708-007-00	COVER,METAL	*	2		2					
16	1544-120-008-10	PIPE,BREATHER	*	1 -64		1 -151					
16A	1427-251-004-00	CAP,BLANK/M10	*	1 65-		1 152-					
17	3664-310-005-10	HOSE/08X13X420	*	1 -64		1 -151					
18	1425-621-004-00	HOLDER/JE/9-9	*	1 -64		1 -151					

FIG. 24 GEAR (REVERSE) SYSTEM (P,Q TYPE)

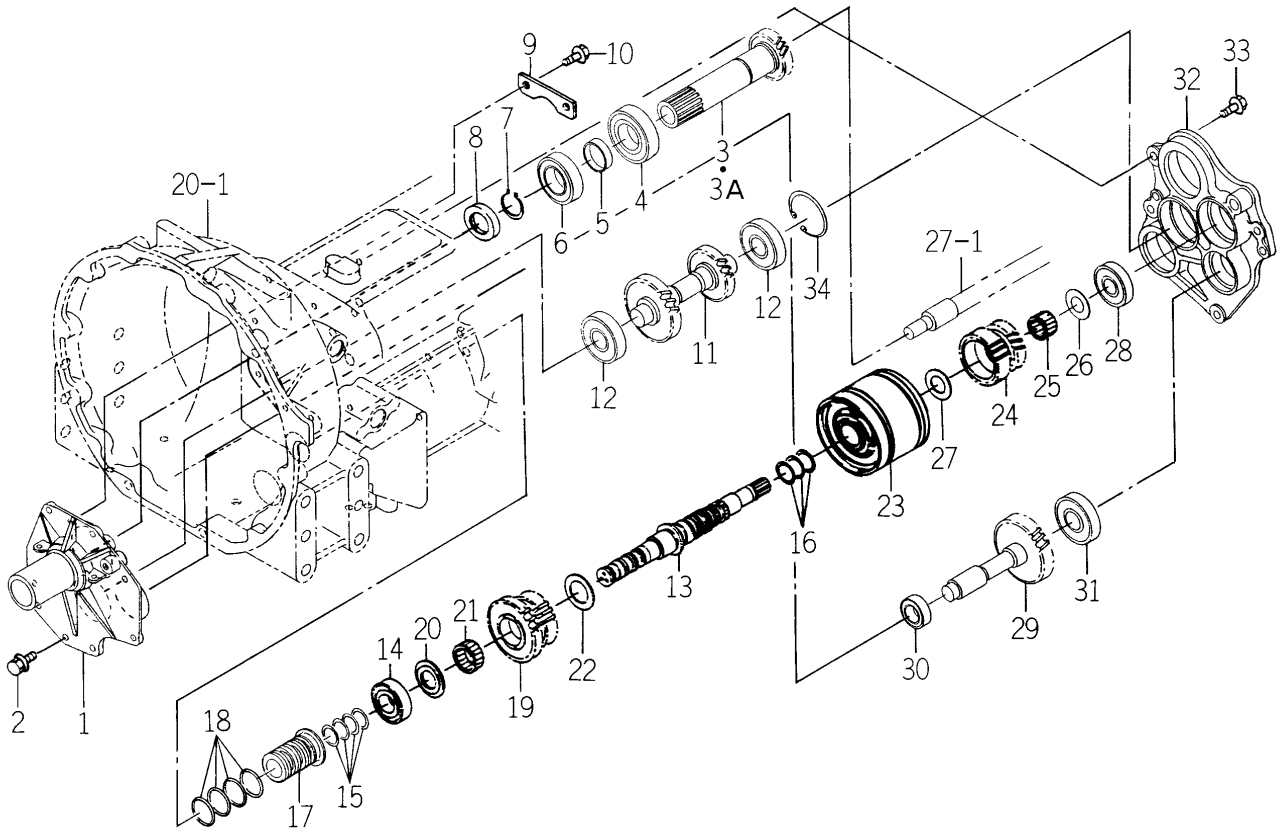

1742-203 -0100

KEY	PART CODE	DESCRIPTION	SPC	TYPE OF MODEL TG5330 E4	TG5330 E6	TG5390 E4	TG5390 E6	ITC	COL	GRP	REMARKS
1	1742-203-001-00	METAL/INPUT	*	1	1	1	1				
2	V231-360-802-00	FLANGEBOLT	*	8	8	8	8				
3	1742-203-012-10	GEAR/HELICAL/18	*	1 -27	1 -27	1 -25	1 -25				
3A	1742-203-012-20	GEAR/HELICAL/18	*	1 28-	1 28-	1 26-	1 26-	3			
4	V600-410-620-70	BEARING/BALL	*	1	1	1	1				
5	1742-203-002-00	COLLAR/36X43X10	*	1	1	1	1				
6	V600-410-600-70	BEARING/BALL	*	1	1	1	1				
7	V704-140-035-00	RING,SNAP/35 C	*	1	1	1	1				
8	V744-135-500-80	SEAL,OIL/TC355008	*	1	1	1	1				
9	1560-206-002-40	PLATE	*	1	1	1	1				
10	V231-360-801-60	FLANGEBOLT	*	2	2	2	2				
11	1742-203-003-00	GEAR/27-25	*	1	1	1	1				
12	1729-214-049-00	BEARING/BALL	*	2	2	2	2				
13	1742-203-200-00	SHAFT/REVERSE COMP	*	1	1	1	1				
14	V600-410-620-50	BEARING/BALL	*	1	1	1	1				
15	1575-261-018-00	RING/25	*	4	4	4	4				
16	1650-203-008-00	RING/30	*	3	3	3	3				
17	1742-203-005-10	HUB/25X50X65	*	1	1	1	1	1			
18	V723-112-003-50	RING/O	*	4	4	4	4				
19	1742-203-004-00	GEAR/HELICAL/23/P	*	1	1	1	1				
20	1650-203-013-00	WASHER/25X46X03	*	1	1	1	1				
21	1716-222-013-00	BEARING/NEEDLE	*	1	1	1	1				
22	1641-217-032-00	WASHER/36X46X02	*	1	1	1	1				
23	1729-203-300-00	CLUTCH/S ASSY	*	1	1	1	1				FIG 271
24	1742-203-014-00	GEAR/HERICAL/23/P	*	1	1	1	1				
25	1740-208-058-00	BEARING/NEEDLE	*	1	1	1	1				
26	1729-215-007-00	WASHER/20X40X03	*	1	1	1	1				
27	1650-203-011-20	WASHER/25X43X02	*	1	1	1	1				
28	V600-410-630-40	BEARING/BALL	*	1	1	1	1				
29	1742-203-013-00	GEAR/HERICAL/32	*	1	1	1	1				

FIG. 24 GEAR (REVERSE) SYSTEM (P,Q TYPE)

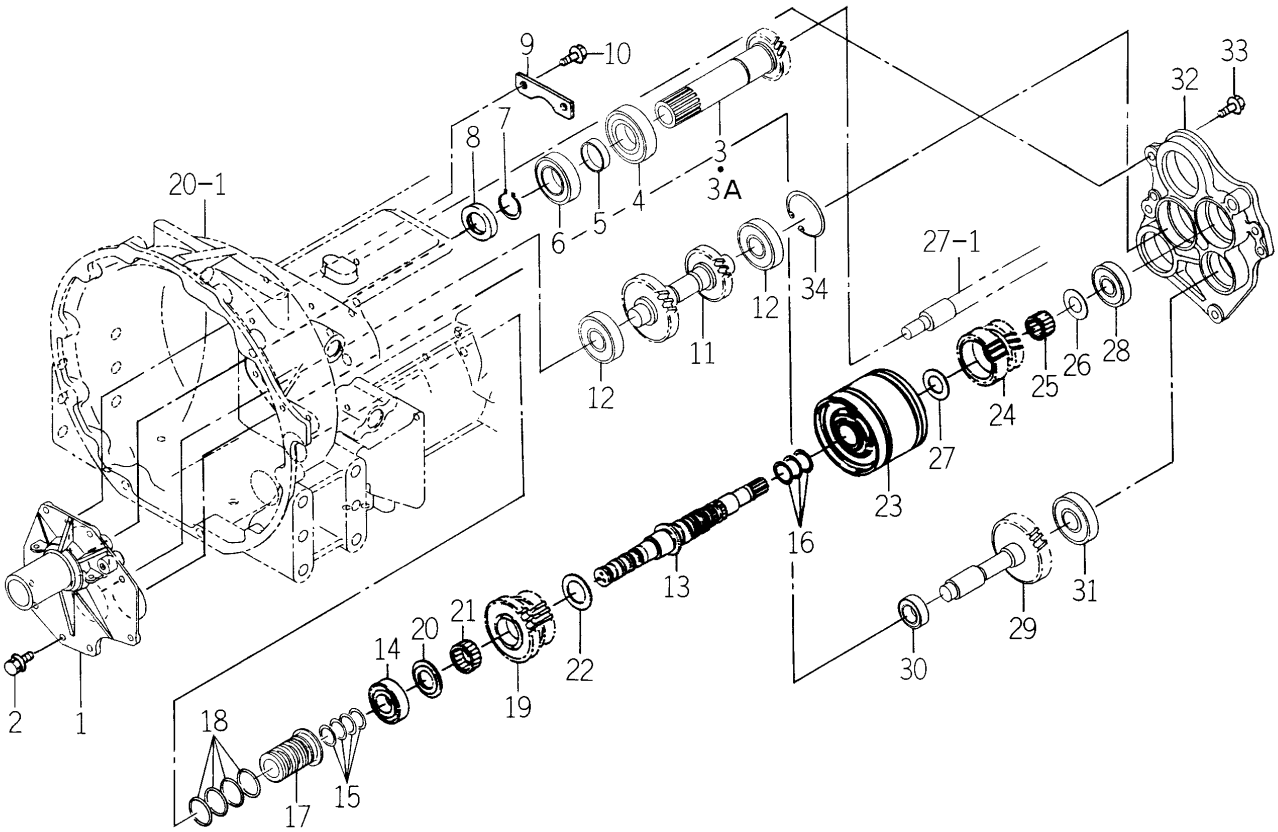

1742-203 -0100

KEY	PART CODE	DESCRIPTION	SPC	TYPE OF MODEL TG5330 E4	TG5330 E6	TG5390 E4	TG5390 E6	ITC	COL	GRP	REMARKS
30	1729-214-049-00	BEARING/BALL	*	1	1	1	1				
31	V600-410-600-40	BEARING/BALL	*	1	1	1	1				
32	1742-203-006-00	METAL/REVERSE	*	1	1	1	1				
33	V231-361-002-50	FLANGEBOLT	*	4	4	4	4				
34	V707-140-062-00	RING/SNAP	*	1	1	1	1				

FIG. 25 HST UNIT SYSTEM (H TYPE)

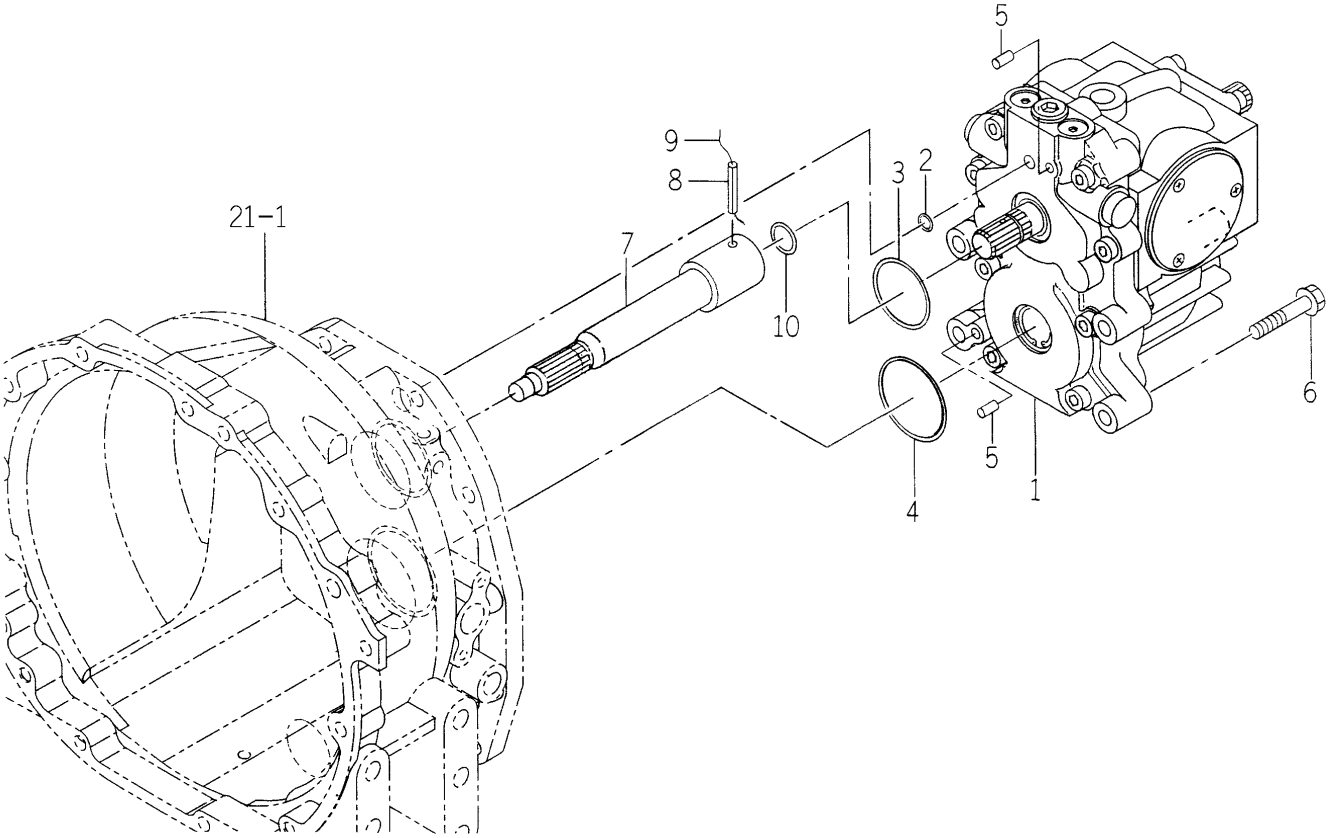

1743-203 -0100

KEY	PART CODE	DESCRIPTION	SPC	TYPE OF MODEL				ITC	COL	GRP	REMARKS
				TG5330 E4	TG5330 E6	TG5390 E4	TG5390 E6				
1	1743-203-510-10	HST/29.5/30.2 ASSY	*			1	1				FIG 277
2	V720-102-401-60	O-RING/P16	*			1	1				
3	V721-103-106-00	O-RING/G60	*			1	1				
4	V721-103-107-00	O-RING/G70	*			1	1				
5	V523-100-801-60	PIN	*			2	2				
6	V231-361-205-50	FLANGEBOLT	*			4	4				
7	1743-203-530-00	SHAFT/INPUT COMP	*			1	1				
8	V580-140-604-00	PIN,SPRING/6 X40 W	*			1	1				
9		WIRE	*			1	1				
10	1646-207-055-00	RING/O	*			1	1				

FIG. 26 GEAR (REVERSE) SYSTEM (S TYPE)

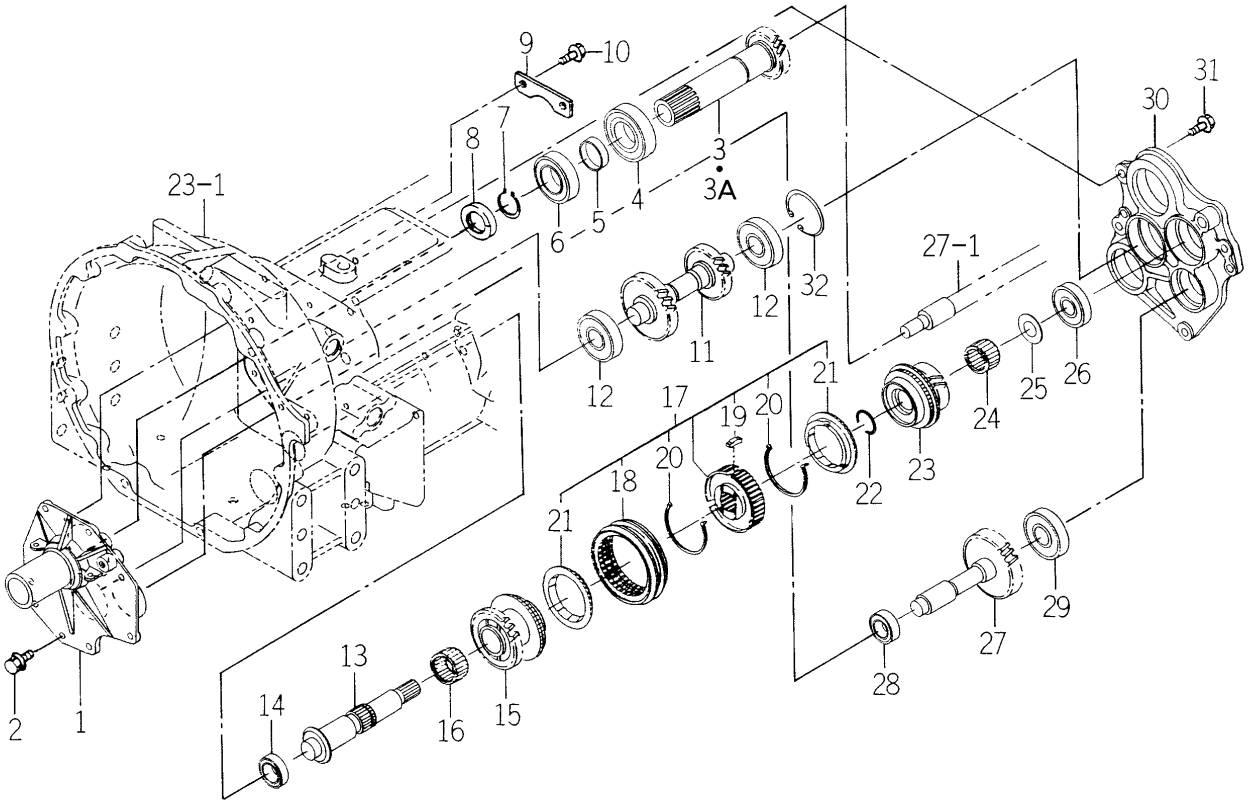

1742-203A-0100

KEY	PART CODE	DESCRIPTION	SPC	TYPE OF MODEL TG5330 E4	TG5330 E6	TG5390 E4	TG5390 E6	ITC	COL	GRP	REMARKS
1	1742-203-001-00	METAL/INPUT	*	1		1					
2	V231-360-802-00	FLANGEBOLT	*	8		8					
3	1742-203-012-10	GEAR/HELICAL/18	*	1 -27		1 -25					
3A	1742-203-012-20	GEAR/HELICAL/18	*	1 28-		1 26-		3			
4	V600-410-620-70	BEARING/BALL	*	1		1					
5	1742-203-002-00	COLLAR/36X43X10	*	1		1					
6	V600-410-600-70	BEARING/BALL	*	1		1					
7	V704-140-035-00	RING,SNAP/35 C	*	1		1					
8	V744-135-500-80	SEAL,OIL/TC355008	*	1		1					
9	1560-206-002-40	PLATE	*	1		1					
10	V231-360-801-60	FLANGEBOLT	*	2		2					
11	1742-203-003-00	GEAR/27-25	*	1		1					
12	1729-214-049-00	BEARING/BALL	*	2		2					
13	1742-203-009-00	SHAFT/REVERSE	*	1		1					
14	V600-410-620-50	BEARING/BALL	*	1		1					
15	1742-203-010-00	GEAR/HERICAL/23	*	1		1					
16	1729-203-004-00	BEARING/NEEDLE	*	1		1					
17	1742-203-230-00	SYNCHRONIZER/30 ASSY	*	1		1					
18	1742-203-232-00	SLEEVE	*	1		1					
19	1627-205-223-00	PIN/INSERT	*	3		3					
20	1650-214-203-00	SPRING	*	2		2					
21	1650-214-204-00	RING/SYNCHRONIZER	*	2		2					
22	1729-203-006-00	RING/SNAP/WR30	*	1		1					
23	1742-203-011-00	GEAR/HERICAL/23	*	1		1					
24	1729-216-006-00	BEARING/NEEDLE	*	1		1					
25	1729-215-007-00	WASHER/20X40X03	*	1		1					
26	V600-410-630-40	BEARING/BALL	*	1		1					
27	1742-203-013-00	GEAR/HERICAL/32	*	1		1					
28	1729-214-049-00	BEARING/BALL	*	1		1					
29	V600-410-600-40	BEARING/BALL	*	1		1					

FIG. 26 GEAR (REVERSE) SYSTEM (S TYPE)

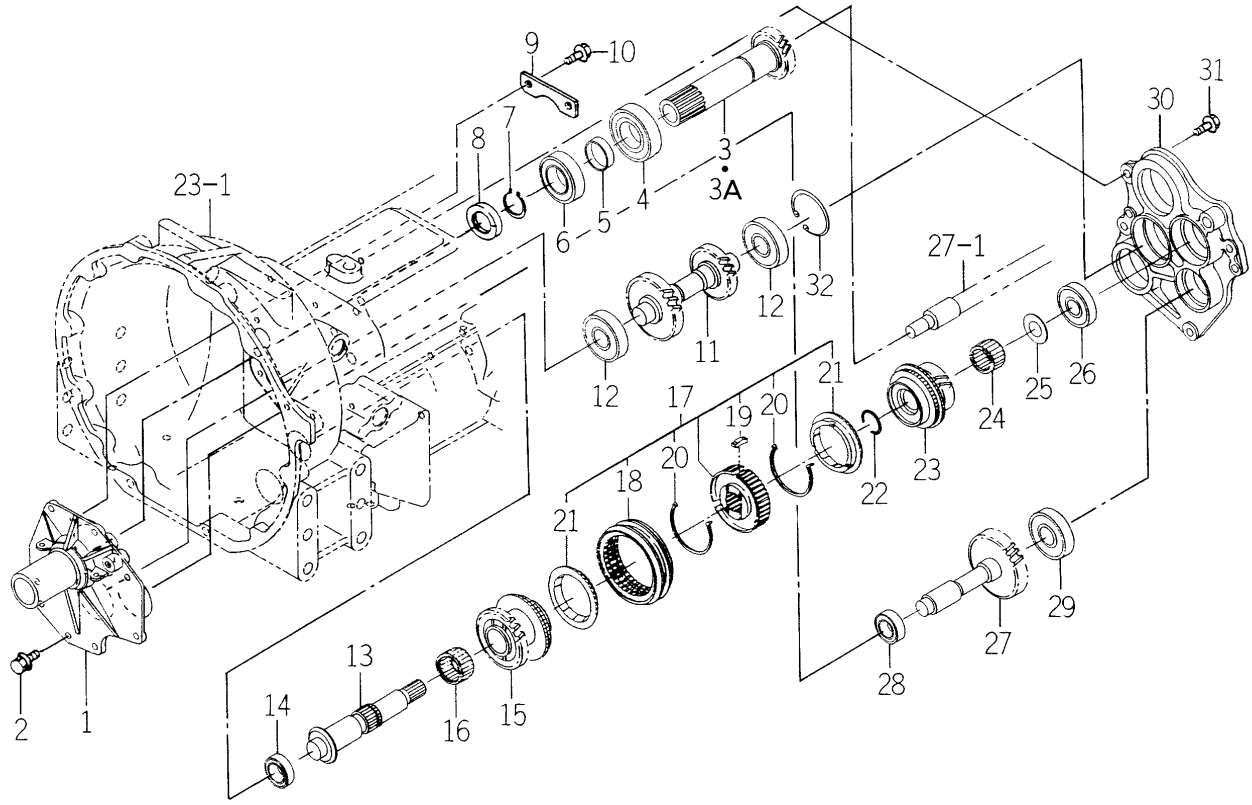

1742-203A-0100

KEY	PART CODE	DESCRIPTION	SPC	TYPE OF MODEL				ITC	COL	GRP	REMARKS
				TG5330 E4	TG5330 E6	TG5390 E4	TG5390 E6				
30	1742-203-006-00	METAL/REVERSE	*	1		1					
31	V231-361-002-50	FLANGEBOLT	*	4		4					
32	V707-140-062-00	RING/SNAP	*	1		1					

FIG. 27 GEAR (PTO/FRONT) SYSTEM (TG5390-EXCEPT H TYPE-No.1-/TG5330-EXCEPT H TYPE-TG5330E4-No.1-59/TG5330E6-No.1-59)

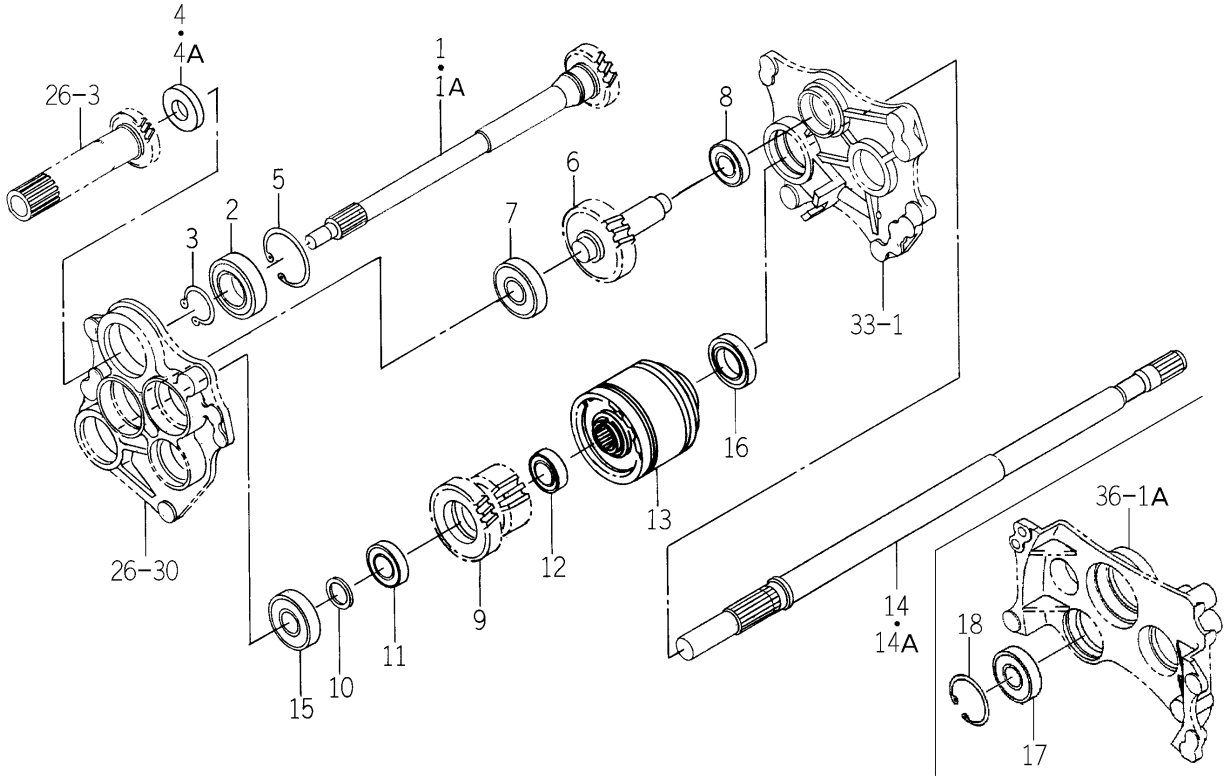

1742-209 -0100

KEY	PART CODE	DESCRIPTION	SPC	TYPE OF MODEL TG5330 E4	TG5330 E6	TG5390 E4	TG5390 E6	ITC	COL	GRP	REMARKS
1	1742-209-001-00	GEAR/HELICAL/18	*	1 -12	1 -18	1 -12	1 -10				
1A	1742-209-001-10	GEAR/HELICAL/18	*	1 -59	1 -59	1 13-	1 11-	1			
2	V600-410-620-70	BEARING/BALL	*	1 -59	1 -59	1	1				
3	V704-140-035-00	RING,SNAP/35 C	*	1 -59	1 -59	1	1				
4	V744-125-400-70	SEAL,OIL/TC25407	*	1 -27	1 -27	1 -25	1 -25				
4A	V744-125-380-70	SEAL,OIL/TC25387	*	1 -59	1 -59	1 26-	1 26-				
5	V707-140-072-00	RING/SNAP	*	1 -59	1 -59	1	1				
6	1742-209-002-00	GEAR/HELICAL/27	*	1 -59	1 -59	1	1				
7	1729-214-049-00	BEARING/BALL	*	1 -59	1 -59	1	1				
8	V600-410-620-40	BEARING/BALL	*	1 -59	1 -59	1	1				
9	1742-209-003-00	GEAR/HELICAL/27	*	1 -59	1 -59	1	1				
10	1593-307-052-10	COLLAR/26X35X03	*	1 -59	1 -59	1	1				
11	V600-410-620-50	BEARING/BALL	*	1 -59	1 -59	1	1				
12	V600-410-600-50	BEARING/BALL	*	1 -59	1 -59	1	1				
13	1742-209-210-00	CLUTCH/PTO ASSY	*	1 -59	1 -59	1	1				FIG 275
14	1742-209-004-10	SHAFT/DRIVE/PTO	*	1 -59	1 -59	1 -528	1 -528				
14A	1742-209-004-20	SHAFT/DRIVE/PTO	*			1 529-	1 529-	1			
15	1729-214-049-00	BEARING/BALL	*	1 -59	1 -59	1	1				
16	V600-410-600-60	BEARING/BALL	*	1 -59	1 -59	1	1				
17	V600-410-620-60	BEARING/BALL	*			1 531-	1 531-				
18	V707-140-062-00	RING/SNAP	*			1 529-	1 529-				

FIG. 28 GEAR (PTO/FRONT) SYSTEM (H TYPE)

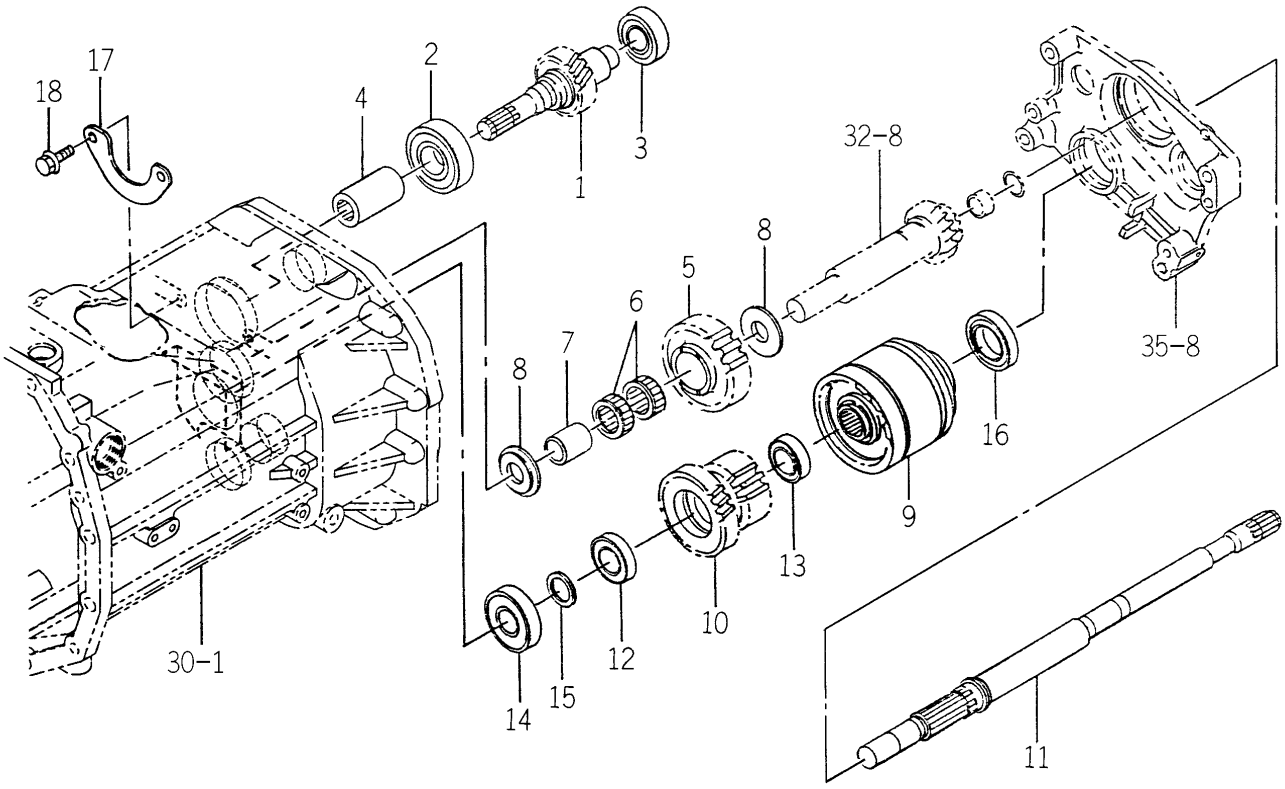

1743-209 -0100

KEY	PART CODE	DESCRIPTION	SPC	TYPE OF MODEL TG5330 E4	TG5330 E6	TG5390 E4	TG5390 E6	ITC	COL	GRP	REMARKS
1	1743-209-051-00	GEAR/HELICAL/18	*			1	1				
2	V600-410-630-60	BEARING/BALL	*			1	1				
3	V600-410-620-50	BEARING/BALL	*			1	1				
4	1560-220-004-10	COUPRING/21X36X65	*			1	1				
5	1743-209-052-00	GEAR/HELICAL/27	*			1	1				
6	1743-209-053-00	BEARING/NEEDLE	*			2	2				
7	1743-209-054-00	BUSH/25X32X36	*			1	1				
8	1743-209-055-00	WASHER/25X55X04	*			2	2				
9	1742-209-210-00	CLUTCH/PTO ASSY	*			1	1				FIG 275
10	1742-209-003-00	GEAR/HELICAL/27	*			1	1				
11	1743-209-056-00	SHAFT/DRIVE/PTO	*			1	1				
12	V600-410-620-50	BEARING/BALL	*			1	1				
13	V600-410-600-50	BEARING/BALL	*			1	1				
14	1729-214-049-00	BEARING/BALL	*			1	1				
15	1593-307-052-10	COLLAR/26X35X03	*			1	1				
16	V600-410-600-60	BEARING/BALL	*			1	1				
17	1656-209-006-00	PLATE	*			1	1				
18	V231-361-002-00	FLANGEBOLT	*			2	2				

FIG. 29 GEAR (PTO/FRONT) SYSTEM (TG5330-EXCEPT H TYPE-TG5330E4-No.60-/ TG5330E6-No.60-)

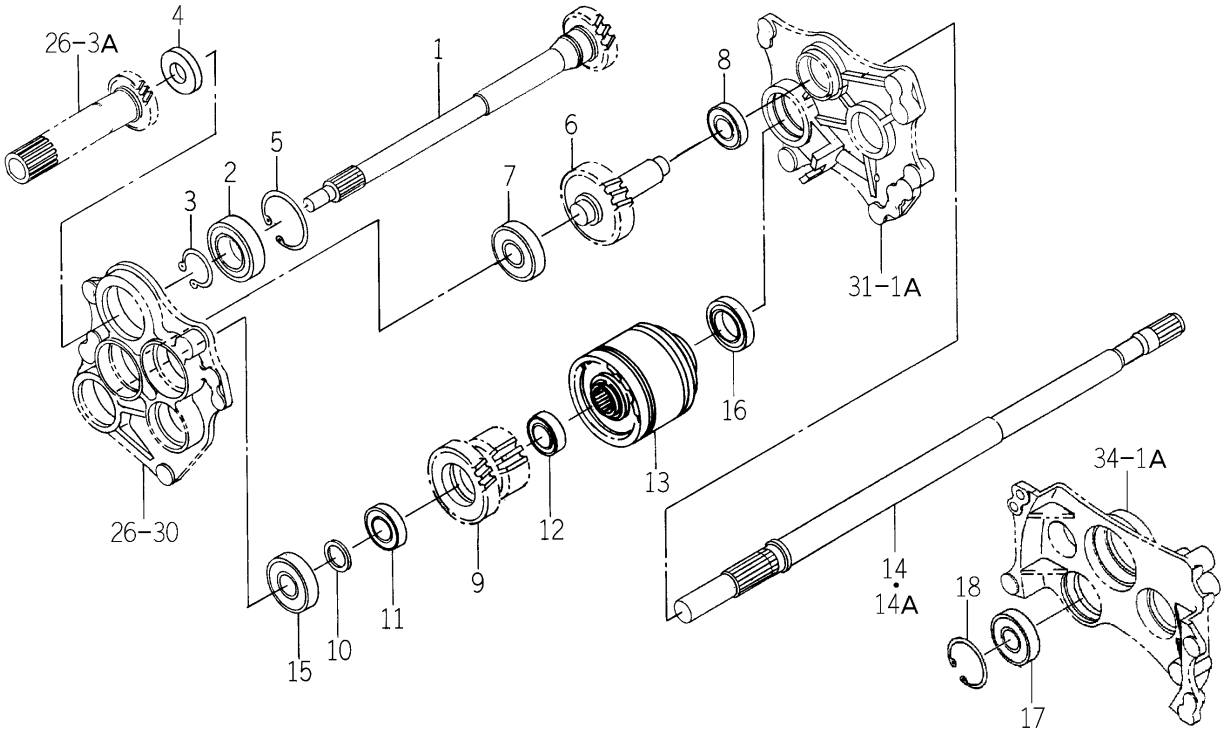

1742-209B-0100

KEY	PART CODE	DESCRIPTION	SPC	TYPE OF MODEL TG5330 E4	TG5330 E6	TG5390 E4	TG5390 E6	ITC	COL	GRP	REMARKS
1	1742-209-001-10	GEAR/HELICAL/18	*	1 60-	1 60-						
2	V600-410-620-70	BEARING/BALL	*	1 60-	1 60-						
3	V704-140-035-00	RING,SNAP/35 C	*	1 60-	1 60-						
4	V744-125-380-70	SEAL,OIL/TC25387	*	1 60-	1 60-						
5	V707-140-072-00	RING/SNAP	*	1 60-	1 60-						
6	1742-209-002-00	GEAR/HELICAL/27	*	1 60-	1 60-						
7	1729-214-049-00	BEARING/BALL	*	1 60-	1 60-						
8	V600-410-620-40	BEARING/BALL	*	1 60-	1 60-						
9	1742-209-003-00	GEAR/HELICAL/27	*	1 60-	1 60-						
10	1593-307-052-10	COLLAR/26X35X03	*	1 60-	1 60-						
11	V600-410-620-50	BEARING/BALL	*	1 60-	1 60-						
12	V600-410-600-50	BEARING/BALL	*	1 60-	1 60-						
13	1729-209-200-00	CLUTCH/PTO ASSY	*	1 60-	1 60-						FIG 272
14	1742-209-004-10	SHAFT/DRIVE/PTO	*	1 -162	1 -162						
14A	1742-209-004-20	SHAFT/DRIVE/PTO	*	1 163-	1 163-			1			
15	1729-214-049-00	BEARING/BALL	*	1 60-	1 60-						
16	V600-410-600-60	BEARING/BALL	*	1 60-	1 60-						
17	V600-410-620-60	BEARING/BALL	*	1 163-	1 163-						
18	V707-140-062-00	RING/SNAP	*	1 163-	1 163-						

FIG. 30 CASE (TRANSMISSION/MID) SYSTEM (H TYPE)

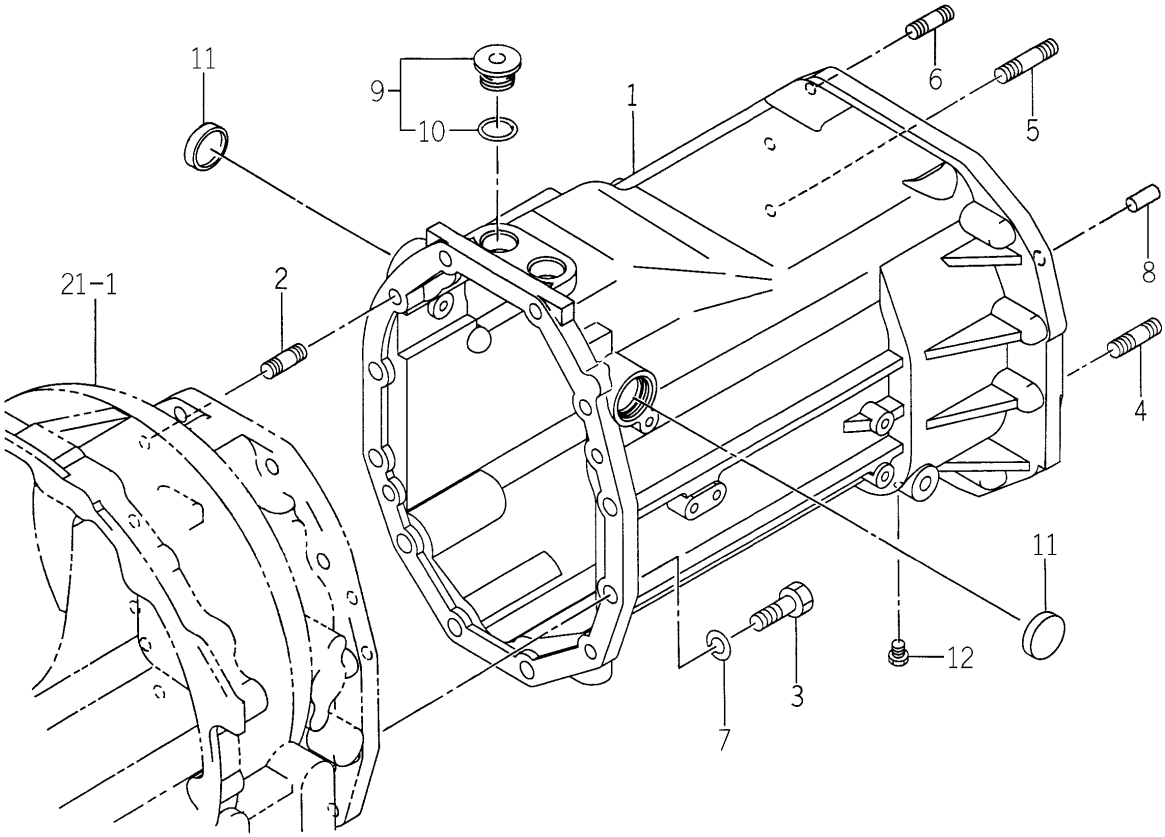

1743-211 -0100

KEY	PART CODE	DESCRIPTION	SPC	TYPE OF MODEL TG5330 E4	TG5330 E6	TG5390 E4	TG5390 E6	ITC	COL	GRP	REMARKS
1	1743-211-051-20	CASE/TRANSMISSION/MI	*			1	1	2			
2	V251-341-203-5D	BOLT/STUD/SEAL	*			2	2				
3	V201-361-203-50	BOLT/M12X35	*			7	7				
4	V251-341-205-00	BOLT/STUD	*			2	2				
5	V251-341-206-00	BOLT/STUD	*			2	2				
6	V251-341-203-50	BOLT	*			1	1				
7	V401-160-012-00	WASHER,SP/M12	*			62-7	62-7				
8	V523-101-002-40	PIN	*			2	2				
9	1743-211-510-00	PLUG/G3/4 ASSY	*			547-2	547-2				
10	V720-113-502-40	O-RING/P24	*			2	2				
11	3737-211-007-00	CAP/35	*			2	2				
12	V782-160-000-2T	PLUG/SCREW/SEAL	*			1	1				

FIG. 31 GEAR (MAIN) SYSTEM (S,P TYPE)

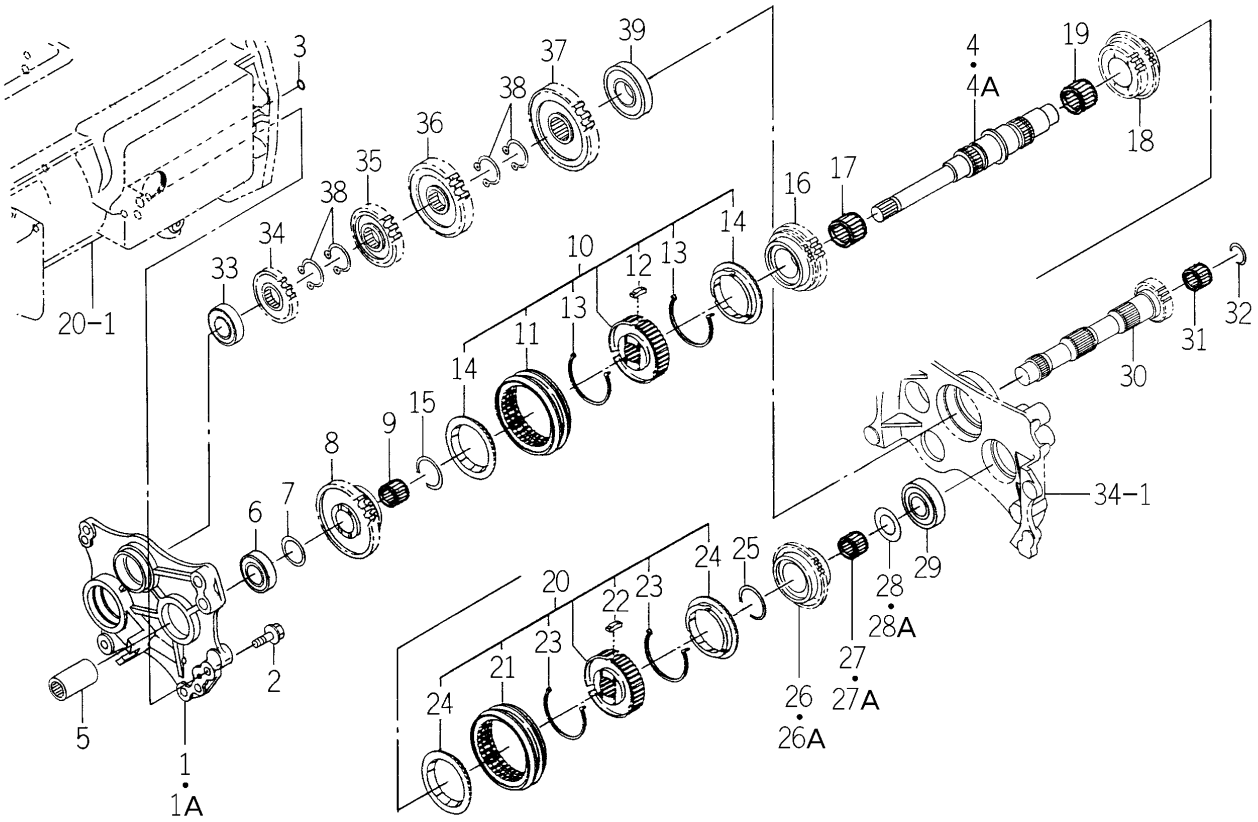

1742-214 -0100

KEY	PART CODE	DESCRIPTION	SPC	TYPE OF MODEL TG5330 E4	TG5330 E6	TG5390 E4	TG5390 E6	ITC	COL	GRP	REMARKS
1	1742-214-200-10	METAL/MAIN COMP	*	1 -43	1 -43	1 -61	1 -61	1			
1A	1742-214-200-20	METAL/MAIN COMP	*	1 44-	1 44-	1 62-	1 62-	1			
2	V231-361-002-50	FLANGEBOLT	*	4	4	4	4				
3	V720-112-401-00	O-RING/P10	*	1	1	1	1				
4	1742-214-001-00	SHAFT/MAIN	*	1 -58	1 -58	1 -134	1 -134				
4A	1742-214-001-10	SHAFT/MAIN	*	1 59-	1 59-	1 135-	1 135-	1			
5	1602-321-004-00	COUPLING/18X30X55	*	1	1	1	1				
6	V600-410-630-40	BEARING/BALL	*	1	1	1	1				
7	1729-215-007-00	WASHER/20X40X03	*	1	1	1	1				
8	1742-214-017-10	GEAR/SPUR/40	*	1	1	1	1				
9	1729-216-006-00	BEARING/NEEDLE	*	1	1	1	1				
10	1742-214-210-00	SYNCHRONIZER/35 ASSY	*	1	1	1	1				
11	1742-203-232-00	SLEEVE	*	1	1	1	1				
12	1627-205-223-00	PIN/INSERT	*	3	3	3	3				
13	1650-214-203-00	SPRING	*	2	2	2	2				
14	1650-214-204-00	RING/SYNCHRONIZER	*	2	2	2	2				
15	1729-214-023-00	RING/SNAP/WR35	*	1	1	1	1				
16	1742-214-003-10	GEAR/SPUR/33	*	1	1	1	1				
17	1729-214-025-00	BEARING/NEEDLE	*	1	1	1	1				
18	1742-214-004-10	GEAR/SPUR/26	*	1	1	1	1				
19	1729-214-025-00	BEARING/NEEDLE	*	1	1	1	1				
20	1742-214-210-00	SYNCHRONIZER/35 ASSY	*	1	1	1	1				
21	1742-203-232-00	SLEEVE	*	1	1	1	1				
22	1627-205-223-00	PIN/INSERT	*	3	3	3	3				
23	1650-214-203-00	SPRING	*	2	2	2	2				
24	1650-214-204-00	RING/SYNCHRONIZER	*	2	2	2	2				
25	1729-214-023-00	RING/SNAP/WR35	*	1	1	1	1				
26	1742-214-005-10	GEAR/SPUR/20	*	1 -479	1 -479	1 -868	1 -868				
26A	1742-214-005-20	GEAR/SPUR/20	*	1 480-	1 480-	1 869-	1 869-	1			
27	1729-203-004-00	BEARING/NEEDLE	*	1 -640	1 -640	1 -955	1 -955				

FIG. 31 GEAR (MAIN) SYSTEM (S,P TYPE)

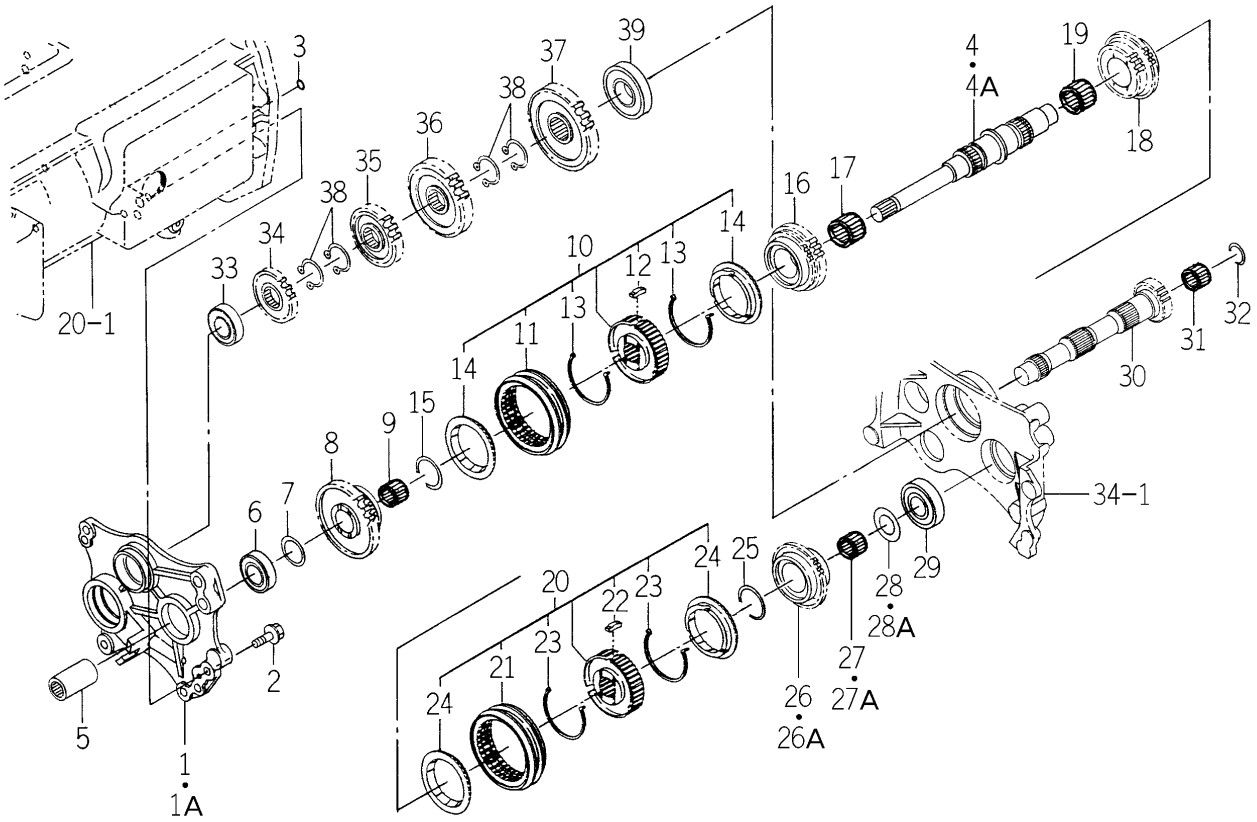

1742-214 -0100

KEY	PART CODE	DESCRIPTION	SPC	TYPE OF MODEL TG5330 E4	TG5330 E6	TG5390 E4	TG5390 E6	ITC	COL	GRP	REMARKS
27A	1746-214-001-00	BEARING/NEEDLE	*	1 641-	1 641-	1 956-	1 956-				
28	1650-203-013-00	WASHER/25X46X03	*	1 -59	1 -59	1 -151	1 -151				
28A	1435-203-001-00	COLLAR/25X46X3	*	1 60-	1 60-	1 152-	1 152-				
29	1729-214-049-00	BEARING/BALL	*	1	1	1	1				
30	1742-214-006-00	GEAR/SPUR/16	*	1	1	1	1				
31	1716-127-011-00	BEARING/NEEDLE	*	1	1	1	1				
32	1560-208-023-00	RING,SNAP	*	1	1	1	1				
33	V600-410-620-50	BEARING/BALL	*	1	1	1	1				
34	1742-214-018-00	GEAR/SPUR/23	*	1	1	1	1				
35	1742-214-008-00	GEAR/SPUR/30	*	1	1	1	1				
36	1742-214-009-00	GEAR/SPUR/37	*	1	1	1	1				
37	1742-214-010-00	GEAR/SPUR/43	*	1	1	1	1				
38	V704-140-030-00	RING,SNAP/30 C	*	4	4	4	4				
39	V600-410-630-60	BEARING/BALL	*	1	1	1	1				

FIG. 32 GEAR (MAIN) SYSTEM (H TYPE)

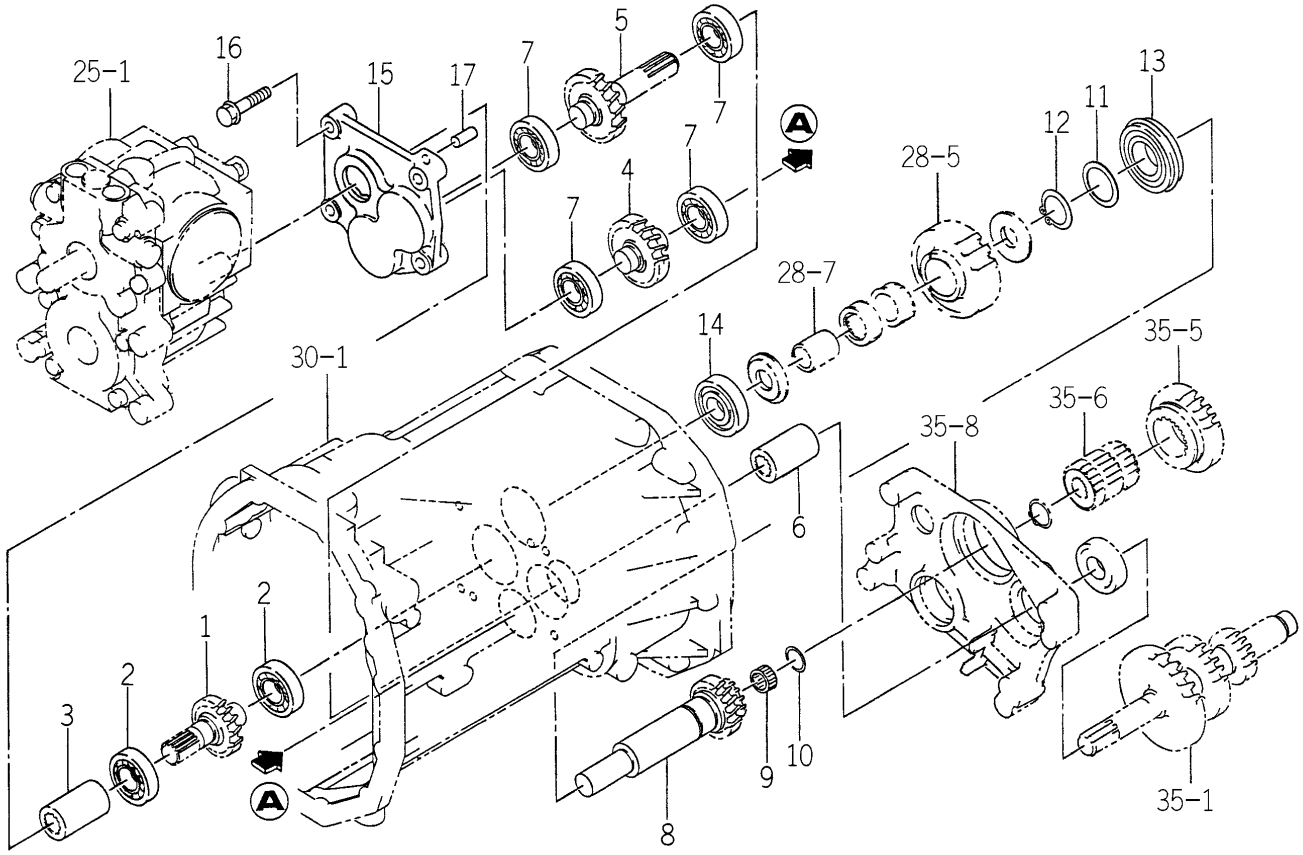

1743-214 -0100

KEY	PART CODE	DESCRIPTION	SPC	TYPE OF MODEL TG5330 E4	TG5330 E6	TG5390 E4	TG5390 E6	ITC	COL	GRP	REMARKS
1	1743-214-051-10	GEAR/HELICAL/20	*			1	1				
2	V600-410-620-50	BEARING/BALL	*			2	2				
3	1560-220-004-10	COUPRING/21X36X65	*			1	1				
4	1743-214-052-00	GEAR/HELICAL/26	*			1	1				
5	1743-214-053-00	GEAR/HELICAL/24	*			1	1				
6	1560-220-004-10	COUPRING/21X36X65	*			1	1				
7	V600-410-620-50	BEARING/BALL	*			4	4				
8	1743-214-054-00	GEAR/HELICAL/21	*			1	1				
9	1716-127-011-00	BEARING/NEEDLE	*			1	1				
10	1560-208-023-00	RING,SNAP	*			1	1				
11	1444-314-004-10	COLLAR(35X50X2)	*			1	1				
12	V704-140-035-00	RING,SNAP/35 C	*			1	1				
13	V607-110-620-70	BEARING,RB/6207N	*			1	1				
14	1729-214-049-00	BEARING/BALL	*			1	1				
15	1743-214-056-10	METAL/INPUT	*			1	1				
16	V231-361-004-00	FLANGEBOLT	*			4	4				
17	V523-101-002-40	PIN	*			2	2				

FIG. 33 GEAR (MAIN) SYSTEM (Q TYPE)

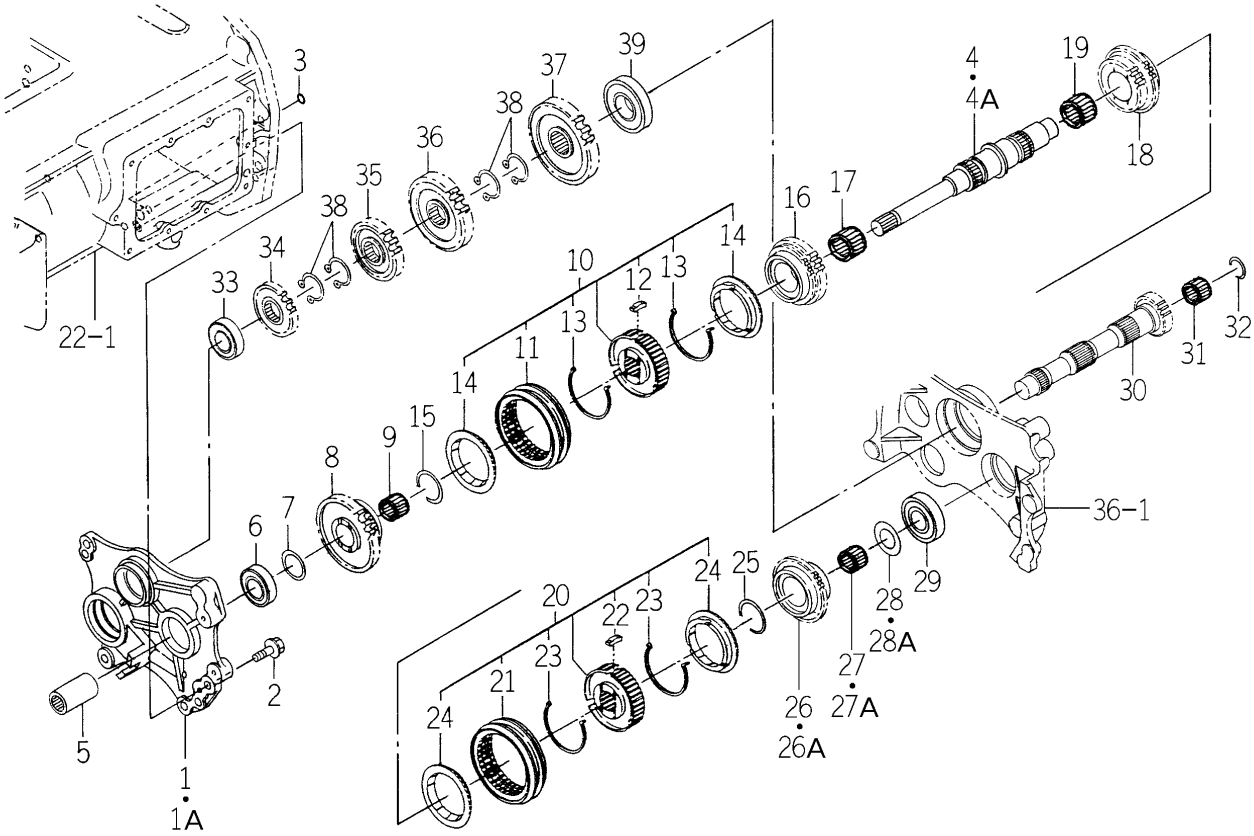

1746-214 -0100

KEY	PART CODE	DESCRIPTION	SPC	TYPE OF MODEL TG5330 E4	TG5330 E6	TG5390 E4	TG5390 E6	ITC	COL	GRP	REMARKS
1	1746-214-200-10	METAL/MAIN/Q COMP	*	1 -39		1 -55		1			
1A	1746-214-200-20	METAL/MAIN/Q COMP	*	1 40-		1 56-		1			
2	V231-361-002-50	FLANGEBOLT	*	4		4					
3	V720-112-401-00	O-RING/P10	*	1		1					
4	1742-214-001-00	SHAFT/MAIN	*	1 -58		1 -134					
4A	1742-214-001-10	SHAFT/MAIN	*	1 59-		1 135-		1			
5	1602-321-004-00	COUPLING/18X30X55	*	1		1					
6	V600-410-630-40	BEARING/BALL	*	1		1					
7	1729-215-007-00	WASHER/20X40X03	*	1		1					
8	1742-214-017-10	GEAR/SPUR/40	*	1		1					
9	1729-216-006-00	BEARING/NEEDLE	*	1		1					
10	1742-214-210-00	SYNCHRONIZER/35 ASSY	*	1		1					
11	1742-203-232-00	SLEEVE	*	1		1					
12	1627-205-223-00	PIN/INSERT	*	3		3					
13	1650-214-203-00	SPRING	*	2		2					
14	1650-214-204-00	RING/SYNCHRONIZER	*	2		2					
15	1729-214-023-00	RING/SNAP/WR35	*	1		1					
16	1742-214-003-10	GEAR/SPUR/33	*	1		1					
17	1729-214-025-00	BEARING/NEEDLE	*	1		1					
18	1742-214-004-10	GEAR/SPUR/26	*	1		1					
19	1729-214-025-00	BEARING/NEEDLE	*	1		1					
20	1742-214-210-00	SYNCHRONIZER/35 ASSY	*	1		1					
21	1742-203-232-00	SLEEVE	*	1		1					
22	1627-205-223-00	PIN/INSERT	*	3		3					
23	1650-214-203-00	SPRING	*	2		2					
24	1650-214-204-00	RING/SYNCHRONIZER	*	2		2					
25	1729-214-023-00	RING/SNAP/WR35	*	1		1					
26	1742-214-005-10	GEAR/SPUR/20	*	1 -479		1 -868					
26A	1742-214-005-20	GEAR/SPUR/20	*	1 480-		1 869-		1			
27	1729-203-004-00	BEARING/NEEDLE	*	1 -642		1 -950					

FIG. 33 GEAR (MAIN) SYSTEM (Q TYPE)

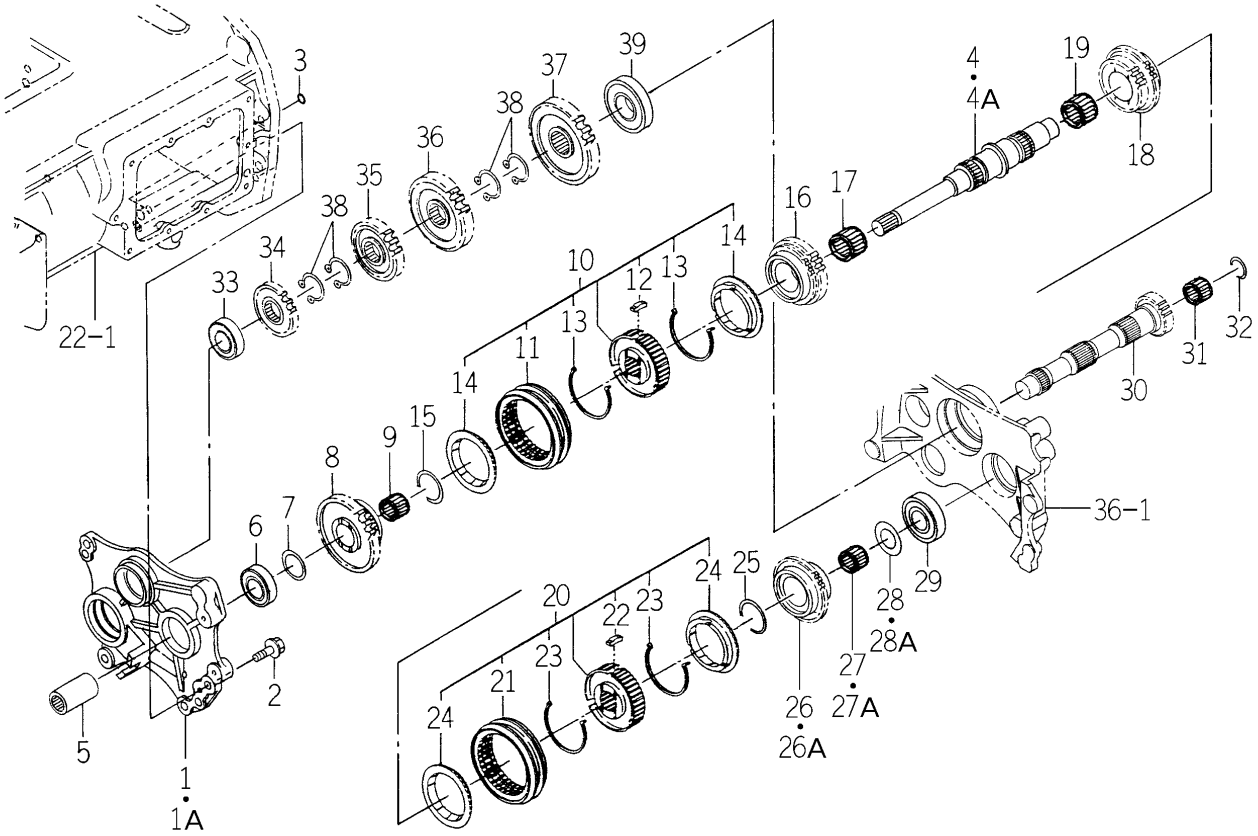

1746-214 -0100

KEY	PART CODE	DESCRIPTION	SPC	TYPE OF MODEL TG5330 E4	TG5330 E6	TG5390 E4	TG5390 E6	ITC	COL	GRP	REMARKS
27A	1746-214-001-00	BEARING/NEEDLE	*	1 643-		1 951-					
28	1650-203-013-00	WASHER/25X46X03	*	1 -58		1 -134					
28A	1435-203-001-00	COLLAR/25X46X3	*	1 59-		1 135-					
29	1729-214-049-00	BEARING/BALL	*	1		1					
30	1742-214-006-00	GEAR/SPUR/16	*	1		1					
31	1716-127-011-00	BEARING/NEEDLE	*	1		1					
32	1560-208-023-00	RING,SNAP	*	1		1					
33	V600-410-620-50	BEARING/BALL	*	1		1					
34	1742-214-018-00	GEAR/SPUR/23	*	1		1					
35	1742-214-008-00	GEAR/SPUR/30	*	1		1					
36	1742-214-009-00	GEAR/SPUR/37	*	1		1					
37	1742-214-010-00	GEAR/SPUR/43	*	1		1					
38	V704-140-030-00	RING,SNAP/30 C	*	4		4					
39	V600-410-630-60	BEARING/BALL	*	1		1					

FIG. 34 GEAR (SUB) SYSTEM (S,P TYPE)

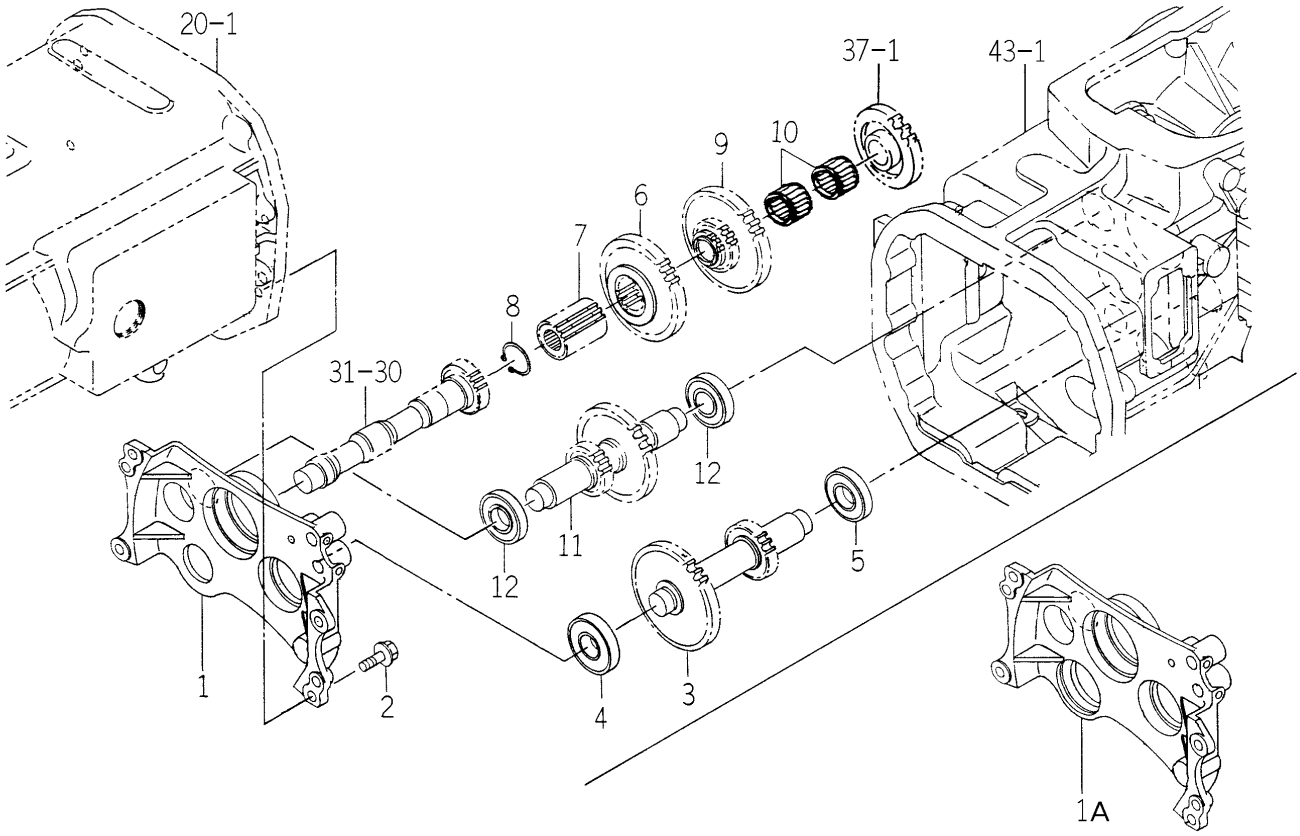

1742-216 -0100

KEY	PART CODE	DESCRIPTION	SPC	TYPE OF MODEL TG5330 E4	TG5330 E6	TG5390 E4	TG5390 E6	ITC	COL	GRP	REMARKS
1	1742-216-006-00	METAL/SUB	*	1 -552	1 -552	1 -893	1 -893				
1A	1742-216-011-00	METAL/SUB	*	1 553-4	1 553-4	1 894-4	1 894-4				
2	V231-361-002-50	FLANGEBOLT	*								
3	1742-216-001-00	GEAR/36-17	*	1	1	1	1				
4	1729-214-049-00	BEARING/BALL	*	1	1	1	1				
5	V600-410-620-50	BEARING/BALL	*	1	1	1	1				
6	1742-216-002-00	GEAR/SPUR/34	*	1	1	1	1				
7	1742-216-003-00	HUB/25X40X58	*	1	1	1	1				
8	V704-140-025-00	RING,SNAP/25 C	*	1	1	1	1				
9	1742-216-004-00	GEAR/17-35	*	1	1	1	1				
10	1709-301-001-00	BEARING/NEEDLE	*	2	2	2	2				
11	1742-216-005-00	GEAR/15-32	*	1	1	1	1				
12	V600-410-620-50	BEARING/BALL	*	2	2	2	2				

FIG. 35 GEAR (SUB) SYSTEM (H TYPE)

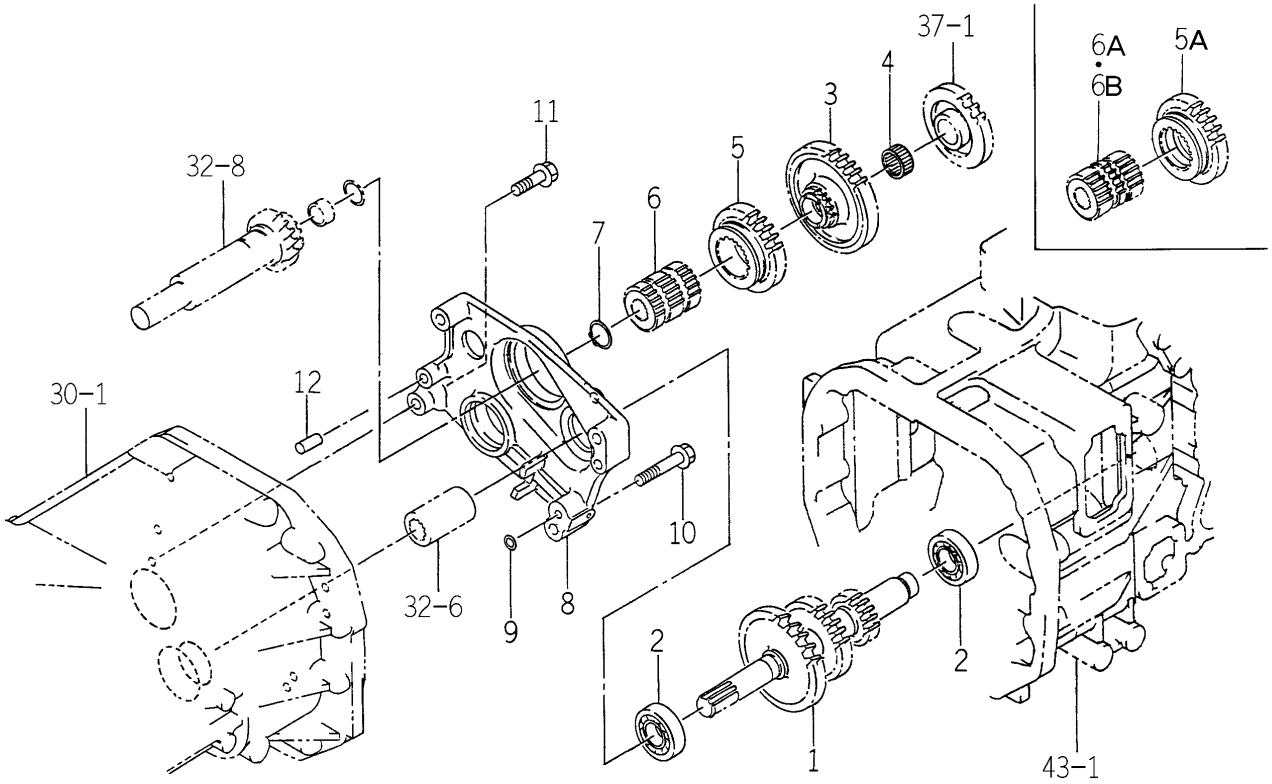

1743-216 -0100

KEY	PART CODE	DESCRIPTION	SPC	TYPE OF MODEL TG5330 E4	TG5330 E6	TG5390 E4	TG5390 E6	ITC	COL	GRP	REMARKS
1	1743-216-051-00	GEAR/38-25-15	*			1	1				
2	V600-410-620-50	BEARING/BALL	*			2	2				
3	1743-216-052-00	GEAR/SPUR/38	*			1	1				
4	1729-216-006-00	BEARING/NEEDLE	*			1	1				
5	1743-216-053-00	GEAR/SPUR/28	*			1 -28	1 -28				
5A	1743-216-053-10	GEAR/SPUR/28	*			1 29-	1 29-	3			
6	1743-216-054-00	HUB/23X46X58	*			1 -28	1 -28				
6A	1743-216-054-10	HUB/23X46X58	*			1 -1274	1 -1274	3			
6B	1743-216-054-20	HUB/23X46X58	*			1 1275-	1 1275-	1			
7	V704-140-025-00	RING,SNAP/25 C	*			1	1				
8	1743-216-510-00	METAL/SUB COMP	*			1	1				
9	V720-112-401-40	O-RING/P14	*			1	1				
10	V231-361-005-50	FLANGEBOLT	*			3	3				
11	V231-361-003-50	FLANGEBOLT	*			1	1				
12	V523-101-002-40	PIN	*			2	2				

FIG. 36 GEAR (SUB) SYSTEM (Q TYPE)

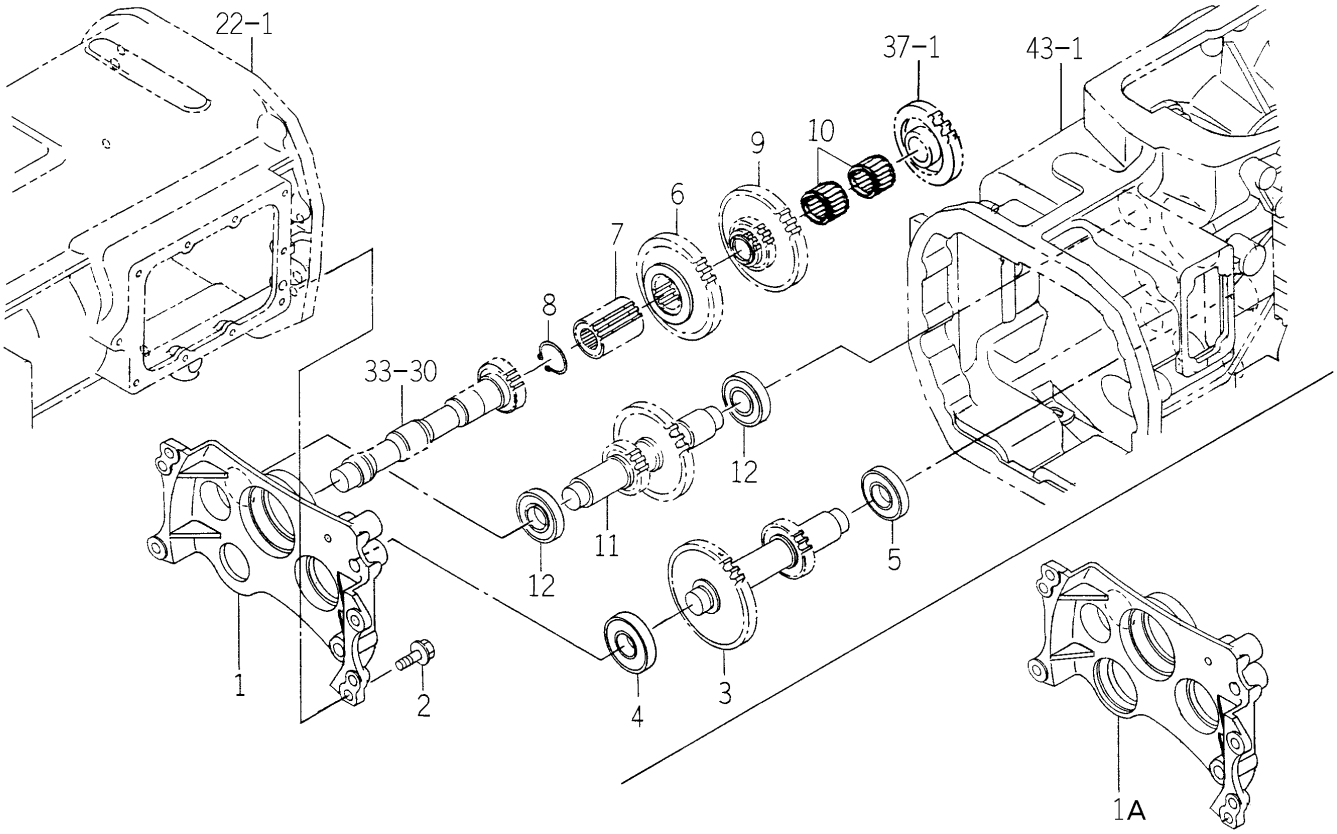

1746-216 -0100

KEY	PART CODE	DESCRIPTION	SPC	TYPE OF MODEL TG5330 E4	TG5330 E6	TG5390 E4	TG5390 E6	ITC	COL	GRP	REMARKS
1	1746-216-001-00	METAL/SUB/Q	*	1 -606		1 -934					
1A	1746-216-011-00	METAL/SUB/Q	*	1 607-		1 935-					
2	V231-361-002-50	FLANGEBOLT	*	4		4					
3	1742-216-001-00	GEAR/36-17	*	1		1					
4	1729-214-049-00	BEARING/BALL	*	1		1					
5	V600-410-620-50	BEARING/BALL	*	1		1					
6	1742-216-002-00	GEAR/SPUR/34	*	1		1					
7	1742-216-003-00	HUB/25X40X58	*	1		1					
8	V704-140-025-00	RING,SNAP/25 C	*	1		1					
9	1742-216-004-00	GEAR/17-35	*	1		1					
10	1709-301-001-00	BEARING/NEEDLE	*	2		2					
11	1742-216-005-00	GEAR/15-32	*	1		1					
12	V600-410-620-50	BEARING/BALL	*	2		2					

FIG. 37 GEAR (4WD) SYSTEM

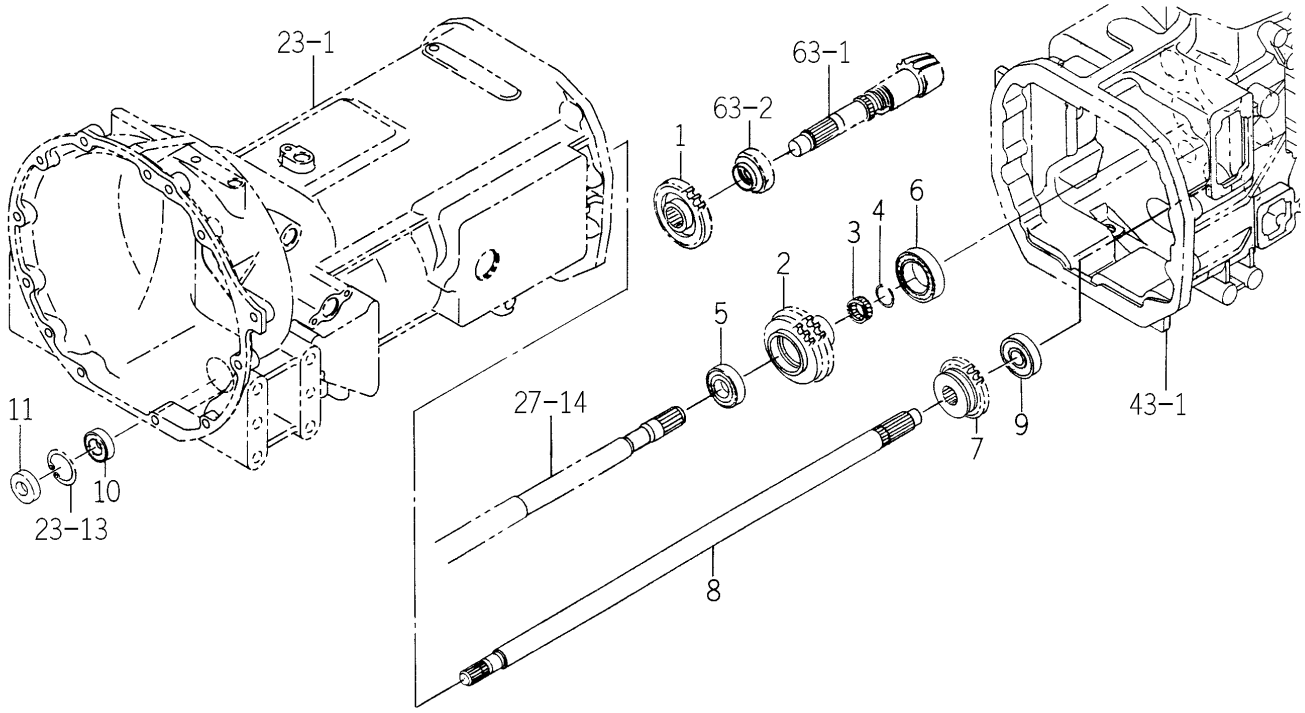

1746-218 -0100

KEY	PART CODE	DESCRIPTION	SPC	TYPE OF MODEL TG5330 E4	TG5330 E6	TG5390 E4	TG5390 E6	ITC	COL	GRP	REMARKS
1	1742-218-001-00	GEAR/SPUR/32	*	1	1	1	1				
2	1742-218-002-10	GEAR/SPUR/36-31	*	1	1	1	1				
3	1729-218-012-10	BEARING/NEEDLE	*	1	1	1	1				
4	1729-218-013-00	RING/SNAP	*	1	1	1	1				
5	V600-410-620-50	BEARING/BALL	*	1	1	1	1				
6	V600-410-600-80	BEARING/BALL	*	1	1	1	1				
7	1746-218-001-00	GEAR/SPUR/26	*	1	1	1	1				
8	1742-218-004-00	SHAFT/4WD	*	1	1	1	1				
9	V600-410-630-40	BEARING/BALL	*	1	1	1	1				
10	V600-410-620-40	BEARING/BALL	*	1	1	1	1				
11	V744-120-470-70	SEAL/OIL	*	1	1	1	1				

FIG. 38 GEAR (PTO/REAR) SYSTEM (E6 TYPE)

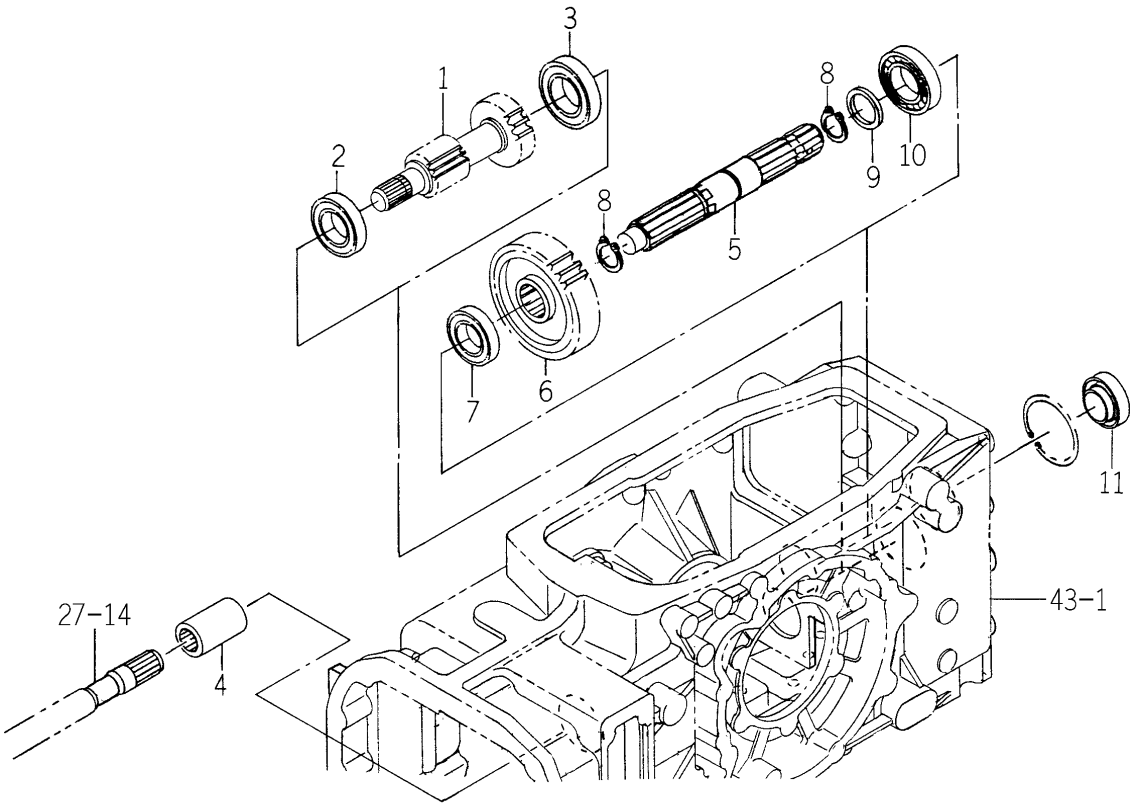

1742-219 -0100

KEY	PART CODE	DESCRIPTION	SPC	TYPE OF MODEL				ITC	COL	GRP	REMARKS
				TG5330 E4	TG5330 E6	TG5390 E4	TG5390 E6				
1	1742-219-001-00	GEAR/14-21	*		1		1				
2	1594-218-001-00	BEARING/BALL 6305SH2	*		1		1				
3	V600-410-630-60	BEARING/BALL	*		1		1				
4	1560-220-004-10	COUPRING/21X36X65	*		1		1				
5	1742-219-006-10	SHAFT/PTO	*		1		1				
6	1742-219-005-00	GEAR/SPUR/42	*		1		1				
7	1594-218-001-00	BEARING/BALL 6305SH2	*		1		1				
8	V704-140-035-00	RING,SNAP/35 C	*		2		2				
9	1444-314-004-10	COLLAR(35X50X2)	*		1		1				
10	V600-410-620-70	BEARING/BALL	*		1		1				
11	1632-273-200-00	SEAL,OIL	*		1		1				

FIG. 39 GEAR (PTO/REAR) SYSTEM (E4 TYPE)

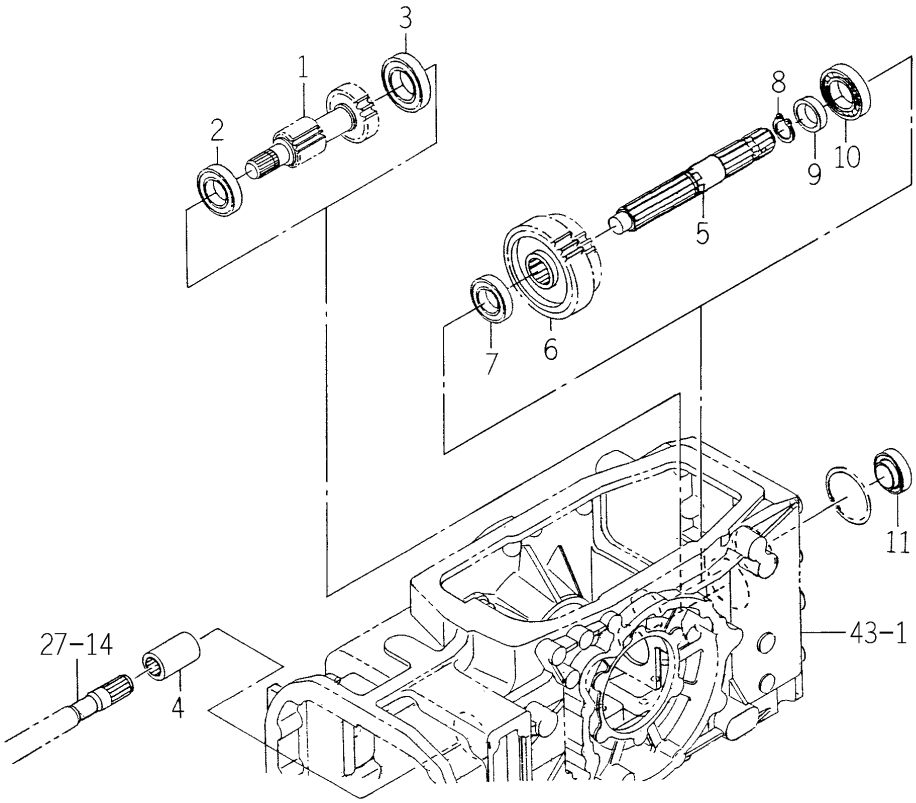

1746-219 -0100

KEY	PART CODE	DESCRIPTION	SPC	TYPE OF MODEL TG5330 E4	TG5330 E6	TG5390 E4	TG5390 E6	ITC	COL	GRP	REMARKS
1	1742-219-001-00	GEAR/14-21	*	1		1					
2	1594-218-001-00	BEARING/BALL 6305SH2	*	1		1					
3	V600-410-630-60	BEARING/BALL	*	1		1					
4	1560-220-004-10	COUPRING/21X36X65	*	1		1					
5	1746-219-001-10	SHAFT/PTO	*	1		1					
6	1746-219-002-00	GEAR/42-35	*	1		1					
7	1594-218-001-00	BEARING/BALL 6305SH2	*	1		1					
8	V704-140-035-00	RING,SNAP/35 C	*	1		1					
9	1746-219-003-00	COLLAR/35X45X13	*	1		1					
10	V600-410-620-70	BEARING/BALL	*	1		1					
11	1632-273-200-00	SEAL,OIL	*	1		1					

FIG. 40 COVER (MID PTO) SYSTEM (EXCEPT M TYPE)

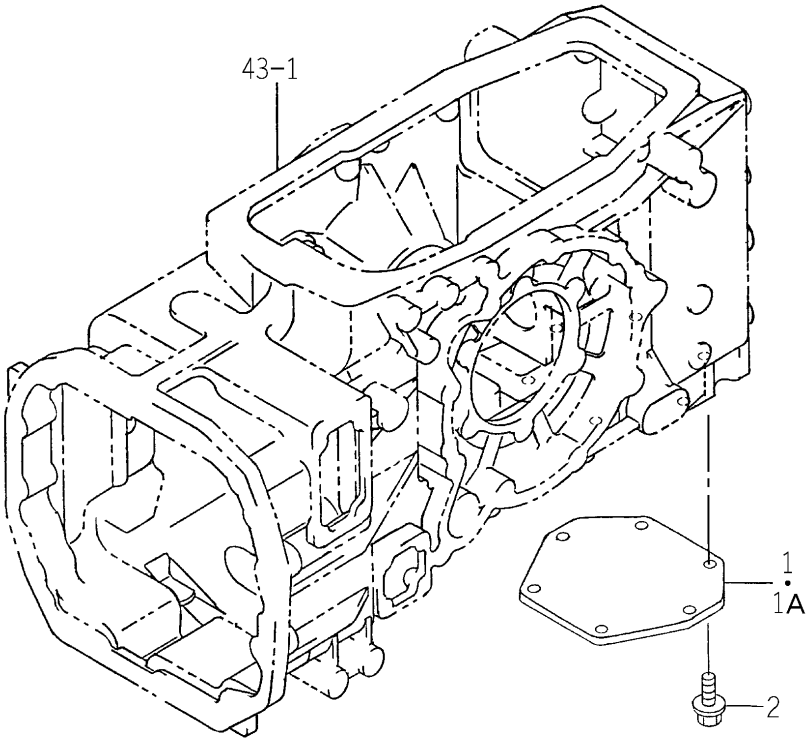

1742-229 -0100

KEY	PART CODE	DESCRIPTION	SPC	TYPE OF MODEL				ITC	COL	GRP	REMARKS
				TG5330 E4	TG5330 E6	TG5390 E4	TG5390 E6				
1	1742-229-001-00	COVER/MID	*	1 -70	1 -70	1 -222	1 -222				
1A	1742-229-001-10	COVER/MID	*	1 71-6	1 71-6	1 223-6	1 223-6	1			
2	V231-361-001-60	FLANGEBOLT	*								

FIG. 41 MID PTO SET(1/2)
(M TYPE-STANDARD-TG5390E4-No.1-502/ EXCEPT Q,M TYPE-OPTION)

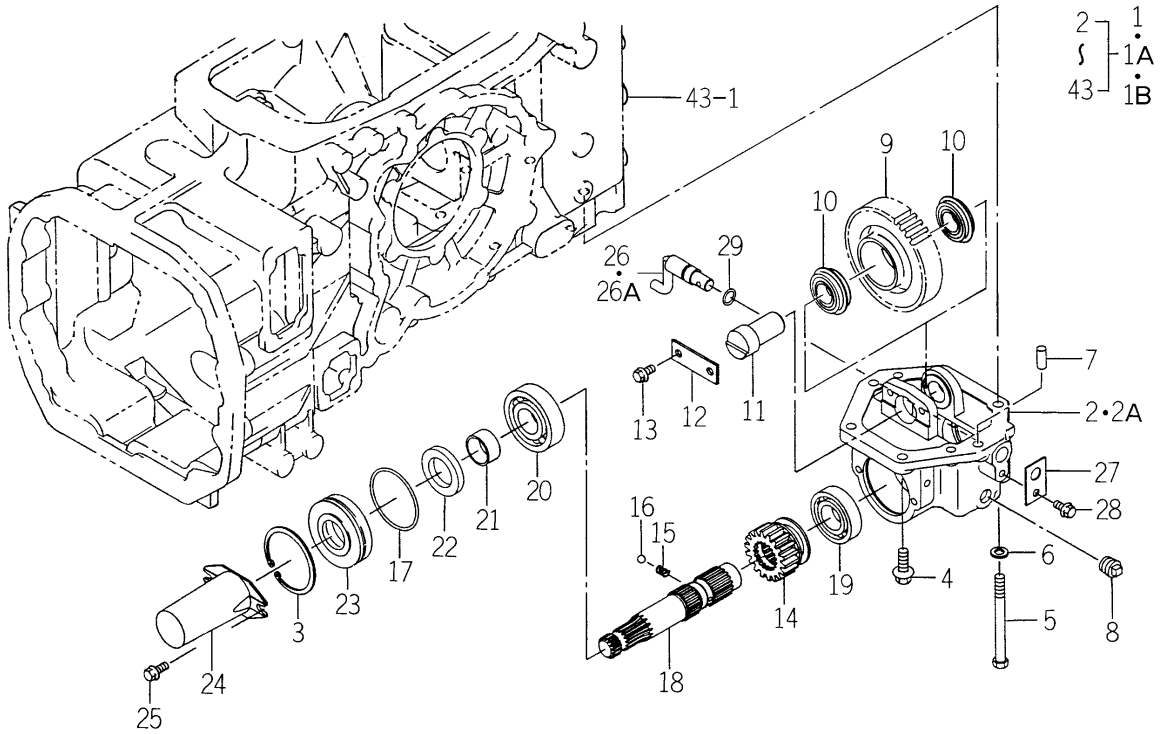

1742-229A-0100

KEY	PART CODE	DESCRIPTION	SPC	TYPE OF MODEL TG5330 E4	TG5330 E6	TG5390 E4	TG5390 E6	ITC	COL	GRP	REMARKS
1	1742-229-800-10	PTO/MID SET	*	1 -53	1 -53	1 -95	1 -95	1			
1A	1742-229-800-20	PTO/MID SET	*	1 -159	1 -159	1 -502	1 -502	1			
1B	1742-229-800-30	PTO/MID	*	1 160-	1 160-	1 503-	1 503-	1			
2	1742-229-002-00	CASE/PTO	*	1 -27	1 -27	1 -25	1 -25				
2A	1742-229-002-10	CASE/PTO	*	1 28-	1 28-	1 26-	1 26-	1			
3	V707-140-072-00	RING/SNAP	*	1	1	1	1				
4	V231-361-002-50	FLANGEBOLT	*	4	4	4	4				
5	V201-361-012-00	BOLT/M10X120 9T	*	2	2	2	2				
6	V401-160-010-00	WASHER,SP/M10	*	2	2	2	2				
7	V523-101-002-40	PIN	*	2	2	2	2				
8	V781-160-000-6B	PLUG/SCREW/SEAL	*	1	1	1	1				
9	1742-229-003-00	GEAR/SPUR/40	*	1	1	1	1				
10	V607-110-620-50	BEARING,RB/6205NR	*	2	2	2	2				
11	1742-229-004-00	SHAFT	*	1	1	1	1				
12	1594-272-006-00	PLATE	*	1	1	1	1				
13	V231-360-801-60	FLANGEBOLT	*	2	2	2	2				
14	1742-229-005-10	GEAR/SPUR/19	*	1	1	1	1	1			
15	1302-225-003-00	SPRING,SHIFTER	*	1	1	1	1				
16	V682-200-001-00	BALL	*	1	1	1	1				
17	1524-244-005-00	O-RING	*	1	1	1	1				
18	1742-229-007-20	SHAFT/PTO/E3	*	1	1	1	1	1			
19	V600-410-620-60	BEARING/BALL	*	1	1	1	1				
20	V600-410-630-60	BEARING/BALL	*	1	1	1	1				
21	1614-244-002-00	SLEEVE	*	1	1	1	1				
22	1614-244-005-00	SEAL/OIL	*	1	1	1	1				
23	1742-229-006-00	METAL/SEAL	*	1	1	1	1				
24	1444-314-009-10	CAP,PTO SHAFT	*	1	1	1	1				
25	V231-360-801-20	FLANGEBOLT	*	2	2	2	2				
26	1620-255-220-00	ARM/SHIFT/MID COMP	*	1 -27	1 -27	1 -25	1 -25				
26A	1620-255-220-10	ARM/SHIFT/MID COMP	*	1 28-	1 28-	1 26-	1 26-	1			

FIG. 41 MID PTO SET(2/2)
(M TYPE-STANDARD-TG5390E4-No.1-502/
EXCEPT Q,M TYPE-OPTION)

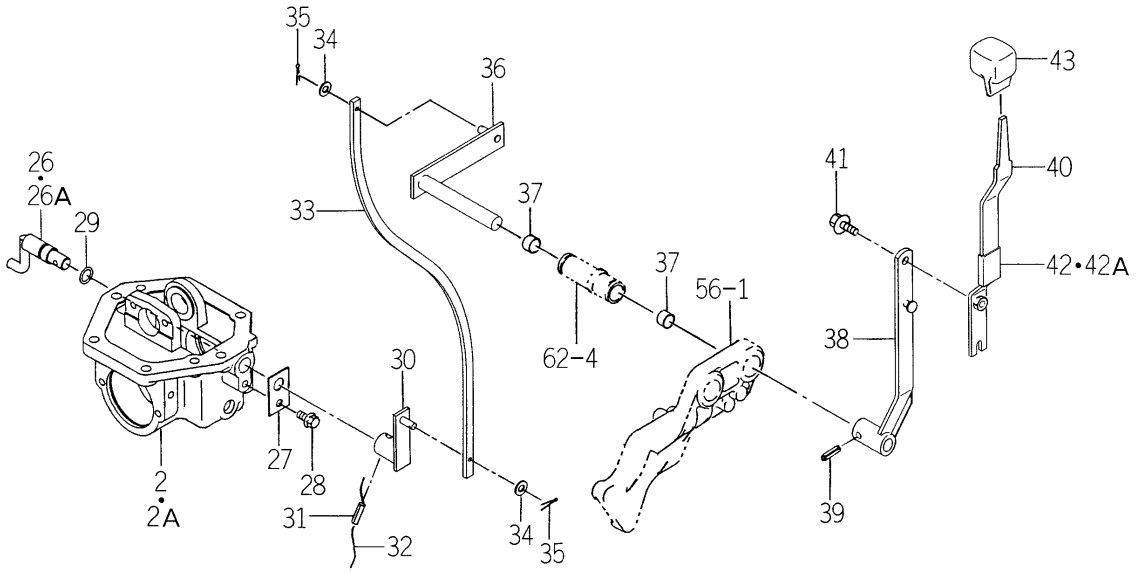

1742-229A-0100

KEY	PART CODE	DESCRIPTION	SPC	TYPE OF MODEL TG5330 E4	TG5330 E6	TG5390 E4	TG5390 E6	ITC	COL	GRP	REMARKS
27	1620-255-208-00	PLATE/I/30X50	*	1	1	1	1				
28	V231-360-801-20	FLANGEBOLT	*	1	1	1	1				
29	V720-102-401-40	O-RING/P14	*	1	1	1	1				
30	1742-229-200-00	ARM/PLATE/MID COMP	*	1	1	1	1				
31	V580-140-602-50	PIN,SPRING/6 X25 W	*	1	1	1	1				
32		WIRE	*	1	1	1	1				
33	1742-229-009-00	PLATE/MID	*	1	1	1	1				
34	V411-260-008-00	WASHER,PL/M 8	*	2	2	2	2				
35	V500-162-002-00	PIN,SPLIT/2 X20	*	2	2	2	2				
36	1742-229-210-00	ARM/SHIFT/MID COMP	*	1	1	1	1				
37	3640-111-001-10	BUSH/16X18X15	*	2	2	2	2				
38	1742-229-230-10	ARM/LEVER/MID COMP	*	1	1	1	1				
39	V580-140-802-80	PIN,SPRING/8 X28 W	*	1	1	1	1				
40	1742-229-220-00	LEVER/MID COMP	*	1	1	1	1				
41	V231-360-802-00	FLANGEBOLT	*	1	1	1	1				
42	1614-262-007-00	INSULATOR/LEVER/SUB/	*	1 -43	1 -43	1 -28	1 -28				
42A	1560-511-101-00	PROTECTER	*	1 44-	1 44-	1 29-	1 29-				
43	1688-265-001-00	GRIP/MID/PTO	*	1	1	1	1				

FIG. 42 MID PTO SET (M TYPE-TG5390E4-No.503-)(1/2)

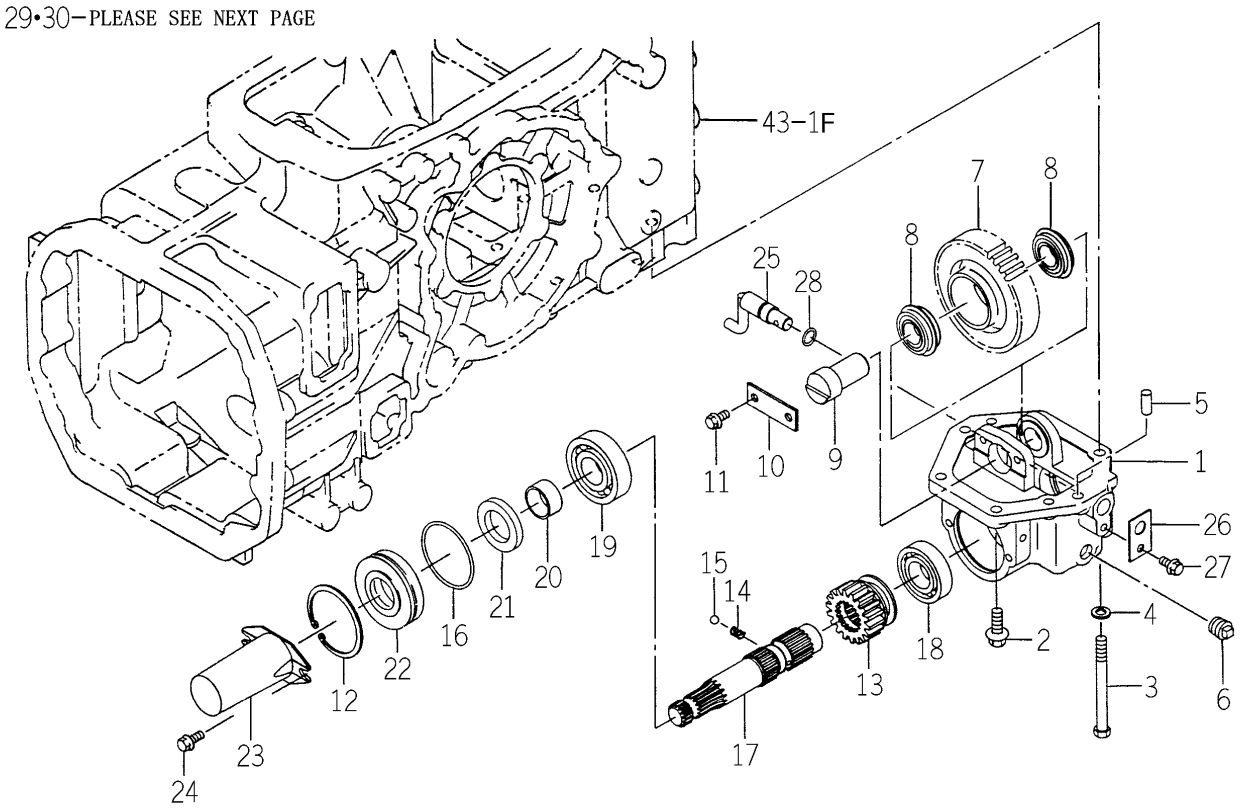

1742-229C-0100

KEY	PART CODE	DESCRIPTION	SPC	TYPE OF MODEL TG5330 E4	TG5330 E6	TG5390 E4	TG5390 E6	ITC	COL	GRP	REMARKS
1	1742-229-002-10	CASE/PTO	*			1 503-					
2	V231-361-002-50	FLANGEBOLT	*			4 503-					
3	V201-361-012-00	BOLT/M10X120 9T	*			2 503-					
4	V401-160-010-00	WASHER,SP/M10	*			2 503-					
5	V523-101-002-40	PIN	*			2 503-					
6	V781-160-000-6B	PLUG/SCREW/SEAL	*			1 503-					
7	1742-229-003-00	GEAR/SPUR/40	*			1 503-					
8	V607-110-620-50	BEARING,RB/6205NR	*			2 503-					
9	1742-229-004-00	SHAFT	*			1 503-					
10	1594-272-006-00	PLATE	*			1 503-					
11	V231-360-801-60	FLANGEBOLT	*			2 503-					
12	V707-140-072-00	RING/SNAP	*			1 503-					
13	1742-229-005-10	GEAR/SPUR/19	*			1 503-					
14	1302-225-003-00	SPRING,SHIFTER	*			1 503-					
15	V682-200-001-00	BALL	*			1 503-					
16	1524-244-005-00	O-RING	*			1 503-					
17	1742-229-007-20	SHAFT/PTO/E3	*			1 503-					
18	V600-410-620-60	BEARING/BALL	*			1 503-					
19	V600-410-630-60	BEARING/BALL	*			1 503-					
20	1614-244-002-00	SLEEVE	*			1 503-					
21	1614-244-005-00	SEAL/OIL	*			1 503-					
22	1742-229-006-00	METAL/SEAL	*			1 503-					
23	1444-314-009-10	CAP,PTO SHAFT	*			1 503-					
24	V231-360-801-20	FLANGEBOLT	*			2 503-					
25	1620-255-220-10	ARM/SHIFT/MID COMP	*			1 503-					
26	1620-255-208-00	PLATE/I/30X50	*			1 503-					
27	V231-360-801-20	FLANGEBOLT	*			1 503-					
28	V720-102-401-40	O-RING/P14	*			1 503-					
29	1742-229-200-00	ARM/PLATE/MID COMP	*			1 503-					
30	V580-140-602-50	PIN,SPRING/6 X25 W	*			1 503-					

FIG. 42 MID PTO SET (M TYPE-TG5390E4-No.503-)(2/2)

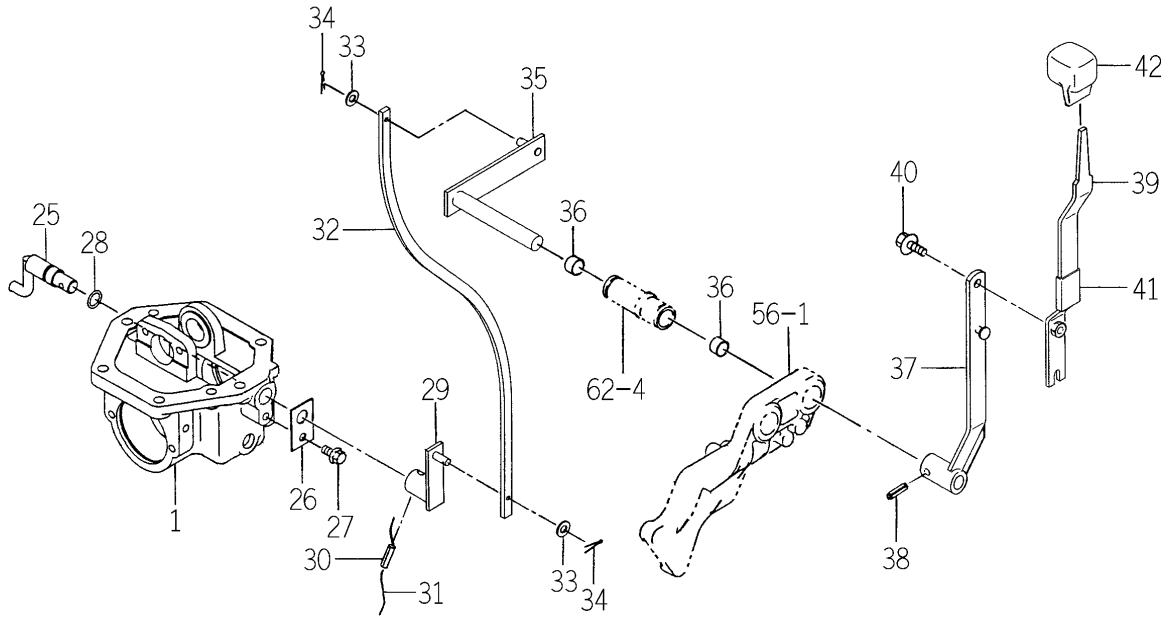

1742-229C-0100

KEY	PART CODE	DESCRIPTION	SPC	TYPE OF MODEL TG5330 E4	TG5330 E6	TG5390 E4	TG5390 E6	ITC	COL	GRP	REMARKS
31		WIRE	*			1 503-					
32	1742-229-009-00	PLATE/MID	*			1 503-					
33	V411-260-008-00	WASHER,PL/M 8	*			2 503-					
34	V500-162-002-00	PIN,SPLIT/2 X20	*			2 503-					
35	1742-229-210-00	ARM/SHIFT/MID COMP	*			1 503-					
36	3640-111-001-10	BUSH/16X18X15	*			2 503-					
37	1742-229-230-10	ARM/LEVER/MID COMP	*			1 503-					
38	V580-140-802-80	PIN,SPRING/8 X28 W	*			1 503-					
39	1742-229-220-00	LEVER/MID COMP	*			1 503-					
40	V231-360-802-00	FLANGEBOLT	*			1 503-					
41	1560-511-101-00	PROTECTER	*			1 503-					
42	1688-265-001-00	GRIP/MID/PTO	*			1 503-					

FIG. 43 CASE (TRANSMISSION/REAR) SYSTEM

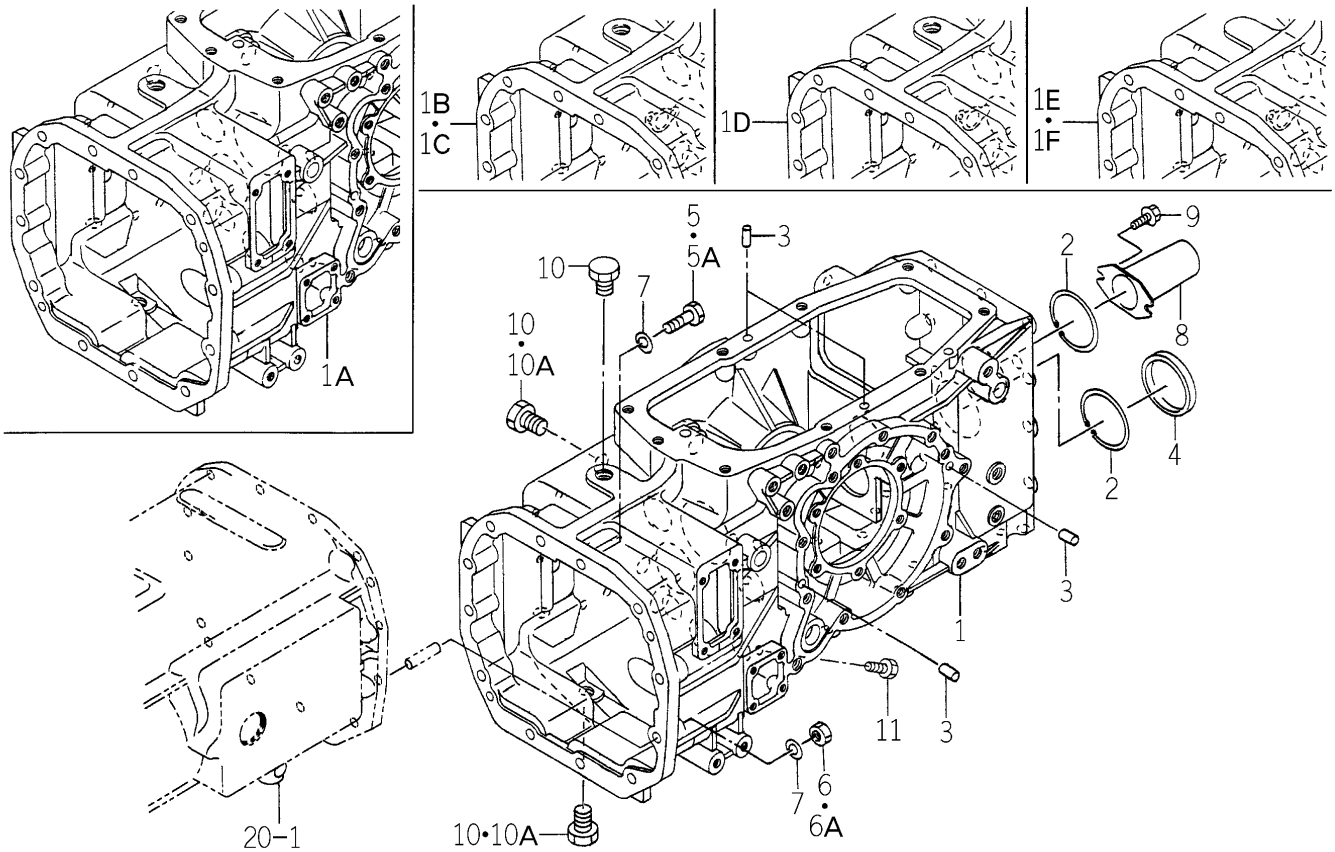

1742-241 -0100

KEY	PART CODE	DESCRIPTION	SPC	TYPE OF MODEL TG5330 E4	TG5330 E6	TG5390 E4	TG5390 E6	ITC	COL	GRP	REMARKS
1	1742-241-001-30	CASE/TRANSMISSION/RE	*	1 -18	1 -18	1 -16	1 -16				
1A	1742-241-001-40	CASE/TRANSMISSION/RE	*	1 -27	1 -27	1 -25	1 -25	1			
1B	1742-241-001-50	CASE/TRANSMISSION/RE	*	1 -52	1 -52	1 -74	1 -74	1			
1C	1742-241-001-60	CASE/TRANSMISSION/RE	*	1 -78	1 -78	1 -262	1 -262	3			
1D	1742-241-001-80	CASE/TRANSMISSION/RE	*	1 -140	1 -140	1 -469	1 -469	1			
1E	1742-241-001-90	CASE/TRANSMISSION/RE	*	1 -471	1 -471	1 -834	1 -834	1			
1F	1742-241-002-00	CASE/TRANSMISSION/RE	*	1 472-	1 472-	1 835-	1 835-				
2	V707-140-072-00	RING/SNAP	*	2	2	2	2				
3	V523-101-002-40	PIN	*	6	6	6	6				
4	1425-433-018-00	CAP,BLANK/72	*	1	1	1	1				
5	V201-361-203-50	BOLT/M12X35	*	8 -34	8 -34	8 -40	8 -40				
5A	V201-361-203-50	BOLT/M12X35	*	7 35-	7 35-	7 41-	7 41-				
6	V304-460-012-00	NUT/M12	*	4 -34	4 -34	4 -40	4 -40				
6A	V304-460-012-00	NUT/M12	*	5 35-	5 35-	5 41-	5 41-				
7	V401-160-012-00	WASHER,SP/M12	*	12	12	12	12				
8	1444-314-009-10	CAP,PTO SHAFT	*	1	1	1	1				
9	V231-360-801-20	FLANGEBOLT	*	2	2	2	2				
10	V782-160-000-8B	PLUG/SCREW/SEAL	*	3 -140	3 -140	3 -469	3 -469				
10A	V782-160-000-8B	PLUG/SCREW/SEAL	*	2 141-	2 141-	2 470-	2 470-				
11	V782-160-000-2B	PLUG/SCREW/SEAL	*	1 -78	1 -78	1 -260	1 -260				

FIG. 44 FORK (SHIFT/REVERSE) SYSTEM (S TYPE)

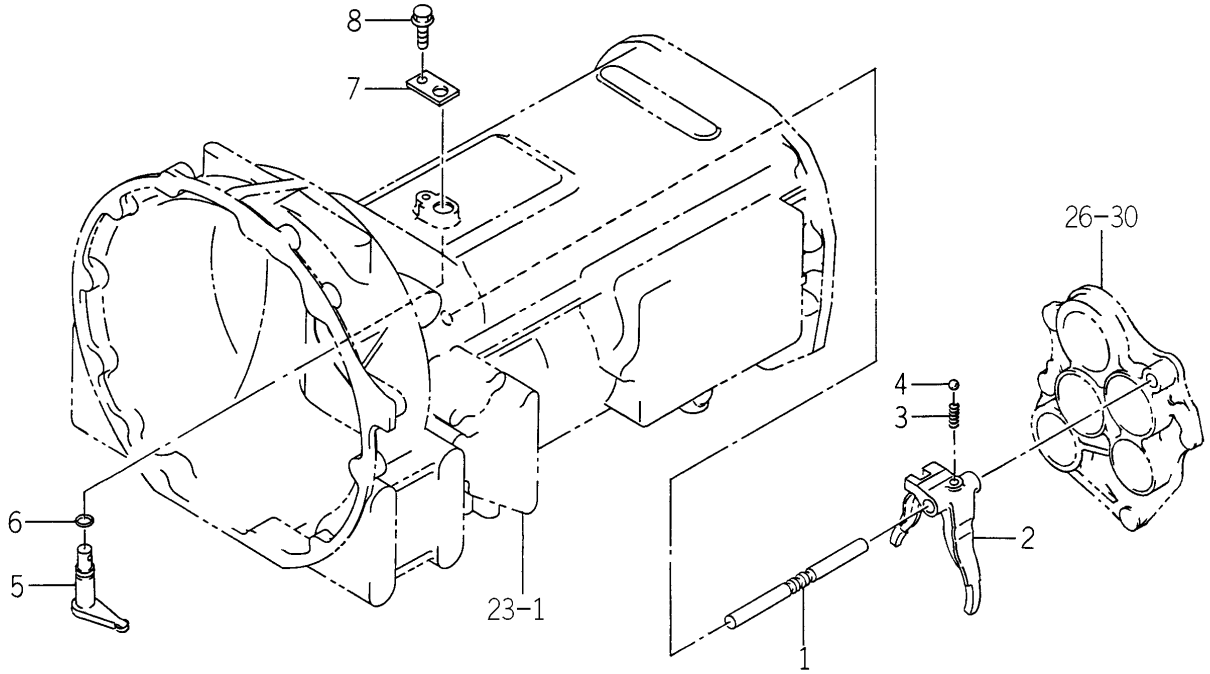

1742-253 -0100

KEY	PART CODE	DESCRIPTION	SPC	TYPE OF MODEL TG5330 E4	TG5330 E6	TG5390 E4	TG5390 E6	ITC	COL	GRP	REMARKS
1	1742-253-001-00	STAY/SHIFT/REVERSE	*	1		1					
2	1742-253-002-00	FORK/SHIFT/REVERSE	*	1		1					
3	1650-253-003-00	SPRING/HC022	*	1		1					
4	V682-200-001-00	BALL	*	1		1					
5	1742-253-200-00	ARM/SHIFT/REVERSE	*	1		1					
6	V720-102-401-40	O-RING/P14	*	1		1					
7	1742-253-003-00	PLATE/I/30X50	*	1		1					
8	V231-360-801-60	FLANGEBOLT	*	1		1					

FIG. 45 METAL (TRUNNION) SYSTEM (H TYPE)

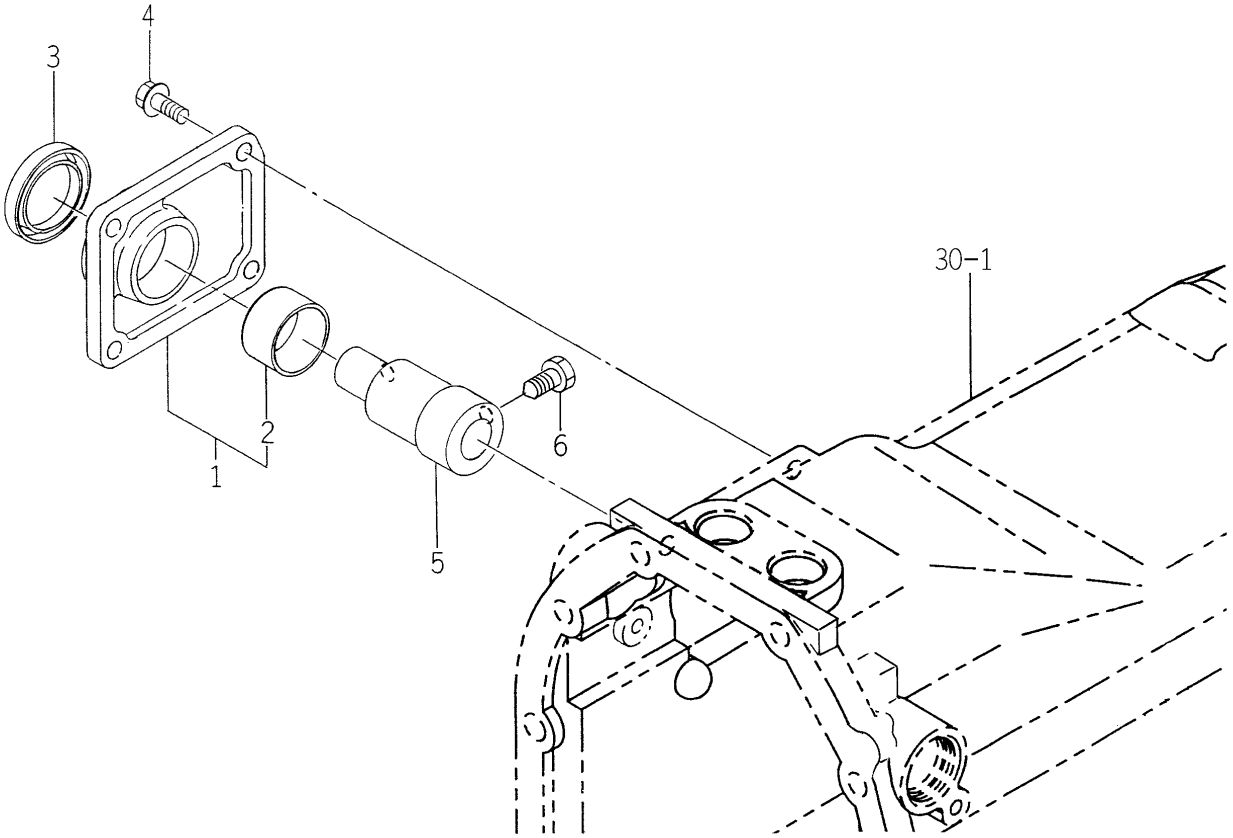

1743-253 -0100

KEY	PART CODE	DESCRIPTION	SPC	TYPE OF MODEL TG5330 E4	TG5330 E6	TG5390 E4	TG5390 E6	ITC	COL	GRP	REMARKS
1	1743-253-510-00	METAL/TRUNNION ASSY	*			1	1				
2	1646-226-512-00	BUSH/35X39X20	*			1	1				
3	V744-135-500-80	SEAL,OIL/TC355008	*			1	1				
4	V231-360-802-00	FLANGEBOLT	*			4	4				
5	1743-253-051-00	SHAFT/TRUNNION	*			1	1				
6	1646-226-053-00	BOLT/SM/M10X23	*			1	1				

FIG. 46 FORK (SHIFT/MAIN) SYSTEM (S,P TYPE)

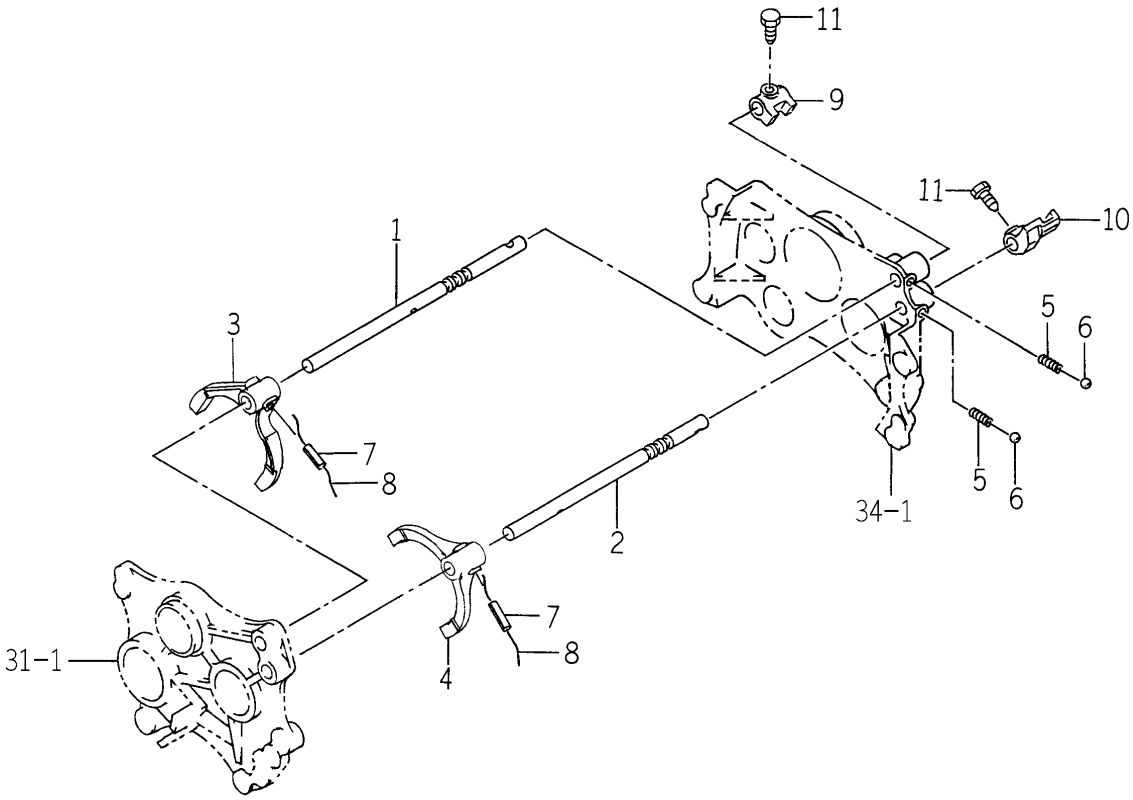

1742-254 -0100

KEY	PART CODE	DESCRIPTION	SPC	TYPE OF MODEL TG5330 E4	TG5330 E6	TG5390 E4	TG5390 E6	ITC	COL	GRP	REMARKS
1	1742-254-001-00	STAY/SHIFT/1ST	*	1	1	1	1				
2	1742-254-009-00	STAY/SHIFT/3RD	*	1	1	1	1				
3	1742-254-002-00	FORK/SHIFT/1ST	*	1	1	1	1				
4	1742-254-003-00	FORK/SHIFT/3RD	*	1	1	1	1				
5	1650-253-003-00	SPRING/HC022	*	2	2	2	2				
6	V682-200-001-00	BALL	*	2	2	2	2				
7	V580-140-603-20	PIN,SPRING/6 X32 W	*	2	2	2	2				
8		WIRE	*	2	2	2	2				
9	1742-254-004-10	ARM/SHIFT/1ST	*	1	1	1	1	1			
10	1742-254-005-10	ARM/SHIFT/3RD	*	1	1	1	1	1			
11	1560-223-016-00	BOLT/M8X16	*	2	2	2	2				

FIG. 47 FORK (SHIFT/MAIN) SYSTEM (Q TYPE)

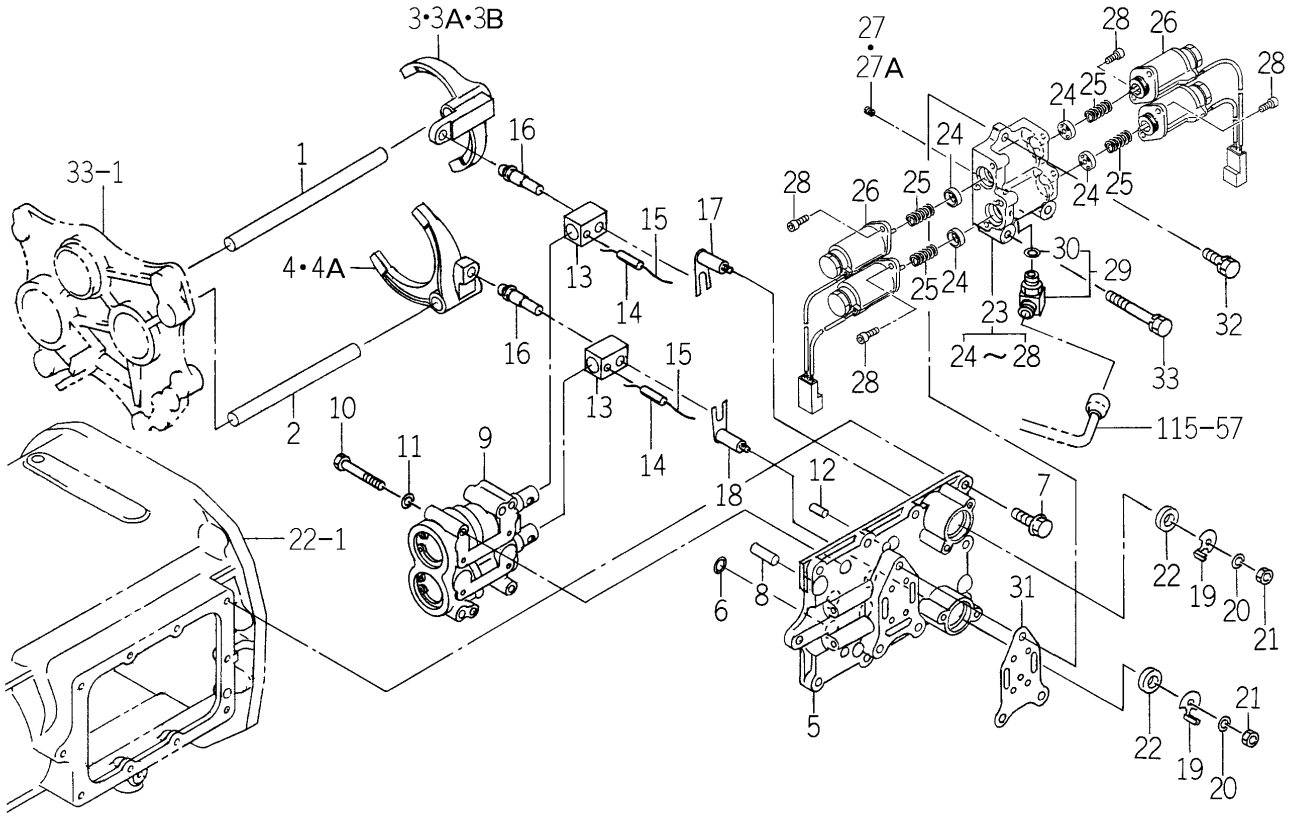

1746-254 -0100

KEY	PART CODE	DESCRIPTION	SPC	TYPE OF MODEL TG5330 E4	TG5330 E6	TG5390 E4	TG5390 E6	ITC	COL	GRP	REMARKS
1	1746-254-001-00	STAY/SHIFT/1ST	*	1		1					
2	1746-254-002-00	STAY/SHIFT/3RD	*	1		1					
3	1746-254-003-00	FORK/SHIFT/1ST	*	1 -27		1 -25					
3A	1746-254-003-10	FORK/SHIFT/1ST	*	1 -52		1 -63		1			
3B	1746-254-003-20	FORK/SHIFT/1ST	*	1 53-		1 64-		1			
4	1746-254-004-00	FORK/SHIFT/3RD	*	1 -27		1 -25					
4A	1746-254-004-10	FORK/SHIFT/3RD	*	1 28-		1 26-		1			
5	1746-254-220-00	COVER/IQSHIFT COMP	*	1		1					
6	V720-111-900-70	O-RING/P 7	*	4		4					
7	V231-360-802-50	FLANGEBOLT	*	10		10					
8	V523-101-002-40	PIN	*	2		2					
9	K192-003-000-00	PUSH CYLINDER ASSY	*	1		1					FIG 259
10	V200-360-605-50	BOLT	*	4		4					
11	V401-160-006-00	WASHER,SP/M 6	*	4		4					
12	V523-100-801-80	PIN	*	2		2					
13	1729-254-013-00	LINK	*	2		2					
14	V580-140-602-50	PIN,SPRING/6 X25 W	*	2		2					
15		WIRE	*	2		2					
16	1729-254-014-00	PIN/10X49	*	2		2					
17	1746-254-200-00	ARM/SENSOR/1-2 COMP	*	1		1					
18	1746-254-210-00	ARM/SENSOR/3-4 COMP	*	1		1					
19	1690-254-002-00	ARM/PLATE	*	2		2					
20	V401-160-006-00	WASHER,SP/M 6	*	2		2					
21	V301-260-006-00	NUT/M6	*	2		2					
22	V742-112-250-50	SEAL,OIL/VC12255	*	2		2					
23	K200-116-000-00	VALVE/S ASSY	*	1		1					
24	K200-096-202-00	SPRING/PLATE/03	*	4		4					
25	K200-096-203-00	SPRING/HC020	*	4		4					
26	K200-096-300-00	SOLENOID/03/2 SET	*	2		2					
27	K200-001-005-00	ORIFICE BOLT/1.5	*	1 -154		1 -498					

FIG. 47 FORK (SHIFT/MAIN) SYSTEM (Q TYPE)

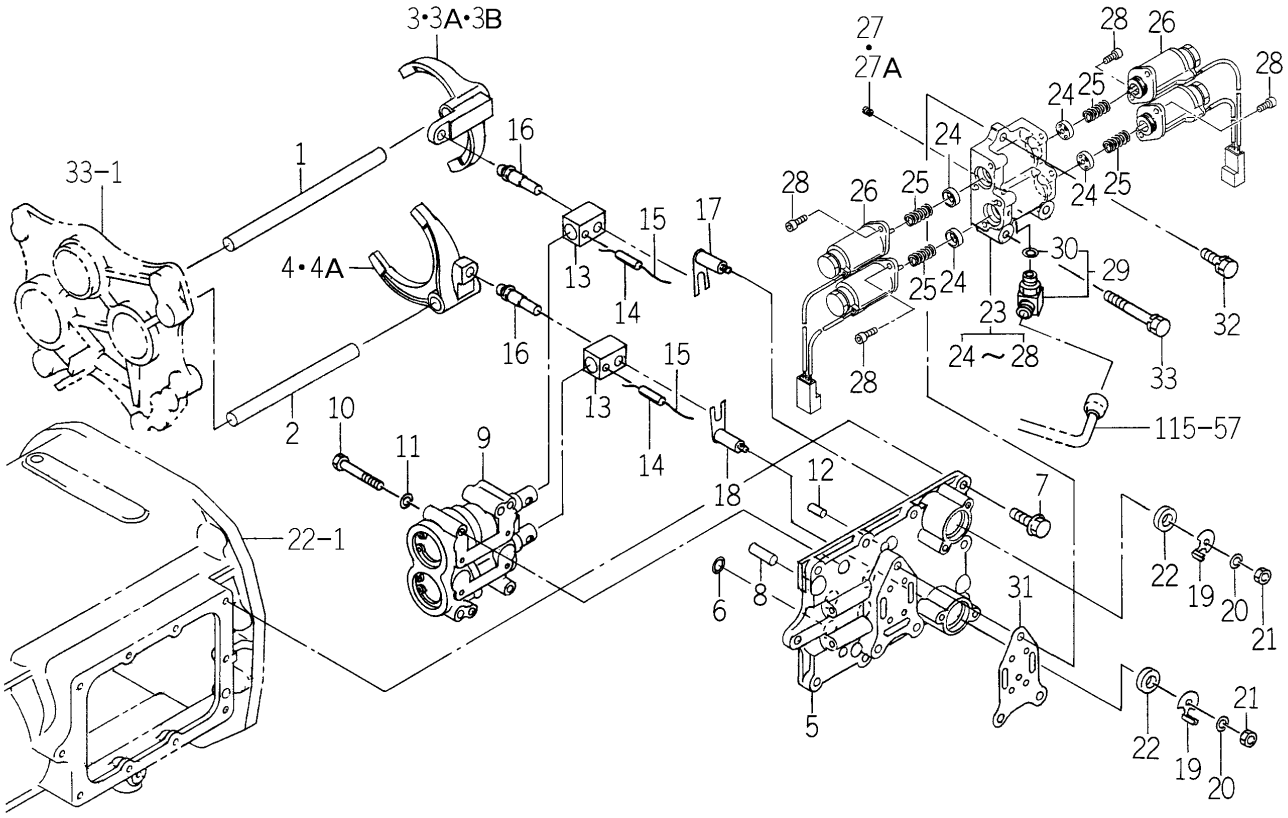

1746-254 -0100

KEY	PART CODE	DESCRIPTION	SPC	TYPE OF MODEL TG5330 E4	TG5330 E6	TG5390 E4	TG5390 E6	ITC	COL	GRP	REMARKS
27A	V783-160-601-50	ORIFICESETS/M6X1.5	*	1		1					
28	4902-610-423-00	SCREW/SOCKET	*	155-8		499-8					
29	1675-510-210-00	ADAPTER/L/PF1/4 ASSY	*	1		1					
30	V720-112-401-10	RING/O	*	1		1					
31	1746-254-006-00	GASKET/IQSHIFT	*	1		1					
32	V211-260-802-50	BOLT/S	*	1		1					
33	V211-260-805-50	BOLT/(S)M8X55	*	2		2					

FIG. 48 FORK (SHIFT/SUB) SYSTEM

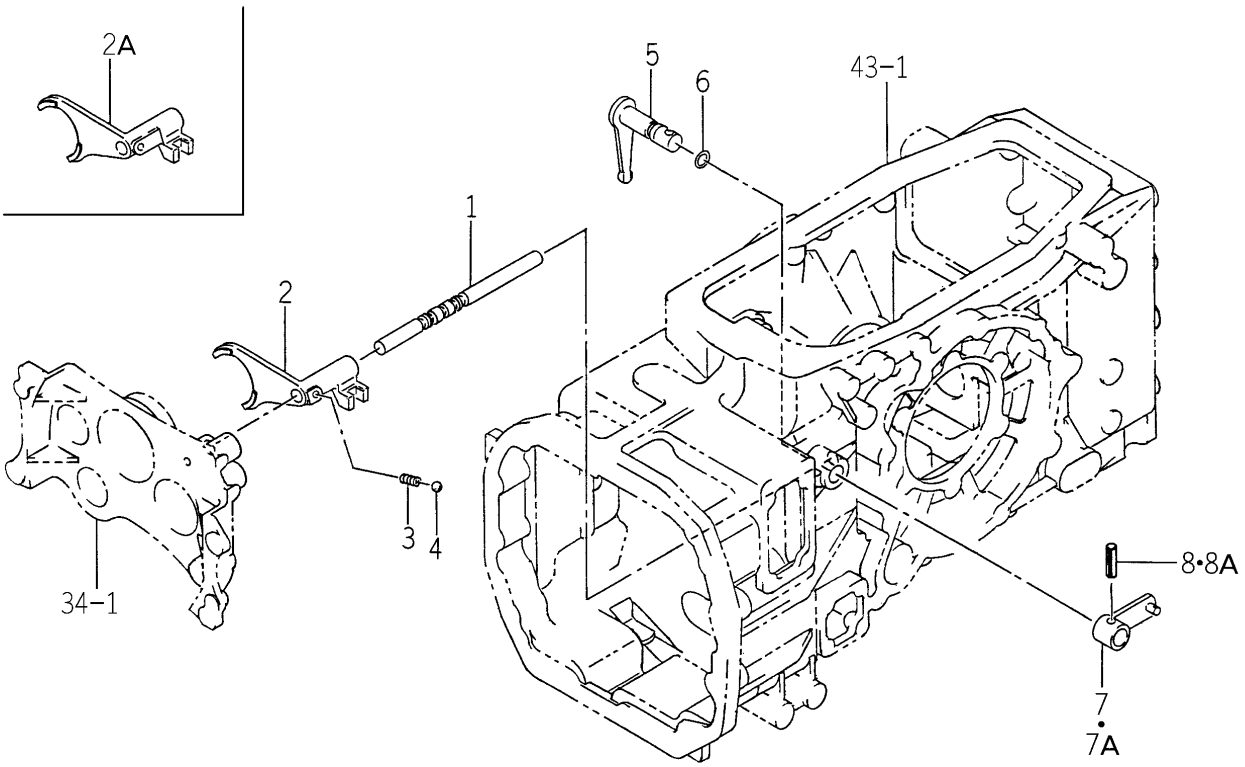

1742-256 -0100

KEY	PART CODE	DESCRIPTION	SPC	TYPE OF MODEL TG5330 E4	TG5330 E6	TG5390 E4	TG5390 E6	ITC	COL	GRP	REMARKS
1	1742-256-001-00	STAY/SHIFT/SUB	*	1	1	1	1				
2	1742-256-002-00	FORK/SHIFT/SUB	*	1 -514	1 -514	1 -877	1 -877				
2A	1742-256-002-10	FORK/SHIFT/SUB	*	1 515-	1 515-	1 878-	1 878-	1			
3	1650-259-010-00	SPRING/HC023	*	1	1	1	1				
4	V682-200-001-00	BALL	*	1	1	1	1				
5	1742-256-200-10	ARM/SHIFT/SUB COMP	*	1	1	1	1				
6	V720-102-401-40	O-RING/P14	*	1	1	1	1				
7	1742-256-210-20	ARM/SHIFT/SUB COMP	*	1 -32	1 -32	1 -28	1 -28				
7A	1742-256-210-30	ARM/SHIFT/SUB COMP	*	1 33-	1 33-	1 29-	1 29-	3			
8	V580-140-802-80	PIN,SPRING/8 X28 W	*	1 -32	1 -32	1 -28	1 -28				
8A	V580-140-803-20	PIN/SPRING	*	1 33-	1 33-	1 29-	1 29-				

FIG. 49 ARM (SHIFT/4WD) SYSTEM (E4 TYPE-No.1-/ E6 TYPE-TG5330E6-No.1-839/ TG5390E6-No.1-1164)

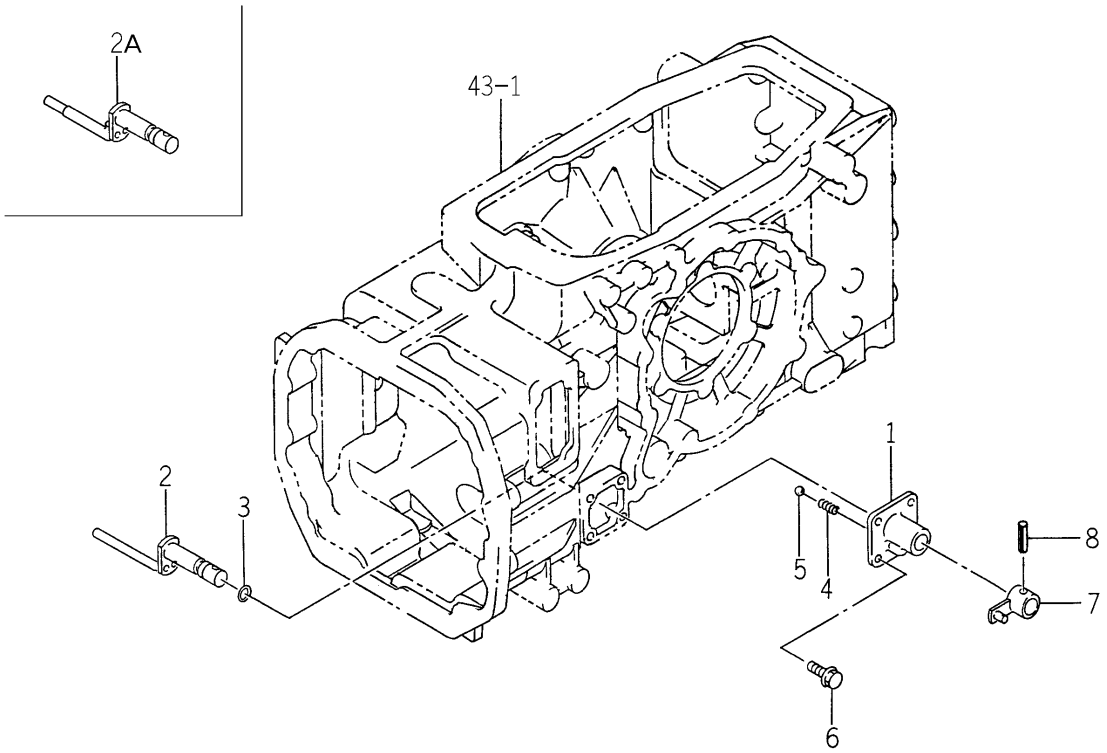

1742-257 -0100

KEY	PART CODE	DESCRIPTION	SPC	TYPE OF MODEL TG5330 E4	TG5330 E6	TG5390 E4	TG5390 E6	ITC	COL	GRP	REMARKS
1	1560-265-002-20	METAL/SHIFT	*	1	1 -839	1	1 -1164				
2	1742-257-200-00	ARM/SHIFT/4WD COMP	*	1 -711	1 -711	1 -1001	1 -1001				
2A	1742-257-200-10	ARM/SHIFT/4WD COMP	*	1 712-	1 712-	1 1002-	1 1002-	1			
3	V720-102-401-40	O-RING/P14	*	1	1 -839	1	1 -1164				
4	1302-225-003-00	SPRING,SHIFTER	*	1	1 -839	1	1 -1164				
5	V682-200-001-00	BALL	*	1	1 -839	1	1 -1164				
6	V231-360-802-00	FLANGEBOLT	*	4	4 -839	4	4 -1164				
7	1742-257-210-00	ARM/PLATE/4WD COMP	*	1	1 -839	1	1 -1164				
8	V580-140-802-80	PIN,SPRING/8 X28 W	*	1	1 -839	1	1 -1164				

FIG. 50 ARM (SHIFT/4WD) SYSTEM (E6 TYPE-TG5330E6-No.840-/TG5390E6-No.1165-)

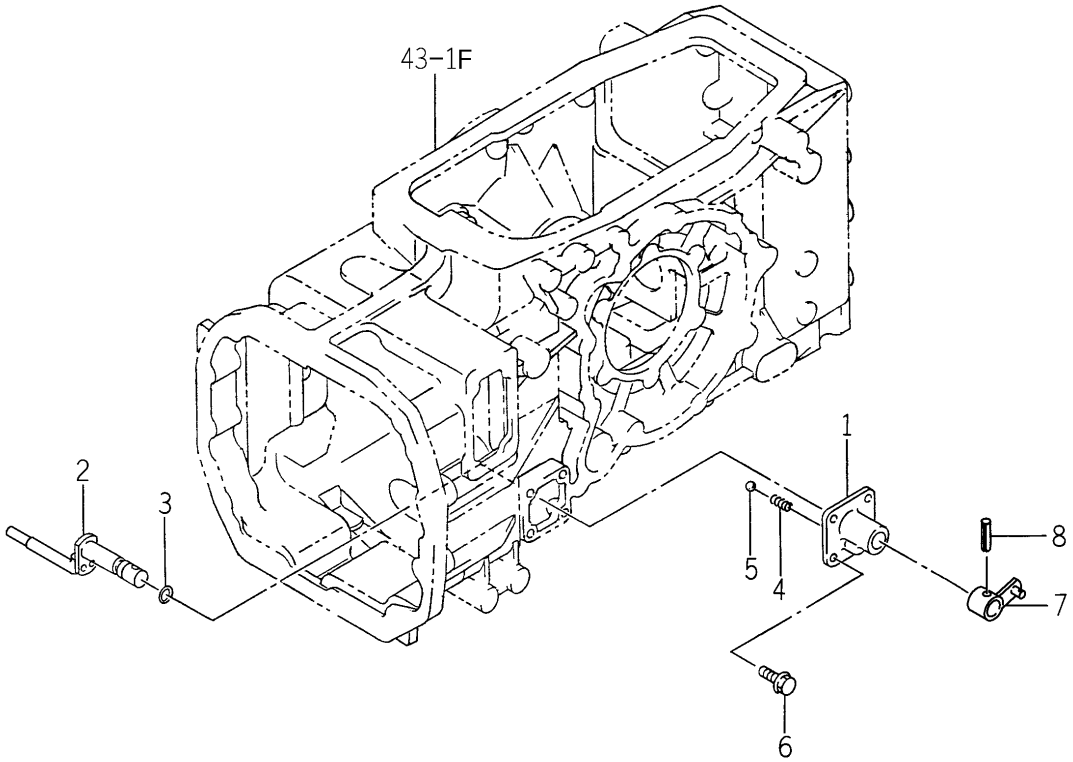

1747-257 -0100

KEY	PART CODE	DESCRIPTION	SPC	TYPE OF MODEL TG5330 E4	TG5330 E6	TG5390 E4	TG5390 E6	ITC	COL	GRP	REMARKS
1	1560-265-002-20	METAL/SHIFT	*		1 840-		1 1165-				
2	1742-257-200-10	ARM/SHIFT/4WD COMP	*		1 840-		1 1165-				
3	V720-102-401-40	O-RING/P14	*		1 840-		1 1165-				
4	1302-225-003-00	SPRING,SHIFTER	*		1 840-		1 1165-				
5	V682-200-001-00	BALL	*		1 840-		1 1165-				
6	V231-360-802-00	FLANGEBOLT	*		4 840-		4 1165-				
7	1747-257-400-10	ARM/PLATE/4WD COMP	*		1 840-		1 1165-				
8	V580-140-802-80	PIN,SPRING/8 X28 W	*		1 840-		1 1165-				

FIG. 51 FORK (SHIFT/PTO) SYSTEM

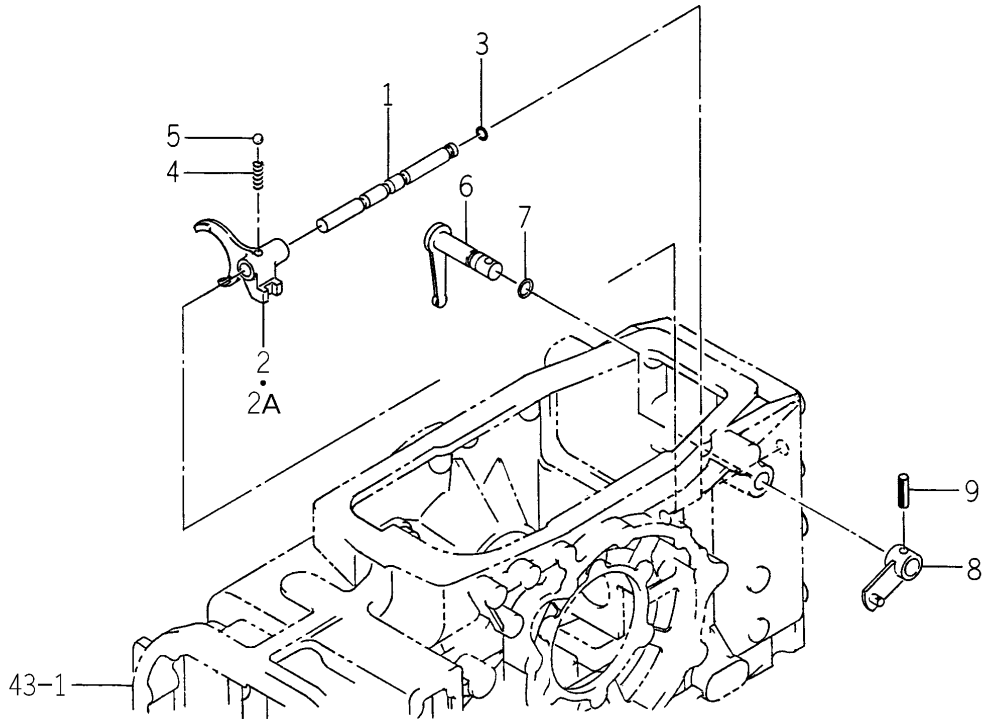

1742-259 -0100

KEY	PART CODE	DESCRIPTION	SPC	TYPE OF MODEL				ITC	COL	GRP	REMARKS
				TG5330 E4	TG5330 E6	TG5390 E4	TG5390 E6				
1	1742-259-001-00	STAY/SHIFT/PTO	*	1	1	1	1				
2	1742-259-002-00	FORK/SHIFT/PTO	*	1 -541	1 -541	1 -879	1 -879				
2A	1742-259-002-10	FORK/SHIFT/PTO	*	1 542-	1 542-	1 880-	1 880-	1			
3	V720-102-401-00	O-RING/P10A	*	1	1	1	1				
4	1650-259-010-00	SPRING/HC023	*	1	1	1	1				
5	V682-200-001-00	BALL	*	1	1	1	1				
6	1742-259-200-00	ARM/SHIFT/PTO COMP	*	1	1	1	1				
7	V720-102-401-40	O-RING/P14	*	1	1	1	1				
8	1742-259-210-00	ARM/PLATE/PTO COMP	*	1	1	1	1				
9	V580-140-802-80	PIN,SPRING/8 X28 W	*	1	1	1	1				

FIG. 52 LEVER (REVERSE) SYSTEM (S TYPE)

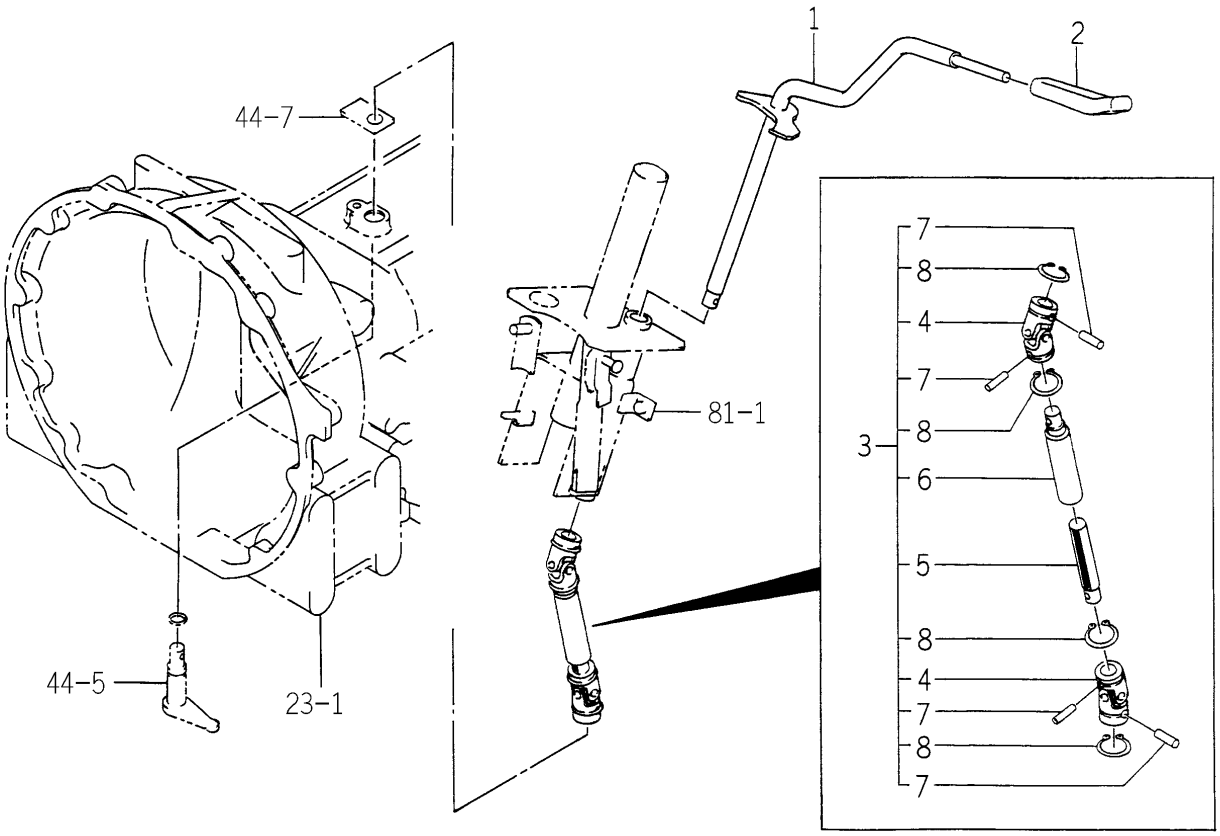

1742-263 -0100

KEY	PART CODE	DESCRIPTION	SPC	TYPE OF MODEL TG5330 E4	TG5330 E6	TG5390 E4	TG5390 E6	ITC	COL	GRP	REMARKS
1	1742-263-200-20	LEVER/REVERSE COMP	*	1		1					
2	1646-116-051-10	GRIP/THROTTLE	*	1		1					
3	1650-263-230-10	JOINT/UNIVERSAL SET	*	1		1					
4	1650-263-221-00	JOINT/UNIVERSAL	*	2		2					
5	1650-263-231-00	SHAFT	*	1		1					
6	1650-263-240-10	SHAFT COMP	*	1		1					
7	1650-263-222-00	PIN	*	4		4					
8	V704-140-025-00	RING,SNAP/25 C	*	4		4					

FIG. 53 LEVER (REVERSE) SYSTEM (P,Q TYPE)

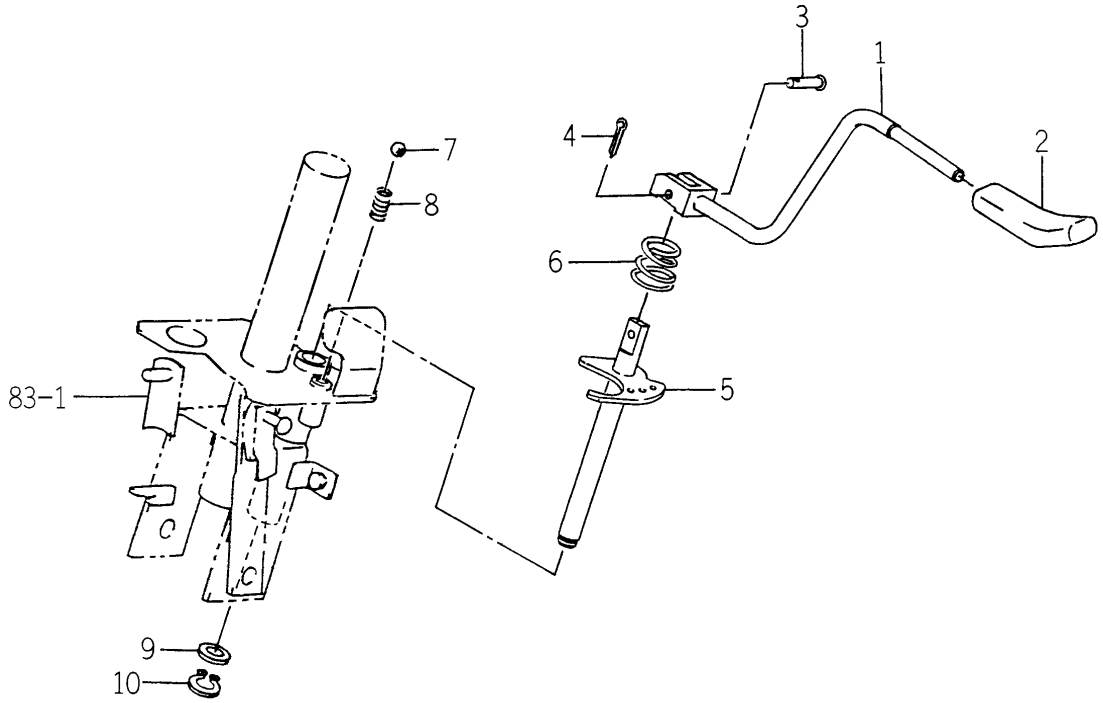

1742-263A-0100

KEY	PART CODE	DESCRIPTION	SPC	TYPE OF MODEL				ITC	COL	GRP	REMARKS
				TG5330 E4	TG5330 E6	TG5390 E4	TG5390 E6				
1	1742-263-310-00	LEVER/REVERSE COMP	*	1	1	1	1				
2	1646-116-051-10	GRIP/THROTTLE	*	1	1	1	1				
3	2144-519-007-00	PIN/06X31	*	1	1	1	1				
4	V500-162-502-00	PIN,SPLIT/2.5X20	*	1	1	1	1				
5	1729-263-200-00	PLATE/CAM COMP	*	1	1	1	1				
6	1650-263-031-00	SPRING/HC028	*	1	1	1	1				
7	V682-200-001-00	BALL	*	1	1	1	1				
8	1650-253-003-00	SPRING/HC022	*	1	1	1	1				
9	1427-601-003-00	WASHER/15X24X2	*	1	1	1	1				
10	V704-140-014-00	RING,SNAP/14 C	*	1	1	1	1				

FIG. 54 LEVER (MAIN) SYSTEM (S,P TYPE)

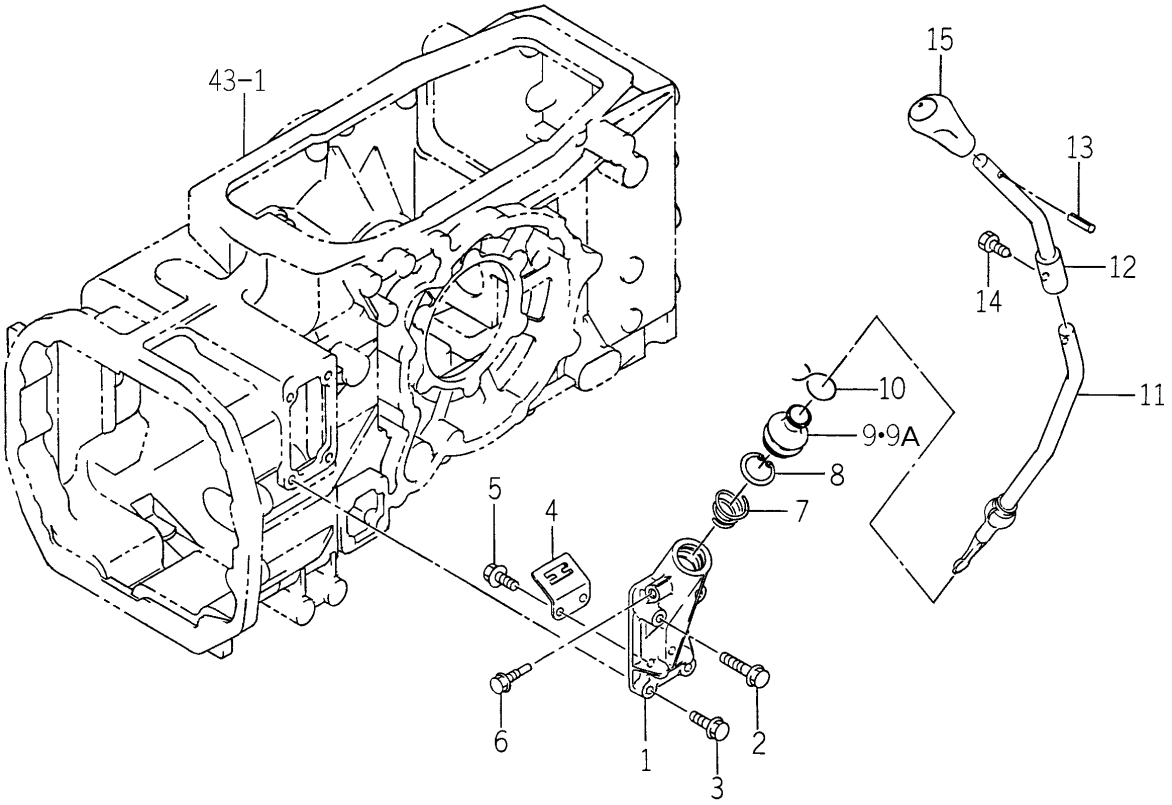

1742-264 -0100

KEY	PART CODE	DESCRIPTION	SPC	TYPE OF MODEL TG5330 E4	TG5330 E6	TG5390 E4	TG5390 E6	ITC	COL	GRP	REMARKS
1	1742-264-001-10	METAL/MAIN	*	1	1	1	1				
2	V231-360-804-00	FLANGEBOLT	*	2	2	2	2				
3	V231-360-802-50	FLANGEBOLT	*	2	2	2	2				
4	1742-264-002-00	GUIDE	*	1	1	1	1				
5	V231-360-801-60	FLANGEBOLT	*	2	2	2	2				
6	1742-264-003-00	BOLT/M08X28	*	1	1	1	1				
7	1560-290-006-30	SPRING	*	1	1	1	1				
8	V705-140-034-00	RING/SNAP	*	1	1	1	1				
9	1560-280-004-40	BOOT	*	1 -98	1 -98	1 -348	1 -348				
9A	1560-280-004-50	BOOT	*	1 99-	1 99-	1 349-	1 349-	1			
10		WIRE	*	1	1	1	1				
11	1742-264-200-00	ARM/SHIFT/MAIN COMP	*	1	1	1	1				
12	1742-264-210-10	LEVER/MAIN COMP	*	1	1	1	1	1			
13	V580-140-602-00	PIN,SPRING	*	1	1	1	1				
14	1560-223-016-00	BOLT/M8X16	*	1	1	1	1				
15	1704-291-001-00	GLIP/MAIN	*	1	1	1	1				

FIG. 55 COVER (MAIN) SYSTEM (Q TYPE)

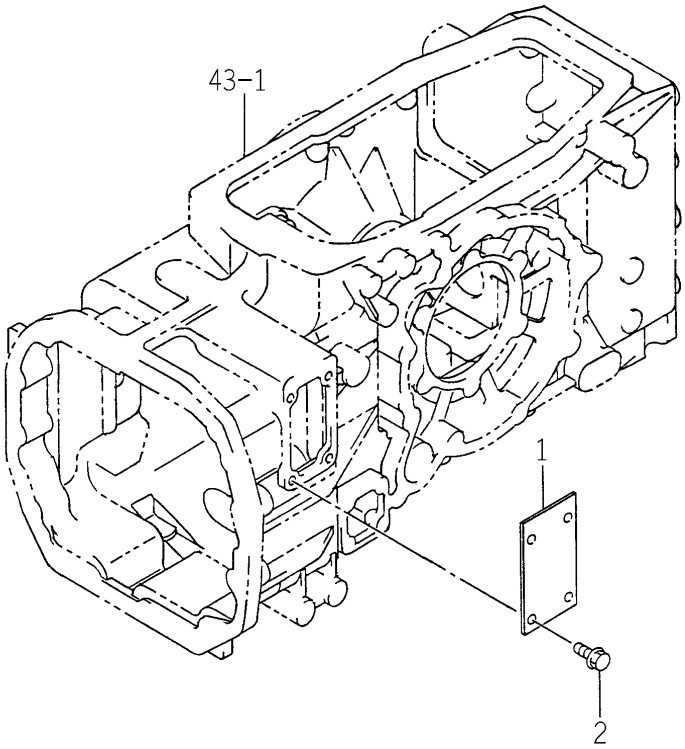

1746-264 -0100

KEY	PART CODE	DESCRIPTION	SPC	TYPE OF MODEL				ITC	COL	GRP	REMARKS
				TG5330 E4	TG5330 E6	TG5390 E4	TG5390 E6				
1	1746-264-001-00	PLATE/I/75X132	*	1		1					
2	V231-360-801-60	FLANGEBOLT	*	4		4					

FIG. 56 LEVER (SUB) SYSTEM (EXCEPT Q TYPE)

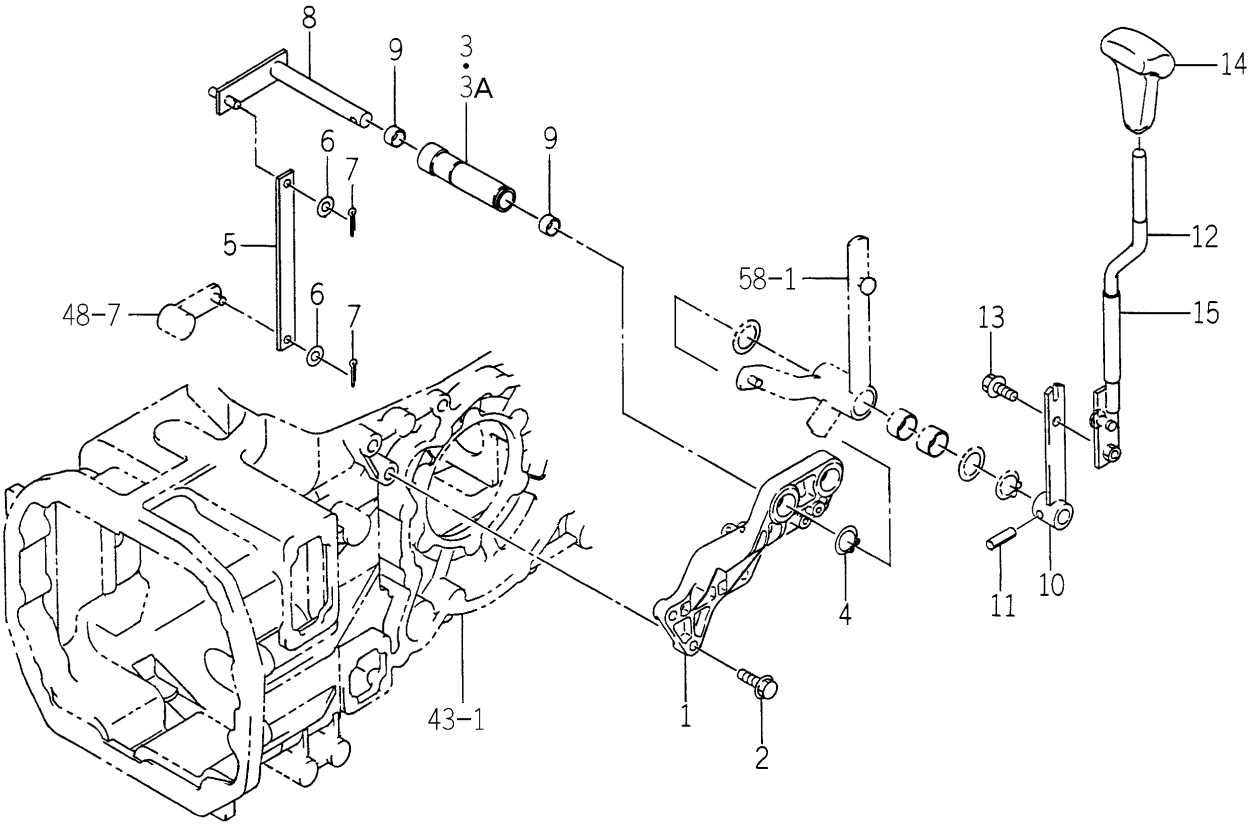

1742-266 -0100

KEY	PART CODE	DESCRIPTION	SPC	TYPE OF MODEL TG5330 E4	TG5330 E6	TG5390 E4	TG5390 E6	ITC	COL	GRP	REMARKS
1	1742-266-001-10	BRACKET/CHANGE	*	1	1	1	1				
2	V231-361-003-00	FLANGEBOLT	*	3	3	3	3				
3	1742-266-002-00	HUB/18X27X106	*	1 -121	1 -121	1 -412	1 -412				
3A	1742-266-002-20	HUB/18X27X106	*	1 122-	1 122-	1 413-	1 413-	1			
4	V704-140-025-00	RING,SNAP/25 C	*	1	1	1	1				
5	1742-266-003-00	PLATE/I/19X206	*	1	1	1	1				
6	V411-260-008-00	WASHER,PL/M 8	*	2	2	2	2				
7	V500-162-002-00	PIN,SPLIT/2 X20	*	2	2	2	2				
8	1742-266-200-00	ARM/SHIFT/SUB COMP	*	1	1	1	1				
9	3640-111-001-10	BUSH/16X18X15	*	2	2	2	2				
10	1742-266-210-10	ARM/SUB COMP	*	1	1	1	1				
11	V580-140-802-80	PIN,SPRING/8 X28 W	*	1	1	1	1				
12	1742-266-220-10	LEVER/SUB COMP	*	1	1	1	1				
13	V231-360-802-00	FLANGEBOLT	*	1	1	1	1				
14	3820-224-001-00	GRIP/CHANGE	*	1	1	1	1				
15	1614-261-006-00	TUBE/14X17X90	*	1	1	1	1				

FIG. 57 LEVER (SUB) SYSTEM (Q TYPE)

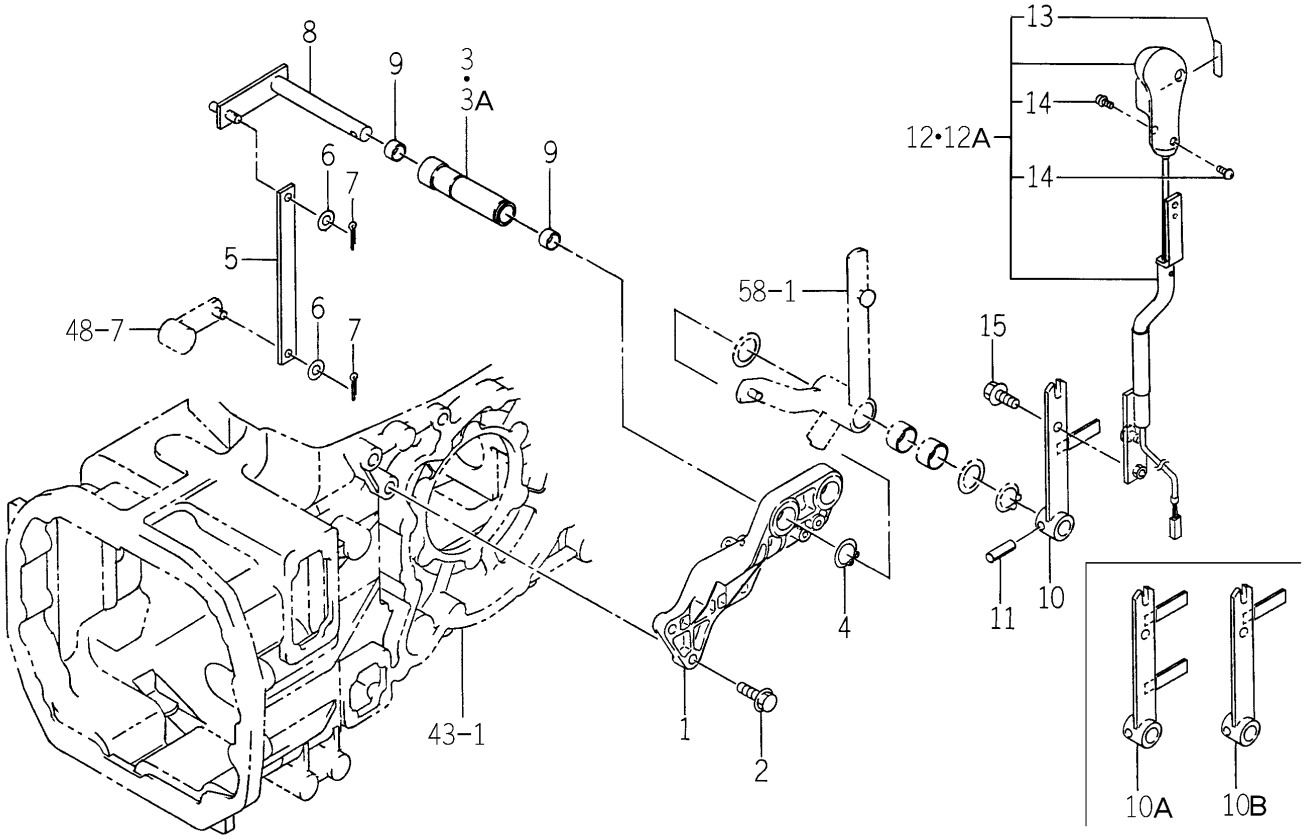

1746-266 -0100

KEY	PART CODE	DESCRIPTION	SPC	TYPE OF MODEL TG5330 E4	TG5330 E6	TG5390 E4	TG5390 E6	ITC	COL	GRP	REMARKS
1	1742-266-001-10	BRACKET/CHANGE	*	1		1					
2	V231-361-003-00	FLANGEBOLT	*	3		3					
3	1742-266-002-00	HUB/18X27X106	*	1 -121		1 -412					
3A	1742-266-002-20	HUB/18X27X106	*	1 122-		1 413-		1			
4	V704-140-025-00	RING,SNAP/25 C	*	1		1					
5	1742-266-003-00	PLATE/I/19X206	*	1		1					
6	V411-260-008-00	WASHER,PL/M 8	*	2		2					
7	V500-162-002-00	PIN,SPLIT/2 X20	*	2		2					
8	1742-266-200-00	ARM/SHIFT/SUB COMP	*	1		1					
9	3640-111-001-10	BUSH/16X18X15	*	2		2					
10	1746-266-200-00	ARM/SUB/Q COMP	*	1 -780		1 -1136					
10A	1746-266-200-10	ARM/SUB/Q COMP	*	1 -935		1 -1214		1			
10B	1746-266-200-20	ARM/SUB/Q COMP	*	1 936-		1 1215-		1			
11	V580-140-802-80	PIN,SPRING/8 X28 W	*	1		1					
12	1746-266-210-00	LEVER/SUB/Q ASSY	*	1 -52		1 -83					
12A	1746-266-210-10	LEVER/SUB/Q ASSY	*	1 53-		1 84-		1			
13	1746-266-231-00	LABEL/CONTROL/SUB/Q	*	1		1					
14	1650-266-332-00	BOLT/HOLE/M4X8	*	2		2					
15	V231-360-802-00	FLANGEBOLT	*	2		2					

FIG. 58 LEVER (4WD) SYSTEM (H,Q TYPE-No.1-/ S TYPE-TG5330E4-No.1-339/TG5390E4-No.1-729/ P TYPE-TG5330E6-No.1-339/TG5390E6-No.1-729)

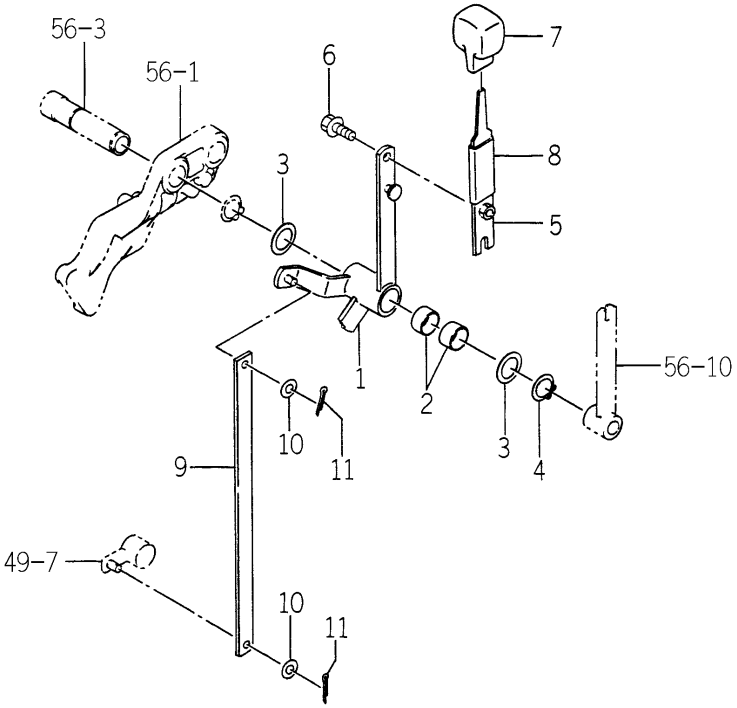

1742-267 -0100

KEY	PART CODE	DESCRIPTION	SPC	TYPE OF MODEL TG5330 E4	TG5330 E6	TG5390 E4	TG5390 E6	ITC	COL	GRP	REMARKS
1	1742-267-200-20	ARM/LEVER/4WD COMP	*	1	1 -339	1	1				
2	3670-836-004-00	BUSH/25X28X20	*	2	2 -339	2	2				
3	1421-312-002-00	WASHER/26X35X1	*	2	2 -339	2	2				
4	V704-140-025-00	RING,SNAP/25 C	*	1	1 -339	1	1				
5	1742-267-210-00	LEVER/4WD COMP	*	1	1 -339	1	1				
6	V231-360-802-00	FLANGEBOLT	*	1	1 -339	1	1				
7	1703-261-002-00	GRIP/MAIN	*	1	1 -339	1	1				
8	1614-262-006-00	INSULATOR/LEVER/SUB	*	1	1 -339	1	1				
9	1742-267-001-00	PLATE/I/19X382	*	1	1 -339	1	1				
10	V411-260-008-00	WASHER,PL/M 8	*	2	2 -339	2	2				
11	V500-162-002-00	PIN,SPLIT/2 X20	*	2	2 -339	2	2				

FIG. 59 LEVER (4WD) SYSTEM
(P TYPE-TG5330E6-No.840-/TG5390E6-No.1165-)

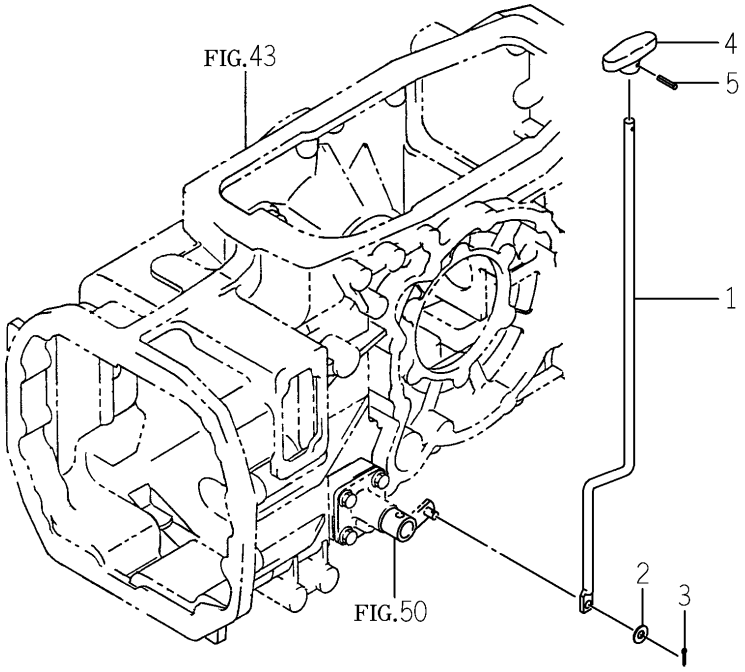

1747-267 -0100

KEY	PART CODE	DESCRIPTION	SPC	TYPE OF MODEL				ITC	COL	GRP	REMARKS
				TG5330 E4	TG5330 E6	TG5390 E4	TG5390 E6				
1	1747-267-041-00	ROD/4WD	*		1 840-		1 1165-				
2	V411-260-008-00	WASHER,PL/M 8	*		1 840-		1 1165-				
3	V500-162-002-00	PIN,SPLIT/2 X20	*		1 840-		1 1165-				
4	1773-267-002-00	GRIP/4WD	*		1 840-		1 1165-				
5	V580-140-301-80	PIN,SPRING/3 X18 W	*		1 840-		1 1165-				

FIG. 60 LEVER (SHIFT/4WD) SYSTEM (S TYPE-TG5330E4-No.340-/TG5390E4-No.730-/ P TYPE-TG5330E6-No.340-839/TG5390E6-No.730-1164)

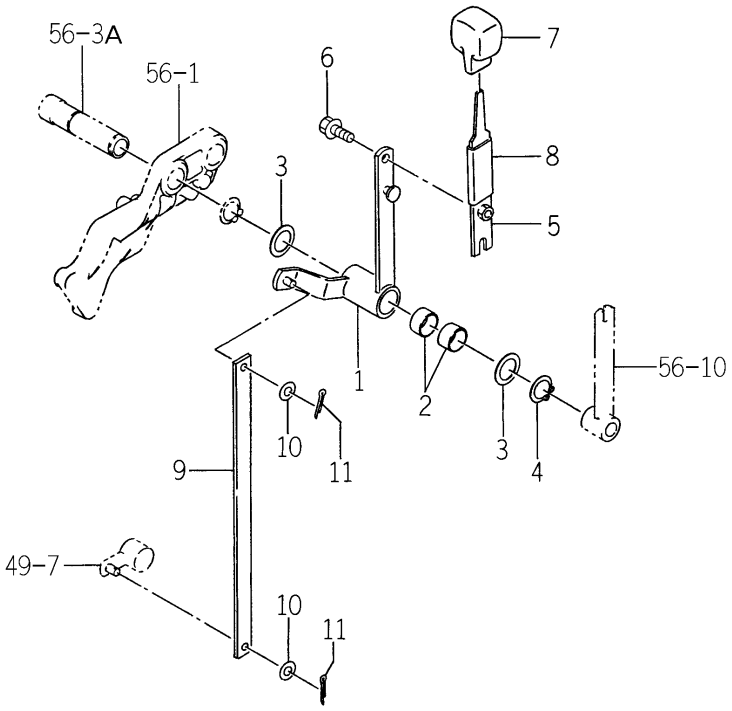

1742-267A-0100

KEY	PART CODE	DESCRIPTION	SPC	TYPE OF MODEL TG5330 E4	TG5330 E6	TG5390 E4	TG5390 E6	ITC	COL	GRP	REMARKS
1	1742-267-300-00	ARM/LEVER/4WD/S COMP	*	1 339-	1 839-	1 730-	1 -1164				
2	3670-836-004-00	BUSH/25X28X20	*	2 339-	2 839-	2 730-	2 -1164				
3	1421-312-002-00	WASHER/26X35X1	*	2 339-	2 839-	2 730-	2 -1164				
4	V704-140-025-00	RING,SNAP/25 C	*	1 339-	1 839-	1 730-	1 -1164				
5	1742-267-210-00	LEVER/4WD COMP	*	1 339-	1 839-	1 730-	1 -1164				
6	V231-360-802-00	FLANGEBOLT	*	1 339-	1 839-	1 730-	1 -1164				
7	1703-261-002-00	GRIP/MAIN	*	1 339-	1 839-	1 730-	1 -1164				
8	1614-262-006-00	INSULATOR/LEVER/SUB	*	1 339-	1 839-	1 730-	1 -1164				
9	1742-267-001-00	PLATE/I/19X382	*	1 339-	1 839-	1 730-	1 -1164				
10	V411-260-008-00	WASHER,PL/M 8	*	2 339-	2 839-	2 730-	2 -1164				
11	V500-162-002-00	PIN,SPLIT/2 X20	*	2 339-	2 839-	2 730-	2 -1164				

FIG. 61 LEVER (PTO) SYSTEM (E6 TYPE)

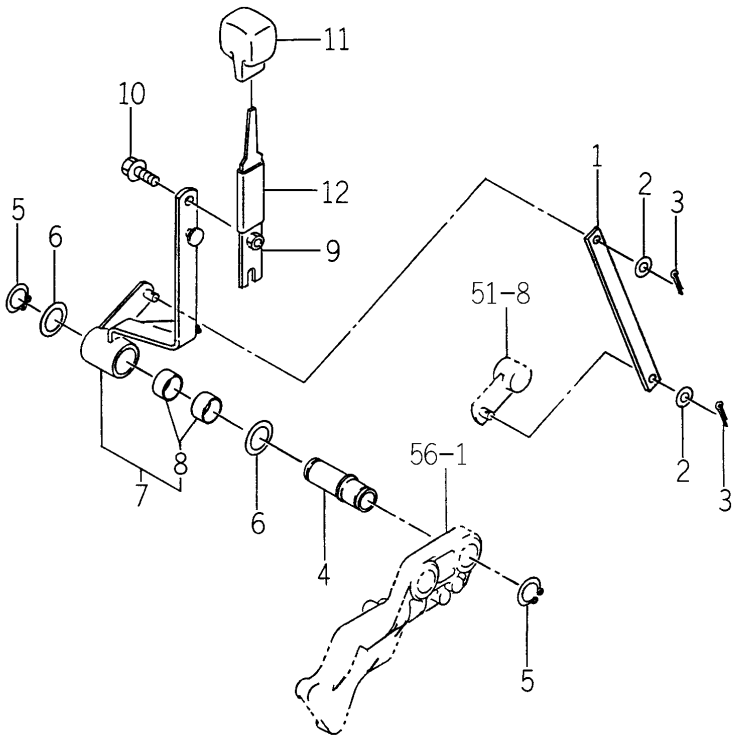

1742-269 -0100

KEY	PART CODE	DESCRIPTION	SPC	TYPE OF MODEL TG5330 E4	TG5330 E6	TG5390 E4	TG5390 E6	ITC	COL	GRP	REMARKS
1	1742-269-001-00	PLATE/I/19X226	*		1		1				
2	V411-260-008-00	WASHER,PL/M 8	*		2		2				
3	V500-162-002-00	PIN,SPLIT/2 X20	*		2		2				
4	1742-269-002-00	HUB/18X27X79	*		1		1				
5	V704-140-025-00	RING,SNAP/25 C	*		2		2				
6	1421-312-002-00	WASHER/26X35X1	*		2		2				
7	1742-269-210-00	ARM/PTO ASSY	*		1		1				
8	3670-836-004-00	BUSH/25X28X20	*		2		2				
9	1742-267-210-00	LEVER/4WD COMP	*		1		1				
10	V231-360-802-00	FLANGEBOLT	*		1		1				
11	1688-265-001-00	GRIP/MID/PTO	*		1		1				
12	1614-262-006-00	INSULATOR/LEVER/SUB	*		1		1				

FIG. 62 LEVER (PTO) SYSTEM (E4 TYPE)

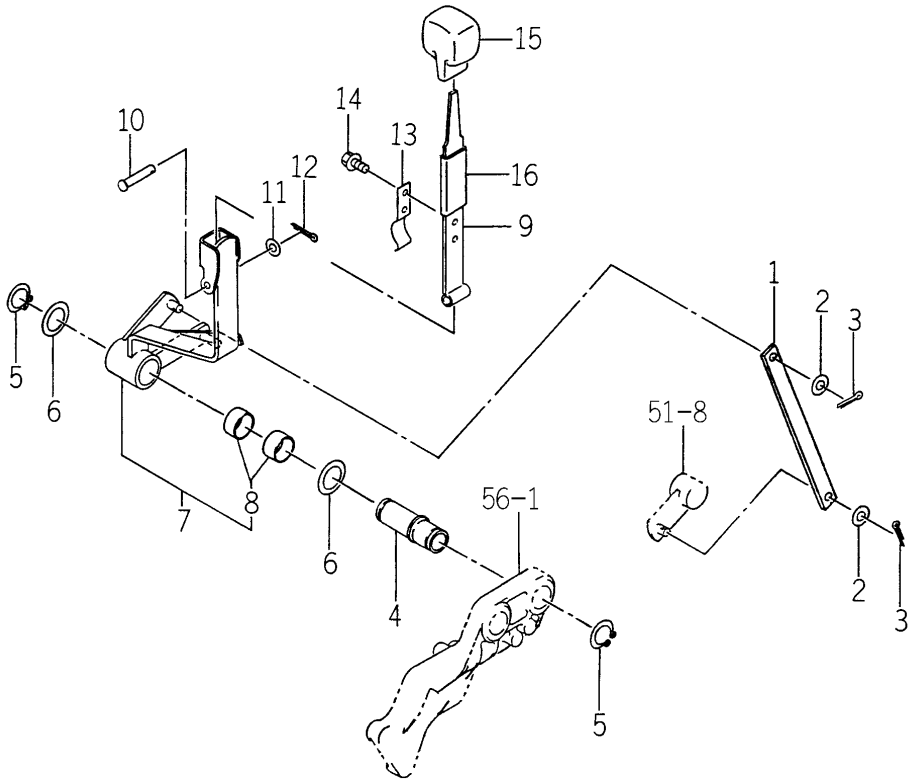

1746-269 -0100

KEY	PART CODE	DESCRIPTION	SPC	TYPE OF MODEL TG5330 E4	TG5330 E6	TG5390 E4	TG5390 E6	ITC	COL	GRP	REMARKS
1	1742-269-001-00	PLATE/I/19X226	*	1		1					
2	V411-260-008-00	WASHER,PL/M 8	*	2		2					
3	V500-162-002-00	PIN,SPLIT/2 X20	*	2		2					
4	1742-269-002-00	HUB/18X27X79	*	1		1					
5	V704-140-025-00	RING,SNAP/25 C	*	2		2					
6	1421-312-002-00	WASHER/26X35X1	*	2		2					
7	1746-269-220-20	ARM/PLATE/PTO ASSY	*	1		1					
8	3670-836-004-00	BUSH/25X28X20	*	2		2					
9	1746-269-210-00	LEVER/PTO COMP	*	1		1					
10	2145-586-002-00	PIN/6X42	*	1		1					
11	V411-260-006-00	WASHER / M6	*	1		1					
12	V500-162-002-00	PIN,SPLIT/2 X20	*	1		1					
13	1746-269-001-00	SPRING/PLATE	*	1		1					
14	V230-360-601-00	FLANGEBOLT	*	2		2					
15	1688-265-001-00	GRIP/MID/PTO	*	1		1					
16	1614-262-006-00	INSULATOR/LEVER/SUB	*	1		1					

FIG. 63 PINION (DRIVE) SYSTEM

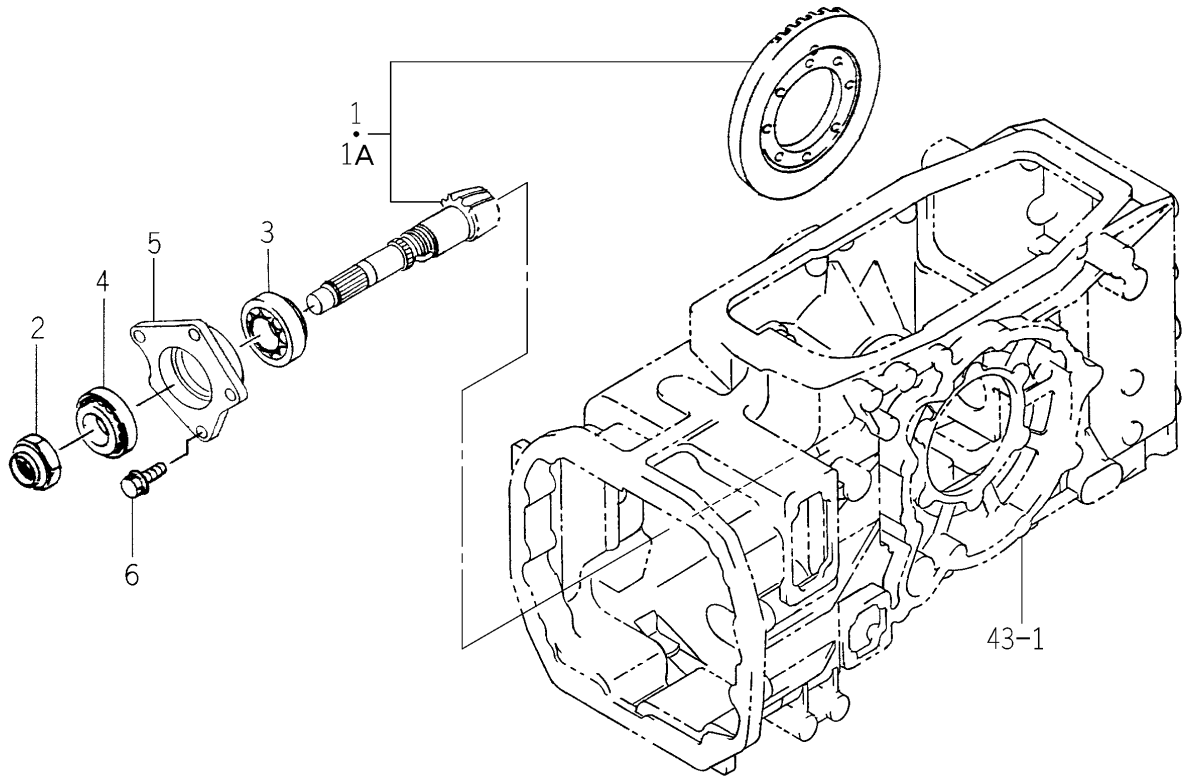

1742-301 -0100

KEY	PART CODE	DESCRIPTION	SPC	TYPE OF MODEL TG5330 E4	TG5330 E6	TG5390 E4	TG5390 E6	ITC	COL	GRP	REMARKS
1	1742-301-200-00	GEAR/08X42 SET	*	1 -471	1 -471	1 -836	1 -836				
1A	1742-301-200-10	GEAR/08X42 SET	*	1 472-	1 472-	1 837-	1 837-	3			
2	1650-301-002-00	NUT/M33X1.5	*	1	1	1	1				
3	1729-301-001-00	BEARING/TAPERROLLER	*	1	1	1	1				
4	1729-301-002-00	BEARING/TAPERROLLER	*	1	1	1	1				
5	1742-301-001-00	METAL/PINION	*	1	1	1	1				
6	V231-361-002-50	FLANGEBOLT	*	4	4	4	4				

FIG. 64 DIFFERENTIAL GEAR SYSTEM

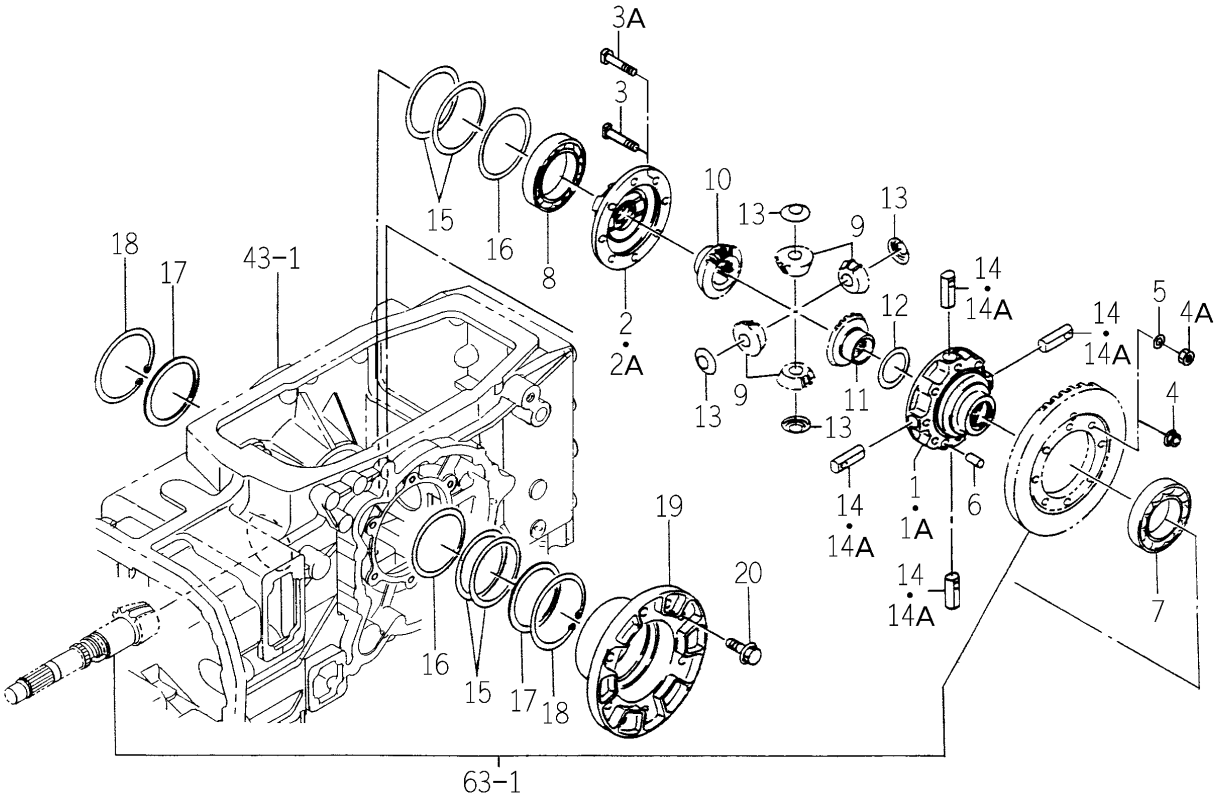

1729-304 -0100

KEY	PART CODE	DESCRIPTION	SPC	TYPE OF MODEL TG5330 E4	TG5330 E6	TG5390 E4	TG5390 E6	ITC	COL	GRP	REMARKS
1	1650-304-001-00	CASE/DIFF	*	1 -702	1 -702	1 -996	1 -996				
1A	1744-304-001-00	CASE/DIFF	*	1 703-	1 703-	1 997-	1 997-				
2	1560-303-005-50	CASE	*	1 -703	1 -703	1 -996	1 -996				
2A	1744-304-002-00	CASE/DIFF	*	1 704-	1 704-	1 997-	1 997-				
3	1404-301-010-00	BOLT,DIFF	*	8 -685	8 -685	8 -971	8 -971				
3A	1744-304-004-00	BOLT/M10X1.25X59	*	8 686-	8 686-	8 972-	8 972-				
4	3817-401-001-00	NUT/M08	*	8 -702	8 -702	8 -996	8 -996				
4A	1635-303-005-00	NUT/SM/M10X1.25	*	8 703-	8 703-	8 997-	8 997-				
5	V401-160-010-00	WASHER,SP/M10	*	8 703-	8 703-	8 997-	8 997-				
6	V523-101-002-40	PIN	*	1	1	1	1				
7	V600-110-621-10	BEARING,RB/6211	*	1	1	1	1				
8	V600-110-601-30	BEARING,RB/6013	*	1	1	1	1				
9	1444-318-004-00	PINION,DIFF/12T	*	4	4	4	4				
10	1443-452-007-00	GEAR,BEVEL	*	1	1	1	1				
11	1560-303-002-00	GEAR,BEVEL/20T	*	1	1	1	1				
12	1650-304-007-00	WASHER/43X58X01	*	1	1	1	1				
13	1650-304-008-00	WASHER/PINION	*	4	4	4	4				
14	1444-318-007-00	SHAFT,DIFF PINION	*	4 -685	4 -685	4 -971	4 -971				
14A	1744-304-003-00	PIN/PINION/DIFF	*	4 686-	4 686-	4 972-	4 972-				
15	1650-304-002-00	SHIM/0.2	*	4	4	4	4				
16	1650-304-003-00	SHIM/0.1	*	2	2	2	2				
17	1650-304-004-00	WASHER/80X100X03	*	2	2	2	2				
18	V707-140-100-00	RING/SNAP	*	2	2	2	2				
19	1650-304-005-00	METAL/DIFF	*	1	1	1	1				
20	V231-361-003-00	FLANGEBOLT	*	6	6	6	6				

FIG. 65 HOUSING (AXLE/REAR) SYSTEM (EXCEPT H TYPE-No.1-/ H TYPE-TG5390E4,E6-No.1-152)

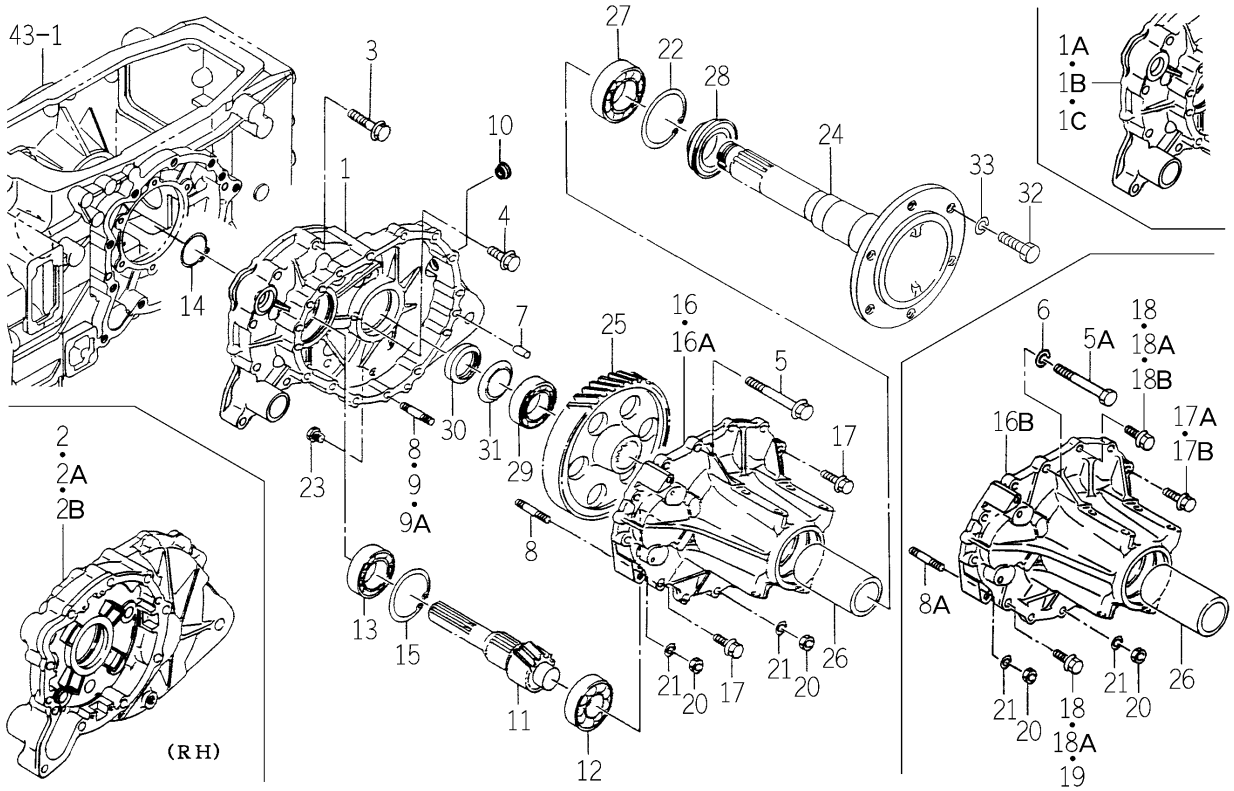

1746-306 -0100

KEY	PART CODE	DESCRIPTION	SPC	TYPE OF MODEL TG5330 E4	TG5330 E6	TG5390 E4	TG5390 E6	ITC	COL	GRP	REMARKS
1	1742-306-003-00	METAL/SPACER/LH	*	1 -58	1 -58	1 -154	1 -154				
1A	1729-306-001-00	METAL/SPACER/LH	*	1 -798	1 -798	1 -1141	1 -1141				
1B	1729-306-001-10	METAL/SPACER/LH	*	1 -957	1 -957	1 -1332	1 -1332	1			
1C	1729-306-001-20	METAL/SPACER/LH	*	1 958-	1 958-	1 1333-	1 1333-	3			
2	1729-306-002-00	METAL/SPACER/RH	*	1 -798	1 -798	1 -1141	1 -1141				
2A	1729-306-002-10	METAL/SPACER/RH	*	1 -957	1 -957	1 -1332	1 -1332	1			
2B	1729-306-002-20	METAL/SPACER/RH	*	1 958-	1 958-	1 1333-	1 1333-	3			
3	V231-361-206-00	FLANGEBOLT	*	16	16	16	16				
4	V231-361-203-50	FLANGEBOLT	*	2	2	2	2				
5	V231-361-212-00	FLANGEBOLT	*	2 -802	2 -802	2 -1143	2 -1143				
5A	V201-361-213-00	BOLT	*	2 803-	2 803-	2 1144-	2 1144-				
6	V401-160-012-00	WASHER,SP/M12	*	2 803-	2 803-	2 1144-	2 1144-				
7	V523-101-002-40	PIN	*	4	4	4	4				
8	V251-341-003-00	BOLT/STUD	*	8 -802	8 -802	8 -1143	8 -1143				
8A	V251-341-003-00	BOLT/STUD	*	4 803-	4 803-	4 1144-	4 1144-				
9	V251-341-003-50	BOLT/STUD	*	4 -955	4 -955	4 -1327	4 -1327				
9A	V251-441-003-50	STUD/M10X35	*	4 956-	4 956-	4 1328-	4 1328-				
10	1690-241-003-00	GAUGE/LEBEL	*	1	1	1	1				
11	1729-306-003-00	GEAR/HELICAL/10	*	2	2	2	2				
12	V600-410-630-70	BEARING/BALL	*	2	2	2	2				
13	V600-110-620-90	BEARING,RB/6209	*	2	2	2	2				
14	V706-140-045-00	RING/SNAP	*	2	2	2	2				
15	V707-140-085-00	RING/SNAP	*	2	2	2	2				
16	1650-306-004-30	HOUSING/AXLE	*	2 -98	2 -98	2 -348	2 -348				
16A	1729-306-005-00	HOUSING/AXLE/AT	*	2 -798	2 -798	2 -1141	2 -1141				
16B	1729-306-005-10	HOUSING/AXLE/AT	*	2 799-	2 799-	2 1142-	2 1142-	3			
17	V231-361-003-00	FLANGEBOLT	*	18 -802	18 -802	18 -1143	18 -1143				
17A	V231-361-003-00	FLANGEBOLT	*	4 -817	4 -817	4 -1157	4 -1157				
17B	V231-361-003-00	FLANGEBOLT	*	12 818-	12 818-	12 1158-	12 1158-				
18	V231-361-003-50	FLANGEBOLT	*	14 -817	14 -817	14 -1157	14 -1157				

FIG. 65 HOUSING (AXLE/REAR) SYSTEM (EXCEPT H TYPE-No.1-/ H TYPE-TG5390E4,E6-No.1-152)

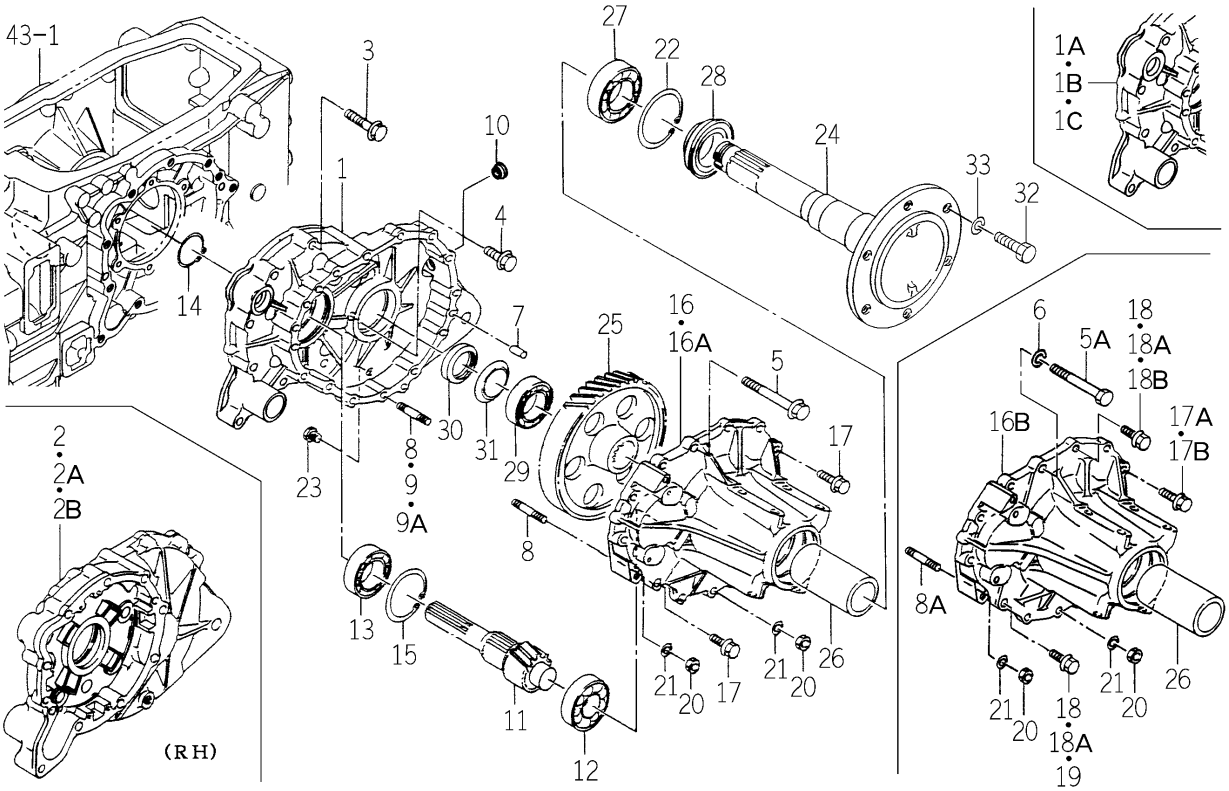

1746-306 -0100

KEY	PART CODE	DESCRIPTION	SPC	TYPE OF MODEL TG5330 E4	TG5330 E6	TG5390 E4	TG5390 E6	ITC	COL	GRP	REMARKS
18A	V231-361-003-50	FLANGEBOLT	*	6 -957	6 -957	6 -1332	6 -1332				
18B	V231-361-003-50	FLANGEBOLT	*	4 958-	4 958-	4 1333-	4 1333-				
19	V231-361-203-50	FLANGEBOLT	*	2 958-	2 958-	2 1333-	2 1333-				
20	V304-460-010-00	NUT/M10	*	8	8	8	8				
21	V401-160-010-00	WASHER,SP/M10	*	8	8	8	8				
22	V707-140-090-00	RING/SNAP	*	2	2	2	2				
23	V782-160-000-4B	PLUG/SCREW/SEAL	*	2	2	2	2				
24	1654-306-001-00	SHAFT/WHEEL	*	2	2	2	2				
25	1729-306-004-00	GEAR/HERICAL/54	*	2	2	2	2				
26	1650-306-007-00	COLLAR/120	*	2	2	2	2				
27	V600-110-621-00	BEARING,RB/6210	*	2	2	2	2				
28	1650-306-200-00	SEAL/OIL ASSY	*	2	2	2	2				
29	V600-110-620-90	BEARING,RB/6209	*	2	2	2	2				
30	V670-200-009-00	NUT,ADAPTER/AN09	*	2	2	2	2				
31	V671-400-009-00	WASHER	*	2	2	2	2				
32	V201-361-603-00	BOLT	*	12	12	12	12				
33	V401-160-016-00	WASHER,SP/M16	*	12	12	12	12				

FIG. 66 HOUSING (AXLE/REAR) SYSTEM
(H TYPE-TG5390E4-No.153-/TG5390E6-No.153-)

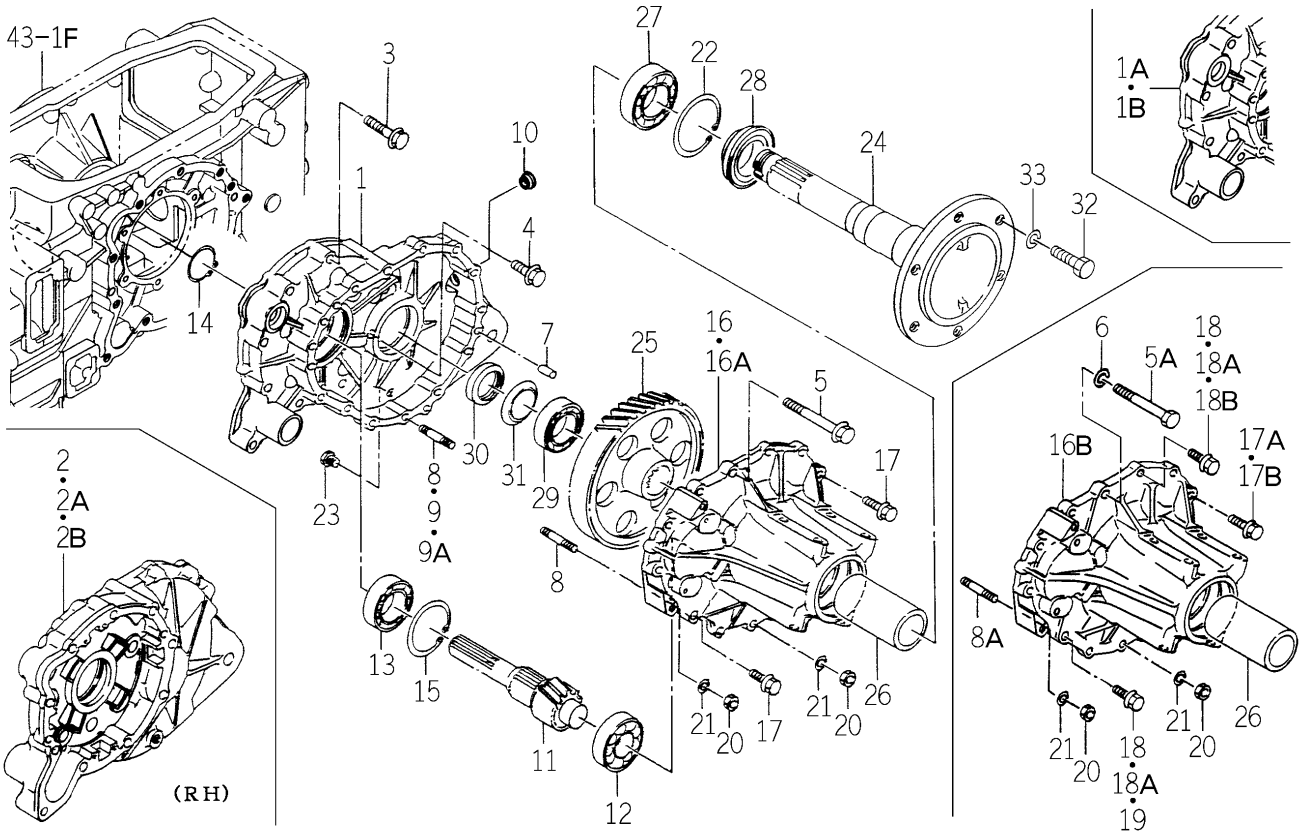

1746-306A-0100

KEY	PART CODE	DESCRIPTION	SPC	TYPE OF MODEL TG5330 E4	TG5330 E6	TG5390 E4	TG5390 E6	ITC	COL	GRP	REMARKS
1	1742-306-003-00	METAL/SPACER/LH	*			1 -1141	1 -1141				
1A	1742-306-003-10	METAL/SPACER/LH	*			1 -1332	1 -1332	1			
1B	1742-306-003-20	METAL/SPACER/LH	*			1 1333-	1 1333-	3			
2	1729-306-002-00	METAL/SPACER/RH	*			1 -1141	1 -1141				
2A	1729-306-002-10	METAL/SPACER/RH	*			1 -1332	1 -1332	1			
2B	1729-306-002-20	METAL/SPACER/RH	*			1 1333-	1 1333-	3			
3	V231-361-206-00	FLANGEBOLT	*			16 153-	16 153-				
4	V231-361-203-50	FLANGEBOLT	*			2 153-	2 153-				
5	V231-361-212-00	FLANGEBOLT	*			2 -1144	2 -1144				
5A	V201-361-213-00	BOLT	*			2 1145-	2 1145-				
6	V401-160-012-00	WASHER,SP/M12	*			2 1145-	2 1145-				
7	V523-101-002-40	PIN	*			4 153-	4 153-				
8	V251-341-003-00	BOLT/STUD	*			8 -1144	8 -1144				
8A	V251-341-003-00	BOLT/STUD	*			4 1145-	4 1145-				
9	V251-341-003-50	BOLT/STUD	*			4 -1325	4 -1325				
9A	V251-441-003-50	STUD/M10X35	*			4 1326-	4 1326-				
10	1690-241-003-00	GAUGE/LEBEL	*			1 153-	1 153-				
11	1729-306-003-00	GEAR/HELICAL/10	*			2 153-	2 153-				
12	V600-410-630-70	BEARING/BALL	*			2 153-	2 153-				
13	V600-110-620-90	BEARING,RB/6209	*			2 153-	2 153-				
14	V706-140-045-00	RING/SNAP	*			2 153-	2 153-				
15	V707-140-085-00	RING/SNAP	*			2 153-	2 153-				
16	1650-306-004-30	HOUSING/AXLE	*			2 -322	2 -322				
16A	1729-306-005-00	HOUSING/AXLE/AT	*			2 -1141	2 -1141				
16B	1729-306-005-10	HOUSING/AXLE/AT	*			2 1142-	2 1142-	3			
17	V231-361-003-00	FLANGEBOLT	*			18 -1144	18 -1144				
17A	V231-361-003-00	FLANGEBOLT	*			4 -1160	4 -1160				
17B	V231-361-003-00	FLANGEBOLT	*			12 1161-	12 1161-				
18	V231-361-003-50	FLANGEBOLT	*			14 -1160	14 -1160				
18A	V231-361-003-50	FLANGEBOLT	*			6 -1332	6 -1332				

FIG. 66 HOUSING (AXLE/REAR) SYSTEM (H TYPE-TG5390E4-No.153-/TG5390E6-No.153-)

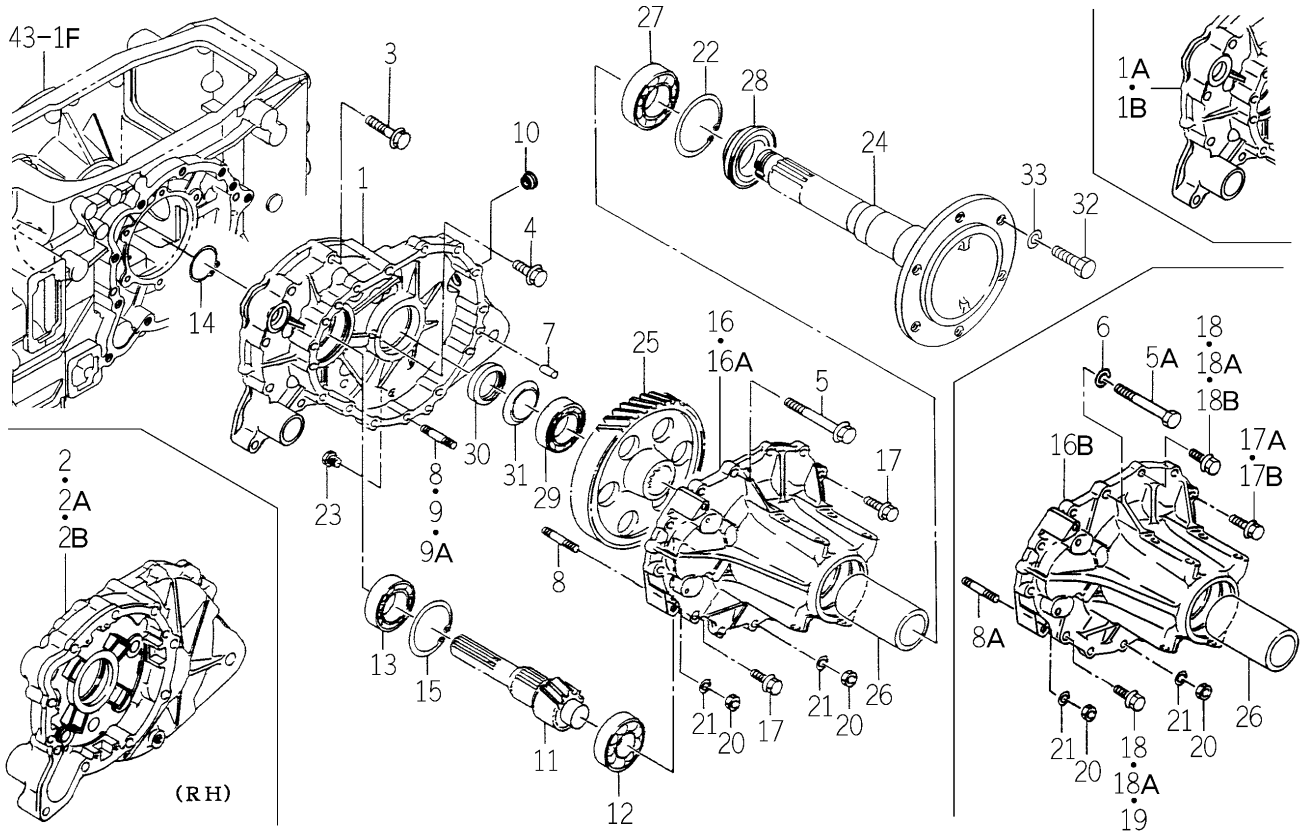

1746-306A-0100

KEY	PART CODE	DESCRIPTION	SPC	TYPE OF MODEL TG5330 E4	TG5330 E6	TG5390 E4	TG5390 E6	ITC	COL	GRP	REMARKS
18B	V231-361-003-50	FLANGEBOLT	*			4 1333-	4 1333-				
19	V231-361-203-50	FLANGEBOLT	*			2 1333-	2 1333-				
20	V304-460-010-00	NUT/M10	*			8 153-	8 153-				
21	V401-160-010-00	WASHER,SP/M10	*			8 153-	8 153-				
22	V707-140-090-00	RING/SNAP	*			2 153-	2 153-				
23	V782-160-000-4B	PLUG/SCREW/SEAL	*			2 153-	2 153-				
24	1654-306-001-00	SHAFT/WHEEL	*			2 153-	2 153-				
25	1729-306-004-00	GEAR/HERICAL/54	*			2 153-	2 153-				
26	1650-306-007-00	COLLAR/120	*			2 153-	2 153-				
27	V600-110-621-00	BEARING,RB/6210	*			2 153-	2 153-				
28	1650-306-200-00	SEAL/OIL ASSY	*			2 153-	2 153-				
29	V600-110-620-90	BEARING,RB/6209	*			2 153-	2 153-				
30	V670-200-009-00	NUT,ADAPTER/AN09	*			2 153-	2 153-				
31	V671-400-009-00	WASHER	*			2 153-	2 153-				
32	V201-361-603-00	BOLT	*			12 153-	12 153-				
33	V401-160-016-00	WASHER,SP/M16	*			12 153-	12 153-				

FIG. 67 DIFF-LOCK SYSTEM (EXCEPT H TYPE)

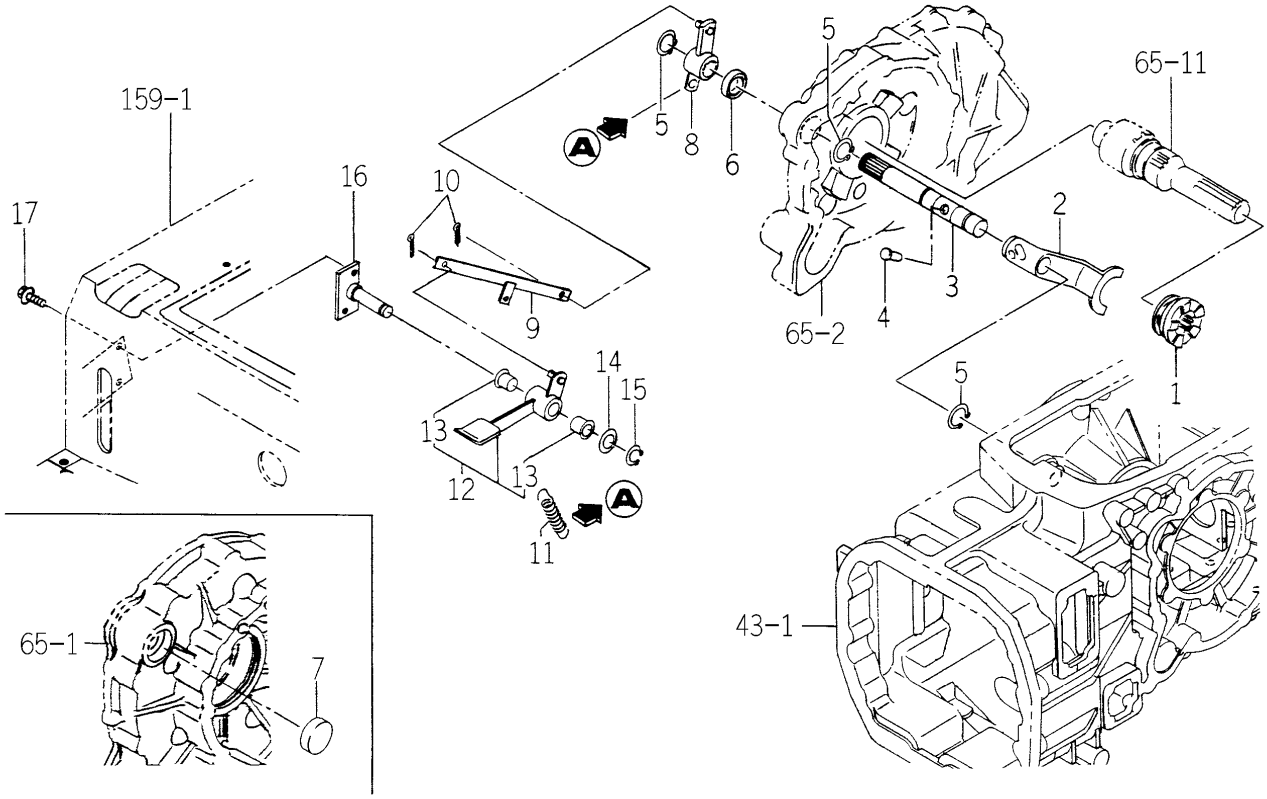

1742-308 -0100

KEY	PART CODE	DESCRIPTION	SPC	TYPE OF MODEL TG5330 E4	TG5330 E6	TG5390 E4	TG5390 E6	ITC	COL	GRP	REMARKS
1	1560-303-006-40	CLUTCH	*	1	1	1	1				
2	1650-308-001-00	FORK/SHIFT/DIFFLOCK	*	1	1	1	1				
3	1729-308-003-00	PIN/SHIFT/DIFFLOCK	*	1	1	1	1				
4	1614-308-004-10	PIN/08X25	*	1	1	1	1				
5	V704-140-022-00	RING,SNAP/22 C	*	3	3	3	3				
6	V744-122-350-80	SEAL,OIL/TC22358	*	1	1	1	1				
7	3737-211-007-00	CAP/35	*	1 -58	1 -58	1 -126	1 -126				
8	1650-308-200-00	ARM/DIFF COMP	*	1	1	1	1				
9	1742-308-200-00	PLATE/I/16X276 COMP	*	1	1	1	1				
10	V500-162-002-00	PIN,SPLIT/2 X20	*	2	2	2	2				
11	1650-135-002-00	SPRING/HE095	*	1	1	1	1				
12	1729-308-200-10	PEDAL/DIFF ASSY	*	1	1	1	1				
13	1560-287-002-30	BUSH/16X24X16	*	2	2	2	2				
14	3621-211-003-00	WASHER	*	1	1	1	1				
15	V704-140-016-00	RING,SNAP/16 C	*	1	1	1	1				
16	1729-308-220-00	PIN COMP	*	1	1	1	1				
17	V231-360-801-60	FLANGEBOLT	*	2	2	2	2				

FIG. 68 DIFF-LOCK SYSTEM (H TYPE)

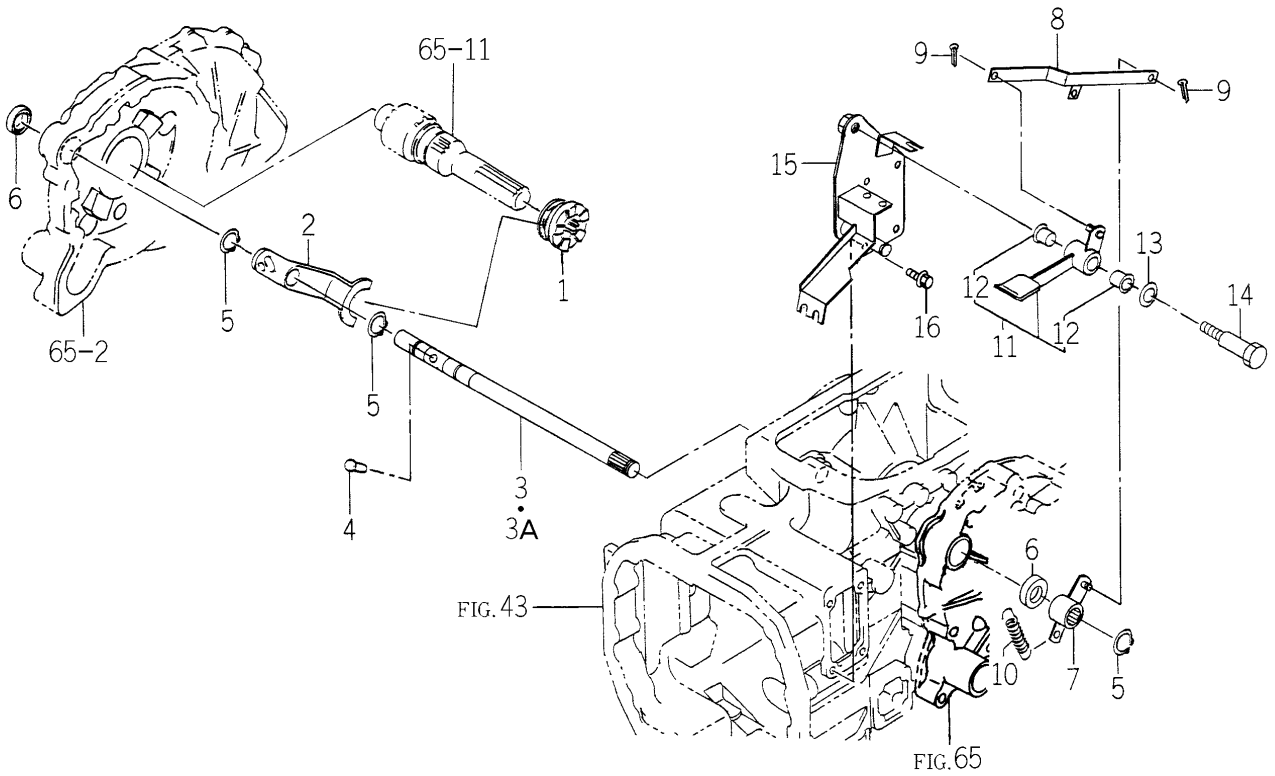

1743-308 -0100

KEY	PART CODE	DESCRIPTION	SPC	TYPE OF MODEL TG5330 E4	TG5330 E6	TG5390 E4	TG5390 E6	ITC	COL	GRP	REMARKS
1	1560-303-006-40	CLUTCH	*			1	1				
2	1650-308-001-00	FORK/SHIFT/DIFFLOCK	*			1	1				
3	1743-308-051-00	PIN/SHIFT/DIFF/HST	*			1 -28	1 -28				
3A	1743-308-051-10	PIN/SHIFT/DIFF/HST	*			1 29-	1 29-	1			
4	1614-308-004-10	PIN/08X25	*			1	1				
5	V704-140-022-00	RING,SNAP/22 C	*			3	3				
6	V744-122-350-80	SEAL,OIL/TC22358	*			2	2				
7	1650-308-200-00	ARM/DIFF COMP	*			1	1				
8	1743-308-500-00	PLATE/Z/16X302 COMP	*			1	1				
9	V500-162-002-00	PIN,SPLIT/2 X20	*			2	2				
10	1650-135-002-00	SPRING/HE095	*			1	1				
11	1729-308-200-10	PEDAL/DIFF ASSY	*			1	1				
12	1560-287-002-30	BUSH/16X24X16	*			2	2				
13	3621-211-003-00	WASHER	*			1	1				
14	1731-265-004-00	BOLT/M12X88	*			1	1				
15	1743-308-510-00	PLATE COMP	*			1	1				
16	V231-360-802-00	FLANGEBOLT	*			4	4				

FIG. 69 BRAKE SYSTEM (E6 TYPE EXCEPT H)

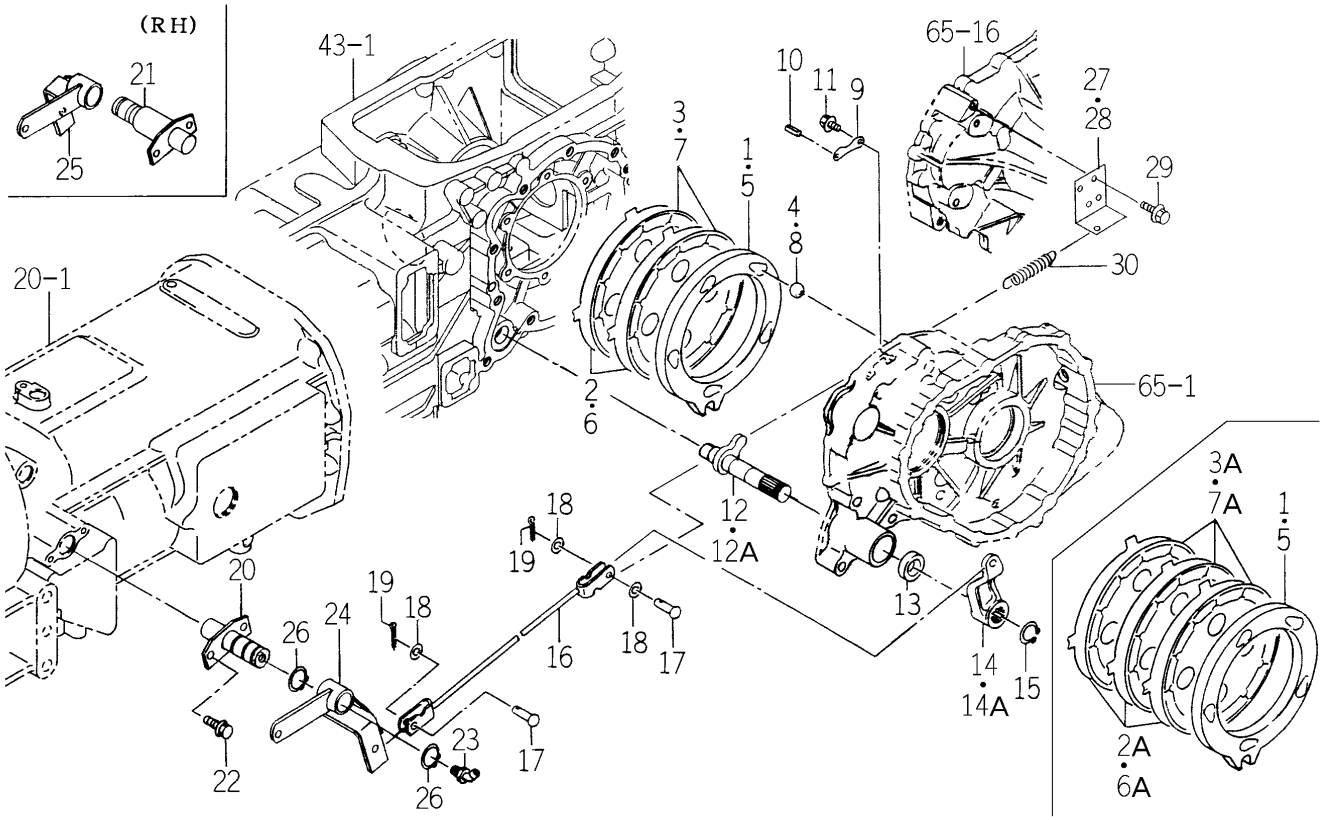

1742-310 -0100

KEY	PART CODE	DESCRIPTION	SPC	TYPE OF MODEL TG5330 E4	TG5330 E6	TG5390 E4	TG5390 E6	ITC	COL	GRP	REMARKS
1	1729-310-201-10	PLATE/PRESSURE/LH	*		1		1				
2	1729-310-202-00	PLATE/SEPARATER	*		2 -957		2 -1332				
2A	1650-310-202-00	PLATE/SEPARATE	*		3 958-		3 1333-				
3	1729-310-203-00	PLATE/FRICTION	*		2 -957		2 -1332				
3A	1650-310-203-00	PLATE/FRICTION	*		3 958-		3 1333-				
4	1650-310-204-00	STEELBALL	*		5		5				
5	1729-310-211-10	PLATE/PRESSURE/RH	*		1		1				
6	1729-310-202-00	PLATE/SEPARATER	*		2 -957		2 -1332				
6A	1650-310-202-00	PLATE/SEPARATE	*		3 958-		3 1333-				
7	1729-310-203-00	PLATE/FRICTION	*		2 -957		2 -1332				
7A	1650-310-203-00	PLATE/FRICTION	*		3 958-		3 1333-				
8	1650-310-204-00	STEELBALL	*		5		5				
9	1614-306-007-00	PLATE	*		4		4				
10	V580-140-501-60	PIN,SP.(W)/5.0X16	*		4		4				
11	V230-360-601-00	FLANGEBOLT	*		4		4				
12	1729-310-220-10	CAM/BRAKE COMP	*		2 -957		2 -1332				
12A	1729-310-220-20	CAM/BRAKE COMP	*		2 958-		2 1333-	3			
13	V744-122-350-80	SEAL,OIL/TC22358	*		2		2				
14	1614-312-001-00	ARM/BRAKE	*		2 -952		2 -1334				
14A	1614-312-001-10	ARM/BRAKE	*		2 953-		2 1335-	1			
15	V704-140-022-00	RING,SNAP/22 C	*		2		2				
16	1742-310-200-00	ROD/FORK COMP	*		2		2				
17	1404-312-006-00	PIN,YOKE A	*		4		4				
18	V411-260-008-00	WASHER,PL/M 8	*		6		6				
19	V500-162-002-00	PIN,SPLIT/2 X20	*		4		4				
20	1560-310-210-40	PIN COMP	*		1		1				
21	1734-310-270-00	PIN/BRAKE COMP	*		1		1				
22	V231-360-801-60	FLANGEBOLT	*		4		4				
23	V763-150-000-00	NIPPLE,GREASE/PT1/8	*		2		2				
24	1729-310-260-00	ARM/BRAKE/LH COMP	*		1		1				

FIG. 69 BRAKE SYSTEM (E6 TYPE EXCEPT H)

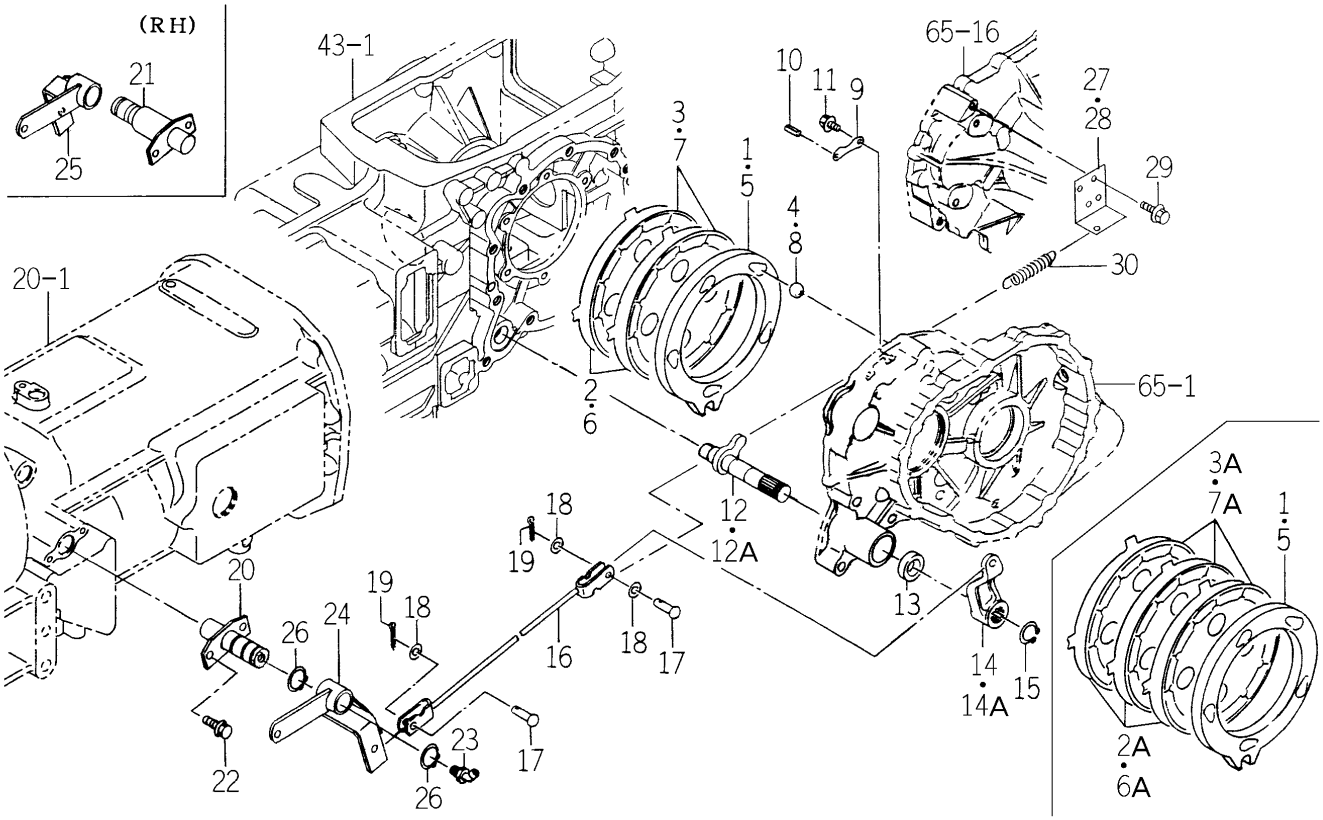

1742-310 -0100

KEY	PART CODE	DESCRIPTION	SPC	TYPE OF MODEL TG5330 E4	TG5330 E6	TG5390 E4	TG5390 E6	ITC	COL	GRP	REMARKS
25	1729-310-270-00	ARM/BRAKE/RH COMP	*		1		1				
26	V704-140-025-00	RING,SNAP/25 C	*		3		3				
27	1729-310-001-00	PLATE/LH	*		1		1				
28	1729-310-002-00	PLATE/RH	*		1		1				
29	V231-360-801-60	FLANGEBOLT	*		4		4				
30	1650-135-002-00	SPRING/HE095	*		2		2				

FIG. 70 BRAKE SYSTEM (HE6 TYPE)

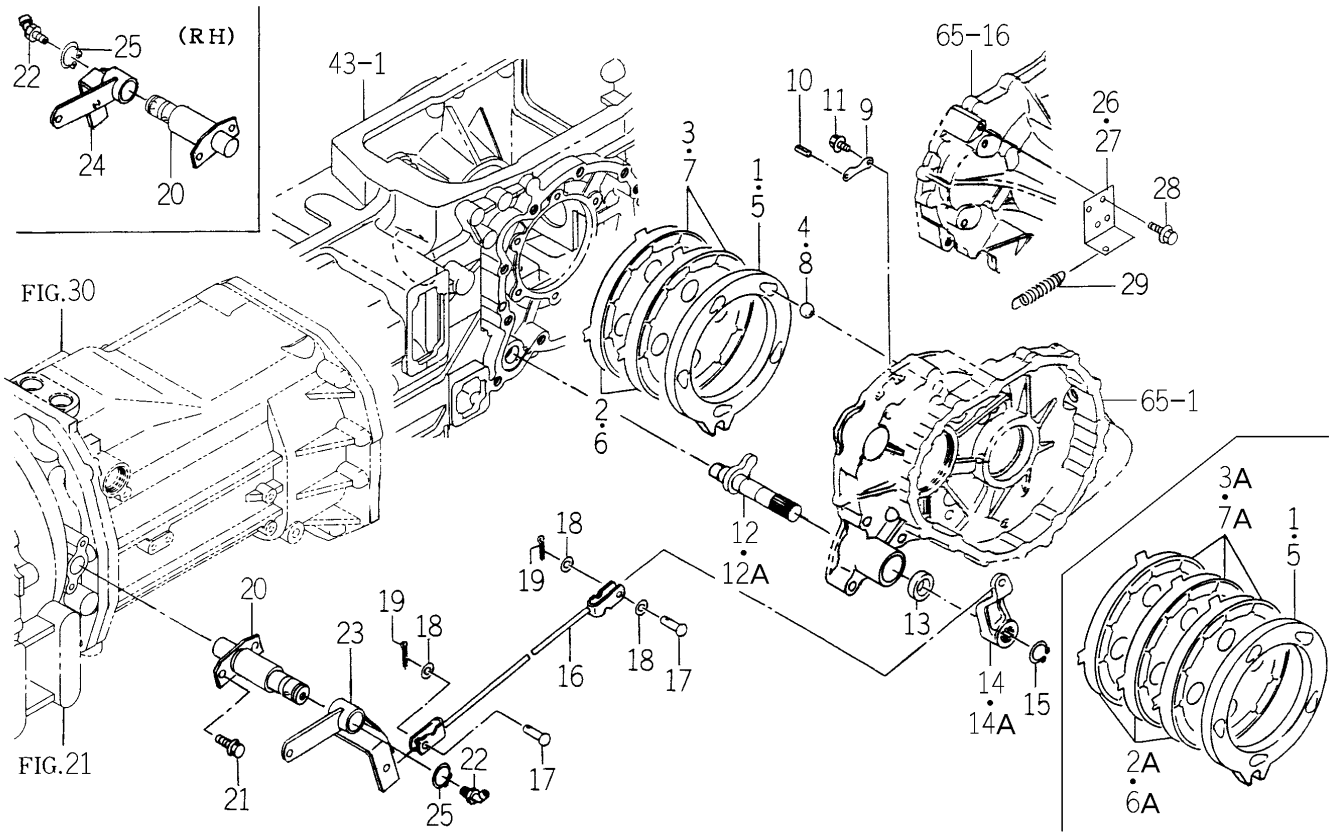

1743-310 -0100

KEY	PART CODE	DESCRIPTION	SPC	TYPE OF MODEL TG5330 E4	TG5330 E6	TG5390 E4	TG5390 E6	ITC	COL	GRP	REMARKS
1	1729-310-201-10	PLATE/PRESSURE/LH	*				1				
2	1729-310-202-00	PLATE/SEPARATER	*				2 -1332				
2A	1650-310-202-00	PLATE/SEPARATE	*				3 1333-				
3	1729-310-203-00	PLATE/FRICTION	*				2 -1332				
3A	1650-310-203-00	PLATE/FRICTION	*				3 1333-				
4	1650-310-204-00	STEELBALL	*				5				
5	1729-310-211-10	PLATE/PRESSURE/RH	*				1				
6	1729-310-202-00	PLATE/SEPARATER	*				2 -1332				
6A	1650-310-202-00	PLATE/SEPARATE	*				3 1333-				
7	1729-310-203-00	PLATE/FRICTION	*				2 -1332				
7A	1650-310-203-00	PLATE/FRICTION	*				3 1333-				
8	1650-310-204-00	STEELBALL	*				5				
9	1614-306-007-00	PLATE	*				4				
10	V580-140-501-60	PIN,SP.(W)/5.0X16	*				4				
11	V230-360-601-00	FLANGEBOLT	*				4				
12	1729-310-220-10	CAM/BRAKE COMP	*				2 -1332				
12A	1729-310-220-20	CAM/BRAKE COMP	*				2 1333-	3			
13	V744-122-350-80	SEAL,OIL/TC22358	*				2				
14	1614-312-001-00	ARM/BRAKE	*				2 -1334				
14A	1614-312-001-10	ARM/BRAKE	*				2 1335-	1			
15	V704-140-022-00	RING,SNAP/22 C	*				2				
16	1742-310-200-00	ROD/FORK COMP	*				2				
17	1404-312-006-00	PIN,YOKE A	*				4				
18	V411-260-008-00	WASHER,PL/M 8	*				6				
19	V500-162-002-00	PIN,SPLIT/2 X20	*				4				
20	1734-310-270-00	PIN/BRAKE COMP	*				2				
21	V231-360-801-60	FLANGEBOLT	*				4				
22	V763-150-000-00	NIPPLE,GREASE/PT1/8	*				2				
23	1729-310-260-00	ARM/BRAKE/LH COMP	*				1				
24	1729-310-270-00	ARM/BRAKE/RH COMP	*				1				

FIG. 70 BRAKE SYSTEM (HE6 TYPE)

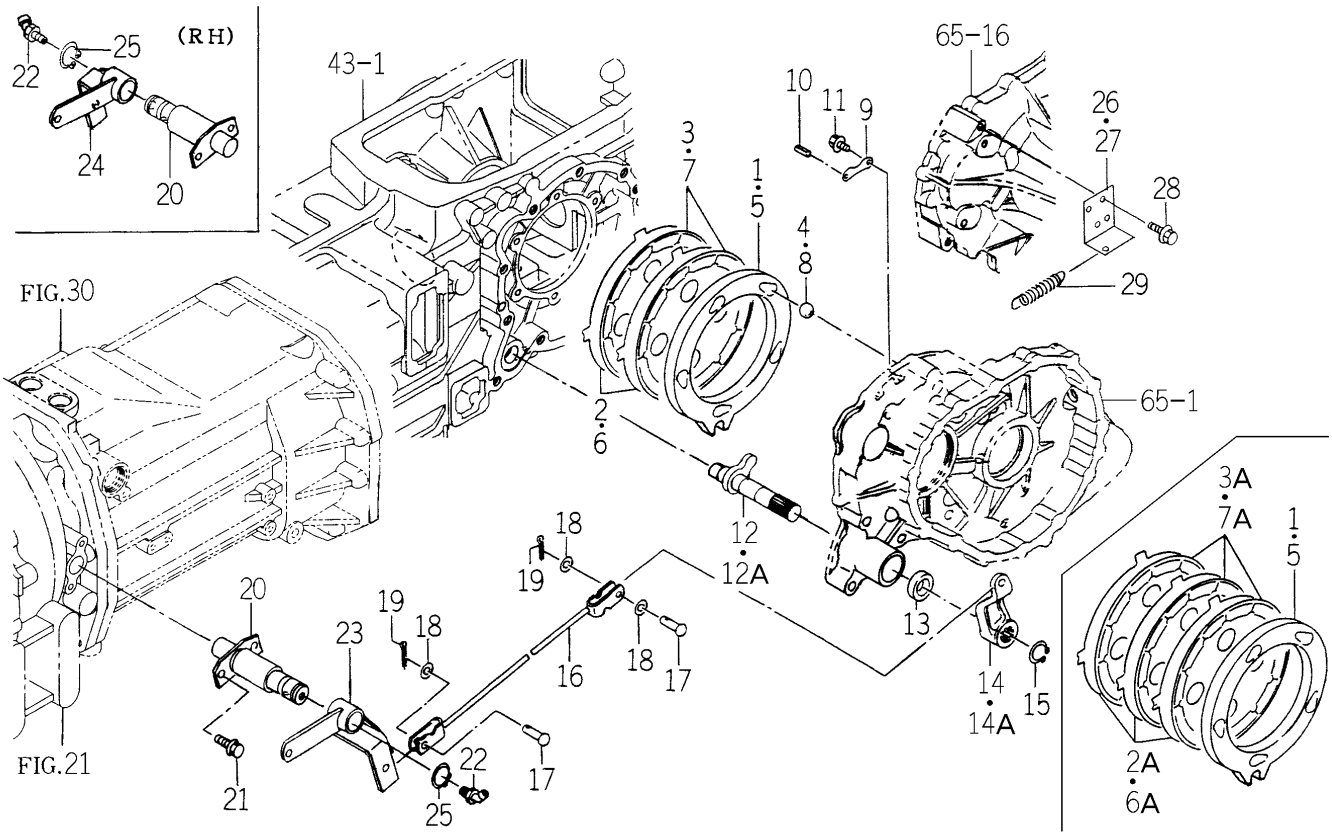

1743-310 -0100

KEY	PART CODE	DESCRIPTION	SPC	TYPE OF MODEL TG5330 E4	TG5330 E6	TG5390 E4	TG5390 E6	ITC	COL	GRP	REMARKS
25	V704-140-025-00	RING,SNAP/25 C	*				2				
26	1729-310-001-00	PLATE/LH	*				1				
27	1729-310-002-00	PLATE/RH	*				1				
28	V231-360-801-60	FLANGEBOLT	*				4				
29	1650-135-002-00	SPRING/HE095	*				2				

FIG. 71 BRAKE SYSTEM (H3 TYPE)

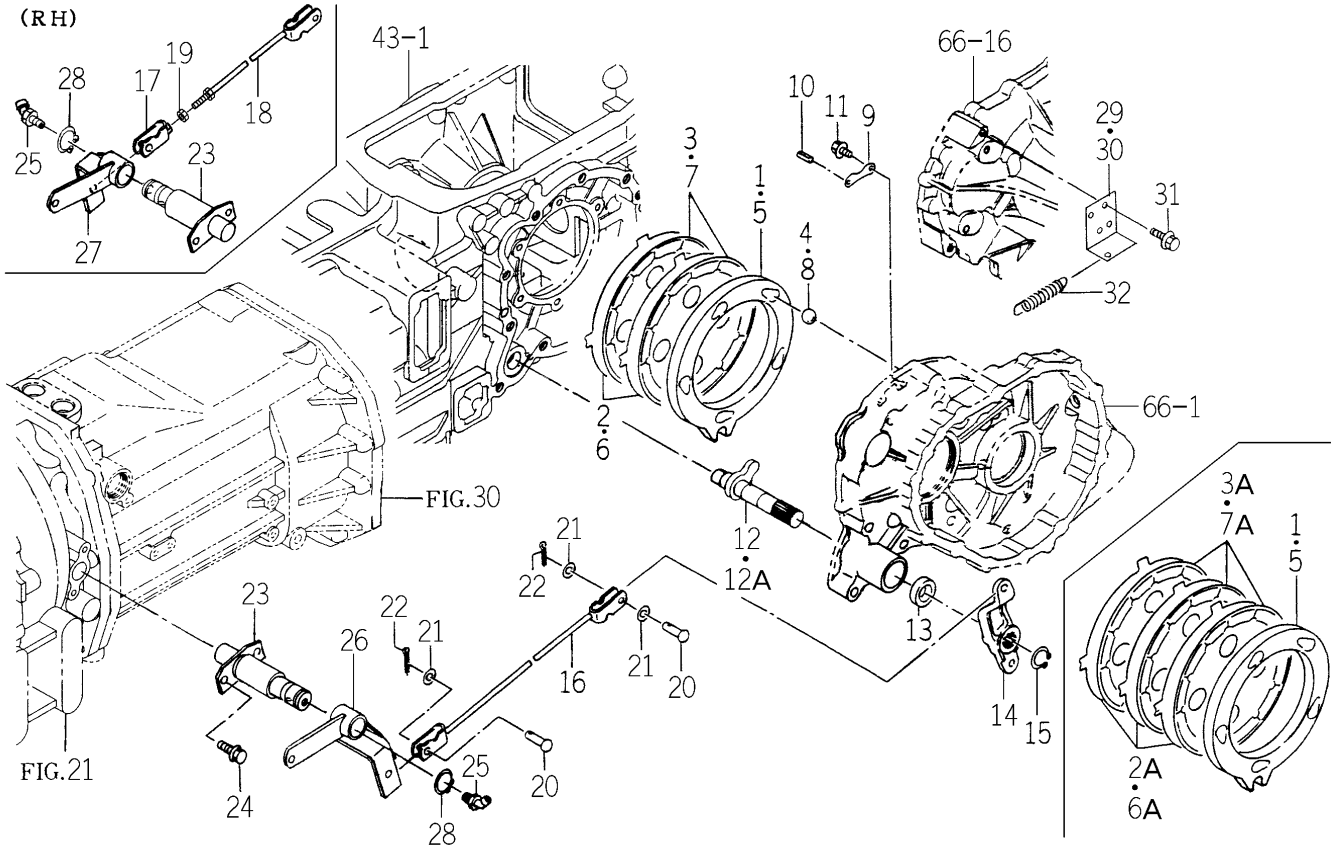

1747-310 -0100

KEY	PART CODE	DESCRIPTION	SPC	TYPE OF MODEL TG5330 E4	TG5330 E6	TG5390 E4	TG5390 E6	ITC	COL	GRP	REMARKS
1	1729-310-201-10	PLATE/PRESSURE/LH	*			1					
2	1729-310-202-00	PLATE/SEPARATER	*			2 -1332					
2A	1650-310-202-00	PLATE/SEPARATE	*			3 1333-					
3	1729-310-203-00	PLATE/FRICTION	*			2 -1332					
3A	1650-310-203-00	PLATE/FRICTION	*			3 1333-					
4	1650-310-204-00	STEELBALL	*			5					
5	1729-310-211-10	PLATE/PRESSURE/RH	*			1					
6	1729-310-202-00	PLATE/SEPARATER	*			2 -1332					
6A	1650-310-202-00	PLATE/SEPARATE	*			3 1333-					
7	1729-310-203-00	PLATE/FRICTION	*			2 -1332					
7A	1650-310-203-00	PLATE/FRICTION	*			3 1333-					
8	1650-310-204-00	STEELBALL	*			5					
9	1614-306-007-00	PLATE	*			4					
10	V580-140-501-60	PIN,SP.(W)/5.0X16	*			4					
11	V230-360-601-00	FLANGEBOLT	*			4					
12	1729-310-220-10	CAM/BRAKE COMP	*			2 -1332					
12A	1729-310-220-20	CAM/BRAKE COMP	*			2 1333-		3			
13	V744-122-350-80	SEAL,OIL/TC22358	*			2					
14	1742-310-001-00	ARM/BRAKE	*			2					
15	V704-140-022-00	RING,SNAP/22 C	*			2					
16	1742-310-200-00	ROD/FORK COMP	*			1					
17	1415-312-600-00	YOKE,RH	*			1					
18	1747-310-700-00	ROD/714 COMP	*			1					
19	V304-260-008-00	NUT	*			1					
20	1404-312-006-00	PIN,YOKE A	*			4					
21	V411-260-008-00	WASHER,PL/M 8	*			6					
22	V500-162-002-00	PIN,SPLIT/2 X20	*			4					
23	1734-310-270-00	PIN/BRAKE COMP	*			2					
24	V231-360-801-60	FLANGEBOLT	*			4					
25	V763-150-000-00	NIPPLE,GREASE/PT1/8	*			2					

FIG. 71 BRAKE SYSTEM (H3 TYPE)

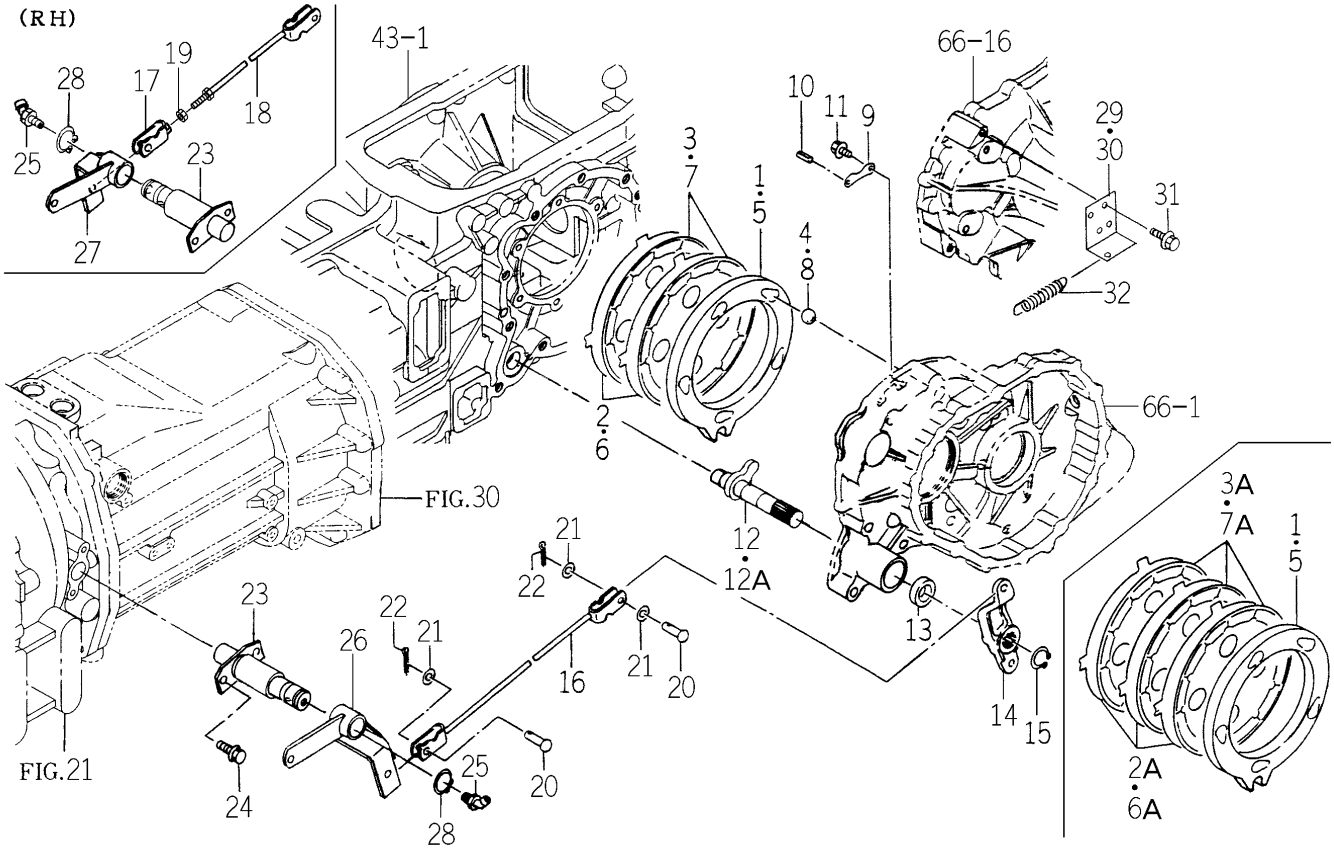

1747-310 -0100

KEY	PART CODE	DESCRIPTION	SPC	TYPE OF MODEL TG5330 E4	TG5330 E6	TG5390 E4	TG5390 E6	ITC	COL	GRP	REMARKS
26	1729-310-260-00	ARM/BRAKE/LH COMP	*			1					
27	1729-310-270-00	ARM/BRAKE/RH COMP	*			1					
28	V704-140-025-00	RING,SNAP/25 C	*			2					
29	1729-310-001-00	PLATE/LH	*			1					
30	1729-310-002-00	PLATE/RH	*			1					
31	V231-360-801-60	FLANGEBOLT	*			4					
32	1650-135-002-00	SPRING/HE095	*			2					

FIG. 72 BRAKE SYSTEM (E4 TYPE EXCEPT H)

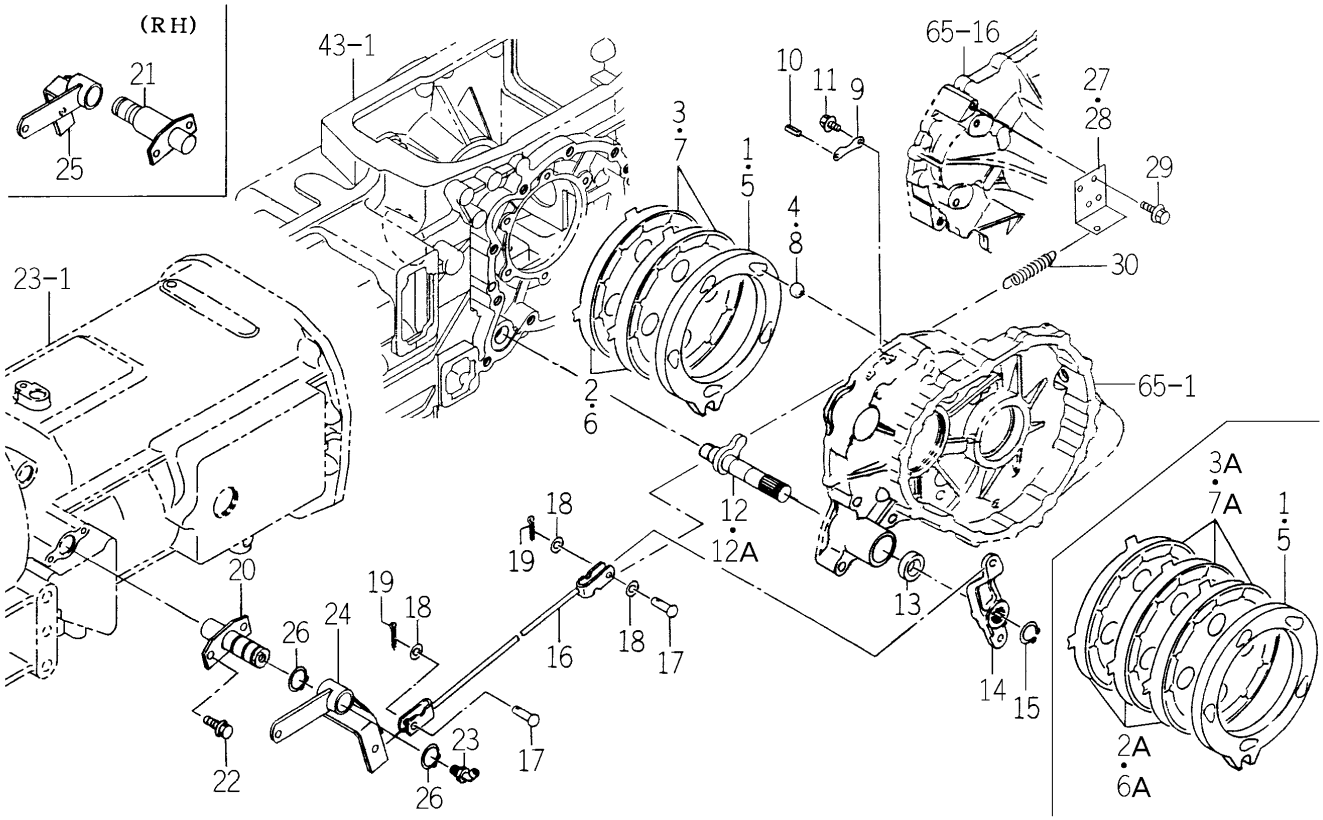

1742-310A-0100

KEY	PART CODE	DESCRIPTION	SPC	TYPE OF MODEL TG5330 E4	TG5330 E6	TG5390 E4	TG5390 E6	ITC	COL	GRP	REMARKS
1	1729-310-201-10	PLATE/PRESSURE/LH	*	1		1					
2	1729-310-202-00	PLATE/SEPARATER	*	2 -957		2 -1332					
2A	1650-310-202-00	PLATE/SEPARATE	*	3 958-		3 1333-					
3	1729-310-203-00	PLATE/FRICTION	*	2 -957		2 -1332					
3A	1650-310-203-00	PLATE/FRICTION	*	3 958-		3 1333-					
4	1650-310-204-00	STEELBALL	*	5		5					
5	1729-310-211-10	PLATE/PRESSURE/RH	*	1		1					
6	1729-310-202-00	PLATE/SEPARATER	*	2 -957		2 -1332					
6A	1650-310-202-00	PLATE/SEPARATE	*	3 958-		3 1333-					
7	1729-310-203-00	PLATE/FRICTION	*	2 -957		2 -1332					
7A	1650-310-203-00	PLATE/FRICTION	*	3 958-		3 1333-					
8	1650-310-204-00	STEELBALL	*	5		5					
9	1614-306-007-00	PLATE	*	4		4					
10	V580-140-501-60	PIN,SP.(W)/5.0X16	*	4		4					
11	V230-360-601-00	FLANGEBOLT	*	4		4					
12	1729-310-220-10	CAM/BRAKE COMP	*	2 -957		2 -1332					
12A	1729-310-220-20	CAM/BRAKE COMP	*	2 958-		2 1333-		3			
13	V744-122-350-80	SEAL,OIL/TC22358	*	2		2					
14	1742-310-001-00	ARM/BRAKE	*	2		2					
15	V704-140-022-00	RING,SNAP/22 C	*	2		2					
16	1742-310-200-00	ROD/FORK COMP	*	2		2					
17	1404-312-006-00	PIN,YOKE A	*	4		4					
18	V411-260-008-00	WASHER,PL/M 8	*	6		6					
19	V500-162-002-00	PIN,SPLIT/2 X20	*	4		4					
20	1560-310-210-40	PIN COMP	*	1		1					
21	1734-310-270-00	PIN/BRAKE COMP	*	1		1					
22	V231-360-801-60	FLANGEBOLT	*	4		4					
23	V763-150-000-00	NIPPLE,GREASE/PT1/8	*	2		2					
24	1729-310-260-00	ARM/BRAKE/LH COMP	*	1		1					
25	1729-310-270-00	ARM/BRAKE/RH COMP	*	1		1					

FIG. 72 BRAKE SYSTEM (E4 TYPE EXCEPT H)

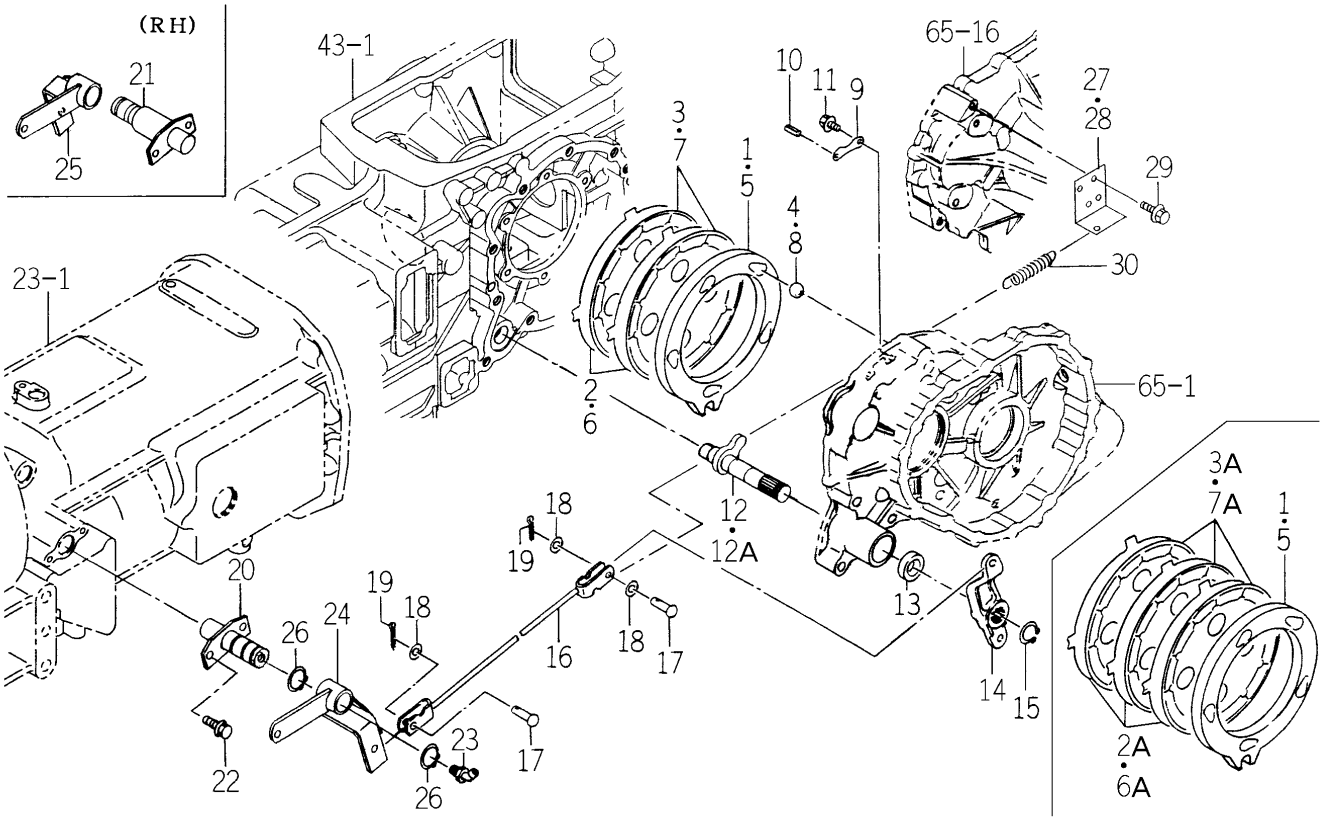

1742-310A-0100

KEY	PART CODE	DESCRIPTION	SPC	TYPE OF MODEL TG5330 E4	TG5330 E6	TG5390 E4	TG5390 E6	ITC	COL	GRP	REMARKS
26	V704-140-025-00	RING,SNAP/25 C	*	3		3					
27	1729-310-001-00	PLATE/LH	*	1		1					
28	1729-310-002-00	PLATE/RH	*	1		1					
29	V231-360-801-60	FLANGEBOLT	*	4		4					
30	1650-135-002-00	SPRING/HE095	*	2		2					

FIG. 73 BRAKE SYSTEM (HE4 TYPE EXCEPT H3)

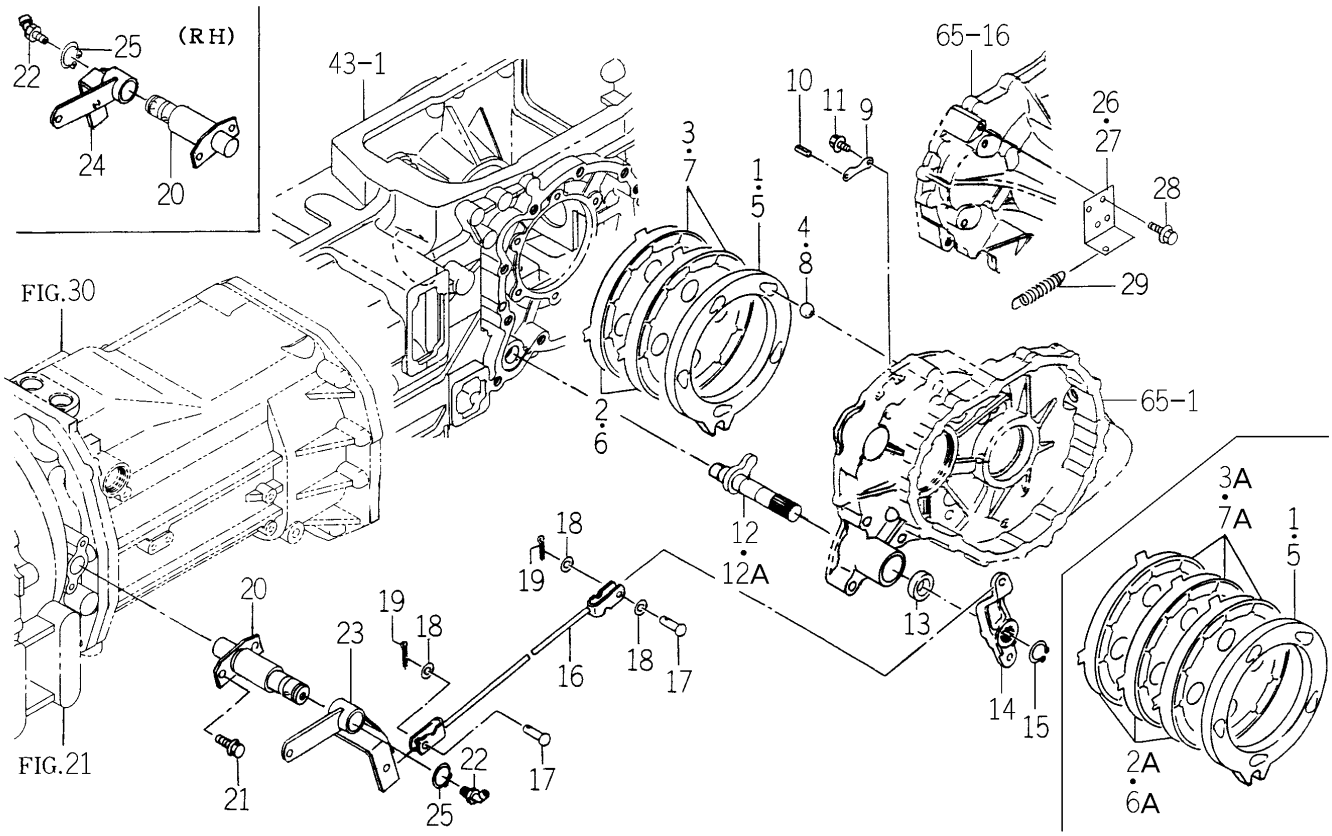

1743-310A-0100

KEY	PART CODE	DESCRIPTION	SPC	TYPE OF MODEL TG5330 E4	TG5330 E6	TG5390 E4	TG5390 E6	ITC	COL	GRP	REMARKS
1	1729-310-201-10	PLATE/PRESSURE/LH	*			1					
2	1729-310-202-00	PLATE/SEPARATER	*			2 -1332					
2A	1650-310-202-00	PLATE/SEPARATE	*			3 1333-					
3	1729-310-203-00	PLATE/FRICTION	*			2 -1332					
3A	1650-310-203-00	PLATE/FRICTION	*			3 1333-					
4	1650-310-204-00	STEELBALL	*			5					
5	1729-310-211-10	PLATE/PRESSURE/RH	*			1					
6	1729-310-202-00	PLATE/SEPARATER	*			2 -1332					
6A	1650-310-202-00	PLATE/SEPARATE	*			3 1333-					
7	1729-310-203-00	PLATE/FRICTION	*			2 -1332					
7A	1650-310-203-00	PLATE/FRICTION	*			3 1333-					
8	1650-310-204-00	STEELBALL	*			5					
9	1614-306-007-00	PLATE	*			4					
10	V580-140-501-60	PIN,SP.(W)/5.0X16	*			4					
11	V230-360-601-00	FLANGEBOLT	*			4					
12	1729-310-220-10	CAM/BRAKE COMP	*			2 -1332					
12A	1729-310-220-20	CAM/BRAKE COMP	*			2 1333-		3			
13	V744-122-350-80	SEAL,OIL/TC22358	*			2					
14	1742-310-001-00	ARM/BRAKE	*			2					
15	V704-140-022-00	RING,SNAP/22 C	*			2					
16	1742-310-200-00	ROD/FORK COMP	*			2					
17	1404-312-006-00	PIN,YOKE A	*			4					
18	V411-260-008-00	WASHER,PL/M 8	*			6					
19	V500-162-002-00	PIN,SPLIT/2 X20	*			4					
20	1734-310-270-00	PIN/BRAKE COMP	*			2					
21	V231-360-801-60	FLANGEBOLT	*			4					
22	V763-150-000-00	NIPPLE,GREASE/PT1/8	*			2					
23	1729-310-260-00	ARM/BRAKE/LH COMP	*			1					
24	1729-310-270-00	ARM/BRAKE/RH COMP	*			1					
25	V704-140-025-00	RING,SNAP/25 C	*			2					

FIG. 73 BRAKE SYSTEM (HE4 TYPE EXCEPT H3)

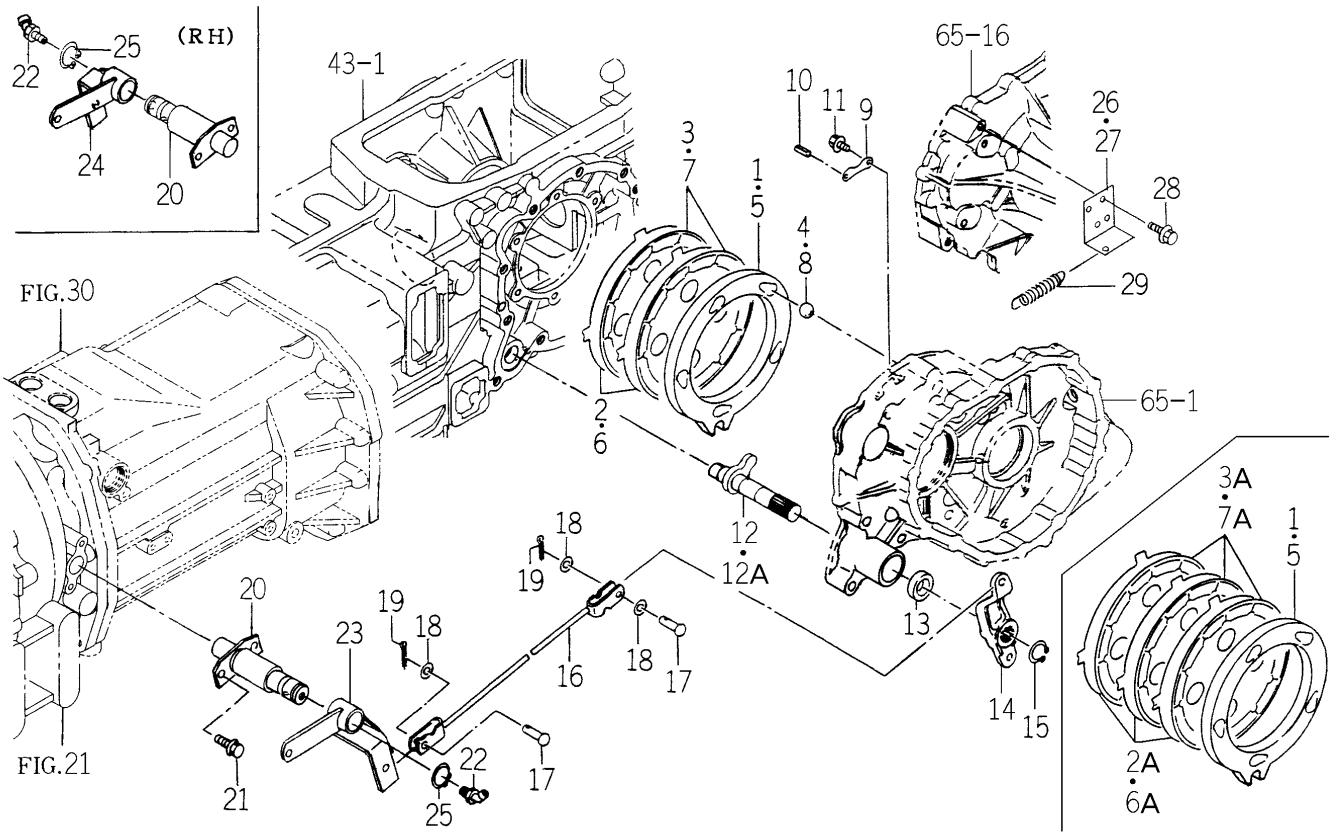

1743-310A-0100

KEY	PART CODE	DESCRIPTION	SPC	TYPE OF MODEL TG5330 E4	TG5330 E6	TG5390 E4	TG5390 E6	ITC	COL	GRP	REMARKS
26	1729-310-001-00	PLATE/LH	*			1					
27	1729-310-002-00	PLATE/RH	*			1					
28	V231-360-801-60	FLANGEBOLT	*			4					
29	1650-135-002-00	SPRING/HE095	*			2					

FIG. 74 PEDAL (BRAKE) SYSTEM (E6 TYPE EXCEPT H)

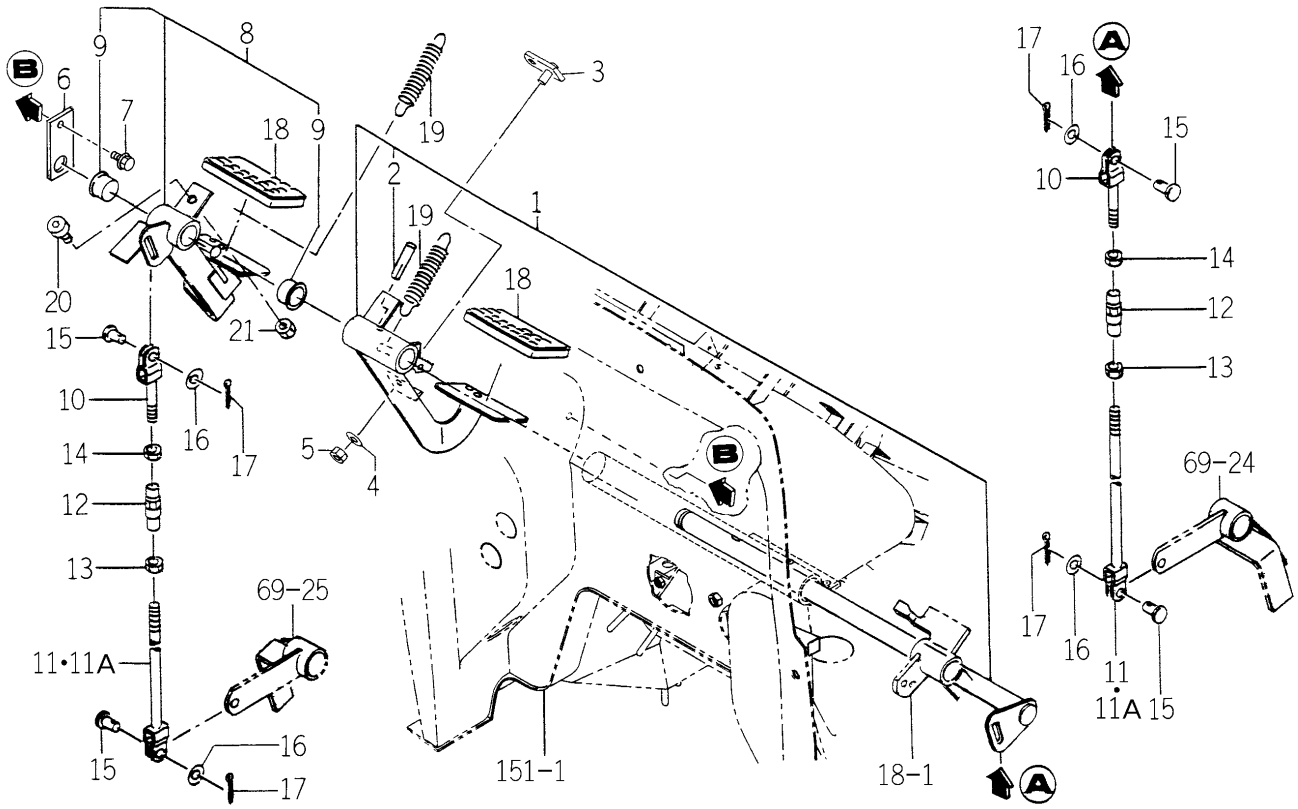

1742-312 -0100

KEY	PART CODE	DESCRIPTION	SPC	TYPE OF MODEL TG5330 E4	TG5330 E6	TG5390 E4	TG5390 E6	ITC	COL	GRP	REMARKS
1	1742-312-200-10	PEDAL/BRAKE/LH SET	*		1		1	3			
2	V511-100-805-00	PIN,TAPER/8X50	*		1		1				
3	1650-312-250-10	LOCKPLATE COMP	*		1		1				
4	3560-203-004-00	SPRING,CONE	*		1		1				
5	1719-312-001-00	U-NUT	*		1		1				
6	1734-312-001-00	PLATE/I/32X72	*		1		1				
7	V231-360-801-60	FLANGEBOLT	*		1		1				
8	1742-312-230-00	PEDAL/BRAKE/RH ASSY	*		1		1				
9	A101-251-008-00	BUSH/20X23X20	*		2		2				
10	1480-122-220-10	ROD,CLUTCH B COMP	*		2		2				
11	1568-132-210-10	ROD COMP	*		2 -76		2 -260				
11A	1568-132-210-20	ROD/LH/240 COMP	*		2 77-		2 261-	1			
12	1444-122-002-00	TURNBUCKLE/M8	*		2		2				
13	1560-132-007-30	NUT/M8	*		2		2				
14	V304-260-008-00	NUT	*		2		2				
15	1432-242-001-00	PIN	*		4		4				
16	V411-260-008-00	WASHER,PL/M 8	*		4		4				
17	V500-162-002-00	PIN,SPLIT/2 X20	*		4		4				
18	1524-122-001-00	PAD	*		2		2				
19	1650-135-002-00	SPRING/HE095	*		2		2				
20	1421-602-005-10	CUSHION,B/ RUBBER	*		1		1				
21	V304-260-008-00	NUT	*		1		1				

FIG. 75 PEDAL (BRAKE) SYSTEM (E4 TYPE EXCEPT H)

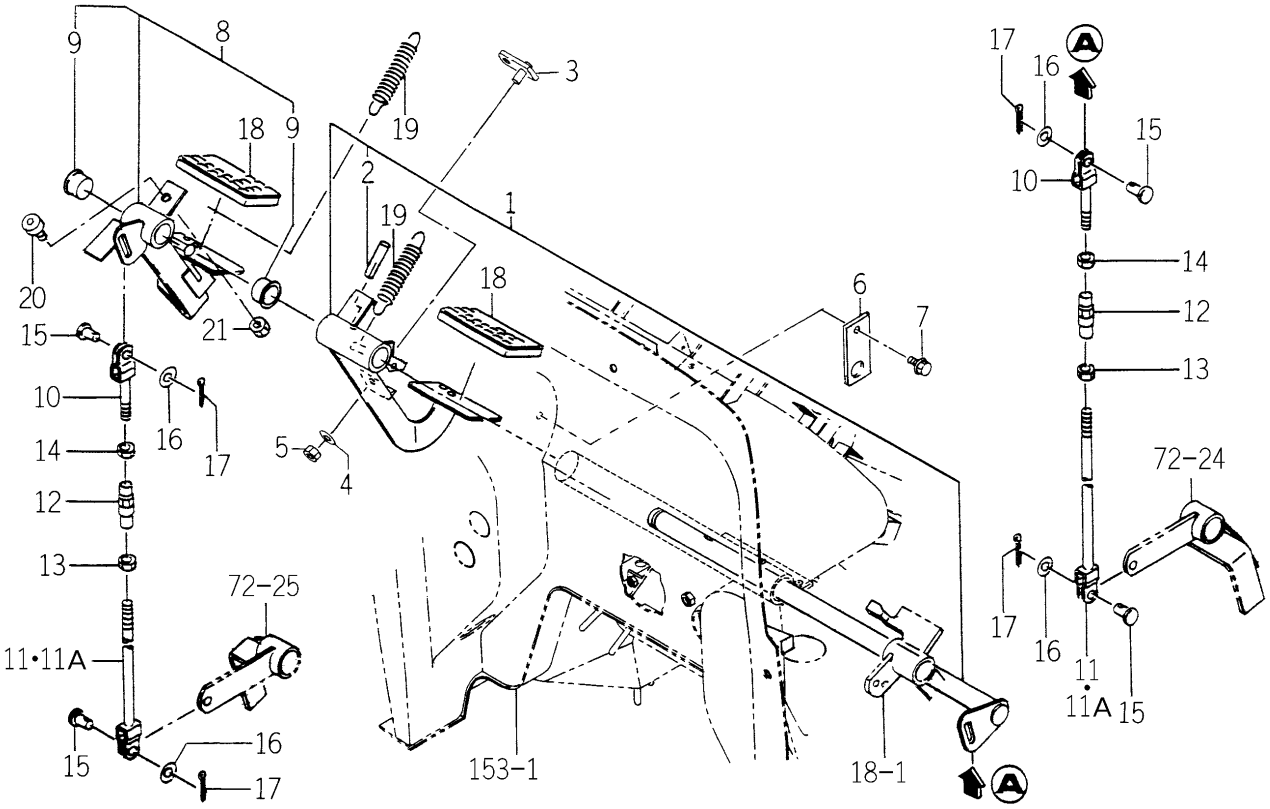

1746-312 -0100

KEY	PART CODE	DESCRIPTION	SPC	TYPE OF MODEL TG5330 E4	TG5330 E6	TG5390 E4	TG5390 E6	ITC	COL	GRP	REMARKS
1	1742-312-200-10	PEDAL/BRAKE/LH SET	*	1		1		3			
2	V511-100-805-00	PIN,TAPER/8X50	*	1		1					
3	1650-312-250-10	LOCKPLATE COMP	*	1		1					
4	3560-203-004-00	SPRING,CONE	*	1		1					
5	1719-312-001-00	U-NUT	*	1		1					
6	1734-312-001-00	PLATE/I/32X72	*	1		1					
7	V231-360-801-60	FLANGEBOLT	*	1		1					
8	1742-312-230-00	PEDAL/BRAKE/RH ASSY	*	1		1					
9	A101-251-008-00	BUSH/20X23X20	*	2		2					
10	1480-122-220-10	ROD,CLUTCH B COMP	*	2		2					
11	1568-132-210-10	ROD COMP	*	2 -76		2 -260					
11A	1568-132-210-20	ROD/LH/240 COMP	*	2 77-		2 261-		1			
12	1444-122-002-00	TURNBUCKLE/M8	*	2		2					
13	1560-132-007-30	NUT/M8	*	2		2					
14	V304-260-008-00	NUT	*	2		2					
15	1432-242-001-00	PIN	*	4		4					
16	V411-260-008-00	WASHER,PL/M 8	*	4		4					
17	V500-162-002-00	PIN,SPLIT/2 X20	*	4		4					
18	1636-313-011-10	PAD/BRAKE	*	2		2					
19	1650-135-002-00	SPRING/HE095	*	2		2					
20	1421-602-005-10	CUSHION,B/ RUBBER	*	1		1					
21	V304-260-008-00	NUT	*	1		1					

FIG. 76 PEDAL (BRAKE) SYSTEM (HE4 TYPE)

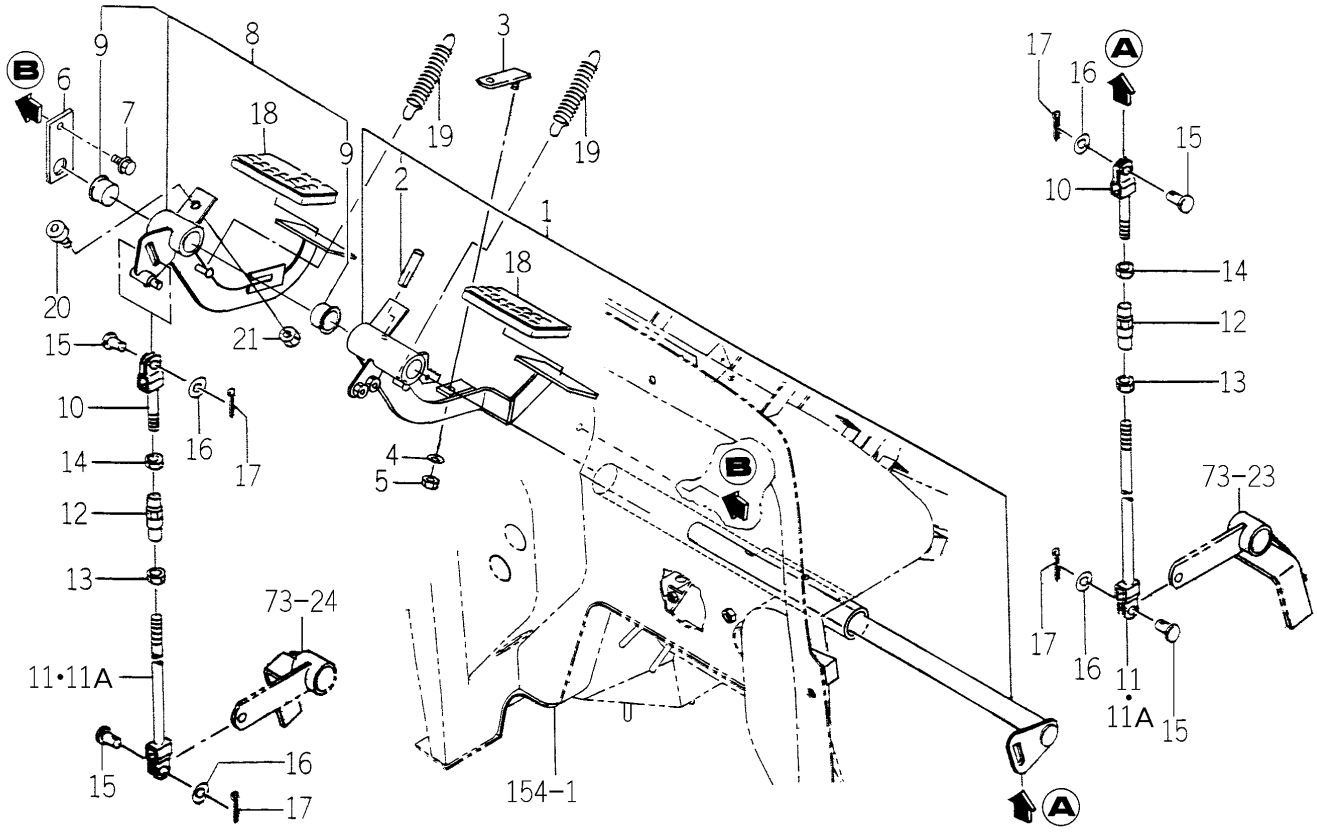

1747-312 -0100

KEY	PART CODE	DESCRIPTION	SPC	TYPE OF MODEL TG5330 E4	TG5330 E6	TG5390 E4	TG5390 E6	ITC	COL	GRP	REMARKS
1	1747-312-700-10	PEDAL/BRAKE/LH SET	*			1		3			
2	V511-100-805-00	PIN,TAPER/8X50	*			1					
3	1650-312-250-10	LOCKPLATE COMP	*			1					
4	3560-203-004-00	SPRING,CONE	*			1					
5	1719-312-001-00	U-NUT	*			1					
6	1734-312-001-00	PLATE/I/32X72	*			1					
7	V231-360-801-60	FLANGEBOLT	*			1					
8	1747-312-730-10	PEDAL/BRAKE/RH ASSY	*			1		3			
9	A101-251-008-00	BUSH/20X23X20	*			2					
10	1480-122-220-10	ROD,CLUTCH B COMP	*			2					
11	1568-132-210-10	ROD COMP	*			2 -260					
11A	1568-132-210-20	ROD/LH/240 COMP	*			2 261-		1			
12	1444-122-002-00	TURNBUCKLE/M8	*			2					
13	1560-132-007-30	NUT/M8	*			2					
14	V304-260-008-00	NUT	*			2					
15	1432-242-001-00	PIN	*			4					
16	V411-260-008-00	WASHER,PL/M 8	*			4					
17	V500-162-002-00	PIN,SPLIT/2 X20	*			4					
18	1725-312-004-00	PAD/OR	*			2					
19	1650-135-002-00	SPRING/HE095	*			2					
20	1421-602-005-10	CUSHION,B/ RUBBER	*			1					
21	V304-260-008-00	NUT	*			1					

FIG. 77 PEDAL (BRAKE) SYSTEM (HE6 TYPE)

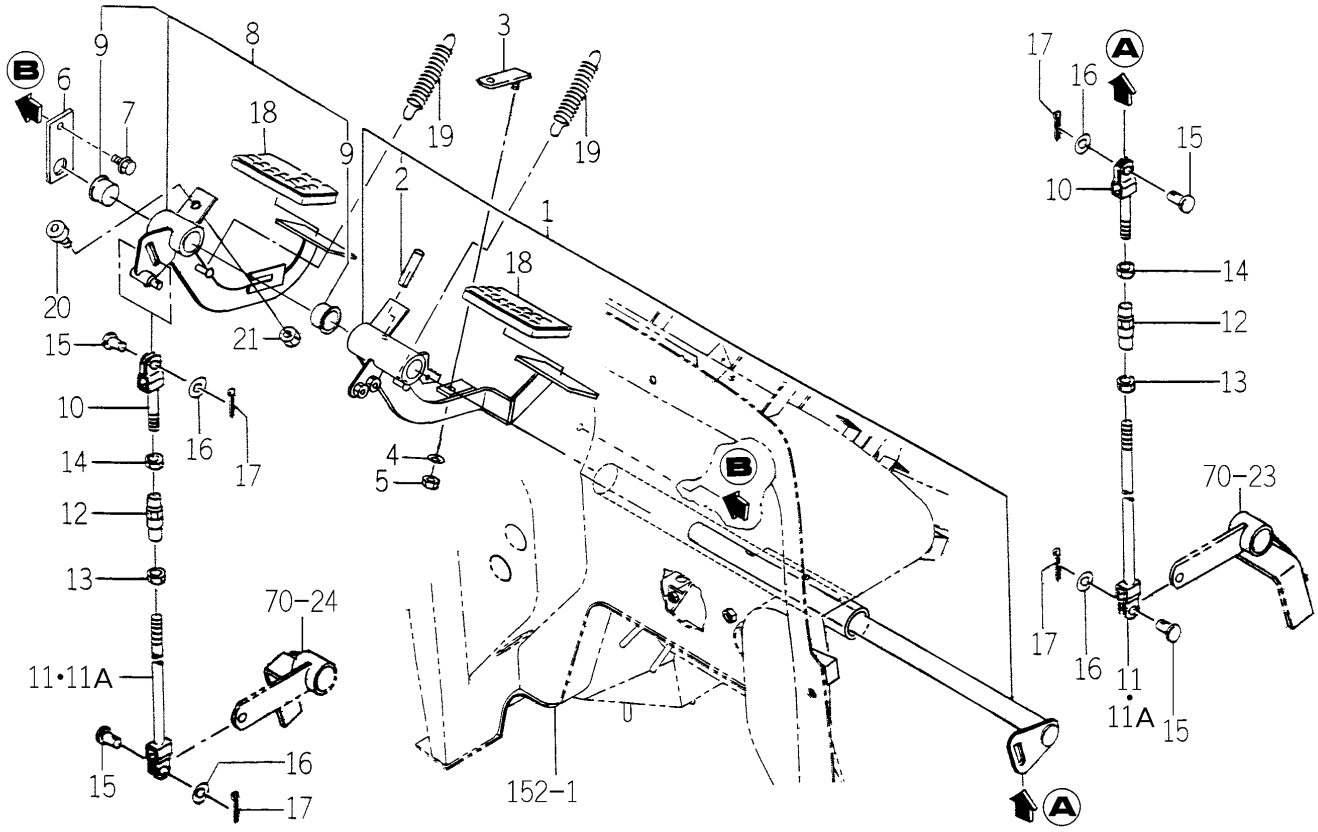

1747-312A-0100

KEY	PART CODE	DESCRIPTION	SPC	TYPE OF MODEL TG5330 E4	TG5330 E6	TG5390 E4	TG5390 E6	ITC	COL	GRP	REMARKS
1	1747-312-700-10	PEDAL/BRAKE/LH SET	*				1	3			
2	V511-100-805-00	PIN,TAPER/8X50	*				1				
3	1650-312-250-10	LOCKPLATE COMP	*				1				
4	3560-203-004-00	SPRING,CONE	*				1				
5	1719-312-001-00	U-NUT	*				1				
6	1734-312-001-00	PLATE/I/32X72	*				1				
7	V231-360-801-60	FLANGEBOLT	*				1				
8	1747-312-730-10	PEDAL/BRAKE/RH ASSY	*				1	3			
9	A101-251-008-00	BUSH/20X23X20	*				2				
10	1480-122-220-10	ROD,CLUTCH B COMP	*				2				
11	1568-132-210-10	ROD COMP	*				2 -260				
11A	1568-132-210-20	ROD/LH/240 COMP	*				2 261-	1			
12	1444-122-002-00	TURNBUCKLE/M8	*				2				
13	1560-132-007-30	NUT/M8	*				2				
14	V304-260-008-00	NUT	*				2				
15	1432-242-001-00	PIN	*				4				
16	V411-260-008-00	WASHER,PL/M 8	*				4				
17	V500-162-002-00	PIN,SPLIT/2 X20	*				4				
18	2512-206-001-00	PAD	*				2				
19	1650-135-002-00	SPRING/HE095	*				2				
20	1421-602-005-10	CUSHION,B/ RUBBER	*				1				
21	V304-260-008-00	NUT	*				1				

FIG. 78 BRAKE (PARKING) SYSTEM (E6 TYPE)

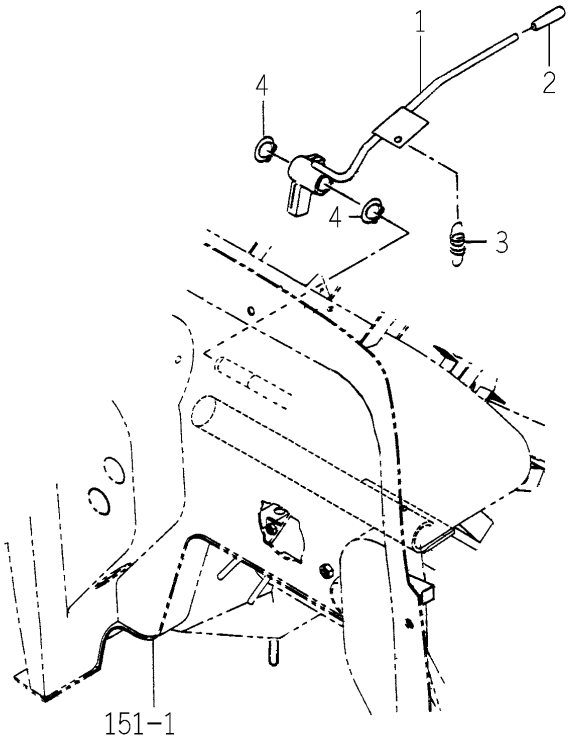

1742-313 -0100

KEY	PART CODE	DESCRIPTION	SPC	TYPE OF MODEL				ITC	COL	GRP	REMARKS
				TG5330 E4	TG5330 E6	TG5390 E4	TG5390 E6				
1	1729-313-200-10	LEVER/PARKING COMP	*		1		1				
2	1742-313-001-10	GRIP/07X34/OR	*		1		1				
3	1588-218-003-00	SPRING/HE044	*		1		1				
4	V704-140-016-00	RING,SNAP/16 C	*		2		2				

FIG. 79 BRAKE (PARKING) SYSTEM (E4 TYPE)

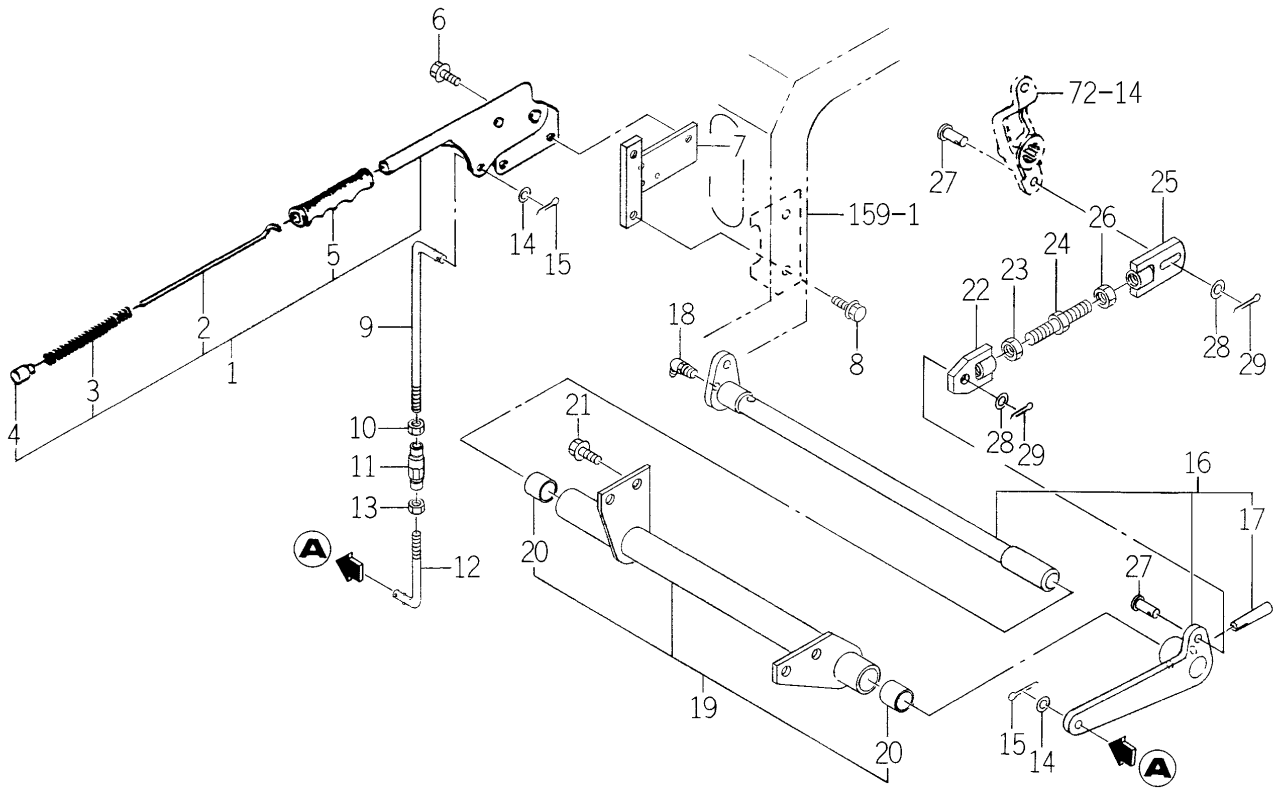

1746-313 -0100

KEY	PART CODE	DESCRIPTION	SPC	TYPE OF MODEL TG5330 E4	TG5330 E6	TG5390 E4	TG5390 E6	ITC	COL	GRP	REMARKS
1	1740-313-300-00	LEVER/PARKING ASSY	*	1		1					
2	1442-313-202-00	ROD	*	1		1					
3	1444-328-273-00	SPRING	*	1		1					
4	1444-328-272-00	BUTTON	*	1		1					
5	1740-313-301-00	GRIP/ORANGE	*	1		1					
6	V231-360-801-60	FLANGEBOLT	*	2		2					
7	1746-313-200-10	BRACKET/PARKING COMP	*	1		1					
8	V231-361-001-60	FLANGEBOLT	*	2		2					
9	1746-313-001-10	ROD/LH/M08X205	*	1		1					
10	1560-132-007-30	NUT/M8	*	1		1					
11	1444-122-002-00	TURNBUCKLE/M8	*	1		1					
12	1594-314-001-00	ROD/90 RH	*	1		1					
13	V304-260-008-00	NUT	*	1		1					
14	V411-260-008-00	WASHER,PL/M 8	*	2		2					
15	V500-162-002-00	PIN,SPLIT/2 X20	*	2		2					
16	1746-313-210-00	ARM/BRAKE SET	*	1		1					
17	V511-100-805-00	PIN,TAPER/8X50	*	1		1					
18	V763-150-000-00	NIPPLE,GREASE/PT1/8	*	1		1					
19	1746-313-240-00	BRACKET/PARKING ASSY	*	1		1					
20	3664-540-001-00	BUSH/22X25X20	*	2		2					
21	V231-361-002-00	FLANGEBOLT	*	4		4					
22	1746-313-260-00	PLATE/PARKING/A COMP	*	2		2					
23	V304-260-012-00	NUT/M12	*	2		2					
24	1746-313-002-00	ROD/M12X80	*	2		2					
25	1746-313-270-00	PLATE/PARKING/B COMP	*	2		2					
26	3640-432-006-00	NUT/M12/LH	*	2		2					
27	1627-122-008-00	PIN/10X25	*	4		4					
28	V411-260-010-00	WASHER/M10	*	4		4					
29	V500-162-502-00	PIN,SPLIT/2.5X20	*	4		4					

FIG. 80 WHEEL (STEERING) SYSTEM

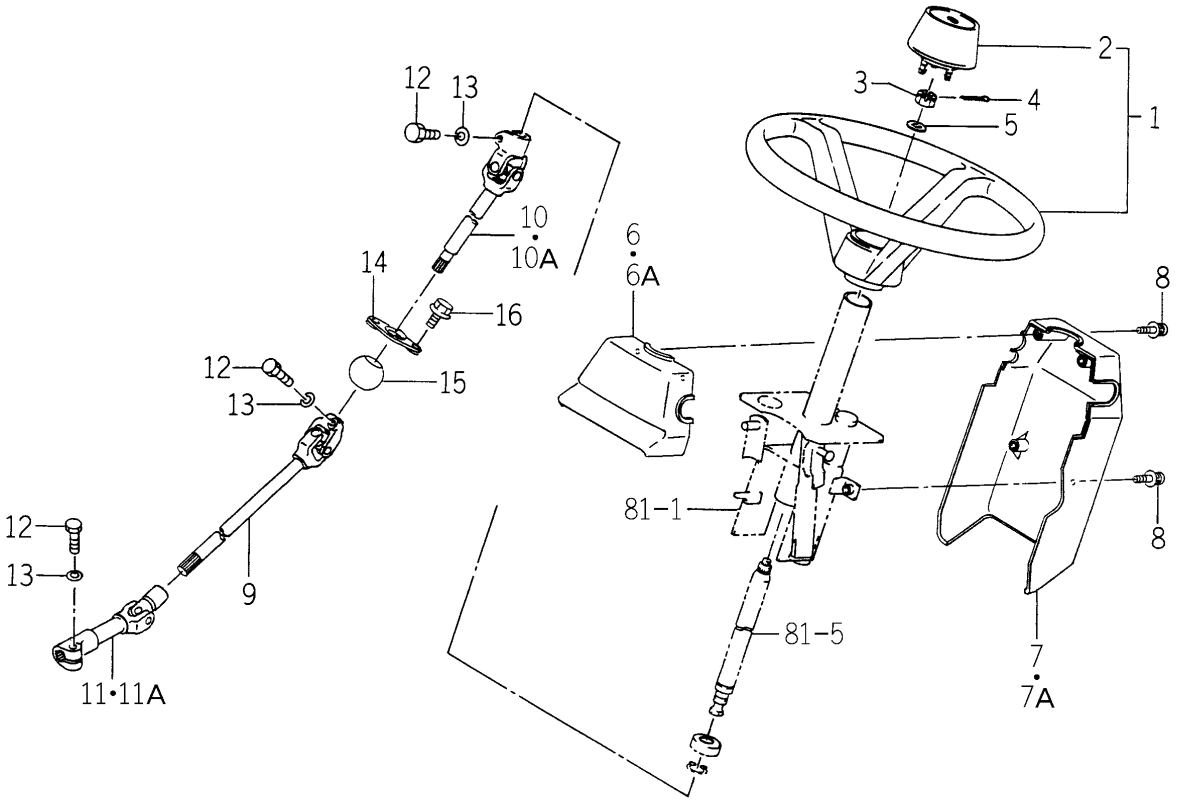

1746-401 -0100

KEY	PART CODE	DESCRIPTION	SPC	TYPE OF MODEL TG5330 E4	TG5330 E6	TG5390 E4	TG5390 E6	ITC	COL	GRP	REMARKS
1	1656-401-220-00	WHEEL/STEERING ASSY	*	1	1	1	1				
2	1656-401-222-00	CAP	*	1	1	1	1				
3	V327-262-110-00	NUT/M10X1.25	*	1	1	1	1				
4	V500-162-002-00	PIN,SPLIT/2 X20	*	1	1	1	1				
5	V411-260-010-00	WASHER/M10	*	1	1	1	1				
6	1742-401-001-00	COVER/COLUMN/FRONT	*	1 -154	1 -154	1 -498	1 -498				
6A	1742-401-001-10	COVER/COLUMN/FRONT	*	1 155-	1 155-	1 499-	1 499-	1			
7	1650-401-002-00	COVER/CORAM/REAR	*	1 -154	1 -154	1 -498	1 -498				
7A	1650-401-002-10	COVER/CORAM/REAR	*	1 155-	1 155-	1 499-	1 499-	1			
8	V120-366-001-60	SCREW	*	4	4	4	4				
9	1732-401-201-00	SHAFT/STEERING/F	*	1	1	1	1				
10	1656-401-202-10	SHAFT/STEERING/REAR	*	1 -511	1 -511	1 -877	1 -877				
10A	1656-401-202-20	SHAFT/STEERING/REAR	*	1 512-	1 512-	1 878-	1 878-	1			
11	1742-401-002-00	JOINT/UNIVERSAL	*	1 -98	1 -98	1 -348	1 -348				
11A	1729-401-003-00	JOINT/UNIVERSAL	*	1 99-	1 99-	1 349-	1 349-				
12	1696-401-003-00	BOLT/SM/M08X26	*	3	3	3	3				
13	V401-160-008-00	WASHER,SP/M 8	*	3	3	3	3				
14	1560-402-210-30	HOLDER COMP	*	1	1	1	1				
15	1690-401-210-00	BALL/STEERING ASSY	*	1	1	1	1				
16	V231-360-801-60	FLANGEBOLT	*	2	2	2	2				

FIG. 81 COLUMN (STEERING) SYSTEM (S TYPE)

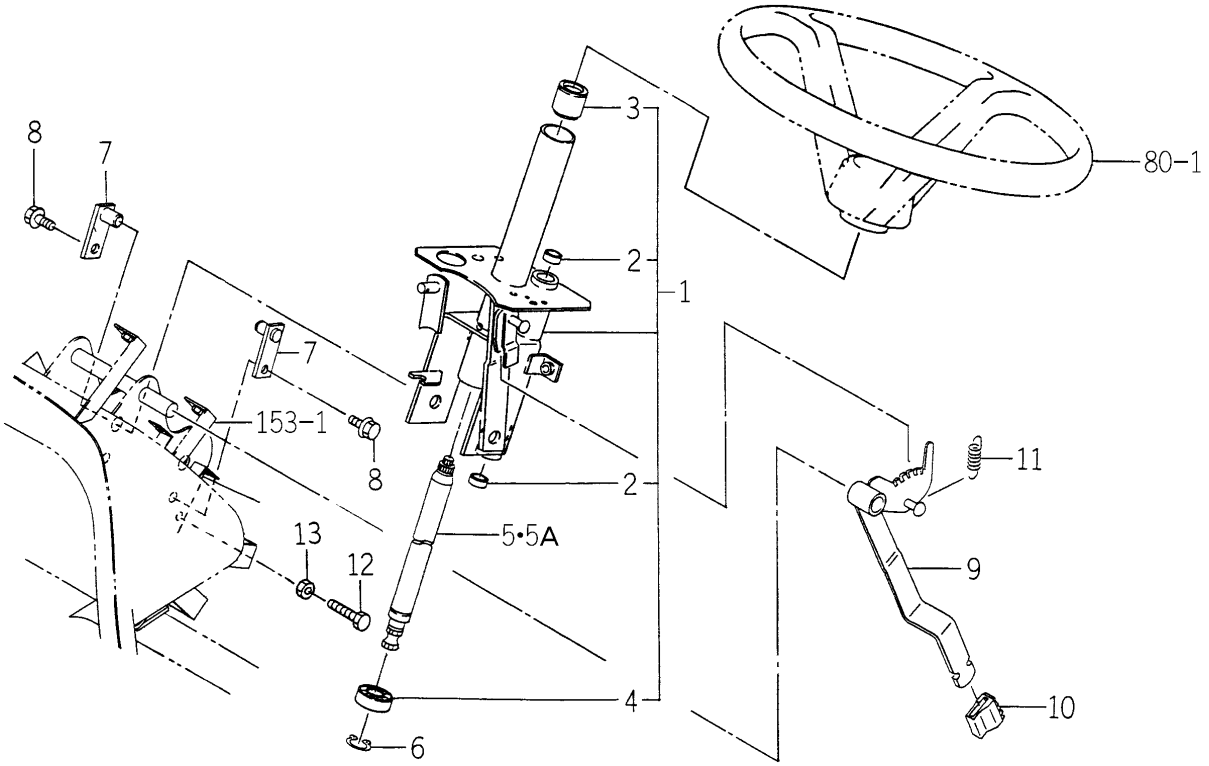

1742-404 -0100

KEY	PART CODE	DESCRIPTION	SPC	TYPE OF MODEL TG5330 E4	TG5330 E6	TG5390 E4	TG5390 E6	ITC	COL	GRP	REMARKS
1	1742-404-210-20	COLUMN/S ASSY	*	1		1		1			
2	1560-314-291-00	BUSH/16X18X15	*	2		2					
3	1429-406-205-00	BUSH	*	1		1					
4	V600-430-600-30	BEARING/BALL	*	1		1					
5	1620-401-001-20	SHAFT/STEERING	*	1 -92		1 -300					
5A	1620-401-001-30	SHAFT/STEERING	*	1 93-		1 301-		1			
6	V704-140-017-00	RING,SNAP/17 C	*	1		1					
7	1560-404-210-10	PIN/16X23 COMP	*	2		2					
8	V231-360-801-60	FLANGEBOLT	*	2		2					
9	1650-404-220-00	PEDAL COMP	*	1		1					
10	1518-406-006-00	COVER,PEDAL	*	1		1					
11	1560-404-002-30	SPRING	*	1		1					
12	V201-260-804-00	BOLT/M 8X40	*	1		1					
13	V304-260-008-00	NUT	*	1		1					

FIG. 82 COLUMN (STEERING) SYSTEM (H TYPE)

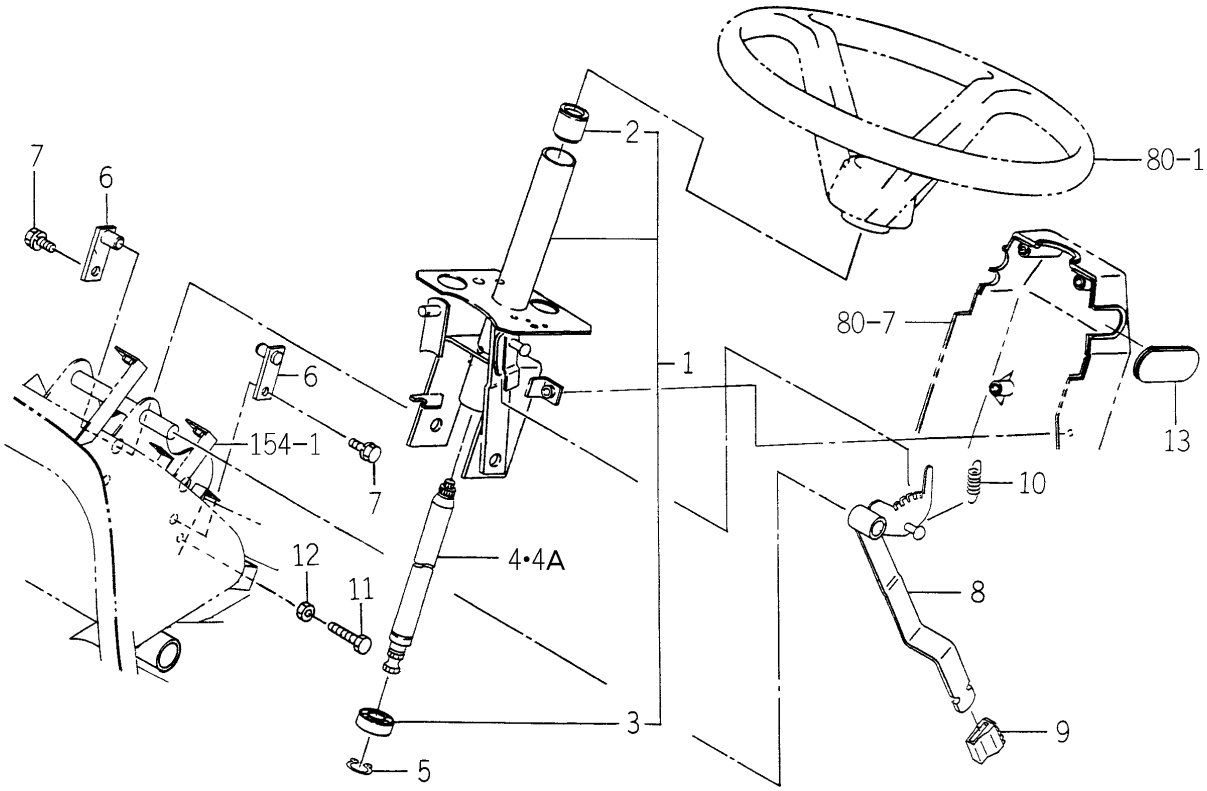

1743-404 -0100

KEY	PART CODE	DESCRIPTION	SPC	TYPE OF MODEL TG5330 E4	TG5330 E6	TG5390 E4	TG5390 E6	ITC	COL	GRP	REMARKS
1	1743-404-710-10	COLUMN/HST ASSY	*			1	1	1			
2	1429-406-205-00	BUSH	*			1	1				
3	V600-430-600-30	BEARING/BALL	*			1	1				
4	1620-401-001-20	SHAFT/STEERING	*			1 -300	1 -300				
4A	1620-401-001-30	SHAFT/STEERING	*			1 301-	1 301-	1			
5	V704-140-017-00	RING,SNAP/17 C	*			1	1				
6	1560-404-210-10	PIN/16X23 COMP	*			2	2				
7	V211-260-802-00	BOLT/S	*			2	2				
8	1650-404-220-00	PEDAL COMP	*			1	1				
9	1518-406-006-00	COVER,PEDAL	*			1	1				
10	1560-404-002-30	SPRING	*			1	1				
11	V201-260-804-00	BOLT/M 8X40	*			1	1				
12	V304-260-008-00	NUT	*			1	1				
13	1743-401-001-00	COVER/HST	*			1	1				

FIG. 83 COLUMN (STEERING) SYSTEM (P,Q TYPE)

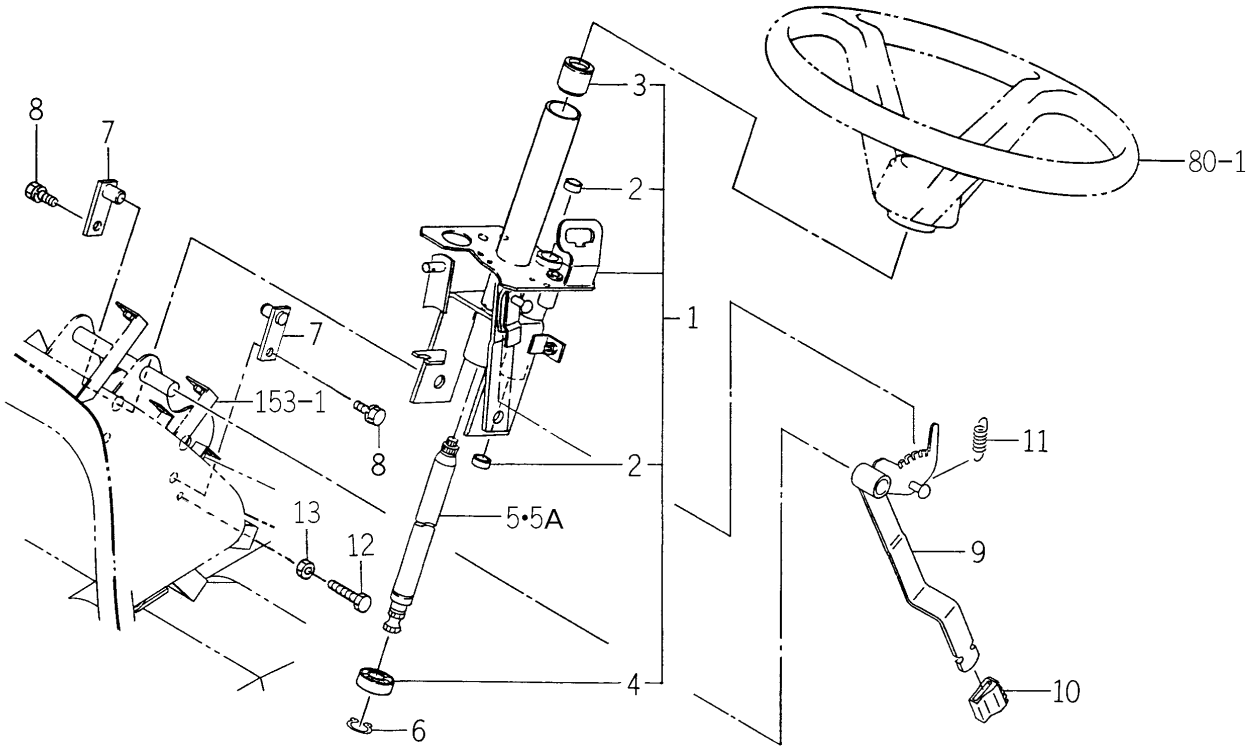

1742-404A-0100

KEY	PART CODE	DESCRIPTION	SPC	TYPE OF MODEL TG5330 E4	TG5330 E6	TG5390 E4	TG5390 E6	ITC	COL	GRP	REMARKS
1	1742-404-310-10	COLUMN ASSY	*	1	1	1	1	1			
2	1560-314-291-00	BUSH/16X18X15	*	2	2	2	2				
3	1429-406-205-00	BUSH	*	1	1	1	1				
4	V600-430-600-30	BEARING/BALL	*	1	1	1	1				
5	1620-401-001-20	SHAFT/STEERING	*	1 -92	1 -92	1 -300	1 -300				
5A	1620-401-001-30	SHAFT/STEERING	*	1 93-	1 93-	1 301-	1 301-	1			
6	V704-140-017-00	RING,SNAP/17 C	*	1	1	1	1				
7	1560-404-210-10	PIN/16X23 COMP	*	2	2	2	2				
8	V211-260-802-00	BOLT/S	*	2	2	2	2				
9	1650-404-220-00	PEDAL COMP	*	1	1	1	1				
10	1518-406-006-00	COVER,PEDAL	*	1	1	1	1				
11	1560-404-002-30	SPRING	*	1	1	1	1				
12	V201-260-804-00	BOLT/M 8X40	*	1	1	1	1				
13	V304-260-008-00	NUT	*	1	1	1	1				

FIG. 84 STEERING (POWER) SYSTEM

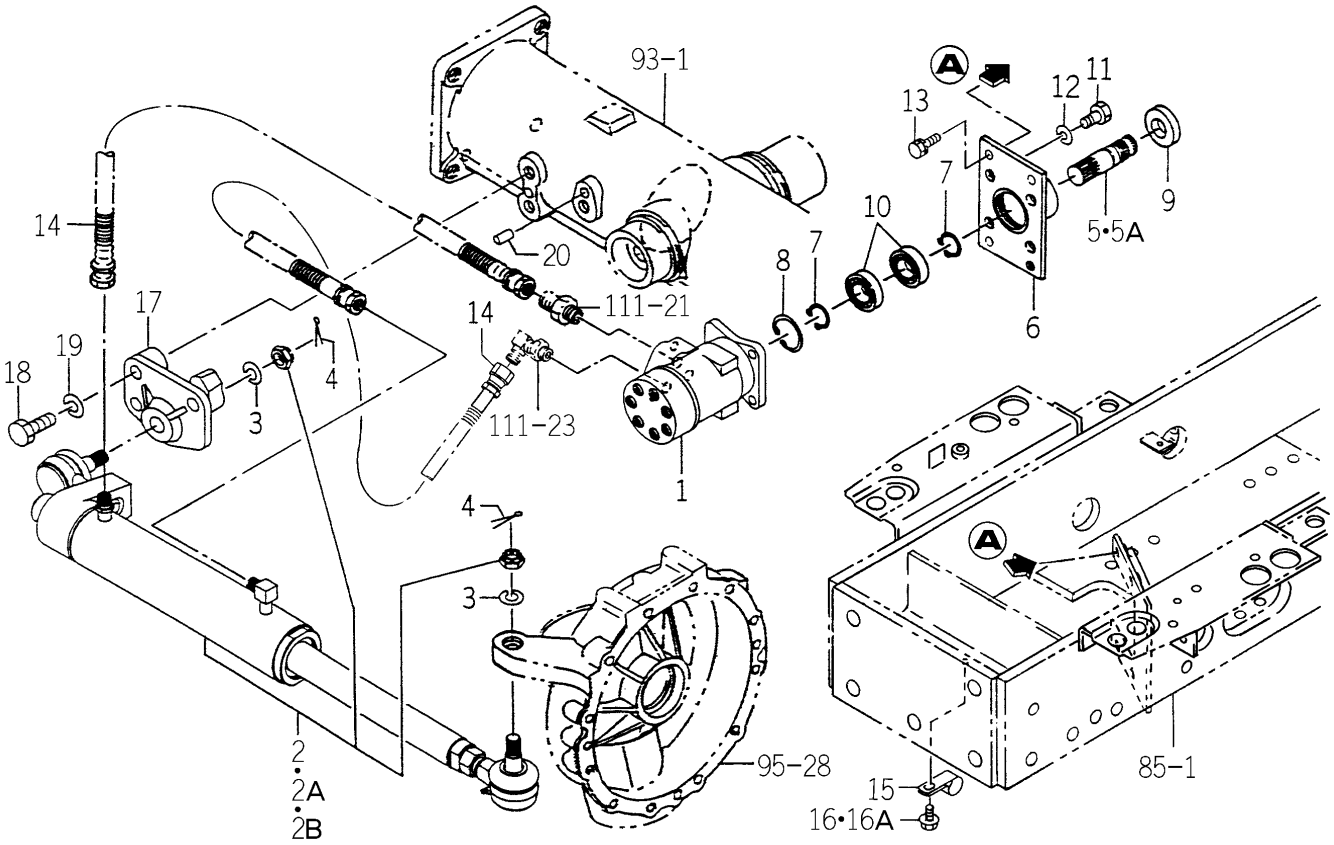

1742-407 -0100

KEY	PART CODE	DESCRIPTION	SPC	TYPE OF MODEL TG5330 E4	TG5330 E6	TG5390 E4	TG5390 E6	ITC	COL	GRP	REMARKS
1	1723-407-300-10	CONTROLLER/STEERING	*	1	1	1	1				
2	1723-407-200-10	CYLINDER ASSY	*	1 -247	1 -247	1 -565	1 -565				FIG 270
2A	1723-407-200-20	CYLINDER ASSY	*	1 -252	1 -252	1	1	1			FIG 270
2B	1723-407-200-30	CYLINDER ASSY	*	1 253-	1 253-	1 566-	1 566-	1			FIG 270
3	V401-160-014-00	WASHER,SP/M14	*	2	2	2	2				
4	V500-163-002-50	PIN,SPLIT/3 X25	*	2	2	2	2				
5	1656-407-001-00	SHAFT	*	1 -98	1 -98	1 -348	1 -348				
5A	1742-407-001-00	SHAFT	*	1 99-	1 99-	1 349-	1 349-				
6	1656-407-220-00	HOUSING COMP	*	1	1	1	1				
7	V704-140-020-00	RING,SNAP/20C	*	2	2	2	2				
8	V705-140-042-00	RING,SNAP/42 C	*	1	1	1	1				
9	V744-120-400-70	SEAL/OIL	*	1	1	1	1				
10	V600-150-600-40	BEARING,RB/6004SS	*	2	2	2	2				
11	V203-261-002-00	BOLT/M10X20	*	3	3	3	3				
12	V401-160-010-00	WASHER,SP/M10	*	3	3	3	3				
13	V211-560-802-00	BOLT/M8X20	*	3	3	3	3				
14	1742-407-200-10	HOSE/700 ASSY	*	2	2	2	2	1			
15	1675-407-003-00	HOLDER/19	*	2	2	2	2				
16	V231-360-801-60	FLANGEBOLT	*	2 -134	2 -134	2 -441	2 -441				
16A	V231-360-801-20	FLANGEBOLT	*	1 135-	1 135-	1 442-	1 442-				
17	1723-407-001-20	METAL/SYLINDER	*	1	1	1	1				
18	V201-361-406-00	BOLT 7 M14	*	3	3	3	3				
19	V401-160-014-00	WASHER,SP/M14	*	3	3	3	3				
20	V523-101-002-40	PIN	*	2	2	2	2				

FIG. 85 BRACKET (AXLE) SYSTEM (E4 TYPE EXCEPT H,A)

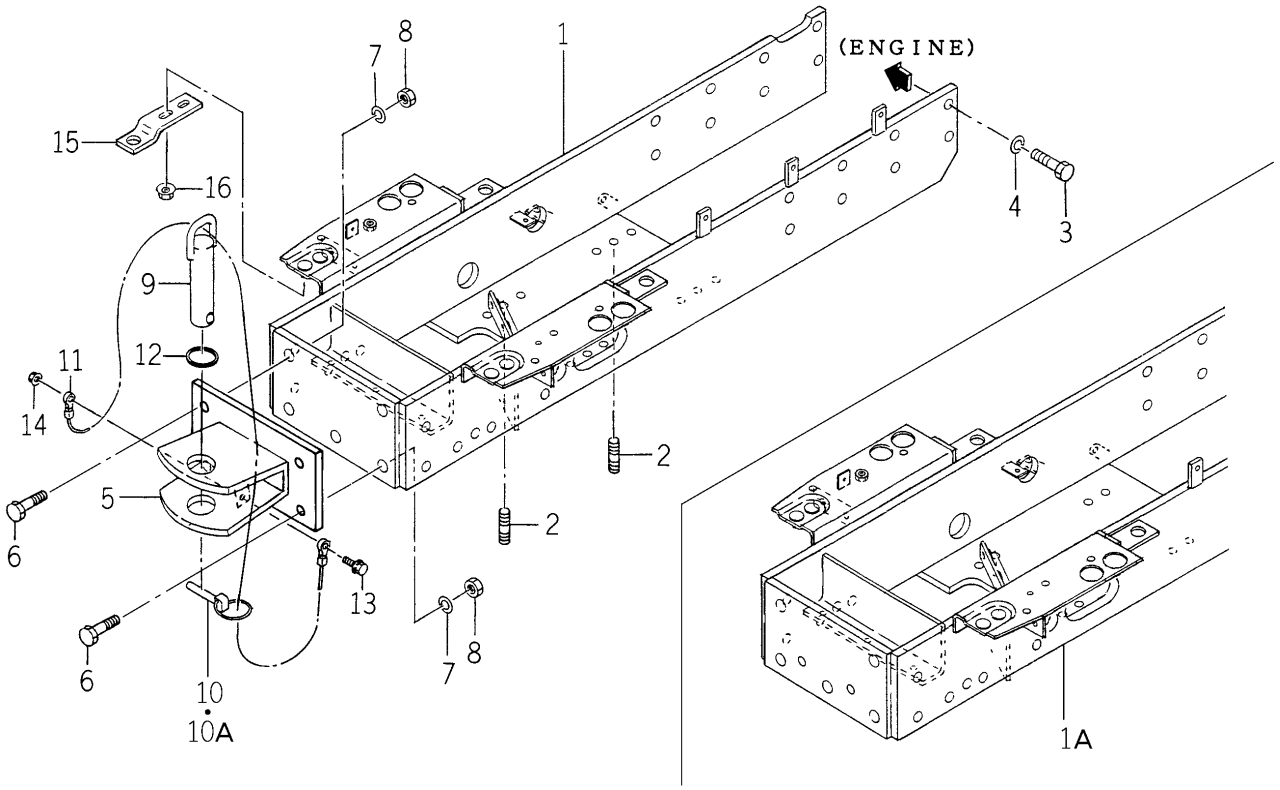

1746-410 -0100

KEY	PART CODE	DESCRIPTION	SPC	TYPE OF MODEL TG5330 E4	TG5330 E6	TG5390 E4	TG5390 E6	ITC	COL	GRP	REMARKS
1	1746-410-200-00	BRACKET/AXLE COMP	*	1 -122		1 -440					
1A	1746-410-200-10	BRACKET/AXLE COMP	*	1 123-		1 441-		1			
2	V251-341-203-20	BOLT/M12X32	*	4		4					
3	V201-361-203-00	BOLT/M12X30	*	16		16					
4	V401-160-012-00	WASHER,SP/M12	*	16		16					
5	1742-410-220-10	HITCH/FRONT/E4 COMP	*	1		1					
6	V201-361-404-50	BOLT/M14X45	*	4		4					
7	V401-160-014-00	WASHER,SP/M14	*	4		4					
8	V304-460-014-00	NUT/M14	*	4		4					
9	1674-410-320-00	PIN/30X120 COMP	*	1		1					
10	1673-525-002-20	LINKPIN	*	1 -627		1 -945					
10A	1673-525-002-30	LINKPIN	*	1 628-		1 946-		1			
11	1674-410-301-00	CABLE	*	1		1					
12	1674-520-004-00	INSULATOR	*	1		1					
13	V231-360-803-00	FLANGEBOLT	*	1		1					
14	V363-260-008-00	NUT/WASHER	*	1		1					
15	1729-410-002-00	PLATE/GRILLE	*	2		2					
16	V362-260-008-00	NUT/WASHER	*	4		4					

FIG. 86 BRACKET (AXLE) SYSTEM (HE4 TYPE)

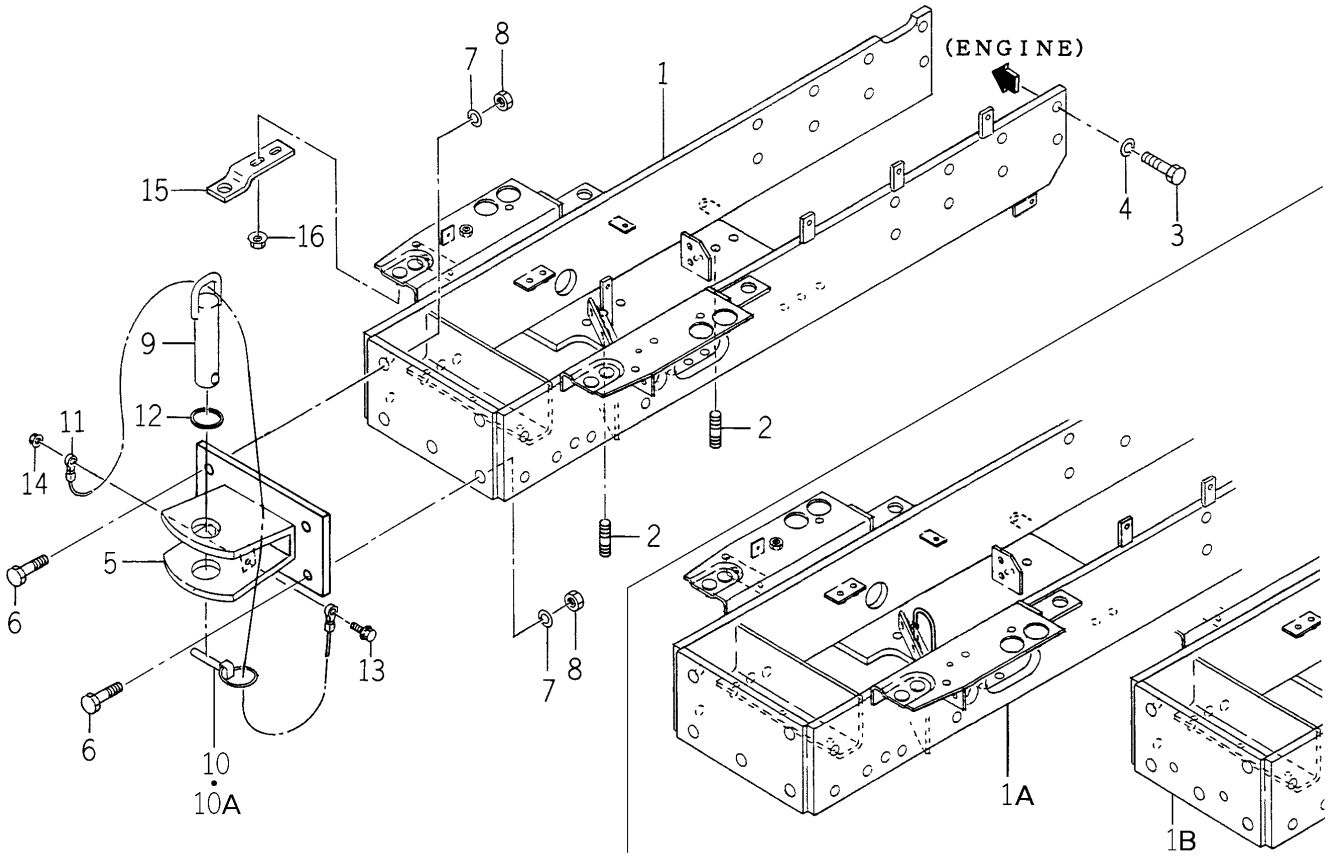

1747-410 -0100

KEY	PART CODE	DESCRIPTION	SPC	TYPE OF MODEL TG5330 E4	TG5330 E6	TG5390 E4	TG5390 E6	ITC	COL	GRP	REMARKS
1	1747-410-700-00	BRACKET/AXLE/HS COMP	*			1 -64					
1A	1747-410-700-10	BRACKET/AXLE/HS COMP	*			1 -442		1			
1B	1747-410-700-20	BRACKET/AXLE/HS COMP	*			1 443-		1			
2	V251-341-203-20	BOLT/M12X32	*			4					
3	V201-361-203-00	BOLT/M12X30	*			16					
4	V401-160-012-00	WASHER,SP/M12	*			16					
5	1742-410-220-10	HITCH/FRONT/E4 COMP	*			1					
6	V201-361-404-50	BOLT/M14X45	*			4					
7	V401-160-014-00	WASHER,SP/M14	*			4					
8	V304-460-014-00	NUT/M14	*			4					
9	1674-410-320-00	PIN/30X120 COMP	*			1					
10	1673-525-002-20	LINKPIN	*			1 -945					
10A	1673-525-002-30	LINKPIN	*			1 946-		1			
11	1674-410-301-00	CABLE	*			1					
12	1674-520-004-00	INSULATOR	*			1					
13	V231-360-803-00	FLANGEBOLT	*			1					
14	V363-260-008-00	NUT/WASHER	*			1					
15	1729-410-002-00	PLATE/GRILLE	*			2					
16	V362-260-008-00	NUT/WASHER	*			4					

FIG. 87 BRACKET (AXLE) SYSTEM (E6 TYPE EXCEPT H)

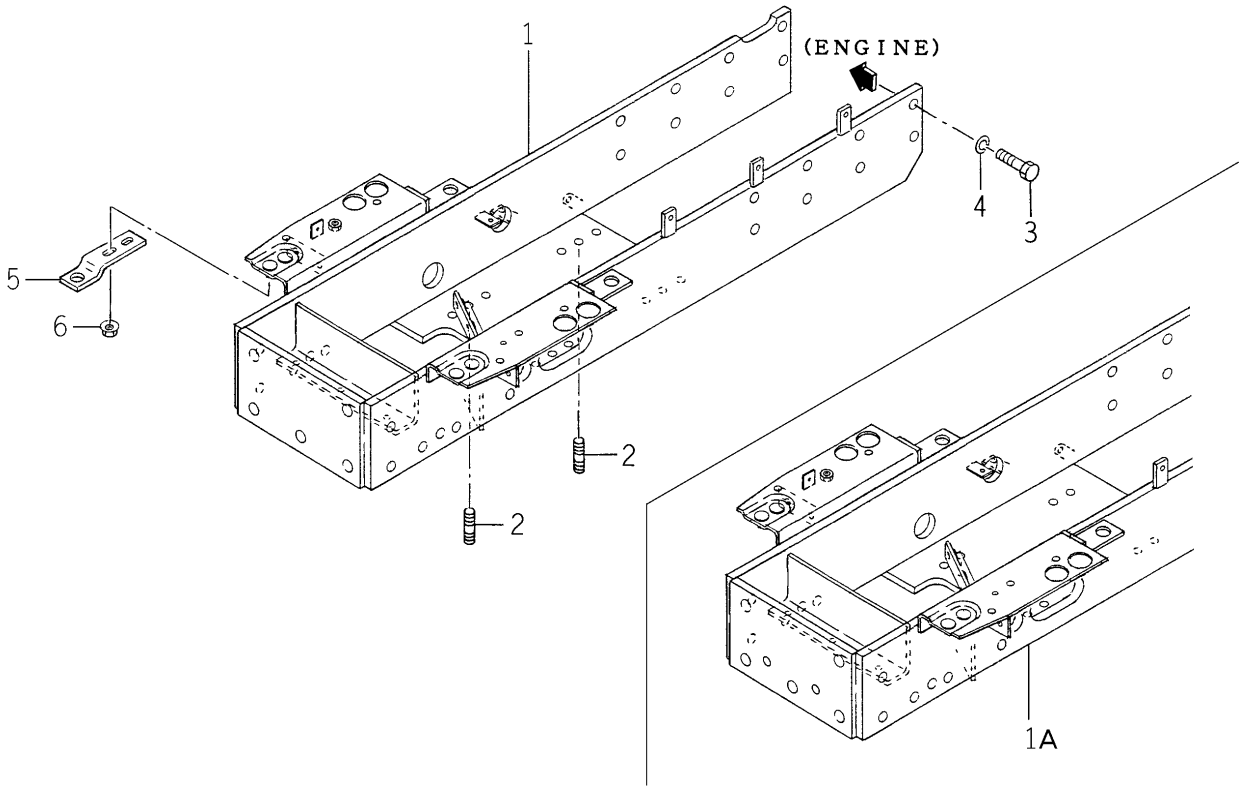

1746-410A-0100

KEY	PART CODE	DESCRIPTION	SPC	TYPE OF MODEL TG5330 E4	TG5330 E6	TG5390 E4	TG5390 E6	ITC	COL	GRP	REMARKS
1	1746-410-200-00	BRACKET/AXLE COMP	*		1 -122		1 -440				
1A	1746-410-200-10	BRACKET/AXLE COMP	*		1 123-		1 441-	1			
2	V251-341-203-20	BOLT/M12X32	*		4		4				
3	V201-361-203-00	BOLT/M12X30	*		16		16				
4	V401-160-012-00	WASHER,SP/M12	*		16		16				
5	1729-410-002-00	PLATE/GRILLE	*		2		2				
6	V362-260-008-00	NUT/WASHER	*		4		4				

FIG. 88 BRACKET (AXLE) SYSTEM (HE6 TYPE)

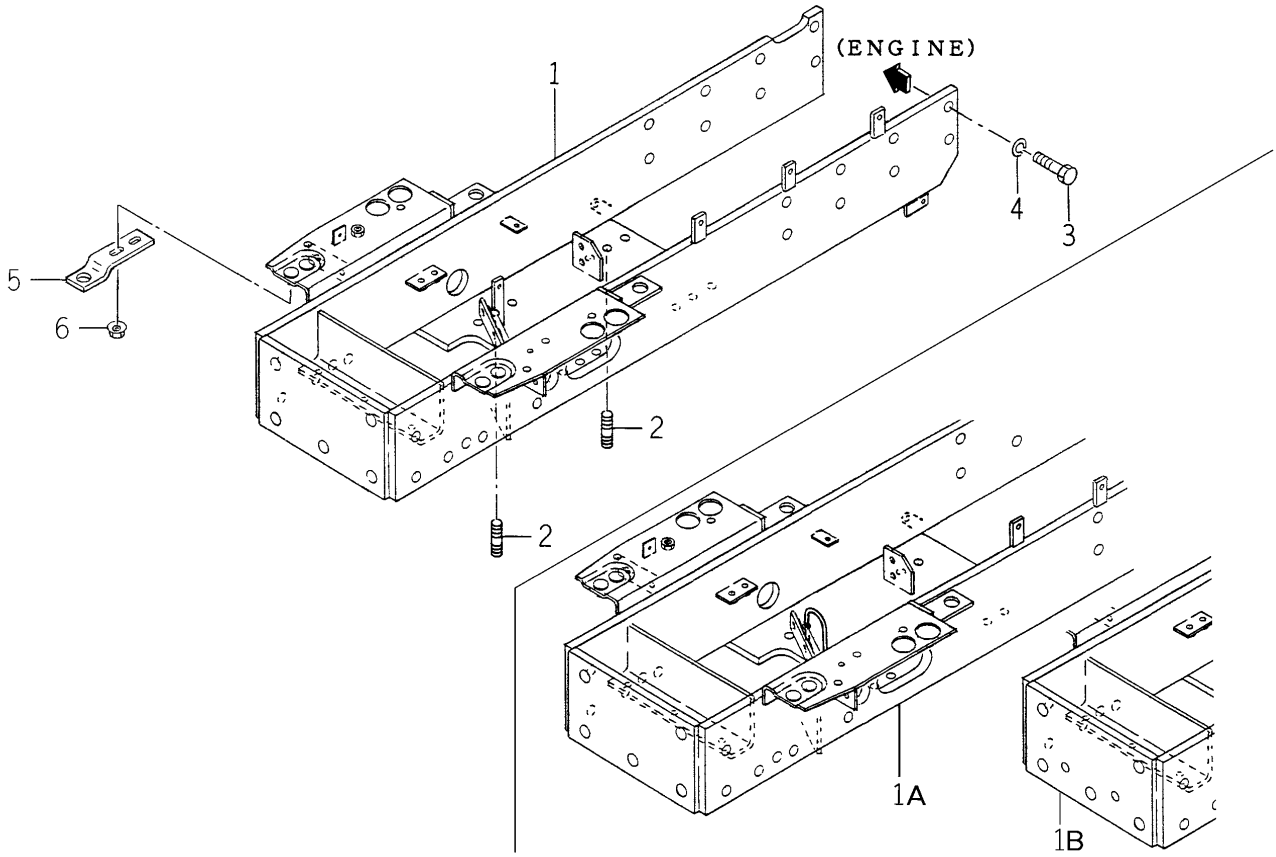

1747-410A-0100

KEY	PART CODE	DESCRIPTION	SPC	TYPE OF MODEL TG5330 E4	TG5330 E6	TG5390 E4	TG5390 E6	ITC	COL	GRP	REMARKS
1	1747-410-700-00	BRACKET/AXLE/HS COMP	*				1 -64				
1A	1747-410-700-10	BRACKET/AXLE/HS COMP	*				1 -442	1			
1B	1747-410-700-20	BRACKET/AXLE/HS COMP	*				1 443-	1			
2	V251-341-203-20	BOLT/M12X32	*				4				
3	V201-361-203-00	BOLT/M12X30	*				16				
4	V401-160-012-00	WASHER,SP/M12	*				16				
5	1729-410-002-00	PLATE/GRILLE	*				2				
6	V362-260-008-00	NUT/WASHER	*				4				

FIG. 89 BUMPER HITCH SYSTEM (A TYPE-STANDARD/EXCEPT A TYPE-OPTION)

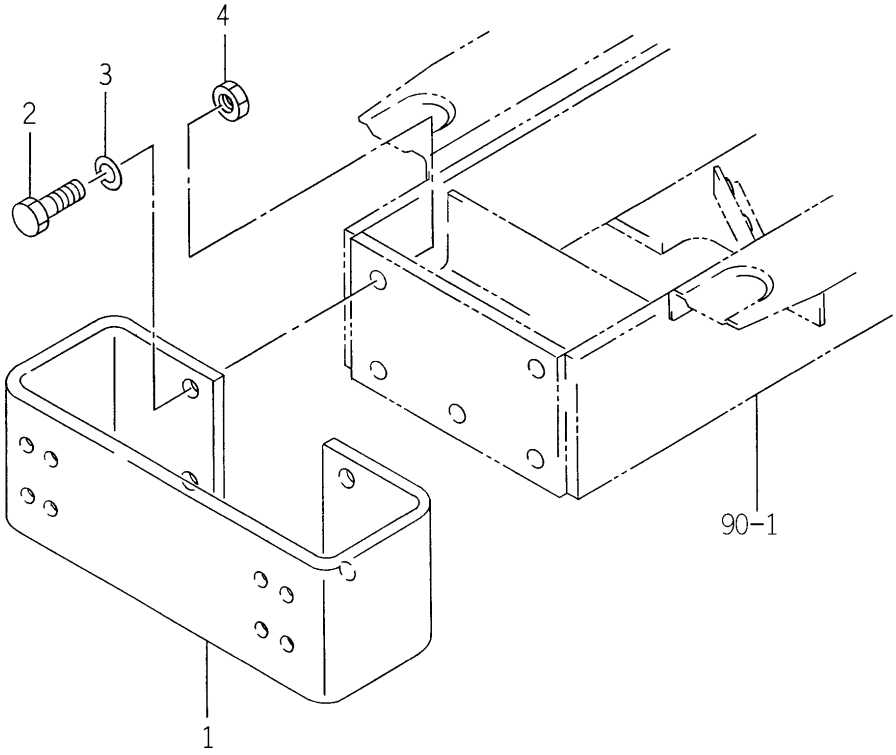

1742-410B-0100

KEY	PART CODE	DESCRIPTION	SPC	TYPE OF MODEL TG5330 E4	TG5330 E6	TG5390 E4	TG5390 E6	ITC	COL	GRP	REMARKS
1	1742-410-001-00	PLATE/BUMPER	*	1	1	1	1				
2	V201-361-404-50	BOLT/M14X45	*	4	4	4	4				
3	V401-160-014-00	WASHER,SP/M14	*	4	4	4	4				
4	V304-460-014-00	NUT/M14	*	4	4	4	4				

FIG. 90 BRACKET (AXLE) SYSTEM (A TYPE)

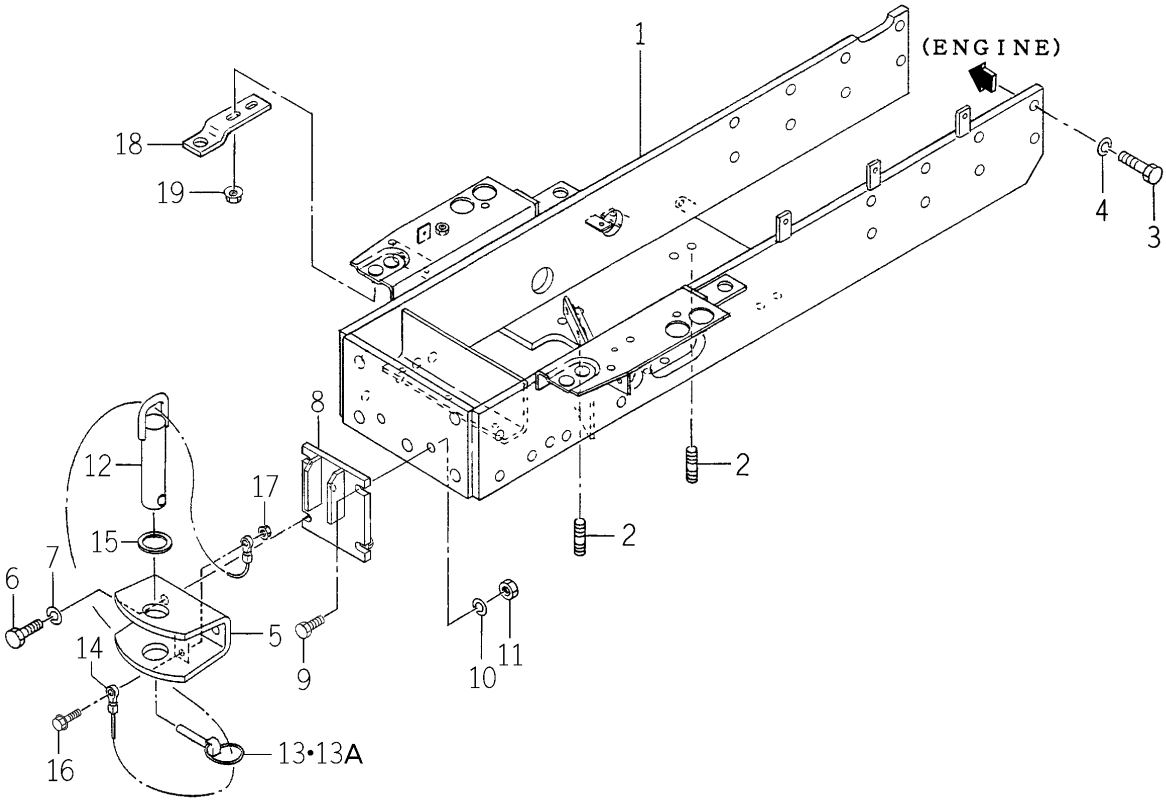

1746-410B-0100

KEY	PART CODE	DESCRIPTION	SPC	TYPE OF MODEL TG5330 E4	TG5330 E6	TG5390 E4	TG5390 E6	ITC	COL	GRP	REMARKS
1	1746-410-200-10	BRACKET/AXLE COMP	*	1		1					
2	V251-341-203-20	BOLT/M12X32	*	4		4					
3	V201-361-203-00	BOLT/M12X30	*	16		16					
4	V401-160-012-00	WASHER,SP/M12	*	16		16					
5	1738-411-210-00	HITCH/FRONT COMP	*	1		1					
6	V201-361-203-50	BOLT/M12X35	*	2		2					
7	V401-160-012-00	WASHER,SP/M12	*	2		2					
8	1741-411-210-00	STAY/HITCH/FRON COMP	*	1		1					
9	V201-361-203-50	BOLT/M12X35	*	3		3					
10	V401-160-012-00	WASHER,SP/M12	*	3		3					
11	V304-460-012-00	NUT/M12	*	3		3					
12	1674-410-320-00	PIN/30X120 COMP	*	1		1					
13	1673-525-002-20	LINKPIN	*	1 -627		1 -945					
13A	1673-525-002-30	LINKPIN	*	1 628-		1 946-		1			
14	1674-410-301-00	CABLE	*	1		1					
15	1674-520-004-00	INSULATOR	*	1		1					
16	V231-360-803-00	FLANGEBOLT	*	1		1					
17	V363-260-008-00	NUT/WASHER	*	1		1					
18	1729-410-002-00	PLATE/GRILLE	*	2		2					
19	V362-260-008-00	NUT/WASHER	*	4		4					

FIG. 91 SHAFT (DRIVE) SYSTEM

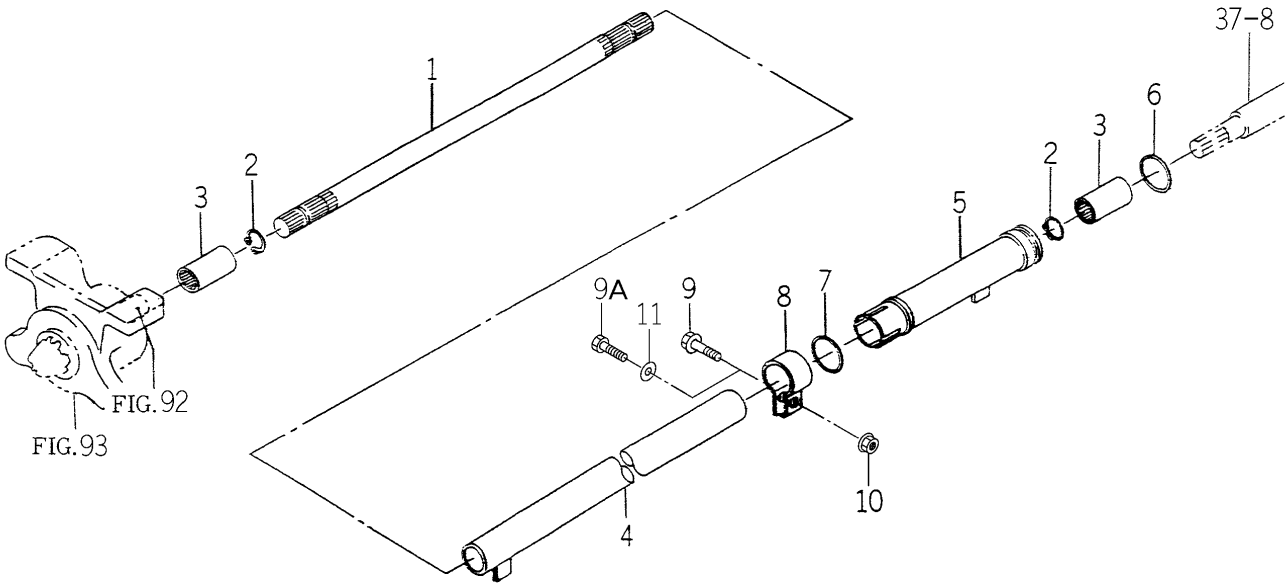

1742-431 -0100

KEY	PART CODE	DESCRIPTION	SPC	TYPE OF MODEL TG5330 E4	TG5330 E6	TG5390 E4	TG5390 E6	ITC	COL	GRP	REMARKS
1	1733-431-001-10	SHAFT/4WD/511	*	1	1	1	1				
2	V704-140-020-00	RING,SNAP/20C	*	2	2	2	2				
3	1673-431-001-10	COUPRING/16X27X55	*	2	2	2	2				
4	1654-431-200-00	TUBE/450 COMP	*	1	1	1	1				
5	1742-431-200-00	PIPE/4WD/REAR COMP	*	1	1	1	1				
6	V720-103-504-10	O-RING /P41	*	1	1	1	1				
7	V720-103-503-40	O-RING/P34	*	1	1	1	1				
8	1444-410-002-10	CLAMP	*	1	1	1	1				
9	V231-360-803-50	FLANGEBOLT	*	1 -52	1 -52	1 -94	1 -94				
9A	V201-260-803-50	BOLT/M 8X35	*	1 53-	1 53-	1 95-	1 95-				
10	V362-260-008-00	NUT/WASHER	*	1	1	1	1				
11	V411-260-008-00	WASHER,PL/M 8	*	1 53-	1 53-	1 95-	1 95-				

FIG. 92 CASE (BEVEL) SYSTEM

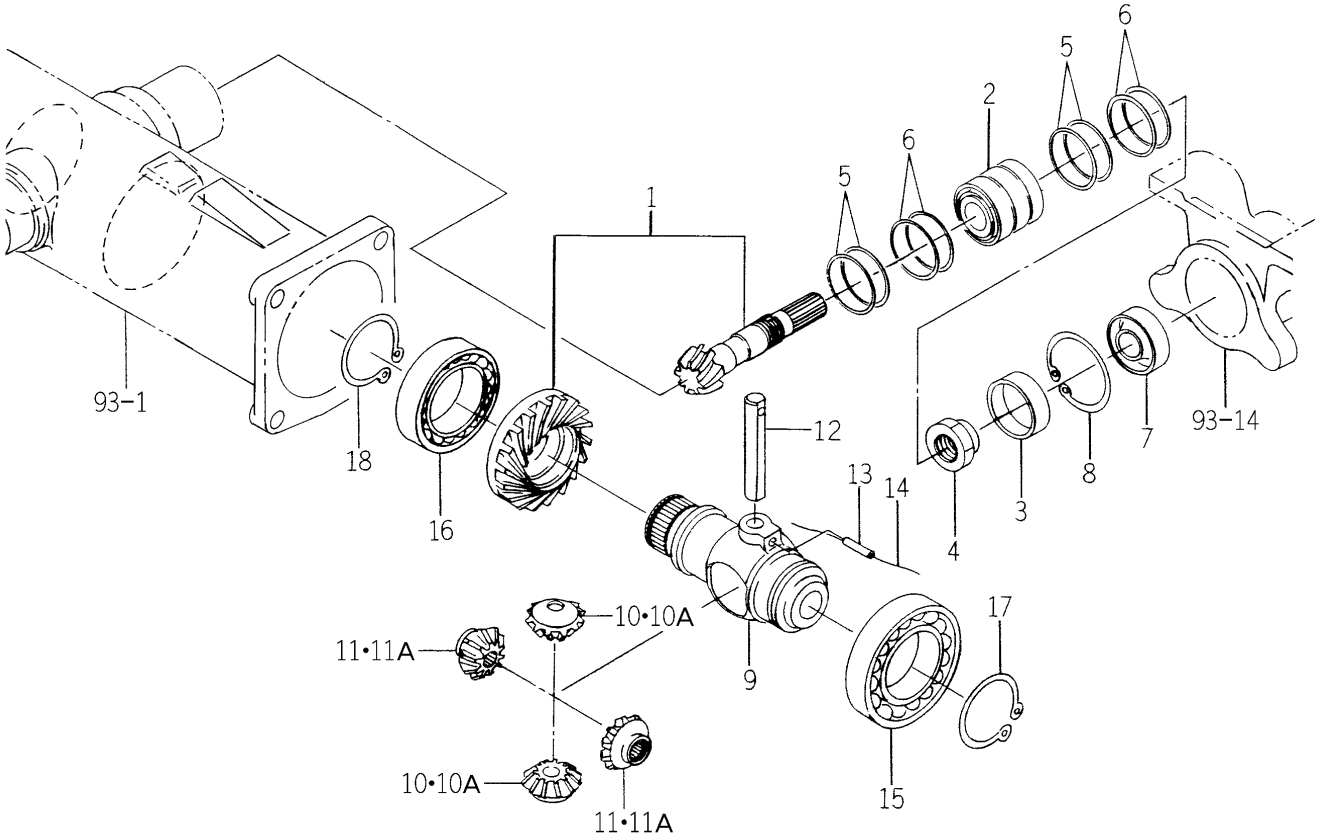

1650-432 -0100

KEY	PART CODE	DESCRIPTION	SPC	TYPE OF MODEL TG5330 E4	TG5330 E6	TG5390 E4	TG5390 E6	ITC	COL	GRP	REMARKS
1	1650-432-200-00	GEAR/10-30	*	1	1	1	1				
2	1560-432-210-00	BEARING/46CHI-32205R	*	1	1	1	1				
3	1650-432-001-00	COLLAR/48X52X17	*	1	1	1	1				
4	1614-432-001-00	NUT/M25	*	1	1	1	1				
5	1444-411-012-00	SHIM (C)	*	4	4	4	4				
6	1444-411-013-00	SHIM D T=0.1	*	4	4	4	4				
7	1427-432-016-00	SEAL,OIL/21	*	1	1	1	1				
8	V705-140-052-00	RING,SNAP/52 C	*	1	1	1	1				
9	1650-432-002-00	CASE/DIFF	*	1	1	1	1				
10	1427-301-004-00	PINION,DIFF/12T	*	2 -368	2 -368	2 -745	2 -745				
10A	1427-301-004-10	PINION,DEFF/12	*	2 369-	2 369-	2 746-	2 746-				
11	1650-432-003-00	GEAR/BEVEL/14	*	2 -368	2 -368	2 -745	2 -745				
11A	1650-432-003-10	GEAR/BEVEL/14	*	2 369-	2 369-	2 746-	2 746-				
12	1650-432-004-00	PIN/14X95	*	1	1	1	1				
13	V580-140-503-20	PIN,SPRING/5 X32 W	*	1	1	1	1				
14		WIRE	*	1	1	1	1				
15	V600-110-621-20	BEARING,RB/6212	*	1	1	1	1				
16	V600-110-601-20	BEARING,RB/6012	*	1	1	1	1				
17	V706-140-060-00	RING/SNAP	*	1	1	1	1				
18	V706-140-050-00	RING/SNAP	*	1	1	1	1				

FIG. 93 HOUSING (AXLE/FRONT) SYSTEM (E4 TYPE-No.1-/E6 TYPE-TG5330E6-No.1-120/ TG5390E6-No.1-399)

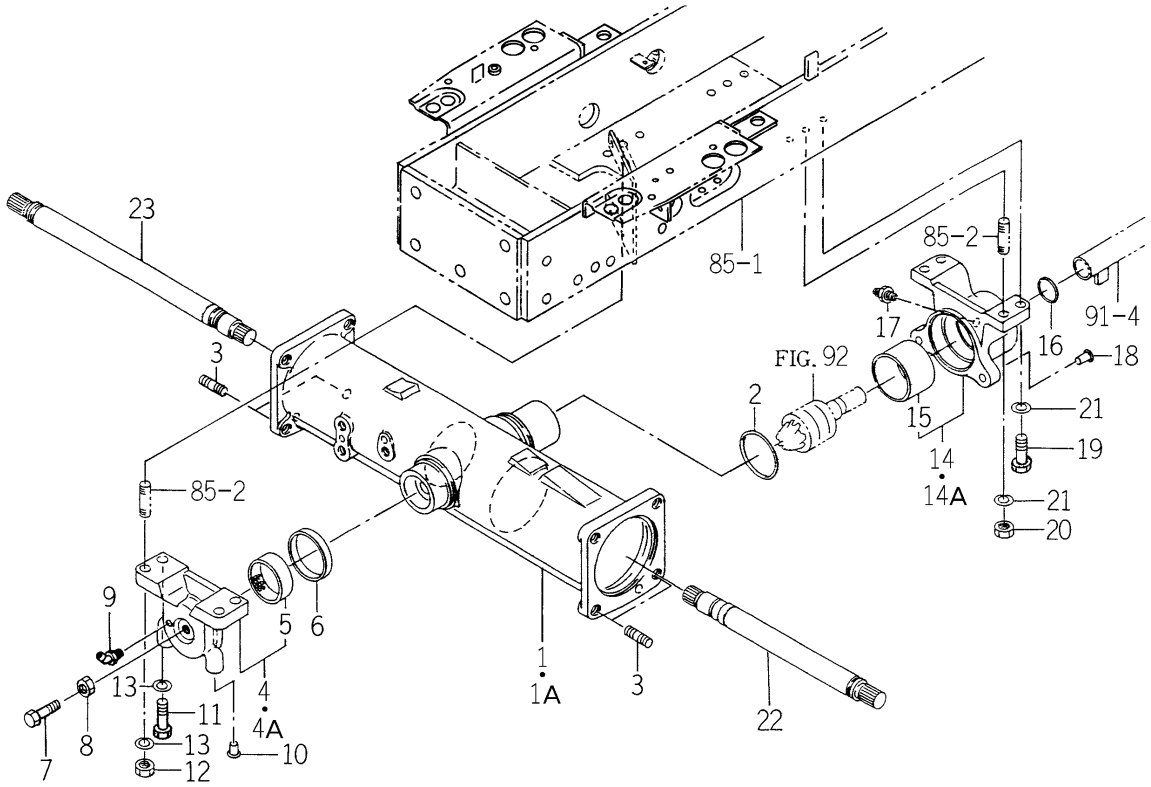

1742-433 -0100

KEY	PART CODE	DESCRIPTION	SPC	TYPE OF MODEL TG5330 E4	TG5330 E6	TG5390 E4	TG5390 E6	ITC	COL	GRP	REMARKS
1	1742-433-001-00	HOUSING/AXLE	*	1 -60	1 -60	1 -172	1 -172				
1A	1742-433-001-10	HOUSING/AXLE	*	1 61-	1 -120	1 173-	1 -399	1			
2	V721-103-107-50	O-RING/G75	*	1	1 -120	1	1 -399				
3	V251-441-403-50	STUD/M14X35	*	4	4 -120	4	4 -399				
4	1742-433-200-00	METAL/PIVOT/FRONT	*	1 -843	1 -120	1 -1166	1 -399				
4A	1742-433-200-10	METAL/PIVOT/FRONT	*	1 844-		1 1167-		1			
5	1650-433-202-00	BUSH/62X67X20	*	1	1 -120	1	1 -399				
6	1614-433-002-00	SEAL/OIL	*	1	1 -120	1	1 -399				
7	V201-261-203-50	BOLT/M12X35	*	1	1 -120	1	1 -399				
8	V304-260-012-00	NUT/M12	*	1	1 -120	1	1 -399				
9	V763-150-000-00	NIPPLE,GREASE/PT1/8	*	1	1 -120	1	1 -399				
10	1427-201-016-00	CAP,BLANK/M12	*	2	2 -120	2	2 -399				
11	V201-361-203-50	BOLT/M12X35	*	2	2 -120	2	2 -399				
12	V304-460-012-00	NUT/M12	*	2	2 -120	2	2 -399				
13	V401-160-012-00	WASHER,SP/M12	*	4	4 -120	4	4 -399				
14	1742-433-210-00	METAL/PIVOT/REA ASSY	*	1 -848	1 -120	1 -1168	1 -399				
14A	1742-433-210-10	METAL/PIVOT/REA ASSY	*	1 849-		1 1169-		1			
15	1564-433-222-10	BUSH/65X70X44	*	1	1 -120	1	1 -399				
16	V720-103-503-40	O-RING/P34	*	1	1 -120	1	1 -399				
17	V761-150-000-00	NIPPLE/GREASE	*	1	1 -120	1	1 -399				
18	1427-201-016-00	CAP,BLANK/M12	*	2	2 -120	2	2 -399				
19	V201-361-203-50	BOLT/M12X35	*	2	2 -120	2	2 -399				
20	V304-460-012-00	NUT/M12	*	2	2 -120	2	2 -399				
21	V401-160-012-00	WASHER,SP/M12	*	4	4 -120	4	4 -399				
22	1691-433-002-00	SHAFT	*	1	1 -120	1	1 -399				
23	1691-433-003-00	SHAFT	*	1	1 -120	1	1 -399				

FIG. 94 HOUSING (AXLE/FRONT) SYSTEM (E6 TYPE-TG5330E6-No.121-/TG5390E6-No.400-)

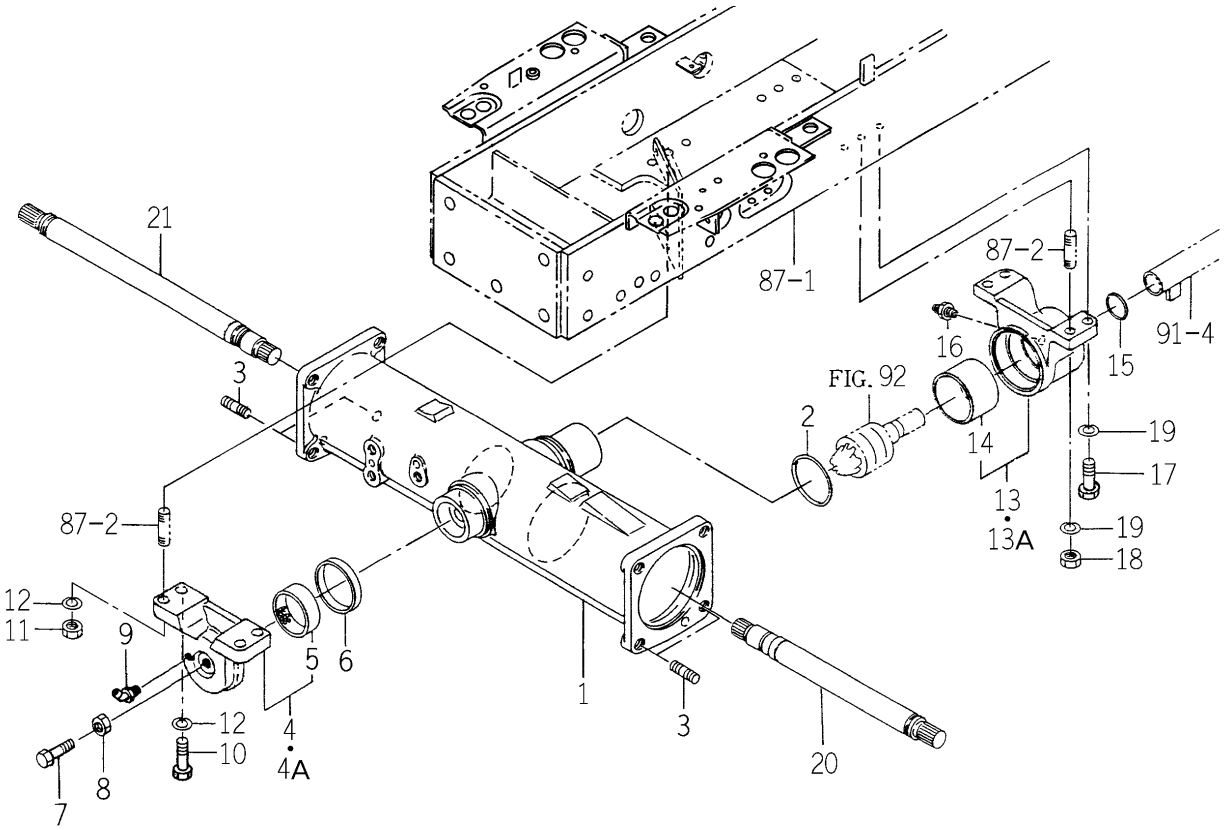

1742-433A-0100

KEY	PART CODE	DESCRIPTION	SPC	TYPE OF MODEL TG5330 E4	TG5330 E6	TG5390 E4	TG5390 E6	ITC	COL	GRP	REMARKS
1	1742-433-001-10	HOUSING/AXLE	*		1 121-		1 400-				
2	V721-103-107-50	O-RING/G75	*		1 121-		1 400-				
3	V251-441-403-50	STUD/M14X35	*		4 121-		4 400-				
4	1742-433-300-00	METAL/PIVOT/FRONT	*		1 -834		1 -1186				
4A	1742-433-300-10	METAL/PIVOT/FRONT	*		1 835-		1 1187-	1			
5	1650-433-202-00	BUSH/62X67X20	*		1 121-		1 400-				
6	1614-433-002-00	SEAL/OIL	*		1 121-		1 400-				
7	V201-261-203-50	BOLT/M12X35	*		1 121-		1 400-				
8	V304-260-012-00	NUT/M12	*		1 121-		1 400-				
9	V763-150-000-00	NIPPLE,GREASE/PT1/8	*		1 121-		1 400-				
10	V201-361-203-50	BOLT/M12X35	*		2 121-		2 400-				
11	V304-460-012-00	NUT/M12	*		2 121-		2 400-				
12	V401-160-012-00	WASHER,SP/M12	*		4 121-		4 400-				
13	1742-433-310-00	METAL/PIVOT/REA ASSY	*		1 -845		1 -1186				
13A	1742-433-310-10	METAL/PIVOT/REA ASSY	*		1 846-		1 1187-	1			
14	1564-433-222-10	BUSH/65X70X44	*		1 121-		1 400-				
15	V720-103-503-40	O-RING/P34	*		1 121-		1 400-				
16	V761-150-000-00	NIPPLE/GREASE	*		1 121-		1 400-				
17	V201-361-203-50	BOLT/M12X35	*		2 121-		2 400-				
18	V304-460-012-00	NUT/M12	*		2 121-		2 400-				
19	V401-160-012-00	WASHER,SP/M12	*		4 121-		4 400-				
20	1691-433-002-00	SHAFT	*		1 121-		1 400-				
21	1691-433-003-00	SHAFT	*		1 121-		1 400-				

FIG. 95 CASE (GEAR/FRONT) SYSTEM

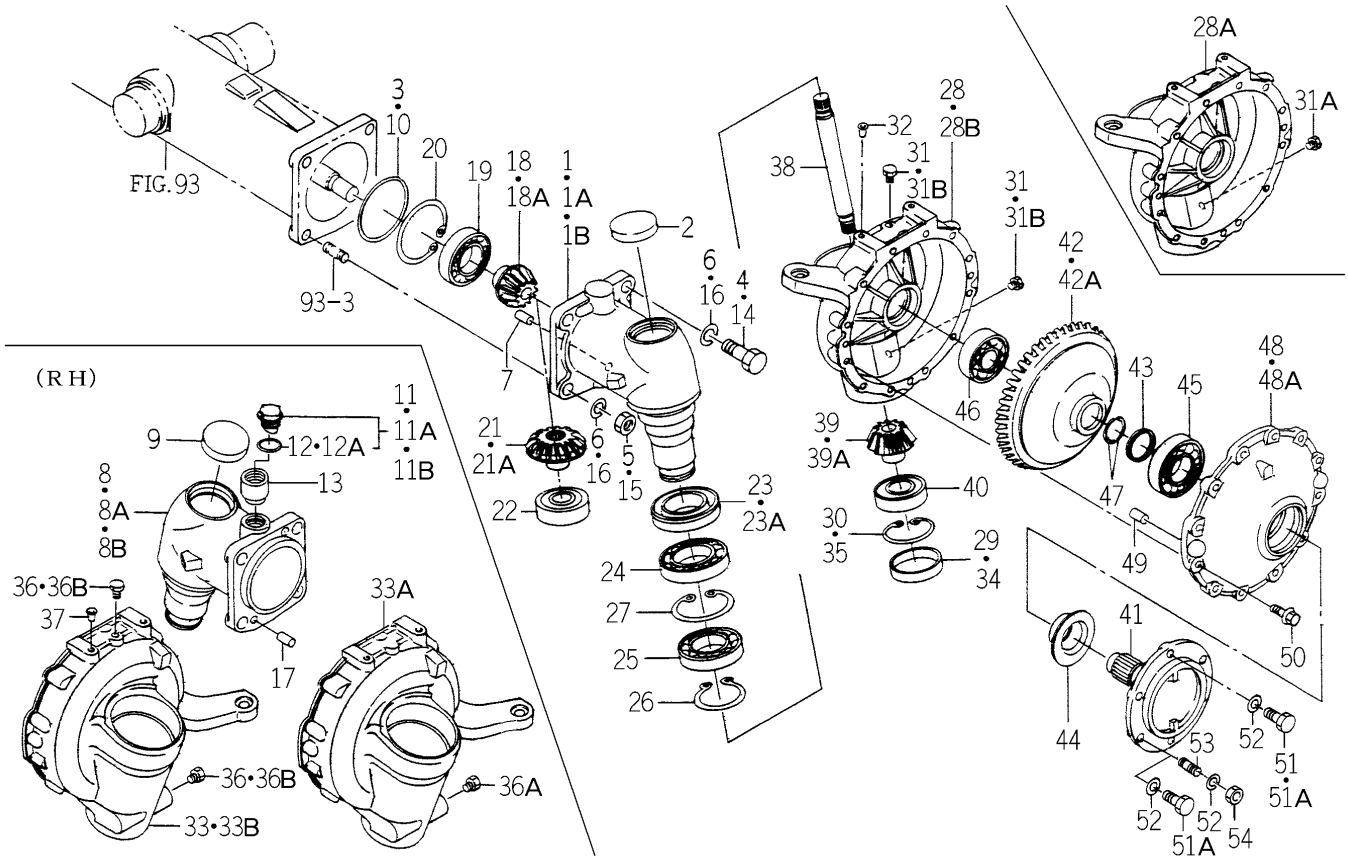

1746-434 -0100

KEY	PART CODE	DESCRIPTION	SPC	TYPE OF MODEL TG5330 E4	TG5330 E6	TG5390 E4	TG5390 E6	ITC	COL	GRP	REMARKS
1	1729-434-001-00	CASE/FINAL/LH	*	1 -163	1 -163	1 -530	1 -530				
1A	1729-434-001-10	CASE/FINAL/LH	*	1 -339	1 -339	1 -729	1 -729	1			
1B	1729-434-001-20	CASE/FINAL/LH	*	1 340-	1 340-	1 730-	1 730-	1			
2	1650-434-003-00	PLUG/SEAL/65	*	1	1	1	1				
3	V721-103-111-00	O-RING/G110	*	1	1	1	1				
4	V201-361-404-00	BOLT/M14X40	*	2	2	2	2				
5	V304-460-014-00	NUT/M14	*	2	2	2	2				
6	V401-160-014-00	WASHER,SP/M14	*	4	4	4	4				
7	V523-101-002-40	PIN	*	1	1	1	1				
8	1729-434-002-00	CASE/FINAL/RH	*	1 -163	1 -163	1 -530	1 -530				
8A	1729-434-002-10	CASE/FINAL/RH	*	1 -339	1 -339	1 -729	1 -729	1			
8B	1729-434-002-20	CASE/FINAL/RH	*	1 340-	1 340-	1 730-	1 730-	1			
9	1650-434-003-00	PLUG/SEAL/65	*	1	1	1	1				
10	V721-103-111-00	O-RING/G110	*	1	1	1	1				
11	1518-432-250-00	CAP,OIL ASSY	*	1 -75	1 -75	1 -248	1 -248				
11A	1518-306-200-00	CAP,OIL ASSY	*	1 -378	1 -378	1 -768	1 -768				
11B	1518-306-200-10	CAP,OIL/A	*	1 379-	1 379-	1 769-	1 769-	1			
12	1518-306-203-00	PACKING	*	1 -329	1 -329	1 -724	1 -724				
12A	1518-306-203-10	PACKING	*	1 330-	1 330-	1 725-	1 725-				
13	1674-501-001-00	SPACER/28X38X53	*	1	1	1	1				
14	V201-361-404-00	BOLT/M14X40	*	2	2	2	2				
15	V304-460-014-00	NUT/M14	*	2	2	2	2				
16	V401-160-014-00	WASHER,SP/M14	*	4	4	4	4				
17	V523-101-002-40	PIN	*	1	1	1	1				
18	1650-434-004-00	GEAR/BEVEL/11	*	2 -356	2 -356	2 -745	2 -745				
18A	1650-434-004-10	GEAR/BEVEL/11	*	2 357-	2 357-	2 746-	2 746-				
19	V600-410-620-80	BEARING/BALL	*	2	2	2	2				
20	V707-140-080-00	RING/SNAP	*	2	2	2	2				
21	1650-434-005-00	GEAR/BEVEL/17	*	2 -356	2 -356	2 -745	2 -745				
21A	1650-434-005-10	GEAR/BEVEL/17	*	2 357-	2 357-	2 746-	2 746-				

FIG. 95 CASE (GEAR/FRONT) SYSTEM

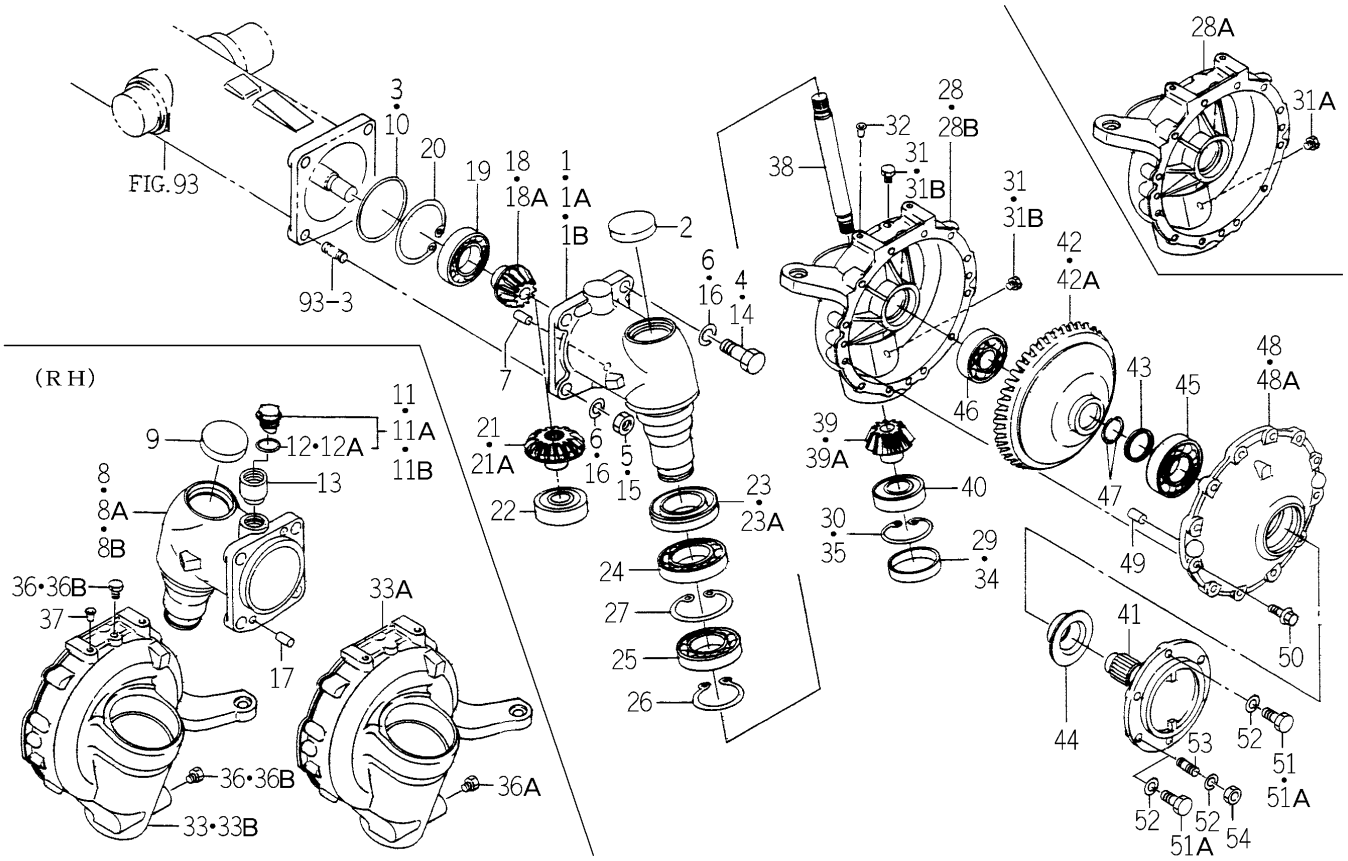

1746-434 -0100

KEY	PART CODE	DESCRIPTION	SPC	TYPE OF MODEL TG5330 E4	TG5330 E6	TG5390 E4	TG5390 E6	ITC	COL	GRP	REMARKS
22	1560-206-003-00	BEARING/BALL	*	2	2	2	2				
23	1729-434-005-00	SEAL/OIL ASSY	*	2 -824	2 -824	2 -1159	2 -1159				
23A	1729-434-005-10	SEAL/OIL ASSY	*	2 825-	2 825-	2 1160-	2 1160-	1			
24	V600-110-601-30	BEARING,RB/6013	*	2	2	2	2				
25	V600-110-601-00	BEARING,RB/6010	*	2	2	2	2				
26	V706-140-050-00	RING/SNAP	*	2	2	2	2				
27	V707-140-080-00	RING/SNAP	*	2	2	2	2				
28	1742-434-002-00	CASE/FINAL/LH	*	1 -76	1 -76	1 -260	1 -260				
28A	1742-434-002-10	CASE/FINAL/LH	*	1 -729	1 -729	1 -1025	1 -1025	3			
28B	1742-434-002-20	CASE/FINAL/LH	*	1 730-	1 730-	1 1026-	1 1026-	1			
29	1650-434-015-00	PLUG/SEAL/72X08	*	1	1	1	1				
30	V707-140-072-00	RING/SNAP	*	1	1	1	1				
31	V782-160-000-4B	PLUG/SCREW/SEAL	*	2 -60	2 -60	2 -154	2 -154				
31A	V782-160-000-4B	PLUG/SCREW/SEAL	*	1 -729	1 -729	1 -1025	1 -1025				
31B	V782-160-000-4B	PLUG/SCREW/SEAL	*	2 730-	2 730-	2 1026-	2 1026-				
32	1427-120-002-00	CAP,BLANK/M10	*	2	2	2	2				
33	1742-434-003-00	CASE/FINAL/RH	*	1 -78	1 -78	1 -260	1 -260				
33A	1742-434-003-10	CASE/FINAL/RH	*	1 -729	1 -729	1 -1025	1 -1025	3			
33B	1742-434-003-20	CASE/FINAL/RH	*	1 730-	1 730-	1 1026-	1 1026-	1			
34	1650-434-015-00	PLUG/SEAL/72X08	*	1	1	1	1				
35	V707-140-072-00	RING/SNAP	*	1	1	1	1				
36	V782-160-000-4B	PLUG/SCREW/SEAL	*	2 -60	2 -60	2 -154	2 -154				
36A	V782-160-000-4B	PLUG/SCREW/SEAL	*	1 -729	1 -729	1 -1025	1 -1025				
36B	V782-160-000-4B	PLUG/SCREW/SEAL	*	2 730-	2 730-	2 1026-	2 1026-				
37	1427-120-002-00	CAP,BLANK/M10	*	2	2	2	2				
38	1650-434-009-00	SHAFT	*	2	2	2	2				
39	1650-434-011-00	GEAR/BEVEL/11	*	2 -388	2 -388	2 -768	2 -768				
39A	1650-434-011-10	GEAR/BEVEL/11	*	2 389-	2 389-	2 769-	2 769-	3			
40	V600-410-620-70	BEARING/BALL	*	2	2	2	2				
41	1560-434-007-60	SHAFT/WHEEL	*	2	2	2	2				

FIG. 95 CASE (GEAR/FRONT) SYSTEM

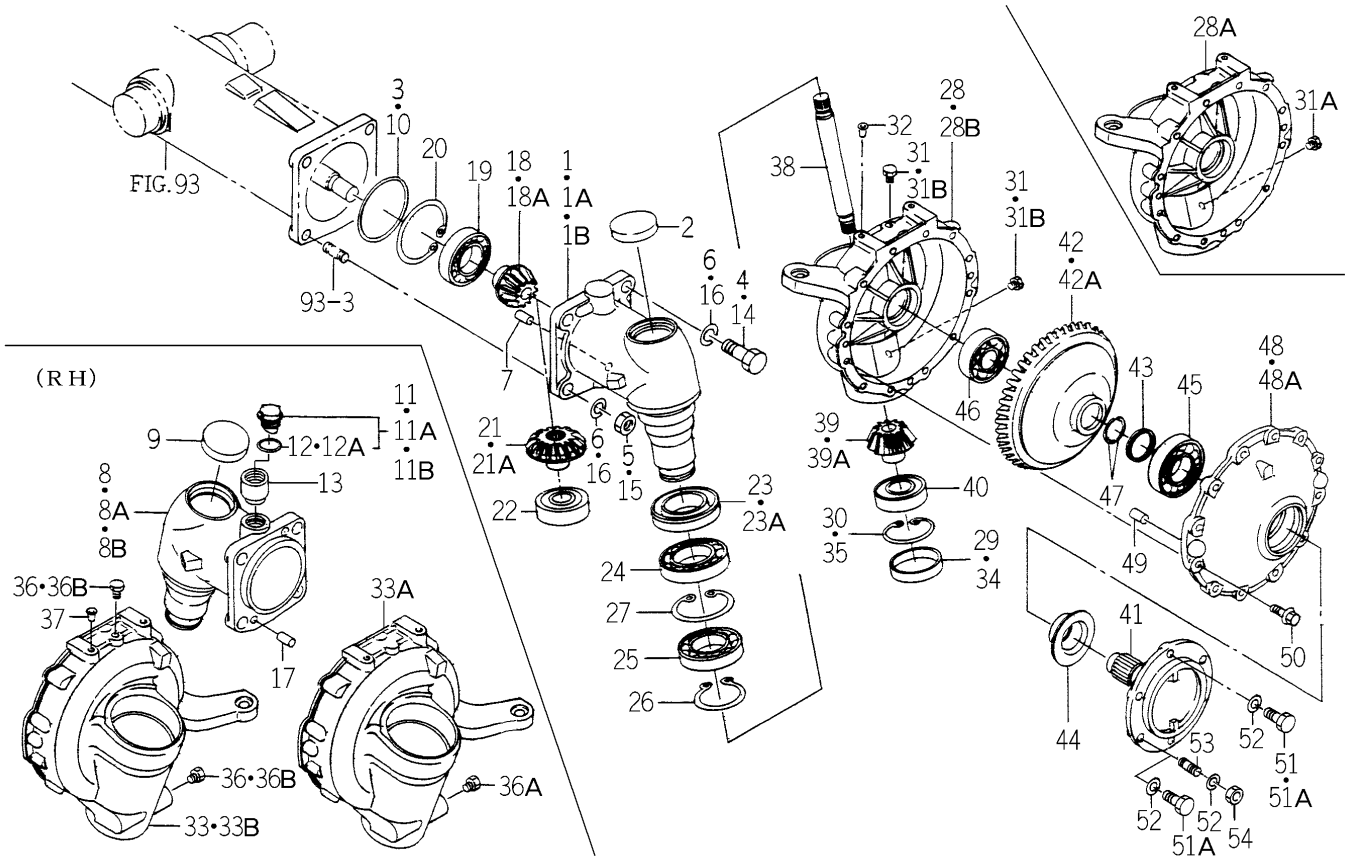

1746-434 -0100

KEY	PART CODE	DESCRIPTION	SPC	TYPE OF MODEL TG5330 E4	TG5330 E6	TG5390 E4	TG5390 E6	ITC	COL	GRP	REMARKS
42	1650-434-012-00	GEAR/BEVEL/46	*	2 -388	2 -388	2 -768	2 -768				
42A	1650-434-012-10	GEAR/BEVEL/46	*	2 389-	2 389-	2 769-	2 769-	3			
43	1560-434-011-40	COLLAR/41X55X4	*	2	2	2	2				
44	1560-434-012-30	SEAL,OIL	*	2	2	2	2				
45	V600-410-620-80	BEARING/BALL	*	2	2	2	2				
46	V600-410-620-60	BEARING/BALL	*	2	2	2	2				
47	1560-434-017-00	RING	*	4	4	4	4				
48	1650-434-013-00	COVER/WHEEL	*	2 -477	2 -477	2 -854	2 -854				
48A	1650-434-013-10	COVER/WHEEL	*	2 478-	2 478-	2 855-	2 855-	1			
49	V523-101-002-40	PIN	*	4	4	4	4				
50	V231-361-002-50	FLANGEBOLT	*	24	24	24	24				
51	V201-361-203-00	BOLT/M12X30	*	8 -27	8 -27	8 -25	8 -25				
51A	V201-361-203-00	BOLT/M12X30	*	12 28-	12 28-	12 26-	12 26-				
52	V401-160-012-00	WASHER,SP/M12	*	12	12	12	12				
53	V251-341-202-50	BOLT/M12X25	*	4 -27	4 -27	4 -25	4 -25				
54	V304-460-012-00	NUT/M12	*	4 -27	4 -27	4 -25	4 -25				

FIG. 96 TIE ROD SYSTEM (TG5330E4-No.1-77/TG5330E6-No.1-77/ TG5390E4-No.1-280/TG5390E6-No.1-280)

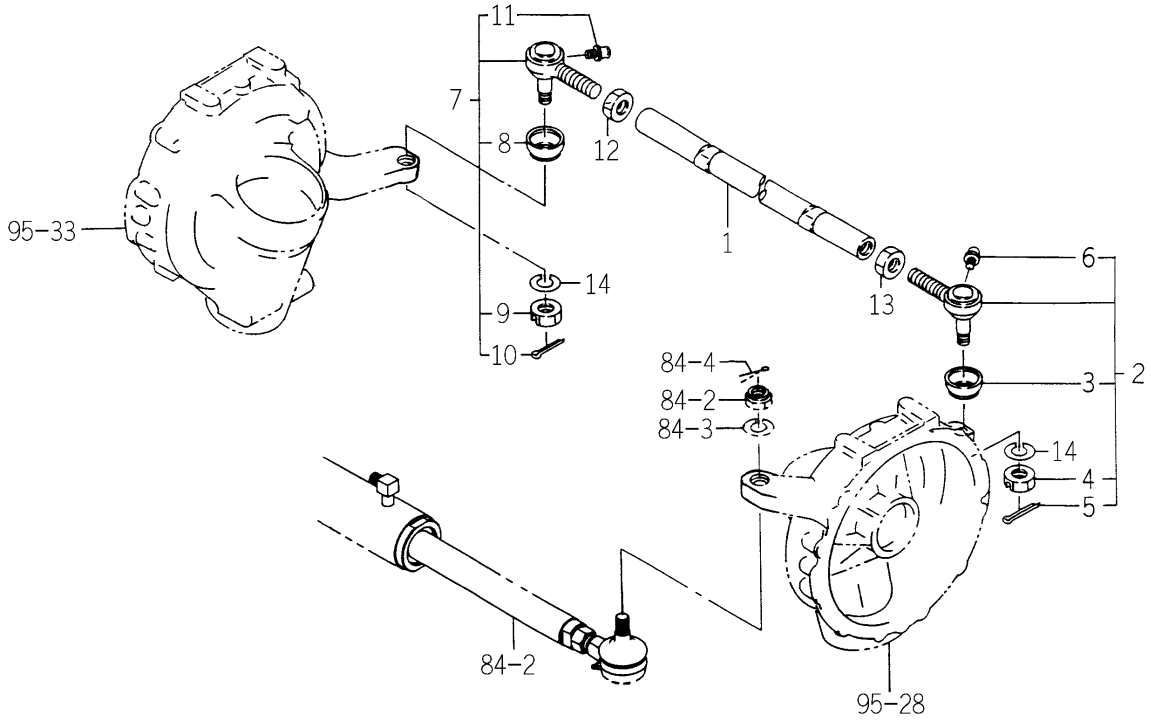

1723-436 -0100

KEY	PART CODE	DESCRIPTION	SPC	TYPE OF MODEL TG5330 E4	TG5330 E6	TG5390 E4	TG5390 E6	ITC	COL	GRP	REMARKS
1	1691-436-001-00	ROD/TIE	*	1 -77	1 -77	1 -280	1 -280				
2	1421-400-054-10	END,ROD/L¥R ASSY	*	1 -77	1 -77	1 -280	1 -280				
3	1404-402-001-00	COVER,DUST	*	1 -77	1 -77	1 -280	1 -280				
4	1421-403-003-00	NUT,SLOTTED/M12P1.25	*	1 -77	1 -77	1 -280	1 -280				
5	V500-163-002-00	PIN,SPLIT/3 X20	*	1 -77	1 -77	1 -280	1 -280				
6	1404-402-005-00	NIPPLE,GREASE	*	1 -77	1 -77	1 -280	1 -280				
7	1421-400-055-00	END,ROD RH ASSY	*	1 -77	1 -77	1 -280	1 -280				
8	1404-402-001-00	COVER,DUST	*	1 -77	1 -77	1 -280	1 -280				
9	1421-403-003-00	NUT,SLOTTED/M12P1.25	*	1 -77	1 -77	1 -280	1 -280				
10	V500-163-002-00	PIN,SPLIT/3 X20	*	1 -77	1 -77	1 -280	1 -280				
11	1404-402-005-00	NIPPLE,GREASE	*	1 -77	1 -77	1 -280	1 -280				
12	1421-403-001-00	NUT	*	1 -77	1 -77	1 -280	1 -280				
13	1421-403-002-00	NUT,LH THREAD/M17	*	1 -77	1 -77	1 -280	1 -280				
14	V401-160-012-00	WASHER,SP/M12	*	2 -77	2 -77	2 -280	2 -280				

FIG. 97 TIE ROD SYSTEM (TG5330E4-No.78-/TG5330E6-No.78-/ TG5390E4-No.281-/TG5390E6-No.281-)

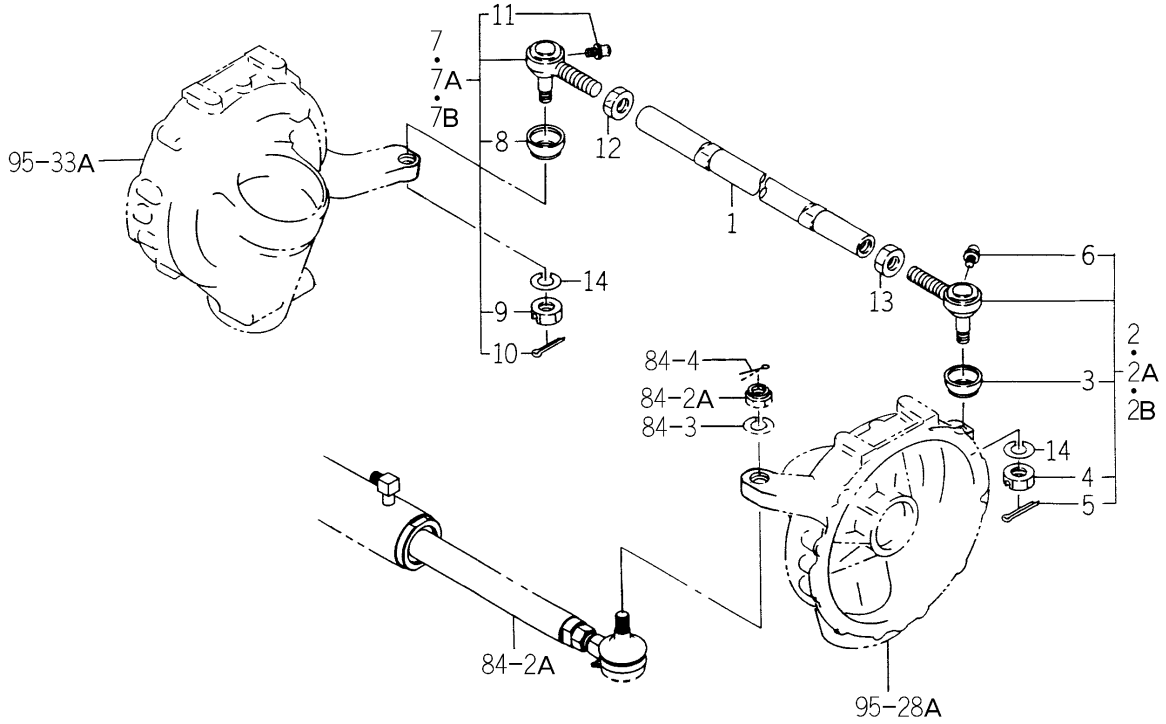

1742-436 -0100

KEY	PART CODE	DESCRIPTION	SPC	TYPE OF MODEL TG5330 E4	TG5330 E6	TG5390 E4	TG5390 E6	ITC	COL	GRP	REMARKS
1	1742-436-001-00	ROD/TIE	*	1 78-	1 78-	1 281-	1 281-				
2	1421-400-054-10	END,ROD/L¥R ASSY	*	1 -247	1 -247	1 -565	1 -565				
2A	1421-400-054-20	RODEND/L/R ASSY	*	1 -252	1 -252			1			
2B	1421-400-054-30	RODEND/L/R ASSY	*	1 253-	1 253-	1 566-	1 566-	1			
3	1404-402-001-00	COVER,DUST	*	1 78-	1 78-	1 281-	1 281-				
4	1421-403-003-00	NUT,SLOTTED/M12P1.25	*	1 78-	1 78-	1 281-	1 281-				
5	V500-163-002-00	PIN,SPLIT/3 X20	*	1 78-	1 78-	1 281-	1 281-				
6	1404-402-005-00	NIPPLE,GREASE	*	1 78-	1 78-	1 281-	1 281-				
7	1421-400-055-00	END,ROD RH ASSY	*	1 -247	1 -247	1 -565	1 -565				
7A	1421-400-055-10	RODEND/R/L ASSY	*	1 -252	1 -252			1			
7B	1421-400-055-20	RODEND/R/L ASSY	*	1 253-	1 253-	1 566-	1 566-	1			
8	1404-402-001-00	COVER,DUST	*	1 78-	1 78-	1 281-	1 281-				
9	1421-403-003-00	NUT,SLOTTED/M12P1.25	*	1 78-	1 78-	1 281-	1 281-				
10	V500-163-002-00	PIN,SPLIT/3 X20	*	1 78-	1 78-	1 281-	1 281-				
11	1404-402-005-00	NIPPLE,GREASE	*	1 78-	1 78-	1 281-	1 281-				
12	1421-403-001-00	NUT	*	1 78-	1 78-	1 281-	1 281-				
13	1421-403-002-00	NUT,LH THREAD/M17	*	1 77-	1 78-	1 281-	1 281-				
14	V401-160-012-00	WASHER,SP/M12	*	2 77-	2 78-	2 255-	2 281-				

FIG. 98 CYLINDER CASE SYSTEM (EXCEPT W,A TYPE-No.1-/ A TYPE-TG5330E4-No.1-159/TG5390E4-No.1-519)

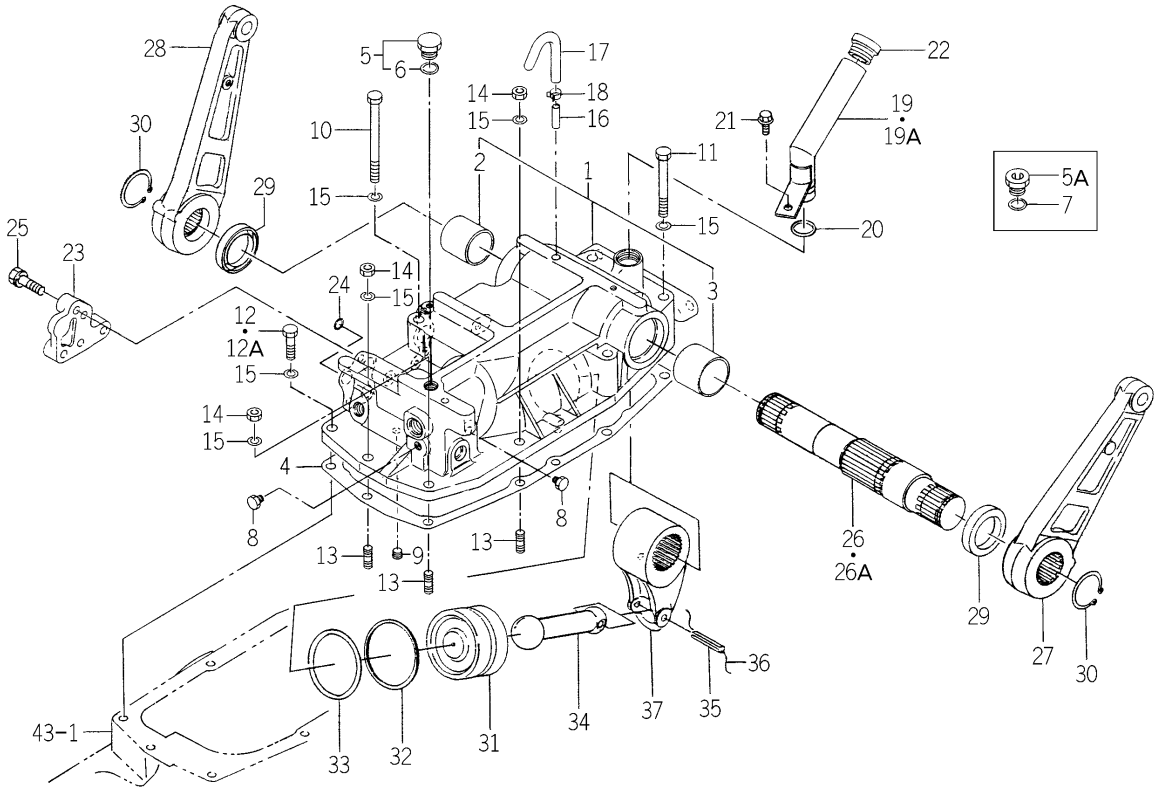

1742-501 -0100

KEY	PART CODE	DESCRIPTION	SPC	TYPE OF MODEL TG5330 E4	TG5330 E6	TG5390 E4	TG5390 E6	ITC	COL	GRP	REMARKS
1	1742-501-200-00	CASE/CYLINDER ASSY	*	1		1					
2	1560-501-202-00	BUSH/45X50X42	*	1		1					
3	1560-501-203-00	BUSH/50X55X42	*	1		1					
4	1729-501-008-10	GASKET/CASE/CYLINDER	*	1		1					
5	1725-203-210-00	PLUG/G3/8 ASSY	*	1 -370		1 -764					
5A	K510-001-029-00	PLUG(G3/8)	*	1 371-		1 765-					
6	V720-112-401-40	O-RING/P14	*	1 -370		1 -764					
7	V720-112-401-40	O-RING/P14	*	1 371-		1 765-					
8	V782-160-000-4T	PLUG/SCREW/SEAL	*	2		2					
9	V780-140-000-4T	PLUG/SCREW/SEAL	*	1		1					
10	V201-361-212-00	BOLT	*	1		1					
11	V201-361-209-00	BOLT	*	4		4					
12	V201-361-203-50	BOLT/M12X35	*	4 -798		4 -1141					
12A	V201-361-203-50	BOLT/M12X35	*	1 799-		1 1142-					
13	V251-341-203-20	BOLT/M12X32	*	3 799-		3 1142-					
14	V304-460-012-00	NUT/M12	*	3 799-		3 1142-					
15	V401-160-012-00	WASHER,SP/M12	*	9		9					
16	1544-120-008-10	PIPE,BREATHER	*	1		1					
17	1716-501-006-00	HOSE/BREATHER	*	1		1					
18	J062-138-148-00	CLIP/HOSE/13.8-14.8	*	1		1					
19	1742-501-210-00	PIPE/FILLER/OIL COMP	*	1 -948		1 -1274					
19A	1742-501-210-10	PIPE/FILLER/OIL COMP	*	1 949-		1 1275-		1			
20	V720-113-502-60	O-RING/P26 HS90	*	1		1					
21	V231-360-801-20	FLANGEBOLT	*	1		1					
22	3676-356-001-00	CAP/OIL(30)	*	1		1					
23	1614-501-003-10	COVER	*	1		1					
24	V720-112-401-40	O-RING/P14	*	3		3					
25	V211-261-003-50	BOLT,SEMS	*	3		3					
26	1729-501-003-00	BAR	*	1 -946		1 -1241					
26A	1744-501-003-00	BAR	*	1 947-		1 1242-					

FIG. 98 CYLINDER CASE SYSTEM (EXCEPT W,A TYPE-No.1-/ A TYPE-TG5330E4-No.1-159/TG5390E4-No.1-519)

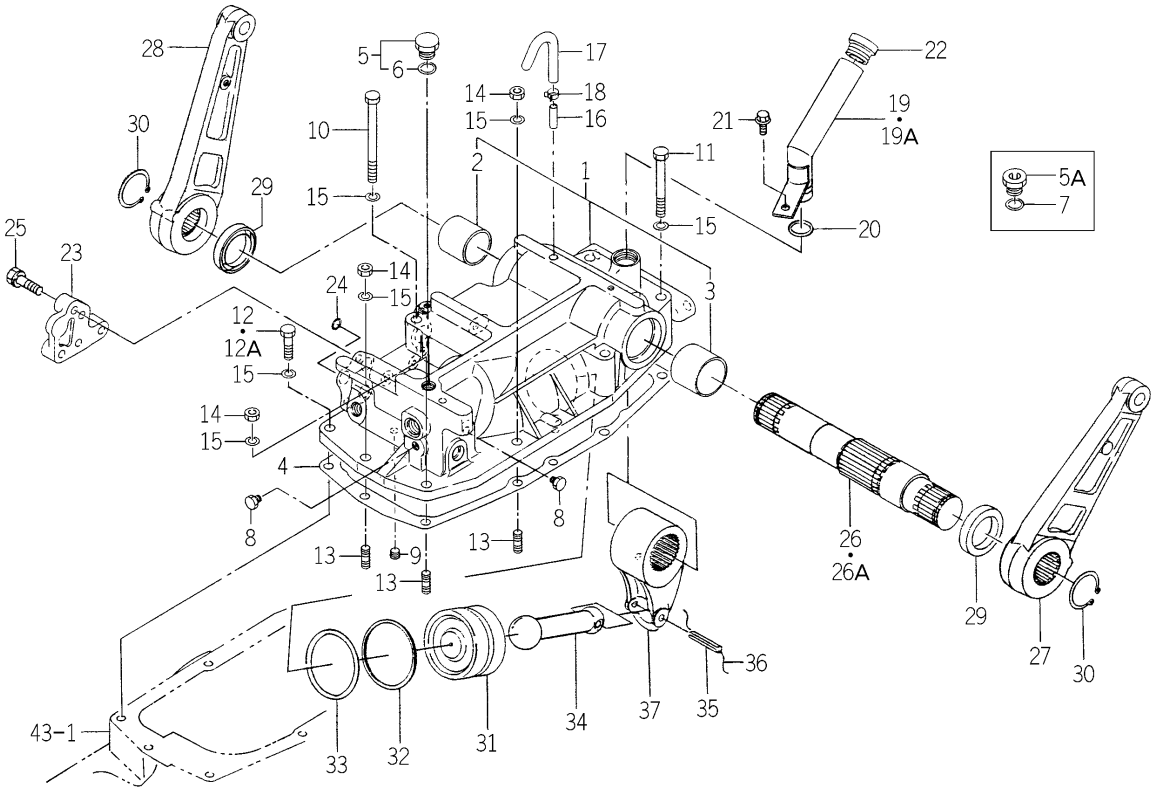

1742-501 -0100

KEY	PART CODE	DESCRIPTION	SPC	TYPE OF MODEL TG5330 E4	TG5330 E6	TG5390 E4	TG5390 E6	ITC	COL	GRP	REMARKS
27	1729-501-001-00	ARM/LIFT/LH	*	1		1					
28	1729-501-002-00	ARM/LIFT/RH	*	1		1					
29	V744-145-600-90	SEAL,OIL/TC45609	*	2		2					
30	V706-140-045-00	RING/SNAP	*	2		2					
31	1650-501-007-00	PISTON	*	1		1					
32	1564-507-004-10	RING	*	1		1					
33	V720-115-707-50	O-RING(1B)P75	*	1		1					
34	1729-501-005-00	ROD	*	1		1					
35	V580-140-805-00	PIN,SPRING/8 X50 W	*	1		1					
36		WIRE	*	1		1					
37	1729-501-004-00	CRANK/LIFT	*	1		1					

FIG. 99 CYLINDER CASE SYSTEM (W TYPE-No.1-/ A TYPE-TG5330E4-No.160-/ TG5390E4-No.520-)

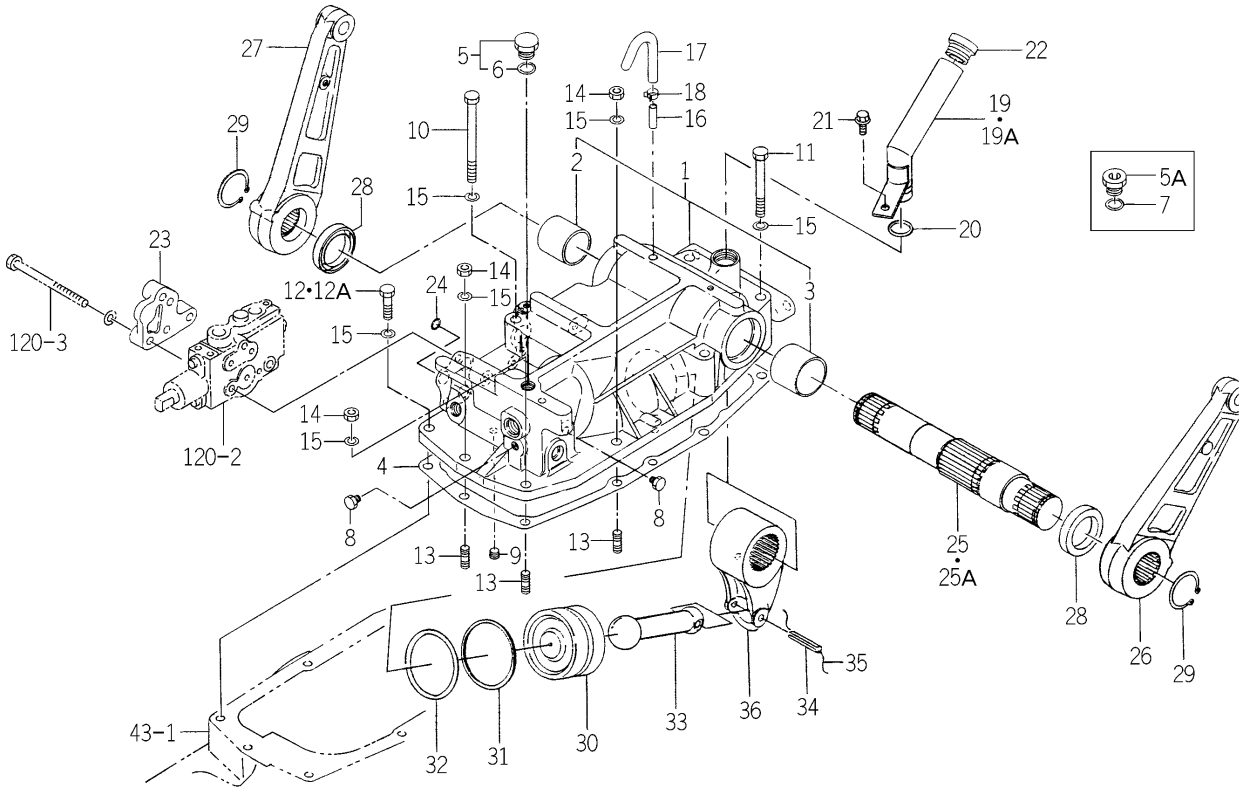

1742-501A-0100

KEY	PART CODE	DESCRIPTION	SPC	TYPE OF MODEL TG5330 E4	TG5330 E6	TG5390 E4	TG5390 E6	ITC	COL	GRP	REMARKS
1	1742-501-200-00	CASE/CYLINDER ASSY	*	1 160-	1	1 520-	1				
2	1560-501-202-00	BUSH/45X50X42	*	1 160-	1	1 520-	1				
3	1560-501-203-00	BUSH/50X55X42	*	1 160-	1	1 520-	1				
4	1729-501-008-10	GASKET/CASE/CYLINDER	*	1 160-	1	1 520-	1				
5	1725-203-210-00	PLUG/G3/8 ASSY	*		1 -370		1 -768				
5A	K510-001-029-00	PLUG(G3/8)	*	1 371-	1 371-	1 769-	1 769-				
6	V720-112-401-40	O-RING/P14	*	1 -370	1 -370	1 -768	1 -768				
7	V720-112-401-40	O-RING/P14	*	1 371-	1 371-	1 769-	1 769-				
8	V782-160-000-4T	PLUG/SCREW/SEAL	*	2 160-	2	2 520-	2				
9	V780-140-000-4T	PLUG/SCREW/SEAL	*	1 160-	1	1 520-	1				
10	V201-361-212-00	BOLT	*	1 160-	1	1 520-	1				
11	V201-361-209-00	BOLT	*	4 160-	4	4 520-	4				
12	V201-361-203-50	BOLT/M12X35	*		4 -798		4 -1164				
12A	V201-361-203-50	BOLT/M12X35	*	1 160-	1 799-	1 520-	1 1165-				
13	V251-341-203-20	BOLT/M12X32	*	3 160-	3 799-	3 520-	3 1165-				
14	V304-460-012-00	NUT/M12	*	3 160-	3 799-	3 520-	3 1165-				
15	V401-160-012-00	WASHER,SP/M12	*	9 160-	9	9 520-	9				
16	1544-120-008-10	PIPE,BREATHER	*	1 160-	1	1 520-	1				
17	1716-501-006-00	HOSE/BREATHER	*	1 160-	1	1 520-	1				
18	J062-138-148-00	CLIP/HOSE/13.8-14.8	*	1 160-	1	1 520-	1				
19	1742-501-210-00	PIPE/FILLER/OIL COMP	*	1 -948	1 -948	1 -1274	1 -1274				
19A	1742-501-210-10	PIPE/FILLER/OIL COMP	*	1 949-	1 949-	1 1275-	1 1275-	1			
20	V720-113-502-60	O-RING/P26 HS90	*	1 160-	1	1 520-	1				
21	V231-360-801-20	FLANGEBOLT	*	1 160-	1	1 520-	1				
22	3676-356-001-00	CAP/OIL(30)	*	1 160-	1	1 520-	1				
23	1614-501-003-10	COVER	*	1 160-	1	1 520-	1				
24	V720-112-401-40	O-RING/P14	*	3 160-	3	3 520-	3				
25	1729-501-003-00	BAR	*		1 -946		1 -1249				
25A	1744-501-003-00	BAR	*	1 160-	1 947-	1 520-	1 1250-				
26	1729-501-001-00	ARM/LIFT/LH	*	1 160-	1	1 520-	1				

FIG. 99 CYLINDER CASE SYSTEM (W TYPE-No.1-/ A TYPE-TG5330E4-No.160-/ TG5390E4-No.520-)

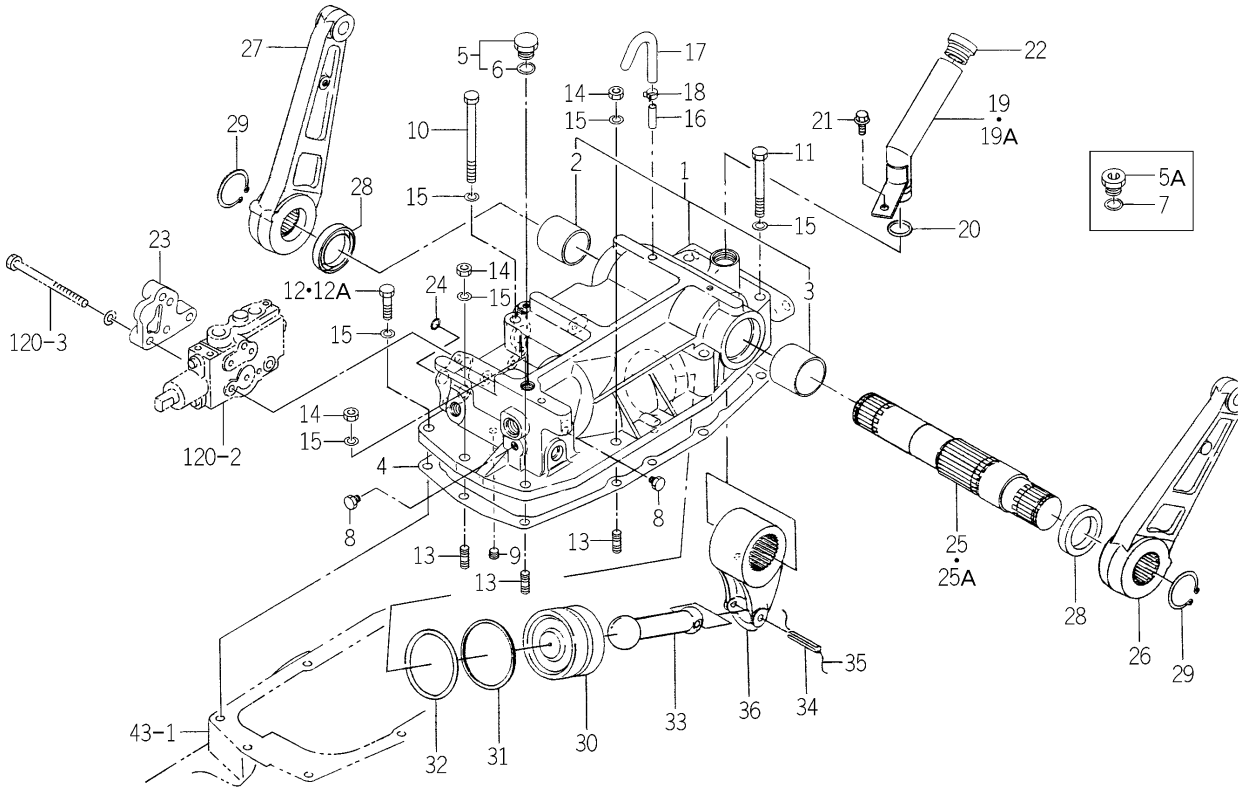

1742-501A-0100

KEY	PART CODE	DESCRIPTION	SPC	TYPE OF MODEL TG5330 E4	TG5330 E6	TG5390 E4	TG5390 E6	ITC	COL	GRP	REMARKS
27	1729-501-002-00	ARM/LIFT/RH	*	1 160-	1	1 520-	1				
28	V744-145-600-90	SEAL,OIL/TC45609	*	2 160-	2	2 520-	2				
29	V706-140-045-00	RING/SNAP	*	2 160-	2	2 520-	2				
30	1650-501-007-00	PISTON	*	1 160-	1	1 520-	1				
31	1564-507-004-10	RING	*	1 160-	1	1 520-	1				
32	V720-115-707-50	O-RING(1B)P75	*	1 160-	1	1 520-	1				
33	1729-501-005-00	ROD	*	1 160-	1	1 520-	1				
34	V580-140-805-00	PIN,SPRING/8 X50 W	*	1 160-	1	1 520-	1				
35		WIRE	*	1 160-	1	1 520-	1				
36	1729-501-004-00	CRANK/LIFT	*	1 160-	1	1 520-	1				

FIG.100 MECHANICAL LINK (POSITION)(1/2) SYSTEM

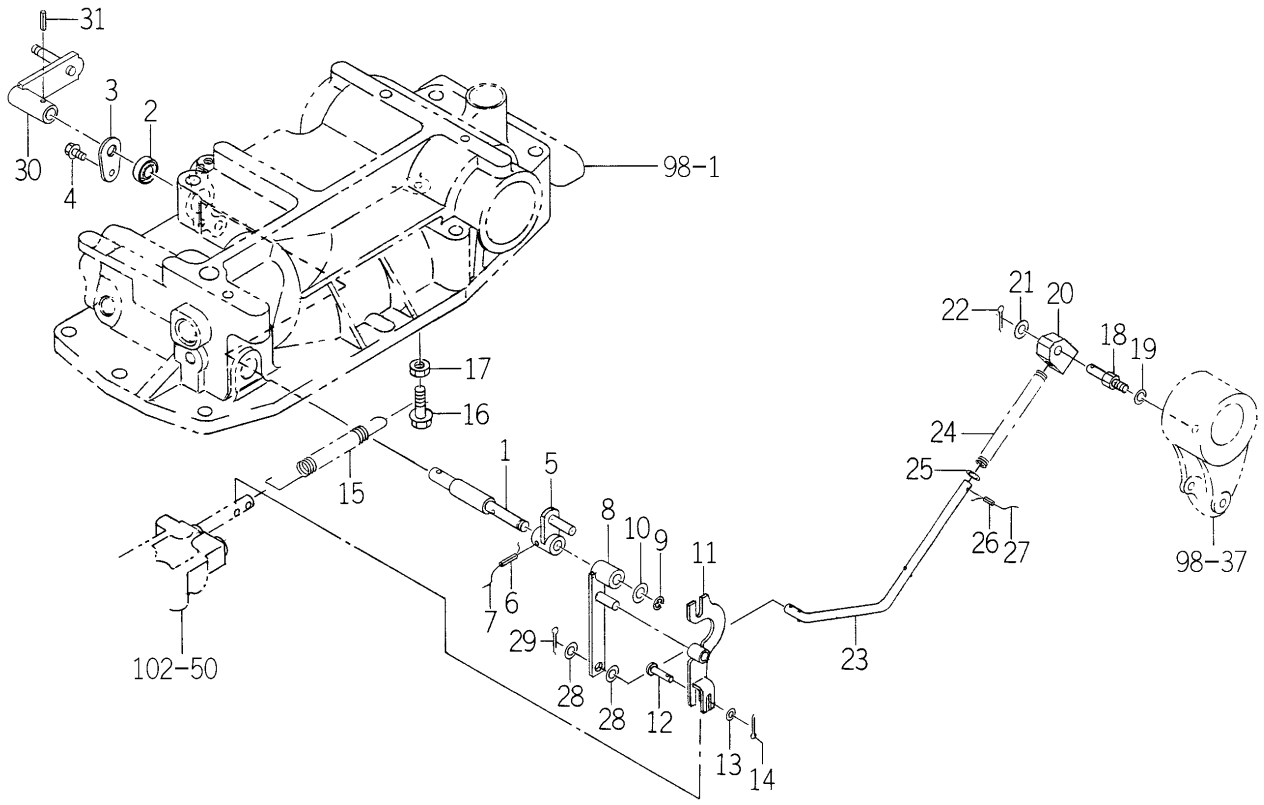

1742-504 -0100

KEY	PART CODE	DESCRIPTION	SPC	TYPE OF MODEL TG5330 E4	TG5330 E6	TG5390 E4	TG5390 E6	ITC	COL	GRP	REMARKS
1	1742-504-001-00	PIN/10X113	*	1	1	1	1				
2	V742-116-240-40	SEAL,OIL/VC16244	*	1	1	1	1				
3	1421-507-007-00	STOPPER	*	1	1	1	1				
4	V231-360-801-20	FLANGEBOLT	*	1	1	1	1				
5	1742-504-200-00	ARM COMP	*	1	1	1	1				
6	V580-140-401-80	PIN/SPRING	*	1	1	1	1				
7		WIRE	*	1	1	1	1				
8	1742-504-210-00	ARM COMP	*	1	1	1	1				
9	V710-140-008-00	RING,SNAP/8 E	*	1	1	1	1				
10	V411-260-010-00	WASHER/M10	*	1	1	1	1				
11	1560-509-340-00	ARM	*	1	1	1	1				
12	1742-504-003-00	PIN/06X25	*	1	1	1	1				
13	V411-260-006-00	WASHER / M6	*	1	1	1	1				
14	V500-162-002-00	PIN,SPLIT/2 X20	*	1	1	1	1				
15	1560-507-002-40	SPRING	*	1	1	1	1				
16	V231-360-803-00	FLANGEBOLT	*	1	1	1	1				
17	V304-260-008-00	NUT	*	1	1	1	1				
18	1560-505-004-00	PIN/12X45	*	1	1	1	1				
19	V401-160-008-00	WASHER,SP/M 8	*	1	1	1	1				
20	1560-509-004-50	RING	*	1	1	1	1				
21	V411-260-008-00	WASHER,PL/M 8	*	1	1	1	1				
22	V500-162-002-00	PIN,SPLIT/2 X20	*	1	1	1	1				
23	1742-504-007-00	ROD	*	1	1	1	1				
24	1560-509-005-30	SPRING	*	1	1	1	1				
25	V411-260-008-00	WASHER,PL/M 8	*	1	1	1	1				
26	V580-140-301-60	PIN,SPRING/3 X16 W	*	1	1	1	1				
27		WIRE	*	1	1	1	1				
28	V411-260-008-00	WASHER,PL/M 8	*	2	2	2	2				
29	V500-162-002-00	PIN,SPLIT/2 X20	*	1	1	1	1				
30	1742-504-230-00	ARM COMP	*	1	1	1	1				

FIG.100 MECHANICAL LINK (POSITION)(2/2) SYSTEM

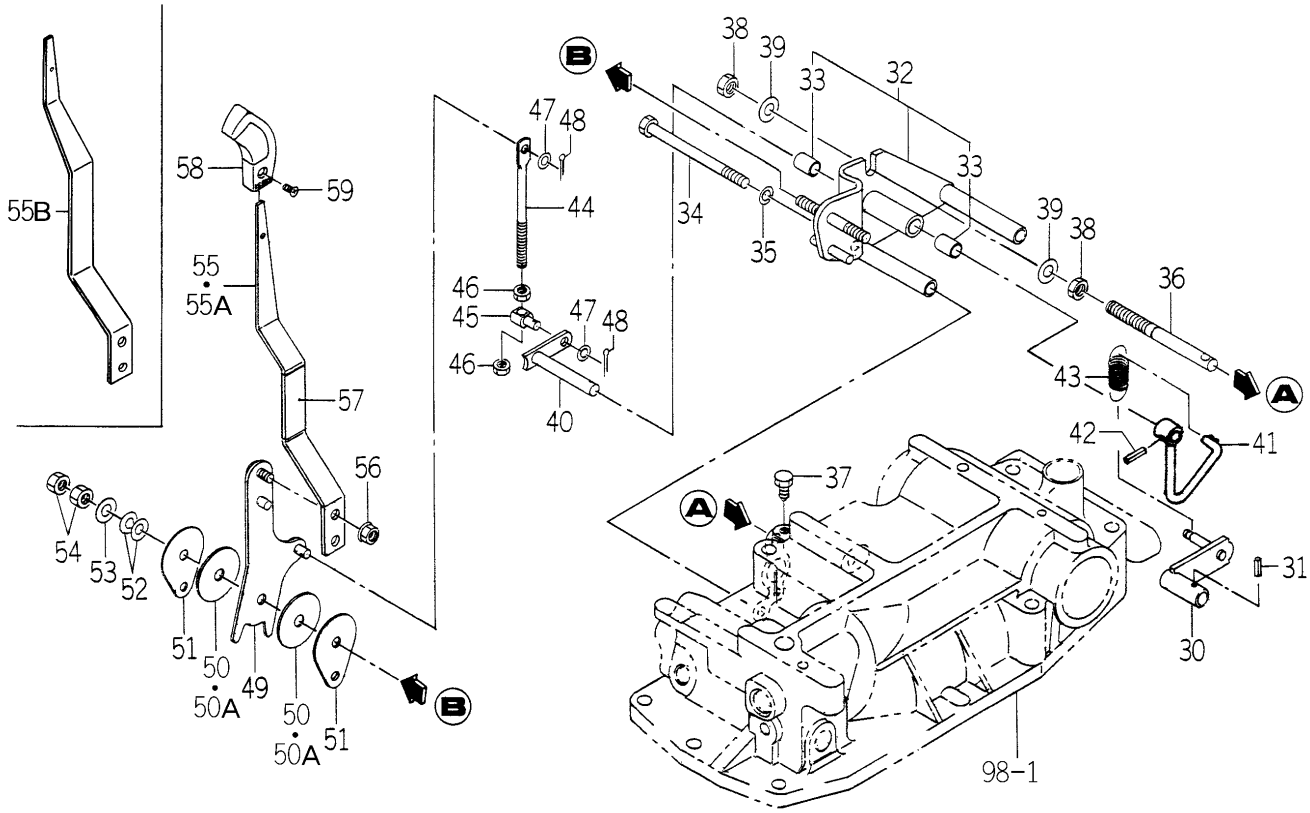

1742-504 -0100

KEY	PART CODE	DESCRIPTION	SPC	TYPE OF MODEL TG5330 E4	TG5330 E6	TG5390 E4	TG5390 E6	ITC	COL	GRP	REMARKS
31	V580-140-402-00	PIN/SPRING	*	1	1	1	1				
32	1742-504-270-00	BRACKET ASSY	*	1	1	1	1				
33	1560-511-015-00	BUSH/12X14X20	*	2	2	2	2				
34	V201-261-012-00	BOLT/M10X120	*	2	2	2	2				
35	V401-160-010-00	WASHER,SP/M10	*	2	2	2	2				
36	1742-504-008-00	PIN/12X128	*	1	1	1	1				
37	1729-266-035-00	BOLT/SM/M08X20	*	1	1	1	1				
38	V305-260-012-00	NUT/M12	*	2	2	2	2				
39	V411-260-012-00	WASHER /M12	*	2	2	2	2				
40	1742-504-250-00	ARM COMP	*	1	1	1	1				
41	1723-511-200-00	ARM COMP	*	1	1	1	1				
42	V580-140-402-00	PIN/SPRING	*	1	1	1	1				
43	1560-511-006-50	SPRING	*	1	1	1	1				
44	1742-504-004-00	ROD/M08X120	*	1	1	1	1				
45	1673-565-003-00	PIN	*	1	1	1	1				
46	V304-260-008-00	NUT	*	2	2	2	2				
47	V411-260-008-00	WASHER,PL/M 8	*	2	2	2	2				
48	V500-163-002-00	PIN,SPLIT/3 X20	*	2	2	2	2				
49	1742-504-260-00	LEVER/PLATE COMP	*	1	1	1	1				
50	1600-505-007-00	LINING/13X50X3	*	2 -952	2 -952	2 -1310	2 -1310				
50A	1600-505-007-10	LINING/13X50X03	*	2 953-	2 953-	2 1311-	2 1311-	1			
51	1560-511-012-00	PLATE	*	2	2	2	2				
52	1614-505-004-00	SPRING/WASHER	*	2	2	2	2				
53	V411-260-010-00	WASHER/M10	*	1	1	1	1				
54	V335-260-010-00	NUT	*	2	2	2	2				
55	1742-504-005-10	LEVER/PLATE	*	1 -25	1 -25	1 -16	1 -16				
55A	1742-504-005-20	LEVER/PLATE	*	1 -28	1 -28	1 -26	1 -26	1			
55B	1742-504-005-30	LEVER/PLATE	*	1 29-	1 29-	1 27-	1 27-	1			
56	V362-260-008-00	NUT/WASHER	*	1	1	1	1				
57	1614-262-006-00	INSULATOR/LEVER/SUB	*	1	1	1	1				

FIG.100 MECHANICAL LINK (POSITION)(2/2) SYSTEM

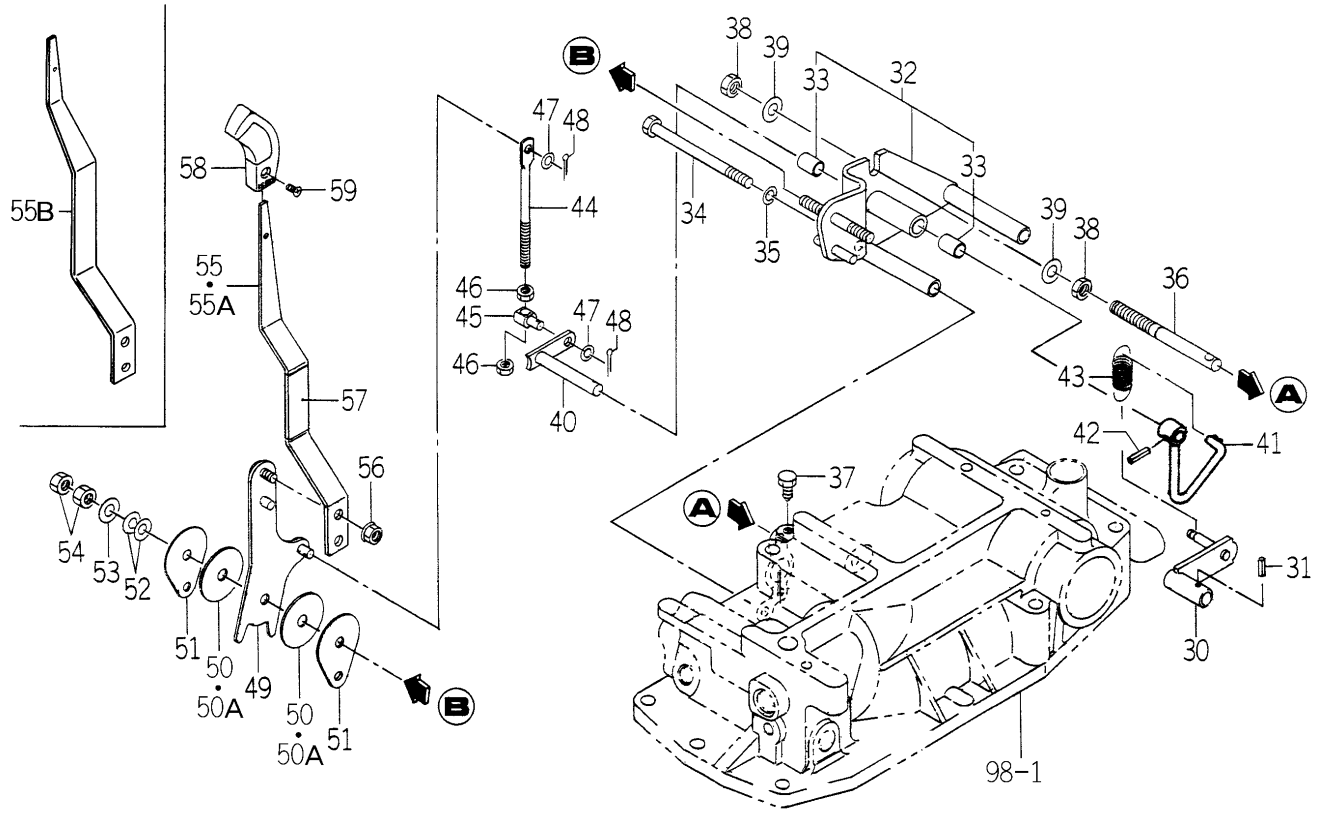

1742-504 -0100

KEY	PART CODE	DESCRIPTION	SPC	TYPE OF MODEL TG5330 E4	TG5330 E6	TG5390 E4	TG5390 E6	ITC	COL	GRP	REMARKS
58	1614-505-007-00	GRIP/03X17X97	*	1	1	1	1				
59	V112-165-001-20	SCREW/M5X12	*	1	1	1	1				

FIG.101 MECHANICAL LINK (DRAFT) SYSTEM (S TYPE-STANDARD/EXCEPT S TYPE-OPTION)

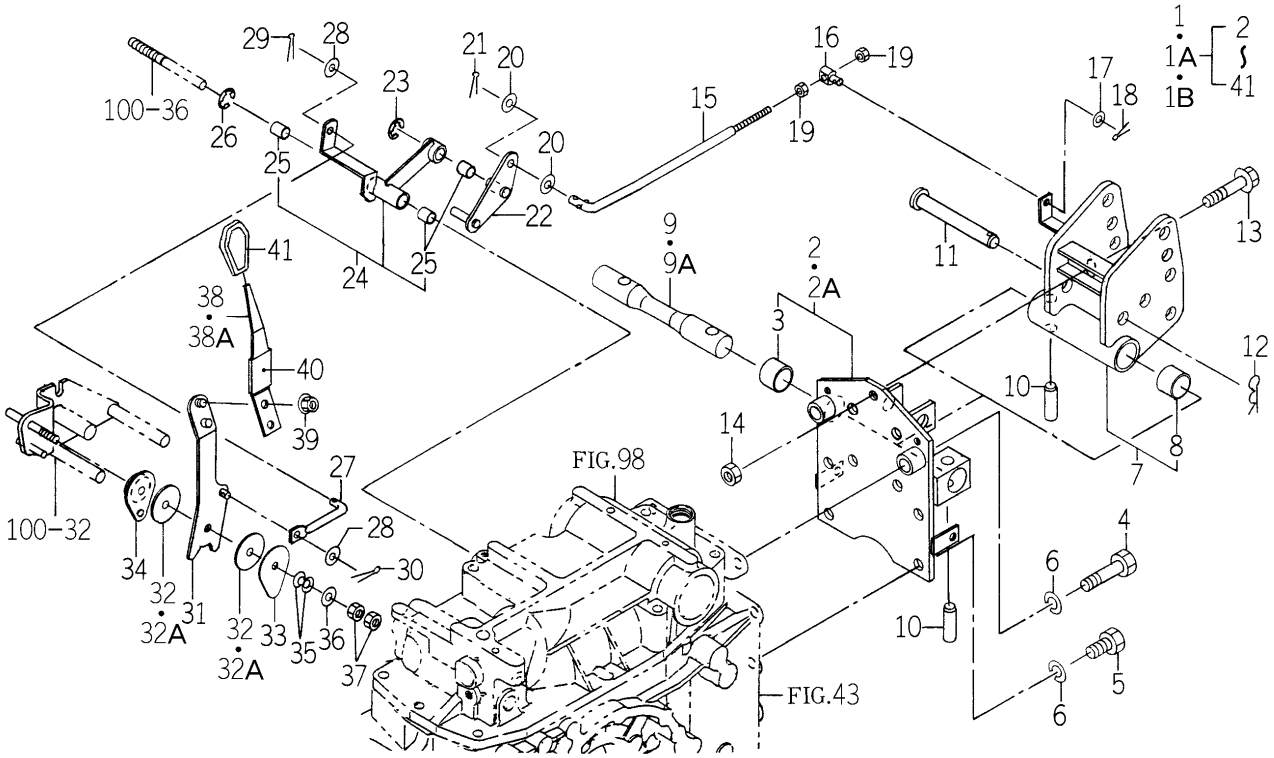

1742-506 -0100

KEY	PART CODE	DESCRIPTION	SPC	TYPE OF MODEL TG5330 E4	TG5330 E6	TG5390 E4	TG5390 E6	ITC	COL	GRP	REMARKS
1	1742-506-260-30	CONTROL/DRAFT SET	*	1 -25	1 -25	1 -16	1 -16				
1A	1742-506-260-40	CONTROL/DRAFT SET	*	1 -626	1 -626	1 -945	1 -945	1			
1B	1742-506-260-50	CONTROL/DRAFT SET	*	1 627-	1 627-	1 946-	1 946-	1			
2	1742-506-270-00	BRACKET/DRAFT ASSY	*	1 -626	1 -626	1 -945	1 -945				
2A	1742-506-270-10	BRACKET/DRAFT ASSY	*	1 627-	1 627-	1 946-	1 946-	1			
3	1689-501-281-00	BUSH/30X34X25	*	1	1	1	1				
4	V201-361-406-00	BOLT 7 M14	*	2	2	2	2				
5	V201-361-403-50	BOLT	*	4	4	4	4				
6	V401-160-014-00	WASHER,SP/M14	*	6	6	6	6				
7	1742-506-280-10	LINK/DRAFT ASSY	*	1	1	1	1				
8	1689-501-281-00	BUSH/30X34X25	*	1	1	1	1				
9	1742-506-001-00	SPRING/DRAFT	*	1 -952	1 -952	1 -1298	1 -1298				
9A	1742-506-001-10	SPRING/DRAFT	*	1 953-	1 953-	1 1299-	1 1299-	1			
10	1742-506-005-00	PIN/16X50	*	2	2	2	2				
11	1444-514-006-00	PIN,TOP LINK	*	1	1	1	1				
12	1444-514-005-10	PIN,HAIR (19)	*	1	1	1	1				
13	V231-361-206-50	FLANGEBOLT	*	1	1	1	1				
14	V304-460-012-00	NUT/M12	*	1	1	1	1				
15	1742-506-002-00	ROD/DRAFT	*	1	1	1	1				
16	1673-565-003-00	PIN	*	1	1	1	1				
17	V411-260-008-00	WASHER,PL/M 8	*	1	1	1	1				
18	V500-162-502-00	PIN,SPLIT/2.5X20	*	1	1	1	1				
19	V304-260-008-00	NUT	*	2	2	2	2				
20	V411-260-010-00	WASHER/M10	*	2	2	2	2				
21	V500-162-002-00	PIN,SPLIT/2 X20	*	1	1	1	1				
22	1742-506-220-10	CAM/DRAFT COMP	*	1	1	1	1				
23	V710-140-010-00	RING,SNAP/E10	*	1	1	1	1				
24	1742-506-290-00	ARM/DRAFT ASSY	*	1	1	1	1				
25	1560-511-015-00	BUSH/12X14X20	*	3	3	3	3				
26	V710-140-010-00	RING,SNAP/E10	*	1	1	1	1				

FIG.101 MECHANICAL LINK (DRAFT) SYSTEM (S TYPE-STANDARD/EXCEPT S TYPE-OPTION)

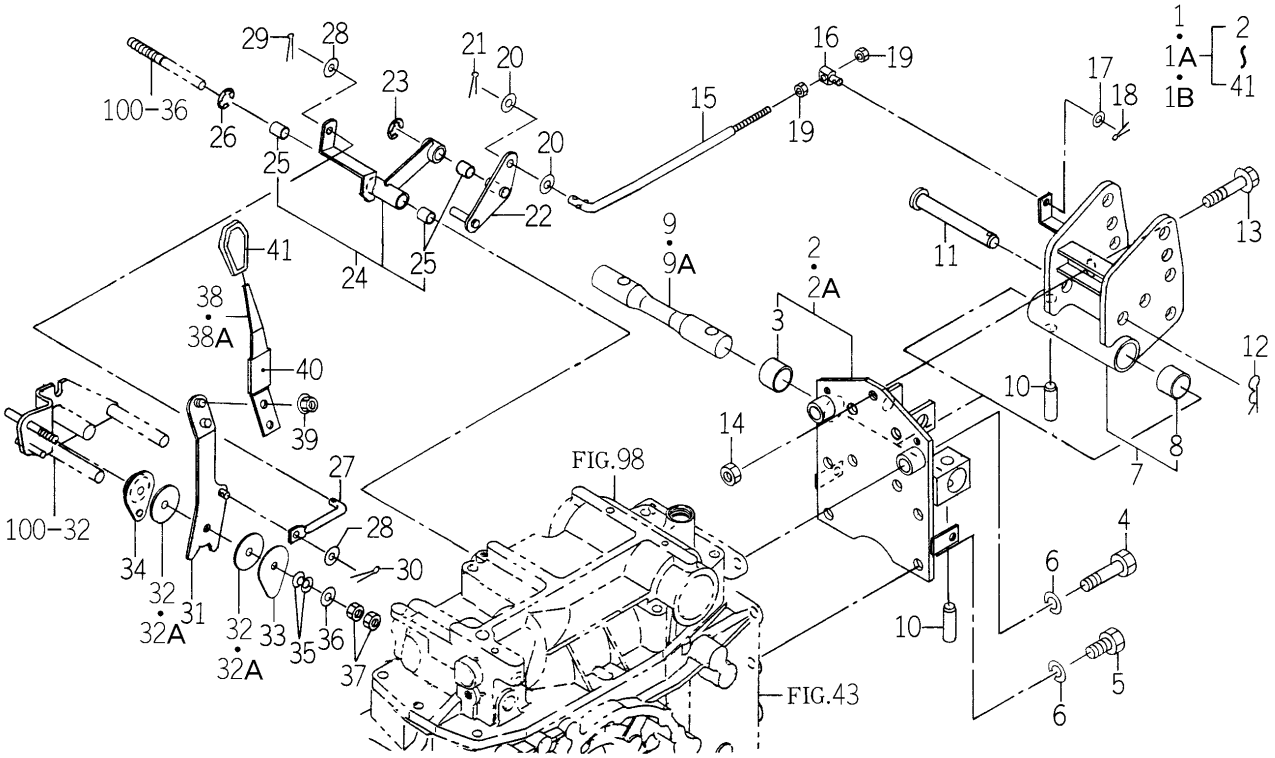

1742-506 -0100

KEY	PART CODE	DESCRIPTION	SPC	TYPE OF MODEL TG5330 E4	TG5330 E6	TG5390 E4	TG5390 E6	ITC	COL	GRP	REMARKS
27	1742-506-003-00	ROD/DRAFT	*	1	1	1	1				
28	V411-260-008-00	WASHER,PL/M 8	*	2	2	2	2				
29	V500-162-002-00	PIN,SPLIT/2 X20	*	1	1	1	1				
30	V500-163-002-00	PIN,SPLIT/3 X20	*	1	1	1	1				
31	1742-506-240-00	LEVER/DRAFT COMP	*	1	1	1	1				
32	1600-505-007-00	LINING/13X50X3	*	2 -952	2 -952	2 -1310	2 -1310				
32A	1600-505-007-10	LINING/13X50X03	*	2 953-	2 953-	2 1311-	2 1311-	1			
33	1560-511-012-00	PLATE	*	1	1	1	1				
34	1742-506-250-00	PLATE COMP	*	1	1	1	1				
35	1614-505-004-00	SPRING/WASHER	*	2	2	2	2				
36	V411-260-010-00	WASHER/M10	*	1	1	1	1				
37	V335-260-010-00	NUT	*	2	2	2	2				
38	1742-506-004-10	LEVER/PLATE	*	1 -25	1 -25	1 -16	1 -16				
38A	1742-506-004-20	LEVER/PLATE	*	1 26-	1 26-	1 17-	1 17-	1			
39	V362-260-008-00	NUT/WASHER	*	1	1	1	1				
40	1614-262-006-00	INSULATOR/LEVER/SUB	*	1	1	1	1				
41	3659-203-005-00	GRIP/03X17X74	*	1	1	1	1				

FIG.102 HYD. SYSTEM (MAIN)(1/2)
(S TYPE-TG5330E4-No.1-439/TG5390E4-No.1-775)

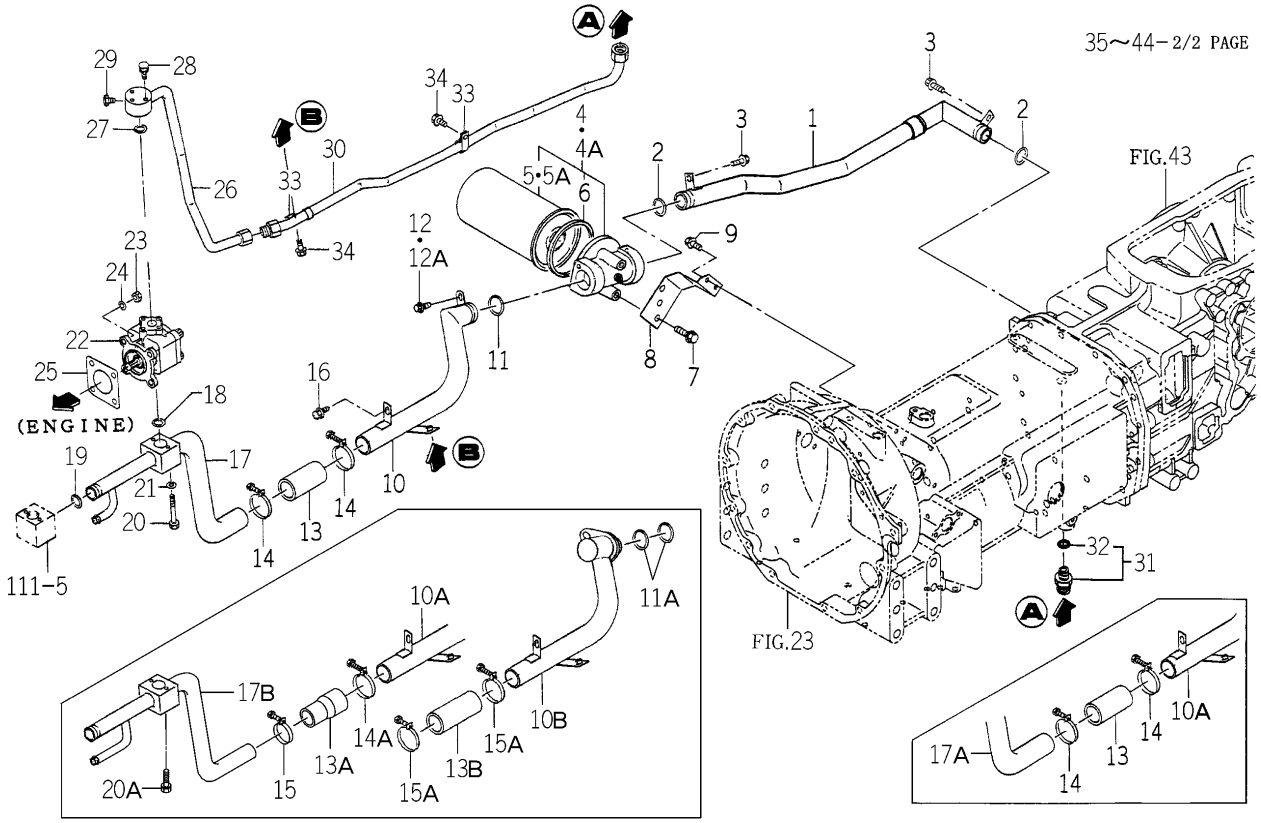

1742-508 -0100

KEY	PART CODE	DESCRIPTION	SPC	TYPE OF MODEL TG5330 E4	TG5330 E6	TG5390 E4	TG5390 E6	ITC	COL	GRP	REMARKS
1	1742-508-210-20	PIPE/SUC/REAR COMP	*	1 -439		1 -775		1			
2	V720-103-502-80	O-RING/P28	*	2 -439		2 -775					
3	V231-360-801-20	FLANGEBOLT	*	2 -439		2 -775					
4	1742-508-200-10	FILTER/SUCTION/20	*	1 -295		1 -659					
4A	1742-508-330-00	FILTER/SUCTION/20/R	*	1 -439		1 -775					
5	1643-515-202-10	CARTRIDGE/20	*	1 -295		1 -659					
5A	1742-508-332-00	CARTRIDGE/20/R	*	1 -439		1 -775					
6	1643-515-203-00	PACKING	*	1 -439		1 -775					
7	V231-361-002-50	FLANGEBOLT	*	2 -439		2 -775					
8	1742-508-005-00	BRACKET/FILTER	*	1 -439		1 -775					
9	V231-360-801-60	FLANGEBOLT	*	2 -439		2 -775					
10	1742-508-220-10	PIPE/SUC/MID COMP	*	1 -18		1 -16					
10A	1742-508-220-20	PIPE/SUC/MID COMP	*	1 -295		1 -659		3			
10B	1742-508-340-00	PIPE/SUC/MID COMP	*	1 -439		1 -775					
11	V720-103-502-80	O-RING/P28	*	1 -295		1 -659					
11A	V720-103-502-80	O-RING/P28	*	2 -439		2 -775					
12	V231-360-801-20	FLANGEBOLT	*	1 -295		1 -659					
12A	V231-360-801-60	FLANGEBOLT	*	1 -439		1 -775					
13	1742-508-007-00	HOSE/80	*	1 -83		1 -280					
13A	1742-508-011-00	HOSE/80	*	1 -295		1 -659					
13B	1729-508-011-00	HOSE/100	*	1 -439		1 -775					
14	J061-236-044-00	CLAMP/WIRE/36-44	*	2 -83		2 -280					
14A	J061-236-044-00	CLAMP/WIRE/36-44	*	1 -295		1 -659					
15	J061-232-040-00	CLAMP/WIRE/32-40	*	1 -295		1 -659					
15A	J061-232-040-00	CLAMP/WIRE/32-40	*	2 -439		2 -775					
16	V231-360-801-20	FLANGEBOLT	*	1 -439		1 -775					
17	1742-508-230-00	PIPE/SUC/FRONT COMP	*	1 -18		1 -16					
17A	1742-508-230-10	PIPE/SUC/FRONT COMP	*	1 -83		1 -280		3			
17B	1742-508-240-00	PIPE/SUC/FRONT COMP	*	1 -439		1 -775					
18	V720-112-402-00	O-RING/P20	*	1 -439		1 -775					

FIG.102 HYD. SYSTEM (MAIN)(1/2)
(S TYPE-TG5330E4-No.1-439/TG5390E4-No.1-775)

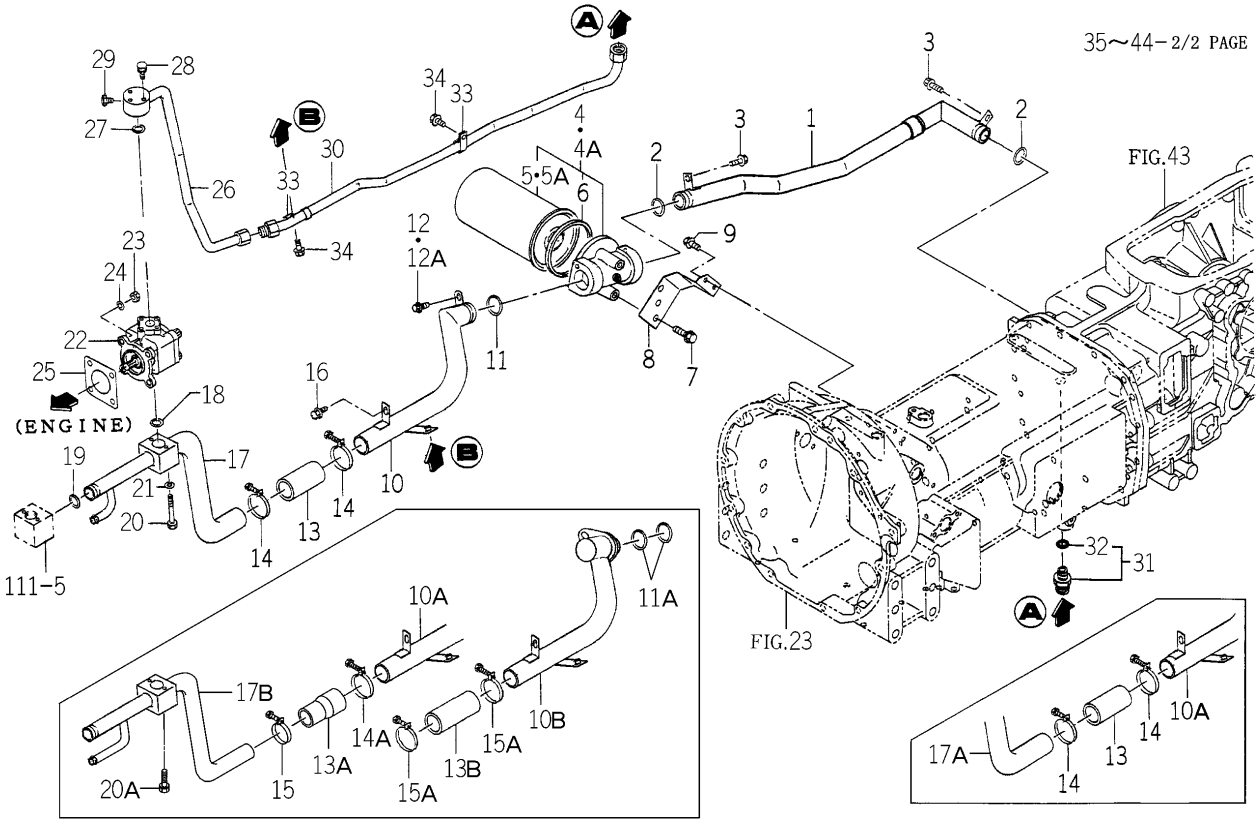

1742-508 -0100

KEY	PART CODE	DESCRIPTION	SPC	TYPE OF MODEL TG5330 E4	TG5330 E6	TG5390 E4	TG5390 E6	ITC	COL	GRP	REMARKS
19	1729-508-006-00	RING/O	*	1 -439		1 -775					
20	V200-360-605-50	BOLT	*	2 -88		2 -292					
20A	V210-560-605-00	BOLT/S	*	2 -439		2 -775					
21	V401-160-006-00	WASHER,SP/M 6	*	2 -88		2 -292					
22	1742-508-300-00	PUMP/GEAR/13.2 ASSY	*	1 -439		1 -775					
23	V304-260-008-00	NUT	*	4 -439		4 -775					
24	V401-160-008-00	WASHER,SP/M 8	*	4 -439		4 -775					
25	1404-503-006-00	PACKING,OIL PUMP	*	1 -439		1 -775					
26	1742-508-250-00	PIPE/DEL/FRONT COMP	*	1 -439		1 -775					
27	V720-112-402-00	O-RING/P20	*	1 -439		1 -775					
28	V210-560-603-50	BOLT/S	*	3 -439		3 -775					
29	V782-160-000-2T	PLUG/SCREW/SEAL	*	1 -439		1 -775					
30	1742-508-310-00	PIPE/DEL/MID COMP	*	1 -439		1 -775					
31	1729-508-290-00	ADAPTER/G3/8 ASSY	*	1 -439		1 -775					
32	V720-112-401-40	O-RING/P14	*	1 -439		1 -775					
33	1675-508-003-00	HOLDER/15	*	2 -439		2 -775					
34	V231-360-801-20	FLANGEBOLT	*	2 -439		2 -775					
35	K200-114-000-00	VALVE ASSY	*	1 -21		1 -22					
35A	K200-114-000-10	VALVE ASSY	*	1 -439		1 -775		1			
36	K200-097-200-00	VALVE/PRV/G ASSY	*	1 -439		1 -775					
36A	K290-003-000-30	VALVE/PRV/B ASSY	*	1 -439		1 -775					
37	K200-114-100-00	VALVE/FROCON SET	*	1 -439		1 -775					
38	V720-112-402-00	O-RING/P20	*	1 -439		1 -775					
39	V723-111-501-60	O-RING	*	2 -439		2 -775					
40	1650-508-002-00	FILTER/LINE/12X18X15	*	1 -439		1 -775					
41	V780-140-000-2T	PLUG/SCREW/SEAL	*	2 -439		2 -775					
41A	V780-140-000-1T	PLUG/SCREW/SEAL	*	1 -439		1 -775					
42	K250-057-000-00	VALVE/RELIEF ASSY	*	1 -439		1 -775					
43	V720-112-402-00	O-RING/P20	*	1 -439		1 -775					
44	V720-112-401-00	O-RING/P10	*	4 -439		4 -775					

FIG.102 HYD. SYSTEM (MAIN)(2/2)
(S TYPE-TG5330E4-No.1-439/TG5390E4-No.1-775)

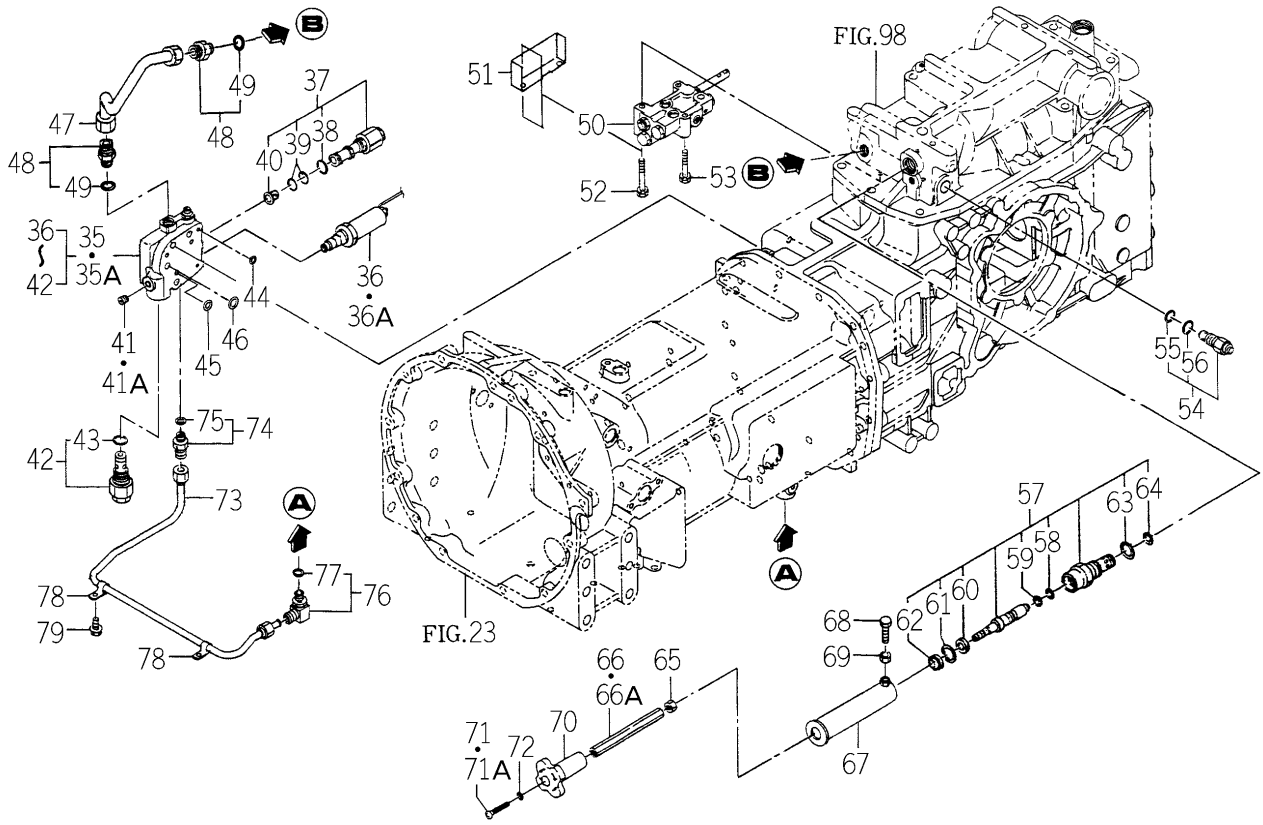

1742-508 -0100

KEY	PART CODE	DESCRIPTION	SPC	TYPE OF MODEL TG5330 E4	TG5330 E6	TG5390 E4	TG5390 E6	ITC	COL	GRP	REMARKS
45	V720-112-401-20	O-RING/P12	*	1 -439		1 -775					
46	V720-112-401-40	O-RING/P14	*	1 -439		1 -775					
47	1742-508-270-00	PIPE/DEL/REAR COMP	*	1 -439		1 -775					
48	1729-508-290-00	ADAPTER/G3/8 ASSY	*	2 -439		2 -775					
49	V720-112-401-40	O-RING/P14	*	2 -439		2 -775					
50	K211-073-000-00	VALVE/CONTROL ASSY	*	1 -439		1 -775					FIG 263
51	1742-508-009-00	COVER/VALVE	*	1 -439		1 -775					
52	V211-260-806-50	BOLT,SEMS/M8X65	*	2 -439		2 -775					
53	V211-260-805-00	BOLT/M8X50	*	1 -439		1 -775					
54	K250-016-000-00	VALVE,RELIEF ASSY	*	1 -439		1 -775					
55	V720-112-401-20	O-RING/P12	*	1 -439		1 -775					
56	V720-112-401-80	O-RING/P18	*	1 -439		1 -775					
57	K231-008-000-10	VALVE/FROCON ASSY	*	1 -439		1 -775					
58	V720-112-401-00	O-RING/P10	*	1 -439		1 -775					
59	V730-101-401-00	RING,BACK UP	*	1 -439		1 -775					
60	K231-004-006-00	COLLAR/11X21X3	*	1 -439		1 -775					
61	V705-140-021-00	RING,SNAP/21 C	*	1 -439		1 -775					
62	K231-004-007-00	SEAL,DUST	*	1 -439		1 -775					
63	V720-112-402-20	O-RING/P22	*	1 -439		1 -775					
64	V720-112-401-60	O-RING/P16	*	1 -439		1 -775					
65	V304-260-010-00	NUT	*	1 -439		1 -775					
66	1568-507-001-00	SHAFT/SLOWRETURN	*	1 -120		1 -388					
66A	1568-507-001-10	SHAFT/SLOWRETURN	*	1 -439		1 -775		1			
67	1742-508-320-00	COVER/SHAFT COMP	*	1 -439		1 -775					
68	V201-260-802-00	BOLT/M 8X20	*	1 -439		1 -775					
69	V304-260-008-00	NUT	*	1 -439		1 -775					
70	1560-507-007-00	KNOB	*	1 -439		1 -775					
71	V111-166-003-50	SCREW/M6X35	*	1 -121		1 -388					
71A	V111-166-004-00	SCREW/M6X40	*	1 -439		1 -775					
72	V401-160-006-00	WASHER,SP/M 6	*	1 -439		1 -775					

FIG.102 HYD. SYSTEM (MAIN)(2/2)
(S TYPE-TG5330E4-No.1-439/TG5390E4-No.1-775)

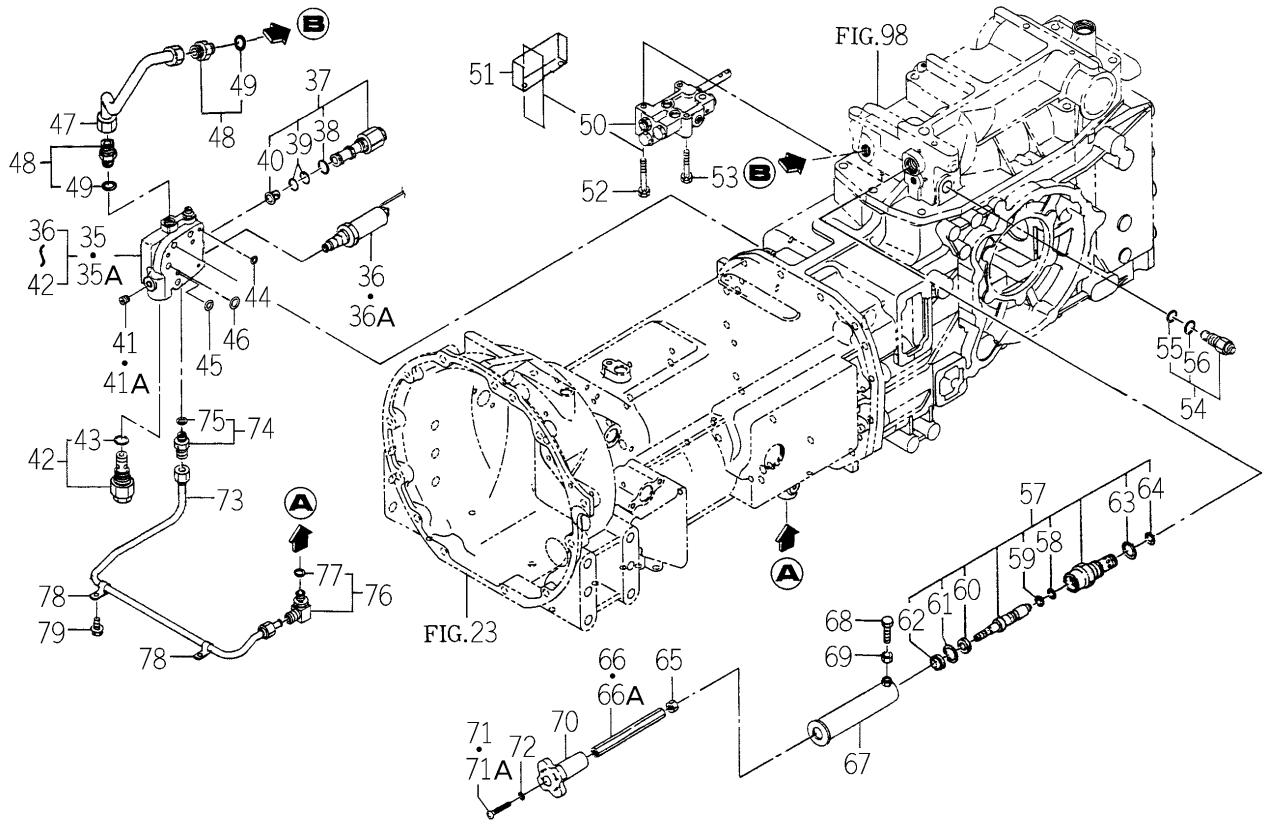

1742-508 -0100

KEY	PART CODE	DESCRIPTION	SPC	TYPE OF MODEL TG5330 E4	TG5330 E6	TG5390 E4	TG5390 E6	ITC	COL	GRP	REMARKS
73	1742-508-280-00	PIPE/PTO/S COMP	*	1 -439		1 -775					
74	1656-509-460-00	ADAPTOR/PF1/4 ASSY	*	1 -439		1 -775					
75	V720-112-401-10	RING/O	*	1 -439		1 -775					
76	1656-509-310-10	ADAPTER/L/PF1/4 ASSY	*	1 -439		1 -775					
77	V720-112-401-10	RING/O	*	1 -439		1 -775					
78	1650-509-003-10	HOLDER/10	*	2 -439		2 -775					
79	V231-360-801-20	FLANGEBOLT	*	2 -439		2 -775					

FIG.103 HYD. SYSTEM (MAIN)(1/2)
(H TYPE EXCEPT H3-TG5390E4-No.1-774)

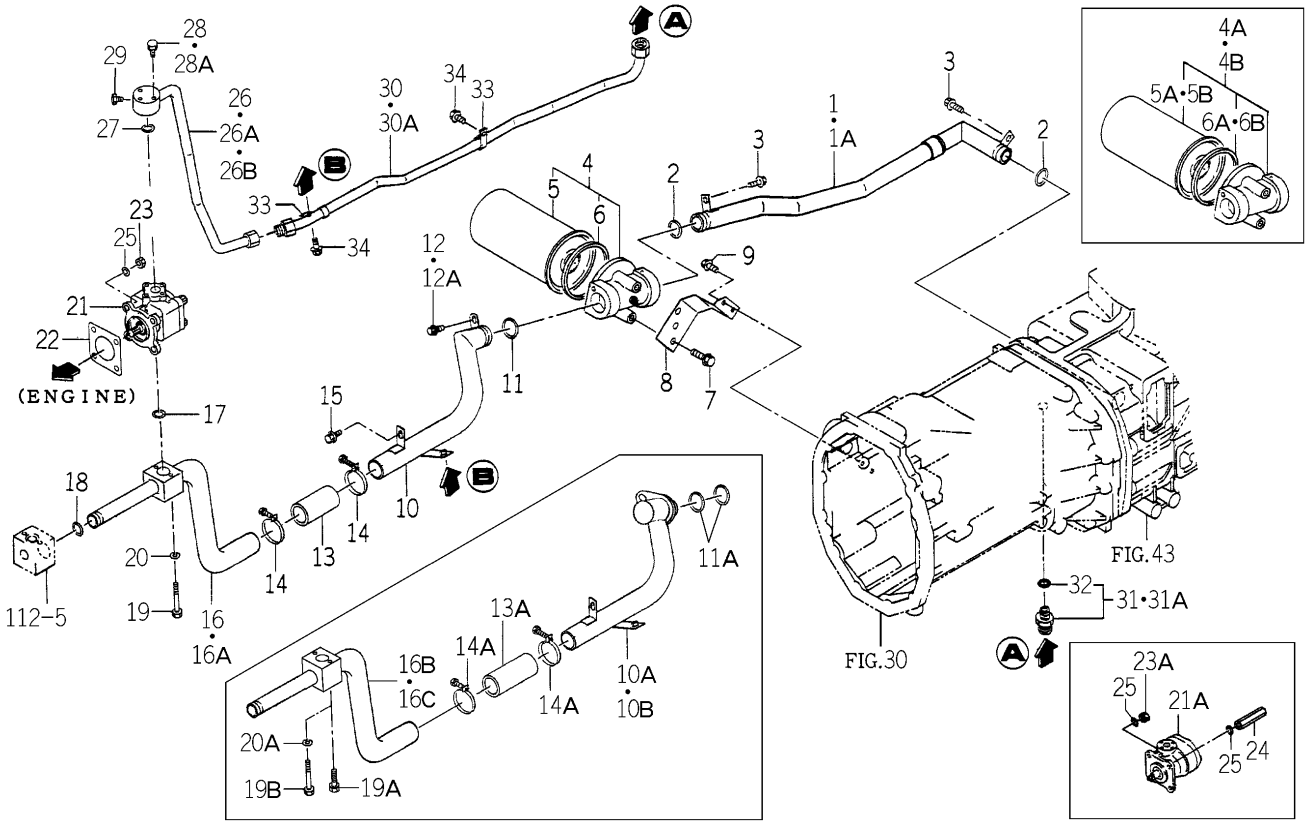

1743-508 -0100

KEY	PART CODE	DESCRIPTION	SPC	TYPE OF MODEL TG5330 E4	TG5330 E6	TG5390 E4	TG5390 E6	ITC	COL	GRP	REMARKS
1	1742-508-210-20	PIPE/SUC/REAR COMP	*			1 -774	1 -1227				
1A	1742-508-210-30	PIPE/SUC/REAR COMP	*				1 1228-	1			
2	V720-103-502-80	O-RING/P28	*			2 -774	2				
3	V231-360-801-20	FLANGEBOLT	*			2 -774	2				
4	1742-508-200-10	FILTER/SUCTION/20	*			1 -654	1 -654				
4A	1742-508-330-00	FILTER/SUCTION/20/R	*			1 -774	1 -869				
4B	1742-508-350-00	FILTER/SUCTION/30/R	*				1 870-				
5	1643-515-202-10	CARTRIDGE/20	*			1 -659	1 -654				
5A	1742-508-332-00	CARTRIDGE/20/R	*			1 -774	1 -877				
5B	1742-508-351-00	CARTRIDGE/30/R	*				1 878-				
6	1643-515-203-00	PACKING	*			1 -659	1 -654				
6A	1643-515-203-00	PACKING	*			1 -774	1 -877				
6B	1643-515-203-00	PACKING	*				1 878-				
7	V231-361-002-50	FLANGEBOLT	*			2 -774	2				
8	1742-508-005-00	BRACKET/FILTER	*			1 -774	1				
9	V231-360-801-60	FLANGEBOLT	*			2 -774	2				
10	1742-508-220-20	PIPE/SUC/MID COMP	*			1 -654	1 -654				
10A	1742-508-340-00	PIPE/SUC/MID COMP	*			1 -774	1 -1227				
10B	1742-508-340-10	PIPE/SUC/MID COMP	*				1 1228-	1			
11	V720-103-502-80	O-RING/P28	*			1 -654	1 -654				
11A	V720-103-502-80	O-RING/P28	*			2 -774	2 655-				
12	V231-360-801-20	FLANGEBOLT	*			1 -654	1 -654				
12A	V231-360-801-60	FLANGEBOLT	*			1 -774	1 655-				
13	1742-508-007-00	HOSE/80	*			1 -654	1 -654				
13A	1729-508-011-00	HOSE/100	*			1 -774	1 655-				
14	J061-236-044-00	CLAMP/WIRE/36-44	*			2 -654	2 -654				
14A	J061-232-040-00	CLAMP/WIRE/32-40	*			2 -774	2 655-				
15	V231-360-801-20	FLANGEBOLT	*			1 -774	1				
16	1743-508-210-00	PIPE/SUC/FRONT COMP	*			1 -654	1 -654				
16A	1743-508-210-10	PIPE/SUC/FRONT COMP	*			1 -774	1 -869	3			

FIG.103 HYD. SYSTEM (MAIN)(1/2)
(H TYPE EXCEPT H3-TG5390E4-No.1-774)

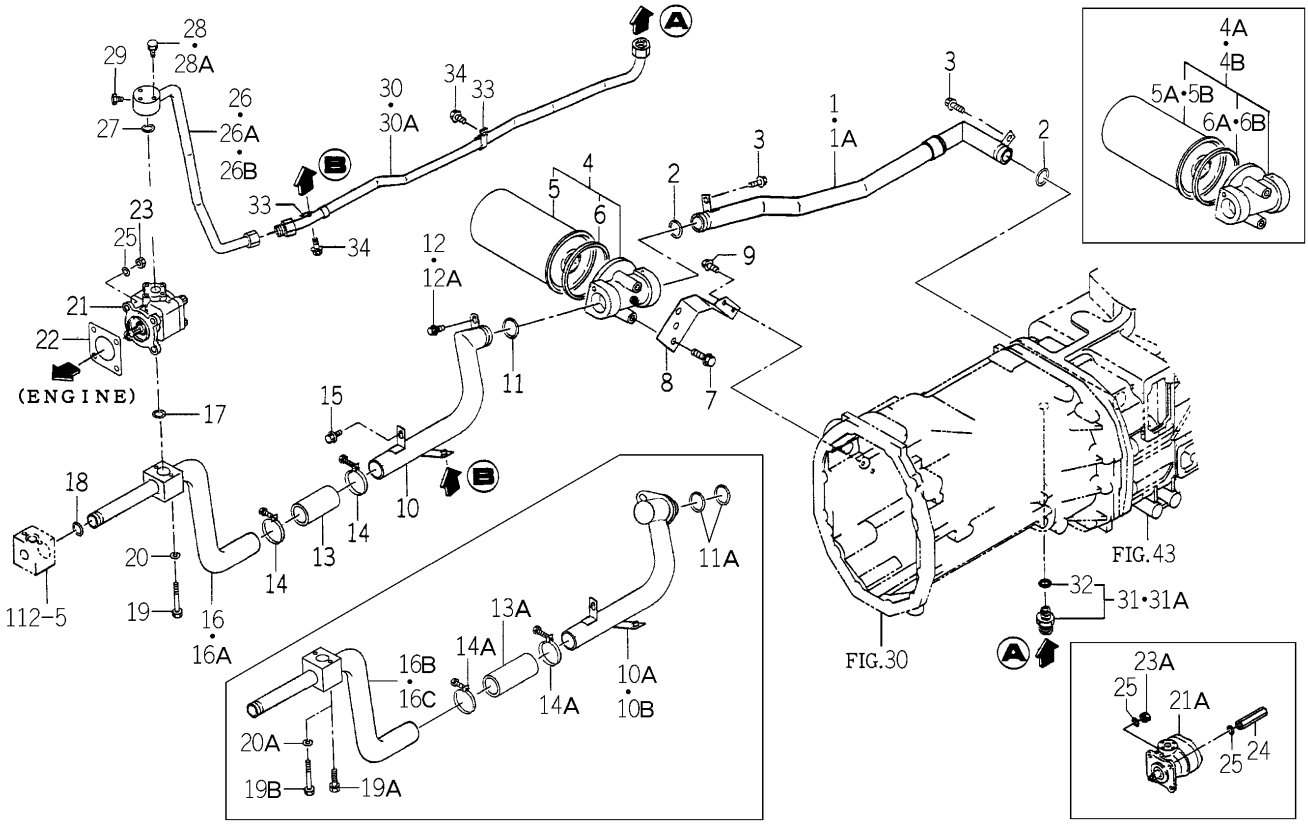

1743-508 -0100

KEY	PART CODE	DESCRIPTION	SPC	TYPE OF MODEL TG5330 E4	TG5330 E6	TG5390 E4	TG5390 E6	ITC	COL	GRP	REMARKS
16B	1747-508-200-00	PIPE/SUC/FRONT COMP	*				1 -1229				
16C	1747-508-200-10	PIPE/SUC/FRONT COMP	*				1 1230-	1			
17	V720-112-402-00	O-RING/P20	*			1	1				
18	1729-508-006-00	RING/O	*			1	1				
19	V200-360-605-50	BOLT	*			2 -654	2 -654				
19A	V210-560-605-00	BOLT/S	*			2 -774	2 -869				
19B	V200-360-606-00	BOLT	*				2 870-				
20	V401-160-006-00	WASHER,SP/M 6	*			2 -654	2 -654				
20A	V401-160-006-00	WASHER,SP/M 6	*				2 870-				
21	1742-508-300-00	PUMP/GEAR/13.2 ASSY	*			1 -774	1 -869				
21A	K135-028-000-00	PUMP/GEAR ASSY	*				1 870-				FIG 258
22	1404-503-006-00	PACKING,OIL PUMP	*			1 -774	1				
23	V304-260-008-00	NUT	*			4 -774	4 -869				
23A	V304-260-008-00	NUT	*				3 870-				
24	1723-508-002-00	NUT/M08	*				1 870-				
25	V401-160-008-00	WASHER,SP/M 8	*			4 -774	4				
26	1742-508-250-00	PIPE/DEL/FRONT COMP	*			1 -774	1 -869				
26A	1746-508-210-00	PIPE/DEL/FRONT COMP	*				1 -1232				
26B	1746-508-210-10	PIPE/DEL/FRONT COMP	*				1 1233-	1			
27	V720-112-402-00	O-RING/P20	*			1 -774	1				
28	V210-560-603-50	BOLT/S	*			3 -774	3 -869				
28A	V210-560-604-00	BOLT/S	*				3 870-				
29	V782-160-000-2T	PLUG/SCREW/SEAL	*			1 -774	1				
30	1742-508-310-00	PIPE/DEL/MID COMP	*			1 -774	1 -1230				
30A	1742-508-310-10	PIPE/DEL/MID COMP	*				1 1231-	1			
31	1729-508-290-00	ADAPTER/G3/8 ASSY	*			1 -774	1 -1241				
31A	1729-508-290-10	ADAPTER/G3/8 ASSY	*				1 1242-	1			
32	V720-112-401-40	O-RING/P14	*			1 -774	1				
33	1675-508-003-00	HOLDER/15	*			2 -774	2				
34	V231-360-801-20	FLANGEBOLT	*			2 -774	2				

FIG.103 HYD. SYSTEM (MAIN)(2/2)
(H TYPE EXCEPT H3-TG5390E4-No.1-774)

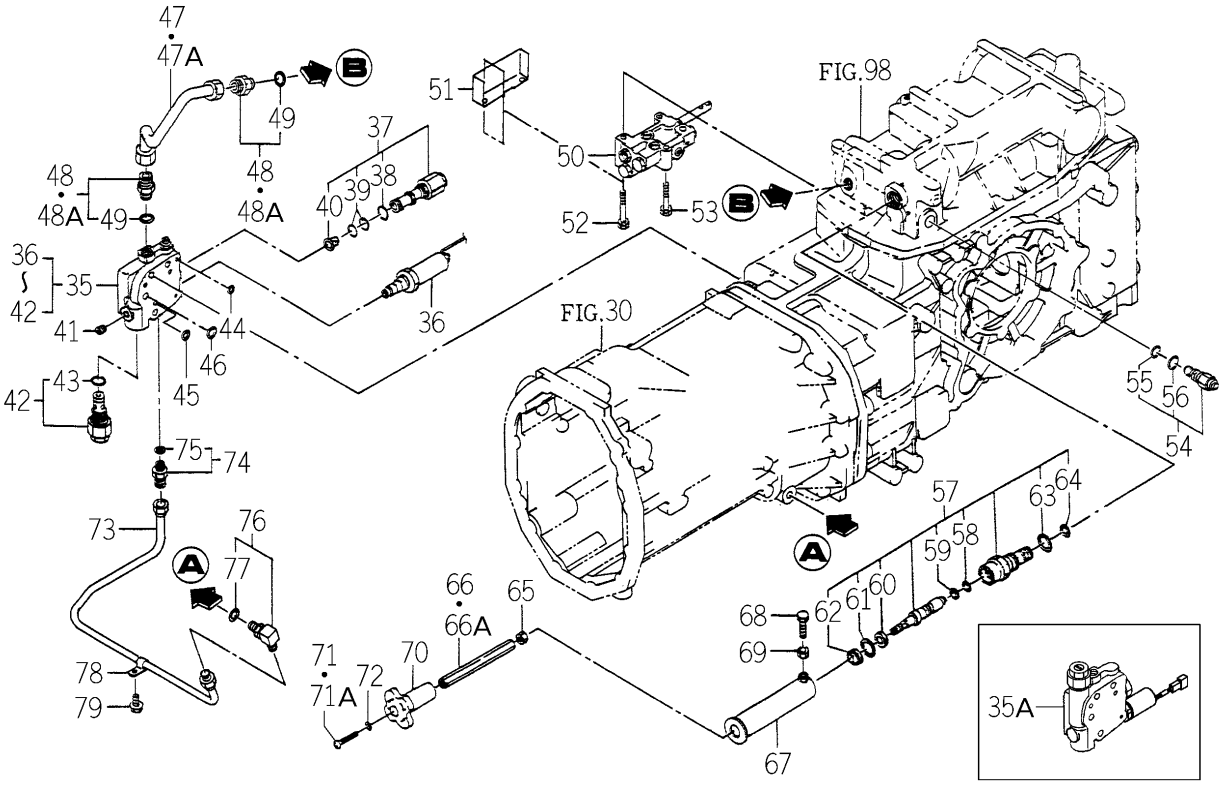

1743-508 -0100

KEY	PART CODE	DESCRIPTION	SPC	TYPE OF MODEL TG5330 E4	TG5330 E6	TG5390 E4	TG5390 E6	ITC	COL	GRP	REMARKS
35	K200-114-000-10	VALVE ASSY	*			1 -774	1 -869				
35A	K200-197-000-00	VALVE/INDEPENDENT	*				1 870-				FIG 262
36	K200-097-200-00	VALVE/PRV/G ASSY	*			1 -774	1 -869				
37	K200-114-100-00	VALVE/FROCON SET	*			1 -774	1 -869				
38	V720-112-402-00	O-RING/P20	*			1 -774	1 -869				
39	V723-111-501-60	O-RING	*			2 -774	2 -869				
40	1650-508-002-00	FILTER/LINE/12X18X15	*			1 -774	1 -869				
41	V780-140-000-2T	PLUG/SCREW/SEAL	*			2 -774	2 -869				
42	K250-057-000-00	VALVE/RELIEF ASSY	*			1 -774	1 -869				
43	V720-112-402-00	O-RING/P20	*			1 -774	1 -869				
44	V720-112-401-00	O-RING/P10	*			4 -774	4				
45	V720-112-401-20	O-RING/P12	*			1 -774	1				
46	V720-112-401-40	O-RING/P14	*			1 -774	1				
47	1742-508-270-00	PIPE/DEL/REAR COMP	*			1 -774	1 -1240				
47A	1742-508-270-10	PIPE/DEL/REAR COMP	*				1 1241-	1			
48	1729-508-290-00	ADAPTER/G3/8 ASSY	*				2 -1241				
48A	1729-508-290-10	ADAPTER/G3/8 ASSY	*				2 1242-	1			
49	V720-112-401-40	O-RING/P14	*				2				
50	K211-073-000-00	VALVE/CONTROL ASSY	*			1 -774	1				FIG 263
51	1742-508-009-00	COVER/VALVE	*			1 -774	1				
52	V211-260-806-50	BOLT,SEMS/M8X65	*			2 -774	2				
53	V211-260-805-00	BOLT/M8X50	*			1 -774	1				
54	K250-016-000-00	VALVE,RELIEF ASSY	*			1 -774	1				
55	V720-112-401-20	O-RING/P12	*			1 -774	1				
56	V720-112-401-80	O-RING/P18	*			1 -774	1				
57	K231-008-000-10	VALVE/FROCON ASSY	*			1 -774	1				
58	V720-112-401-00	O-RING/P10	*			1 -774	1				
59	V730-101-401-00	RING,BACK UP	*			1 -774	1				
60	K231-004-006-00	COLLAR/11X21X3	*			1 -774	1				
61	V705-140-021-00	RING,SNAP/21 C	*			1 -774	1				

FIG.103 HYD. SYSTEM (MAIN)(2/2)
(H TYPE EXCEPT H3-TG5390E4-No.1-774)

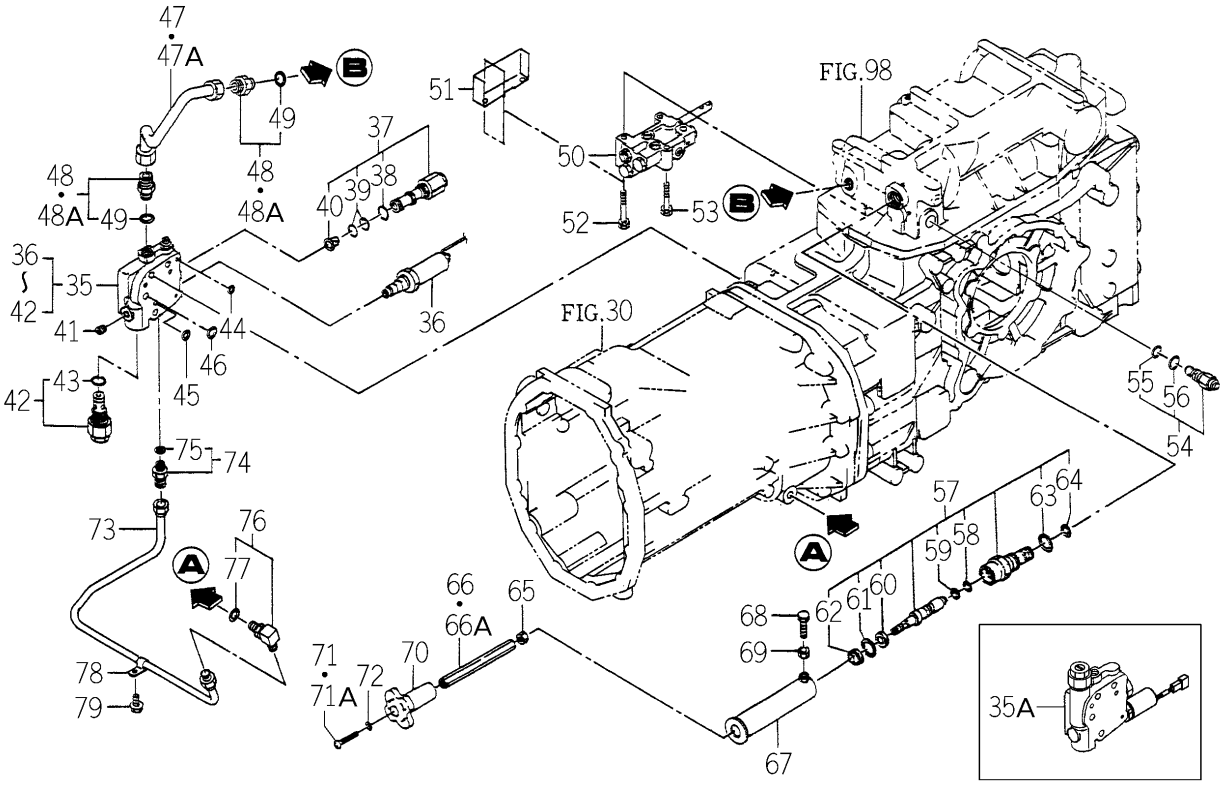

1743-508 -0100

KEY	PART CODE	DESCRIPTION	SPC	TYPE OF MODEL TG5330 E4	TG5330 E6	TG5390 E4	TG5390 E6	ITC	COL	GRP	REMARKS
62	K231-004-007-00	SEAL,DUST	*			1 -774	1				
63	V720-112-402-20	O-RING/P22	*			1 -774	1				
64	V720-112-401-60	O-RING/P16	*			1 -774	1				
65	V304-260-010-00	NUT	*			1 -774	1				
66	1568-507-001-00	SHAFT/SLOWRETURN	*			1 -388	1 -388				
66A	1568-507-001-10	SHAFT/SLOWRETURN	*			1 -774	1 389-	1			
67	1742-508-320-00	COVER/SHAFT COMP	*			1 -774	1				
68	V201-260-802-00	BOLT/M 8X20	*			1 -774	1				
69	V304-260-008-00	NUT	*			1 -774	1				
70	1560-507-007-00	KNOB	*			1 -774	1				
71	V111-166-003-50	SCREW/M6X35	*			1 -393	1 -393				
71A	V111-166-004-00	SCREW/M6X40	*			1 -774	1 394-				
72	V401-160-006-00	WASHER,SP/M 6	*			1 -774	1				
73	1743-508-220-00	PIPE/PTO/H COMP	*			1 -774	1				
74	1656-509-460-00	ADAPTOR/PF1/4 ASSY	*			1 -774	1				
75	V720-112-401-10	RING/O	*			1 -774	1				
76	1656-509-310-10	ADAPTER/L/PF1/4 ASSY	*			1 -774	1				
77	V720-112-401-10	RING/O	*			1 -774	1				
78	1650-509-003-10	HOLDER/10	*			1 -774	1				
79	V231-360-801-20	FLANGEBOLT	*			1 -774	1				

FIG.104 HYD. SYSTEM (MAIN) (P TYPE-No.1-/(1/2) Q TYPE-TG5330E4-No.1-443/ TG5390E4-No.1-777)

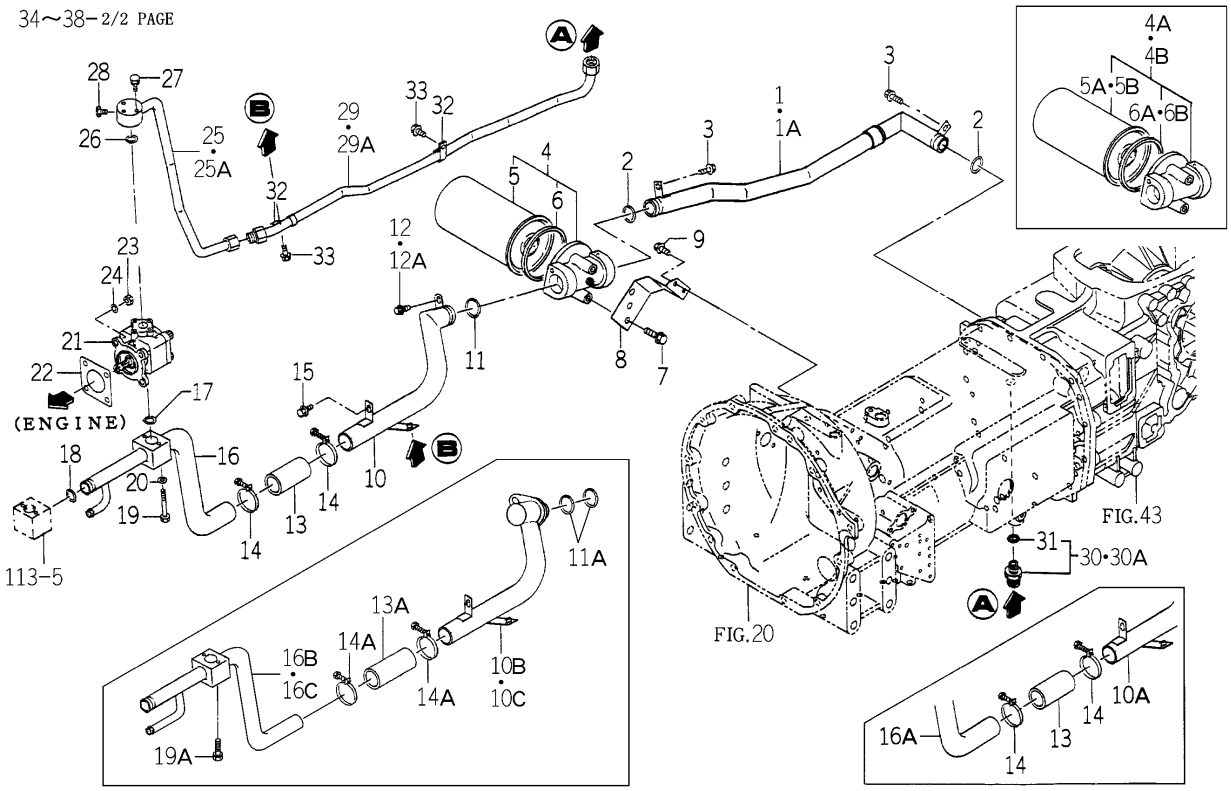

1742-508A-0100

KEY	PART CODE	DESCRIPTION	SPC	TYPE OF MODEL TG5330 E4	TG5330 E6	TG5390 E4	TG5390 E6	ITC	COL	GRP	REMARKS
1	1742-508-210-20	PIPE/SUC/REAR COMP	*	1 -443	1 -937	1 -777	1 -1227	1			
1A	1742-508-210-30	PIPE/SUC/REAR COMP	*		1 938-		1 1228-	1			
2	V720-103-502-80	O-RING/P28	*	2 -443	2	2 -777	2				
3	V231-360-801-20	FLANGEBOLT	*	2 -443	2	2 -777	2				
4	1742-508-200-10	FILTER/SUCTION/20	*	1 -443	1 -443	1 -777	1 -777				
4A	1742-508-330-00	FILTER/SUCTION/20/R	*		1 -497		1 -877				
4B	1742-508-350-00	FILTER/SUCTION/30/R	*		1 498-		1 878-				
5	1643-515-202-10	CARTRIDGE/20	*	1 -443	1 -443	1 -777	1 -777				
5A	1742-508-332-00	CARTRIDGE/20/R	*		1 -497		1 -877				
5B	1742-508-351-00	CARTRIDGE/30/R	*		1 498-		1 878-				
6	1643-515-203-00	PACKING	*	1 -443	1 -443	1 -777	1 -777				
6A	1643-515-203-00	PACKING	*		1 -497		1 -877				
6B	1643-515-203-00	PACKING	*		1 498-		1 878-				
7	V231-361-002-50	FLANGEBOLT	*	2 -443	2	2 -777	2				
8	1742-508-005-00	BRACKET/FILTER	*	1 -443	1	1 -777	1				
9	V231-360-801-60	FLANGEBOLT	*	2 -443	2	2 -777	2				
10	1742-508-220-10	PIPE/SUC/MID COMP	*	1 -18	1 -18	1 -16	1 -16				
10A	1742-508-220-20	PIPE/SUC/MID COMP	*	1 -443	1 -443	1 -777	1 -777	3			
10B	1742-508-340-00	PIPE/SUC/MID COMP	*		1 -937		1 -1227				
10C	1742-508-340-10	PIPE/SUC/MID COMP	*		1 938-		1 1228-	1			
11	V720-103-502-80	O-RING/P28	*	1 -443	1 -443	1 -777	1 -777				
11A	V720-103-502-80	O-RING/P28	*		2 444-		2 778-				
12	V231-360-801-20	FLANGEBOLT	*	1 -443	1 -443	1 -777	1 -777				
12A	V231-360-801-60	FLANGEBOLT	*		1 444-		1 778-				
13	1742-508-007-00	HOSE/80	*	1 -443	1 -443	1 -777	1 -777				
13A	1729-508-011-00	HOSE/100	*		1 444-		1 778-				
14	J061-236-044-00	CLAMP/WIRE/36-44	*	2 -443	2 -443	2 -777	2 -777				
14A	J061-232-040-00	CLAMP/WIRE/32-40	*		2 444-		2 778-				
15	V231-360-801-20	FLANGEBOLT	*	1	1	1	1				
16	1742-508-230-00	PIPE/SUC/FRONT COMP	*	1 -18	1 -18	1 -16	1 -16				

FIG.104 HYD. SYSTEM (MAIN) (P TYPE-No.1-/(1/2) Q TYPE-TG5330E4-No.1-443/ TG5390E4-No.1-777)

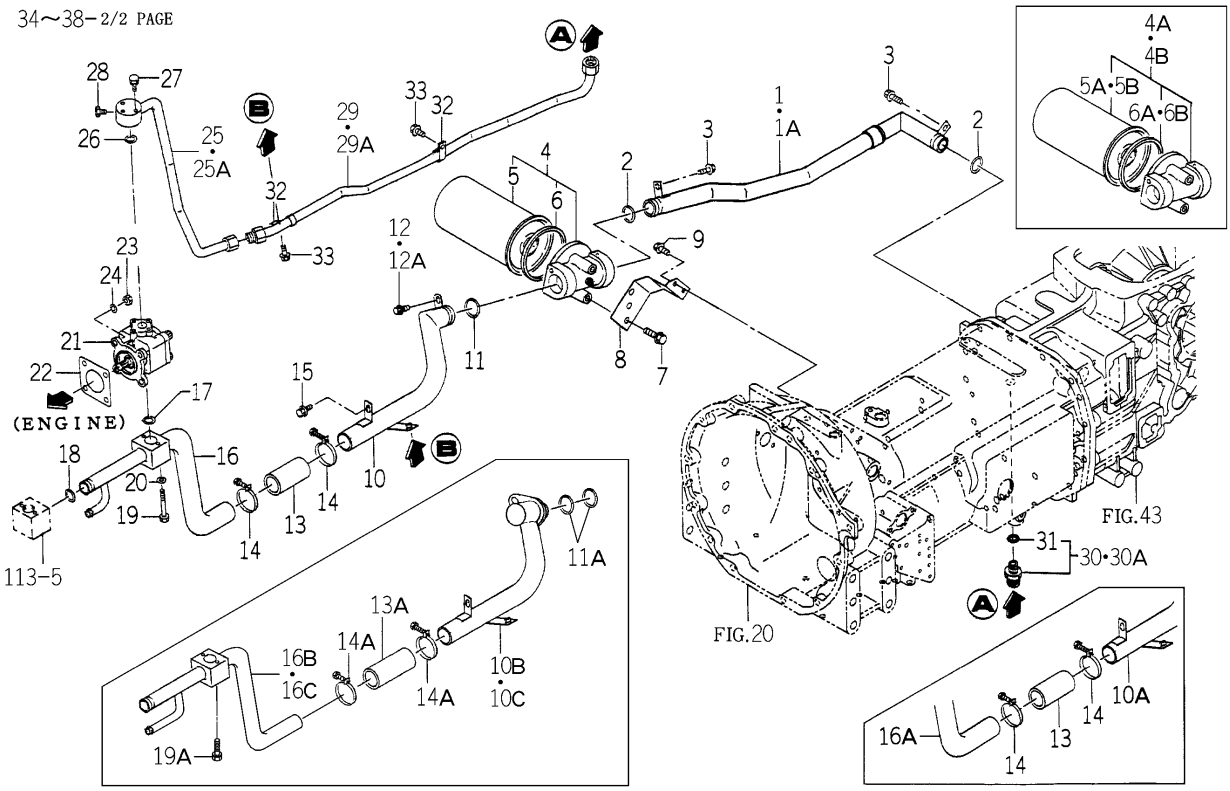

1742-508A-0100

KEY	PART CODE	DESCRIPTION	SPC	TYPE OF MODEL TG5330 E4	TG5330 E6	TG5390 E4	TG5390 E6	ITC	COL	GRP	REMARKS
16A	1742-508-230-10	PIPE/SUC/FRONT COMP	*	1 -443	1 -443	1 -777	1 -777	3			
16B	1742-508-240-00	PIPE/SUC/FRONT COMP	*		1 -937		1 -1227				
16C	1742-508-240-10	PIPE/SUC/FRONT COMP	*		1 938-		1 1228-	1			
17	V720-112-402-00	O-RING/P20	*	1 -443	1	1 -777	1				
18	1729-508-006-00	RING/O	*	1 -443	1	1 -777	1				
19	V200-360-605-50	BOLT	*	2 -443	2 -443	2 -777	2 -777				
19A	V210-560-605-00	BOLT/S	*		2 444-		2 778-				
20	V401-160-006-00	WASHER,SP/M 6	*	2 -443	2 -443	2 -777	2 -777				
21	1742-508-300-00	PUMP/GEAR/13.2 ASSY	*	1 -443	1	1 -777	1				
22	1404-503-006-00	PACKING,OIL PUMP	*	1 -443	1	1 -777	1				
23	V304-260-008-00	NUT	*	4 -443	4	4 -777	4				
24	V401-160-008-00	WASHER,SP/M 8	*	4 -443	4	4 -777	4				
25	1742-508-250-00	PIPE/DEL/FRONT COMP	*	1 -443	1 -937	1 -777	1 -1227				
25A	1742-508-250-10	PIPE/DEL/FRONT COMP	*		1 938-		1 1228-	1			
26	V720-112-402-00	O-RING/P20	*	1 -443	1	1 -777	1				
27	V210-560-603-50	BOLT/S	*	3 -443	3	3 -777	3				
28	V782-160-000-2T	PLUG/SCREW/SEAL	*	1 -443	1	1 -777	1				
29	1742-508-310-00	PIPE/DEL/MID COMP	*	1 -443	1 -937	1 -777	1 -1230				
29A	1742-508-310-10	PIPE/DEL/MID COMP	*		1 938-		1 1231-	1			
30	1729-508-290-00	ADAPTER/G3/8 ASSY	*	1 -443	1 -946	1 -777	1 -1241				
30A	1729-508-290-10	ADAPTER/G3/8 ASSY	*		1 947-		1 1242-	1			
31	V720-112-401-40	O-RING/P14	*	1 -443	1	1 -777	1				
32	1675-508-003-00	HOLDER/15	*	2 -443	2	2 -777	2				
33	V231-360-801-20	FLANGEBOLT	*	2 -443	2	2 -777	2				
34	1742-508-002-00	METAL/RELIEF	*	1 -18	1 -18	1 -16	1 -16				
34A	1742-508-002-10	METAL/RELIEF	*	1 -443	1 19-	1 -777	1 17-	1			
35	K250-057-000-00	VALVE/RELIEF ASSY	*	1 -443	1	1 -777	1				
36	V720-112-402-00	O-RING/P20	*	1 -443	1	1 -777	1				
37	V782-160-000-6T	PLUG/SCREW/SEAL	*	1 -443	1	1 -777	1				
38	V782-160-000-2T	PLUG/SCREW/SEAL	*	2 -443	2	2 -777	2				

FIG.104 HYD. SYSTEM (MAIN) (P TYPE-No.1-/(2/2) Q TYPE-TG5330E4-No.1-443/ TG5390E4-No.1-777)

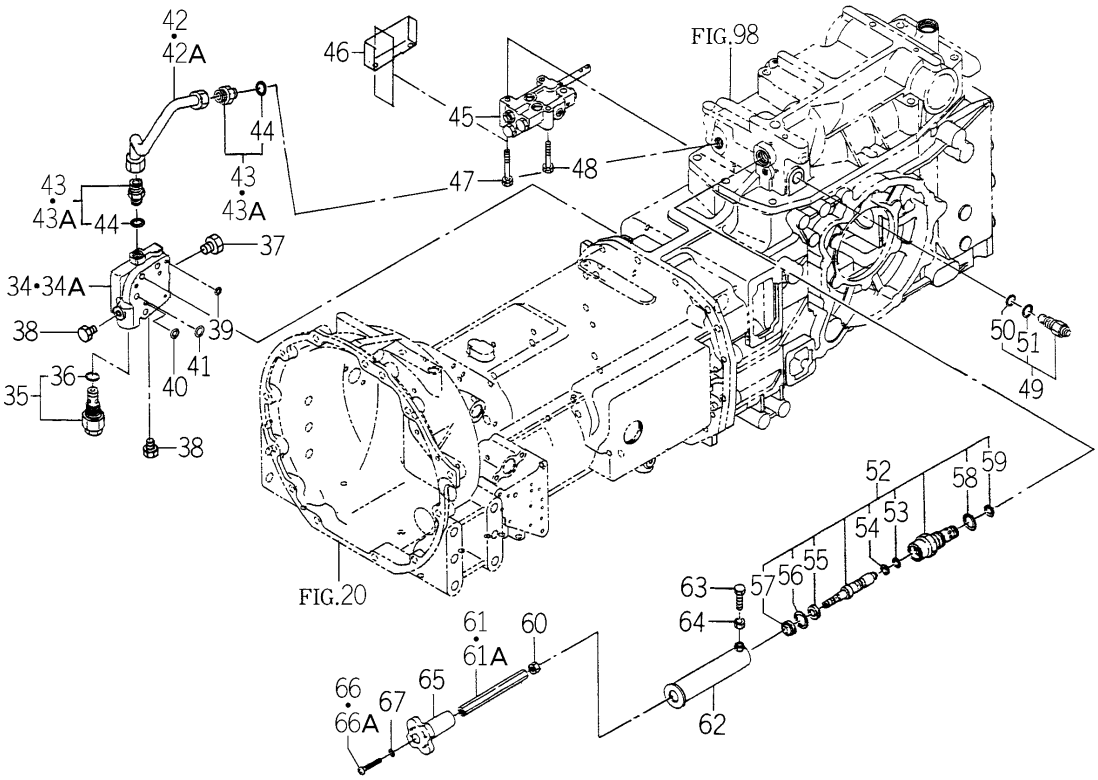

1742-508A-0100

KEY	PART CODE	DESCRIPTION	SPC	TYPE OF MODEL TG5330 E4	TG5330 E6	TG5390 E4	TG5390 E6	ITC	COL	GRP	REMARKS
39	V720-112-401-00	O-RING/P10	*	4 -443	4	4 -777	4				
40	V720-112-401-20	O-RING/P12	*	1 -443	1	1 -777	1				
41	V720-112-401-40	O-RING/P14	*	1 -443	1	1 -777	1				
42	1742-508-270-00	PIPE/DEL/REAR COMP	*	1 -443	1 -944	1 -777	1 -1240				
42A	1742-508-270-10	PIPE/DEL/REAR COMP	*		1 945-		1 1241-	1			
43	1729-508-290-00	ADAPTER/G3/8 ASSY	*	2 -443	2 -946	2 -777	2 -1241				
43A	1729-508-290-10	ADAPTER/G3/8 ASSY	*		2 947-		2 1242-	1			
44	V720-112-401-40	O-RING/P14	*	2 -443	2	2 -777	2				
45	K211-073-000-00	VALVE/CONTROL ASSY	*	1 -443	1	1 -777	1				FIG 263
46	1742-508-009-00	COVER/VALVE	*	1 -443	1	1 -777	1				
47	V211-260-806-50	BOLT,SEMS/M8X65	*	2 -443	2	2 -777	2				
48	V211-260-805-00	BOLT/M8X50	*	1 -443	1	1 -777	1				
49	K250-016-000-00	VALVE,RELIEF ASSY	*	1 -443	1	1 -777	1				
50	V720-112-401-20	O-RING/P12	*	1 -443	1	1 -777	1				
51	V720-112-401-80	O-RING/P18	*	1 -443	1	1 -777	1				
52	K231-008-000-10	VALVE/FROCON ASSY	*	1 -443	1	1 -777	1				
53	V720-112-401-00	O-RING/P10	*	1 -443	1	1 -777	1				
54	V730-101-401-00	RING,BACK UP	*	1 -443	1	1 -777	1				
55	K231-004-006-00	COLLAR/11X21X3	*	1 -443	1	1 -777	1				
56	V705-140-021-00	RING,SNAP/21 C	*	1 -443	1	1 -777	1				
57	K231-004-007-00	SEAL,DUST	*	1 -443	1	1 -777	1				
58	V720-112-402-20	O-RING/P22	*	1 -443	1	1 -777	1				
59	V720-112-401-60	O-RING/P16	*	1 -443	1	1 -777	1				
60	V304-260-010-00	NUT	*	1 -443	1	1 -777	1				
61	1568-507-001-00	SHAFT/SLOWRETURN	*	1 -120	1 -120	1 -388	1 -388				
61A	1568-507-001-10	SHAFT/SLOWRETURN	*	1 -443	1 121-	1 -777	1 389-	1			
62	1742-508-320-00	COVER/SHAFT COMP	*	1 -443	1	1 -777	1				
63	V201-260-802-00	BOLT/M 8X20	*	1 -443	1	1 -777	1				
64	V304-260-008-00	NUT	*	1 -443	1	1 -777	1				
65	1560-507-007-00	KNOB	*	1 -443	1	1 -777	1				

FIG.104 HYD. SYSTEM (MAIN) (P TYPE-No.1-/(2/2) Q TYPE-TG5330E4-No.1-443/ TG5390E4-No.1-777)

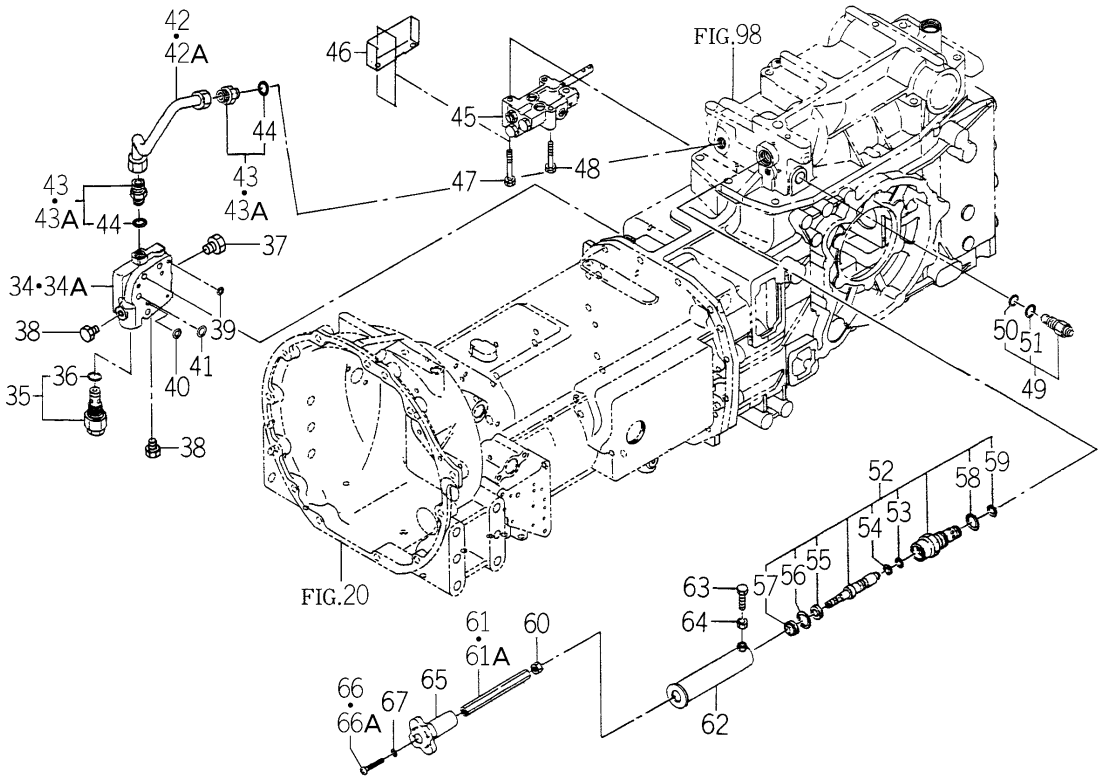

1742-508A-0100

KEY	PART CODE	DESCRIPTION	SPC	TYPE OF MODEL TG5330 E4	TG5330 E6	TG5390 E4	TG5390 E6	ITC	COL	GRP	REMARKS
66	V111-166-003-50	SCREW/M6X35	*	1 -120	1 -120	1 -391	1 -391				
66A	V111-166-004-00	SCREW/M6X40	*	1 -443	1 121-1	1 -777	1 392-1				
67	V401-160-006-00	WASHER,SP/M 6	*	1 -443		1 -777					

FIG.105 HYD. SYSTEM (MAIN)(1/2)
(H TYPE EXCEPT H3-TG5390E4-No.775-)

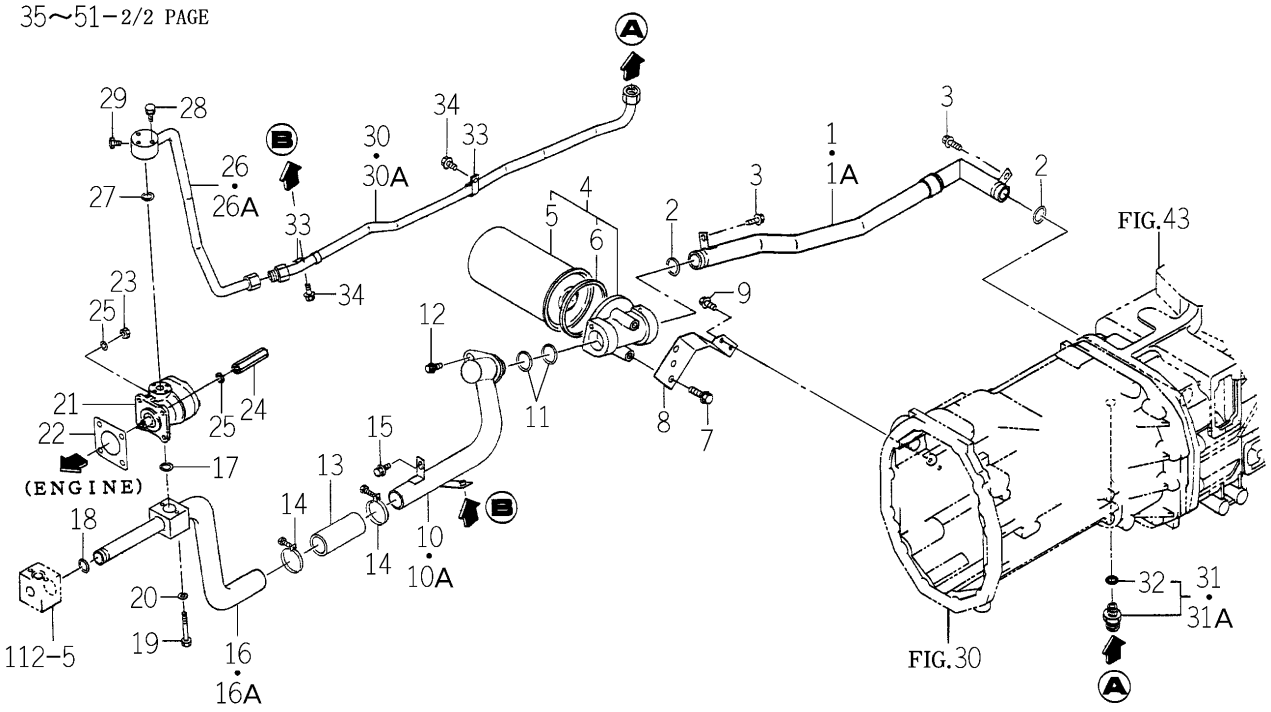

1747-508A-0100

KEY	PART CODE	DESCRIPTION	SPC	TYPE OF MODEL TG5330 E4	TG5330 E6	TG5390 E4	TG5390 E6	ITC	COL	GRP	REMARKS
1	1742-508-210-20	PIPE/SUC/REAR COMP	*			1 -1227					
1A	1742-508-210-30	PIPE/SUC/REAR COMP	*			1 1228-		1			
2	V720-103-502-80	O-RING/P28	*			2 775-					
3	V231-360-801-20	FLANGEBOLT	*			2 775-					
4	1742-508-330-00	FILTER/SUCTION/20/R	*			1 775-					
5	1742-508-332-00	CARTRIDGE/20/R	*			1 775-					
6	1643-515-203-00	PACKING	*			1 775-					
7	V231-361-002-50	FLANGEBOLT	*			2 775-					
8	1742-508-005-00	BRACKET/FILTER	*			1 775-					
9	V231-360-801-60	FLANGEBOLT	*			2 775-					
10	1742-508-340-00	PIPE/SUC/MID COMP	*			1 -1227					
10A	1742-508-340-10	PIPE/SUC/MID COMP	*			1 1228-		1			
11	V720-103-502-80	O-RING/P28	*			2 775-					
12	V231-360-801-60	FLANGEBOLT	*			1 775-					
13	1729-508-011-00	HOSE/100	*			1 775-					
14	J061-232-040-00	CLAMP/WIRE/32-40	*			2 775-					
15	V231-360-801-20	FLANGEBOLT	*			1 775-					
16	1747-508-200-00	PIPE/SUC/FRONT COMP	*			1 -1229					
16A	1747-508-200-10	PIPE/SUC/FRONT COMP	*			1 1230-		1			
17	V720-112-402-00	O-RING/P20	*			1 775-					
18	1729-508-006-00	RING/O	*			1 775-					
19	V200-360-606-00	BOLT	*			2 775-					
20	V401-160-006-00	WASHER,SP/M 6	*			2 775-					
21	K135-028-000-00	PUMP/GEAR ASSY	*			1 775-					FIG 258
22	1404-503-006-00	PACKING,OIL PUMP	*			1 775-					
23	V304-260-008-00	NUT	*			3 775-					
24	1723-508-002-00	NUT/M08	*			1 775-					
25	V401-160-008-00	WASHER,SP/M 8	*			4 775-					
26	1746-508-210-00	PIPE/DEL/FRONT COMP	*			1 -1232					
26A	1746-508-210-10	PIPE/DEL/FRONT COMP	*			1 1233-		1			

FIG.105 HYD. SYSTEM (MAIN)(1/2)
(H TYPE EXCEPT H3-TG5390E4-No.775-)

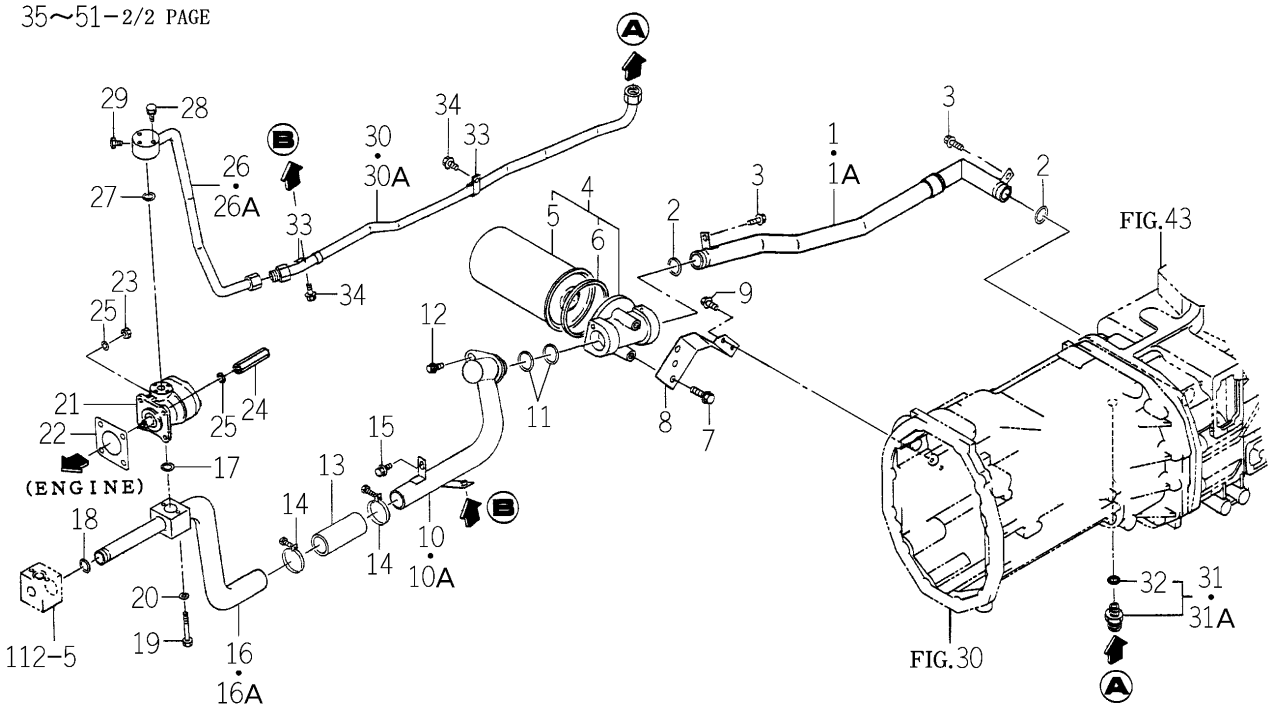

1747-508A-0100

KEY	PART CODE	DESCRIPTION	SPC	TYPE OF MODEL TG5330 E4	TG5330 E6	TG5390 E4	TG5390 E6	ITC	COL	GRP	REMARKS
27	V720-112-402-00	O-RING/P20	*			1 775-					
28	V210-560-604-00	BOLT/S	*			3 775-					
29	V782-160-000-2T	PLUG/SCREW/SEAL	*			1 775-					
30	1742-508-310-00	PIPE/DEL/MID COMP	*			1 -1230					
30A	1742-508-310-10	PIPE/DEL/MID COMP	*			1 1231-		1			
31	1729-508-290-00	ADAPTER/G3/8 ASSY	*			1 -1241					
31A	1729-508-290-10	ADAPTER/G3/8 ASSY	*			1 1242-		1			
32	V720-112-401-40	O-RING/P14	*			1 775-					
33	1675-508-003-00	HOLDER/15	*			2 775-					
34	V231-360-801-20	FLANGEBOLT	*			2 775-					
35	K200-114-000-10	VALVE ASSY	*			1 -957					
35A	K200-114-000-20	VALVE/INDEPENDENT	*			1 958-		1			
36	K200-097-200-00	VALVE/PRV/G ASSY	*			1 -957					
36A	K290-003-000-30	VALVE/PRV/B ASSY	*			1 958-					
37	V720-112-402-00	O-RING/P20	*			1 958-					
38	K290-001-001-00	RING/O(AS568/013)	*			1 958-					
39	K290-001-002-00	RING/O(AS568/014)	*			1 958-					
40	K290-001-003-00	RING/O(AS568/015)	*			1 958-					
41	K200-114-100-00	VALVE/FROCON SET	*			1 775-					
42	V720-112-402-00	O-RING/P20	*			1 775-					
43	V723-111-501-60	O-RING	*			2 -961					
43A	V723-111-501-60	O-RING	*			1 962-					
44	1650-508-002-00	FILTER/LINE/12X18X15	*			1 775-					
45	V780-140-000-2T	PLUG/SCREW/SEAL	*			2 775-					
46	K250-057-000-00	VALVE/RELIEF ASSY	*			1 775-					
47	V720-112-402-00	O-RING/P20	*			1 775-					
48	V720-112-401-00	O-RING/P10	*			4 775-					
49	V720-112-401-20	O-RING/P12	*			1 775-					
50	V720-112-401-40	O-RING/P14	*			1 775-					
51	1742-508-270-00	PIPE/DEL/REAR COMP	*			1 -1240					

FIG.105 HYD. SYSTEM (MAIN)(2/2)
(H TYPE EXCEPT H3-TG5390E4-No.775-)

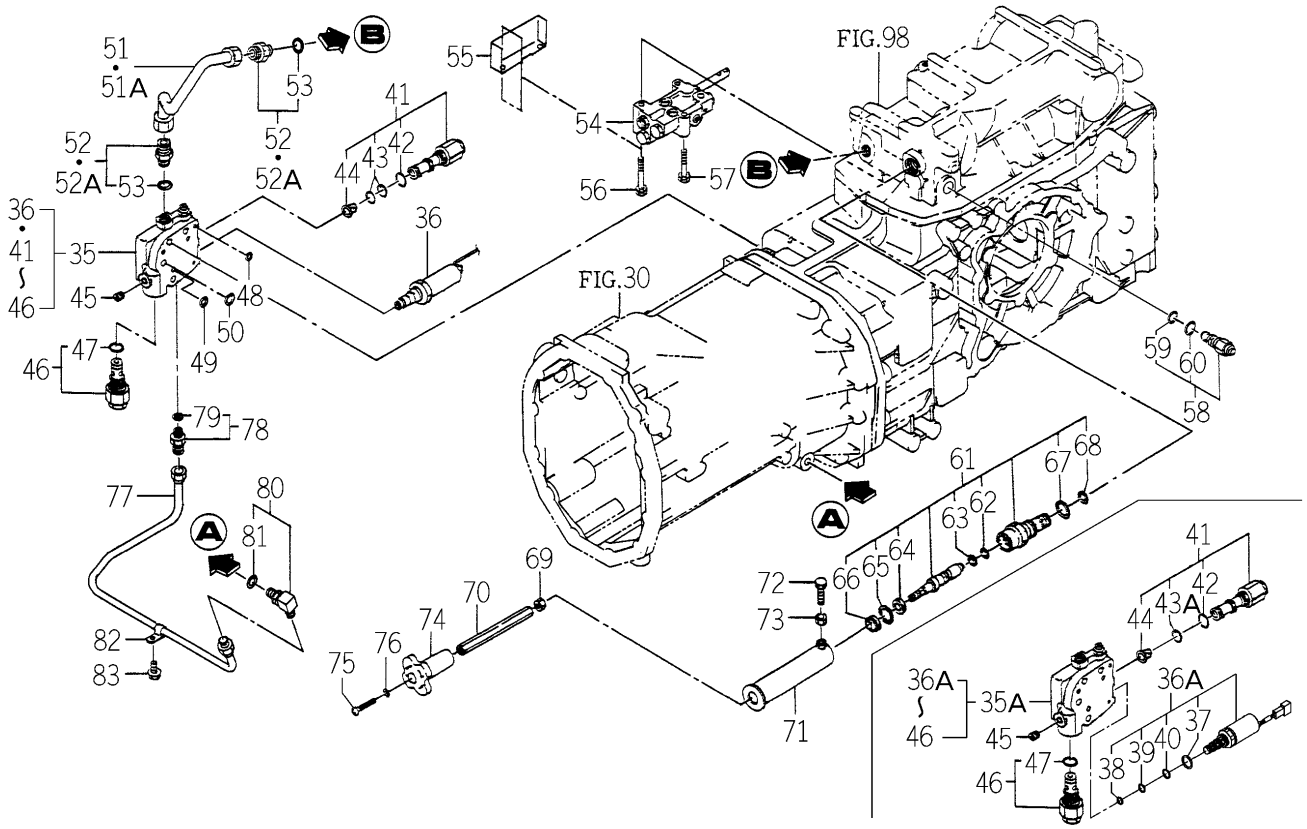

1747-508A-0100

KEY	PART CODE	DESCRIPTION	SPC	TYPE OF MODEL TG5330 E4	TG5330 E6	TG5390 E4	TG5390 E6	ITC	COL	GRP	REMARKS
51A	1742-508-270-10	PIPE/DEL/REAR COMP	*			1 1241-		1			
52	1729-508-290-00	ADAPTER/G3/8 ASSY	*			2 -1241					
52A	1729-508-290-10	ADAPTER/G3/8 ASSY	*			2 1242-		1			
53	V720-112-401-40	O-RING/P14	*			2 775-					
54	K211-073-000-00	VALVE/CONTROL ASSY	*			1 775-					FIG 263
55	1742-508-009-00	COVER/VALVE	*			1 775-					
56	V211-260-806-50	BOLT,SEMS/M8X65	*			2 775-					
57	V211-260-805-00	BOLT/M8X50	*			1 775-					
58	K250-016-000-00	VALVE,RELIEF ASSY	*			1 775-					
59	V720-112-401-20	O-RING/P12	*			1 775-					
60	V720-112-401-80	O-RING/P18	*			1 775-					
61	K231-008-000-10	VALVE/FROCON ASSY	*			1 775-					
62	V720-112-401-00	O-RING/P10	*			1 775-					
63	V730-101-401-00	RING,BACK UP	*			1 775-					
64	K231-004-006-00	COLLAR/11X21X3	*			1 775-					
65	V705-140-021-00	RING,SNAP/21 C	*			1 775-					
66	K231-004-007-00	SEAL,DUST	*			1 775-					
67	V720-112-402-20	O-RING/P22	*			1 775-					
68	V720-112-401-60	O-RING/P16	*			1 775-					
69	V304-260-010-00	NUT	*			1 775-					
70	1568-507-001-10	SHAFT/SLOWRETURN	*			1 775-					
71	1742-508-320-00	COVER/SHAFT COMP	*			1 775-					
72	V201-260-802-00	BOLT/M 8X20	*			1 775-					
73	V304-260-008-00	NUT	*			1 775-					
74	1560-507-007-00	KNOB	*			1 775-					
75	V111-166-004-00	SCREW/M6X40	*			1 775-					
76	V401-160-006-00	WASHER,SP/M 6	*			1 775-					
77	1743-508-220-00	PIPE/PTO/H COMP	*			1 775-					
78	1656-509-460-00	ADAPTOR/PF1/4 ASSY	*			1 775-					
79	V720-112-401-10	RING/O	*			1 775-					

FIG.105 HYD. SYSTEM (MAIN)(2/2)
(H TYPE EXCEPT H3-TG5390E4-No.775-)

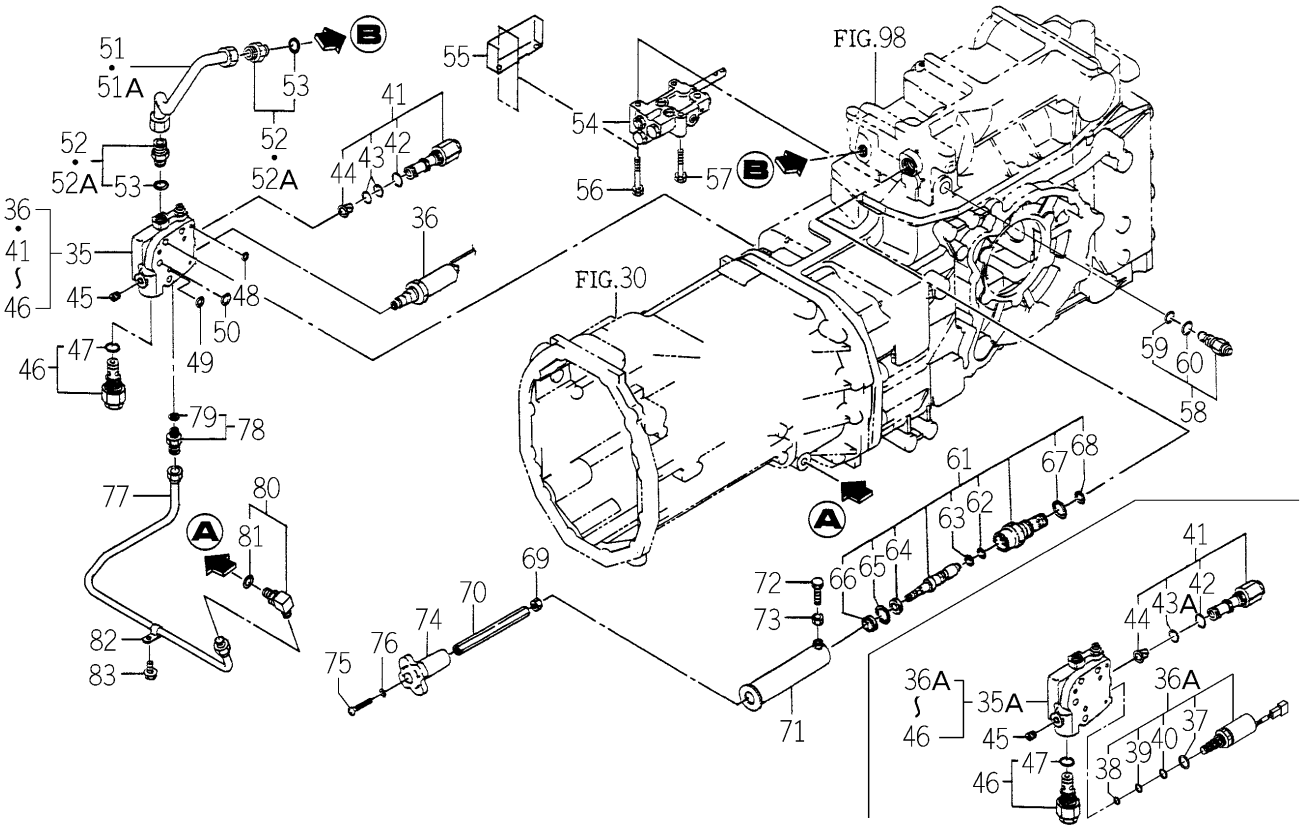

1747-508A-0100

KEY	PART CODE	DESCRIPTION	SPC	TYPE OF MODEL TG5330 E4	TG5330 E6	TG5390 E4	TG5390 E6	ITC	COL	GRP	REMARKS
80	1656-509-310-10	ADAPTER/L/PF1/4 ASSY	*			1 775-					
81	V720-112-401-10	RING/O	*			1 775-					
82	1650-509-003-10	HOLDER/10	*			1 775-					
83	V231-360-801-20	FLANGEBOLT	*			1 775-					

FIG.106 HYD. SYSTEM (MAIN)(1/2)
(S TYPE-TG5330E4-No.440-/TG5390E4-No.776-)

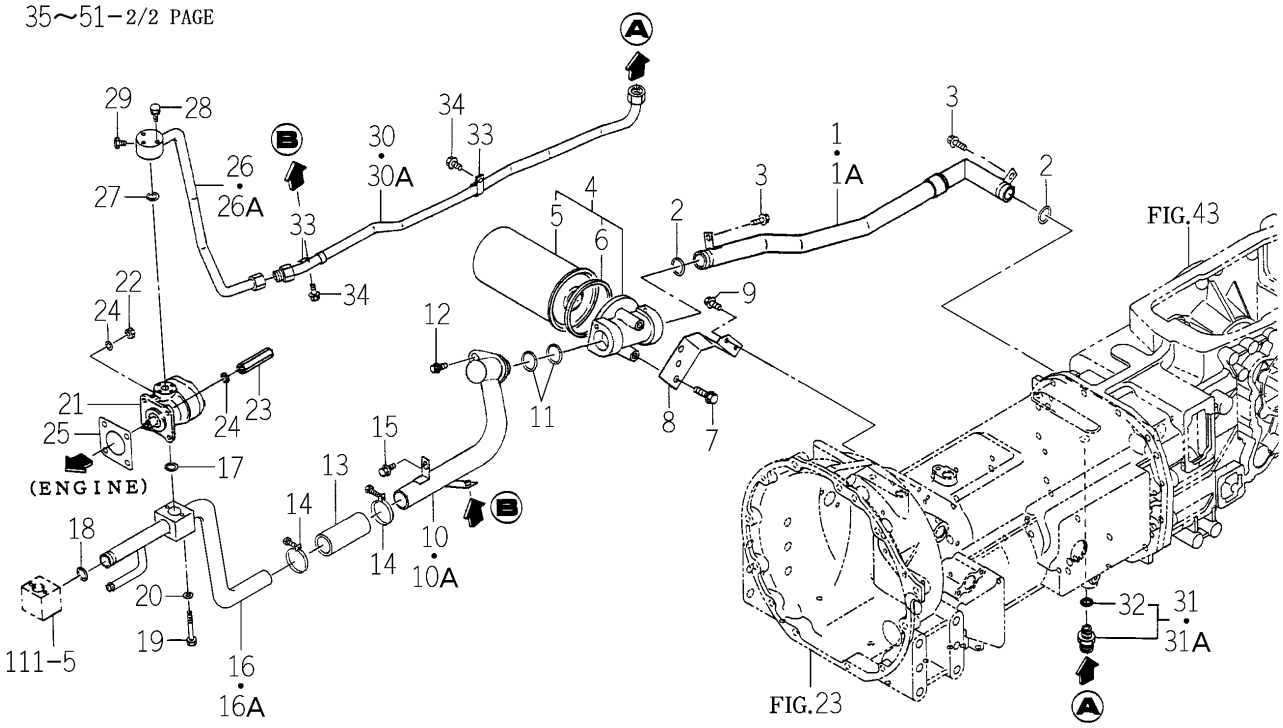

1746-508B-0100

KEY	PART CODE	DESCRIPTION	SPC	TYPE OF MODEL TG5330 E4	TG5330 E6	TG5390 E4	TG5390 E6	ITC	COL	GRP	REMARKS
1	1742-508-210-20	PIPE/SUC/REAR COMP	*	1 -937		1 -1227					
1A	1742-508-210-30	PIPE/SUC/REAR COMP	*	1 938-		1 1228-		1			
2	V720-103-502-80	O-RING/P28	*	2 440-		2 776-					
3	V231-360-801-20	FLANGEBOLT	*	2 440-		2 776-					
4	1742-508-330-00	FILTER/SUCTION/20/R	*	1 440-		1 776-					
5	1742-508-332-00	CARTRIDGE/20/R	*	1 440-		1 776-					
6	1643-515-203-00	PACKING	*	1 440-		1 776-					
7	V231-361-002-50	FLANGEBOLT	*	2 440-		2 776-					
8	1742-508-005-00	BRACKET/FILTER	*	1 440-		1 776-					
9	V231-360-801-60	FLANGEBOLT	*	2 440-		2 776-					
10	1742-508-340-00	PIPE/SUC/MID COMP	*	1 -937		1 -1227					
10A	1742-508-340-10	PIPE/SUC/MID COMP	*	1 938-		1 1228-		1			
11	V720-103-502-80	O-RING/P28	*	2 440-		2 776-					
12	V231-360-801-60	FLANGEBOLT	*	1 440-		1 776-					
13	1729-508-011-00	HOSE/100	*	1 440-		1 776-					
14	J061-232-040-00	CLAMP/WIRE/32-40	*	2 440-		2 776-					
15	V231-360-801-20	FLANGEBOLT	*	1 440-		1 776-					
16	1746-508-200-00	PIPE/SUC/FRONT COMP	*	1 -937		1 -1227					
16A	1746-508-200-10	PIPE/SUC/FRONT COMP	*	1 938-		1 1228-		1			
17	V720-112-402-00	O-RING/P20	*	1 440-		1 776-					
18	1729-508-006-00	RING/O	*	1 440-		1 776-					
19	V200-360-606-00	BOLT	*	2 440-		2 776-					
20	V401-160-006-00	WASHER,SP/M 6	*	2 440-		2 776-					
21	K135-028-000-00	PUMP/GEAR ASSY	*	1 440-		1 776-					FIG 258
22	V304-260-008-00	NUT	*	3 440-		3 776-					
23	1723-508-002-00	NUT/M08	*	1 440-		1 776-					
24	V401-160-008-00	WASHER,SP/M 8	*	4 440-		4 776-					
25	1404-503-006-00	PACKING,OIL PUMP	*	1 440-		1 776-					
26	1746-508-210-00	PIPE/DEL/FRONT COMP	*	1 -937		1 -1232					
26A	1746-508-210-10	PIPE/DEL/FRONT COMP	*	1 938-		1 1233-		1			

FIG.106 HYD. SYSTEM (MAIN)(1/2)
(S TYPE-TG5330E4-No.440-/TG5390E4-No.776-)

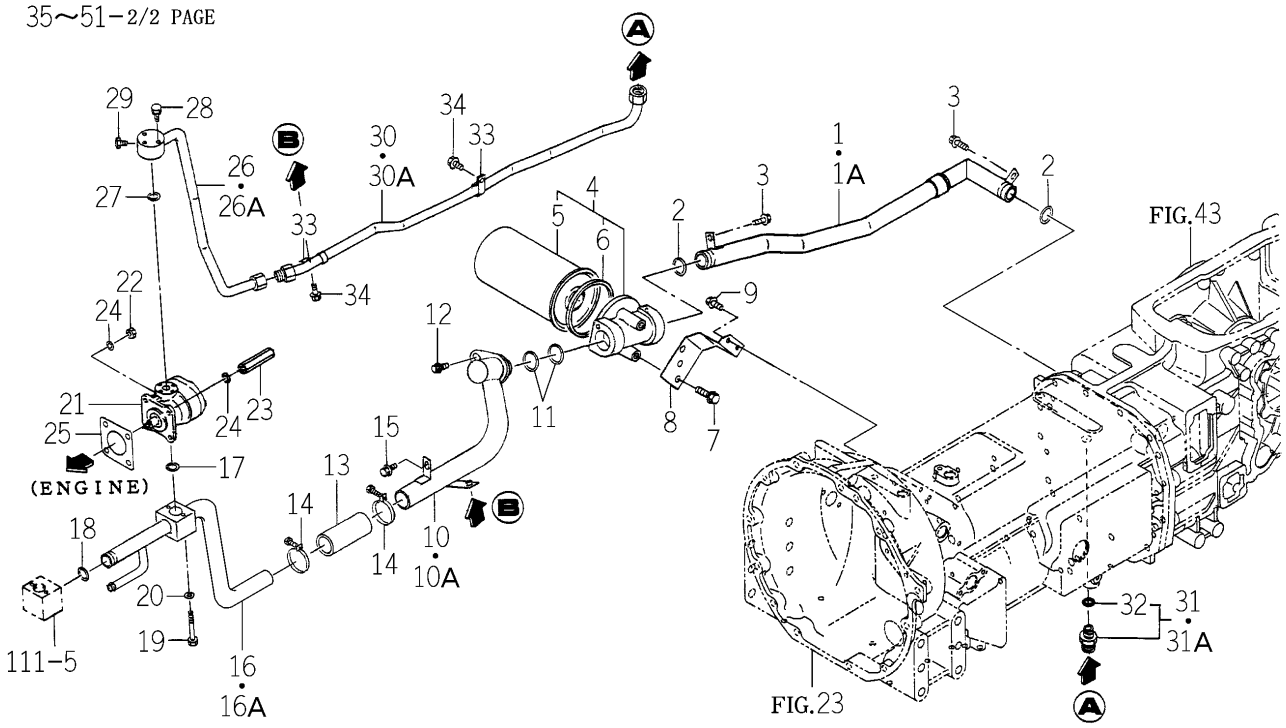

1746-508B-0100

KEY	PART CODE	DESCRIPTION	SPC	TYPE OF MODEL TG5330 E4	TG5330 E6	TG5390 E4	TG5390 E6	ITC	COL	GRP	REMARKS
27	V720-112-402-00	O-RING/P20	*	1 440-		1 776-					
28	V210-560-604-00	BOLT/S	*	3 440-		3 776-					
29	V782-160-000-2T	PLUG/SCREW/SEAL	*	1 440-		1 776-					
30	1742-508-310-00	PIPE/DEL/MID COMP	*	1 -937		1 -1230					
30A	1742-508-310-10	PIPE/DEL/MID COMP	*	1 938-		1 1231-		1			
31	1729-508-290-00	ADAPTER/G3/8 ASSY	*	1 -946		1 -1241					
31A	1729-508-290-10	ADAPTER/G3/8 ASSY	*	1 947-		1 1242-		1			
32	V720-112-401-40	O-RING/P14	*	1 440-		1 776-					
33	1675-508-003-00	HOLDER/15	*	2 440-		2 776-					
34	V231-360-801-20	FLANGEBOLT	*	2 440-		2 776-					
35	K200-114-000-10	VALVE ASSY	*	1 -658		1 -957					
35A	K200-114-000-20	VALVE/INDEPENDENT	*	1 659-		1 958-		1			
36	K200-097-200-00	VALVE/PRV/G ASSY	*	1 -658		1 -957					
36A	K290-003-000-30	VALVE/PRV/B ASSY	*	1 659-		1 958-					
37	V720-112-402-00	O-RING/P20	*	1 659-		1 958-					
38	K290-001-001-00	RING/O(AS568/013)	*	1 659-		1 958-					
39	K290-001-002-00	RING/O(AS568/014)	*	1 659-		1 958-					
40	K290-001-003-00	RING/O(AS568/015)	*	1 659-		1 958-					
41	K200-114-100-00	VALVE/FROCON SET	*	1 440-		1 776-					
42	V720-112-402-00	O-RING/P20	*	1 440-		1 776-					
43	V723-111-501-60	O-RING	*	2 -685		2 -961					
43A	V723-111-501-60	O-RING	*	1 686-		1 962-					
44	1650-508-002-00	FILTER/LINE/12X18X15	*	1 440-		1 776-					
45	V780-140-000-2T	PLUG/SCREW/SEAL	*	2 440-		2 776-					
46	K250-057-000-00	VALVE/RELIEF ASSY	*	1 440-		1 776-					
47	V720-112-402-00	O-RING/P20	*	1 440-		1 776-					
48	V720-112-401-00	O-RING/P10	*	4 440-		4 776-					
49	V720-112-401-20	O-RING/P12	*	1 440-		1 776-					
50	V720-112-401-40	O-RING/P14	*	1 440-		1 776-					
51	1742-508-270-00	PIPE/DEL/REAR COMP	*	1 -944		1 -1240					

FIG.106 HYD. SYSTEM (MAIN)(2/2)
(S TYPE-TG5330E4-No.440-/TG5390E4-No.776-)

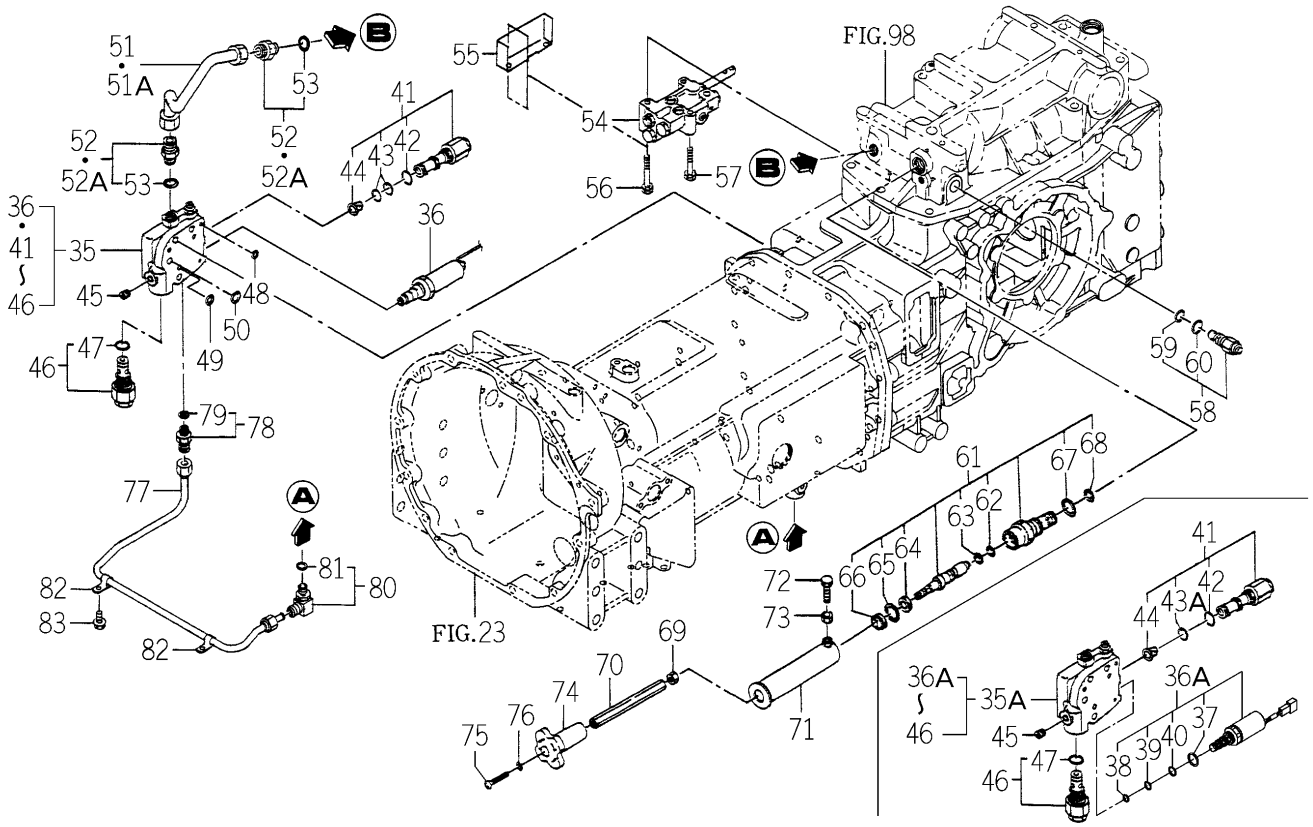

1746-508B-0100

KEY	PART CODE	DESCRIPTION	SPC	TYPE OF MODEL TG5330 E4	TG5330 E6	TG5390 E4	TG5390 E6	ITC	COL	GRP	REMARKS
51A	1742-508-270-10	PIPE/DEL/REAR COMP	*	1 945-		1 1241-		1			
52	1729-508-290-00	ADAPTER/G3/8 ASSY	*	2 -946		2 -1241					
52A	1729-508-290-10	ADAPTER/G3/8 ASSY	*	2 947-		2 1242-		1			
53	V720-112-401-40	O-RING/P14	*	2 440-		2 776-					
54	K211-073-000-00	VALVE/CONTROL ASSY	*	1 440-		1 776-					FIG 263
55	1742-508-009-00	COVER/VALVE	*	1 440-		1 776-					
56	V211-260-806-50	BOLT,SEMS/M8X65	*	2 440-		2 776-					
57	V211-260-805-00	BOLT/M8X50	*	1 440-		1 776-					
58	K250-016-000-00	VALVE,RELIEF ASSY	*	1 440-		1 776-					
59	V720-112-401-20	O-RING/P12	*	1 440-		1 776-					
60	V720-112-401-80	O-RING/P18	*	1 440-		1 776-					
61	K231-008-000-10	VALVE/FROCON ASSY	*	1 440-		1 776-					
62	V720-112-401-00	O-RING/P10	*	1 440-		1 776-					
63	V730-101-401-00	RING,BACK UP	*	1 440-		1 776-					
64	K231-004-006-00	COLLAR/11X21X3	*	1 440-		1 776-					
65	V705-140-021-00	RING,SNAP/21 C	*	1 440-		1 776-					
66	K231-004-007-00	SEAL,DUST	*	1 440-		1 776-					
67	V720-112-402-20	O-RING/P22	*	1 440-		1 776-					
68	V720-112-401-60	O-RING/P16	*	1 440-		1 776-					
69	V304-260-010-00	NUT	*	1 440-		1 776-					
70	1568-507-001-10	SHAFT/SLOWRETURN	*	1 440-		1 776-					
71	1742-508-320-00	COVER/SHAFT COMP	*	1 440-		1 776-					
72	V201-260-802-00	BOLT/M 8X20	*	1 440-		1 776-					
73	V304-260-008-00	NUT	*	1 440-		1 776-					
74	1560-507-007-00	KNOB	*	1 440-		1 776-					
75	V111-166-004-00	SCREW/M6X40	*	1 440-		1 776-					
76	V401-160-006-00	WASHER,SP/M 6	*	1 440-		1 776-					
77	1742-508-280-00	PIPE/PTO/S COMP	*	1 440-		1 776-					
78	1656-509-460-00	ADAPTOR/PF1/4 ASSY	*	1 440-		1 776-					
79	V720-112-401-10	RING/O	*	1 440-		1 776-					

FIG.106 HYD. SYSTEM (MAIN)(2/2)
(S TYPE-TG5330E4-No.440-/TG5390E4-No.776-)

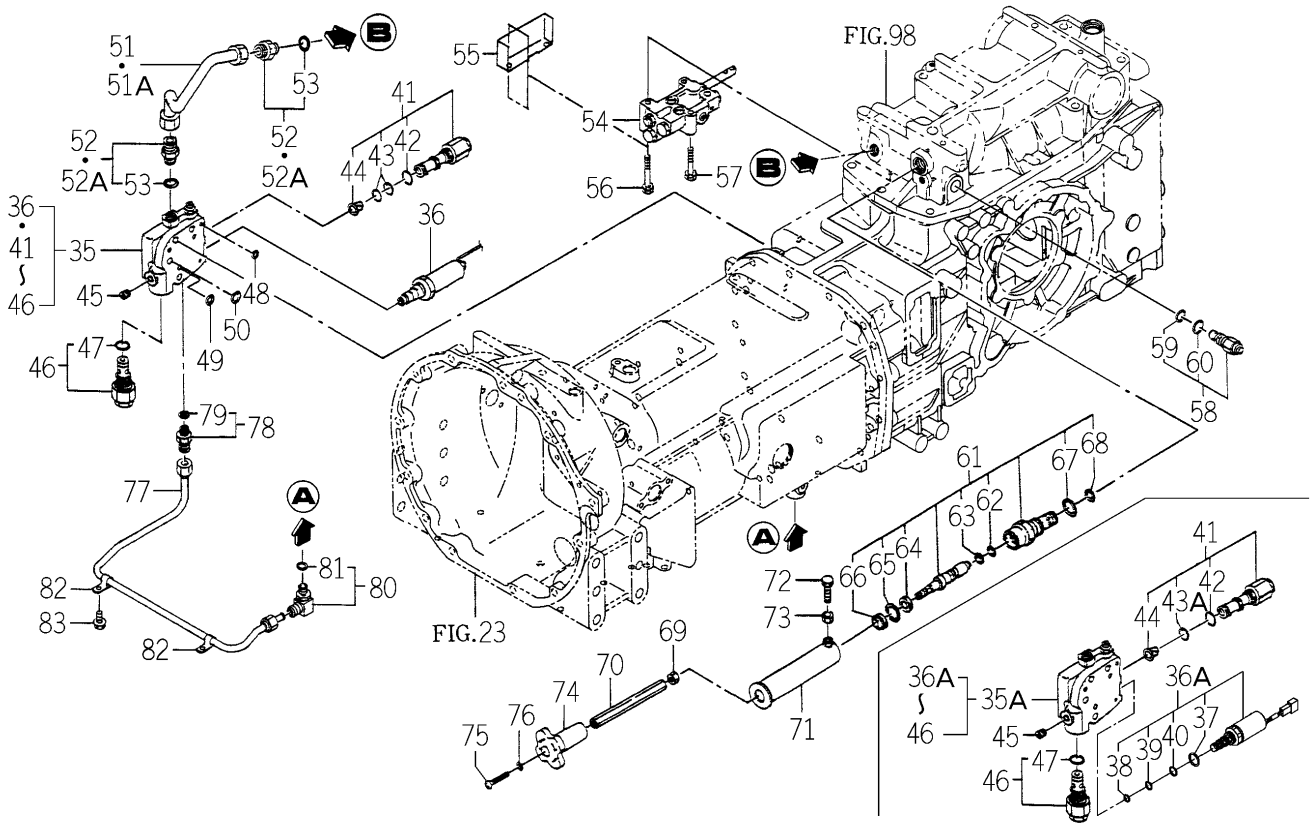

1746-508B-0100

KEY	PART CODE	DESCRIPTION	SPC	TYPE OF MODEL TG5330 E4	TG5330 E6	TG5390 E4	TG5390 E6	ITC	COL	GRP	REMARKS
80	1656-509-310-10	ADAPTER/L/PF1/4 ASSY	*	1 440-		1 776-					
81	V720-112-401-10	RING/O	*	1 440-		1 776-					
82	1650-509-003-10	HOLDER/10	*	2 440-		2 776-					
83	V231-360-801-20	FLANGEBOLT	*	2 440-		2 776-					

FIG.107 HYD. SYSTEM (MAIN) (H3 TYPE)(1/2)

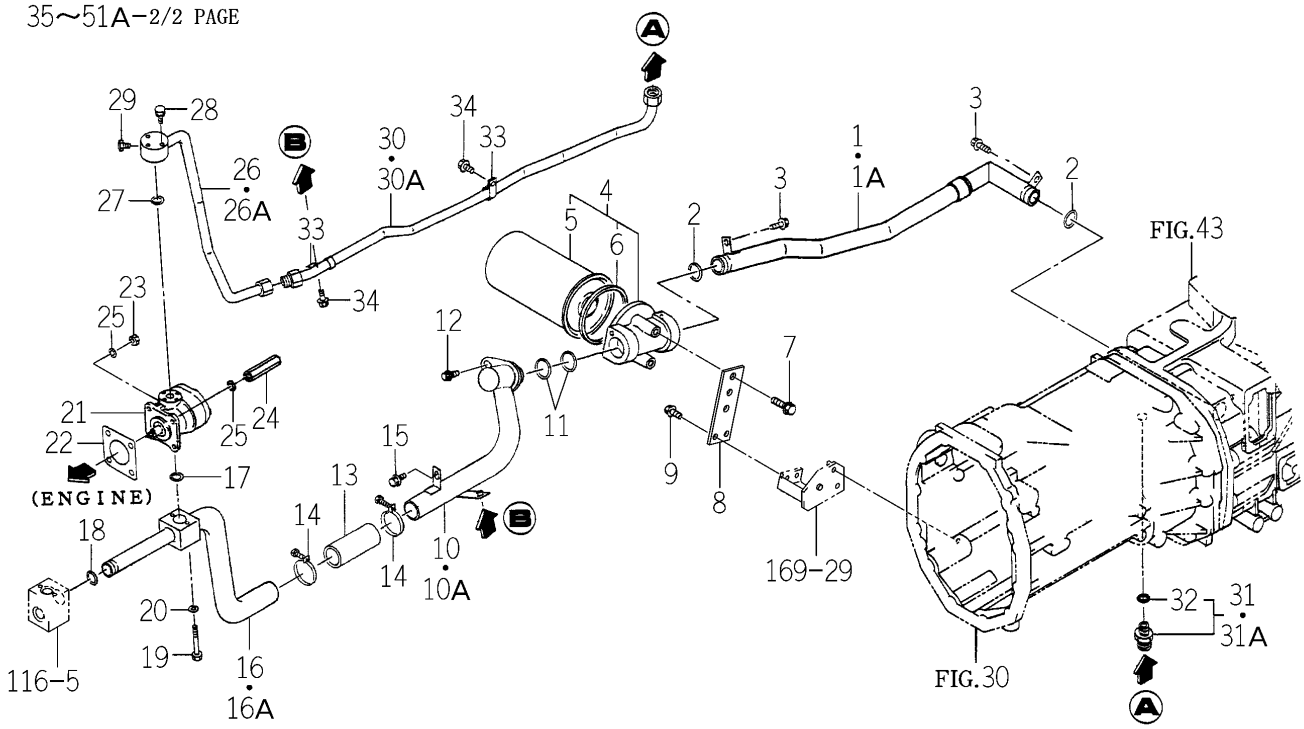

1747-508B-0100

KEY	PART CODE	DESCRIPTION	SPC	TYPE OF MODEL TG5330 E4	TG5330 E6	TG5390 E4	TG5390 E6	ITC	COL	GRP	REMARKS
1	1742-508-210-20	PIPE/SUC/REAR COMP	*			1 -1227					
1A	1742-508-210-30	PIPE/SUC/REAR COMP	*			1 1228-		1			
2	V720-103-502-80	O-RING/P28	*			2					
3	V231-360-801-20	FLANGEBOLT	*			2					
4	1742-508-330-00	FILTER/SUCTION/20/R	*			1					
5	1742-508-332-00	CARTRIDGE/20/R	*			1					
6	1643-515-203-00	PACKING	*			1					
7	V231-361-002-50	FLANGEBOLT	*			2					
8	1747-508-071-00	PLATE/I/44X124	*			1					
9	V231-360-801-60	FLANGEBOLT	*			2					
10	1742-508-340-00	PIPE/SUC/MID COMP	*			1 -1227					
10A	1742-508-340-10	PIPE/SUC/MID COMP	*			1 1228-		1			
11	V720-103-502-80	O-RING/P28	*			2					
12	V231-360-801-60	FLANGEBOLT	*			1					
13	1729-508-011-00	HOSE/100	*			1					
14	J061-232-040-00	CLAMP/WIRE/32-40	*			2					
15	V231-360-801-20	FLANGEBOLT	*			1					
16	1747-508-200-00	PIPE/SUC/FRONT COMP	*			1 -1229					
16A	1747-508-200-10	PIPE/SUC/FRONT COMP	*			1 1230-		1			
17	V720-112-402-00	O-RING/P20	*			1					
18	1729-508-006-00	RING/O	*			1					
19	V200-360-606-00	BOLT	*			2					
20	V401-160-006-00	WASHER,SP/M 6	*			2					
21	K135-028-000-00	PUMP/GEAR ASSY	*			1					FIG 258
22	1404-503-006-00	PACKING,OIL PUMP	*			1					
23	V304-260-008-00	NUT	*			3					
24	1723-508-002-00	NUT/M08	*			1					
25	V401-160-008-00	WASHER,SP/M 8	*			4					
26	1746-508-210-00	PIPE/DEL/FRONT COMP	*			1 -1232					
26A	1746-508-210-10	PIPE/DEL/FRONT COMP	*			1 1233-		1			

FIG.107 HYD. SYSTEM (MAIN) (H3 TYPE)(1/2)

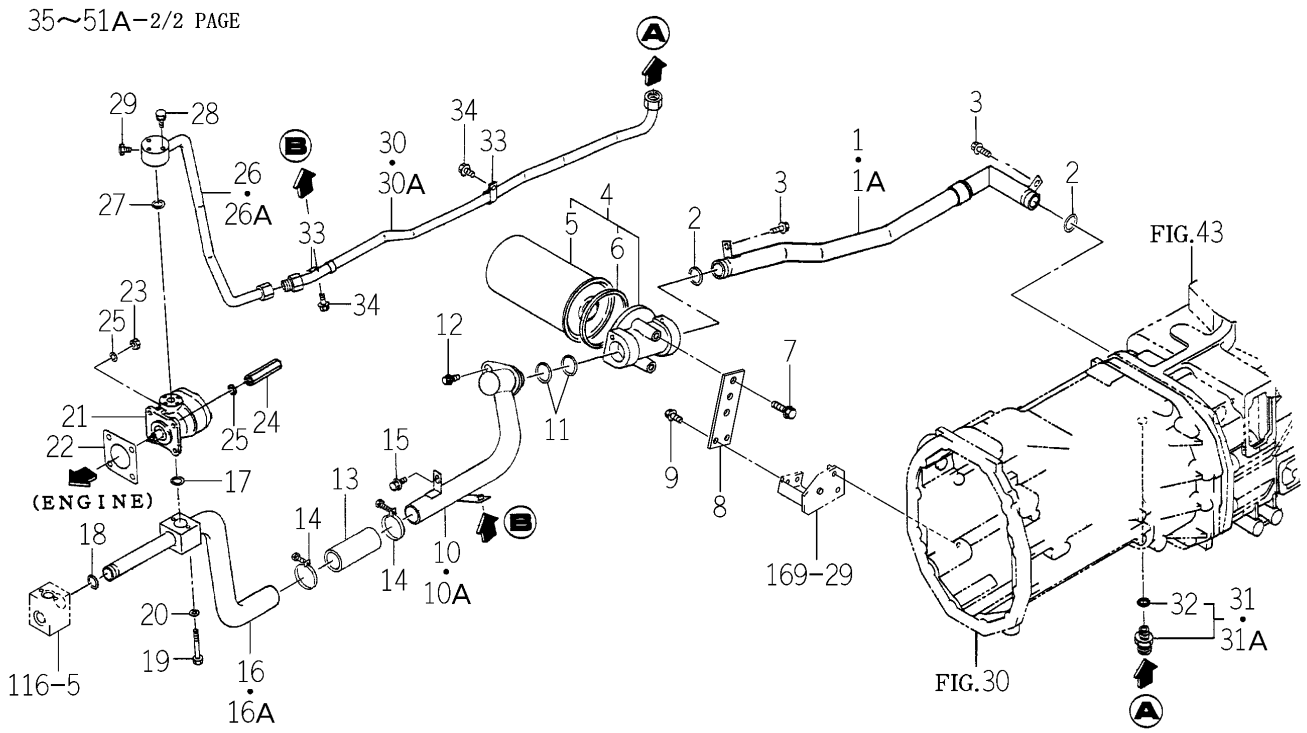

1747-508B-0100

KEY	PART CODE	DESCRIPTION	SPC	TYPE OF MODEL TG5330 E4	TG5330 E6	TG5390 E4	TG5390 E6	ITC	COL	GRP	REMARKS
27	V720-112-402-00	O-RING/P20	*			1					
28	V210-560-604-00	BOLT/S	*			3					
29	V782-160-000-2T	PLUG/SCREW/SEAL	*			1					
30	1742-508-310-00	PIPE/DEL/MID COMP	*			1 -1230					
30A	1742-508-310-10	PIPE/DEL/MID COMP	*			1 1231-		1			
31	1729-508-290-00	ADAPTER/G3/8 ASSY	*			1 -1241					
31A	1729-508-290-10	ADAPTER/G3/8 ASSY	*			1 1242-		1			
32	V720-112-401-40	O-RING/P14	*			1					
33	1675-508-003-00	HOLDER/15	*			2					
34	V231-360-801-20	FLANGEBOLT	*			2					
35	K200-114-000-10	VALVE ASSY	*			1 -957					
35A	K200-114-000-20	VALVE/INDEPENDENT	*			1 958-		1			
36	K200-097-200-00	VALVE/PRV/G ASSY	*			1					
36A	K290-003-000-30	VALVE/PRV/B ASSY	*			1					
37	V720-112-402-00	O-RING/P20	*			1					
38	K290-001-001-00	O-RING(AS568/013)	*			1 958-					
39	K290-001-002-00	O-RING(AS568/014)	*			1					
40	K290-001-003-00	O-RING(AS568/015)	*			1					
41	K200-114-100-00	VALVE/FROCON SET	*			1					
42	V720-112-402-00	O-RING/P20	*			1					
43	V723-111-501-60	O-RING	*			1 958-					
44	1650-508-002-00	FILTER/LINE/12X18X15	*			1					
45	V780-140-000-2T	PLUG/SCREW/SEAL	*			2					
46	K250-057-000-00	VALVE/RELIEF ASSY	*			1					
47	V720-112-402-00	O-RING/P20	*			1					
48	V720-112-401-00	O-RING/P10	*			4					
49	V720-112-401-20	O-RING/P12	*			1					
50	V720-112-401-40	O-RING/P14	*			1					
51	1742-508-270-00	PIPE/DEL/REAR COMP	*			1 -1240					
51A	1742-508-270-10	PIPE/DEL/REAR COMP	*			1 1241-		1			

FIG.107 HYD. SYSTEM (MAIN) (H3 TYPE)(2/2)

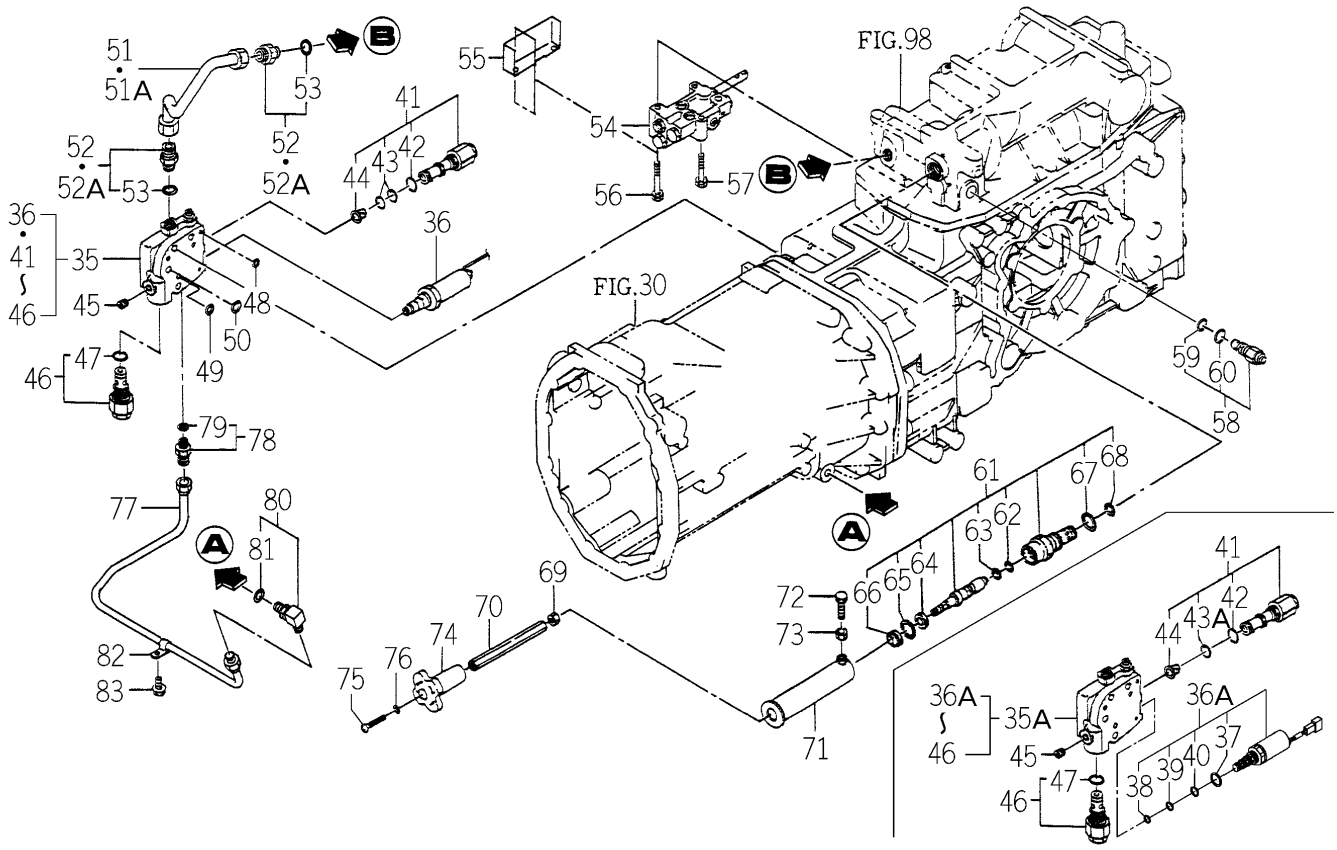

1747-508B-0100

KEY	PART CODE	DESCRIPTION	SPC	TYPE OF MODEL TG5330 E4	TG5330 E6	TG5390 E4	TG5390 E6	ITC	COL	GRP	REMARKS
52	1729-508-290-00	ADAPTER/G3/8 ASSY	*			2 -1241					
52A	1729-508-290-10	ADAPTER/G3/8 ASSY	*			2 1242-		1			
53	V720-112-401-40	O-RING/P14	*			2					
54	K211-073-000-00	VALVE/CONTROL ASSY	*			1					FIG 263
55	1742-508-009-00	COVER/VALVE	*			1					
56	V211-260-806-50	BOLT,SEMS/M8X65	*			2					
57	V211-260-805-00	BOLT/M8X50	*			1					
58	K250-016-000-00	VALVE,RELIEF ASSY	*			1					
59	V720-112-401-20	O-RING/P12	*			1					
60	V720-112-401-80	O-RING/P18	*			1					
61	K231-008-000-10	VALVE/FROCON ASSY	*			1					
62	V720-112-401-00	O-RING/P10	*			1					
63	V730-101-401-00	RING,BACK UP	*			1					
64	K231-004-006-00	COLLAR/11X21X3	*			1					
65	V705-140-021-00	RING,SNAP/21 C	*			1					
66	K231-004-007-00	SEAL,DUST	*			1					
67	V720-112-402-20	O-RING/P22	*			1					
68	V720-112-401-60	O-RING/P16	*			1					
69	V304-260-010-00	NUT	*			1					
70	1568-507-001-10	SHAFT/SLOWRETURN	*			1					
71	1742-508-320-00	COVER/SHAFT COMP	*			1					
72	V201-260-802-00	BOLT/M 8X20	*			1					
73	V304-260-008-00	NUT	*			1					
74	1560-507-007-00	KNOB	*			1					
75	V111-166-004-00	SCREW/M6X40	*			1					
76	V401-160-006-00	WASHER,SP/M 6	*			1					
77	1743-508-220-00	PIPE/PTO/H COMP	*			1					
78	1656-509-460-00	ADAPTOR/PF1/4 ASSY	*			1					
79	V720-112-401-10	RING/O	*			1					
80	1656-509-310-10	ADAPTER/L/PF1/4 ASSY	*			1					

FIG.107 HYD. SYSTEM (MAIN) (H3 TYPE)(2/2)

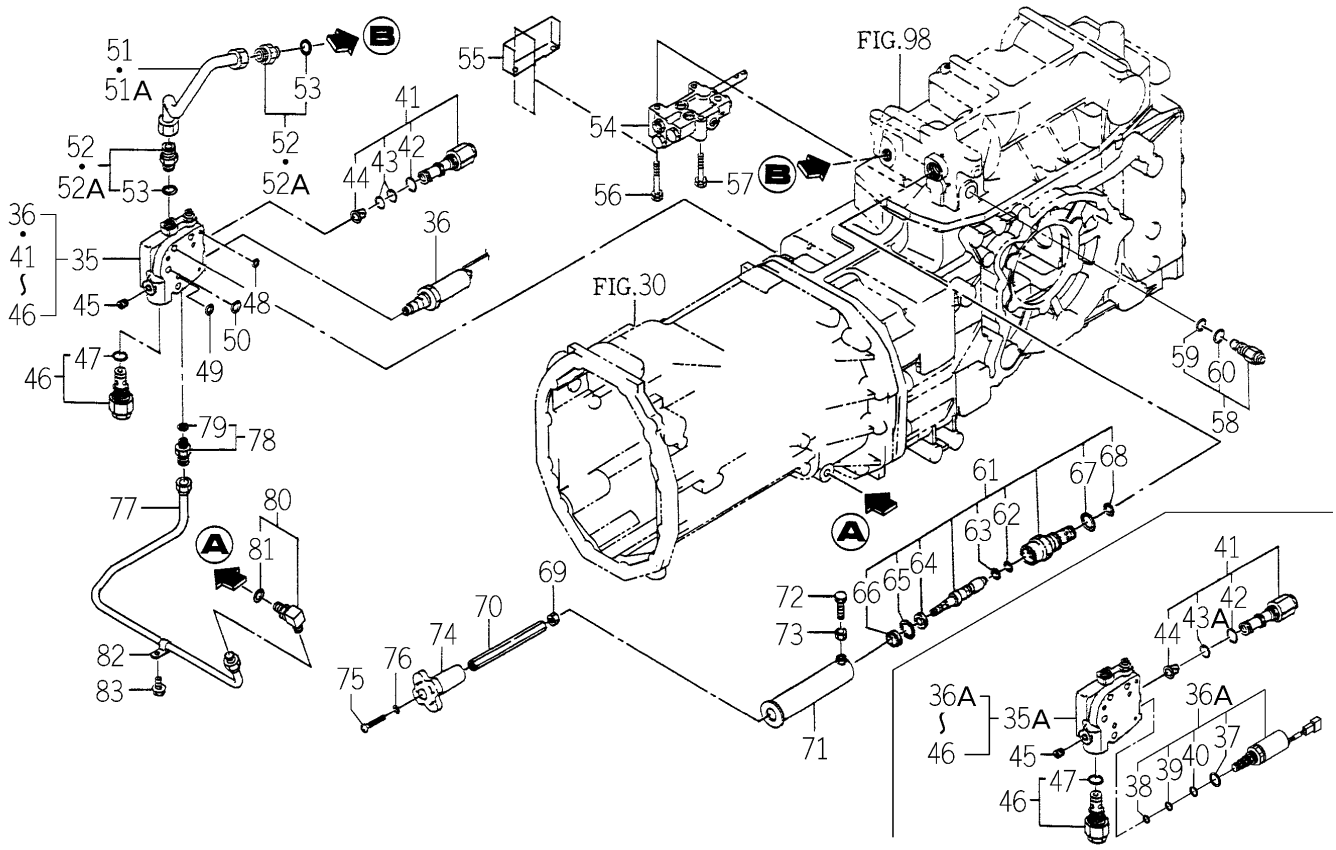

1747-508B-0100

KEY	PART CODE	DESCRIPTION	SPC	TYPE OF MODEL TG5330 E4	TG5330 E6	TG5390 E4	TG5390 E6	ITC	COL	GRP	REMARKS
81	V720-112-401-10	RING/O	*			1					
82	1650-509-003-10	HOLDER/10	*			1					
83	V231-360-801-20	FLANGEBOLT	*			1					

FIG.108 COVER (RELIEF METAL) SYSTEM (E4 TYPE)

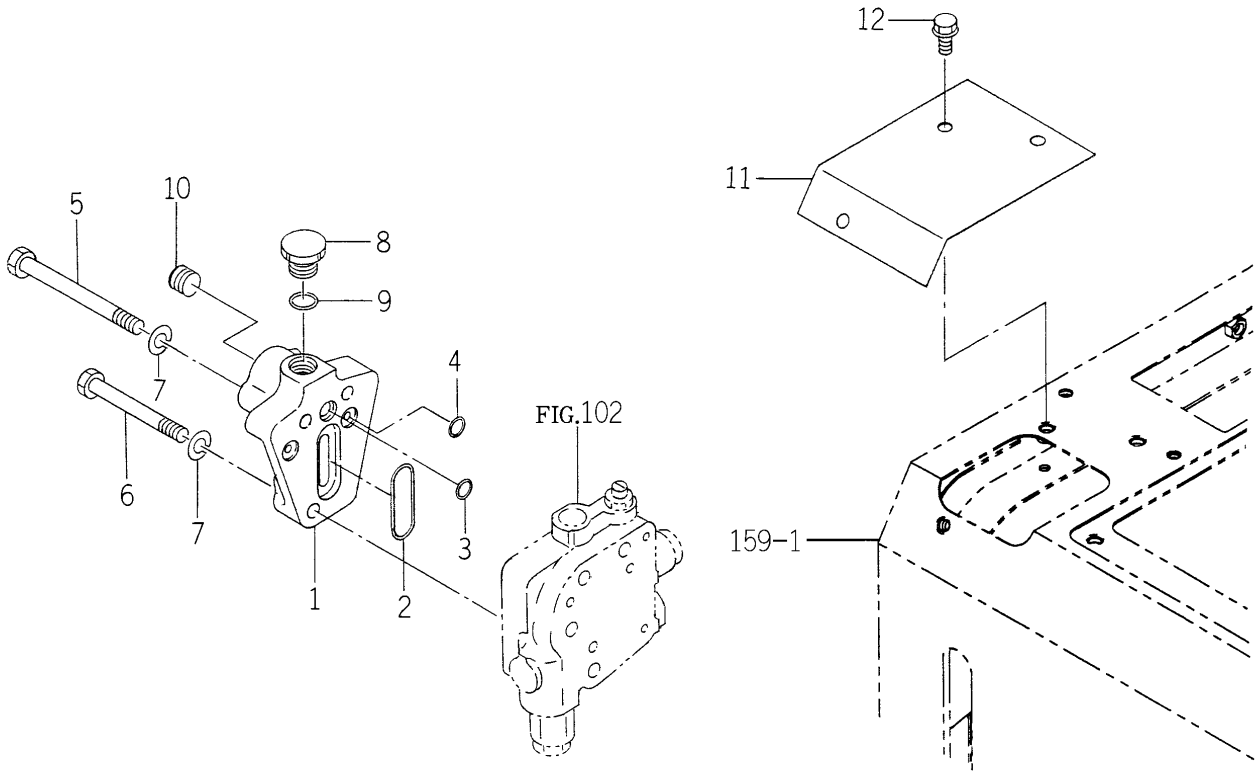

1742-508C-0100

KEY	PART CODE	DESCRIPTION	SPC	TYPE OF MODEL TG5330 E4	TG5330 E6	TG5390 E4	TG5390 E6	ITC	COL	GRP	REMARKS
1	1742-508-008-00	COVER/OUTLET	*	1		1					
2	V720-113-503-80	RING/O	*	1		1					
3	V720-112-401-20	O-RING/P12	*	1		1					
4	V720-112-401-00	O-RING/P10	*	2		2					
5	V201-261-010-00	BOLT/M10X100	*	2		2					
6	V201-261-008-00	BOLT/M10X80	*	1		1					
7	V401-160-010-00	WASHER,SP/M10	*	3		3					
8	K211-074-002-00	PLUG/M18	*	1		1					
9	V720-112-401-60	O-RING/P16	*	1		1					
10	V780-140-000-6T	PLUG/SCREW/SEAL	*	2		2					
11	1742-631-003-10	COVER	*	1		1		1	7F		
11	1742-631-003-11	COVER	*	1		1		1	5I		
12	V231-360-801-60	FLANGEBOLT	*	3		3					

FIG.109 HYD. SYSTEM (MAIN)(1/2)
(Q TYPE-TG5330E4-No.444-/TG5390E4-No.778-)

35～52－2/2 PAGE

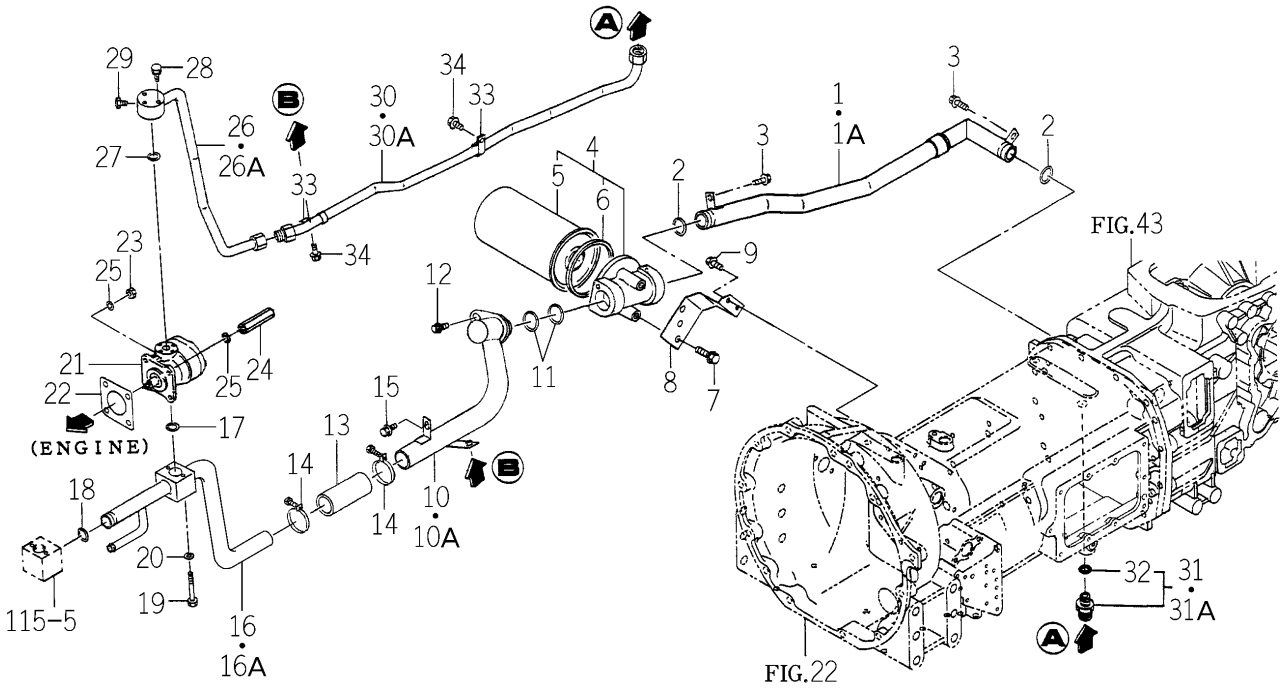

1746-508C-0100

KEY	PART CODE	DESCRIPTION	SPC	TYPE OF MODEL TG5330 E4	TG5330 E6	TG5390 E4	TG5390 E6	ITC	COL	GRP	REMARKS
1	1742-508-210-20	PIPE/SUC/REAR COMP	*	1 -937		1 -1227					
1A	1742-508-210-30	PIPE/SUC/REAR COMP	*	1 938-		1 1228-		1			
2	V720-103-502-80	O-RING/P28	*	2 444-		2 778-					
3	V231-360-801-20	FLANGEBOLT	*	2 444-		2 778-					
4	1742-508-330-00	FILTER/SUCTION/20/R	*	1 444-		1 778-					
5	1742-508-332-00	CARTRIDGE/20/R	*	1 444-		1 778-					
6	1643-515-203-00	PACKING	*	1 444-		1 778-					
7	V231-361-002-50	FLANGEBOLT	*	2 444-		2 778-					
8	1742-508-005-00	BRACKET/FILTER	*	1 444-		1 778-					
9	V231-360-801-60	FLANGEBOLT	*	2 444-		2 778-					
10	1742-508-340-00	PIPE/SUC/MID COMP	*	1 -937		1 -1227					
10A	1742-508-340-10	PIPE/SUC/MID COMP	*	1 938-		1 1228-		1			
11	V720-103-502-80	O-RING/P28	*	2 444-		2 778-					
12	V231-360-801-60	FLANGEBOLT	*	1 444-		1 778-					
13	1729-508-011-00	HOSE/100	*	1 444-		1 778-					
14	J061-232-040-00	CLAMP/WIRE/32-40	*	2 444-		2 778-					
15	V231-360-801-20	FLANGEBOLT	*	1 444-		1 778-					
16	1746-508-200-00	PIPE/SUC/FRONT COMP	*	1 -937		1 -1227					
16A	1746-508-200-10	PIPE/SUC/FRONT COMP	*	1 938-		1 1228-		1			
17	V720-112-402-00	O-RING/P20	*	1 444-		1 778-					
18	1729-508-006-00	RING/O	*	1 444-		1 778-					
19	V200-360-606-00	BOLT	*	2 444-		2 778-					
20	V401-160-006-00	WASHER,SP/M 6	*	2 444-		2 778-					
21	K135-028-000-00	PUMP/GEAR ASSY	*	1 444-		1 778-					FIG 258
22	1404-503-006-00	PACKING,OIL PUMP	*	1 444-		1 778-					
23	V304-260-008-00	NUT	*	3 444-		3 778-					
24	1723-508-002-00	NUT/M08	*	1 444-		1 778-					
25	V401-160-008-00	WASHER,SP/M 8	*	4 444-		4 778-					
26	1746-508-210-00	PIPE/DEL/FRONT COMP	*	1 -937		1 -1232					
26A	1746-508-210-10	PIPE/DEL/FRONT COMP	*	1 938-		1 1233-		1			

FIG.109 HYD. SYSTEM (MAIN)(1/2)
(Q TYPE-TG5330E4-No.444-/TG5390E4-No.778-)

35～52－2/2 PAGE

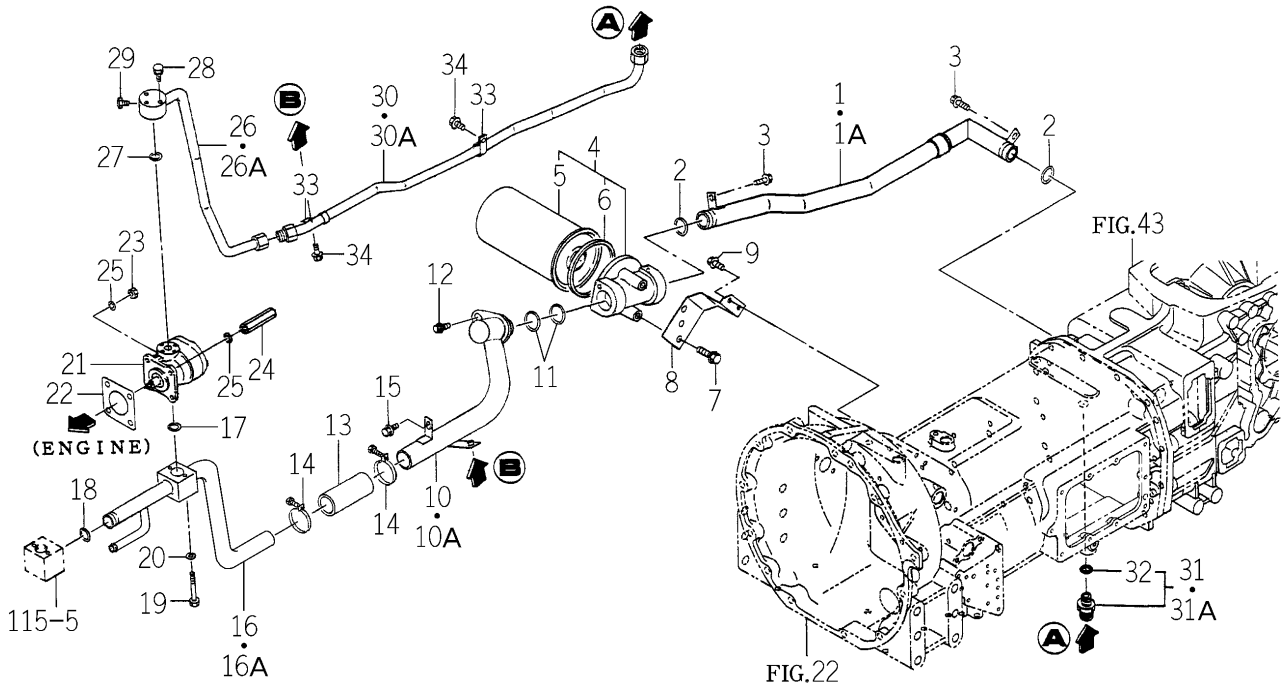

1746-508C-0100

KEY	PART CODE	DESCRIPTION	SPC	TYPE OF MODEL TG5330 E4	TG5330 E6	TG5390 E4	TG5390 E6	ITC	COL	GRP	REMARKS
27	V720-112-402-00	O-RING/P20	*	1 444-		1 778-					
28	V210-560-604-00	BOLT/S	*	3 444-		3 778-					
29	V782-160-000-2T	PLUG/SCREW/SEAL	*	1 444-		1 778-					
30	1742-508-310-00	PIPE/DEL/MID COMP	*	1 -937		1 -1230					
30A	1742-508-310-10	PIPE/DEL/MID COMP	*	1 938-		1 1231-		1			
31	1729-508-290-00	ADAPTER/G3/8 ASSY	*	1 -946		1 -1241					
31A	1729-508-290-10	ADAPTER/G3/8 ASSY	*	1 947-		1 1242-		1			
32	V720-112-401-40	O-RING/P14	*	1 444-		1 778-					
33	1675-508-003-00	HOLDER/15	*	2 444-		2 778-					
34	V231-360-801-20	FLANGEBOLT	*	2 444-		2 778-					
35	1742-508-002-10	METAL/RELIEF	*	1 444-		1 778-					
36	K250-057-000-00	VALVE/RELIEF ASSY	*	1 444-		1 778-					
37	V720-112-402-00	O-RING/P20	*	1 444-		1 778-					
38	V782-160-000-6T	PLUG/SCREW/SEAL	*	1 444-		1 778-					
39	V782-160-000-2T	PLUG/SCREW/SEAL	*	2 444-		2 778-					
40	V720-112-401-00	O-RING/P10	*	4 444-		4 778-					
41	V720-112-401-20	O-RING/P12	*	1 444-		1 778-					
42	V720-112-401-40	O-RING/P14	*	1 444-		1 778-					
43	1742-508-270-00	PIPE/DEL/REAR COMP	*	1 -944		1 -1240					
43A	1742-508-270-10	PIPE/DEL/REAR COMP	*	1 945-		1 1241-		1			
44	1729-508-290-00	ADAPTER/G3/8 ASSY	*	2 -946		2 -1241					
44A	1729-508-290-10	ADAPTER/G3/8 ASSY	*	2 947-		2 1242-		1			
45	V720-112-401-40	O-RING/P14	*	2 444-		2 778-					
46	K211-073-000-00	VALVE/CONTROL ASSY	*	1 444-		1 778-					FIG 263
47	1742-508-009-00	COVER/VALVE	*	1 444-		1 778-					
48	V211-260-806-50	BOLT,SEMS/M8X65	*	2 444-		2 778-					
49	V211-260-805-00	BOLT/M8X50	*	1 444-		1 778-					
50	K250-016-000-00	VALVE,RELIEF ASSY	*	1 444-		1 778-					
51	V720-112-401-20	O-RING/P12	*	1 444-		1 778-					
52	V720-112-401-80	O-RING/P18	*	1 444-		1 778-					

FIG.109 HYD. SYSTEM (MAIN)(2/2)
(Q TYPE-TG5330E4-No.444-/TG5390E4-No.778-)

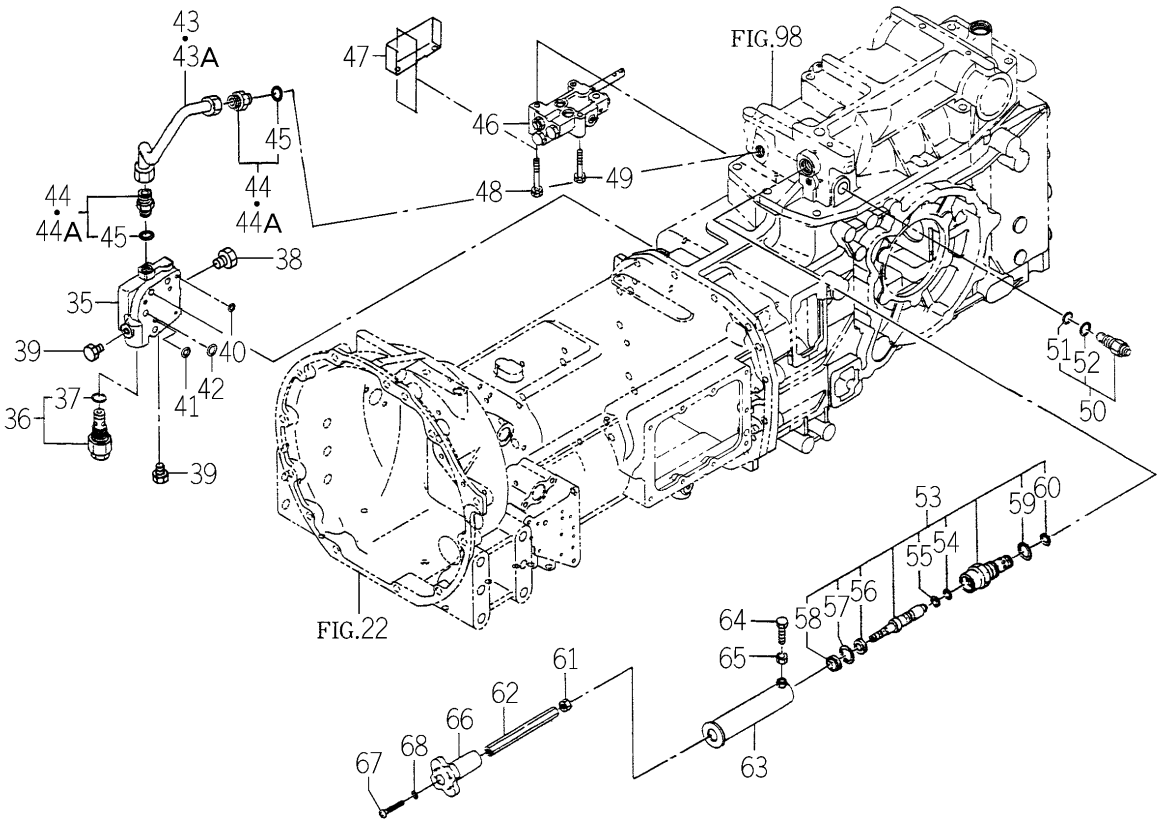

1746-508C-0100

KEY	PART CODE	DESCRIPTION	SPC	TYPE OF MODEL TG5330 E4	TG5330 E6	TG5390 E4	TG5390 E6	ITC	COL	GRP	REMARKS
53	K231-008-000-10	VALVE/FROCON ASSY	*	1 444-		1 778-					
54	V720-112-401-00	O-RING/P10	*	1 444-		1 778-					
55	V730-101-401-00	RING,BACK UP	*	1 444-		1 778-					
56	K231-004-006-00	COLLAR/11X21X3	*	1 444-		1 778-					
57	V705-140-021-00	RING,SNAP/21 C	*	1 444-		1 778-					
58	K231-004-007-00	SEAL,DUST	*	1 444-		1 778-					
59	V720-112-402-20	O-RING/P22	*	1 444-		1 778-					
60	V720-112-401-60	O-RING/P16	*	1 444-		1 778-					
61	V304-260-010-00	NUT	*	1 444-		1 778-					
62	1568-507-001-10	SHAFT/SLOWRETURN	*	1 444-		1 778-					
63	1742-508-320-00	COVER/SHAFT COMP	*	1 444-		1 778-					
64	V201-260-802-00	BOLT/M 8X20	*	1 444-		1 778-					
65	V304-260-008-00	NUT	*	1 444-		1 778-					
66	1560-507-007-00	KNOB	*	1 444-		1 778-					
67	V111-166-004-00	SCREW/M6X40	*	1 444-		1 778-					
68	V401-160-006-00	WASHER,SP/M 6	*	1 444-		1 778-					

FIG.110 SUCTION SYSTEM (EXCEPT H TYPE-REPAIR)

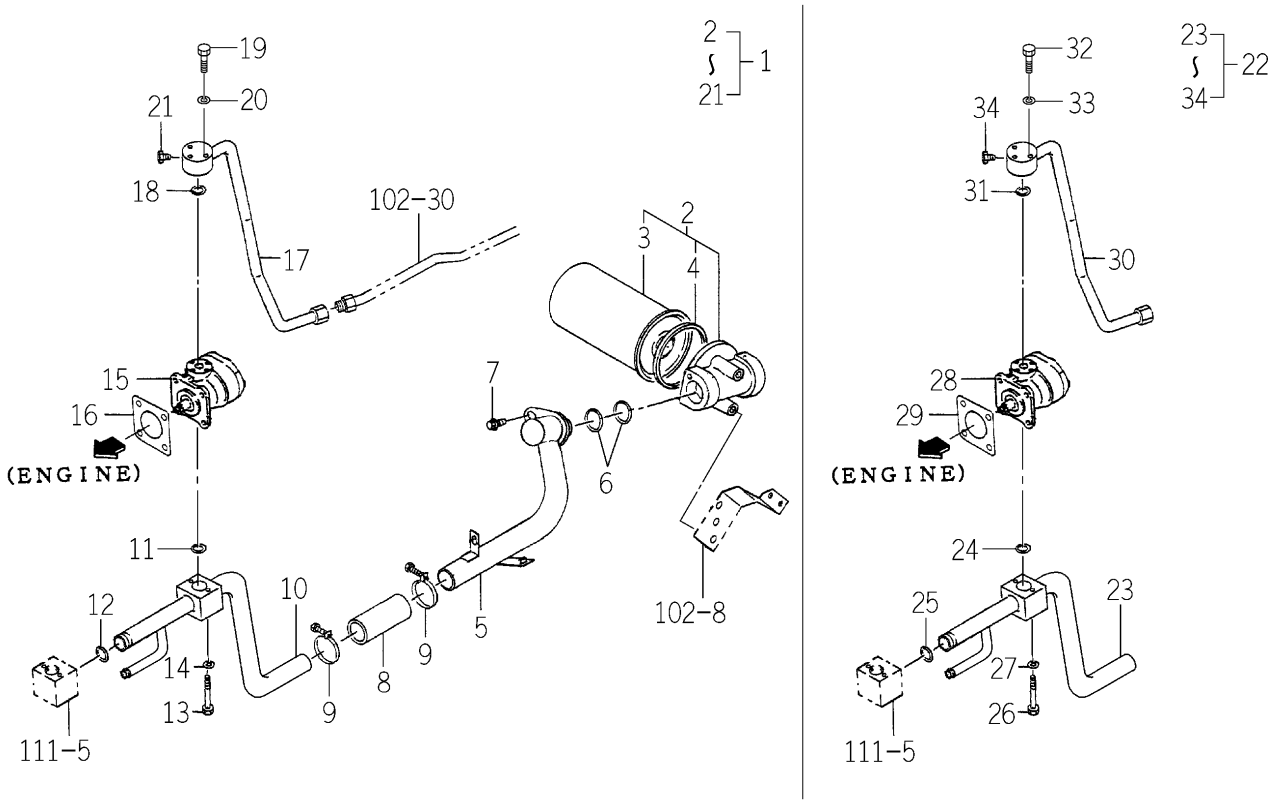

1742-508V-0100

KEY	PART CODE	DESCRIPTION	SPC	TYPE OF MODEL TG5330 E4	TG5330 E6	TG5390 E4	TG5390 E6	ITC	COL	GRP	REMARKS
1	1742-508-950-00	SUCTION/23/SPQ-07	R	1	1	1	1				
2	1742-508-330-00	FILTER/SUCTION/20/R	R	1	1	1	1				
3	1742-508-332-00	CARTRIDGE/20/R	R	1	1	1	1				
4	1643-515-203-00	PACKING	R	1	1	1	1				
5	1742-508-340-10	PIPE/SUC/MID COMP	R	1	1	1	1				
6	V720-103-502-80	O-RING/P28	R	2	2	2	2				
7	V231-360-801-60	FLANGEBOLT	R	1	1	1	1				
8	1729-508-011-00	HOSE/100	R	1	1	1	1				
9	J061-232-040-00	CLAMP/WIRE/32-40	R	2	2	2	2				
10	1746-508-200-10	PIPE/SUC/FRONT COMP	R	1	1	1	1				
11	V720-112-402-00	O-RING/P20	R	1	1	1	1				
12	1729-508-006-00	RING/O	R	1	1	1	1				
13	V200-360-605-50	BOLT	R	2	2	2	2				
14	V401-160-006-00	WASHER,SP/M 6	R	2	2	2	2				
15	K135-028-000-00	PUMP/GEAR ASSY	R	1	1	1	1				FIG 258
16	1404-503-006-00	PACKING,OIL PUMP	R	1	1	1	1				
17	1746-508-210-10	PIPE/DEL/FRONT COMP	R	1	1	1	1				
18	V720-112-402-00	O-RING/P20	R	1	1	1	1				
19	V200-360-604-00	BOLT	R	3	3	3	3				
20	V401-160-006-00	WASHER,SP/M 6	R	3	3	3	3				
21	V782-160-000-2T	PLUG/SCREW/SEAL	R	1	1	1	1				
22	1742-508-960-00	SUCTION/3/SPQ-0 SET	R	1	1	1	1				
23	1746-508-200-10	PIPE/SUC/FRONT COMP	R	1	1	1	1				
24	V720-112-402-00	O-RING/P20	R	1	1	1	1				
25	1729-508-006-00	RING/O	R	1	1	1	1				
26	V200-360-605-50	BOLT	R	2	2	2	2				
27	V401-160-006-00	WASHER,SP/M 6	R	2	2	2	2				
28	K135-028-000-00	PUMP/GEAR ASSY	R	1	1	1	1				FIG 258
29	1404-503-006-00	PACKING,OIL PUMP	R	1	1	1	1				
30	1746-508-210-10	PIPE/DEL/FRONT COMP	R	1	1	1	1				

FIG.110 SUCTION SYSTEM (EXCEPT H TYPE-REPAIR)

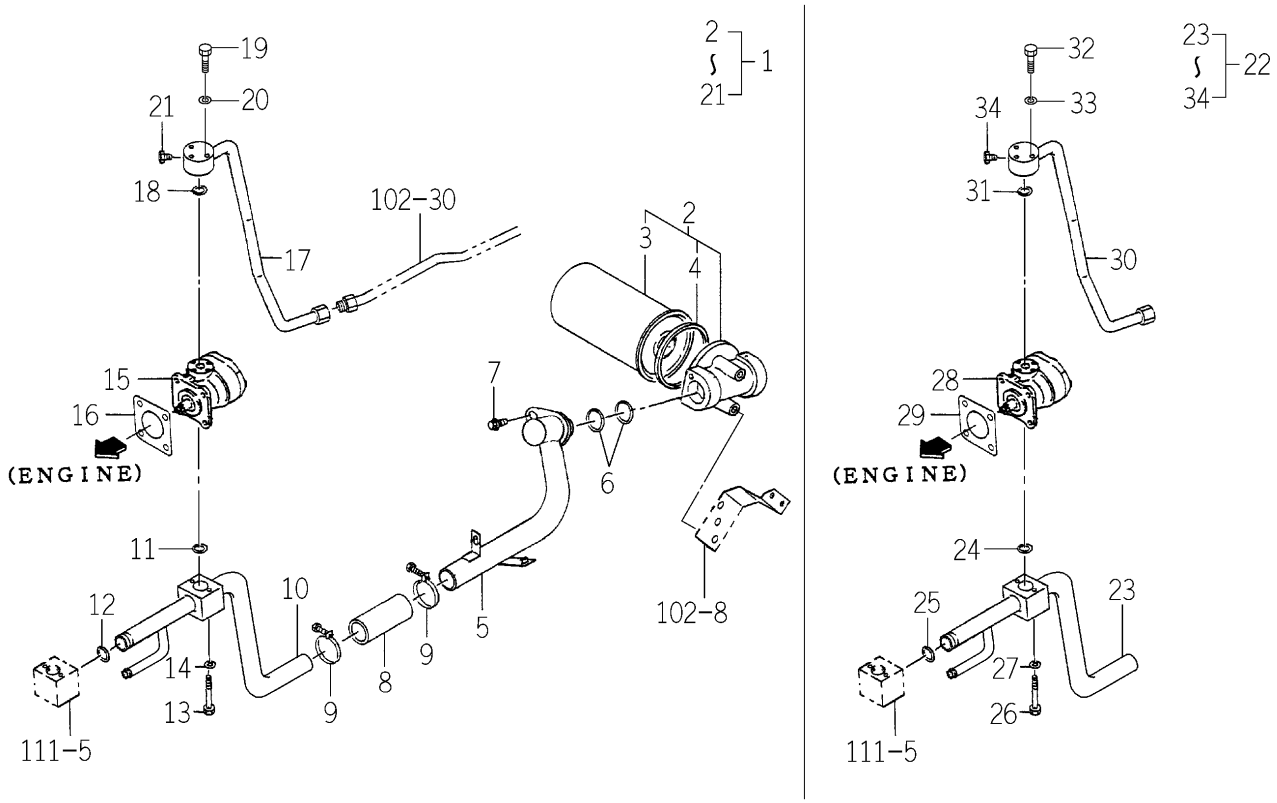

1742-508V-0100

KEY	PART CODE	DESCRIPTION	SPC	TYPE OF MODEL TG5330 E4	TG5330 E6	TG5390 E4	TG5390 E6	ITC	COL	GRP	REMARKS
31	V720-112-402-00	O-RING/P20	R	1	1	1	1				
32	V200-360-604-00	BOLT	R	3	3	3	3				
33	V401-160-006-00	WASHER,SP/M 6	R	3	3	3	3				
34	V782-160-000-2T	PLUG/SCREW/SEAL	R	1	1	1	1				

FIG.111 HYD. SYSTEM (SUB) (S TYPE)

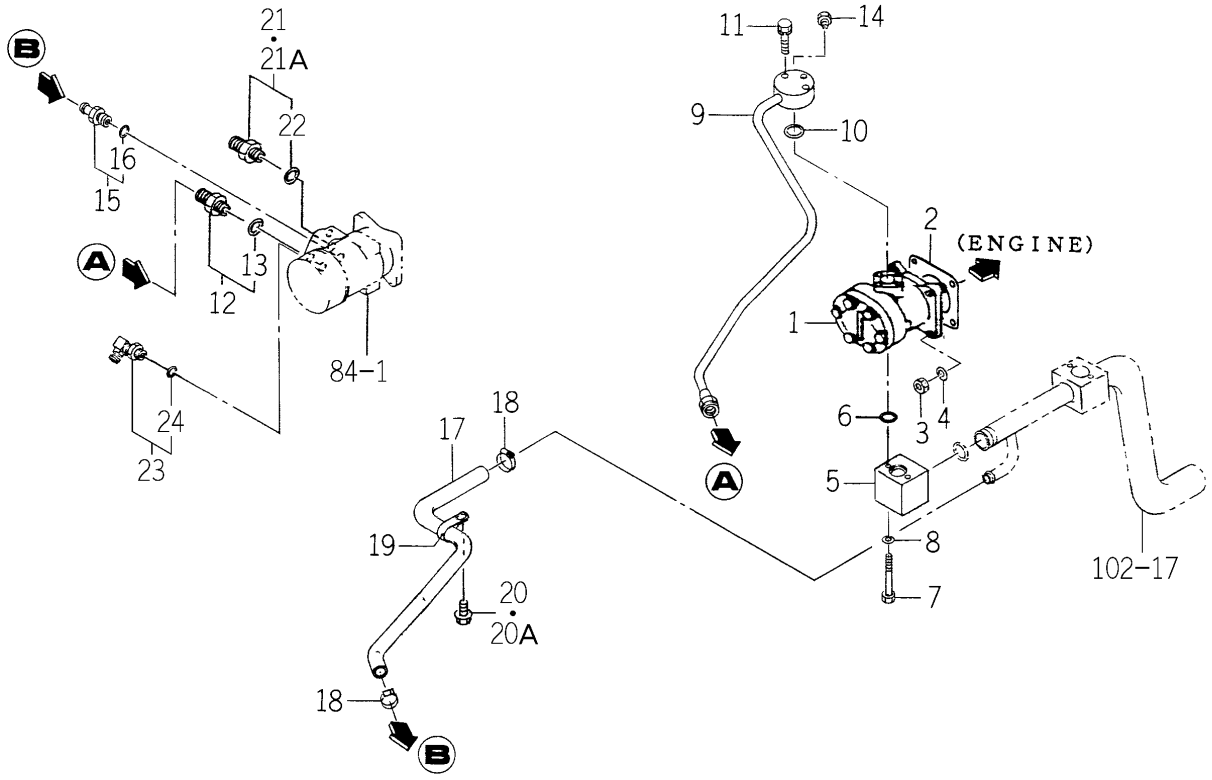

1742-509 -0100

KEY	PART CODE	DESCRIPTION	SPC	TYPE OF MODEL TG5330 E4	TG5330 E6	TG5390 E4	TG5390 E6	ITC	COL	GRP	REMARKS
1	K135-015-000-00	PUMP GEAR ASSY	*	1		1					FIG 256
2	1404-503-006-00	PACKING,OIL PUMP	*	1 20-		1 21-					
3	V304-260-008-00	NUT	*	4		4					
4	V401-160-008-00	WASHER,SP/M 8	*	4		4					
5	1742-509-001-00	FLANGE/SUCTION/S	*	1		1					
6	V720-112-402-00	O-RING/P20	*	1		1					
7	V200-360-606-00	BOLT	*	2		2					
8	V401-160-006-00	WASHER,SP/M 6	*	2		2					
9	1742-509-250-10	PIPE/STEERING COMP	*	1		1					
10	V720-112-402-00	O-RING/P20	*	1		1					
11	V210-560-603-50	BOLT/S	*	3		3					
12	1650-509-290-00	ADAPTER/PF1/4 ASSY	*	1		1					
13	V720-112-401-10	RING/O	*	1		1					
14	V782-160-000-2T	PLUG/SCREW/SEAL	*	1		1					
15	1742-509-260-00	ADAPTER/G1/4B ASSY	*	1		1					
16	V720-112-401-10	RING/O	*	1		1					
17	1742-509-003-00	HOSE/RETURN	*	1		1					
18	J061-112-022-00	CLAMP/WORM/12-22	*	2		2					
19	1675-407-003-00	HOLDER/19	*	1		1					
20	V231-360-801-60	FLANGEBOLT	*	1 -139		1 -441					
20A	V231-360-801-20	FLANGEBOLT	*	1 140-		1 442-					
21	P112-521-350-00	UNION/STRAIGHT/ ASSY	*	1 -88		1 -292					
21A	3829-387-410-00	ADPTER/G1/4.1/4	*	1 89-		1 293-					
22	V720-112-401-10	RING/O	*	1		1					
23	1705-408-230-00	ADAPTER/L/G1/4 ASSY	*	1		1					
24	V720-112-401-10	RING/O	*	1		1					

FIG.112 HYD. SYSTEM (SUB)(1/2) (HE4 TYPE EXCEPT H3-No.1-/ HE6 TYPE-TG5390E6-No.1-877)

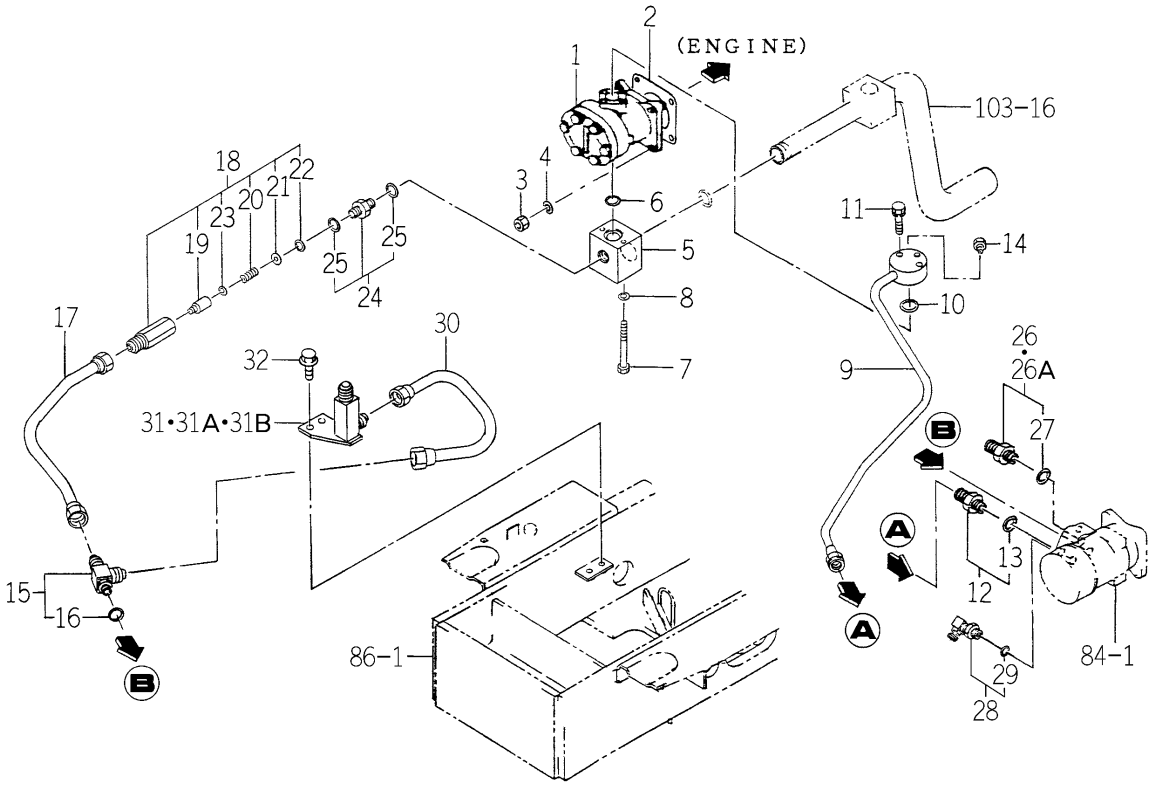

1743-509 -0100

KEY	PART CODE	DESCRIPTION	SPC	TYPE OF MODEL TG5330 E4	TG5330 E6	TG5390 E4	TG5390 E6	ITC	COL	GRP	REMARKS
1	K135-015-000-00	PUMP GEAR ASSY	*			1	1				FIG 256
2	1404-503-006-00	PACKING,OIL PUMP	*			1	1				
3	V304-260-008-00	NUT	*			4	4				
4	V401-160-008-00	WASHER,SP/M 8	*			4	4				
5	1743-509-001-00	FLANGE/SUCTION/H	*			1	1				
6	V720-112-402-00	O-RING/P20	*			1	1				
7	V200-360-607-00	BOLT	*			2	2				
8	V401-160-006-00	WASHER,SP/M 6	*			2	2				
9	1742-509-250-10	PIPE/STEERING COMP	*			1	1				
10	V720-112-402-00	O-RING/P20	*			1	1				
11	V210-560-603-50	BOLT/S	*			3	3				
12	1650-509-290-00	ADAPTER/PF1/4 ASSY	*			1	1				
13	V720-112-401-10	RING/O	*			1	1				
14	V782-160-000-2T	PLUG/SCREW/SEAL	*			1	1				
15	1743-509-210-00	ADAPTER/T/G1/4 ASSY	*			1	1				
16	V720-112-401-10	RING/O	*			1	1				
17	1743-509-220-00	PIPE/RETURN/H COMP	*			1	1				
18	K250-049-000-00	VALVE/RELIEF ASSY	*			1	1				
19	K250-039-002-00	POPPET	*			1	1				
20	K250-039-003-00	SPRING/HC024	*			1	1				
21	K250-039-004-10	COLLAR/04X14X02	*			1	1				
22	V705-140-015-00	RING,SNAP/15 C	*			1	1				
23	K250-049-001-00	COLLAR/06X10X02	*			1	1				
24	1656-509-300-00	ADAPTER/PF3/8 ASSY	*			1	1				
25	V720-112-401-40	O-RING/P14	*			2	2				
26	P112-521-350-00	UNION/STRAIGHT/ ASSY	*			1 -312	1 -312				
26A	3829-387-410-00	ADPTER/G1/4.1/4	*			1 313-	1 313-				
27	V720-112-401-10	RING/O	*			1	1				
28	1705-408-230-00	ADAPTER/L/G1/4 ASSY	*			1	1				
29	V720-112-401-10	RING/O	*			1	1				

FIG.112 HYD. SYSTEM (SUB)(2/2) (HE4 TYPE EXCEPT H3-No.1-/ HE6 TYPE-TG5390E6-No.1-877)

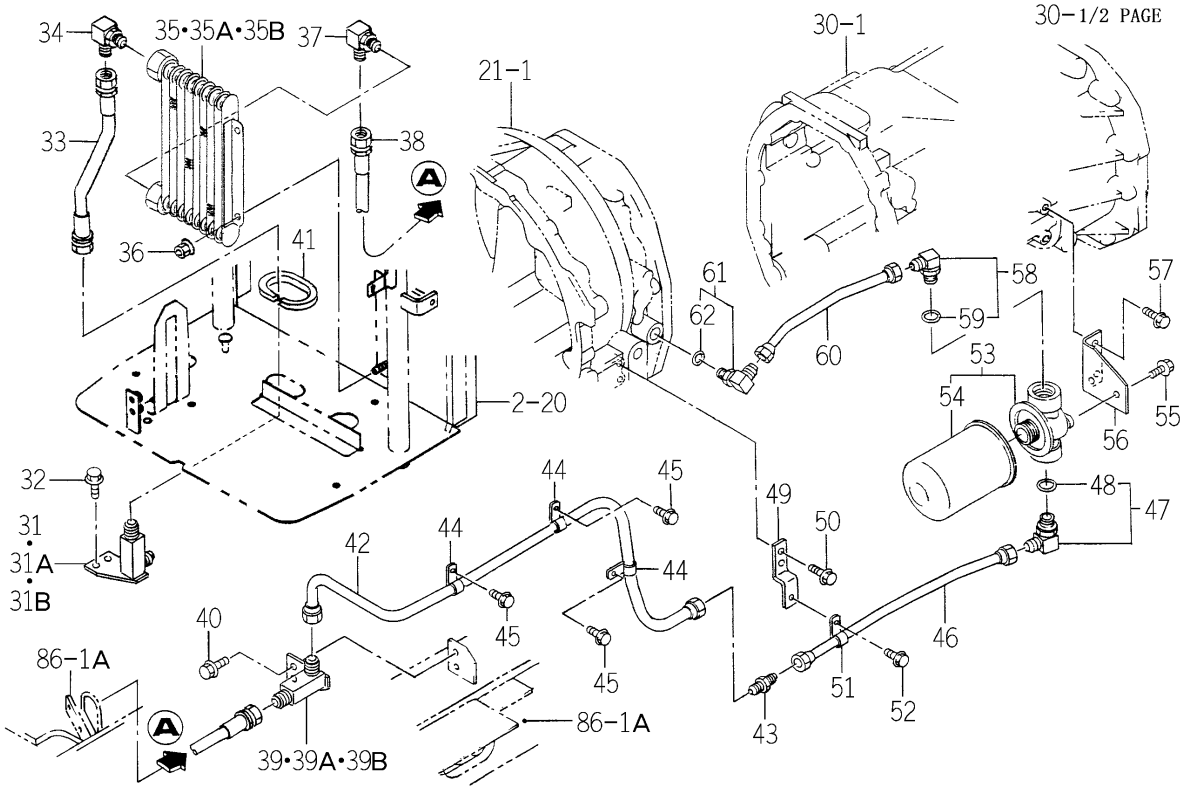

1743-509 -0100

KEY	PART CODE	DESCRIPTION	SPC	TYPE OF MODEL TG5330 E4	TG5330 E6	TG5390 E4	TG5390 E6	ITC	COL	GRP	REMARKS
30	1743-509-230-00	PIPE/COOLER/LOWER	*			1	1				
31	1646-407-590-10	ADAPTER/M20XG3/ COMP	*			1 -172	1 -172				
31A	1646-407-590-20	ADAPTER/M20XG3/ COMP	*			1 -879	1 -879	1			
31B	1646-407-590-30	ADAPTER/M20XG3/ COMP	*			1 880-	1 880-	1			
32	V231-360-801-60	FLANGEBOLT	*			2	2				
33	1734-508-320-10	HOSE/310 ASSY	*			1	1				
34	1640-530-003-00	CONNECTOR	*			1	1				
35	1646-407-560-00	COOLER/OIL ASSY	*			1 -30	1 -30				
35A	1646-407-560-10	COOLER/OIL ASSY	*			1 -600	1 -600	1			
35B	1646-407-560-20	COOLER/OIL ASSY	*			1 601-	1 601-	1			
36	V362-260-008-00	NUT/WASHER	*			2	2				
37	1640-530-003-00	CONNECTOR	*			1	1				
38	1734-508-320-10	HOSE/310 ASSY	*			1	1				
39	1646-407-590-10	ADAPTER/M20XG3/ COMP	*			1 -172	1 -172				
39A	1646-407-590-20	ADAPTER/M20XG3/ COMP	*			1 -879	1 -879	1			
39B	1646-407-590-30	ADAPTER/M20XG3/ COMP	*			1 880-	1 880-	1			
40	V231-360-801-60	FLANGEBOLT	*			2	2				
41	1734-508-005-00	PAD/190	*			1	1				
42	1743-509-250-00	PIPE/FILTER/FRONT	*			1	1				
43	1719-509-002-00	ADAPTER/2-M20X1.5	*			1	1				
44	1650-509-012-00	HOLDER/12	*			3	3				
45	V231-360-801-20	FLANGEBOLT	*			3	3				
46	1743-509-260-00	PIPE/FILTER/REA COMP	*			1	1				
47	1646-516-710-00	ADAPTER/L/G3/4 ASSY	*			1	1				
48	V720-113-502-40	O-RING/P24	*			1	1				
49	1743-509-002-00	STAY/PIPE/FILTER/REA	*			1	1				
50	V231-360-801-60	FLANGEBOLT	*			2	2				
51	1650-509-012-00	HOLDER/12	*			1	1				
52	V231-360-801-20	FLANGEBOLT	*			1	1				
53	1646-516-690-00	FILTER/CHARGE ASSY	*			1	1				

FIG.112 HYD. SYSTEM (SUB)(2/2) (HE4 TYPE EXCEPT H3-No.1-/ HE6 TYPE-TG5390E6-No.1-877)

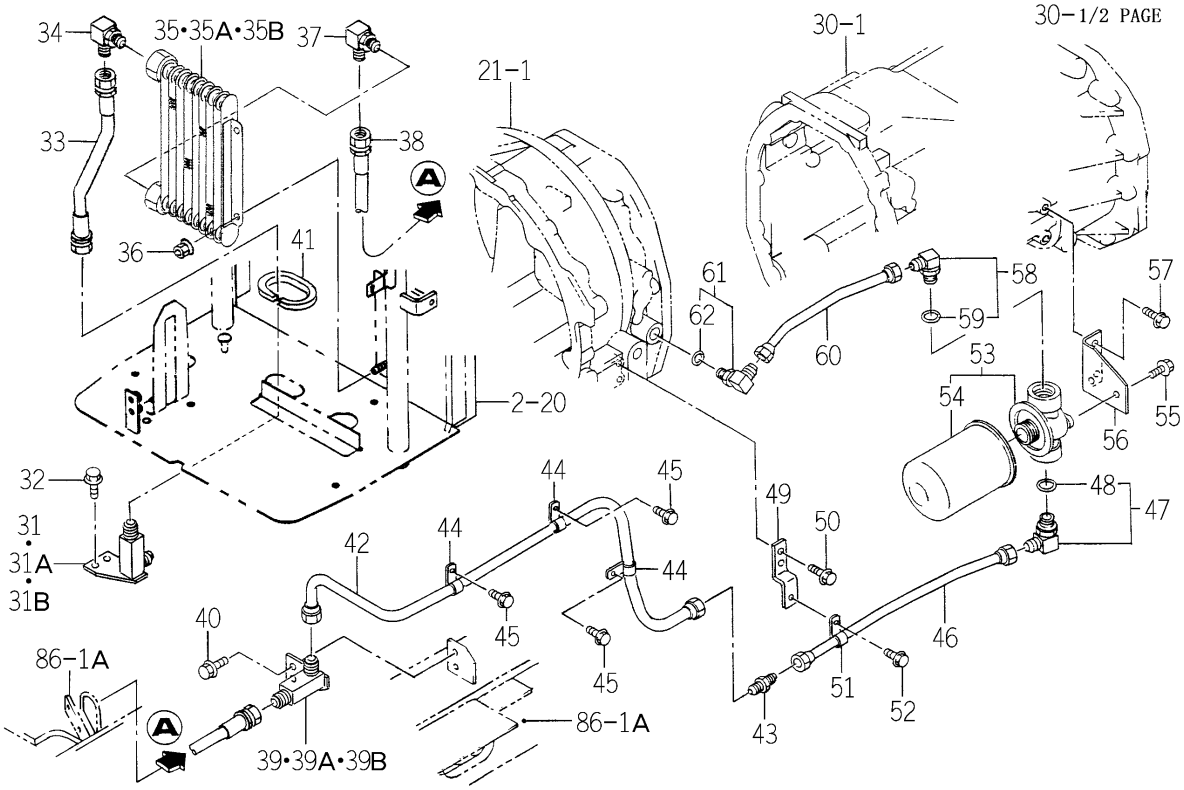

1743-509 -0100

KEY	PART CODE	DESCRIPTION	SPC	TYPE OF MODEL TG5330 E4	TG5330 E6	TG5390 E4	TG5390 E6	ITC	COL	GRP	REMARKS
54	1646-516-692-00	CARTRIDGE ASSY	*			1	1				
55	V231-360-801-60	FLANGEBOLT	*			2	2				
56	1743-509-003-00	STAY/FILTER/CHARGE	*			1	1				
57	V231-360-801-60	FLANGEBOLT	*			2	2				
58	1646-516-710-00	ADAPTER/L/G3/4 ASSY	*			1	1				
59	V720-113-502-40	O-RING/P24	*			1	1				
60	1743-509-270-00	PIPE/HST COMP	*			1	1				
61	1650-509-310-00	ADAPTER/L/PF3/8 ASSY	*			1	1				
62	V720-112-401-40	O-RING/P14	*			1	1				

FIG.113 HYD. SYSTEM (SUB) (P TYPE)(1/2)

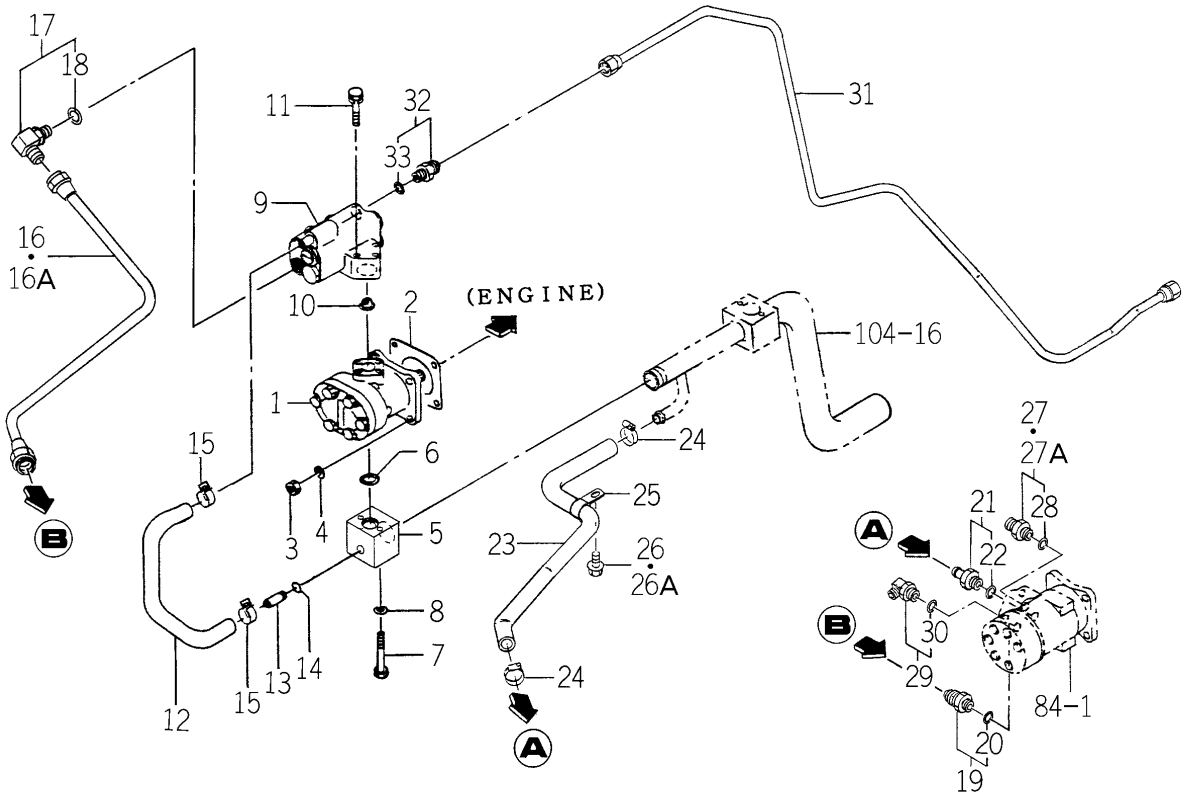

1742-509A-0100

KEY	PART CODE	DESCRIPTION	SPC	TYPE OF MODEL TG5330 E4	TG5330 E6	TG5390 E4	TG5390 E6	ITC	COL	GRP	REMARKS
1	K135-018-000-00	PUMP GEAR ASSY	*		1		1				FIG 257
2	1404-503-006-00	PACKING,OIL PUMP	*		1 24-		1 20-				
3	V304-260-008-00	NUT	*		4		4				
4	V401-160-008-00	WASHER,SP/M 8	*		4		4				
5	1742-509-002-00	FLANGE/SUCTION/P/Q	*		1		1				
6	V720-112-402-00	O-RING/P20	*		1		1				
7	V200-360-606-00	BOLT	*		2		2				
8	V401-160-006-00	WASHER,SP/M 6	*		2		2				
9	K256-004-000-00	REDUCE VALVE ASSY	*		1		1				FIG 265
10	1650-508-002-00	FILTER/LINE/12X18X15	*		1		1				
11	V210-560-604-50	BOLT/S	*		3		3				
12	1650-509-006-10	HOSE/OIL	*		1		1				
13	1650-501-006-00	PIPE/30	*		1		1				
14	V723-111-500-80	RING/O	*		1		1				
15	1673-782-016-10	CLIP/HOSE/17-20	*		2		2				
16	1742-509-200-10	PIPE/STEERING/P COMP	*		1 -946		1 -1241	1			
16A	1742-509-200-20	PIPE/STEERING/P COMP	*		1 947-		1 1242-	1			
17	1650-509-310-00	ADAPTER/L/PF3/8 ASSY	*		1		1				
18	V720-112-401-40	O-RING/P14	*		1		1				
19	1650-509-290-00	ADAPTER/PF1/4 ASSY	*		1		1				
20	V720-112-401-10	RING/O	*		1		1				
21	1675-407-220-00	ADAPTER/G1/4B ASSY	*		1		1				
22	V720-112-401-10	RING/O	*		1		1				
23	1742-509-003-00	HOSE/RETURN	*		1		1				
24	J061-112-022-00	CLAMP/WORM/12-22	*		2		2				
25	1675-407-003-00	HOLDER/19	*		1		1				
26	V231-360-801-60	FLANGEBOLT	*		1 -134		1 -461				
26A	V231-360-801-20	FLANGEBOLT	*		1 135-		1 462-				
27	P112-521-350-00	UNION/STRAIGHT/ ASSY	*		1 -94		1 -301				
27A	3829-387-410-00	ADPTER/G1/4.1/4	*		1 95-		1 302-				

FIG.113 HYD. SYSTEM (SUB) (P TYPE)(2/2)

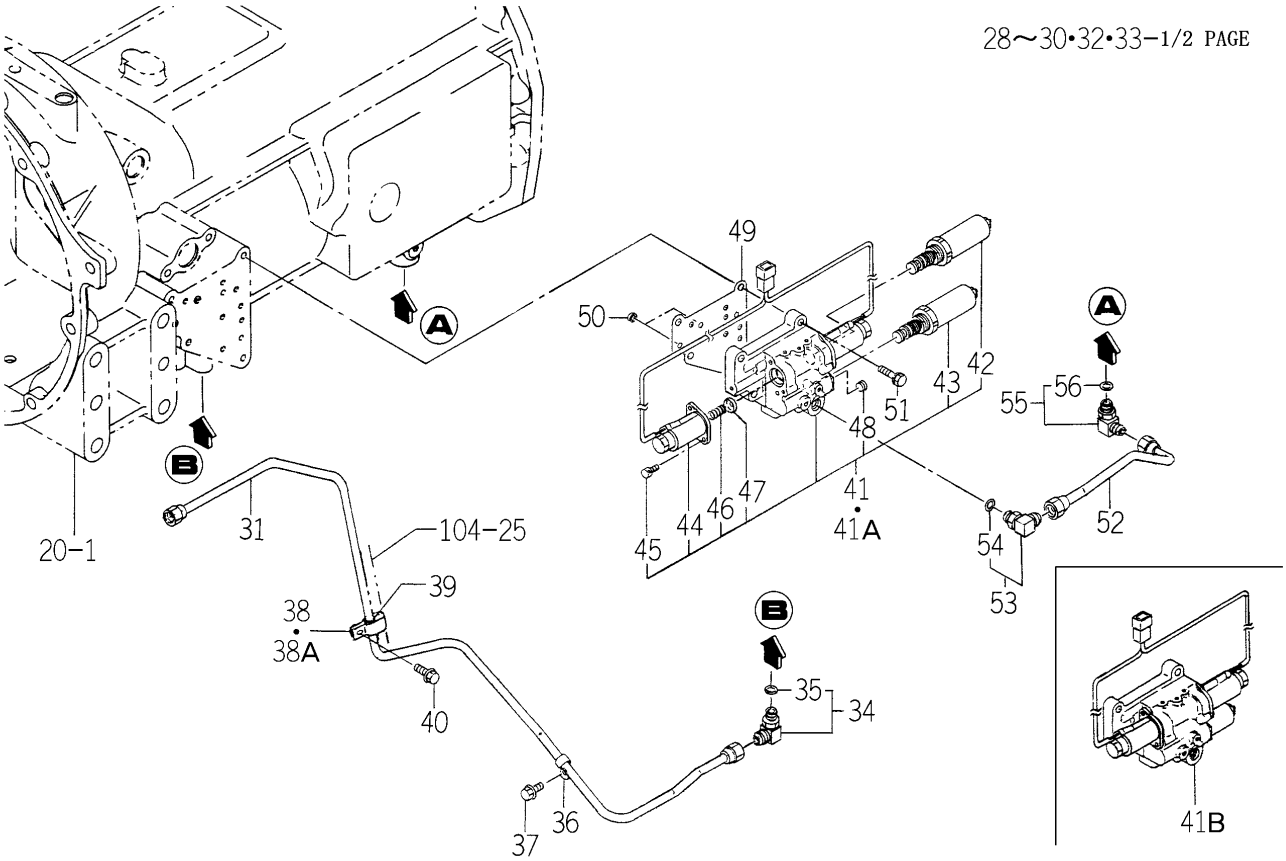

1742-509A-0100

KEY	PART CODE	DESCRIPTION	SPC	TYPE OF MODEL TG5330 E4	TG5330 E6	TG5390 E4	TG5390 E6	ITC	COL	GRP	REMARKS
28	V720-112-401-10	RING/O	*		1		1				
29	1705-408-230-00	ADAPTER/L/G1/4 ASSY	*		1		1				
30	V720-112-401-10	RING/O	*		1		1				
31	1742-509-230-00	PIPE/CONTROL/PQ COMP	*		1		1				
32	1650-509-280-00	ADAPTER/PF1/4 ASSY	*		1		1				
33	V720-112-401-10	RING/O	*		1		1				
34	1675-510-210-00	ADAPTER/L/PF1/4 ASSY	*		1		1				
35	V720-112-401-10	RING/O	*		1		1				
36	1650-509-003-10	HOLDER/10	*		1		1				
37	V231-360-801-20	FLANGEBOLT	*		1		1				
38	1742-509-007-00	HOLDER/15	*		1 -23		1 -25				
38A	1742-509-007-10	HOLDER/15	*		1 24-		1 26-	1			
39	1650-509-017-00	GROMMET/10X18X20	*		1		1				
40	V231-360-801-20	FLANGEBOLT	*		1		1				
41	K200-115-000-00	VALVE/LINEAR ASSY	*		1 -74		1 -254				
41A	K200-115-000-10	VALVE/LINEAR ASSY	*		1 -933		1 -1212	1			
41B	K200-182-000-00	VALVE/LINEAR ASSY	*		1 934-		1 1213-				FIG 261
42	K200-100-300-00	VALVE/PRV/B ASSY	*		1 -933		1 -1212				
43	K200-097-200-00	VALVE/PRV/G ASSY	*		1 -933		1 -1212				
44	K200-096-300-00	SOLENOID/03/2 SET	*		1 -933		1 -1212				
45	4902-610-423-00	SCREW/SOCKET	*		4 -933		4 -1212				
46	K200-096-203-00	SPRING/HC020	*		2 -933		2 -1212				
47	K200-096-202-00	SPRING/PLATE/03	*		2 -933		2 -1212				
48	V780-140-000-2T	PLUG/SCREW/SEAL	*		1 -933		1 -1212				
49	1742-509-006-00	GASKET/REVERSE	*		1		1				
50	1729-509-001-00	FILTER/PORT/09	*		2		2				
51	V211-260-803-00	BOLT,SEMS	*		4		4				
52	1742-509-240-00	PIPE/PTO COMP	*		1		1				
53	1675-510-210-00	ADAPTER/L/PF1/4 ASSY	*		1		1				
54	V720-112-401-10	RING/O	*		1		1				

FIG.113 HYD. SYSTEM (SUB) (P TYPE)(2/2)

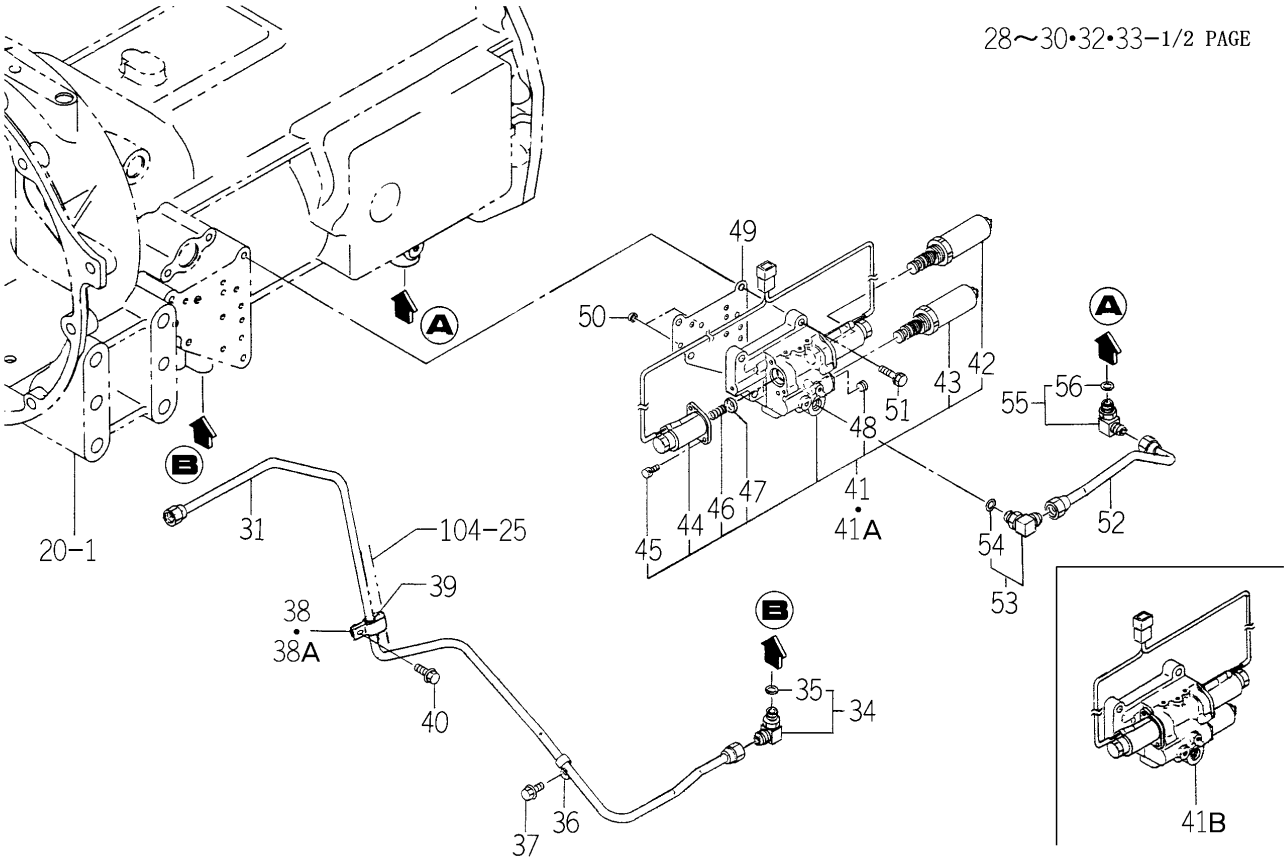

1742-509A-0100

KEY	PART CODE	DESCRIPTION	SPC	TYPE OF MODEL TG5330 E4	TG5330 E6	TG5390 E4	TG5390 E6	ITC	COL	GRP	REMARKS
55	1656-509-310-10	ADAPTER/L/PF1/4 ASSY	*		1		1				
56	V720-112-401-10	RING/O	*		1		1				

FIG.114 HYD. SYSTEM (SUB)(1/3)
(HE6 TYPE-TG5390E6-No.878-)

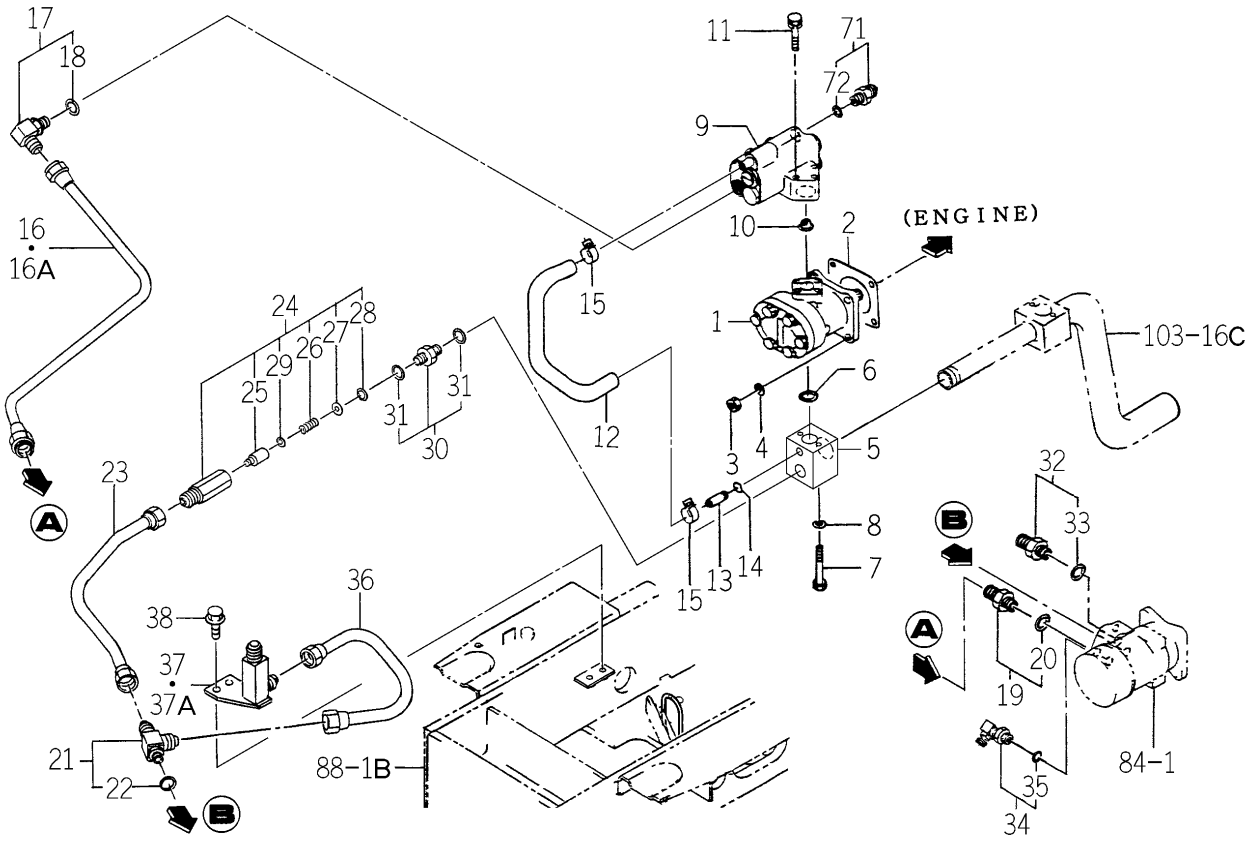

1743-509A-0100

KEY	PART CODE	DESCRIPTION	SPC	TYPE OF MODEL TG5330 E4	TG5330 E6	TG5390 E4	TG5390 E6	ITC	COL	GRP	REMARKS
1	K135-015-000-00	PUMP GEAR ASSY	*				1 878-				FIG 256
2	1404-503-006-00	PACKING,OIL PUMP	*				1 878-				
3	V304-260-008-00	NUT	*				4 878-				
4	V401-160-008-00	WASHER,SP/M 8	*				4 878-				
5	1743-509-005-00	FLANGE/SUCTION/H	*				1 878-				
6	V720-112-402-00	O-RING/P20	*				1 878-				
7	V200-360-607-00	BOLT	*				2 878-				
8	V401-160-006-00	WASHER,SP/M 6	*				2 878-				
9	K256-004-000-00	REDUCE VALVE ASSY	*				1 878-				FIG 265
10	1650-508-002-00	FILTER/LINE/12X18X15	*				1 878-				
11	V210-560-604-50	BOLT/S	*				3 878-				
12	1727-407-002-10	HOSE/OIL	*				1 878-				
13	1650-501-006-00	PIPE/30	*				1 878-				
14	V723-111-500-80	RING/O	*				1 878-				
15	1673-782-016-10	CLIP/HOSE/17-20	*				2 878-				
16	1742-509-200-10	PIPE/STEERING/P COMP	*				1 -1241				
16A	1742-509-200-20	PIPE/STEERING/P COMP	*				1 1242-	1			
17	1650-509-310-00	ADAPTER/L/PF3/8 ASSY	*				1 878-				
18	V720-112-401-40	O-RING/P14	*				1 878-				
19	1650-509-290-00	ADAPTER/PF1/4 ASSY	*				1 878-				
20	V720-112-401-10	RING/O	*				1 878-				
21	1743-509-210-00	ADAPTER/T/G1/4 ASSY	*				1 878-				
22	V720-112-401-10	RING/O	*				1 878-				
23	1743-509-220-00	PIPE/RETURN/H COMP	*				1 878-				
24	K250-049-000-00	VALVE/RELIEF ASSY	*				1 878-				
25	K250-039-002-00	POPPET	*				1 878-				
26	K250-039-003-00	SPRING/HC024	*				1 878-				
27	K250-039-004-10	COLLAR/04X14X02	*				1 878-				
28	V705-140-015-00	RING,SNAP/15 C	*				1 878-				
29	K250-049-001-00	COLLAR/06X10X02	*				1 878-				

FIG.114 HYD. SYSTEM (SUB)(2/3)
(HE6 TYPE-TG5390E6-No.878-)

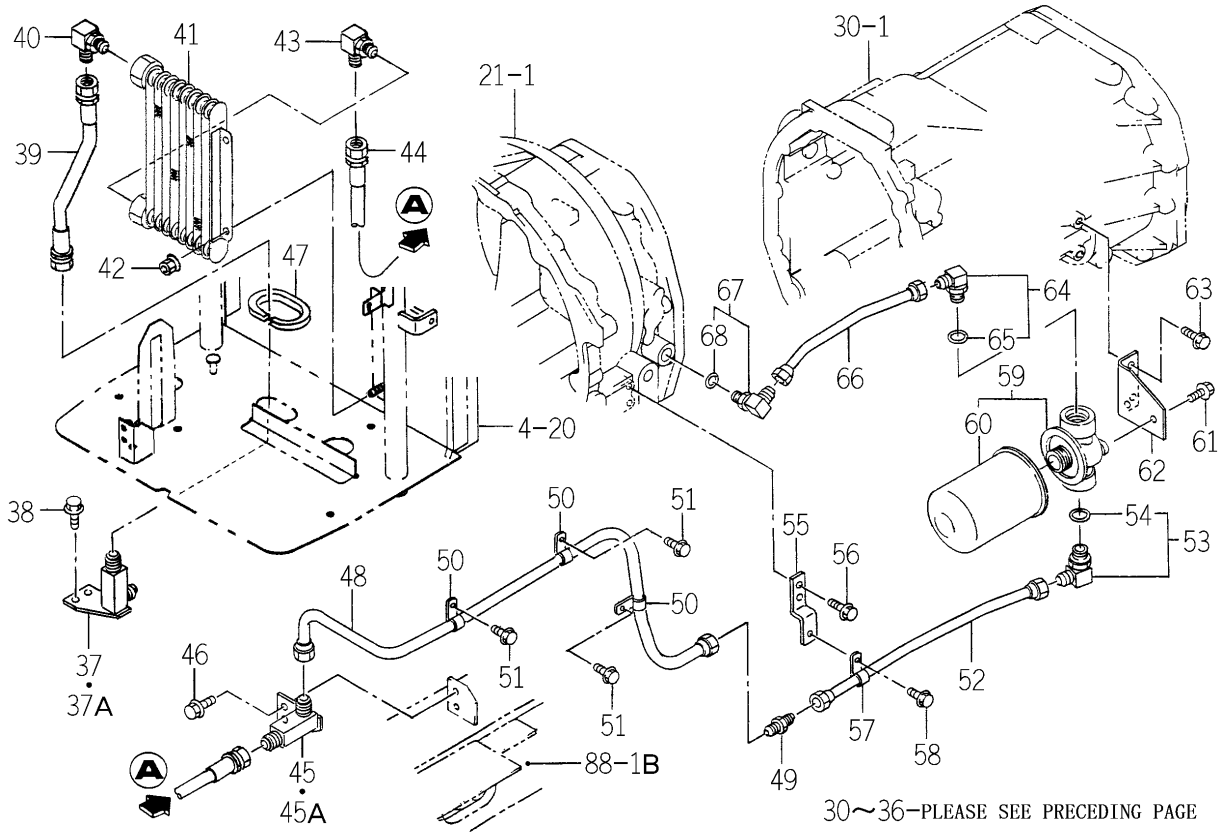

1743-509A-0100

KEY	PART CODE	DESCRIPTION	SPC	TYPE OF MODEL TG5330 E4	TG5330 E6	TG5390 E4	TG5390 E6	ITC	COL	GRP	REMARKS
30	1656-509-300-00	ADAPTER/PF3/8 ASSY	*				1 878-				
31	V720-112-401-40	O-RING/P14	*				2 878-				
32	3829-387-410-00	ADPTER/G1/4.1/4	*				1 878-				
33	V720-112-401-10	RING/O	*				1 878-				
34	1705-408-230-00	ADAPTER/L/G1/4 ASSY	*				1 878-				
35	V720-112-401-10	RING/O	*				1 878-				
36	1743-509-230-00	PIPE/COOLER/LOWER	*				1 878-				
37	1646-407-590-20	ADAPTER/M20XG3/ COMP	*				1 -879				
37A	1646-407-590-30	ADAPTER/M20XG3/ COMP	*				1 880-	1			
38	V231-360-801-60	FLANGEBOLT	*				2 878-				
39	1734-508-320-10	HOSE/310 ASSY	*				1 878-				
40	1640-530-003-00	CONNECTOR	*				1 878-				
41	1646-407-560-20	COOLER/OIL ASSY	*				1 878-				
42	V362-260-008-00	NUT/WASHER	*				2 878-				
43	1640-530-003-00	CONNECTOR	*				1 878-				
44	1734-508-320-10	HOSE/310 ASSY	*				1 878-				
45	1646-407-590-20	ADAPTER/M20XG3/ COMP	*				1 -879				
45A	1646-407-590-30	ADAPTER/M20XG3/ COMP	*				1 880-	1			
46	V231-360-801-60	FLANGEBOLT	*				2 878-				
47	1734-508-005-00	PAD/190	*				1 878-				
48	1743-509-250-00	PIPE/FILTER/FRONT	*				1 878-				
49	1719-509-002-00	ADAPTER/2-M20X1.5	*				1 878-				
50	1650-509-012-00	HOLDER/12	*				3 878-				
51	V231-360-801-20	FLANGEBOLT	*				3 878-				
52	1743-509-260-00	PIPE/FILTER/REA COMP	*				1 878-				
53	1646-516-710-00	ADAPTER/L/G3/4 ASSY	*				1 878-				
54	V720-113-502-40	O-RING/P24	*				1 878-				
55	1743-509-002-00	STAY/PIPE/FILTER/REA	*				1 878-				
56	V231-360-801-60	FLANGEBOLT	*				2 878-				
57	1650-509-012-00	HOLDER/12	*				1 878-				

FIG.114 HYD. SYSTEM (SUB)(3/3)
(HE6 TYPE-TG5390E6-No.878-)

58～68−PLEASE SEE PRECEDING PAGE

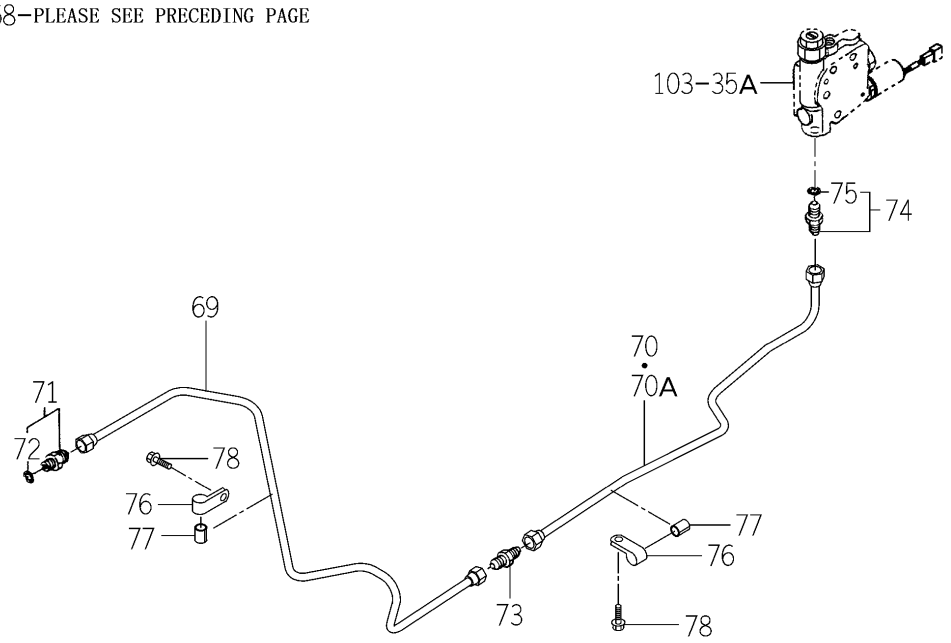

1743-509A-0100

KEY	PART CODE	DESCRIPTION	SPC	TYPE OF MODEL TG5330 E4	TG5330 E6	TG5390 E4	TG5390 E6	ITC	COL	GRP	REMARKS
58	V231-360-801-20	FLANGEBOLT	*				1 878-				
59	1646-516-690-00	FILTER/CHARGE ASSY	*				1 878-				
60	1646-516-692-00	CARTRIDGE ASSY	*				1 878-				
61	V231-360-801-60	FLANGEBOLT	*				2 878-				
62	1743-509-003-00	STAY/FILTER/CHARGE	*				1 878-				
63	V231-360-801-60	FLANGEBOLT	*				2 878-				
64	1646-516-710-00	ADAPTER/L/G3/4 ASSY	*				1 878-				
65	V720-113-502-40	O-RING/P24	*				1 878-				
66	1743-509-270-00	PIPE/HST COMP	*				1 878-				
67	1650-509-310-00	ADAPTER/L/PF3/8 ASSY	*				1 878-				
68	V720-112-401-40	O-RING/P14	*				1 878-				
69	1742-509-270-00	PIPE/CONTROL/F COMP	*				1 878-				
70	1742-509-280-00	PIPE/CONTROL/R COMP	*				1 -928				
70A	1742-509-280-10	PIPE/CONTROL/R COMP	*				1 929-	1			
71	1650-509-280-00	ADAPTER/PF1/4 ASSY	*				1 878-				
72	V720-112-401-10	RING/O	*				1 878-				
73	1650-509-011-00	ADAPTER/M16-M16	*				1 878-				
74	1656-509-460-00	ADAPTOR/PF1/4 ASSY	*				1 878-				
75	V720-112-401-10	RING/O	*				1 878-				
76	1742-509-007-10	HOLDER/15	*				2 878-				
77	1650-509-017-00	GROMMET/10X18X20	*				2 878-				
78	V231-360-801-20	FLANGEBOLT	*				2 878-				

FIG.115 HYD. SYSTEM (SUB) (Q TYPE)(1/2)

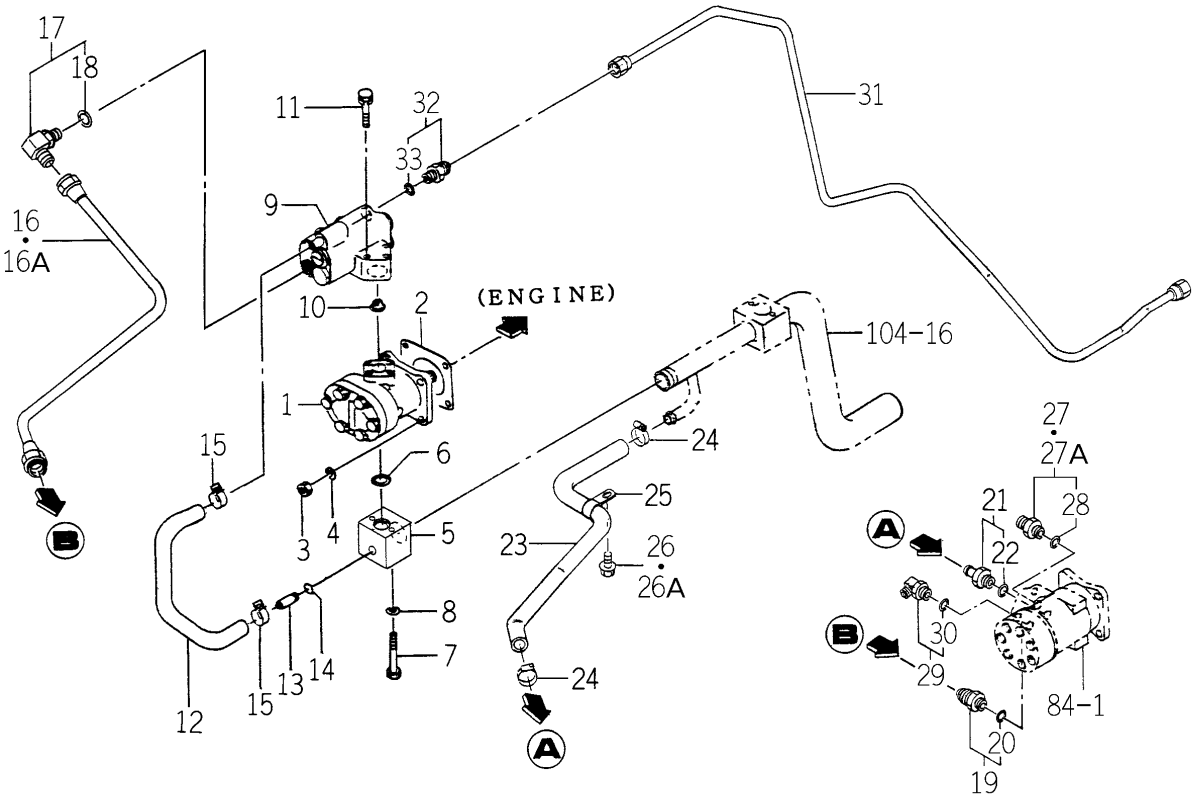

1746-509A-0100

KEY	PART CODE	DESCRIPTION	SPC	TYPE OF MODEL TG5330 E4	TG5330 E6	TG5390 E4	TG5390 E6	ITC	COL	GRP	REMARKS
1	K135-018-000-00	PUMP GEAR ASSY	*	1		1					FIG 257
2	1404-503-006-00	PACKING,OIL PUMP	*	1 19-		1 17-					
3	V304-260-008-00	NUT	*	4		4					
4	V401-160-008-00	WASHER,SP/M 8	*	4		4					
5	1742-509-002-00	FLANGE/SUCTION/P/Q	*	1		1					
6	V720-112-402-00	O-RING/P20	*	1		1					
7	V200-360-606-00	BOLT	*	2		2					
8	V401-160-006-00	WASHER,SP/M 6	*	2		2					
9	K256-004-000-00	REDUCE VALVE ASSY	*	1		1					FIG 265
10	1650-508-002-00	FILTER/LINE/12X18X15	*	1		1					
11	V210-560-604-50	BOLT/S	*	3		3					
12	1650-509-006-10	HOSE/OIL	*	1		1					
13	1650-501-006-00	PIPE/30	*	1		1					
14	V723-111-500-80	RING/O	*	1		1					
15	1673-782-016-10	CLIP/HOSE/17-20	*	2		2					
16	1742-509-200-10	PIPE/STEERING/P COMP	*	1 -946		1 -1241		1			
16A	1742-509-200-20	PIPE/STEERING/P COMP	*	1 947-		1 1242-		1			
17	1650-509-310-00	ADAPTER/L/PF3/8 ASSY	*	1		1					
18	V720-112-401-40	O-RING/P14	*	1		1					
19	1650-509-290-00	ADAPTER/PF1/4 ASSY	*	1		1					
20	V720-112-401-10	RING/O	*	1		1					
21	1675-407-220-00	ADAPTER/G1/4B ASSY	*	1		1					
22	V720-112-401-10	RING/O	*	1		1					
23	1742-509-003-00	HOSE/RETURN	*	1		1					
24	J061-112-022-00	CLAMP/WORM/12-22	*	2		2					
25	1675-407-003-00	HOLDER/19	*	1		1					
26	V231-360-801-60	FLANGEBOLT	*	1 -135		1 -443					
26A	V231-360-801-20	FLANGEBOLT	*	1 136-		1 444-					
27	P112-521-350-00	UNION/STRAIGHT/ ASSY	*	1 -98		1 -296					
27A	3829-387-410-00	ADPTER/G1/4.1/4	*	1 99-		1 297-					

FIG.115 HYD. SYSTEM (SUB) (Q TYPE)(2/2)

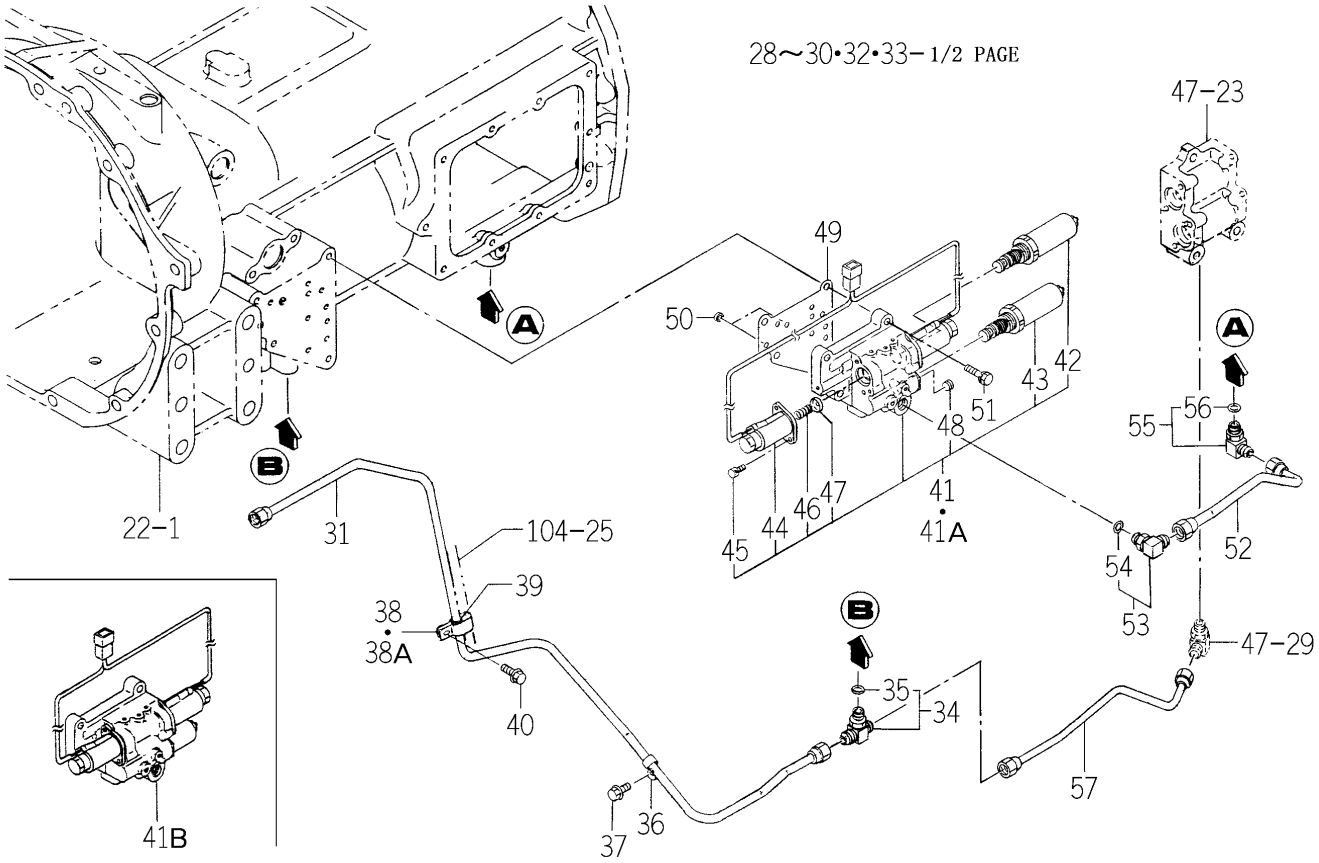

1746-509A-0100

KEY	PART CODE	DESCRIPTION	SPC	TYPE OF MODEL TG5330 E4	TG5330 E6	TG5390 E4	TG5390 E6	ITC	COL	GRP	REMARKS
28	V720-112-401-10	RING/O	*	1		1					
29	1705-408-230-00	ADAPTER/L/G1/4 ASSY	*	1		1					
30	V720-112-401-10	RING/O	*	1		1					
31	1742-509-230-00	PIPE/CONTROL/PQ COMP	*	1		1					
32	1650-509-280-00	ADAPTER/PF1/4 ASSY	*	1		1					
33	V720-112-401-10	RING/O	*	1		1					
34	1690-509-270-00	ADAPTOR/TG1/4 ASSY	*	1		1					
35	V720-112-401-10	RING/O	*	1		1					
36	1650-509-003-10	HOLDER/10	*	1		1					
37	V231-360-801-20	FLANGEBOLT	*	1		1					
38	1742-509-007-00	HOLDER/15	*	1 -23		1 -25					
38A	1742-509-007-10	HOLDER/15	*	1 24-		1 26-		1			
39	1650-509-017-00	GROMMET/10X18X20	*	1		1					
40	V231-360-801-20	FLANGEBOLT	*	1		1					
41	K200-115-000-00	VALVE/LINEAR ASSY	*	1 -74		1 -254					
41A	K200-115-000-10	VALVE/LINEAR ASSY	*	1 -892		1 -1183		1			
41B	K200-182-000-00	VALVE/LINEAR ASSY	*	1 893-		1 1184-					FIG 261
42	K200-100-300-00	VALVE/PRV/B ASSY	*	1 -892		1 -1183					
43	K200-097-200-00	VALVE/PRV/G ASSY	*	1 -892		1 -1183					
44	K200-096-300-00	SOLENOID/03/2 SET	*	1 -892		1 -1183					
45	4902-610-423-00	SCREW/SOCKET	*	4 -892		4 -1183					
46	K200-096-203-00	SPRING/HC020	*	2 -892		2 -1183					
47	K200-096-202-00	SPRING/PLATE/03	*	2 -892		2 -1183					
48	V780-140-000-2T	PLUG/SCREW/SEAL	*	1 -892		1 -1183					
49	1742-509-006-00	GASKET/REVERSE	*	1		1					
50	1729-509-001-00	FILTER/PORT/09	*	2		2					
51	V211-260-803-00	BOLT,SEMS	*	4		4					
52	1742-509-240-00	PIPE/PTO COMP	*	1		1					
53	1675-510-210-00	ADAPTER/L/PF1/4 ASSY	*	1		1					
54	V720-112-401-10	RING/O	*	1		1					

FIG.115 HYD. SYSTEM (SUB) (Q TYPE)(2/2)

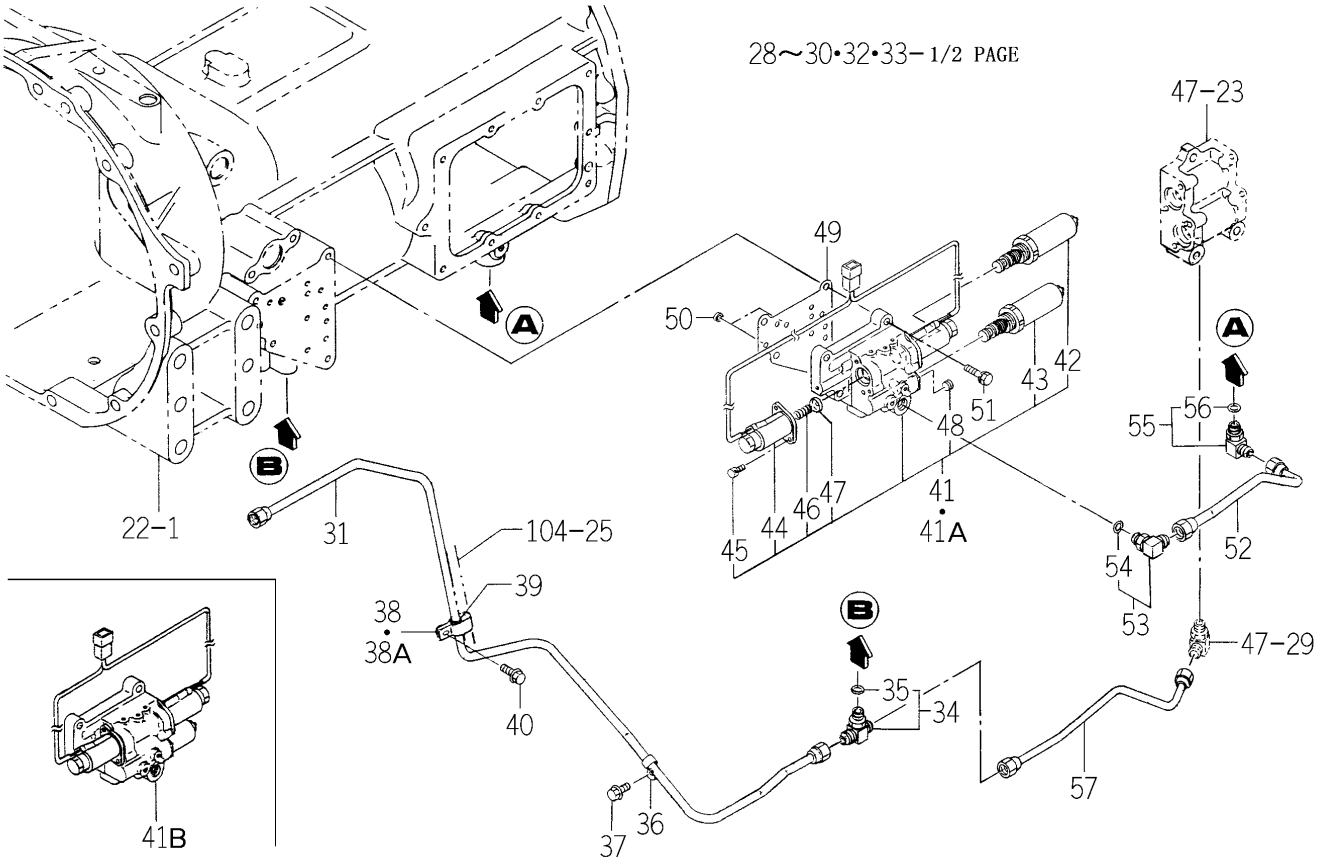

1746-509A-0100

KEY	PART CODE	DESCRIPTION	SPC	TYPE OF MODEL TG5330 E4	TG5330 E6	TG5390 E4	TG5390 E6	ITC	COL	GRP	REMARKS
55	1656-509-310-10	ADAPTER/L/PF1/4 ASSY	*	1		1					
56	V720-112-401-10	RING/O	*	1		1					
57	1746-509-210-00	PIPE/MAIN COMP	*	1		1					

FIG.116 HYD. SYSTEM (SUB) (H3 TYPE)(1/4)

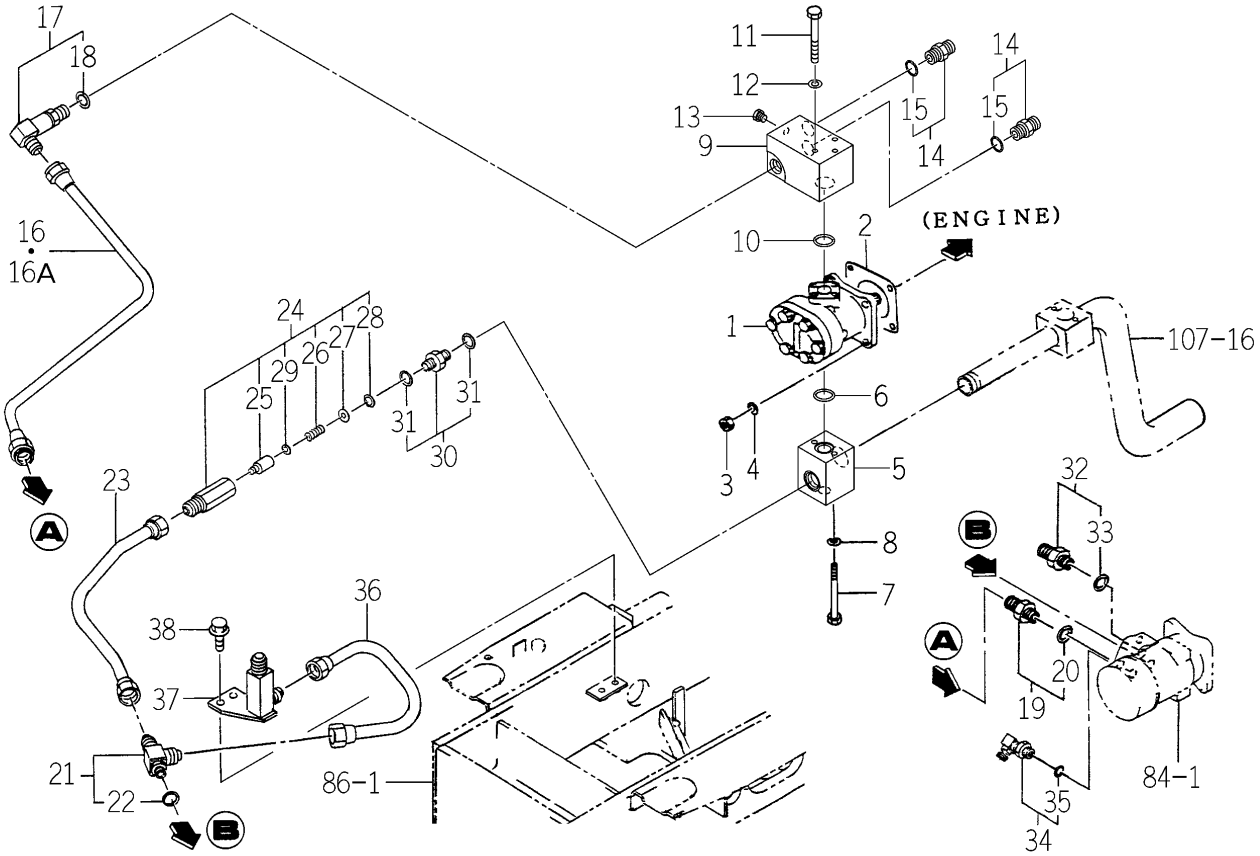

1747-509A-0100

KEY	PART CODE	DESCRIPTION	SPC	TYPE OF MODEL TG5330 E4	TG5330 E6	TG5390 E4	TG5390 E6	ITC	COL	GRP	REMARKS
1	K135-018-000-00	PUMP GEAR ASSY	*			1					FIG 257
2	1404-503-006-00	PACKING,OIL PUMP	*			1					
3	V304-260-008-00	NUT	*			4					
4	V401-160-008-00	WASHER,SP/M 8	*			4					
5	1747-509-072-00	FLANGE/SUCTION/HST	*			1					
6	V720-112-402-00	O-RING/P20	*			1					
7	V200-360-608-00	BOLT/M6X80	*			2					
8	V401-160-006-00	WASHER,SP/M 6	*			2					
9	1747-509-073-00	MANIFOLD/PUMP	*			1					
10	V720-112-402-00	O-RING/P20	*			1					
11	V200-360-607-00	BOLT	*			3					
12	V401-160-006-00	WASHER,SP/M 6	*			3					
13	V782-160-000-2T	PLUG/SCREW/SEAL	*			1					
14	1650-508-320-00	ADAPTER/PF3/8 ASSY	*			2					
15	V720-112-401-40	O-RING/P14	*			2					
16	1742-509-200-10	PIPE/STEERING/P COMP	*			1 -1241					
16A	1742-509-200-20	PIPE/STEERING/P COMP	*			1 1242-		1			
17	1650-511-250-00	ADAPTER/L/PF3/8 ASSY	*			1					
18	V720-112-401-40	O-RING/P14	*			1					
19	1650-509-290-00	ADAPTER/PF1/4 ASSY	*			1					
20	V720-112-401-10	RING/O	*			1					
21	1743-509-210-00	ADAPTER/T/G1/4 ASSY	*			1					
22	V720-112-401-10	RING/O	*			1					
23	1743-509-220-00	PIPE/RETURN/H COMP	*			1					
24	K250-049-000-00	VALVE/RELIEF ASSY	*			1					
25	K250-039-002-00	POPPET	*			1					
26	K250-039-003-00	SPRING/HC024	*			1					
27	K250-039-004-10	COLLAR/04X14X02	*			1					
28	V705-140-015-00	RING,SNAP/15 C	*			1					
29	K250-049-001-00	COLLAR/06X10X02	*			1					

FIG.116 HYD. SYSTEM (SUB) (H3 TYPE)(2/4)

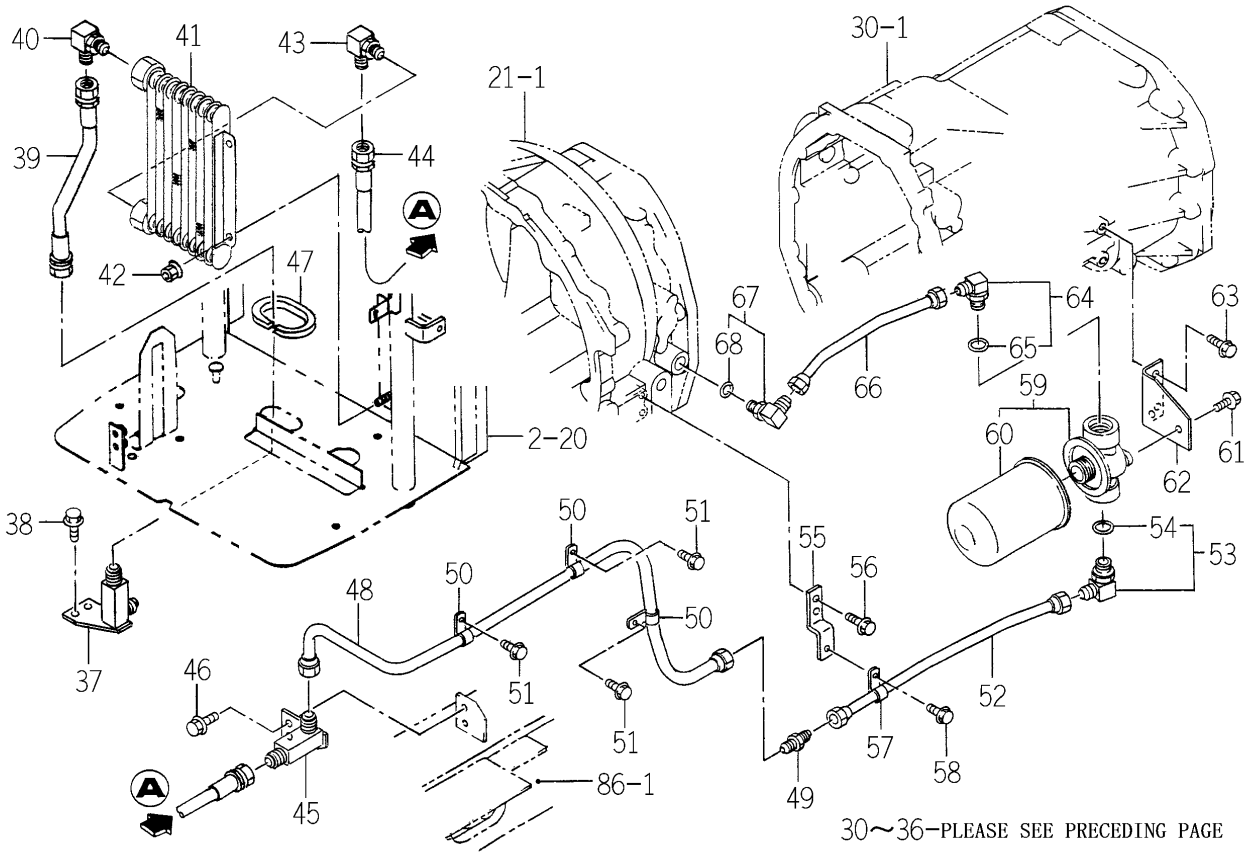

1747-509A-0100

KEY	PART CODE	DESCRIPTION	SPC	TYPE OF MODEL TG5330 E4	TG5330 E6	TG5390 E4	TG5390 E6	ITC	COL	GRP	REMARKS
30	1656-509-300-00	ADAPTER/PF3/8 ASSY	*			1					
31	V720-112-401-40	O-RING/P14	*			2					
32	3829-387-410-00	ADPTER/G1/4.1/4	*			1					
33	V720-112-401-10	RING/O	*			1					
34	1705-408-230-00	ADAPTER/L/G1/4 ASSY	*			1					
35	V720-112-401-10	RING/O	*			1					
36	1743-509-230-00	PIPE/COOLER/LOWER	*			1					
37	1646-407-590-30	ADAPTER/M20XG3/ COMP	*			1					
38	V231-360-801-60	FLANGEBOLT	*			2					
39	1734-508-320-10	HOSE/310 ASSY	*			1					
40	1640-530-003-00	CONNECTOR	*			1					
41	1646-407-560-20	COOLER/OIL ASSY	*			1					
42	V362-260-008-00	NUT/WASHER	*			2					
43	1640-530-003-00	CONNECTOR	*			1					
44	1734-508-320-10	HOSE/310 ASSY	*			1					
45	1646-407-590-30	ADAPTER/M20XG3/ COMP	*			1					
46	V231-360-801-60	FLANGEBOLT	*			2					
47	1734-508-005-00	PAD/190	*			1					
48	1743-509-250-00	PIPE/FILTER/FRONT	*			1					
49	1719-509-002-00	ADAPTER/2-M20X1.5	*			1					
50	1650-509-012-00	HOLDER/12	*			3					
51	V231-360-801-20	FLANGEBOLT	*			3					
52	1743-509-260-00	PIPE/FILTER/REA COMP	*			1					
53	1646-516-710-00	ADAPTER/L/G3/4 ASSY	*			1					
54	V720-113-502-40	O-RING/P24	*			1					
55	1743-509-002-00	STAY/PIPE/FILTER/REA	*			1					
56	V231-360-801-60	FLANGEBOLT	*			2					
57	1650-509-012-00	HOLDER/12	*			1					
58	V231-360-801-20	FLANGEBOLT	*			1					
59	1646-516-690-00	FILTER/CHARGE ASSY	*			1					

FIG.116 HYD. SYSTEM (SUB) (H3 TYPE)(3/4)

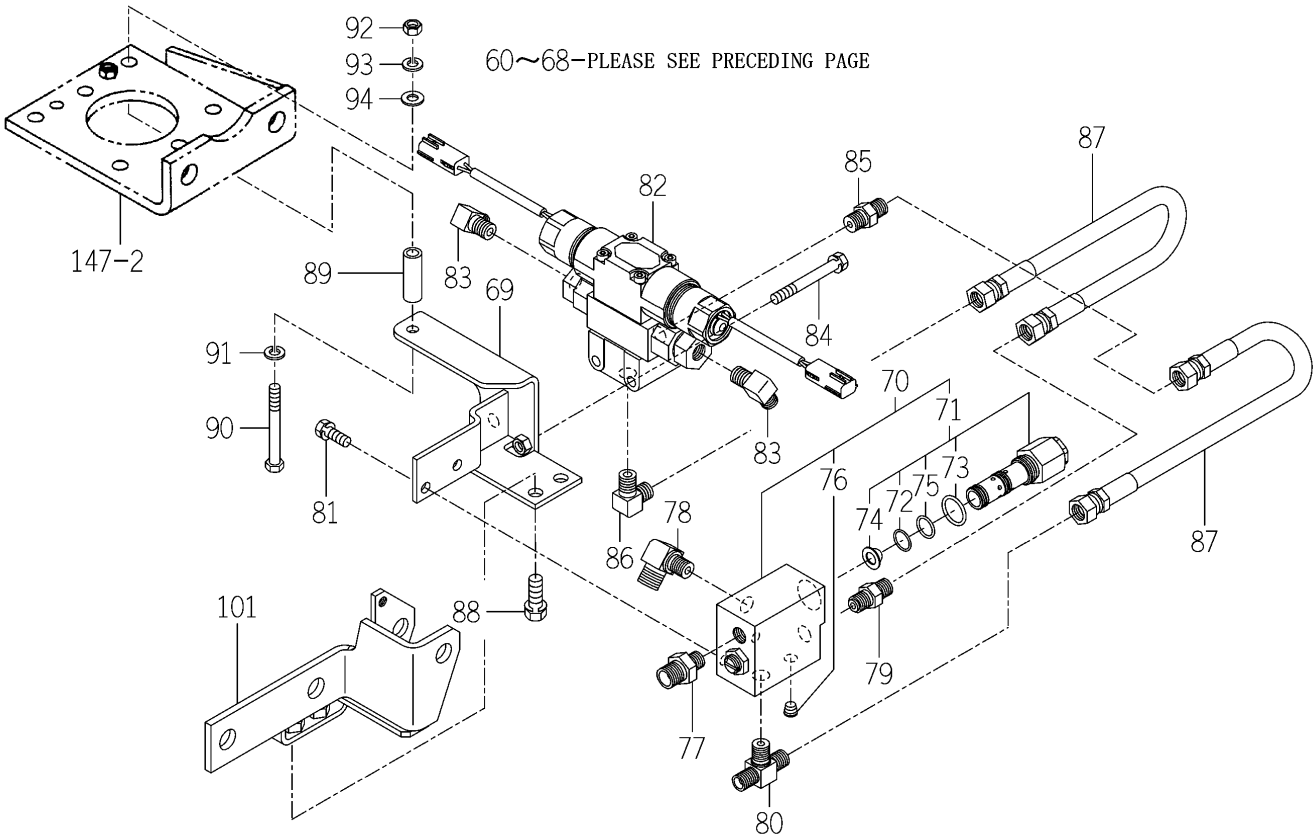

1747-509A-0100

KEY	PART CODE	DESCRIPTION	SPC	TYPE OF MODEL TG5330 E4	TG5330 E6	TG5390 E4	TG5390 E6	ITC	COL	GRP	REMARKS
60	1646-516-692-00	CARTRIDGE ASSY	*			1					
61	V231-360-801-60	FLANGEBOLT	*			2					
62	1743-509-003-00	STAY/FILTER/CHARGE	*			1					
63	V231-360-801-60	FLANGEBOLT	*			2					
64	1646-516-710-00	ADAPTER/L/G3/4 ASSY	*			1					
65	V720-113-502-40	O-RING/P24	*			1					
66	1743-509-270-00	PIPE/HST COMP	*			1					
67	1650-509-310-00	ADAPTER/L/PF3/8 ASSY	*			1					
68	V720-112-401-40	O-RING/P14	*			1					
69	1747-509-720-00	BRACKET/VALVE COMP	*			1					
70	K234-006-000-20	VALVE/FLOW PRIORITY/	*			1					
71	K233-013-000-00	VALVE/FLOW PRIORITY/	*			1					
72	V723-111-501-60	O-RING	*			1					
73	V720-112-402-00	O-RING/P20	*			1					
74	1650-508-002-00	FILTER/LINE/12X18X15	*			1					
75	K211-066-103-00	RING/O/F404/1015	*			1					
76	V780-140-000-2T	PLUG/SCREW/SEAL	*			1					
77	1747-509-075-00	ADAPTER/G3/8-R1/4	*			1					
78	1747-509-074-00	ADAPTER/L/G3/8-R1/4	*			1					
79	1764-178-022-00	ADAPTER/R1/4XG1/4	*			1					
80	1747-509-731-00	ADAPTER/T/G1/4	*			1					
81	V211-260-802-00	BOLT/S	*			2					
82	K200-180-000-20	VALVE/180 ASSY	*			1					FIG 260
83	3768-185-022-10	ADAPTER(90ß/PUMP)	*			2					
84	V211-260-806-50	BOLT,SEMS/M8X65	*			2					
85	3676-352-001-00	ADAPTOR/STRAIGHT	*			1					
86	3768-185-022-10	ADAPTER(90ß/PUMP)	*			1					
87	1747-509-750-00	HOSE/400 ASSY	*			2					
88	V211-561-002-50	BOLT/M10X25	*			2					
89	1747-509-076-00	TUBE/041	*			1					

FIG.116 HYD. SYSTEM (SUB) (H3 TYPE)(4/4)

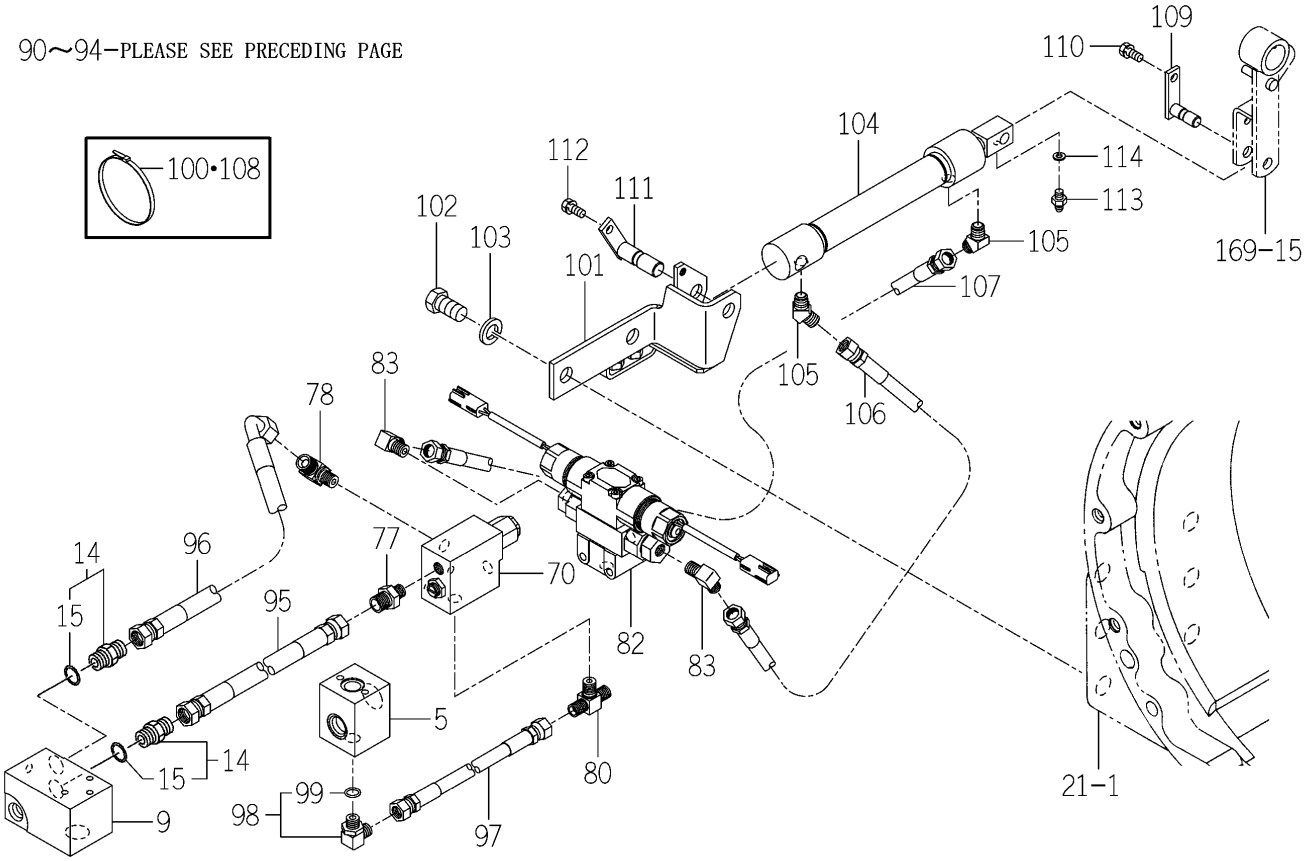

1747-509A-0100

KEY	PART CODE	DESCRIPTION	SPC	TYPE OF MODEL TG5330 E4	TG5330 E6	TG5390 E4	TG5390 E6	ITC	COL	GRP	REMARKS
90	V201-360-807-00	BOLT	*			1					
91	V401-160-008-00	WASHER,SP/M 8	*			1					
92	V304-460-008-00	NUT/M8	*			1					
93	V401-160-008-00	WASHER,SP/M 8	*			1					
94	V411-260-008-00	WASHER,PL/M 8	*			1					
95	1747-509-770-00	HOSE/800 ASSY	*			1					
96	1747-509-790-00	HOSE/800 ASSY	*			1					
97	1747-509-760-00	HOSE/700 ASSY	*			1					
98	1705-408-230-00	ADAPTER/L/G1/4 ASSY	*			1					
99	V720-112-401-10	RING/O	*			1					
100	1342-402-006-00	BAND/WIRE/250	*			4					
101	1747-509-700-00	BRACKET/CYLINDE COMP	*			1					
102	V203-361-603-00	BOLT	*			2					
103	V401-160-016-00	WASHER,SP/M16	*			2					
104	K185-078-000-10	CYLINDER ASSY	*			1					
105	3631-350-201-10	ADAPTER/45ß	*			2					
106	1747-509-750-00	HOSE/400 ASSY	*			1					
107	1747-509-760-00	HOSE/700 ASSY	*			1					
108	1342-402-006-00	BAND/WIRE/250	*			2					
109	1764-178-300-10	PIN COMP	*			1					
110	V211-560-801-60	BOLT,SEMS	*			1					
111	1764-178-310-10	PIN COMP	*			1					
112	V211-560-801-60	BOLT,SEMS	*			1					
113	V760-150-000-00	NIPPLE,GREASE	*			1					
114	V401-160-006-00	WASHER,SP/M 6	*			1					

FIG.117 JOY STICK VALVE SET(E6 TYPE-STD-(1/2) TG5330E6-No.1-566/TG5390E6-No.1-881/ E4 TYPE EXCEPT A-OPTION-No.1-)

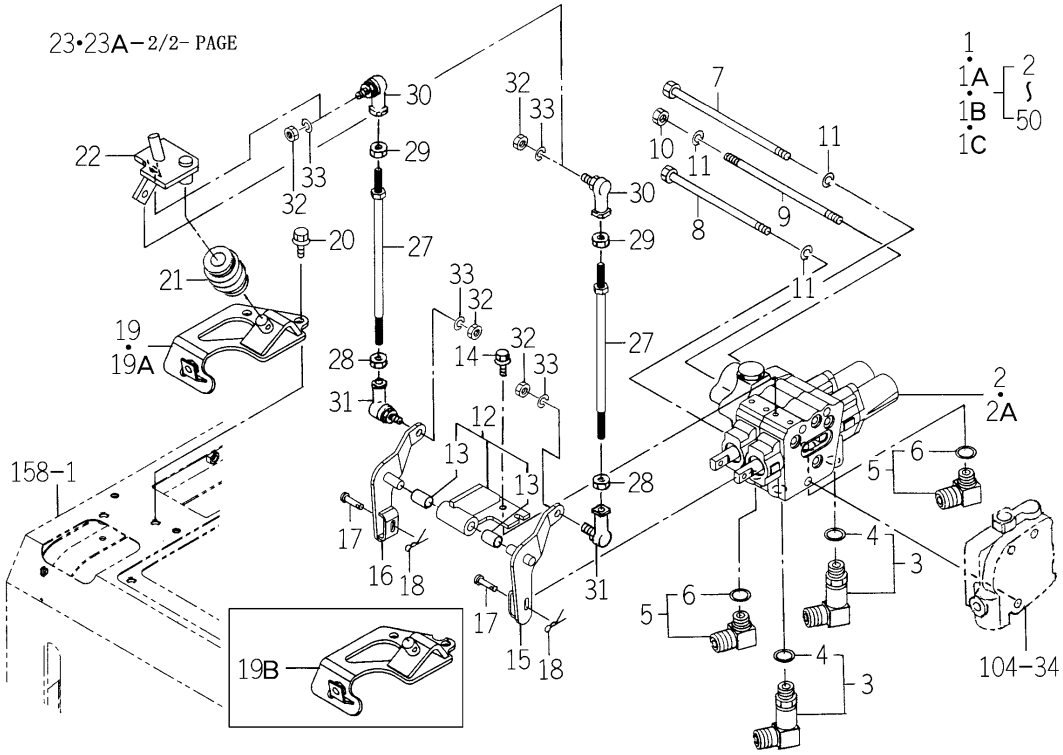

1742-511A-0100

KEY	PART CODE	DESCRIPTION	SPC	TYPE OF MODEL TG5330 E4	TG5330 E6	TG5390 E4	TG5390 E6	ITC	COL	GRP	REMARKS
1	1742-511-600-00	JOYSTICK/E4 SET	*	1 -51	1 -51	1 -62	1 -62				
1A	1742-511-600-30	JOYSTICK/E4 SET	*	1 -384	1 -384	1 -768	1 -768	1			
1B	1742-511-600-40	JOYSTICK/E4 SET	*	1 -957	1 -566	1 -1331	1 -881	1			
1C	1742-511-600-50	JOYSTICK/E4 SET	T	1 958-		1 1332-		1			
2	K211-074-000-00	VALVE/CONTROL ASSY	*	1 -66	1 -66	1 -208	1 -208				FIG 264
2A	K211-074-000-10	VALVE/CONTROL ASSY	*	1 67-	1 -566	1 209-	1 -881	1			FIG 264
3	1650-511-250-00	ADAPTER/L/PF3/8 ASSY	*	2	2 -566	2	2 -881				
4	V720-112-401-40	O-RING/P14	*	2	2 -566	2	2 -881				
5	1650-509-310-00	ADAPTER/L/PF3/8 ASSY	*	2	2 -566	2	2 -881				
6	V720-112-401-40	O-RING/P14	*	2	2 -566	2	2 -881				
7	V201-261-017-00	BOLT	*	1	1 -566	1	1 -881				
8	V201-261-015-00	BOLT	*	1	1 -566	1	1 -881				
9	1742-511-002-00	BOLT/STUD	*	1	1 -566	1	1 -881				
10	V304-260-010-00	NUT	*	1	1 -566	1	1 -881				
11	V401-160-010-00	WASHER,SP/M10	*	3	3 -566	3	3 -881				
12	1742-511-370-00	PLATE/JOY ASSY	*	1	1 -566	1	1 -881				
13	1560-509-211-00	BUSH/10X12X20	*	2	2 -566	2	2 -881				
14	V230-360-601-20	FLANGEBOLT	*	3	3 -566	3	3 -881				
15	1742-511-310-00	ARM/BOOM COMP	*	1	1 -566	1	1 -881				
16	1742-511-320-00	ARM/BUCKET COMP	*	1	1 -566	1	1 -881				
17	3805-544-016-00	PIN/06X23	*	2	2 -566	2	2 -881				
18	V560-160-008-00	PIN/SNAP	*	2	2 -566	2	2 -881				
19	1742-511-330-00	BRACKET COMP	*	1 -363	1 -363	1 -763	1 -763				
19A	1742-511-330-10	BRACKET COMP	*	1 -449	1 -449	1 -794	1 -794	1			
19B	1742-511-330-20	BRACKET COMP	*	1 450-	1 -566	1 795-	1 -881	1			
20	V231-360-802-00	FLANGEBOLT	*	3	3 -566	3	3 -881				
21	P112-401-220-00	JOINT ASSY	*	1	1 -566	1	1 -881				
22	1742-511-340-00	BASE/LEVER COMP	*	1	1 -566	1	1 -881				
23	1742-511-350-00	LEVER/JOYSTICK COMP	*	1 -140	1 -140	1 -469	1 -469				
23A	1742-511-350-10	LEVER/JOYSTICK COMP	*	1 141-	1 -566	1 470-	1 -881	1			

FIG.117 JOY STICK VALVE SET(E6 TYPE-STD-(2/2) TG5330E6-No.1-566/TG5390E6-No.1-881/ E4 TYPE EXCEPT A-OPTION-No.1-)

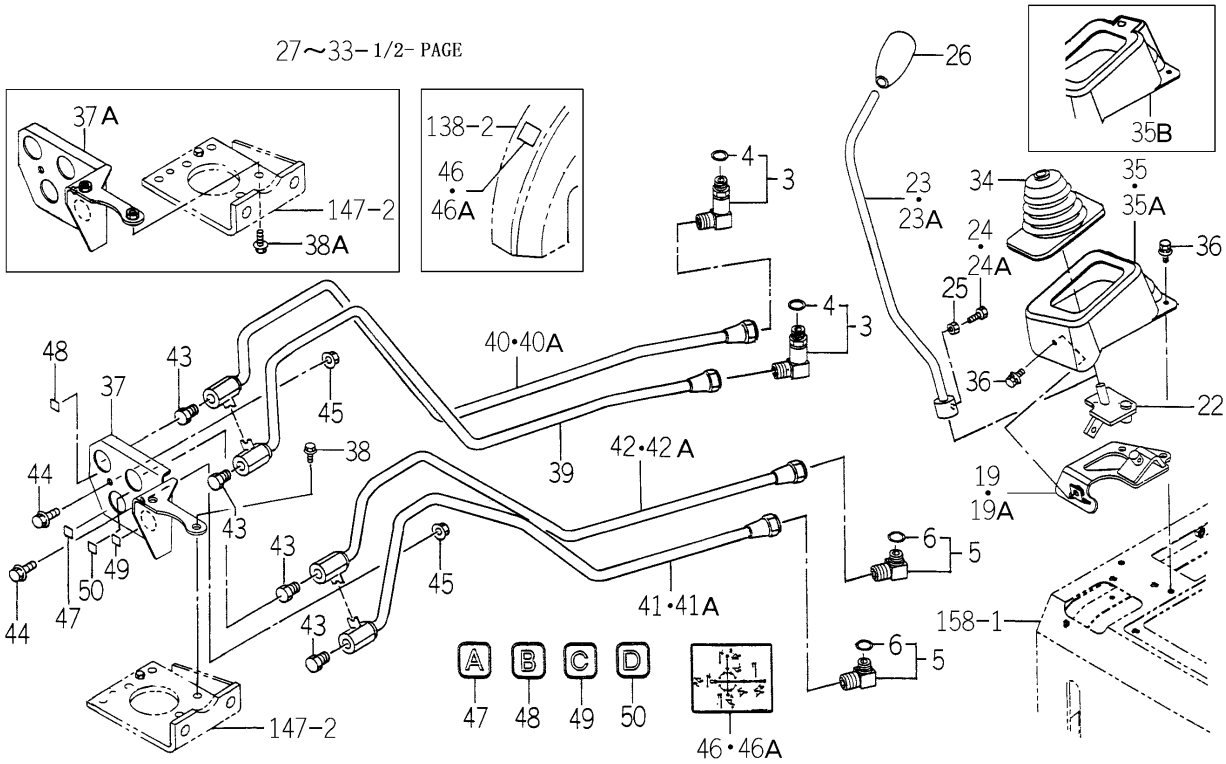

1742-511A-0100

KEY	PART CODE	DESCRIPTION	SPC	TYPE OF MODEL TG5330 E4	TG5330 E6	TG5390 E4	TG5390 E6	ITC	COL	GRP	REMARKS
24	1404-502-013-00	BOLT/M8X25	*	1 -724	1 -566	1 -1019	1 -881				
24A	1600-502-003-00	BOLT,SM/M08X25	T	1 725-		1 1020-					
25	V304-260-008-00	NUT	*	1	1 -566	1	1 -881				
26	1672-207-003-00	GRIP	*	1	1 -566	1	1 -881				
27	1742-511-360-00	ROD/M8X234 COMP	*	2	2 -566	2	2 -881				
28	1560-132-007-30	NUT/M8	*	2	2 -566	2	2 -881				
29	V304-260-008-00	NUT	*	2	2 -566	2	2 -881				
30	1560-695-021-00	JOINT BALL M08RH	*	2	2 -566	2	2 -881				
31	1560-695-022-00	JOINT BALL M08LH	*	2	2 -566	2	2 -881				
32	V304-260-008-00	NUT	*	4	4 -566	4	4 -881				
33	V401-160-008-00	WASHER,SP/M 8	*	4	4 -566	4	4 -881				
34	1600-606-002-00	BOOT	*	1	1 -566	1	1 -881				
35	1742-511-001-00	COVER	*	1 -366	1 -366	1 -763	1 -763				
35A	1742-511-001-10	COVER	*	1 -444	1 -444	1 -777	1 -777	1			
35B	1742-511-001-20	COVER	*	1 445-	1 -566	1 778-	1 -881	1			
36	V210-370-601-60	BOLT/SP	*	3	3 -566	3	3 -881				
37	1742-511-250-00	BRACKET COMP	*	1 -51	1 -51	1 -62	1 -62				
37A	1742-511-250-10	BRACKET COMP	*	1 52-	1 -566	1 63-	1 -881	1			
38	V231-361-201-60	FLANGEBOLT	*	2 -51	2 -51	2 -62	2 -62				
38A	V231-360-802-50	FLANGEBOLT	*	2 52-	2 -566	2 63-	2 -881				
39	1742-511-210-00	PIPE/BOOM/A COMP	*	1	1 -566	1	1 -881				
40	1742-511-220-00	PIPE/BOOM/B COMP	*	1	1 -566	1	1 -881				
40A	1742-511-220-10	PIPE/BOOM/B/E4 COMP	*	1	1 -566	1	1 -881	1			
41	1742-511-230-00	PIPE/BUCKET/A COMP	*	1 -51	1 -51	1 -62	1 -62				
41A	1742-511-230-20	PIPE/BUCKET/A/E COMP	*	1 52-	1 -556	1 63-	1 -881	1			
42	1742-511-240-00	PIPE/BUCKET/B COMP	*	1 -51	1 -51	1 -64	1 -64				
42A	1742-511-240-10	PIPE/BUCKET/B/E COMP	*	1 52-	1 -566	1 65-	1 -881	1			
43	V782-160-000-6T	PLUG/SCREW/SEAL	*	4	4 -566	4	4 -881				
44	V231-360-802-00	FLANGEBOLT	*	2	2 -566	2	2 -881				
45	V363-260-008-00	NUT/WASHER	*	2	2 -566	2	2 -881				

FIG.117 JOY STICK VALVE SET(E6 TYPE-STD-(2/2) TG5330E6-No.1-566/TG5390E6-No.1-881/ E4 TYPE EXCEPT A-OPTION-No.1-)

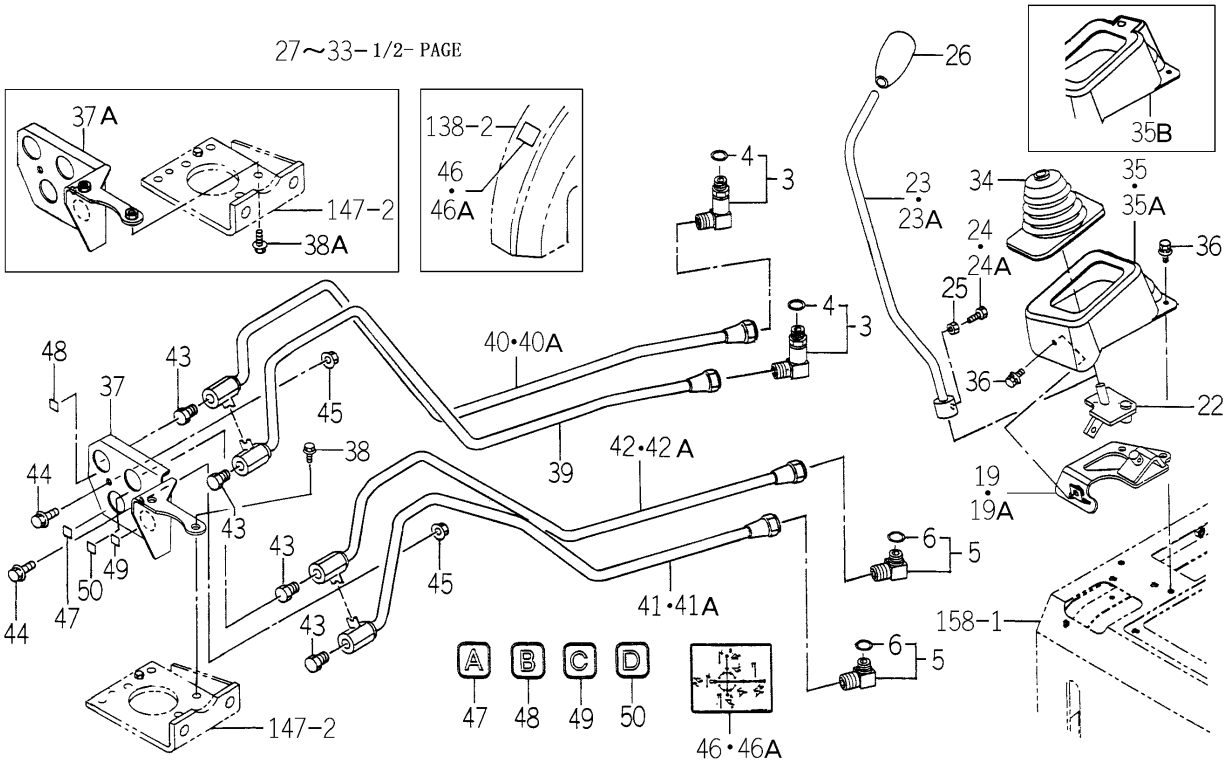

1742-511A-0100

KEY	PART CODE	DESCRIPTION	SPC	TYPE OF MODEL TG5330 E4	TG5330 E6	TG5390 E4	TG5390 E6	ITC	COL	GRP	REMARKS
46	1723-530-010-10	LABEL/LOADER	*	1 -94	1 -94	1 -298	1 -298				
46A	1723-530-010-20	LABEL/LOADER	*	1 95-	1 -566	1 299-	1 -881	1			
47	1518-903-006-00	MARK/PORT/A	*	1	1 -566	1	1 -881				
48	1518-903-007-00	MARK/PORT/B	*	1	1 -566	1	1 -881				
49	1723-902-007-00	LABEL/C	*	1	1 -566	1	1 -881				
50	1723-902-008-00	LABEL/D	*	1	1 -566	1	1 -881				

FIG.118 JOY STICK VALVE SET(1/3)
(E6 TYPE-TG5330E6-No.567-/TG5390E6-No.882-)

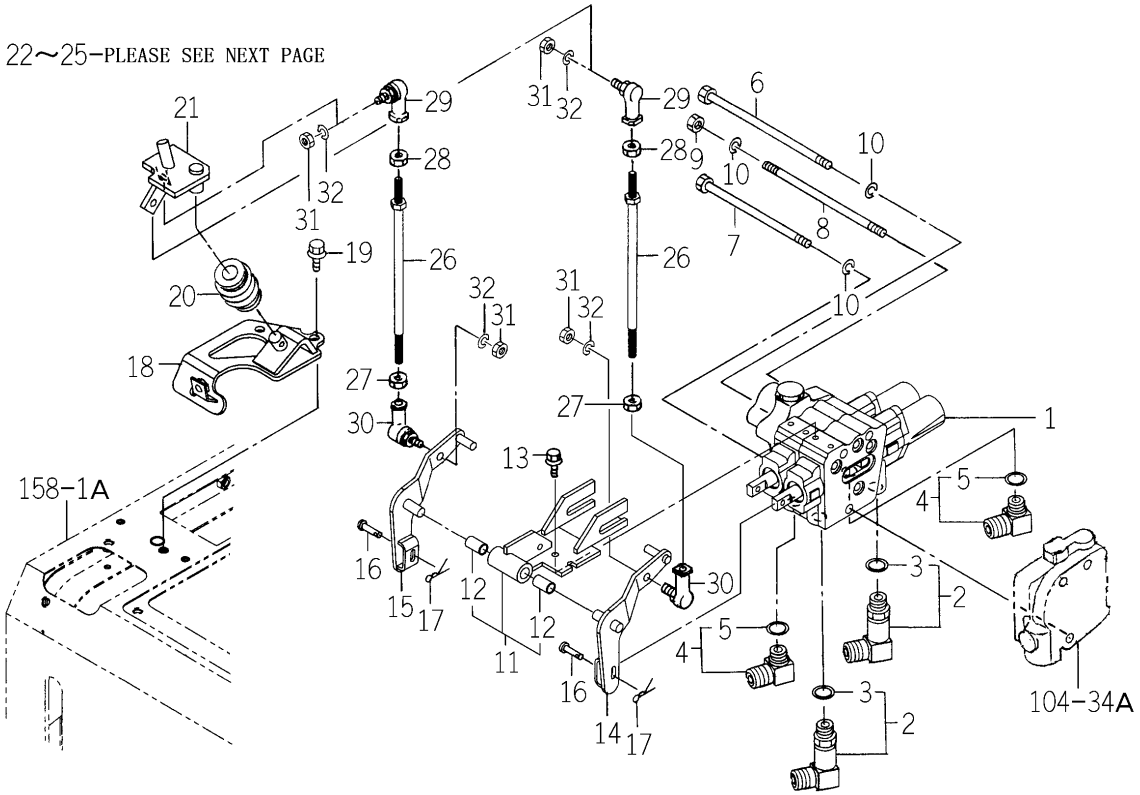

1742-511D-0100

KEY	PART CODE	DESCRIPTION	SPC	TYPE OF MODEL TG5330 E4	TG5330 E6	TG5390 E4	TG5390 E6	ITC	COL	GRP	REMARKS
1	K211-074-000-10	VALVE/CONTROL ASSY	*		1 567-		1 882-				FIG 264
2	1650-511-250-00	ADAPTER/L/PF3/8 ASSY	*		2 567-		2 882-				
3	V720-112-401-40	O-RING/P14	*		2 567-		2 882-				
4	1650-509-310-00	ADAPTER/L/PF3/8 ASSY	*		2 567-		2 882-				
5	V720-112-401-40	O-RING/P14	*		2 567-		2 882-				
6	V201-261-017-00	BOLT	*		1 567-		1 882-				
7	V201-261-015-00	BOLT	*		1 567-		1 882-				
8	1742-511-002-00	BOLT/STUD	*		1 567-		1 882-				
9	V304-260-010-00	NUT	*		1 567-		1 882-				
10	V401-160-010-00	WASHER,SP/M10	*		3 567-		3 882-				
11	1742-511-710-00	PLATE/JOY ASSY	*		1 567-		1 882-				
12	1560-509-211-00	BUSH/10X12X20	*		2 567-		2 882-				
13	V230-360-601-20	FLANGEBOLT	*		3 567-		3 882-				
14	1742-511-740-00	ARM/BOOMCOMP	*		1 567-		1 882-				
15	1742-511-750-00	ARM/BUCKETCOMP	*		1 567-		1 882-				
16	3805-544-016-00	PIN/06X23	*		2 567-		2 882-				
17	V560-160-008-00	PIN/SNAP	*		2 567-		2 882-				
18	1742-511-330-20	BRACKET COMP	*		1 567-		1 882-				
19	V231-360-802-00	FLANGEBOLT	*		3 567-		3 882-				
20	P112-401-220-00	JOINT ASSY	*		1 567-		1 882-				
21	1742-511-340-00	BASE/LEVER COMP	*		1 567-		1 882-				
22	1742-511-350-10	LEVER/JOYSTICK COMP	*		1 567-		1 882-				
23	1404-502-013-00	BOLT/M8X25	*		1 -724		1 -1020				
23A	1600-502-003-00	BOLT,SM/M08X25	*		1 725-		1 1021-				
24	V304-260-008-00	NUT	*		1 567-		1 882-				
25	1672-207-003-00	GRIP	*		1 567-		1 882-				
26	1742-511-360-00	ROD/M8X234 COMP	*		2 567-		2 882-				
27	1560-132-007-30	NUT/M8	*		2 567-		2 882-				
28	V304-260-008-00	NUT	*		2 567-		2 882-				
29	1560-695-021-00	JOINT BALL M08RH	*		2 567-		2 882-				

FIG.118 JOY STICK VALVE SET(2/3)
(E6 TYPE-TG5330E6-No.567-/TG5390E6-No.882-)

30～32−PLEASE SEE PRECEDING PAGE
50～56−PLEASE SEE NEXT PAGE

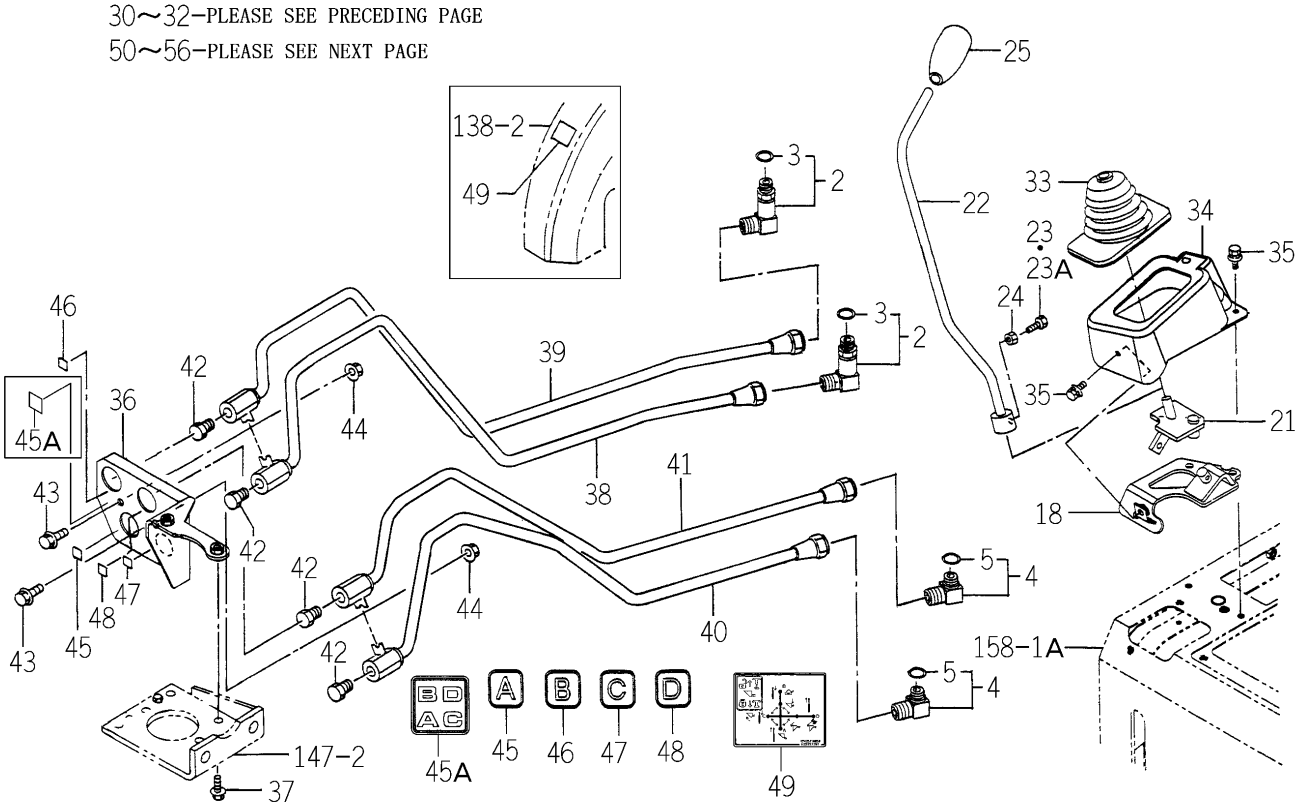

1742-511D-0100

KEY	PART CODE	DESCRIPTION	SPC	TYPE OF MODEL TG5330 E4	TG5330 E6	TG5390 E4	TG5390 E6	ITC	COL	GRP	REMARKS
30	1560-695-022-00	JOINT BALL M08LH	*		2 567-		2 882-				
31	V304-260-008-00	NUT	*		4 567-		4 882-				
32	V401-160-008-00	WASHER,SP/M 8	*		4 567-		4 882-				
33	1600-606-002-00	BOOT	*		1 567-		1 882-				
34	1742-511-001-20	COVER	*		1 567-		1 882-				
35	V210-370-601-60	BOLT/SP	*		3 567-		3 882-				
36	1742-511-250-10	BRACKET COMP	*		1 567-		1 882-				
37	V231-360-802-50	FLANGEBOLT	*		2 567-		2 882-				
38	1742-511-210-00	PIPE/BOOM/A COMP	*		1 567-		1 882-				
39	1742-511-220-00	PIPE/BOOM/B COMP	*		1 567-		1 882-				
40	1742-511-230-20	PIPE/BUCKET/A/E COMP	*		1 567-		1 882-				
41	1742-511-240-10	PIPE/BUCKET/B/E COMP	*		1 567-		1 882-				
42	V782-160-000-6T	PLUG/SCREW/SEAL	*		4 567-		4 882-				
43	V231-360-802-00	FLANGEBOLT	*		2 567-		2 882-				
44	V363-260-008-00	NUT/WASHER	*		2 567-		2 882-				
45	1518-903-006-00	MARK/PORT/A	*		1 -948		1 -1283				
45A	1773-511-053-00	LABEL/PORTDECAL	*		1 949-		1 1284-				
46	1518-903-007-00	MARK/PORT/B	*		1 -948		1 -1283				
47	1723-902-007-00	LABEL/C	*		1 -948		1 -1283				
48	1723-902-008-00	LABEL/D	*		1 -948		1 -1283				
49	1742-511-005-00	LABEL/LOADER	*		1 567-		1 882-				
50	V201-361-007-50	BOLT	*		1 567-		1 882-				
51	V401-160-010-00	WASHER,SP/M10	*		1 567-		1 882-				
52	V411-260-010-00	WASHER/M10	*		1 567-		1 882-				
53	1742-511-071-00	HUB/12X19X42	*		1 567-		1 882-				
54	1742-511-770-10	ARN ASSY	*		1 567-		1 882-				
55	1560-509-211-00	BUSH/10X12X20	*		2 567-		2 882-				
56	2183-615-012-00	SPRING/HE055	*		1 567-		1 882-				
57	1742-511-760-00	PLATE/HOLDERCOMP	*		1 567-		1 882-				
58	8844-616-001-00	PIN/10X070	*		1 567-		1 882-				

FIG.118 JOY STICK VALVE SET(3/3)
(E6 TYPE-TG5330E6-No.567-/TG5390E6-No.882-)

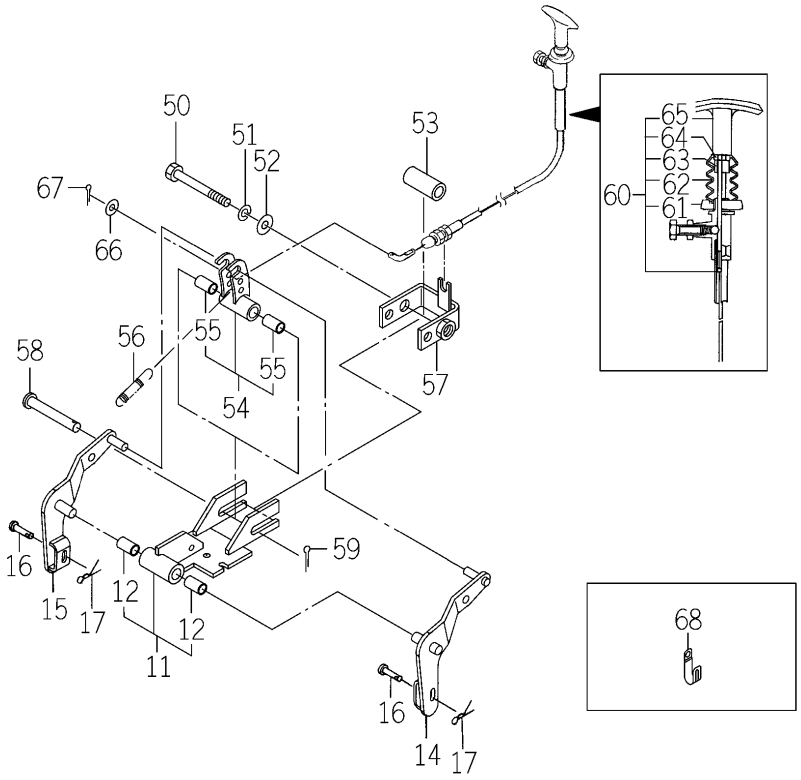

1742-511D-0100

KEY	PART CODE	DESCRIPTION	SPC	TYPE OF MODEL TG5330 E4	TG5330 E6	TG5390 E4	TG5390 E6	ITC	COL	GRP	REMARKS
59	V500-162-002-00	PIN,SPLIT/2 X20	*		1 567-		1 882-				
60	1742-511-790-10	CABLE/LOCK ASSY	*		1 567-		1 882-				
61	1742-511-791-00	NUT	*		1 567-		1 882-				
62	1742-511-792-00	BOOT	*		1 567-		1 882-				
63	1742-511-793-00	COLLAR	*		1 567-		1 882-				
64	1742-511-794-00	NUT	*		1 567-		1 882-				
65	1742-511-795-00	KNOB	*		1 567-		1 882-				
66	V411-260-005-00	WASHER	*		1 567-		1 882-				
67	V500-161-601-50	PIN,SPLIT/1.6X15	*		1 567-		1 882-				
68	3737-172-011-00	CLAMP,HARNESS	*		1 567-		1 882-				

FIG.119 VALVE (REMOTE/2R) SET (E6 TYPE)

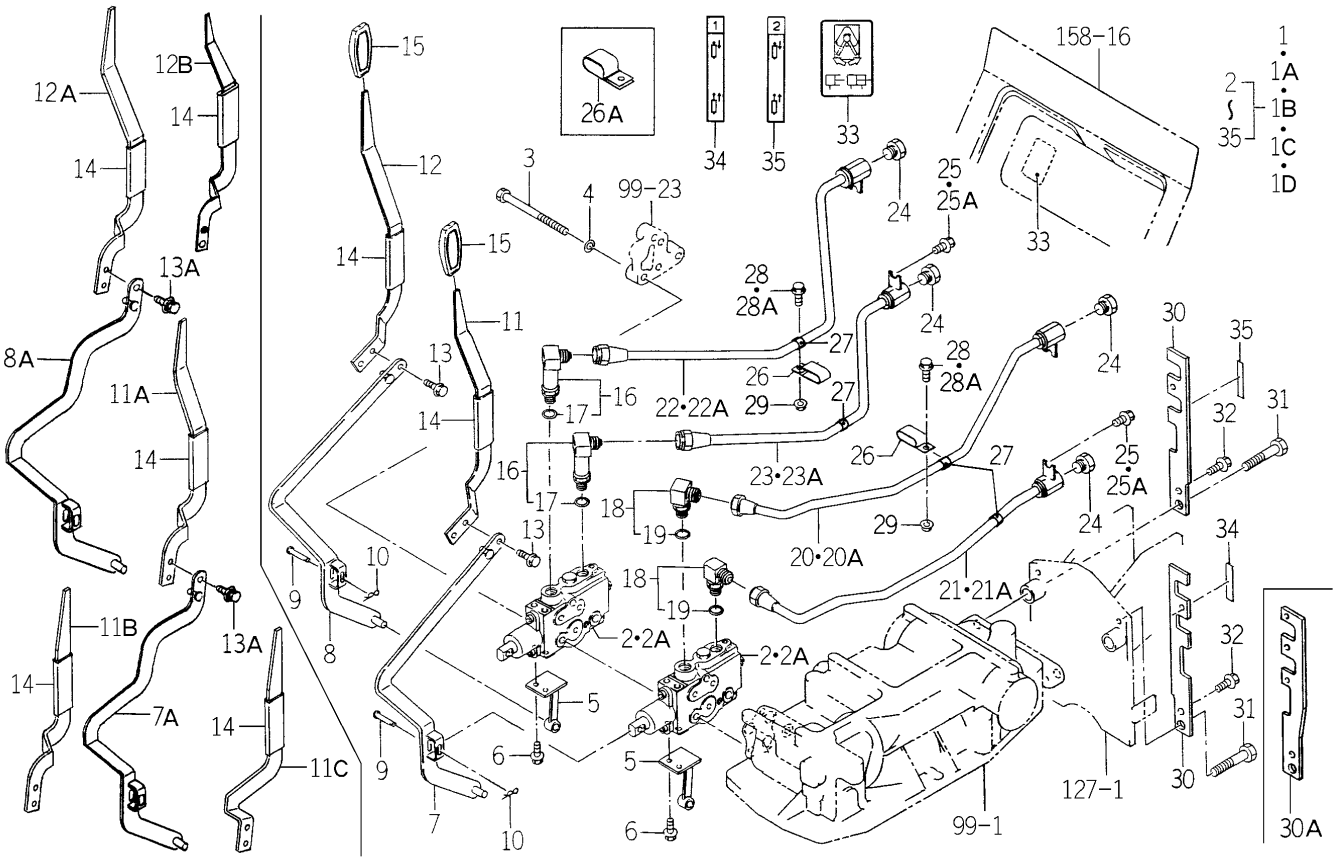

1746-512 -0100

KEY	PART CODE	DESCRIPTION	SPC	TYPE OF MODEL TG5330 E4	TG5330 E6	TG5390 E4	TG5390 E6	ITC	COL	GRP	REMARKS
1	1746-512-200-00	VALVE/REMOTE/2R/E6	*		1 -43		1 -65				
1A	1746-512-200-10	VALVE/REMOTE/2R/E6	*		1 -94		1 -312	1			
1B	1746-512-200-20	VALVE/REMOTE/2R/E6	*		1 -309		1 -628	1			
1C	1746-512-200-30	VALVE/REMOTE/2R/E6	*		1 -951		1 -1310	1			
1D	1746-512-200-40	VALVE/REMOTE/2R/E6	*		1 952-		1 1311-	1			
2	1640-530-600-10	VALVE/CONTROL ASSY	*		2 -120		2 -393				FIG 267
2A	1719-511-350-00	VALVE/CONTROL ASSY	*		2 121-		2 394-				FIG 269
3	V201-261-012-00	BOLT/M10X120	*		3		3				
4	V401-160-010-00	WASHER,SP/M10	*		3		3				
5	1742-512-220-00	HOLDER COMP	*		2		2				
6	V231-360-801-60	FLANGEBOLT	*		4		4				
7	1742-512-200-00	ARM/1ST COMP	*		1 -27		1 -25				
7A	1742-512-200-10	ARM/1ST COMP	*		1 28-		1 26-	3			
8	1742-512-210-00	ARM/2ND COMP	*		1 -27		1 -25				
8A	1742-512-210-10	ARM/2ND COMP	*		1 28-		1 26-	3			
9	2144-519-007-00	PIN/06X31	*		2		2				
10	2130-601-018-00	PIN,SNAP/6	*		2		2				
11	1742-512-002-00	LEVER/1ST	*		1 -27		1 -25				
11A	1742-512-002-10	LEVER/1ST	*		1 -309		1 -628	3			
11B	1759-512-003-20	LEVER/1ST	*		1 -798		1 -1141				
11C	1759-512-003-30	LEVER/1ST	*		1 799-		1 1142-	1			
12	1742-512-003-00	LEVER/2ND	*		1 -27		1 -25				
12A	1742-512-003-10	LEVER/2ND	*		1 -309		1 -628	3			
12B	1759-512-004-20	LEVER/2ND	*		1 310-		1 629-				
13	V231-360-801-20	FLANGEBOLT	*		2 -27		2 -25				
13A	V211-360-801-60	BOLT,SEMS (SP)	*		2 28-		2 26-				
14	1614-262-006-00	INSULATOR/LEVER/SUB	*		2		2				
15	3659-203-005-00	GRIP/03X17X74	*		2		2				
16	1650-511-250-00	ADAPTER/L/PF3/8 ASSY	*		2		2				
17	V720-112-401-40	O-RING/P14	*		2 -27		2 -25				

FIG.119 VALVE (REMOTE/2R) SET (E6 TYPE)

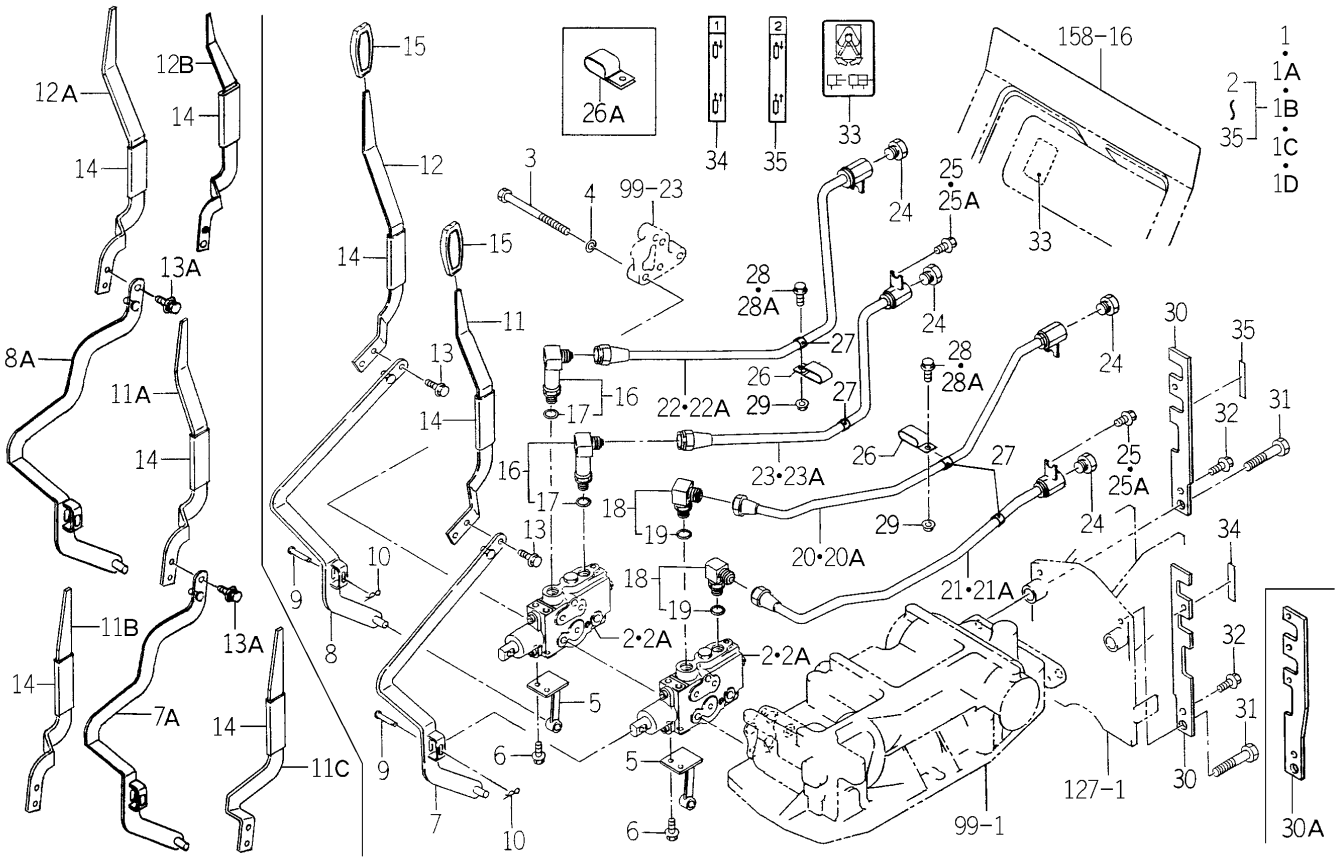

1746-512 -0100

KEY	PART CODE	DESCRIPTION	SPC	TYPE OF MODEL TG5330 E4	TG5330 E6	TG5390 E4	TG5390 E6	ITC	COL	GRP	REMARKS
18	1650-509-310-00	ADAPTER/L/PF3/8 ASSY	*		2		2				
19	V720-112-401-40	O-RING/P14	*		2 -27		2 -19				
20	1742-512-300-00	PIPE/1ST/A/E4 COMP	*		1 -951		1 -1281				
20A	1742-512-300-10	PIPE/1ST/A/E4 COMP	*		1 952-		1 1282-	1			
21	1742-512-310-00	PIPE/1ST/B/E4 COMP	*		1 -948		1 -1263				
21A	1742-512-310-10	PIPE/1ST/B/E4 COMP	*		1 949-		1 1264-	1			
22	1742-512-320-00	PIPE/2ND/A/E4 COMP	*		1 -937		1 -1227				
22A	1742-512-320-10	PIPE/2ND/A/E4 COMP	*		1 938-		1 1228-	1			
23	1742-512-330-00	PIPE/2ND/B/E4 COMP	*		1 -948		1 -1262				
23A	1742-512-330-10	PIPE/2ND/B/E4 COMP	*		1 949-		1 1263-	1			
24	V782-160-000-6T	PLUG/SCREW/SEAL	*		4		4				
25	V231-360-801-20	FLANGEBOLT	*		2 -27		2 -25				
25A	V231-360-801-60	FLANGEBOLT	*		2 28-		2 26-				
26	1742-511-004-00	CLAMP/12X36	*		2 -27		2 -25				
26A	1560-104-005-50	CLIP	*		2 28-		2 26-				
27	1650-509-017-00	GROMMET/10X18X20	*		4 28-		4 26-				
28	V231-360-801-20	FLANGEBOLT	*		2 -27		2 -25				
28A	V231-360-801-60	FLANGEBOLT	*		2 28-		2 26-				
29	V362-260-008-00	NUT/WASHER	*		2		2				
30	1742-512-001-00	STAY/PIPE	*		2 -27		2 -25				
30A	1742-512-001-10	STAY	*		2 28-		2 26-	1			
31	V201-361-406-50	BOLT	*		2		2				
32	V231-360-801-60	FLANGEBOLT	*		2		2				
33	1640-530-008-00	LABEL/SUBCON	*		1		1				
34	1742-512-006-00	LABEL/PORT/1ST	*		1		1				
35	1742-512-007-00	LABEL/PORT/2ND	*		1		1				

FIG.120 VALVE (REMOTE/1R)SET(A TYPE-STD-TG5330E4-No.1-268/TG5390E4-No.1-659/ E4 TYPE EXCEPT C,A-OPTION)

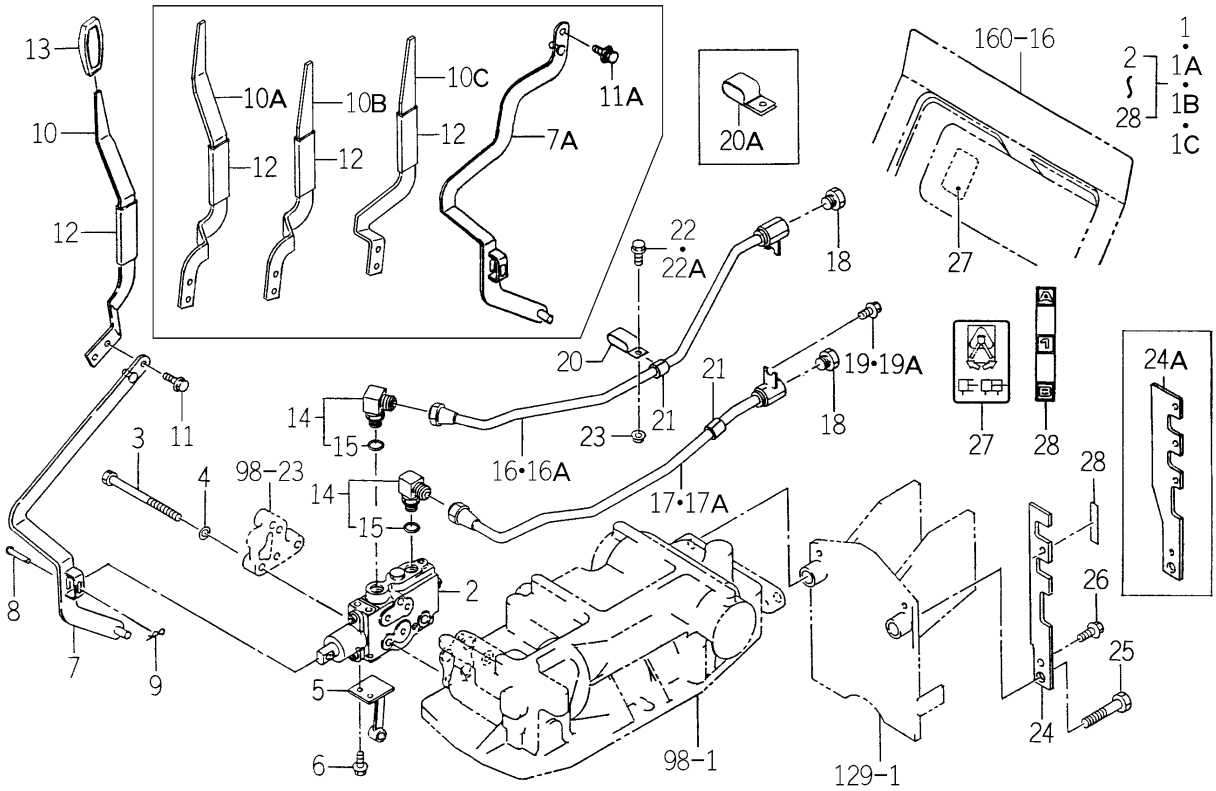

1742-512B-0100

KEY	PART CODE	DESCRIPTION	SPC	TYPE OF MODEL TG5330 E4	TG5330 E6	TG5390 E4	TG5390 E6	ITC	COL	GRP	REMARKS
1	1742-512-340-00	VALVE/REMOTE/1R/E4	T	1 -43		1 -65					
1A	1742-512-340-10	VALVE/REMOTE/1R/E4	*	1 -272		1 -621		1			
1B	1742-512-340-20	VALVE/REMOTE/1R/E4	*	1 -952		1 -1281		1			
1C	1742-512-340-30	VALVE/REMOTE/1R/E4	*	1 953-		1 1282-		1			
2	1640-530-600-10	VALVE/CONTROL ASSY	*	1		1					FIG 267
3	V201-261-008-00	BOLT/M10X80	*	3		3					
4	V401-160-010-00	WASHER,SP/M10	*	3		3					
5	1742-512-220-00	HOLDER COMP	*	1		1					
6	V231-360-801-60	FLANGEBOLT	*	2		2					
7	1742-512-200-00	ARM/1ST COMP	T	1 -27		1 -25					
7A	1742-512-200-10	ARM/1ST COMP	*	1 28-		1 26-		3			
8	2144-519-007-00	PIN/06X31	*	1		1					
9	2130-601-018-00	PIN,SNAP/6	*	1		1					
10	1742-512-002-00	LEVER/1ST	T	1 -27		1 -25					
10A	1742-512-002-10	LEVER/1ST	*	1 -272		1 -621		3			
10B	1759-512-003-20	LEVER/1ST	*	1 -798		1 -1141					
10C	1759-512-003-30	LEVER/1ST	*	1 799-		1 1142-		1			
11	V231-360-801-20	FLANGEBOLT	T	1 -27		1 -25					
11A	V211-360-801-60	BOLT,SEMS (SP)	*	1 28-		1 26-					
12	1614-262-006-00	INSULATOR/LEVER/SUB	*	1		1					
13	3659-203-005-00	GRIP/03X17X74	*	1		1					
14	1650-509-310-00	ADAPTER/L/PF3/8 ASSY	*	2		2					
15	V720-112-401-40	O-RING/P14	T	2 -27		2 -25					
16	1742-512-300-00	PIPE/1ST/A/E4 COMP	*	1 -951		1 -1281					
16A	1742-512-300-10	PIPE/1ST/A/E4 COMP	*	1 952-		1 1282-		1			
17	1742-512-310-00	PIPE/1ST/B/E4 COMP	*	1 -948		1 -1263					
17A	1742-512-310-10	PIPE/1ST/B/E4 COMP	*	1 949-		1 1264-		1			
18	V782-160-000-6T	PLUG/SCREW/SEAL	*	2		2					
19	V231-360-801-20	FLANGEBOLT	T	1 -27		1 -25					
19A	V231-360-801-60	FLANGEBOLT	*	1 28-		1 26-					

FIG.120 VALVE (REMOTE/1R)SET(A TYPE-STD-TG5330E4-No.1-268/TG5390E4-No.1-659/ E4 TYPE EXCEPT C,A-OPTION)

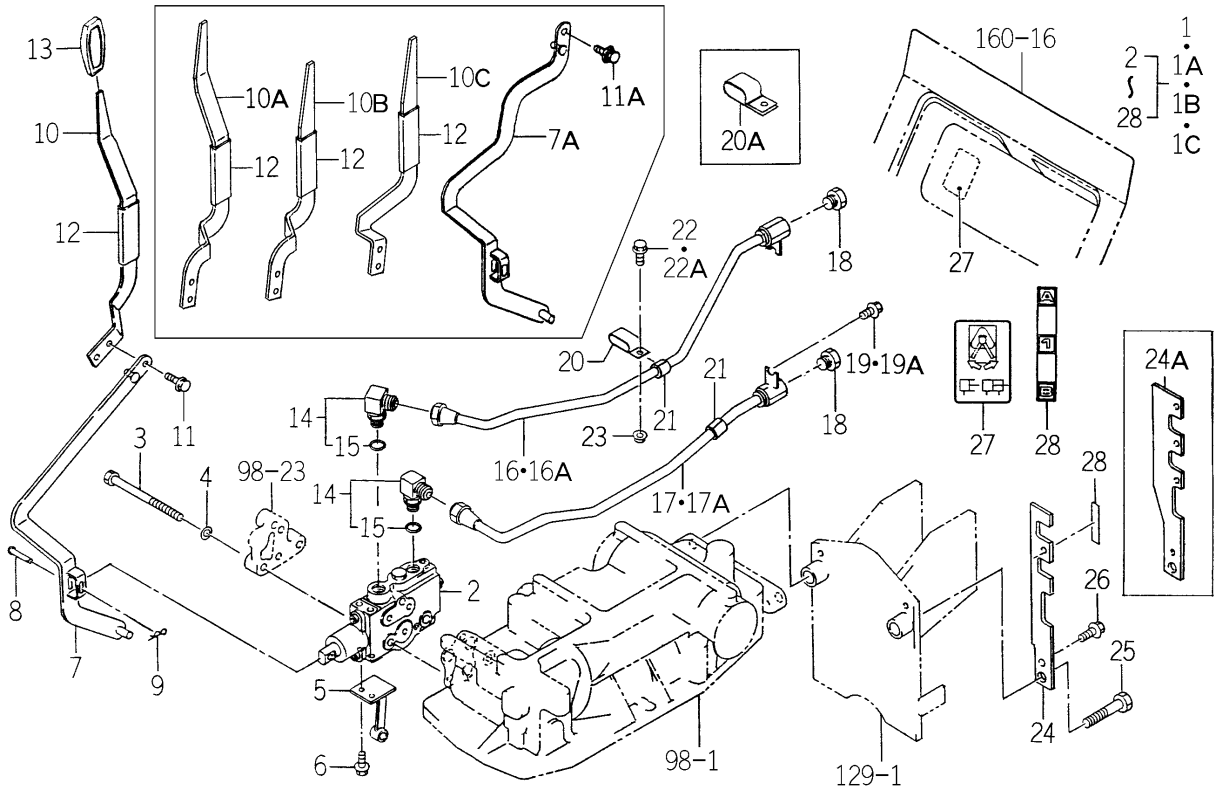

1742-512B-0100

KEY	PART CODE	DESCRIPTION	SPC	TYPE OF MODEL TG5330 E4	TG5330 E6	TG5390 E4	TG5390 E6	ITC	COL	GRP	REMARKS
20	1742-511-004-00	CLAMP/12X36	T	1 -27		1 -25					
20A	1560-104-005-50	CLIP	*	1 28-		1 26-					
21	1650-509-017-00	GROMMET/10X18X20	*	2 28-		2 26-					
22	V231-360-801-20	FLANGEBOLT	T	1 -27		1 -25					
22A	V231-360-801-60	FLANGEBOLT	*	1 28-		1 26-					
23	V362-260-008-00	NUT/WASHER	*	1		1					
24	1742-512-001-00	STAY/PIPE	T	1 -27		1 -25					
24A	1742-512-001-10	STAY	*	1 28-		1 26-		1			
25	V201-361-406-50	BOLT	*	1		1					
26	V231-360-801-60	FLANGEBOLT	*	1		1					
27	1640-530-008-00	LABEL/SUBCON	*	1		1					
28	1742-512-004-00	LABEL/PORT/1ST	*	1		1					

FIG.121 VALVE (1R) SET
(A TYPE-TG5330E4-No.296-/TG5390E4-No.660-)

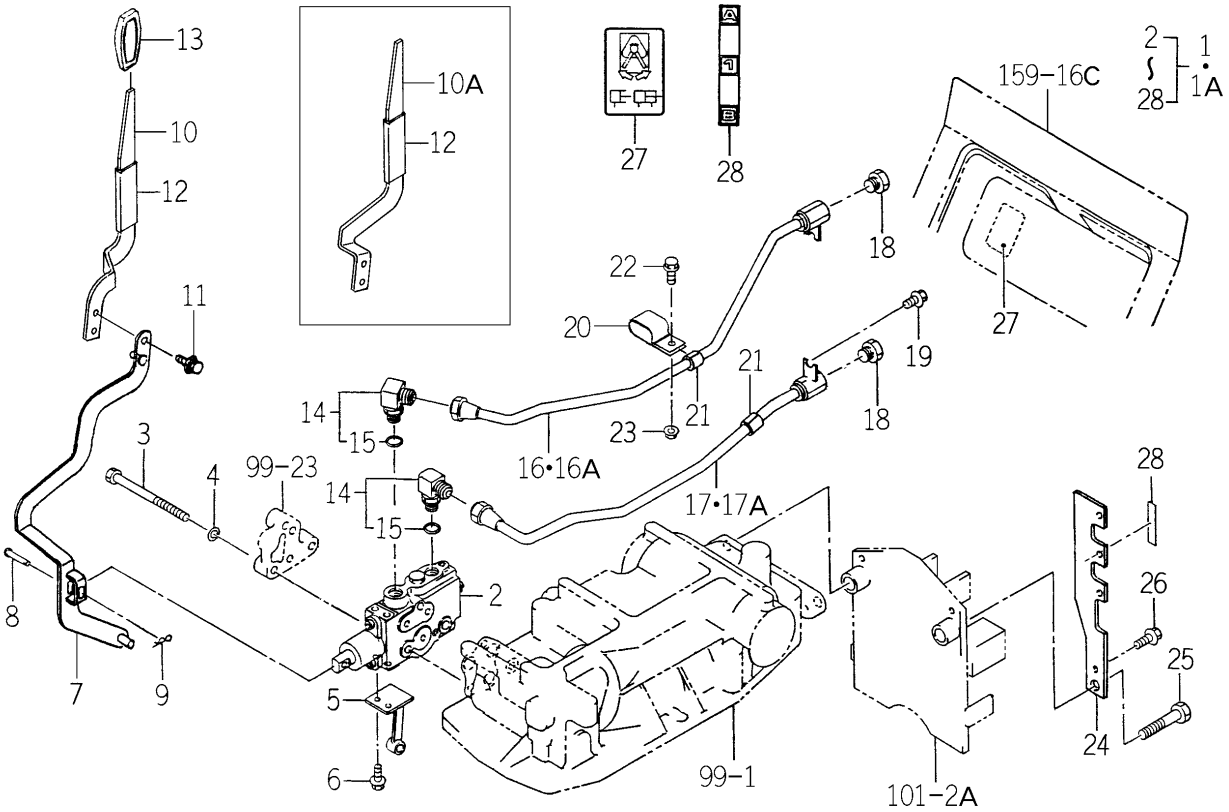

1742-512I-0100

KEY	PART CODE	DESCRIPTION	SPC	TYPE OF MODEL TG5330 E4	TG5330 E6	TG5390 E4	TG5390 E6	ITC	COL	GRP	REMARKS
1	1742-512-420-10	VALVE/REMOTE/1R/E4	*	1 -952		1 -1310		1			
1A	1742-512-420-20	VALVE/REMOTE/1R/E4	*	1 953-		1 1311-		1			
2	1719-511-350-00	VALVE/CONTROL ASSY	*	1 296-		1 660-					FIG 269
3	V201-261-008-00	BOLT/M10X80	*	3 296-		3 660-					
4	V401-160-010-00	WASHER,SP/M10	*	3 296-		3 660-					
5	1742-512-220-00	HOLDER COMP	*	1 296-		1 660-					
6	V231-360-801-60	FLANGEBOLT	*	2 296-		2 660-					
7	1742-512-200-10	ARM/1ST COMP	*	1 296-		1 660-					
8	2144-519-007-00	PIN/06X31	*	1 296-		1 660-					
9	2130-601-018-00	PIN,SNAP/6	*	1 296-		1 660-					
10	1759-512-003-20	LEVER/1ST	*	1 -798		1 -1141					
10A	1759-512-003-30	LEVER/1ST	*	1 799-		1 1142-		1			
11	V211-360-801-60	BOLT,SEMS (SP)	*	1 296-		1 660-					
12	1614-262-006-00	INSULATOR/LEVER/SUB	*	1 296-		1 660-					
13	3659-203-005-00	GRIP/03X17X74	*	1 296-		1 660-					
14	1650-509-310-00	ADAPTER/L/PF3/8 ASSY	*	2 296-		2 660-					
15	V720-112-401-40	O-RING/P14	*	2 296-		2 660-					
16	1742-512-300-00	PIPE/1ST/A/E4 COMP	*	1 -951		1 -1281					
16A	1742-512-300-10	PIPE/1ST/A/E4 COMP	*	1 952-		1 1282-		1			
17	1742-512-310-00	PIPE/1ST/B/E4 COMP	*	1 -948		1 -1263					
17A	1742-512-310-10	PIPE/1ST/B/E4 COMP	*	1 949-		1 1264-		1			
18	V782-160-000-6T	PLUG/SCREW/SEAL	*	2 296-		2 660-					
19	V231-360-801-60	FLANGEBOLT	*	1 296-		1 660-					
20	1560-104-005-50	CLIP	*	1 296-		1 660-					
21	1650-509-017-00	GROMMET/10X18X20	*	2 296-		2 660-					
22	V231-360-801-60	FLANGEBOLT	*	1 296-		1 660-					
23	V362-260-008-00	NUT/WASHER	*	1 296-		1 660-					
24	1742-512-001-10	STAY	*	1 296-		1 660-					
25	V201-361-406-50	BOLT	*	1 296-		1 660-					
26	V231-360-801-60	FLANGEBOLT	*	1 296-		1 660-					

FIG.121 VALVE (1R) SET
(A TYPE-TG5330E4-No.296-/TG5390E4-No.660-)

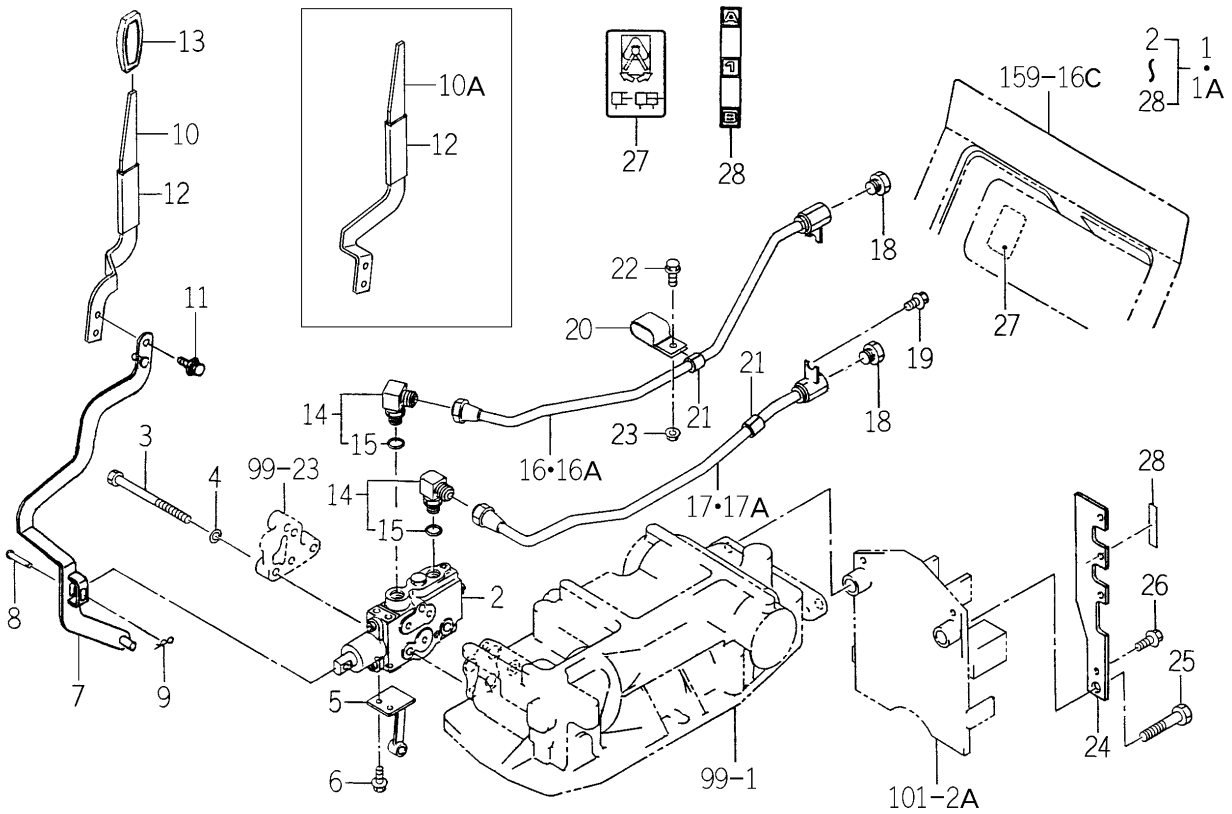

1742-512I-0100

KEY	PART CODE	DESCRIPTION	SPC	TYPE OF MODEL TG5330 E4	TG5330 E6	TG5390 E4	TG5390 E6	ITC	COL	GRP	REMARKS
27	1640-530-008-00	LABEL/SUBCON	*	1 296-		1 660-					
28	1742-512-004-00	LABEL/PORT/1ST	*	1 296-		1 660-					

FIG.122 3P LINK SYSTEM (E6 TYPE)

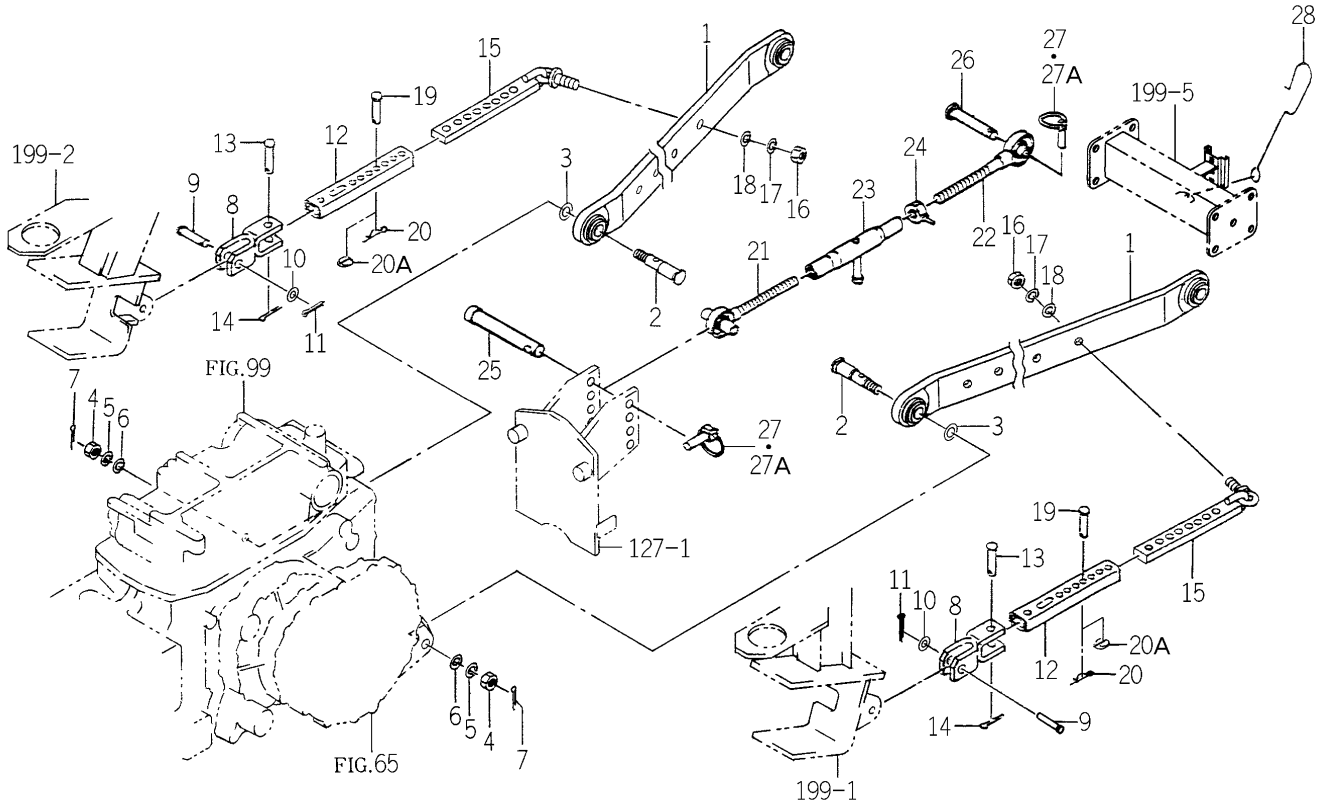

1742-514 -0100

KEY	PART CODE	DESCRIPTION	SPC	TYPE OF MODEL TG5330 E4	TG5330 E6	TG5390 E4	TG5390 E6	ITC	COL	GRP	REMARKS
1	1742-514-200-10	LINK/LOWER COMP	*		2		2				
2	1690-514-001-00	PIN/22X99	*		2		2				
3	1650-514-004-00	WASHER/19X30X03	*		2		2				
4	V304-460-016-00	NUT/M16	*		2		2				
5	V401-160-016-00	WASHER,SP/M16	*		2		2				
6	V411-260-016-00	WASHER / M16	*		2		2				
7	V500-164-003-00	PIN,SPLIT/4 X30	*		2		2				
8	1742-514-250-00	LINK/FRONT COMP	*		2		2				
9	7963-611-003-00	PIN/12X48	*		2		2				
10	V411-260-012-00	WASHER /M12	*		2 949-		2 1284-				
11	V500-163-002-00	PIN,SPLIT/3 X20	*		2		2				
12	1723-514-320-10	STABILIZER/FRON COMP	*		2		2				
13	7963-611-003-00	PIN/12X48	*		2		2				
14	V500-163-002-00	PIN,SPLIT/3 X20	*		2		2				
15	1742-514-210-00	STABILIZER/REAR COMP	*		2		2				
16	V304-460-016-00	NUT/M16	*		2		2				
17	V401-160-016-00	WASHER,SP/M16	*		2		2				
18	V411-260-016-00	WASHER / M16	*		2		2				
19	7963-611-003-00	PIN/12X48	*		2		2				
20	7957-405-003-00	PIN/HAIR	*		2 -948		2 -1310				
20A	1427-317-003-00	CLIP,PIN	*		2 949-		2 1311-				
21	1560-525-290-10	LINK/TOP/LH COMP	*		1		1				
22	1568-525-300-10	LINK/TOP/RH COMP	*		1		1				
23	1550-514-290-00	TURNBUCLE COMP	*		1		1				
24	1402-511-600-00	NUT,TOP LINK LOCK	*		1		1				
25	1640-525-001-00	PIN 19X132	*		1		1				
26	1620-514-005-00	PIN/19X94	*		1		1				
27	1673-525-002-20	LINKPIN	*		2 -627		2 -945				
27A	1673-525-002-30	LINKPIN	*		2 628-		2 946-	1			
28	1742-514-001-10	HOOK/TOPLINK	*		1		1				

FIG.123 3P LINK SYSTEM (E4 TYPE EXCEPT C)

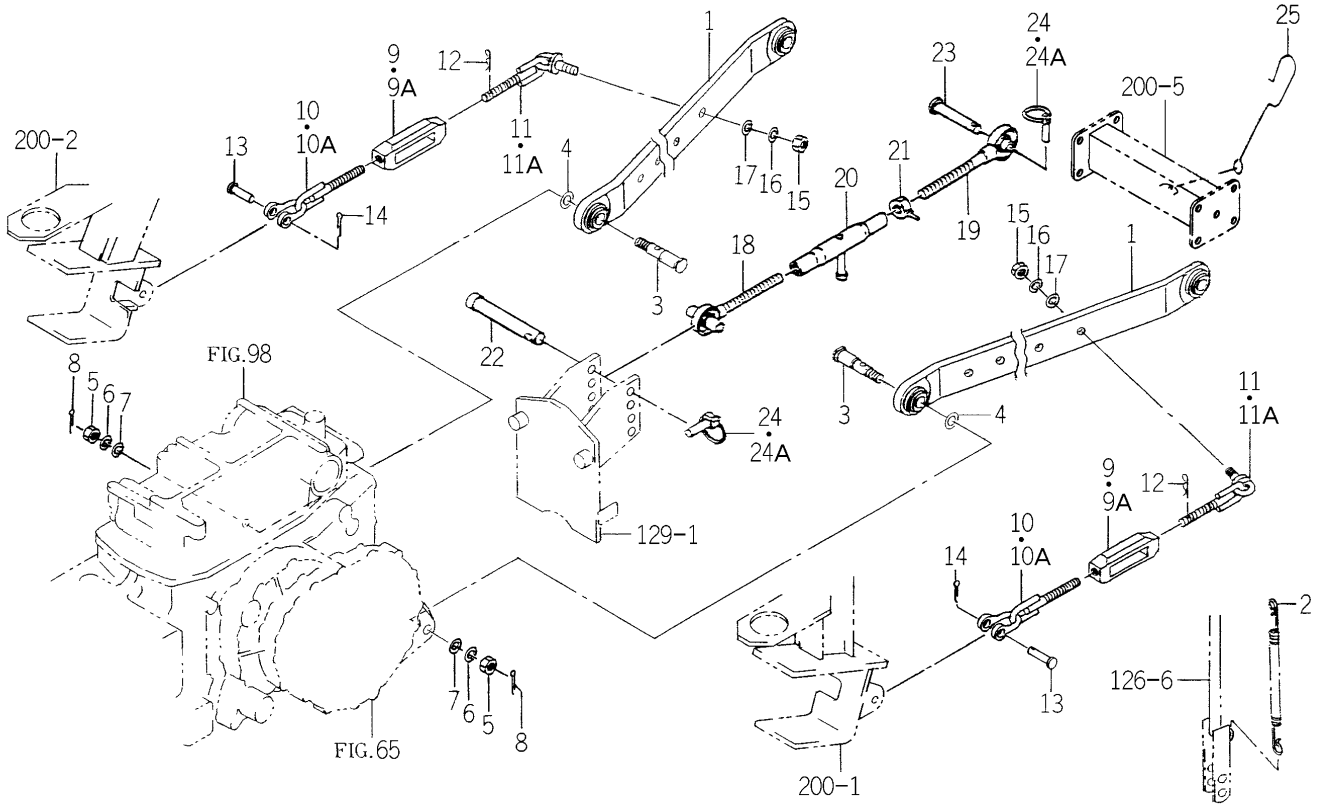

1742-514B-0100

KEY	PART CODE	DESCRIPTION	SPC	TYPE OF MODEL TG5330 E4	TG5330 E6	TG5390 E4	TG5390 E6	ITC	COL	GRP	REMARKS
1	1742-514-200-10	LINK/LOWER COMP	*	2		2					
2	1560-525-001-40	SPRING	*	1		1					
3	1690-514-001-00	PIN/22X99	*	2		2					
4	1650-514-004-00	WASHER/19X30X03	*	2		2					
5	V304-460-016-00	NUT/M16	*	2		2					
6	V401-160-016-00	WASHER,SP/M16	*	2		2					
7	V411-260-016-00	WASHER / M16	*	2		2					
8	V500-164-003-00	PIN,SPLIT/4 X30	*	2		2					
9	1650-514-001-10	BACKLE/TURN/M16	*	2 -948		2 -1283					
9A	1746-514-301-00	BACKLE/TURN/M16/E4	*	2 949-		2 1284-					
10	1729-514-220-00	CHAIN/CHECK/FRONT/A	*	2 -948		2 -1283					
10A	1746-514-310-00	CHAIN/CHECK/FRONT/E4	*	2 949-		2 1284-					
11	1742-514-240-00	CHAIN/CHECK/REA COMP	*	2 -948		2 -1283					
11A	1746-514-320-00	CHAIN/CHECK/REAR/E4	*	2 949-		2 1284-					
12	1305-931-003-00	PIN,HAIR	*	2		2					
13	7963-611-003-00	PIN/12X48	*	2		2					
14	V500-163-002-00	PIN,SPLIT/3 X20	*	2		2					
15	V304-460-016-00	NUT/M16	*	2		2					
16	V401-160-016-00	WASHER,SP/M16	*	2		2					
17	V411-260-016-00	WASHER / M16	*	2		2					
18	1560-525-290-10	LINK/TOP/LH COMP	*	1		1					
19	1568-525-300-10	LINK/TOP/RH COMP	*	1		1					
20	1550-514-290-00	TURNBUCLE COMP	*	1		1					
21	1402-511-600-00	NUT,TOP LINK LOCK	*	1		1					
22	1640-525-001-00	PIN 19X132	*	1		1					
23	1620-514-005-00	PIN/19X94	*	1		1					
24	1673-525-002-20	LINKPIN	*	2 -627		2 -945					
24A	1673-525-002-30	LINKPIN	*	2 628-		2 946-		1			
25	1742-514-001-10	HOOK/TOPLINK	*	1		1					

FIG.124 3P LINK SYSTEM (C TYPE)

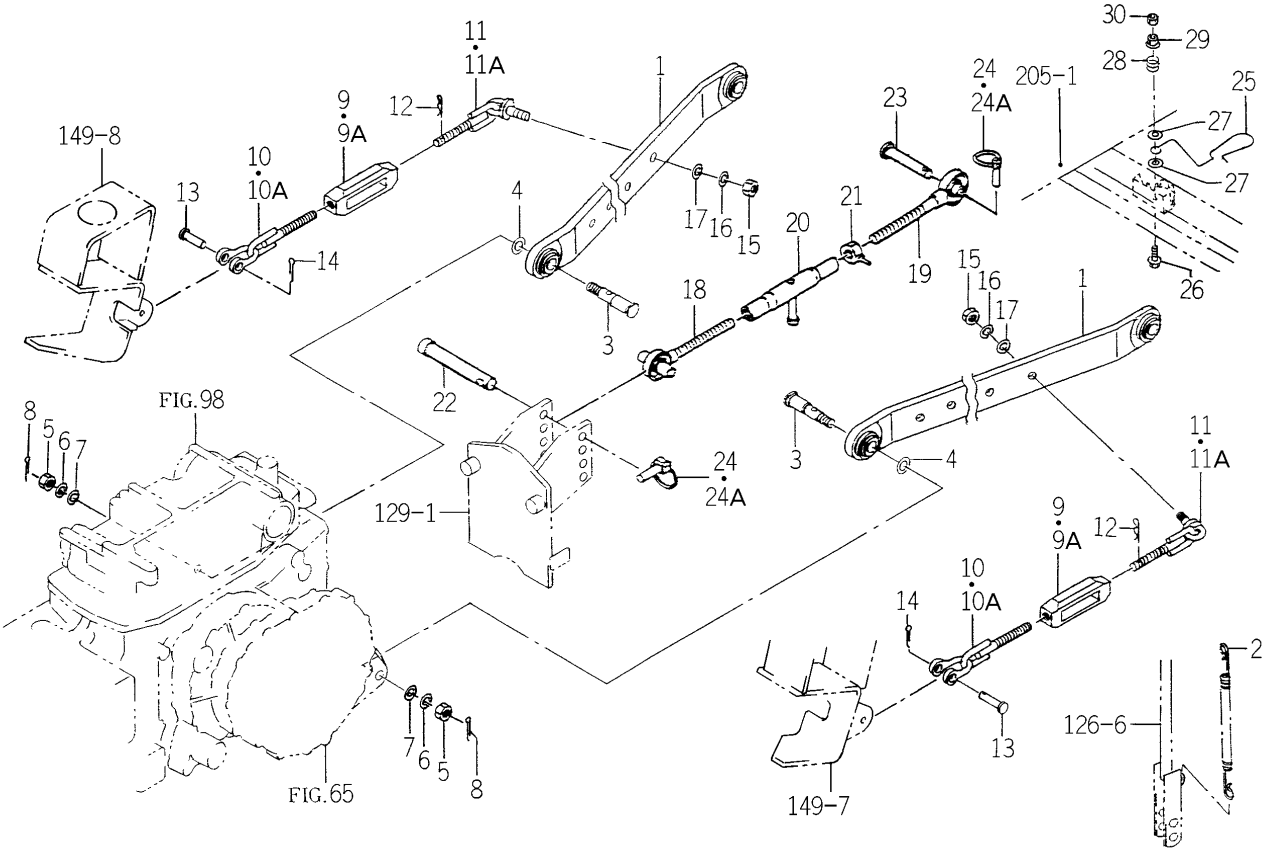

1742-514C-0100

KEY	PART CODE	DESCRIPTION	SPC	TYPE OF MODEL TG5330 E4	TG5330 E6	TG5390 E4	TG5390 E6	ITC	COL	GRP	REMARKS
1	1742-514-200-10	LINK/LOWER COMP	*	2		2					
2	1560-525-001-40	SPRING	*	1		1					
3	1690-514-001-00	PIN/22X99	*	2		2					
4	1650-514-004-00	WASHER/19X30X03	*	2		2					
5	V304-460-016-00	NUT/M16	*	2		2					
6	V401-160-016-00	WASHER,SP/M16	*	2		2					
7	V411-260-016-00	WASHER / M16	*	2		2					
8	V500-164-003-00	PIN,SPLIT/4 X30	*	2		2					
9	1650-514-001-10	BACKLE/TURN/M16	*	2 -948		2 -1283					
9A	1746-514-301-00	BACKLE/TURN/M16/E4	*	2 949-		2 1284-					
10	1729-514-220-00	CHAIN/CHECK/FRONT/A	*	2 -948		2 -1283					
10A	1746-514-310-00	CHAIN/CHECK/FRONT/E4	*	2 949-		2 1284-					
11	1742-514-240-00	CHAIN/CHECK/REA COMP	*	2 -948		2 -1283					
11A	1746-514-320-00	CHAIN/CHECK/REAR/E4	*	2 949-		2 1284-					
12	1305-931-003-00	PIN,HAIR	*	2		2					
13	7963-611-003-00	PIN/12X48	*	2		2					
14	V500-163-002-00	PIN,SPLIT/3 X20	*	2		2					
15	V304-460-016-00	NUT/M16	*	2		2					
16	V401-160-016-00	WASHER,SP/M16	*	2		2					
17	V411-260-016-00	WASHER / M16	*	2		2					
18	1560-525-290-10	LINK/TOP/LH COMP	*	1		1					
19	1568-525-300-10	LINK/TOP/RH COMP	*	1		1					
20	1550-514-290-00	TURNBUCLE COMP	*	1		1					
21	1402-511-600-00	NUT,TOP LINK LOCK	*	1		1					
22	1640-525-001-00	PIN 19X132	*	1		1					
23	1620-514-005-00	PIN/19X94	*	1		1					
24	1673-525-002-20	LINKPIN	*	2 -627		2 -945					
24A	1673-525-002-30	LINKPIN	*	2 628-		2 946-		1			
25	1734-514-004-00	HOOK/TOPLINK	*	1		1					
26	V231-360-803-00	FLANGEBOLT	*	1		1					

FIG.124 3P LINK SYSTEM (C TYPE)

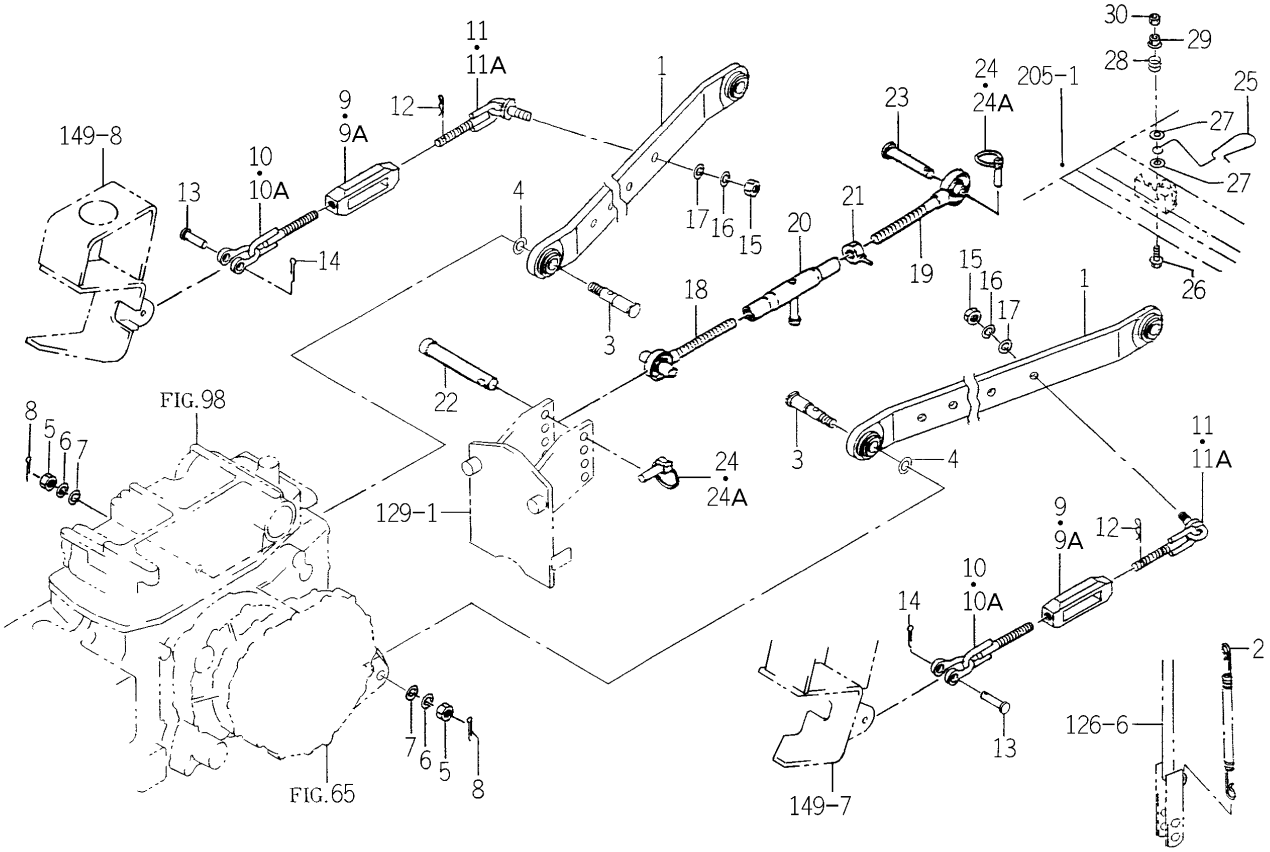

1742-514C-0100

KEY	PART CODE	DESCRIPTION	SPC	TYPE OF MODEL TG5330 E4	TG5330 E6	TG5390 E4	TG5390 E6	ITC	COL	GRP	REMARKS
27	V411-260-008-00	WASHER,PL/M 8	*	2		2					
28	1564-530-011-00	SPRING/HC014	*	1		1					
29	V363-260-008-00	NUT/WASHER	*	1		1					
30	V304-260-008-00	NUT	*	1		1					

FIG.125 LIFT ROD (BEVEL) SYSTEM (E6 TYPE)

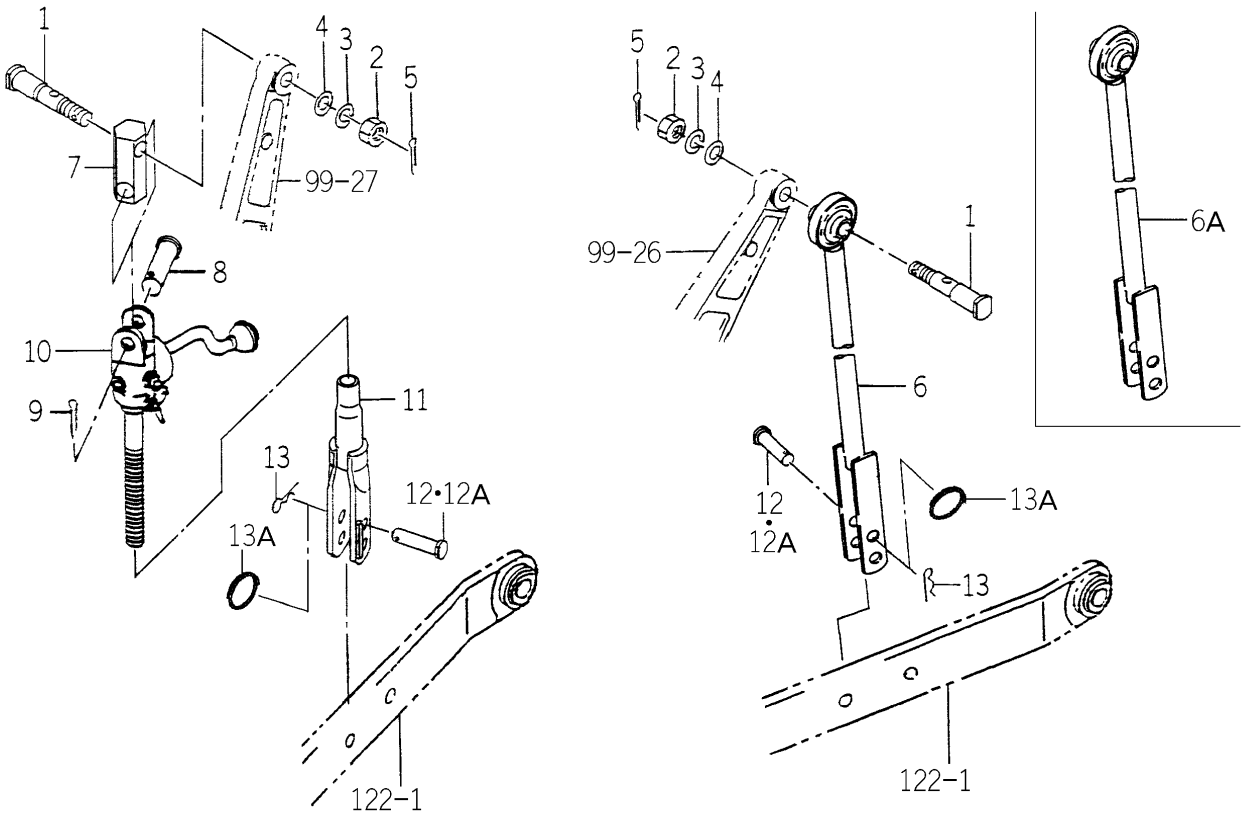

1742-515A-0100

KEY	PART CODE	DESCRIPTION	SPC	TYPE OF MODEL TG5330 E4	TG5330 E6	TG5390 E4	TG5390 E6	ITC	COL	GRP	REMARKS
1	1690-514-001-00	PIN/22X99	*		2		2				
2	V304-460-016-00	NUT/M16	*		2		2				
3	V401-160-016-00	WASHER,SP/M16	*		2		2				
4	V411-260-016-00	WASHER / M16	*		2		2				
5	V500-164-003-00	PIN,SPLIT/4 X30	*		2		2				
6	1742-515-200-00	ROD/FORK/LH/E3 COMP	*		1 -948		1 -1310				
6A	1785-515-200-00	ROD/FORK/LH/E3 COMP	*		1 949-		1 1311-				
7	1742-515-001-00	LINK	*		1		1				
8	1444-514-003-00	PIN (19X72)	*		1		1				
9	V500-164-003-00	PIN,SPLIT/4 X30	*		1		1				
10	1564-527-300-40	CASE/BEVEL ASSY	*		1		1				FIG 266
11	1742-515-230-00	ROD/FORK/E3 COMP	*		1		1				
12	1560-526-001-40	PIN/16X51	*		2 -120		2 -393				
12A	1759-514-004-10	PIN/16X51	*		2 121-		2 394-				
13	1305-931-003-00	PIN,HAIR	*		2 -120		2 -393				
13A	8654-501-006-10	SPRING/CLIP	*		2 121-		2 394-				

FIG.126 LIFT ROD (BEVEL) SYSTEM (E4 TYPE)

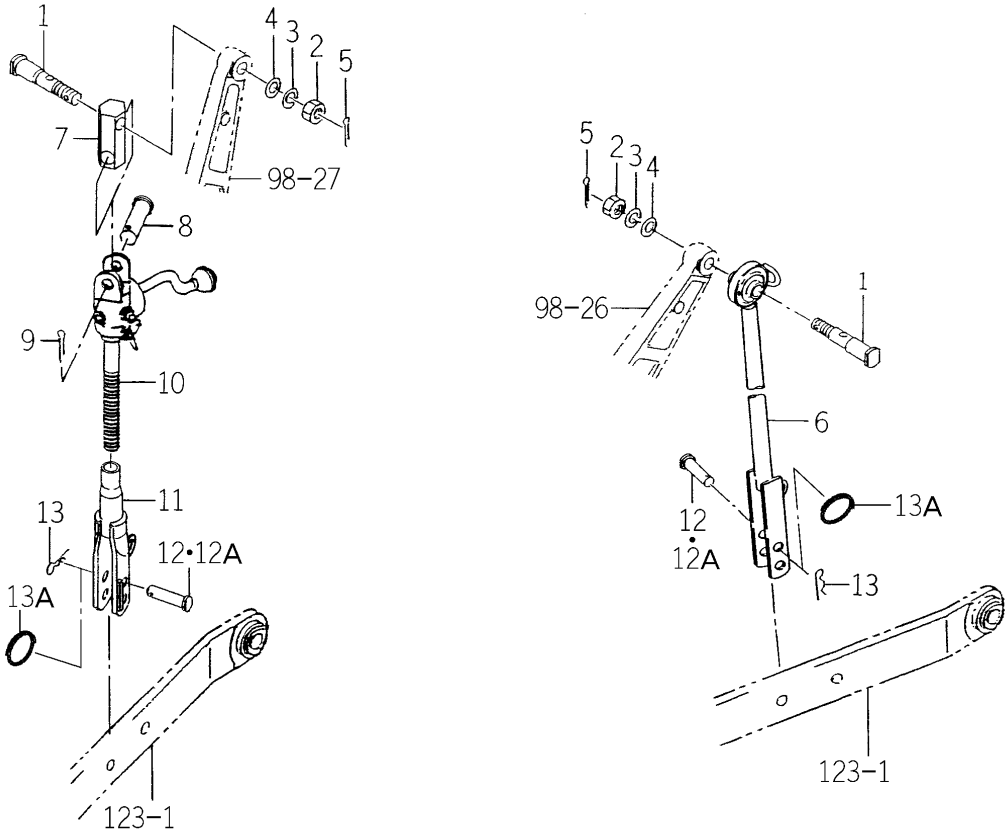

1742-515B-0100

KEY	PART CODE	DESCRIPTION	SPC	TYPE OF MODEL TG5330 E4	TG5330 E6	TG5390 E4	TG5390 E6	ITC	COL	GRP	REMARKS
1	1690-514-001-00	PIN/22X99	*	2		2					
2	V304-460-016-00	NUT/M16	*	2		2					
3	V401-160-016-00	WASHER,SP/M16	*	2		2					
4	V411-260-016-00	WASHER / M16	*	2		2					
5	V500-164-003-00	PIN,SPLIT/4 X30	*	2		2					
6	1742-515-240-00	ROD/FORK/LH/E4 COMP	*	1		1					
7	1742-515-001-00	LINK	*	1		1					
8	1444-514-003-00	PIN (19X72)	*	1		1					
9	V500-164-003-00	PIN,SPLIT/4 X30	*	1		1					
10	1564-527-300-40	CASE/BEVEL ASSY	*	1		1					FIG 266
11	1742-515-250-00	ROD/FORK/E4 COMP	*	1		1					
12	1560-526-001-40	PIN/16X51	*	2 -122		2 -406					
12A	1759-514-004-10	PIN/16X51	*	2 123-		2 407-					
13	1305-931-003-00	PIN,HAIR	*	2 -122		2 -406					
13A	8654-501-006-10	SPRING/CLIP	*	2 123-		2 407-					

FIG.127 TOP LINK BRACKET SYSTEM (E6 TYPE)

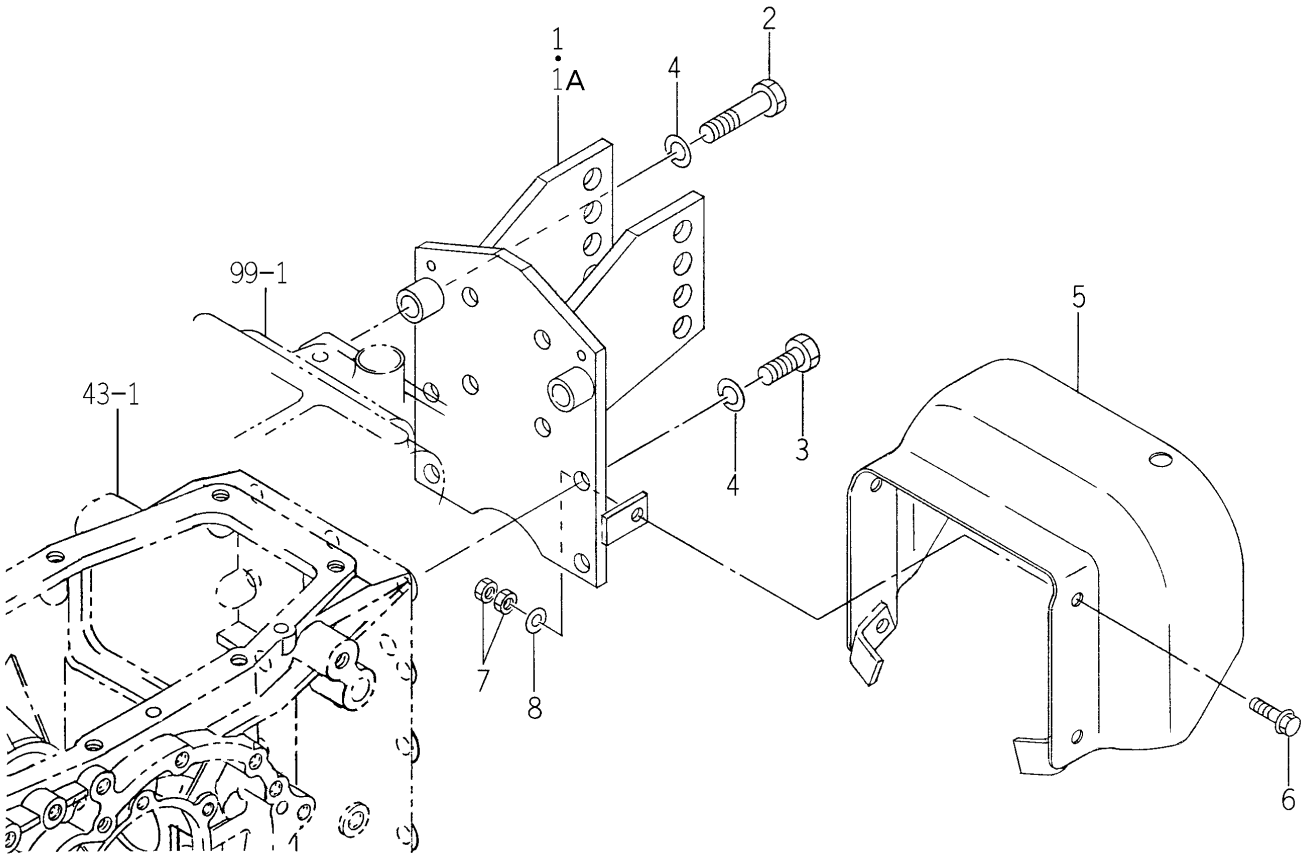

1742-520 -0100

KEY	PART CODE	DESCRIPTION	SPC	TYPE OF MODEL TG5330 E4	TG5330 E6	TG5390 E4	TG5390 E6	ITC	COL	GRP	REMARKS
1	1742-520-200-00	BRACKET COMP	*		1 -628		1 -943				
1A	1742-520-200-10	BRACKET COMP	*		1 629-		1 944-	1			
2	V201-361-406-00	BOLT 7 M14	*		2		2				
3	V201-361-403-50	BOLT	*		4		4				
4	V401-160-014-00	WASHER,SP/M14	*		6		6				
5	1742-520-210-00	COVER/SHIELD COMP	*		1		1				
6	V231-361-003-00	FLANGEBOLT	*		2		2				
7	V304-260-010-00	NUT	*		4		4				
8	V411-260-010-00	WASHER/M10	*		2		2				

FIG.128 TOP LINK BRACKET SYSTEM (E4D TYPE EXCEPT S)

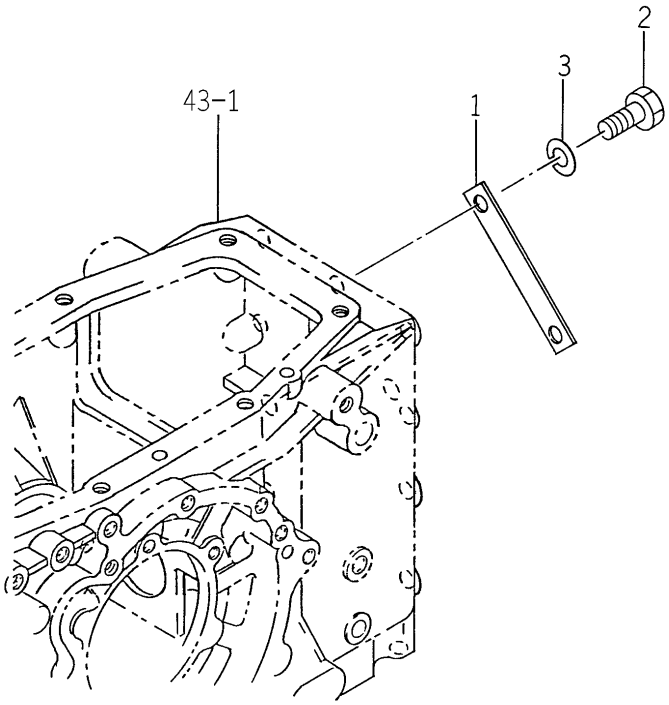

1746-520 -0100

KEY	PART CODE	DESCRIPTION	SPC	TYPE OF MODEL TG5330 E4	TG5330 E6	TG5390 E4	TG5390 E6	ITC	COL	GRP	REMARKS
1	1746-520-003-00	PLATE/I/25X137	*	1		1					
2	V201-361-402-50	BOLT	*	2		2					
3	V401-160-014-00	WASHER,SP/M14	*	2		2					

FIG.129 TOP LINK BRACKET SYSTEM (E4 TYPE EXCEPT S,D)

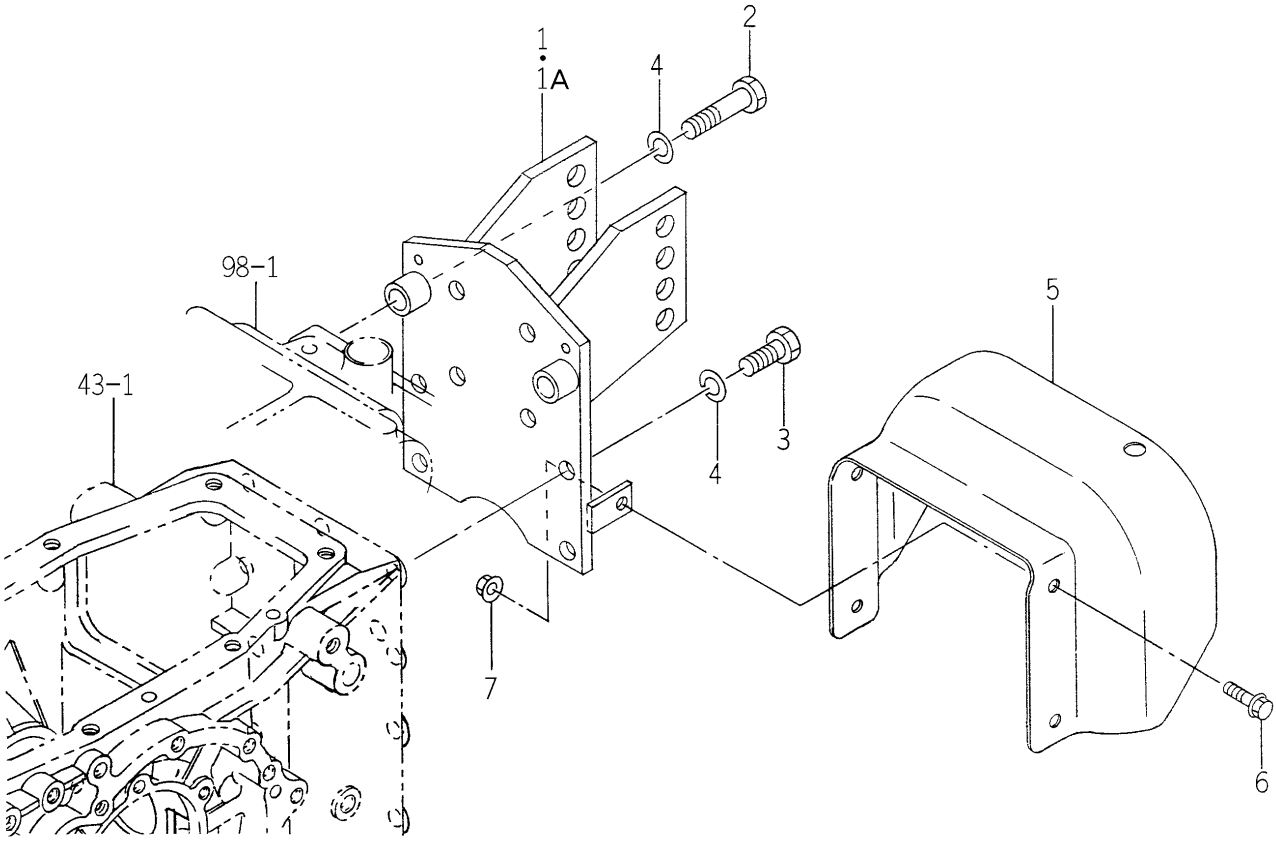

1742-520A-0100

KEY	PART CODE	DESCRIPTION	SPC	TYPE OF MODEL TG5330 E4	TG5330 E6	TG5390 E4	TG5390 E6	ITC	COL	GRP	REMARKS
1	1742-520-200-00	BRACKET COMP	*	1 -628		1 -943					
1A	1742-520-200-10	BRACKET COMP	*	1 629-		1 944-		1			
2	V201-361-406-00	BOLT 7 M14	*	2		2					
3	V201-361-403-50	BOLT	*	4		4					
4	V401-160-014-00	WASHER,SP/M14	*	6		6					
5	1742-520-001-00	COVER/SHIELD	*	1		1					
6	V231-361-003-00	FLANGEBOLT	*	4		4					
7	V363-260-010-00	NUT/M10	*	4		4					

FIG.130 TOP LINK BRACKET SYSTEM (SE4 TYPE)

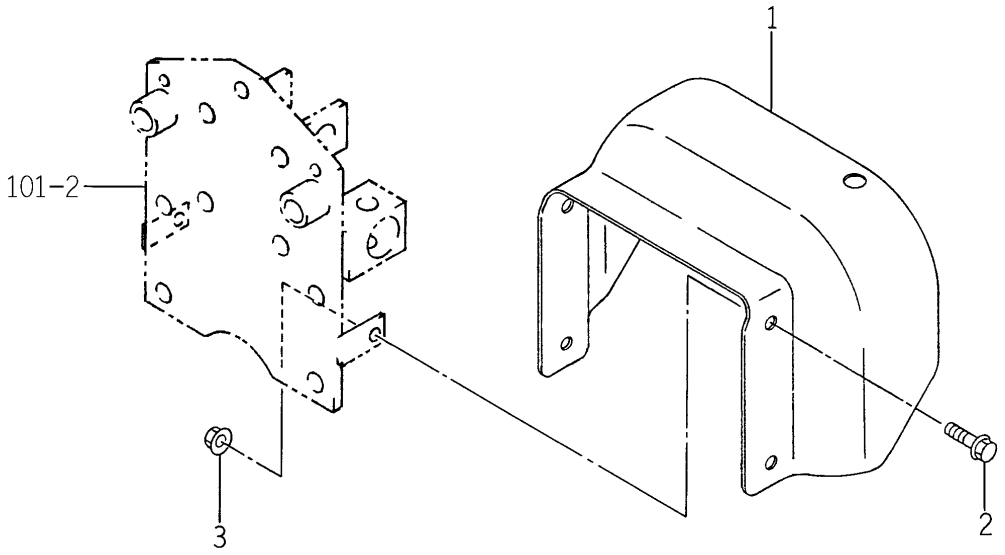

1742-520B-0100

KEY	PART CODE	DESCRIPTION	SPC	TYPE OF MODEL				ITC	COL	GRP	REMARKS
				TG5330 E4	TG5330 E6	TG5390 E4	TG5390 E6				
1	1742-520-001-00	COVER/SHIELD	*	1		1					
2	V231-361-003-00	FLANGEBOLT	*	4		4					
3	V363-260-010-00	NUT/M10	*	4		4					

FIG.131 DRAW BAR (FIX) SYSTEM (E6 TYPE)

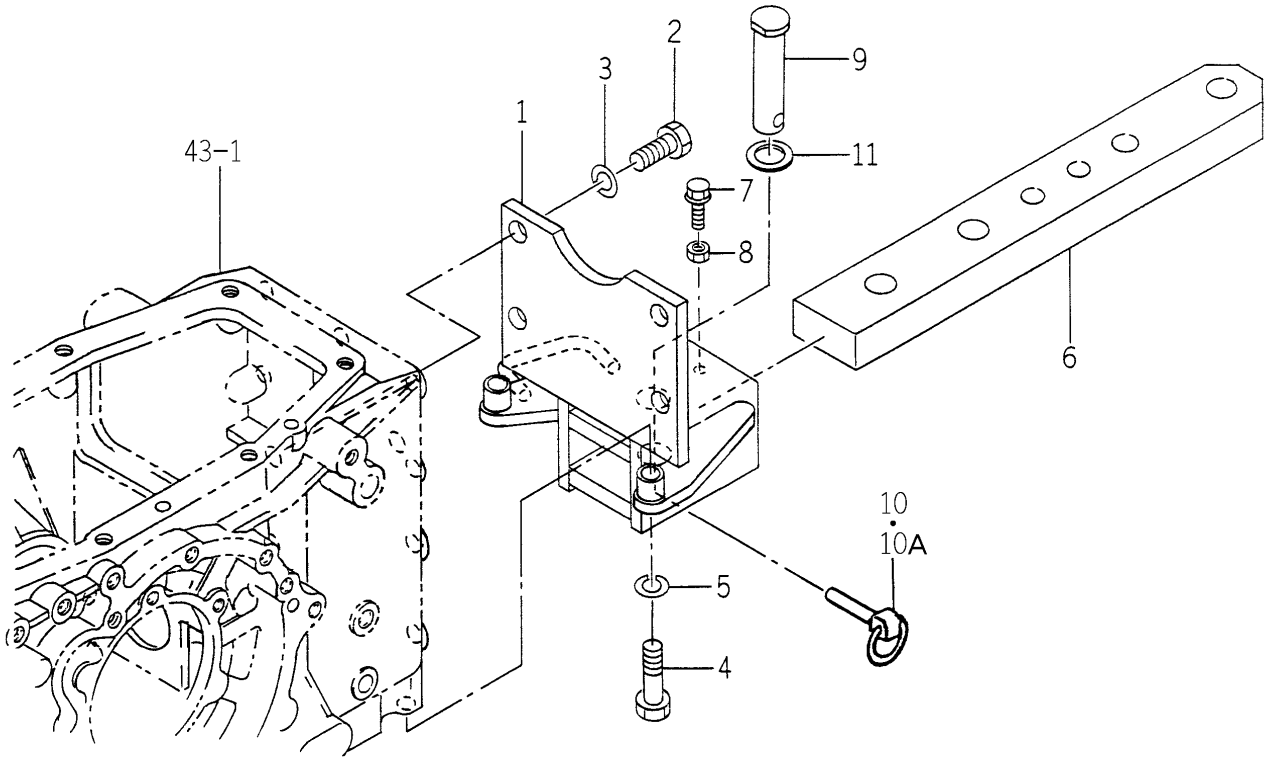

1742-521 -0100

KEY	PART CODE	DESCRIPTION	SPC	TYPE OF MODEL TG5330 E4	TG5330 E6	TG5390 E4	TG5390 E6	ITC	COL	GRP	REMARKS
1	1742-521-200-30	BRACKET/DRAW BAR/E3	*		1		1	3			
2	V201-361-603-50	BOLT M16X35	*		4		4				
3	V401-160-016-00	WASHER,SP/M16	*		4		4				
4	V201-361-405-00	BOLT/M14X50	*		2		2				
5	V401-160-014-00	WASHER,SP/M14	*		2		2				
6	1742-521-001-10	DRAWBAR/E3	*		1		1				
7	V231-361-003-00	FLANGEBOLT	*		1		1				
8	V304-460-010-00	NUT/M10	*		1		1				
9	1640-520-005-00	PIN/25X91	*		1		1				
10	1673-525-002-20	LINKPIN	*		1 -627		1 -945				
10A	1673-525-002-30	LINKPIN	*		1 628-		1 946-	1			
11	1640-520-004-00	INSULATOR	*		1		1				

FIG.132 DRAW BAR (FIX) SYSTEM (E4 TYPE EXCEPT E4D)

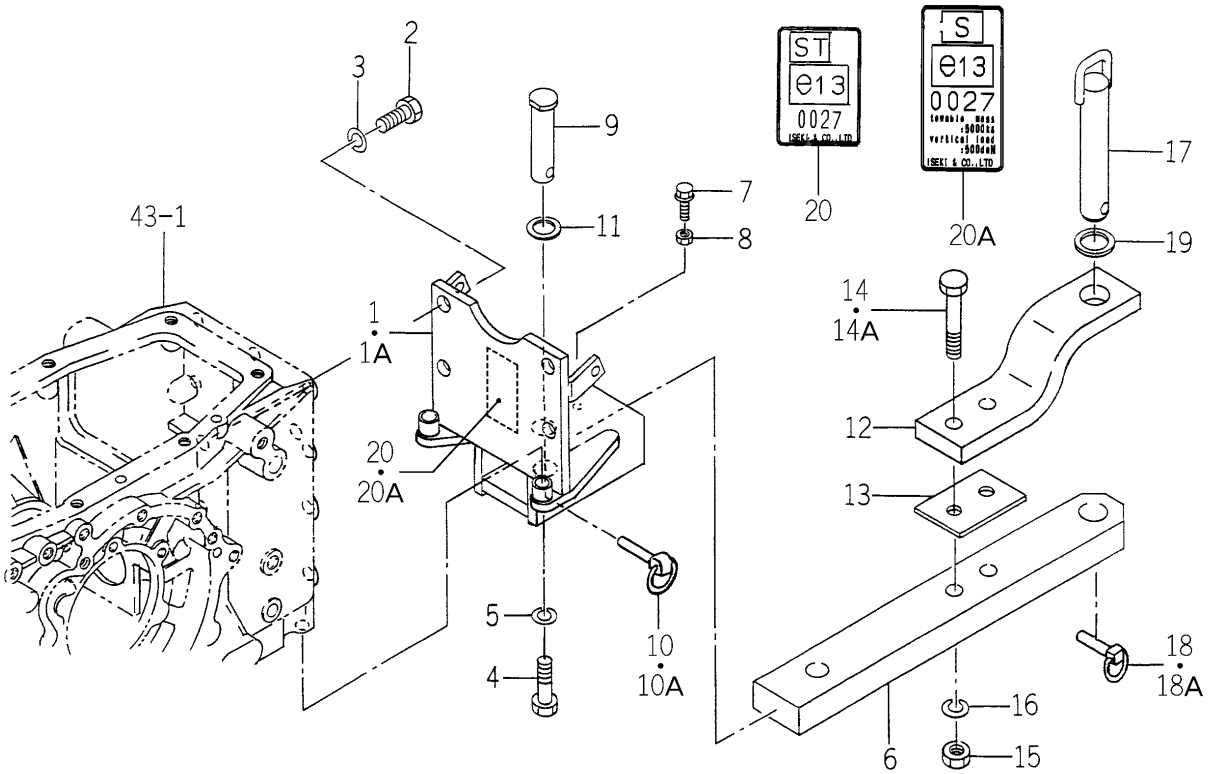

1742-521A-0100

KEY	PART CODE	DESCRIPTION	SPC	TYPE OF MODEL TG5330 E4	TG5330 E6	TG5390 E4	TG5390 E6	ITC	COL	GRP	REMARKS
1	1742-521-210-20	BRACKET/DRAW BAR/E4	*	1 -607		1 -921		3			
1A	1742-521-210-30	BRACKET/DRAW BAR/E4	*	1 608-		1 922-		1			
2	V201-361-603-50	BOLT M16X35	*	4		4					
3	V401-160-016-00	WASHER,SP/M16	*	4		4					
4	V201-361-405-00	BOLT/M14X50	*	2		2					
5	V401-160-014-00	WASHER,SP/M14	*	2		2					
6	1742-521-002-10	DRAWBAR/E4	*	1		1					
7	V231-361-003-00	FLANGEBOLT	*	1		1					
8	V304-460-010-00	NUT/M10	*	1		1					
9	1640-520-005-00	PIN/25X91	*	1		1					
10	1673-525-002-20	LINKPIN	*	1 -627		1 -945					
10A	1673-525-002-30	LINKPIN	*	1 628-		1 946-		1			
11	1640-520-004-00	INSULATOR	*	1		1					
12	1674-520-002-00	LINK/DRAWBAR	*	1		1					
13	1674-520-003-00	PLATE	*	1		1					
14	V201-261-608-50	BOLT/M16X85	*	2 -439		2 -774					
14A	V201-361-608-50	BOLT	*	2 440-		2 775-					
15	1518-924-001-00	NUT,U/M16	*	2		2					
16	V401-160-016-00	WASHER,SP/M16	*	2		2					
17	1674-520-210-00	PIN/30X162 COMP	*	1		1					
18	1673-525-002-20	LINKPIN	*	1 -627		1 -945					
18A	1673-525-002-30	LINKPIN	*	1 628-		1 946-		1			
19	1674-520-004-00	INSULATOR	*	1		1					
20	1742-521-003-00	LABEL/TRH-1742A	*	1 -798		1 -1141					
20A	1742-521-003-10	LABEL/TRH-1742A	*	1 799-		1 1142-		1			

FIG.133 HOOD SYSTEM (EXCEPT C TYPE)

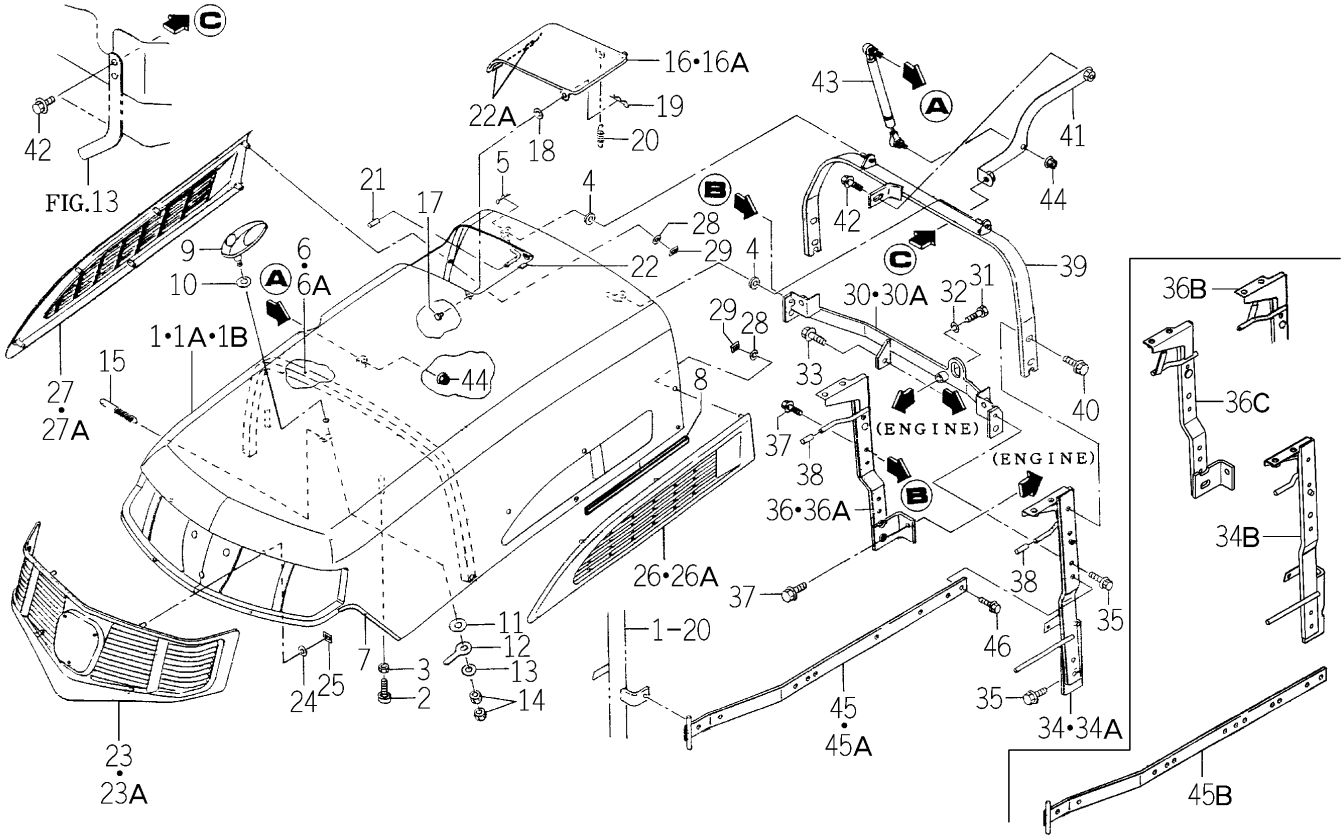

1746-601 -0100

KEY	PART CODE	DESCRIPTION	SPC	TYPE OF MODEL TG5330 E4	TG5330 E6	TG5390 E4	TG5390 E6	ITC	COL	GRP	REMARKS
1	1729-601-200-30	HOOD COMP	*	1 -54	1 -54	1 -110	1 -110		4L		
1A	1729-601-200-40	HOOD COMP	*	1 -257	1 -257	1 -580	1 -580	1	4L		
1B	1729-601-200-50	HOOD COMP	*	1 258-	1 258-	1 581-	1 581-	1	4L		
2	1421-602-005-10	CUSHION,B/ RUBBER	*	2	2	2	2				
3	V304-460-008-00	NUT/M8	*	2	2	2	2				
4	1423-616-004-00	CUSHION/RUBBER/10X25	*	2	2	2	2				
5	V560-160-008-00	PIN/SNAP	*	1	1	1	1				
6	1729-601-004-10	INSULATOR	*	1 -27	1 -27	1 -155	1 -155				
6A	1729-601-004-20	INSULATOR	*	1 28-	1 28-	1 156-	1 156-	1			
7	1636-630-008-00	TRIM/150	*	2	2	2	2				
8	3670-840-006-00	TRIM/270	*	2 56-	2 56-	2 116-	2 116-				
9	1650-601-001-00	HANDLE	*	1	1	1	1				
10	1650-601-007-00	WASHER/12X25X02	*	1	1	1	1				
11	3610-440-018-00	WASHER	*	1	1	1	1				
12	1716-601-002-00	ARM/PLATE	*	1	1	1	1				
13	V411-260-008-00	WASHER,PL/M 8	*	1	1	1	1				
14	V304-260-008-00	NUT	*	2	2	2	2				
15	1588-117-001-00	SPRING/HE089	*	1	1	1	1				
16	1729-601-220-10	COVER COMP	*	1 -60	1 -60	1 -172	1 -172		4L		
16A	1729-601-220-20	COVER COMP	*	1 61-	1 61-	1 173-	1 173-	1	4L		
17	1716-601-021-00	PIN/06X07	*	1	1	1	1				
18	V411-260-006-00	WASHER / M6	*	1	1	1	1				
19	V560-160-006-00	PIN/SNAP	*	1	1	1	1				
20	1716-601-018-00	SPRING/HE036	*	1	1	1	1				
21	1716-601-019-00	TUBE/06X10X20	*	1	1	1	1				
22	1672-601-002-00	TRIM/20	*	1 -70	1 -70	1 -228	1 -228				
22A	1672-601-002-00	TRIM/20	*	2 71-	2 71-	2 229-	2 229-				
23	1729-601-001-10	MOLDING/FRONT	*	1 -691	1 -691	1 -979	1 -979				
23A	1729-601-001-20	MOLDING/FRONT	*	1 692-	1 692-	1 980-	1 980-	1			
24	1444-601-015-00	WASHER/6X14X3	*	5	5	5	5				

FIG.133 HOOD SYSTEM (EXCEPT C TYPE)

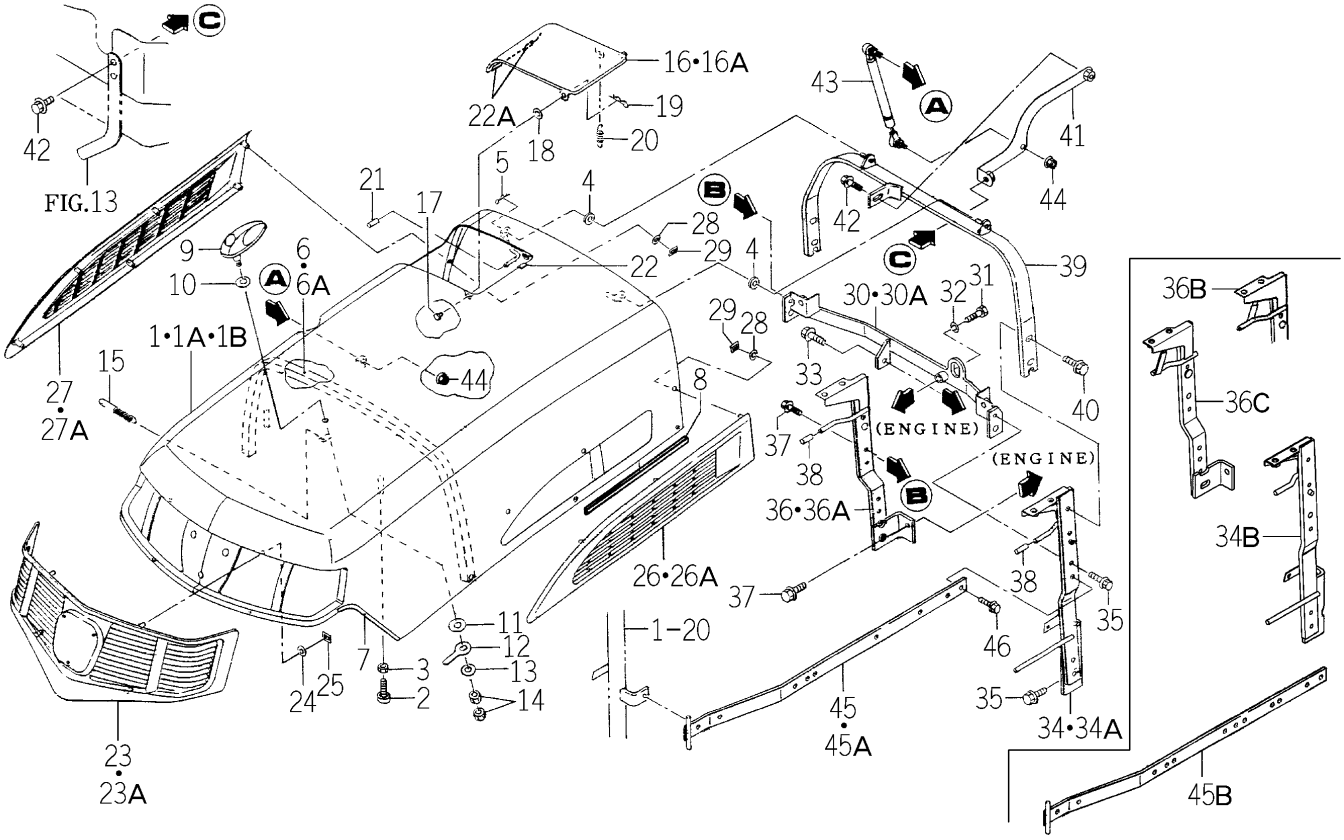

1746-601 -0100

KEY	PART CODE	DESCRIPTION	SPC	TYPE OF MODEL TG5330 E4	TG5330 E6	TG5390 E4	TG5390 E6	ITC	COL	GRP	REMARKS
25	V350-160-006-00	NUT,SPEED/P6	*	5	5	5	5				
26	1729-601-002-10	MOLDING/LH	*	1 -712	1 -712	1 -1002	1 -1002				
26A	1729-601-002-20	MOLDING/LH	*	1 713-	1 713-	1 1003-	1 1003-	1			
27	1729-601-003-10	MOLDING/RH	*	1 -684	1 -684	1 -971	1 -971				
27A	1729-601-003-20	MOLDING/RH	*	1 685-	1 685-	1 972-	1 972-	1			
28	1444-601-015-00	WASHER/6X14X3	*	12	12	12	12				
29	V350-160-006-00	NUT,SPEED/P6	*	12	12	12	12				
30	1729-601-300-00	BRACKET/FRAME COMP	*	1 -750	1 -750	1 -1085	1 -1085				
30A	1729-601-300-10	BRACKET/FRAME COMP	*	1 751-	1 751-	1 1086-	1 1086-	3			
31	V203-361-003-50	BOLT	*	1	1	1	1				
32	V401-160-010-00	WASHER,SP/M10	*	1	1	1	1				
33	V231-360-801-60	FLANGEBOLT	*	1	1	1	1				
34	1729-601-310-00	FRAME/HOOD/LH COMP	*	1 -363	1 -363	1 -763	1 -763				
34A	1729-601-310-10	FRAME/HOOD/LH COMP	*	1 -750	1 -750	1 -1085	1 -1085	1			
34B	1729-601-310-20	FRAME/HOOD/LH COMP	*	1 751-	1 751-	1 1086-	1 1086-	3			
35	V231-360-802-00	FLANGEBOLT	*	3	3	3	3				
36	1742-601-270-00	FRAME/HOOD/RH COMP	*	1 -10	1 -10	1 -15	1 -15				
36A	1742-601-270-10	FRAME/HOOD/RH COMP	*	1 -60	1 -60	1 -172	1 -172	1			
36B	1742-601-270-20	FRAME/HOOD/RH COMP	*	1 -750	1 -750	1 -1085	1 -1085	1			
36C	1742-601-270-30	FRAME/HOOD/RH COMP	*	1 751-	1 751-	1 1086-	1 1086-	3			
37	V231-360-802-00	FLANGEBOLT	*	3	3	3	3				
38	1716-601-009-00	TUBE/07X09X30	*	4	4	4	4				
39	1729-601-240-10	FRAME/HOOD COMP	*	1	1	1	1				
40	V231-360-802-00	FLANGEBOLT	*	4	4	4	4				
41	1742-601-260-20	STAY COMP	*	1	1	1	1	1			
42	V231-360-802-00	FLANGEBOLT	*	3	3	3	3				
43	1729-601-280-10	DUMPER/HOOD ASSY	*	1	1	1	1				
44	V362-260-008-00	NUT/WASHER	*	2	2	2	2				
45	1729-601-260-10	FRAME COMP	*	2 -98	2 -98	2 -348	2 -348				
45A	1729-601-260-20	FRAME COMP	*	2 -750	2 -750	2 -1085	2 -1085	1			

FIG.133 HOOD SYSTEM (EXCEPT C TYPE)

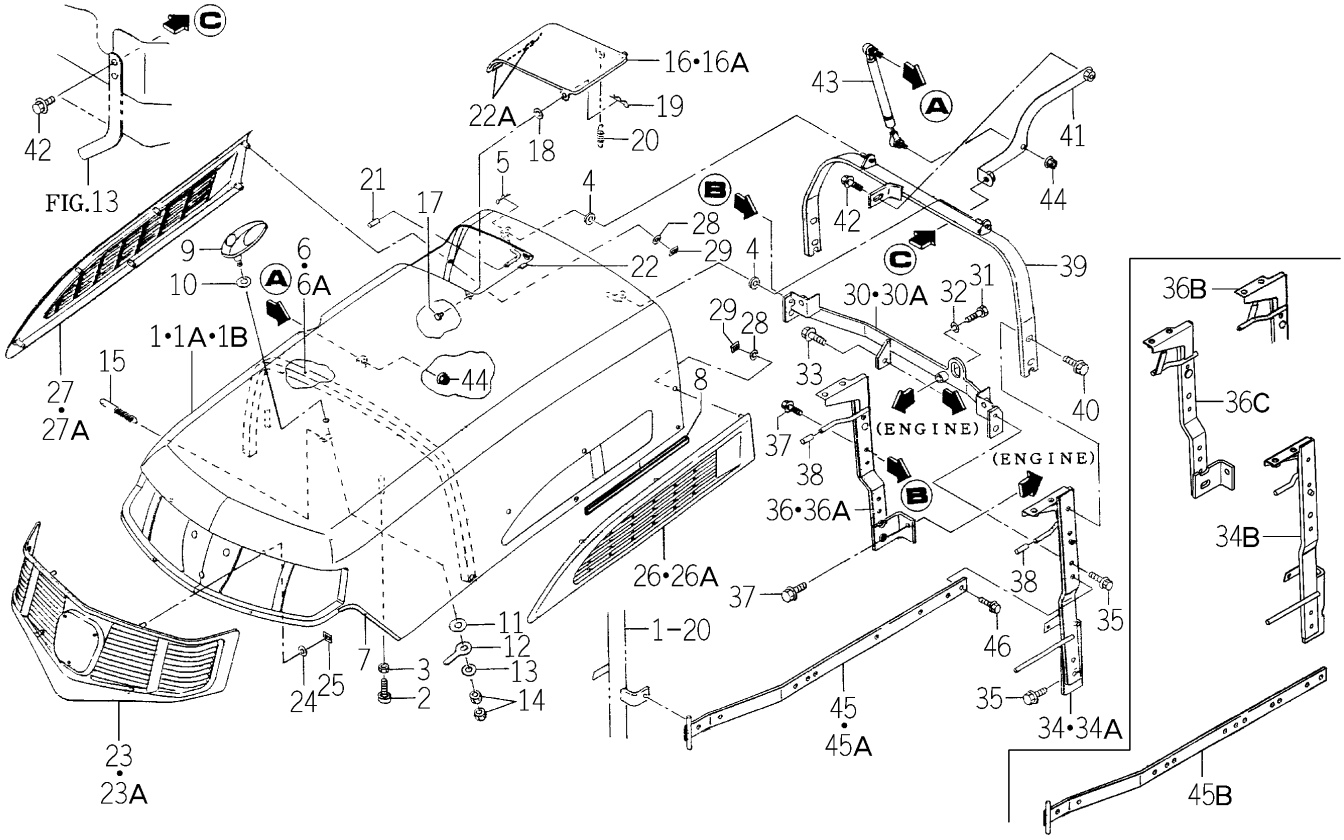

1746-601 -0100

KEY	PART CODE	DESCRIPTION	SPC	TYPE OF MODEL TG5330 E4	TG5330 E6	TG5390 E4	TG5390 E6	ITC	COL	GRP	REMARKS
45B	1729-601-260-30	FRAME COMP	*	2 751-4	2 751-4	2 1086-4	2 1086-4	3			
46	V231-360-802-00	FLANGEBOLT	*								

FIG.134 HOOD SYSTEM (C TYPE)

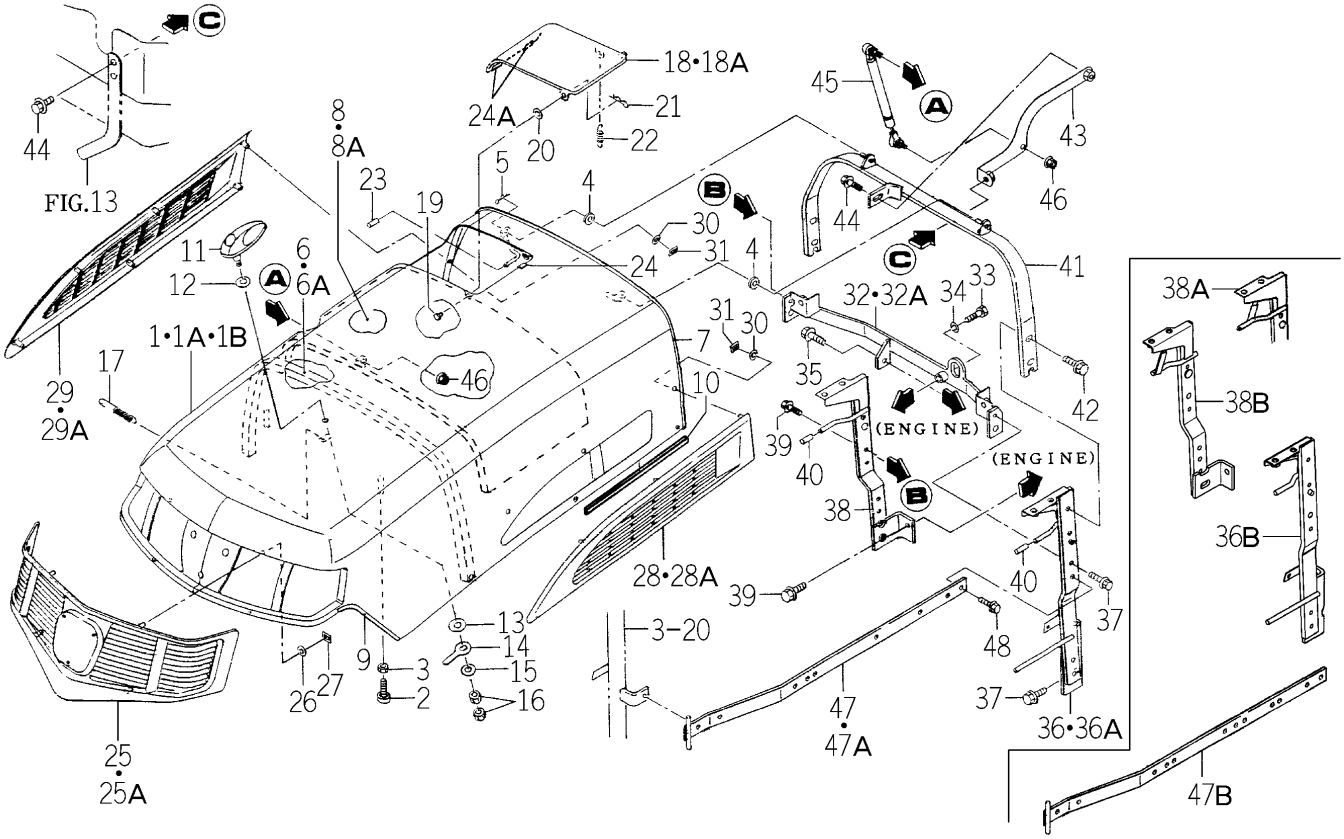

1746-601A-0100

KEY	PART CODE	DESCRIPTION	SPC	TYPE OF MODEL TG5330 E4	TG5330 E6	TG5390 E4	TG5390 E6	ITC	COL	GRP	REMARKS
1	1729-601-200-30	HOOD COMP	*	1 -54		1 -110			4L		
1A	1729-601-200-40	HOOD COMP	*	1 -257		1 -580		1	4L		
1B	1729-601-200-50	HOOD COMP	*	1 258-		1 581-		1	4L		
2	1421-602-005-10	CUSHION,B/ RUBBER	*	2		2					
3	V304-460-008-00	NUT/M8	*	2		2					
4	1423-616-004-00	CUSHION/RUBBER/10X25	*	2		2					
5	V560-160-008-00	PIN/SNAP	*	1		1					
6	1729-601-004-10	INSULATOR	*	1 -27		1 -155					
6A	1729-601-004-20	INSULATOR	*	1 28-		1 156-		1			
7	1729-601-051-00	INSULATOR/HOOD	*	1		1					
8	1729-601-052-00	INSULATOR/HOOD	*	1 -27		1 -155					
8A	1729-601-052-10	INSULATOR/HOOD	*	1 28-		1 156-		1			
9	1636-630-008-00	TRIM/150	*	2		2					
10	3670-840-006-00	TRIM/270	*	2 28-		2 26-					
11	1650-601-001-00	HANDLE	*	1		1					
12	1650-601-007-00	WASHER/12X25X02	*	1		1					
13	3610-440-018-00	WASHER	*	1		1					
14	1716-601-002-00	ARM/PLATE	*	1		1					
15	V411-260-008-00	WASHER,PL/M 8	*	1		1					
16	V304-260-008-00	NUT	*	2		2					
17	1588-117-001-00	SPRING/HE089	*	1		1					
18	1729-601-220-10	COVER COMP	*	1 -60		1 -172			4L		
18A	1729-601-220-20	COVER COMP	*	1 61-		1 173-		1	4L		
19	1716-601-021-00	PIN/06X07	*	1		1					
20	V411-260-006-00	WASHER / M6	*	1		1					
21	V560-160-006-00	PIN/SNAP	*	1		1					
22	1716-601-018-00	SPRING/HE036	*	1		1					
23	1716-601-019-00	TUBE/06X10X20	*	1		1					
24	1672-601-002-00	TRIM/20	*	1 -69		1 -210					
24A	1672-601-002-00	TRIM/20	*	2 70-		2 211-					

FIG.134 HOOD SYSTEM (C TYPE)

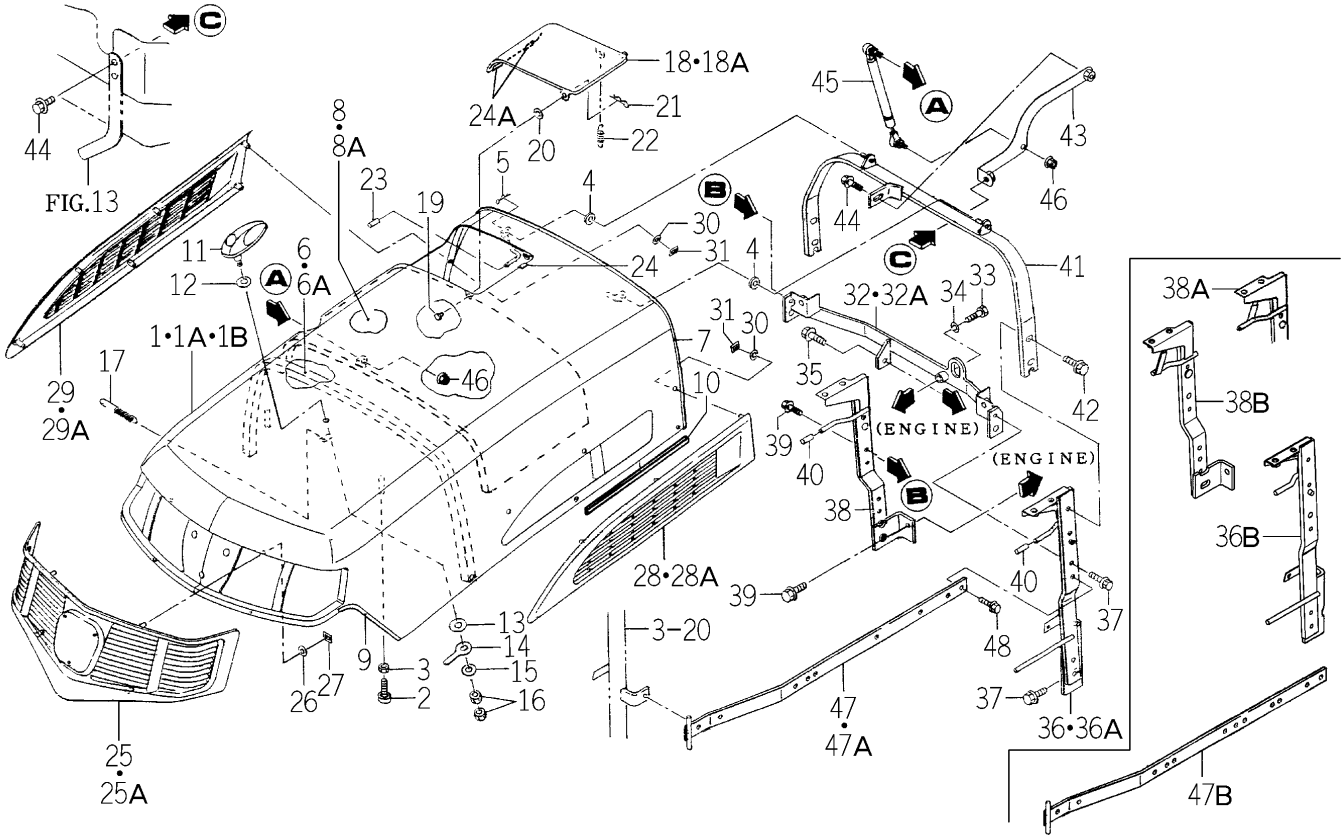

1746-601A-0100

KEY	PART CODE	DESCRIPTION	SPC	TYPE OF MODEL TG5330 E4	TG5330 E6	TG5390 E4	TG5390 E6	ITC	COL	GRP	REMARKS
25	1729-601-001-10	MOLDING/FRONT	*	1 -691		1 -979					
25A	1729-601-001-20	MOLDING/FRONT	*	1 692-		1 980-		1			
26	1444-601-015-00	WASHER/6X14X3	*	5		5					
27	V350-160-006-00	NUT,SPEED/P6	*	5		5					
28	1729-601-002-10	MOLDING/LH	*	1 -712		1 -1002					
28A	1729-601-002-20	MOLDING/LH	*	1 713-		1 1003-		1			
29	1729-601-003-10	MOLDING/RH	*	1 -684		1 -971					
29A	1729-601-003-20	MOLDING/RH	*	1 685-		1 972-		1			
30	1444-601-015-00	WASHER/6X14X3	*	12		12					
31	V350-160-006-00	NUT,SPEED/P6	*	12		12					
32	1729-601-300-00	BRACKET/FRAME COMP	*	1 -750		1 -1085					
32A	1729-601-300-10	BRACKET/FRAME COMP	*	1 751-		1 1086-		3			
33	V203-361-003-50	BOLT	*	1		1					
34	V401-160-010-00	WASHER,SP/M10	*	1		1					
35	V231-360-801-60	FLANGEBOLT	*	1		1					
36	1729-601-310-00	FRAME/HOOD/LH COMP	*	1 -363		1 -763					
36A	1729-601-310-10	FRAME/HOOD/LH COMP	*	1 -750		1 -1085		1			
36B	1729-601-310-20	FRAME/HOOD/LH COMP	*	1 751-		1 1086-		3			
37	V231-360-802-00	FLANGEBOLT	*	3		3					
38	1742-601-270-10	FRAME/HOOD/RH COMP	*	1 -60		1 -172					
38A	1742-601-270-20	FRAME/HOOD/RH COMP	*	1 -750		1 -1085		1			
38B	1742-601-270-30	FRAME/HOOD/RH COMP	*	1 751-		1 1086-		3			
39	V231-360-802-00	FLANGEBOLT	*	3		3					
40	1716-601-009-00	TUBE/07X09X30	*	4		4					
41	1729-601-240-10	FRAME/HOOD COMP	*	1		1					
42	V231-360-802-00	FLANGEBOLT	*	4		4					
43	1742-601-260-20	STAY COMP	*	1		1					
44	V231-360-802-00	FLANGEBOLT	*	3		3					
45	1729-601-280-10	DUMPER/HOOD ASSY	*	1		1					
46	V362-260-008-00	NUT/WASHER	*	2		2					

FIG.134 HOOD SYSTEM (C TYPE)

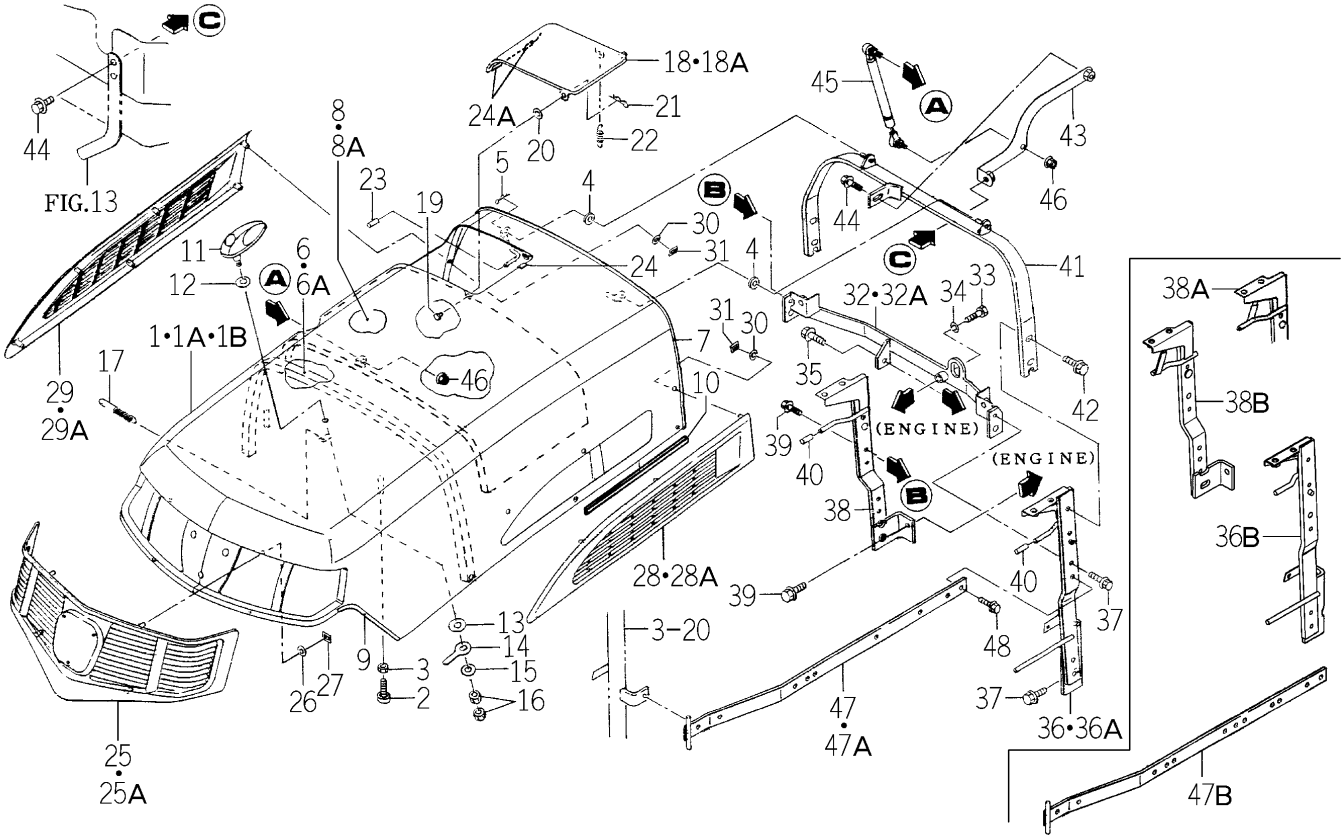

1746-601A-0100

KEY	PART CODE	DESCRIPTION	SPC	TYPE OF MODEL TG5330 E4	TG5330 E6	TG5390 E4	TG5390 E6	ITC	COL	GRP	REMARKS
47	1729-601-260-10	FRAME COMP	*	2 -98		2 -348					
47A	1729-601-260-20	FRAME COMP	*	2 -750		2 -1085		1			
47B	1729-601-260-30	FRAME COMP	*	2 751-		2 1086-		3			
48	V231-360-802-00	FLANGEBOLT	*	4		4					

FIG.135 GRILLE SYSTEM

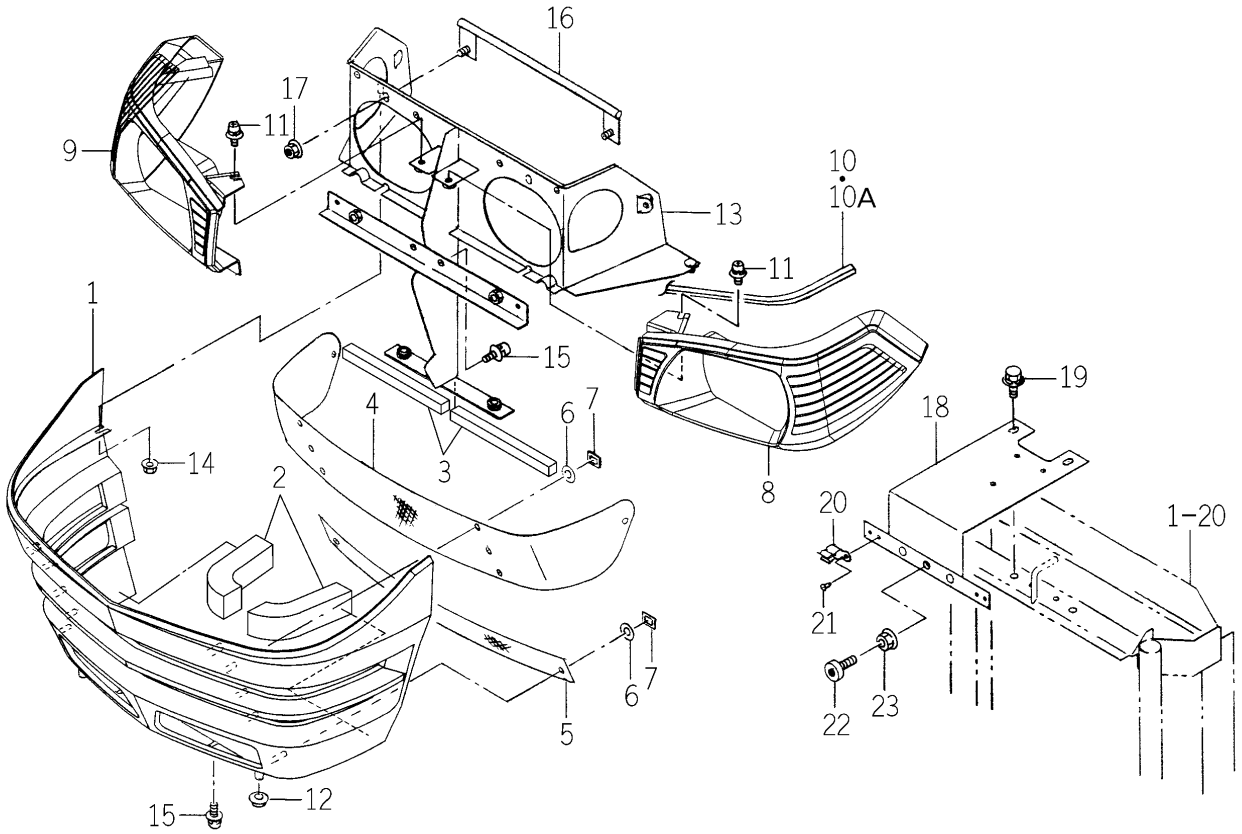

1746-602 -0100

KEY	PART CODE	DESCRIPTION	SPC	TYPE OF MODEL TG5330 E4	TG5330 E6	TG5390 E4	TG5390 E6	ITC	COL	GRP	REMARKS
1	1746-602-002-00	GRILLE/EEC	*	1	1	1	1				
2	1729-602-006-00	INSULATOR/30X35X150	*	2 95-	2 95-	2 313-	2 313-				
3	1729-602-007-00	INSULATOR/15X15X190	*	2 95-	2 95-	2 313-	2 313-				
4	1729-602-002-00	NET/GRILLE	*	1	1	1	1		7F		
5	1729-602-003-10	NET/GRILLE/UNDER	*	1	1	1	1		7F		
6	1444-601-015-00	WASHER/6X14X3	*	8	8	8	8				
7	V350-160-006-00	NUT,SPEED/P6	*	8	8	8	8				
8	1746-602-001-00	COVER/LAMP/LH	*	1	1	1	1				
9	1746-602-003-00	COVER/LAMP/RH	*	1	1	1	1				
10	1729-602-005-00	INSULATOR/6X9X680	*	1 -27	1 -27	1 -155	1 -155				
10A	1729-602-005-10	INSULATOR/6X9X650	*	1 28-	1 28-	1 156-	1 156-	1			
11	V120-366-001-60	SCREW	*	6	6	6	6				
12	1421-603-004-00	BUSH,LEVER	*	2	2	2	2				
13	1746-602-230-00	HOLDER/GRILLE/E COMP	*	1	1	1	1				
14	V361-260-006-00	NUT	*	2	2	2	2				
15	V120-366-001-60	SCREW	*	6	6	6	6				
16	1729-602-210-10	BAR COMP	*	1	1	1	1				
17	V363-260-008-00	NUT/WASHER	*	2	2	2	2				
18	1729-602-220-30	BRACKET COMP	*	1	1	1	1				
19	V211-360-801-60	BOLT,SEMS (SP)	*	2	2	2	2				
20	1729-602-004-10	SPRING	*	2	2	2	2				
21	W296-134-007-00	RIVET,BLIND	*	4	4	4	4				
22	1421-602-005-10	CUSHION,B/ RUBBER	*	1	1	1	1				
23	V363-260-008-00	NUT/WASHER	*	1	1	1	1				

FIG.136 COVER (SIDE) SYSTEM (C TYPE)

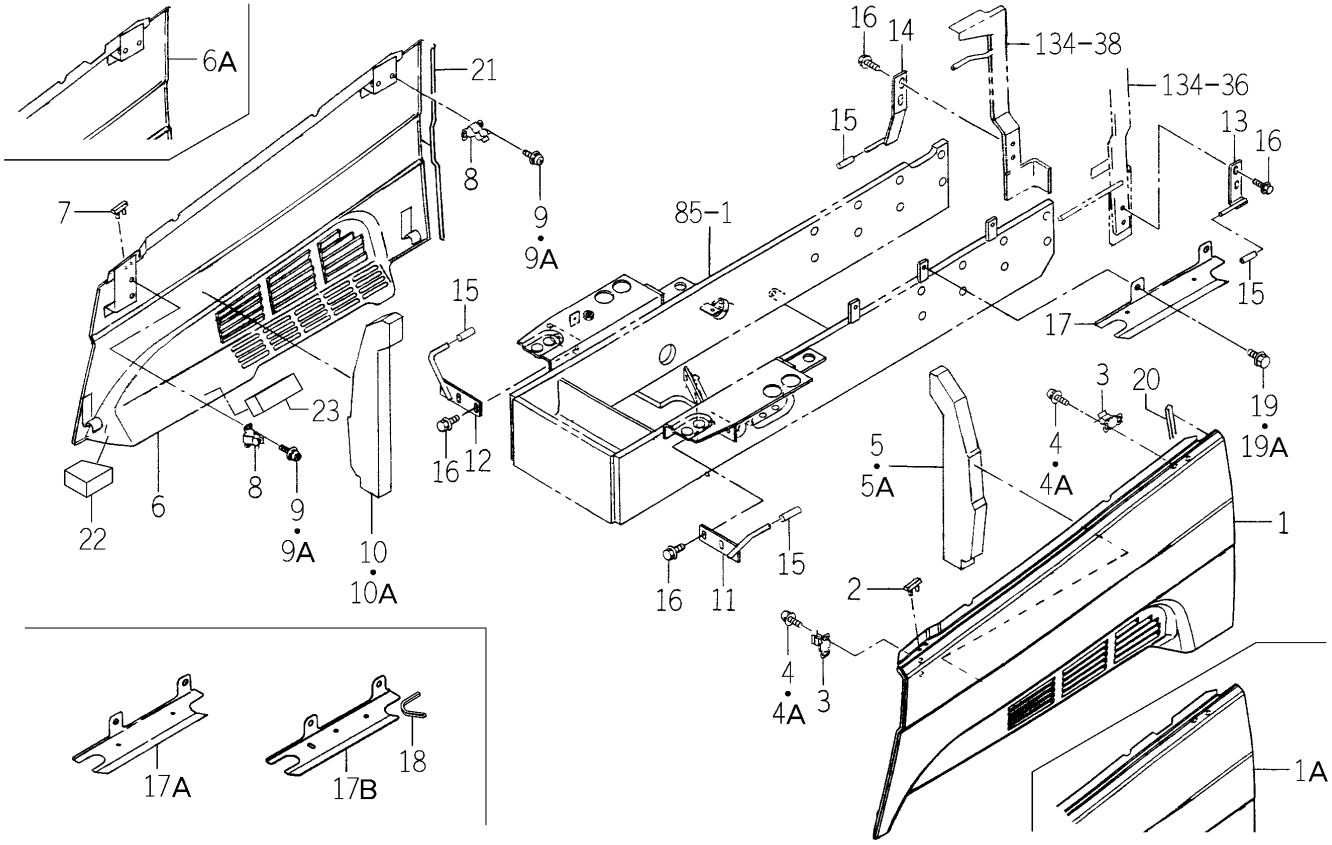

1746-604A-0100

KEY	PART CODE	DESCRIPTION	SPC	TYPE OF MODEL TG5330 E4	TG5330 E6	TG5390 E4	TG5390 E6	ITC	COL	GRP	REMARKS
1	1746-604-200-00	COVER/SIDE/LH COMP	*	1 -730		1 -1028			4L		
1A	1746-604-200-10	COVER/SIDE/LH COMP	*	1 731-		1 1029-		1	4L		
2	1716-601-017-00	INSULATOR	*	1		1					
3	1729-604-003-00	SPRING	*	2		2					
4	V120-366-001-60	SCREW	*	4 -458		4 -790					
4A	V120-366-001-20	SCREW	*	4 459-		4 791-					
5	1729-604-001-10	INSULATOR/SIDE/LH	*	1 -27		1 -155					
5A	1729-604-001-20	INSULATOR/SIDE/LH	*	1 28-		1 156-		1			
6	1746-604-210-00	COVER/SIDE/RH COMP	*	1 -730		1 -1028			4L		
6A	1746-604-210-10	COVER/SIDE/RH COMP	*	1 731-		1 1029-		1	4L		
7	1716-601-017-00	INSULATOR	*	1		1					
8	1729-604-003-00	SPRING	*	2		2					
9	V120-366-001-60	SCREW	*	4 -458		4 -790					
9A	V120-366-001-20	SCREW	*	4 459-		4 791-					
10	1729-604-002-10	INSULATOR/SIDE/RH	*	1 -27		1 -155					
10A	1729-604-002-20	INSULATOR/SIDE/RH	*	1 28-		1 156-		1			
11	1729-604-240-00	HOOK/FRONT/LH COMP	*	1		1					
12	1729-604-250-00	HOOK/FRONT/RH COMP	*	1		1					
13	1729-604-260-10	HOOK/REAR/LH COMP	*	1		1					
14	1742-604-240-10	HOOK/RH COMP	*	1		1					
15	1716-601-009-00	TUBE/07X09X30	*	4		4					
16	V231-360-802-00	FLANGEBOLT	*	8		8					
17	1729-604-004-10	PLATE/UNDER	*	1 -52		1 -70					
17A	1729-604-004-20	PLATE/UNDER	*	1 -749		1 -1066		1			
17B	1729-604-004-30	PLATE/UNDER	*	1 750-		1 1067-		1			
18	1685-604-003-00	INSULATOR/90	*	1 952-		1 1264-					
19	V231-360-801-60	FLANGEBOLT	*	2 -138		2 -443					
19A	V231-360-801-20	FLANGEBOLT	*	2 139-		2 444-					
20	1729-604-051-00	INSULATOR/SIDE/LH	*	1		1					
21	1729-604-052-00	INSULATOR/SIDE/RH	*	1		1					

FIG.136 COVER (SIDE) SYSTEM (C TYPE)

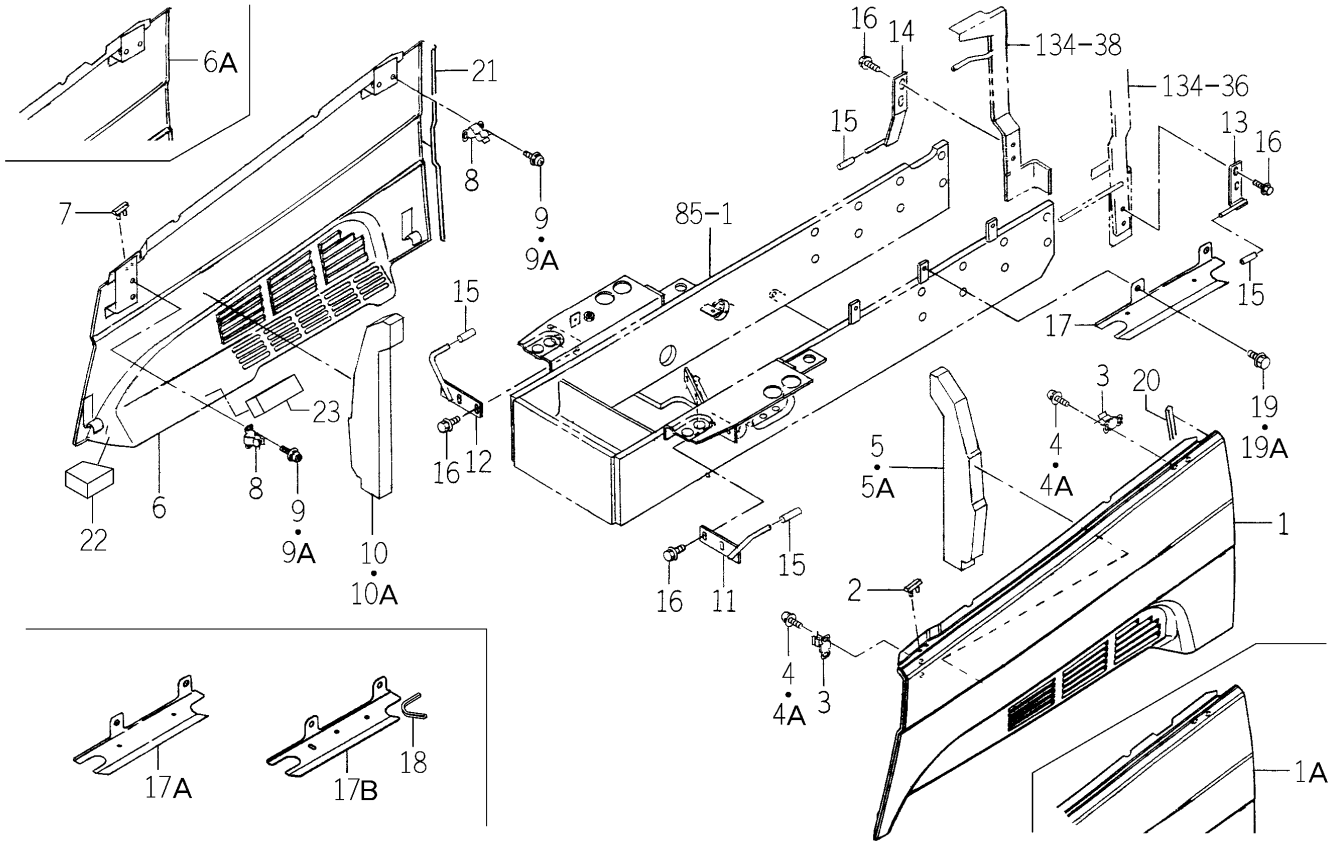

1746-604A-0100

KEY	PART CODE	DESCRIPTION	SPC	TYPE OF MODEL TG5330 E4	TG5330 E6	TG5390 E4	TG5390 E6	ITC	COL	GRP	REMARKS
22	1729-604-005-00	INSULATOR/SIDE	*	2 99-		2 297-					
23	1729-604-006-00	INSULATOR/30X30X90	*	2 99-		2 297-					

FIG.137 COVER (SIDE) SYSTEM (EXCEPT C TYPE)

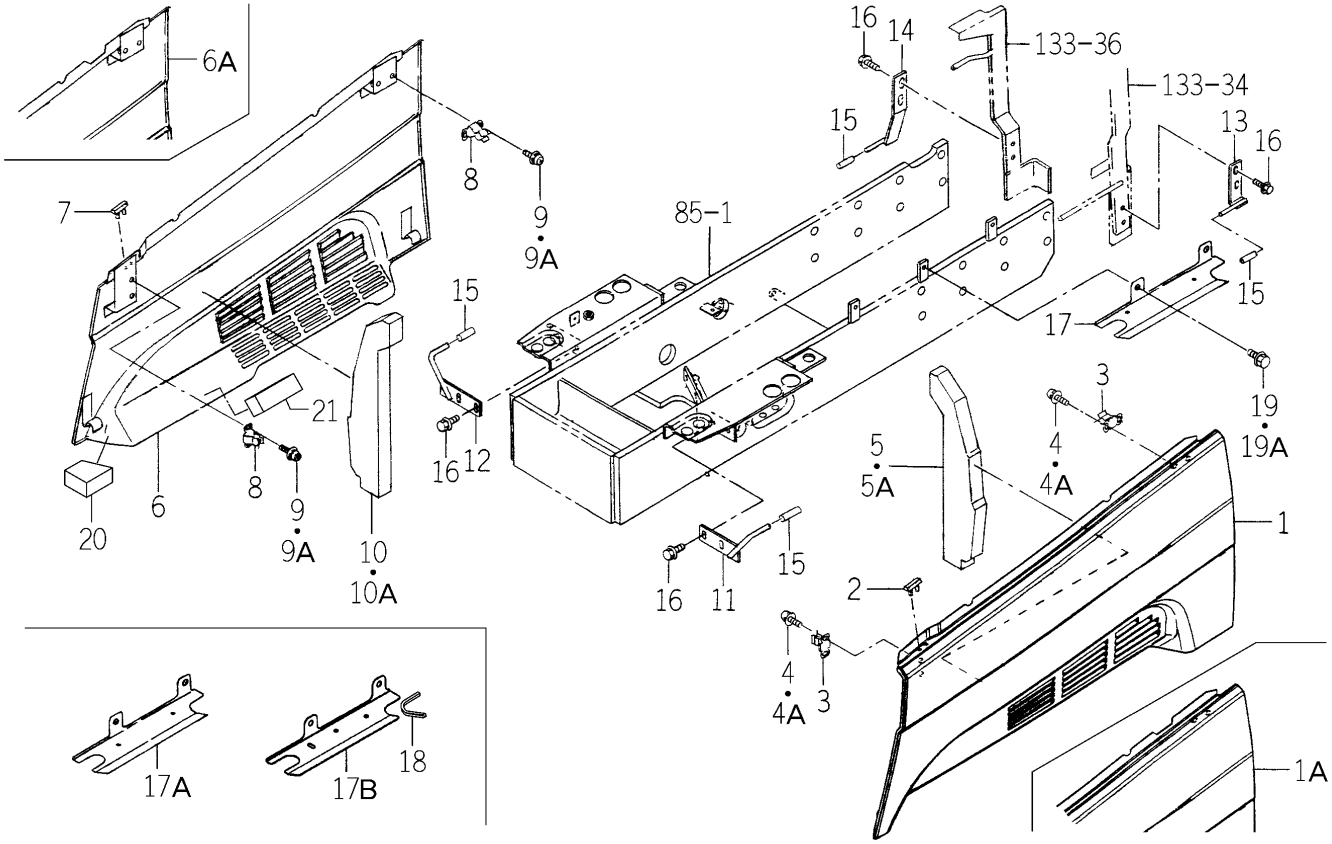

1746-604B-0100

KEY	PART CODE	DESCRIPTION	SPC	TYPE OF MODEL TG5330 E4	TG5330 E6	TG5390 E4	TG5390 E6	ITC	COL	GRP	REMARKS
1	1746-604-200-00	COVER/SIDE/LH COMP	*	1 -730	1 -730	1 -1028	1 -1028		4L		
1A	1746-604-200-10	COVER/SIDE/LH COMP	*	1 731-	1 731-	1 1029-	1 1029-	1	4L		
2	1716-601-017-00	INSULATOR	*	1	1	1	1				
3	1729-604-003-00	SPRING	*	2	2	2	2				
4	V120-366-001-60	SCREW	*	4 -448	4 -448	4 -789	4 -789				
4A	V120-366-001-20	SCREW	*	4 449-	4 449-	4 790-	4 790-				
5	1729-604-001-10	INSULATOR/SIDE/LH	*	1 -27	1 -27	1 -155	1 -155				
5A	1729-604-001-20	INSULATOR/SIDE/LH	*	1 28-	1 28-	1 156-	1 156-	1			
6	1746-604-210-00	COVER/SIDE/RH COMP	*	1 -730	1 -730	1 -1028	1 -1028		4L		
6A	1746-604-210-10	COVER/SIDE/RH COMP	*	1 731-	1 731-	1 1029-	1 1029-	1	4L		
7	1716-601-017-00	INSULATOR	*	1	1	1	1				
8	1729-604-003-00	SPRING	*	2	2	2	2				
9	V120-366-001-60	SCREW	*	4 -448	4 -448	4 -789	4 -789				
9A	V120-366-001-20	SCREW	*	4 449-	4 449-	4 790-	4 790-				
10	1729-604-002-10	INSULATOR/SIDE/RH	*	1 -27	1 -27	1 -155	1 -155				
10A	1729-604-002-20	INSULATOR/SIDE/RH	*	1 28-	1 28-	1 156-	1 156-	1			
11	1729-604-240-00	HOOK/FRONT/LH COMP	*	1	1	1	1				
12	1729-604-250-00	HOOK/FRONT/RH COMP	*	1	1	1	1				
13	1729-604-260-10	HOOK/REAR/LH COMP	*	1	1	1	1				
14	1742-604-240-10	HOOK/RH COMP	*	1	1	1	1				
15	1716-601-009-00	TUBE/07X09X30	*	4	4	4	4				
16	V231-360-802-00	FLANGEBOLT	*	8	8	8	8				
17	1729-604-004-10	PLATE/UNDER	*	1 -52	1 -52	1 -70	1 -70				
17A	1729-604-004-20	PLATE/UNDER	*	1 -749	1 -749	1 -1066	1 -1066	1			
17B	1729-604-004-30	PLATE/UNDER	*	1 750-	1 750-	1 1067-	1 1067-	1			
18	1685-604-003-00	INSULATOR/90	*	1 949-	1 949-	1 1268-	1 1268-				
19	V231-360-801-60	FLANGEBOLT	*	2 -134	2 -134	2 -441	2 -441				
19A	V231-360-801-20	FLANGEBOLT	*	2 135-	2 135-	2 442-	2 442-				
20	1729-604-005-00	INSULATOR/SIDE	*	2 95-	2 95-	2 313-	2 313-				
21	1729-604-006-00	INSULATOR/30X30X90	*	2 95-	2 95-	2 313-	2 313-				

FIG.138 FENDER SYSTEM (EXCEPT C TYPE)

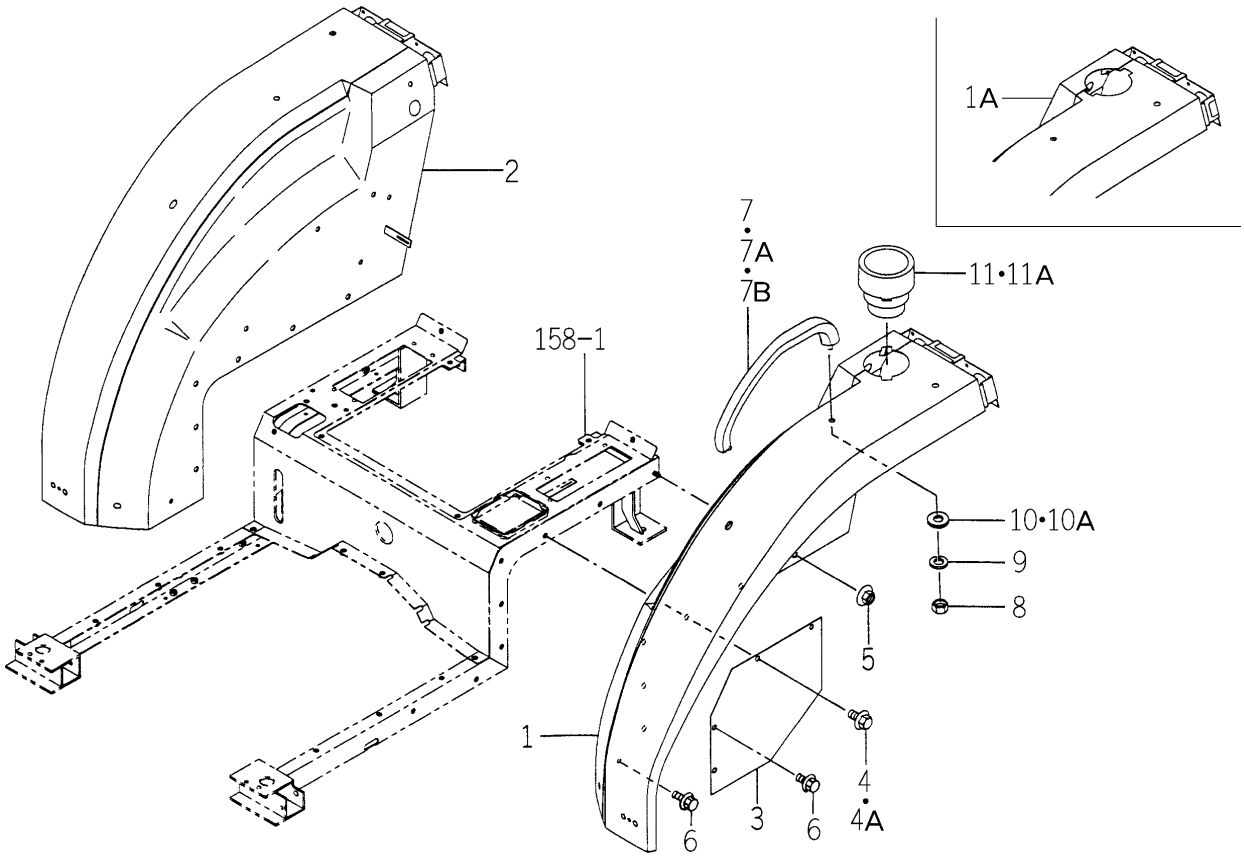

1742-606 -0100

KEY	PART CODE	DESCRIPTION	SPC	TYPE OF MODEL TG5330 E4	TG5330 E6	TG5390 E4	TG5390 E6	ITC	COL	GRP	REMARKS
1	1742-606-200-00	FENDER/LH COMP	*	1 -62	1 -62	1 -172	1 -172		4L		
1A	1742-606-200-10	FENDER/LH COMP	*	1 63-	1 63-	1 173-	1 173-	1	4L		
2	1742-606-210-00	FENDER/RH COMP	*	1	1	1	1		4L		
3	1729-606-001-00	COVER	*	2	2	2	2		4L		
4	V231-360-801-60	FLANGEBOLT	*	18 -66	18 -66	18 -198	18 -198				
4A	V231-360-801-60	FLANGEBOLT	*	8 67-	8 67-	8 199-	8 199-				
5	V363-260-008-00	NUT/WASHER	*	2	2	2	2				
6	V231-360-801-20	FLANGEBOLT	*	10 67-	10 67-	10 199-	10 199-				
7	1729-606-002-00	GRIP/ASSIST	*	2 -11	2 -11	2 -15	2 -15				
7A	1729-606-002-10	GRIP/ASSIST	*	2 -946	2 -946	2 -1250	2 -1250	1			
7B	1729-606-002-20	GRIP/ASSIST	*	2 947-	2 947-	2 1251-	2 1251-	1			
8	V304-260-010-00	NUT	*	4	4	4	4				
9	V401-160-010-00	WASHER,SP/M10	*	4	4	4	4				
10	V411-260-008-00	WASHER,PL/M 8	*	4 -53	4 -53	4 -103	4 -103				
10A	V411-260-010-00	WASHER/M10	*	4 54-	4 54-	4 104-	4 104-				
11	1742-606-001-00	TRAY/BOTTLE	*	1 -27	1 -27	1 -25	1 -25				
11A	1742-606-001-10	TRAY/BOTTLE	*	1 28-	1 28-	1 26-	1 26-	1			

FIG.139 LEVER GUIDE SYSTEM (P TYPE)

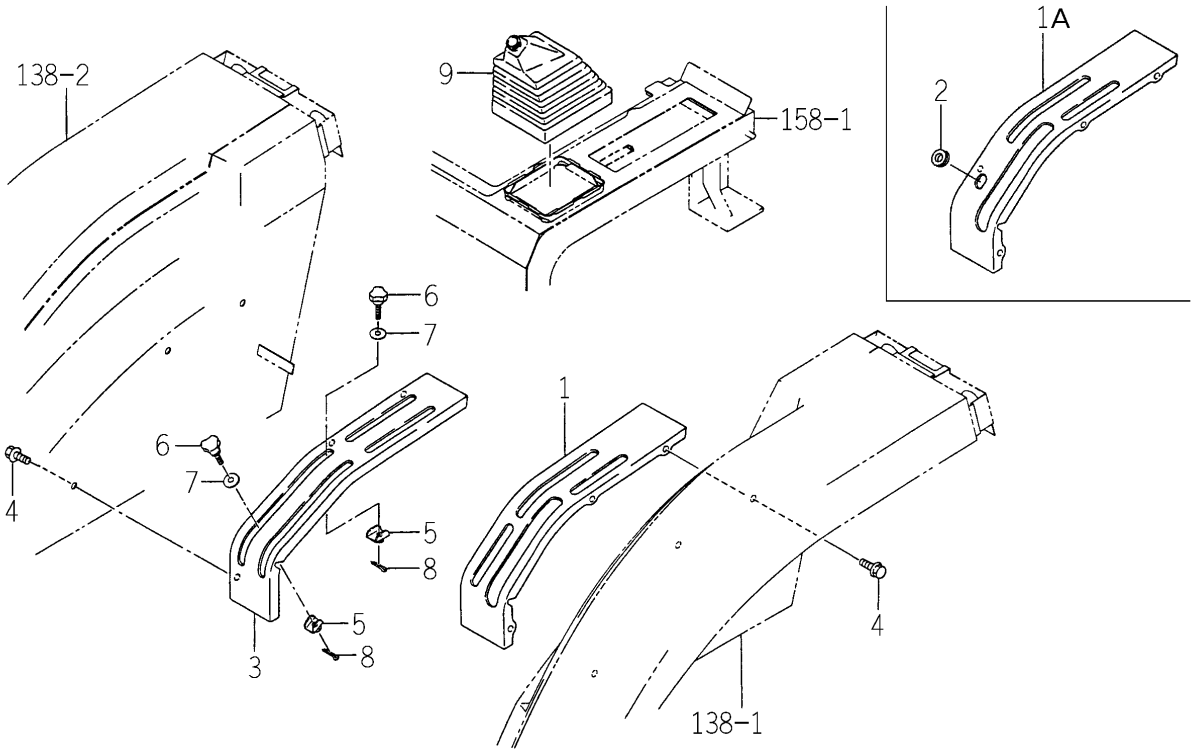

1742-608 -0100

KEY	PART CODE	DESCRIPTION	SPC	TYPE OF MODEL TG5330 E4	TG5330 E6	TG5390 E4	TG5390 E6	ITC	COL	GRP	REMARKS
1	1742-608-200-00	GUIDE/LEVER/LH COMP	*		1 -839		1 -1164		5I		
1A	1785-608-200-00	GUIDE/LEVER/LH COMP	*		1 840-		1 1165-		5I		
2	4130-705-002-00	GROMMET/20	*		1 840-		1 1165-				
3	1742-608-210-00	GUIDE/LEVER/RH COMP	*		1		1		5I		
4	V231-360-801-60	FLANGEBOLT	*		6		6				
5	1594-609-200-00	PLATE COMP	*		2		2				
6	1690-608-003-00	BOLT/KNOB/M06X27	*		2		2				
7	1421-507-014-00	WASHER/6X24X2	*		2		2				
8	V500-161-601-50	PIN,SPLIT/1.6X15	*		2		2				
9	1742-608-001-00	BOOT	*		1		1				

FIG.140 LEVER GUIDE SYSTEM (HE6 TYPE)

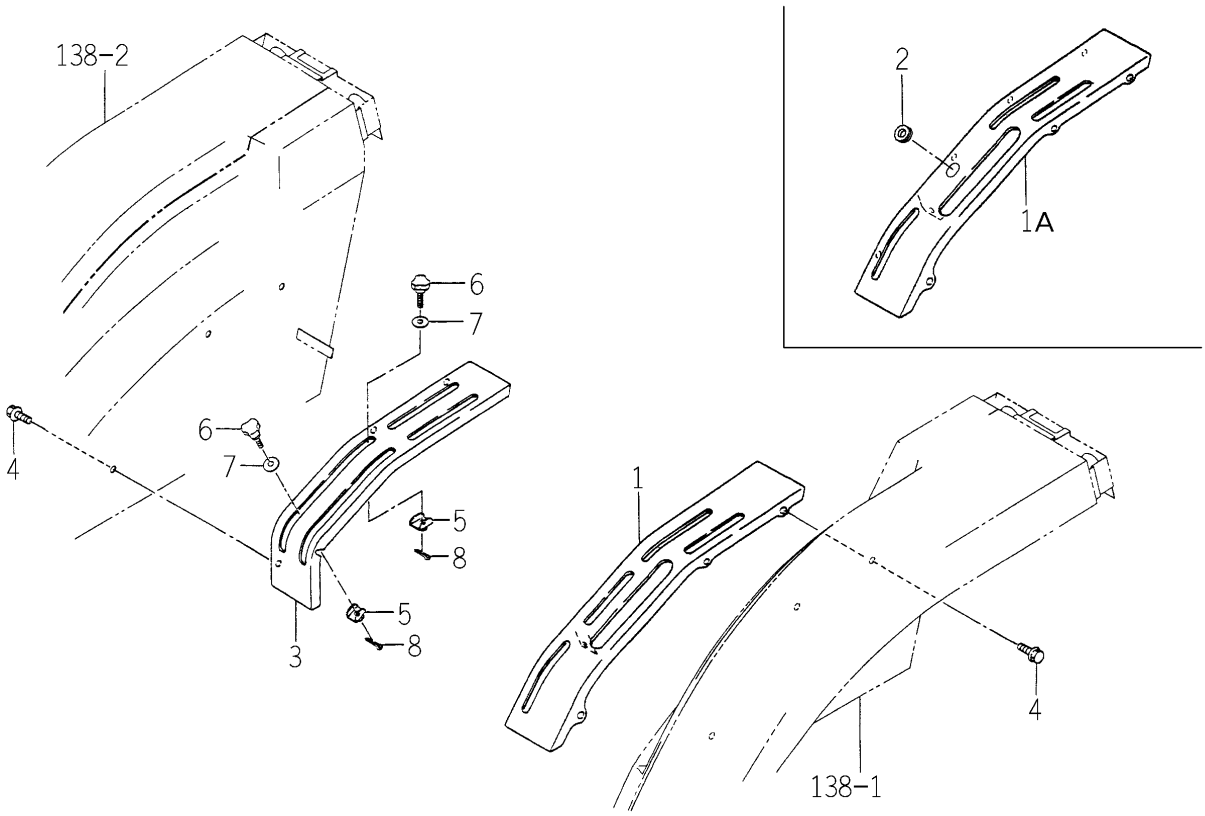

1743-608 -0100

KEY	PART CODE	DESCRIPTION	SPC	TYPE OF MODEL TG5330 E4	TG5330 E6	TG5390 E4	TG5390 E6	ITC	COL	GRP	REMARKS
1	1743-608-200-00	GUIDE/LEVER/LH/ COMP	*				1 -1164		5I		
1A	1785-608-220-00	GUIDE/LEVER/LH/ COMP	*				1 1165-		5I		
2	4130-705-002-00	GROMMET/20	*				1 1165-				
3	1742-608-210-00	GUIDE/LEVER/RH COMP	*				1		5I		
4	V231-360-801-60	FLANGEBOLT	*				6				
5	1594-609-200-00	PLATE COMP	*				2				
6	1690-608-003-00	BOLT/KNOB/M06X27	*				2				
7	1421-507-014-00	WASHER/6X24X2	*				2				
8	V500-161-601-50	PIN,SPLIT/1.6X15	*				2				

FIG.141 LEVER GUIDE SYSTEM (S TYPE)

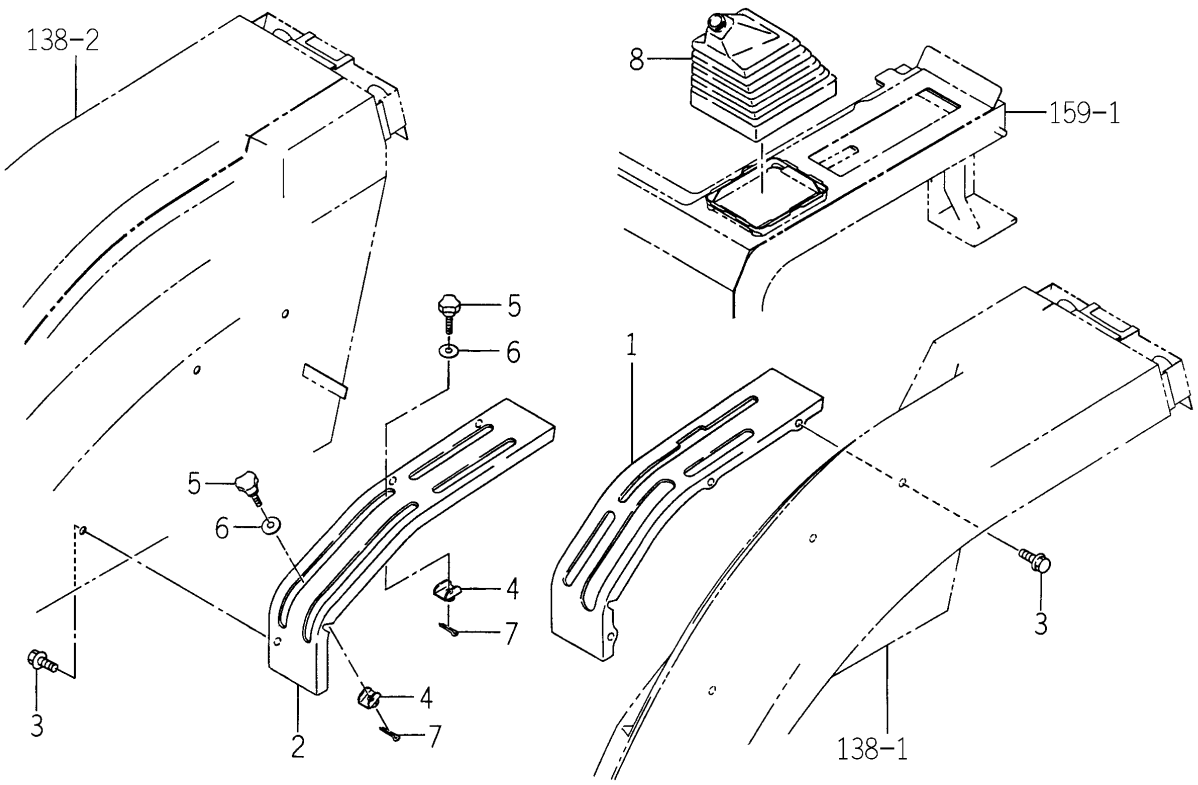

1746-608 -0100

KEY	PART CODE	DESCRIPTION	SPC	TYPE OF MODEL TG5330 E4	TG5330 E6	TG5390 E4	TG5390 E6	ITC	COL	GRP	REMARKS
1	1746-608-200-10	GUIDE/LEVER/LH COMP	*	1		1			5I		
2	1742-608-210-00	GUIDE/LEVER/RH COMP	*	1		1			5I		
3	V231-360-801-60	FLANGEBOLT	*	6		6					
4	1594-609-200-00	PLATE COMP	*	2		2					
5	1690-608-003-00	BOLT/KNOB/M06X27	*	2		2					
6	1421-507-014-00	WASHER/6X24X2	*	2		2					
7	V500-161-601-50	PIN,SPLIT/1.6X15	*	2		2					
8	1742-608-001-00	BOOT	*	1		1					

FIG.142 LEVER GUIDE SYSTEM (HE4 TYPE EXCEPT C-No.1-/ HC TYPE-TG5390E4-No.1-1025)

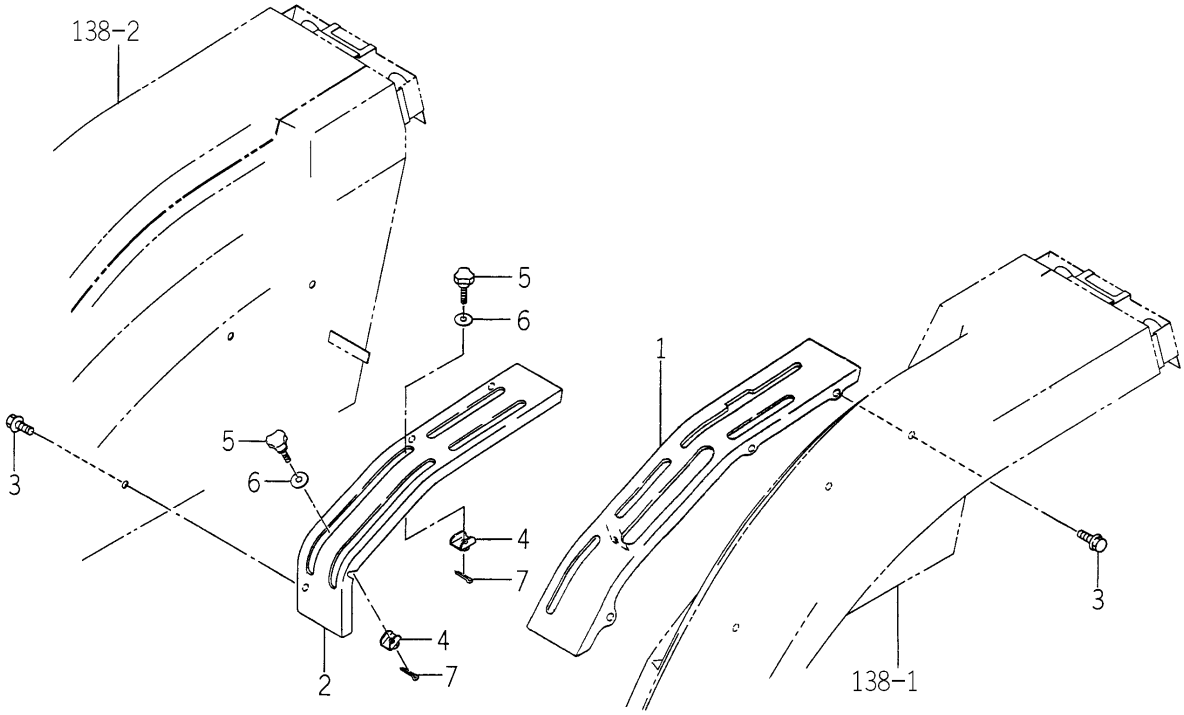

1747-608 -0100

KEY	PART CODE	DESCRIPTION	SPC	TYPE OF MODEL TG5330 E4	TG5330 E6	TG5390 E4	TG5390 E6	ITC	COL	GRP	REMARKS
1	1747-608-200-00	GUIDE/LEVER/LH/ COMP	*			1			5I		
2	1742-608-210-00	GUIDE/LEVER/RH COMP	*			1			5I		
3	V231-360-801-60	FLANGEBOLT	*			6					
4	1594-609-200-00	PLATE COMP	*			2					
5	1690-608-003-00	BOLT/KNOB/M06X27	*			2					
6	1421-507-014-00	WASHER/6X24X2	*			2					
7	V500-161-601-50	PIN,SPLIT/1.6X15	*			2					

FIG.143 LEVER GUIDE SYSTEM (Q TYPE EXCEPT C-No.1-/QC TYPE-TG5330E4-No.1-729/ TG5390E4-No.1-1008)

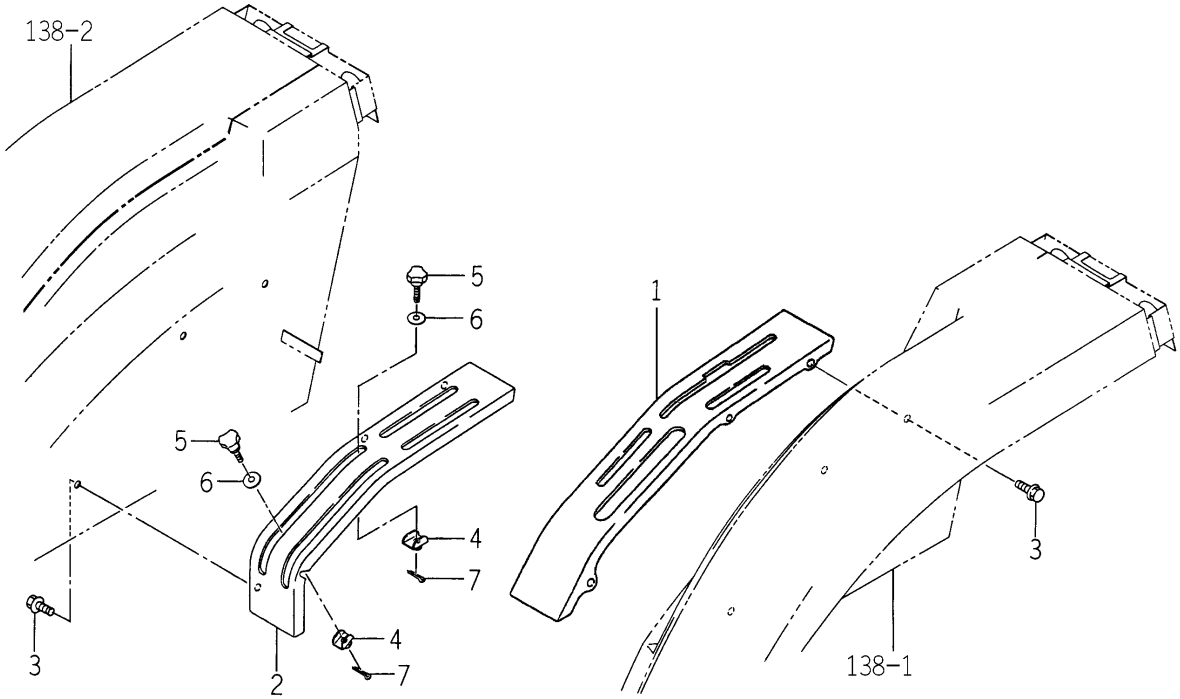

1746-608A-0100

KEY	PART CODE	DESCRIPTION	SPC	TYPE OF MODEL TG5330 E4	TG5330 E6	TG5390 E4	TG5390 E6	ITC	COL	GRP	REMARKS
1	1746-608-210-10	GUIDE/LEVER/LH/ COMP	*	1		1			5I		
2	1742-608-210-00	GUIDE/LEVER/RH COMP	*	1		1			5I		
3	V231-360-801-60	FLANGEBOLT	*	6		6					
4	1594-609-200-00	PLATE COMP	*	2		2					
5	1690-608-003-00	BOLT/KNOB/M06X27	*	2		2					
6	1421-507-014-00	WASHER/6X24X2	*	2		2					
7	V500-161-601-50	PIN,SPLIT/1.6X15	*	2		2					

FIG.144 LEVER GUIDE SYSTEM
(QC TYPE-TG5330E4-No.730-/TG5390E4-No.1009-)

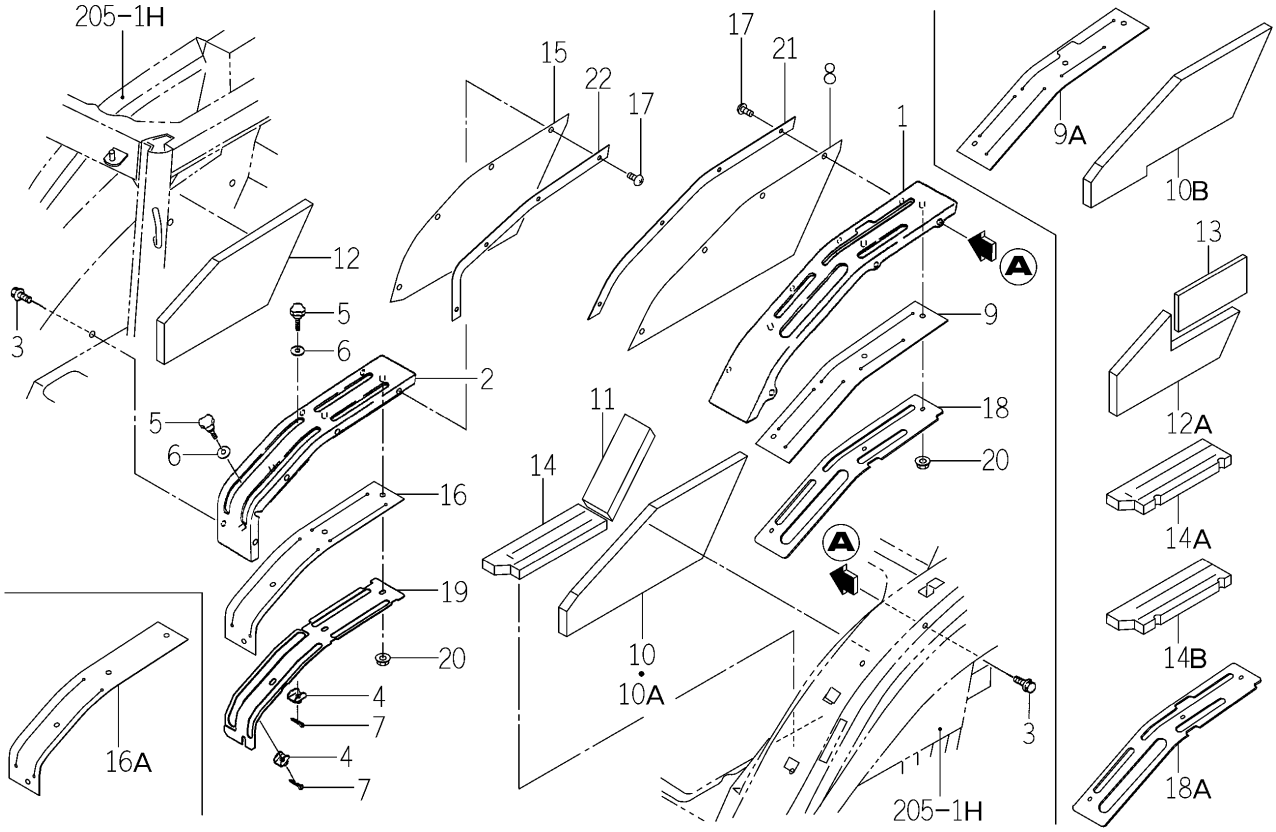

1746-608B-0100

KEY	PART CODE	DESCRIPTION	SPC	TYPE OF MODEL TG5330 E4	TG5330 E6	TG5390 E4	TG5390 E6	ITC	COL	GRP	REMARKS
1	1746-608-250-10	GUIDE/LEVER/LH/ COMP	*	1 730-		1 1009-		3			
2	1742-608-260-10	GUIDE/LEVER/RH COMP	*	1 730-		1 1009-		3			
3	V231-360-801-60	FLANGEBOLT	*	6 730-		6 1009-					
4	1594-609-200-00	PLATE COMP	*	2 730-		2 1009-					
5	1690-608-003-00	BOLT/KNOB/M06X27	*	2 730-		2 1009-					
6	1421-507-014-00	WASHER/6X24X2	*	2 730-		2 1009-					
7	V500-161-601-50	PIN,SPLIT/1.6X15	*	2 730-		2 1009-					
8	1742-608-019-00	COVER/GUIDE/LH	*	1 730-		1 1009-					
9	1742-608-025-00	INSULATOR/GUIDE/LH	*	1 -737		1 -1026					
9A	1742-608-025-10	INSULATOR/GUIDE/LH	*	1 738-		1 1027-		1			
10	1742-608-022-00	INSULATOR	*	1 -737		1 -1026					
10A	1742-608-022-10	INSULATOR	*	1 -802		1 -1143		1			
10B	1742-608-022-20	INSULATOR	*	1 803-		1 1144-		1			
11	1742-608-014-00	INSULATOR	*	2 730-		2 1009-					
12	1742-608-015-00	INSULATOR	*	1 -737		1 -1026					
12A	1742-608-015-10	INSULATOR	*	1 738-		1 1027-		3			
13	1742-608-032-00	INSULATOR/80X175X10	*	1 738-		1 1027-					
14	1742-608-016-00	INSULATOR	*	1 -737		1 -1026					
14A	1742-608-016-10	INSULATOR	*	1 -802		1 -1143		1			
14B	1742-608-016-20	INSULATOR	*	1 803-		1 1144-		3			
15	1742-608-017-10	COVER/GUIDE/RH	*	1 730-		1 1009-		3			
16	1742-608-018-10	INSULATOR/GUIDE/RH	*	1 -737		1 -1025		3			
16A	1742-608-018-20	INSULATOR/GUIDE/RH	*	1 738-		1 1026-		1			
17	1729-705-008-00	SCREW/TRUSS/M05X12	*	8 730-		8 1009-					
18	1742-608-024-00	PLATE/INNER/LH/Q	*	1 -737		1 -1034					
18A	1742-608-024-10	PLATE/INNER/LH/Q	*	1 738-		1 1035-		1			
19	1742-608-280-00	PLATE/INNER/RH COMP	*	1 730-		1 1009-					
20	V361-260-006-00	NUT	*	7 730-		7 1009-					
21	1742-608-029-00	PLATE	*	1 730-		1 1009-					
22	1742-608-028-00	PLATE	*	1 730-		1 1009-					

FIG.145 LEVER GUIDE SYSTEM (HC TYPE-TG5390E4-No.1026-)

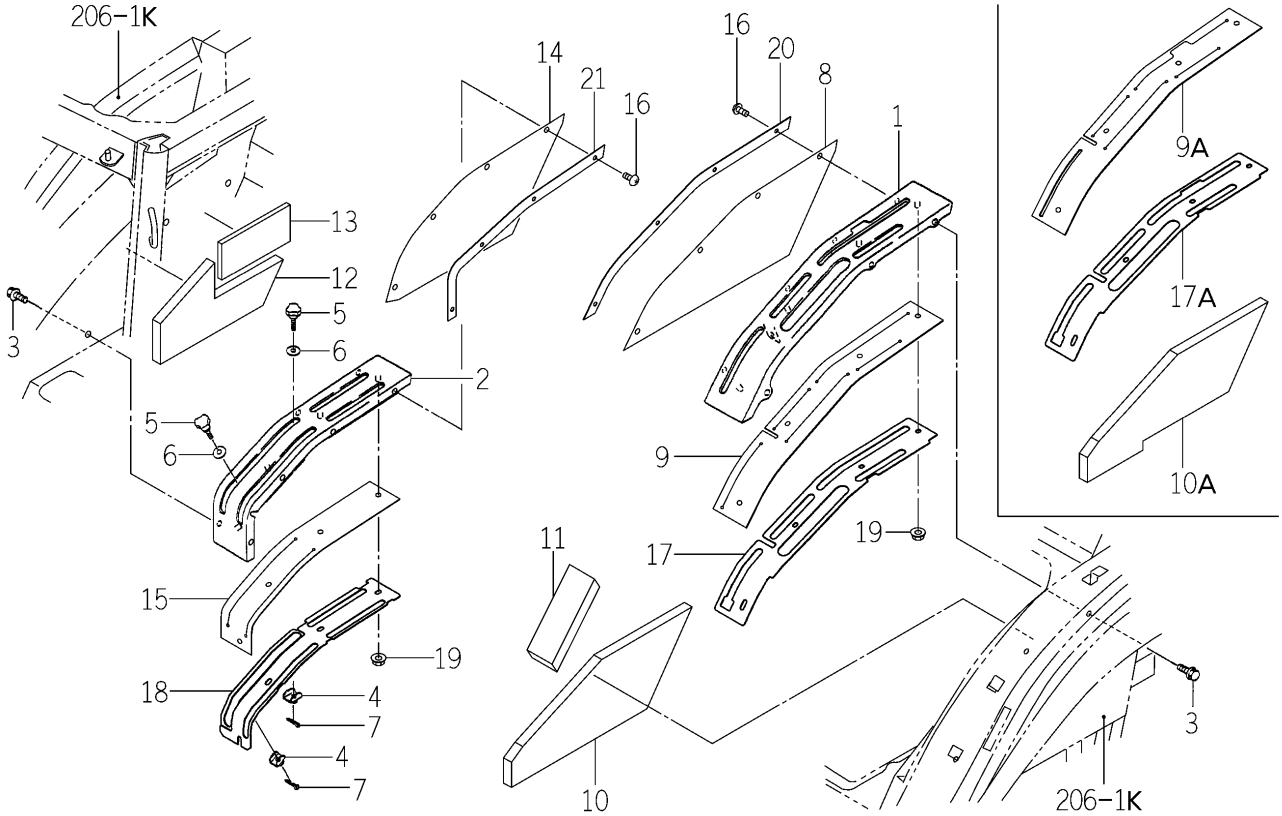

1747-608B-0100

KEY	PART CODE	DESCRIPTION	SPC	TYPE OF MODEL TG5330 E4	TG5330 E6	TG5390 E4	TG5390 E6	ITC	COL	GRP	REMARKS
1	1747-608-250-10	GUIDE/LEVER/LH/ COMP	*			1 1026-		3			
2	1742-608-260-10	GUIDE/LEVER/RH COMP	*			1 1026-		3			
3	V231-360-801-60	FLANGEBOLT	*			6 1026-					
4	1594-609-200-00	PLATE COMP	*			2 1026-					
5	1690-608-003-00	BOLT/KNOB/M06X27	*			2 1026-					
6	1421-507-014-00	WASHER/6X24X2	*			2 1026-					
7	V500-161-601-50	PIN,SPLIT/1.6X15	*			2 1026-					
8	1742-608-019-00	COVER/GUIDE/LH	*			1 1026-					
9	1742-608-021-10	INSULATOR/GUIDE/LH	*			1 -1031		3			
9A	1742-608-021-20	INSULATOR/GUIDE/LH	*			1 1032-		1			
10	1742-608-022-10	INSULATOR	*			1 -1143		1			
10A	1742-608-022-20	INSULATOR	*			1 1144-		1			
11	1742-608-014-00	INSULATOR	*			2 1026-					
12	1742-608-015-10	INSULATOR	*			1 1026-		3			
13	1742-608-032-00	INSULATOR/80X175X10	*			1 1033-					
14	1742-608-017-10	COVER/GUIDE/RH	*			1 1026-		3			
15	1742-608-018-20	INSULATOR/GUIDE/RH	*			1 1026-		1			
16	1729-705-008-00	SCREW/TRUSS/M05X12	*			8 1026-					
17	1742-608-023-00	PLATE/INNER/LH/H	*			1 -1032					
17A	1742-608-023-10	PLATE/INNER/LH/H	*			1 1033-		1			
18	1742-608-280-00	PLATE/INNER/RH COMP	*			1 1026-					
19	V361-260-006-00	NUT	*			8 1026-					
20	1742-608-029-00	PLATE	*			1 1026-					
21	1742-608-028-00	PLATE	*			1 1026-					

FIG.146 SEAT SYSTEM (E6 TYPE)

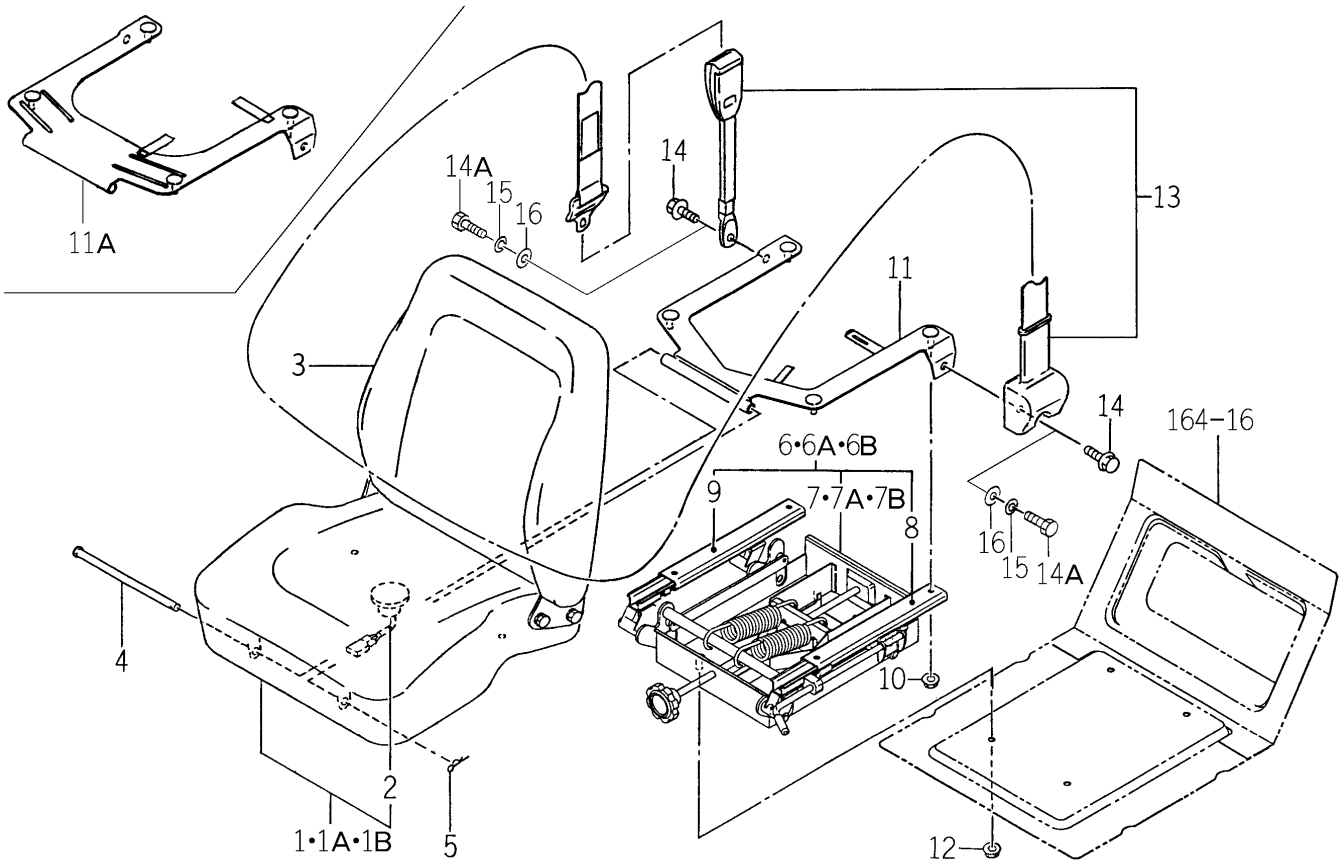

1742-611 -0100

KEY	PART CODE	DESCRIPTION	SPC	TYPE OF MODEL TG5330 E4	TG5330 E6	TG5390 E4	TG5390 E6	ITC	COL	GRP	REMARKS
1	1742-611-220-00	SEAT/CUSHION COMP	*		1 -130		1 -461				
1A	1742-611-220-10	SEAT/CUSHION ASSY	*		1 -722		1 -1014	1			
1B	1742-611-220-20	SEAT/CUSHION ASSY	*		1 723-		1 1015-	1			
2	1742-611-222-00	SWITCH/SEAT ASSY	*		1		1				
3	1742-611-230-00	SEAT/BACK COMP	*		1		1				
4	1488-611-003-10	PIN,SEAT SET	*		1		1				
5	1305-241-001-00	PIN,HAIR	*		1		1				
6	1719-611-620-00	SEAT/SUS ASSY	*		1 -60		1 -162				
6A	1752-611-350-00	SUSPENSHION/SEA ASSY	*		1 -107		1 -358				
6B	1752-611-350-10	SUSPENSHION/SEA ASSY	*		1 108-		1 359-	1			
7	1719-611-621-00	SUSPENSHION/SEAT	*		1 -60		1 -162				
7A	1752-611-351-00	SUSPENSHION/SEAT	*		1 -107		1 -358				
7B	1752-611-351-10	SUSPENSHION/SEAT	*		1 108-		1 359-	1			
8	1719-611-622-00	RAIL/SLIDE/SEAT/L	*		1		1				
9	1719-611-623-00	RAIL/SLIDE/SEAT/R	*		1		1				
10	V362-260-008-00	NUT/WASHER	*		4		4				
11	1742-611-200-20	BRACKET/SEAT/E COMP	*		1 -60		1 -162	1			
11A	1742-611-200-30	BRACKET/SEAT/E COMP	*		1 61-		1 163-	1			
12	V362-260-008-00	NUT/WASHER	*		4		4				
13	1742-611-240-00	BELT/SEAT SET	*		1		1				
14	V231-361-002-00	FLANGEBOLT	*		2 -53		2 -103				
14A	V201-461-002-50	BOLT/M10X25	*		2 54-		2 104-				
15	V401-160-010-00	WASHER,SP/M10	*		2 54-		2 104-				
16	V411-260-010-00	WASHER/M10	*		2 54-		2 104-				

FIG.147 MOUNT SYSTEM (EXCEPT C,A TYPE)

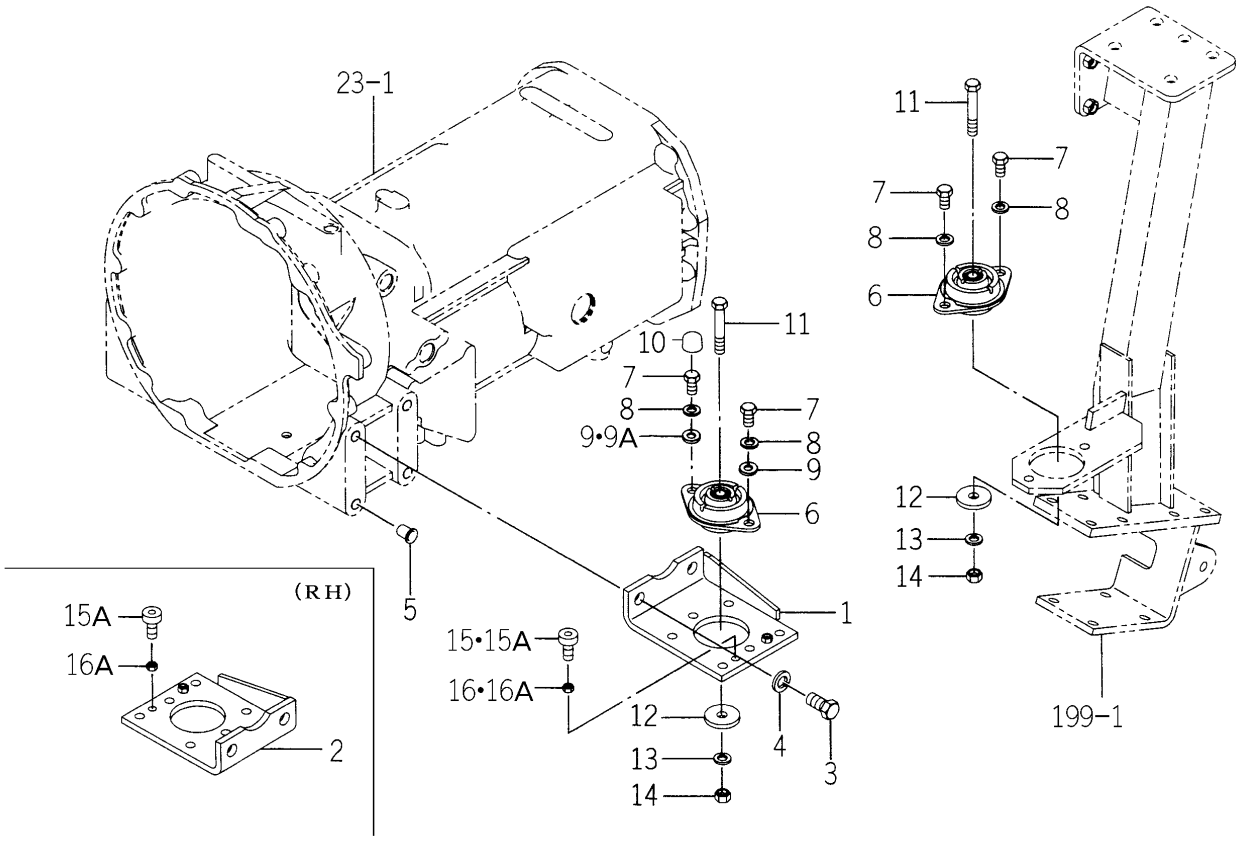

1742-625 -0100

KEY	PART CODE	DESCRIPTION	SPC	TYPE OF MODEL TG5330 E4	TG5330 E6	TG5390 E4	TG5390 E6	ITC	COL	GRP	REMARKS
1	1742-625-200-00	BRACKET/MOUNT/L COMP	*	1	1	1	1				
2	1742-625-210-00	BRACKET/MOUNT/R COMP	*	1	1	1	1				
3	V203-361-603-00	BOLT	*	4	4	4	4				
4	V401-160-016-00	WASHER,SP/M16	*	4	4	4	4				
5	1432-621-011-00	CAP,BLANK/M16	*	8	8	8	8				
6	1650-625-002-00	INSURATOR/MOUNT	*	4	4	4	4				
7	V201-361-202-00	BOLT/M12X20	*	8	8	8	8				
8	V401-160-012-00	WASHER,SP/M12	*	8	8	8	8				
9	V411-260-012-00	WASHER /M12	*	4 -58	4 -58	4 -141	4 -141				
9A	V411-260-012-00	WASHER /M12	*	2 -943	2 -943	2 -1234	2 -1234				
10	1650-625-001-00	INSULATOR	*	2	2	2	2				
11	V201-361-207-00	BOLT/M12X70	*	4	4	4	4				
12	1614-626-001-00	WASHER/13X44X06	*	4	4	4	4				
13	V401-160-012-00	WASHER,SP/M12	*	4	4	4	4				
14	V304-460-012-00	NUT/M12	*	4	4	4	4				
15	1421-602-005-10	CUSHION,B/ RUBBER	*	1 -53	1 -53	1 -115	1 -115				
15A	1421-602-005-10	CUSHION,B/ RUBBER	*	2 54-	2 54-	2 116-	2 116-				
16	V304-260-008-00	NUT	*	1 -55	1 -55	1 -115	1 -115				
16A	V304-260-008-00	NUT	*	2 56-	2 56-	2 116-	2 116-				

FIG.148 MOUNT SYSTEM
(C TYPE-TG5330E4-No.260-/TG5390E4-No.568-)

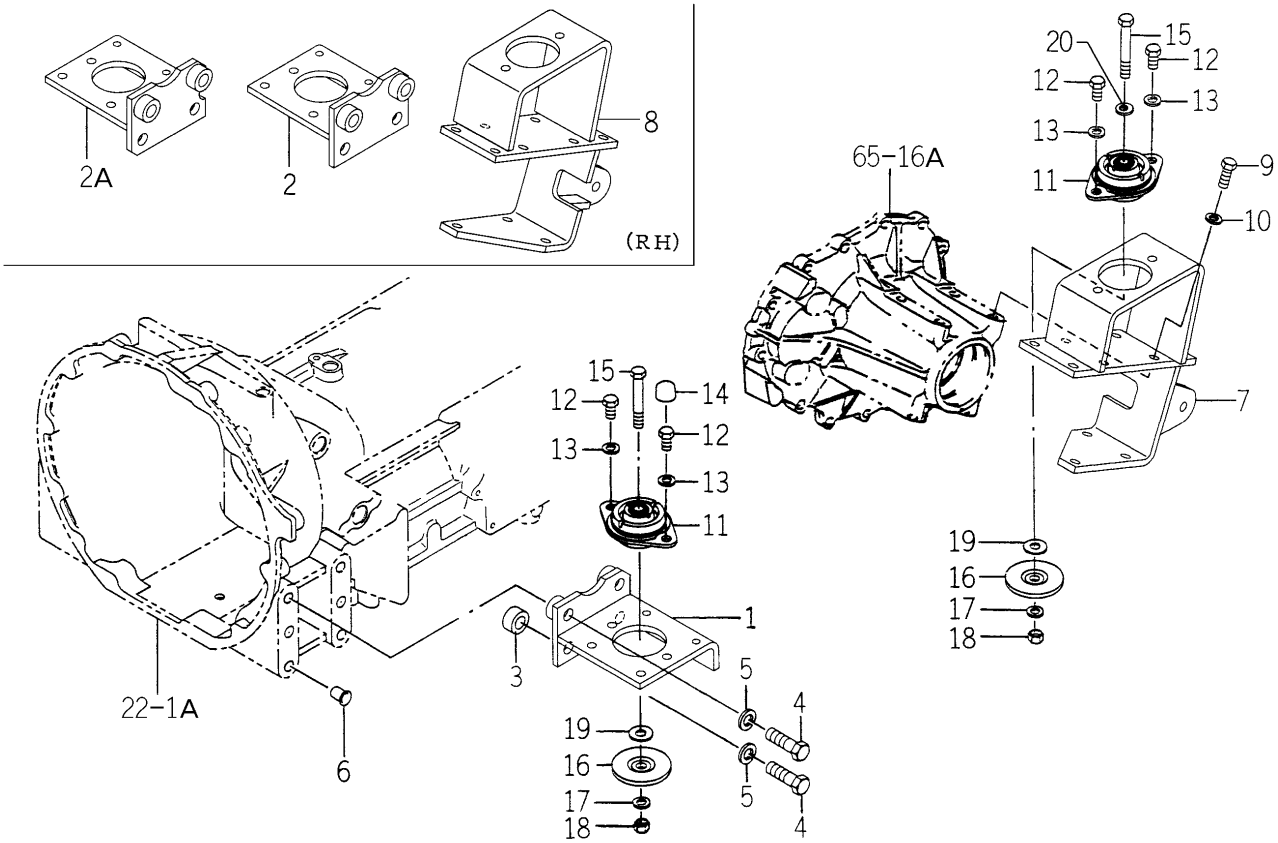

1742-625E-0100

KEY	PART CODE	DESCRIPTION	SPC	TYPE OF MODEL TG5330 E4	TG5330 E6	TG5390 E4	TG5390 E6	ITC	COL	GRP	REMARKS
1	1742-625-500-00	BRACKET/MOUNT/L COMP	*	1 260-		1 568-					
2	1742-625-510-00	BRACKET/MOUNT/R COMP	*	1 -711		1 -1001					
2A	1742-625-510-10	BRACKET/MOUNT/R COMP	*	1 712-		1 1002-		1			
3	1742-625-503-00	HUB/18X32X16	*	4 260-		4 568-					
4	V203-361-605-00	BOLT	*	8 260-		8 568-					
5	V401-160-016-00	WASHER,SP/M16	*	8 260-		8 568-					
6	1432-621-011-00	CAP,BLANK/M16	*	4 260-		4 568-					
7	1742-625-540-00	BRACKET/REAR/LH COMP	*	1 260-		1 568-					
8	1742-625-550-00	BRACKET/REAR/RH COMP	*	1 260-		1 568-					
9	V201-361-203-00	BOLT/M12X30	*	14 260-		14 568-					
10	V401-160-012-00	WASHER,SP/M12	*	14 260-		14 568-					
11	1690-625-051-00	INSULATOR/MOUNT/CY	*	4 260-		4 568-					
12	V201-361-202-00	BOLT/M12X20	*	8 260-		8 568-					
13	V401-160-012-00	WASHER,SP/M12	*	8 260-		8 568-					
14	1650-625-001-00	INSULATOR	*	2 260-		2 568-					
15	V201-361-208-00	BOLT/M12X80	*	4 260-		4 568-					
16	1731-625-051-00	WASHER/MOUNT/CY	*	4 260-		4 568-					
17	V401-160-012-00	WASHER,SP/M12	*	4 260-		4 568-					
18	V304-460-012-00	NUT/M12	*	4 260-		4 568-					
19	3610-440-018-00	WASHER	*	4 260-		4 568-					
20	V411-260-012-00	WASHER /M12	*	2 260-		2 568-					

FIG.149 MOUNT SYSTEM
(C TYPE-TG5330E4-No.1-259/TG5390E4-No.1-567)

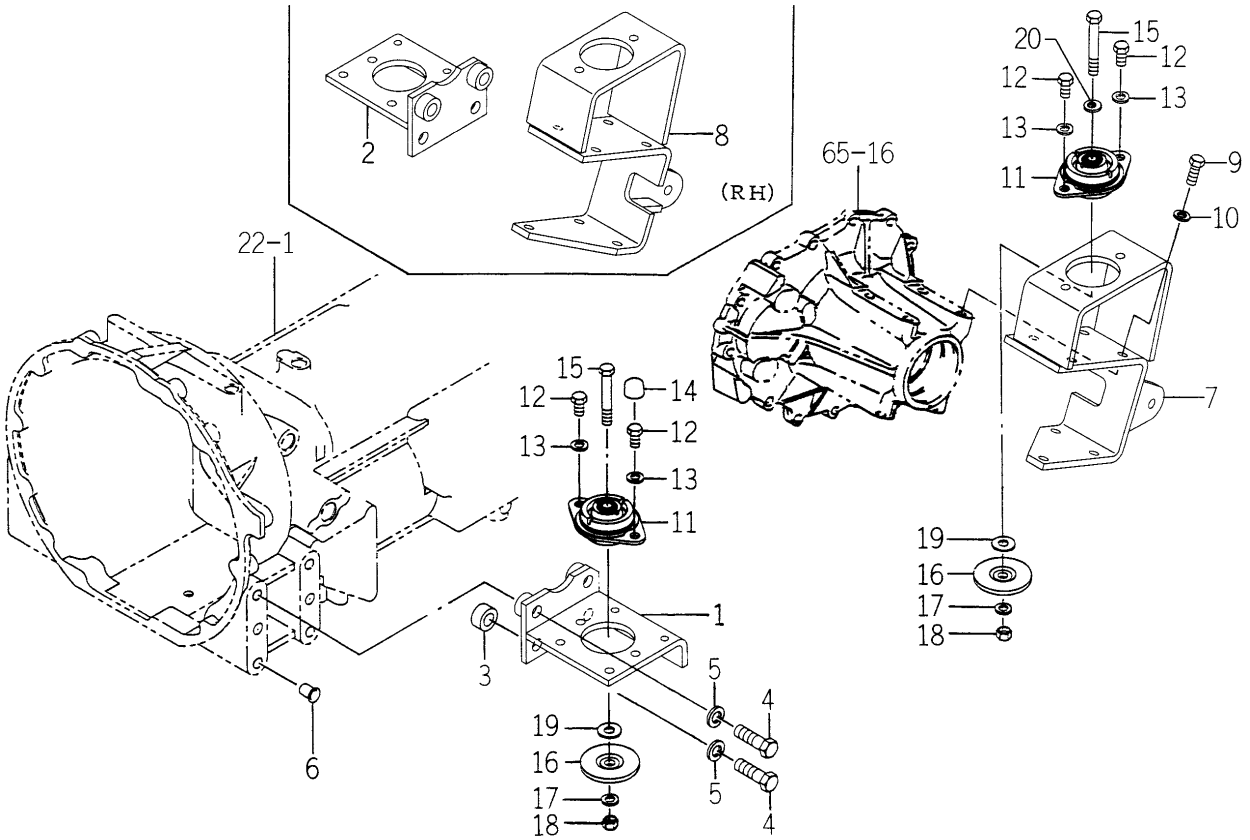

1742-625F-0100

KEY	PART CODE	DESCRIPTION	SPC	TYPE OF MODEL TG5330 E4	TG5330 E6	TG5390 E4	TG5390 E6	ITC	COL	GRP	REMARKS
1	1742-625-500-00	BRACKET/MOUNT/L COMP	*	1 -259		1 -567					
2	1742-625-510-00	BRACKET/MOUNT/R COMP	*	1 -259		1 -567					
3	1742-625-503-00	HUB/18X32X16	*	4 -259		4 -567					
4	V203-361-605-00	BOLT	*	8 -259		8 -567					
5	V401-160-016-00	WASHER,SP/M16	*	8 -259		8 -567					
6	1432-621-011-00	CAP,BLANK/M16	*	4 -259		4 -567					
7	1742-625-520-00	BRACKET/REAR/LH COMP	*	1 -259		1 -567					
8	1742-625-530-00	BRACKET/REAR/RH COMP	*	1 -259		1 -567					
9	V201-361-203-00	BOLT/M12X30	*	14 -259		14 -567					
10	V401-160-012-00	WASHER,SP/M12	*	14 -259		14 -567					
11	1690-625-051-00	INSULATOR/MOUNT/CY	*	4 -259		4 -567					
12	V201-361-202-00	BOLT/M12X20	*	8 -259		8 -567					
13	V401-160-012-00	WASHER,SP/M12	*	8 -259		8 -567					
14	1650-625-001-00	INSULATOR	*	2 -259		2 -567					
15	V201-361-208-00	BOLT/M12X80	*	4 -259		4 -567					
16	1731-625-051-00	WASHER/MOUNT/CY	*	4 -259		4 -567					
17	V401-160-012-00	WASHER,SP/M12	*	4 -259		4 -567					
18	V304-460-012-00	NUT/M12	*	4 -259		4 -567					
19	3610-440-018-00	WASHER	*	4 -259		4 -567					
20	V411-260-012-00	WASHER /M12	*	2 -259		2 -567					

FIG.150 MOUNT SYSTEM (A TYPE)

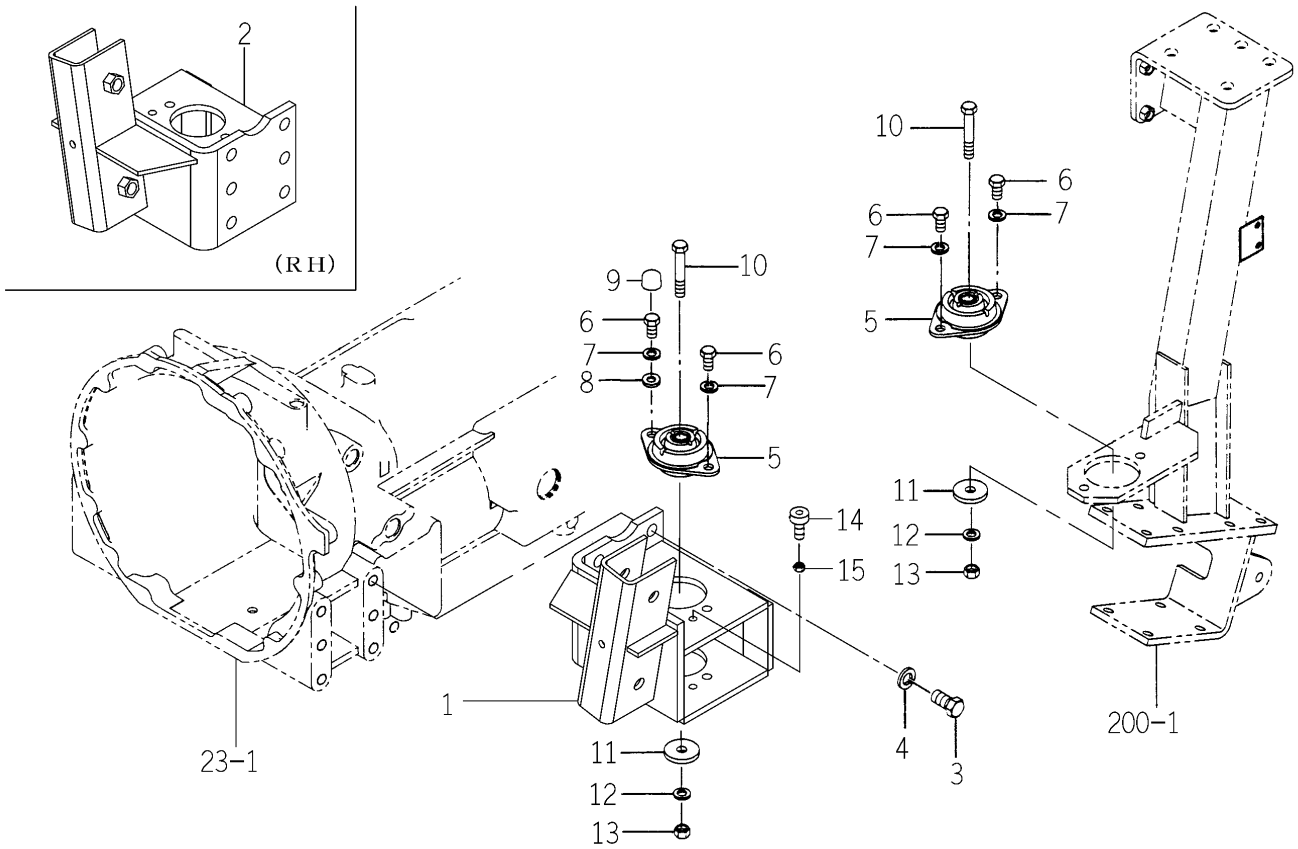

1742-625H-0100

KEY	PART CODE	DESCRIPTION	SPC	TYPE OF MODEL TG5330 E4	TG5330 E6	TG5390 E4	TG5390 E6	ITC	COL	GRP	REMARKS
1	1742-625-800-00	BRACKET/C/LH COMP	*	1		1					
2	1742-625-810-00	BRACKET/C/RH COMP	*	1		1					
3	V203-361-603-00	BOLT	*	12		12					
4	V401-160-016-00	WASHER,SP/M16	*	12		12					
5	1650-625-002-00	INSURATOR/MOUNT	*	4		4					
6	V201-361-202-00	BOLT/M12X20	*	8		8					
7	V401-160-012-00	WASHER,SP/M12	*	8		8					
8	V411-260-012-00	WASHER /M12	*	2 -937		2 -1238					
9	1650-625-001-00	INSULATOR	*	2		2					
10	V201-361-207-00	BOLT/M12X70	*	4		4					
11	1614-626-001-00	WASHER/13X44X06	*	4		4					
12	V401-160-012-00	WASHER,SP/M12	*	4		4					
13	V304-460-012-00	NUT/M12	*	4		4					
14	1421-602-005-10	CUSHION,B/ RUBBER	*	2		2					
15	V304-260-008-00	NUT	*	2		2					

FIG.151 FLOOR (FRONT) SYSTEM (E6 TYPE EXCEPT H)

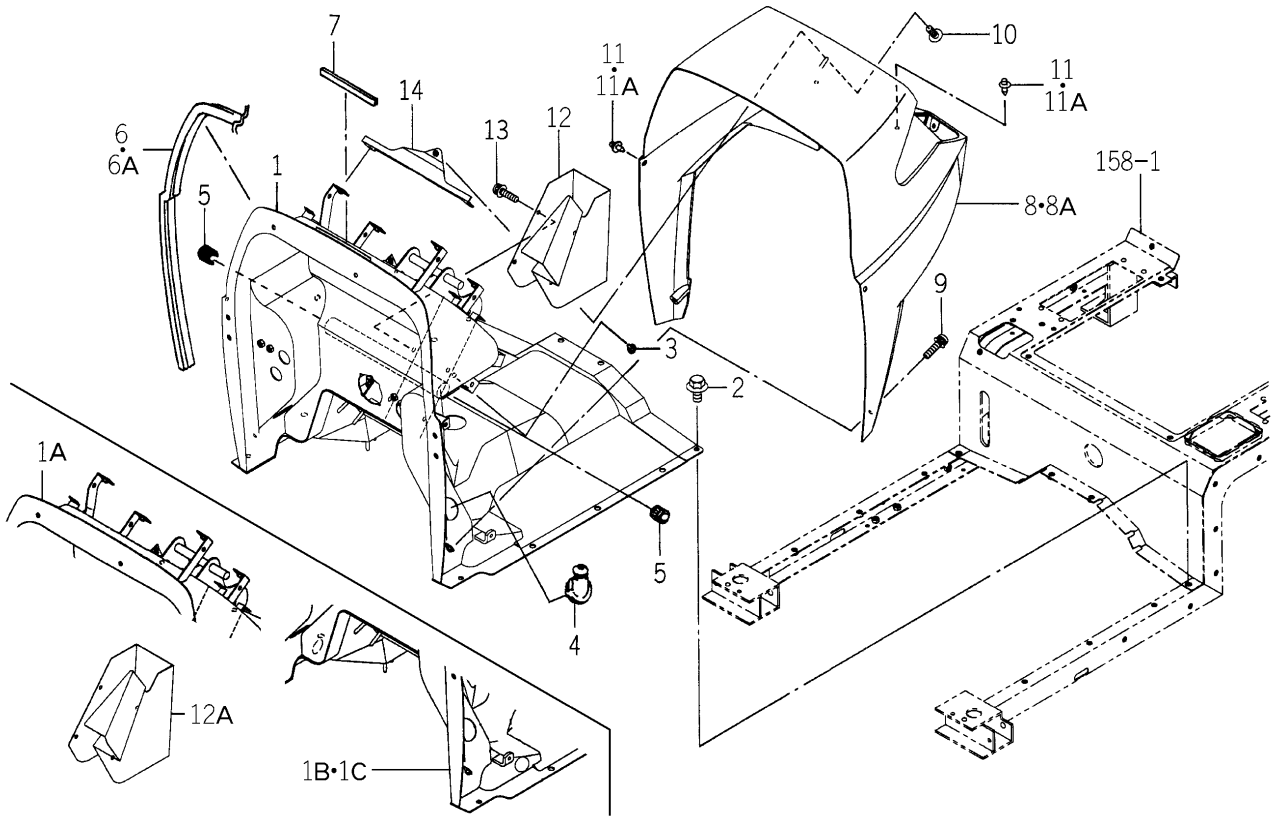

1742-630 -0100

KEY	PART CODE	DESCRIPTION	SPC	TYPE OF MODEL TG5330 E4	TG5330 E6	TG5390 E4	TG5390 E6	ITC	COL	GRP	REMARKS
1	1742-630-200-30	PANEL/DASH COMP	*		1 -60		1 -151	1	5I		
1A	1742-630-200-50	PANEL/DASH COMP	*		1 -76		1 -254	1	5I		
1B	1742-630-200-60	PANEL/DASH COMP	*		1 -837		1 -1163	1	5I		
1C	1742-630-200-70	PANEL/DASH COMP	*		1 838-		1 1164-	1	5I		
2	V231-360-801-60	FLANGEBOLT	*		12		12				
3	1432-616-002-00	RUBBER,CUSHION	*		3		3				
4	1650-630-011-00	BOOT	*		3		3				
5	1650-630-017-00	BEARING	*		2		2				
6	1742-630-003-00	INSULATOR/DASH/E3	*		1 -43		1 -65				
6A	1742-630-003-10	INSULATOR/DASH/E3	*		1 44-		1 66-	1			
7	1636-630-008-00	TRIM/150	*		1 -43		1 -65				
8	1729-630-001-20	COVER/DASH	*		1 -673		1 -961				
8A	1729-630-001-30	COVER/DASH	*		1 674-		1 962-	1			
9	V120-376-001-60	SCREW/SP	*		4		4				
10	1729-705-009-00	SCREW/TRUSS/M06X16	*		1		1				
11	1704-705-003-00	RIVET	*		4 -59		4 -152				
11A	1650-705-006-00	RIVET	*		4 60-		4 153-				
12	1742-630-001-00	COVER/UNDER	*		1 -25		1 -25		5I		
12A	1742-630-001-10	COVER/UNDER	*		1 26-		1 26-	1	5I		
13	V120-376-002-00	SCREW/SP	*		4		4				
14	1729-630-270-10	PLATE/DASH COMP	*		1		1				

FIG.152 FLOOR (FRONT) SYSTEM (HE6 TYPE)

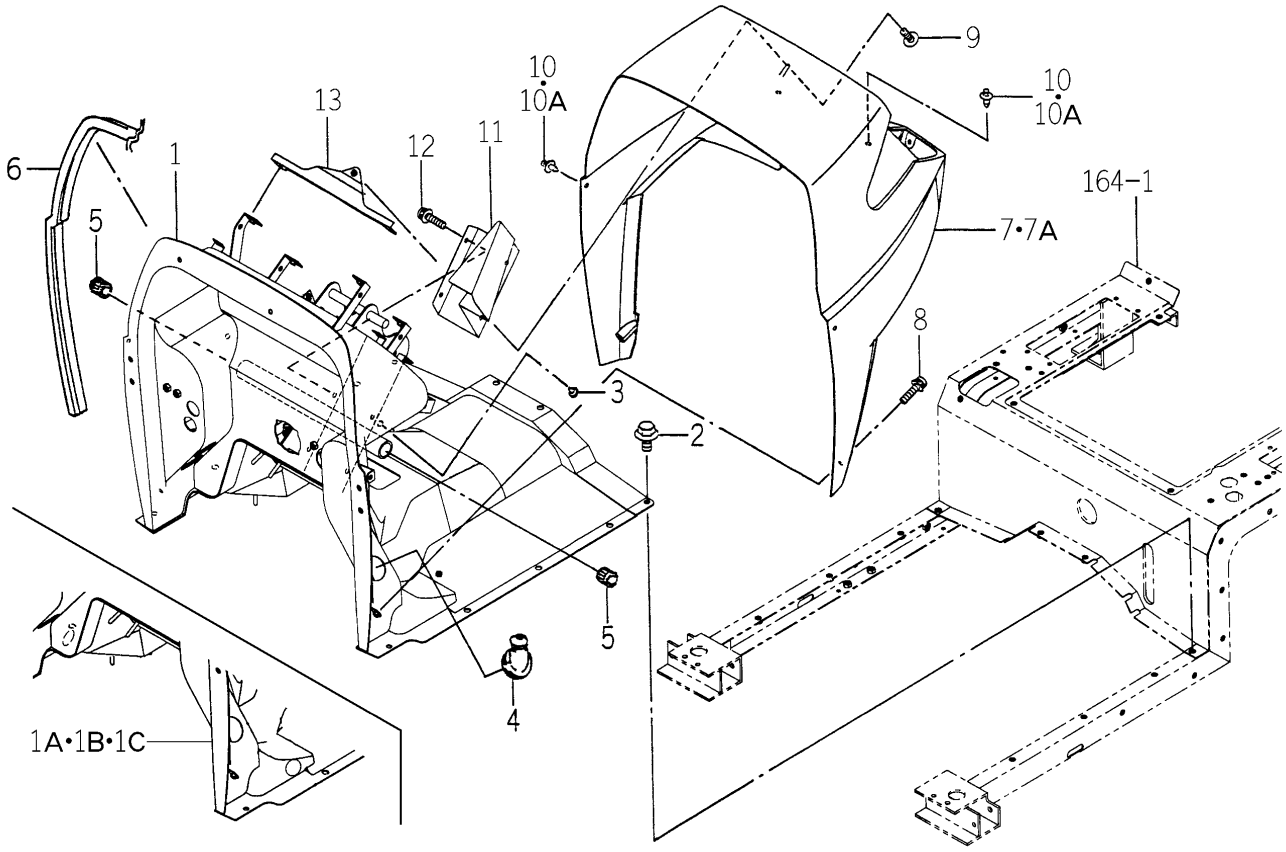

1743-630 -0100

KEY	PART CODE	DESCRIPTION	SPC	TYPE OF MODEL TG5330 E4	TG5330 E6	TG5390 E4	TG5390 E6	ITC	COL	GRP	REMARKS
1	1743-630-700-20	PANEL/DASH/HST COMP	*				1 -252	1	5I		
1A	1743-630-700-30	PANEL/DASH/HST COMP	*				1 -890	1	5I		
1B	1743-630-700-40	PANEL/DASH/HST COMP	*				1 -1184	1	5I		
1C	1743-630-700-50	PANEL/DASH/HST COMP	*				1 1185-	1	5I		
2	V231-360-801-60	FLANGEBOLT	*				12				
3	1432-616-002-00	RUBBER,CUSHION	*				2				
4	1650-630-011-00	BOOT	*				2				
5	1650-630-017-00	BEARING	*				2				
6	1742-630-003-10	INSULATOR/DASH/E3	*				1				
7	1729-630-001-20	COVER/DASH	*				1 -961				
7A	1729-630-001-30	COVER/DASH	*				1 962-	1			
8	V120-376-001-60	SCREW/SP	*				4				
9	1729-705-009-00	SCREW/TRUSS/M06X16	*				1				
10	1704-705-003-00	RIVET	*				4 -152				
10A	1650-705-006-00	RIVET	*				4 153-				
11	1729-630-006-20	COVER/UNDER	*				1		5I		
12	V120-376-002-00	SCREW/SP	*				4				
13	1729-630-270-10	PLATE/DASH COMP	*				1				

FIG.153 FLOOR (FRONT) SYSTEM (E4 TYPE EXCEPT H,C)

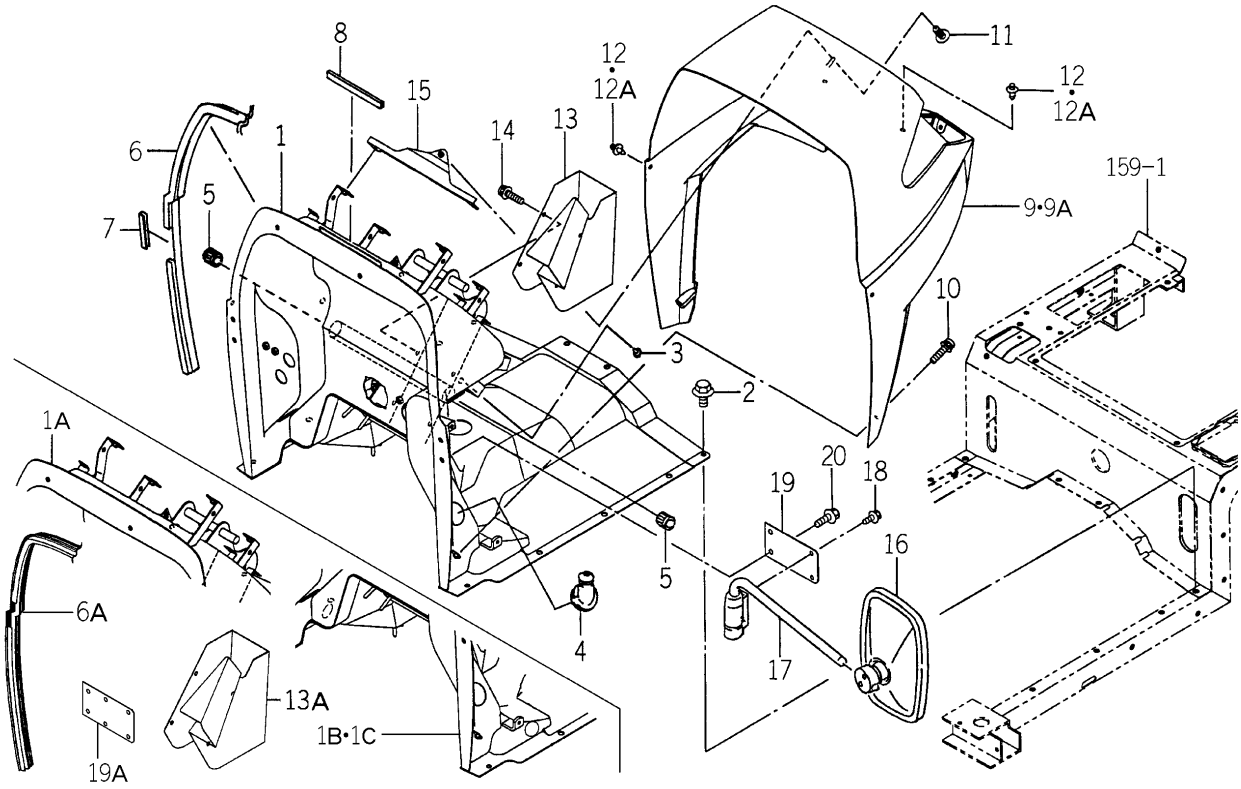

1742-630A-0100

KEY	PART CODE	DESCRIPTION	SPC	TYPE OF MODEL TG5330 E4	TG5330 E6	TG5390 E4	TG5390 E6	ITC	COL	GRP	REMARKS
1	1742-630-200-30	PANEL/DASH COMP	*	1 -60		1 -151		1	5I		
1A	1742-630-200-50	PANEL/DASH COMP	*	1 -76		1 -254		1	5I		
1B	1742-630-200-60	PANEL/DASH COMP	*	1 -837		1 -1163		1	5I		
1C	1742-630-200-70	PANEL/DASH COMP	*	1 838-		1 1164-		1	5I		
2	V231-360-801-60	FLANGEBOLT	*	12		12					
3	1432-616-002-00	RUBBER,CUSHION	*	3		3					
4	1650-630-011-00	BOOT	*	3		3					
5	1650-630-017-00	BEARING	*	2		2					
6	1742-630-004-00	INSULATOR/DASH/E4	*	1 -51		1 -63					
6A	1742-630-004-10	INSULATOR/DASH/E4	*	1 52-		1 64-		1			
7	1742-630-006-00	INSULATOR	*	1 -51		1 -63					
8	1636-630-008-00	TRIM/150	*	1 -51		1 -63					
9	1729-630-001-20	COVER/DASH	*	1 -673		1 -961					
9A	1729-630-001-30	COVER/DASH	*	1 674-		1 962-		1			
10	V120-376-002-00	SCREW/SP	*	4		4					
11	1729-705-009-00	SCREW/TRUSS/M06X16	*	1		1					
12	1704-705-003-00	RIVET	*	4 -58		4 -151					
12A	1650-705-006-00	RIVET	*	4 59-		4 152-					
13	1742-630-001-00	COVER/UNDER	*	1 -25		1 -25			5I		
13A	1742-630-001-10	COVER/UNDER	*	1 26-		1 26-		1	5I		
14	V120-376-001-60	SCREW/SP	*	4		4					
15	1729-630-270-10	PLATE/DASH COMP	*	1		1					
16	1674-619-300-10	MIRROR ASSY	*	1		1					
17	1674-619-310-00	ARM/MIRROR ASSY	*	1		1					
18	V230-360-601-60	FLANGEBOLT	*	2		2					
19	1742-630-005-00	PLATE/I/75X145	*	1 -478		1 -868					
19A	1742-630-005-10	PLATE/I/75X145	*	1 479-		1 869-		1			
20	V231-360-802-00	FLANGEBOLT	*	2		2					

FIG.154 FLOOR (FRONT) SYSTEM (HE4 TYPE EXCEPT C)

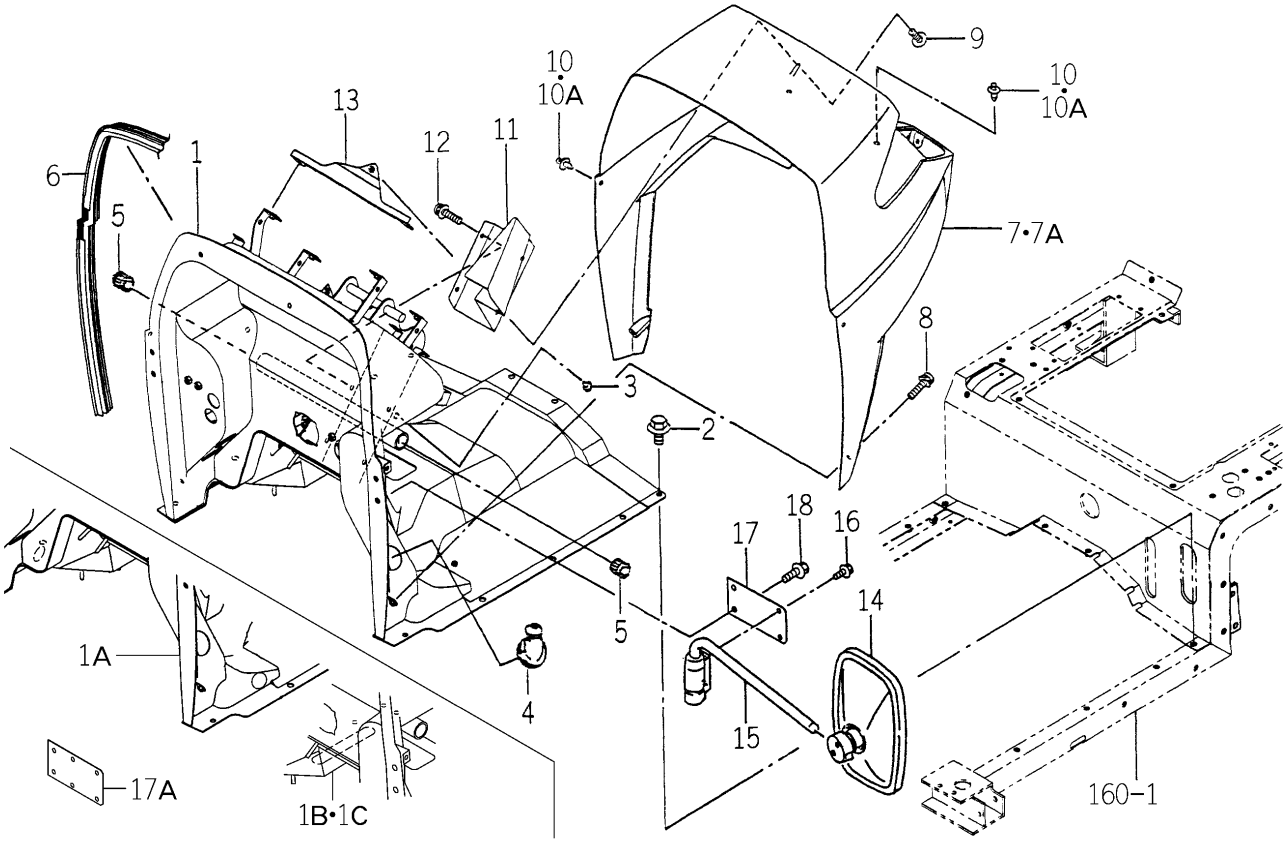

1743-630A-0100

KEY	PART CODE	DESCRIPTION	SPC	TYPE OF MODEL TG5330 E4	TG5330 E6	TG5390 E4	TG5390 E6	ITC	COL	GRP	REMARKS
1	1743-630-700-20	PANEL/DASH/HST COMP	*			1 -252		1	5I		
1A	1743-630-700-30	PANEL/DASH/HST COMP	*			1 -890		1	5I		
1B	1743-630-700-40	PANEL/DASH/HST COMP	*			1 -1184		1	5I		
1C	1743-630-700-50	PANEL/DASH/HST COMP	*			1 1185-		1	5I		
2	V231-360-801-60	FLANGEBOLT	*			12					
3	1432-616-002-00	RUBBER,CUSHION	*			2					
4	1650-630-011-00	BOOT	*			2					
5	1650-630-017-00	BEARING	*			2					
6	1742-630-004-10	INSULATOR/DASH/E4	*			1					
7	1729-630-001-20	COVER/DASH	*			1 -961					
7A	1729-630-001-30	COVER/DASH	*			1 962-		1			
8	V120-376-002-00	SCREW/SP	*			4					
9	1729-705-009-00	SCREW/TRUSS/M06X16	*			1					
10	1704-705-003-00	RIVET	*			4 -133					
10A	1650-705-006-00	RIVET	*			4 134-					
11	1729-630-006-20	COVER/UNDER	*			1			5I		
12	V120-376-001-60	SCREW/SP	*			4					
13	1729-630-270-10	PLATE/DASH COMP	*			1					
14	1674-619-300-10	MIRROR ASSY	*			1					
15	1674-619-310-00	ARM/MIRROR ASSY	*			1					
16	V230-360-601-60	FLANGEBOLT	*			2					
17	1742-630-005-00	PLATE/I/75X145	*			1 -868					
17A	1742-630-005-10	PLATE/I/75X145	*			1 869-		1			
18	V231-360-802-00	FLANGEBOLT	*			2					

FIG.155 FLOOR (FRONT) SYSTEM (C TYPE EXCEPT H)

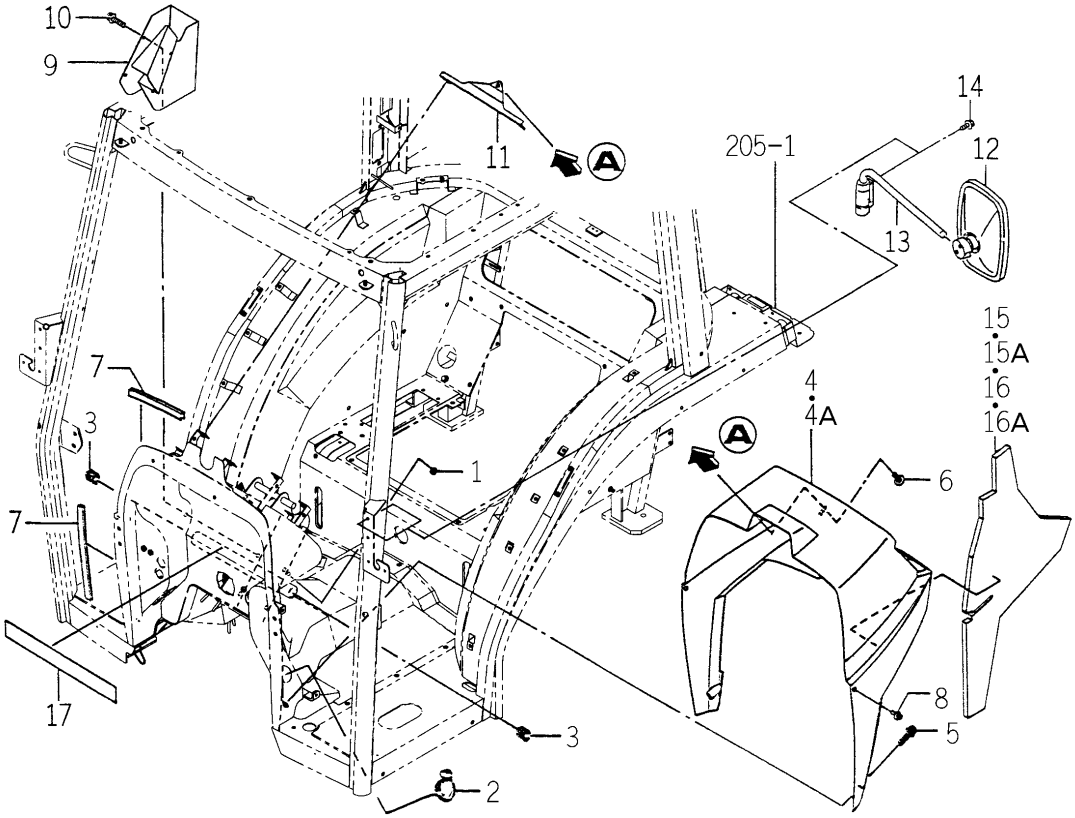

1746-630A-0100

KEY	PART CODE	DESCRIPTION	SPC	TYPE OF MODEL TG5330 E4	TG5330 E6	TG5390 E4	TG5390 E6	ITC	COL	GRP	REMARKS
1	1432-616-002-00	RUBBER,CUSHION	*	3		3					
2	1650-630-011-00	BOOT	*	3		3					
3	1650-630-017-00	BEARING	*	2		2					
4	1729-630-051-20	COVER/DASH/CY	*	1 -678		1 -962					
4A	1729-630-051-30	COVER/DASH/CY	*	1 679-		1 963-		1			
5	V120-376-001-60	SCREW/SP	*	4		4					
6	1729-705-009-00	SCREW/TRUSS/M06X16	*	1		1					
7	1729-630-056-10	INSULATOR/300	*	4		4					
8	1729-630-057-00	RIVET	*	4		4					
9	1742-630-001-10	COVER/UNDER	*	1		1			5I		
10	V120-376-002-00	SCREW/SP	*	4		4					
11	1729-630-270-10	PLATE/DASH COMP	*	1		1					
12	1674-619-300-10	MIRROR ASSY	*	2		2					
13	1674-619-310-00	ARM/MIRROR ASSY	*	2		2					
14	V210-360-601-60	BOLT(SP)/M6X16	*	4		4					
15	1729-630-052-20	INSULATOR/LH	*	1 -27		1 -186					
15A	1729-630-052-30	INSULATOR/LH	*	1 28-		1 187-		1			
16	1729-630-053-20	INSULATOR/RH	*	1 -27		1 -186					
16A	1729-630-053-30	INSULATOR/RH	*	1 28-		1 187-		1			
17	1729-630-058-00	TAPE/ALUMINIUM/400	*	1 -98		1 -305					

FIG.156 FLOOR (FRONT) SYSTEM (HC TYPE)

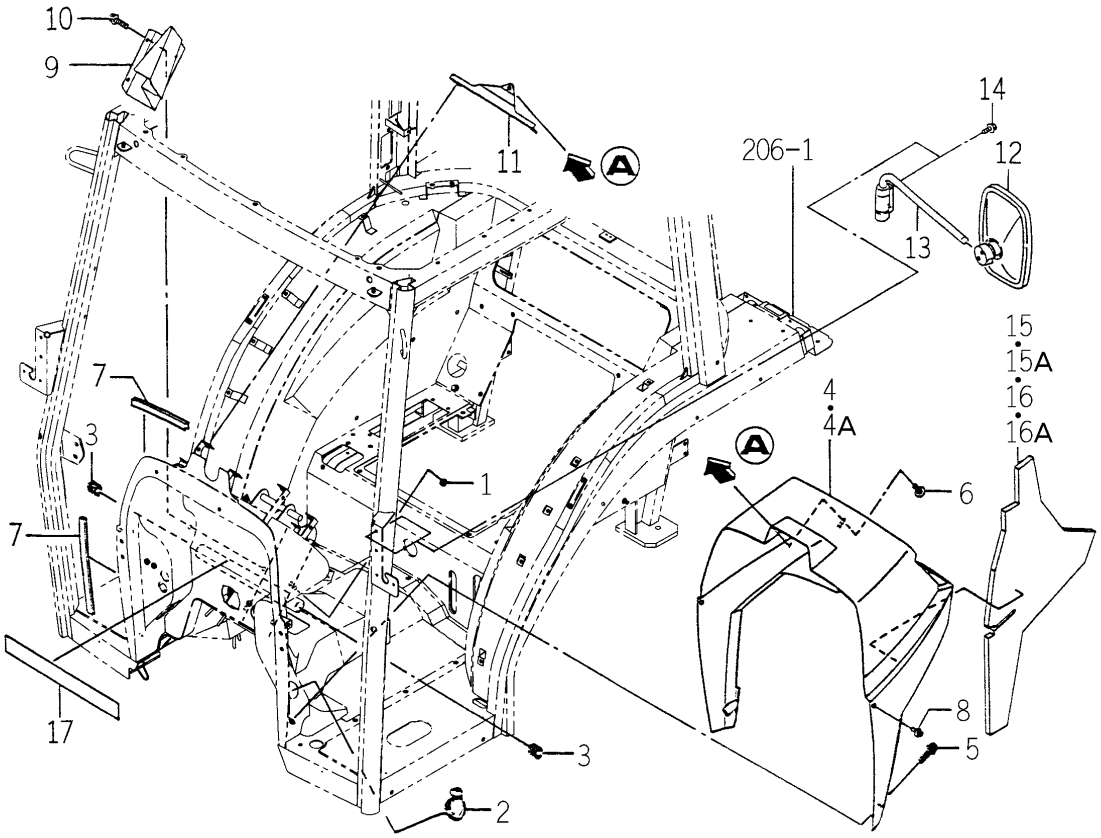

1747-630A-0100

KEY	PART CODE	DESCRIPTION	SPC	TYPE OF MODEL TG5330 E4	TG5330 E6	TG5390 E4	TG5390 E6	ITC	COL	GRP	REMARKS
1	1432-616-002-00	RUBBER,CUSHION	*			3					
2	1650-630-011-00	BOOT	*			2					
3	1650-630-017-00	BEARING	*			2					
4	1729-630-051-20	COVER/DASH/CY	*			1 -962					
4A	1729-630-051-30	COVER/DASH/CY	*			1 963-		1			
5	V120-376-001-60	SCREW/SP	*			4					
6	1729-705-009-00	SCREW/TRUSS/M06X16	*			1					
7	1729-630-056-10	INSULATOR/300	*			4					
8	1729-630-057-00	RIVET	*			4					
9	1729-630-006-20	COVER/UNDER	*			1			5I		
10	V120-376-002-00	SCREW/SP	*			4					
11	1729-630-270-10	PLATE/DASH COMP	*			1					
12	1674-619-300-10	MIRROR ASSY	*			2					
13	1674-619-310-00	ARM/MIRROR ASSY	*			2					
14	V210-360-601-60	BOLT(SP)/M6X16	*			4					
15	1729-630-052-20	INSULATOR/LH	*			1 -186					
15A	1729-630-052-30	INSULATOR/LH	*			1 187-		1			
16	1729-630-053-20	INSULATOR/RH	*			1 -186					
16A	1729-630-053-30	INSULATOR/RH	*			1 187-		1			
17	1729-630-058-00	TAPE/ALUMINIUM/400	*			1 -304					

FIG.157 INSULATOR (FLOOR) SYSTEM (H TYPE EXCEPT C)

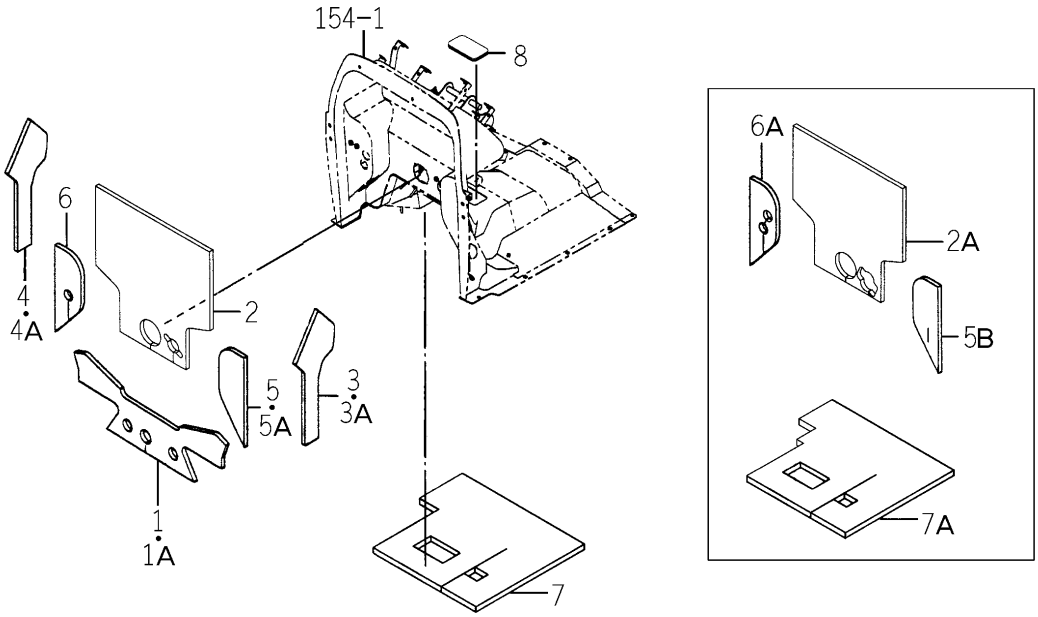

1743-630B-0100

KEY	PART CODE	DESCRIPTION	SPC	TYPE OF MODEL TG5330 E4	TG5330 E6	TG5390 E4	TG5390 E6	ITC	COL	GRP	REMARKS
1	1729-720-001-00	INSULATOR/DASH/LOWER	*			1 -172	1 -172				
1A	1729-720-001-10	INSULATOR/DASH/LOWER	*			1 173-	1 173-	1			
2	1729-720-004-00	INSULATOR/DASH/UPPER	*			1 -186	1 -186				
2A	1729-720-004-10	INSULATOR/DASH/UPPER	*			1 187-	1 187-	1			
3	1729-720-005-00	INSULATOR/DASH/LH	*			1 -196	1 -196				
3A	1729-720-005-10	INSULATOR/DASH/LH	*			1 197-	1 197-	1			
4	1729-720-006-00	INSULATOR/DASH/RH	*			1 -155	1 -155				
4A	1729-720-006-10	INSULATOR/DASH/RH	*			1 156-	1 156-	1			
5	1729-720-007-00	INSULATOR/LH	*			1 -172	1 -172				
5A	1729-720-007-10	INSULATOR/LH	*			1 -411	1 -411	1			
5B	1729-720-007-20	INSULATOR/LH	*			1 412-	1 412-	1			
6	1729-720-008-00	INSULATOR/RH	*			1 -172	1 -172				
6A	1729-720-008-10	INSULATOR/RH	*			1 173-	1 173-	1			
7	1744-631-054-00	INSULATOR	*			1 -897	1 -897				
7A	1744-631-054-10	INSULATOR	*			1 898-	1 898-	1			
8	1674-630-053-00	CAP	*			1	1				

FIG.158 FLOOR (REAR) SYSTEM (P TYPE)

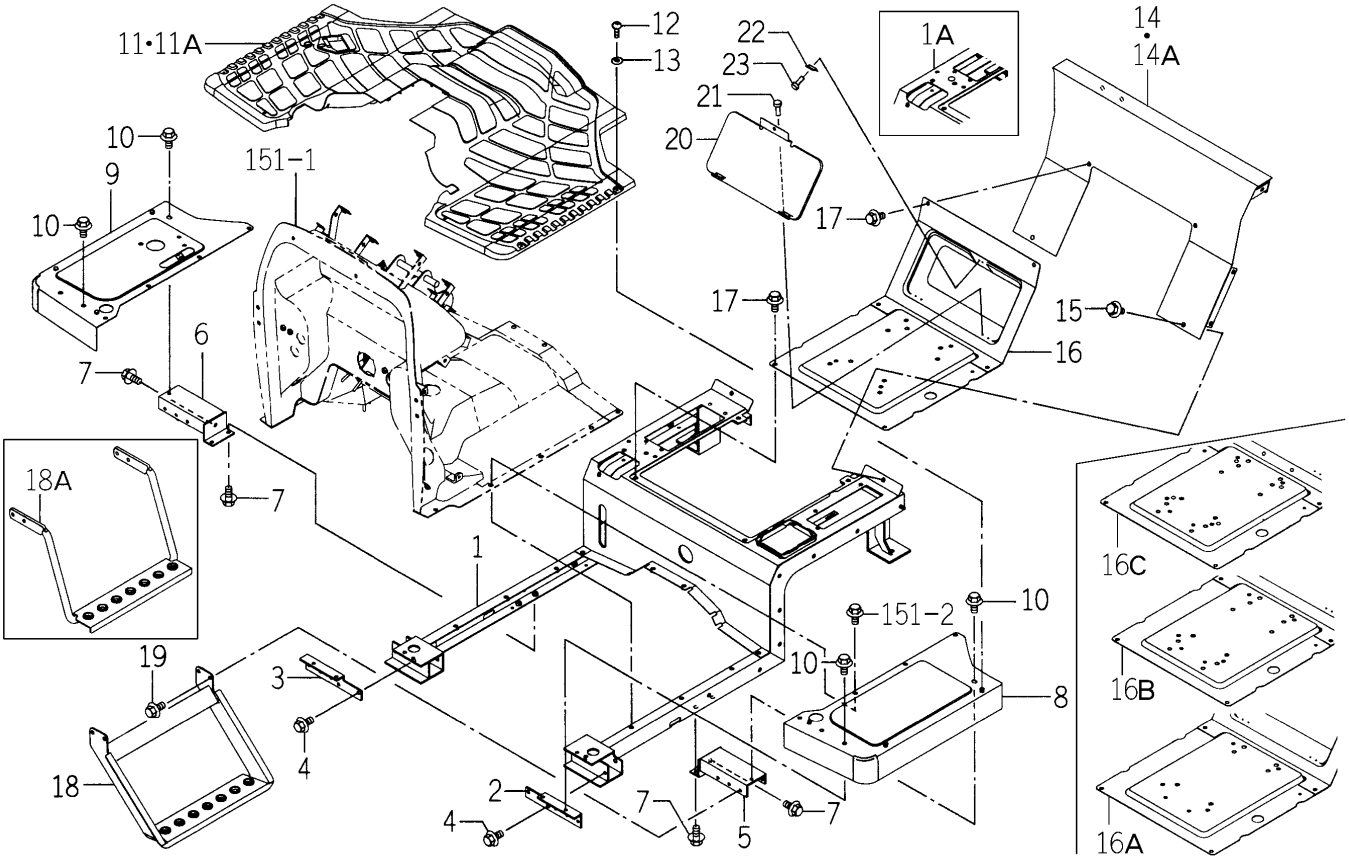

1742-631 -0100

KEY	PART CODE	DESCRIPTION	SPC	TYPE OF MODEL TG5330 E4	TG5330 E6	TG5390 E4	TG5390 E6	ITC	COL	GRP	REMARKS
1	1742-631-200-10	PANEL/FLOOR COMP	*		1 -476		1 -877		5I		
1A	1742-631-200-20	PANEL/FLOOR COMP	*		1 477-		1 878-	1	5I		
2	1742-631-001-00	STAY/PLATE/LH	*		1		1				
3	1742-631-002-00	STAY/PLATE/RH	*		1		1				
4	V231-360-801-60	FLANGEBOLT	*		4		4				
5	1742-631-250-00	BRACKET/LH COMP	*		1		1				
6	1742-631-260-00	BRACKET/RH COMP	*		1		1				
7	V231-360-801-60	FLANGEBOLT	*		6		6				
8	1742-631-220-10	STEP/LH COMP	*		1		1		4L		
9	1742-631-230-10	STEP/RH COMP	*		1		1		4L		
10	V231-360-801-60	FLANGEBOLT	*		6		6				
11	1742-631-004-10	MAT/E	*		1 -394		1 -768				
11A	1742-631-004-20	MAT/E	*		1 395-		1 769-	1			
12	1729-705-009-00	SCREW/TRUSS/M06X16	*		6		6				
13	3819-261-005-00	WASHER/07X18X01	*		6		6				
14	1742-631-240-00	COVER/REAR COMP	*		1 -943		1 -1238		4L		
14A	1742-631-240-10	COVER/REAR COMP	*		1 944-		1 1239-	1	4L		
15	V231-360-801-60	FLANGEBOLT	*		8		8				
16	1742-631-210-00	PANEL/SEAT COMP	*		1 -10		1 -15		4L		
16A	1742-631-210-10	PANEL/SEAT COMP	*		1 -798		1 -1141	1	4L		
16B	1742-631-210-20	PANEL/SEAT COMP	*		1 -899		1 -1186	1	4L		
16C	1785-631-250-10	PANEL/SEAT COMP	*		1 900-		1 1187-		4L		
17	V231-360-801-60	FLANGEBOLT	*		6		6				
18	1742-631-280-00	STEP/SUB/LH COMP	*		1 -19		1 -20				
18A	1742-631-290-00	STEP/SUB COMP	*		1 20-		1 21-				
19	V231-360-801-60	FLANGEBOLT	*		4		4				
20	1742-631-270-10	COVER/BOX/TOOL COMP	*		1		1		4L		
21	W296-203-208-00	RIVET/BLIND	*		4		4				
22	1560-601-014-30	SPRING	*		1		1				
23	W296-203-208-00	RIVET/BLIND	*		2		2				

FIG.159 FLOOR (REAR) SYSTEM (S TYPE)

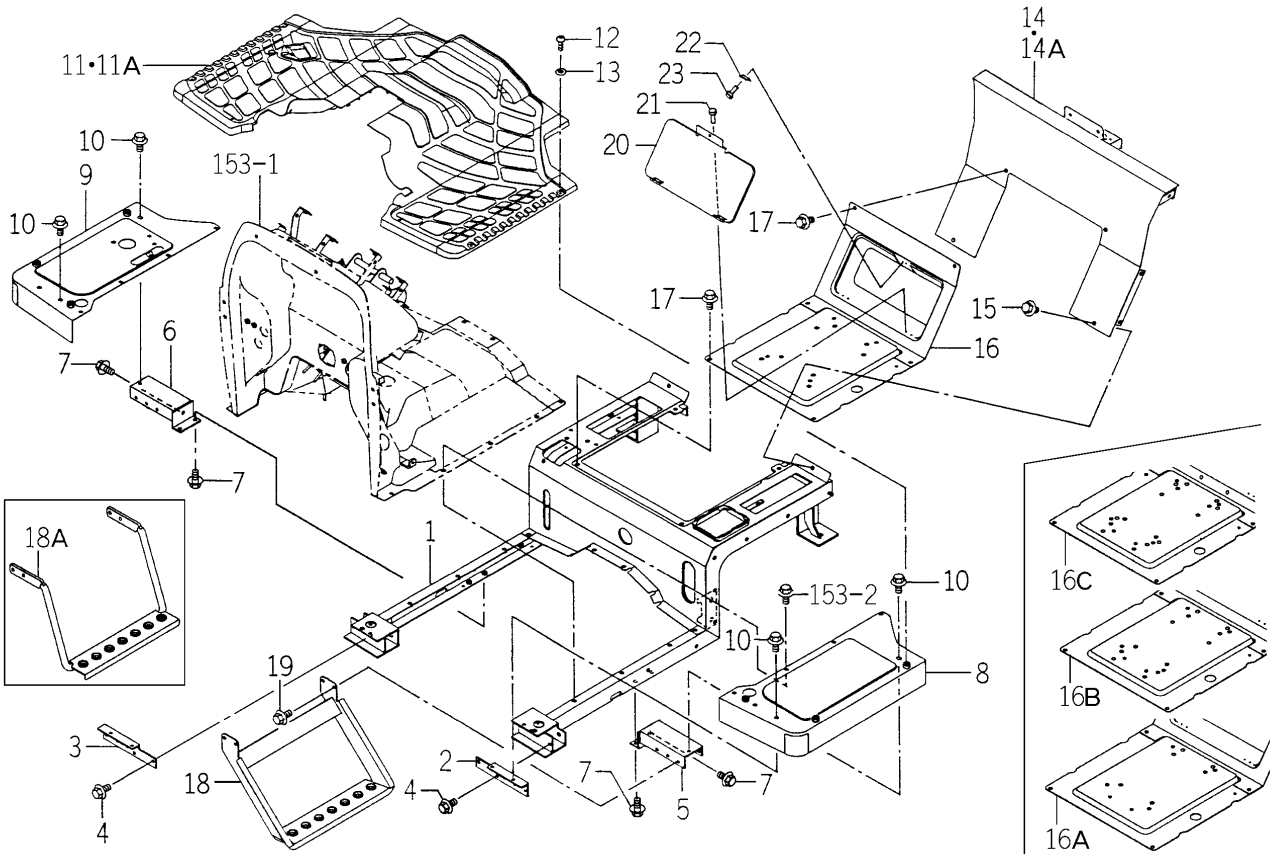

1746-631 -0100

KEY	PART CODE	DESCRIPTION	SPC	TYPE OF MODEL TG5330 E4	TG5330 E6	TG5390 E4	TG5390 E6	ITC	COL	GRP	REMARKS
1	1746-631-200-10	PANEL/FLOOR COMP	*	1		1			5I		
2	1742-631-001-00	STAY/PLATE/LH	*	1		1					
3	1742-631-002-00	STAY/PLATE/RH	*	1		1					
4	V231-360-801-60	FLANGEBOLT	*	4		4					
5	1742-631-250-00	BRACKET/LH COMP	*	1		1					
6	1742-631-260-00	BRACKET/RH COMP	*	1		1					
7	V231-360-801-60	FLANGEBOLT	*	6		6					
8	1742-631-220-10	STEP/LH COMP	*	1		1			4L		
9	1742-631-230-10	STEP/RH COMP	*	1		1			4L		
10	V231-360-801-60	FLANGEBOLT	*	6		6					
11	1742-631-004-10	MAT/E	*	1 -394		1 -768					
11A	1742-631-004-20	MAT/E	*	1 395-		1 769-		1			
12	1729-705-009-00	SCREW/TRUSS/M06X16	*	6		6					
13	3819-261-005-00	WASHER/07X18X01	*	6		6					
14	1746-631-240-00	COVER/REAR COMP	*	1 -19		1 -20			4L		
14A	1746-631-240-10	COVER/REAR COMP	*	1 20-		1 21-		1	4L		
15	V231-360-801-60	FLANGEBOLT	*	8		8					
16	1742-631-210-00	PANEL/SEAT COMP	*	1 -10		1 -15			4L		
16A	1742-631-210-10	PANEL/SEAT COMP	*	1 -798		1 -1141		1	4L		
16B	1742-631-210-20	PANEL/SEAT COMP	*	1 -849		1 -1175		1	4L		
16C	1785-631-250-10	PANEL/SEAT COMP	*	1 850-		1 1176-			4L		
17	V231-360-801-60	FLANGEBOLT	*	6		6					
18	1742-631-280-00	STEP/SUB/LH COMP	*	1 -19		1 -20					
18A	1742-631-290-00	STEP/SUB COMP	*	1 20-		1 21-					
19	V231-360-801-60	FLANGEBOLT	*	4		4					
20	1742-631-270-10	COVER/BOX/TOOL COMP	*	1		1			4L		
21	W296-203-208-00	RIVET/BLIND	*	4		4					
22	1560-601-014-30	SPRING	*	1		1					
23	W296-203-208-00	RIVET/BLIND	*	2		2					

FIG.160 FLOOR (REAR) SYSTEM (HE4 TYPE EXCEPT H3,C)

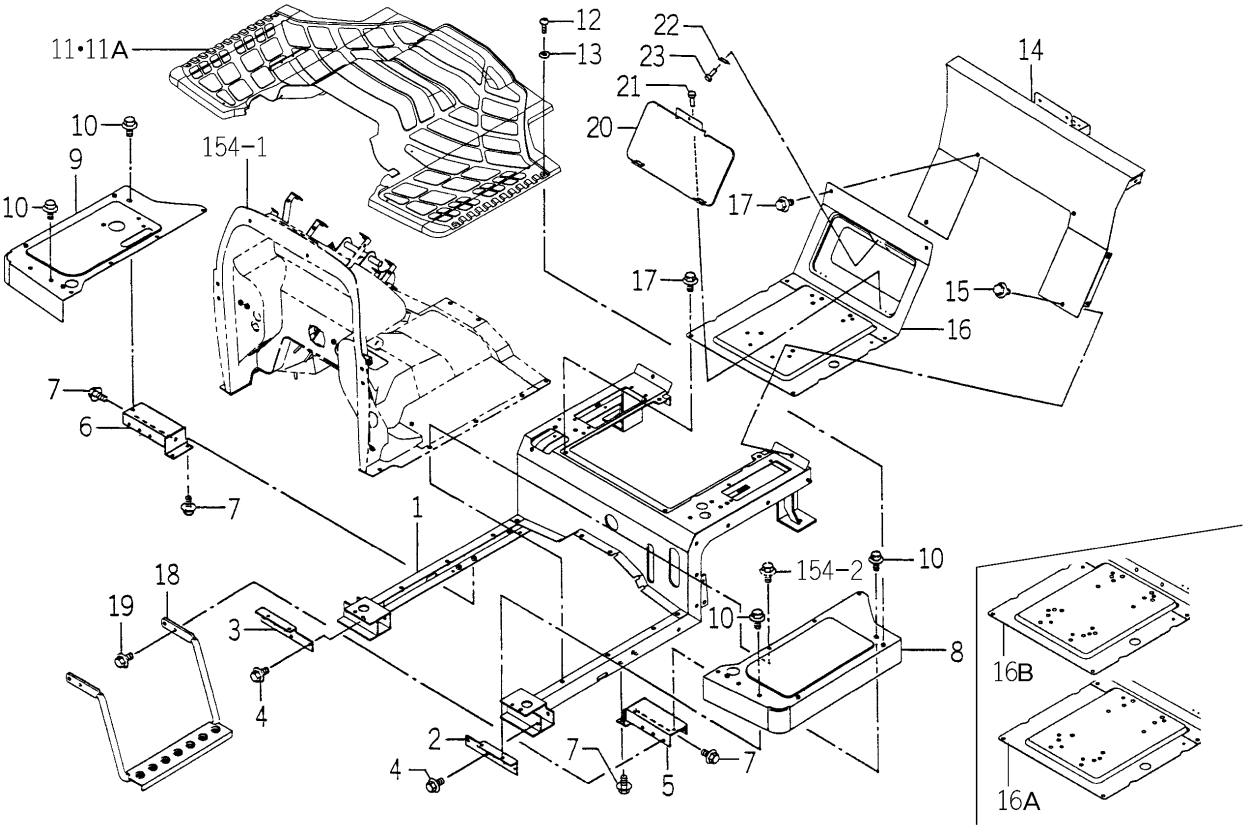

1747-631 -0100

KEY	PART CODE	DESCRIPTION	SPC	TYPE OF MODEL TG5330 E4	TG5330 E6	TG5390 E4	TG5390 E6	ITC	COL	GRP	REMARKS
1	1747-631-700-00	PANEL/FLOOR/HST COMP	*			1			5I		
2	1742-631-001-00	STAY/PLATE/LH	*			1					
3	1742-631-002-00	STAY/PLATE/RH	*			1					
4	V231-360-801-60	FLANGEBOLT	*			4					
5	1742-631-250-00	BRACKET/LH COMP	*			1					
6	1742-631-260-00	BRACKET/RH COMP	*			1					
7	V231-360-801-60	FLANGEBOLT	*			6					
8	1742-631-220-10	STEP/LH COMP	*			1			4L		
9	1743-631-710-10	STEP/RH/HST COMP	*			1			4L		
10	V231-360-801-60	FLANGEBOLT	*			6					
11	1747-631-071-00	MAT/E4/HST	*			1 -766					
11A	1747-631-071-10	MAT/E4/HST	*			1 767-		1			
12	1729-705-009-00	SCREW/TRUSS/M06X16	*			8					
13	3819-261-005-00	WASHER/07X18X01	*			8					
14	1746-631-240-10	COVER/REAR COMP	*			1			4L		
15	V231-360-801-60	FLANGEBOLT	*			8					
16	1742-631-210-10	PANEL/SEAT COMP	*			1 -1141			4L		
16A	1742-631-210-20	PANEL/SEAT COMP	*			1 -1184		1	4L		
16B	1785-631-250-10	PANEL/SEAT COMP	*			1 1185-			4L		
17	V231-360-801-60	FLANGEBOLT	*			6					
18	1742-631-290-00	STEP/SUB COMP	*			1					
19	V231-360-801-60	FLANGEBOLT	*			4					
20	1742-631-270-10	COVER/BOX/TOOL COMP	*			1			4L		
21	W296-203-208-00	RIVET/BLIND	*			4					
22	1560-601-014-30	SPRING	*			1					
23	W296-203-208-00	RIVET/BLIND	*			2					

FIG.161 STEP(SUB/RH) SYSTEM
(E6 TYPE-TG5330E6-No.567-/TG5390E6-No.153-)

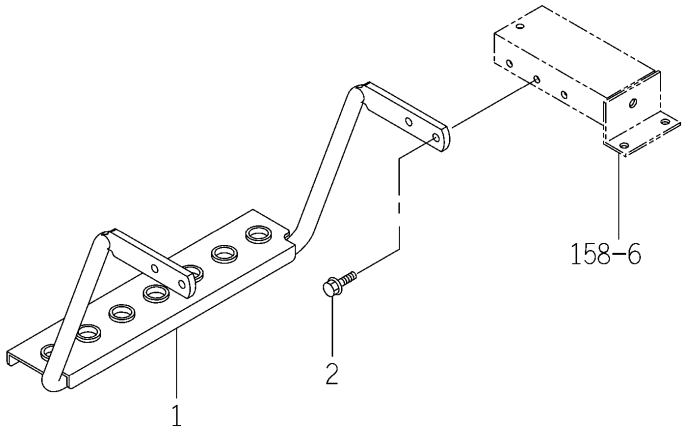

1742-631A-0100

KEY	PART CODE	DESCRIPTION	SPC	TYPE OF MODEL				ITC	COL	GRP	REMARKS
				TG5330 E4	TG5330 E6	TG5390 E4	TG5390 E6				
1	1742-631-290-00	STEP/SUB COMP	*		1 55-		1 153-				
2	V231-360-802-00	FLANGEBOLT	*		4 55-		4 153-				

FIG.162 FLOOR (REAR) SYSTEM (HC TYPE)

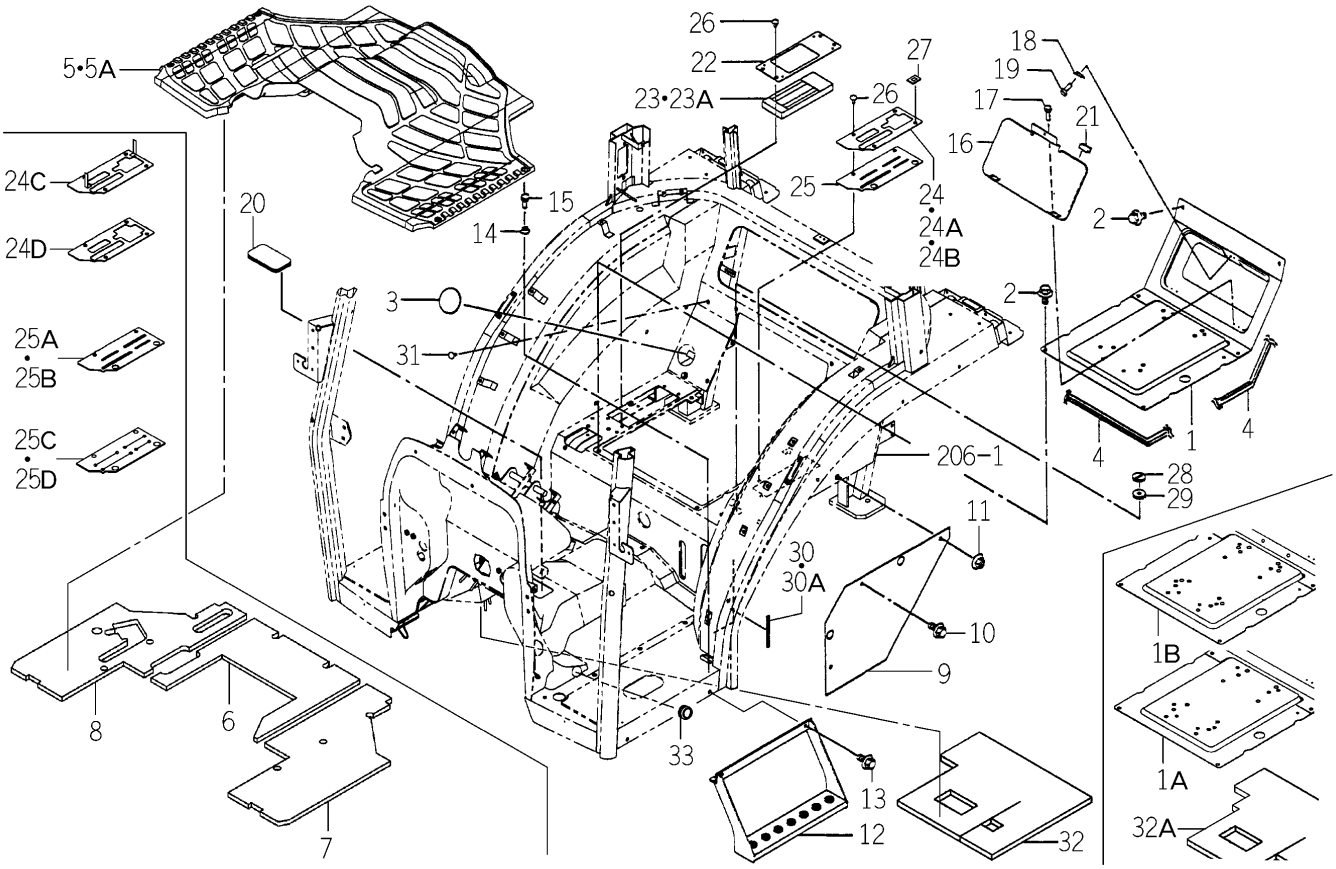

1747-631A-0100

KEY	PART CODE	DESCRIPTION	SPC	TYPE OF MODEL TG5330 E4	TG5330 E6	TG5390 E4	TG5390 E6	ITC	COL	GRP	REMARKS
1	1742-631-210-11	PANEL/SEAT COMP	*			1 -1141			7F		
1A	1742-631-210-21	PANEL/SEAT COMP	*			1 -1169		1	7F		
1B	1785-631-250-11	PANEL/SEAT COMP	*			1 1170-			7F		
2	V231-360-801-20	FLANGEBOLT	*			6					
3	1729-631-006-00	PLUG/60	*			1					
4	1729-705-241-00	INSULATOR	*			3					
5	1747-631-051-00	MAT/CY/E4/HST	*			1 -771					
5A	1747-631-051-10	MAT/CY/E4/HST	*			1 772-		3			
6	1729-631-056-10	INSULATOR/MAT/CENTER	*			1 772-		3			
7	1729-631-057-00	INSULATOR/MAT/LH	*			1 772-					
8	1729-631-058-00	INSULATOR/MAT/RH	*			1 772-					
9	1729-631-053-00	COVER/CY	*			2			7F		
10	V231-360-801-20	FLANGEBOLT	*			4					
11	V363-260-008-00	NUT/WASHER	*			2					
12	1742-631-560-00	STEP/SUB COMP	*			2					
13	V231-360-801-60	FLANGEBOLT	*			4					
14	1719-631-052-00	HOLDER	*			4					
15	W296-203-208-00	RIVET/BLIND	*			4					
16	1742-631-270-11	COVER/BOX/TOOL COMP	*			1			7F		
17	W296-203-208-00	RIVET/BLIND	*			4					
18	1560-601-014-30	SPRING	*			1					
19	W296-203-208-00	RIVET/BLIND	*			2					
20	1674-630-053-00	CAP	*			1					
21	1734-631-052-00	INSULATOR/025	*			2					
22	1742-631-052-00	PLATE	*			1					
23	1742-631-053-00	INSULATOR	*			1 -155					
23A	1742-631-053-10	INSULATOR	*			1 156-		1			
24	1742-631-054-40	PLATE	*			1 -113		1			
24A	1742-631-054-50	PLATE	*			1 -1008		1			
24B	1742-631-054-60	PLATE	*			1 -1025		1			

FIG.162 FLOOR (REAR) SYSTEM (HC TYPE)

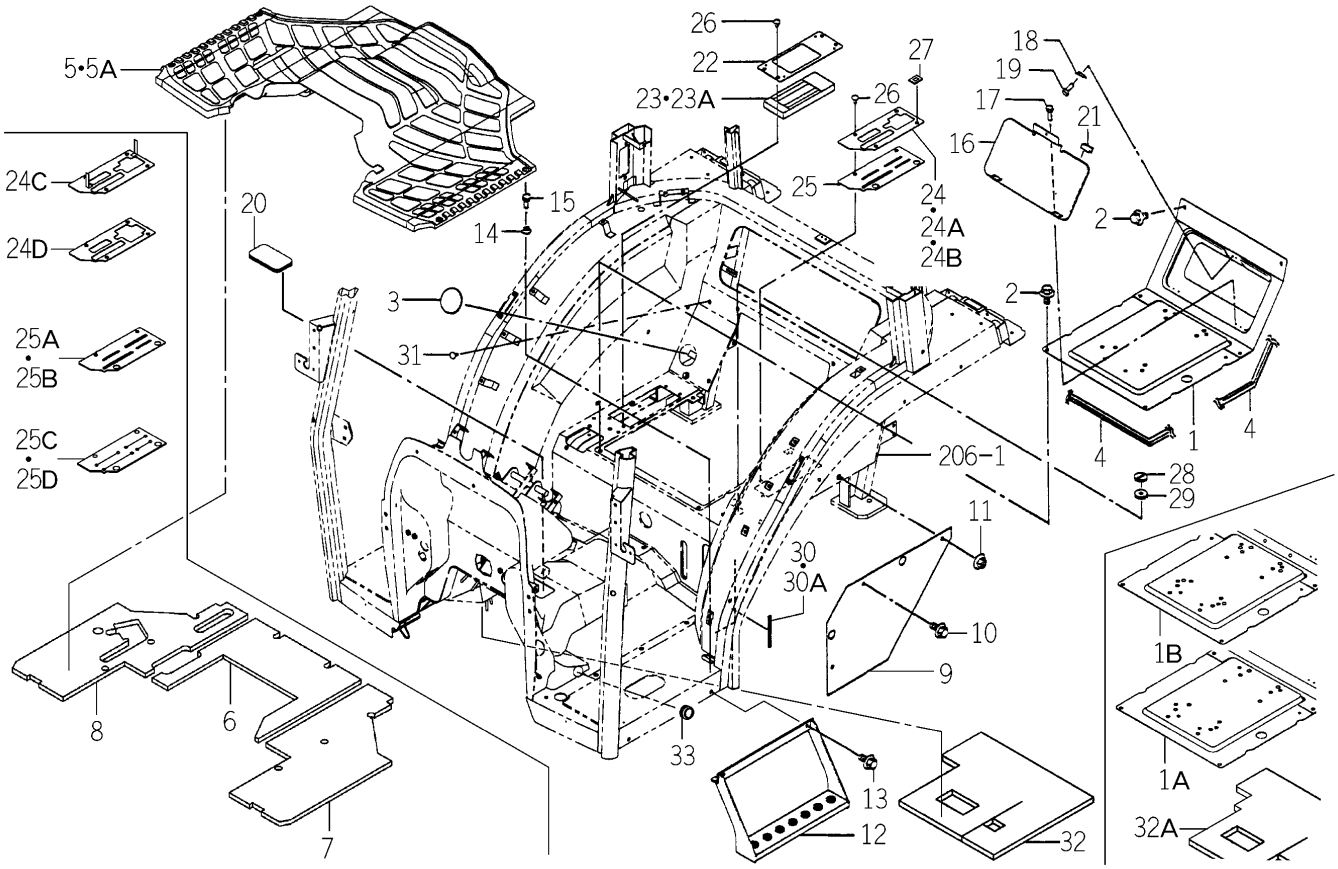

1747-631A-0100

KEY	PART CODE	DESCRIPTION	SPC	TYPE OF MODEL TG5330 E4	TG5330 E6	TG5390 E4	TG5390 E6	ITC	COL	GRP	REMARKS
24C	1742-631-580-00	PLATE COMP	*			1 -1075					
24D	1747-631-001-00	PLATE	*			1 1076-					
25	1742-631-055-30	INSULATOR	*			1 -126		1			
25A	1742-631-055-40	INSULATOR	*			1 -1008		1			
25B	1742-631-055-50	INSULATOR/LEVER/LH	*			1 -1031		1			
25C	1742-631-055-60	INSULATOR/LEVER/LH	*			1 -1158		1			
25D	1742-631-055-70	INSULATOR/LEVER/LH	*			1 1159-		1			
26	1527-604-002-00	CLIP(B)	*			6					
27	V350-160-006-00	NUT,SPEED/P6	*			2 -95					
28	1744-631-053-00	GROMMET/05X30X01	*			1					
29	1588-606-003-00	GROMMET/10X30X01	*			1					
30	1729-631-054-00	INSULATOR/08X100	*			2 -180					
30A	1729-631-054-10	INSULATOR/08X100	*			2 181-		1			
31	1434-611-002-10	CAP(M8)	*			2					
32	1744-631-054-00	INSULATOR	*			1 -897					
32A	1744-631-054-10	INSULATOR	*			1 898-		1			
33	1742-630-051-00	CAP/30	*			2 307-					

FIG.163 FLOOR (REAR) SYSTEM (Q TYPE EXCEPT C)

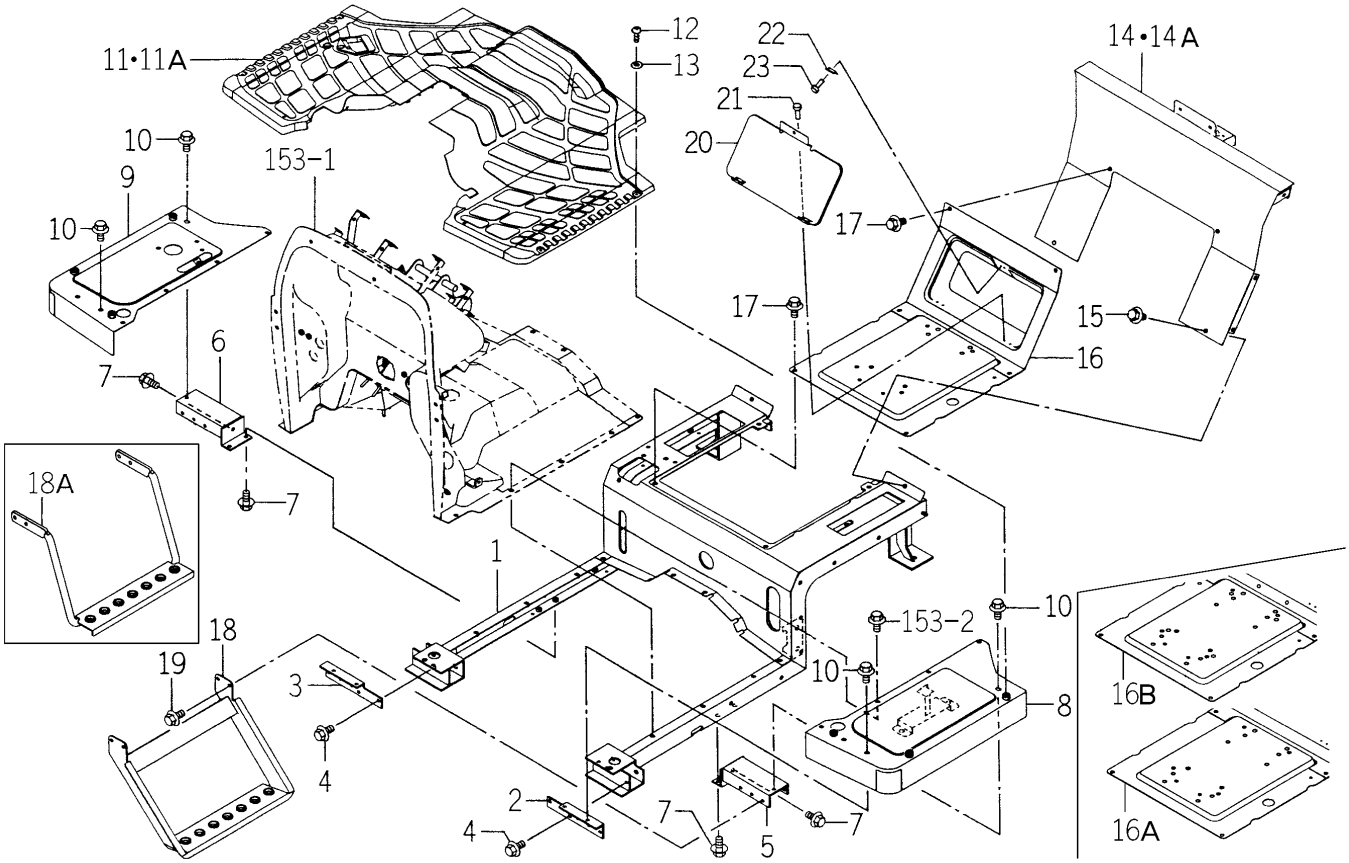

1746-631B-0100

KEY	PART CODE	DESCRIPTION	SPC	TYPE OF MODEL TG5330 E4	TG5330 E6	TG5390 E4	TG5390 E6	ITC	COL	GRP	REMARKS
1	1746-631-300-00	PANEL/FLOOR/Q COMP	*	1		1			5I		
2	1742-631-001-00	STAY/PLATE/LH	*	1		1					
3	1742-631-002-00	STAY/PLATE/RH	*	1		1					
4	V231-360-801-60	FLANGEBOLT	*	4		4					
5	1742-631-250-00	BRACKET/LH COMP	*	1		1					
6	1742-631-260-00	BRACKET/RH COMP	*	1		1					
7	V231-360-801-60	FLANGEBOLT	*	6		6					
8	1746-631-310-00	STEP/LH/Q COMP	*	1		1			4L		
9	1742-631-230-10	STEP/RH COMP	*	1		1			4L		
10	V231-360-801-60	FLANGEBOLT	*	6		6					
11	1742-631-004-10	MAT/E	*	1 -394		1 -768					
11A	1742-631-004-20	MAT/E	*	1 395-		1 769-		1			
12	1729-705-009-00	SCREW/TRUSS/M06X16	*	6		6					
13	3819-261-005-00	WASHER/07X18X01	*	6		6					
14	1746-631-240-00	COVER/REAR COMP	*	1 -19		1 -20			4L		
14A	1746-631-240-10	COVER/REAR COMP	*	1 20-		1 21-		1	4L		
15	V231-360-801-60	FLANGEBOLT	*	8		8					
16	1742-631-210-10	PANEL/SEAT COMP	*	1 -798		1 -1141		1	4L		
16A	1742-631-210-20	PANEL/SEAT COMP	*	1 -846		1 -1168		1	4L		
16B	1785-631-250-10	PANEL/SEAT COMP	*	1 847-		1 1169-			4L		
17	V231-360-801-60	FLANGEBOLT	*	6		6					
18	1742-631-280-00	STEP/SUB/LH COMP	*	1 -23		1 -16					
18A	1742-631-290-00	STEP/SUB COMP	*	1 24-		1 17-					
19	V231-360-801-60	FLANGEBOLT	*	4		4					
20	1742-631-270-10	COVER/BOX/TOOL COMP	*	1		1			4L		
21	W296-203-208-00	RIVET/BLIND	*	4		4					
22	1560-601-014-30	SPRING	*	1		1					
23	W296-203-208-00	RIVET/BLIND	*	2		2					

FIG.164 FLOOR (REAR) SYSTEM (HE6 TYPE)

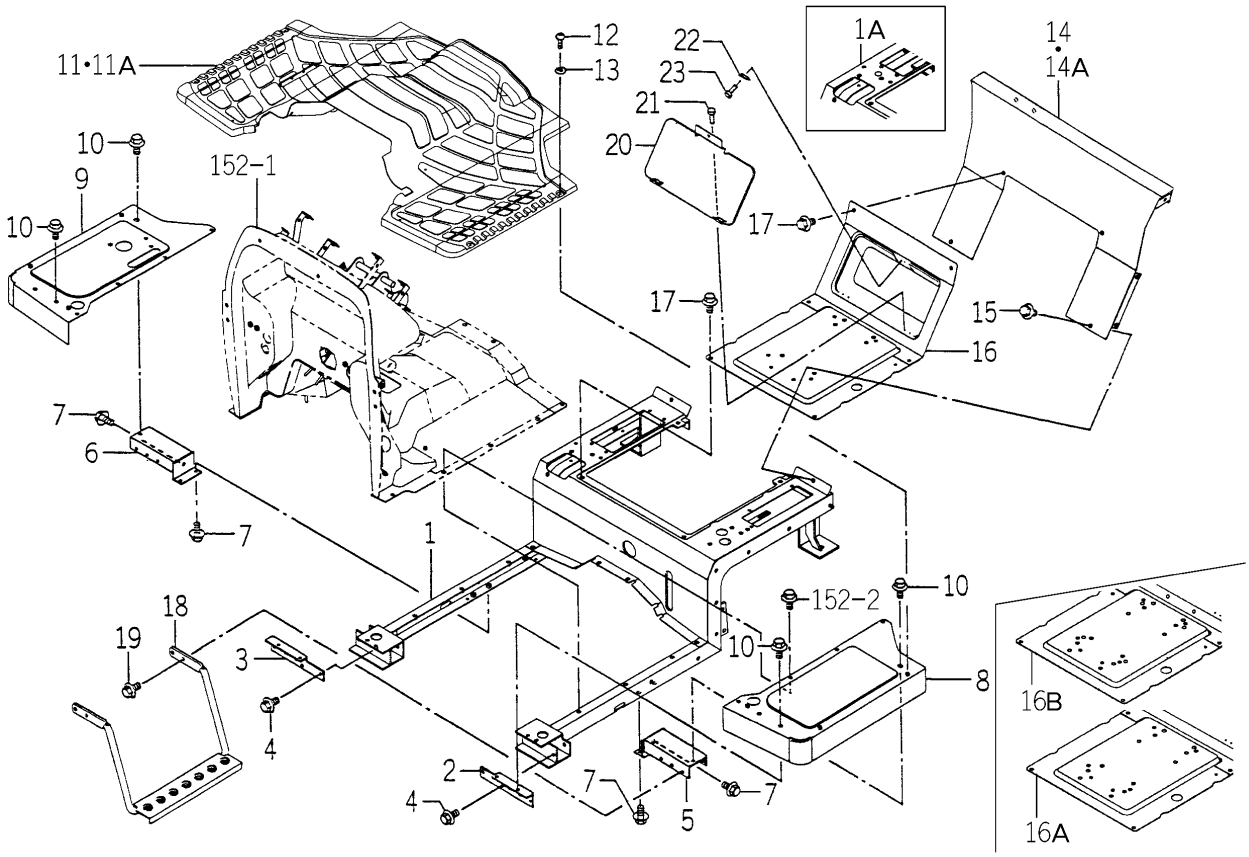

1747-631B-0100

KEY	PART CODE	DESCRIPTION	SPC	TYPE OF MODEL TG5330 E4	TG5330 E6	TG5390 E4	TG5390 E6	ITC	COL	GRP	REMARKS
1	1743-631-700-00	PANEL/FLOOR/HST COMP	*				1-877		5I		
1A	1743-631-700-10	PANEL/FLOOR/HST COMP	*				1878-	1	5I		
2	1742-631-001-00	STAY/PLATE/LH	*				1				
3	1742-631-002-00	STAY/PLATE/RH	*				1				
4	V231-360-801-60	FLANGEBOLT	*				4				
5	1742-631-250-00	BRACKET/LH COMP	*				1				
6	1742-631-260-00	BRACKET/RH COMP	*				1				
7	V231-360-801-60	FLANGEBOLT	*				6				
8	1742-631-220-10	STEP/LH COMP	*				1		4L		
9	1743-631-710-10	STEP/RH/HST COMP	*				1		4L		
10	V231-360-801-60	FLANGEBOLT	*				6				
11	1747-631-071-00	MAT/E4/HST	*				1-766				
11A	1747-631-071-10	MAT/E4/HST	*				1767-	1			
12	1729-705-009-00	SCREW/TRUSS/M06X16	*				8				
13	3819-261-005-00	WASHER/07X18X01	*				8				
14	1742-631-240-00	COVER/REAR COMP	*				1-1238		4L		
14A	1742-631-240-10	COVER/REAR COMP	*				1239-	1	4L		
15	V231-360-801-60	FLANGEBOLT	*				8				
16	1742-631-210-10	PANEL/SEAT COMP	*				1-1141		4L		
16A	1742-631-210-20	PANEL/SEAT COMP	*				1-1186	1	4L		
16B	1785-631-250-10	PANEL/SEAT COMP	*				1187-		4L		
17	V231-360-801-60	FLANGEBOLT	*				6				
18	1742-631-290-00	STEP/SUB COMP	*				1				
19	V231-360-801-60	FLANGEBOLT	*				4				
20	1742-631-270-10	COVER/BOX/TOOL COMP	*				1		4L		
21	W296-203-208-00	RIVET/BLIND	*				4				
22	1560-601-014-30	SPRING	*				1				
23	W296-203-208-00	RIVET/BLIND	*				2				

FIG.165 FLOOR (REAR) SYSTEM (C TYPE EXCEPT H)

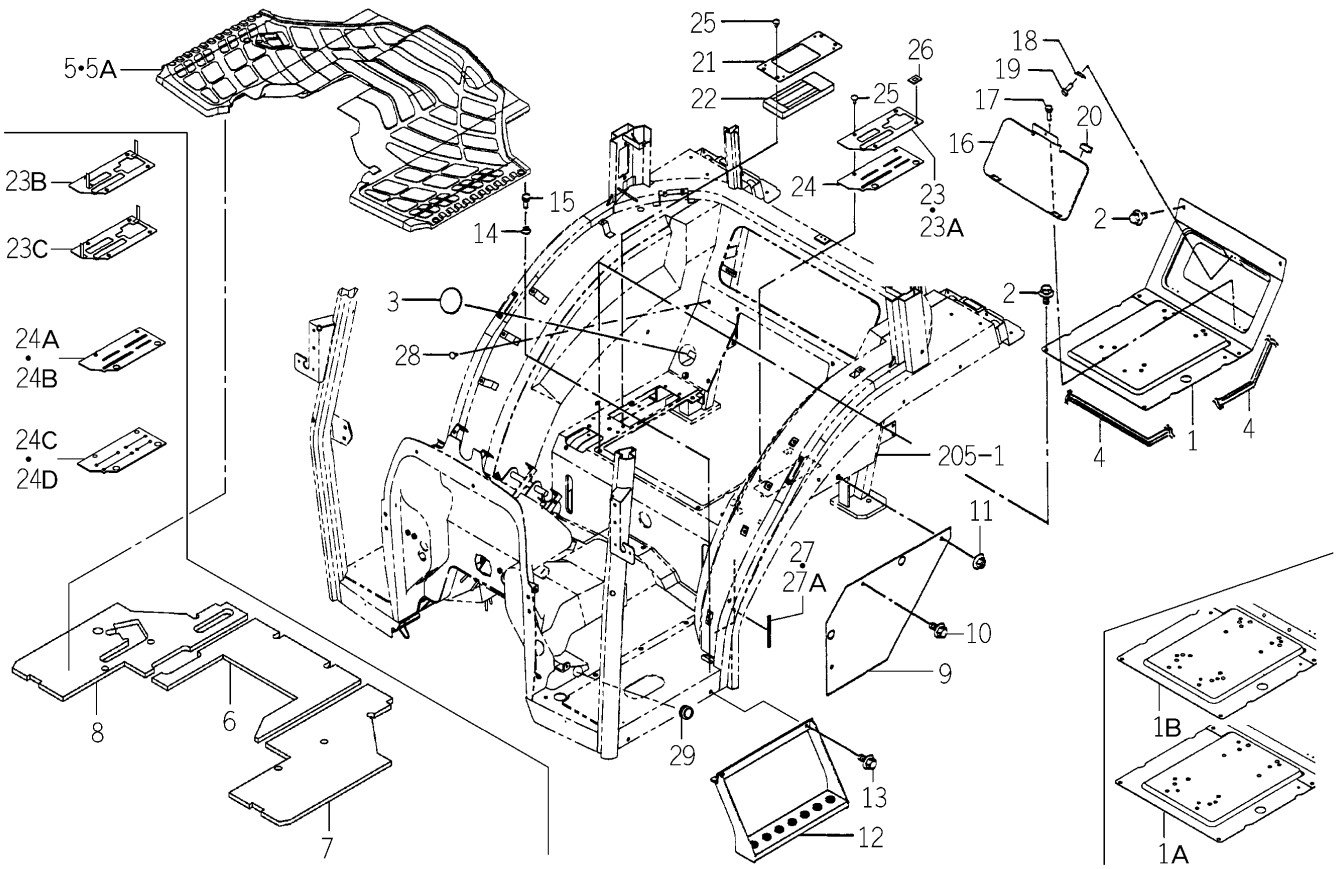

1746-631C-0100

KEY	PART CODE	DESCRIPTION	SPC	TYPE OF MODEL TG5330 E4	TG5330 E6	TG5390 E4	TG5390 E6	ITC	COL	GRP	REMARKS
1	1742-631-210-11	PANEL/SEAT COMP	*	1 -798		1 -1141			7F		
1A	1742-631-210-21	PANEL/SEAT COMP	*	1 -852		1 -1170		1	7F		
1B	1785-631-250-11	PANEL/SEAT COMP	*	1 853-		1 1171-			7F		
2	V231-360-801-20	FLANGEBOLT	*	6		6					
3	1729-631-006-00	PLUG/60	*	1		1					
4	1729-705-241-00	INSULATOR	*	3		3					
5	1742-631-051-00	MAT/CY/E	*	1 -470		1 -820					
5A	1742-631-051-10	MAT/CY/E	*	1 471-		1 821-		3			
6	1729-631-056-10	INSULATOR/MAT/CENTER	*	1 471-		1 821-		3			
7	1729-631-057-00	INSULATOR/MAT/LH	*	1 471-		1 821-					
8	1729-631-058-00	INSULATOR/MAT/RH	*	1 471-		1 821-					
9	1729-631-053-00	COVER/CY	*	2		2			7F		
10	V231-360-801-20	FLANGEBOLT	*	4		4					
11	V363-260-008-00	NUT/WASHER	*	2		2					
12	1742-631-560-00	STEP/SUB COMP	*	2		2					
13	V231-360-801-60	FLANGEBOLT	*	4		4					
14	1719-631-052-00	HOLDER	*	4		4					
15	W296-203-208-00	RIVET/BLIND	*	4		4					
16	1742-631-270-11	COVER/BOX/TOOL COMP	*	1		1			7F		
17	W296-203-208-00	RIVET/BLIND	*	4		4					
18	1560-601-014-30	SPRING	*	1		1					
19	W296-203-208-00	RIVET/BLIND	*	2		2					
20	1734-631-052-00	INSULATOR/025	*	2		2					
21	1742-631-052-00	PLATE	*	1		1					
22	1742-631-053-10	INSULATOR	*	1		1					
23	1742-631-054-40	PLATE	*	1 -60		1 -113		1			
23A	1742-631-054-50	PLATE	*	1 -729		1 -1008		1			
23B	1742-631-580-00	PLATE COMP	*	1 -802		1 -1143					
23C	1742-631-580-10	PLATE COMP	*	1 803-		1 1144-		1			
24	1742-631-055-30	INSULATOR	*	1 -58		1 -126		1			

FIG.165 FLOOR (REAR) SYSTEM (C TYPE EXCEPT H)

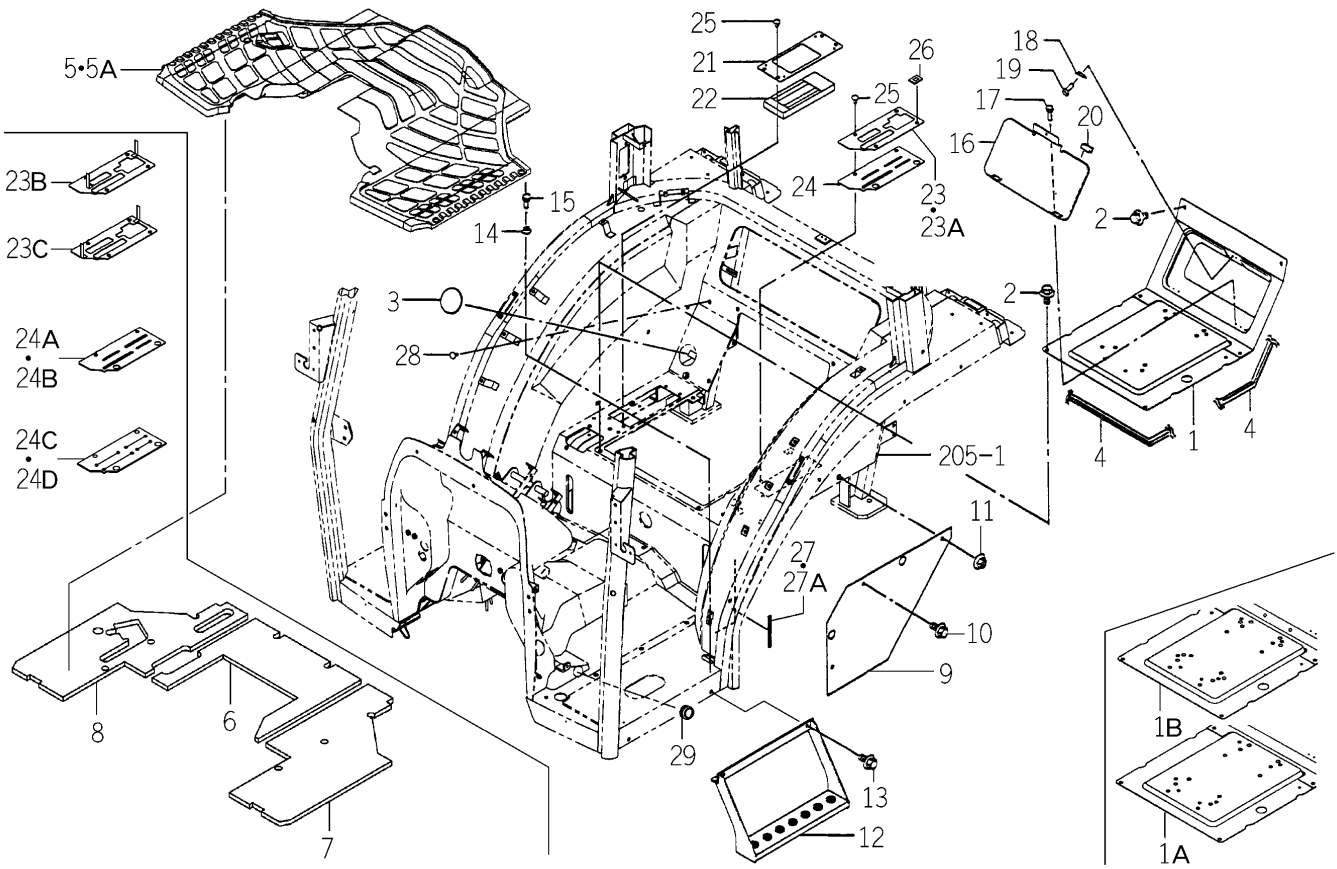

1746-631C-0100

KEY	PART CODE	DESCRIPTION	SPC	TYPE OF MODEL TG5330 E4	TG5330 E6	TG5390 E4	TG5390 E6	ITC	COL	GRP	REMARKS
24A	1742-631-055-40	INSULATOR	*	1 -729		1 -1008		1			
24B	1742-631-055-50	INSULATOR/LEVER/LH	*	1 -737		1 -1031		1			
24C	1742-631-055-60	INSULATOR/LEVER/LH	*	1 -827		1 -1158		1			
24D	1742-631-055-70	INSULATOR/LEVER/LH	*	1 828-		1 1159-		1			
25	1527-604-002-00	CLIP(B)	*	6		6					
26	V350-160-006-00	NUT,SPEED/P6	*	2 -27		2 -25					
27	1729-631-054-00	INSULATOR/08X100	*	2 -27		2 -180					
27A	1729-631-054-10	INSULATOR/08X100	*	2 28-		2 181-		1			
28	1434-611-002-10	CAP(M8)	*	2		2					
29	1742-630-051-00	CAP/30	*	2 99-		2 297-					

FIG.166 FLOOR (REAR) SYSTEM (H3 TYPE EXCEPT C)

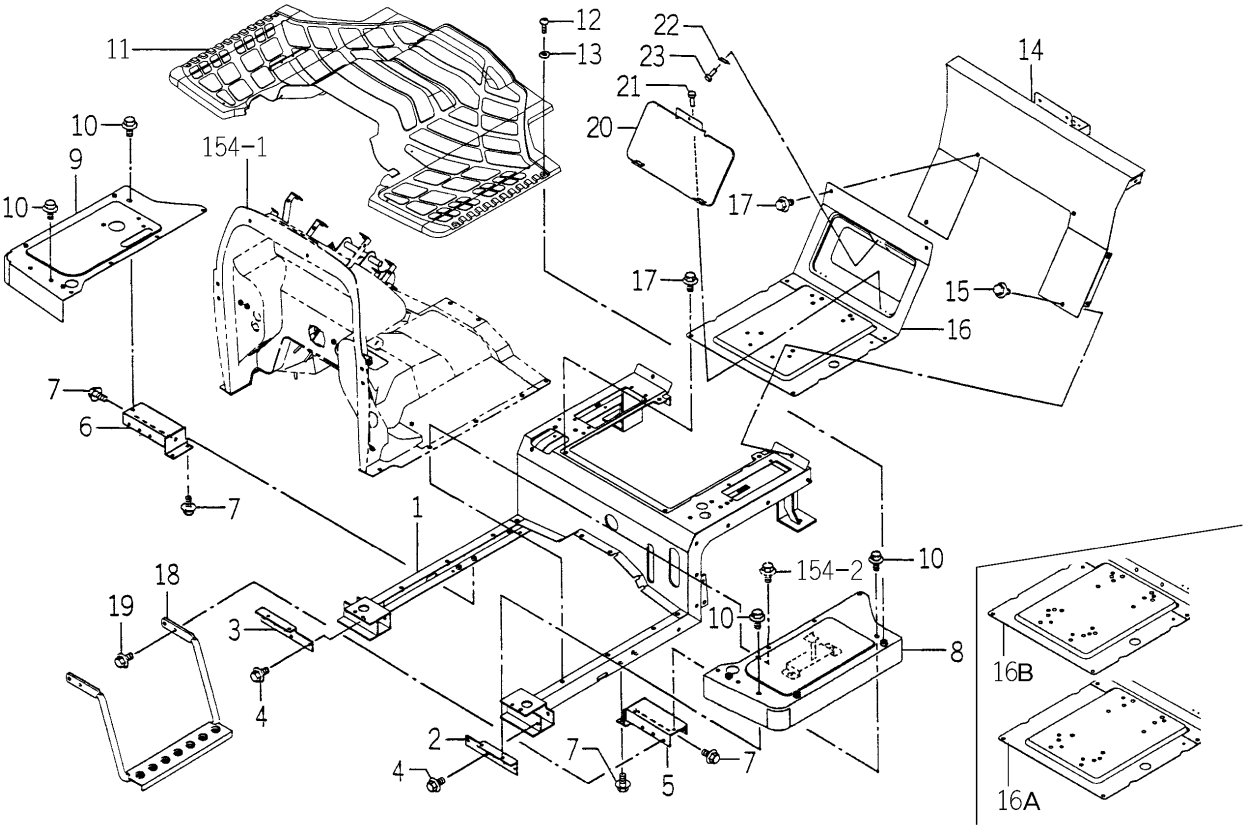

1747-631D-0100

KEY	PART CODE	DESCRIPTION	SPC	TYPE OF MODEL TG5330 E4	TG5330 E6	TG5390 E4	TG5390 E6	ITC	COL	GRP	REMARKS
1	1747-631-700-00	PANEL/FLOOR/HST COMP	*			1			5I		
2	1742-631-001-00	STAY/PLATE/LH	*			1					
3	1742-631-002-00	STAY/PLATE/RH	*			1					
4	V231-360-801-60	FLANGEBOLT	*			4					
5	1742-631-250-00	BRACKET/LH COMP	*			1					
6	1742-631-260-00	BRACKET/RH COMP	*			1					
7	V231-360-801-60	FLANGEBOLT	*			6					
8	1746-631-310-00	STEP/LH/Q COMP	*			1			4L		
9	1743-631-710-10	STEP/RH/HST COMP	*			1			4L		
10	V231-360-801-60	FLANGEBOLT	*			6					
11	1747-631-071-10	MAT/E4/HST	*			1					
12	1729-705-009-00	SCREW/TRUSS/M06X16	*			8					
13	3819-261-005-00	WASHER/07X18X01	*			8					
14	1746-631-240-10	COVER/REAR COMP	*			1			4L		
15	V231-360-801-60	FLANGEBOLT	*			8					
16	1742-631-210-10	PANEL/SEAT COMP	*			1 -1141			4L		
16A	1742-631-210-20	PANEL/SEAT COMP	*			1 -1186		1	4L		
16B	1785-631-250-10	PANEL/SEAT COMP	*			1 1187-			4L		
17	V231-360-801-60	FLANGEBOLT	*			6					
18	1742-631-290-00	STEP/SUB COMP	*			1					
19	V231-360-801-60	FLANGEBOLT	*			4					
20	1742-631-270-10	COVER/BOX/TOOL COMP	*			1			4L		
21	W296-203-208-00	RIVET/BLIND	*			4					
22	1560-601-014-30	SPRING	*			1					
23	W296-203-208-00	RIVET/BLIND	*			2					

FIG.167 PEDAL (HST) SYSTEM (HE4 TYPE EXCEPT H3)

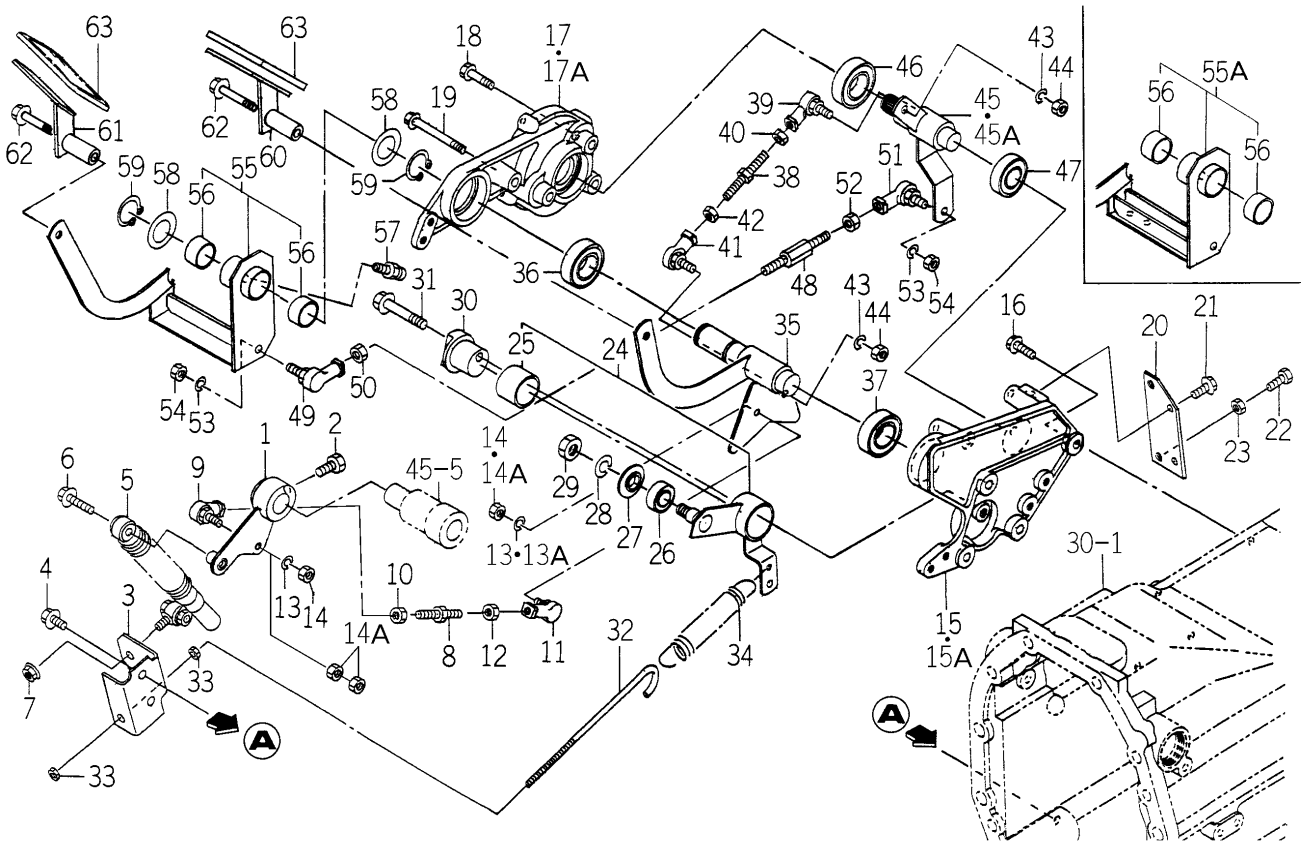

1747-640 -0100

KEY	PART CODE	DESCRIPTION	SPC	TYPE OF MODEL TG5330 E4	TG5330 E6	TG5390 E4	TG5390 E6	ITC	COL	GRP	REMARKS
1	1747-640-500-00	ARM/TRUNNION/E4 COMP	*			1					
2	1646-226-053-00	BOLT/SM/M10X23	*			1					
3	1743-640-051-00	PLATE/HOLDER	*			1					
4	V231-360-801-60	FLANGEBOLT	*			2					
5	3803-222-890-00	DUMPER/OIL ASSY	*			1					
6	V231-360-803-00	FLANGEBOLT	*			1					
7	V362-260-008-00	NUT/WASHER	*			1					
8	1646-640-002-00	ROD/M08X64	*			1					
9	1560-695-021-00	JOINT BALL M08RH	*			1					
10	V304-460-008-00	NUT/M8	*			1					
11	1560-695-022-00	JOINT BALL M08LH	*			1					
12	1560-132-007-30	NUT/M8	*			1					
13	V401-160-008-00	WASHER,SP/M 8	*			2 -1332					
13A	V401-160-008-00	WASHER,SP/M 8	*			1 1333-					
14	V304-260-008-00	NUT	*			2 -1332					
14A	V304-260-008-00	NUT	*			3 1333-					
15	1743-640-052-00	BRACKET/LINK	*			1 -130					
15A	1743-640-052-10	BRACKET/LINK	*			1 131-		1			
16	V231-361-002-50	FLANGEBOLT	*			4					
17	1743-640-053-00	METAL/LINK	*			1 -172					
17A	1743-640-053-10	METAL/LINK	*			1 173-		1			
18	V231-360-803-00	FLANGEBOLT	*			3					
19	V231-360-805-50	FLANGEBOLT	*			1					
20	1743-640-054-00	PLATE/STOPPER	*			1					
21	V231-360-801-60	FLANGEBOLT	*			2					
22	W201-261-005-50	BOLT	*			2					
23	V304-260-010-00	NUT	*			2					
24	1743-640-540-00	ARM/NEUTRAL ASSY	*			1					
25	1646-640-221-00	BUSH/32X36X25	*			1					
26	V600-350-600-20	BEARING/BALL	*			1					

FIG.167 PEDAL (HST) SYSTEM (HE4 TYPE EXCEPT H3)

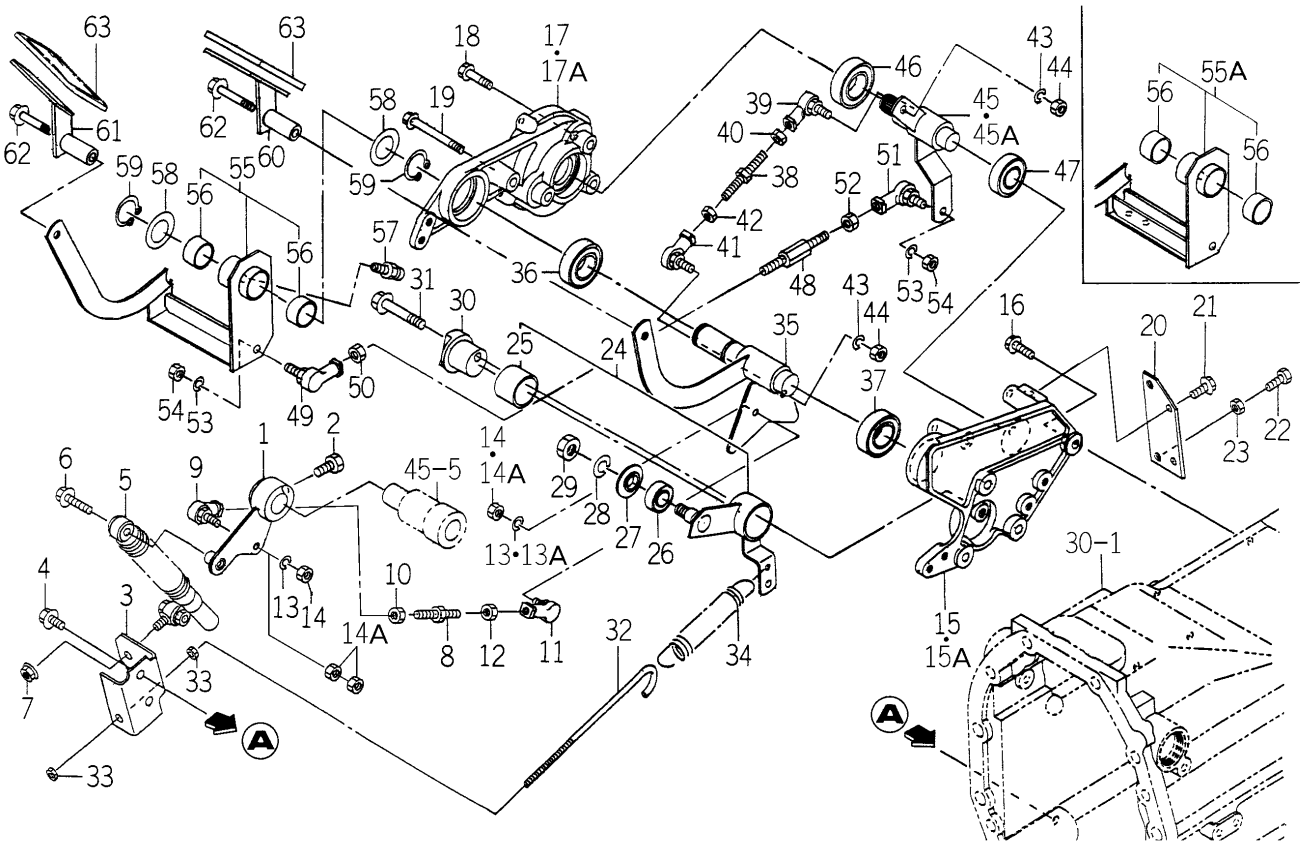

1747-640 -0100

KEY	PART CODE	DESCRIPTION	SPC	TYPE OF MODEL TG5330 E4	TG5330 E6	TG5390 E4	TG5390 E6	ITC	COL	GRP	REMARKS
27	1689-271-006-00	WASHER/38X12X2	*			1					
28	V401-160-012-00	WASHER,SP/M12	*			1					
29	V304-260-012-00	NUT/M12	*			1					
30	1646-640-006-00	PIN/ADJUST	*			1					
31	V231-361-005-00	FLANGEBOLT	*			1					
32	1743-640-055-00	ROD/TENSION/M08X120	*			1					
33	V304-260-008-00	NUT	*			2					
34	3661-114-004-00	SPRING/HE122	*			1					
35	1747-640-510-00	ARM/HST/F COMP	*			1					
36	V600-450-620-50	BEARING/BALL	*			1					
37	V600-450-600-50	BEARING/BALL	*			1					
38	1646-640-002-00	ROD/M08X64	*			1					
39	1560-695-021-00	JOINT BALL M08RH	*			1					
40	V304-460-008-00	NUT/M8	*			1					
41	1560-695-022-00	JOINT BALL M08LH	*			1					
42	1560-132-007-30	NUT/M8	*			1					
43	V401-160-008-00	WASHER,SP/M 8	*			2					
44	V304-260-008-00	NUT	*			2					
45	1743-640-560-00	SHAFT/COUNTER COMP	*			1 -1340					
45A	1743-640-560-10	SHAFT/COUNTER COMP	*			1 1341-		1			
46	V600-450-600-50	BEARING/BALL	*			1					
47	V600-450-600-40	BEARING/BALL	*			1					
48	1747-640-051-00	ROD/M08X92	*			1					
49	1560-695-021-00	JOINT BALL M08RH	*			1					
50	V304-460-008-00	NUT/M8	*			1					
51	1560-695-022-00	JOINT BALL M08LH	*			1					
52	1560-132-007-30	NUT/M8	*			1					
53	V401-160-008-00	WASHER,SP/M 8	*			2					
54	V304-260-008-00	NUT	*			2					
55	1747-640-520-00	ARM/HST/R ASSY	*			1 -28					

FIG.167 PEDAL (HST) SYSTEM (HE4 TYPE EXCEPT H3)

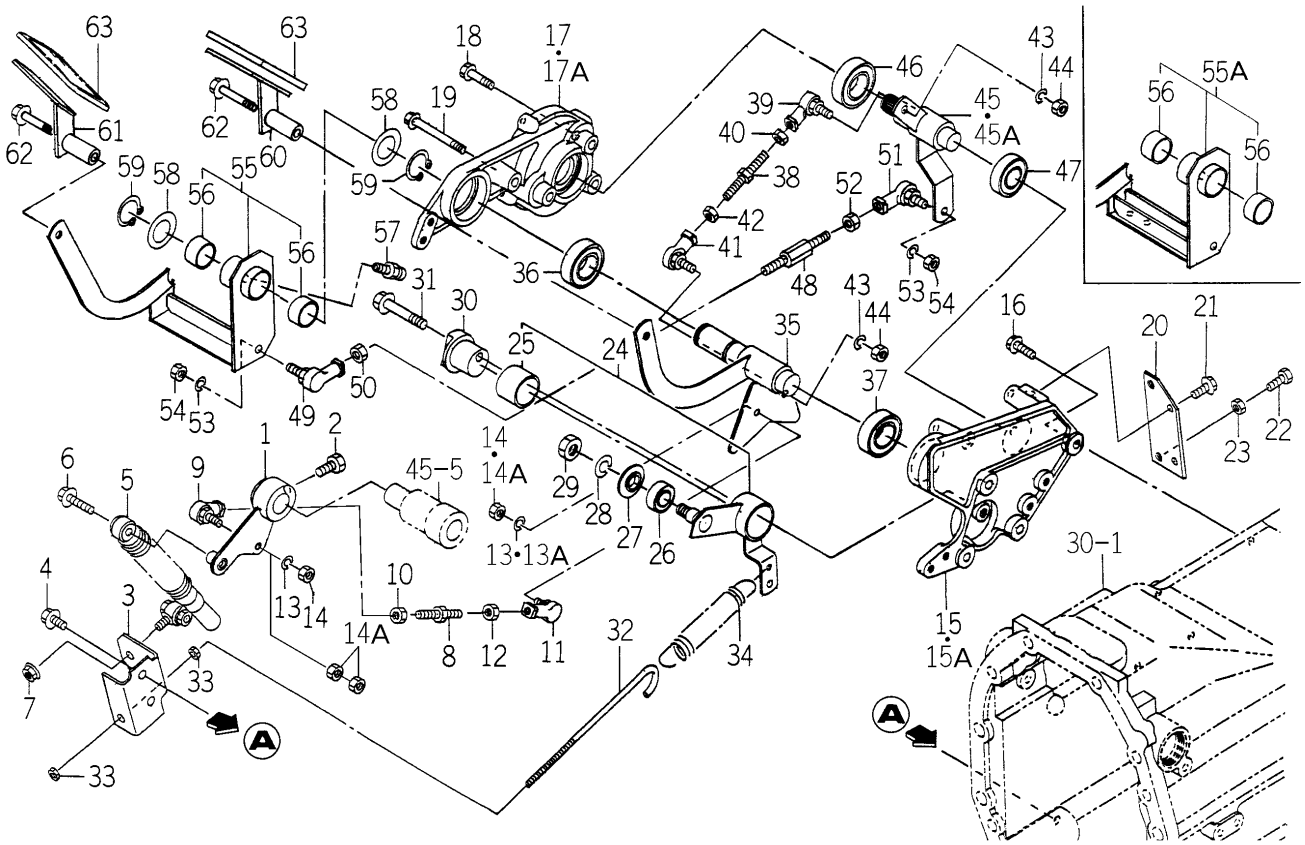

1747-640 -0100

KEY	PART CODE	DESCRIPTION	SPC	TYPE OF MODEL TG5330 E4	TG5330 E6	TG5390 E4	TG5390 E6	ITC	COL	GRP	REMARKS
55A	1747-640-520-10	ARM/HST/R ASSY	*			1 29-		1			
56	8654-203-201-00	BUSH/25X28X15	*			2					
57	V760-150-000-00	NIPPLE,GREASE	*			1					
58	1646-640-001-00	WASHER/25X43X02	*			2					
59	V704-140-025-00	RING,SNAP/25 C	*			2					
60	1747-640-540-20	PEDAL/HST/L COMP	*			1		3			
61	1747-640-550-20	PEDAL/HST/R COMP	*			1		3			
62	V231-361-005-50	FLANGEBOLT	*			2					
63	1740-272-061-00	PAD/HST/OR	*			2					

FIG.168 PEDAL (HST) SYSTEM (HE6 TYPE)

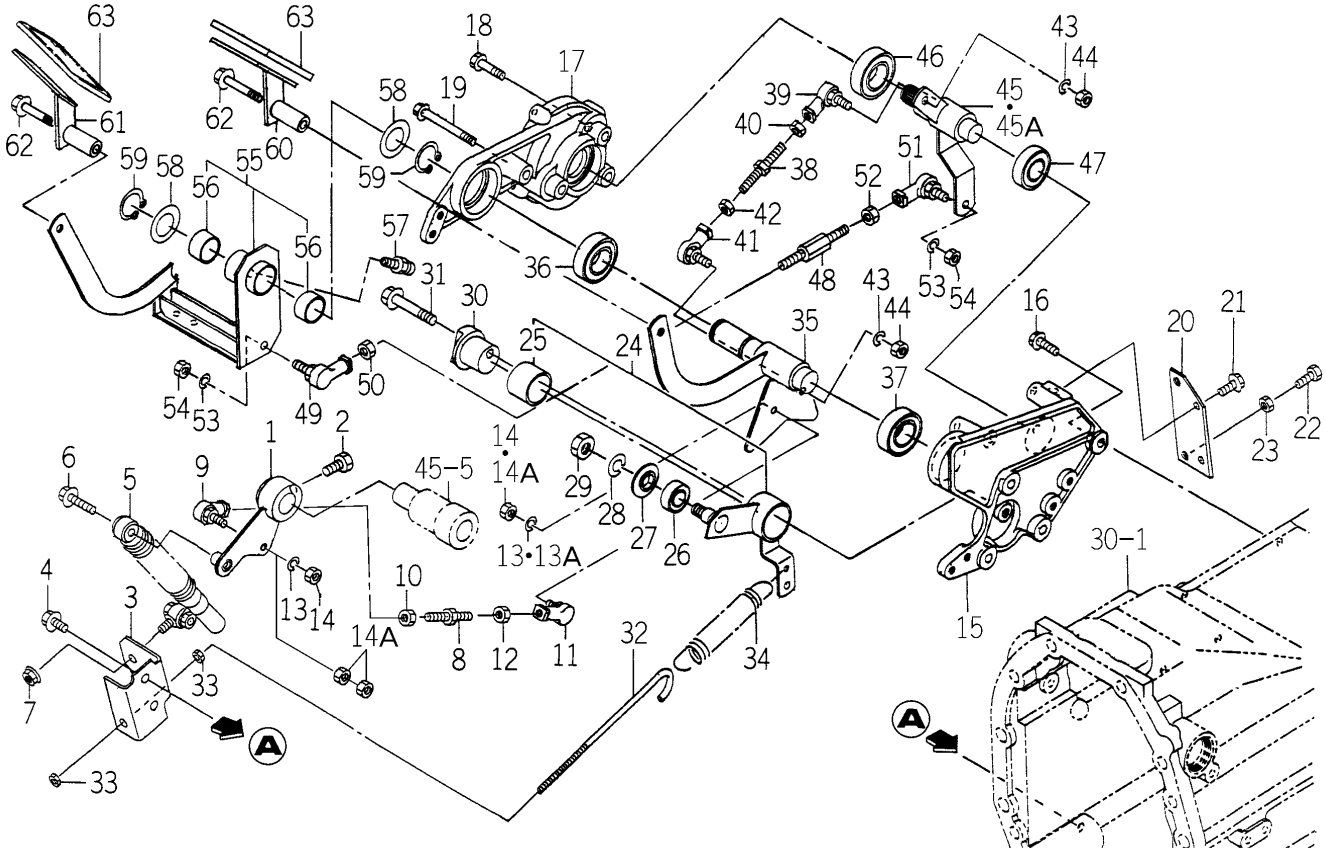

1747-640A-0100

KEY	PART CODE	DESCRIPTION	SPC	TYPE OF MODEL TG5330 E4	TG5330 E6	TG5390 E4	TG5390 E6	ITC	COL	GRP	REMARKS
1	1747-640-500-00	ARM/TRUNNION/E4 COMP	*				1				
2	1646-226-053-00	BOLT/SM/M10X23	*				1				
3	1743-640-051-00	PLATE/HOLDER	*				1				
4	V231-360-801-60	FLANGEBOLT	*				2				
5	3803-222-890-00	DUMPER/OIL ASSY	*				1				
6	V231-360-803-00	FLANGEBOLT	*				1				
7	V362-260-008-00	NUT/WASHER	*				1				
8	1646-640-002-00	ROD/M08X64	*				1				
9	1560-695-021-00	JOINT BALL M08RH	*				1				
10	V304-460-008-00	NUT/M8	*				1				
11	1560-695-022-00	JOINT BALL M08LH	*				1				
12	1560-132-007-30	NUT/M8	*				1				
13	V401-160-008-00	WASHER,SP/M 8	*				2 -1334				
13A	V401-160-008-00	WASHER,SP/M 8	*				1 1335-				
14	V304-260-008-00	NUT	*				2 -1334				
14A	V304-260-008-00	NUT	*				3 1335-				
15	1743-640-052-10	BRACKET/LINK	*				1	1			
16	V231-361-002-50	FLANGEBOLT	*				4				
17	1743-640-053-10	METAL/LINK	*				1	1			
18	V231-360-803-00	FLANGEBOLT	*				3				
19	V231-360-805-50	FLANGEBOLT	*				1				
20	1743-640-054-00	PLATE/STOPPER	*				1				
21	V231-360-801-60	FLANGEBOLT	*				2				
22	W201-261-005-50	BOLT	*				2				
23	V304-260-010-00	NUT	*				2				
24	1743-640-540-00	ARM/NEUTRAL ASSY	*				1				
25	1646-640-221-00	BUSH/32X36X25	*				1				
26	V600-350-600-20	BEARING/BALL	*				1				
27	1689-271-006-00	WASHER/38X12X2	*				1				
28	V401-160-012-00	WASHER,SP/M12	*				1				

FIG.168 PEDAL (HST) SYSTEM (HE6 TYPE)

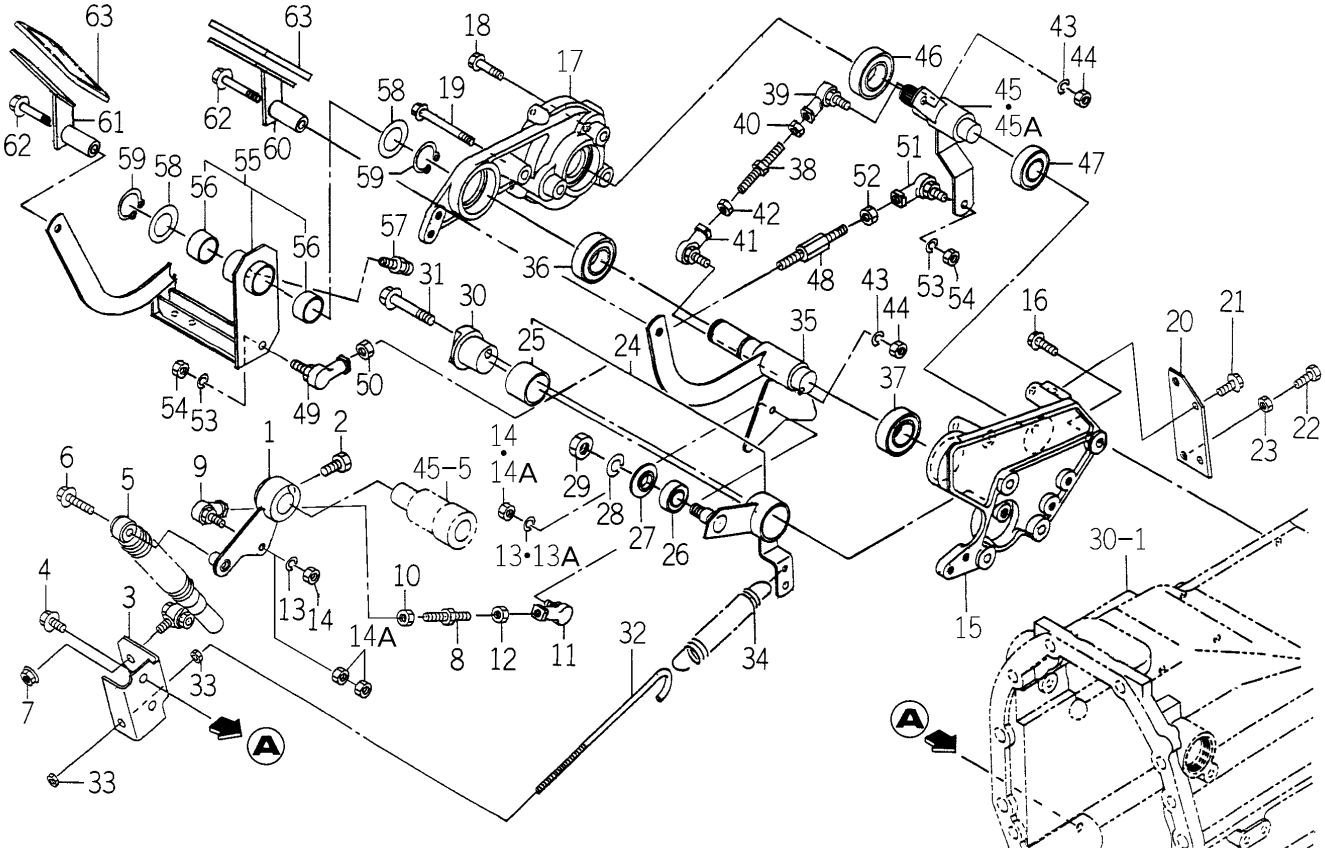

1747-640A-0100

KEY	PART CODE	DESCRIPTION	SPC	TYPE OF MODEL TG5330 E4	TG5330 E6	TG5390 E4	TG5390 E6	ITC	COL	GRP	REMARKS
29	V304-260-012-00	NUT/M12	*				1				
30	1646-640-006-00	PIN/ADJUST	*				1				
31	V231-361-005-00	FLANGEBOLT	*				1				
32	1743-640-055-00	ROD/TENSION/M08X120	*				1				
33	V304-260-008-00	NUT	*				2				
34	3661-114-004-00	SPRING/HE122	*				1				
35	1747-640-510-00	ARM/HST/F COMP	*				1				
36	V600-450-620-50	BEARING/BALL	*				1				
37	V600-450-600-50	BEARING/BALL	*				1				
38	1646-640-002-00	ROD/M08X64	*				1				
39	1560-695-021-00	JOINT BALL M08RH	*				1				
40	V304-460-008-00	NUT/M8	*				1				
41	1560-695-022-00	JOINT BALL M08LH	*				1				
42	1560-132-007-30	NUT/M8	*				1				
43	V401-160-008-00	WASHER,SP/M 8	*				2				
44	V304-260-008-00	NUT	*				2				
45	1743-640-560-00	SHAFT/COUNTER COMP	*				1 -1340				
45A	1743-640-560-10	SHAFT/COUNTER COMP	*				1 1341-	1			
46	V600-450-600-50	BEARING/BALL	*				1				
47	V600-450-600-40	BEARING/BALL	*				1				
48	1747-640-051-00	ROD/M08X92	*				1				
49	1560-695-021-00	JOINT BALL M08RH	*				1				
50	V304-460-008-00	NUT/M8	*				1				
51	1560-695-022-00	JOINT BALL M08LH	*				1				
52	1560-132-007-30	NUT/M8	*				1				
53	V401-160-008-00	WASHER,SP/M 8	*				2				
54	V304-260-008-00	NUT	*				2				
55	1747-640-520-10	ARM/HST/R ASSY	*				1	1			
56	8654-203-201-00	BUSH/25X28X15	*				2				
57	V760-150-000-00	NIPPLE,GREASE	*				1				

FIG.168 PEDAL (HST) SYSTEM (HE6 TYPE)

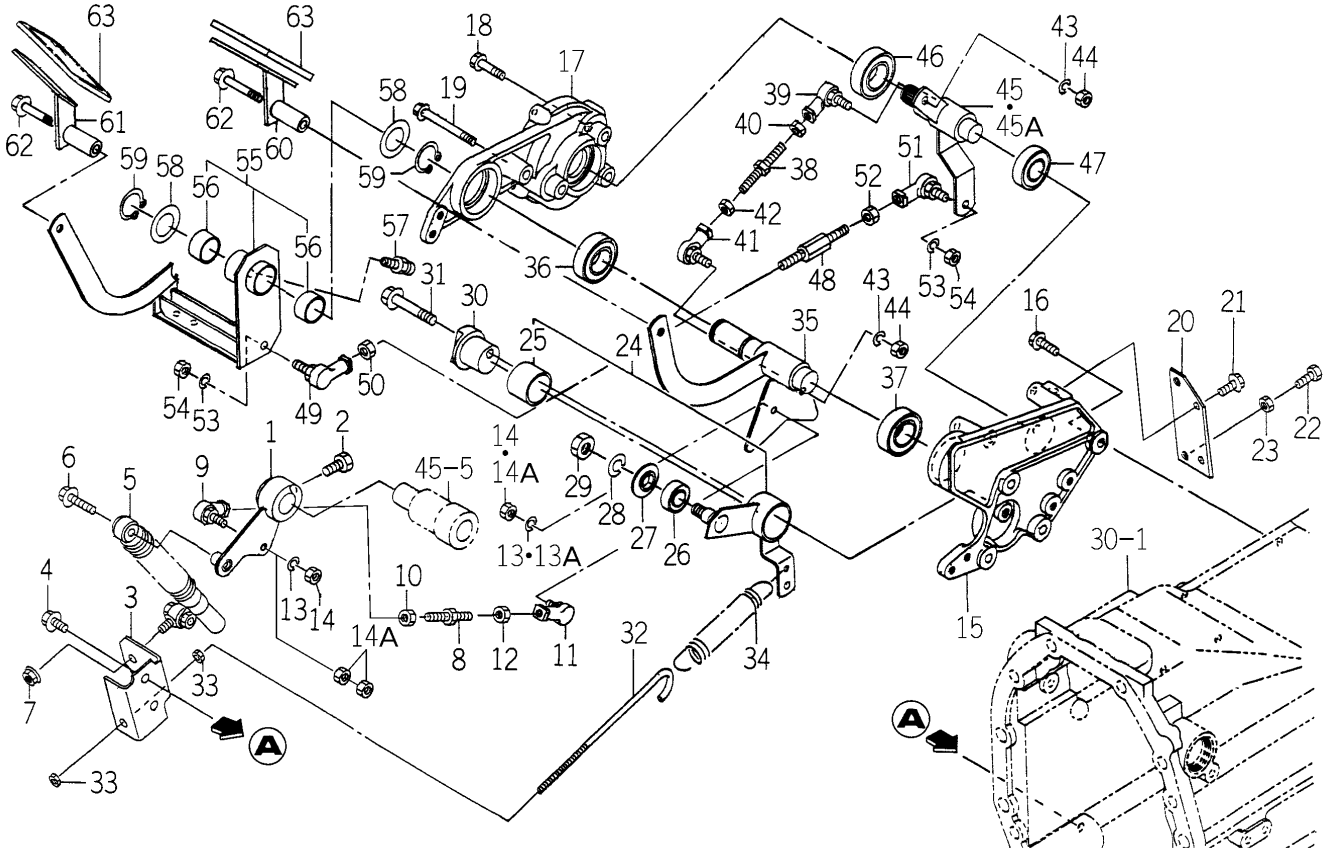

1747-640A-0100

KEY	PART CODE	DESCRIPTION	SPC	TYPE OF MODEL TG5330 E4	TG5330 E6	TG5390 E4	TG5390 E6	ITC	COL	GRP	REMARKS
58	1646-640-001-00	WASHER/25X43X02	*				2				
59	V704-140-025-00	RING,SNAP/25 C	*				2				
60	1747-640-540-20	PEDAL/HST/L COMP	*				1	3			
61	1747-640-550-20	PEDAL/HST/R COMP	*				1	3			
62	V231-361-005-50	FLANGEBOLT	*				2				
63	1608-207-014-00	PAD (HST)	*				2				

FIG.169 PEDAL (HST) SYSTEM (H3 TYPE)(1/2)

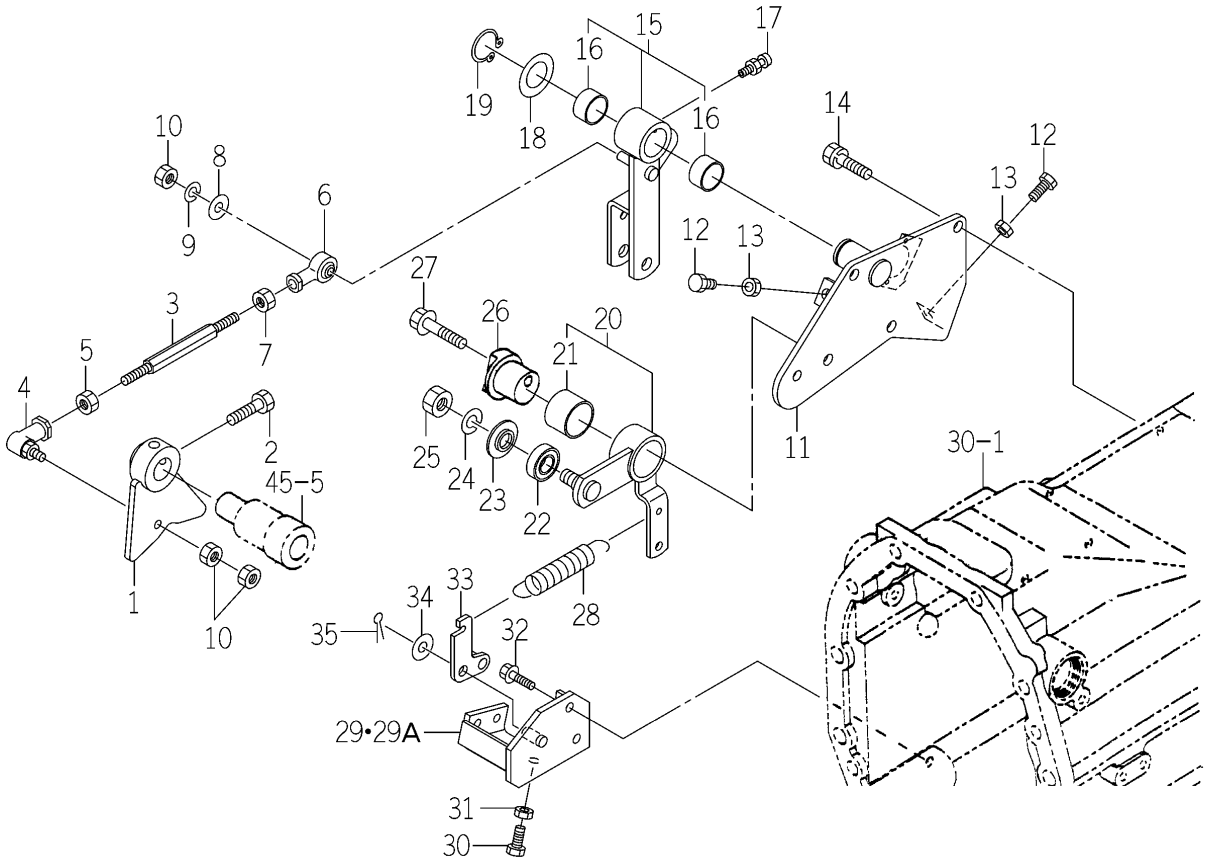

1747-640B-0100

KEY	PART CODE	DESCRIPTION	SPC	TYPE OF MODEL TG5330 E4	TG5330 E6	TG5390 E4	TG5390 E6	ITC	COL	GRP	REMARKS
1	1747-640-700-10	ARM/NEUTRAL COMP	*			1					
2	1646-226-053-00	BOLT/SM/M10X23	*			1					
3	1747-640-071-00	ROD/M08X140	*			1					
4	1560-695-021-00	JOINT BALL M08RH	*			1					
5	V304-460-008-00	NUT/M8	*			1					
6	1646-640-058-00	JOINT/BALL/M08/LH	*			1					
7	1560-132-007-30	NUT/M8	*			1					
8	6209-500-005-00	WASHER/08X15.5X1.6	*			1					
9	V401-160-008-00	WASHER,SP/M 8	*			1					
10	V304-260-008-00	NUT	*			3					
11	1747-640-730-00	BRACKET COMP	*			1					
12	V201-361-003-50	BOLT/M10X35	*			2					
13	V304-260-010-00	NUT	*			2					
14	V211-561-002-00	BOLT/M10X20	*			4					
15	1747-640-710-00	ARM ASSY	*			1					
16	8654-203-201-00	BUSH/25X28X15	*			2					
17	V760-150-000-00	NIPPLE,GREASE	*			1					
18	1646-640-001-00	WASHER/25X43X02	*			1					
19	V704-140-025-00	RING,SNAP/25 C	*			1					
20	1747-640-740-00	ARM/NEUTRAL ASSY	*			1					
21	1646-640-221-00	BUSH/32X36X25	*			1					
22	V600-350-600-20	BEARING/BALL	*			1					
23	1689-271-006-00	WASHER/38X12X2	*			1					
24	V401-160-012-00	WASHER,SP/M12	*			1					
25	V305-460-012-00	NUT	*			1					
26	1646-640-006-00	PIN/ADJUST	*			1					
27	V231-361-004-50	FLANGEBOLT	*			1					
28	3661-114-004-00	SPRING/HE122	*			1					
29	1747-640-760-00	BRACKET COMP	*			1 -1335					
29A	1747-640-760-10	BRACKET COMP	*			1 1336-		1			

FIG.169 PEDAL (HST) SYSTEM (H3 TYPE)(2/2)

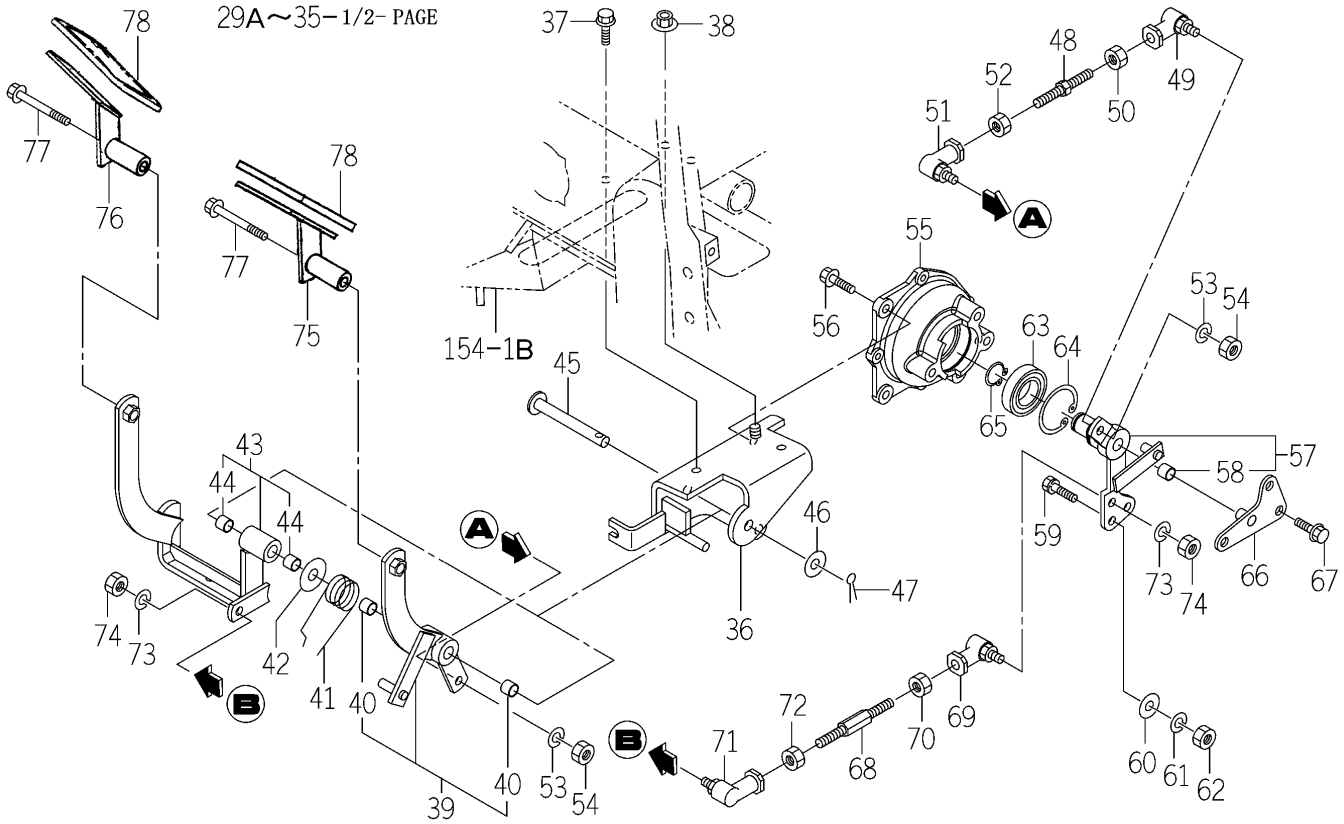

1747-640B-0100

KEY	PART CODE	DESCRIPTION	SPC	TYPE OF MODEL TG5330 E4	TG5330 E6	TG5390 E4	TG5390 E6	ITC	COL	GRP	REMARKS
30	V201-361-004-00	BOLT/M10X40	*			1					
31	V304-260-010-00	NUT	*			1					
32	V231-360-802-00	FLANGEBOLT	*			2					
33	1747-640-770-00	ARM/TENSION COMP	*			1					
34	V411-260-010-00	WASHER/M10	*			1					
35	V500-163-002-00	PIN,SPLIT/3 X20	*			1					
36	1747-640-850-00	BRACKET/PEDAL COMP	*			1					
37	V231-360-801-60	FLANGEBOLT	*			2					
38	V363-260-008-00	NUT/WASHER	*			1					
39	1747-640-800-00	ARM/HST/F ASSY	*			1					
40	1588-502-007-00	BUSH(10X12X10)	*			2					
41	3805-223-002-00	SPRING/HT29	*			1					
42	1747-640-081-00	WASHER/11X32X02	*			1					
43	1747-640-820-00	ARM/HST/R ASSY	*			1					
44	1588-502-007-00	BUSH(10X12X10)	*			2					
45	1747-640-082-00	PIN/10X86	*			1					
46	V411-260-010-00	WASHER/M10	*			1					
47	V500-163-002-00	PIN,SPLIT/3 X20	*			1					
48	1646-640-002-00	ROD/M08X64	*			1					
49	1560-695-021-00	JOINT BALL M08RH	*			1					
50	V304-460-008-00	NUT/M8	*			1					
51	1560-695-022-00	JOINT BALL M08LH	*			1					
52	1560-132-007-30	NUT/M8	*			1					
53	V401-160-008-00	WASHER,SP/M 8	*			2					
54	V304-260-008-00	NUT	*			2					
55	1747-640-083-00	HOLDER/BRAKE	*			1					
56	V231-360-801-60	FLANGEBOLT	*			2					
57	1747-640-870-00	SHAFT/COUNTER ASSY	*			1					
58	1588-502-007-00	BUSH(10X12X10)	*			1					
59	V211-260-803-00	BOLT,SEMS	*			1					

FIG.169 PEDAL (HST) SYSTEM (H3 TYPE)(2/2)

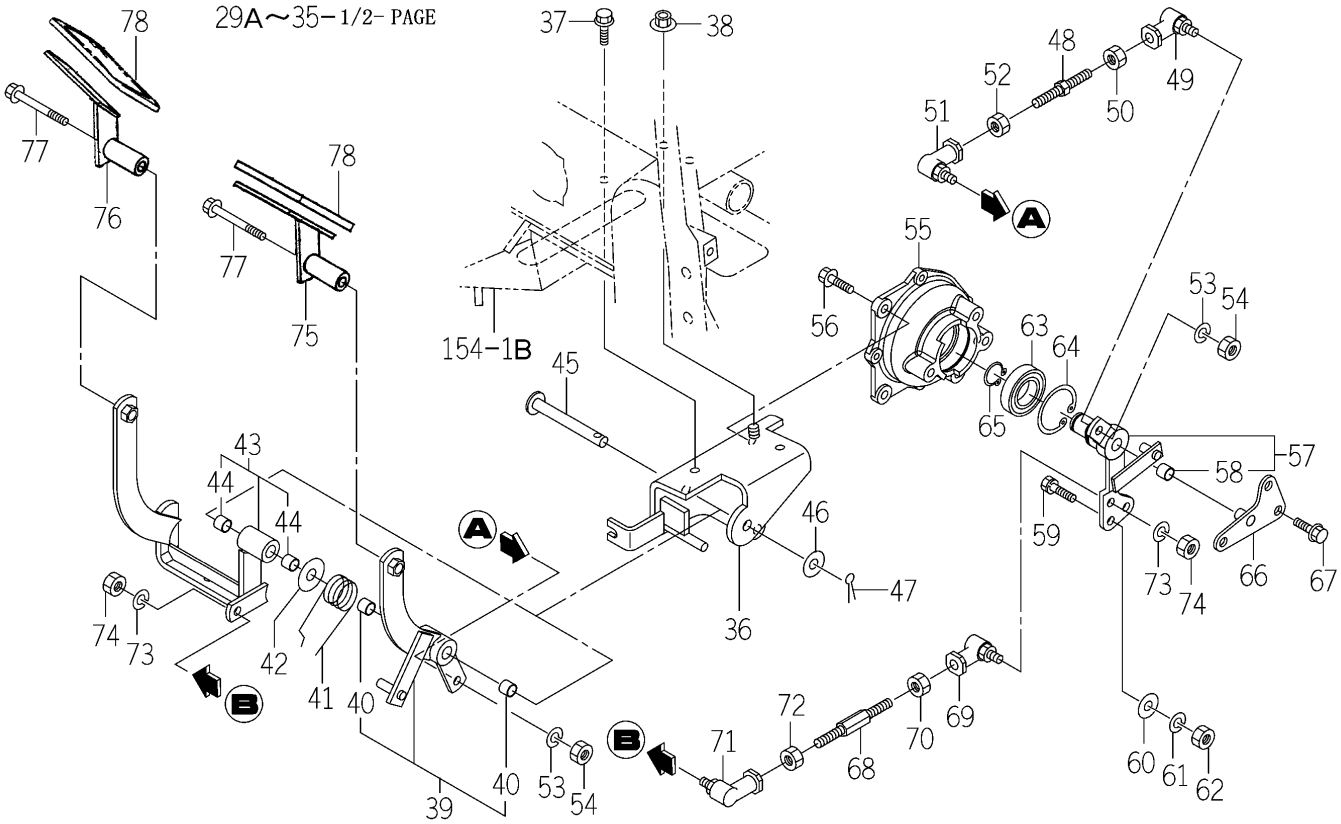

1747-640B-0100

KEY	PART CODE	DESCRIPTION	SPC	TYPE OF MODEL TG5330 E4	TG5330 E6	TG5390 E4	TG5390 E6	ITC	COL	GRP	REMARKS
60	6209-500-005-00	WASHER/08X15.5X1.6	*			1					
61	V401-160-008-00	WASHER,SP/M 8	*			1					
62	V304-260-008-00	NUT	*			1					
63	V600-450-600-50	BEARING/BALL	*			1					
64	V705-140-047-00	RING,SNAP/47 C	*			1					
65	V704-140-025-00	RING,SNAP/25 C	*			1					
66	1747-640-860-00	HOLDER COMP	*			1					
67	V231-360-801-60	FLANGEBOLT	*			3					
68	1747-640-051-00	ROD/M08X92	*			1					
69	1560-695-021-00	JOINT BALL M08RH	*			1					
70	V304-460-008-00	NUT/M8	*			1					
71	1560-695-022-00	JOINT BALL M08LH	*			1					
72	1560-132-007-30	NUT/M8	*			1					
73	V401-160-008-00	WASHER,SP/M 8	*			2					
74	V304-260-008-00	NUT	*			2					
75	1747-640-540-20	PEDAL/HST/L COMP	*			1					
76	1747-640-550-20	PEDAL/HST/R COMP	*			1					
77	V231-361-006-00	FLANGEBOLT	*			2					
78	1740-272-061-00	PAD/HST/OR	*			2					

FIG.170 CRUISE CONTROL SYSTEM(1/2)
(H TYPE EXCEPT H3)

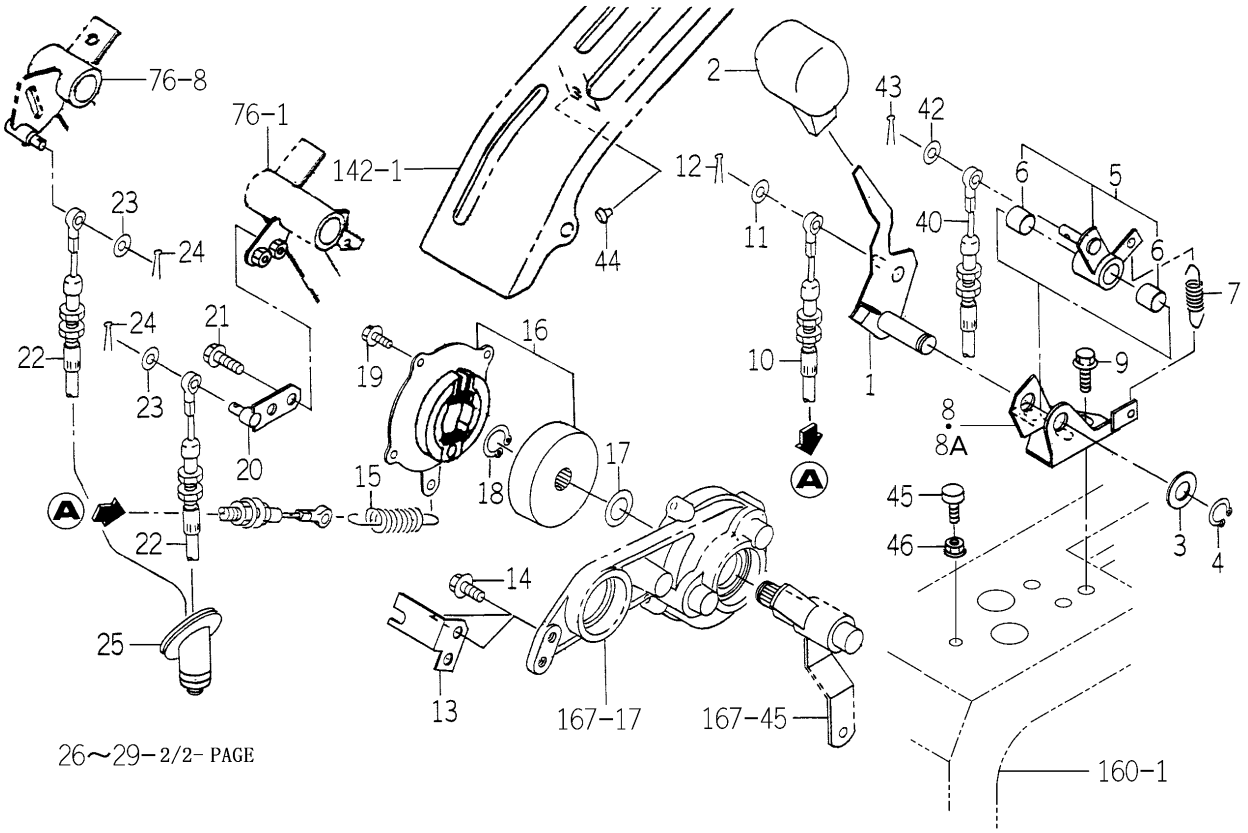

26～29－2/2- PAGE

1747-642 -0100

KEY	PART CODE	DESCRIPTION	SPC	TYPE OF MODEL TG5330 E4	TG5330 E6	TG5390 E4	TG5390 E6	ITC	COL	GRP	REMARKS
1	1743-642-500-10	LEVER/CRUISE COMP	*			1	1	1			
2	1703-261-002-00	GRIP/MAIN	*			1	1				
3	V411-260-014-00	WASHER,PL/M14	*			1	1				
4	V704-140-015-00	RING,SNAP/15 C	*			1	1				
5	1743-642-510-00	ARM/CRUISE ASSY	*			1	1				
6	3650-106-006-00	BUSH/15X17X15	*			2	2				
7	2194-128-003-00	SPRING/HE60	*			1	1				
8	1743-642-530-00	PLATE/CRUISE COMP	*			1 -1141	1 -1141				
8A	1743-642-530-10	PLATE/CRUISE COMP	*			1 1142-	1 1142-	1			
9	V231-360-801-60	FLANGEBOLT	*			3	3				
10	1743-642-600-00	CABLE/CRUISE/A ASSY	*			1	1				
11	V411-260-008-00	WASHER,PL/M 8	*			1	1				
12	V500-162-002-00	PIN,SPLIT/2 X20	*			1	1				
13	1743-642-051-00	STAY/CABLE/CRUISE	*			1	1				
14	V231-360-801-60	FLANGEBOLT	*			2	2				
15	1743-642-053-00	SPRING/HE110	*			1	1				
16	3824-222-300-00	BRAKE ASSY	*			1	1				
17	3824-222-006-00	COLLAR/18X30X1	*			1	1				
18	V704-140-018-00	RING,SNAP/18 C	*			1	1				
19	V230-360-601-20	FLANGEBOLT	*			4	4				
20	1743-642-630-10	PLATE/I/22X56 COMP	*			1	1				
21	V231-360-801-60	FLANGEBOLT	*			2	2				
22	1743-642-600-00	CABLE/CRUISE/A ASSY	*			2	2				
23	V411-260-008-00	WASHER,PL/M 8	*			4	4				
24	V500-162-002-00	PIN,SPLIT/2 X20	*			4	4				
25	1743-642-054-00	BOOT	*			1	1				
26	1743-642-550-00	ARM/CRUISE/LH ASSY	*			1	1				
27	3650-106-006-00	BUSH/15X17X15	*			1	1				
28	1743-642-570-00	ARM/CRUISE/RH ASSY	*			1	1				
29	3650-106-006-00	BUSH/15X17X15	*			2	2				

FIG.170 CRUISE CONTROL SYSTEM(2/2)
(H TYPE EXCEPT H3)

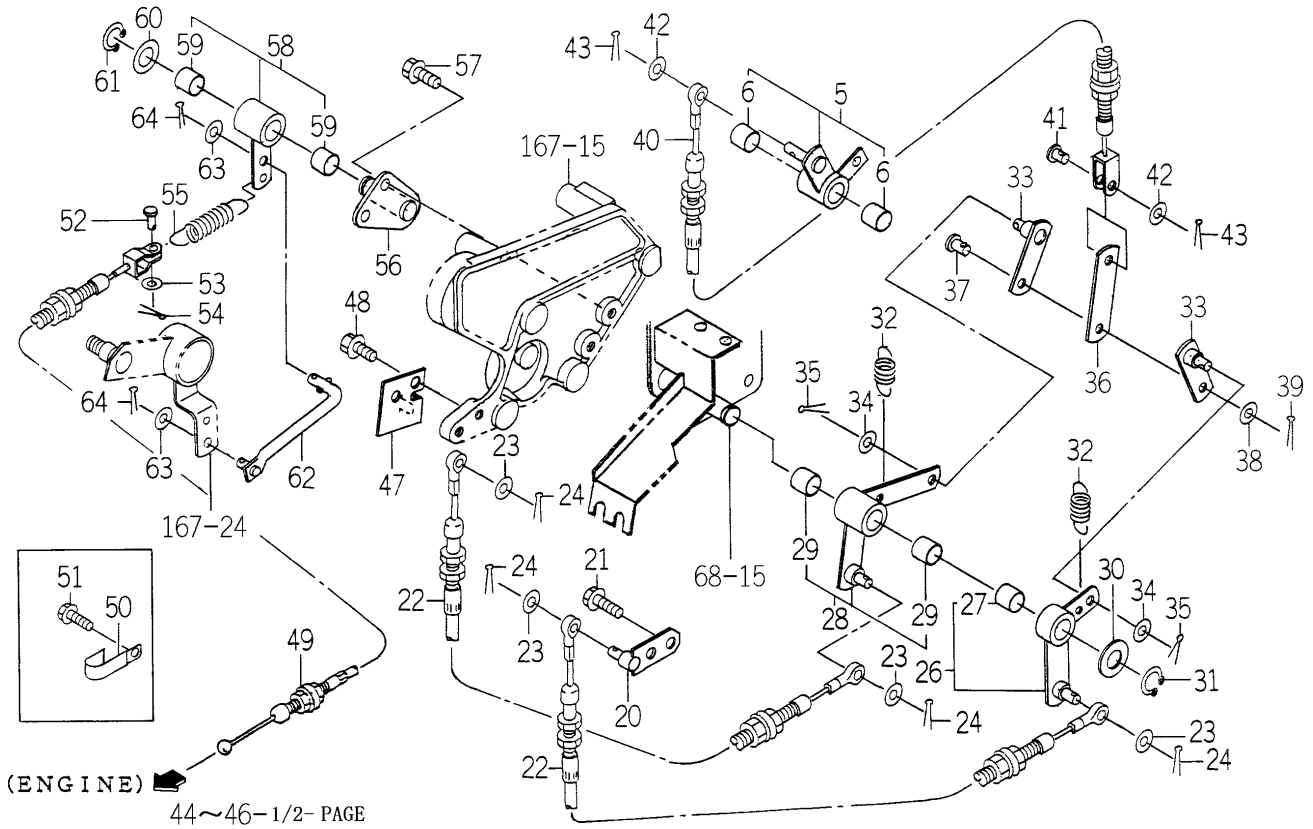

1747-642 -0100

KEY	PART CODE	DESCRIPTION	SPC	TYPE OF MODEL TG5330 E4	TG5330 E6	TG5390 E4	TG5390 E6	ITC	COL	GRP	REMARKS
30	V411-260-014-00	WASHER,PL/M14	*			1	1				
31	V704-140-015-00	RING,SNAP/15 C	*			1	1				
32	2149-806-025-10	SPRING/HE046	*			2	2				
33	1743-642-540-00	PLATE/IR/19X62 COMP	*			2	2				
34	V411-260-008-00	WASHER,PL/M 8	*			2	2				
35	V500-162-002-00	PIN,SPLIT/2 X20	*			2	2				
36	1743-642-052-00	PLATE/IR/19X80	*			1	1				
37	1432-242-001-00	PIN	*			1	1				
38	V411-260-008-00	WASHER,PL/M 8	*			1	1				
39	V500-162-002-00	PIN,SPLIT/2 X20	*			1	1				
40	1743-642-610-10	CABLE/CRUISE/B ASSY	*			1	1				
41	1432-242-001-00	PIN	*			1	1				
42	V411-260-008-00	WASHER,PL/M 8	*			2	2				
43	V500-162-002-00	PIN,SPLIT/2 X20	*			2	2				
44	1432-616-002-00	RUBBER,CUSHION	*			1	1				
45	1560-630-024-00	INSULATOR	*			1	1				
46	V362-260-008-00	NUT/WASHER	*			1	1				
47	1743-642-055-00	STAY/CABLE/ACCELERAT	*			1	1				
48	V231-360-801-60	FLANGEBOLT	*			2	2				
49	1743-642-690-00	CABLE/PEDAL/HST ASSY	*			1	1				
50	1425-621-004-00	HOLDER/JE/9-9	*			1	1				
51	V231-360-801-20	FLANGEBOLT	*			1	1				
52	1560-116-008-30	PIN/6X16	*			1	1				
53	V411-260-006-00	WASHER / M6	*			1	1				
54	V500-162-001-50	PIN,SPLIT/2 X15	*			1	1				
55	3827-221-002-10	SPRING/HE077	*			1	1				
56	1743-642-650-00	PLATE COMP	*			1	1				
57	V231-360-801-60	FLANGEBOLT	*			2	2				
58	1747-642-640-00	ARM/ACCELERATOR/E4	*			1	1				
59	3650-106-006-00	BUSH/15X17X15	*			2	2				

FIG.170 CRUISE CONTROL SYSTEM(2/2)
(H TYPE EXCEPT H3)

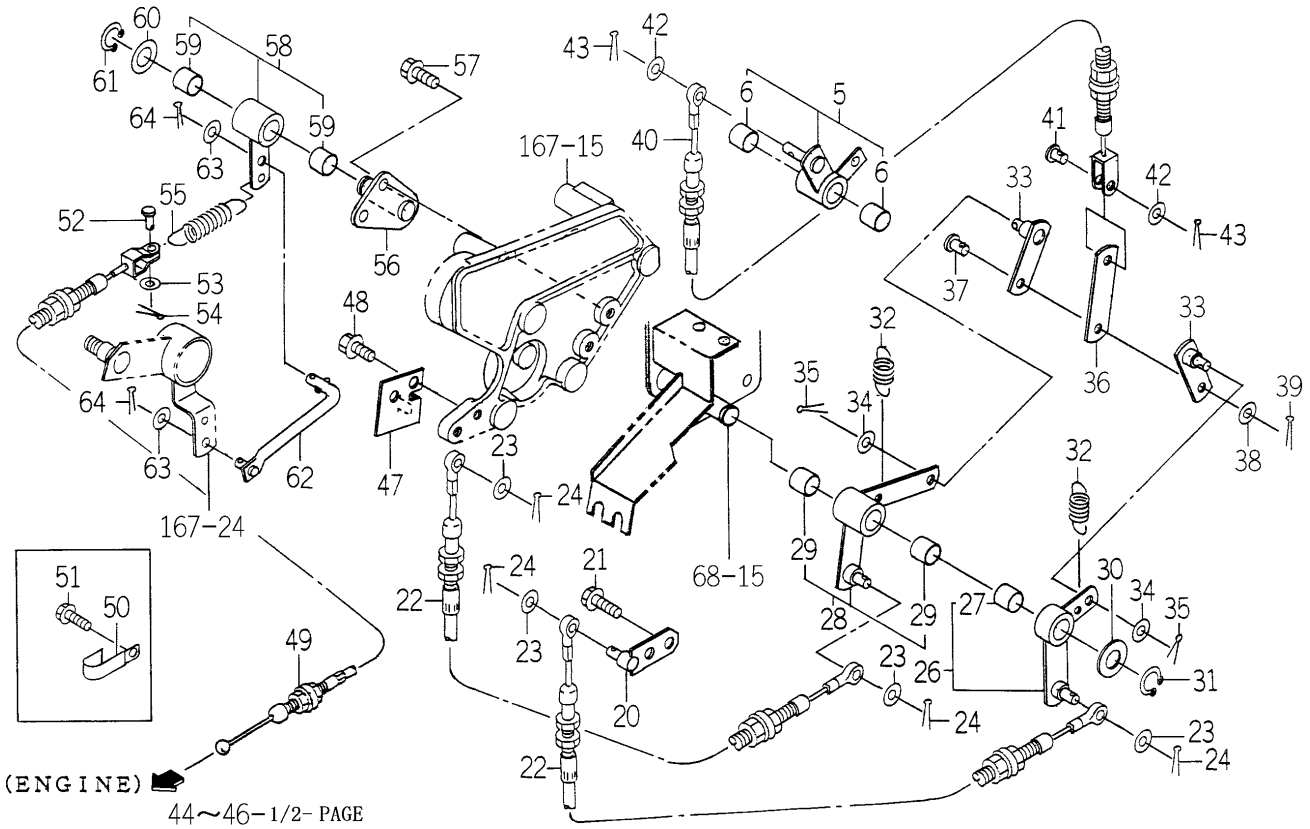

1747-642 -0100

KEY	PART CODE	DESCRIPTION	SPC	TYPE OF MODEL TG5330 E4	TG5330 E6	TG5390 E4	TG5390 E6	ITC	COL	GRP	REMARKS
60	V411-260-014-00	WASHER,PL/M14	*			1	1				
61	V704-140-015-00	RING,SNAP/15 C	*			1	1				
62	1743-642-670-00	ROD/ACCELERATOR COMP	*			1	1				
63	V411-260-008-00	WASHER,PL/M 8	*			2	2				
64	V500-162-002-00	PIN,SPLIT/2 X20	*			2	2				

FIG.171 CRUISE CONTROL SYSTEM (H3 TYPE)(1/2)

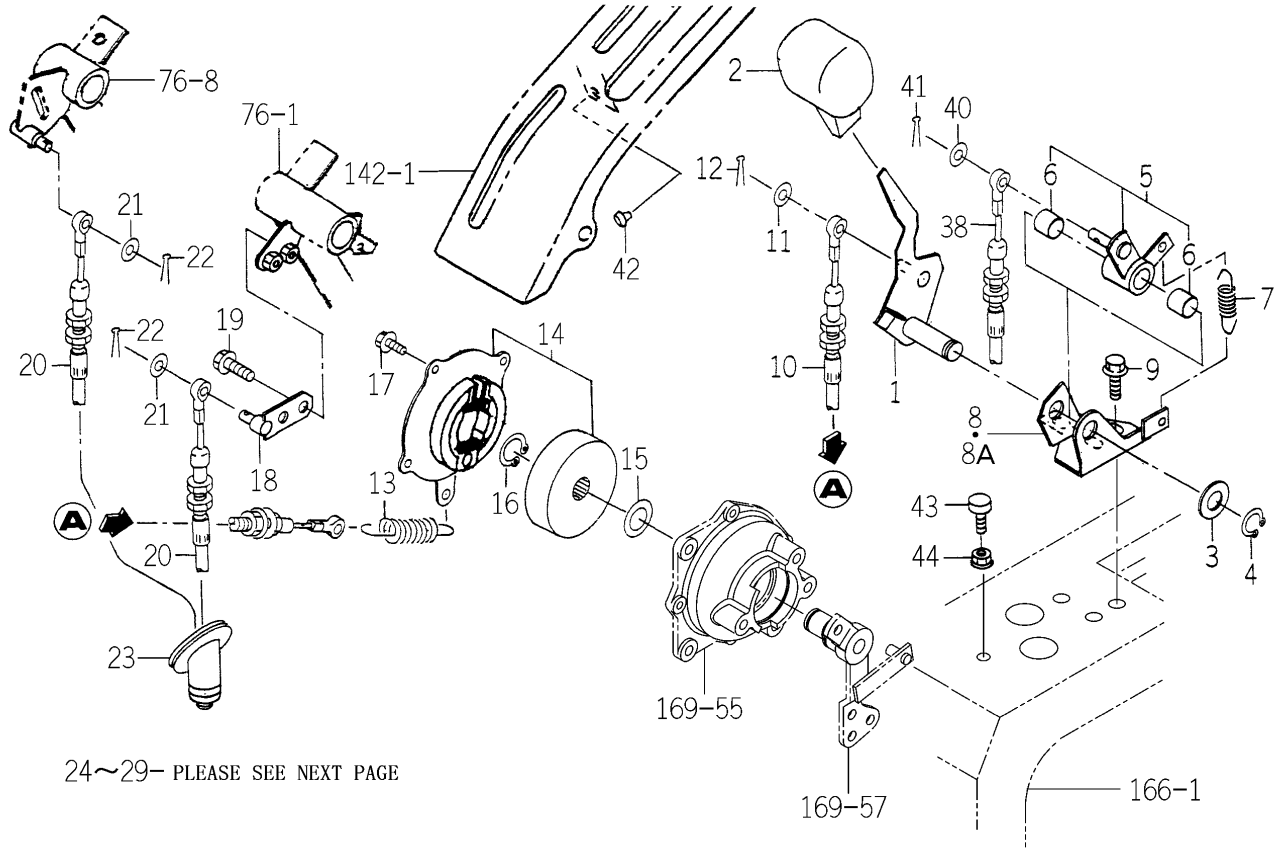

1747-642A-0100

KEY	PART CODE	DESCRIPTION	SPC	TYPE OF MODEL TG5330 E4	TG5330 E6	TG5390 E4	TG5390 E6	ITC	COL	GRP	REMARKS
1	1743-642-500-10	LEVER/CRUISE COMP	*			1					
2	1703-261-002-00	GRIP/MAIN	*			1					
3	V411-260-014-00	WASHER,PL/M14	*			1					
4	V704-140-015-00	RING,SNAP/15 C	*			1					
5	1743-642-510-00	ARM/CRUISE ASSY	*			1					
6	3650-106-006-00	BUSH/15X17X15	*			2					
7	2194-128-003-00	SPRING/HE60	*			1					
8	1743-642-530-00	PLATE/CRUISE COMP	*			1 -1141					
8A	1743-642-530-10	PLATE/CRUISE COMP	*			1 1142-		1			
9	V231-360-801-60	FLANGEBOLT	*			3					
10	1743-642-600-00	CABLE/CRUISE/A ASSY	*			1					
11	V411-260-008-00	WASHER,PL/M 8	*			1					
12	V500-162-002-00	PIN,SPLIT/2 X20	*			1					
13	1105-106-001-00	SPRING/HC094	*			1					
14	3824-222-300-00	BRAKE ASSY	*			1					
15	3824-222-006-00	COLLAR/18X30X1	*			1					
16	V704-140-018-00	RING,SNAP/18 C	*			1					
17	V230-360-601-20	FLANGEBOLT	*			4					
18	1743-642-630-10	PLATE/I/22X56 COMP	*			1					
19	V231-360-801-60	FLANGEBOLT	*			2					
20	1743-642-600-00	CABLE/CRUISE/A ASSY	*			2					
21	V411-260-008-00	WASHER,PL/M 8	*			4					
22	V500-162-002-00	PIN,SPLIT/2 X20	*			4					
23	1743-642-054-00	BOOT	*			1					
24	1743-642-550-00	ARM/CRUISE/LH ASSY	*			1					
25	3650-106-006-00	BUSH/15X17X15	*			1					
26	1743-642-570-00	ARM/CRUISE/RH ASSY	*			1					
27	3650-106-006-00	BUSH/15X17X15	*			2					
28	V411-260-014-00	WASHER,PL/M14	*			1					
29	V704-140-015-00	RING,SNAP/15 C	*			1					

FIG.171 CRUISE CONTROL SYSTEM (H3 TYPE)(2/2)

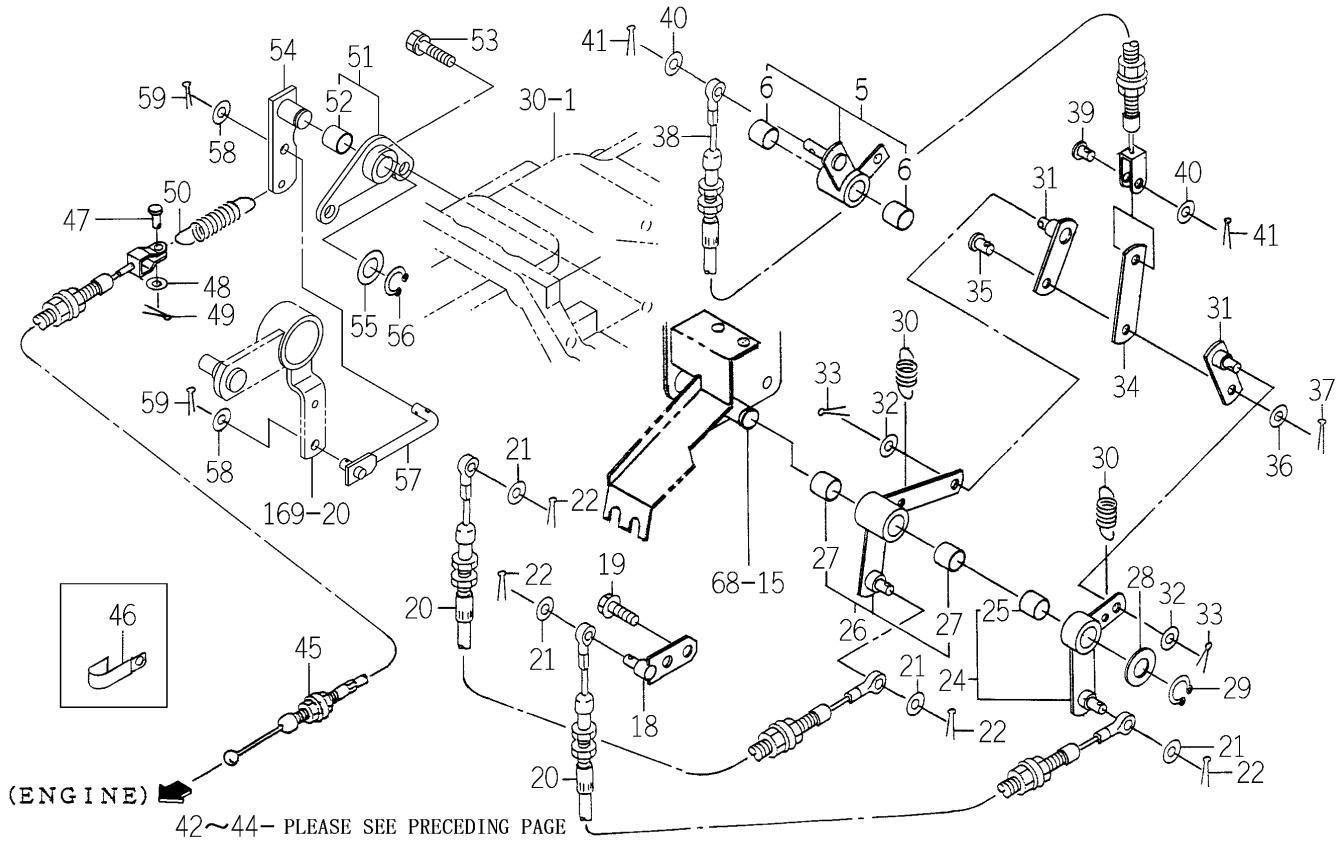

1747-642A-0100

KEY	PART CODE	DESCRIPTION	SPC	TYPE OF MODEL TG5330 E4	TG5330 E6	TG5390 E4	TG5390 E6	ITC	COL	GRP	REMARKS
30	2149-806-025-10	SPRING/HE046	*			2					
31	1743-642-540-00	PLATE/IR/19X62 COMP	*			2					
32	V411-260-008-00	WASHER,PL/M 8	*			2					
33	V500-162-002-00	PIN,SPLIT/2 X20	*			2					
34	1743-642-052-00	PLATE/IR/19X80	*			1					
35	1432-242-001-00	PIN	*			1					
36	V411-260-008-00	WASHER,PL/M 8	*			1					
37	V500-162-002-00	PIN,SPLIT/2 X20	*			1					
38	1743-642-610-10	CABLE/CRUISE/B ASSY	*			1					
39	1432-242-001-00	PIN	*			1					
40	V411-260-008-00	WASHER,PL/M 8	*			2					
41	V500-162-002-00	PIN,SPLIT/2 X20	*			2					
42	1432-616-002-00	RUBBER,CUSHION	*			1					
43	1560-630-024-00	INSULATOR	*			1					
44	V362-260-008-00	NUT/WASHER	*			1					
45	1743-642-690-00	CABLE/PEDAL/HST ASSY	*			1					
46	1425-621-004-00	HOLDER/JE/9-9	*			1					
47	1560-116-008-30	PIN/6X16	*			1					
48	V411-260-006-00	WASHER / M6	*			1					
49	V500-162-001-50	PIN,SPLIT/2 X15	*			1					
50	3827-221-002-10	SPRING/HE077	*			1					
51	1747-642-700-00	BRACKET ASSY	*			1					
52	3650-106-006-00	BUSH/15X17X15	*			1					
53	V211-561-002-00	BOLT/M10X20	*			2					
54	1747-642-720-00	ARM/ACCELERATOR COMP	*			1					
55	V411-260-014-00	WASHER,PL/M14	*			1					
56	V704-140-015-00	RING,SNAP/15 C	*			1					
57	1747-642-730-00	ROD/ACCELERATOR/A	*			1					
58	V411-260-008-00	WASHER,PL/M 8	*			2					
59	V500-162-002-00	PIN,SPLIT/2 X20	*			2					

FIG.172 ELC. SYSTEM (FRONT) (S TYPE)(1/2)

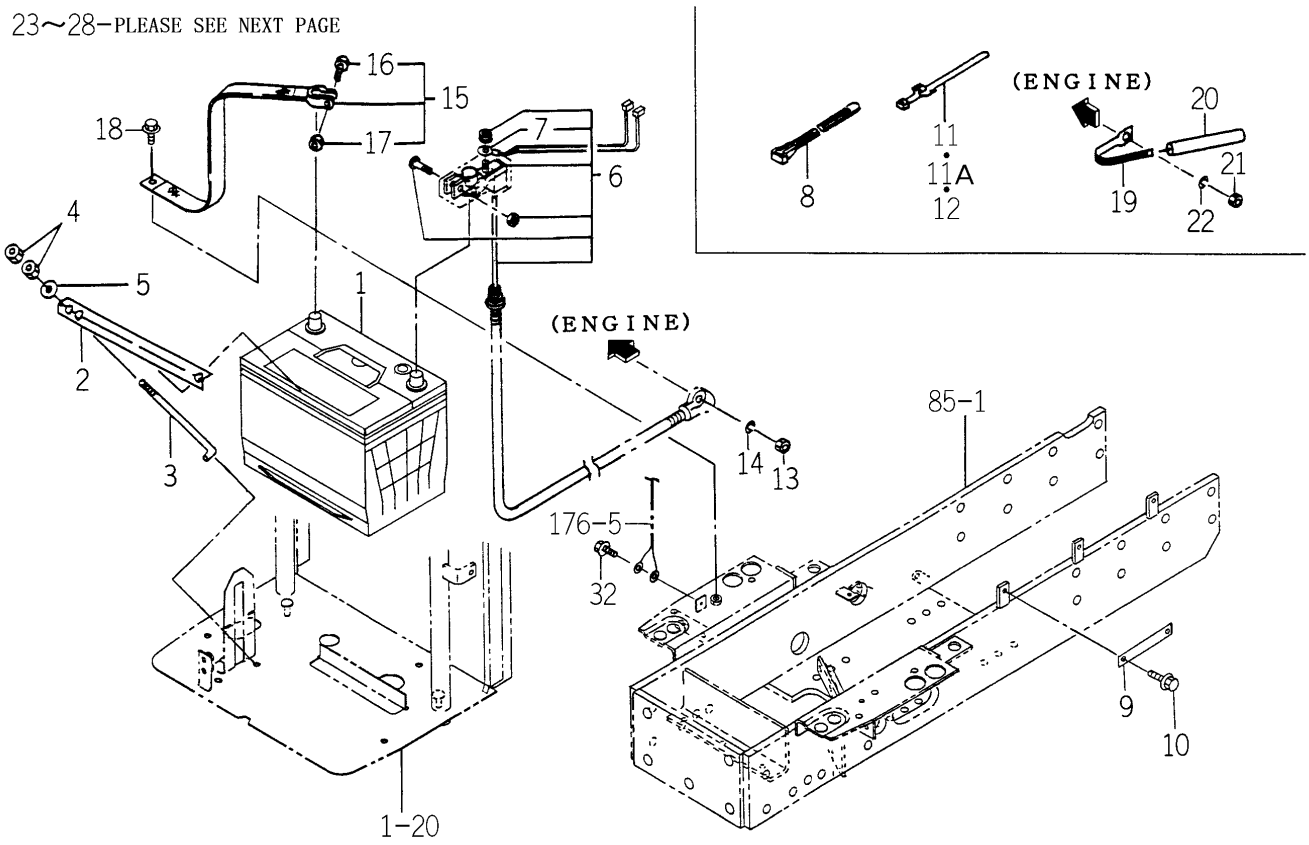

1746-650 -0100

KEY	PART CODE	DESCRIPTION	SPC	TYPE OF MODEL TG5330 E4	TG5330 E6	TG5390 E4	TG5390 E6	ITC	COL	GRP	REMARKS
1	1742-650-220-00	BATTERY/80D26R ASSY	*	1		1					
2	1716-112-001-00	PLATE/BATTERY	*	1		1					
3	1675-112-002-00	BOLT/BATTERY	*	2		2					
4	V301-260-006-00	NUT/M6	*	4		4					
5	V411-260-006-00	WASHER / M6	*	2		2					
6	1729-650-210-10	CABLE/BATTERY ASSY	*	1		1					
7	1696-650-243-00	HARNESS ASSY	*	1		1					
8	1376-402-003-00	BAND,WIRE/140	*	2		2					
9	3666-223-001-00	PLATE/I/16X116	*	1		1					
10	V231-360-801-60	FLANGEBOLT	*	1		1					
11	1560-666-004-00	BAND	*	2 -109		2 -364					
11A	1560-666-004-00	BAND	*	1 110-		1 365-					
12	1560-666-004-00	BAND	*	1		1					
13	V304-260-008-00	NUT	*	1		1					
14	V401-160-008-00	WASHER,SP/M 8	*	1		1					
15	3768-171-003-00	STRAP,GROUND	*	1		1					
16	1568-650-004-10	BOLT/M08X32	*	1		1					
17	1568-650-005-10	NUT/M08	*	1		1					
18	V231-360-801-60	FLANGEBOLT	*	1		1					
19	1650-650-015-00	CLAMP	*	1		1					
20	1650-650-017-00	TUBE/120	*	1		1					
21	V301-260-006-00	NUT/M6	*	1		1					
22	V401-160-006-00	WASHER,SP/M 6	*	1		1					
23	1674-652-200-00	LAMP/HEAD ASSY	*	2 -946		2 -1245					**********
23A	1674-652-200-10	LAMP/HEAD ASSY	*	2 947-		2 1246-		1			
24	1674-652-202-00	BULB/12V/45/40W	*	2		2					
25	V111-166-003-00	SCREW/M6X30	*	6		6					
26	1729-650-002-00	SPRING/HC016	*	6		6					
27	1746-650-210-00	STAY/LAMP/LH COMP	*	1		1					
28	1746-650-220-00	STAY/LAMP/RH COMP	*	1		1					

FIG.172 ELC. SYSTEM (FRONT) (S TYPE)(2/2)

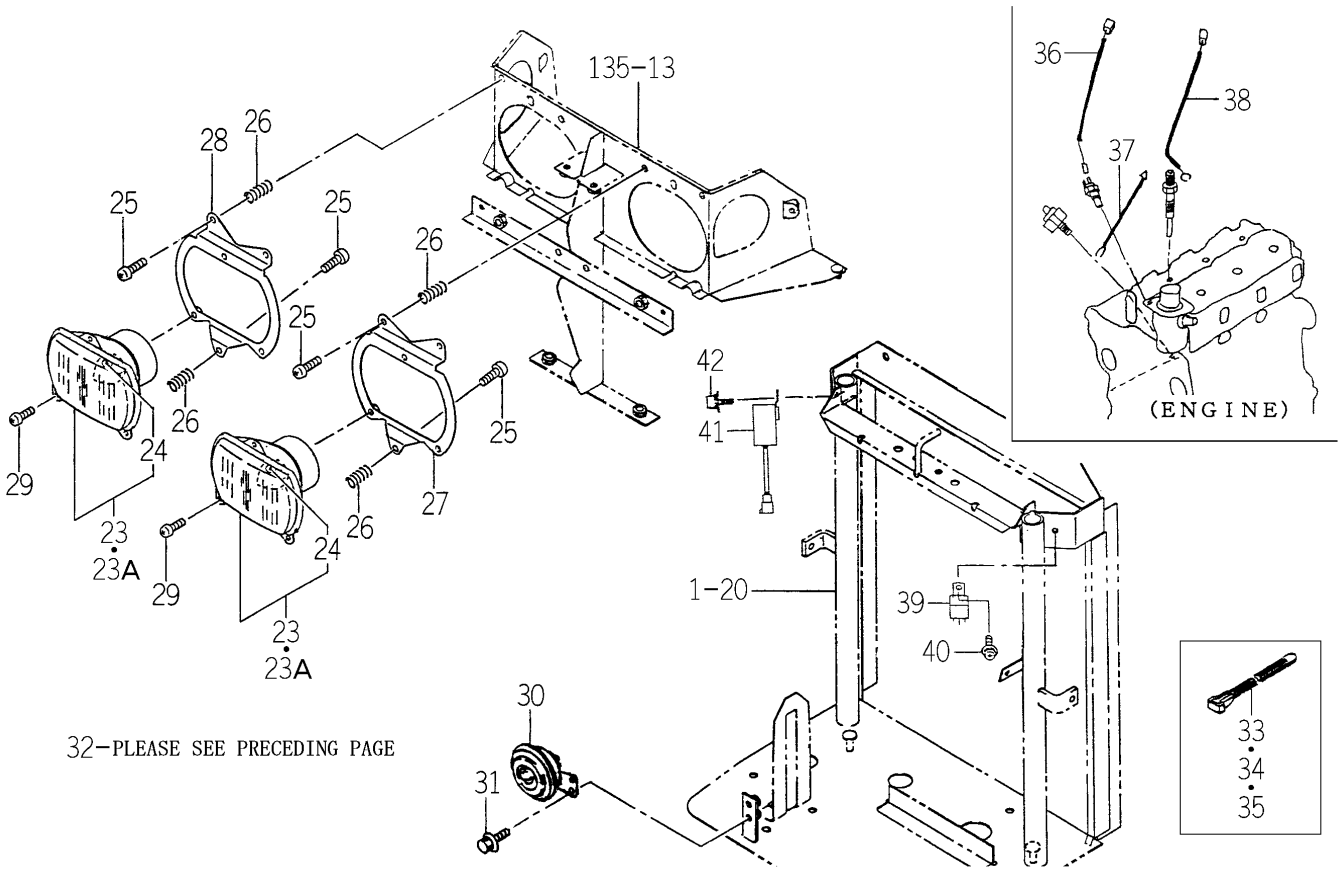

1746-650 -0100

KEY	PART CODE	DESCRIPTION	SPC	TYPE OF MODEL TG5330 E4	TG5330 E6	TG5390 E4	TG5390 E6	ITC	COL	GRP	REMARKS
29	V111-165-001-20	SCREW/M5X12	*	6		6					
30	1740-680-530-00	HORN ASSY	*	1		1					
31	V230-360-601-60	FLANGEBOLT	*	2		2					
32	V230-360-601-60	FLANGEBOLT	*	1		1					
33	1376-402-003-00	BAND,WIRE/140	*	4		4					
34	1342-402-006-00	BAND/WIRE/250	*	2		2					
35	1376-402-003-00	BAND,WIRE/140	*	1		1					
				479-		869-					
36	1742-650-270-10	HARNESS/JOINT/THERMO	*	1		1					
37	1600-624-004-10	HARNESS/OILPRESSURE	*	1		1					
38	1568-668-203-00	HARNESS,GLOW	*	1		1					
39	1725-681-200-00	RELAY/35A ASSY	*	1		1					
40	V120-365-001-60	SCREW/SP	*	1		1					
41	1742-650-320-00	UNIT/TIMER ASSY	*	1		1					
42	V120-365-001-60	SCREW/SP	*	1		1					

FIG.173 ELC. SYSTEM (FRONT) (H3 TYPE)(1/2)

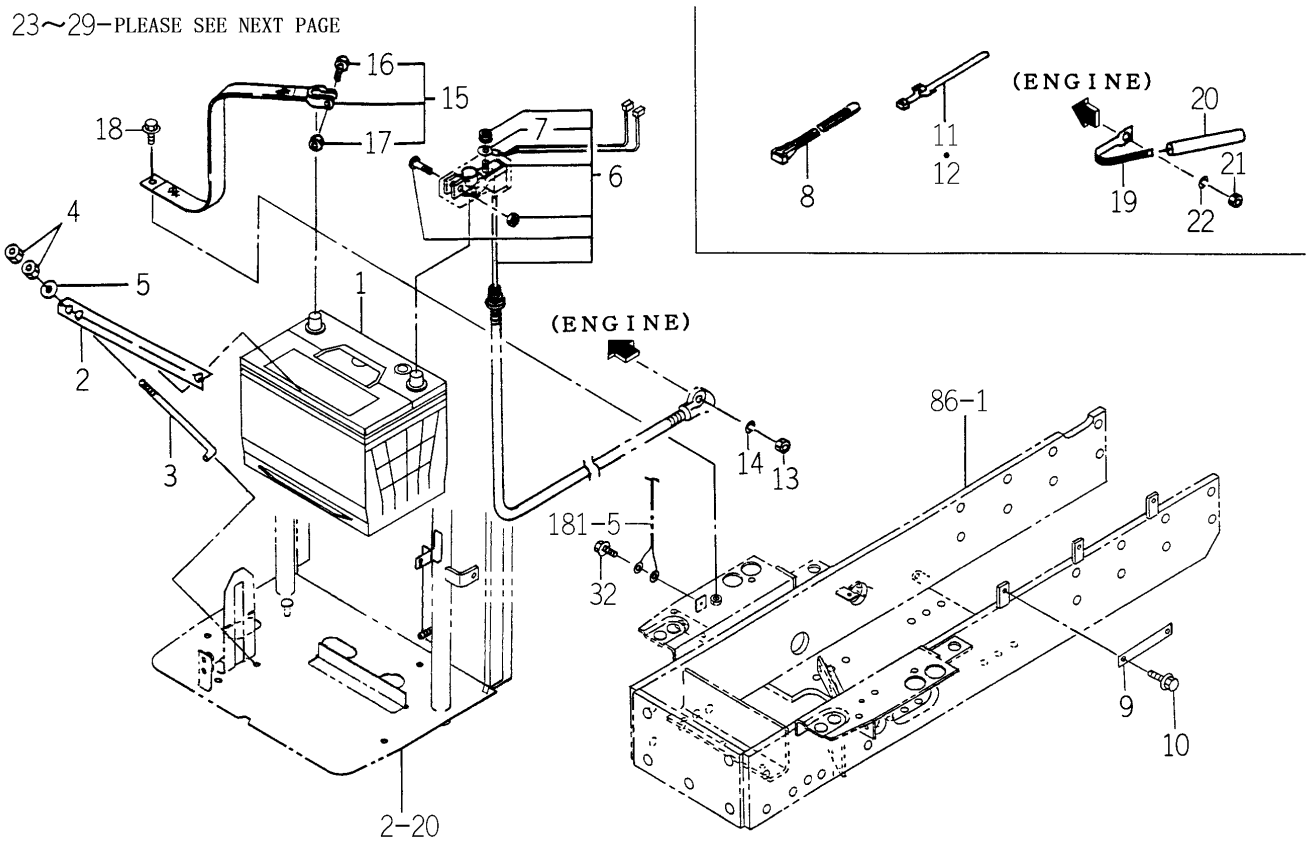

1747-650 -0100

KEY	PART CODE	DESCRIPTION	SPC	TYPE OF MODEL TG5330 E4	TG5330 E6	TG5390 E4	TG5390 E6	ITC	COL	GRP	REMARKS
1	1742-650-220-00	BATTERY/80D26R ASSY	*			1					
2	1716-112-001-00	PLATE/BATTERY	*			1					
3	1675-112-002-00	BOLT/BATTERY	*			2					
4	V301-260-006-00	NUT/M6	*			4					
5	V411-260-006-00	WASHER / M6	*			2					
6	1729-650-210-10	CABLE/BATTERY ASSY	*			1					
7	1696-650-243-00	HARNESS ASSY	*			1					
8	1376-402-003-00	BAND,WIRE/140	*			2					
9	3666-223-001-00	PLATE/I/16X116	*			1					
10	V231-360-801-60	FLANGEBOLT	*			1					
11	1560-666-004-00	BAND	*			1					
12	1560-666-004-00	BAND	*			1					
13	V304-260-008-00	NUT	*			1					
14	V401-160-008-00	WASHER,SP/M 8	*			1					
15	3768-171-003-00	STRAP,GROUND	*			1					
16	1568-650-004-10	BOLT/M08X32	*			1					
17	1568-650-005-10	NUT/M08	*			1					
18	V231-360-801-60	FLANGEBOLT	*			1					
19	1650-650-015-00	CLAMP	*			1					
20	1650-650-017-00	TUBE/120	*			1					
21	V301-260-006-00	NUT/M6	*			1					
22	V401-160-006-00	WASHER,SP/M 6	*			1					
23	1674-652-200-00	LAMP/HEAD ASSY	*			2 -1245					**********
23A	1674-652-200-10	LAMP/HEAD ASSY	*			2 1246-		1			
24	1674-652-202-00	BULB/12V/45/40W	*			2					
25	V111-166-003-00	SCREW/M6X30	*			6					
26	1729-650-002-00	SPRING/HC016	*			6					
27	1746-650-210-00	STAY/LAMP/LH COMP	*			1					
28	1746-650-220-00	STAY/LAMP/RH COMP	*			1					
29	V111-165-001-20	SCREW/M5X12	*			6					

FIG.173 ELC. SYSTEM (FRONT) (H3 TYPE)(2/2)

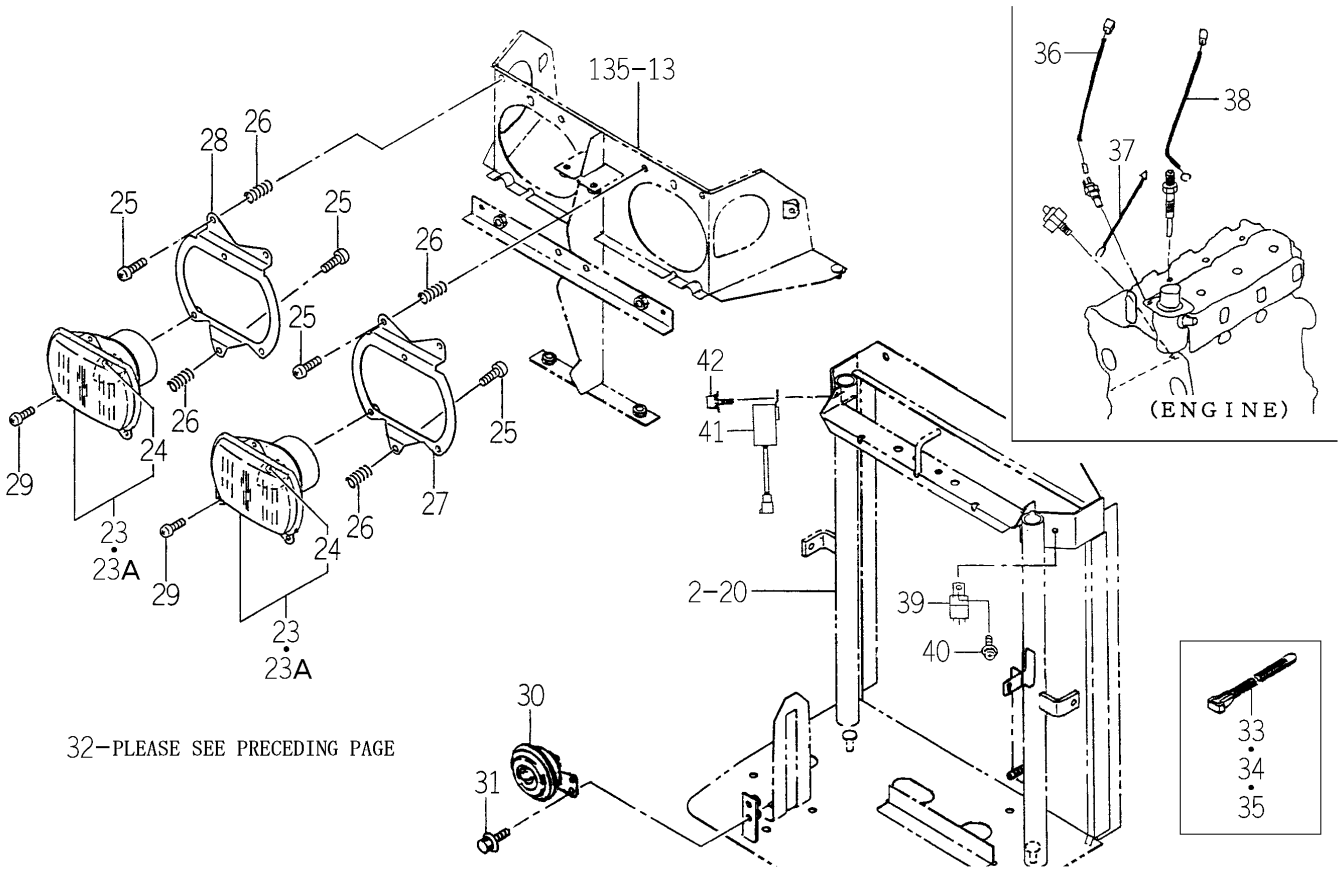

1747-650 -0100

KEY	PART CODE	DESCRIPTION	SPC	TYPE OF MODEL TG5330 E4	TG5330 E6	TG5390 E4	TG5390 E6	ITC	COL	GRP	REMARKS
30	1740-680-530-00	HORN ASSY	*			1					
31	V230-360-601-60	FLANGEBOLT	*			2					
32	V230-360-601-60	FLANGEBOLT	*			1					
33	1376-402-003-00	BAND,WIRE/140	*			4					
34	1342-402-006-00	BAND/WIRE/250	*			2					
35	1376-402-003-00	BAND,WIRE/140	*			1					
36	1729-650-260-00	HARNESS/THERMOMETER	*			1					
37	1747-650-002-00	HARNESS/OILPRESSURE	*			1					
38	1568-668-203-00	HARNESS,GLOW	*			1					
39	1725-681-200-00	RELAY/35A ASSY	*			1					
40	V120-365-001-60	SCREW/SP	*			1					
41	1742-650-320-00	UNIT/TIMER ASSY	*			1					
42	V120-365-001-60	SCREW/SP	*			1					

FIG.174 ELC. SYSTEM (FRONT) (E6 TYPE)(1/2)

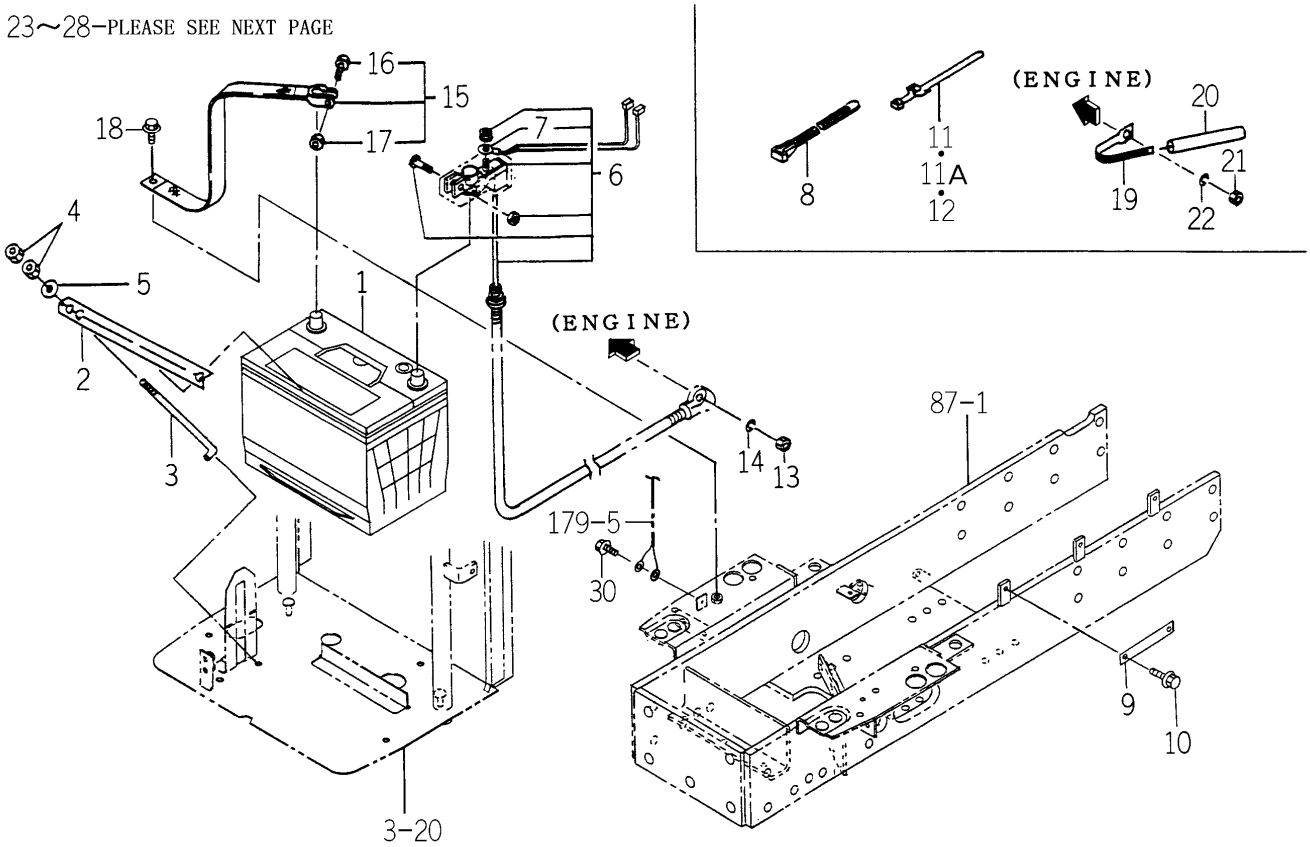

1746-650A-0100

KEY	PART CODE	DESCRIPTION	SPC	TYPE OF MODEL TG5330 E4	TG5330 E6	TG5390 E4	TG5390 E6	ITC	COL	GRP	REMARKS
1	1742-650-220-00	BATTERY/80D26R ASSY	*		1		1				
2	1716-112-001-00	PLATE/BATTERY	*		1		1				
3	1675-112-002-00	BOLT/BATTERY	*		2		2				
4	V301-260-006-00	NUT/M6	*		4		4				
5	V411-260-006-00	WASHER / M6	*		2		2				
6	1729-650-210-10	CABLE/BATTERY ASSY	*		1		1				
7	1696-650-243-00	HARNESS ASSY	*		1		1				
8	1376-402-003-00	BAND,WIRE/140	*		2		2				
9	3666-223-001-00	PLATE/I/16X116	*		1		1				
10	V231-360-801-60	FLANGEBOLT	*		1		1				
11	1560-666-004-00	BAND	*		2 -120		2 -393				
11A	1560-666-004-00	BAND	*		1 121-		1 394-				
12	1560-666-004-00	BAND	*		1		1				
13	V304-260-008-00	NUT	*		1		1				
14	V401-160-008-00	WASHER,SP/M 8	*		1		1				
15	3768-171-003-00	STRAP,GROUND	*		1		1				
16	1568-650-004-10	BOLT/M08X32	*		1		1				
17	1568-650-005-10	NUT/M08	*		1		1				
18	V231-360-801-60	FLANGEBOLT	*		1		1				
19	1650-650-015-00	CLAMP	*		1		1				
20	1650-650-017-00	TUBE/120	*		1		1				
21	V301-260-006-00	NUT/M6	*		1		1				
22	V401-160-006-00	WASHER,SP/M 6	*		1		1				
23	1674-652-200-00	LAMP/HEAD ASSY	*		2 -946		2 -1245				**********
23A	1674-652-200-10	LAMP/HEAD ASSY	*		2 947-		2 1246-	1			
24	1674-652-202-00	BULB/12V/45/40W	*		2		2				
25	V111-166-003-00	SCREW/M6X30	*		6		6				
26	1729-650-002-00	SPRING/HC016	*		6		6				
27	1746-650-210-00	STAY/LAMP/LH COMP	*		1		1				
28	1746-650-220-00	STAY/LAMP/RH COMP	*		1		1				

FIG.174 ELC. SYSTEM (FRONT) (E6 TYPE)(2/2)

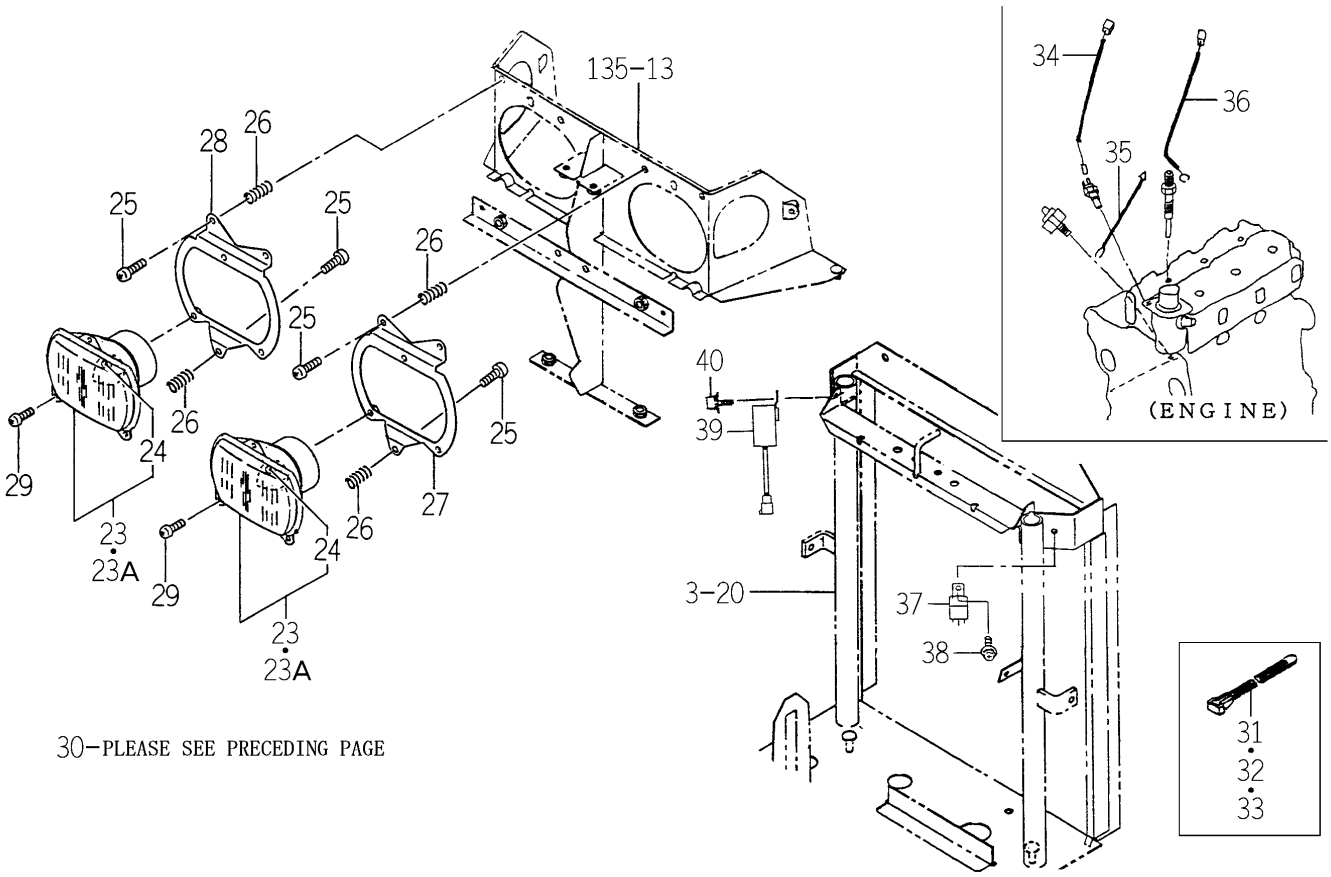

1746-650A-0100

KEY	PART CODE	DESCRIPTION	SPC	TYPE OF MODEL TG5330 E4	TG5330 E6	TG5390 E4	TG5390 E6	ITC	COL	GRP	REMARKS
29	V111-165-001-20	SCREW/M5X12	*		6		6				
30	V230-360-601-60	FLANGEBOLT	*		1		1				
31	1376-402-003-00	BAND,WIRE/140	*		4		4				
32	1342-402-006-00	BAND/WIRE/250	*		2		2				
33	1376-402-003-00	BAND,WIRE/140	*		1		1				
34	1742-650-270-10	HARNESS/JOINT/THERMO	*		567- 1		882- 1				
35	1600-624-004-10	HARNESS/OILPRESSURE	*		1		1				
36	1568-668-203-00	HARNESS,GLOW	*		1		1				
37	1725-681-200-00	RELAY/35A ASSY	*		1		1				
38	V120-365-001-60	SCREW/SP	*		1		1				
39	1742-650-320-00	UNIT/TIMER ASSY	*		1		1				
40	V120-365-001-60	SCREW/SP	*		1		1				

FIG.175 ELC. SYSTEM (FRONT)(1/2) (QE4,HE4 TYPE EXCEPT H3)

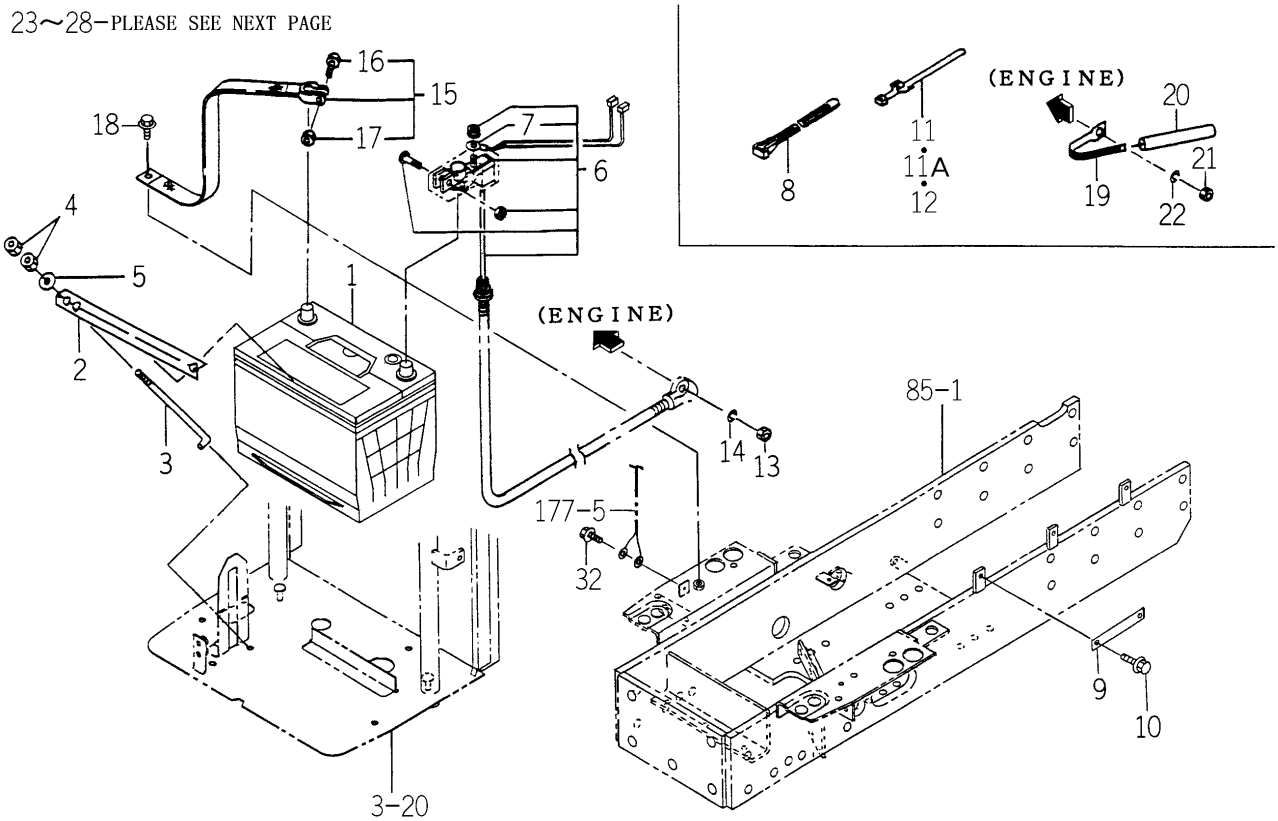

1746-650B-0100

KEY	PART CODE	DESCRIPTION	SPC	TYPE OF MODEL TG5330 E4	TG5330 E6	TG5390 E4	TG5390 E6	ITC	COL	GRP	REMARKS
1	1742-650-220-00	BATTERY/80D26R ASSY	*	1		1					
2	1716-112-001-00	PLATE/BATTERY	*	1		1					
3	1675-112-002-00	BOLT/BATTERY	*	2		2					
4	V301-260-006-00	NUT/M6	*	4		4					
5	V411-260-006-00	WASHER / M6	*	2		2					
6	1729-650-210-10	CABLE/BATTERY ASSY	*	1		1					
7	1696-650-243-00	HARNESS ASSY	*	1		1					
8	1376-402-003-00	BAND,WIRE/140	*	2		2					
9	3666-223-001-00	PLATE/I/16X116	*	1		1					
10	V231-360-801-60	FLANGEBOLT	*	1		1					
11	1560-666-004-00	BAND	*	2 -110		2 -368					
11A	1560-666-004-00	BAND	*	1 111-		1 369-					
12	1560-666-004-00	BAND	*	1		1					
13	V304-260-008-00	NUT	*	1		1					
14	V401-160-008-00	WASHER,SP/M 8	*	1		1					
15	3768-171-003-00	STRAP,GROUND	*	1		1					
16	1568-650-004-10	BOLT/M08X32	*	1		1					
17	1568-650-005-10	NUT/M08	*	1		1					
18	V231-360-801-60	FLANGEBOLT	*	1		1					
19	1650-650-015-00	CLAMP	*	1		1					
20	1650-650-017-00	TUBE/120	*	1		1					
21	V301-260-006-00	NUT/M6	*	1		1					
22	V401-160-006-00	WASHER,SP/M 6	*	1		1					
23	1674-652-200-00	LAMP/HEAD ASSY	*	2 -946		2 -1245					**********
23A	1674-652-200-10	LAMP/HEAD ASSY	*	2 947-		2 1246-		1			
24	1674-652-202-00	BULB/12V/45/40W	*	2		2					
25	V111-166-003-00	SCREW/M6X30	*	6		6					
26	1729-650-002-00	SPRING/HC016	*	6		6					
27	1746-650-210-00	STAY/LAMP/LH COMP	*	1		1					
28	1746-650-220-00	STAY/LAMP/RH COMP	*	1		1					

FIG.175 ELC. SYSTEM (FRONT)(2/2)
(QE4,HE4 TYPE EXCEPT H3)

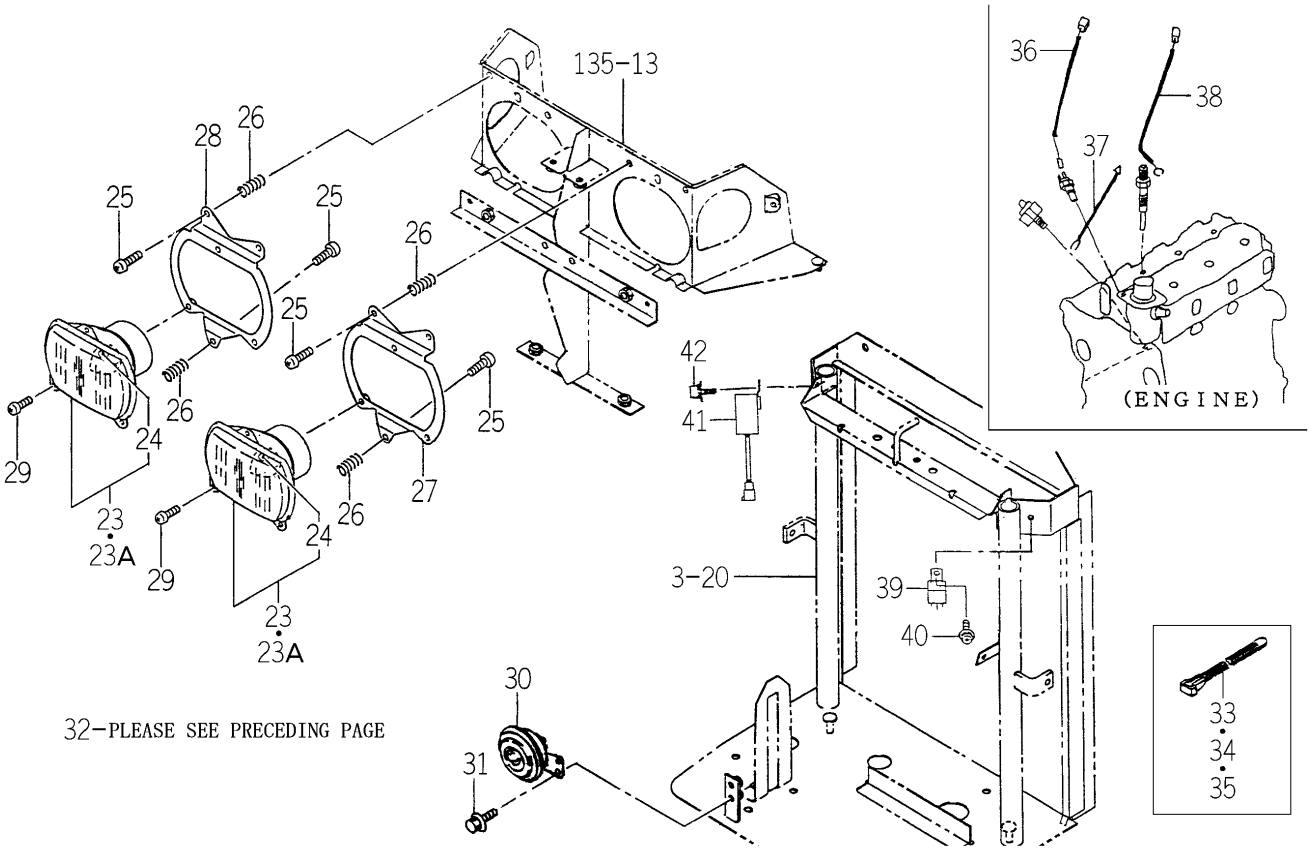

1746-650B-0100

KEY	PART CODE	DESCRIPTION	SPC	TYPE OF MODEL TG5330 E4	TG5330 E6	TG5390 E4	TG5390 E6	ITC	COL	GRP	REMARKS
29	V111-165-001-20	SCREW/M5X12	*	6		6					
30	1740-680-530-00	HORN ASSY	*	1		1					
31	V230-360-601-60	FLANGEBOLT	*	2		2					
32	V230-360-601-60	FLANGEBOLT	*	1		1					
33	1376-402-003-00	BAND,WIRE/140	*	4		4					
34	1342-402-006-00	BAND/WIRE/250	*	2		2					
35	1376-402-003-00	BAND,WIRE/140	*	1		1					
				498-		867-					
36	1729-650-260-00	HARNESS/THERMOMETER	*	1		1					
37	1600-624-004-10	HARNESS/OILPRESSURE	*	1		1					
38	1568-668-203-00	HARNESS,GLOW	*	1		1					
39	1725-681-200-00	RELAY/35A ASSY	*	1		1					
40	V120-365-001-60	SCREW/SP	*	1		1					
41	1742-650-320-00	UNIT/TIMER ASSY	*	1		1					
42	V120-365-001-60	SCREW/SP	*	1		1					

FIG.176 ELC. SYSTEM (MAIN) (S TYPE)(1/2)

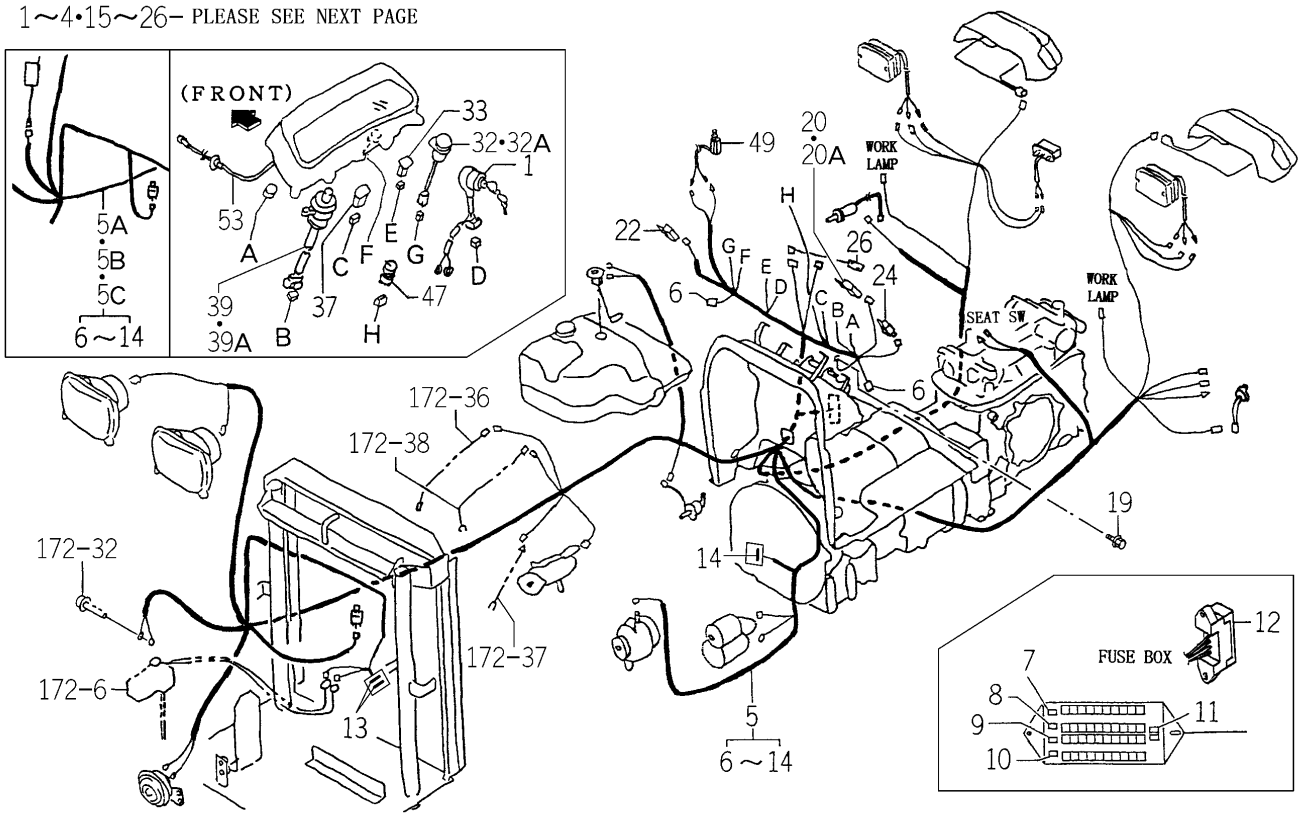

1746-652 -0100

KEY	PART CODE	DESCRIPTION	SPC	TYPE OF MODEL TG5330 E4	TG5330 E6	TG5390 E4	TG5390 E6	ITC	COL	GRP	REMARKS
1	1746-652-290-00	SWITCH/ROTALY/E SET	*	1		1					
2	1729-652-272-00	RINGNUT	*	1		1					
3	1729-652-273-00	WASHER	*	1		1					
4	1729-652-212-00	KEY	*	1		1					
5	1746-652-200-10	HARNESS/MAIN/SE ASSY	*	1 -21		1 -22					
5A	1746-652-200-30	HARNESS/MAIN/SE ASSY	*	1 -70		1 -219		1			
5B	1746-652-200-40	HARNESS/MAIN/SE ASSY	*	1 -306		1 -668		1			
5C	1746-652-200-50	HARNESS/MAIN/SE ASSY	*	1 307-		1 669-		1			
6	1560-666-212-00	DIODE	*	2		2					
7	3821-262-204-00	FUSE/BLADE/32V20A	*	3		3					
8	3821-262-203-00	FUSE(BLADE/32V15A)	*	4		4					
9	3821-262-202-00	FUSE/BLADE/32V10A	*	8		8					
10	3824-247-202-00	FUSE/BLADE/32V05A	*	6		6					
11	3821-262-209-00	TOOL/FUSE	*	1		1					
12	3821-262-206-00	COVER/FUSE	*	1		1					
13	1650-650-222-00	FUSE/SLOWBLOW	*	2		2					
14	1650-650-243-00	FUSE/SLOWBLOW	*	1		1					
15	1560-666-004-00	BAND	*	4		4					
16	1650-602-223-00	PAD/20	*	1		1					
17	V230-360-601-60	FLANGEBOLT	*	2		2					
18	3650-201-008-00	PROTECTOR,EDGE/120	*	2		2					
19	V230-360-601-60	FLANGEBOLT	*	1		1					
20	1600-623-002-00	FLASHER ASSY	*	1 -933		1 -1211					4DM0-033-600-01
20A	1600-623-002-10	FLASHER ASSY	*	1 934-		1 1212-		1			
21	V230-360-601-60	FLANGEBOLT	*	1		1					
22	1690-658-370-00	RELAY/4P ASSY	*	1		1					
23	V230-360-601-60	FLANGEBOLT	*	1		1					
24	1690-658-370-00	RELAY/4P ASSY	*	1		1					
25	V230-360-601-60	FLANGEBOLT	*	1		1					
26	1690-652-200-00	SWITCH ASSY	*	1		1					

FIG.176 ELC. SYSTEM (MAIN) (S TYPE)(2/2)

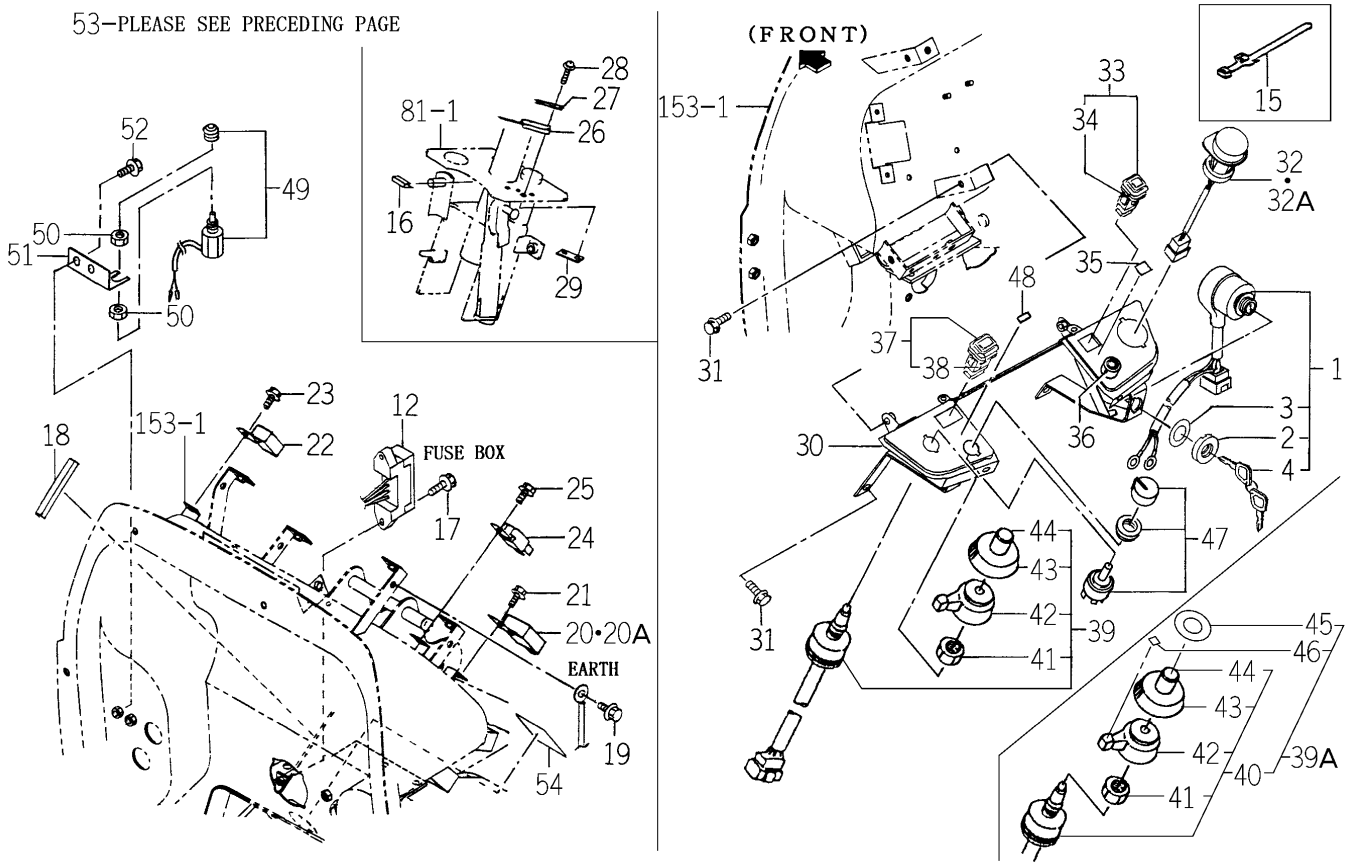

1746-652 -0100

KEY	PART CODE	DESCRIPTION	SPC	TYPE OF MODEL TG5330 E4	TG5330 E6	TG5390 E4	TG5390 E6	ITC	COL	GRP	REMARKS
27	1614-261-301-00	LEVER/SWITCH	*	1		1					
28	3800-835-034-00	SCREW/SP	*	2		2					
29	3642-496-007-10	PLATE,SWITCH	*	1		1					
30	1746-652-410-20	PANEL/SW/EU/S/H COMP	*	1		1			5I		
31	V230-360-601-60	FLANGEBOLT	*	4		4					
32	1742-652-300-00	SWITCH/PTO ASSY	*	1 -798		1 -1141					
32A	1742-652-300-20	SWITCH/PTO ASSY	*	1 799-		1 1142-		1			
33	1742-652-260-00	SWITCH/ALTERNAT ASSY	*	1		1					
34	3801-272-302-00	BULB/LAMP/12V1W	*	1		1					
35	1742-652-006-00	LABEL/MODE/PTO	*	1		1					
36	6281-420-001-00	RESISTANCE	*	1		1					
37	1740-680-550-00	SWITCH/HAZARD ASSY	*	1		1					
38	1740-680-551-00	BULB/LAMP/14V60MA	*	1 385-		1 769-					
39	1544-623-001-00	SWITCH ASSY	*	1 -798		1 -1164					
39A	1738-680-210-00	SWITCH/COMBINATION/E	*	1 799-		1 1165-					
40	1544-623-001-00	SWITCH ASSY	*	1 799-		1 1165-					
41	1544-623-232-00	NUT/M22	*	1		1					
42	1544-623-233-00	LEVER	*	1		1					
43	1544-623-234-00	KNOB	*	1		1					
44	1544-623-235-00	BOOT/HORN	*	1		1					
45	1738-680-211-00	LABEL/LIGHTING	*	1 799-		1 1165-					
46	1738-680-212-00	LABEL/TURNSIGNAL	*	1 799-		1 1165-					
47	1746-652-230-00	SWITCH ASSY	*	1		1					
48	1746-652-005-00	LABEL/POSITION	*	1		1					
49	1518-621-320-00	SWITCH,STOP	*	1		1					
50	1432-621-006-10	NUT,LOCK	*	2		2					
51	1746-652-004-00	PLATE	*	1		1					
52	V231-360-801-60	FLANGEBOLT	*	2		2					
53	1650-652-900-00	CABLE/META ASSY	*	1		1					
54	1729-652-005-00	LABEL/SEAL	*	1 -43		1 -65					

FIG.177 ELC. SYSTEM (MAIN)(1/2) (HE4 TYPE EXCEPT H3)

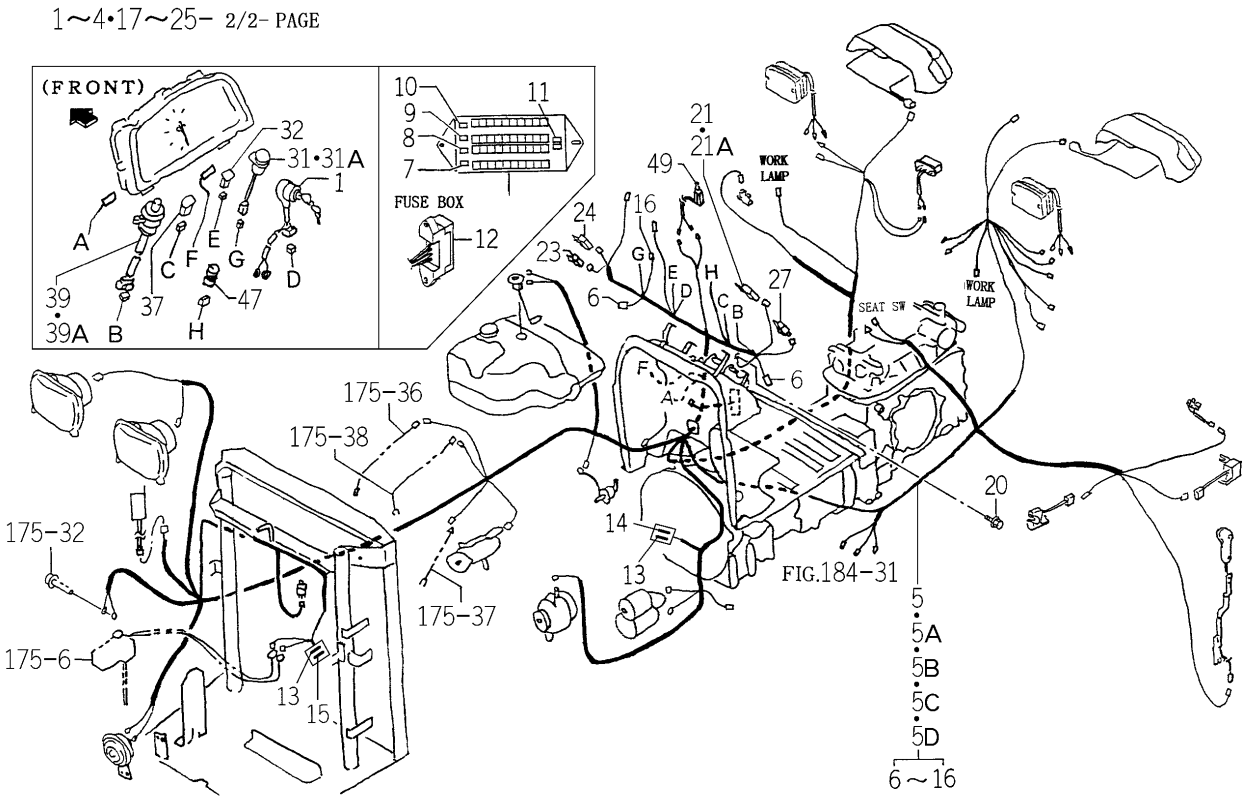

1747-652 -0100

KEY	PART CODE	DESCRIPTION	SPC	TYPE OF MODEL TG5330 E4	TG5330 E6	TG5390 E4	TG5390 E6	ITC	COL	GRP	REMARKS
1	1746-652-290-00	SWITCH/ROTALY/E SET	*			1					
2	1729-652-272-00	RINGNUT	*			1					
3	1729-652-273-00	WASHER	*			1					
4	1729-652-212-00	KEY	*			1					
5	1747-652-510-00	HARNESS/MAIN/HDE4	*			1 -64					
5A	1747-652-510-10	HARNESS/MAIN/HDE4	*			1 -197		1			
5B	1747-652-510-20	HARNESS/MAIN/HDE4	*			1 -332		1			
5C	1747-652-510-30	HARNESS/MAIN/HDE4	*			1 -710		1			
5D	1747-652-510-40	HARNESS/MAIN/HDE4	*			1 711-		1			
6	1560-666-212-00	DIODE	*			2					
7	3821-262-204-00	FUSE/BLADE/32V20A	*			4					
8	3821-262-203-00	FUSE(BLADE/32V15A)	*			5					
9	3821-262-202-00	FUSE/BLADE/32V10A	*			7					
10	3824-247-202-00	FUSE/BLADE/32V05A	*			7					
11	3821-262-209-00	TOOL/FUSE	*			1					
12	3821-262-206-00	COVER/FUSE	*			1					
13	1650-650-222-00	FUSE/SLOWBLOW	*			2					
14	1650-650-243-00	FUSE/SLOWBLOW	*			1					
15	1729-652-232-00	FUSE/SLOWBLOW	*			1					
16	1652-654-212-00	DIOD	*			1					
17	1560-666-004-00	BAND	*			4					
18	V230-360-601-60	FLANGEBOLT	*			2					
19	3650-201-008-00	PROTECTOR,EDGE/120	*			2					
20	V230-360-601-60	FLANGEBOLT	*			1					
21	1600-623-002-00	FLASHER ASSY	*			1 -1211					4DM0-033-600-01
21A	1600-623-002-10	FLASHER ASSY	*			1 1212-		1			
22	V230-360-601-60	FLANGEBOLT	*			1					
23	1690-658-370-00	RELAY/4P ASSY	*			1					
24	1690-652-210-00	RELAY ASSY	*			1					
25	3676-274-001-00	COLLAR/07X11X20	*			1 -430					

FIG.177 ELC. SYSTEM (MAIN)(2/2)
(HE4 TYPE EXCEPT H3)

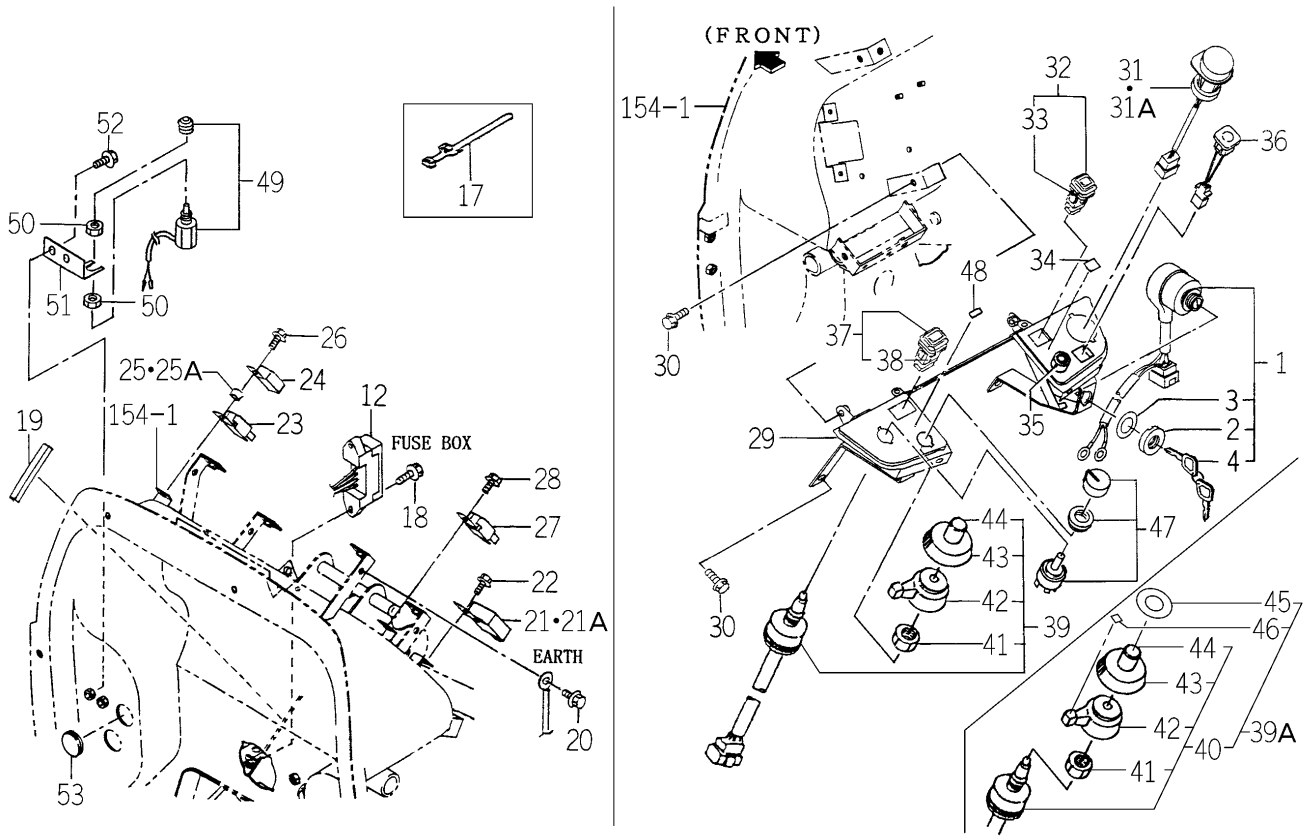

1747-652 -0100

KEY	PART CODE	DESCRIPTION	SPC	TYPE OF MODEL TG5330 E4	TG5330 E6	TG5390 E4	TG5390 E6	ITC	COL	GRP	REMARKS
25A	1672-616-004-00	COLLAR/07X11X20	*			1 431-					
26	V230-360-603-50	FLANGEBOLT	*			1					
27	1690-658-370-00	RELAY/4P ASSY	*			1					
28	V230-360-601-60	FLANGEBOLT	*			1					
29	1746-652-420-00	PANEL/SWITCH/Q/E4	*			1			5I		
30	V230-360-601-60	FLANGEBOLT	*			4					
31	1742-652-300-00	SWITCH/PTO ASSY	*			1 -1141					
31A	1742-652-300-20	SWITCH/PTO ASSY	*			1 1142-		1			
32	1742-652-260-00	SWITCH/ALTERNAT ASSY	*			1					
33	3801-272-302-00	BULB/LAMP/12V1W	*			1					
34	1742-652-006-00	LABEL/MODE/PTO	*			1					
35	6281-420-001-00	RESISTANCE	*			1					
36	1729-656-210-00	SWITCH ASSY	*			1					
37	1740-680-550-00	SWITCH/HAZARD ASSY	*			1					
38	1740-680-551-00	BULB/LAMP/14V60MA	*			1 769-					
39	1544-623-001-00	SWITCH ASSY	*			1 -1141					
39A	1738-680-210-00	SWITCH/COMBINATION/E	*			1 1142-					
40	1544-623-001-00	SWITCH ASSY	*			1 1142-					
41	1544-623-232-00	NUT/M22	*			1					
42	1544-623-233-00	LEVER	*			1					
43	1544-623-234-00	KNOB	*			1					
44	1544-623-235-00	BOOT/HORN	*			1					
45	1738-680-211-00	LABEL/LIGHTING	*			1 1142-					
46	1738-680-212-00	LABEL/TURNSIGNAL	*			1 1142-					
47	1746-652-230-00	SWITCH ASSY	*			1					
48	1746-652-005-00	LABEL/POSITION	*			1					
49	1518-621-320-00	SWITCH,STOP	*			1					
50	1432-621-006-10	NUT,LOCK	*			2					
51	1746-652-004-00	PLATE	*			1					
52	V231-360-801-60	FLANGEBOLT	*			2					

FIG.177 ELC. SYSTEM (MAIN)(2/2) (HE4 TYPE EXCEPT H3)

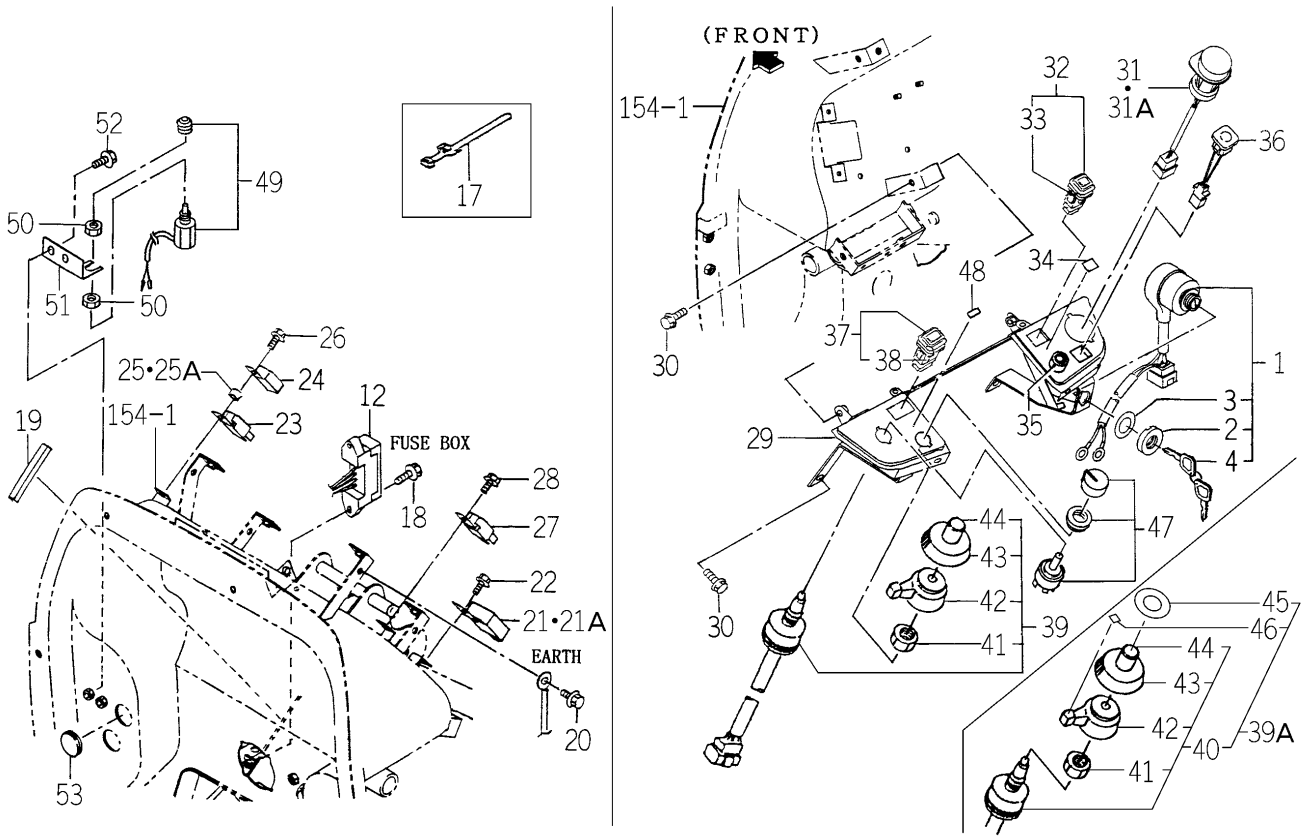

1747-652 -0100

KEY	PART CODE	DESCRIPTION	SPC	TYPE OF MODEL TG5330 E4	TG5330 E6	TG5390 E4	TG5390 E6	ITC	COL	GRP	REMARKS
53	1544-606-014-00	CAP/30	*			1					

FIG.178 ELC. SYSTEM (MAIN) (Q TYPE)(1/2)

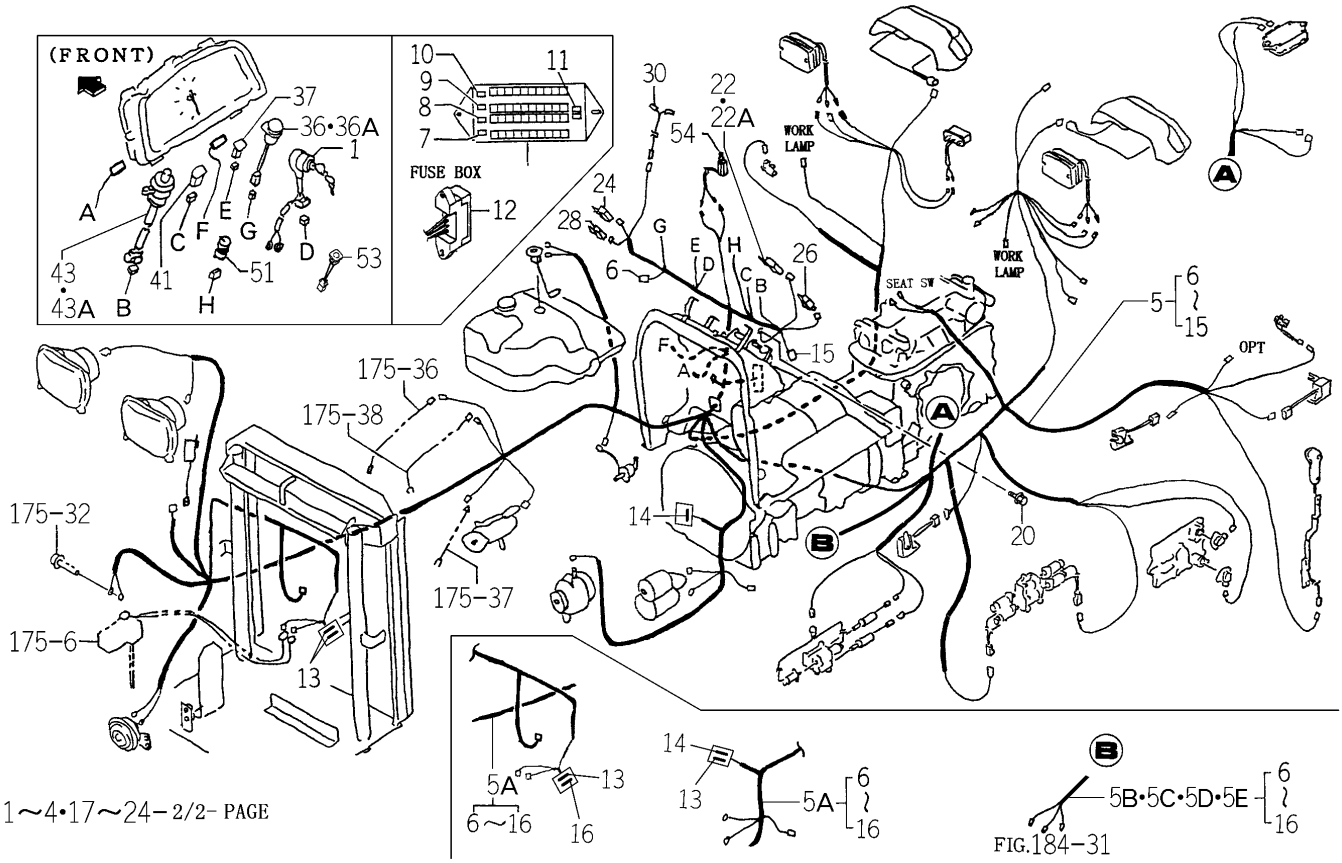

1746-652A-0100

KEY	PART CODE	DESCRIPTION	SPC	TYPE OF MODEL TG5330 E4	TG5330 E6	TG5390 E4	TG5390 E6	ITC	COL	GRP	REMARKS
1	1746-652-290-00	SWITCH/ROTALY/E SET	*	1		1					
2	1729-652-272-00	RINGNUT	*	1		1					
3	1729-652-273-00	WASHER	*	1		1					
4	1729-652-212-00	KEY	*	1		1					
5	1746-652-210-10	HARNESS/MAIN/QE ASSY	*	1 -19		1 -20		1			
5A	1746-652-210-20	HARNESS/MAIN/QE ASSY	*	1 -27		1 -25		1			
5B	1746-652-210-40	HARNESS/MAIN/QE ASSY	*			1 -188		1			
5C	1746-652-210-50	HARNESS/MAIN/QE ASSY	*	1 -98		1 -307		1			
5D	1746-652-210-60	HARNESS/MAIN/QE ASSY	*	1 -301		1 -655		1			
5E	1746-652-210-70	HARNESS/MAIN/QE ASSY	*	1 302-		1 656-		1			
6	1560-666-212-00	DIODE	*	1		1					
7	3821-262-204-00	FUSE/BLADE/32V20A	*	3		3					
8	3821-262-203-00	FUSE(BLADE/32V15A)	*	5		5					
9	3821-262-202-00	FUSE/BLADE/32V10A	*	8		8					
10	3824-247-202-00	FUSE/BLADE/32V05A	*	7		7					
11	3821-262-209-00	TOOL/FUSE	*	1		1					
12	3821-262-206-00	COVER/FUSE	*	1		1					
13	1650-650-222-00	FUSE/SLOWBLOW	*	2		2					
14	1650-650-243-00	FUSE/SLOWBLOW	*	1		1					
15	1652-654-212-00	DIOD	*	1		1					
16	1729-652-232-00	FUSE/SLOWBLOW	*	1 26-		1 26-					
17	1560-666-004-00	BAND	*	4		4					
18	1650-602-223-00	PAD/20	*	1		1					
19	V230-360-601-60	FLANGEBOLT	*	2		2					
20	V230-360-601-60	FLANGEBOLT	*	1		1					
21	3650-201-008-00	PROTECTOR,EDGE/120	*	2		2					
22	1600-623-002-00	FLASHER ASSY	*	1 -933		1 -1211					4DM0-033-600-01
22A	1600-623-002-10	FLASHER ASSY	*	1 934-		1 1212-		1			
23	V230-360-601-60	FLANGEBOLT	*	1		1					
24	1690-652-210-00	RELAY ASSY	*	1		1					

FIG.178 ELC. SYSTEM (MAIN) (Q TYPE)(2/2)

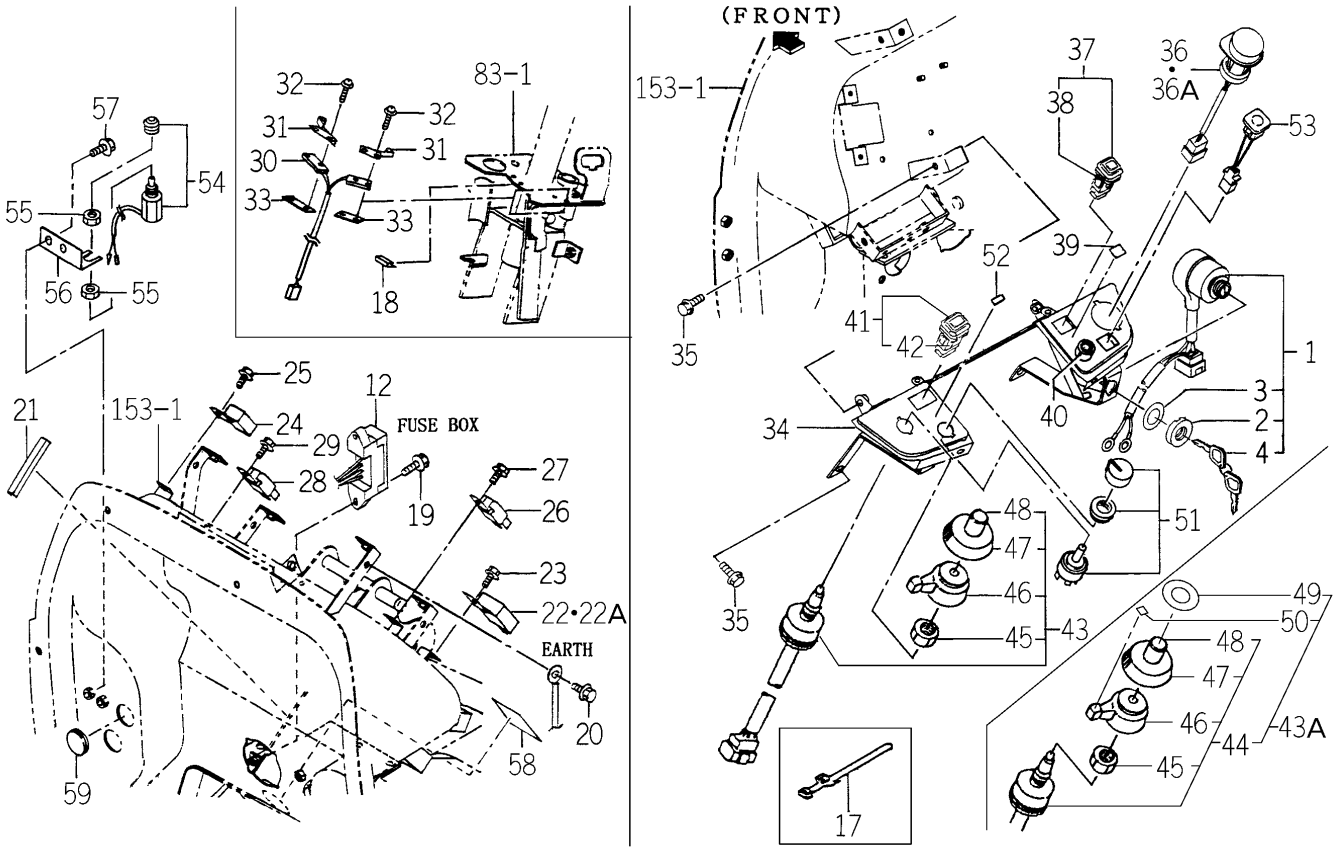

1746-652A-0100

KEY	PART CODE	DESCRIPTION	SPC	TYPE OF MODEL TG5330 E4	TG5330 E6	TG5390 E4	TG5390 E6	ITC	COL	GRP	REMARKS
25	V230-360-601-60	FLANGEBOLT	*	1		1					
26	1690-658-370-00	RELAY/4P ASSY	*	1		1					
27	V230-360-601-60	FLANGEBOLT	*	1		1					
28	1690-658-370-00	RELAY/4P ASSY	*	1		1					
29	V230-360-601-60	FLANGEBOLT	*	1		1					
30	1729-652-290-00	SWITCH/TWIN ASSY	*	1		1					
31	3807-836-400-00	ACTUATOR ASSY	*	2		2					
32	3800-835-034-00	SCREW/SP	*	4		4					
33	3642-496-007-10	PLATE,SWITCH	*	2		2					
34	1746-652-420-00	PANEL/SWITCH/Q/E4	*	1		1			5I		
35	V230-360-601-60	FLANGEBOLT	*	4		4					
36	1742-652-300-00	SWITCH/PTO ASSY	*	1 -798		1 -1141					
36A	1742-652-300-20	SWITCH/PTO ASSY	*	1 799-		1 1142-		1			
37	1742-652-260-00	SWITCH/ALTERNAT ASSY	*	1		1					
38	3801-272-302-00	BULB/LAMP/12V1W	*	1		1					
39	1742-652-006-00	LABEL/MODE/PTO	*	1		1					
40	6281-420-001-00	RESISTANCE	*	1		1					
41	1740-680-550-00	SWITCH/HAZARD ASSY	*	1		1					
42	1740-680-551-00	BULB/LAMP/14V60MA	*	1 385-		1 769-					
43	1544-623-001-00	SWITCH ASSY	*	1 -798		1 -1164					
43A	1738-680-210-00	SWITCH/COMBINATION/E	*	1 799-		1 1165-					
44	1544-623-001-00	SWITCH ASSY	*	1 799-		1 1142-					
45	1544-623-232-00	NUT/M22	*	1		1					
46	1544-623-233-00	LEVER	*	1		1					
47	1544-623-234-00	KNOB	*	1		1					
48	1544-623-235-00	BOOT/HORN	*	1		1					
49	1738-680-211-00	LABEL/LIGHTING	*	1 799-		1 1165-					
50	1738-680-212-00	LABEL/TURNSIGNAL	*	1 799-		1 1165-					
51	1746-652-230-00	SWITCH ASSY	*	1		1					
52	1746-652-005-00	LABEL/POSITION	*	1		1					

FIG.178 ELC. SYSTEM (MAIN) (Q TYPE)(2/2)

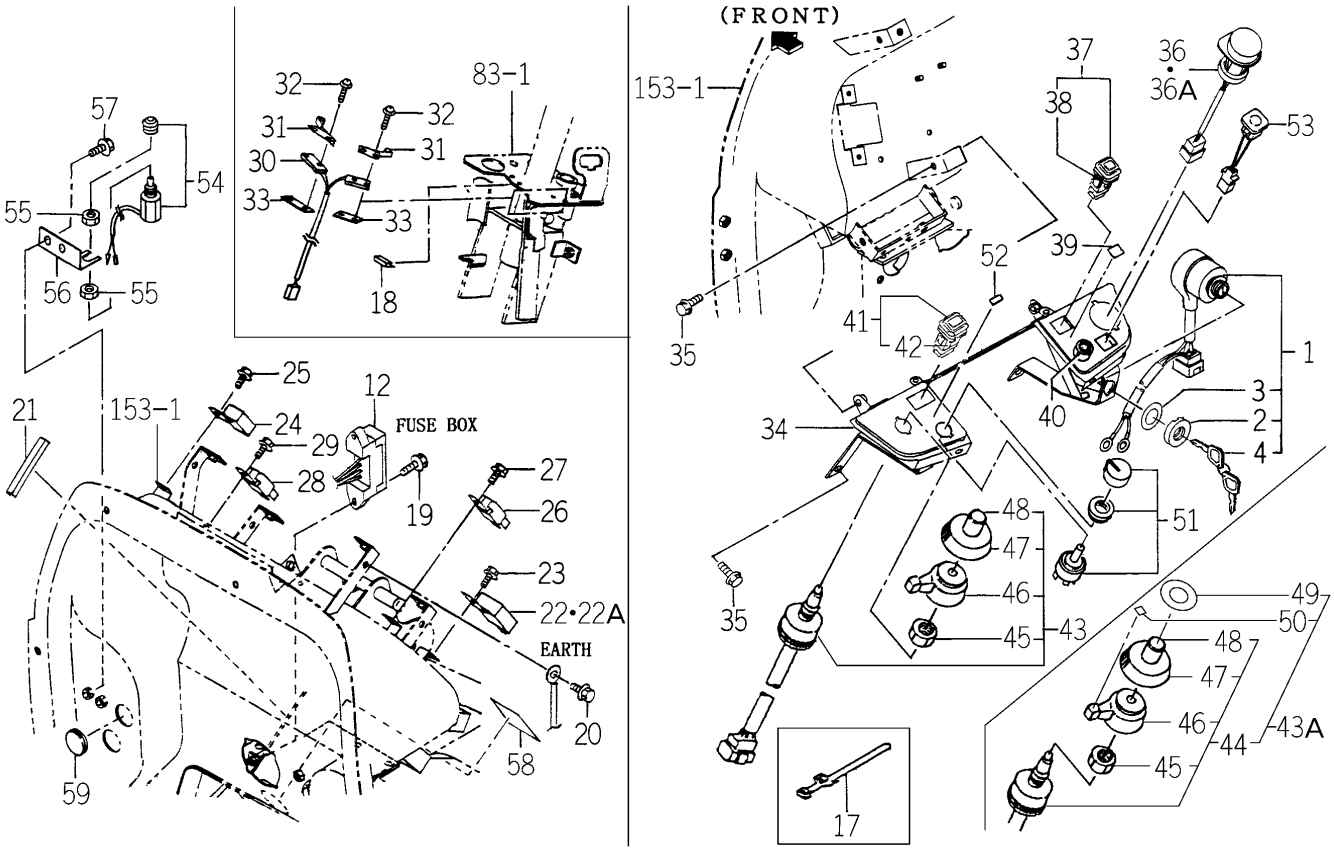

1746-652A-0100

KEY	PART CODE	DESCRIPTION	SPC	TYPE OF MODEL TG5330 E4	TG5330 E6	TG5390 E4	TG5390 E6	ITC	COL	GRP	REMARKS
53	1729-656-210-00	SWITCH ASSY	*	1		1					
54	1518-621-320-00	SWITCH,STOP	*	1		1					
55	1432-621-006-10	NUT,LOCK	*	2		2					
56	1746-652-004-00	PLATE	*	1		1					
57	V231-360-801-60	FLANGEBOLT	*	2		2					
58	1729-652-005-00	LABEL/SEAL	*	1 -43		1 -65					
58A	1544-606-014-00	CAP/30	*	1 28-		1 26-					

FIG.179 ELC. SYSTEM (MAIN) (HE6 TYPE)(1/2)

1～4•15～27A－PLEASE SEE NEXT PAGE

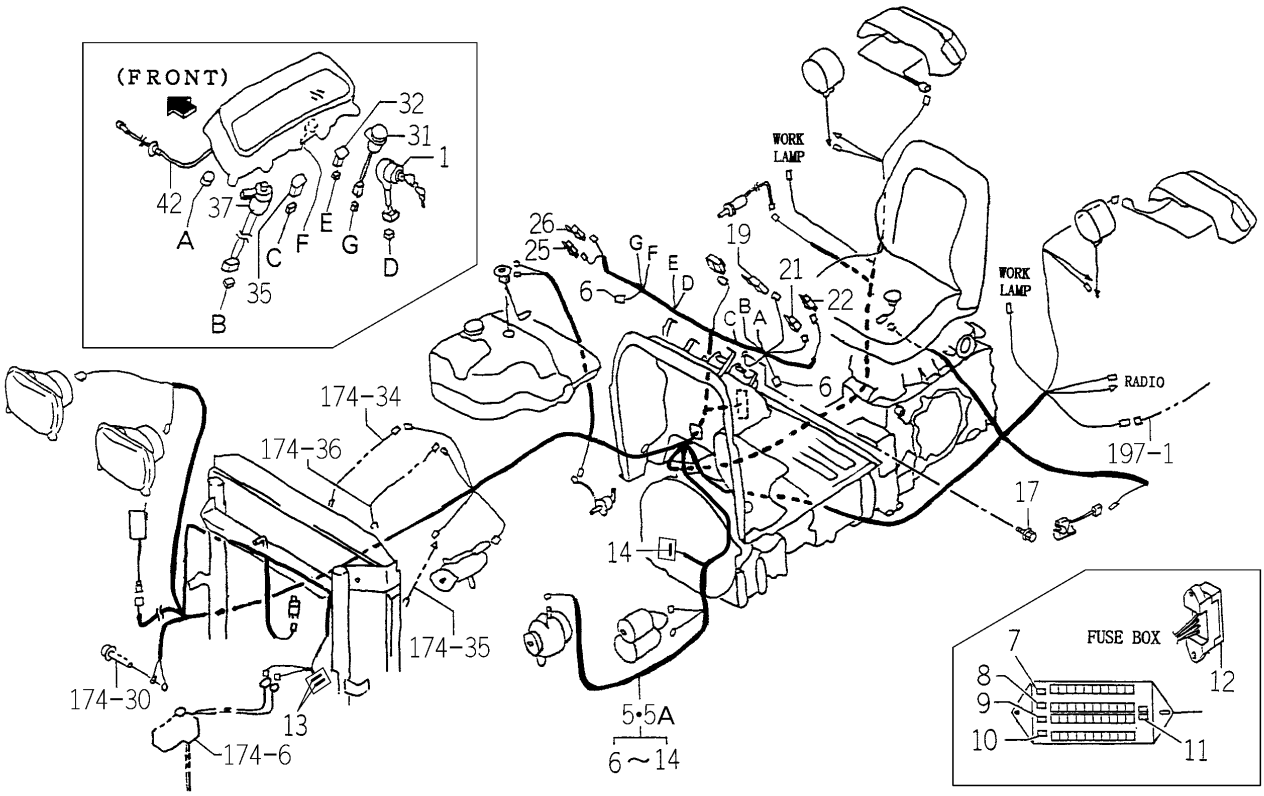

1747-652B-0100

KEY	PART CODE	DESCRIPTION	SPC	TYPE OF MODEL TG5330 E4	TG5330 E6	TG5390 E4	TG5390 E6	ITC	COL	GRP	REMARKS
1	1746-652-310-00	SWITCH/ROTALY/E SET	*				1				
2	1729-652-272-00	RINGNUT	*				1				
3	1729-652-273-00	WASHER	*				1				
4	1729-652-212-00	KEY	*				1				
5	1747-652-520-00	HARNESS/MAIN/HE ASSY	*				1 -222				
5A	1747-652-520-10	HARNESS/MAIN/HE ASSY	*				1 223-	1			
6	1560-666-212-00	DIODE	*				2				
7	3821-262-204-00	FUSE/BLADE/32V20A	*				3				
8	3821-262-203-00	FUSE(BLADE/32V15A)	*				3				
9	3821-262-202-00	FUSE/BLADE/32V10A	*				2				
10	3824-247-202-00	FUSE/BLADE/32V05A	*				2				
11	3821-262-209-00	TOOL/FUSE	*				1				
12	3821-262-206-00	COVER/FUSE	*				1				
13	1650-650-222-00	FUSE/SLOWBLOW	*				2				
14	1650-650-243-00	FUSE/SLOWBLOW	*				1				
15	1560-666-004-00	BAND	*				4				
16	V230-360-601-60	FLANGEBOLT	*				2				
17	V230-360-601-60	FLANGEBOLT	*				1				
18	3650-201-008-00	PROTECTOR,EDGE/120	*				2				
19	1709-680-200-00	RELAY/FLASHER/SAE	*				1				
20	V230-360-601-60	FLANGEBOLT	*				1				
21	1690-652-210-00	RELAY ASSY	*				1				
22	1690-658-370-00	RELAY/4P ASSY	*				1				
23	3676-274-001-00	COLLAR/07X11X20	*				1 -411				
23A	1672-616-004-00	COLLAR/07X11X20	*				1 412-				
24	V230-360-603-50	FLANGEBOLT	*				1				
25	1690-658-370-00	RELAY/4P ASSY	*				1				
26	1690-658-370-00	RELAY/4P ASSY	*				1				
27	3676-274-001-00	COLLAR/07X11X20	*				1 -411				
27A	1672-616-004-00	COLLAR/07X11X20	*				1 412-				

FIG.179 ELC. SYSTEM (MAIN) (HE6 TYPE)(2/2)

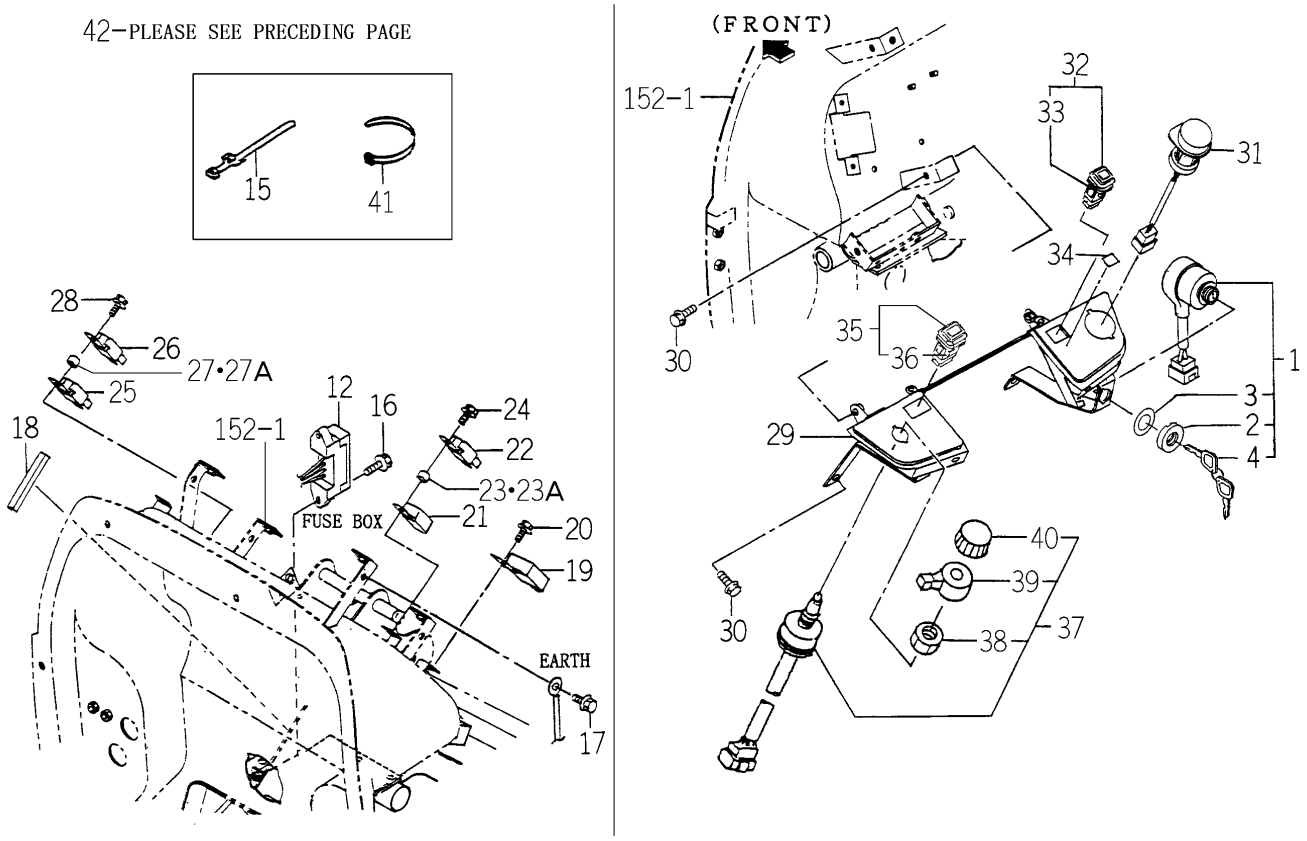

1747-652B-0100

KEY	PART CODE	DESCRIPTION	SPC	TYPE OF MODEL TG5330 E4	TG5330 E6	TG5390 E4	TG5390 E6	ITC	COL	GRP	REMARKS
28	V230-360-603-50	FLANGEBOLT	*				1				
29	1742-652-420-20	PANEL/SWITCH/S/ COMP	*				1		5I		
30	V230-360-601-60	FLANGEBOLT	*				4				
31	1640-664-320-00	SWITCH/PTO ASSY	*				1				
32	1742-652-260-00	SWITCH/ALTERNAT ASSY	*				1				
33	3801-272-302-00	BULB/LAMP/12V1W	*				1				
34	1742-652-006-00	LABEL/MODE/PTO	*				1				
35	1740-680-550-00	SWITCH/HAZARD ASSY	*				1				
36	1740-680-551-00	BULB/LAMP/14V60MA	*				1				
37	1723-658-210-00	SWITCH/COMBINATION	*				769- 1				
38	1544-623-232-00	NUT/M22	*				1				
39	1723-658-213-00	LEVER/FRASHER	*				1				
40	1723-658-214-00	KNOB/LIGHTING	*				1				
41	1376-402-003-00	BAND,WIRE/140	*				2				
42	1650-652-900-00	CABLE/META ASSY	*				1				

FIG.180 ELC. SYSTEM (MAIN) (P TYPE)(1/2)

1～4•16～26A－PLEASE SEE NEXT PAGE

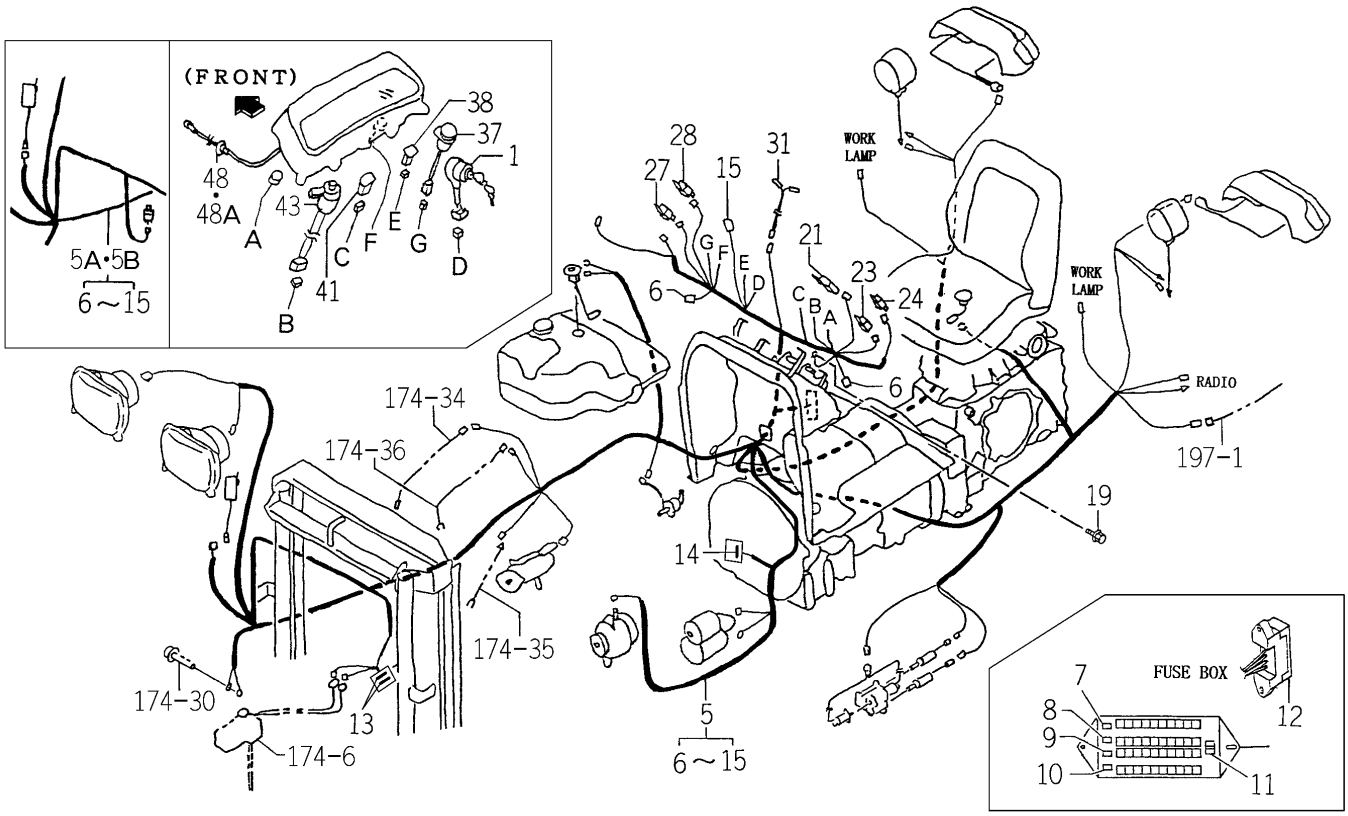

1746-652C-0100

KEY	PART CODE	DESCRIPTION	SPC	TYPE OF MODEL TG5330 E4	TG5330 E6	TG5390 E4	TG5390 E6	ITC	COL	GRP	REMARKS
1	1746-652-310-00	SWITCH/ROTALY/E SET	*		1		1				
2	1729-652-272-00	RINGNUT	*		1		1				
3	1729-652-273-00	WASHER	*		1		1				
4	1729-652-212-00	KEY	*		1		1				
5	1746-652-240-00	HARNESS/MAIN/PE ASSY	*		1 -21		1 -22				
5A	1746-652-240-10	HARNESS/MAIN/PE ASSY	*		1 -66		1 -187	1			
5B	1746-652-240-20	HARNESS/MAIN/PE ASSY	*		1 67-		1 188-	1			
6	1560-666-212-00	DIODE	*		2		2				
7	3821-262-204-00	FUSE/BLADE/32V20A	*		3		3				
8	3821-262-203-00	FUSE(BLADE/32V15A)	*		3		3				
9	3821-262-202-00	FUSE/BLADE/32V10A	*		2		2				
10	3824-247-202-00	FUSE/BLADE/32V05A	*		2		2				
11	3821-262-209-00	TOOL/FUSE	*		1		1				
12	3821-262-206-00	COVER/FUSE	*		1		1				
13	1650-650-222-00	FUSE/SLOWBLOW	*		2		2				
14	1650-650-243-00	FUSE/SLOWBLOW	*		1		1				
15	1652-654-212-00	DIOD	*		1		1				
16	1560-666-004-00	BAND	*		4		4				
17	1650-602-223-00	PAD/20	*		1		1				
18	V230-360-601-60	FLANGEBOLT	*		2		2				
19	V230-360-601-60	FLANGEBOLT	*		1		1				
20	3650-201-008-00	PROTECTOR,EDGE/120	*		2		2				
21	1709-680-200-00	RELAY/FLASHER/SAE	*		1		1				
22	V230-360-601-60	FLANGEBOLT	*		1		1				
23	1690-652-210-00	RELAY ASSY	*		1		1				
24	1690-658-370-00	RELAY/4P ASSY	*		1		1				
25	3676-274-001-00	COLLAR/07X11X20	*		1 -121		1 -434				
25A	1672-616-004-00	COLLAR/07X11X20	*		1 122-		1 435-				
26	V230-360-601-60	FLANGEBOLT	*		1 -79		1 -301				
26A	V230-360-603-50	FLANGEBOLT	*		1 80-		1 302-				

FIG.180 ELC. SYSTEM (MAIN) (P TYPE)(2/2)

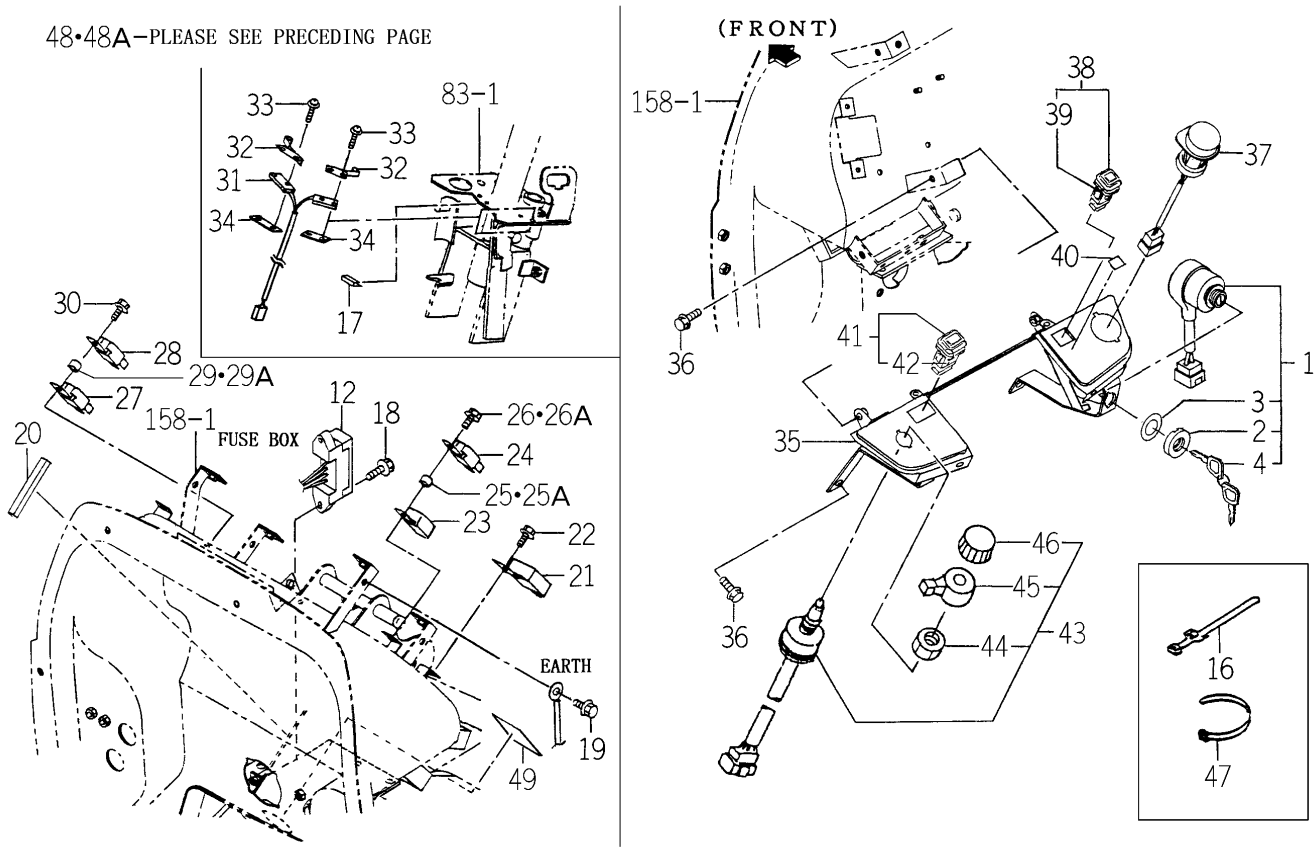

1746-652C-0100

KEY	PART CODE	DESCRIPTION	SPC	TYPE OF MODEL TG5330 E4	TG5330 E6	TG5390 E4	TG5390 E6	ITC	COL	GRP	REMARKS
27	1690-658-370-00	RELAY/4P ASSY	*		1		1				
28	1690-658-370-00	RELAY/4P ASSY	*		1		1				
29	3676-274-001-00	COLLAR/07X11X20	*		1 -121		1 -434				
29A	1672-616-004-00	COLLAR/07X11X20	*		1 122-		1 435-				
30	V230-360-603-50	FLANGEBOLT	*		1		1				
31	1729-652-290-00	SWITCH/TWIN ASSY	*		1		1				
32	3807-836-400-00	ACTUATOR ASSY	*		2		2				
33	3800-835-034-00	SCREW/SP	*		4		4				
34	3642-496-007-10	PLATE,SWITCH	*		2		2				
35	1742-652-420-20	PANEL/SWITCH/S/ COMP	*		1		1		5I		
36	V230-360-601-60	FLANGEBOLT	*		4		4				
37	1640-664-320-00	SWITCH/PTO ASSY	*		1		1				
38	1742-652-260-00	SWITCH/ALTERNAT ASSY	*		1		1				
39	3801-272-302-00	BULB/LAMP/12V1W	*		1		1				
40	1742-652-006-00	LABEL/MODE/PTO	*		1		1				
41	1740-680-550-00	SWITCH/HAZARD ASSY	*		1		1				
42	1740-680-551-00	BULB/LAMP/14V60MA	*		1 385-		1 769-				
43	1723-658-210-00	SWITCH/COMBINATION	*		1		1				
44	1544-623-232-00	NUT/M22	*		1		1				
45	1723-658-213-00	LEVER/FRASHER	*		1		1				
46	1723-658-214-00	KNOB/LIGHTING	*		1		1				
47	1376-402-003-00	BAND,WIRE/140	*		2		2				
48	1656-652-290-00	CABLE/META ASSY	*		1 -23		1 -19				
48A	1650-652-900-00	CABLE/META ASSY	*		1 24-		1 20-				
49	1729-652-005-00	LABEL/SEAL	*		1 -43		1 -65				

FIG.181 ELC. SYSTEM (MAIN) (H3 TYPE)(1/3)

1～4•17～28- PLEASE SEE NEXT PAGE

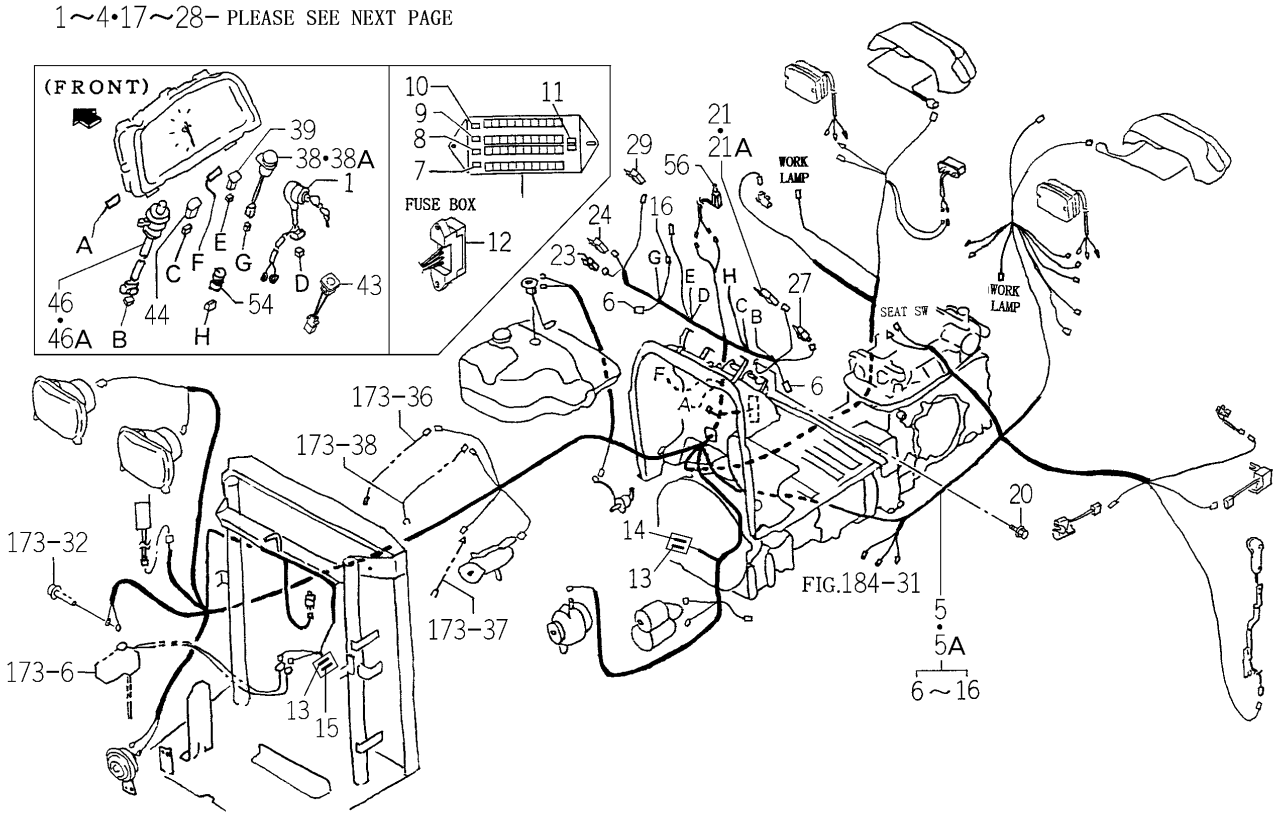

1747-652C-0100

KEY	PART CODE	DESCRIPTION	SPC	TYPE OF MODEL TG5330 E4	TG5330 E6	TG5390 E4	TG5390 E6	ITC	COL	GRP	REMARKS
1	1746-652-290-00	SWITCH/ROTALY/E SET	*			1					
2	1729-652-272-00	RINGNUT	*			1					
3	1729-652-273-00	WASHER	*			1					
4	1729-652-212-00	KEY	*			1					
5	1747-652-700-10	HARNESS/MAIN/H3DE4	*			1 -1247					
5A	1747-652-700-20	HARNESS/MAIN/H3DE4	*			1 1248-		3			
6	1560-666-212-00	DIODE	*			2					
7	3821-262-204-00	FUSE/BLADE/32V20A	*			4					
8	3821-262-203-00	FUSE(BLADE/32V15A)	*			5					
9	3821-262-202-00	FUSE/BLADE/32V10A	*			8					
10	3824-247-202-00	FUSE/BLADE/32V05A	*			7					
11	3821-262-209-00	TOOL/FUSE	*			1					
12	3821-262-206-00	COVER/FUSE	*			1					
13	1650-650-222-00	FUSE/SLOWBLOW	*			2					
14	1650-650-243-00	FUSE/SLOWBLOW	*			1					
15	1729-652-232-00	FUSE/SLOWBLOW	*			1					
16	1652-654-212-00	DIOD	*			1					
17	1560-666-004-00	BAND	*			4					
18	V230-360-601-60	FLANGEBOLT	*			2					
19	3650-201-008-00	PROTECTOR,EDGE/120	*			2					
20	V230-360-601-60	FLANGEBOLT	*			1					
21	1600-623-002-00	FLASHER ASSY	*			1 -1211					4DM0-033-600-01
21A	1600-623-002-10	FLASHER ASSY	*			1 1212-		1			
22	V230-360-601-60	FLANGEBOLT	*			1					
23	1690-658-370-00	RELAY/4P ASSY	*			1					
24	1690-652-210-00	RELAY ASSY	*			1					
25	1672-616-004-00	COLLAR/07X11X20	*			1					
26	V230-360-603-50	FLANGEBOLT	*			1					
27	1690-658-370-00	RELAY/4P ASSY	*			1					
28	V230-360-601-60	FLANGEBOLT	*			1					

FIG.181 ELC. SYSTEM (MAIN) (H3 TYPE)(2/3)

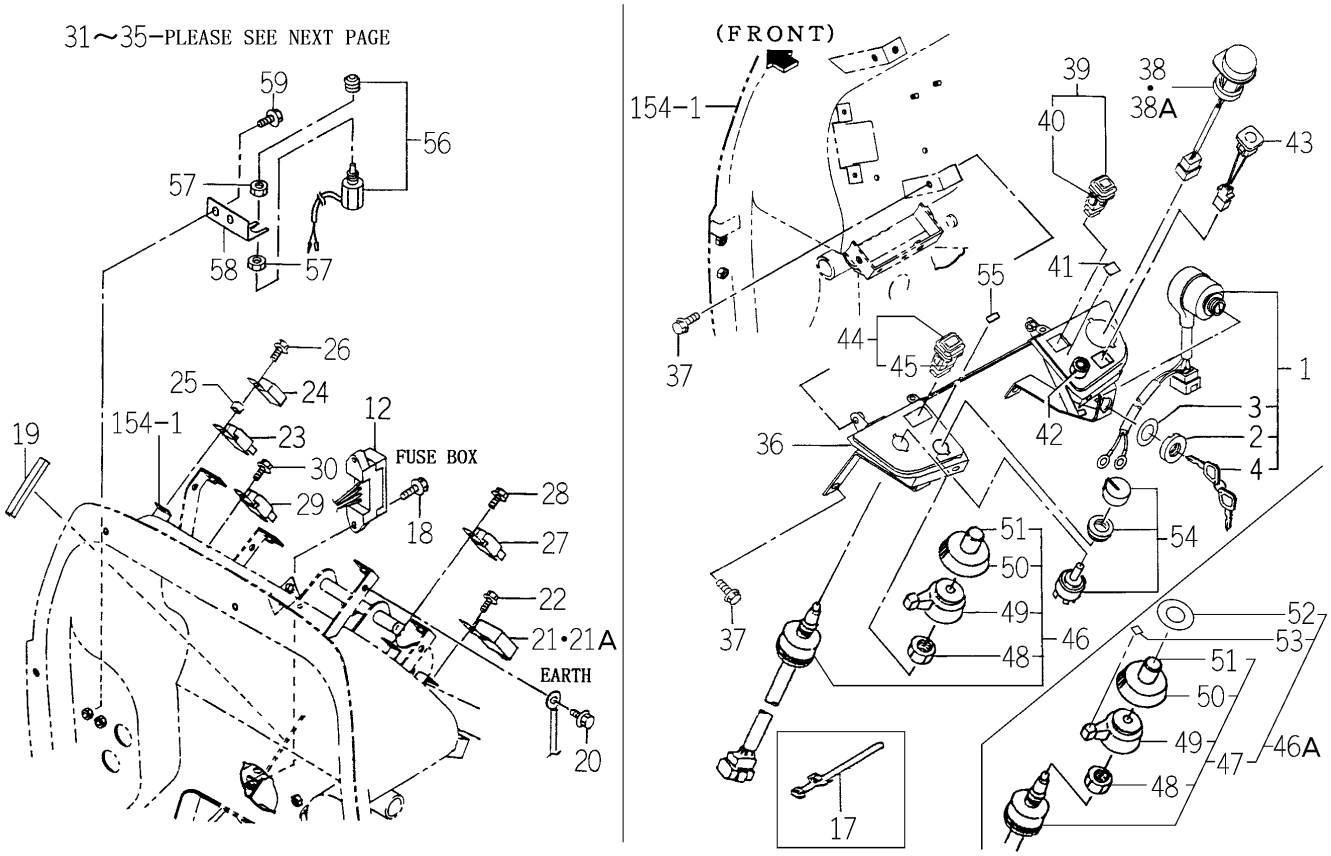

1747-652C-0100

KEY	PART CODE	DESCRIPTION	SPC	TYPE OF MODEL TG5330 E4	TG5330 E6	TG5390 E4	TG5390 E6	ITC	COL	GRP	REMARKS
29	1690-658-370-00	RELAY/4P ASSY	*			1					
30	V230-360-601-60	FLANGEBOLT	*			1					
31	1747-652-800-00	STAY/RELAY COMP	*			1 1248-					
32	V360-260-006-00	NUT/M6	*			2 1248-					
33	1690-652-210-00	RELAY ASSY	*			1 1248-					
34	V210-360-601-60	BOLT(SP)/M6X16	*			1 1248-					
35	3908-310-220-10	TIMERUNIT/FNP	*			1 1248-					
36	1746-652-420-00	PANEL/SWITCH/Q/E4	*			1			5I		
37	V230-360-601-60	FLANGEBOLT	*			4					
38	1742-652-300-00	SWITCH/PTO ASSY	*			1 -1141					
38A	1742-652-300-20	SWITCH/PTO ASSY	*			1 1142-		1			
39	1742-652-260-00	SWITCH/ALTERNAT ASSY	*			1					
40	3801-272-302-00	BULB/LAMP/12V1W	*			1					
41	1742-652-006-00	LABEL/MODE/PTO	*			1					
42	6281-420-001-00	RESISTANCE	*			1					
43	1729-656-210-00	SWITCH ASSY	*			1					
44	1740-680-550-00	SWITCH/HAZARD ASSY	*			1					
45	1740-680-551-00	BULB/LAMP/14V60MA	*			1					
46	1544-623-001-00	SWITCH ASSY	*			1 -1144					
46A	1738-680-210-00	SWITCH/COMBINATION/E	*			1 1145-					
47	1544-623-001-00	SWITCH ASSY	*			1 1145-					
48	1544-623-232-00	NUT/M22	*			1					
49	1544-623-233-00	LEVER	*			1					
50	1544-623-234-00	KNOB	*			1					
51	1544-623-235-00	BOOT/HORN	*			1					
52	1738-680-211-00	LABEL/LIGHTING	*			1 1145-					
53	1738-680-212-00	LABEL/TURNSIGNAL	*			1 1145-					
54	1746-652-230-00	SWITCH ASSY	*			1					
55	1746-652-005-00	LABEL/POSITION	*			1					
56	1518-621-320-00	SWITCH,STOP	*			1					

FIG.181 ELC. SYSTEM (MAIN) (H3 TYPE)(3/3)

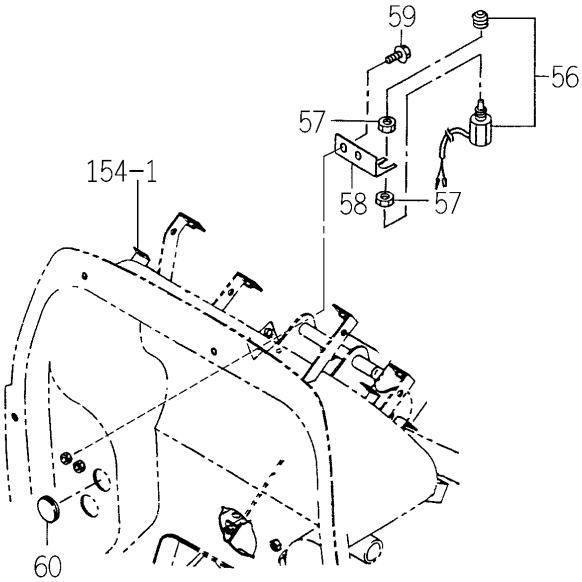

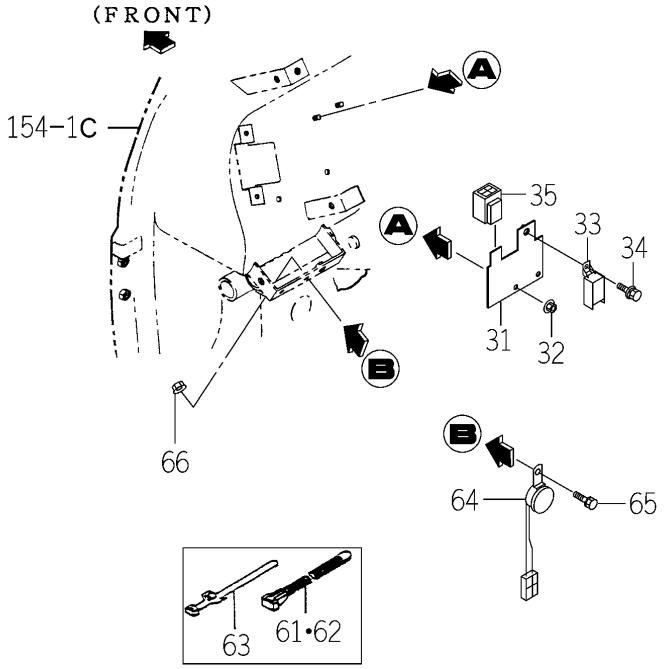

1747-652C-0100

KEY	PART CODE	DESCRIPTION	SPC	TYPE OF MODEL TG5330 E4	TG5330 E6	TG5390 E4	TG5390 E6	ITC	COL	GRP	REMARKS
57	1432-621-006-10	NUT,LOCK	*			2					
58	1746-652-004-00	PLATE	*			1					
59	V231-360-801-60	FLANGEBOLT	*			2					
60	1544-606-014-00	CAP/30	*			1					
61	1376-402-003-00	BAND,WIRE/140	*			2					
62	1342-402-006-00	BAND/WIRE/250	*			3					
63	1560-666-004-00	BAND	*			1					
64	2515-665-210-00	BUZZER	*			1 1248-					
65	V230-360-601-60	FLANGEBOLT	*			1 1248-					
66	V360-260-006-00	NUT/M6	*			1 1248-					

FIG.182 ELC. SYSTEM (REAR) (E6 TYPE)

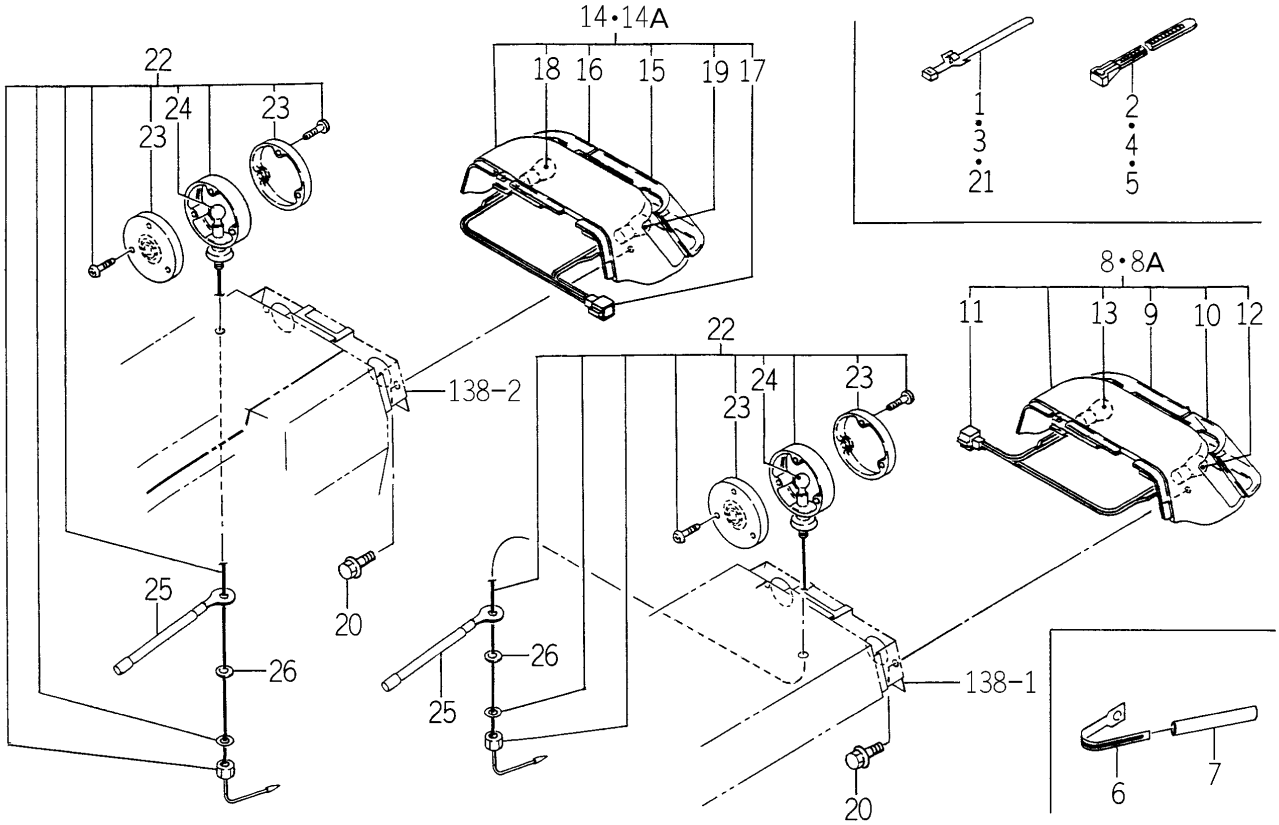

1742-654A-0100

KEY	PART CODE	DESCRIPTION	SPC	TYPE OF MODEL TG5330 E4	TG5330 E6	TG5390 E4	TG5390 E6	ITC	COL	GRP	REMARKS
1	1560-666-004-00	BAND	*		1		1				
2	1376-402-003-00	BAND,WIRE/140	*		1		1				
3	1560-666-004-00	BAND	*		12		12				
4	1342-402-006-00	BAND/WIRE/250	*		4		4				
5	1376-402-003-00	BAND,WIRE/140	*		6		6				
6	1650-650-015-00	CLAMP	*		1		1				
7	1650-650-017-00	TUBE/120	*		1		1				
8	1742-654-200-10	LAMP/REAR/LH SET	*		1 -63		1 -198				
8A	1742-654-200-20	LAMP/REAR/LH SET	*		1 64-		1 199-	3			
9	1650-654-252-00	LENS/LH/TAIL	*		1		1				
10	1719-654-602-00	LENS/LH/TAIL	*		1		1				
11	1742-654-201-10	HARNESS	*		1		1				
12	1564-654-213-00	BULB,LAMP/12V21W	*		1		1				
13	1742-654-202-00	BULB/LAMP/12V5W	*		1		1				
14	1742-654-210-10	LAMP/REAR/RH SET	*		1 -63		1 -198				
14A	1742-654-210-20	LAMP/REAR/RH SET	*		1 64-		1 199-	3			
15	1650-654-262-00	LENS/RH/TAIL	*		1		1				
16	1719-654-611-00	LENS/RH/TAIL	*		1		1				
17	1742-654-201-10	HARNESS	*		1		1				
18	1564-654-213-00	BULB,LAMP/12V21W	*		1		1				
19	1742-654-202-00	BULB/LAMP/12V5W	*		1		1				
20	V230-360-601-60	FLANGEBOLT	*		4		4				
21	1560-666-004-00	BAND	*		4		4				
22	1640-654-200-00	LAMP/TURNSIGNAL	*		2		2				
23	1640-654-201-00	LENS	*		4		4				
24	1640-654-202-00	VALVE/12V27W	*		2		2				
25	2147-537-005-00	HARNESS	*		2		2				
26	V411-260-012-00	WASHER /M12	*		2		2				

FIG.183 ELC. SYSTEM (REAR) (E4 TYPE EXCEPT C)

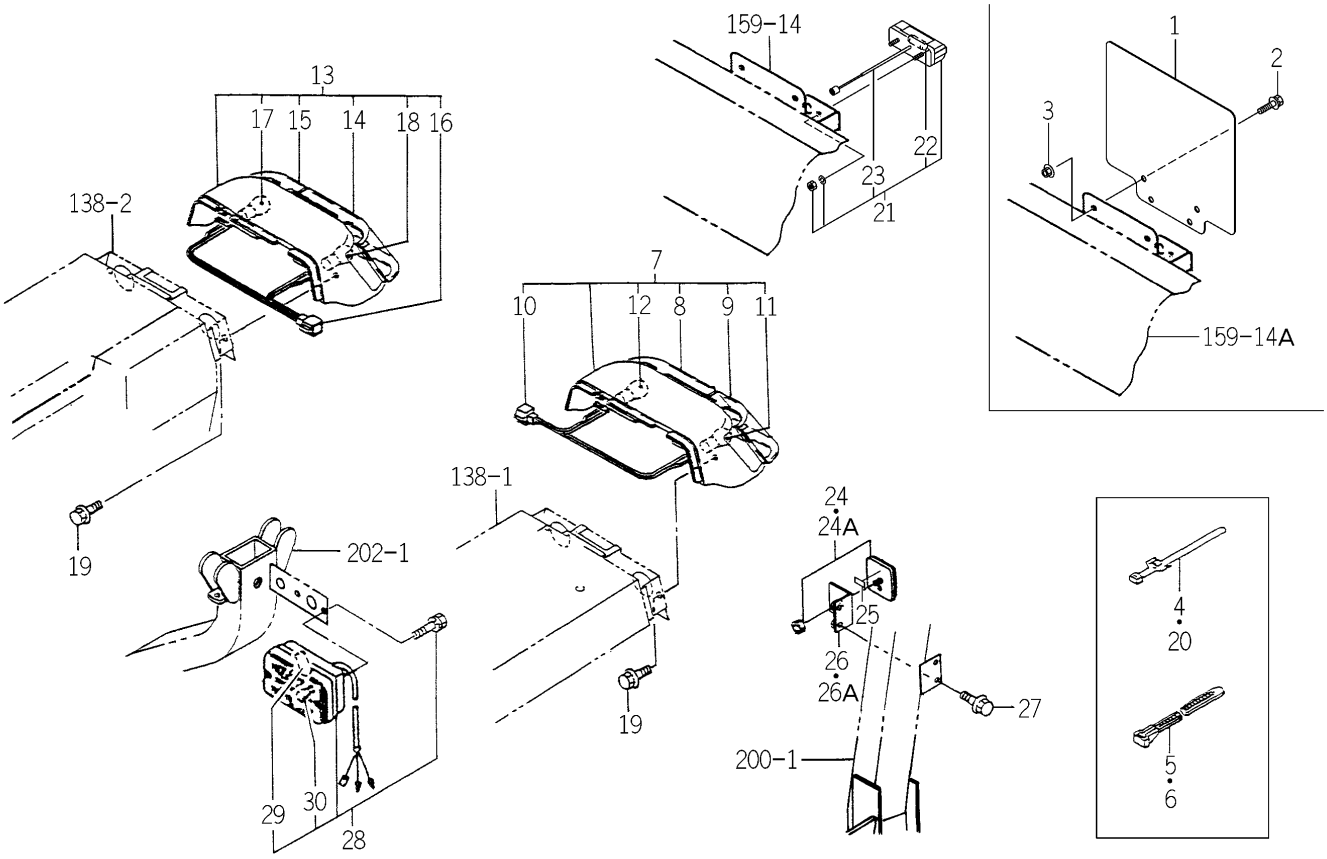

1742-654B-0100

KEY	PART CODE	DESCRIPTION	SPC	TYPE OF MODEL TG5330 E4	TG5330 E6	TG5390 E4	TG5390 E6	ITC	COL	GRP	REMARKS
1	1772-635-001-10	PLATE/NUMBER/E4	*	1 799-		1 1142-					
2	V211-360-802-00	BOLT/SP	*	2 799-		2 1142-					
3	V362-260-008-00	NUT/WASHER	*	2 799-		2 1142-					
4	1560-666-004-00	BAND	*	12		12					
5	1342-402-006-00	BAND/WIRE/250	*	4		4					
6	1376-402-003-00	BAND,WIRE/140	*	6		6					
7	1746-654-200-10	LAMP/REAR/LH SET	*	1		1					
8	1650-654-252-00	LENS/LH/TAIL	*	1		1					
9	1650-654-253-00	LENS/LH/TURN	*	1		1					
10	1746-654-201-10	HARNESS	*	1		1					
11	1564-654-213-00	BULB,LAMP/12V21W	*	1		1					
12	1566-656-211-00	BULB/12V21-5W	*	1		1					
13	1746-654-210-10	LAMP/REAR/RH SET	*	1		1					
14	1650-654-262-00	LENS/RH/TAIL	*	1		1					
15	1650-654-263-00	LENS/RH/TURN	*	1		1					
16	1746-654-201-10	HARNESS	*	1		1					
17	1564-654-213-00	BULB,LAMP/12V21W	*	1		1					
18	1566-656-211-00	BULB/12V21-5W	*	1		1					
19	V230-360-601-60	FLANGEBOLT	*	4		4					
20	1560-666-004-00	BAND	*	4		4					
21	1674-654-270-00	LAMP/NUMBERPLAT SET	*	1		1					
22	1674-654-271-00	BULB/12V/5W	*	1		1					
23	1674-654-272-00	HARNESS/LAMP	*	1		1					
24	1674-654-400-00	REFLECTOR ASSY	*	2 -388		2 -774					
24A	1674-654-400-10	REFLECTOR ASSY	*	2 389-		2 775-		1			
25	1674-654-004-00	TAPE/10X20	*	2		2					
26	1742-654-220-00	STAY/REFLECTOR COMP	*	2 -798		2 -1141					
26A	1742-654-220-10	STAY/REFLECTOR COMP	*	2 799-		2 1142-		1			
27	V231-360-801-60	FLANGEBOLT	*	4		4					
28	1674-654-200-10	LAMP/FRONT SET	*	2		2					

FIG.183 ELC. SYSTEM (REAR) (E4 TYPE EXCEPT C)

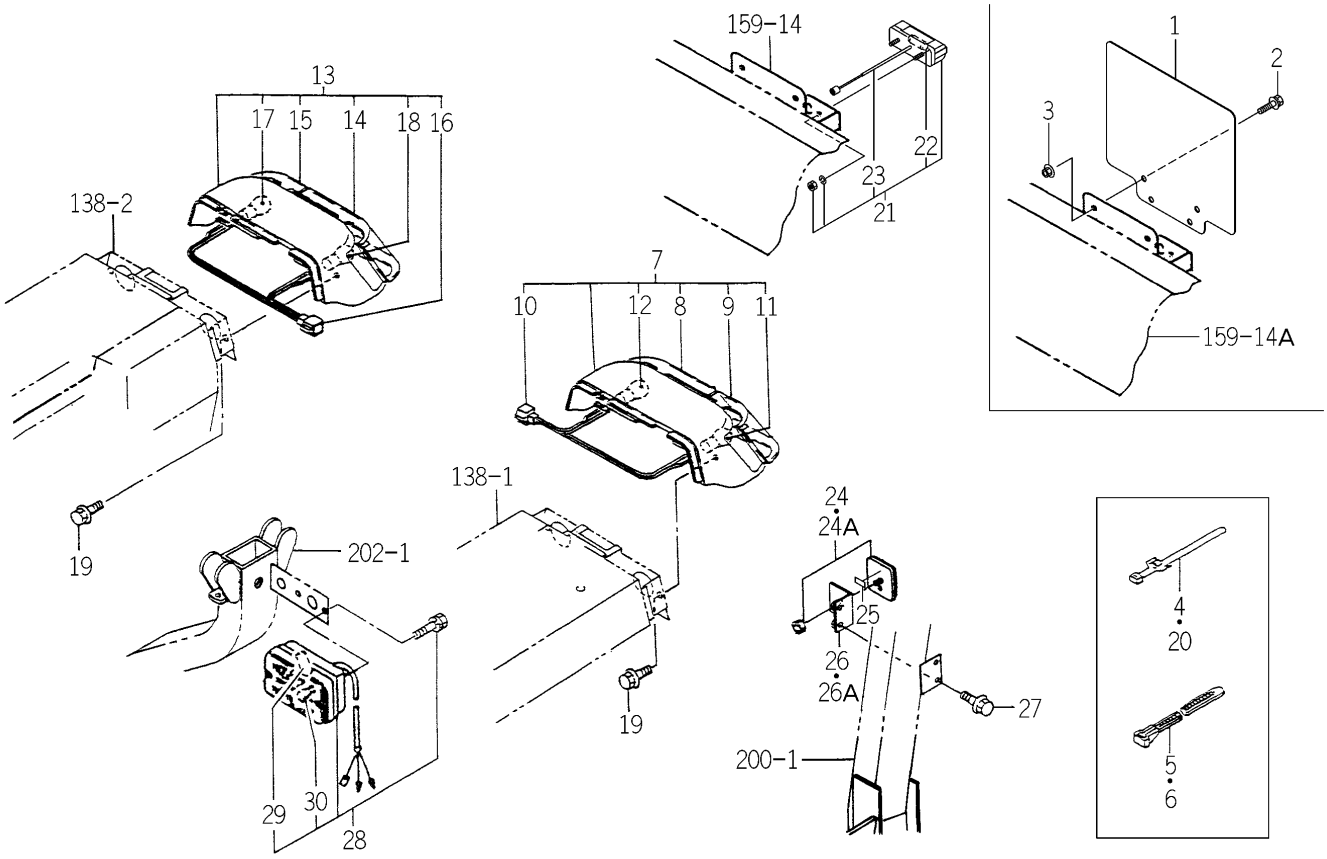

1742-654B-0100

KEY	PART CODE	DESCRIPTION	SPC	TYPE OF MODEL TG5330 E4	TG5330 E6	TG5390 E4	TG5390 E6	ITC	COL	GRP	REMARKS
29	1674-654-211-00	BULB/12V21W	*	2		2					
30	1674-654-212-00	BULB/12V5W	*	2		2					

FIG.184 ELC. SYSTEM (REAR) (C TYPE)

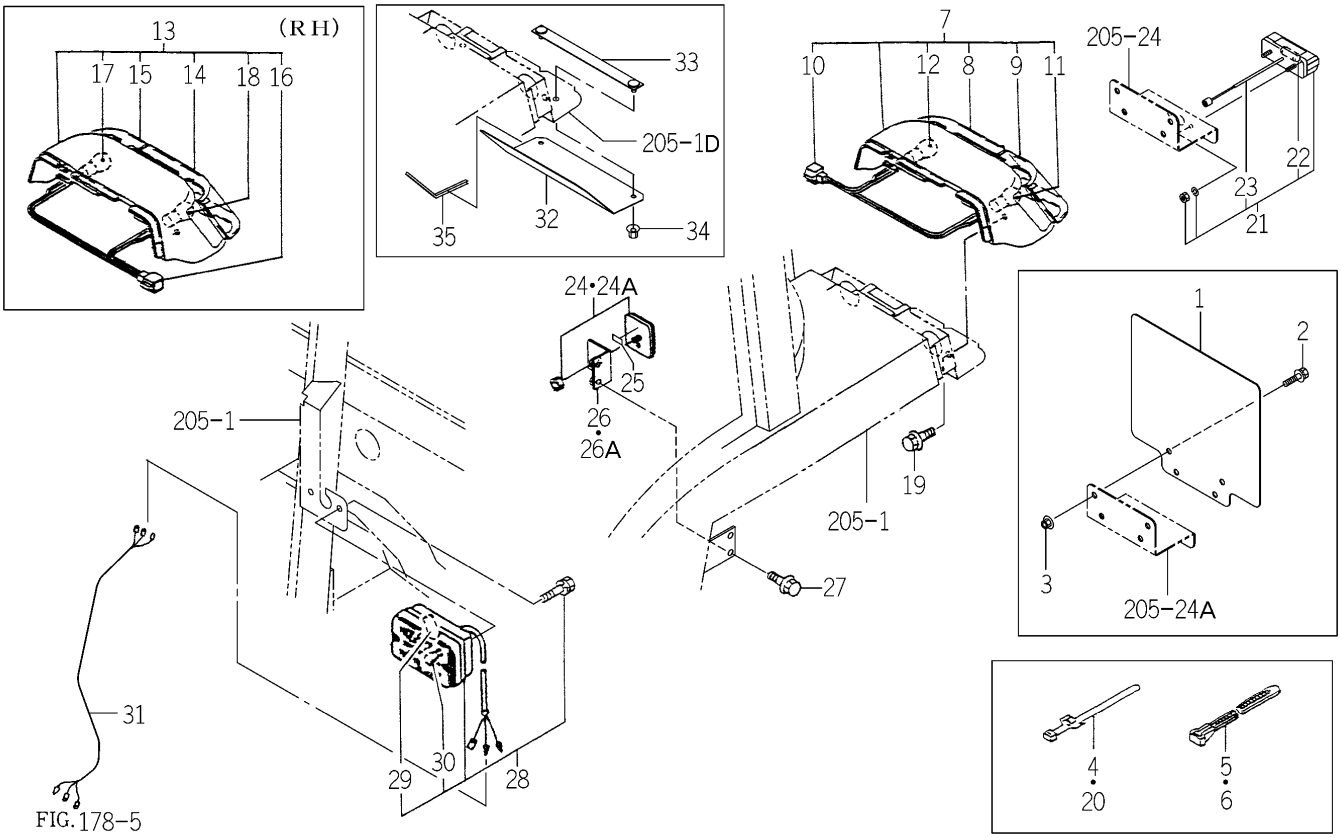

FIG. 178-5

1742-654C-0100

KEY	PART CODE	DESCRIPTION	SPC	TYPE OF MODEL TG5330 E4	TG5330 E6	TG5390 E4	TG5390 E6	ITC	COL	GRP	REMARKS
1	1772-635-001-10	PLATE/NUMBER/E4	*	1 803-		1 1144-					
2	V211-360-802-00	BOLT/SP	*	2 803-		2 1144-					
3	V362-260-008-00	NUT/WASHER	*	2 803-		2 1144-					
4	1560-666-004-00	BAND	*	12		12					
5	1342-402-006-00	BAND/WIRE/250	*	4		4					
6	1376-402-003-00	BAND,WIRE/140	*	6		6					
7	1746-654-200-10	LAMP/REAR/LH SET	*	1		1					
8	1650-654-252-00	LENS/LH/TAIL	*	1		1					
9	1650-654-253-00	LENS/LH/TURN	*	1		1					
10	1746-654-201-10	HARNESS	*	1		1					
11	1564-654-213-00	BULB,LAMP/12V21W	*	1		1					
12	1566-656-211-00	BULB/12V21-5W	*	1		1					
13	1746-654-210-10	LAMP/REAR/RH SET	*	1		1					
14	1650-654-262-00	LENS/RH/TAIL	*	1		1					
15	1650-654-263-00	LENS/RH/TURN	*	1		1					
16	1746-654-201-10	HARNESS	*	1		1					
17	1564-654-213-00	BULB,LAMP/12V21W	*	1		1					
18	1566-656-211-00	BULB/12V21-5W	*	1		1					
19	V230-360-601-60	FLANGEBOLT	*	4		4					
20	1560-666-004-00	BAND	*	4		4					
21	1674-654-270-00	LAMP/NUMBERPLAT SET	*	1		1					
22	1674-654-271-00	BULB/12V/5W	*	1		1					
23	1674-654-272-00	HARNESS/LAMP	*	1		1					
24	1674-654-400-00	REFLECTOR ASSY	*	2 -388		2 -774					
24A	1674-654-400-10	REFLECTOR ASSY	*	2 389-		2 775-		1			
25	1674-654-004-00	TAPE/10X20	*	2		2					
26	1742-654-220-00	STAY/REFLECTOR COMP	*	2 -798		2 -1141					
26A	1742-654-220-10	STAY/REFLECTOR COMP	*	2 799-		2 1142-		1			
27	V231-360-801-60	FLANGEBOLT	*	4		4					
28	1674-654-200-10	LAMP/FRONT SET	*	2		2					

FIG.184 ELC. SYSTEM (REAR) (C TYPE)

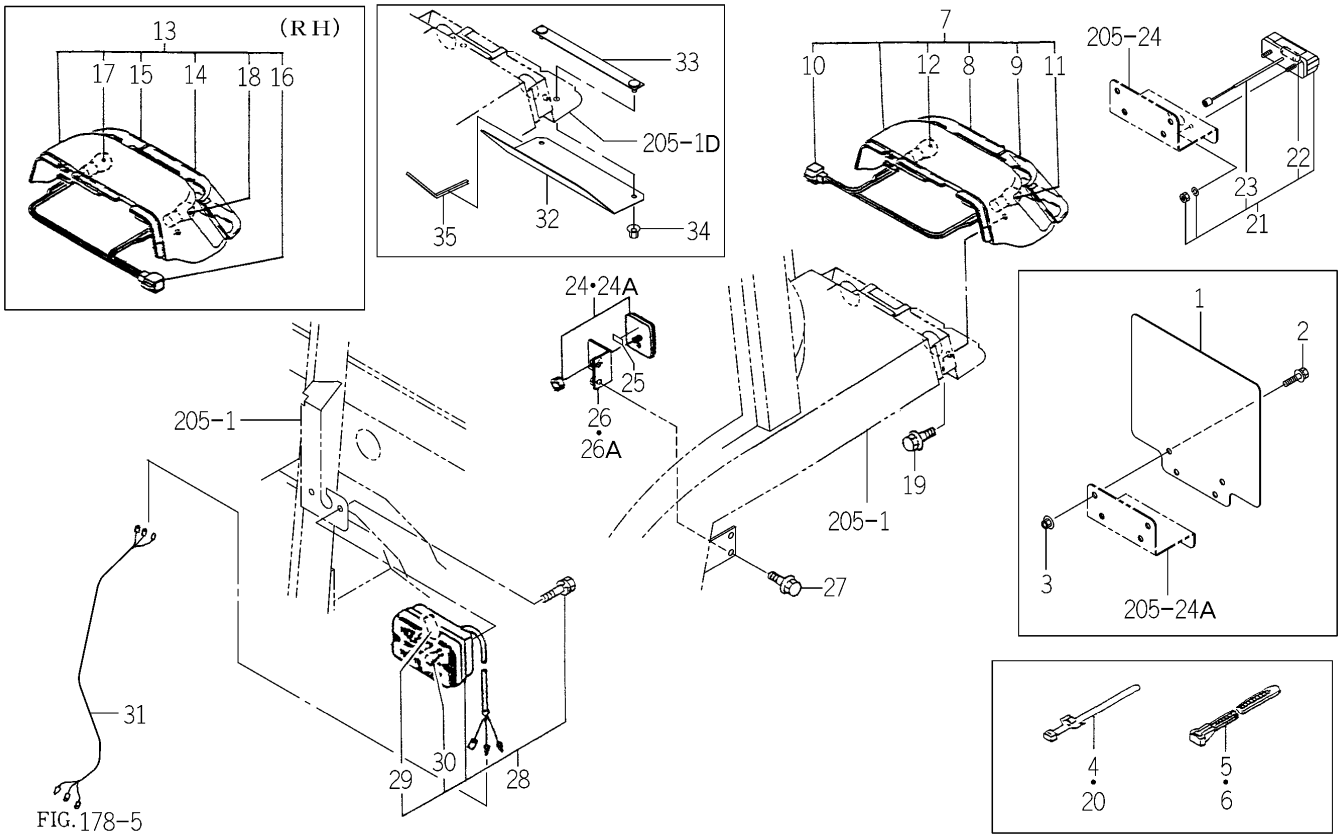

FIG. 178-5

1742-654C-0100

KEY	PART CODE	DESCRIPTION	SPC	TYPE OF MODEL TG5330 E4	TG5330 E6	TG5390 E4	TG5390 E6	ITC	COL	GRP	REMARKS
29	1674-654-211-00	BULB/12V21W	*	2		2					
30	1674-654-212-00	BULB/12V5W	*	2		2					
31	1656-652-003-00	HARNESS/LAMP/ROPS	*	2		2					
32	1746-654-051-00	COVER/REAR	*	2 319-		2 651-					
33	1746-654-510-00	STAY COMP	*	2 319-		2 651-					
34	V363-260-008-00	NUT/WASHER	*	4 319-		4 651-					
35	1519-604-005-00	RUBBER,HOOK	*	2 319-		2 651-					

FIG.185 WIRE BAND SYSTEM (C TYPE EXCEPT H-TG5330E4-No.498-/ TG5390E4-No.885-)

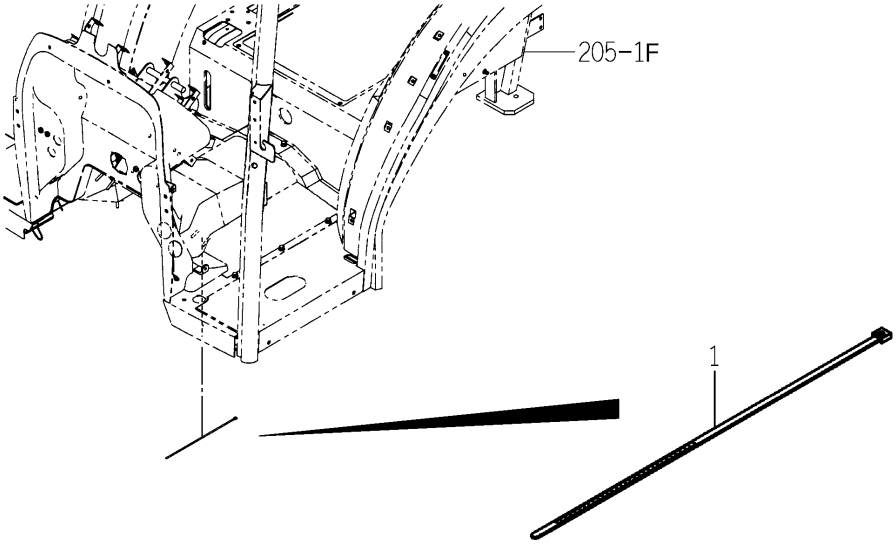

1742-654D-0100

KEY	PART CODE	DESCRIPTION	SPC	TYPE OF MODEL TG5330 E4	TG5330 E6	TG5390 E4	TG5390 E6	ITC	COL	GRP	REMARKS
1	1342-402-006-00	BAND/WIRE/250	*	1 498-		1 885-					

FIG.186 METER PANEL SYSTEM (SE4,E6 TYPE)

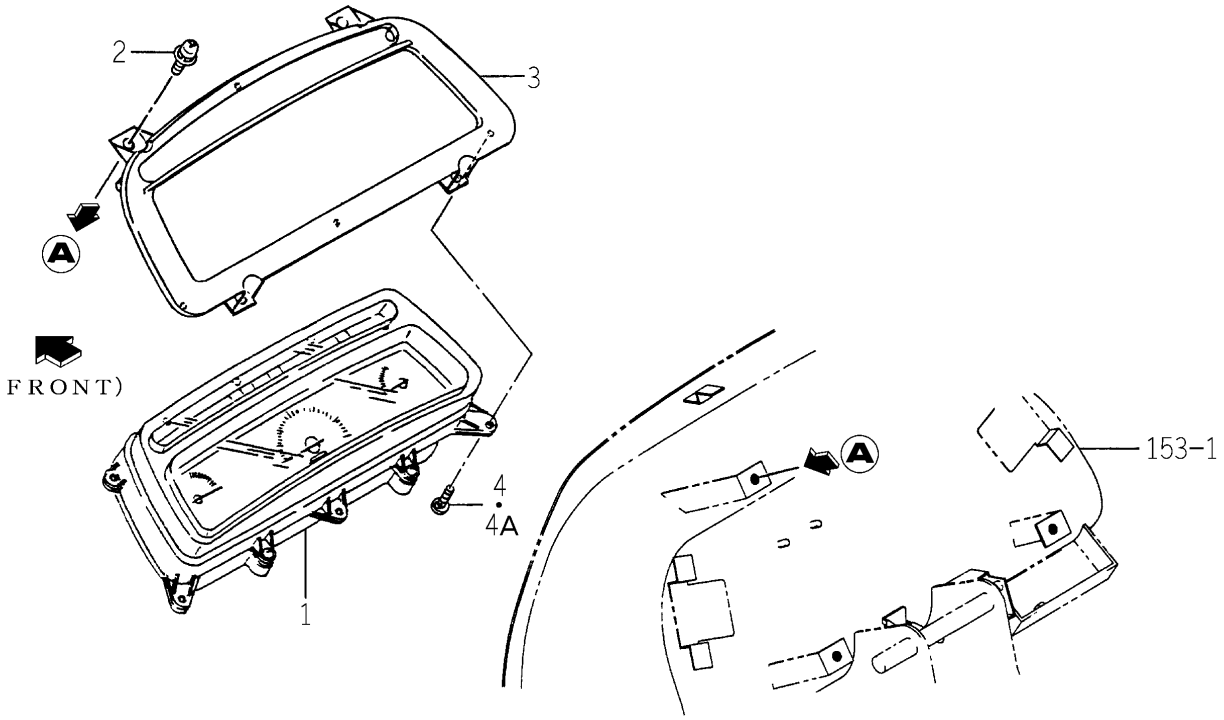

1742-656 -0100

KEY	PART CODE	DESCRIPTION	SPC	TYPE OF MODEL TG5330 E4	TG5330 E6	TG5390 E4	TG5390 E6	ITC	COL	GRP	REMARKS
1	1742-656-200-00	PANEL/INSTRUMEN ASSY	*	1	1	1	1				FIG 276
2	V120-376-001-60	SCREW/SP	*	4	4	4	4				
3	1742-656-001-00	SPACER	*	1	1	1	1				
4	1742-656-002-00	SCREW/6X20	*	6 -11	6 -11	6 -11	6 -11				
4A	1560-401-004-40	BOLT/M5X16	*	6 12-	6 12-	6 12-	6 12-				

FIG.187 METER PANEL SYSTEM (HE4,QE4 TYPE)

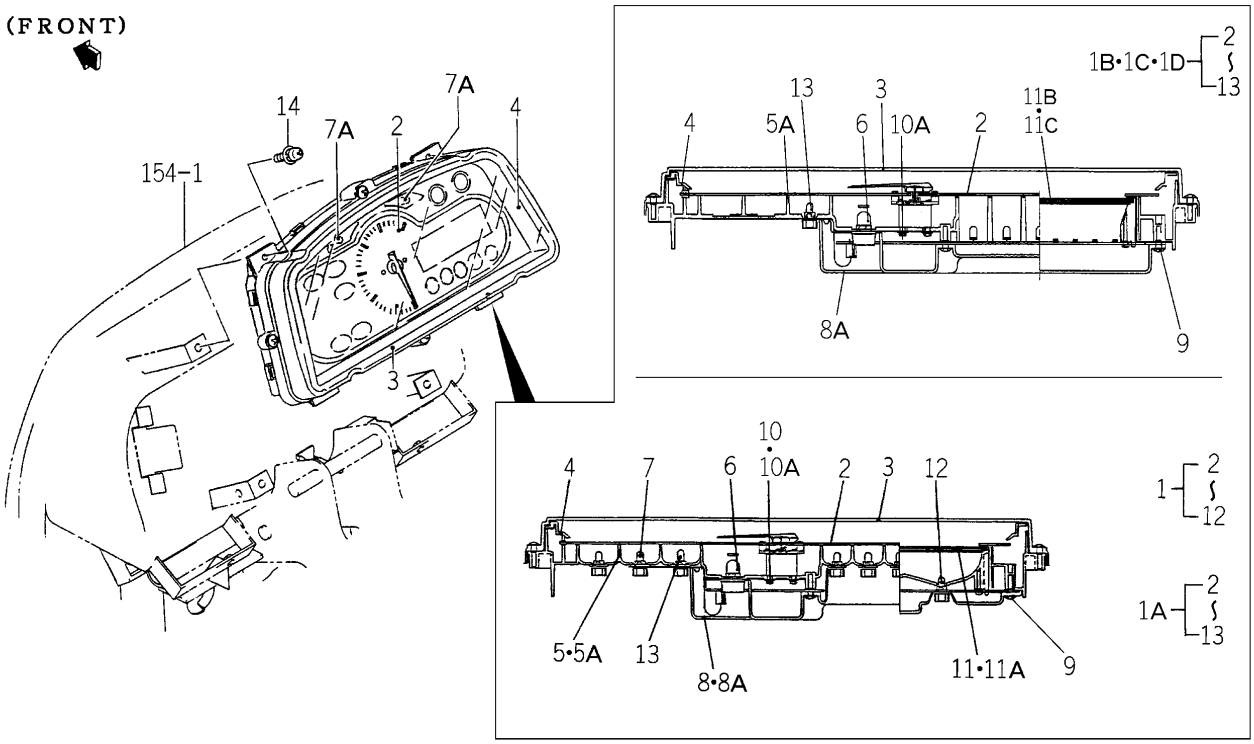

1746-656A-0100

KEY	PART CODE	DESCRIPTION	SPC	TYPE OF MODEL TG5330 E4	TG5330 E6	TG5390 E4	TG5390 E6	ITC	COL	GRP	REMARKS
1	1746-656-210-00	PANEL/INSTRUMEN ASSY	*	1 -27		1 -25					
1A	1746-656-210-10	PANEL/INSTRUMEN ASSY	*			1 -154		1			
1B	1746-656-210-20	PANEL/INSTRUMEN ASSY	*	1 -98		1 -307		1			
1C	1746-656-210-30	PANEL/INSTRUMEN ASSY	*	1 -941		1 -1236		3			
1D	1746-656-210-40	PANEL/INSTRUMEN ASSY	*	1 942-		1 1237-		1			
2	1746-656-220-00	METER ASSY	*	1		1					
3	1729-656-202-00	GLASS	*	1		1					
4	1729-656-310-00	TRIM ASSY	*	1		1					
5	1746-656-230-00	CASE ASSY	*	1 -27		1 -25					
5A	1746-656-230-10	CASE ASSY	*	1 28-		1 26-		3			
6	1729-656-205-00	LAMP ASSY	*	1		1					
7	1729-656-206-00	LAMP ASSY	*	14 -27		14 -25					
7A	1729-656-206-00	LAMP ASSY	*	2 28-		2 26-					
8	1729-656-330-00	COVER ASSY	*	1 -19		1 -16					
8A	1729-656-330-20	COVER ASSY	*	1 20-		1 17-		3			
9	1729-656-208-00	SCREW	*	14		14					
10	1729-656-209-00	SCREW	*	4 -938		4 -1232					
10A	1719-656-621-00	SCREW/SP/03X19	*	4 939-		4 1233-					
11	1746-656-240-00	UNIT/LCD ASSY	*	1 -27		1 -25					
11A	1746-656-240-10	UNIT/LCD ASSY	*			1 -154		3			
11B	1746-656-240-20	UNIT/LCD ASSY	*	1 -98		1 -307		1			
11C	1746-656-240-30	UNIT/LCD ASSY	*	1 99-		1 308-		3			
12	1729-656-207-00	LAMP ASSY	*	1 -27		1 -25					
13	1729-656-321-00	LAMP ASSY	*	7 28-		7 26-					
14	V120-376-001-60	SCREW/SP	*	4		4					

FIG.188 ELC. SYSTEM (C TYPE)(1/3)

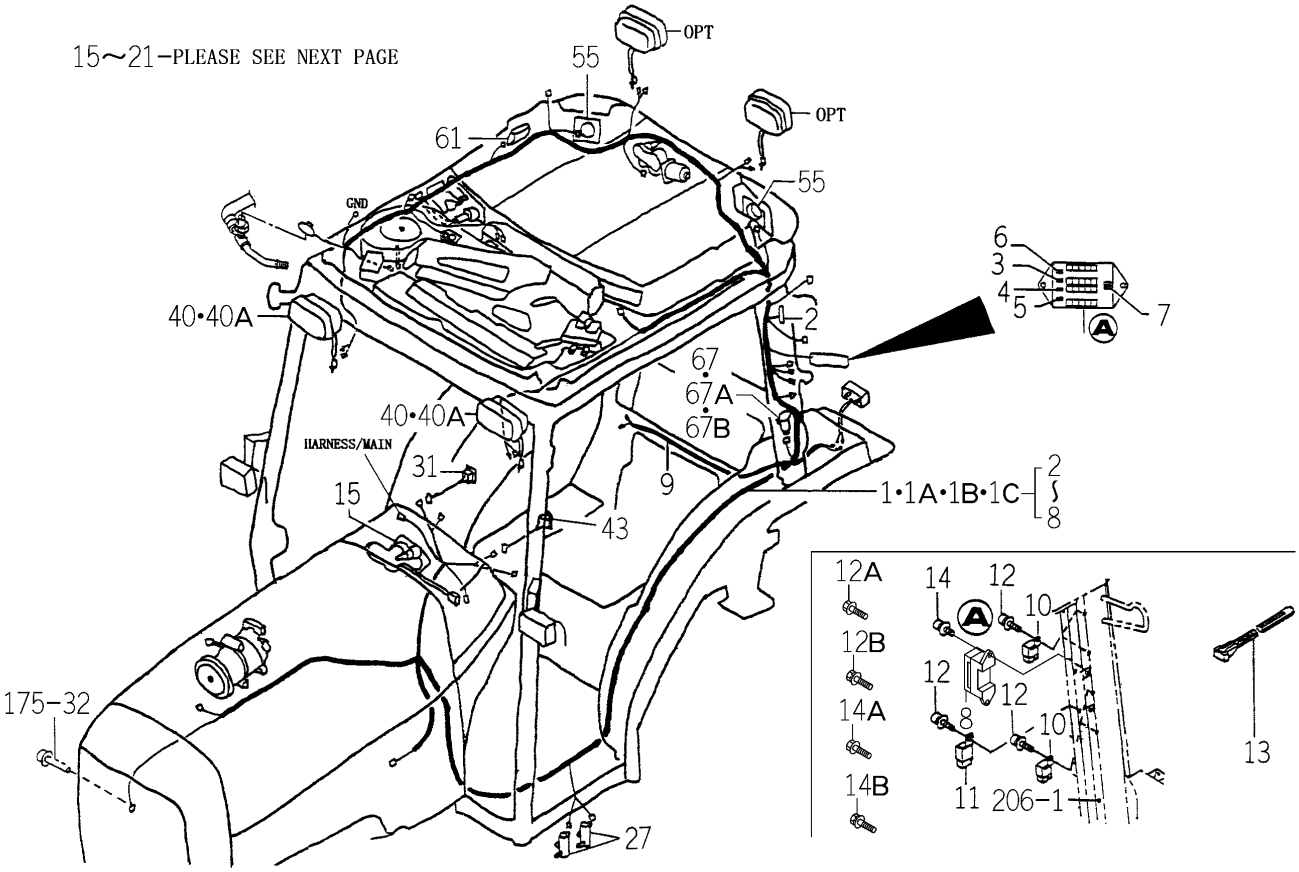

1746-658 -0100

KEY	PART CODE	DESCRIPTION	SPC	TYPE OF MODEL TG5330 E4	TG5330 E6	TG5390 E4	TG5390 E6	ITC	COL	GRP	REMARKS
1	1742-658-200-00	HARNESS/CY ASSY	*	1 -81		1 -242					
1A	1742-658-200-10	HARNESS/CY ASSY	*	1 -123		1 -420		1			
1B	1742-658-200-20	HARNESS/CY ASSY	*	1 -971		1 -1339		1			
1C	1742-658-200-30	HARNESS/CY ASSY	*	1 972-		1 1340-		1			
2	1560-666-212-00	DIODE	*	1		1					
3	1729-658-202-00	FUSE/BLADE/32V7.5A	*	2		2					
4	3821-262-203-00	FUSE(BLADE/32V15A)	*	5		5					
5	3821-262-202-00	FUSE/BLADE/32V10A	*	4		4					
6	3824-247-202-00	FUSE/BLADE/32V05A	*	3		3					
7	3821-262-209-00	TOOL/FUSE	*	1		1					
8	3824-247-204-00	COVER/FUSE	*	1		1					
9	1746-658-210-00	HARNESS/LICENSE ASSY	*	1		1					
10	1690-658-370-00	RELAY/4P ASSY	*	2		2					
11	1593-623-530-00	RELAY,5P ASSY	*	1		1					
12	V120-366-001-60	SCREW	*	3 -678		3 -954					
12A	V230-360-601-60	FLANGEBOLT	*	3 -696		3 -962					
12B	V210-360-601-20	BOLT,SEMS	*	3 697-		3 963-					
13	1376-402-003-00	BAND,WIRE/140	*	6		6					
14	V120-366-001-60	SCREW	*	2 -651		2 -954					
14A	V230-360-601-60	FLANGEBOLT	*	2 -696		2 -962					
14B	V210-360-601-60	BOLT(SP)/M6X16	*	2 697-		2 963-					
15	1729-658-210-00	MOTOR/WIPER/175 ASSY	*	1		1					
16	1729-658-212-00	GROMMET	*	1		1					
17	V301-260-006-00	NUT/M6	*	1		1					
18	V361-260-006-00	NUT	*	3		3					
19	1729-658-300-30	STAY/WIPER COMP	*	1		1		1			
20	V120-366-001-60	SCREW	*	2 -27		2 -25					
20A	4301-210-002-00	BOLT (S/N6X16)	*	2 -98		2 -294					
20B	2144-501-011-10	BOLT/M6X16X16	*	2 99-		2 295-					
21	1673-705-008-10	WASHER/06X15X01	*	2		2					

FIG.188 ELC. SYSTEM (C TYPE)(2/3)

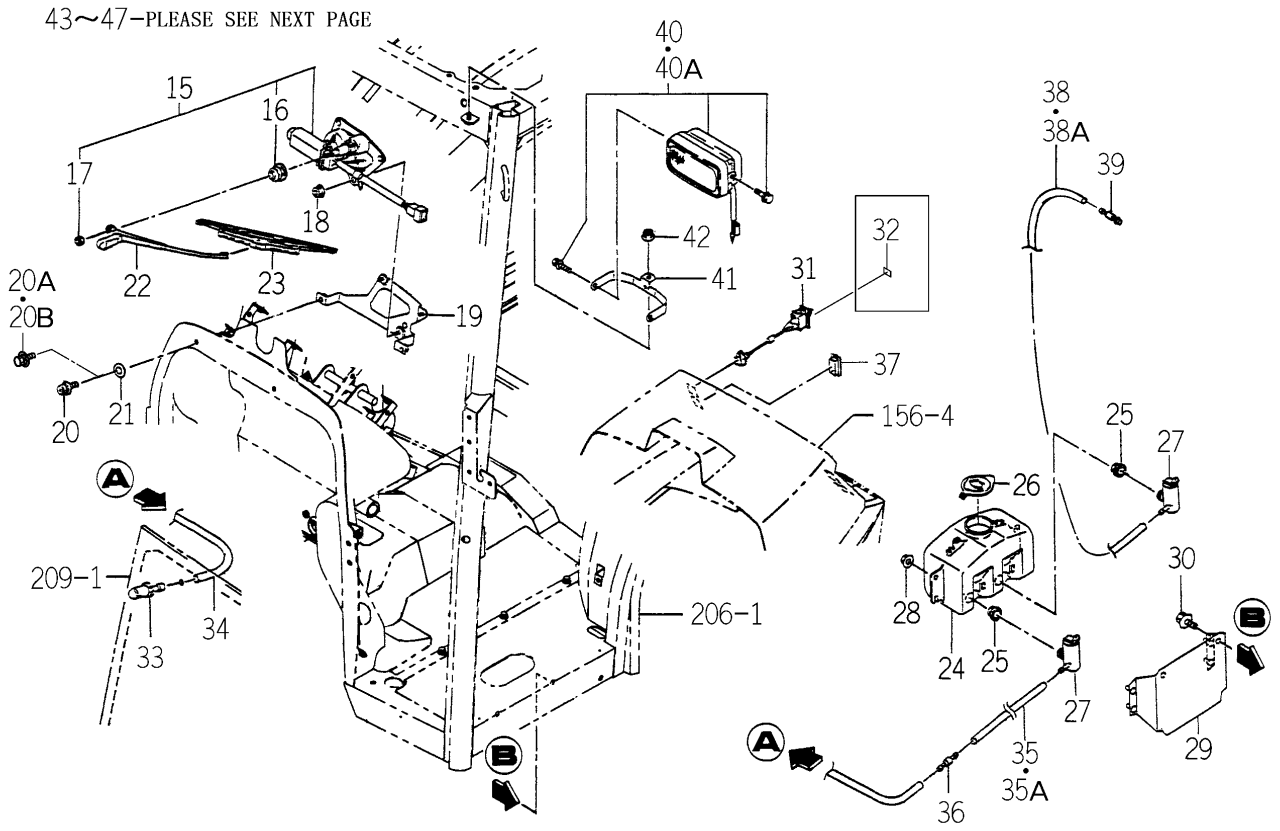

1746-658 -0100

KEY	PART CODE	DESCRIPTION	SPC	TYPE OF MODEL TG5330 E4	TG5330 E6	TG5390 E4	TG5390 E6	ITC	COL	GRP	REMARKS
22	1731-658-210-00	ARM/WIPER/330 ASSY	*	1		1					
23	1650-658-320-10	BLADE/WIPER/450 ASSY	*	1		1					
24	1729-658-311-00	TANK/WASHER/2M	*	1		1					
25	1729-658-312-00	GROMMET/W/T	*	2		2					
26	1729-658-313-00	CAP/W/T	*	1		1					
27	1729-658-314-00	PUMP/W/T	*	2		2					
28	V361-260-006-00	NUT	*	4		4					
29	1729-658-270-00	STAY/WASHER COMP	*	1		1					
30	V231-360-801-60	FLANGEBOLT	*	2		2					
31	1518-621-540-00	SWITCH,WIPER ASSY	*	1		1					
32	1746-658-002-00	LABEL/WASHER/WIPER/F	*	1 828-		1 1145-					
33	1691-658-200-00	NOZZLE/WASHER ASSY	*	1		1					
34	1729-658-001-00	HOSE/4700	*	1		1					
35	1729-658-007-00	HOSE/500	*	1 -81		1 -248					
35A	1650-658-005-00	HOSE/600	*	1 82-		1 249-					
36	1691-658-003-00	JOINT/WASHER	*	1		1					
37	1742-658-002-00	CAP/22X38	*	1		1					
38	1729-658-001-00	HOSE/4700	*	1 -361		1 -731					
38A	1742-658-003-00	HOSE/5000	*	1 362-		1 732-					
39	1518-621-532-00	VALVE,CHECK	*	1		1					
40	1696-658-340-00	LAMP/WORKING ASSY	*	2 -123		2 -416					FIG 268
40A	1696-658-340-10	LAMP/WORKING ASSY	*	2 124-		2 417-		1			FIG 268
41	1729-658-004-00	STAY/LAMP/WORKING	*	2		2					
42	V363-260-008-00	NUT/WASHER	*	2		2					
43	1521-621-600-00	REAR DIFF SWITCH	*	1		1					
44	1521-621-601-00	DIFF LOSTING MARK	*	1		1					
45	1711-666-052-00	LABEL/LAMP/F/E4	*	1 -403		1 -770					
45A	1711-666-052-10	LABEL/LAMP/F/E4	*	1 404-		1 771-		1			
46	1742-658-002-00	CAP/22X38	*	1		1					
47	V210-360-601-60	BOLT(SP)/M6X16	*	2		2					

FIG.188 ELC. SYSTEM (C TYPE)(3/3)

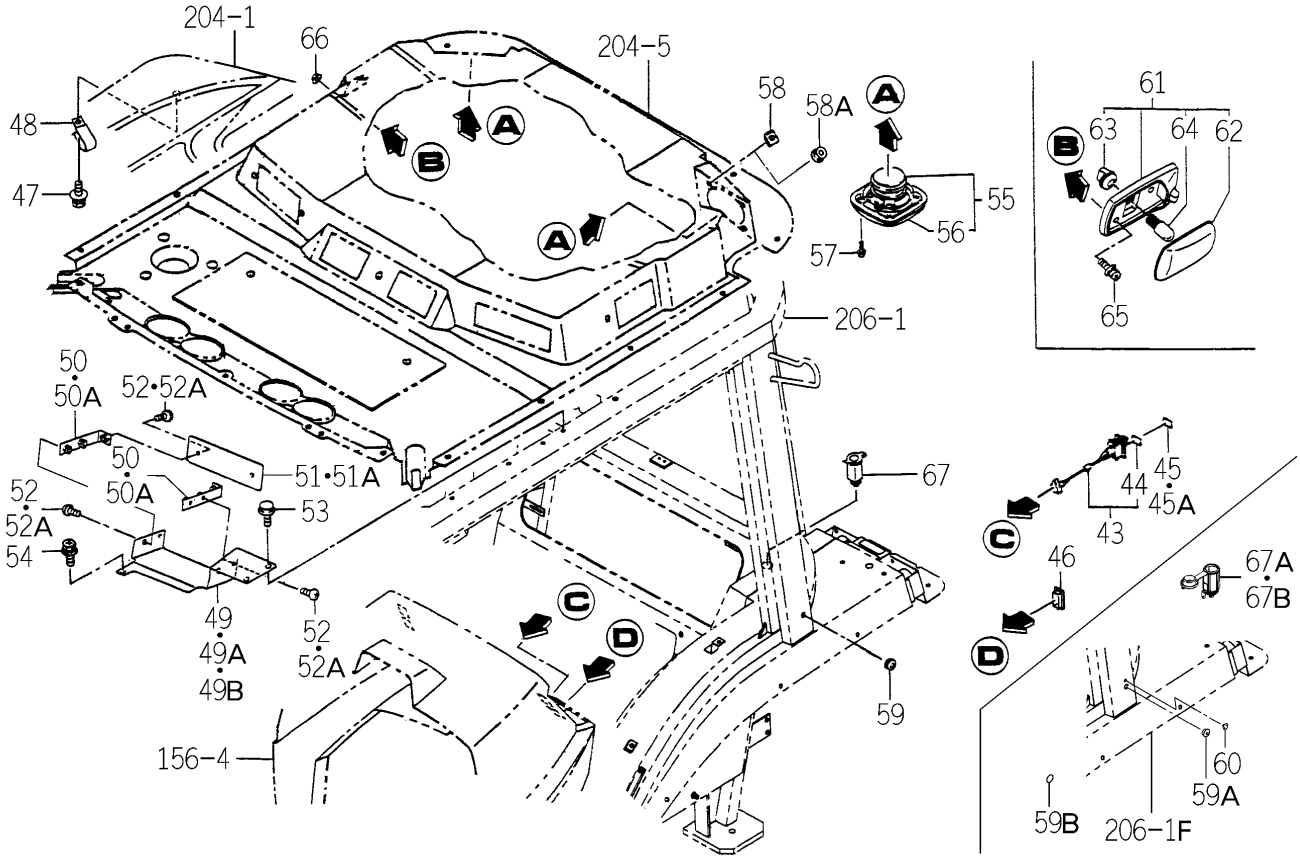

1746-658 -0100

KEY	PART CODE	DESCRIPTION	SPC	TYPE OF MODEL TG5330 E4	TG5330 E6	TG5390 E4	TG5390 E6	ITC	COL	GRP	REMARKS
48	3612-631-001-00	LAMP,WINKER B	*	2		2					
49	1729-658-003-00	STAY/RADICASSE	*	1 -339		1 -730					
49A	1729-658-003-10	STAY/RADICASSE	*	1 -951		1 -1263		1			
49B	1729-658-003-20	STAY/RADIOCASSETTE	*	1 952-		1 1264-		1			
50	1742-658-220-00	STAY COMP	*	2 -52		2 -91					
50A	1742-658-220-10	STAY COMP	*	2 53-		2 92-		3			
51	1742-658-001-00	PLATE/I/190X60	*	1 -779		1 -1143					
51A	1742-658-001-10	PLATE/I/190X60	*	1 780-		1 1144-		1			
52	1729-705-008-00	SCREW/TRUSS/M05X12	*	6 -259		6 -537					
52A	1719-720-051-00	SCREW/TRUSS/M05X10	*	6 260-		6 538-					
53	V230-360-601-20	FLANGEBOLT	*	2		2					
54	2144-501-012-00	BOLT/M6X20/16	*	1		1					
55	1729-658-320-00	SPAKER SET	*	2		2					
56	1673-666-621-00	COVER/SPEAKER COMP	*	2		2					
57	V111-174-002-00	SCREW	*	8		8					
58	1729-658-008-00	NUT/CLIP/M04	*	8 -27		8 -25					
58A	1617-730-005-00	NUT/WASHER	*	8 28-		8 26-					
59	1432-651-028-00	GROMMET/9X13X2	*	1 -416		1 -776					
59A	1781-658-003-00	GROMMET/05X09X02	*	1 -779		1 -1143					
59B	1783-658-001-00	LABEL/SEAL	*	1 780-		1 1144-					
60	1781-658-004-00	CAP	*	1 -779		1 -1143					
61	1729-658-230-00	LAMP/ROOM ASSY	*	1		1					
62	1729-658-232-00	LENS	*	1 -27		1 -170					
63	1729-658-233-00	HOLDER/BULB/LAMP	*	1 -27		1 -170					
64	1729-658-234-00	BULB/LAMP/12V5W	*	1		1					
65	V120-365-002-00	SCREW,SEMS	*	2		2					
66	V360-260-005-00	NUT/M5	*	2		2					
67	1742-658-210-00	SOCKET ASSY	*	1 -271		1 -598					
67A	1742-658-210-10	SOCKET/12V ASSY	*	1 -476		1 -821		1			
67B	1742-658-210-20	SOCKET/12V ASSY	*	1 477-		1 822-		1			

FIG.189 CONTROL SYSTEM (P TYPE)

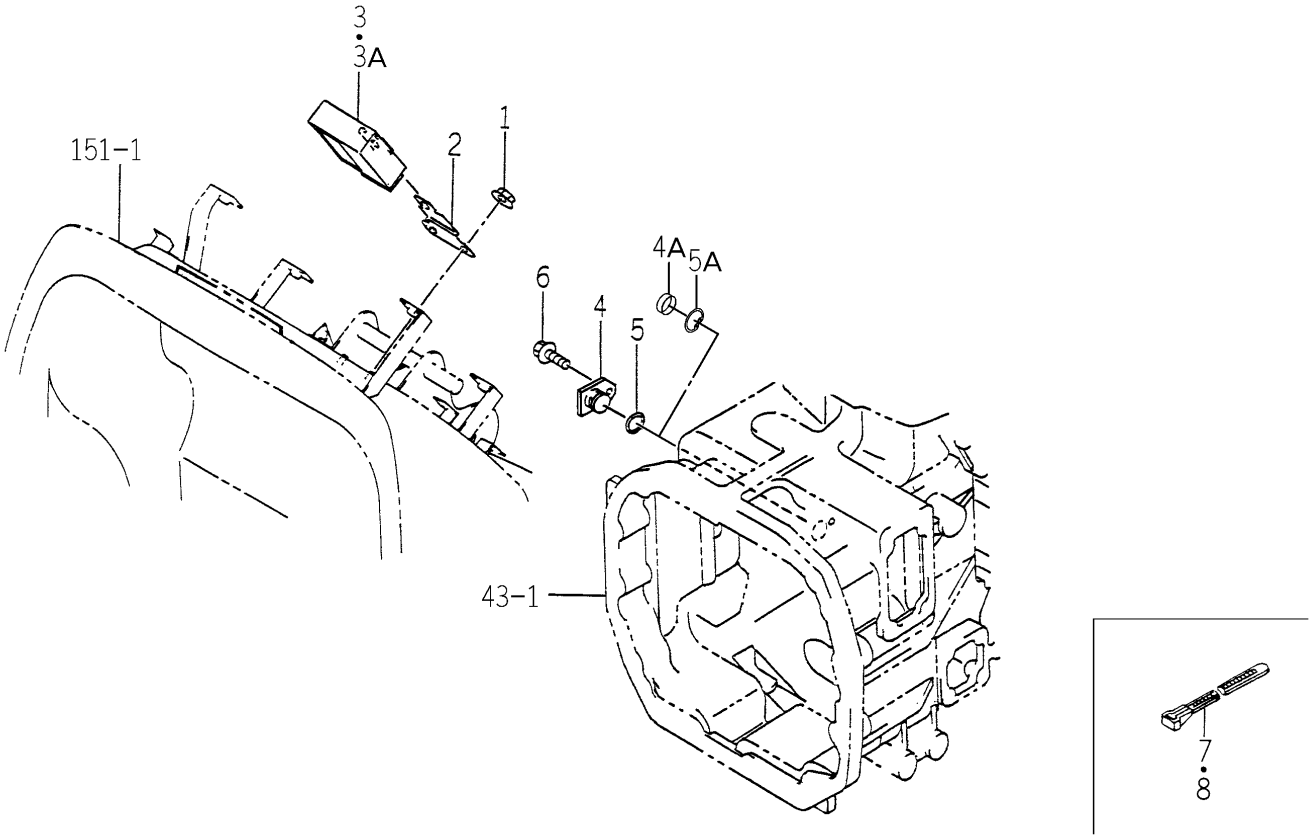

1742-662 -0100

KEY	PART CODE	DESCRIPTION	SPC	TYPE OF MODEL TG5330 E4	TG5330 E6	TG5390 E4	TG5390 E6	ITC	COL	GRP	REMARKS
1	V360-260-006-00	NUT/M6	*		2		2				
2	1742-662-001-00	STAY/CONTROLLER	*		1		1				
3	1742-662-200-50	CONTROLLER/EP ASSY	*		1 -817		1 -1175	1			
3A	1742-662-200-60	CONTROLLER/EP ASSY	*		1 818-		1 1176-	1			
4	1700-664-200-10	PLUG COMP	*		1 -68		1 -224				
4A	2144-307-004-00	SEAL/20X07	*		1 69-		1 225-				
5	V720-102-401-60	O-RING/P16	*		1 -68		1 -224				
5A	V705-140-020-00	RING,SNAP/20 C	*		1 69-		1 225-				
6	V230-360-601-20	FLANGEBOLT	*		1 -68		1 -224				
7	1376-402-003-00	BAND,WIRE/140	*		2		2				
8	1342-402-006-00	BAND/WIRE/250	*		1		1				

FIG.190 CONTROL SYSTEM (HE6 TYPE)

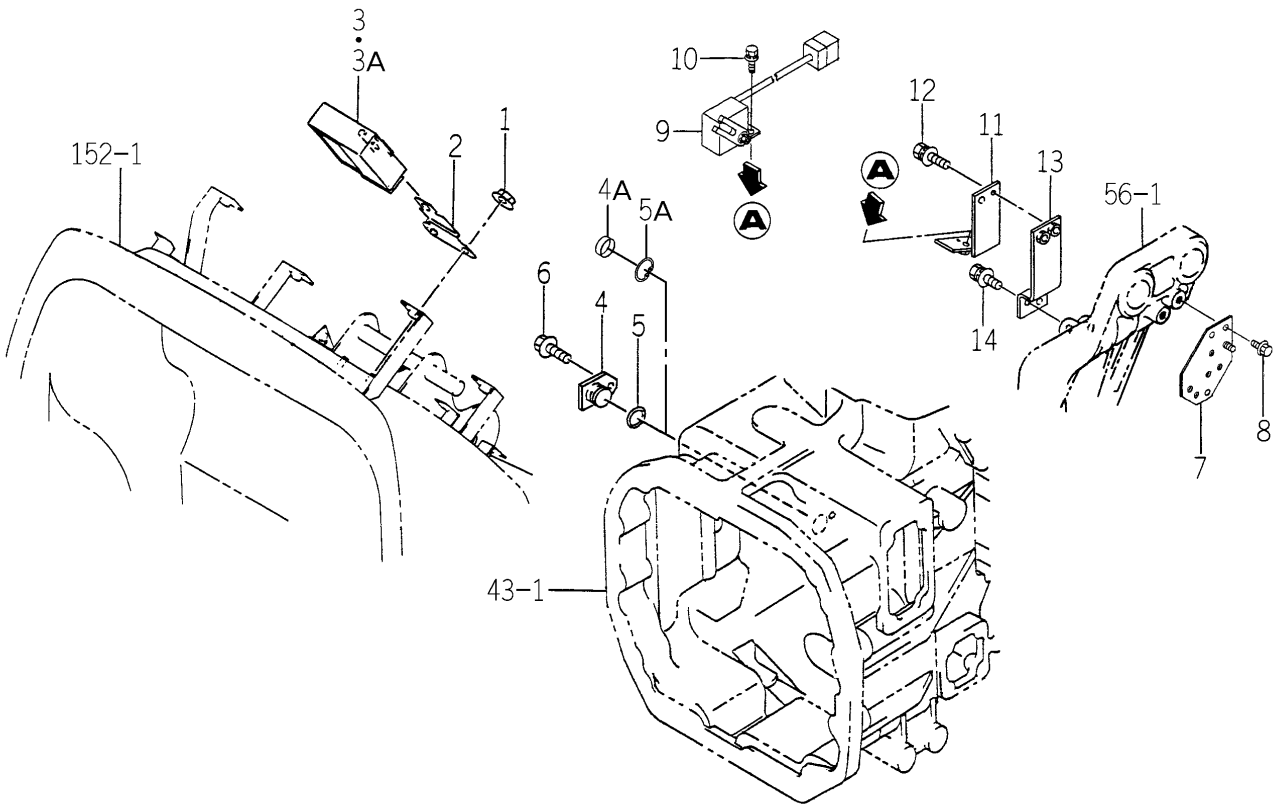

1743-662 -0100

KEY	PART CODE	DESCRIPTION	SPC	TYPE OF MODEL TG5330 E4	TG5330 E6	TG5390 E4	TG5390 E6	ITC	COL	GRP	REMARKS
1	V360-260-006-00	NUT/M6	*				2				
2	1742-662-001-00	STAY/CONTROLLER	*				1				
3	1742-662-200-50	CONTROLLER/EP ASSY	*				1 -1175	1			
3A	1742-662-200-60	CONTROLLER/EP ASSY	*				1 1176-	1			
4	1700-664-200-10	PLUG COMP	*				1 -222				
4A	2144-307-004-00	SEAL/20X07	*				1 223-				
5	V720-102-401-60	O-RING/P16	*				1 -222				
5A	V705-140-020-00	RING,SNAP/20 C	*				1 223-				
6	V230-360-601-20	FLANGEBOLT	*				1 -222				
7	1746-662-240-10	BRACKET/SENSOR COMP	*				1				
8	V230-360-601-20	FLANGEBOLT	*				2				
9	1740-680-520-00	SWITCH/SENSOR ASSY	*				1				
10	V210-360-601-60	BOLT(SP)/M6X16	*				1				
11	1743-652-520-10	STAY/SENSOR COMP	*				1				
12	V210-360-601-60	BOLT(SP)/M6X16	*				2				
13	1743-652-550-00	PLATE/STAY COMP	*				1				
14	V210-360-601-20	BOLT,SEMS	*				2				

FIG.191 CONTROL SYSTEM(Q TYPE EXCEPT C-No.1-/QC TYPE-TG5330E4-No.1-81/ TG5390E4-No.1-270)

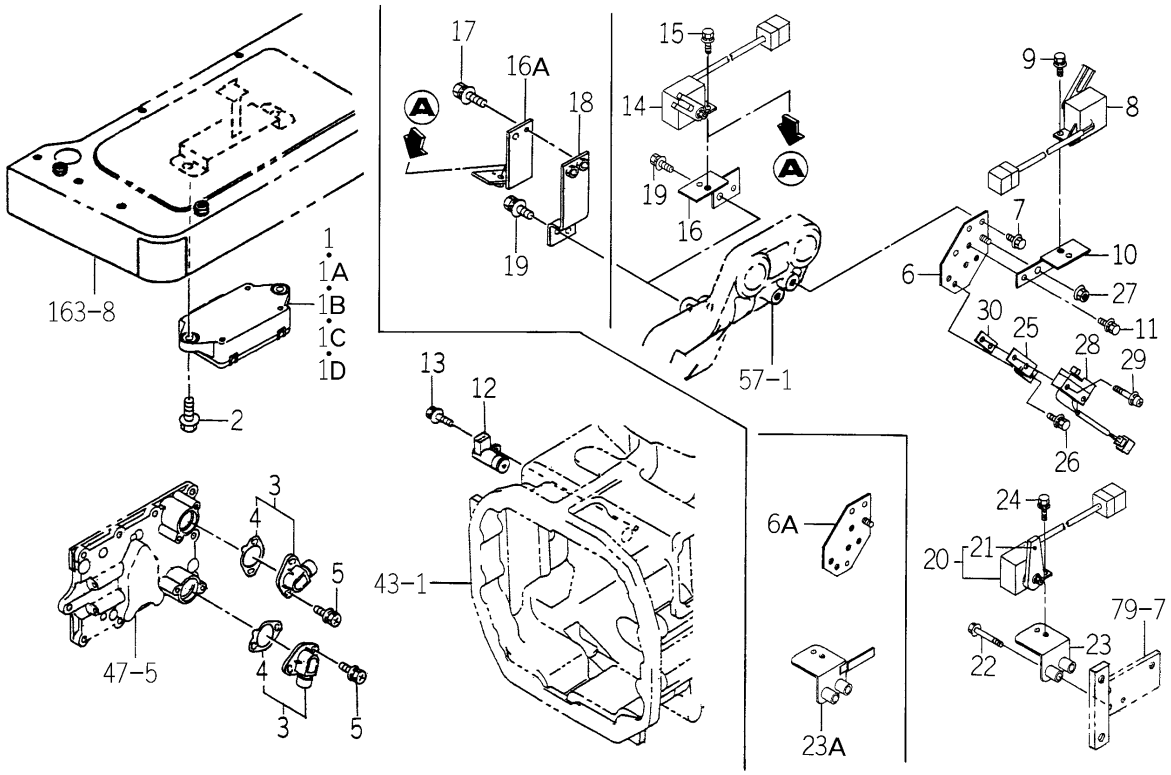

1746-662 -0100

KEY	PART CODE	DESCRIPTION	SPC	TYPE OF MODEL TG5330 E4	TG5330 E6	TG5390 E4	TG5390 E6	ITC	COL	GRP	REMARKS
1	1746-662-200-20	CONTROLLER/Q ASSY	*	1 -98		1 -299		1			
1A	1746-662-200-30	CONTROLLER/Q ASSY	*	1 -154		1 -498		1			
1B	1746-662-200-40	CONTROLLER/Q ASSY	*	1 -497		1 -849		1			
1C	1746-662-200-50	CONTROLLER/Q ASSY	*	1 -819		1 -1157		1			
1D	1746-662-200-60	CONTROLLER/Q ASSY	*	1 820-		1 1158-		1			
2	V231-360-802-50	FLANGEBOLT	*	2		2					
3	1696-660-400-00	SENSOR/ANGLE/R ASSY	*	2		2					
4	1690-660-001-00	GASKET/SENSOR	*	2		2					
5	2505-111-001-00	BOLT/SP	*	4		4					
6	1746-662-240-00	BRACKET/SENSOR COMP	*	1 -27		1 -25					
6A	1746-662-240-10	BRACKET/SENSOR COMP	*	1 28-		1 26-		1			
7	V230-360-601-20	FLANGEBOLT	*	2		2					
8	1729-660-230-00	SENSOR ASSY	*	1		1					
9	V210-360-601-60	BOLT(SP)/M6X16	*	1		1					
10	1746-662-220-00	PLATE/SENSOR COMP	*	1		1					
11	V210-360-601-60	BOLT(SP)/M6X16	*	2		2					
12	1690-654-350-00	SENSOR/REVOLUTION/L	*	1		1					
13	V230-360-601-60	FLANGEBOLT	*	1		1					
14	1740-680-520-00	SWITCH/SENSOR ASSY	*	1		1					
15	V210-360-601-60	BOLT(SP)/M6X16	*	1		1					
16	1743-652-520-00	STAY/SENSOR COMP	*	1 -27		1 -25					
16A	1743-652-520-10	STAY/SENSOR COMP	*	1 28-		1 26-		1			
17	V210-360-601-60	BOLT(SP)/M6X16	*	2 28-		2 26-					
18	1743-652-550-00	PLATE/STAY COMP	*	1 28-		1 26-					
19	V210-360-601-20	BOLT,SEMS	*	2		2					
20	1716-680-330-00	SWITCH/LEVER ASSY	*	1		1					
21	1716-680-222-00	ARM	*	1		1					
22	V230-360-603-00	FLANGEBOLT	*	2		2					
23	1746-652-250-00	BRACKET/SWITCH COMP	*	1 -39		1 -55					
23A	1746-652-250-10	BRACKET/SWITCH COMP	*	1 40-		1 56-		1			

FIG.191 CONTROL SYSTEM(Q TYPE EXCEPT C-No.1-/QC TYPE-TG5330E4-No.1-81/ TG5390E4-No.1-270)

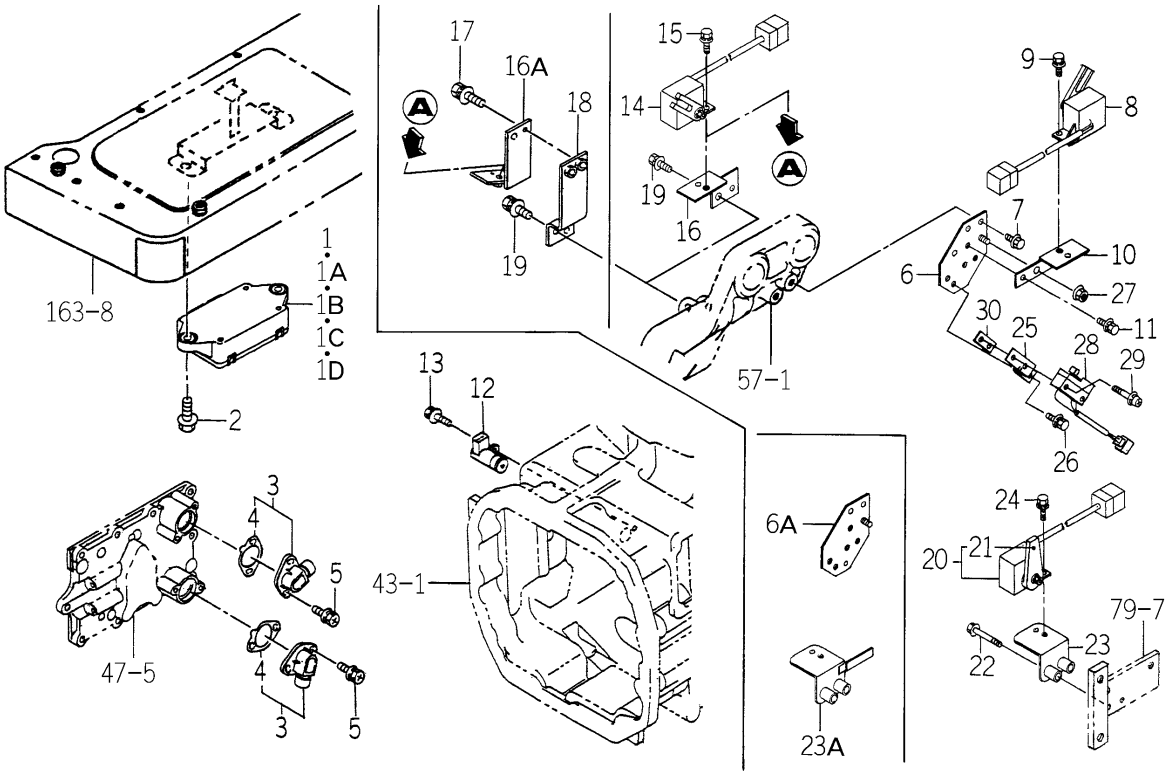

1746-662 -0100

KEY	PART CODE	DESCRIPTION	SPC	TYPE OF MODEL TG5330 E4	TG5330 E6	TG5390 E4	TG5390 E6	ITC	COL	GRP	REMARKS
24	V210-360-601-60	BOLT(SP)/M6X16	*	1		1					
25	1746-229-001-00	PLATE/Z/16X86	*	1		1					
26	V210-360-601-60	BOLT(SP)/M6X16	*	1		1					
27	V360-260-006-00	NUT/M6	*	1		1					
28	1518-621-470-00	SWITCH,SAFETY ASSY	*	1		1					
29	V120-364-003-00	SCREW/M4X30	*	2		2					
30	3656-271-001-00	PLATE/I,13X40	*	1		1					

FIG.192 CONTROL SYSTEM (HE4 TYPE EXCEPT H3)

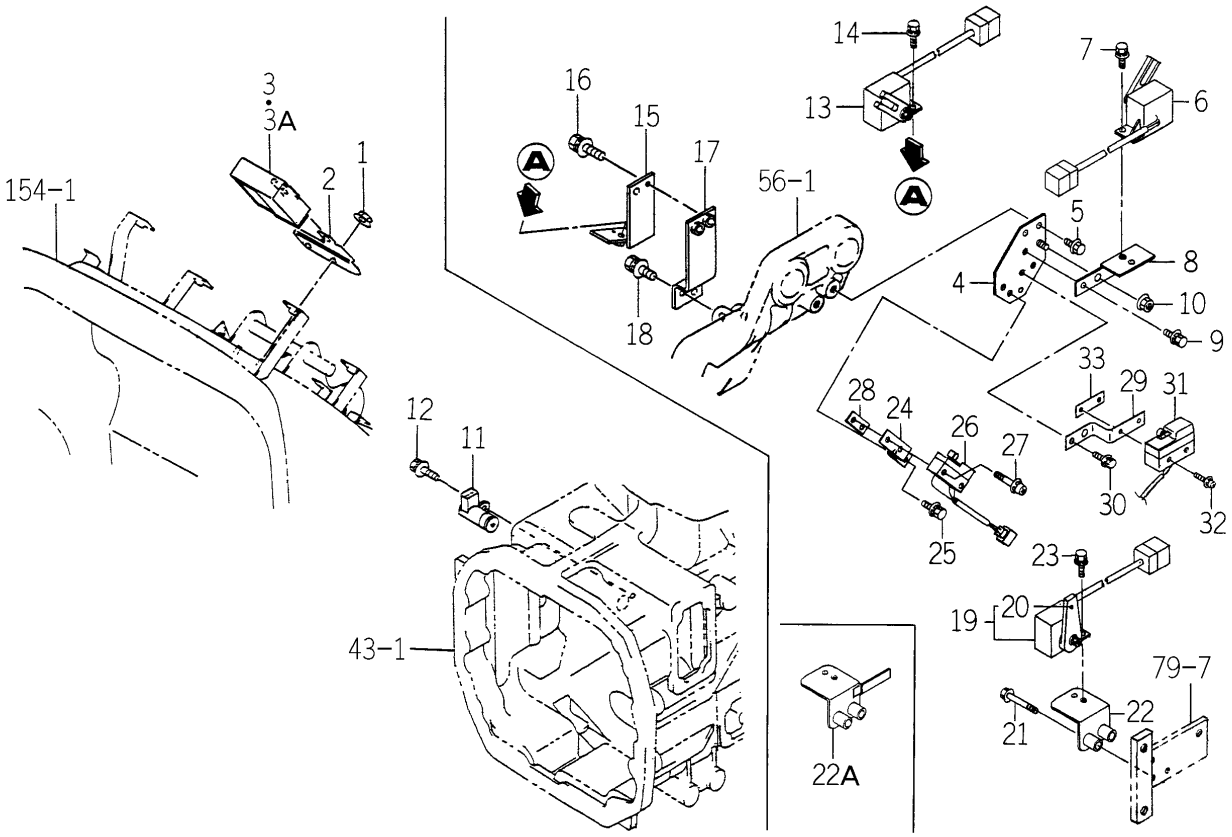

1747-662 -0100

KEY	PART CODE	DESCRIPTION	SPC	TYPE OF MODEL TG5330 E4	TG5330 E6	TG5390 E4	TG5390 E6	ITC	COL	GRP	REMARKS
1	V360-260-006-00	NUT/M6	*			2					
2	1744-662-001-00	STAY/CONTROLLER	*			1					
3	1742-662-200-50	CONTROLLER/EP ASSY	*			1 -1175		1			
3A	1742-662-200-60	CONTROLLER/EP ASSY	*			1 1176-		1			
4	1746-662-240-10	BRACKET/SENSOR COMP	*			1					
5	V230-360-601-20	FLANGEBOLT	*			2					
6	1729-660-230-00	SENSOR ASSY	*			1					
7	V210-360-601-60	BOLT(SP)/M6X16	*			1					
8	1746-662-220-00	PLATE/SENSOR COMP	*			1					
9	V210-360-601-60	BOLT(SP)/M6X16	*			1					
10	V360-260-006-00	NUT/M6	*			1					
11	1690-654-350-00	SENSOR/REVOLUTION/L	*			1					
12	V230-360-601-60	FLANGEBOLT	*			1					
13	1740-680-520-00	SWITCH/SENSOR ASSY	*			1					
14	V210-360-601-60	BOLT(SP)/M6X16	*			1					
15	1743-652-520-10	STAY/SENSOR COMP	*			1					
16	V210-360-601-60	BOLT(SP)/M6X16	*			2					
17	1743-652-550-00	PLATE/STAY COMP	*			1					
18	V210-360-601-20	BOLT,SEMS	*			2					
19	1716-680-330-00	SWITCH/LEVER ASSY	*			1					
20	1716-680-222-00	ARM	*			1					
21	V230-360-603-00	FLANGEBOLT	*			2					
22	1746-652-250-00	BRACKET/SWITCH COMP	*			1 -55					
22A	1746-652-250-10	BRACKET/SWITCH COMP	*			1 56-		1			
23	V210-360-601-60	BOLT(SP)/M6X16	*			1					
24	1746-229-001-00	PLATE/Z/16X86	*			1					
25	V210-360-601-60	BOLT(SP)/M6X16	*			2					
26	1518-621-470-00	SWITCH,SAFETY ASSY	*			1					
27	V120-364-003-00	SCREW/M4X30	*			2					
28	3656-271-001-00	PLATE/I,13X40	*			1					

FIG.192 CONTROL SYSTEM (HE4 TYPE EXCEPT H3)

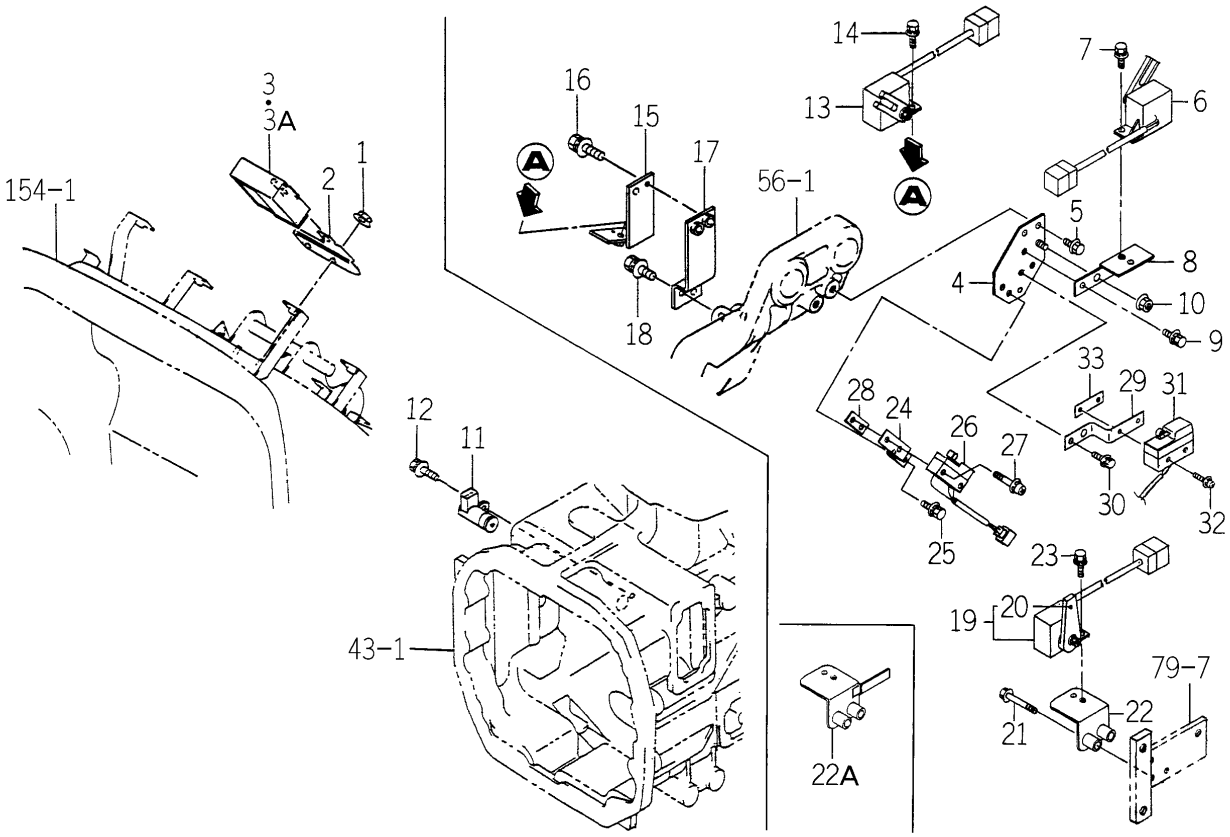

1747-662 -0100

KEY	PART CODE	DESCRIPTION	SPC	TYPE OF MODEL TG5330 E4	TG5330 E6	TG5390 E4	TG5390 E6	ITC	COL	GRP	REMARKS
29	1746-229-001-00	PLATE/Z/16X86	*			1					
30	V210-360-601-60	BOLT(SP)/M6X16	*			2					
31	1518-621-470-00	SWITCH,SAFETY ASSY	*			1					
32	V120-364-003-00	SCREW/M4X30	*			2					
33	3656-271-001-00	PLATE/I,13X40	*			1					

FIG.193 CONTROL SYSTEM (S TYPE)

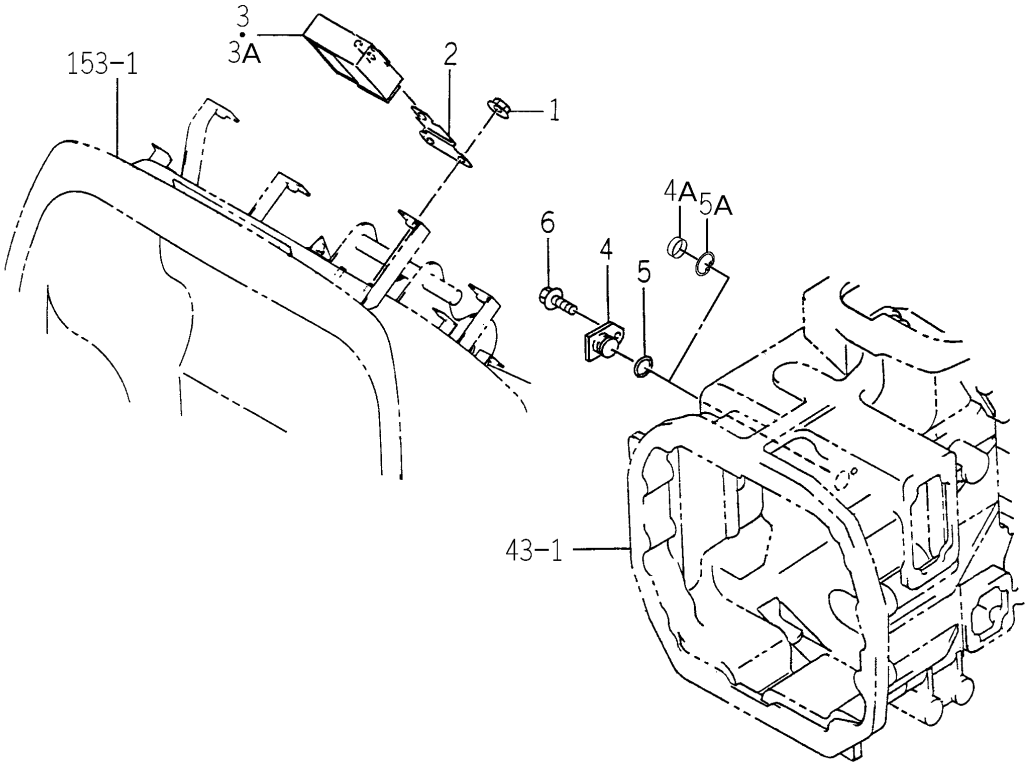

1742-662A-0100

KEY	PART CODE	DESCRIPTION	SPC	TYPE OF MODEL TG5330 E4	TG5330 E6	TG5390 E4	TG5390 E6	ITC	COL	GRP	REMARKS
1	V360-260-006-00	NUT/M6	*	2		2					
2	1742-662-001-00	STAY/CONTROLLER	*	1		1					
3	1742-662-200-50	CONTROLLER/EP ASSY	*	1 -817		1 -1175		1			
3A	1742-662-200-60	CONTROLLER/EP ASSY	*	1 818-		1 1176-		1			
4	1700-664-200-10	PLUG COMP	*	1 -72		1 -219					
4A	2144-307-004-00	SEAL/20X07	*	1 73-		1 220-					
5	V720-102-401-60	O-RING/P16	*	1 -72		1 -219					
5A	V705-140-020-00	RING,SNAP/20 C	*	1 73-		1 220-					
6	V230-360-601-20	FLANGEBOLT	*	1 -72		1 -219					

FIG.194 CONTROL SYSTEM (H3 TYPE EXCEPT C)

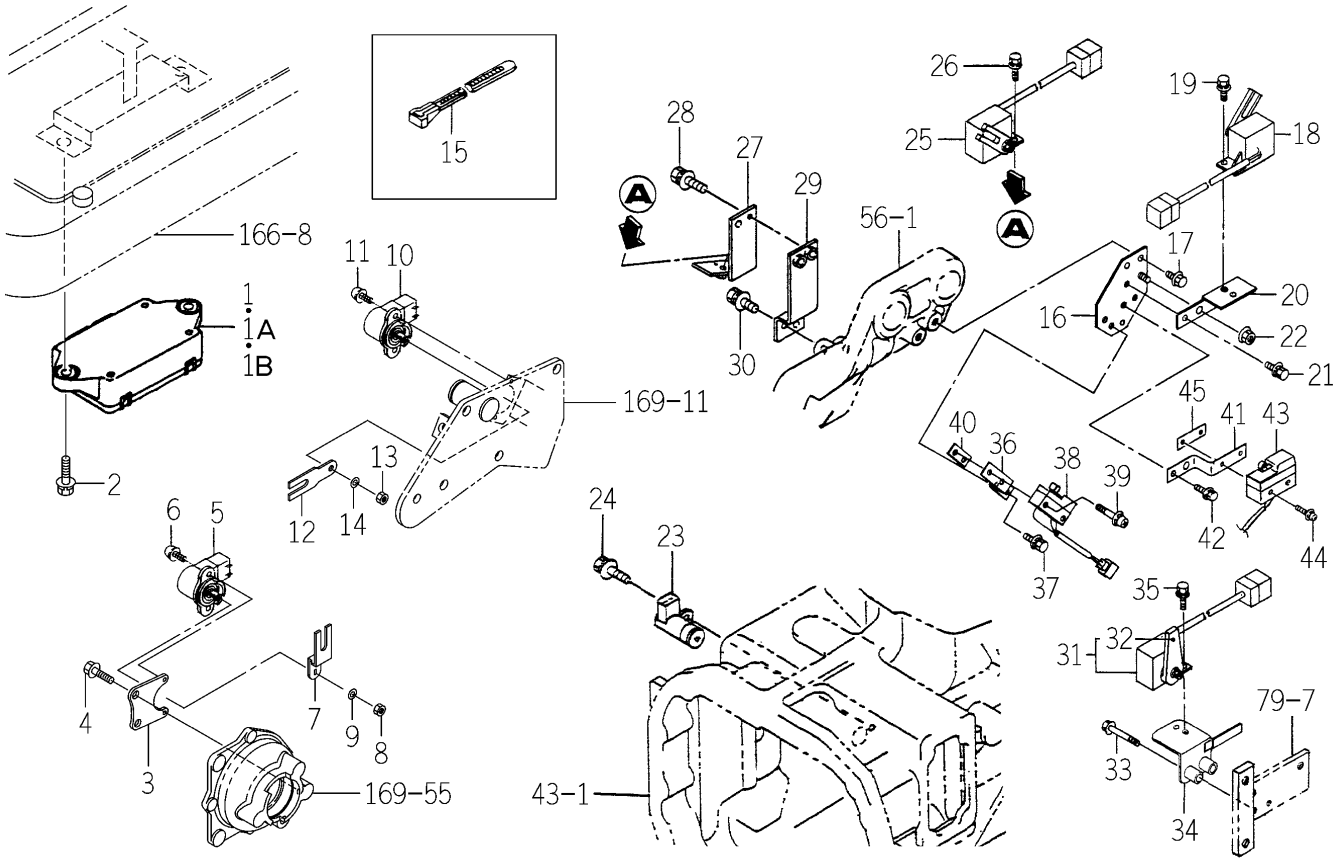

1747-662A-0100

KEY	PART CODE	DESCRIPTION	SPC	TYPE OF MODEL TG5330 E4	TG5330 E6	TG5390 E4	TG5390 E6	ITC	COL	GRP	REMARKS
1	1747-662-700-00	CONTROLLER/HST ASSY	*			1 -1009					
1A	1747-662-700-10	CONTROLLER/HST ASSY	*			1 -1245		1			
1B	1747-662-700-20	CONTROLLER/HST ASSY	*			1 1246-		1			
2	V211-360-802-50	BOLT/SP	*			2					
3	1747-662-071-00	BRACKET/SENSOR	*			1					
4	V231-360-801-60	FLANGEBOLT	*			2					
5	1729-662-330-00	SENSOR/ANGLE/75 ASSY	*			1					
6	V120-364-001-20	SCREW,SP/M4X12	*			2					
7	1747-662-085-00	ARM/SENSOR	*			1					
8	V301-260-006-00	NUT/M6	*			1					
9	V401-160-006-00	WASHER,SP/M 6	*			1					
10	1729-662-330-00	SENSOR/ANGLE/75 ASSY	*			1					
11	V120-364-001-20	SCREW,SP/M4X12	*			2					
12	1747-662-086-00	ARM/PLATE	*			1					
13	V301-260-006-00	NUT/M6	*			1					
14	V401-160-006-00	WASHER,SP/M 6	*			1					
15	1376-402-003-00	BAND,WIRE/140	*			1					
16	1746-662-240-10	BRACKET/SENSOR COMP	*			1					
17	V230-360-601-20	FLANGEBOLT	*			2					
18	1729-660-230-00	SENSOR ASSY	*			1					
19	V210-360-601-60	BOLT(SP)/M6X16	*			1					
20	1746-662-220-00	PLATE/SENSOR COMP	*			1					
21	V210-360-601-60	BOLT(SP)/M6X16	*			1					
22	V360-260-006-00	NUT/M6	*			1					
23	1690-654-350-00	SENSOR/REVOLUTION/L	*			1					
24	V230-360-601-60	FLANGEBOLT	*			1					
25	1740-680-520-00	SWITCH/SENSOR ASSY	*			1					
26	V210-360-601-60	BOLT(SP)/M6X16	*			1					
27	1743-652-520-10	STAY/SENSOR COMP	*			1					
28	V210-360-601-60	BOLT(SP)/M6X16	*			2					

FIG.194 CONTROL SYSTEM (H3 TYPE EXCEPT C)

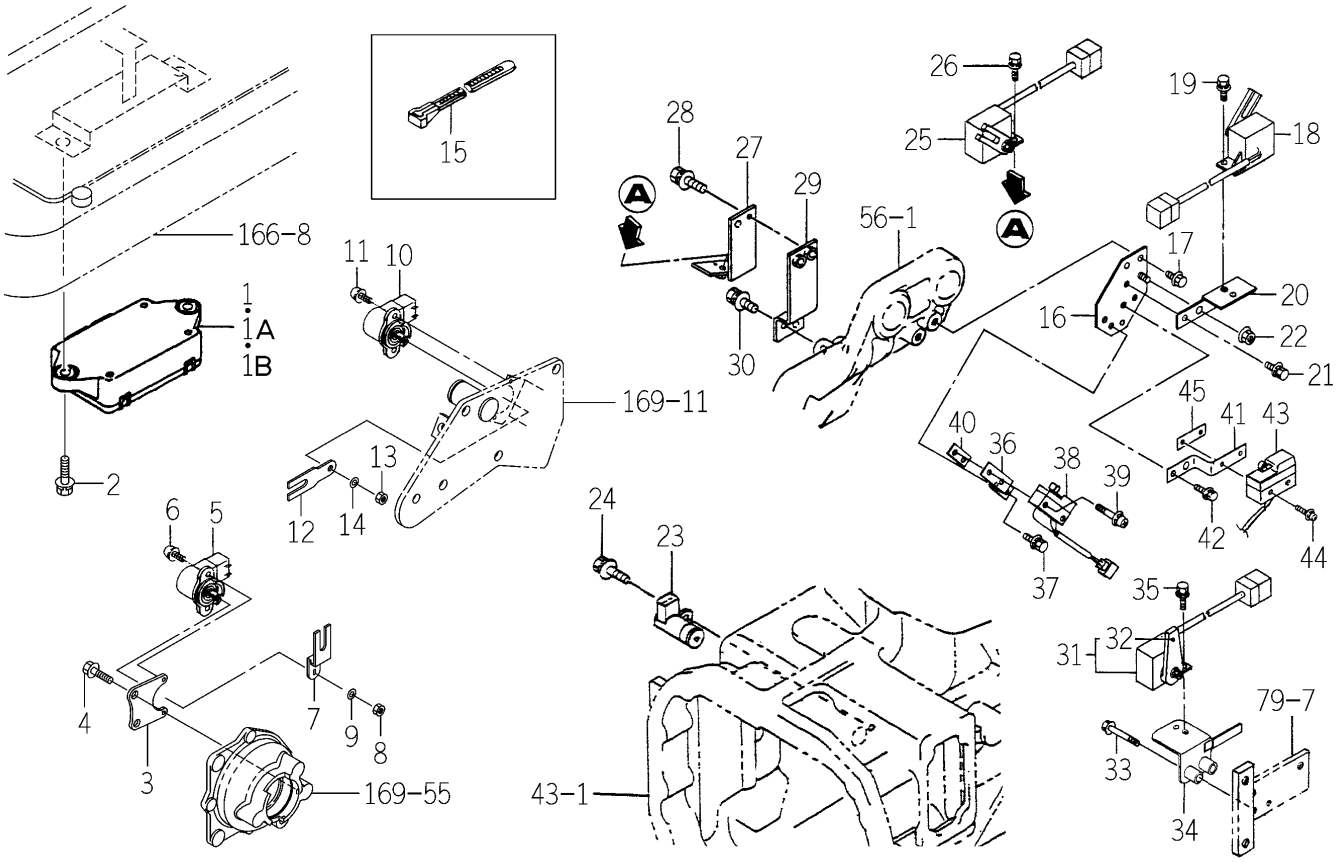

1747-662A-0100

KEY	PART CODE	DESCRIPTION	SPC	TYPE OF MODEL TG5330 E4	TG5330 E6	TG5390 E4	TG5390 E6	ITC	COL	GRP	REMARKS
29	1743-652-550-00	PLATE/STAY COMP	*			1					
30	V210-360-601-20	BOLT,SEMS	*			2					
31	1716-680-330-00	SWITCH/LEVER ASSY	*			1					
32	1716-680-222-00	ARM	*			1					
33	V230-360-603-00	FLANGEBOLT	*			2					
34	1746-652-250-10	BRACKET/SWITCH COMP	*			1					
35	V210-360-601-60	BOLT(SP)/M6X16	*			1					
36	1746-229-001-00	PLATE/Z/16X86	*			1					
37	V210-360-601-60	BOLT(SP)/M6X16	*			2					
38	1518-621-470-00	SWITCH,SAFETY ASSY	*			1					
39	V120-364-003-00	SCREW/M4X30	*			2					
40	3656-271-001-00	PLATE/I,13X40	*			1					
41	1746-229-001-00	PLATE/Z/16X86	*			1					
42	V210-360-601-60	BOLT(SP)/M6X16	*			2					
43	1518-621-470-00	SWITCH,SAFETY ASSY	*			1					
44	V120-364-003-00	SCREW/M4X30	*			2					
45	3656-271-001-00	PLATE/I,13X40	*			1					

FIG.195 CONTROL SYSTEM
(QC TYPE-TG5330E4-No.82-/TG5390E4-No.271-)

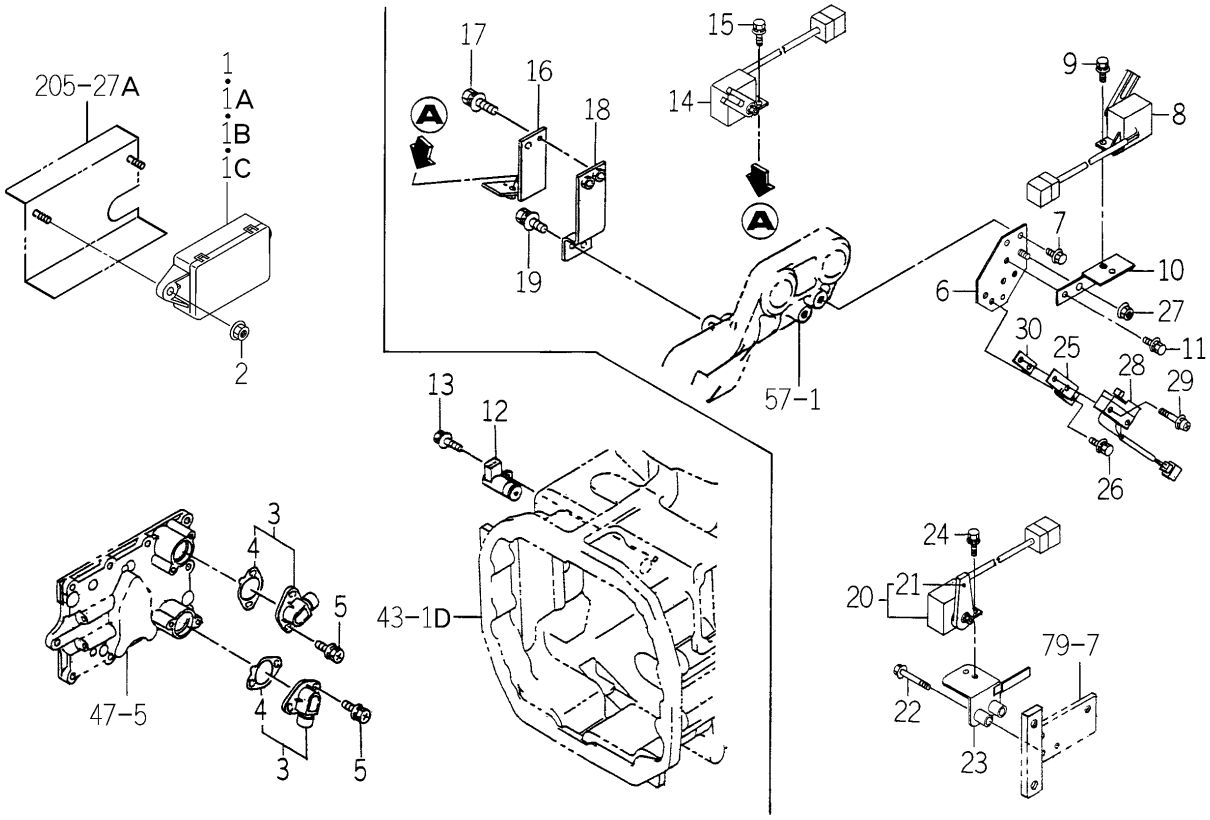

1746-662B-0100

KEY	PART CODE	DESCRIPTION	SPC	TYPE OF MODEL TG5330 E4	TG5330 E6	TG5390 E4	TG5390 E6	ITC	COL	GRP	REMARKS
1	1746-662-200-30	CONTROLLER/Q ASSY	*	1 -154		1 -498					
1A	1746-662-200-40	CONTROLLER/Q ASSY	*	1 -497		1 -849		1			
1B	1746-662-200-50	CONTROLLER/Q ASSY	*	1 -819		1 -1157		1			
1C	1746-662-200-60	CONTROLLER/Q ASSY	*	1 820-		1 1158-		1			
2	V363-260-008-00	NUT/WASHER	*	2 82-		2 271-					
3	1696-660-400-00	SENSOR/ANGLE/R ASSY	*	2 82-		2 271-					
4	1690-660-001-00	GASKET/SENSOR	*	2 82-		2 271-					
5	2505-111-001-00	BOLT/SP	*	4 82-		4 271-					
6	1746-662-240-10	BRACKET/SENSOR COMP	*	1 82-		1 271-					
7	V230-360-601-20	FLANGEBOLT	*	2 82-		2 271-					
8	1729-660-230-00	SENSOR ASSY	*	1 82-		1 271-					
9	V210-360-601-60	BOLT(SP)/M6X16	*	1 82-		1 271-					
10	1746-662-220-00	PLATE/SENSOR COMP	*	1 82-		1 271-					
11	V210-360-601-60	BOLT(SP)/M6X16	*	2 82-		2 271-					
12	1690-654-350-00	SENSOR/REVOLUTION/L	*	1 82-		1 271-					
13	V230-360-601-60	FLANGEBOLT	*	1 82-		1 271-					
14	1740-680-520-00	SWITCH/SENSOR ASSY	*	1 82-		1 271-					
15	V210-360-601-60	BOLT(SP)/M6X16	*	1 82-		1 271-					
16	1743-652-520-10	STAY/SENSOR COMP	*	1 82-		1 271-					
17	V210-360-601-60	BOLT(SP)/M6X16	*	2 82-		2 271-					
18	1743-652-550-00	PLATE/STAY COMP	*	1 82-		1 271-					
19	V210-360-601-20	BOLT,SEMS	*	2 82-		2 271-					
20	1716-680-330-00	SWITCH/LEVER ASSY	*	1 82-		1 271-					
21	1716-680-222-00	ARM	*	1 82-		1 271-					
22	V230-360-603-00	FLANGEBOLT	*	2 82-		2 271-					
23	1746-652-250-10	BRACKET/SWITCH COMP	*	1 82-		1 271-					
24	V210-360-601-60	BOLT(SP)/M6X16	*	1 82-		1 271-					
25	1746-229-001-00	PLATE/Z/16X86	*	1 82-		1 271-					
26	V210-360-601-60	BOLT(SP)/M6X16	*	1 82-		1 271-					
27	V360-260-006-00	NUT/M6	*	1 82-		1 271-					

FIG.195 CONTROL SYSTEM
(QC TYPE-TG5330E4-No.82-/TG5390E4-No.271-)

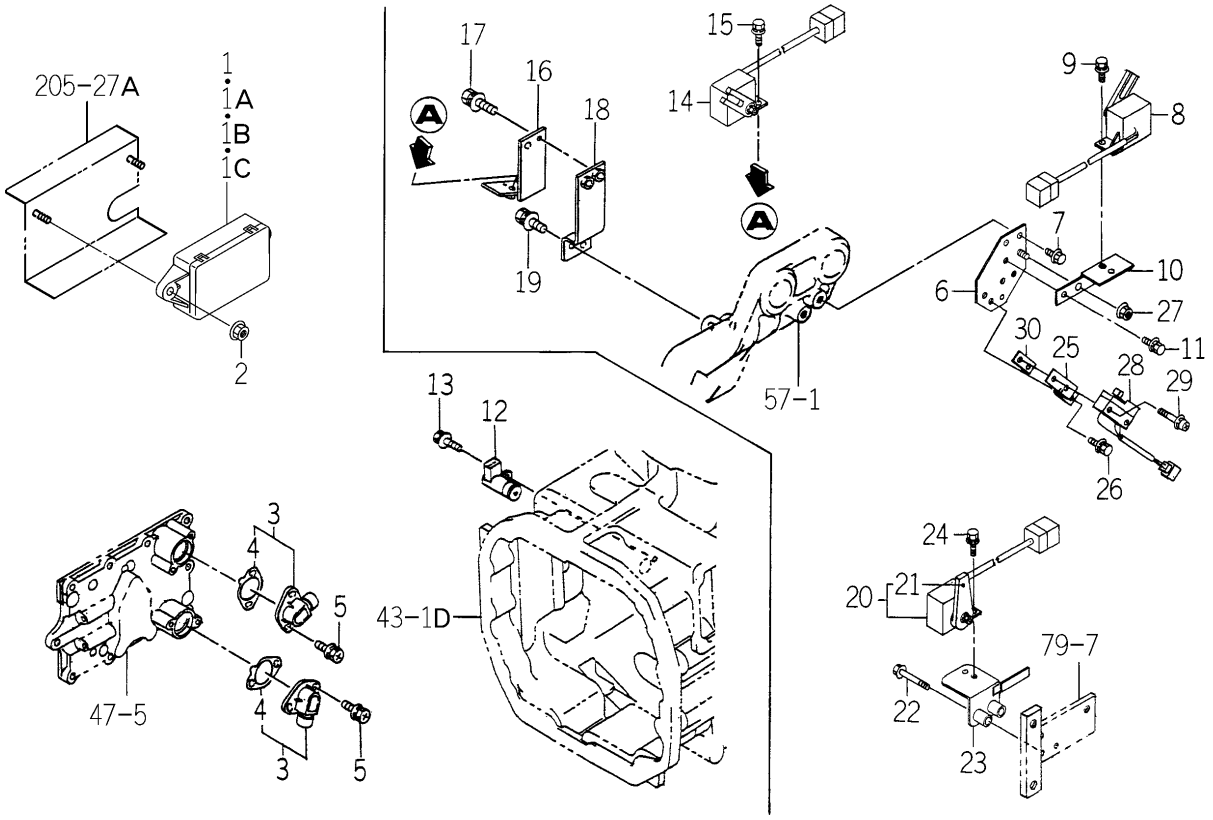

1746-662B-0100

KEY	PART CODE	DESCRIPTION	SPC	TYPE OF MODEL TG5330 E4	TG5330 E6	TG5390 E4	TG5390 E6	ITC	COL	GRP	REMARKS
28	1518-621-470-00	SWITCH,SAFETY ASSY	*	1 82-		1 271-					
29	V120-364-003-00	SCREW/M4X30	*	2 82-		2 271-					
30	3656-271-001-00	PLATE/I,13X40	*	1 82-		1 271-					

FIG.196 CONTROL SYSTEM (H3C TYPE)

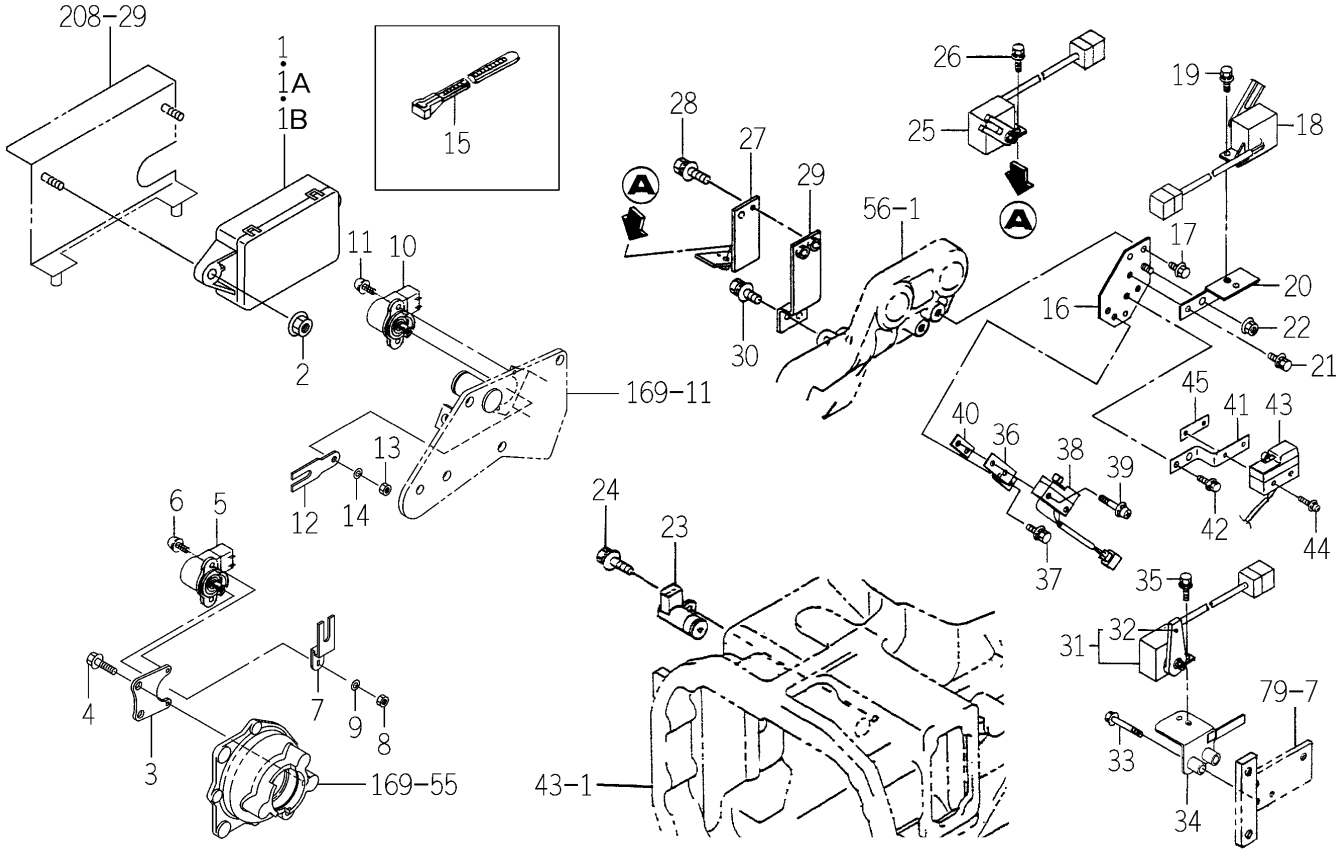

1747-662B-0100

KEY	PART CODE	DESCRIPTION	SPC	TYPE OF MODEL TG5330 E4	TG5330 E6	TG5390 E4	TG5390 E6	ITC	COL	GRP	REMARKS
1	1747-662-700-00	CONTROLLER/HST ASSY	*			1 -1009					
1A	1747-662-700-10	CONTROLLER/HST ASSY	*			1 -1245		1			
1B	1747-662-700-20	CONTROLLER/HST ASSY	*			1 1246-		1			
2	V363-260-008-00	NUT/WASHER	*			2					
3	1747-662-071-00	BRACKET/SENSOR	*			1					
4	V231-360-801-60	FLANGEBOLT	*			2					
5	1729-662-330-00	SENSOR/ANGLE/75 ASSY	*			1					
6	V120-364-001-20	SCREW,SP/M4X12	*			2					
7	1747-662-085-00	ARM/SENSOR	*			1					
8	V301-260-006-00	NUT/M6	*			1					
9	V401-160-006-00	WASHER,SP/M 6	*			1					
10	1729-662-330-00	SENSOR/ANGLE/75 ASSY	*			1					
11	V120-364-001-20	SCREW,SP/M4X12	*			2					
12	1747-662-086-00	ARM/PLATE	*			1					
13	V301-260-006-00	NUT/M6	*			1					
14	V401-160-006-00	WASHER,SP/M 6	*			1					
15	1376-402-003-00	BAND,WIRE/140	*			1					
16	1746-662-240-10	BRACKET/SENSOR COMP	*			1					
17	V230-360-601-20	FLANGEBOLT	*			2					
18	1729-660-230-00	SENSOR ASSY	*			1					
19	V210-360-601-60	BOLT(SP)/M6X16	*			1					
20	1746-662-220-00	PLATE/SENSOR COMP	*			1					
21	V210-360-601-60	BOLT(SP)/M6X16	*			1					
22	V360-260-006-00	NUT/M6	*			1					
23	1690-654-350-00	SENSOR/REVOLUTION/L	*			1					
24	V230-360-601-60	FLANGEBOLT	*			1					
25	1740-680-520-00	SWITCH/SENSOR ASSY	*			1					
26	V210-360-601-60	BOLT(SP)/M6X16	*			1					
27	1743-652-520-10	STAY/SENSOR COMP	*			1					
28	V210-360-601-60	BOLT(SP)/M6X16	*			2					

FIG.196 CONTROL SYSTEM (H3C TYPE)

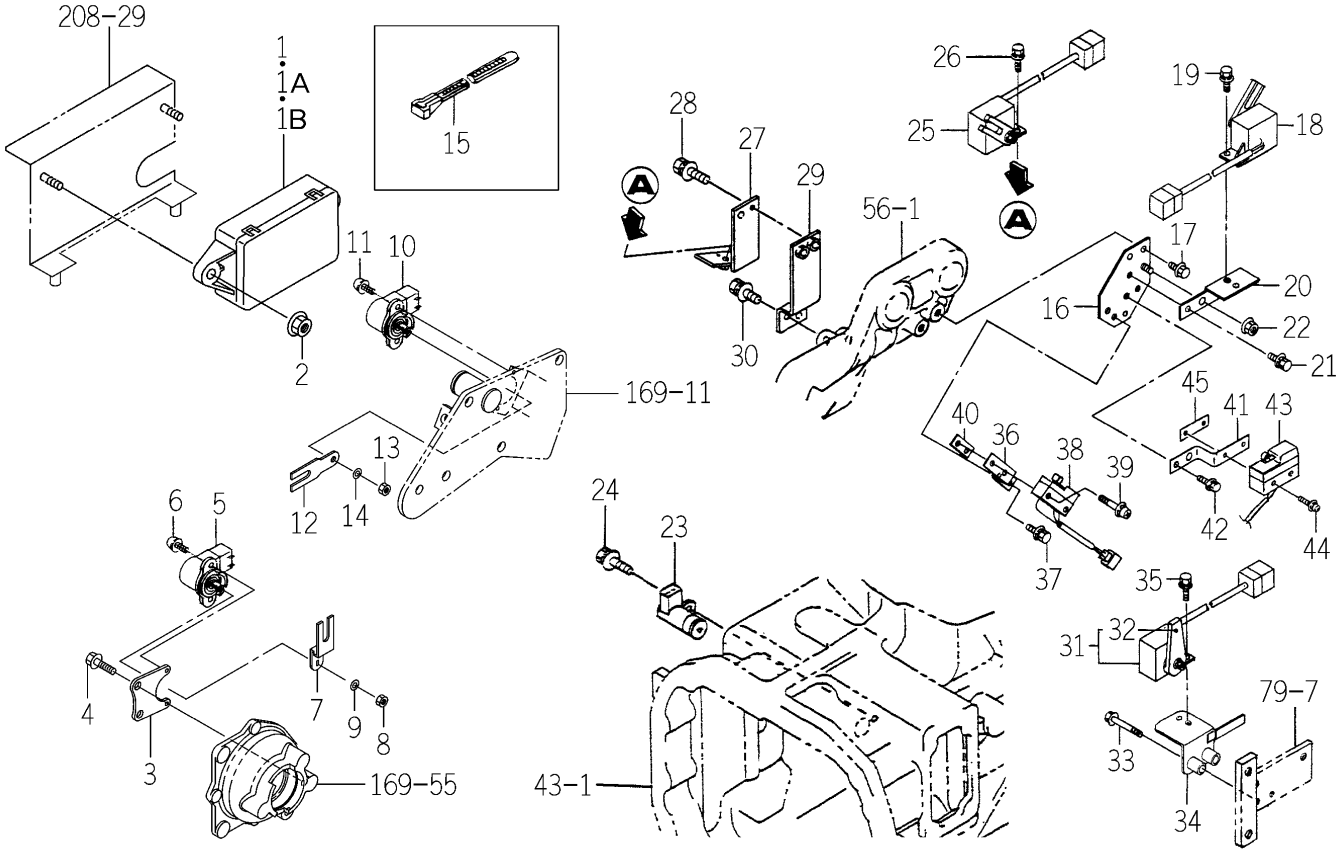

1747-662B-0100

KEY	PART CODE	DESCRIPTION	SPC	TYPE OF MODEL TG5330 E4	TG5330 E6	TG5390 E4	TG5390 E6	ITC	COL	GRP	REMARKS
29	1743-652-550-00	PLATE/STAY COMP	*			1					
30	V210-360-601-20	BOLT,SEMS	*			2					
31	1716-680-330-00	SWITCH/LEVER ASSY	*			1					
32	1716-680-222-00	ARM	*			1					
33	V230-360-603-00	FLANGEBOLT	*			2					
34	1746-652-250-10	BRACKET/SWITCH COMP	*			1					
35	V210-360-601-60	BOLT(SP)/M6X16	*			1					
36	1746-229-001-00	PLATE/Z/16X86	*			1					
37	V210-360-601-60	BOLT(SP)/M6X16	*			2					
38	1518-621-470-00	SWITCH,SAFETY ASSY	*			1					
39	V120-364-003-00	SCREW/M4X30	*			2					
40	3656-271-001-00	PLATE/I,13X40	*			1					
41	1746-229-001-00	PLATE/Z/16X86	*			1					
42	V210-360-601-60	BOLT(SP)/M6X16	*			2					
43	1518-621-470-00	SWITCH,SAFETY ASSY	*			1					
44	V120-364-003-00	SCREW/M4X30	*			2					
45	3656-271-001-00	PLATE/I,13X40	*			1					

FIG.197 7P SOCKET SYSTEM (E6 TYPE)

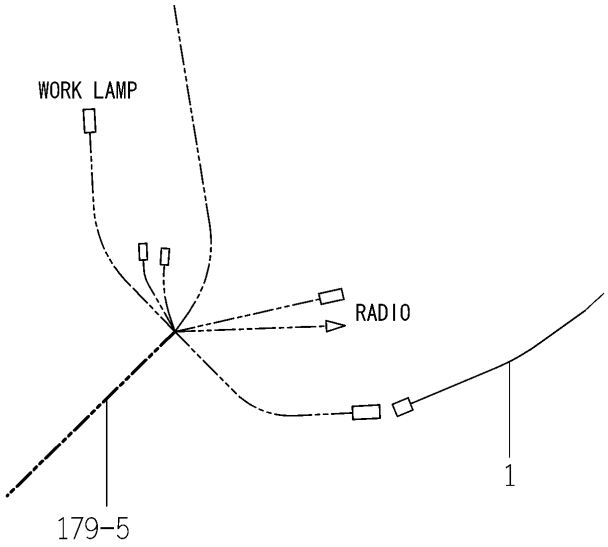

1742-666 -0100

KEY	PART CODE	DESCRIPTION	SPC	TYPE OF MODEL				ITC	COL	GRP	REMARKS
				TG5330 E4	TG5330 E6	TG5390 E4	TG5390 E6				
1	1727-666-900-00	HARNESS/SOCKET ASSY	*		1		1				

FIG.198 7P SOCKET SYSTEM (E4 TYPE)

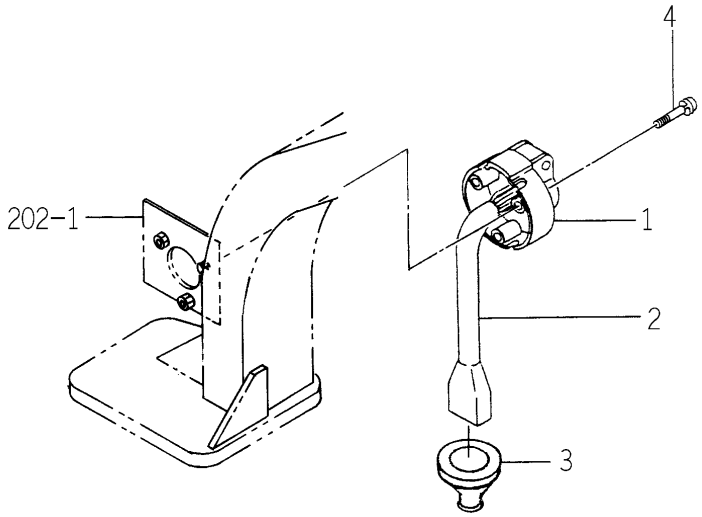

1742-666A-0100

KEY	PART CODE	DESCRIPTION	SPC	TYPE OF MODEL				ITC	COL	GRP	REMARKS
				TG5330 E4	TG5330 E6	TG5390 E4	TG5390 E6				
1	1600-624-201-00	PLUG/7P	*	1		1					8JB0-019-430-01
2	1682-690-380-00	HARNESS/SOCKET ASSY	*	1		1					
3	1650-654-036-00	GROMMET/10X40X03	*	1		1					
4	V120-265-003-00	BOLT/M5X30	*	3		3					

FIG.199 FRAME (REAR) SYSTEM (E6 TYPE)

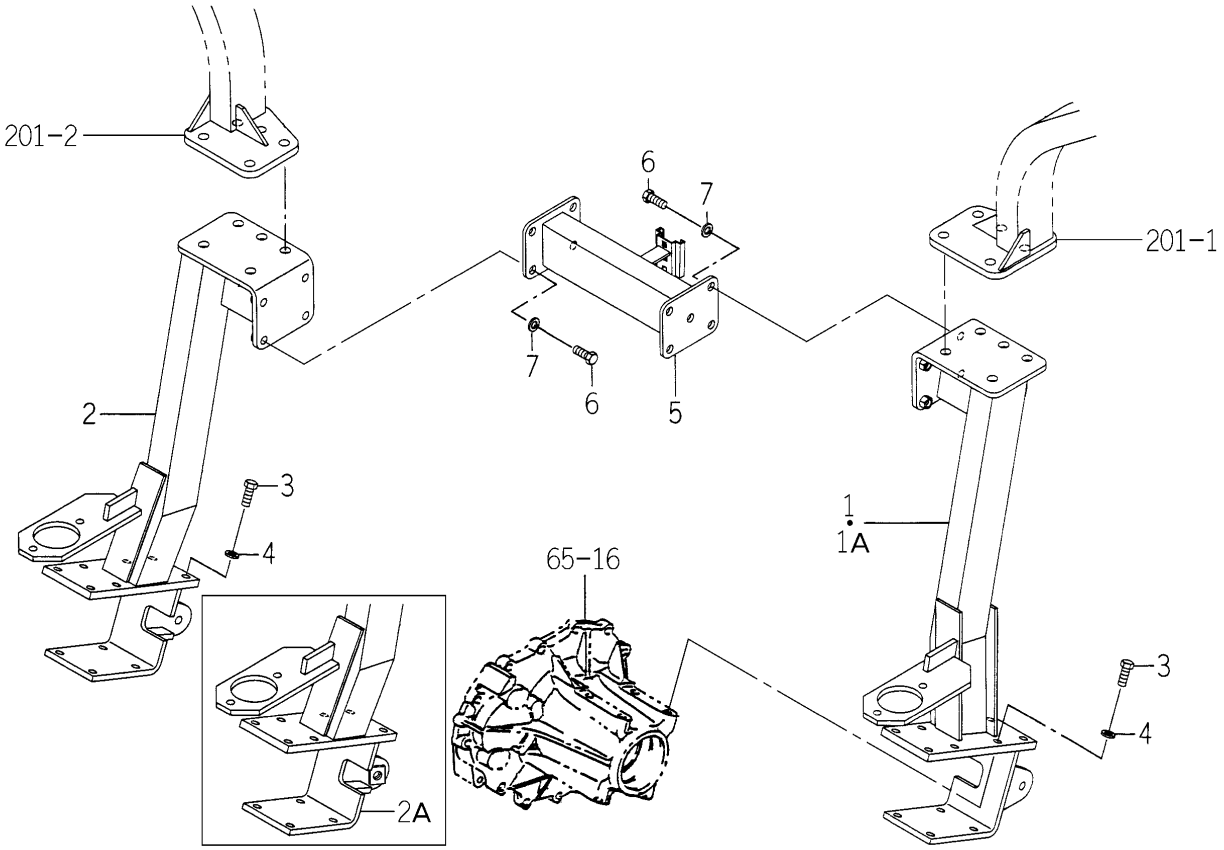

1742-702 -0100

KEY	PART CODE	DESCRIPTION	SPC	TYPE OF MODEL TG5330 E4	TG5330 E6	TG5390 E4	TG5390 E6	ITC	COL	GRP	REMARKS
1	1742-702-200-00	FRAME/REAR/SAE/LH	*		1 -839		1 -1164				
1A	1742-702-200-10	FRAME/REAR/SAE/LH	*		1 840-		1 1165-	1			
2	1742-702-210-00	FRAME/REAR/SAE/RH	*		1 -839		1 -1164				
2A	1742-702-210-10	FRAME/REAR/SAE/RH	*		1 840-		1 1165-	1			
3	V201-461-203-00	BOLT/M12X30	*		14		14				
4	V401-160-012-00	WASHER,SP/M12	*		14		14				
5	1742-702-220-00	TUBE/SAE COMP	*		1		1				
6	V201-461-203-00	BOLT/M12X30	*		8		8				
7	V401-160-012-00	WASHER,SP/M12	*		8		8				

FIG.200 FRAME (REAR) SYSTEM (E4 TYPE EXCEPT C)

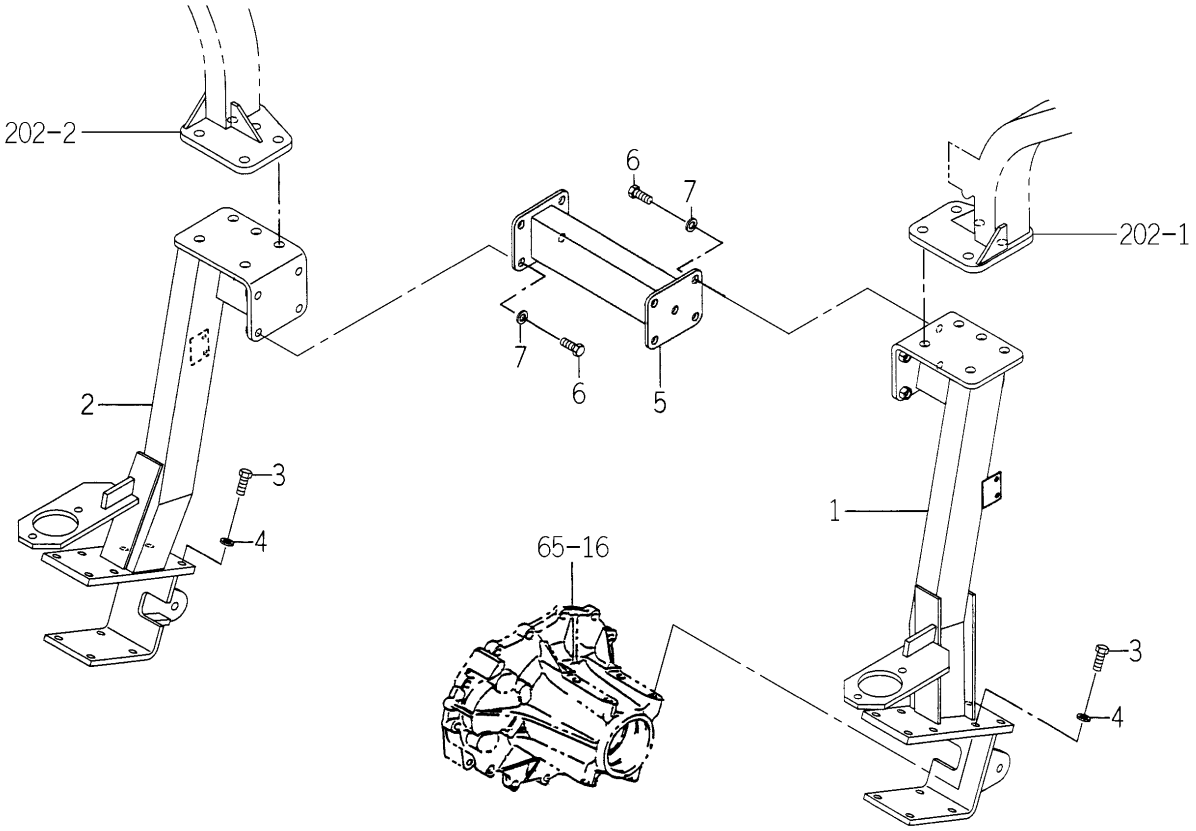

1742-702A-0100

KEY	PART CODE	DESCRIPTION	SPC	TYPE OF MODEL TG5330 E4	TG5330 E6	TG5390 E4	TG5390 E6	ITC	COL	GRP	REMARKS
1	1742-702-310-00	FRAME/REAR/EEC/LH	*	1		1					
2	1742-702-320-00	FRAME/REAR/EEC/RH	*	1		1					
3	V201-461-203-00	BOLT/M12X30	*	14		14					
4	V401-160-012-00	WASHER,SP/M12	*	14		14					
5	1742-702-300-00	TUBE/EEC COMP	*	1		1					
6	V201-461-203-00	BOLT/M12X30	*	8		8					
7	V401-160-012-00	WASHER,SP/M12	*	8		8					

FIG.201 FRAME SYSTEM (E6 TYPE)

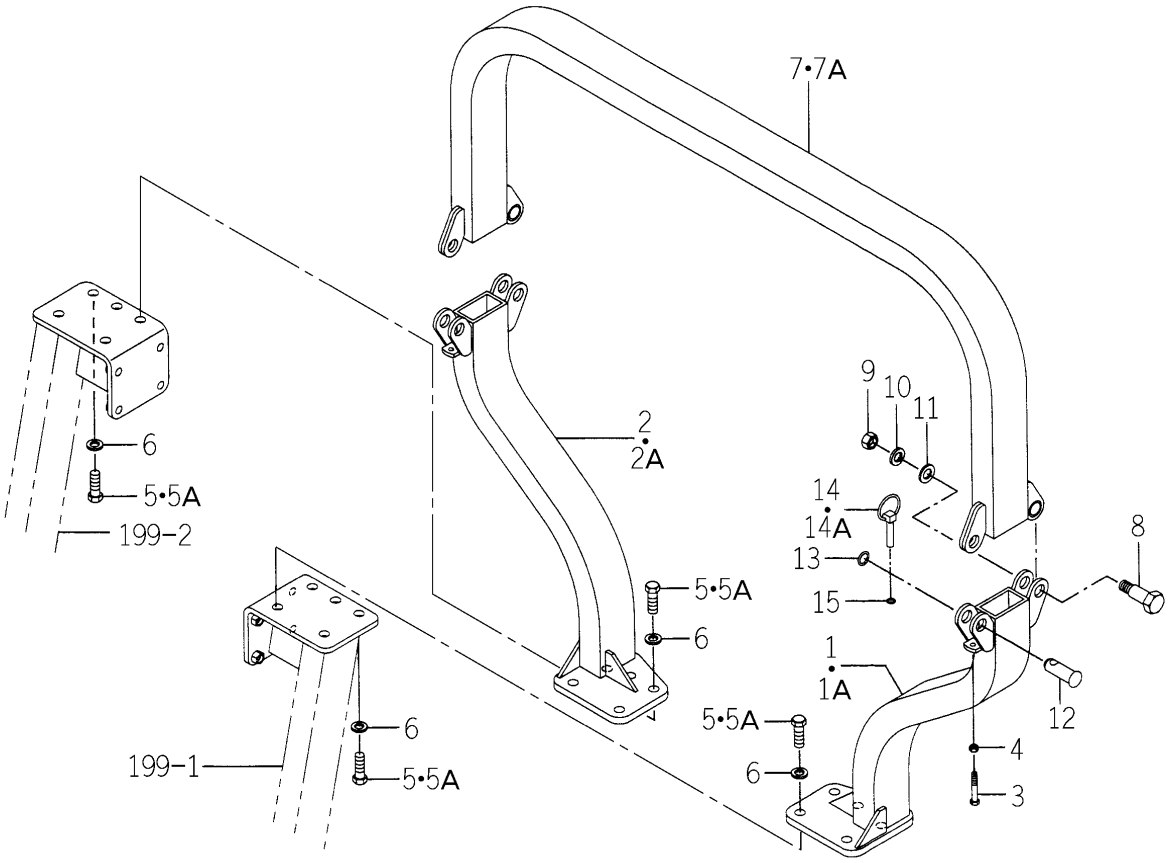

1742-702B-0100

KEY	PART CODE	DESCRIPTION	SPC	TYPE OF MODEL TG5330 E4	TG5330 E6	TG5390 E4	TG5390 E6	ITC	COL	GRP	REMARKS
1	1742-702-250-00	FRAME/SAE/LH COMP	*		1 -23		1 -19		7F		
1A	1742-702-250-10	FRAME/SAE/LH COMP	*		1 24-		1 20-	1	7F		
2	1742-702-260-00	FRAME/SAE/RH COMP	*		1 -23		1 -19		7F		
2A	1742-702-260-10	FRAME/SAE/RH COMP	*		1 24-		1 20-	1	7F		
3	V201-261-005-00	BOLT/M10X50	*		2		2				
4	V304-260-010-00	NUT	*		2		2				
5	V201-461-404-00	BOLT/M14X40	*		10 -130		10 -461				
5A	1696-434-003-00	BOLT	*		10 131-		10 462-				
6	V401-160-014-00	WASHER,SP/M14	*		10		10				
7	1723-702-320-10	FRAME/UPPER COMP	*		1 -43		1 -65		7F		
7A	1744-702-310-00	FRAME/UPPER COMP	*		1 44-		1 66-		7F		
8	1640-702-003-00	BOLT/SET/M16X60	*		2		2				
9	V304-260-016-00	NUT/M16	*		2		2				
10	V401-160-016-00	WASHER,SP/M16	*		2		2				
11	V411-260-016-00	WASHER / M16	*		2		2				
12	1640-702-004-00	PIN/20X58	*		2		2				
13	V720-112-401-80	O-RING/P18	*		2		2				
14	1673-525-002-20	LINKPIN	*		2 -627		2 -945				
14A	1673-525-002-30	LINKPIN	*		2 628-		2 946-	1			
15	V720-101-900-90	O-RING/P 9	*		2		2				

FIG.202 FRAME SYSTEM (E4 TYPE EXCEPT C,A)

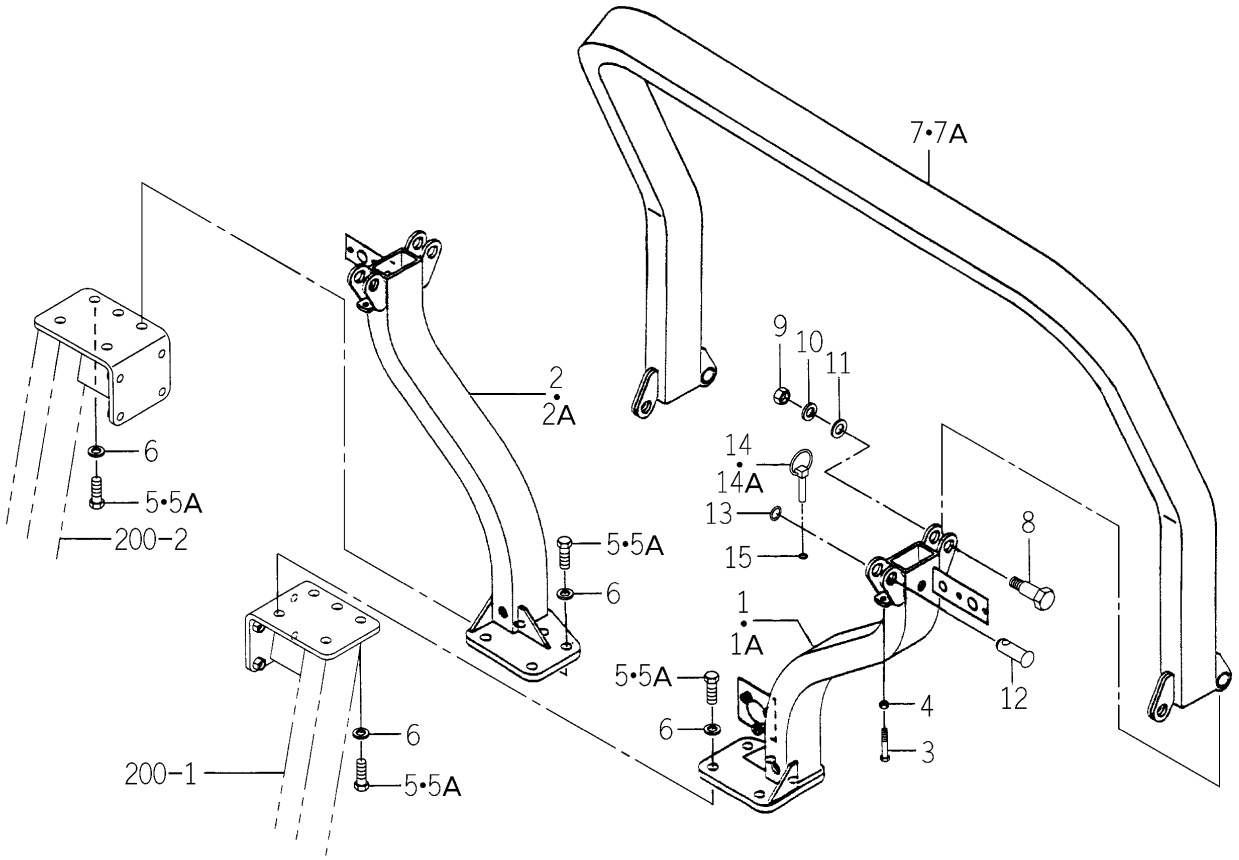

1742-702C-0100

KEY	PART CODE	DESCRIPTION	SPC	TYPE OF MODEL TG5330 E4	TG5330 E6	TG5390 E4	TG5390 E6	ITC	COL	GRP	REMARKS
1	1742-702-280-00	FRAME/EEC/LH COMP	*	1 -17		1 -17			7F		
1A	1742-702-280-10	FRAME/EEC/LH COMP	*	1 18-		1 18-		1	7F		
2	1742-702-290-00	FRAME/EEC/RH COMP	*	1 -17		1 -17			7F		
2A	1742-702-290-10	FRAME/EEC/RH COMP	*	1 18-		1 18-		1	7F		
3	V201-261-005-00	BOLT/M10X50	*	2		2					
4	V304-260-010-00	NUT	*	2		2					
5	V201-461-404-00	BOLT/M14X40	*	10 -135		10 -437					
5A	1696-434-003-00	BOLT	*	10 136-		10 438-					
6	V401-160-014-00	WASHER,SP/M14	*	10		10					
7	1742-702-270-00	FRAME/UPPER/EEC COMP	*	1 -43		1 -65			7F		
7A	1742-702-270-20	FRAME/UPPER/EEC COMP	*	1 44-		1 66-		1	7F		
8	1640-702-003-00	BOLT/SET/M16X60	*	2		2					
9	V304-260-016-00	NUT/M16	*	2		2					
10	V401-160-016-00	WASHER,SP/M16	*	2		2					
11	V411-260-016-00	WASHER / M16	*	2		2					
12	1640-702-004-00	PIN/20X58	*	2		2					
13	V720-112-401-80	O-RING/P18	*	2		2					
14	1673-525-002-20	LINKPIN	*	2 -627		2 -945					
14A	1673-525-002-30	LINKPIN	*	2 628-		2 946-		1			
15	V720-101-900-90	O-RING/P 9	*	2		2					

FIG.203 FRAME (REAR) SYSTEM (A TYPE)

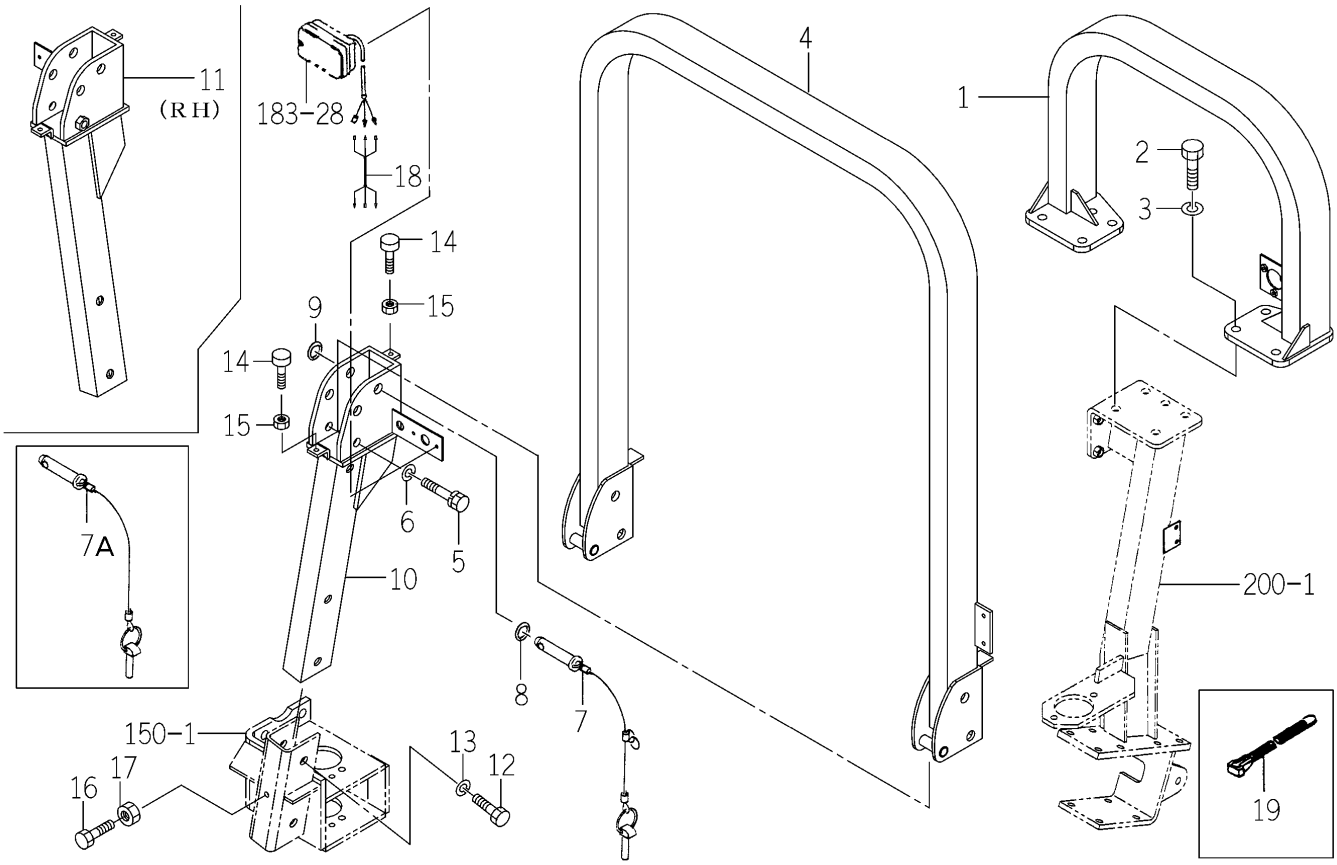

1742-702E-0100

KEY	PART CODE	DESCRIPTION	SPC	TYPE OF MODEL TG5330 E4	TG5330 E6	TG5390 E4	TG5390 E6	ITC	COL	GRP	REMARKS
1	1742-702-800-00	FRAME/C/REAR COMP	*	1		1			7F		
2	1696-434-003-00	BOLT	*	10		10					
3	V401-160-014-00	WASHER,SP/M14	*	10		10					
4	1742-702-810-00	FRAME/C/UPPER COMP	*	1		1			7F		
5	1560-625-005-10	BOLT/SM/M14X96	*	2		2					
6	V401-160-014-00	WASHER,SP/M14	*	2		2					
7	1673-702-330-10	PIN COMP	*	2 -957		2 -1341					
7A	1673-702-330-20	PIN COMP	*	2 958-		2 1342-		1			
8	V720-112-401-80	O-RING/P18	*	2		2					
9	V720-101-900-90	O-RING/P 9	*	2		2					
10	1742-702-820-00	FRAME/C/LH COMP	*	1		1			7F		
11	1742-702-830-00	FRAME/C/RH COMP	*	1		1			7F		
12	V201-361-608-00	BOLT	*	4		4					
13	V401-160-016-00	WASHER,SP/M16	*	4		4					
14	1421-602-005-10	CUSHION,B/ RUBBER	*	4		4					
15	V304-260-008-00	NUT	*	4		4					
16	V201-361-002-00	BOLT/M10X20	*	2		2					
17	V304-460-010-00	NUT/M10	*	2		2					
18	1742-702-900-00	HARNESS/COMBINATION/	*	2		2					
19	1421-621-038-00	BAND,WIRE/170	*	4		4					

FIG.204 ROOF SYSTEM (C TYPE)(1/2)

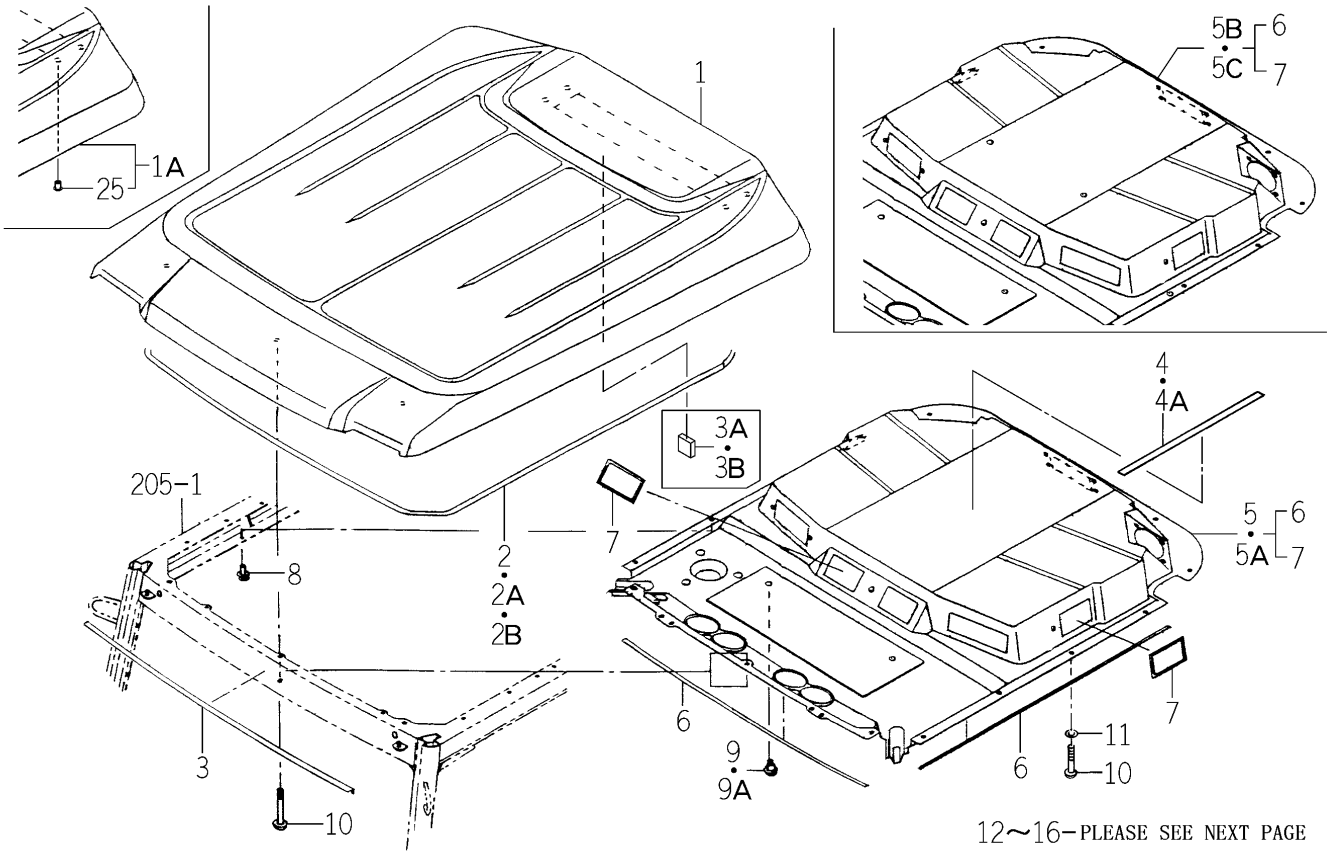

1729-705 -0100

KEY	PART CODE	DESCRIPTION	SPC	TYPE OF MODEL TG5330 E4	TG5330 E6	TG5390 E4	TG5390 E6	ITC	COL	GRP	REMARKS
1	1729-705-200-20	ROOF ASSY	*	1 -642		1 -950		1			
1A	1729-705-200-30	ROOF ASSY	*	1 643-		1 951-		1			
2	1729-705-012-10	INSULATOR/ROOF	*	1 -107		1 -352					
2A	1729-705-012-20	INSULATOR/ROOF	*	1 -259		1 -585		1			
2B	1729-705-012-30	INSULATOR/ROOF	*	1 260-		1 586-		1			
3	1729-705-017-00	INSULATOR/ROOF/FRONT	*	1 -107		1 -352					
3A	1729-705-018-00	SPACER	*	1 -271		1 -600					
3B	1729-705-018-00	SPACER	*	2 272-		2 601-					
4	1729-705-019-00	INSULATOR/20X330	*	1 -852		1 -1169					
4A	1729-705-019-10	INSULATOR/50X330	*	1 853-		1 1170-		1			
5	1729-705-240-30	ROOF/INNER ASSY	*	1 -69		1 -210					
5A	1729-705-240-40	ROOF/INNER ASSY	*	1 -648		1 -948		1			
5B	1729-705-240-50	ROOF/INNER ASSY	*	1 -747		1 -1041		3			
5C	1729-705-240-60	ROOF/INNER ASSY	*	1 748-		1 1042-		1			
6	1729-705-241-00	INSULATOR	*	4		4					
7	1729-705-242-00	INSULATOR	*	4		4					
8	1560-630-012-00	RIVET	*	15		15					
9	1719-705-006-00	RIVET/SCREW/08	*	6 -648		6 -948					
9A	1719-705-006-00	RIVET/SCREW/08	*	8 649-		8 949-					
10	1729-705-003-00	SCREW/TRUSS/M06X100	*	5		5					
11	1719-730-003-00	INSULATOR	*	2		2					
12	1729-705-015-00	FILTER/AIR/REFINER	*	1 -154		1 -463					
12A	1729-705-015-10	FILTER/AIR/REFINER	*	1 155-		1 464-		1			
13	1729-705-220-00	COVER/FILTER COMP	*	1		1					
14	1729-705-009-00	SCREW/TRUSS/M06X16	*	4		4					
15	1729-705-230-00	SHUTTER/AIR COMP	*	1 -374		1 -748					
15A	1729-705-230-10	SHUTTER/AIR COMP	*	1 -761		1 -1085		1			
15B	1729-705-230-20	SHUTTER/AIR COMP	*	1 -946		1 -1246		1			
15C	1729-705-230-40	SHUTTER/AIR COMP	*	1 947-		1 1247-		1			
16	1729-705-008-00	SCREW/TRUSS/M05X12	*	8		8					

FIG.204 ROOF SYSTEM (C TYPE)(2/2)

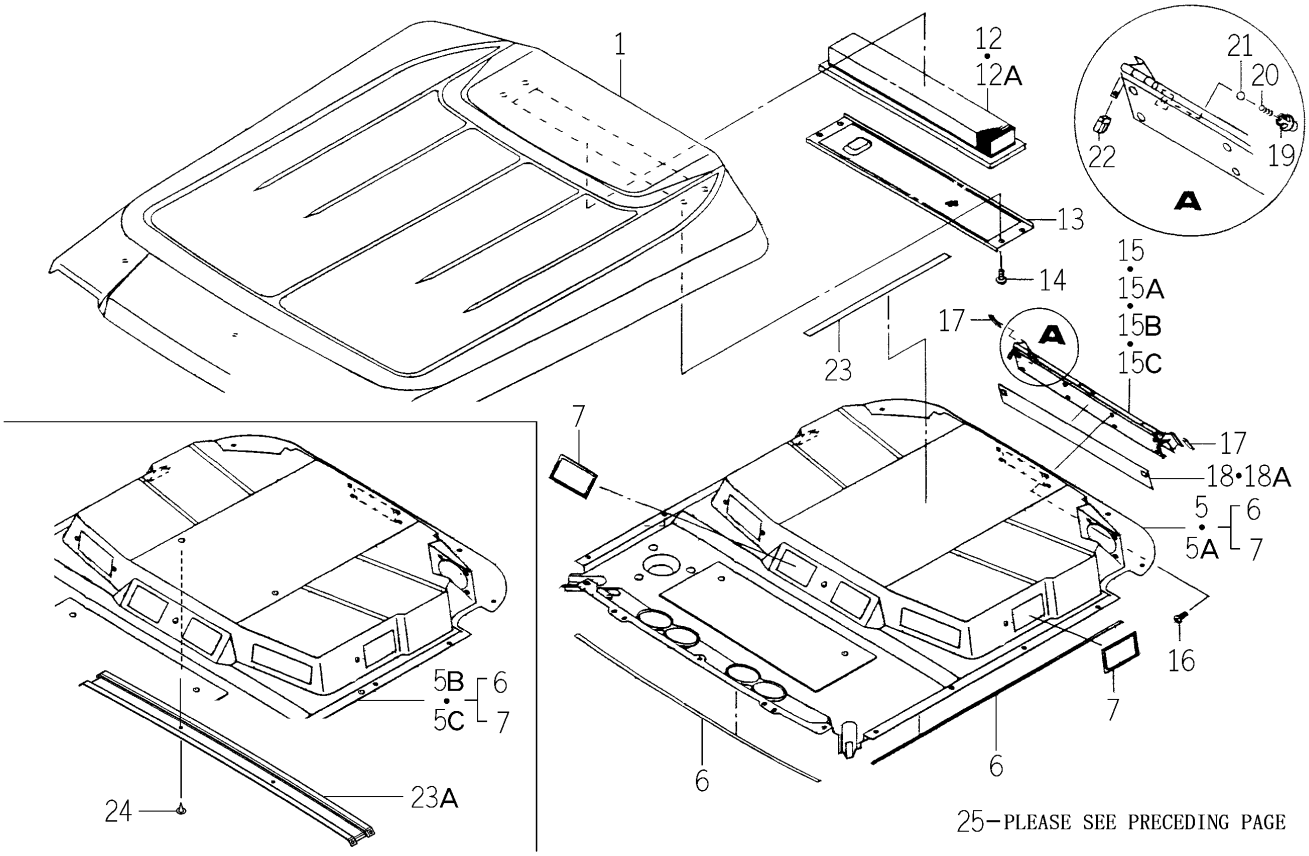

1729-705 -0100

KEY	PART CODE	DESCRIPTION	SPC	TYPE OF MODEL TG5330 E4	TG5330 E6	TG5390 E4	TG5390 E6	ITC	COL	GRP	REMARKS
17	1729-705-016-00	INSULATOR/040	*	2		2					
18	1729-705-002-10	INSULATOR/65X530	*	1 -27		1 -155					
18A	1729-705-002-20	INSULATOR/65X530	*	1 28-		1 156-		1			
19	1729-705-004-00	COVER/BEARING	*	2		2					
20	1729-705-011-00	SPRING	*	2		2					
21	1729-705-013-00	BALL/STEEL	*	2		2					
22	1729-705-014-00	KNOB	*	2		2					
23	1690-705-009-00	INSULATOR/20X500	*	1 -648		1 -948					
23A	1783-705-001-00	STAY/ROOF	*	1 649-		1 949-					
24	1696-705-006-00	RIVET/05X24	*	4 649-		4 949-					
25	1729-705-005-00	NUT/JACK/M06	*	11 643-		11 951-					

FIG.205 FRAME SYSTEM (C TYPE EXCEPT H)

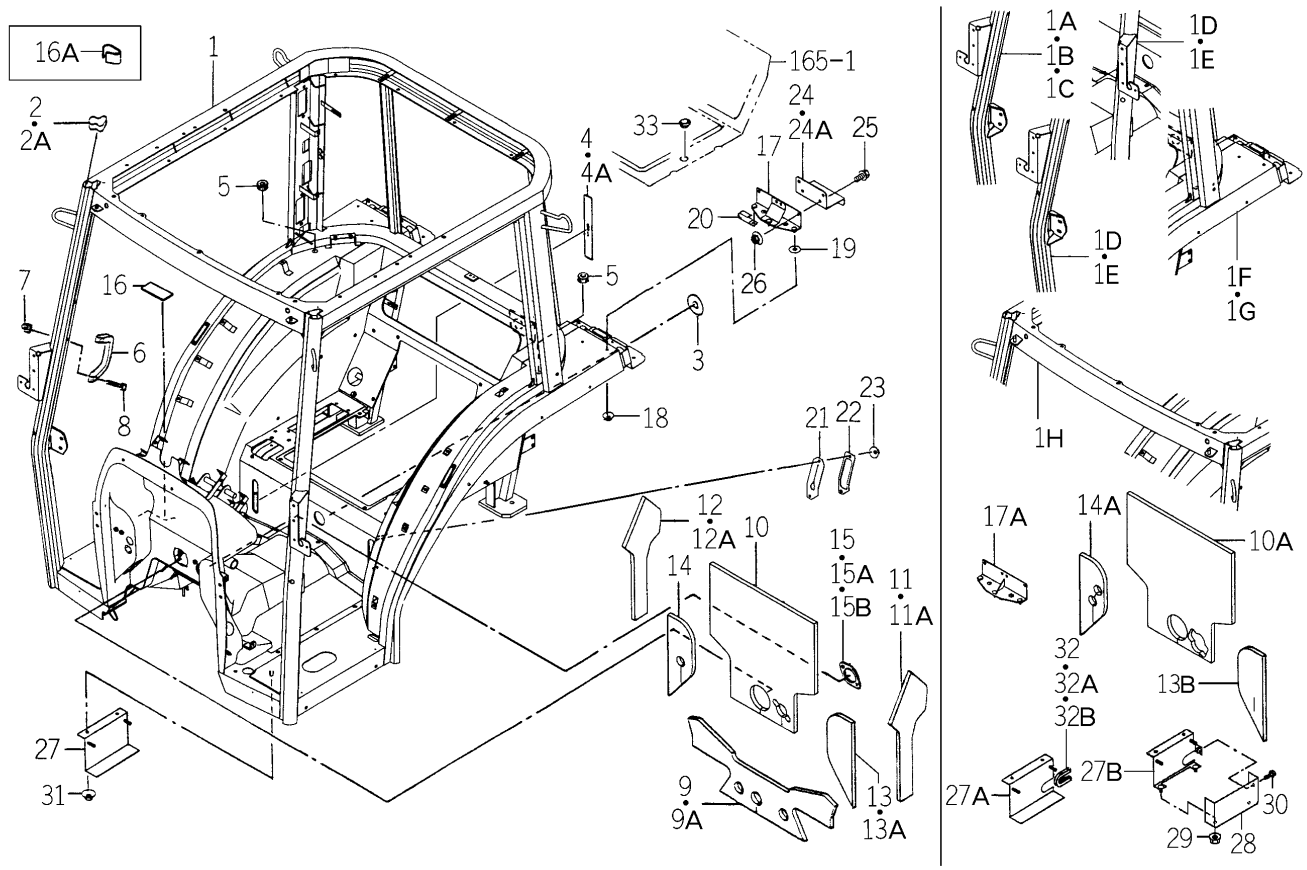

1746-720 -0100

KEY	PART CODE	DESCRIPTION	SPC	TYPE OF MODEL TG5330 E4	TG5330 E6	TG5390 E4	TG5390 E6	ITC	COL	GRP	REMARKS
1	1746-720-200-00	FRAME/CY/Q/E4 COMP	*	1 -52		1 -91			7F		
1A	1746-720-200-10	FRAME/CY/Q/E4 COMP	*	1 -75				3	7F		
1B	1746-720-200-20	FRAME/CY/Q/E4 COMP	*			1 -248		1	7F		
1C	1746-720-200-30	FRAME/CY/Q/E4 COMP	*	1 -98		1 -296		1	7F		
1D	1746-720-200-60	FRAME/CY/Q/E4 COMP	*	1 -361		1 -724		1	7F		
1E	1746-720-200-70	FRAME/CY/Q/E4 COMP	*	1 -443		1 -777		1	7F		
1F	1746-720-200-80	FRAME/CY/Q/E4 COMP	*	1 -619		1 -884		3	7F		
1G	1746-720-200-90	FRAME/CY/Q/E4 COMP	*	1 -960		1 -1298		1	7F		
1H	1746-720-210-00	FRAME/CY/Q/E4 COMP	*	1 961-		1 1299-					
2	1729-720-002-00	INSULATOR	*	2 -27		2 -170					
2A	1729-720-002-10	INSULATOR	*	2 28-		2 171-		1			
3	1650-720-001-00	INSULATOR	*	1		1					
4	1650-720-015-00	INSULATOR	*	1 -122		1 -416					
4A	1650-720-015-10	INSULATOR	*	1 123-		1 417-		1			
5	1691-658-001-00	GROMMET/13X18X02	*	2		2					
6	1690-760-006-10	GRIP	*	2		2					
7	3801-232-229-00	POPNUT/M06	*	4		4					
8	V120-376-002-50	SCREW/SP	*	4		4					
9	1729-720-001-00	INSULATOR/DASH/LOWER	*	1 -27		1 -172					
9A	1729-720-001-10	INSULATOR/DASH/LOWER	*	1 28-		1 173-		1			
10	1729-720-004-00	INSULATOR/DASH/UPPER	*	1 -27		1 -186					
10A	1729-720-004-10	INSULATOR/DASH/UPPER	*	1 28-		1 187-		1			
11	1729-720-005-00	INSULATOR/DASH/LH	*	1 -27		1 -196					
11A	1729-720-005-10	INSULATOR/DASH/LH	*	1 28-		1 197-		1			
12	1729-720-006-00	INSULATOR/DASH/RH	*	1 -27		1 -155					
12A	1729-720-006-10	INSULATOR/DASH/RH	*	1 28-		1 156-		1			
13	1729-720-007-00	INSULATOR/LH	*	1 -27		1 -172					
13A	1729-720-007-10	INSULATOR/LH	*	1 -123		1 -411		1			
13B	1729-720-007-20	INSULATOR/LH	*	1 124-		1 412-		1			
14	1729-720-008-00	INSULATOR/RH	*	1 -27		1 -172					

FIG.205 FRAME SYSTEM (C TYPE EXCEPT H)

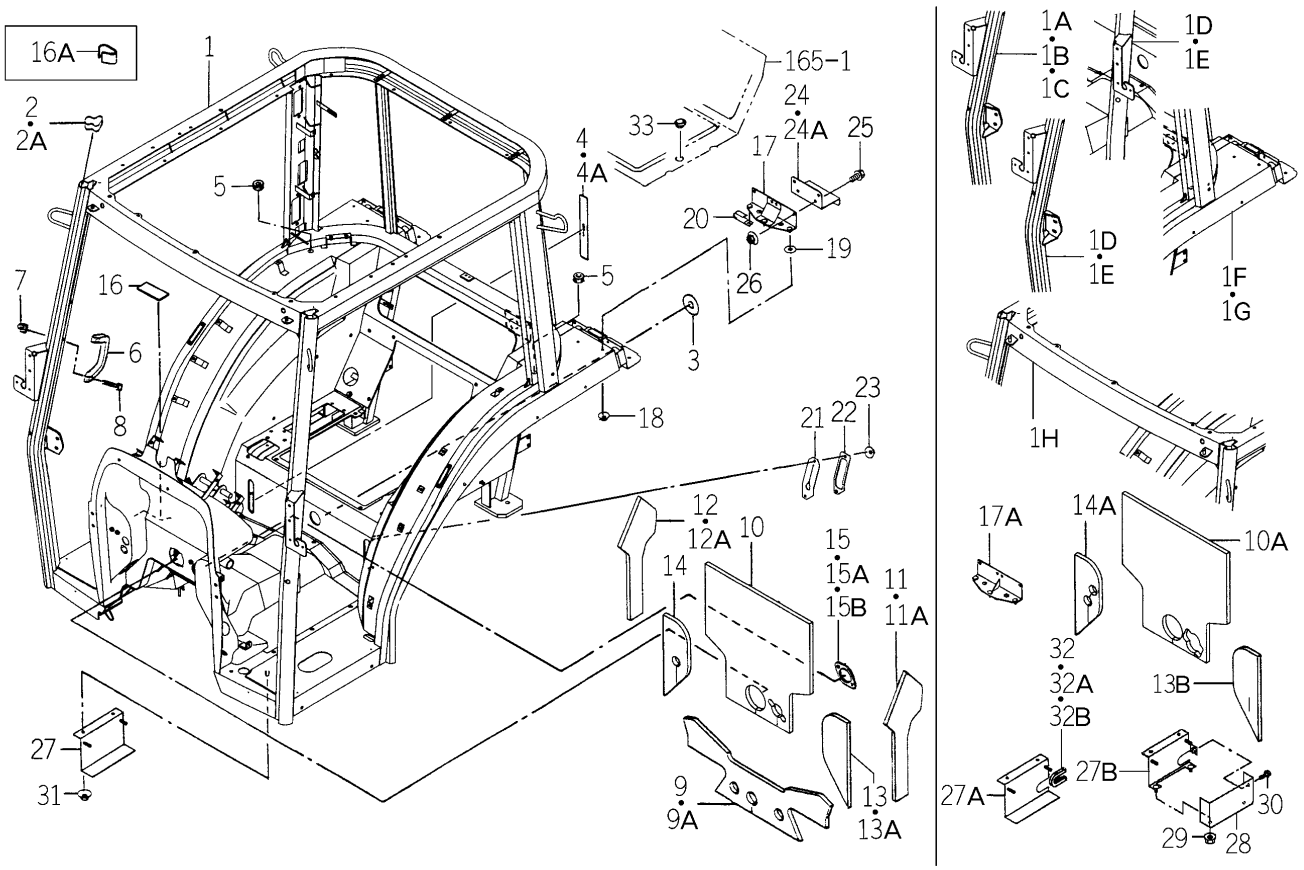

1746-720 -0100

KEY	PART CODE	DESCRIPTION	SPC	TYPE OF MODEL TG5330 E4	TG5330 E6	TG5390 E4	TG5390 E6	ITC	COL	GRP	REMARKS
14A	1729-720-008-10	INSULATOR/RH	*	1 28-		1 173-		1			
15	1729-720-009-00	INSULATOR/BALL	*	1 -27		1 -170					
15A	1729-720-009-10	INSULATOR/BALL	*	1 -960		1 -1302		1			
15B	1729-720-009-20	INSULATOR/BALL	*	1 961-		1 1303-		1			
16	1729-720-003-00	INSULATOR	*	1 -27		1 -155					
16A	1729-720-003-10	INSULATOR	*	1 28-		1 156-		1			
17	1746-720-400-00	PLATE COMP	*	1 -374		1 -748					
17A	1746-720-400-10	PLATE COMP	*	1 375-		1 749-		1			
18	V361-260-006-00	NUT	*	3		3					
19	V411-260-006-00	WASHER / M6	*	2		2					
20	3612-631-001-00	LAMP,WINKER B	*	1		1					
21	1746-720-001-20	INSULATOR/PARKING	*	1		1		1			
22	1746-720-002-10	PLATE	*	1		1					
23	V361-260-006-00	NUT	*	2		2					
24	1746-631-241-10	PLATE	*	1 -763		1 -1131					
24A	1746-631-241-20	PLATE	*	1 764-		1 1132-		1			
25	V231-360-801-60	FLANGEBOLT	*	2		2					
26	V363-260-008-00	NUT/WASHER	*	2		2					
27	1744-720-410-00	STAY/CONTROLLER COMP	*	1 -52		1 -91					
27A	1744-720-410-10	STAY/CONTROLLER COMP	*	1 -318		1 -656		3			
27B	1744-720-410-20	STAY/CONTROLLER COMP	*	1 319-		1 657-		1			
28	1744-720-011-00	COVER/CONTROLLER	*	1 319-		1 657-					
29	V363-260-008-00	NUT/WASHER	*	2 319-		2 657-					
30	V231-360-801-20	FLANGEBOLT	*	1 319-		1 657-					
31	V363-260-008-00	NUT/WASHER	*	4		4					
32	3805-210-021-00	PAD/100	*	1 -81		1 -248					
32A	3805-210-021-10	INSULATOR	*	1 -852		1 -1166		1			
32B	2504-165-002-10	INSULATOR	*	1 853-		1 1167-					
33	1560-630-029-00	CAP/30	*	1		1					

FIG.206 FRAME SYSTEM (HC TYPE EXCEPT H3)

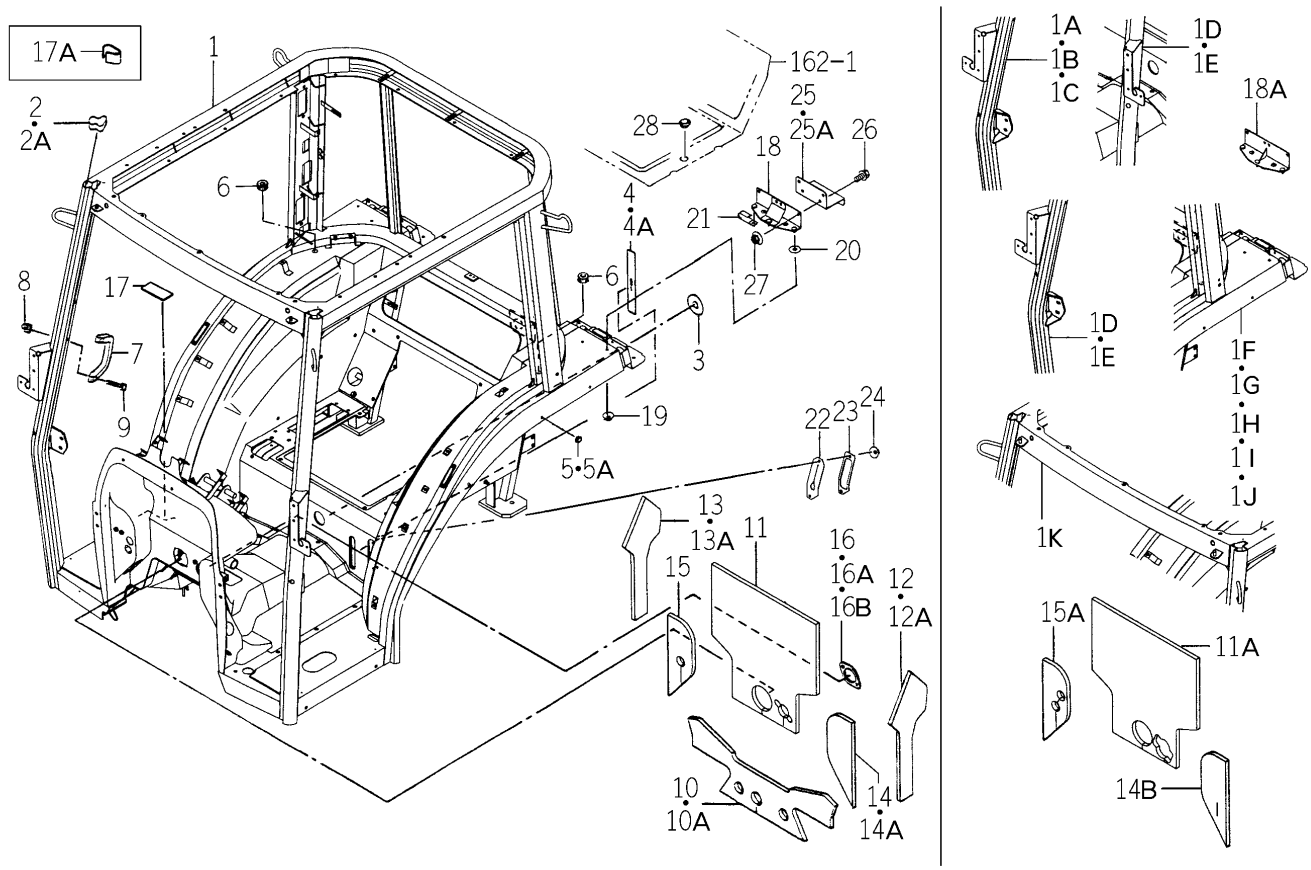

1747-720 -0100

KEY	PART CODE	DESCRIPTION	SPC	TYPE OF MODEL TG5330 E4	TG5330 E6	TG5390 E4	TG5390 E6	ITC	COL	GRP	REMARKS
1	1747-720-700-00	FRAME/CY/H/E4 COMP	*			1 -91			7F		
1A	1747-720-700-10	FRAME/CY/H/E4 COMP	*			1 -95		3	7F		
1B	1747-720-700-20	FRAME/CY/H/E4 COMP	*			1 -242		1	7F		
1C	1747-720-700-30	FRAME/CY/H/E4 COMP	*			1 -294		1	7F		
1D	1747-720-700-40	FRAME/CY/H/E4 COMP	*			1 -304		1	7F		
1E	1747-720-700-50	FRAME/CY/H/E4 COMP	*			1 -306		3	7F		
1F	1747-720-700-60	FRAME/CY/H/E4 COMP	*			1 -318		1	7F		
1G	1747-720-700-70	FRAME/CY/H/E4 COMP	*			1 -725		1	7F		
1H	1747-720-700-80	FRAME/CY/H/E4 COMP	*			1 -771		1	7F		
1I	1747-720-700-90	FRAME/CY/H/E4 COMP	*			1 -871		3	7F		
1J	1747-720-710-10	FRAME/CY/H/E4 COMP	*			1 -1294		1	7F		
1K	1747-720-710-20	FRAME/CY/H/E4 COMP	*			1 1295-		1	7F		
2	1729-720-002-00	INSULATOR	*			2 -170					
2A	1729-720-002-10	INSULATOR	*			2 171-		1			
3	1650-720-001-00	INSULATOR	*			1					
4	1650-720-015-00	INSULATOR	*			1 -416					
4A	1650-720-015-10	INSULATOR	*			1 417-		1			
5	1404-621-030-00	GROMMET,SMALL	*			2 -871					
5A	1564-621-030-00	GROMMET/12X17X04	*			2 872-					
6	1691-658-001-00	GROMMET/13X18X02	*			2					
7	1690-760-006-10	GRIP	*			2					
8	3801-232-229-00	POPNUT/M06	*			4					
9	V120-376-002-50	SCREW/SP	*			4					
10	1729-720-001-00	INSULATOR/DASH/LOWER	*			1 -172					
10A	1729-720-001-10	INSULATOR/DASH/LOWER	*			1 173-		1			
11	1729-720-004-00	INSULATOR/DASH/UPPER	*			1 -186					
11A	1729-720-004-10	INSULATOR/DASH/UPPER	*			1 187-		1			
12	1729-720-005-00	INSULATOR/DASH/LH	*			1 -196					
12A	1729-720-005-10	INSULATOR/DASH/LH	*			1 197-		1			
13	1729-720-006-00	INSULATOR/DASH/RH	*			1 -155					

FIG.206 FRAME SYSTEM (HC TYPE EXCEPT H3)

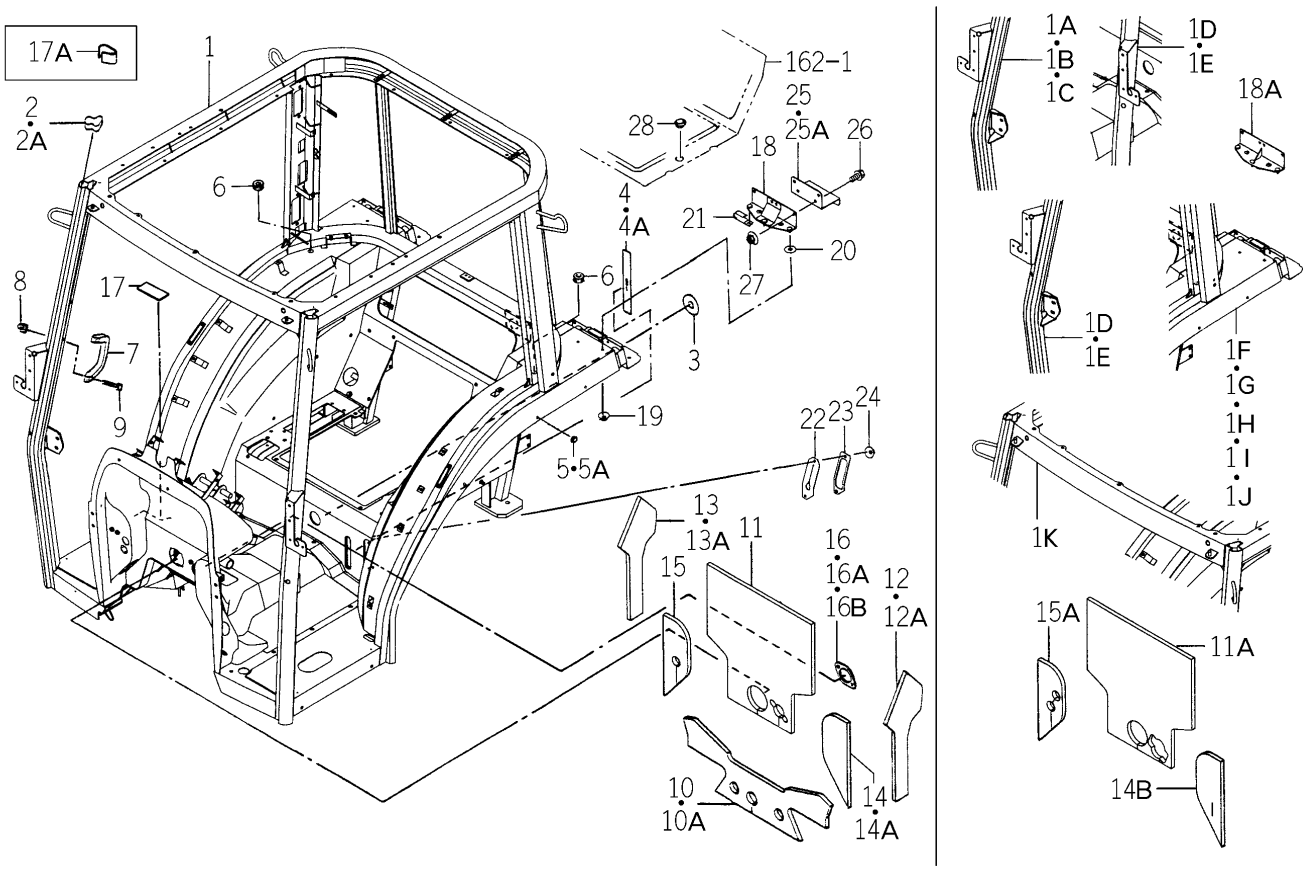

1747-720 -0100

KEY	PART CODE	DESCRIPTION	SPC	TYPE OF MODEL TG5330 E4	TG5330 E6	TG5390 E4	TG5390 E6	ITC	COL	GRP	REMARKS
13A	1729-720-006-10	INSULATOR/DASH/RH	*			1 156-		1			
14	1729-720-007-00	INSULATOR/LH	*			1 -172					
14A	1729-720-007-10	INSULATOR/LH	*			1 -411		1			
14B	1729-720-007-20	INSULATOR/LH	*			1 412-		1			
15	1729-720-008-00	INSULATOR/RH	*			1 -172					
15A	1729-720-008-10	INSULATOR/RH	*			1 173-		1			
16	1729-720-009-00	INSULATOR/BALL	*			1 -170					
16A	1729-720-009-10	INSULATOR/BALL	*			1 -1302		1			
16B	1729-720-009-20	INSULATOR/BALL	*			1 1303-		1			
17	1729-720-003-00	INSULATOR	*			1 -155					
17A	1729-720-003-10	INSULATOR	*			1 156-		1			
18	1746-720-400-00	PLATE COMP	*			1 -748					
18A	1746-720-400-10	PLATE COMP	*			1 749-		1			
19	V361-260-006-00	NUT	*			3					
20	V411-260-006-00	WASHER / M6	*			2					
21	3612-631-001-00	LAMP,WINKER B	*			1					
22	1746-720-001-20	INSULATOR/PARKING	*			1		1			
23	1746-720-002-10	PLATE	*			1					
24	V361-260-006-00	NUT	*			2					
25	1746-631-241-10	PLATE	*			1 -1131					
25A	1746-631-241-20	PLATE	*			1 1132-		1			
26	V231-360-801-60	FLANGEBOLT	*			2					
27	V363-260-008-00	NUT/WASHER	*			2					
28	1560-630-029-00	CAP/30	*			1					

FIG.207 FENDER (OVER) SYSTEM (C TYPE)

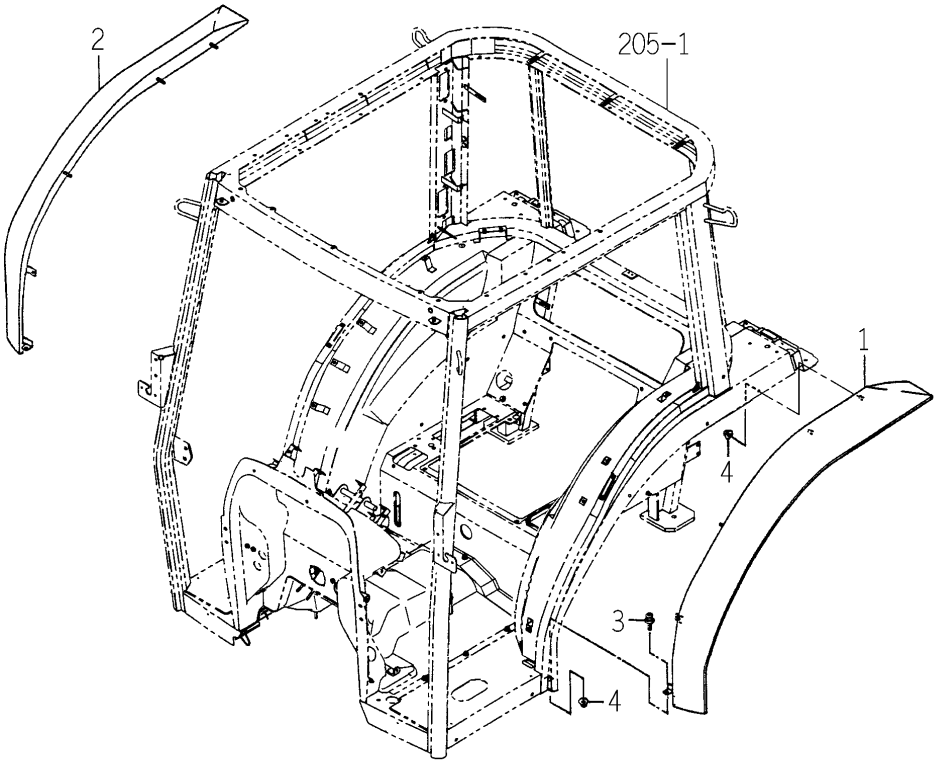

1734-720A-0100

KEY	PART CODE	DESCRIPTION	SPC	TYPE OF MODEL TG5330 E4	TG5330 E6	TG5390 E4	TG5390 E6	ITC	COL	GRP	REMARKS
1	1734-720-400-00	FENDER/OVER/LH COMP	*	1		1			4L		
2	1734-720-410-00	FENDER/OVER/RH COMP	*	1		1			4L		
3	2144-501-011-10	BOLT/M6X16X16	*	4		4					
4	V360-260-006-00	NUT/M6	*	10		10					

FIG.208 FRAME SYSTEM (H3C TYPE)

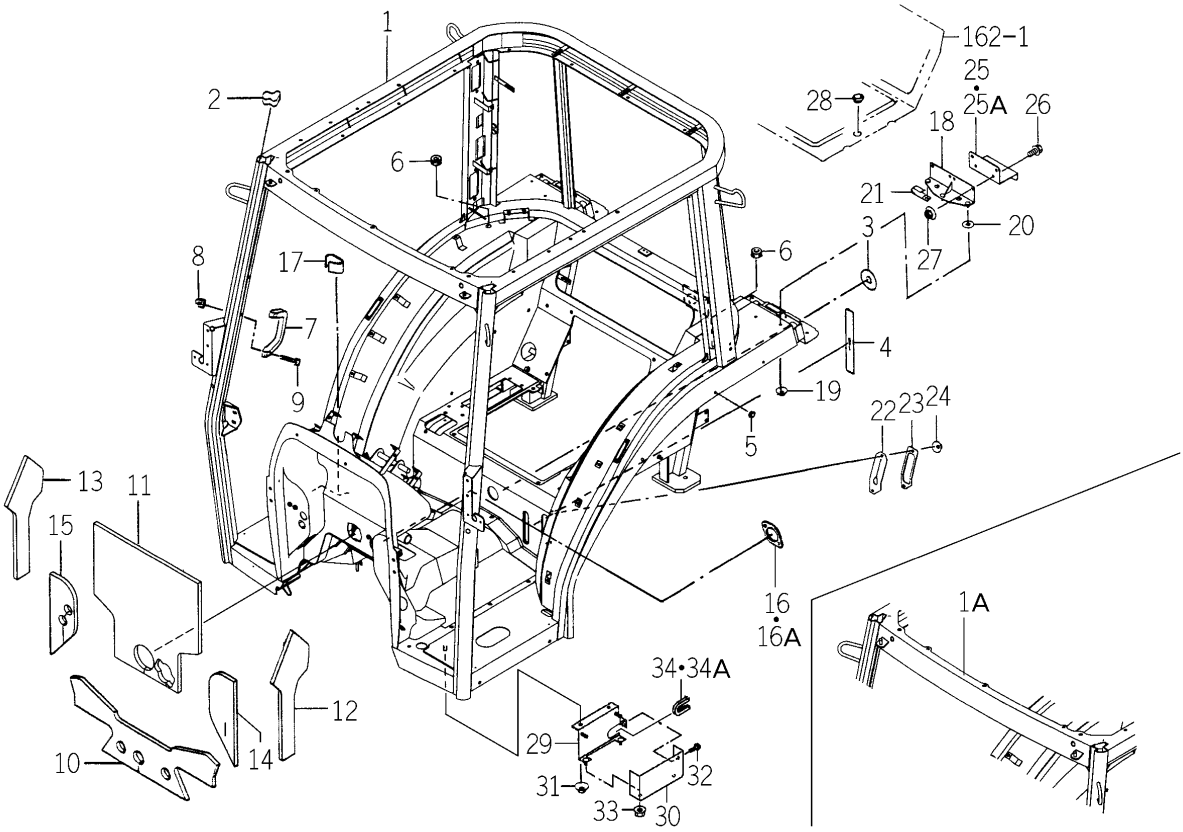

1747-720A-0100

KEY	PART CODE	DESCRIPTION	SPC	TYPE OF MODEL TG5330 E4	TG5330 E6	TG5390 E4	TG5390 E6	ITC	COL	GRP	REMARKS
1	1747-720-710-10	FRAME/CY/H/E4 COMP	*			1 -1294			7F		
1A	1747-720-710-20	FRAME/CY/H/E4 COMP	*			1 1295-		1	7F		
2	1729-720-002-10	INSULATOR	*			2					
3	1650-720-001-00	INSULATOR	*			1					
4	1650-720-015-10	INSULATOR	*			1					
5	1564-621-030-00	GROMMET/12X17X04	*			2					
6	1691-658-001-00	GROMMET/13X18X02	*			2					
7	1690-760-006-10	GRIP	*			2					
8	3801-232-229-00	POPNUT/M06	*			4					
9	V120-376-002-50	SCREW/SP	*			4					
10	1729-720-001-10	INSULATOR/DASH/LOWER	*			1					
11	1729-720-004-10	INSULATOR/DASH/UPPER	*			1					
12	1729-720-005-10	INSULATOR/DASH/LH	*			1					
13	1729-720-006-10	INSULATOR/DASH/RH	*			1					
14	1729-720-007-20	INSULATOR/LH	*			1					
15	1729-720-008-10	INSULATOR/RH	*			1					
16	1729-720-009-10	INSULATOR/BALL	*			1 -1302					
16A	1729-720-009-20	INSULATOR/BALL	*			1 1303-		1			
17	1729-720-003-10	INSULATOR	*			1					
18	1746-720-400-10	PLATE COMP	*			1					
19	V361-260-006-00	NUT	*			3					
20	V411-260-006-00	WASHER / M6	*			2					
21	3612-631-001-00	LAMP,WINKER B	*			1					
22	1746-720-001-20	INSULATOR/PARKING	*			1					
23	1746-720-002-10	PLATE	*			1					
24	V361-260-006-00	NUT	*			2					
25	1746-631-241-10	PLATE	*			1 -1131					
25A	1746-631-241-20	PLATE	*			1 1132-		1			
26	V231-360-801-60	FLANGEBOLT	*			2					
27	V363-260-008-00	NUT/WASHER	*			2					

FIG.208 FRAME SYSTEM (H3C TYPE)

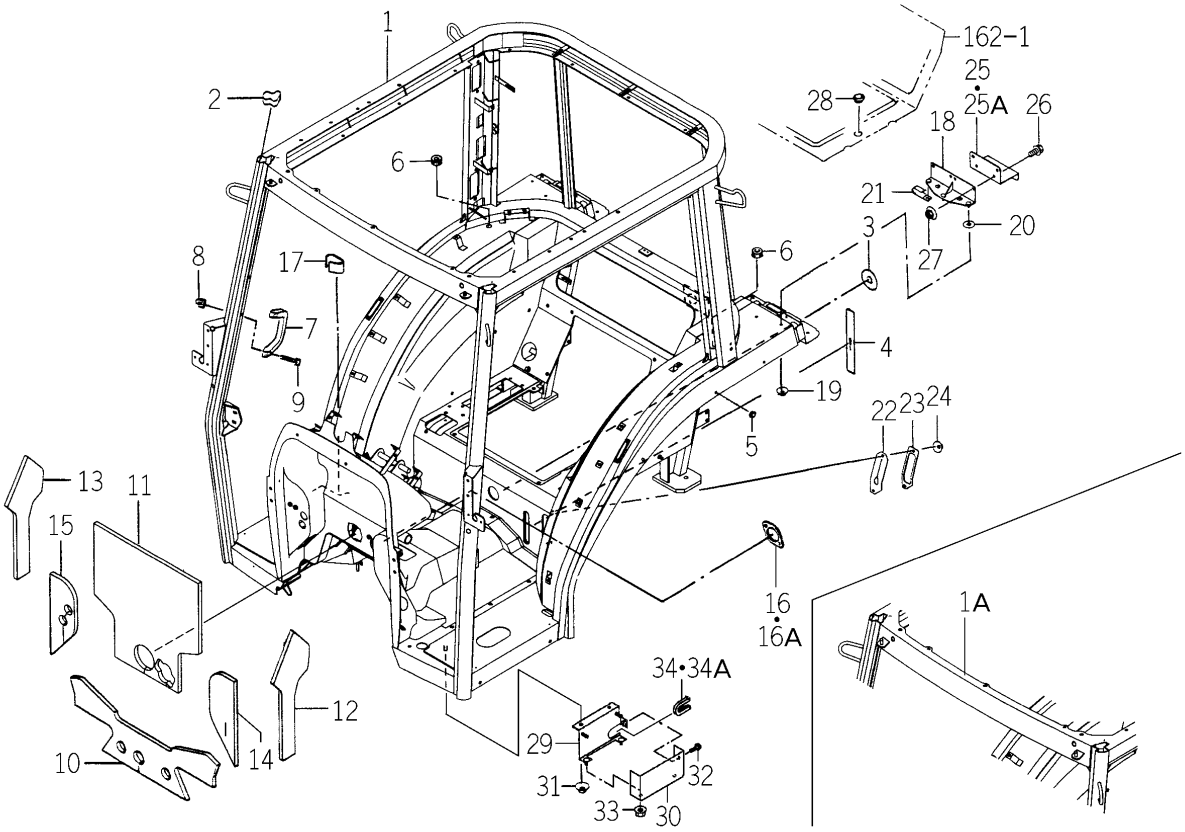

1747-720A-0100

KEY	PART CODE	DESCRIPTION	SPC	TYPE OF MODEL TG5330 E4	TG5330 E6	TG5390 E4	TG5390 E6	ITC	COL	GRP	REMARKS
28	1560-630-029-00	CAP/30	*			1					
29	1744-720-410-20	STAY/CONTROLLER COMP	*			1					
30	1744-720-011-00	COVER/CONTROLLER	*			1					
31	V362-260-008-00	NUT/WASHER	*			2					
32	V231-360-801-20	FLANGEBOLT	*			1					
33	V363-260-008-00	NUT/WASHER	*			2					
34	3805-210-021-10	INSULATOR	*			1 -1169					
34A	2504-165-002-10	INSULATOR	*			1 1170-					

FIG.209 GLASS (FRONT) SYSTEM (C TYPE EXCEPT H3-TG5330E4-No.1-678/ TG5390E4-No.1-948)

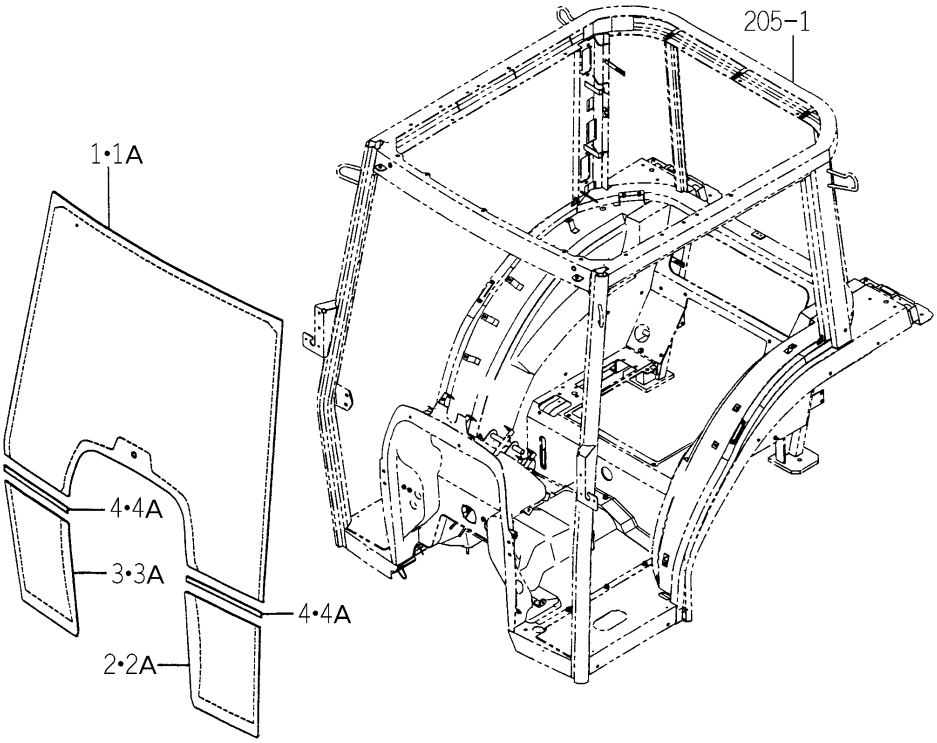

1742-721 -0100

KEY	PART CODE	DESCRIPTION	SPC	TYPE OF MODEL TG5330 E4	TG5330 E6	TG5390 E4	TG5390 E6	ITC	COL	GRP	REMARKS
1	1731-721-001-00	GLASS/FRONT/UPPER	*	1 -259		1 -516					
1A	1731-721-001-10	GLASS/FRONT/UPPER	*	1 -679		1 -948		1			
2	1731-721-002-00	GLASS/FRONT/LOWER/LH	*	1 -259		1 -516					
2A	1731-721-002-10	GLASS/FRONT/LOWER/LH	*	1 -679		1 -948		1			
3	1731-721-003-00	GLASS/FRONT/LOWER/RH	*	1 -259		1 -516					
3A	1731-721-003-10	GLASS/FRONT/LOWER/RH	*	1 -679		1 -948		1			
4	1742-721-001-00	INSULATOR/CENTER	*	2 -130		2 -432					
4A	1742-721-001-10	INSULATOR/CENTER/310	*	2 -679		2 -948		1			

FIG.210 DOOR SYSTEM (C TYPE)

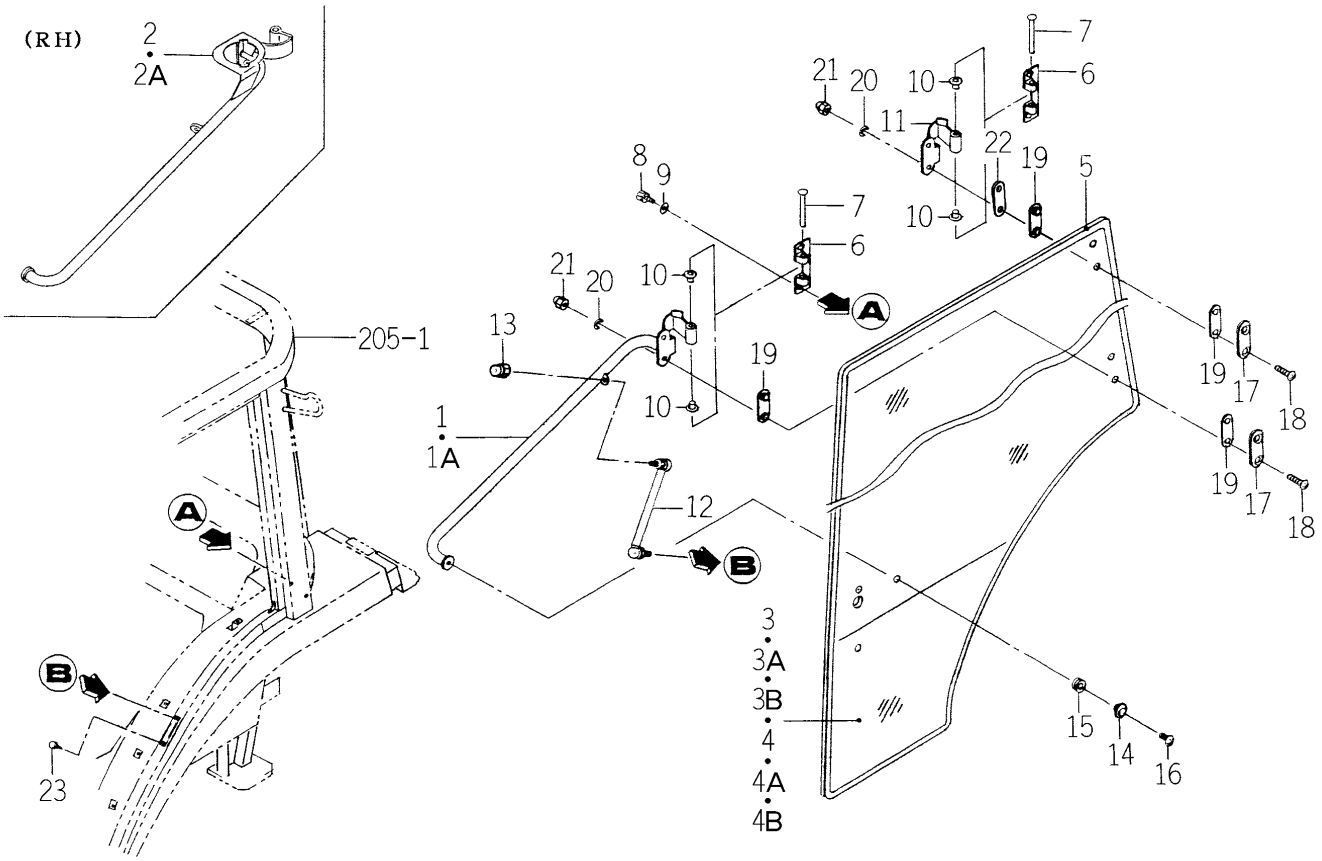

1742-730 -0100

KEY	PART CODE	DESCRIPTION	SPC	TYPE OF MODEL TG5330 E4	TG5330 E6	TG5390 E4	TG5390 E6	ITC	COL	GRP	REMARKS
1	1729-730-200-00	FRAME/DOOR/LH COMP	*	1 -69		1 -216			5I		
1A	1729-730-200-10	FRAME/DOOR/LH COMP	*	1 70-		1 217-		1	5I		
2	1742-730-220-00	FRAME/DOOR/RH COMP	*	1 -69		1 -216			5I		
2A	1742-730-220-10	FRAME/DOOR/RH COMP	*	1 70-		1 217-		1	5I		
3	1731-730-001-00	GLASS/DOOR/LH	*	1 -259		1 -516					
3A	1731-730-001-10	GLASS/DOOR/LH	*	1 -737		1 -1025		1			
3B	1731-730-001-10	GLASS/DOOR/LH	*	1 738-		1 1026-					
4	1731-730-002-00	GLASS/DOOR/RH	*	1 -259		1 -516					
4A	1731-730-002-10	GLASS/DOOR/RH	*	1 -737		1 -1025		1			
4B	1731-730-002-10	GLASS/DOOR/RH	*	1 738-		1 1026-					
5	1731-730-003-00	INSULATOR/DOOR	*	2		2					
6	1729-730-009-00	HINGE/DOOR	*	4		4					
7	1690-730-004-00	PIN/08X94	*	4		4					
8	V211-560-802-50	BOLT,SEMS/M8X25 7T	*	8		8					
9	1373-121-001-00	WASHER/9X22X2	*	8		8					
10	2150-420-008-00	BUSH/08X15X11	*	8		8					
11	1729-730-011-00	BRACKET/DOOR	*	2		2					
12	1690-730-250-00	DUMPER/DOOR ASSY	*	2		2					
13	V341-120-008-00	NUT,CAP/M 8	*	2		2					
14	1719-730-001-00	SPACER/GLASS	*	2		2					
15	1729-730-004-10	GROMMET/15X17X05	*	2		2					
16	1690-733-006-00	SCREW/TRUSS/M06X25	*	2		2					
17	1729-730-005-00	SPACER/GLASS/M08	*	4		4					
18	1729-730-007-00	SCREW/TRUSS/M08X35	*	8		8					
19	1729-730-012-00	GROMMET/15X17X02	*	8		8					
20	V401-160-008-00	WASHER,SP/M 8	*	8		8					
21	V341-120-008-00	NUT,CAP/M 8	*	8		8					
22	1757-730-006-00	PLATE/IR/36X96	*	2 -960		2 -1294					
23	1434-611-002-10	CAP(M8)	*	2		2					

FIG.211 LOCK (DOOR) SYSTEM (C TYPE)

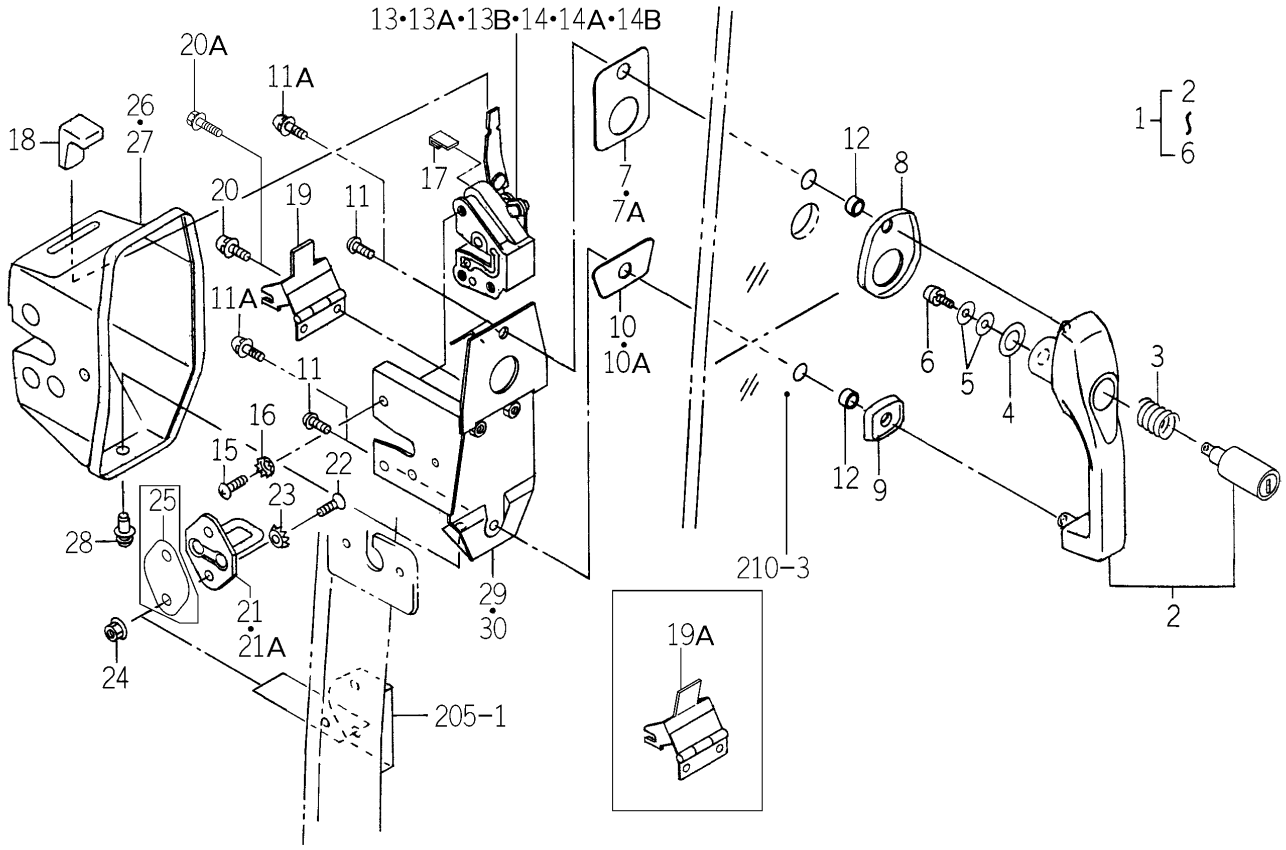

1729-733 -0100

KEY	PART CODE	DESCRIPTION	SPC	TYPE OF MODEL TG5330 E4	TG5330 E6	TG5390 E4	TG5390 E6	ITC	COL	GRP	REMARKS
1	1729-733-200-00	HANDLE/OUTER ASSY	*	2		2					
2	1729-733-201-00	CYLINDER ASSY	*	2		2					
3	1729-733-203-00	SPRING	*	2		2					
4	1729-733-204-00	INSULATOR	*	2		2					
5	1729-733-205-00	WASHER	*	4		4					
6	V120-264-001-00	SCREW/S	*	2		2					
7	1729-733-001-00	INSULATOR/DOOR	*	2 -27		2 -154					
7A	1729-733-001-10	INSULATOR/DOOR	*	2 28-		2 155-		3			
8	1729-733-002-00	INSULATOR/HANDLE	*	2		2					
9	1729-733-003-00	INSULATOR/HANDLE/LOW	*	2		2					
10	1729-733-004-10	INSULATOR/DOOR	*	2 -27		2 -154					
10A	1729-733-004-20	INSULATOR/DOOR	*	2 28-		2 155-		3			
11	1729-705-009-00	SCREW/TRUSS/M06X16	*	4 -27		4 -25					
11A	V120-366-001-60	SCREW	*	4 28-		4 26-					
12	1729-733-013-00	TUBE/008	*	4		4					
13	1729-733-210-10	LOCK/DOOR/LH ASSY	*	1 -123		1 -414					
13A	1729-733-210-20	LOCK/DOOR/LH ASSY	*	1 -747		1 -1037		1			
13B	1729-733-210-30	LOCK/DOOR/LH ASSY	*	1 748-		1 1038-		1			
14	1729-733-220-10	LOCK/DOOR/RH ASSY	*	1 -123		1 -416					
14A	1729-733-220-20	LOCK/DOOR/RH ASSY	*	1 -747		1 -1037		1			
14B	1729-733-220-30	LOCK/DOOR/RH ASSY	*	1 748-		1 1038-		1			
15	1729-733-005-00	SCREW/M06X20	*	6		6					
16	V422-160-006-00	WASHER,TOOTH/M 6	*	6		6					
17	1729-733-014-00	INSULATOR	*	2		2					
18	1729-733-007-00	GRIP	*	2		2					
19	1729-733-230-00	FORK/LOCK COMP	*	2 -259		2 -567					
19A	1729-733-230-10	FORK/LOCK COMP	*	2 260-		2 568-		1			
20	V120-366-001-60	SCREW	*	4 -107		4 -332					
20A	V210-360-601-60	BOLT(SP)/M6X16	*	4 108-		4 333-					
21	1729-733-008-00	STRIKER	*	2 -122		2 -416					

FIG.211 LOCK (DOOR) SYSTEM (C TYPE)

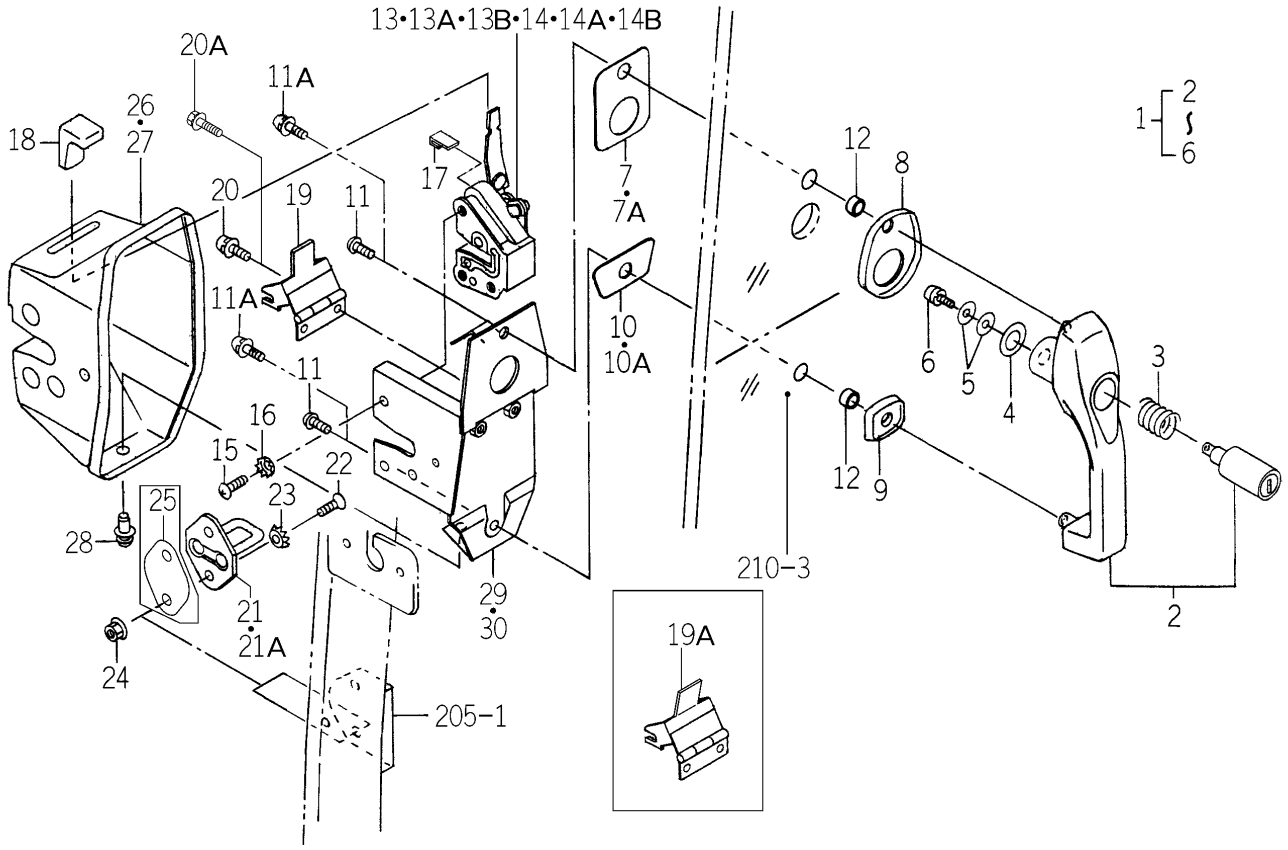

1729-733 -0100

KEY	PART CODE	DESCRIPTION	SPC	TYPE OF MODEL TG5330 E4	TG5330 E6	TG5390 E4	TG5390 E6	ITC	COL	GRP	REMARKS
21A	1729-733-008-10	STRIKER	*	2 123-		2 417-		1			
22	1690-733-007-00	BOLT/M08X25	*	4		4					
23	V422-160-008-00	WASHER,TOOTH/M 8	*	4		4					
24	3817-401-001-00	NUT/M08	*	4		4					
25	1650-733-005-00	SHIM/02/DOOR	*	2 82-		2 277-					
26	1729-733-011-00	COVER/DOOR/LH	*	1		1					
27	1729-733-012-00	COVER/DOOR/RH	*	1		1					
28	1650-705-006-00	RIVET	*	6		6					
29	1729-733-240-00	BRACKET/LOCK/LH COMP	*	1		1					
30	1729-733-250-00	BRACKET/LOCK/RH COMP	*	1		1					

FIG.212 GLASS (SIDE) SYSTEM (C TYPE)

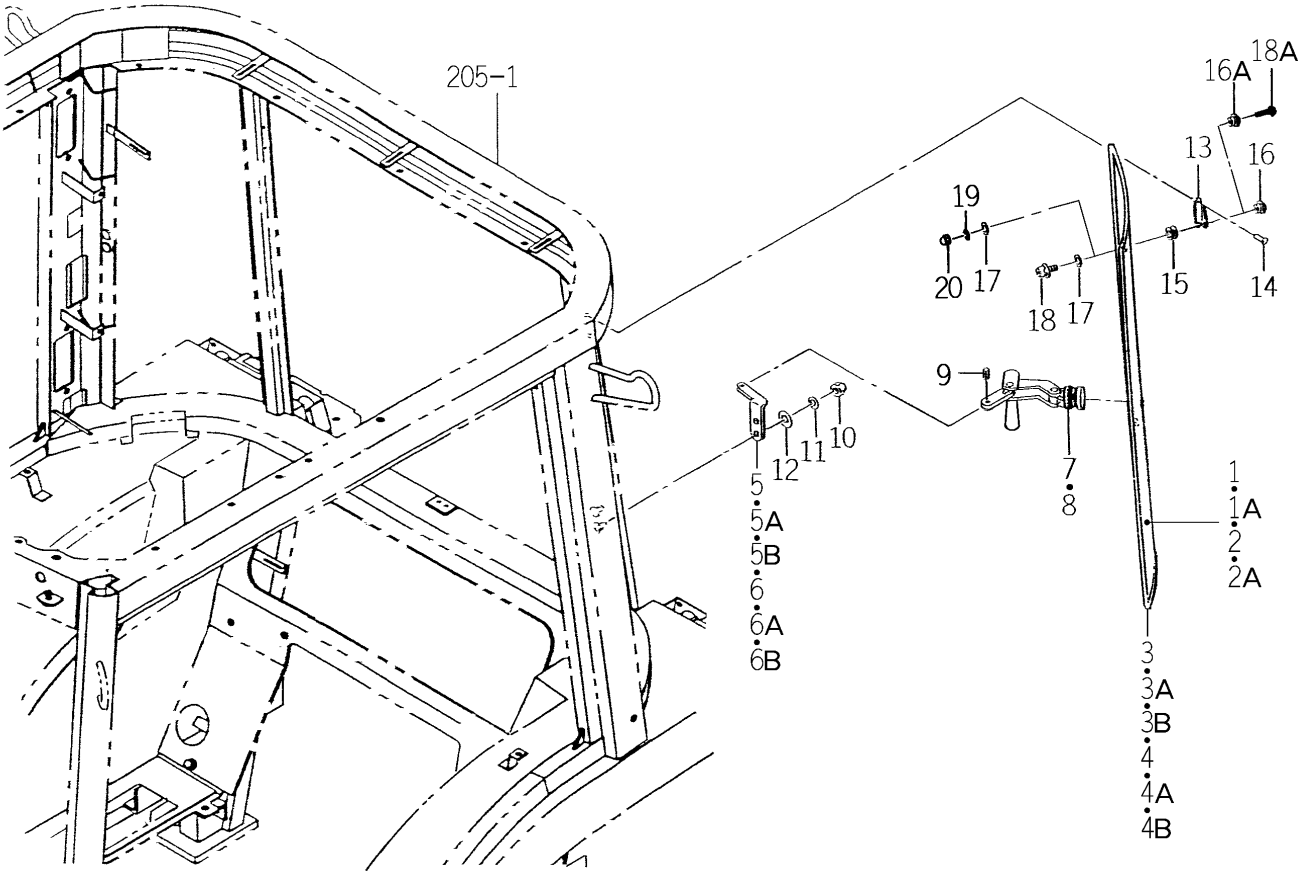

1731-740 -0100

KEY	PART CODE	DESCRIPTION	SPC	TYPE OF MODEL TG5330 E4	TG5330 E6	TG5390 E4	TG5390 E6	ITC	COL	GRP	REMARKS
1	1731-740-001-00	GLASS/SIDE/LH	*	1 -619		1 -915					
1A	1731-740-001-10	GLASS/SIDE/LH	*	1 620-		1 916-		1			
2	1731-740-002-00	GLASS/SIDE/RH	*	1 -619		1 -915					
2A	1731-740-002-10	GLASS/SIDE/RH	*	1 620-		1 916-		1			
3	1731-740-003-00	INSULATOR/SIDE/LH	*	1 -122		1 -406					
3A	1731-740-003-10	INSULATOR/SIDE/LH	*	1 -271		1 -600		1			
3B	1731-740-003-20	INSULATOR/SIDE/LH	*	1 272-		1 601-		1			
4	1731-740-007-00	INSULATOR/SIDE/RH	*	1 -122		1 -406					
4A	1731-740-007-10	INSULATOR/SIDE/RH	*	1 -271		1 -600		1			
4B	1731-740-007-20	INSULATOR/SIDE/RH	*	1 272-		1 601-		1			
5	1731-740-005-00	STAY/LOCK/LH	*	1 -648		1 -943					
5A	1731-740-005-10	STAY/LOCK/LH	*	1 -737		1 -1036		1			
5B	1731-740-005-20	STAY/LOCK/LH	*	1 738-		1 1037-		1			
6	1731-740-006-00	STAY/LOCK/RH	*	1 -648		1 -943					
6A	1731-740-006-10	STAY/LOCK/RH	*	1 -737		1 -1036		1			
6B	1731-740-006-20	STAY/LOCK/RH	*	1 738-		1 1037-		1			
7	1719-740-200-00	LOCK/LH ASSY	*	1		1					
8	1719-740-210-00	LOCK/RH ASSY	*	1		1					
9	1719-740-005-00	PIN/SPRING/W	*	2		2					
10	V340-120-006-00	NUT,CAP/M6	*	4		4					
11	V401-160-006-00	WASHER,SP/M 6	*	4		4					
12	V411-260-006-00	WASHER / M6	*	4		4					
13	1731-740-004-00	PLATE/HINGE	*	4		4					
14	W296-133-206-40	RIVET/BLIND	*	8		8					
15	1729-741-005-00	GROMMET/10X12X05	*	4		4					
16	1690-742-003-00	NUT/M05	*	4 -111		4 -338					
16A	1729-741-014-00	SPACER/GLASS/M05	*	4 112-		4 339-					
17	1650-658-214-00	WASHER/05X18X01	*	4		4					
18	V120-375-001-00	SCREW/SP	*	4 -111		4 -332					
18A	1729-741-015-00	SCREW/TRUSS/M05X20	*	4 112-		4 333-					

FIG.212 GLASS (SIDE) SYSTEM (C TYPE)

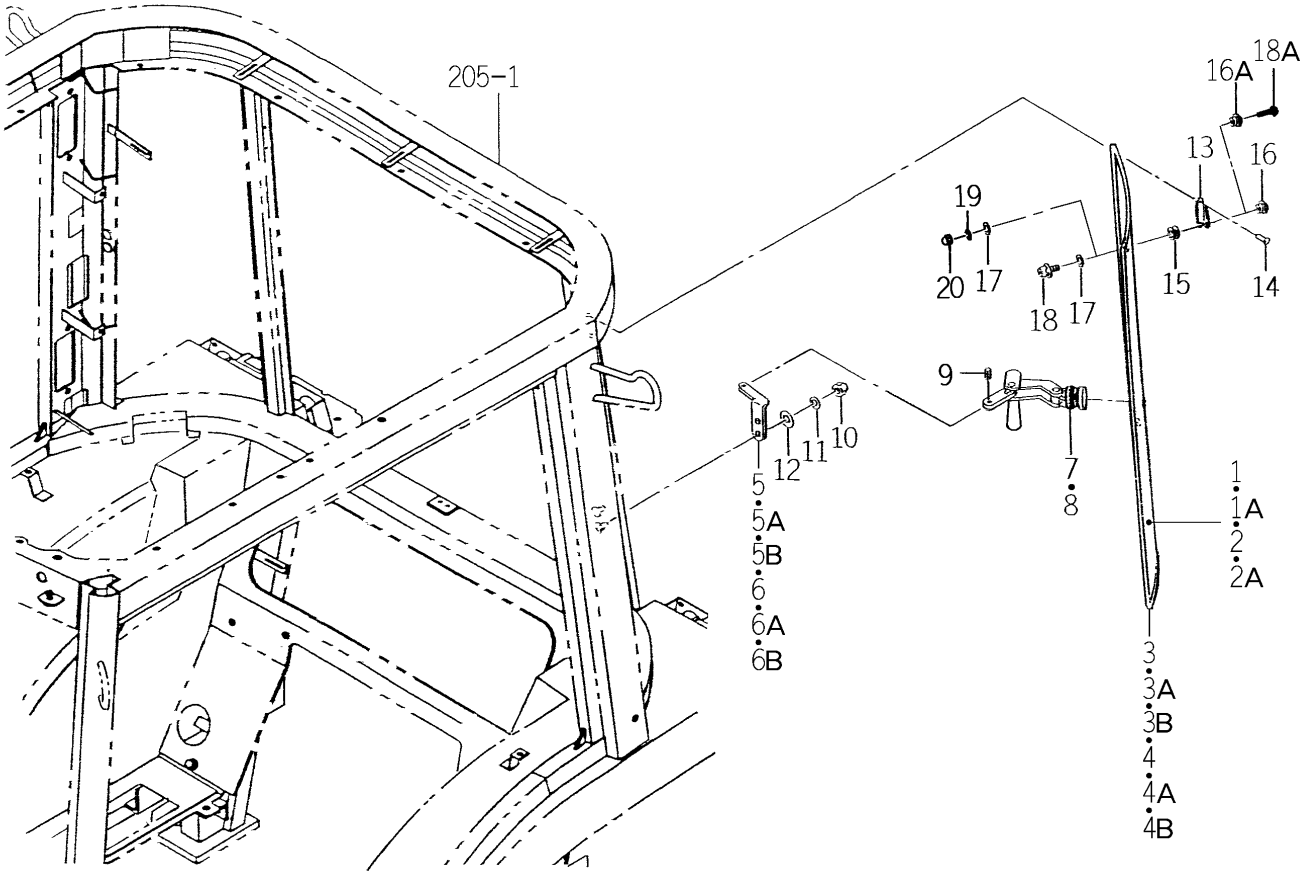

1731-740 -0100

KEY	PART CODE	DESCRIPTION	SPC	TYPE OF MODEL TG5330 E4	TG5330 E6	TG5390 E4	TG5390 E6	ITC	COL	GRP	REMARKS
19	V401-160-005-00	WASHER,SP/M 5	*	4 112-		4 335-					
20	1729-741-016-00	NUT/CAP/M05	*	4 112-		4 335-					

FIG.213 GLASS (REAR) SYSTEM (C TYPE)

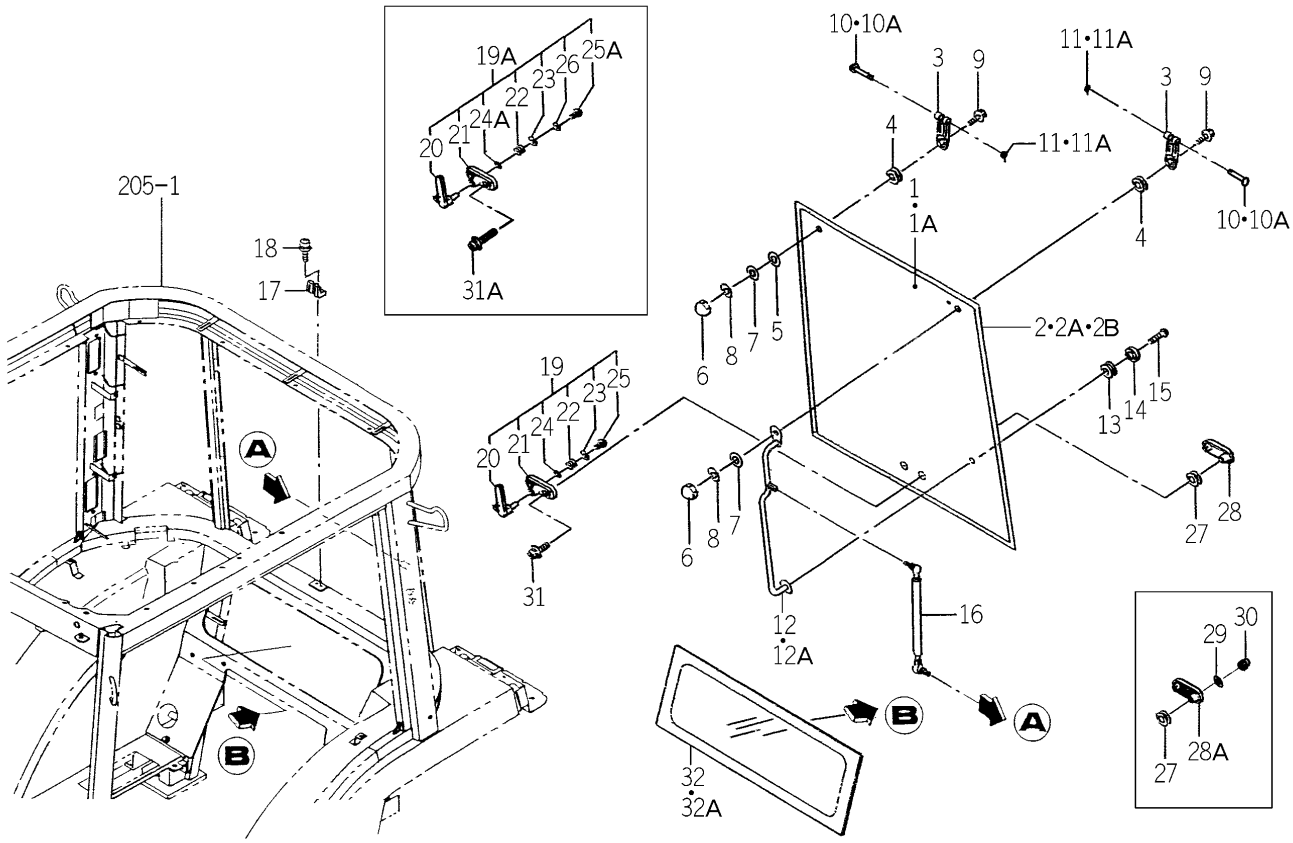

1742-742 -0100

KEY	PART CODE	DESCRIPTION	SPC	TYPE OF MODEL TG5330 E4	TG5330 E6	TG5390 E4	TG5390 E6	ITC	COL	GRP	REMARKS
1	1742-742-001-00	GLASS/REAR	*	1 -938		1 -1227					
1A	1742-742-001-10	GLASS/REAR	*	1 939-		1 1228-					
2	1731-742-002-00	INSULATOR/REAR	*	1 -122		1 -406					
2A	1731-742-002-10	INSULATOR/REAR	*	1 -271		1 -600		1			
2B	1731-742-002-20	INSULATOR/REAR	*	1 272-		1 601-		1			
3	1731-742-005-00	HINGE/REAR	*	2		2					
4	1729-730-004-10	GROMMET/15X17X05	*	2		2					
5	1673-743-003-00	WASHER/09X36X03	*	1		1					
6	V341-120-008-00	NUT,CAP/M 8	*	2		2					
7	V411-260-008-00	WASHER,PL/M 8	*	2		2					
8	V401-160-008-00	WASHER,SP/M 8	*	2		2					
9	1729-741-004-00	SCREW/TRUSS/M08X30	*	2		2					
10	1518-601-002-00	PIN SET /51	*	2 -938		2 -1227					
10A	1729-741-017-00	PIN/08X54	*	2 939-		2 1228-					
11	1729-741-013-00	PIN/SNAP	*	2 -938		2 -1227					
11A	1566-731-107-00	RING,RETANING/E07	*	2 939-		2 1228-					
12	1731-742-220-00	STAY/WINDOW COMP	*	1 -443		1 -776					
12A	1719-742-210-00	STAY/WINDOW COMP	*	1 444-		1 777-					
13	1729-730-004-10	GROMMET/15X17X05	*	1		1					
14	1719-730-001-00	SPACER/GLASS	*	1		1					
15	1690-733-006-00	SCREW/TRUSS/M06X25	*	1		1					
16	1690-730-250-00	DUMPER/DOOR ASSY	*	1		1					
17	1704-740-013-20	GUIDE/LOCK	*	1		1					
18	V120-375-001-60	SCREW/SP	*	2		2					
19	1719-742-230-00	HANDLE SET	*	1 -696		1 -986					
19A	1719-742-230-10	HANDLE SET	*	1 697-		1 987-		1			
20	1719-742-231-00	HANDLE	*	1		1					
21	1719-742-232-00	HANDLE/BASE/INNER	*	1		1					
22	1719-742-233-00	SPRING/HC014	*	1		1					
23	1719-742-234-00	WASHER/13X18X02	*	1		1					

FIG.213 GLASS (REAR) SYSTEM (C TYPE)

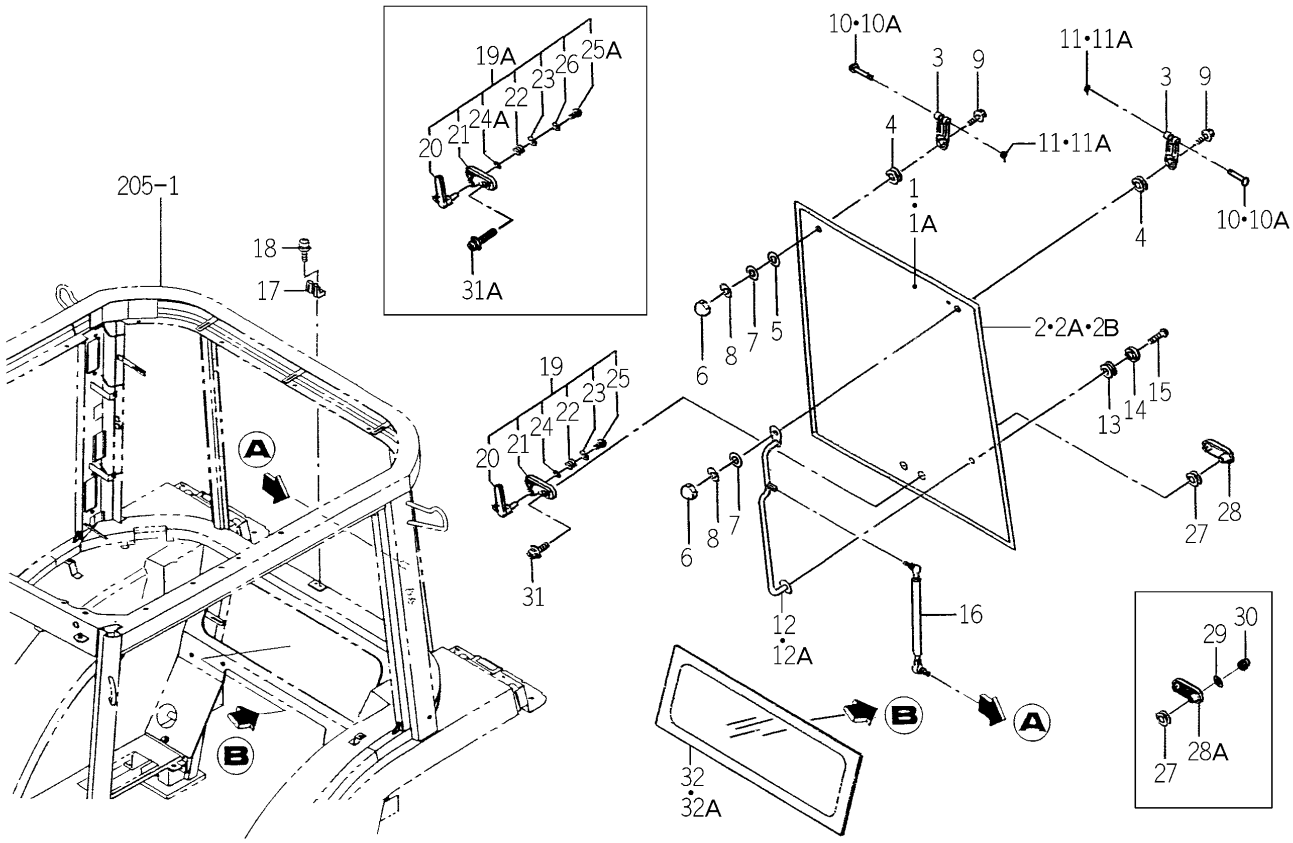

1742-742 -0100

KEY	PART CODE	DESCRIPTION	SPC	TYPE OF MODEL TG5330 E4	TG5330 E6	TG5390 E4	TG5390 E6	ITC	COL	GRP	REMARKS
24	1719-742-235-00	WASHER/09X22X02	*	1 -696		1 -986					
24A	1719-742-235-10	WASHER/07X18X01	*	1 697-		1 987-		3			
25	P113-602-009-00	SCREW/M06X12	*	1 -696		1 -986					
25A	1719-742-236-00	BOLT/SET/M06X16	*	1 697-		1 987-					
26	1719-742-237-00	S.W/07X12X02	*	1 697-		1 987-					
27	1729-741-007-00	GROMMET/17X21X05	*	2		2					
28	1704-740-007-00	HANDLE/BASE/OUTER	*	1 -111		1 -334					
28A	1729-730-005-00	SPACER/GLASS/M08	*	1 112-		1 335-					
29	3740-162-005-00	WASHER	*	2 112-		2 333-					
30	V340-120-006-00	NUT,CAP/M6	*	2 112-		2 339-					
31	V120-376-002-00	SCREW/SP	*	2 -111		2 -332					
31A	V120-376-003-00	SCREW/SP	*	2 112-		2 333-					
32	1731-742-003-00	GLASS/REAR/UNDER	*	1 -259		1 -516					
32A	1731-742-003-10	GLASS/REAR/UNDER	*	1 260-		1 517-		1			

FIG.214 INTERIOR SYSTEM (C TYPE)

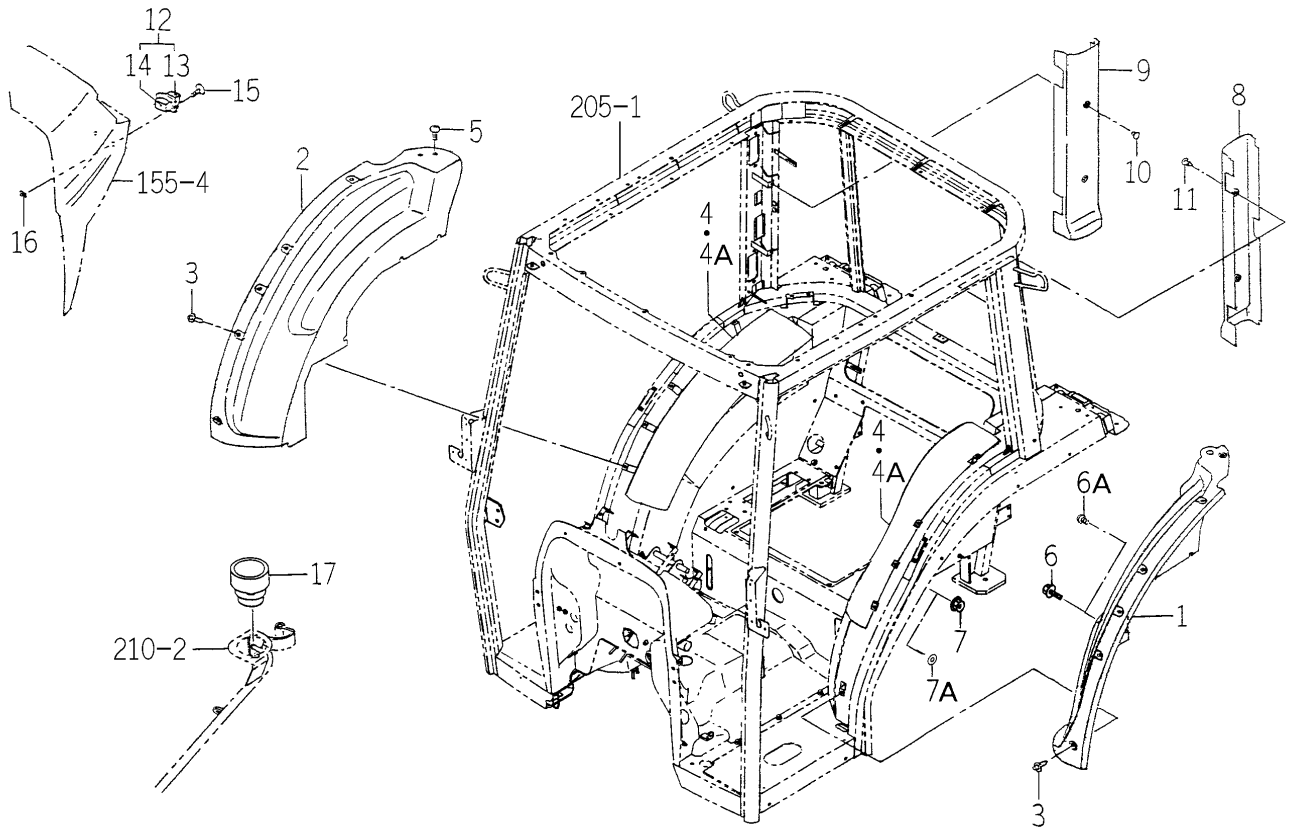

1742-760 -0100

KEY	PART CODE	DESCRIPTION	SPC	TYPE OF MODEL TG5330 E4	TG5330 E6	TG5390 E4	TG5390 E6	ITC	COL	GRP	REMARKS
1	1742-760-001-00	COVER/FENDER/LH	*	1		1					
2	1742-760-002-00	COVER/FENDER/RH	*	1		1					
3	1650-705-006-00	RIVET	*	11		11					
4	1729-760-005-00	INSULATOR	*	2 -27		2 -170					
4A	1729-760-005-10	INSULATOR	*	2 28-		2 171-		1			
5	3824-232-021-00	SCREW/TRUSS/M08X20	*	2		2					
6	V231-360-801-60	FLANGEBOLT	*	1 -27		1 -25					
6A	1527-604-002-00	CLIP(B)	*	1 28-		1 26-					
7	V363-260-008-00	NUT/WASHER	*	1 -27		1 -25					
7A	V411-260-008-00	WASHER,PL/M 8	*	1 28-		1 26-					
8	1731-760-003-00	COVER/LH	*	1		1					
9	1731-760-004-00	COVER/RH	*	1		1					
10	1719-705-006-00	RIVET/SCREW/08	*	2		2					
11	1719-780-210-00	LATCH ASSY	*	2		2					
12	1518-730-550-00	ASHTRY COMP	*	1		1					
13	1518-730-551-00	CASE	*	1		1					
14	1518-730-552-00	COVER	*	1		1					
15	V112-164-001-60	SCREW/FLAT	*	2		2					
16	1696-658-001-00	NUT/CLIP/M04	*	2		2					
17	1742-606-001-10	TRAY/BOTTLE	*	1		1					

FIG.215 HEATER (CABIN) SYSTEM (C TYPE)(1/2)

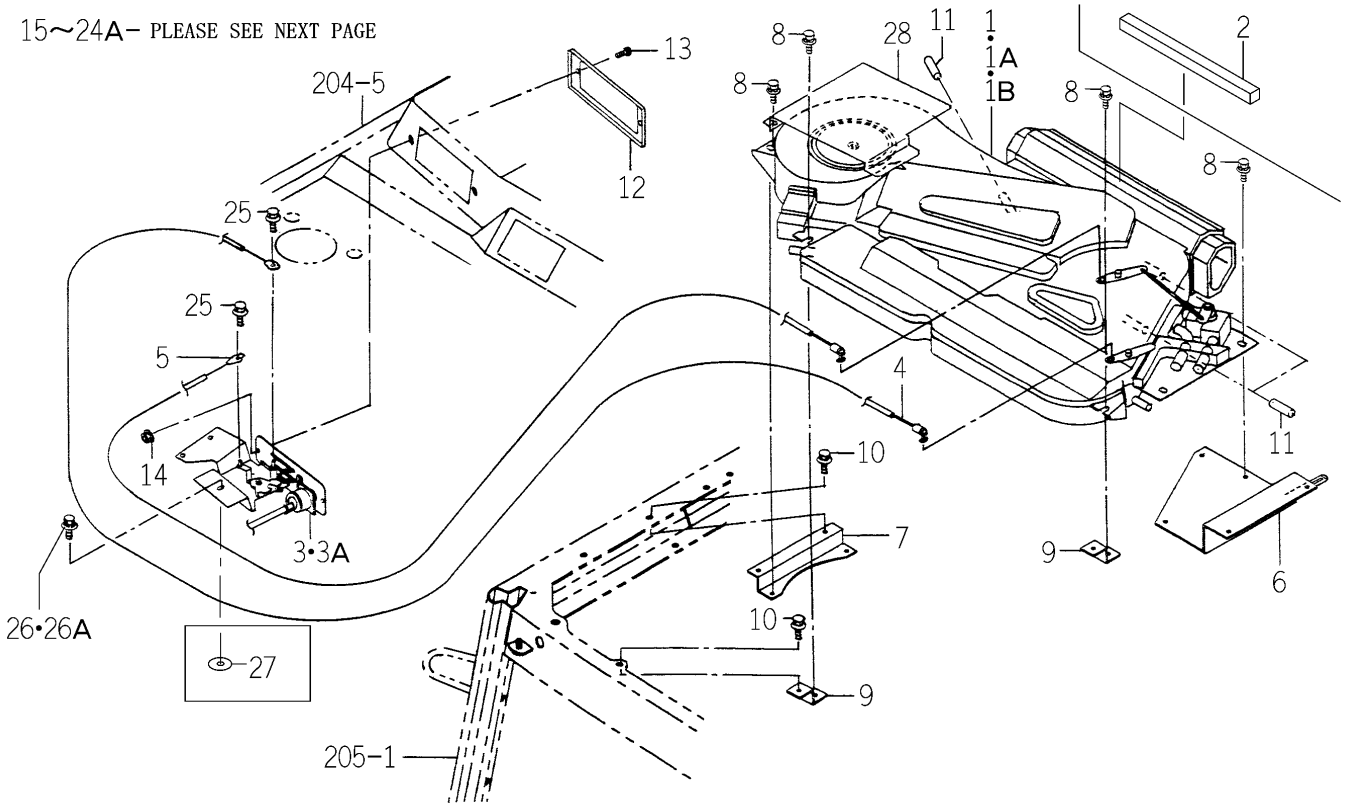

1746-781 -0100

KEY	PART CODE	DESCRIPTION	SPC	TYPE OF MODEL TG5330 E4	TG5330 E6	TG5390 E4	TG5390 E6	ITC	COL	GRP	REMARKS
1	1729-782-510-00	AIRCONDITIONER ASSY	*	1 -259		1 -567					FIG 273
1A	1729-782-510-10	AIRCONDITIONER ASSY	*	1 -960		1 -1328		1			FIG 273
1B	1729-782-510-20	AIRCONDITIONER ASSY	*	1 961-		1 1329-		2			FIG 273
2	1716-782-005-00	INSULATOR/20X280	*	1 108-		1 333-					
3	1746-781-220-00	PANEL/CONTROL/H ASSY	*	1 -151		1 -490					FIG 278
3A	1746-781-220-10	PANEL/CONTROL/H SET	*	1 152-		1 491-		1			FIG 278
4	1729-782-024-00	CABLE/1380	*	1		1					
5	1729-782-026-00	CABLE/505	*	1		1					
6	1729-782-260-10	STAY/LH COMP	*	1		1					
7	1729-782-270-00	STAY/RH COMP	*	1		1					
8	2144-501-012-00	BOLT/M6X20/16	*	6		6					
9	1729-782-280-00	PLATE COMP	*	2		2					
10	V230-360-601-20	FLANGEBOLT	*	6		6					
11	1746-781-001-00	CAP/09	*	5		5					
12	1729-782-007-00	PANEL/AC	*	1		1					
13	1729-705-008-00	SCREW/TRUSS/M05X12	*	2		2					
14	V360-260-005-00	NUT/M5	*	2		2					
15	1729-782-005-20	DUCT/LH	*	1		1					
16	1729-782-006-20	DUCT/RH	*	1		1					
17	1729-782-001-00	GRILLE/AIR/TWIN	*	2		2					
18	1729-782-002-10	GRILLE/AIR	*	4		4					
19	1731-782-001-00	HOSE/HEATER	*	1		1					
20	1731-782-002-00	HOSE/HEATER	*	1		1					
21	1650-780-011-10	CLIP/HOSE/18-22	*	2 -111		2 -304					
21A	1650-780-011-10	CLIP/HOSE/18-22	*	1 112-		1 305-					
22	J061-112-022-00	CLAMP/WORM/12-22	*	1 -111		1 -304					
22A	J061-112-022-00	CLAMP/WORM/12-22	*	2 112-		2 305-					
23	J061-112-022-00	CLAMP/WORM/12-22	*	1		1					
24	1729-782-018-00	INSULATOR	*	2 -27		2 -170					
24A	1729-782-018-10	INSULATOR	*	2 28-		2 171-		1			

FIG.215 HEATER (CABIN) SYSTEM (C TYPE)(2/2)

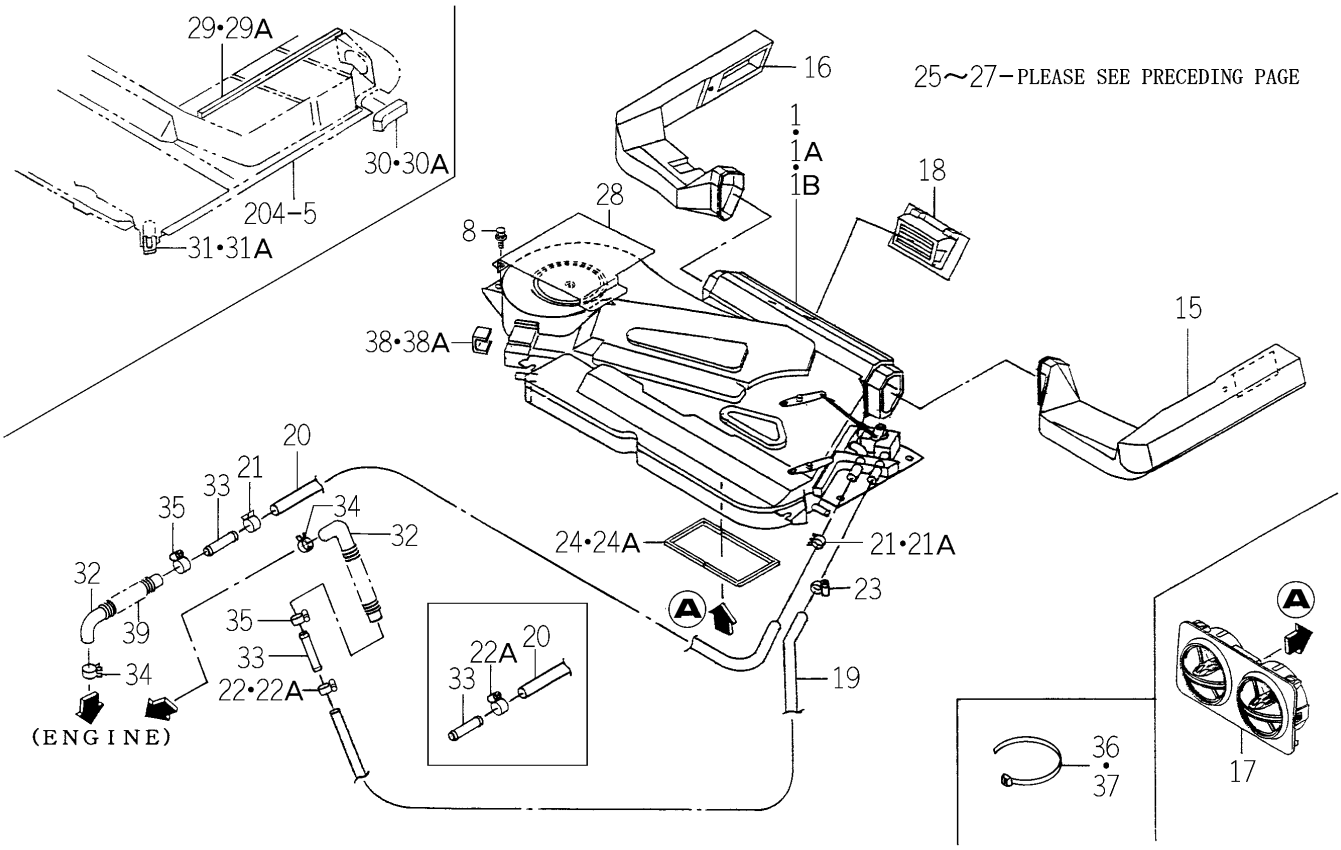

1746-781 -0100

KEY	PART CODE	DESCRIPTION	SPC	TYPE OF MODEL TG5330 E4	TG5330 E6	TG5390 E4	TG5390 E6	ITC	COL	GRP	REMARKS
25	V230-360-601-20	FLANGEBOLT	*	2		2					
26	2144-501-011-10	BOLT/M6X16X16	*	1 -27		1 -170					
26A	2144-501-012-00	BOLT/M6X20/16	*	1 28-		1 171-					
27	4101-102-038-00	WASHER/24X9X3.2	*	1 28-		1 171-					
28	1731-782-006-00	PLATE	*	1		1					
29	1731-782-007-00	INSULATOR/20X630	*	2 -27		2 -170					
29A	1731-782-007-10	INSULATOR/20X630	*	2 28-		2 171-		1			
30	1731-782-008-00	INSULATOR/50X150	*	2 -27		2 -170					
30A	1731-782-008-10	INSULATOR/50X150	*	2 28-		2 171-		1			
31	1731-782-009-00	INSULATOR/10X180	*	2 -27		2 -170					
31A	1731-782-009-10	INSULATOR/10X180	*	2 28-		2 171-		1			
32	1656-780-012-00	HOSE/HEATER/L	*	2		2					
33	1674-780-007-00	CONNECTOR/STRAIGHT	*	2		2					
34	1650-780-011-10	CLIP/HOSE/18-22	*	2		2					
35	J061-112-022-00	CLAMP/WORM/12-22	*	2		2					
36	1376-402-003-00	BAND,WIRE/140	*	4		4					
37	1342-402-006-00	BAND/WIRE/250	*	2		2					
38	1729-720-003-00	INSULATOR	*			1 -155					
38A	1729-720-003-10	INSULATOR	*	1 28-		1 156-		1			
39	1729-780-014-00	TUBE/CORRUGATED/100	*	1 28-		1 26-					

FIG.216 ORNAMENT (TG5330-S TYPE)

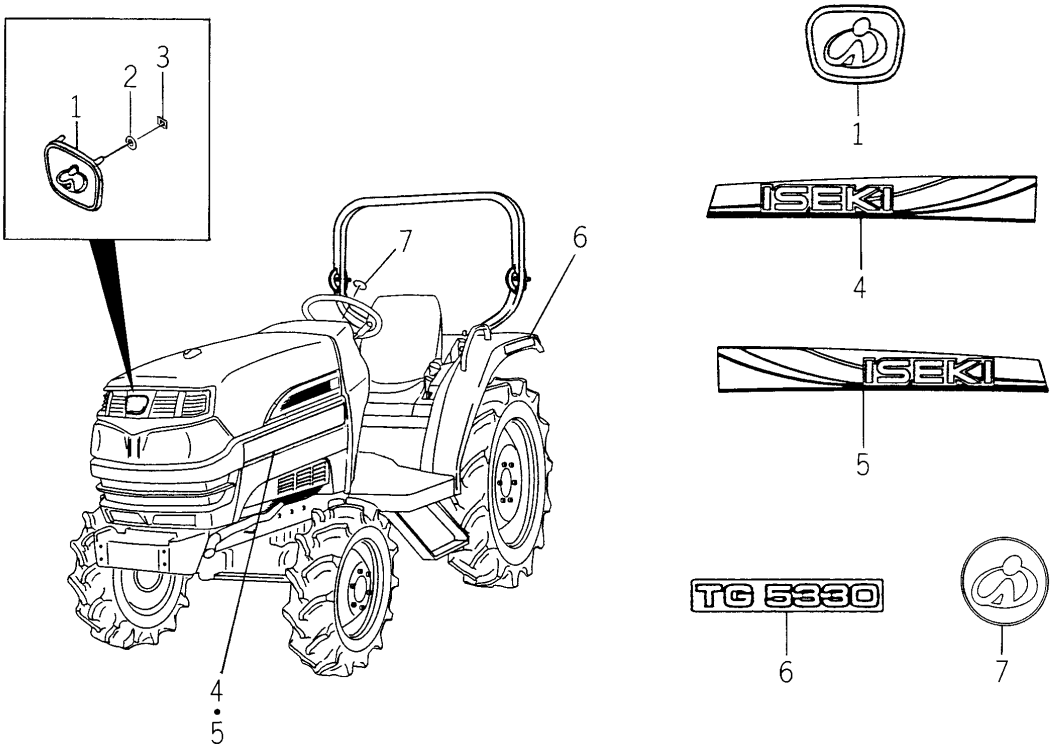

1746-901 -0100

KEY	PART CODE	DESCRIPTION	SPC	TYPE OF MODEL TG5330 E4	TG5330 E6	TG5390 E4	TG5390 E6	ITC	COL	GRP	REMARKS
1	3689-902-019-00	ORNAMENT/ISEKI	*	1							
2	1444-601-015-00	WASHER/6X14X3	*	3							
3	V350-160-004-00	NUT,SPEED/P4	*	3							
4	1746-901-001-10	ORNAMENT/ISEKI/LH	*	1							
5	1746-901-002-10	ORNAMENT/TG5330/RH	*	1							
6	1746-901-003-00	ORNAMENT/TG5330	*	2							
7	1696-901-006-00	ORNAMENT/STEERING	*	1							

FIG.217 ORNAMENT (TG5390-S TYPE)

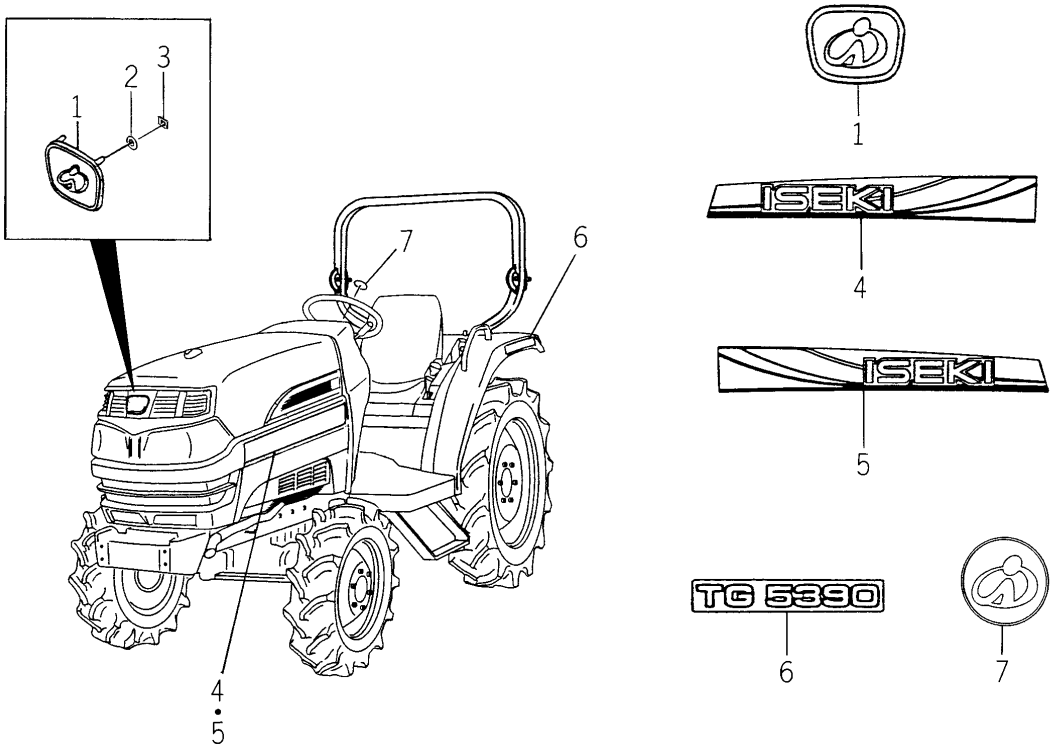

1747-901 -0100

KEY	PART CODE	DESCRIPTION	SPC	TYPE OF MODEL TG5330 E4	TG5330 E6	TG5390 E4	TG5390 E6	ITC	COL	GRP	REMARKS
1	3689-902-019-00	ORNAMENT/ISEKI	*			1					
2	1444-601-015-00	WASHER/6X14X3	*			3					
3	V350-160-004-00	NUT,SPEED/P4	*			3					
4	1746-901-001-10	ORNAMENT/ISEKI/LH	*			1					
5	1746-901-002-10	ORNAMENT/TG5330/RH	*			1					
6	1747-901-003-00	ORNAMENT/TG5390	*			2					
7	1696-901-006-00	ORNAMENT/STEERING	*			1					

FIG.218 ORNAMENT (TG5330-Q TYPE)

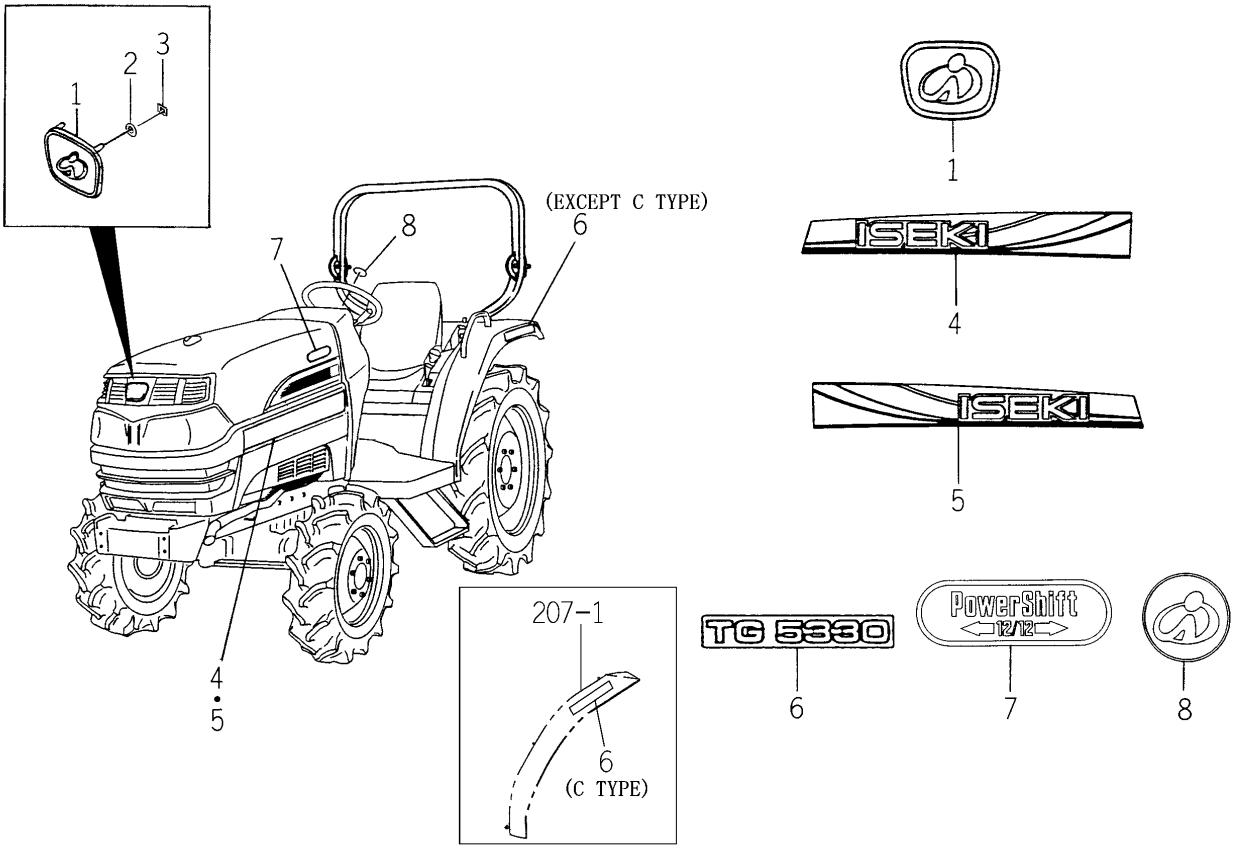

1746-901A-0100

KEY	PART CODE	DESCRIPTION	SPC	TYPE OF MODEL TG5330 E4	TG5330 E6	TG5390 E4	TG5390 E6	ITC	COL	GRP	REMARKS
1	3689-902-019-00	ORNAMENT/ISEKI	*	1							
2	1444-601-015-00	WASHER/6X14X3	*	3							
3	V350-160-004-00	NUT,SPEED/P4	*	3							
4	1746-901-001-10	ORNAMENT/ISEKI/LH	*	1							
5	1746-901-002-10	ORNAMENT/TG5330/RH	*	1							
6	1746-901-003-00	ORNAMENT/TG5330	*	2							
7	1746-901-005-00	ORNAMENT/POWERSHIFT	*	2							
8	1696-901-006-00	ORNAMENT/STEERING	*	1							

FIG.219 ORNAMENT (TG5390-Q TYPE)

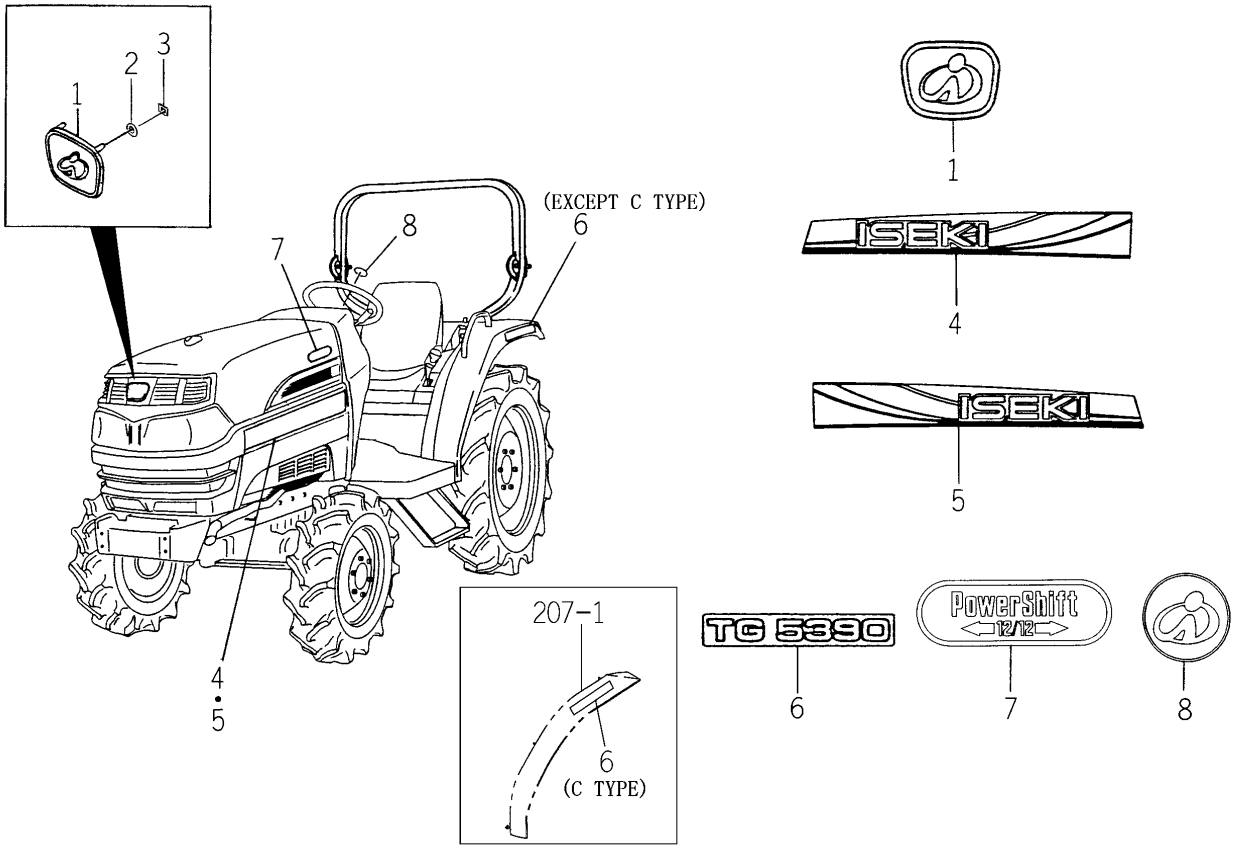

1747-901A-0100

KEY	PART CODE	DESCRIPTION	SPC	TYPE OF MODEL TG5330 E4	TG5330 E6	TG5390 E4	TG5390 E6	ITC	COL	GRP	REMARKS
1	3689-902-019-00	ORNAMENT/ISEKI	*			1					
2	1444-601-015-00	WASHER/6X14X3	*			3					
3	V350-160-004-00	NUT,SPEED/P4	*			3					
4	1746-901-001-10	ORNAMENT/ISEKI/LH	*			1					
5	1746-901-002-10	ORNAMENT/TG5330/RH	*			1					
6	1747-901-003-00	ORNAMENT/TG5390	*			2					
7	1746-901-005-00	ORNAMENT/POWERSHIFT	*			2					
8	1696-901-006-00	ORNAMENT/STEERING	*			1					

FIG.220 ORNAMENT (TG5330-P TYPE)

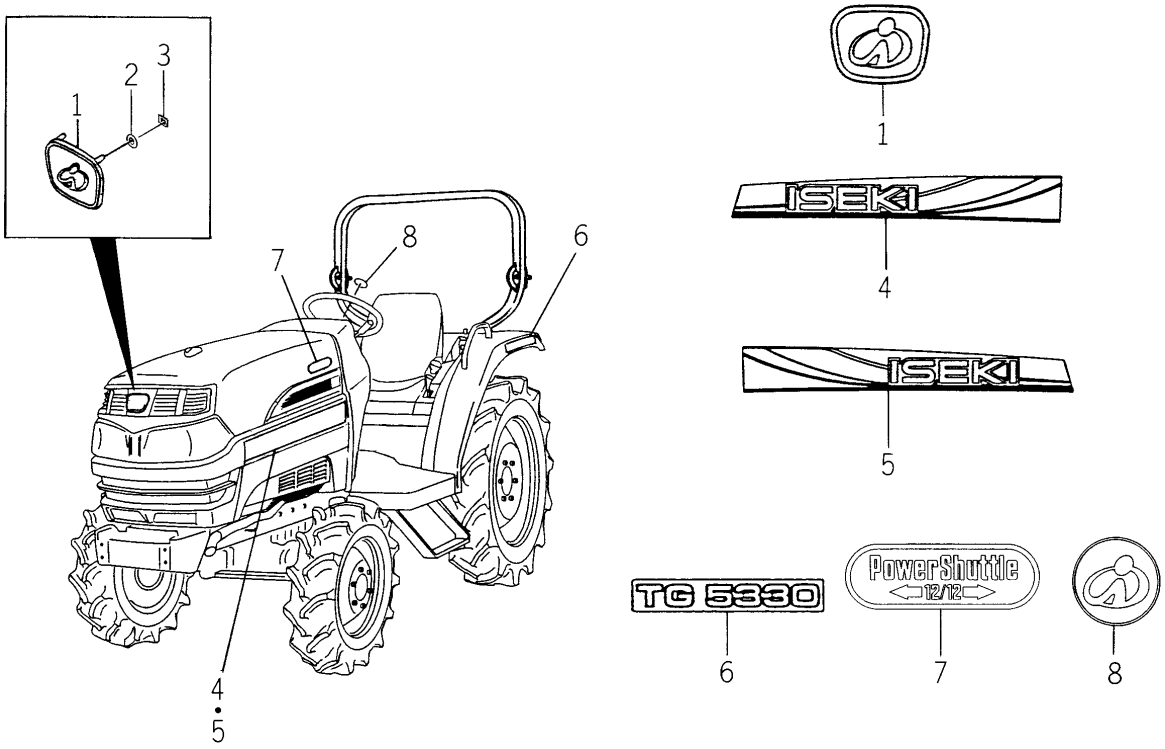

1746-901B-0100

KEY	PART CODE	DESCRIPTION	SPC	TYPE OF MODEL TG5330 E4	TG5330 E6	TG5390 E4	TG5390 E6	ITC	COL	GRP	REMARKS
1	3689-902-019-00	ORNAMENT/ISEKI	*		1						
2	1444-601-015-00	WASHER/6X14X3	*		3						
3	V350-160-004-00	NUT,SPEED/P4	*		3						
4	1746-901-001-10	ORNAMENT/ISEKI/LH	*		1						
5	1746-901-002-10	ORNAMENT/TG5330/RH	*		1						
6	1746-901-003-00	ORNAMENT/TG5330	*		2						
7	1746-901-006-00	ORNAMENT/POWERSHUTTL	*		2						
8	1696-901-006-00	ORNAMENT/STEERING	*		1						

FIG.221 ORNAMENT (TG5390-P TYPE)

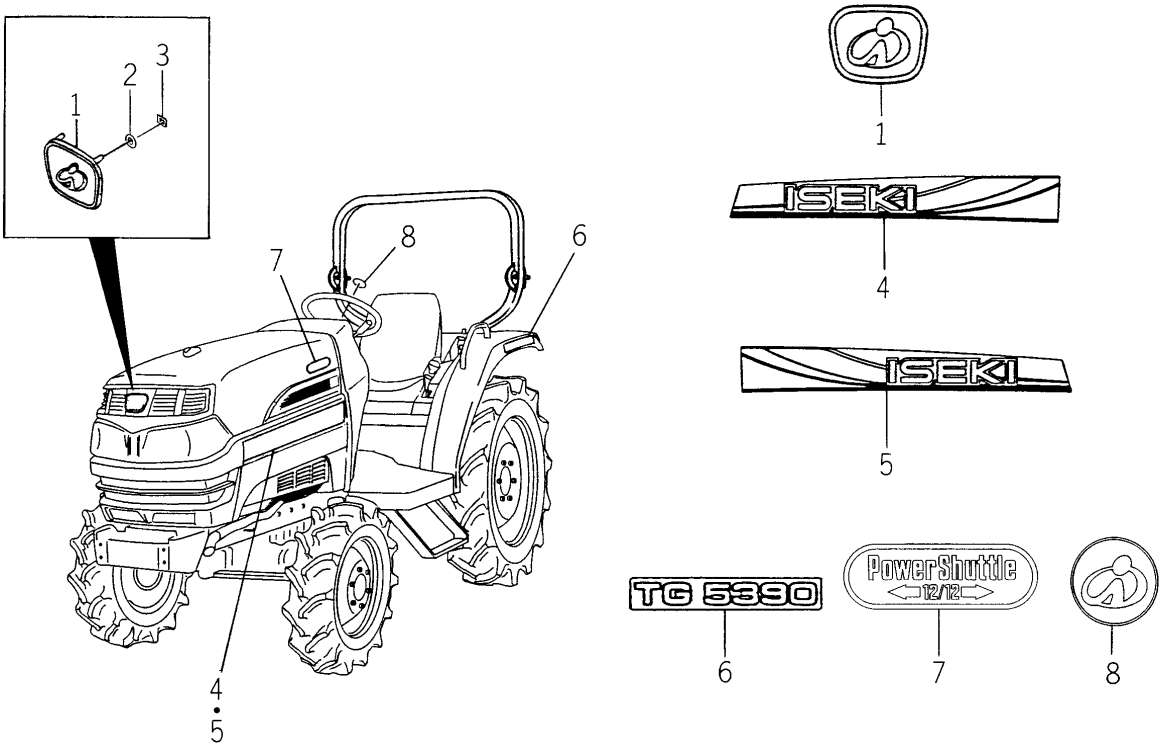

1747-901C-0100

KEY	PART CODE	DESCRIPTION	SPC	TYPE OF MODEL TG5330 E4	TG5330 E6	TG5390 E4	TG5390 E6	ITC	COL	GRP	REMARKS
1	3689-902-019-00	ORNAMENT/ISEKI	*				1				
2	1444-601-015-00	WASHER/6X14X3	*				3				
3	V350-160-004-00	NUT,SPEED/P4	*				3				
4	1746-901-001-10	ORNAMENT/ISEKI/LH	*				1				
5	1746-901-002-10	ORNAMENT/TG5330/RH	*				1				
6	1747-901-003-00	ORNAMENT/TG5390	*				2				
7	1746-901-006-00	ORNAMENT/POWERSHUTTL	*				2				
8	1696-901-006-00	ORNAMENT/STEERING	*				1				

FIG.222 ORNAMENT (TG5390-H TYPE)

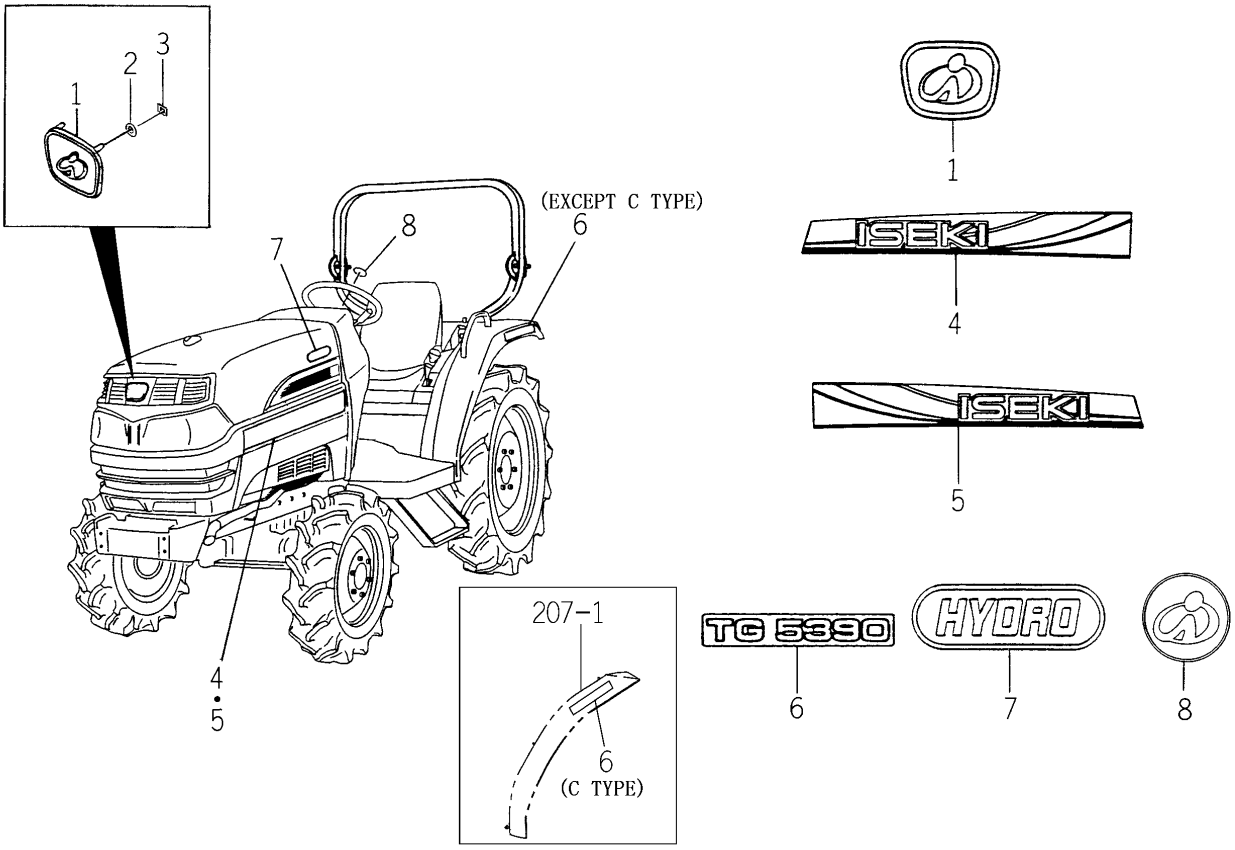

1747-901D-0100

KEY	PART CODE	DESCRIPTION	SPC	TYPE OF MODEL TG5330 E4	TG5330 E6	TG5390 E4	TG5390 E6	ITC	COL	GRP	REMARKS
1	3689-902-019-00	ORNAMENT/ISEKI	*			1	1				
2	1444-601-015-00	WASHER/6X14X3	*			3	3				
3	V350-160-004-00	NUT,SPEED/P4	*			3	3				
4	1746-901-001-10	ORNAMENT/ISEKI/LH	*			1	1				
5	1746-901-002-10	ORNAMENT/TG5330/RH	*			1	1				
6	1747-901-003-00	ORNAMENT/TG5390	*			2	2				
7	1646-901-061-00	ORNAMENT/HYDRO	*			2	2				
8	1696-901-006-00	ORNAMENT/STEERING	*			1	1				

FIG.223 LABEL (CONTROL) (HE4 TYPE EXCEPT H3)

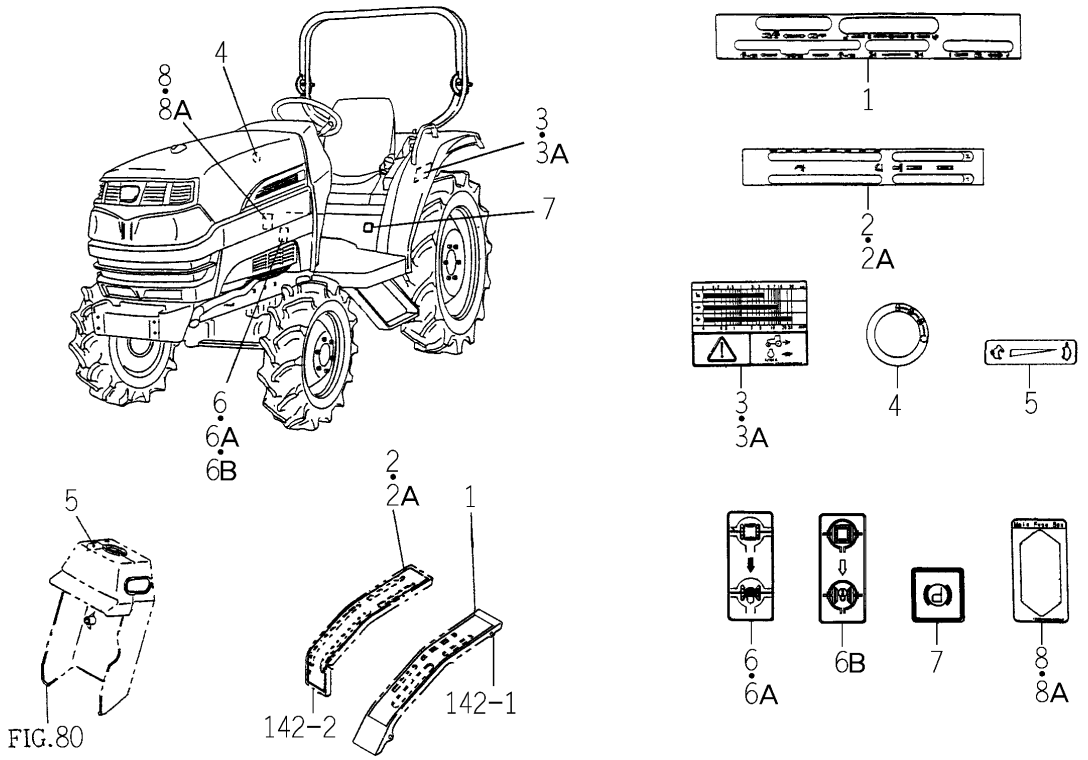

1743-902 -0100

KEY	PART CODE	DESCRIPTION	SPC	TYPE OF MODEL TG5330 E4	TG5330 E6	TG5390 E4	TG5390 E6	ITC	COL	GRP	REMARKS
1	1743-902-001-00	LABEL/CONTROL/LH/H/E	*			1					
2	1746-902-002-10	LABEL/CONTROL/RH/S	*			1 -1144					
2A	1746-902-002-20	LABEL/CONTROL/RH/S	*			1 1145-		1			
3	1746-902-007-00	LABEL/SPEED/H/E4	*			1 -621					
3A	1746-902-007-10	LABEL/SPEED/H/E4	*			1 622-		1			
4	1746-902-004-00	LABEL/CONTROL/START/	*			1					
5	1742-902-009-00	LABEL/CONTROL/THROTT	*			1					
6	1683-902-004-00	LABEL/DIFF	*			1 -766					
6A	1683-902-004-10	LABEL/DIFF	*			1 -1146		1			
6B	1740-903-075-00	LABEL/DIFF	*			1 1147-					
7	1682-902-014-00	LABEL/CONTROL/PARKIN	*			1					
8	1743-902-002-00	LABEL/FUSE/H/E4	*			1 -172					
8A	1743-902-002-10	LABEL/FUSE/H/E4	*			1 173-		1			

FIG.224 LABEL (CONTROL) (S TYPE)

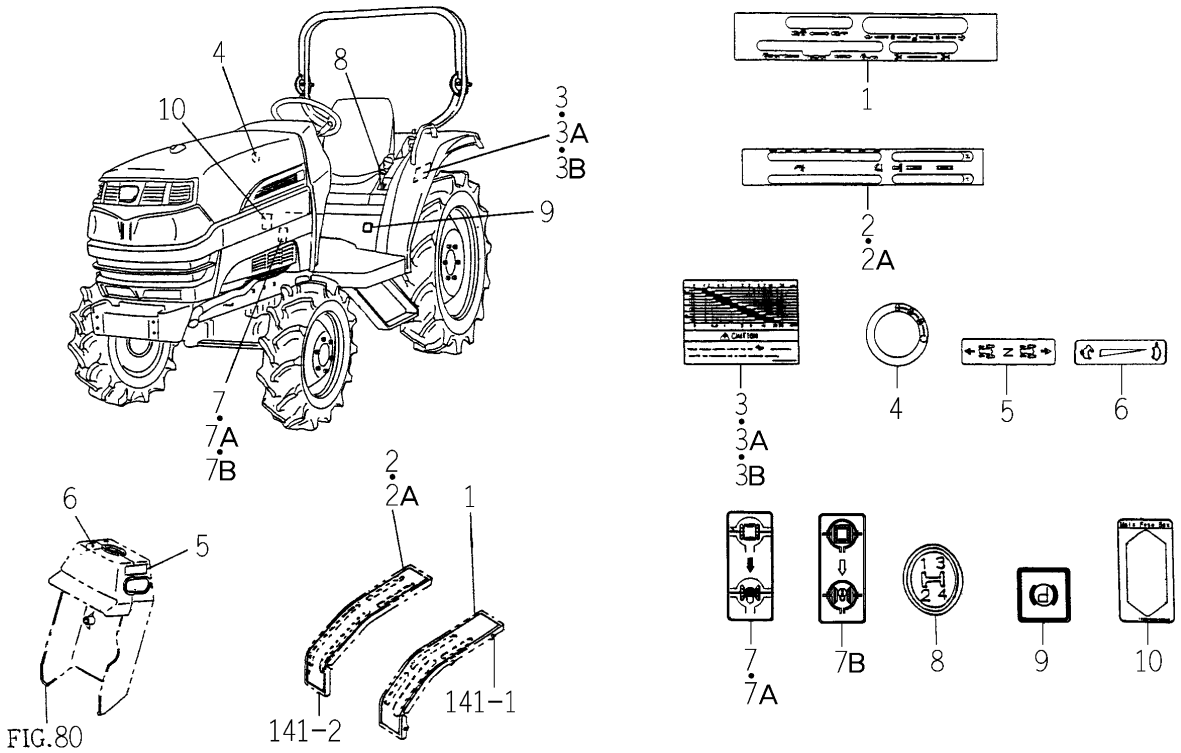

1742-902A-0100

KEY	PART CODE	DESCRIPTION	SPC	TYPE OF MODEL TG5330 E4	TG5330 E6	TG5390 E4	TG5390 E6	ITC	COL	GRP	REMARKS
1	1746-902-001-20	LABEL/CONTROL/LH/S	*	1		1		1			
2	1746-902-002-10	LABEL/CONTROL/RH/S	*	1 -806		1 -1144					
2A	1746-902-002-20	LABEL/CONTROL/RH/S	*	1 807-		1 1145-		1			
3	1746-902-003-00	LABEL/SPEED/S	*	1 -270		1 -627					
3A	1746-902-003-10	LABEL/SPEED/S	*	1 -332		1 -749		1			
3B	1746-902-052-00	LABEL/SPEED/S/E4	*	1 333-		1 750-					
4	1746-902-004-00	LABEL/CONTROL/START/	*	1		1					
5	1742-902-004-10	LABEL/CONTROL/LINEAR	*	1		1					
6	1742-902-009-00	LABEL/CONTROL/THROTT	*	1		1					
7	1683-902-004-00	LABEL/DIFF	*	1 -375		1 -766					
7A	1683-902-004-10	LABEL/DIFF	*	1 -806		1 -1164		1			
7B	1740-903-075-00	LABEL/DIFF	*	1 807-		1 1165-					
8	1723-902-001-00	LABEL/CONTROL/MAIN	*	1		1					
9	1682-902-014-00	LABEL/CONTROL/PARKIN	*	1		1					
10	1742-902-007-00	LABEL/FUSE/E4	*	1		1					

FIG.225 LABEL (CONTROL) (Q TYPE)

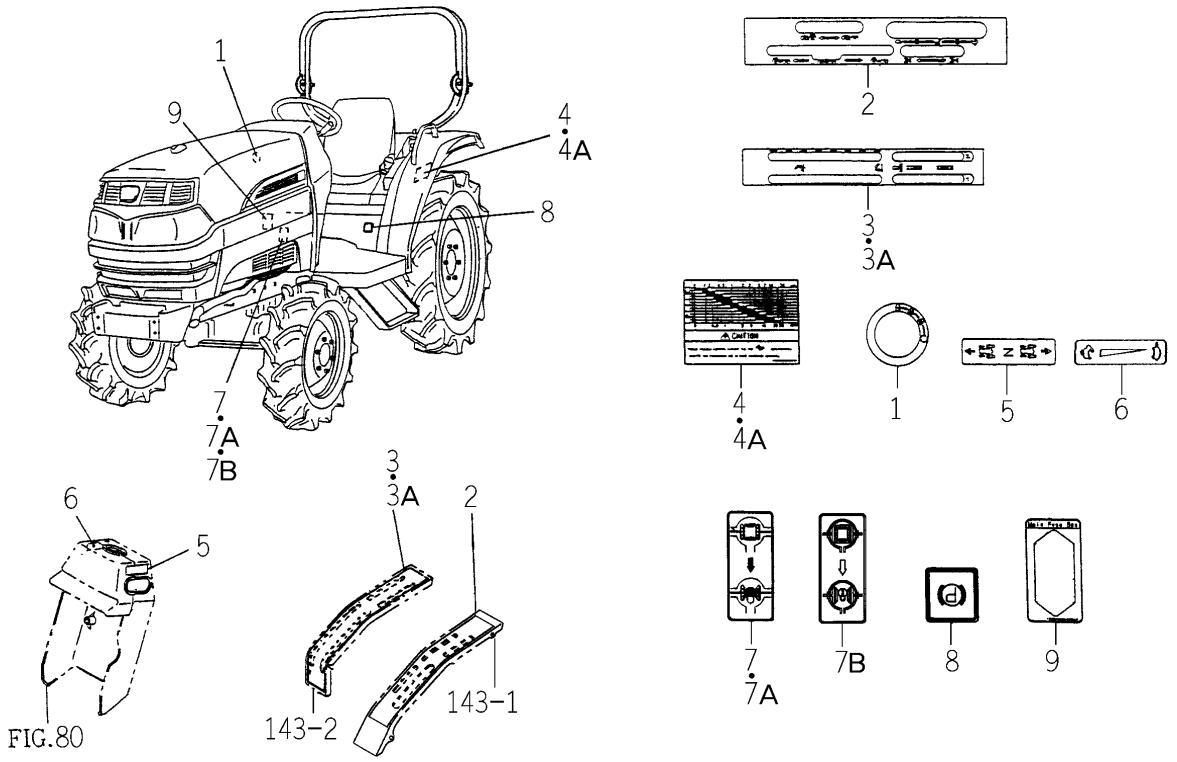

1746-902A-0100

KEY	PART CODE	DESCRIPTION	SPC	TYPE OF MODEL TG5330 E4	TG5330 E6	TG5390 E4	TG5390 E6	ITC	COL	GRP	REMARKS
1	1746-902-004-00	LABEL/CONTROL/START/	*	1		1					
2	1746-902-005-00	LABEL/CONTROL/LH/Q	*	1		1					
3	1746-902-002-10	LABEL/CONTROL/RH/S	*	1 -806		1 -1144					
3A	1746-902-002-20	LABEL/CONTROL/RH/S	*	1 807-		1 1145-		1			
4	1746-902-003-00	LABEL/SPEED/S	*	1 -271		1 -627					
4A	1746-902-052-00	LABEL/SPEED/S/E4	*	1 272-		1 628-					
5	1742-902-004-10	LABEL/CONTROL/LINEAR	*	1		1					
6	1742-902-009-00	LABEL/CONTROL/THROTT	*	1		1					
7	1683-902-004-00	LABEL/DIFF	*	1 -375		1 -766					
7A	1683-902-004-10	LABEL/DIFF	*	1 -807		1 -1145		1			
7B	1740-903-075-00	LABEL/DIFF	*	1 808-		1 1146-					
8	1682-902-014-00	LABEL/CONTROL/PARKIN	*	1		1					
9	1746-902-006-10	LABEL/FUSE/QE4	*	1		1		3			

FIG.226 LABEL (CONTROL) (HE6 TYPE)

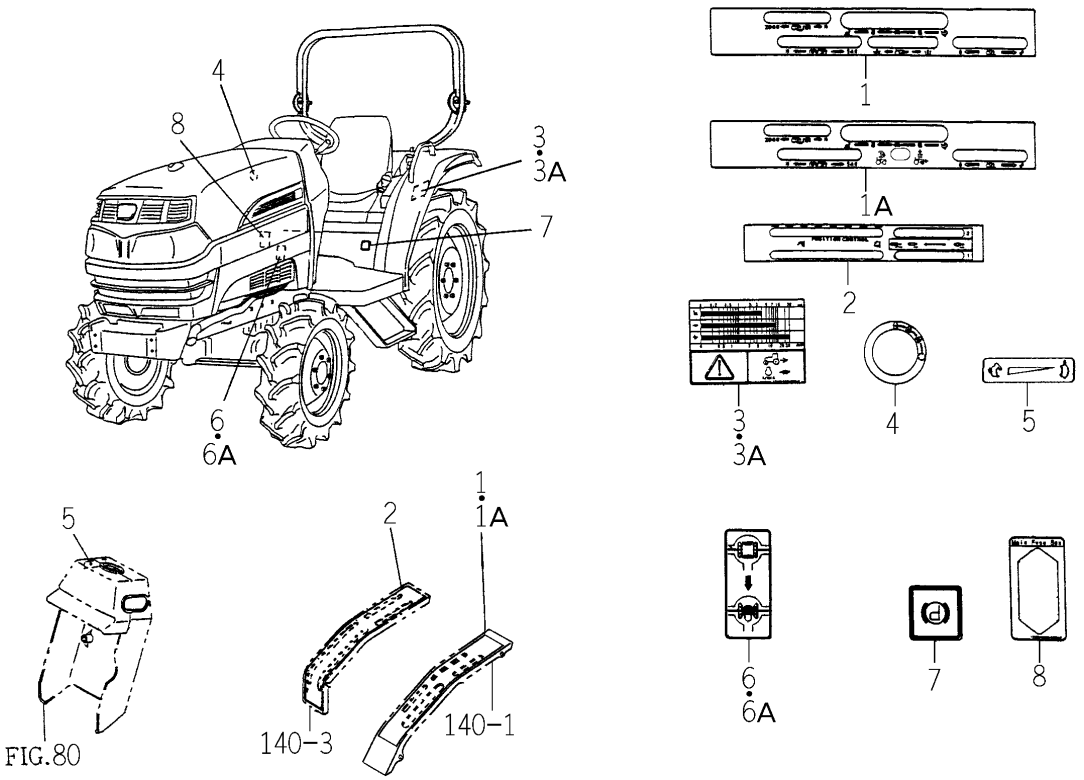

1747-902A-0100

KEY	PART CODE	DESCRIPTION	SPC	TYPE OF MODEL TG5330 E4	TG5330 E6	TG5390 E4	TG5390 E6	ITC	COL	GRP	REMARKS
1	1742-902-013-00	LABEL/CONTROL/LH/H/E	*				1 -1164				
1A	1742-902-013-10	LABEL/CONTROL/LH/H/E	*				1 1165-	3			
2	1742-902-003-10	LABEL/CONTROL/RH/S	*				1				
3	1746-902-007-00	LABEL/SPEED/H/E4	*				1 -621				
3A	1746-902-007-10	LABEL/SPEED/H/E4	*				1 622-	1			
4	1746-902-004-00	LABEL/CONTROL/START/	*				1				
5	1742-902-009-00	LABEL/CONTROL/THROTT	*				1				
6	1683-902-004-00	LABEL/DIFF	*				1 -766				
6A	1683-902-004-10	LABEL/DIFF	*				1 767-	1			
7	1682-902-014-00	LABEL/CONTROL/PARKIN	*				1				
8	1744-902-006-00	LABEL/FUSE/Q/E3	*				1				

FIG.227 LABEL (CONTROL) (P TYPE)

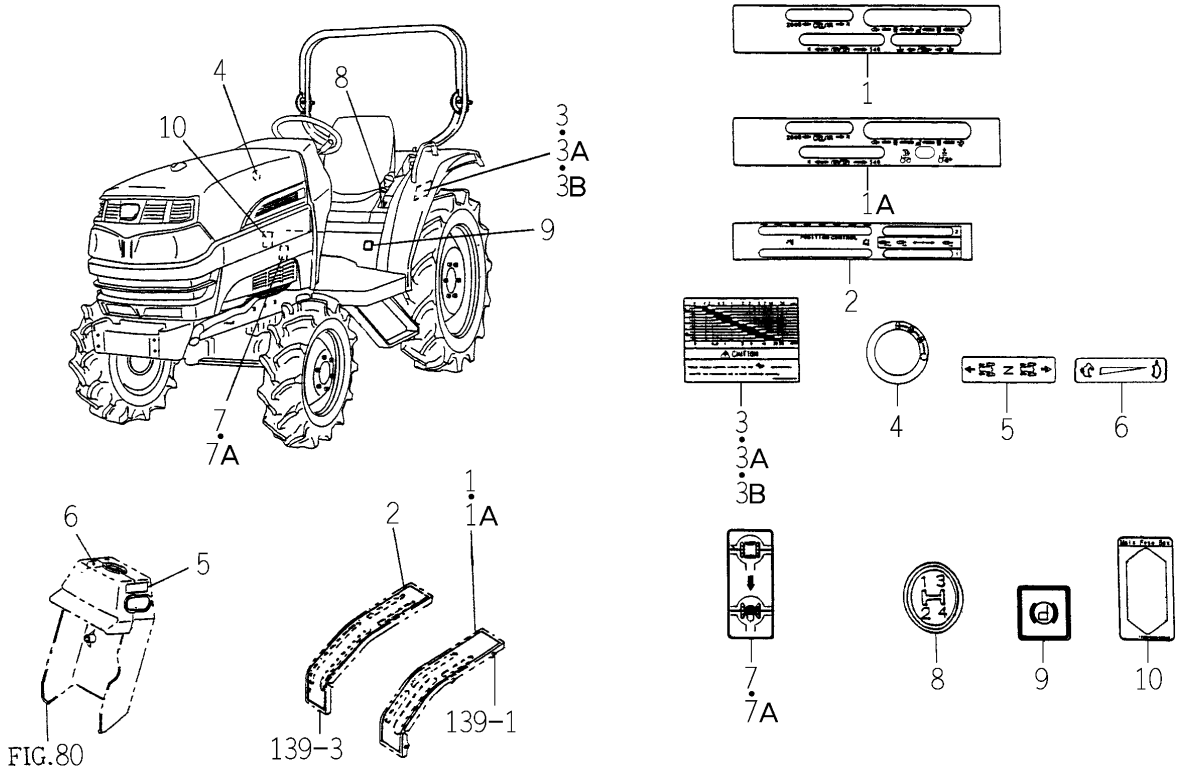

1746-902C-0100

KEY	PART CODE	DESCRIPTION	SPC	TYPE OF MODEL TG5330 E4	TG5330 E6	TG5390 E4	TG5390 E6	ITC	COL	GRP	REMARKS
1	1742-902-012-10	LABEL/CONTROL/LH/P	*		1 -839		1 -1164				
1A	1742-902-012-20	LABEL/CONTROL/LH/P	*		1 840-		1 1165-	3			
2	1742-902-003-10	LABEL/CONTROL/RH/S	*		1		1				
3	1746-902-003-00	LABEL/SPEED/S	*		1 -270		1 -627				
3A	1746-902-003-10	LABEL/SPEED/S	*		1 -357		1 -745	1			
3B	1746-902-052-00	LABEL/SPEED/S/E4	*		1 358-		1 746-				
4	1746-902-004-00	LABEL/CONTROL/START/	*		1		1				
5	1742-902-004-10	LABEL/CONTROL/LINEAR	*		1		1				
6	1742-902-009-00	LABEL/CONTROL/THROTT	*		1		1				
7	1683-902-004-00	LABEL/DIFF	*		1 -375		1 -766				
7A	1683-902-004-10	LABEL/DIFF	*		1 376-		1 767-	1			
8	1723-902-001-00	LABEL/CONTROL/MAIN	*		1		1				
9	1682-902-014-00	LABEL/CONTROL/PARKIN	*		1		1				
10	1744-902-006-00	LABEL/FUSE/Q/E3	*		1		1				

FIG.228 LABEL (CONTROL) (H3 TYPE)

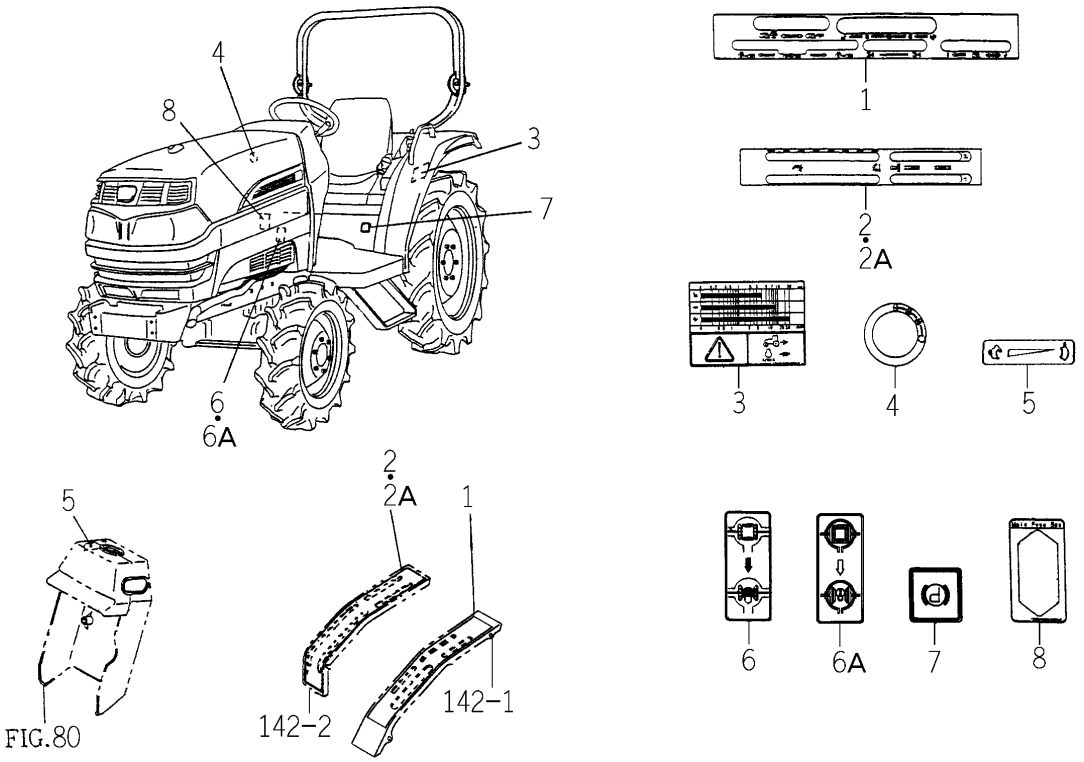

1747-902C-0100

KEY	PART CODE	DESCRIPTION	SPC	TYPE OF MODEL TG5330 E4	TG5330 E6	TG5390 E4	TG5390 E6	ITC	COL	GRP	REMARKS
1	1743-902-001-00	LABEL/CONTROL/LH/H/E	*			1					
2	1746-902-002-10	LABEL/CONTROL/RH/S	*			1 -1144					
2A	1746-902-002-20	LABEL/CONTROL/RH/S	*			1 1145-		1			
3	1746-902-007-10	LABEL/SPEED/H/E4	*			1					
4	1746-902-004-00	LABEL/CONTROL/START/	*			1					
5	1742-902-009-00	LABEL/CONTROL/THROTT	*			1					
6	1683-902-004-10	LABEL/DIFF	*			1 -1144					
6A	1740-903-075-00	LABEL/DIFF	*			1 1145-					
7	1682-902-014-00	LABEL/CONTROL/PARKIN	*			1					
8	1746-902-006-10	LABEL/FUSE/QE4	*			1					

FIG.229 LABEL (CAUTION) (H TYPE EXCEPT C-No.1-/ HC TYPE-TG5390E4-No.1-621)

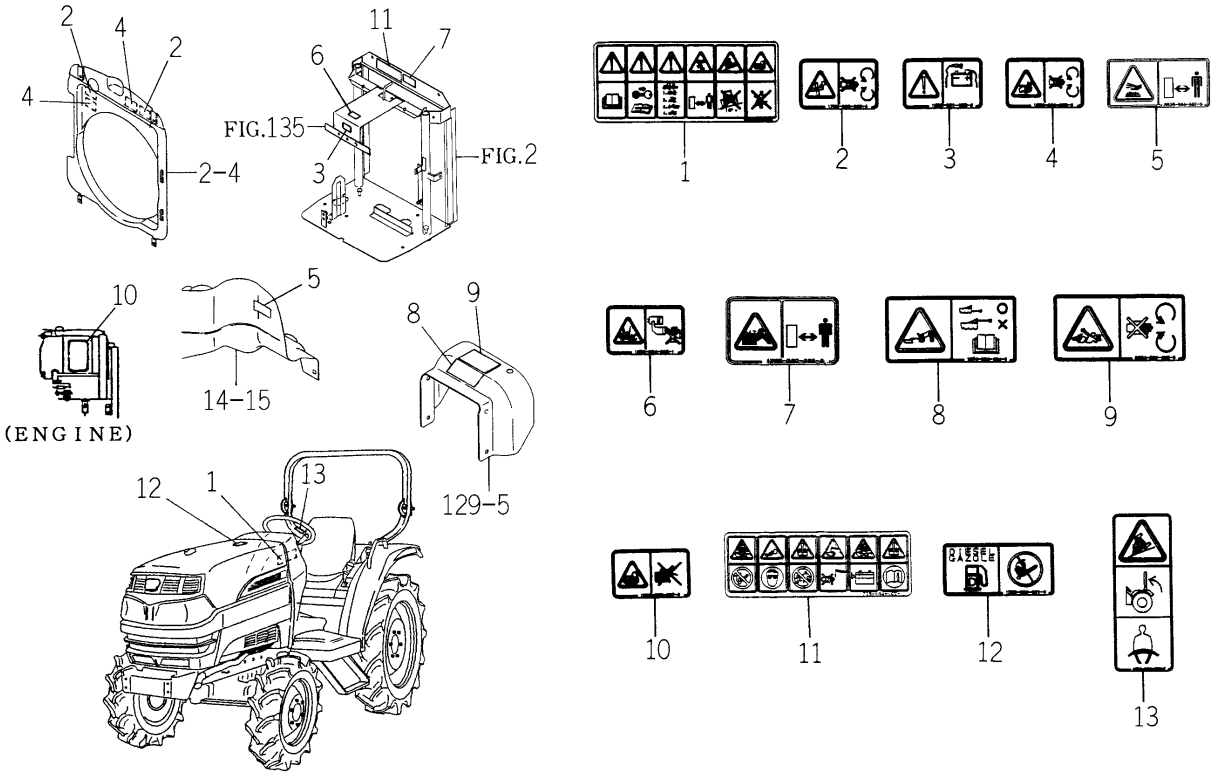

1743-904 -0100

KEY	PART CODE	DESCRIPTION	SPC	TYPE OF MODEL TG5330 E4	TG5330 E6	TG5390 E4	TG5390 E6	ITC	COL	GRP	REMARKS
1	1674-904-001-00	LABEL/DRIVE	*			1	1				
2	1705-902-006-00	LABEL/W/FAN	*			2	2				
3	1636-901-022-00	LABEL/CAUTION/BATTER	*			1	1				
4	1674-904-008-00	LABEL/WARNING/BELT	*			2	2				
5	8595-901-007-00	LABEL/WARNING/HOT	*			1	1				
6	1674-904-002-10	LABEL/ETHER	*			1	1				
7	1705-902-008-00	LABEL/W/RADIATOR	*			1	1				
8	1674-904-004-00	LABEL/TRAILER	*			1	1				
9	8654-901-002-00	LABEL/PTO	*			1	1				
10	1705-902-007-00	LABEL/W/STARTER	*			1	1				
11	1705-904-002-10	LABEL/BATTERY	*			1	1				
12	1705-904-001-00	LABEL/FUEL	*			1	1				
13	1674-904-005-00	LABEL/ROPS	*			1	1				

FIG.230 LABEL (CAUTION) (EXCEPT H,C TYPE-No.1-/ C TYPE EXCEPT H-TG5330E4-No.1-271/ TG5390E4-No.1-621)

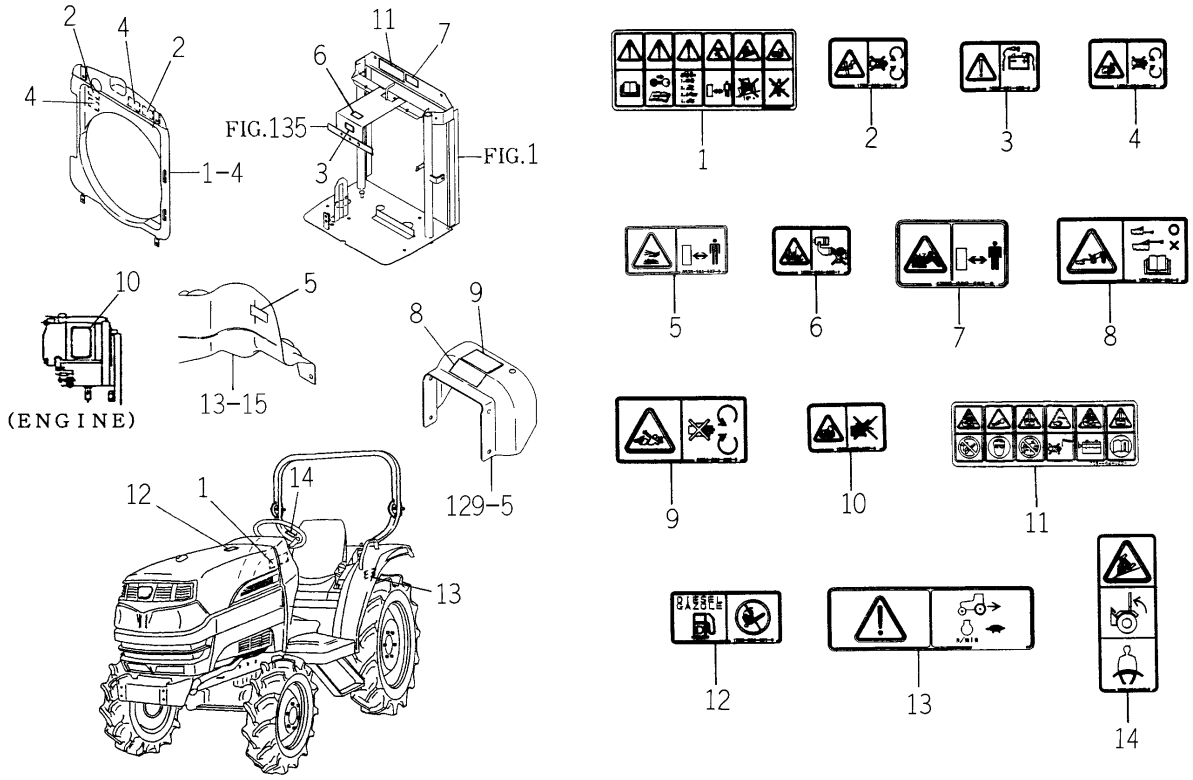

1742-904A-0100

KEY	PART CODE	DESCRIPTION	SPC	TYPE OF MODEL TG5330 E4	TG5330 E6	TG5390 E4	TG5390 E6	ITC	COL	GRP	REMARKS
1	1674-904-001-00	LABEL/DRIVE	*	1	1	1	1				
2	1705-902-006-00	LABEL/W/FAN	*	2	2	2	2				
3	1636-901-022-00	LABEL/CAUTION/BATTER	*	1	1	1	1				
4	1674-904-008-00	LABEL/WARNING/BELT	*	2	2	2	2				
5	8595-901-007-00	LABEL/WARNING/HOT	*	1	1	1	1				
6	1674-904-002-10	LABEL/ETHER	*	1	1	1	1				
7	1705-902-008-00	LABEL/W/RADIATOR	*	1	1	1	1				
8	1674-904-004-00	LABEL/TRAILER	*	1	1	1	1				
9	8654-901-002-00	LABEL/PTO	*	1	1	1	1				
10	1705-902-007-00	LABEL/W/STARTER	*	1	1	1	1				
11	1705-904-002-10	LABEL/BATTERY	*	1	1	1	1	1			
12	1705-904-001-00	LABEL/FUEL	*	1	1	1	1				
13	1674-904-007-10	LABEL/SHIFT	*	1 -681	1 -681	1 -972	1 -972				
14	1674-904-005-00	LABEL/ROPS	*	1	1	1	1				

FIG.231 LABEL (C TYPE)

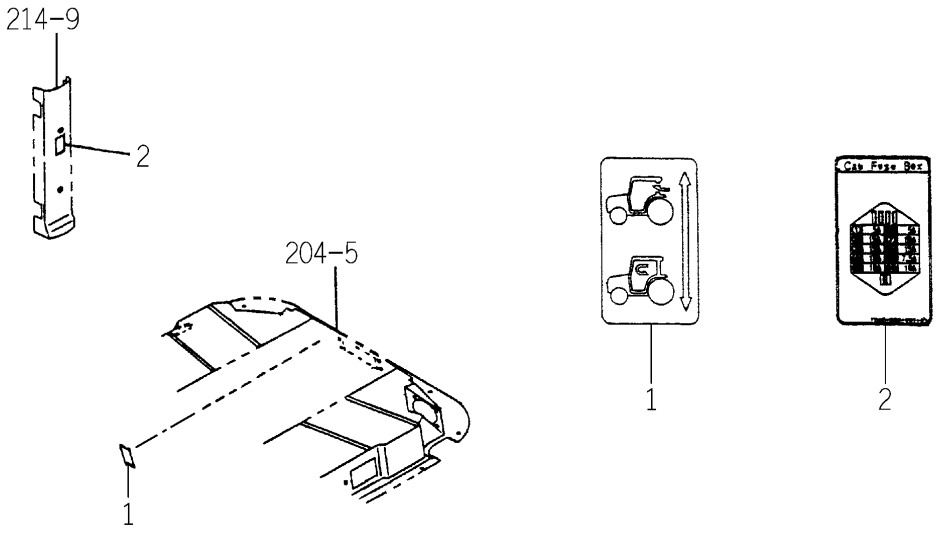

1746-904A-0100

KEY	PART CODE	DESCRIPTION	SPC	TYPE OF MODEL				ITC	COL	GRP	REMARKS
				TG5330 E4	TG5330 E6	TG5390 E4	TG5390 E6				
1	1746-904-001-00	LABEL/AIRCON/E4	*	2		2					
2	1742-904-001-00	LABEL/FUSE/CAB	*	1		1					

FIG.232 LABEL (CAUTION)
(C TYPE-TG5330E4-No.272-/TG5390E4-No.622-)

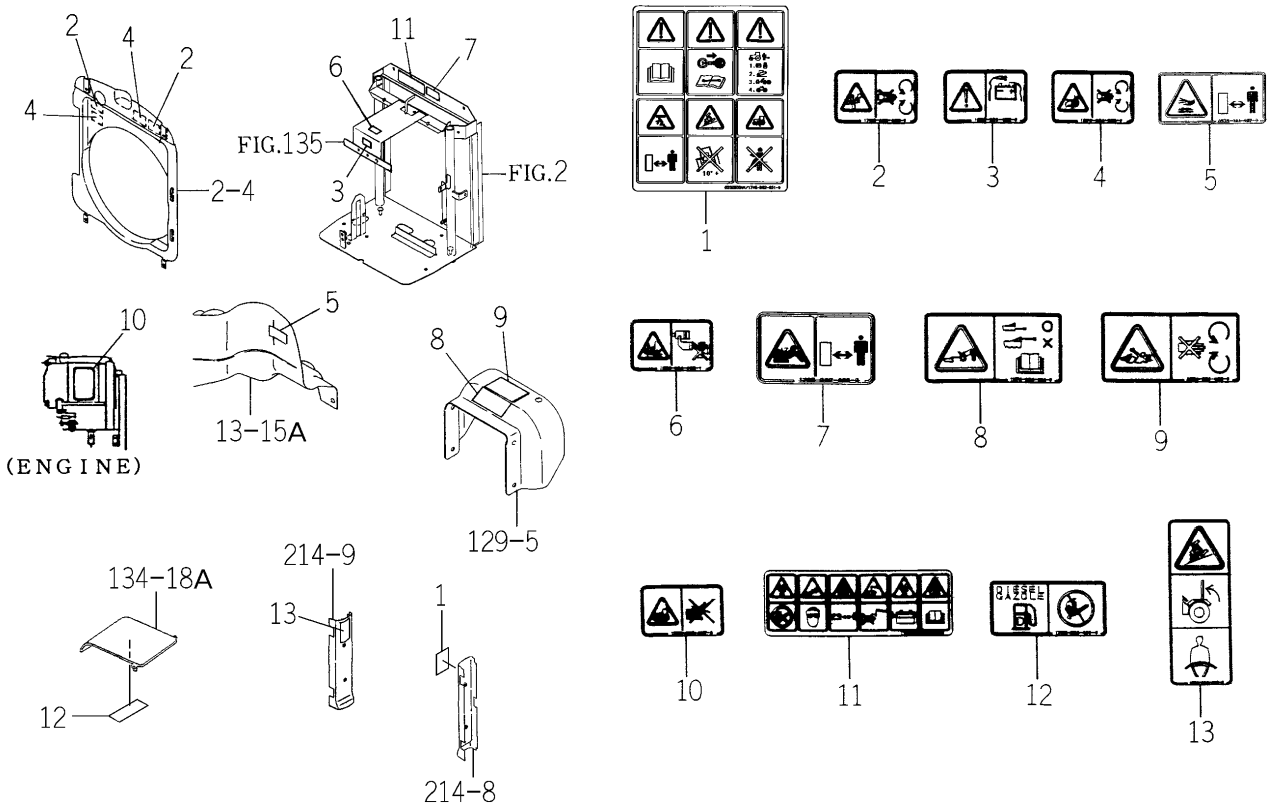

1742-904F-0100

KEY	PART CODE	DESCRIPTION	SPC	TYPE OF MODEL TG5330 E4	TG5330 E6	TG5390 E4	TG5390 E6	ITC	COL	GRP	REMARKS
1	1746-902-051-00	LABEL/C/DRIVE/E4	*	1 272-		1 622-					
2	1705-902-006-00	LABEL/W/FAN	*	2 272-		2 622-					
3	1636-901-022-00	LABEL/CAUTION/BATTER	*	1 272-		1 622-					
4	1674-904-008-00	LABEL/WARNING/BELT	*	2 272-		2 622-					
5	8595-901-007-00	LABEL/WARNING/HOT	*	1 272-		1 622-					
6	1674-904-002-10	LABEL/ETHER	*	1 272-		1 622-					
7	1705-902-008-00	LABEL/W/RADIATOR	*	1 272-		1 622-					
8	1674-904-004-00	LABEL/TRAILER	*	1 272-		1 622-					
9	8654-901-002-00	LABEL/PTO	*	1 272-		1 622-					
10	1705-902-007-00	LABEL/W/STARTER	*	1 272-		1 622-					
11	1705-904-002-10	LABEL/BATTERY	*	1 272-		1 622-					
12	1705-904-001-00	LABEL/FUEL	*	1 272-		1 622-					
13	1674-904-005-00	LABEL/ROPS	*	1 272-		1 622-					

FIG.233 LABEL (CAUTION) (TG5330E4-No.809-/TG5330E6-No.809-/ TG5390E4-No.1153-/TG5390E6-No.1153-)

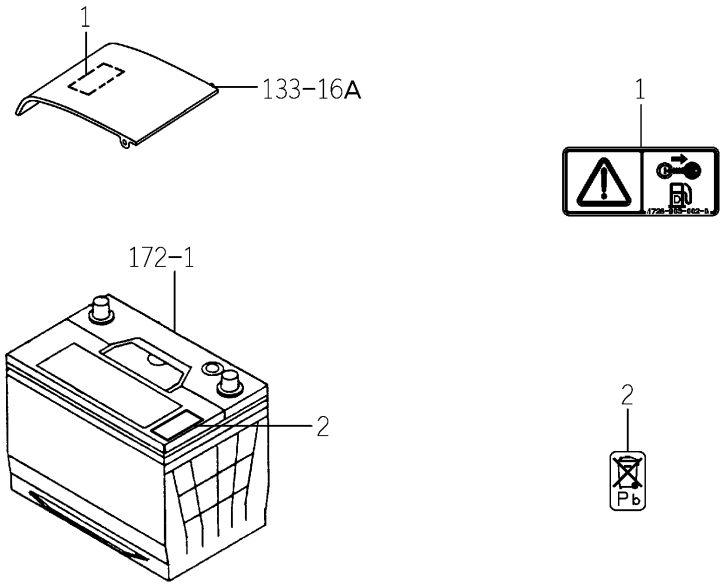

1742-904G-0100

KEY	PART CODE	DESCRIPTION	SPC	TYPE OF MODEL				ITC	COL	GRP	REMARKS
				TG5330 E4	TG5330 E6	TG5390 E4	TG5390 E6				
1	1728-903-002-00	LABEL/WARNING/FUEL	*	1 809-	1 809-	1 1153-	1 1153-				
2	1728-903-003-00	LABEL/BATTERY	*	1 809-	1 809-	1 1153-	1 1153-				

FIG.234 LABEL (CE) (E4 TYPE)

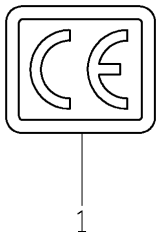

1709-905 -0100

KEY	PART CODE	DESCRIPTION	SPC	TYPE OF MODEL TG5330 E4	TG5330 E6	TG5390 E4	TG5390 E6	ITC	COL	GRP	REMARKS
1	2500-901-027-00	LABEL/CE	*	1		1					

FIG.235 TOOL

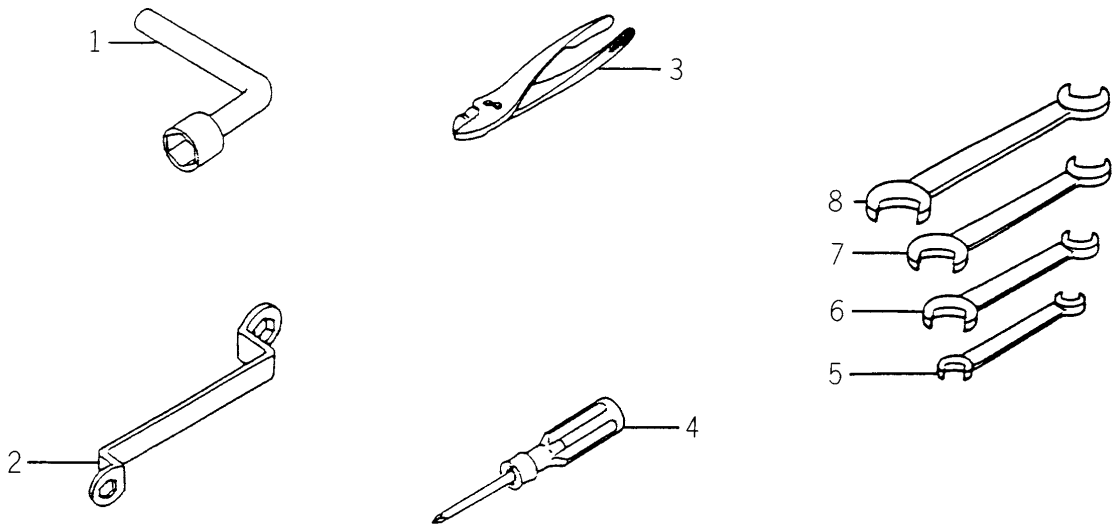

1674-912 -0100

KEY	PART CODE	DESCRIPTION	SPC	TYPE OF MODEL				ITC	COL	GRP	REMARKS
				TG5330 E4	TG5330 E6	TG5390 E4	TG5390 E6				
1	1421-906-001-00	SPANNER,BOX/22	*	1	1	1	1				
2	1401-906-005-00	WRENCH,SOCKET/17X19	*	1	1	1	1				
3	V936-150-015-00	PLIERS/G150	*	1	1	1	1				
4	2130-931-210-00	SCREWDRIVER ASSY	*	1	1	1	1				
5	V920-551-001-20	SPANNER/10X12	*	1	1	1	1				
6	V920-551-401-70	SPANNER/14X17	*	1	1	1	1				
7	V920-551-902-20	SPANNER/19X22	*	1	1	1	1				
8	V920-552-402-70	SPANNER/24X27	*	1	1	1	1				

FIG.236 MID PTO SET (Q TYPE-OPTION)(1/2)

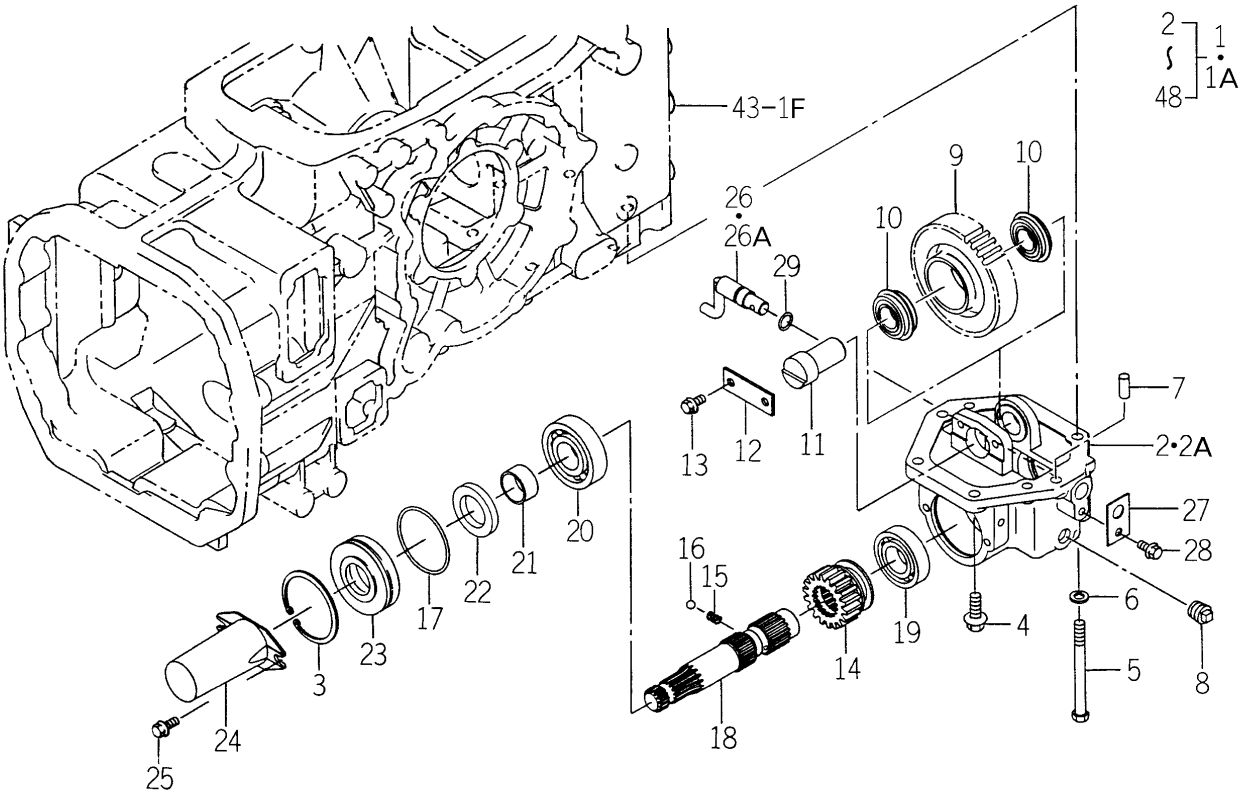

1746-229 -0100

KEY	PART CODE	DESCRIPTION	SPC	TYPE OF MODEL TG5330 E4	TG5330 E6	TG5390 E4	TG5390 E6	ITC	COL	GRP	REMARKS
1	1746-229-200-10	MIDPTO/E4/19/Q SET	T	1 -53		1 -95		1			
1A	1746-229-200-20	MIDPTO/E4/19/Q SET	T	1 54-		1 96-		1			
2	1742-229-002-00	CASE/PTO	T	1 -27		1 -25					
2A	1742-229-002-10	CASE/PTO	T	1 28-		1 26-		1			
3	V707-140-072-00	RING/SNAP	T	1		1					
4	V231-361-002-50	FLANGEBOLT	T	4		4					
5	V201-361-012-00	BOLT/M10X120 9T	T	2		2					
6	V401-160-010-00	WASHER,SP/M10	T	2		2					
7	V523-101-002-40	PIN	T	2		2					
8	V781-160-000-6B	PLUG/SCREW/SEAL	T	1		1					
9	1742-229-003-00	GEAR/SPUR/40	T	1		1					
10	V607-110-620-50	BEARING,RB/6205NR	T	2		2					
11	1742-229-004-00	SHAFT	T	1		1					
12	1594-272-006-00	PLATE	T	1		1					
13	V231-360-801-60	FLANGEBOLT	T	2		2					
14	1742-229-005-10	GEAR/SPUR/19	T	1		1		1			
15	1302-225-003-00	SPRING,SHIFTER	T	1		1					
16	V682-200-001-00	BALL	T	1		1					
17	1524-244-005-00	O-RING	T	1		1					
18	1742-229-007-20	SHAFT/PTO/E3	T	1		1		1			
19	V600-410-620-60	BEARING/BALL	T	1		1					
20	V600-410-630-60	BEARING/BALL	T	1		1					
21	1614-244-002-00	SLEEVE	T	1		1					
22	1614-244-005-00	SEAL/OIL	T	1		1					
23	1742-229-006-00	METAL/SEAL	T	1		1					
24	1444-314-009-10	CAP,PTO SHAFT	T	1		1					
25	V231-360-801-20	FLANGEBOLT	T	2		2					
26	1620-255-220-00	ARM/SHIFT/MID COMP	T	1 -27		1 -25					
26A	1620-255-220-10	ARM/SHIFT/MID COMP	T	1 28-		1 26-		1			
27	1620-255-208-00	PLATE/I/30X50	T	1		1					

FIG.236 MID PTO SET (Q TYPE-OPTION)(2/2)

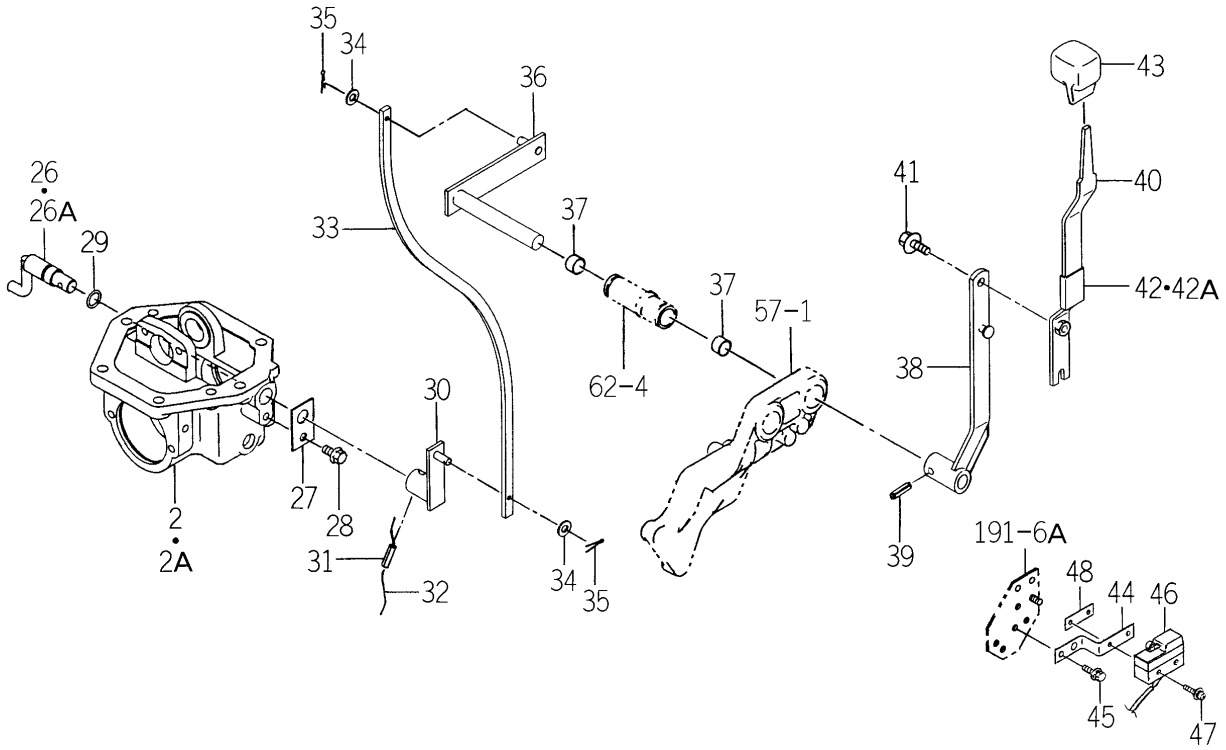

1746-229 -0100

KEY	PART CODE	DESCRIPTION	SPC	TYPE OF MODEL TG5330 E4	TG5330 E6	TG5390 E4	TG5390 E6	ITC	COL	GRP	REMARKS
28	V231-360-801-20	FLANGEBOLT	T	1		1					
29	V720-102-401-40	O-RING/P14	T	1		1					
30	1742-229-200-00	ARM/PLATE/MID COMP	T	1		1					
31	V580-140-602-50	PIN,SPRING/6 X25 W	T	1		1					
32		WIRE	T	1		1					
33	1742-229-009-00	PLATE/MID	T	1		1					
34	V411-260-008-00	WASHER,PL/M 8	T	2		2					
35	V500-162-002-00	PIN,SPLIT/2 X20	T	2		2					
36	1742-229-210-00	ARM/SHIFT/MID COMP	T	1		1					
37	3640-111-001-10	BUSH/16X18X15	T	2		2					
38	1742-229-230-10	ARM/LEVER/MID COMP	T	1		1					
39	V580-140-802-80	PIN,SPRING/8 X28 W	T	1		1					
40	1742-229-220-00	LEVER/MID COMP	T	1		1					
41	V231-360-802-00	FLANGEBOLT	T	1		1					
42	1614-262-007-00	INSULATOR/LEVER/SUB/	T	1 -43		1 -28					
42A	1560-511-101-00	PROTECTER	T	1 44-		1 29-					
43	1688-265-001-00	GRIP/MID/PTO	T	1		1					
44	1746-229-001-00	PLATE/Z/16X86	T	1		1					
45	V210-360-601-60	BOLT(SP)/M6X16	T	2		2					
46	1518-621-470-00	SWITCH,SAFETY ASSY	T	1		1					
47	V120-364-003-00	SCREW/M4X30	T	2		2					
48	3656-271-001-00	PLATE/I,13X40	T	1		1					

FIG.237 REAR WHEEL SYSTEM (OPTION)

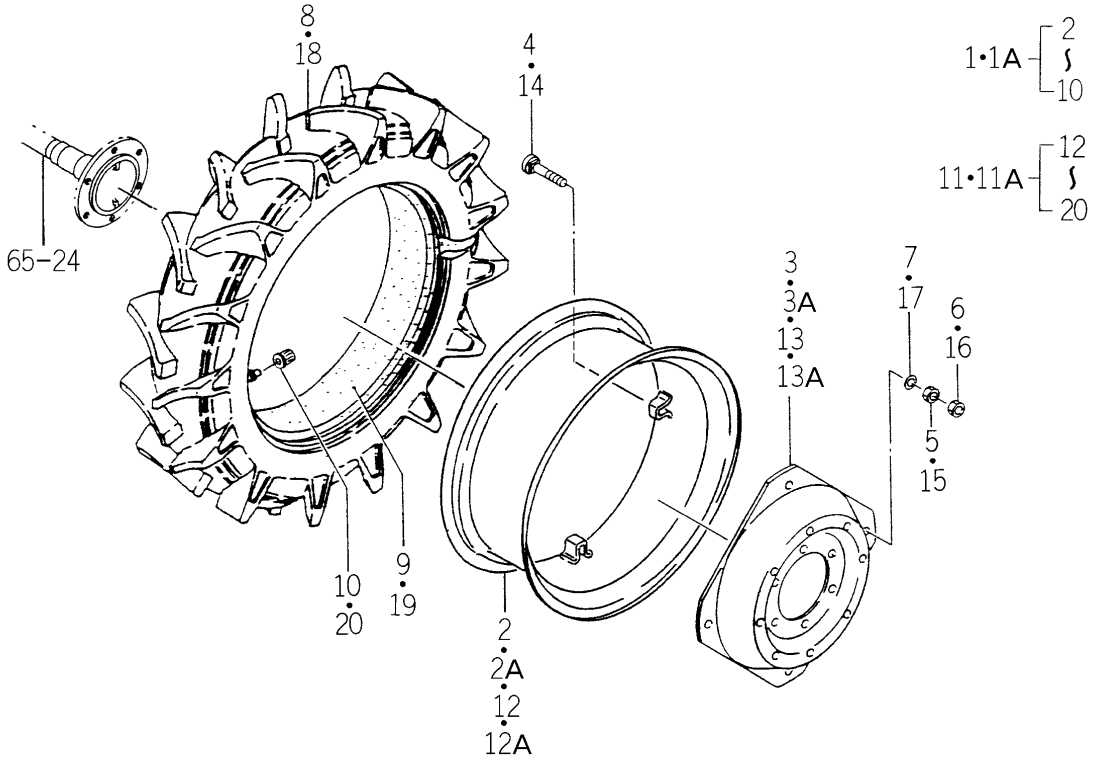

1595-320A-0100

KEY	PART CODE	DESCRIPTION	SPC	TYPE OF MODEL TG5330 E4	TG5330 E6	TG5390 E4	TG5390 E6	ITC	COL	GRP	REMARKS
1	1595-320-210-20	TIRE/LH ASSY	T	1 -120	1 -120	1 -348	1 -348		6G		
1A	1595-320-210-30	TIRE/LH ASSY	*	1 121-	1 121-	1 349-	1 349-	1	6G		
2	1640-320-220-02	WHEEL/24XW10 COMP	T	1 -120	1 -120	1 -348	1 -348		6G		
2A	1640-320-220-12	WHEEL/24XW10 COMP	*	1 121-	1 121-	1 349-	1 349-	1	6G		
3	1640-320-211-03	DISK	T	1 -120	1 -120	1 -348	1 -348		6G		
3A	1640-320-211-13	DISK	*	1 121-	1 121-	1 349-	1 349-	1	6G		
4	V240-461-608-50	BOLT/M16X85	*	4	4	4	4				
5	V300-460-016-00	NUT/M16	*	4	4	4	4				
6	V302-460-016-00	NUT/M16	*	4	4	4	4				
7	V401-160-016-00	WASHER,SP/M16	*	4	4	4	4				
8	1431-361-211-00	TIRE/12.4-24-4PR	*	1	1	1	1				
9	V889-001-242-40	TUBE	*	1	1	1	1				
10	V999-200-003-00	CAP,TIRE VALVE	*	1	1	1	1				
11	1595-320-220-20	TIRE/RH ASSY	T	1 -120	1 -120	1 -348	1 -348		6G		
11A	1595-320-220-30	TIRE/RH ASSY	*	1 121-	1 121-	1 349-	1 349-	1	6G		
12	1640-320-220-02	WHEEL/24XW10 COMP	T	1 -120	1 -120	1 -348	1 -348		6G		
12A	1640-320-220-12	WHEEL/24XW10 COMP	*	1 121-	1 121-	1 349-	1 349-	1	6G		
13	1640-320-211-03	DISK	T	1 -120	1 -120	1 -348	1 -348		6G		
13A	1640-320-211-13	DISK	*	1 121-	1 121-	1 349-	1 349-	1	6G		
14	V240-461-608-50	BOLT/M16X85	*	4	4	4	4				
15	V300-460-016-00	NUT/M16	*	4	4	4	4				
16	V302-460-016-00	NUT/M16	*	4	4	4	4				
17	V401-160-016-00	WASHER,SP/M16	*	4	4	4	4				
18	1431-361-211-00	TIRE/12.4-24-4PR	*	1	1	1	1				
19	V889-001-242-40	TUBE	*	1	1	1	1				
20	V999-200-003-00	CAP,TIRE VALVE	*	1	1	1	1				

FIG.238 REAR WHEEL SYSTEM (TG5390-OPTION)

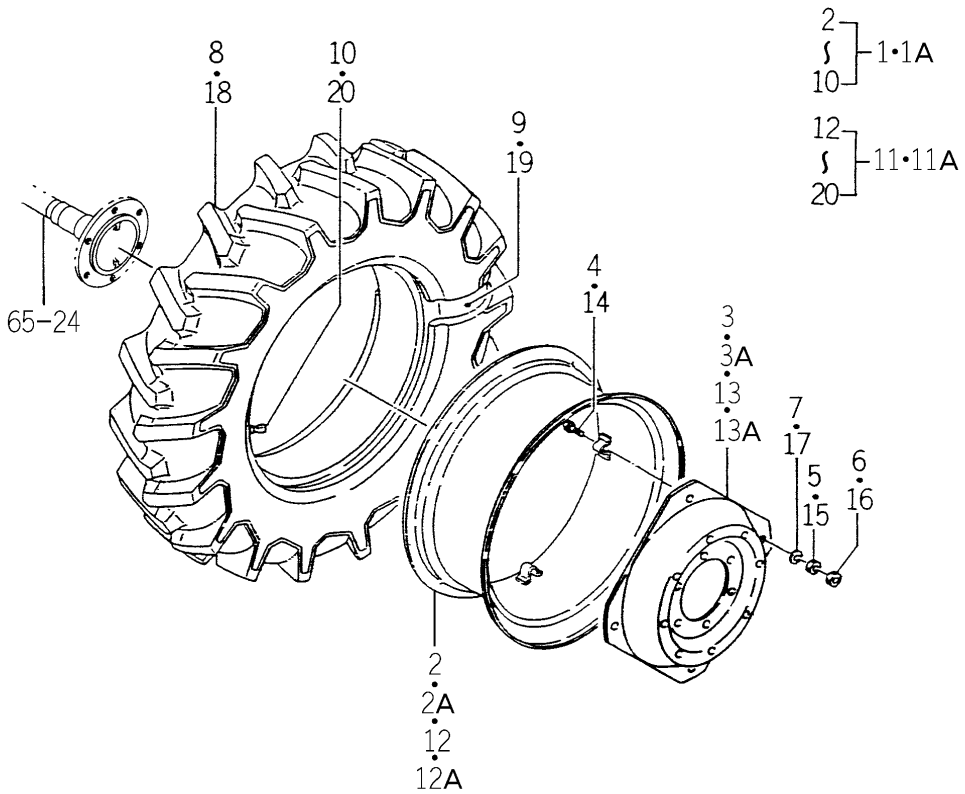

1641-320A-0100

KEY	PART CODE	DESCRIPTION	SPC	TYPE OF MODEL TG5330 E4	TG5330 E6	TG5390 E4	TG5390 E6	ITC	COL	GRP	REMARKS
1	1641-320-210-20	TIRE/LH ASSY	T			1 -348	1 -348		6G		
1A	1641-320-210-30	TIRE/LH ASSY	T			1 349-	1 349-	1	6G		
2	1641-320-240-02	WHEEL/24XW11 COMP	T			1 -348	1 -348		6G		
2A	1641-320-240-12	WHEEL/24XW11 COMP	T			1 349-	1 349-	1	6G		
3	1640-320-211-03	DISK	T			1 -348	1 -348		6G		
3A	1640-320-211-13	DISK	T			1 349-	1 349-	1	6G		
4	V240-461-608-50	BOLT/M16X85	T			4	4				
5	V300-460-016-00	NUT/M16	T			4	4				
6	V302-460-016-00	NUT/M16	T			4	4				
7	V401-160-016-00	WASHER,SP/M16	T			4	4				
8	1426-361-211-00	TIRE/13.6-24-4	T			1	1				
9	V889-001-362-40	TUBE/13.6/12-24	T			1	1				
10	V999-200-003-00	CAP,TIRE VALVE	T			1	1				
11	1641-320-220-20	TIRE/RH ASSY	T			1 -348	1 -348		6G		
11A	1641-320-220-30	TIRE/RH ASSY	T			1 349-	1 349-	1	6G		
12	1641-320-240-02	WHEEL/24XW11 COMP	T			1 -348	1 -348		6G		
12A	1641-320-240-12	WHEEL/24XW11 COMP	T			1 349-	1 349-	1	6G		
13	1640-320-211-03	DISK	T			1 -348	1 -348		6G		
13A	1640-320-211-13	DISK	T			1 349-	1 349-	1	6G		
14	V240-461-608-50	BOLT/M16X85	T			4	4				
15	V300-460-016-00	NUT/M16	T			4	4				
16	V302-460-016-00	NUT/M16	T			4	4				
17	V401-160-016-00	WASHER,SP/M16	T			4	4				
18	1426-361-211-00	TIRE/13.6-24-4	T			1	1				
19	V889-001-362-40	TUBE/13.6/12-24	T			1	1				
20	V999-200-003-00	CAP,TIRE VALVE	T			1	1				

FIG.239 REAR WHEEL (TURF) SYSTEM (OPTION)

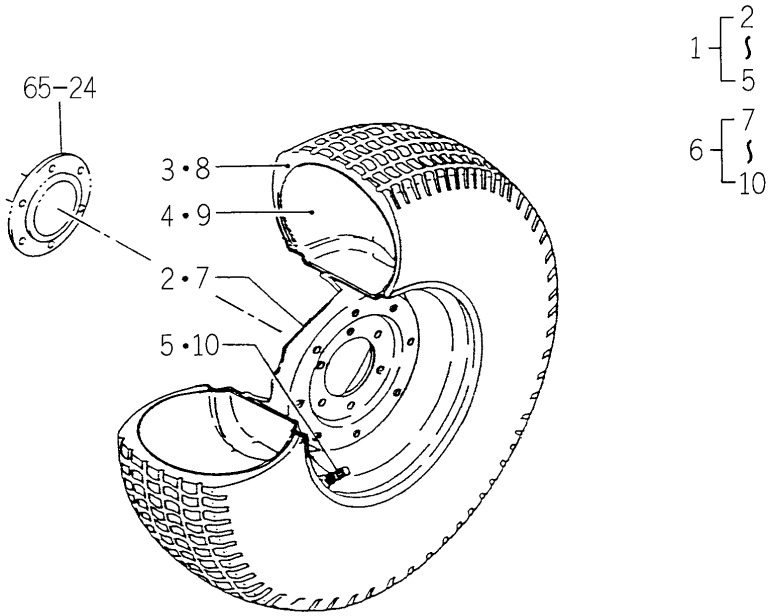

1747-321 -0100

KEY	PART CODE	DESCRIPTION	SPC	TYPE OF MODEL TG5330 E4	TG5330 E6	TG5390 E4	TG5390 E6	ITC	COL	GRP	REMARKS
1	1747-321-220-00	TIRE/TURF/LH ASSY	T	1	1	1	1		6G		
2	1747-321-240-00	WHEEL/20XW11 COMP	T	1	1	1	1		6G		
3	1510-331-311-00	TIRE,R.TURF LH ASSY	T	1	1	1	1				
4	1510-331-312-00	TUBE	T	1	1	1	1				
5	V999-200-003-00	CAP,TIRE VALVE	T	1	1	1	1				
6	1747-321-230-00	TIRE/TURF/RH ASSY	T	1	1	1	1		6G		
7	1747-321-240-00	WHEEL/20XW11 COMP	T	1	1	1	1		6G		
8	1510-331-311-00	TIRE,R.TURF LH ASSY	T	1	1	1	1				
9	1510-331-312-00	TUBE	T	1	1	1	1				
10	V999-200-003-00	CAP,TIRE VALVE	T	1	1	1	1				

FIG.240 FRONT WHEEL SYSTEM (TG5390-OPTION)

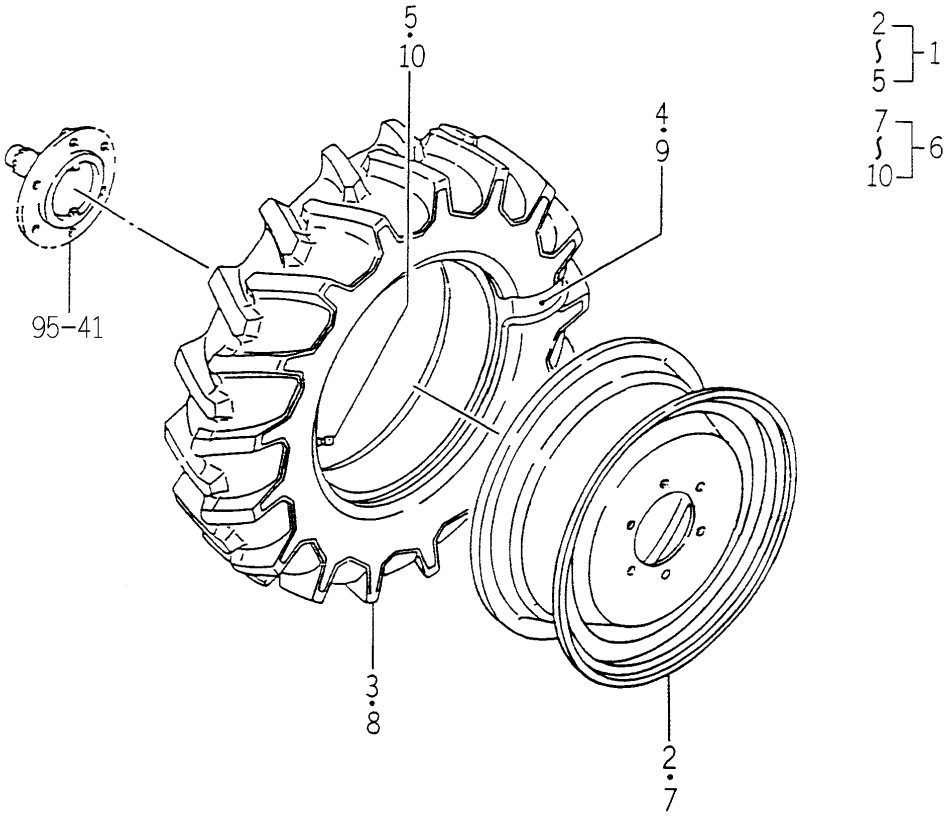

1641-437A-0100

KEY	PART CODE	DESCRIPTION	SPC	TYPE OF MODEL				ITC	COL	GRP	REMARKS
				TG5330 E4	TG5330 E6	TG5390 E4	TG5390 E6				
1	1641-437-210-00	TIRE/8-16-4/LH ASSY	T			1	1		6G		
2	1611-437-220-00	WHEEL/16X5.50F COMP	T			1	1		6G		
3	1641-437-211-00	TIRE/8-16-4	T			1	1				
4	1641-437-212-00	TUBE/TIRE/8-16	T			1	1				
5	V999-200-003-00	CAP,TIRE VALVE	T			1	1				
6	1641-437-220-00	TIRE/8-16-4/RH ASSY	T			1	1		6G		
7	1611-437-220-00	WHEEL/16X5.50F COMP	T			1	1		6G		
8	1641-437-211-00	TIRE/8-16-4	T			1	1				
9	1641-437-212-00	TUBE/TIRE/8-16	T			1	1				
10	V999-200-003-00	CAP,TIRE VALVE	T			1	1				

FIG.241 HUB RING SYSTEM (OPTION)

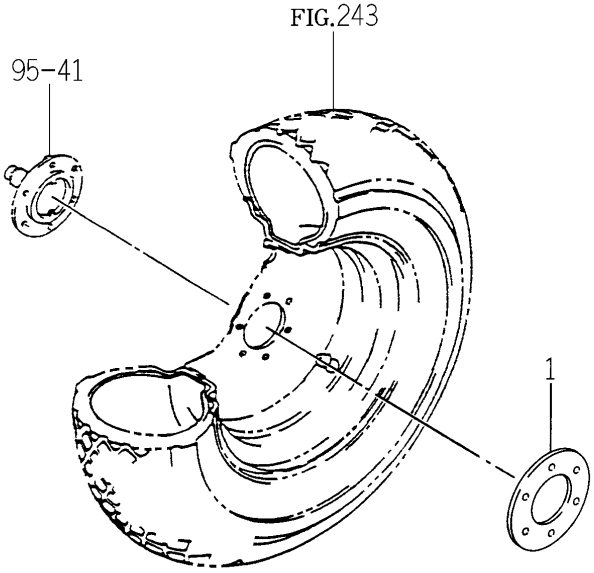

1594-437B-0100

KEY	PART CODE	DESCRIPTION	SPC	TYPE OF MODEL TG5330 E4	TG5330 E6	TG5390 E4	TG5390 E6	ITC	COL	GRP	REMARKS
1	1572-417-001-02	RING,HUB/150	T	2	2	2	2		6G		

FIG.242 FRONT WHEEL SYSTEM (OPTION)

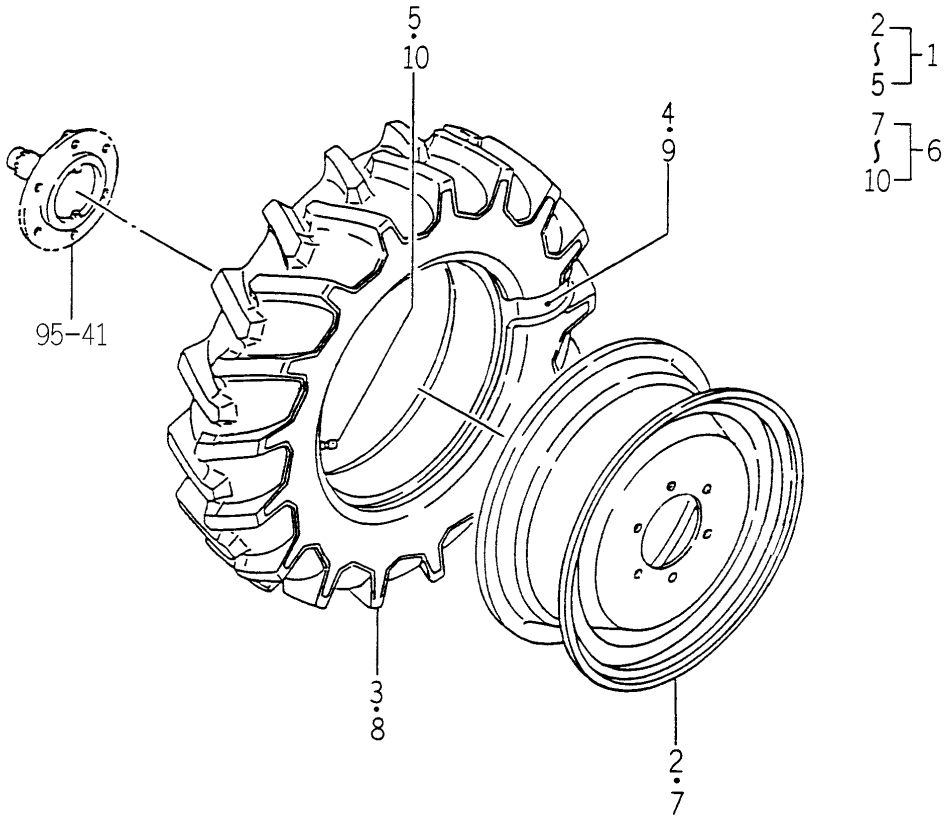

1640-437B-0100

KEY	PART CODE	DESCRIPTION	SPC	TYPE OF MODEL				ITC	COL	GRP	REMARKS
				TG5330 E4	TG5330 E6	TG5390 E4	TG5390 E6				
1	1640-437-210-00	TIRE/LH ASSY	*	1	1	1	1		6G		
2	1574-417-220-03	WHEEL/16X5.50F COMP	*	1	1	1	1		6G		
3	1640-437-211-00	TIRE/7-16-4	*	1	1	1	1				
4	1640-437-212-00	TUBE/TIRE/7-16	*	1	1	1	1				
5	V999-200-003-00	CAP,TIRE VALVE	*	1	1	1	1				
6	1640-437-220-00	TIRE/RH ASSY	*	1	1	1	1		6G		
7	1574-417-220-03	WHEEL/16X5.50F COMP	*	1	1	1	1		6G		
8	1640-437-211-00	TIRE/7-16-4	*	1	1	1	1				
9	1640-437-212-00	TUBE/TIRE/7-16	*	1	1	1	1				
10	V999-200-003-00	CAP,TIRE VALVE	*	1	1	1	1				

FIG.243 FRONT WHEEL (TURF) SYSTEM (OPTION)

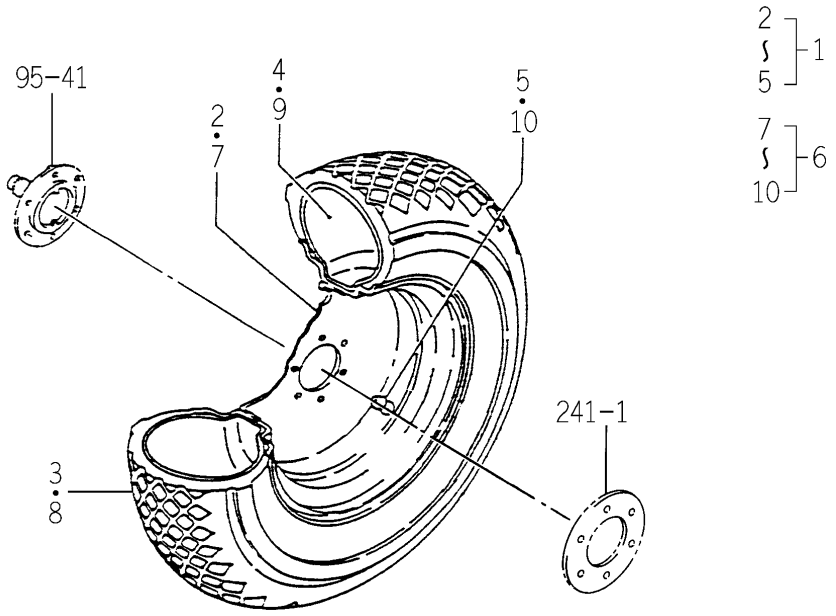

1594-438A-0100

KEY	PART CODE	DESCRIPTION	SPC	TYPE OF MODEL TG5330 E4	TG5330 E6	TG5390 E4	TG5390 E6	ITC	COL	GRP	REMARKS
1	1510-417-310-00	TIRE,F.TURF L.H ASSY	T	1	1	1	1		6G		
2	1510-417-320-02	WHEEL/15X7JA COMP	T	1	1	1	1		6G		
3	1510-417-311-00	TIRE,F.TURF212-80-15	T	1	1	1	1				
4	1510-417-312-00	TUBE	T	1	1	1	1				
5	V999-200-003-00	CAP,TIRE VALVE	T	1	1	1	1				
6	1510-417-330-00	TIRE,F.TURF R.H ASSY	T	1	1	1	1		6G		
7	1510-417-320-02	WHEEL/15X7JA COMP	T	1	1	1	1		6G		
8	1510-417-311-00	TIRE,F.TURF212-80-15	T	1	1	1	1				
9	1510-417-312-00	TUBE	T	1	1	1	1				
10	V999-200-003-00	CAP,TIRE VALVE	T	1	1	1	1				

FIG.244 CUT OFF PLUG ASSY (OPTION)

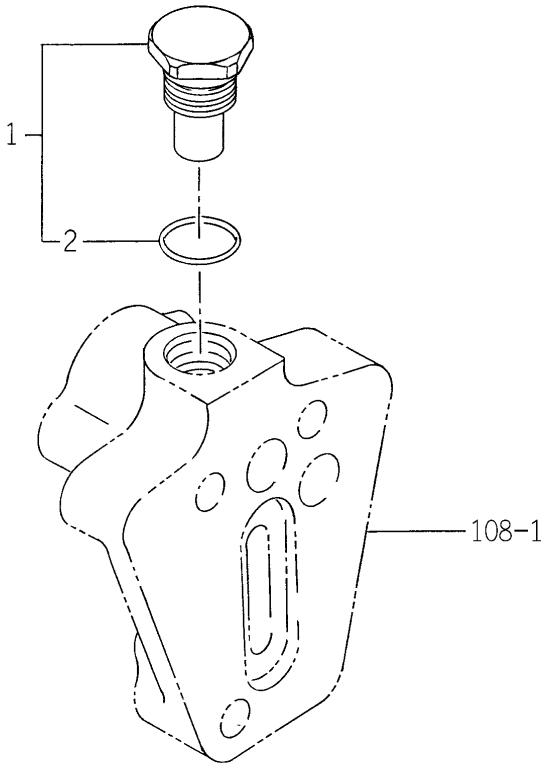

1742-508D-0100

KEY	PART CODE	DESCRIPTION	SPC	TYPE OF MODEL TG5330 E4	TG5330 E6	TG5390 E4	TG5390 E6	ITC	COL	GRP	REMARKS
1	1742-508-410-00	PLUG/M18 ASSY	T	1	1	1	1				
2	V720-112-401-60	O-RING/P16	T	1	1	1	1				

FIG.245 SUCTION SYSTEM (H TYPE-REPAIR)

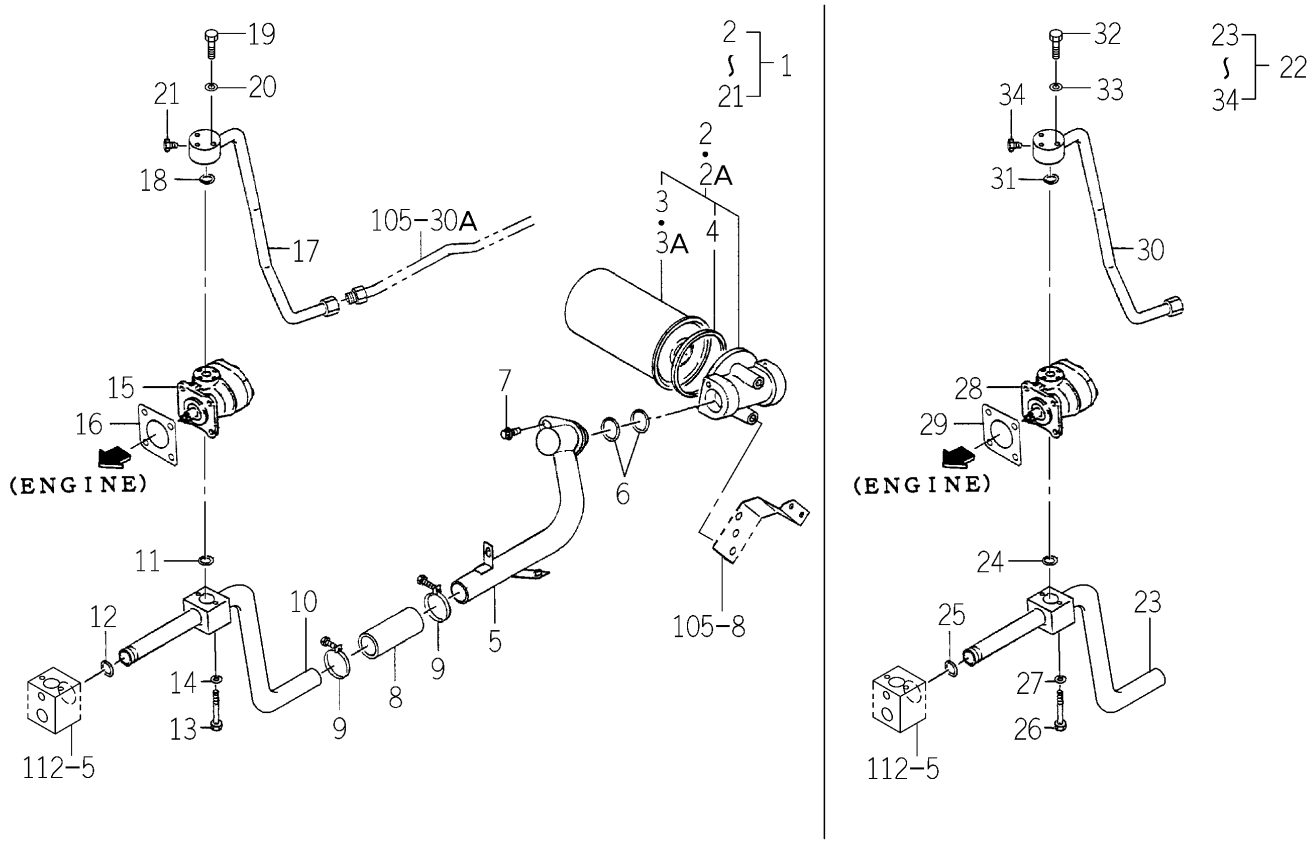

1743-508W-0100

KEY	PART CODE	DESCRIPTION	SPC	TYPE OF MODEL TG5330 E4	TG5330 E6	TG5390 E4	TG5390 E6	ITC	COL	GRP	REMARKS
1	1743-508-930-00	SUCTION/23/H-07 SET	R			1	1				
2	1742-508-330-00	FILTER/SUCTION/20/R	R			1 -1359	1 -1359				
2A	1742-508-330-10	FILTER/SUCTION/20/R	R			1 1360-	1 1360-	1			
3	1742-508-332-00	CARTRIDGE/20/R	R			1 -1359	1 -1359				
3A	1742-508-332-10	CARTRIDGE/20/R	R			1 1360-	1 1360-	1			
4	1643-515-203-00	PACKING	R			1	1				
5	1742-508-340-10	PIPE/SUC/MID COMP	R			1	1				
6	V720-103-502-80	O-RING/P28	R			2	2				
7	V231-360-801-60	FLANGEBOLT	R			1	1				
8	1729-508-011-00	HOSE/100	R			1	1				
9	J061-232-040-00	CLAMP/WIRE/32-40	R			2	2				
10	1747-508-200-10	PIPE/SUC/FRONT COMP	R			1	1				
11	V720-112-402-00	O-RING/P20	R			1	1				
12	1729-508-006-00	RING/O	R			1	1				
13	V200-360-605-50	BOLT	R			2	2				
14	V401-160-006-00	WASHER,SP/M 6	R			2	2				
15	K135-028-000-00	PUMP/GEAR ASSY	R			1	1				FIG 258
16	1404-503-006-00	PACKING,OIL PUMP	R			1	1				
17	1746-508-210-10	PIPE/DEL/FRONT COMP	R			1	1				
18	V720-112-402-00	O-RING/P20	R			1	1				
19	V200-360-604-00	BOLT	R			3	3				
20	V401-160-006-00	WASHER,SP/M 6	R			3	3				
21	V782-160-000-2T	PLUG/SCREW/SEAL	R			1	1				
22	1743-508-940-00	SUCTION/3/H-07 SET	R			1	1				
23	1747-508-200-10	PIPE/SUC/FRONT COMP	R			1	1				
24	V720-112-402-00	O-RING/P20	R			1	1				
25	1729-508-006-00	RING/O	R			1	1				
26	V200-360-605-50	BOLT	R			2	2				
27	V401-160-006-00	WASHER,SP/M 6	R			2	2				
28	K135-028-000-00	PUMP/GEAR ASSY	R			1	1				FIG 258

FIG.245 SUCTION SYSTEM (H TYPE-REPAIR)

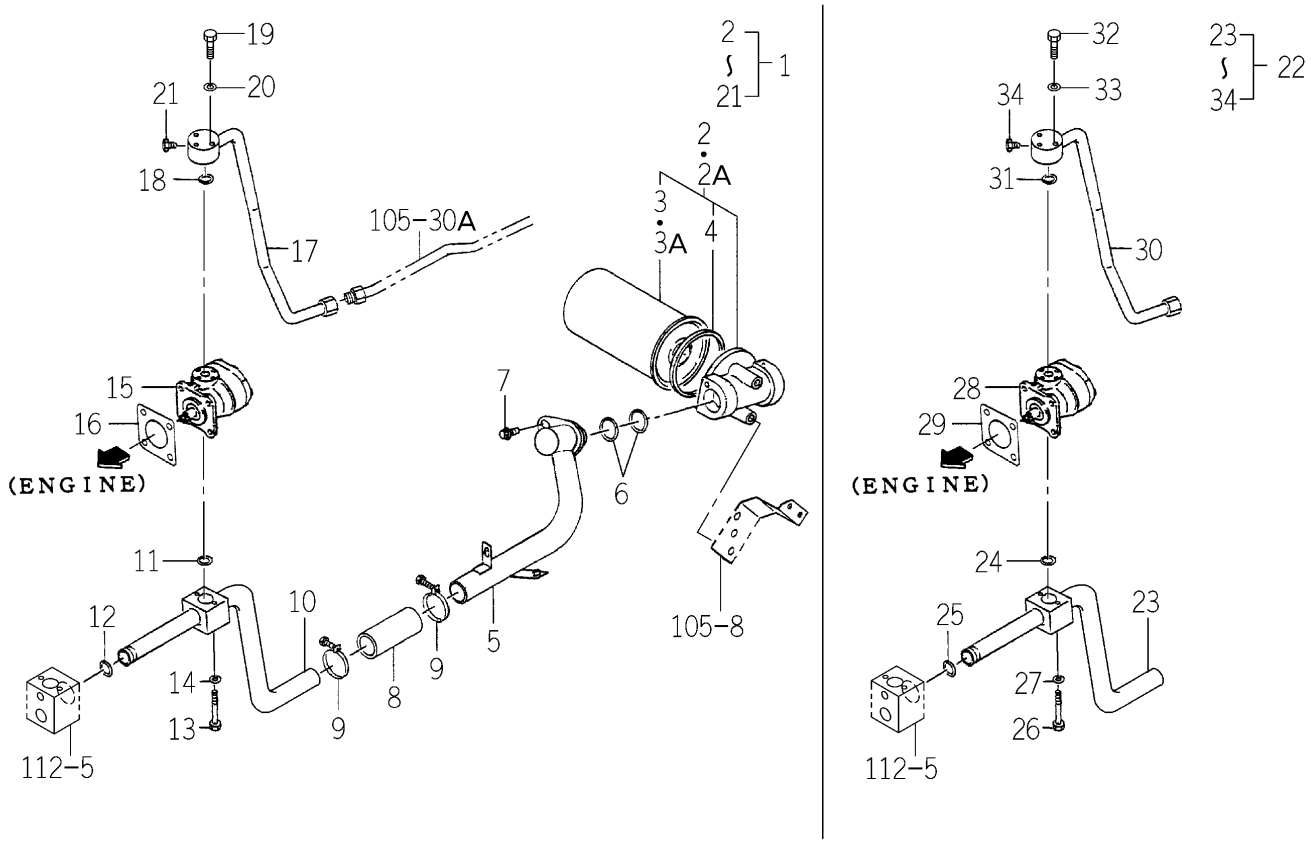

1743-508W-0100

KEY	PART CODE	DESCRIPTION	SPC	TYPE OF MODEL TG5330 E4	TG5330 E6	TG5390 E4	TG5390 E6	ITC	COL	GRP	REMARKS
29	1404-503-006-00	PACKING,OIL PUMP	R			1	1				
30	1746-508-210-10	PIPE/DEL/FRONT COMP	R			1	1				
31	V720-112-402-00	O-RING/P20	R			1	1				
32	V200-360-604-00	BOLT	R			3	3				
33	V401-160-006-00	WASHER,SP/M 6	R			3	3				
34	V782-160-000-2T	PLUG/SCREW/SEAL	R			1	1				

FIG.246 VALVE (REMOTE/2R) SET (E4 TYPE EXCEPT C,A-OPTION)

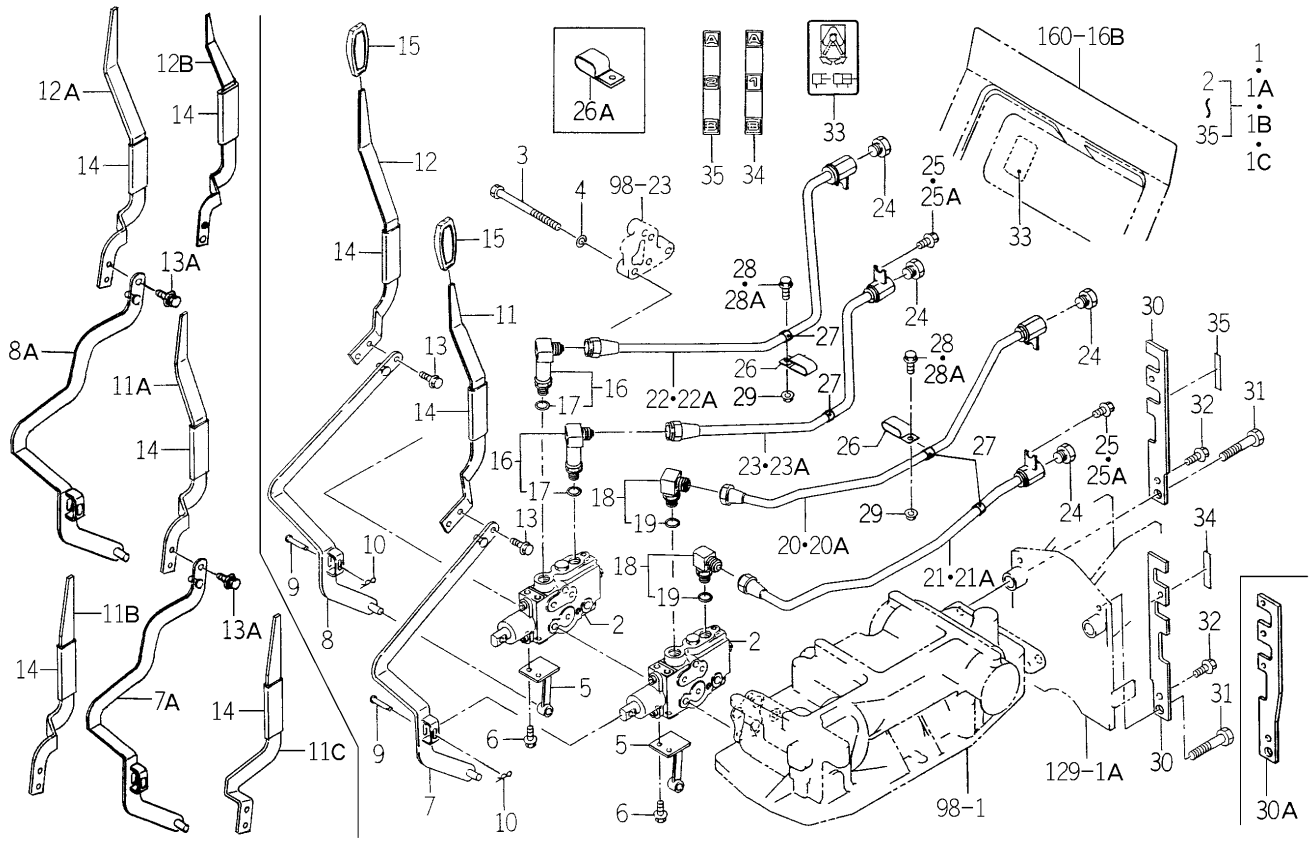

1742-512C-0100

KEY	PART CODE	DESCRIPTION	SPC	TYPE OF MODEL TG5330 E4	TG5330 E6	TG5390 E4	TG5390 E6	ITC	COL	GRP	REMARKS
1	1742-512-350-10	VALVE/REMOTE/2R/E4	T	1 -43		1 -65					
1A	1742-512-350-20	VALVE/REMOTE/2R/E4	T	1 -272		1 -621		1			
1B	1742-512-350-30	VALVE/REMOTE/2R/E4	T	1 -952		1 -1281		1			
1C	1742-512-350-40	VALVE/REMOTE/2R/E4	T	1 953-		1 1282-		1			
2	1640-530-600-10	VALVE/CONTROL ASSY	T	2		2					FIG 267
3	V201-261-012-00	BOLT/M10X120	T	3		3					
4	V401-160-010-00	WASHER,SP/M10	T	3		3					
5	1742-512-220-00	HOLDER COMP	T	2		2					
6	V231-360-801-60	FLANGEBOLT	T	4		4					
7	1742-512-200-00	ARM/1ST COMP	T	1 -27		1 -25					
7A	1742-512-200-10	ARM/1ST COMP	T	1 28-		1 26-		3			
8	1742-512-210-00	ARM/2ND COMP	T	1 -27		1 -25					
8A	1742-512-210-10	ARM/2ND COMP	T	1 28-		1 26-		3			
9	2144-519-007-00	PIN/06X31	T	2		2					
10	2130-601-018-00	PIN,SNAP/6	T	2		2					
11	1742-512-002-00	LEVER/1ST	T	1 -27		1 -25					
11A	1742-512-002-10	LEVER/1ST	T	1 -272		1 -621		3			
11B	1759-512-003-20	LEVER/1ST	T	1 -798		1 -1141					
11C	1759-512-003-30	LEVER/1ST	T	1 799-		1 1142-		1			
12	1742-512-003-00	LEVER/2ND	T	1 -27		1 -25					
12A	1742-512-003-10	LEVER/2ND	T	1 -272		1 -621		3			
12B	1759-512-004-20	LEVER/2ND	T	1 273-		1 622-					
13	V231-360-801-20	FLANGEBOLT	T	2 -27		2 -25					
13A	V211-360-801-60	BOLT,SEMS (SP)	T	2 28-		2 26-					
14	1614-262-006-00	INSULATOR/LEVER/SUB	T	2		2					
15	3659-203-005-00	GRIP/03X17X74	T	2		2					
16	1650-511-250-00	ADAPTER/L/PF3/8 ASSY	T	2		2					
17	V720-112-401-40	O-RING/P14	T	2 -27		2 -25					
18	1650-509-310-00	ADAPTER/L/PF3/8 ASSY	T	2		2					
19	V720-112-401-40	O-RING/P14	T	2 -27		2 -25					

FIG.246 VALVE (REMOTE/2R) SET (E4 TYPE EXCEPT C,A-OPTION)

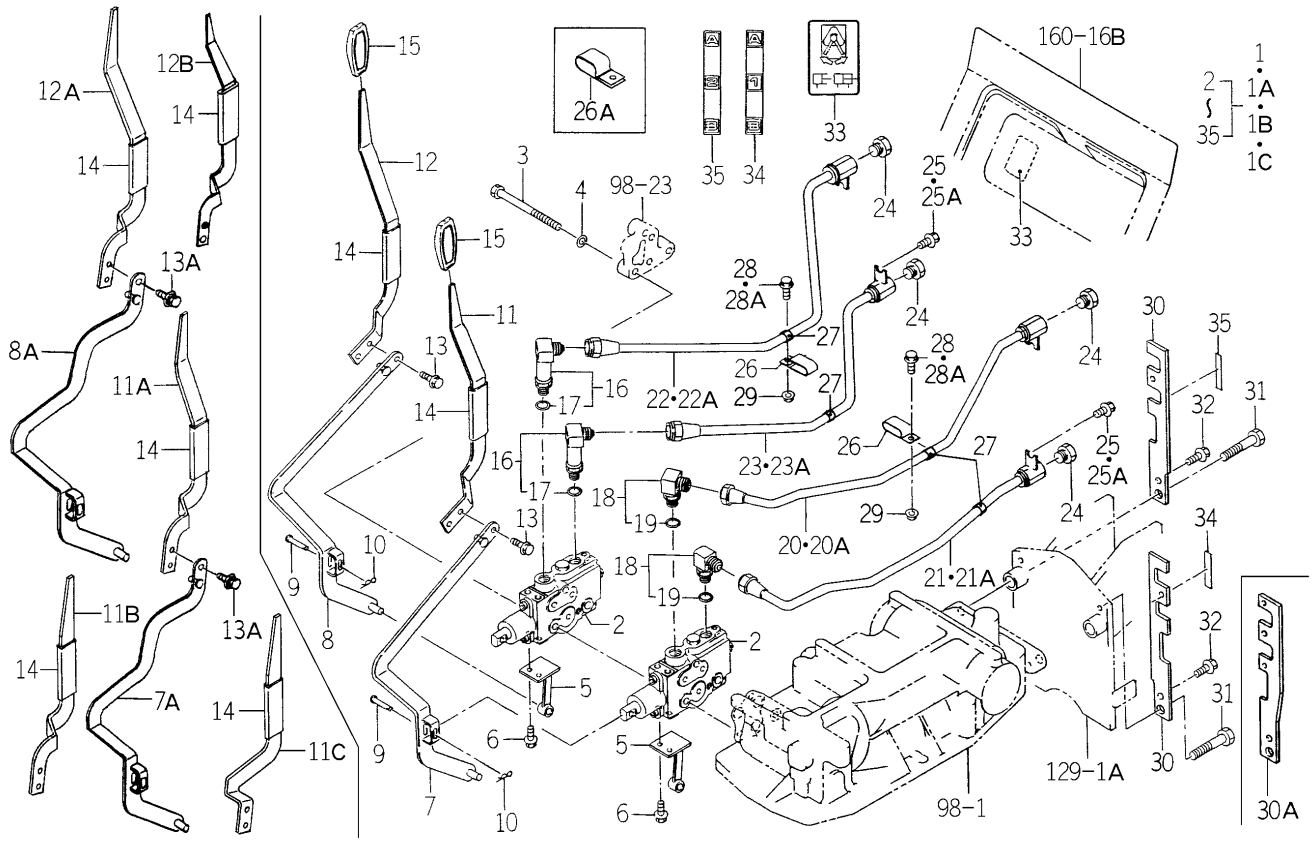

1742-512C-0100

KEY	PART CODE	DESCRIPTION	SPC	TYPE OF MODEL TG5330 E4	TG5330 E6	TG5390 E4	TG5390 E6	ITC	COL	GRP	REMARKS
20	1742-512-300-00	PIPE/1ST/A/E4 COMP	T	1 -951		1 -1281					
20A	1742-512-300-10	PIPE/1ST/A/E4 COMP	T	1 952-		1 1282-		1			
21	1742-512-310-00	PIPE/1ST/B/E4 COMP	T	1 -948		1 -1263					
21A	1742-512-310-10	PIPE/1ST/B/E4 COMP	T	1 949-		1 1264-		1			
22	1742-512-320-00	PIPE/2ND/A/E4 COMP	T	1 -937		1 -1227					
22A	1742-512-320-10	PIPE/2ND/A/E4 COMP	T	1 938-		1 1228-		1			
23	1742-512-330-00	PIPE/2ND/B/E4 COMP	T	1 -948		1 -1262					
23A	1742-512-330-10	PIPE/2ND/B/E4 COMP	T	1 949-		1 1263-		1			
24	V782-160-000-6T	PLUG/SCREW/SEAL	T	4		4					
25	V231-360-801-20	FLANGEBOLT	T	2 -27		2 -25					
25A	V231-360-801-60	FLANGEBOLT	T	2 28-		2 26-					
26	1742-511-004-00	CLAMP/12X36	T	2 -27		2 -25					
26A	1560-104-005-50	CLIP	T	2 28-		2 26-					
27	1650-509-017-00	GROMMET/10X18X20	T	4 28-		4 26-					
28	V231-360-801-20	FLANGEBOLT	T	2 -27		2 -25					
28A	V231-360-801-60	FLANGEBOLT	T	2 28-		2 26-					
29	V362-260-008-00	NUT/WASHER	T	2		2					
30	1742-512-001-00	STAY/PIPE	T	2 -27		2 -25					
30A	1742-512-001-10	STAY	T	2 28-		2 26-		1			
31	V201-361-406-50	BOLT	T	2		2					
32	V231-360-801-60	FLANGEBOLT	T	2		2					
33	1640-530-008-00	LABEL/SUBCON	T	1		1					
34	1742-512-004-00	LABEL/PORT/1ST	T	1		1					
35	1742-512-005-00	LABEL/PORT/2ND	T	1		1					

FIG.247 VALVE (REMOTE/1R) SET (C TYPE-OPTION)

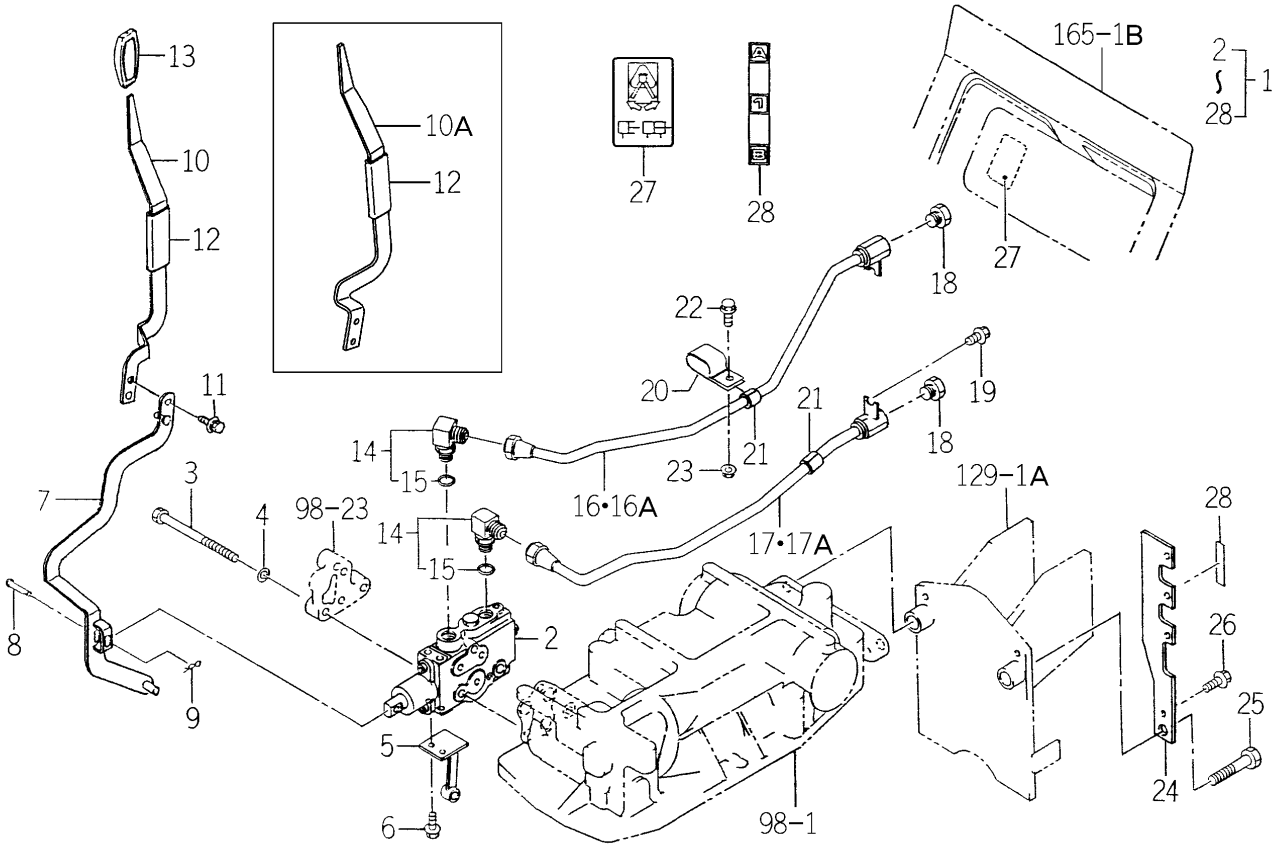

1742-512E-0100

KEY	PART CODE	DESCRIPTION	SPC	TYPE OF MODEL TG5330 E4	TG5330 E6	TG5390 E4	TG5390 E6	ITC	COL	GRP	REMARKS
1	1742-512-370-00	VALVE/1R/E4/CY SET	T	1		1					
2	1640-530-600-10	VALVE/CONTROL ASSY	T	1		1					FIG 267
3	V201-261-008-00	BOLT/M10X80	T	3		3					
4	V401-160-010-00	WASHER,SP/M10	T	3		3					
5	1742-512-220-00	HOLDER COMP	T	1		1					
6	V231-360-801-60	FLANGEBOLT	T	2		2					
7	1742-512-200-10	ARM/1ST COMP	T	1		1					
8	2144-519-007-00	PIN/06X31	T	1		1					
9	2130-601-018-00	PIN,SNAP/6	T	1		1					
10	1744-512-001-10	LEVER/1ST	T	1 -802		1 -1143					
10A	1744-512-001-20	LEVER/1ST	T	1 803-		1 1144-		1			
11	V211-360-801-60	BOLT,SEMS (SP)	T	1		1					
12	1614-262-006-00	INSULATOR/LEVER/SUB	T	1		1					
13	3659-203-005-00	GRIP/03X17X74	T	1		1					
14	1650-509-310-00	ADAPTER/L/PF3/8 ASSY	T	2		2					
15	V720-112-401-40	O-RING/P14	T	2		2					
16	1742-512-300-00	PIPE/1ST/A/E4 COMP	T	1 -951		1 -1281					
16A	1742-512-300-10	PIPE/1ST/A/E4 COMP	T	1 952-		1 1282-		1			
17	1742-512-310-00	PIPE/1ST/B/E4 COMP	T	1 -948		1 -1263					
17A	1742-512-310-10	PIPE/1ST/B/E4 COMP	T	1 949-		1 1264-		1			
18	V782-160-000-6T	PLUG/SCREW/SEAL	T	2		2					
19	V231-360-801-60	FLANGEBOLT	T	1		1					
20	1560-104-005-50	CLIP	T	1		1					
21	1650-509-017-00	GROMMET/10X18X20	T	2		2					
22	V231-360-801-60	FLANGEBOLT	T	1		1					
23	V362-260-008-00	NUT/WASHER	T	1		1					
24	1742-512-001-10	STAY	T	1		1					
25	V201-361-406-50	BOLT	T	1		1					
26	V231-360-801-60	FLANGEBOLT	T	1		1					
27	1640-530-008-00	LABEL/SUBCON	T	1		1					

FIG.247 VALVE (REMOTE/1R) SET (C TYPE-OPTION)

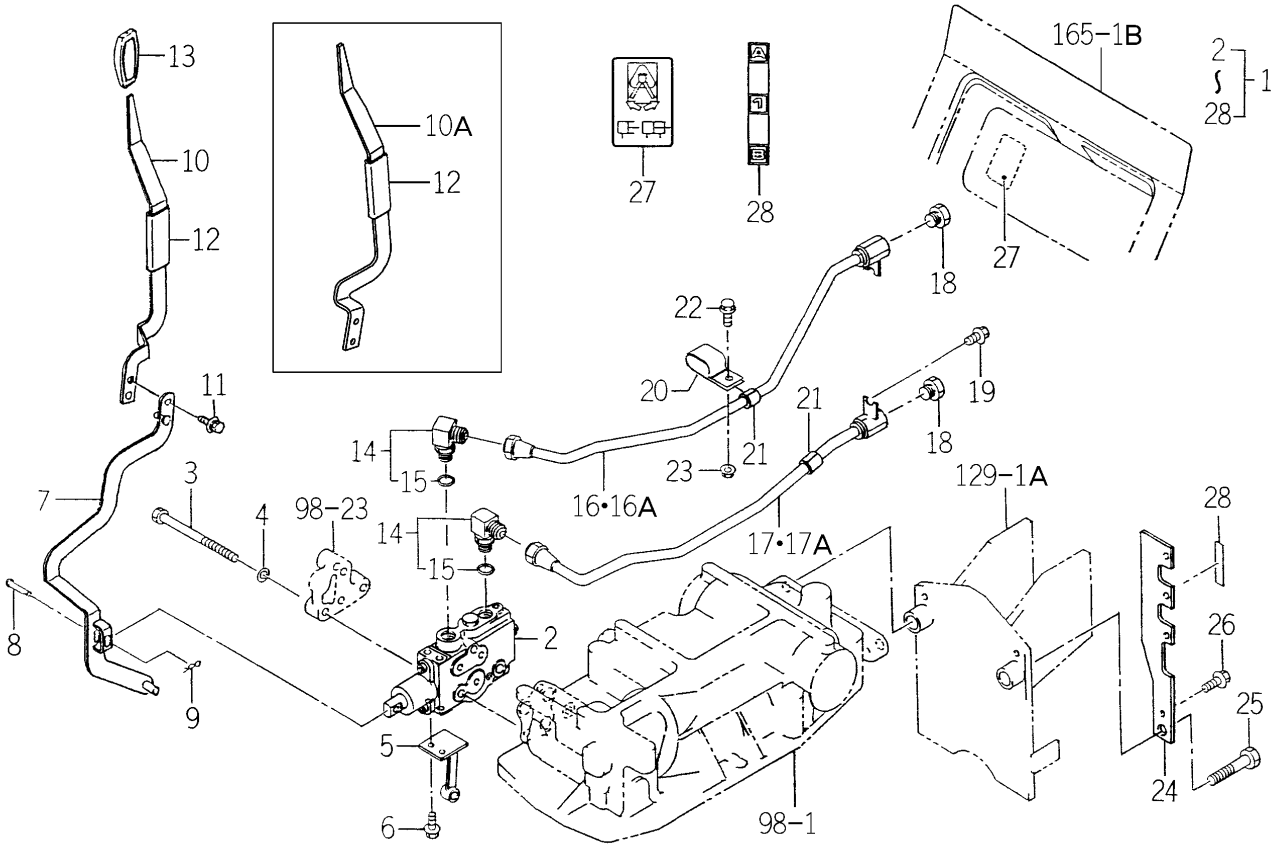

1742-512E-0100

KEY	PART CODE	DESCRIPTION	SPC	TYPE OF MODEL TG5330 E4	TG5330 E6	TG5390 E4	TG5390 E6	ITC	COL	GRP	REMARKS
28	1742-512-004-00	LABEL/PORT/1ST	T	1		1					

FIG.248 VALVE (REMOTE/2R) SET (C TYPE-OPTION)

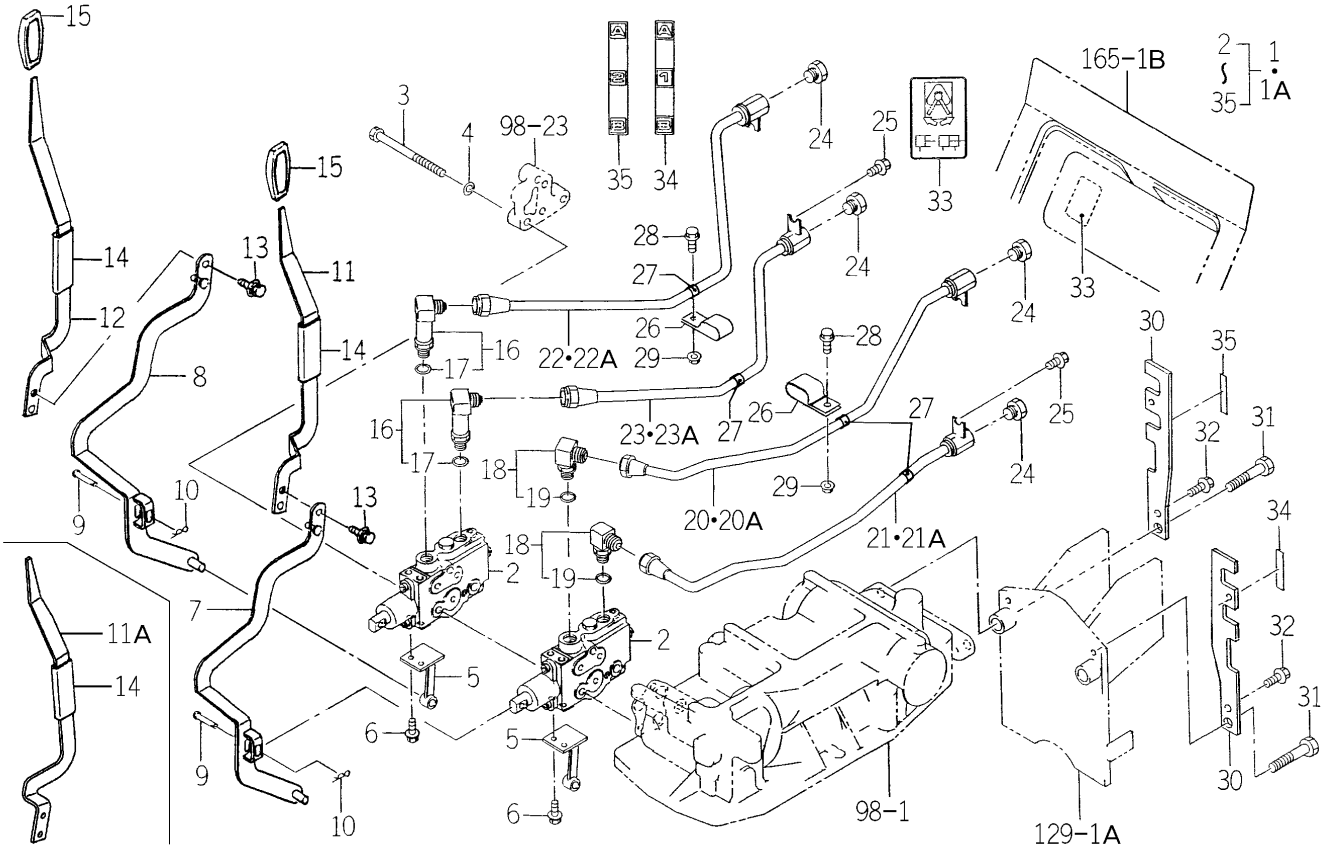

1742-512F-0100

KEY	PART CODE	DESCRIPTION	SPC	TYPE OF MODEL TG5330 E4	TG5330 E6	TG5390 E4	TG5390 E6	ITC	COL	GRP	REMARKS
1	1742-512-380-00	VALVE/2R/E4/CY SET	T	1 -952		1 -1282					
1A	1742-512-380-10	VALVE/2R/E4/CY SET	T	1 953-		1 1283-		1			
2	1640-530-600-10	VALVE/CONTROL ASSY	T	2		2					FIG 267
3	V201-261-012-00	BOLT/M10X120	T	3		3					
4	V401-160-010-00	WASHER,SP/M10	T	3		3					
5	1742-512-220-00	HOLDER COMP	T	2		2					
6	V231-360-801-60	FLANGEBOLT	T	4		4					
7	1742-512-200-10	ARM/1ST COMP	T	1		1					
8	1742-512-210-10	ARM/2ND COMP	T	1		1					
9	2144-519-007-00	PIN/06X31	T	2		2					
10	2130-601-018-00	PIN,SNAP/6	T	2		2					
11	1744-512-001-10	LEVER/1ST	T	1 -802		1 -1143					
11A	1744-512-001-20	LEVER/1ST	T	1 803-		1 1144-		1			
12	1744-512-002-10	LEVER/2ND	T	1		1					
13	V211-360-801-60	BOLT,SEMS (SP)	T	2		2					
14	1614-262-006-00	INSULATOR/LEVER/SUB	T	2		2					
15	3659-203-005-00	GRIP/03X17X74	T	2		2					
16	1650-511-250-00	ADAPTER/L/PF3/8 ASSY	T	2		2					
17	V720-112-401-40	O-RING/P14	T	2		2					
18	1650-509-310-00	ADAPTER/L/PF3/8 ASSY	T	2		2					
19	V720-112-401-40	O-RING/P14	T	2		2					
20	1742-512-300-00	PIPE/1ST/A/E4 COMP	T	1 -951		1 -1281					
20A	1742-512-300-10	PIPE/1ST/A/E4 COMP	T	1 952-		1 1282-		1			
21	1742-512-310-00	PIPE/1ST/B/E4 COMP	T	1 -948		1 -1263					
21A	1742-512-310-10	PIPE/1ST/B/E4 COMP	T	1 949-		1 1264-		1			
22	1742-512-320-00	PIPE/2ND/A/E4 COMP	T	1 -937		1 -1227					
22A	1742-512-320-10	PIPE/2ND/A/E4 COMP	T	1 938-		1 1228-		1			
23	1742-512-330-00	PIPE/2ND/B/E4 COMP	T	1 -948		1 -1262					
23A	1742-512-330-10	PIPE/2ND/B/E4 COMP	T	1 949-		1 1263-		1			
24	V782-160-000-6T	PLUG/SCREW/SEAL	T	4		4					

FIG.248 VALVE (REMOTE/2R) SET (C TYPE-OPTION)

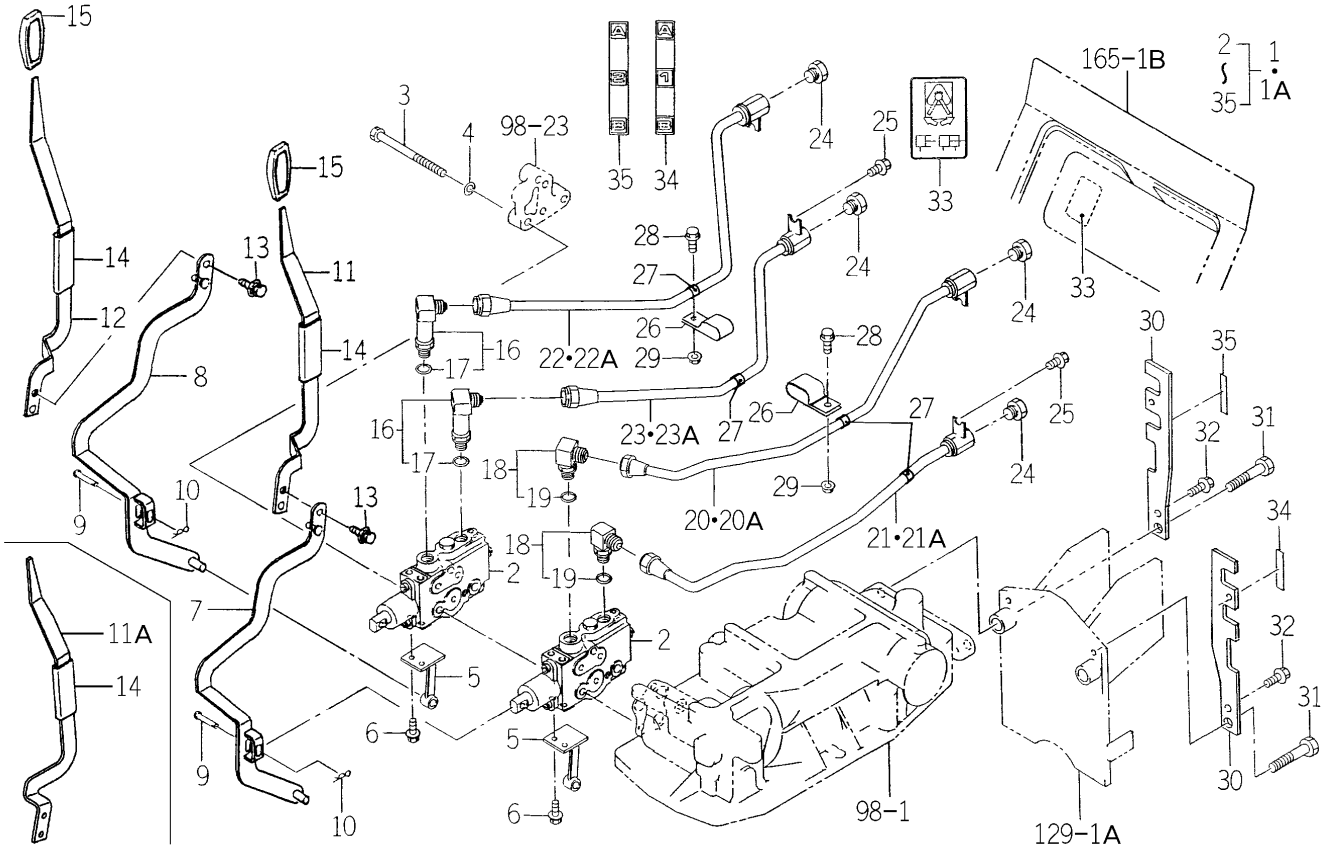

1742-512F-0100

KEY	PART CODE	DESCRIPTION	SPC	TYPE OF MODEL TG5330 E4	TG5330 E6	TG5390 E4	TG5390 E6	ITC	COL	GRP	REMARKS
25	V231-360-801-60	FLANGEBOLT	T	2		2					
26	1560-104-005-50	CLIP	T	2		2					
27	1650-509-017-00	GROMMET/10X18X20	T	4		4					
28	V231-360-801-60	FLANGEBOLT	T	2		2					
29	V362-260-008-00	NUT/WASHER	T	2		2					
30	1742-512-001-10	STAY	T	2		2					
31	V201-361-406-50	BOLT	T	2		2					
32	V231-360-801-60	FLANGEBOLT	T	2		2					
33	1640-530-008-00	LABEL/SUBCON	T	1		1					
34	1742-512-004-00	LABEL/PORT/1ST	T	1		1					
35	1742-512-005-00	LABEL/PORT/2ND	T	1		1					

FIG.249 VALVE (REMOTE/2R) SET (A TYPE-OPTION)

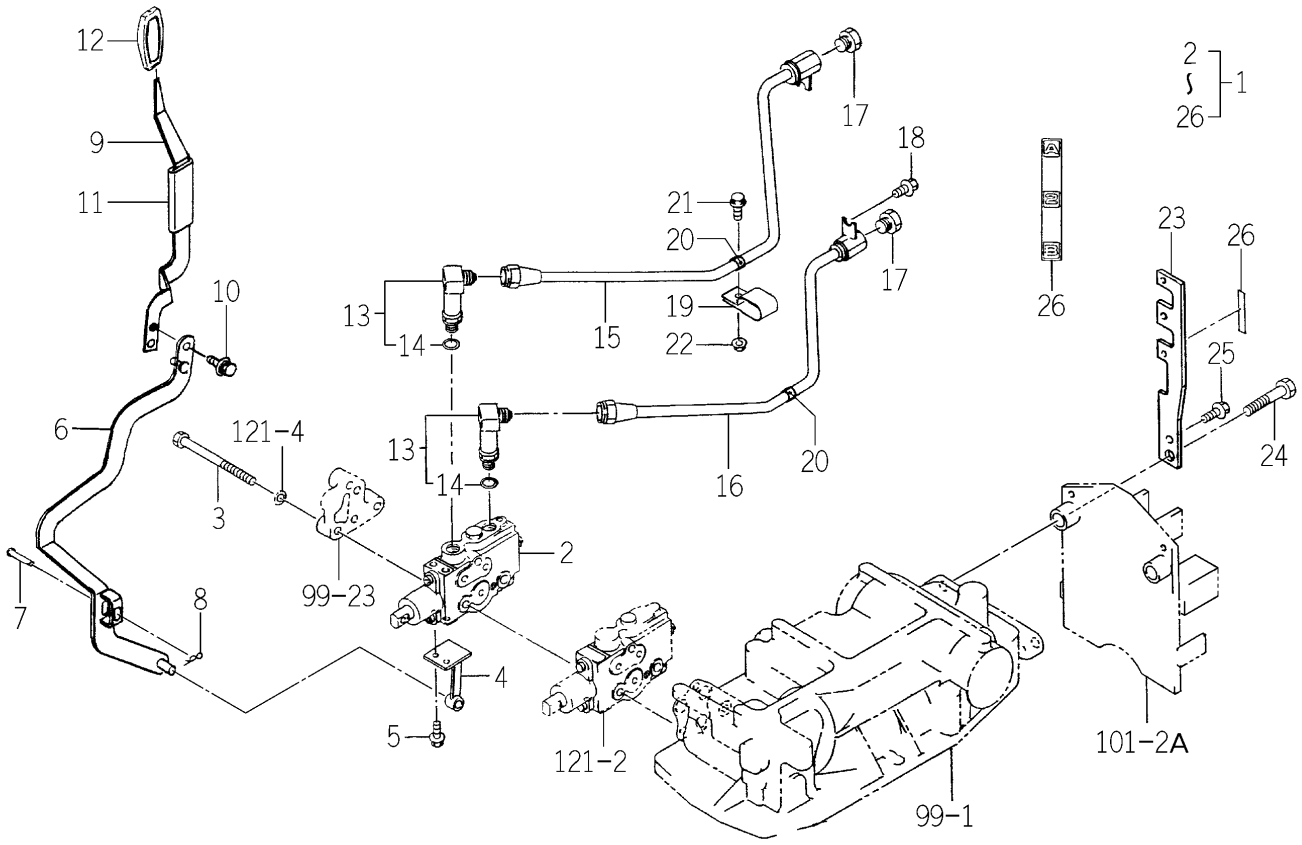

1742-512J-0100

KEY	PART CODE	DESCRIPTION	SPC	TYPE OF MODEL TG5330 E4	TG5330 E6	TG5390 E4	TG5390 E6	ITC	COL	GRP	REMARKS
1	1742-512-430-10	VALVE/2R/E4A SET	T	1		1		1			
2	1640-530-600-10	VALVE/CONTROL ASSY	T	1		1					FIG 267
3	V201-261-012-00	BOLT/M10X120	T	3		3					
4	1742-512-220-00	HOLDER COMP	T	1		1					
5	V231-360-801-60	FLANGEBOLT	T	2		2					
6	1742-512-210-10	ARM/2ND COMP	T	1		1					
7	2144-519-007-00	PIN/06X31	T	1		1					
8	2130-601-018-00	PIN,SNAP/6	T	1		1					
9	1759-512-004-20	LEVER/2ND	T	1		1					
10	V211-360-801-60	BOLT,SEMS (SP)	T	1		1					
11	1614-262-006-00	INSULATOR/LEVER/SUB	T	1		1					
12	3659-203-005-00	GRIP/03X17X74	T	1		1					
13	1650-511-250-00	ADAPTER/L/PF3/8 ASSY	T	2		2					
14	V720-112-401-40	O-RING/P14	T	2		2					
15	1742-512-320-10	PIPE/2ND/A/E4 COMP	T	1		1		1			
16	1742-512-330-10	PIPE/2ND/B/E4 COMP	T	1		1		1			
17	V782-160-000-6T	PLUG/SCREW/SEAL	T	2		2					
18	V231-360-801-60	FLANGEBOLT	T	1		1					
19	1560-104-005-50	CLIP	T	1		1					
20	1650-509-017-00	GROMMET/10X18X20	T	2		2					
21	V231-360-801-60	FLANGEBOLT	T	1		1					
22	V362-260-008-00	NUT/WASHER	T	1		1					
23	1742-512-001-10	STAY	T	1		1					
24	V201-361-406-50	BOLT	T	1		1					
25	V231-360-801-60	FLANGEBOLT	T	1		1					
26	1742-512-005-00	LABEL/PORT/2ND	T	1		1					

FIG.250 DRAW BAR (FIX) SYSTEM (E4D TYPE-OPTION)

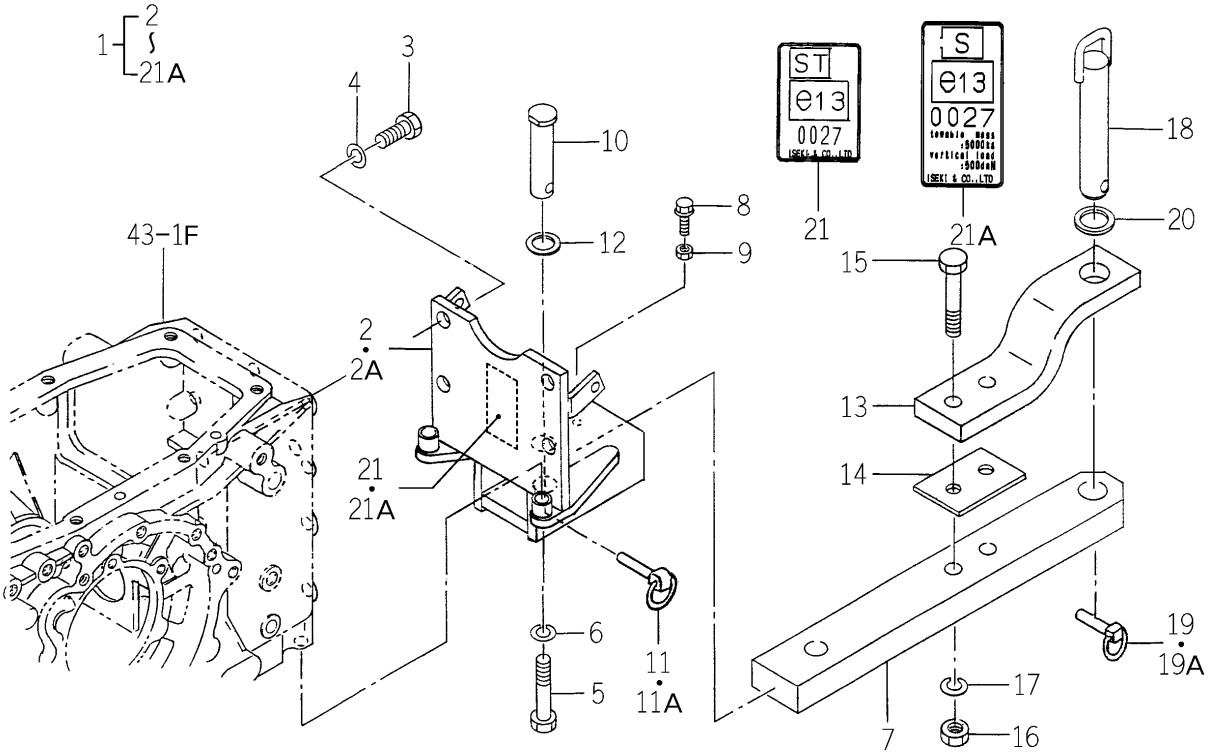

1742-521B-0100

KEY	PART CODE	DESCRIPTION	SPC	TYPE OF MODEL TG5330 E4	TG5330 E6	TG5390 E4	TG5390 E6	ITC	COL	GRP	REMARKS
1	1742-521-300-20	DRAWBAR/FIX/E4D SET	T	1		1		1			
2	1742-521-210-20	BRACKET/DRAW BAR/E4	T	1 -607		1 -921					
2A	1742-521-210-30	BRACKET/DRAW BAR/E4	T	1 608-		1 922-		1			
3	V201-361-603-50	BOLT M16X35	T	4		4					
4	V401-160-016-00	WASHER,SP/M16	T	4		4					
5	V201-361-405-00	BOLT/M14X50	T	2		2					
6	V401-160-014-00	WASHER,SP/M14	T	2		2					
7	1742-521-002-10	DRAWBAR/E4	T	1		1					
8	V231-361-003-00	FLANGEBOLT	T	1		1					
9	V304-460-010-00	NUT/M10	T	1		1					
10	1640-520-005-00	PIN/25X91	T	1		1					
11	1673-525-002-20	LINKPIN	T	1 -627		1 -945					
11A	1673-525-002-30	LINKPIN	T	1 628-		1 946-		1			
12	1640-520-004-00	INSULATOR	T	1		1					
13	1674-520-002-00	LINK/DRAWBAR	T	1		1					
14	1674-520-003-00	PLATE	T	1		1					
15	V201-361-608-50	BOLT	T	2		2					
16	1518-924-001-00	NUT,U/M16	T	2		2					
17	V401-160-016-00	WASHER,SP/M16	T	2		2					
18	1674-520-210-00	PIN/30X162 COMP	T	1		1					
19	1673-525-002-20	LINKPIN	T	1 -627		1 -945					
19A	1673-525-002-30	LINKPIN	T	1 628-		1 946-		1			
20	1674-520-004-00	INSULATOR	T	1		1					
21	1742-521-003-00	LABEL/TRH-1742A	T	1 -798		1 -1141					
21A	1742-521-003-10	LABEL/TRH-1742A	T	1 799-		1 1142-		1			

FIG.251 ELC. SYSTEM (C TYPE-OPTION)

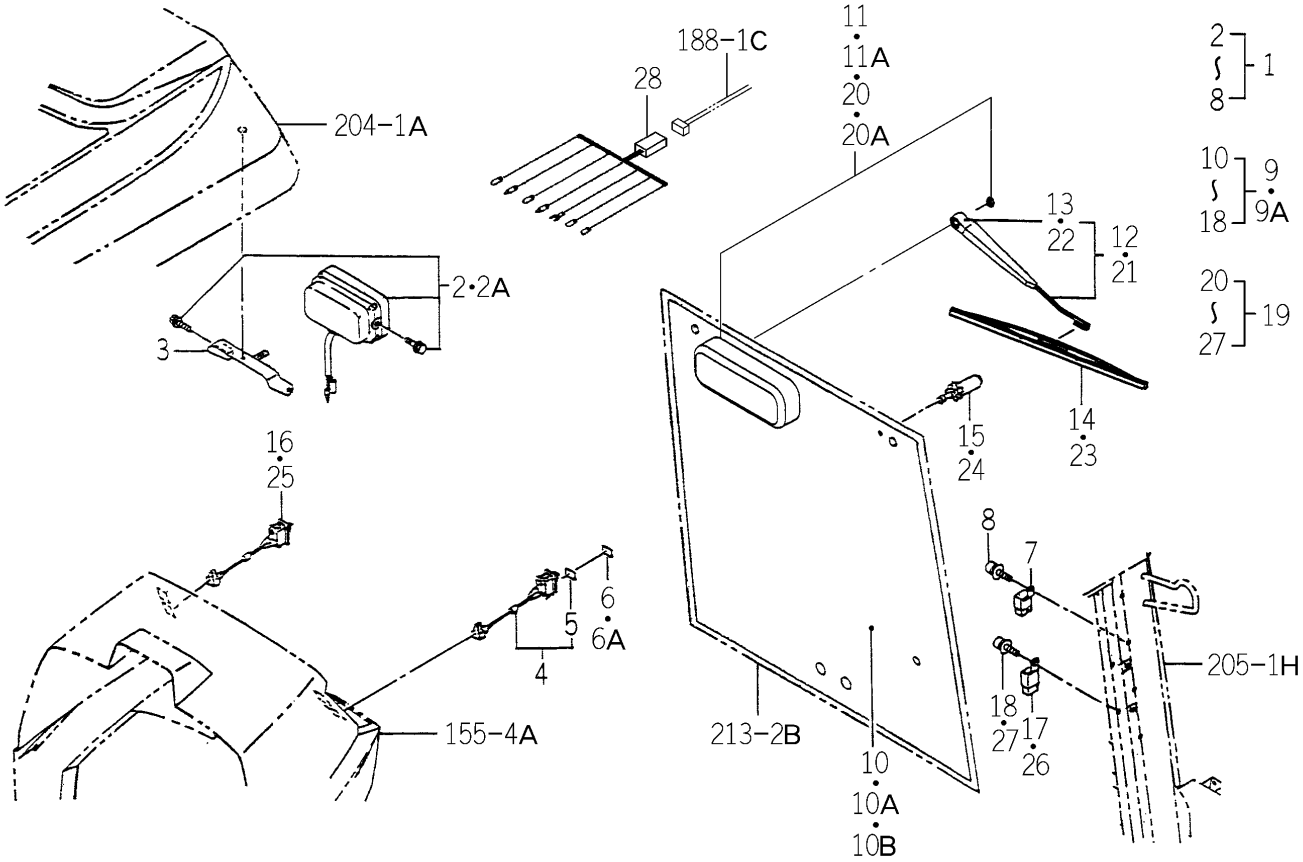

1746-658Z-0100

KEY	PART CODE	DESCRIPTION	SPC	TYPE OF MODEL TG5330 E4	TG5330 E6	TG5390 E4	TG5390 E6	ITC	COL	GRP	REMARKS
1	1746-658-250-10	LAMP/WORKING/REAR	T	1		1		1			
2	1696-658-340-00	LAMP/WORKING ASSY	T	2 -123		2 -416					FIG 268
2A	1696-658-340-10	LAMP/WORKING ASSY	T	2 124-		2 417-		1			FIG 268
3	1729-658-340-00	STAY/LAMP/WORKING	T	2		2					
4	1521-621-600-00	REAR DIFF SWITCH	T	1		1					
5	1521-621-601-00	DIFF LOSTING MARK	T	1		1					
6	1711-666-053-00	LABEL/LAMP/R/E4	T	1 -408		1 -764					
6A	1711-666-053-10	LABEL/LAMP/R/E4	T	1 409-		1 765-		1			
7	1690-658-370-00	RELAY/4P ASSY	T	1		1					
8	V120-366-001-60	SCREW	T	1		1					
9	1742-658-250-00	WIPER/REAR SET	T	1 -696		1 -972					
9A	1742-658-250-20	WIPER/REAR SET	T	1 697-		1 973-		1			
10	1731-742-001-00	GLASS/REAR	T	1 -154		1 -499					
10A	1731-742-001-10	GLASS/REAR	T	1 -696		1 -972		1			
10B	1731-742-001-20	GLASS/REAR	T	1 697-		1 973-		1			
11	1731-658-230-20	MOTOR/WIPER ASSY	T	1 -476		1 -826					FIG 274
11A	1731-658-230-30	MOTOR/WIPER ASSY	T	1 477-		1 827-		1			FIG 274
12	1731-658-240-00	ARM/WIPER/300 ASSY	T	1		1					
13	1673-666-521-00	COVER/HEAD	T	1		1					
14	1673-666-530-10	BLADE/WIPER/400 ASSY	T	1		1					
15	1691-658-200-00	NOZZLE/WASHER ASSY	T	1		1					
16	1518-621-540-00	SWITCH,WIPER ASSY	T	1		1					
17	1593-623-530-00	RELAY,5P ASSY	T	1		1					
18	V120-366-001-60	SCREW	T	1		1					
19	1742-658-270-10	WIPER/REAR/SUB SET	T	1		1		1			
20	1731-658-230-20	MOTOR/WIPER ASSY	T	1 -476		1 -826					FIG 274
20A	1731-658-230-30	MOTOR/WIPER ASSY	T	1 477-		1 827-		1			FIG 274
21	1731-658-240-00	ARM/WIPER/300 ASSY	T	1		1					
22	1673-666-521-00	COVER/HEAD	T	1		1					
23	1673-666-530-10	BLADE/WIPER/400 ASSY	T	1		1					

FIG.251 ELC. SYSTEM (C TYPE-OPTION)

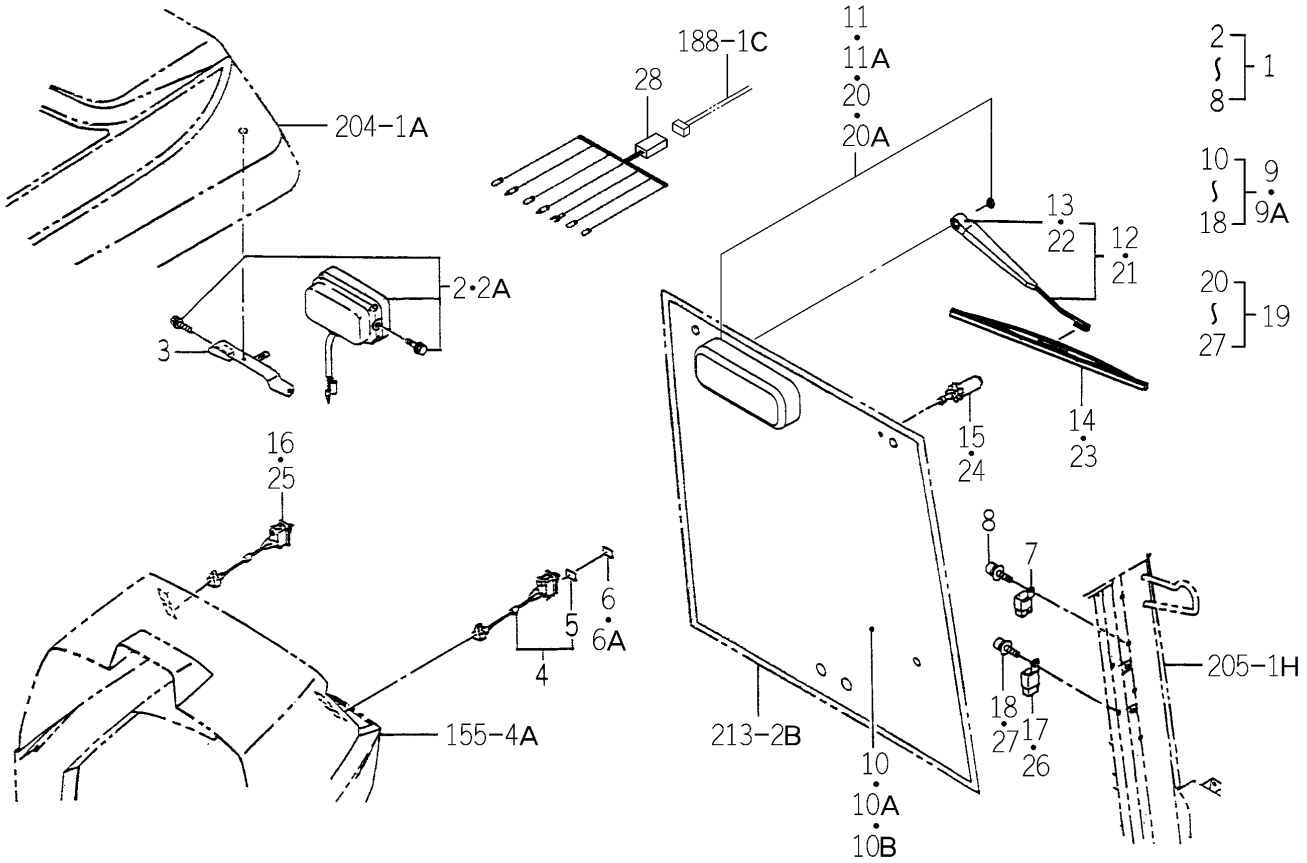

1746-658Z-0100

KEY	PART CODE	DESCRIPTION	SPC	TYPE OF MODEL				ITC	COL	GRP	REMARKS
				TG5330 E4	TG5330 E6	TG5390 E4	TG5390 E6				
24	1691-658-200-00	NOZZLE/WASHER ASSY	T	1		1					
25	1518-621-540-00	SWITCH,WIPER ASSY	T	1		1					
26	1593-623-530-00	RELAY,5P ASSY	T	1		1					
27	V120-366-001-60	SCREW	T	1		1					
28	1742-658-230-00	HARNESS/RADIO CASSET	T	1		1					

FIG.252 PARTS (CABIN) SYSTEM (C TYPE-REPAIR)

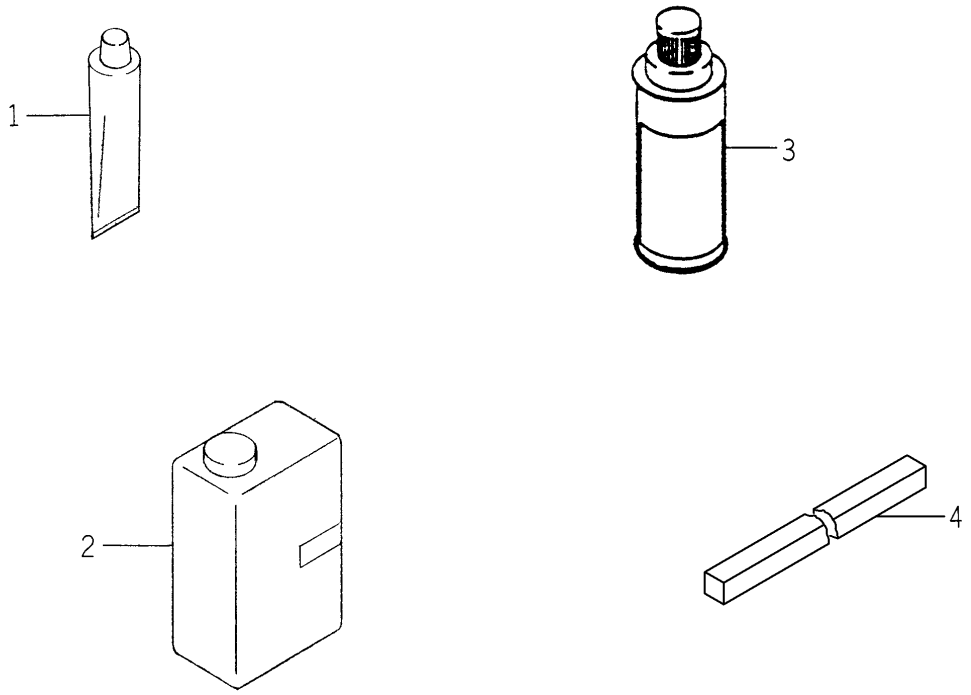

1729-760Y-0100

KEY	PART CODE	DESCRIPTION	SPC	TYPE OF MODEL TG5330 E4	TG5330 E6	TG5390 E4	TG5390 E6	ITC	COL	GRP	REMARKS
1	1729-760-900-00	SEAL/PVC	R	1		1					
2	1729-760-930-00	PRIMER/K-520 ASSY	R	1		1					
3	1650-760-910-00	CLEANER ASSY	R	1		1					
4	1729-760-091-00	INSULATOR/20X20X1000	R	1		1					

FIG.253 CABIN SYSTEM (C TYPE-OPTION)

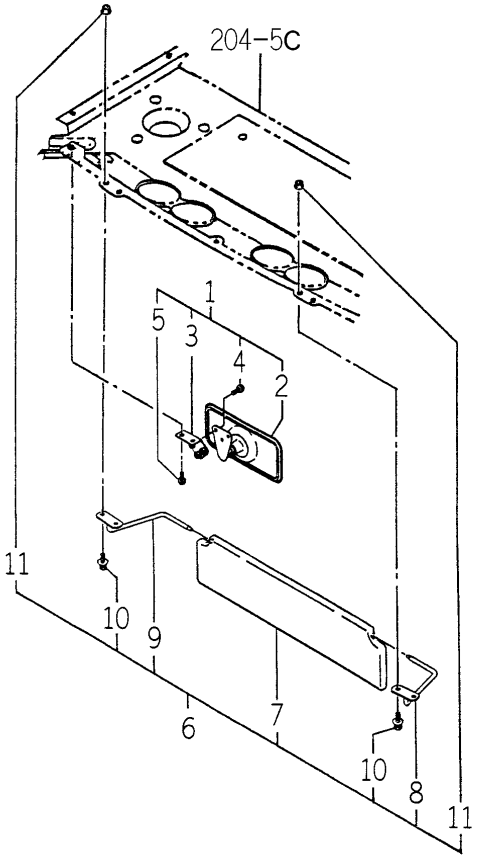

1746-760Z-0100

KEY	PART CODE	DESCRIPTION	SPC	TYPE OF MODEL TG5330 E4	TG5330 E6	TG5390 E4	TG5390 E6	ITC	COL	GRP	REMARKS
1	1729-760-210-00	MIRROR/ROOM SET	T	1		1					
2	1690-760-510-00	MIRROR/ROOM ASSY	T	1		1					
3	1729-760-220-10	STAY COMP	T	1		1		1			
4	1729-705-008-00	SCREW/TRUSS/M05X12	T	3		3					
5	1729-705-009-00	SCREW/TRUSS/M06X16	T	1		1					
6	1729-760-230-00	VISOR/SUN SET	T	1		1					
7	1596-760-500-10	VISOR/SUN SET	T	1		1					
8	1729-760-240-00	STAY/LH COMP	T	1		1					
9	1729-760-250-00	STAY/RH COMP	T	1		1					
10	1690-705-008-00	BOLT/M06X16	T	4		4					
11	V360-260-006-00	NUT/M6	T	4		4					

FIG.254 GENERATOR (60A/C3) SET (TG5330-OPTION)

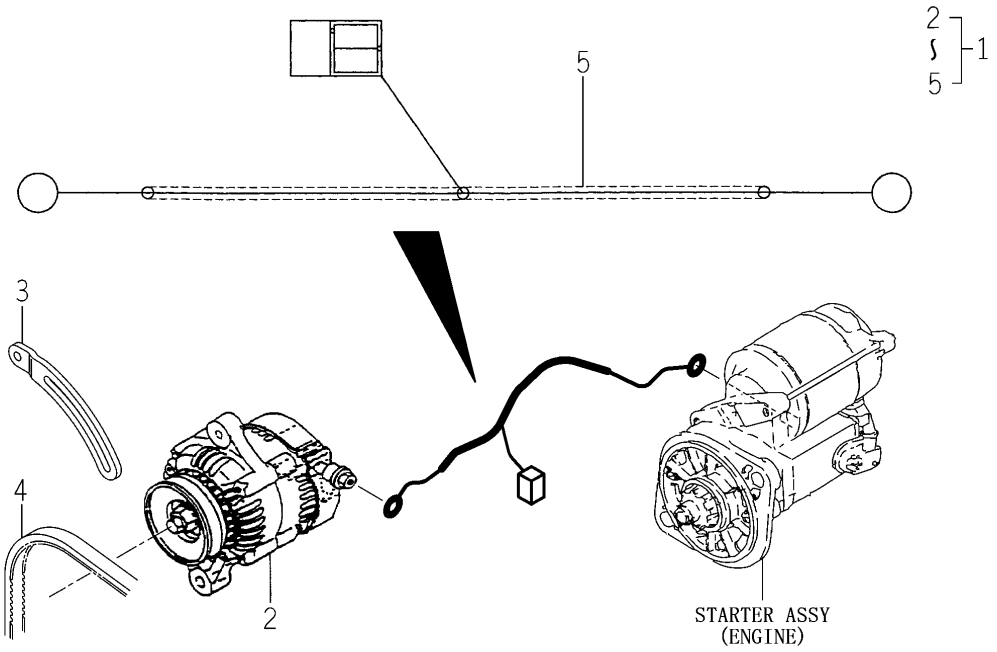

1742-780 -0100

KEY	PART CODE	DESCRIPTION	SPC	TYPE OF MODEL TG5330 E4	TG5330 E6	TG5390 E4	TG5390 E6	ITC	COL	GRP	REMARKS
1	1742-780-300-00	GENERATOR/60A/C SET	T	1	1						
2	6281-200-015-00	GENERATOR ASSY	T	1	1						FIG 279
3	6213-674-015-20	PLATE/ADJUST	T	1	1						
4	6213-671-049-00	BELT/VR5A40.0	T	1	1						
5	1734-650-240-00	HARNESS/ORTERNATER	T	1	1						

FIG.255 GENERATOR (60A/C3T) SET (TG5390-OPTION)

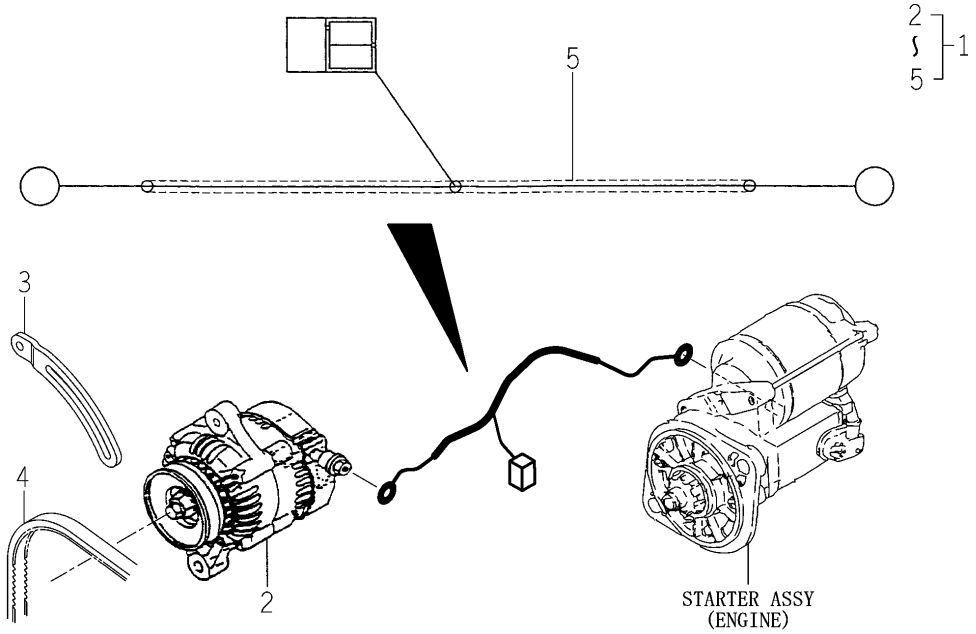

1743-780 -0100

KEY	PART CODE	DESCRIPTION	SPC	TYPE OF MODEL				ITC	COL	GRP	REMARKS
				TG5330 E4	TG5330 E6	TG5390 E4	TG5390 E6				
1	1743-780-300-00	GENERATOR/60A/C3T	T			1	1				
2	6281-200-015-00	GENERATOR ASSY	T			1	1				FIG 279
3	6213-674-015-20	PLATE/ADJUST	T			1	1				
4	6213-671-032-00	BELT/VR5A40.5	T			1	1				
5	1734-650-240-00	HARNESS/ORTERNATER	T			1	1				

FIG.256 COMPONENT PARTS FOR K135-015-000-00 ON Fig.111,112,114

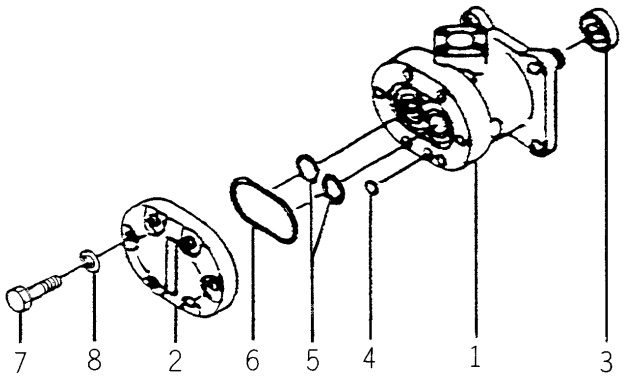

K135-015-000-0D

KEY	PART CODE	DESCRIPTION	SPC	TYPE OF MODEL				ITC	COL	GRP	REMARKS
				TG5330 E4	TG5330 E6	TG5390 E4	TG5390 E6				
1	K135-015-100-00	PUMP GEAR SET	*	1		1	1				
2	K135-015-002-00	COVER,PUMP	*	1		1	1				
3	V744-114-280-70	SEAL,OIL	*	1		1	1				
4	V721-113-105-00	O-RING HS90 G50	*	1		1	1				
5	V720-112-402-20	O-RING/P22	*	4		4	4				
6	V720-111-900-60	O-RING P6 HS90	*	1		1	1				
7	K135-002-009-00	BOLT/M8X28 11T	*	6		6	6				
8	V401-170-008-00	S.W	*	6		6	6				

FIG.257 COMPONENT PARTS FOR K135-018-000-00 ON Fig.113,115,116

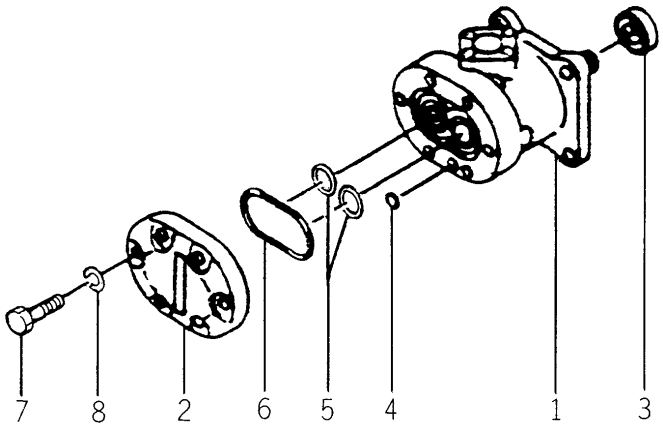

K135-018-000-0B

KEY	PART CODE	DESCRIPTION	SPC	TYPE OF MODEL				ITC	COL	GRP	REMARKS
				TG5330 E4	TG5330 E6	TG5390 E4	TG5390 E6				
1	K135-018-100-00	GEAR/PUMP SET	*	1	1	1	1				
2	K135-015-002-00	COVER,PUMP	*	1	1	1	1				
3	V744-114-280-70	SEAL,OIL	*	1	1	1	1				
4	V721-113-105-00	O-RING HS90 G50	*	1	1	1	1				
5	V720-112-402-20	O-RING/P22	*	4	4	4	4				
6	V720-111-900-60	O-RING P6 HS90	*	1	1	1	1				
7	K135-002-009-00	BOLT/M8X28 11T	*	6	6	6	6				
8	V401-170-008-00	S.W	*	6	6	6	6				

FIG.258 COMPONENT PARTS FOR K135-028-000-00 ON Fig.103,105-107,109,110,245

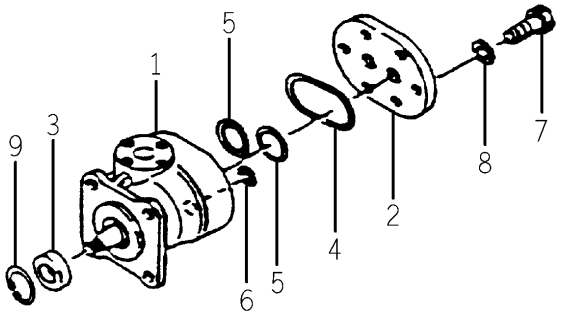

K135-028-000-0C

KEY	PART CODE	DESCRIPTION	SPC	TYPE OF MODEL TG5330 E4	TG5330 E6	TG5390 E4	TG5390 E6	ITC	COL	GRP	REMARKS
1	K135-028-100-10	PUMP SET	*	1 440-	1	1	1 870-				
2	K135-017-006-00	COVER,PUMP	*	1 440-	1	1	1 870-				
3	V744-114-280-70	SEAL,OIL	*	1 440-	1	1	1 870-				
4	V721-113-105-00	O-RING HS90 G50	*	1 440-	1	1	1 870-				
5	V720-112-402-20	O-RING/P22	*	4 440-	4	4	4 870-				
6	V720-111-900-60	O-RING P6 HS90	*	1 440-	1	1	1 870-				
7	K135-002-009-00	BOLT/M8X28 11T	*	6 440-	6	6	6 870-				
8	V401-170-008-00	S.W	*	6 440-	6	6	6 870-				
9	V705-140-028-00	RING,SNAP/28 C	*	1 440-	1	1	1 870-				

FIG.259 COMPONENT PARTS FOR K192-003-000-00 ON Fig.47

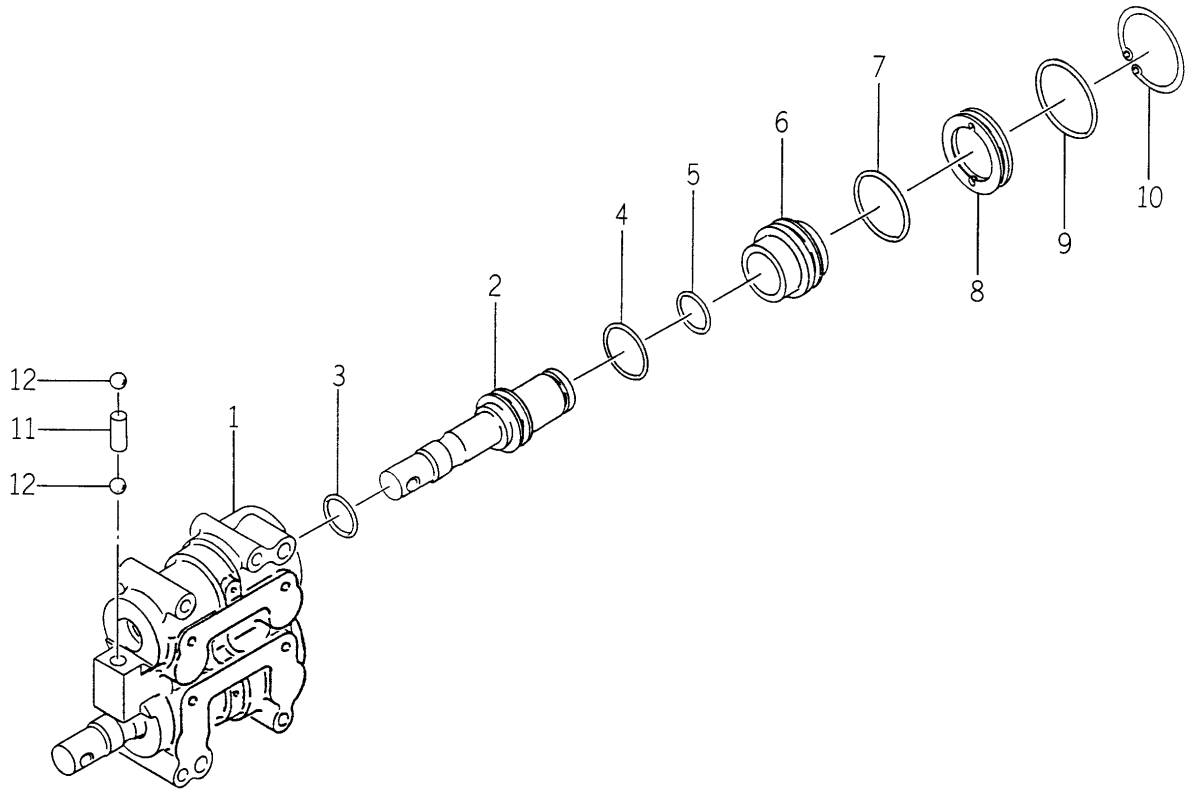

K192-003-000-0D

KEY	PART CODE	DESCRIPTION	SPC	TYPE OF MODEL				ITC	COL	GRP	REMARKS
				TG5330 E4	TG5330 E6	TG5390 E4	TG5390 E6				
1	K192-003-001-00	BODY/CPA3/3	*	1		1					
2	K192-001-002-20	PISTON(A)	*	2		2		1			
3	V720-102-401-80	O-RING/P18	*	2		2					
4	V720-103-502-60	O-RING/P26	*	2		2					
5	V720-102-402-00	O-RING/P20	*	2		2					
6	K192-001-003-20	PISTON(B)	*	2		2		1			
7	V720-103-503-40	O-RING/P34	*	2		2					
8	K192-001-004-10	PLUG	*	2		2					
9	V721-103-104-00	O-RING/G40	*	2		2					
10	V705-140-045-00	RING,SNAP/45 C	*	2		2					
11	K192-001-005-00	PIN/A	*	1		1					
12	K192-001-006-00	STEEL BALL	*	2		2					

FIG.260 COMPONENT PARTS FOR K200-180-000-20 ON Fig.116

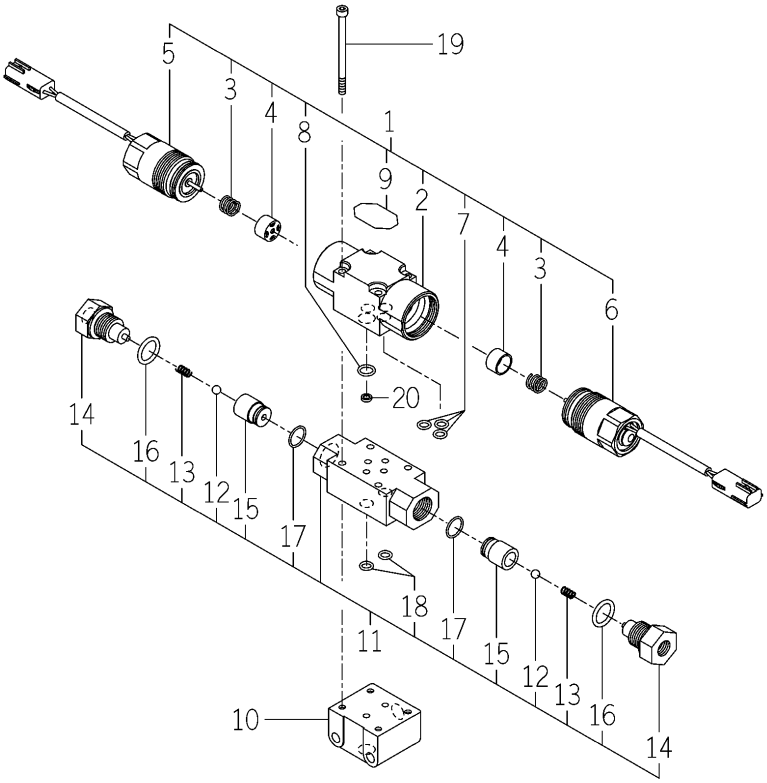

K200-180-000-2D

KEY	PART CODE	DESCRIPTION	SPC	TYPE OF MODEL TG5330 E4	TG5330 E6	TG5390 E4	TG5390 E6	ITC	COL	GRP	REMARKS
1	K273-016-000-00	VALVE/SOLENOID ASSY	*			1					
2	K273-016-100-00	VALVE/BDA/016 SET	*			1					
3	K270-001-003-10	SPRING/HC012	*			2					
4	K270-001-004-10	BASE/SPRING	*			2					
5	K273-008-300-00	SOLENOID/DL/BL	*			1					
6	K273-008-400-00	SOLENOID/DL/G	*			1					
7	V720-111-900-70	O-RING/P 7	*			3					
8	V720-111-901-00	RING/O	*			1					
9	K273-001-002-00	DECAL/BDA	*			1					
10	K200-180-001-00	BASE/SOLENOID	*			1					
11	3676-352-260-10	VALVE/CHECK ASSY	*			1					
12	3676-352-264-00	BALL,STEEL	*			2					
13	K110-001-106-00	SPRING	*			2					
14	3676-352-262-00	BOLT	*			2					
15	3676-352-261-00	PLUG	*			2					
16	V720-112-401-80	O-RING/P18	*			2					
17	V723-111-501-50	RING/O	*			2					
18	V720-111-900-70	O-RING/P 7	*			2					
19	V220-540-507-50	SCREW/SOCKET	*			4					
20	K200-124-106-00	FILTER/08	*			1					

FIG.261 COMPONENT PARTS FOR K200-182-000-00 ON Fig.113,115

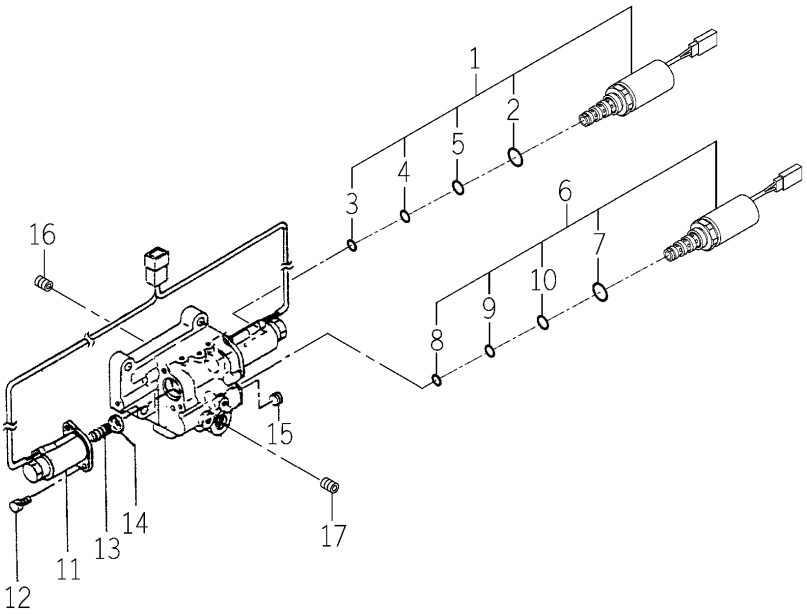

K200-182-000-0B

KEY	PART CODE	DESCRIPTION	SPC	TYPE OF MODEL TG5330 E4	TG5330 E6	TG5390 E4	TG5390 E6	ITC	COL	GRP	REMARKS
1	K290-001-000-20	VALVE/PRV/L ASSY	*	1 893-	1 934-	1 1184-	1 1213-				
2	V720-112-402-00	O-RING/P20	*	1 893-	1 934-	1 1184-	1 1213-				
3	K290-001-001-00	RING/O(AS568/013)	*	1 893-	1 934-	1 1184-	1 1213-				
4	K290-001-002-00	RING/O(AS568/014)	*	1 893-	1 934-	1 1184-	1 1213-				
5	K290-001-003-00	RING/O(AS568/015)	*	1 893-	1 934-	1 1184-	1 1213-				
6	K290-003-000-30	VALVE/PRV/B ASSY	*	1 893-	1 934-	1 1184-	1 1213-				
7	V720-112-402-00	O-RING/P20	*	1 893-	1 934-	1 1184-	1 1213-				
8	K290-001-001-00	RING/O(AS568/013)	*	1 893-	1 934-	1 1184-	1 1213-				
9	K290-001-002-00	RING/O(AS568/014)	*	1 893-	1 934-	1 1184-	1 1213-				
10	K290-001-003-00	RING/O(AS568/015)	*	1 893-	1 934-	1 1184-	1 1213-				
11	K200-096-300-00	SOLENOID/03/2 SET	*	1 893-	1 934-	1 1184-	1 1213-				
12	4902-610-423-00	SCREW/SOCKET	*	4 893-	4 934-	4 1184-	4 1213-				
13	K200-096-203-00	SPRING/HC020	*	2 893-	2 934-	2 1184-	2 1213-				
14	K200-096-202-00	SPRING/PLATE/03	*	2 893-	2 934-	2 1184-	2 1213-				
15	V780-140-000-2T	PLUG/SCREW/SEAL	*	1 893-	1 934-	1 1184-	1 1213-				
16	V783-160-501-10	ORIFICESETS/M5X1.1	*	1 893-	1 934-	1 1184-	1 1213-				
17	V783-160-601-80	ORIFICESETS/M6X1.8	*	1 893-	1 934-	1 1184-	1 1213-				

FIG.262 COMPONENT PARTS FOR K200-197-000-00 ON Fig.103

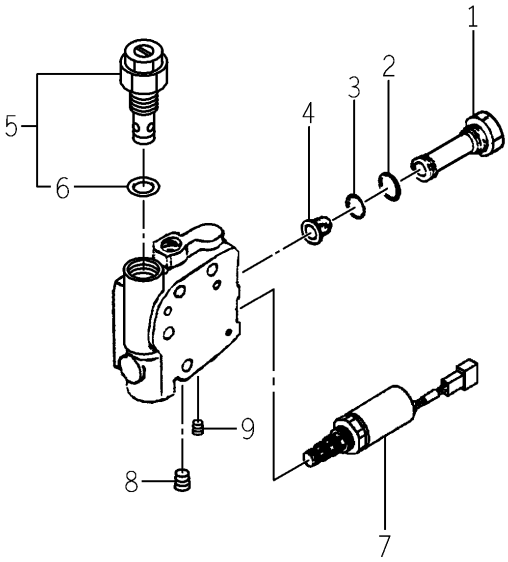

K200-197-000-0D

KEY	PART CODE	DESCRIPTION	SPC	TYPE OF MODEL TG5330 E4	TG5330 E6	TG5390 E4	TG5390 E6	ITC	COL	GRP	REMARKS
1	K200-197-002-00	FILTER/PLUG	*				1870-1				
2	V720-112-402-00	O-RING/P20	*				1870-1				
3	K200-197-003-00	RING/O/F404/1017	*				1870-1				
4	1650-508-002-00	FILTER/LINE/12X18X15	*				1870-1				
5	K250-057-000-00	VALVE/RELIEF ASSY	*				1870-1				
6	V720-112-402-00	O-RING/P20	*				1870-1				
7	K290-003-000-30	VALVE/PRV/B ASSY	*			1-774					
8	V780-140-000-2T	PLUG/SCREW/SEAL	*				1869-1				
9	V780-140-000-1T	PLUG/SCREW/SEAL	*			1-774					

FIG.263 COMPONENT PARTS FOR K211-073-000-00 ON Fig.102-107,109

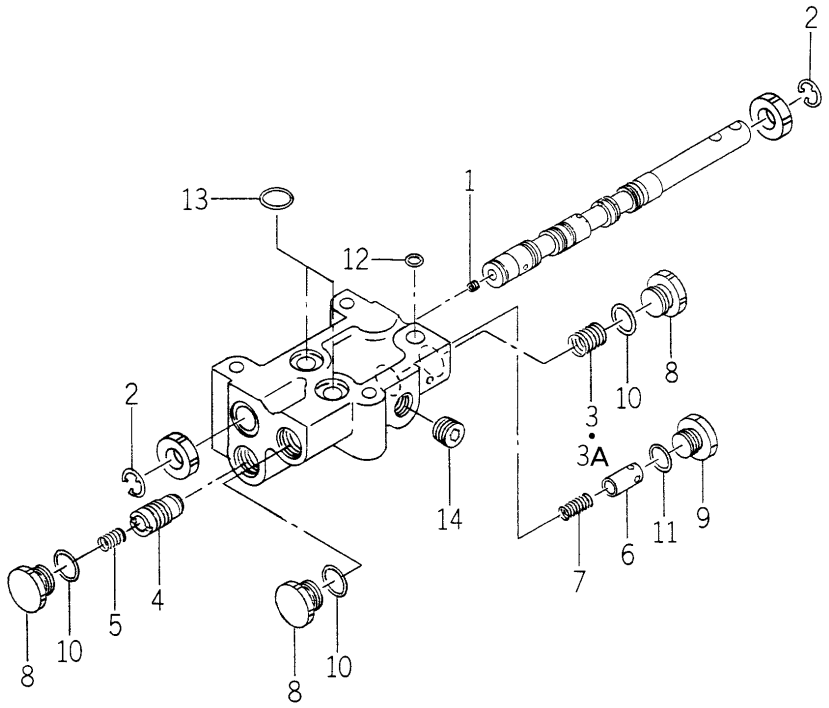

K211-073-000-0C

KEY	PART CODE	DESCRIPTION	SPC	TYPE OF MODEL TG5330 E4	TG5330 E6	TG5390 E4	TG5390 E6	ITC	COL	GRP	REMARKS
1	K211-003-002-00	BOLT/M4X5	*	1	1	1	1				
2	V710-140-009-00	RING,SNAP/ 9 E	*	2	2	2	2				
3	K211-008-018-10	SPRING/HC029	*	1 -27	1 -27	1 -25	1 -25				
3A	K211-008-010-00	SPRING/HC19	*	1 28-	1 28-	1	1 26-				
4	K211-008-009-00	POPPET/CHECK	*	1	1	1	1				
5	K211-001-006-20	SPRING	*	1	1	1	1				
6	K211-073-004-00	POPPET/073	*	1	1	1	1				
7	K211-073-005-00	SPRING/HC018	*	1	1	1	1				
8	K211-008-011-00	PLUG	*	3	3	3	3				
9	K211-001-008-00	PLUG	*	1	1	1	1				
10	V720-112-401-40	O-RING/P14	*	3	3	3	3				
11	V720-112-401-20	O-RING/P12	*	1	1	1	1				
12	V720-111-900-70	O-RING/P 7	*	1	1	1	1				
13	V720-112-401-40	O-RING/P14	*	2	2	2	2				
14	V780-140-000-4T	PLUG/SCREW/SEAL	*	1	1	1	1				

FIG.264 COMPONENT PARTS FOR K211-074-000-00,10 ON Fig.117,118

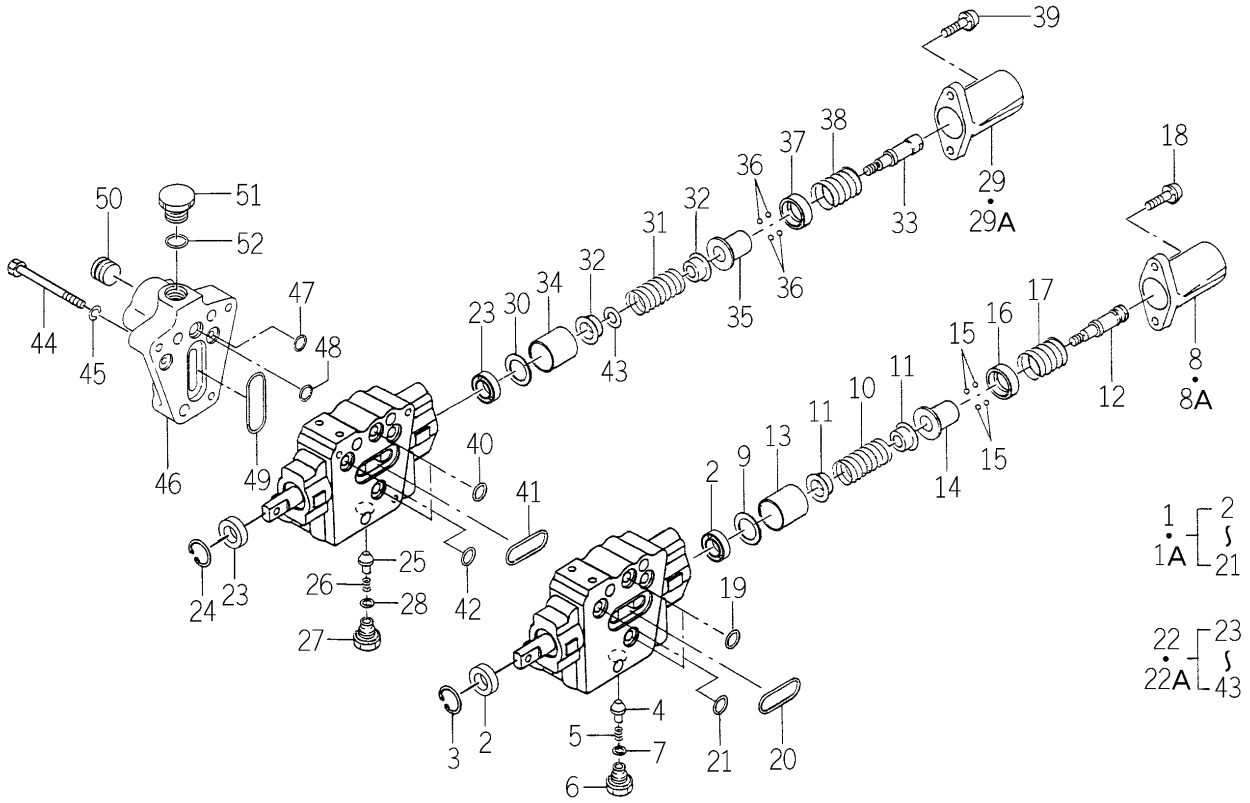

K211-074-000-2G

KEY	PART CODE	DESCRIPTION	SPC	TYPE OF MODEL TG5330 E4	TG5330 E6	TG5390 E4	TG5390 E6	ITC	COL	GRP	REMARKS
1	K211-074-100-00	VALVE,BOOM SET	*	1 -66	1 -66	1 -208	1 -208				
1A	K211-074-100-10	VALVE,BOOM SET	*	1 67-	1 67-	1 209-	1 209-	1			
2	K211-004-007-00	SEAL,OIL/TC4,14247	*	2	2	2	2				
3	V705-140-024-00	RING,SNAP	*	1	1	1	1				
4	K211-074-111-00	POPPET/074/2	*	1	1 -566	1	1 -881				
5	K110-001-106-00	SPRING	*	1	1	1	1				
6	K211-074-112-00	PLUG/M14	*	1	1	1	1				
7	V720-112-401-20	O-RING/P12	*	1	1	1	1				
8	K211-074-103-00	COVER/DVS2/074	*	1 -66	1 -66	1 -208	1 -208				
8A	K211-074-103-10	COVER/DVS2/074	*	1 67-	1 67-	1 209-	1 209-	1			
9	3104-171-003-00	WASHER/19X28X02	*	1	1	1	1				
10	K211-074-110-00	SPRING/HC043	*	1	1	1	1				
11	K211-074-106-00	STOPPER,SPRING	*	2	2	2	2				
12	K211-074-104-10	HEAD/SPOOL/074/1	*	1	1	1	1				
13	K211-074-108-00	SLEEVE	*	1	1	1	1				
14	K211-074-105-00	SLEEVE/DETENT	*	1	1	1	1				
15	K211-074-115-00	STEELBALL	*	4	4	4	4				
16	K211-074-113-00	COLLAR	*	1	1	1	1				
17	K211-074-109-00	SPRING/HC029	*	1	1	1	1				
18	V120-266-002-00	SCREW,SEMS	*	2	2	2	2				
19	V720-112-401-20	O-RING/P12	*	2	2	2	2				
20	V720-113-503-20	RING/O	*	1	1	1	1				
21	V720-112-401-00	O-RING/P10	*	2	2	2	2				
22	K211-074-200-00	VALVE,BUCKET SET	*	1 -66	1 -66	1 -208	1 -208				
22A	K211-074-200-10	VALVE,BUCKET SET	*	1 67-	1 67-	1 209-	1 209-	1			
23	K211-004-007-00	SEAL,OIL/TC4,14247	*	2	2	2	2				
24	V705-140-024-00	RING,SNAP	*	1	1	1	1				
25	K211-074-111-00	POPPET/074/2	*	1	1 -566	1	1 -881				
26	K110-001-106-00	SPRING	*	1	1	1	1				
27	K211-074-112-00	PLUG/M14	*	1	1	1	1				

FIG.264 COMPONENT PARTS FOR K211-074-000-00,10 ON Fig.117,118

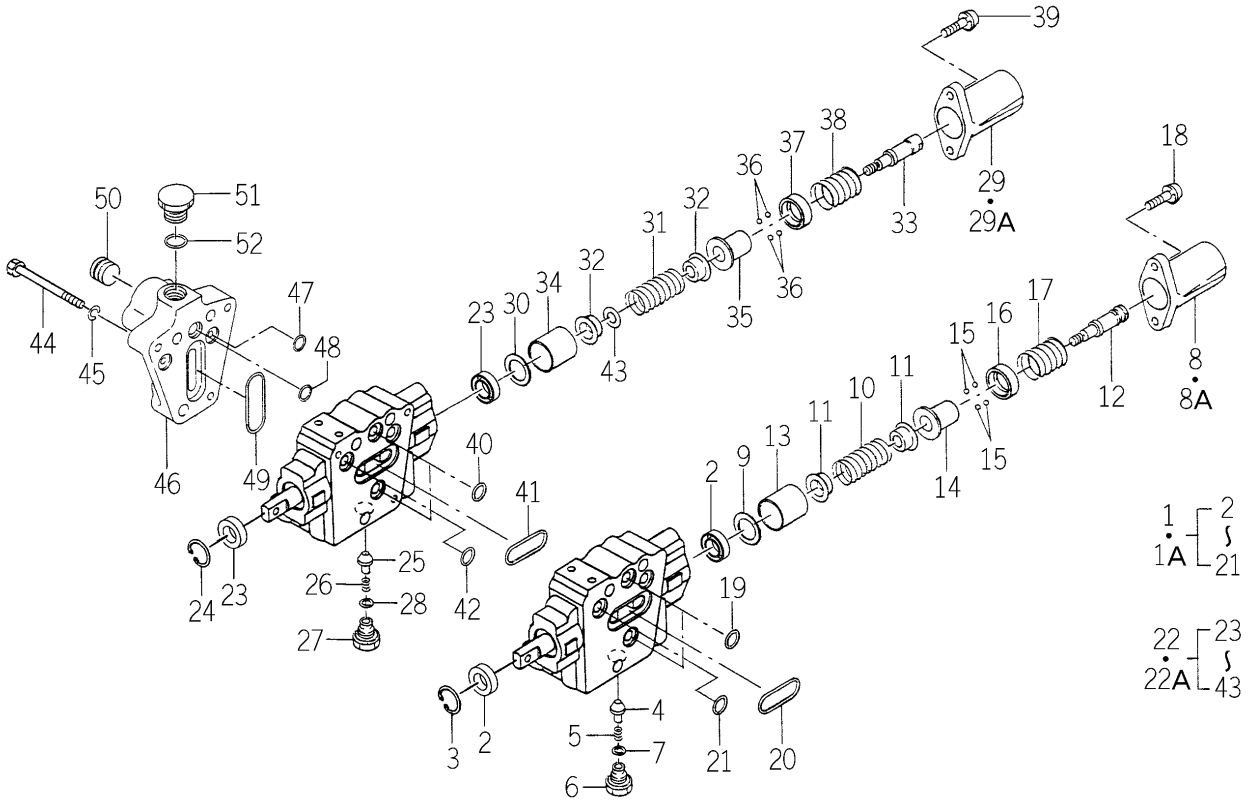

K211-074-000-2G

KEY	PART CODE	DESCRIPTION	SPC	TYPE OF MODEL TG5330 E4	TG5330 E6	TG5390 E4	TG5390 E6	ITC	COL	GRP	REMARKS
28	V720-112-401-20	O-RING/P12	*	1	1	1	1				
29	K211-074-103-00	COVER/DVS2/074	*	1 -66	1 -66	1 -208	1 -208				
29A	K211-074-103-10	COVER/DVS2/074	*	1 67-	1 67-	1 209-	1 209-	1			
30	3104-171-003-00	WASHER/19X28X02	*	1	1	1	1				
31	K211-074-110-00	SPRING/HC043	*	1	1	1	1				
32	K211-074-106-00	STOPPER,SPRING	*	2	2	2	2				
33	K211-074-204-10	HEAD/SPOOL/074/2	*	1	1	1	1				
34	K211-074-108-00	SLEEVE	*	1	1	1	1				
35	K211-074-105-00	SLEEVE/DETENT	*	1	1	1	1				
36	K211-074-115-00	STEELBALL	*	4	4	4	4				
37	K211-074-113-00	COLLAR	*	1	1	1	1				
38	K211-074-109-00	SPRING/HC029	*	1	1	1	1				
39	V120-266-002-00	SCREW,SEMS	*	2	2	2	2				
40	V720-112-401-20	O-RING/P12	*	2	2	2	2				
41	V720-113-503-20	RING/O	*	1	1	1	1				
42	V720-112-401-00	O-RING/P10	*	2	2	2	2				
43	K211-074-203-00	WASHER/10X17X2	*	1	1	1	1				
44	V200-260-607-00	BOLT/M 6X70	*	3	3	3	3				
45	V401-160-006-00	WASHER,SP/M 6	*	3	3	3	3				
46	1742-508-004-00	COVER	*	1	1	1	1				
47	V720-112-401-00	O-RING/P10	*	2	2	2	2				
48	V720-112-401-20	O-RING/P12	*	1	1	1	1				
49	V720-113-503-80	RING/O	*	1	1	1	1				
50	V780-140-000-6T	PLUG/SCREW/SEAL	*	2	2	2	2				
51	K211-074-002-00	PLUG/M18	*	1	1	1	1				
52	V720-112-401-60	O-RING/P16	*	1	1	1	1				

FIG.265 COMPONENT PARTS FOR K256-004-000-00 ON Fig.113-115

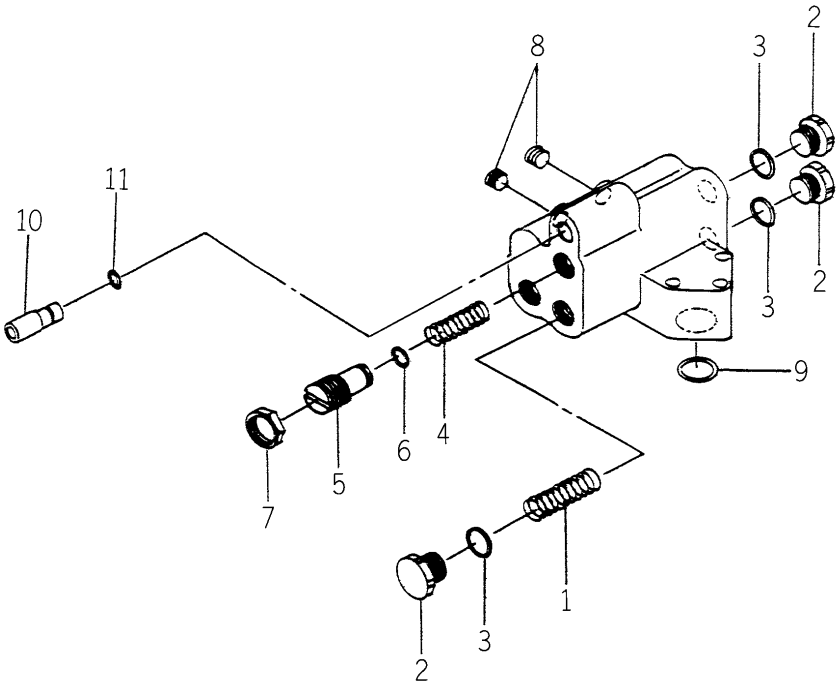

K256-004-000-0A

KEY	PART CODE	DESCRIPTION	SPC	TYPE OF MODEL TG5330 E4	TG5330 E6	TG5390 E4	TG5390 E6	ITC	COL	GRP	REMARKS
1	K256-001-004-10	SPRING(HC054)	*	1	1	1	1				
2	K211-008-011-00	PLUG	*	3	3	3	3				
3	V720-112-401-40	O-RING/P14	*	3	3	3	3				
4	K256-001-005-00	SPRING(HC042)	*	1	1	1	1				
5	K256-001-006-00	ADJUST SCREW(F)	*	1	1	1	1				
6	V720-112-401-00	O-RING/P10	*	1	1	1	1				
7	K250-008-005-00	LOCK-NUT	*	1	1	1	1				
8	V780-140-000-2T	PLUG/SCREW/SEAL	*	2	2	2	2				
9	V720-112-402-00	O-RING/P20	*	1	1	1	1				
10	K256-001-007-10	PIPE(30)	*	1	1	1	1				
11	V723-101-500-80	RING/O	*	1	1	1	1				

FIG.266 COMPONENT PARTS FOR 1564-527-300-40 ON Fig.125,126

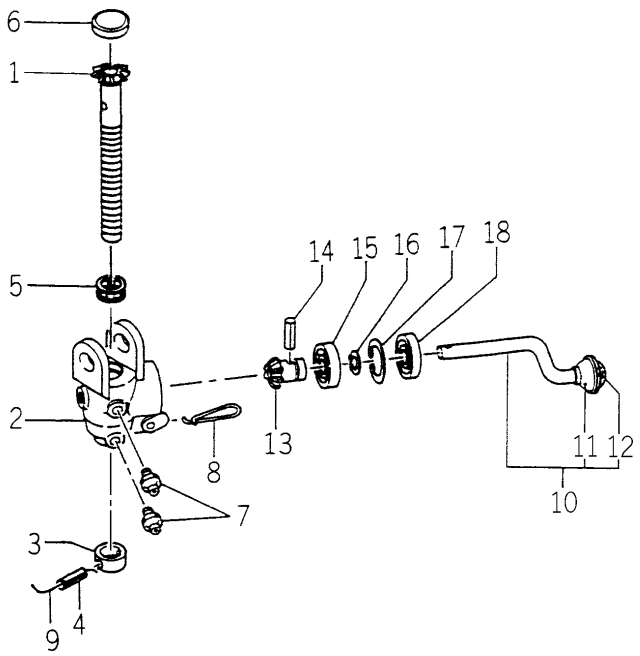

1564-527-300-4F

KEY	PART CODE	DESCRIPTION	SPC	TYPE OF MODEL TG5330 E4	TG5330 E6	TG5390 E4	TG5390 E6	ITC	COL	GRP	REMARKS
1	1564-527-220-10	GEAR,BEVEL,RH COMP	*	1	1	1	1				
2	1564-527-004-00	CASE,BEVEL	*	1	1	1	1				
3	1445-514-002-00	COLLAR(20X30X10)	*	1	1	1	1				
4	V580-140-503-20	PIN,SPRING/5 X32 W	*	1	1	1	1				
5	V610-115-110-40	BEARING,TB/51104	*	1	1	1	1				
6	1560-527-002-00	CAP/SEAL/38	*	1	1	1	1				
7	V762-150-000-00	NIPPLE,GREASE/B-M6F	*	2	2	2	2				
8	1445-514-004-00	SPRING,LOCK	*	1	1	1	1				
9		WIRE	*	1	1	1	1				
10	1560-527-220-00	LEVER COMP	*	1	1	1	1				
11	1302-726-502-00	GRIP	*	1	1	1	1				
12	V411-260-006-00	WASHER / M6	*	1	1	1	1				
13	1696-515-001-00	GEAR/BEVEL/10	*	1	1	1	1				
14	V580-140-501-80	PIN,SPRING/5 X18 W	*	1	1	1	1				
15	V600-110-600-40	BEARING,RB/6004	*	1	1	1	1				
16	V704-140-020-00	RING,SNAP/20C	*	1	1	1	1				
17	V705-140-042-00	RING,SNAP/42 C	*	1	1	1	1				
18	V744-120-420-80	SEAL,OIL/TC20428	*	1	1	1	1				

FIG.267 COMPONENT PARTS FOR 1640-530-600-10 ON Fig.119,120,246-249

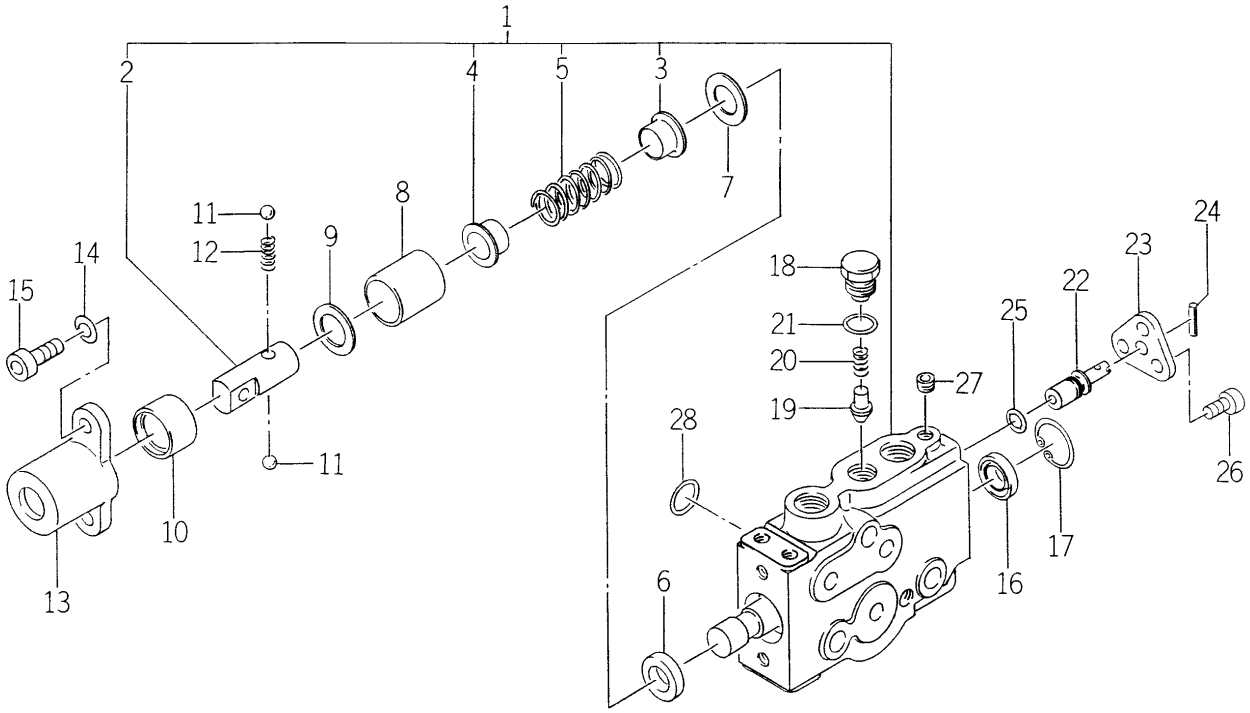

1640-530-600-1D

KEY	PART CODE	DESCRIPTION	SPC	TYPE OF MODEL TG5330 E4	TG5330 E6	TG5390 E4	TG5390 E6	ITC	COL	GRP	REMARKS
1	1640-530-610-10	VALVE SET	*	1		1					
1	1640-530-610-10	VALVE SET	*	2	2 -120	2	2 -393				
2	1640-530-613-00	HEAD/SPOOL	*	1		1					
2	1640-530-613-00	HEAD/SPOOL	*	2	2 -120	2	2 -393				
3	1640-530-614-00	STOPPER/SPRING/A	*	1		1					
3	1640-530-614-00	STOPPER/SPRING/A	*	2	2 -120	2	2 -393				
4	1640-530-615-00	STOPPER/SPRING/B	*	1		1					
4	1640-530-615-00	STOPPER/SPRING/B	*	2	2 -120	2	2 -393				
5	K211-012-006-00	SPRING/HC042	*	1		1					
5	K211-012-006-00	SPRING/HC042	*	2	2 -120	2	2 -393				
6	K211-004-007-00	SEAL,OIL/TC4,14247	*	1		1					
6	K211-004-007-00	SEAL,OIL/TC4,14247	*	2	2 -120	2	2 -393				
7	K211-004-006-00	COLLAR	*	1		1					
7	K211-004-006-00	COLLAR	*	2	2 -120	2	2 -393				
8	1640-530-622-00	SLEEVE	*	1		1					
8	1640-530-622-00	SLEEVE	*	2	2 -120	2	2 -393				
9	1640-530-623-00	COLLAR/19X28X02	*	1		1					
9	1640-530-623-00	COLLAR/19X28X02	*	2	2 -120	2	2 -393				
10	1640-530-624-00	SLEEVE/DETENT	*	1		1					
10	1640-530-624-00	SLEEVE/DETENT	*	2	2 -120	2	2 -393				
11	V682-200-000-60	BALL	*	2		2					
11	V682-200-000-60	BALL	*	4	4 -120	4	4 -393				
12	1640-530-625-00	SPRING/HC015	*	1		1					
12	1640-530-625-00	SPRING/HC015	*	2	2 -120	2	2 -393				
13	1640-530-626-00	COVER	*	1		1					
13	1640-530-626-00	COVER	*	2	2 -120	2	2 -393				
14	V401-160-008-00	WASHER,SP/M 8	*	2		2					
14	V401-160-008-00	WASHER,SP/M 8	*	4	4 -120	4	4 -393				
15	V220-540-802-00	SCREW/SOCKET	*	2		2					
15	V220-540-802-00	SCREW/SOCKET	*	4	4 -120	4	4 -393				

FIG.267 COMPONENT PARTS FOR 1640-530-600-10 ON Fig.119,120,246-249

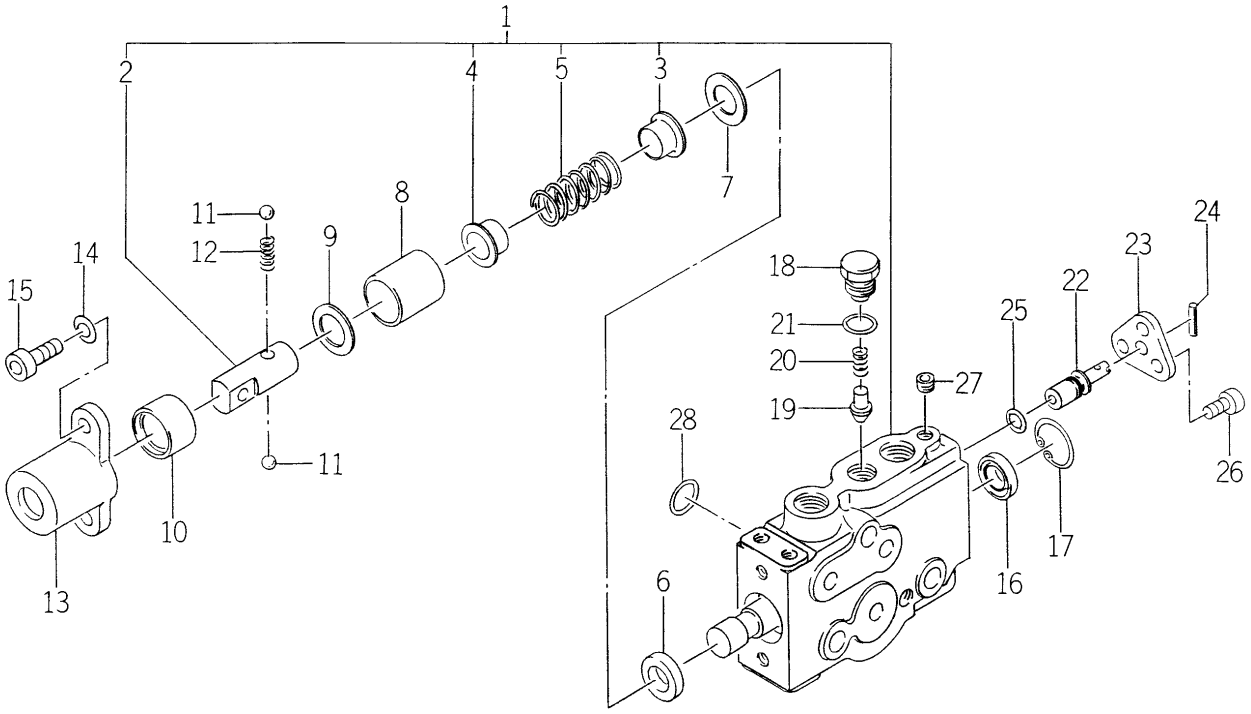

1640-530-600-1D

KEY	PART CODE	DESCRIPTION	SPC	TYPE OF MODEL TG5330 E4	TG5330 E6	TG5390 E4	TG5390 E6	ITC	COL	GRP	REMARKS
16	K211-004-007-00	SEAL,OIL/TC4,14247	*	1		1					
16	K211-004-007-00	SEAL,OIL/TC4,14247	*	2	2 -120	2	2 -393				
17	V705-140-024-00	RING,SNAP	*	1		1					
17	V705-140-024-00	RING,SNAP	*	2	2 -120	2	2 -393				
18	1640-530-628-00	PLUG/M14	*	1		1					
18	1640-530-628-00	PLUG/M14	*	2	2 -120	2	2 -393				
19	1640-530-629-00	POPPET	*	1		1					
19	1640-530-629-00	POPPET	*	2	2 -120	2	2 -393				
20	K110-001-106-00	SPRING	*	1		1					
20	K110-001-106-00	SPRING	*	2	2 -120	2	2 -393				
21	V720-112-401-20	O-RING/P12	*	1		1					
21	V720-112-401-20	O-RING/P12	*	2	2 -120	2	2 -393				
22	1640-530-631-00	SPOOL/DELECT	*	1		1					
22	1640-530-631-00	SPOOL/DELECT	*	2	2 -120	2	2 -393				
23	1640-530-632-00	PLATE	*	1		1					
23	1640-530-632-00	PLATE	*	2	2 -120	2	2 -393				
24	V580-140-302-50	SPRING PIN (W)	*	1		1					
24	V580-140-302-50	SPRING PIN (W)	*	2	2 -120	2	2 -393				
25	V720-111-900-70	O-RING/P 7	*	1		1					
25	V720-111-900-70	O-RING/P 7	*	2	2 -120	2	2 -393				
26	V220-540-601-00	BOLT	*	3		3					
26	V220-540-601-00	BOLT	*	6	6 -120	6	6 -393				
27	K200-014-007-00	PLUG/SEAL	*	3		3					
27	K200-014-007-00	PLUG/SEAL	*	6	6 -120	6	6 -393				
28	V720-112-401-40	O-RING/P14	*	3		3					
28	V720-112-401-40	O-RING/P14	*	6	6 -120	6	6 -393				

FIG.268 COMPONENT PARTS FOR 1696-658-340-00,10 ON Fig.188,251

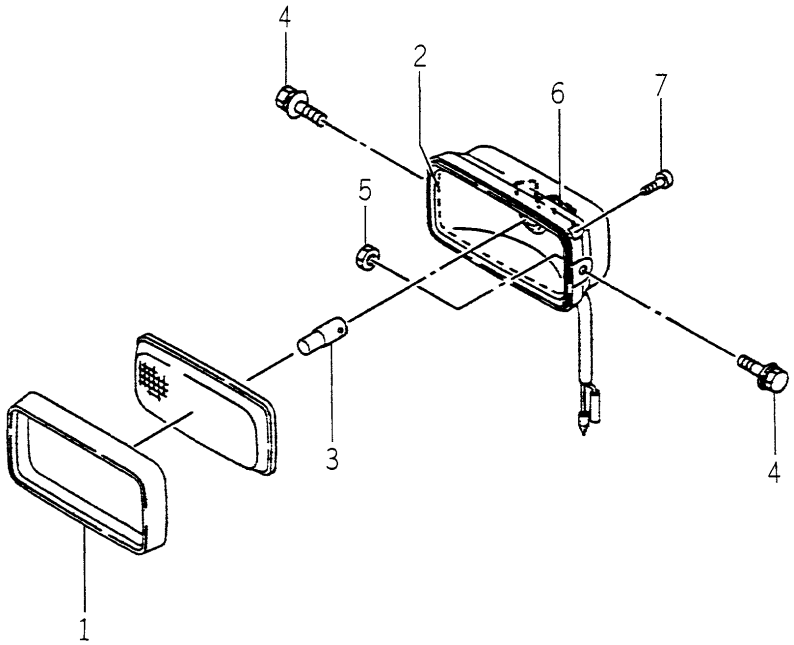

1696-658-340-1E

KEY	PART CODE	DESCRIPTION	SPC	TYPE OF MODEL TG5330 E4	TG5330 E6	TG5390 E4	TG5390 E6	ITC	COL	GRP	REMARKS
1	1696-658-342-00	RIM	*	2		2					
2	1696-658-344-00	INSULATOR	*	2		2					
3	1696-658-345-00	VALVE/HALOGEN/12V35W	*	2		2					
4	V210-360-601-60	BOLT(SP)/M6X16	*	4		4					
5	1656-658-402-00	NUT/M06	*	4		4					
6	1696-658-347-00	SPRING	*	2		2					
7	V195-164-020-40	BOLT	*	8		8					

FIG.269 COMPONENT PARTS FOR 1719-511-350-00 ON Fig.119,121

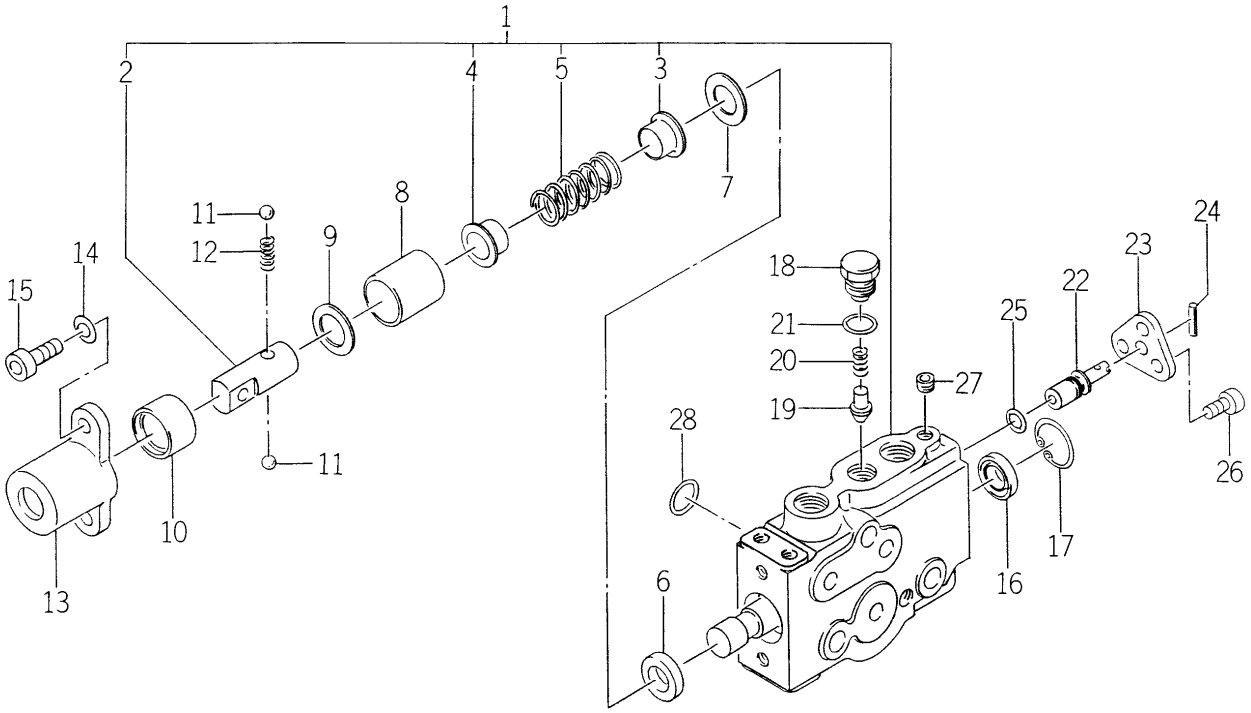

1719-511-350-0

KEY	PART CODE	DESCRIPTION	SPC	TYPE OF MODEL TG5330 E4	TG5330 E6	TG5390 E4	TG5390 E6	ITC	COL	GRP	REMARKS
1	1640-530-610-10	VALVE SET	*		2 121-		2 394-				
1	1640-530-610-10	VALVE SET	*	1 296-		1 660-					
2	1640-530-613-00	HEAD/SPOOL	*		2 121-		2 394-				
2	1640-530-613-00	HEAD/SPOOL	*	1 296-		1 660-					
3	1640-530-614-00	STOPPER/SPRING/A	*		2 121-		2 394-				
3	1640-530-614-00	STOPPER/SPRING/A	*	1 296-		1 660-					
4	1640-530-615-00	STOPPER/SPRING/B	*		2 121-		2 394-				
4	1640-530-615-00	STOPPER/SPRING/B	*	1 296-		1 660-					
5	K211-012-006-00	SPRING/HC042	*		2 121-		2 394-				
5	K211-012-006-00	SPRING/HC042	*	1 296-		1 660-					
6	K211-004-007-00	SEAL,OIL/TC4,14247	*		2 121-		2 394-				
6	K211-004-007-00	SEAL,OIL/TC4,14247	*	1 296-		1 660-					
7	K211-004-006-00	COLLAR	*		2 121-		2 394-				
7	K211-004-006-00	COLLAR	*	1 296-		1 660-					
8	1640-530-622-00	SLEEVE	*		2 121-		2 394-				
8	1640-530-622-00	SLEEVE	*	1 296-		1 660-					
9	1640-530-623-00	COLLAR/19X28X02	*		2 121-		2 394-				
9	1640-530-623-00	COLLAR/19X28X02	*	1 296-		1 660-					
10	1640-530-624-00	SLEEVE/DETENT	*		2 121-		2 394-				
10	1640-530-624-00	SLEEVE/DETENT	*	1 296-		1 660-					
11	V682-200-000-60	BALL	*		4 121-		4 394-				
11	V682-200-000-60	BALL	*	2 296-		2 660-					
12	1640-530-625-00	SPRING/HC015	*		2 121-		2 394-				
12	1640-530-625-00	SPRING/HC015	*	1 296-		1 660-					
13	1640-530-626-00	COVER	*		2 121-		2 394-				
13	1640-530-626-00	COVER	*	1 296-		1 660-					
14	V401-160-008-00	WASHER,SP/M 8	*		4 121-		4 394-				
14	V401-160-008-00	WASHER,SP/M 8	*	2 296-		2 660-					
15	V220-540-802-00	SCREW/SOCKET	*		4 121-		4 394-				
15	V220-540-802-00	SCREW/SOCKET	*	2 296-		2 660-					

FIG.269 COMPONENT PARTS FOR 1719-511-350-00 ON Fig.119,121

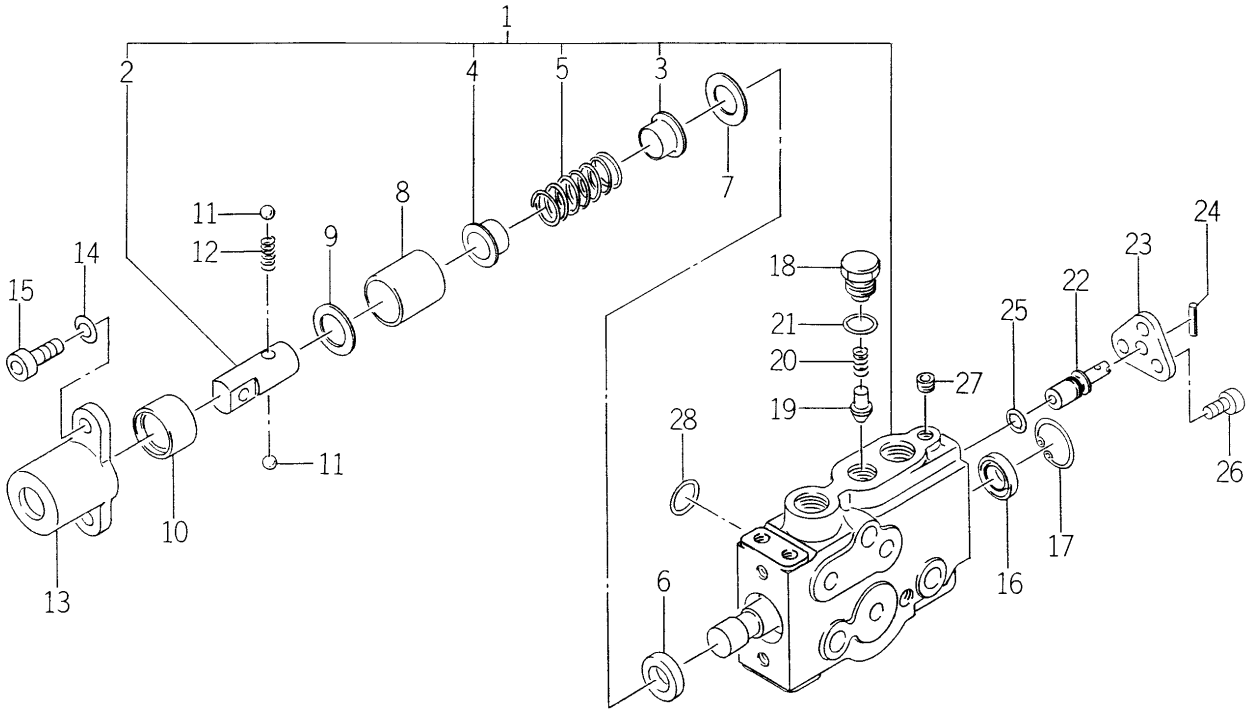

1719-511-350-0

KEY	PART CODE	DESCRIPTION	SPC	TYPE OF MODEL TG5330 E4	TG5330 E6	TG5390 E4	TG5390 E6	ITC	COL	GRP	REMARKS
16	K211-004-007-00	SEAL,OIL/TC4,14247	*		2 121-		2 394-				
16	K211-004-007-00	SEAL,OIL/TC4,14247	*	1 296-		1 660-					
17	V705-140-024-00	RING,SNAP	*		2 121-		2 394-				
17	V705-140-024-00	RING,SNAP	*	1 296-		1 660-					
18	1640-530-628-00	PLUG/M14	*		2 121-		2 394-				
18	1640-530-628-00	PLUG/M14	*	1 296-		1 660-					
19	1640-530-629-00	POPPET	*		2 121-		2 394-				
19	1640-530-629-00	POPPET	*	1 296-		1 660-					
20	K110-001-106-00	SPRING	*		2 121-		2 394-				
20	K110-001-106-00	SPRING	*	1 296-		1 660-					
21	V720-112-401-20	O-RING/P12	*		2 121-		2 394-				
21	V720-112-401-20	O-RING/P12	*	1 296-		1 660-					
22	1640-530-631-00	SPOOL/DELECT	*		2 121-		2 394-				
22	1640-530-631-00	SPOOL/DELECT	*	1 296-		1 660-					
23	1640-530-632-00	PLATE	*		2 121-		2 394-				
23	1640-530-632-00	PLATE	*	1 296-		1 660-					
24	V580-140-302-50	SPRING PIN (W)	*		2 121-		2 394-				
24	V580-140-302-50	SPRING PIN (W)	*	1 296-		1 660-					
25	V720-111-900-70	O-RING/P 7	*		2 121-		2 394-				
25	V720-111-900-70	O-RING/P 7	*	1 296-		1 660-					
26	V220-540-601-00	BOLT	*		6 121-		6 394-				
26	V220-540-601-00	BOLT	*	3 296-		3 660-					
27	K200-014-007-00	PLUG/SEAL	*		6 121-		6 394-				
27	K200-014-007-00	PLUG/SEAL	*	3 296-		3 660-					
28	V720-112-401-40	O-RING/P14	*		6 121-		6 394-				
28	V720-112-401-40	O-RING/P14	*	3 296-		3 660-					

FIG.270 COMPONENT PARTS FOR 1723-407-200-10-30 ON Fig.84

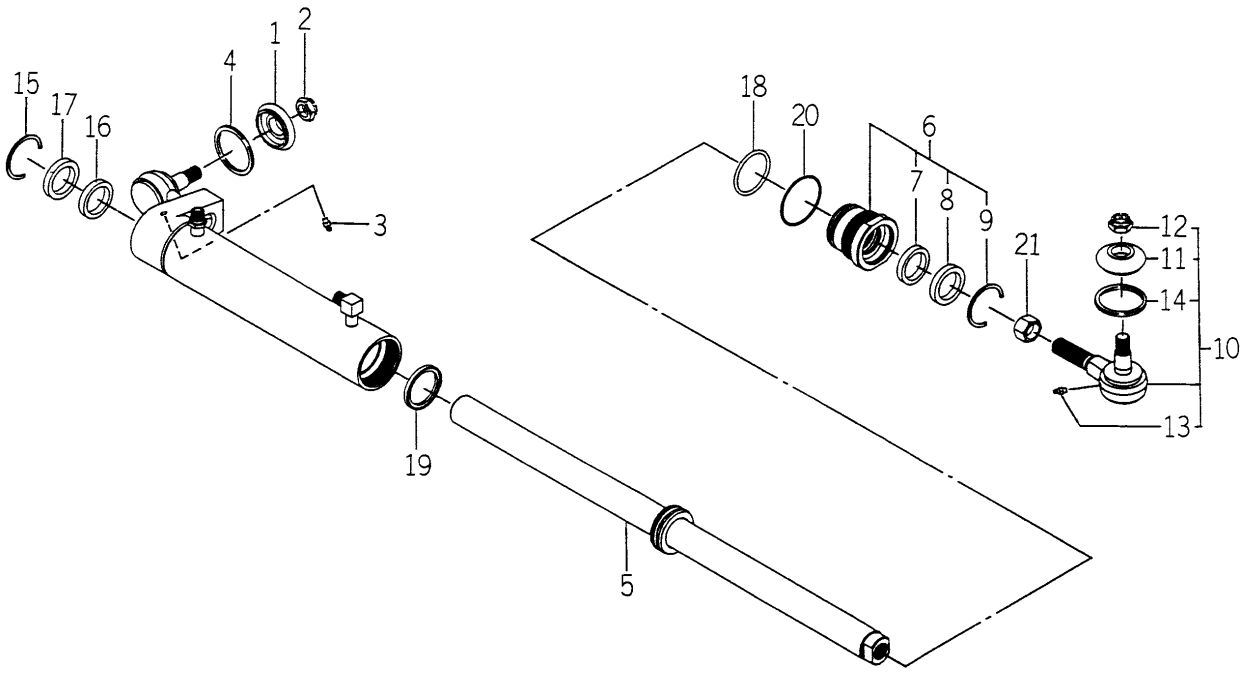

1723-407-200-3H

KEY	PART CODE	DESCRIPTION	SPC	TYPE OF MODEL TG5330 E4	TG5330 E6	TG5390 E4	TG5390 E6	ITC	COL	GRP	REMARKS
1	1723-407-262-00	DUSTCOVER	*	1	1	1	1				
2	V327-262-214-00	NUT/M14X1.5	*	1	1	1	1				
3	V767-400-000-00	NIPPLE,GREASE/M6F	*	1	1	1	1				
4	1723-407-263-00	SNAPRING	*	1	1	1	1				
5	1723-407-250-00	ROD/PISTON COMP	*	1	1	1	1				
6	K167-001-300-00	COVER/ROD SET	*	1	1	1	1				
7	K167-001-303-00	PACKING/ROD	*	1	1	1	1				
8	K167-001-304-00	SEAL/DUST	*	1	1	1	1				
9	K167-001-305-00	RING	*	1	1	1	1				
10	1723-407-260-00	RODEND/RH ASSY	*	1 -247	1 -247	1 -565	1 -565				
11	1723-407-262-00	DUSTCOVER	*	1	1	1	1				
12	V327-262-214-00	NUT/M14X1.5	*	1	1	1	1				
13	V767-400-000-00	NIPPLE,GREASE/M6F	*	1	1	1	1				
14	1723-407-263-00	SNAPRING	*	1	1	1	1				
15	K167-001-305-00	RING	*	1	1	1	1				
16	K167-001-303-00	PACKING/ROD	*	1	1	1	1				
17	K167-001-304-00	SEAL/DUST	*	1	1	1	1				
18	V720-113-504-40	O-RING(1B)P044	*	1	1	1	1				
19	K167-001-001-00	PACKING/PISTON	*	1	1	1	1				
20	V723-102-005-30	O-RING	*	1	1	1	1				
21	V334-460-018-00	NUT	*	1	1	1	1				

FIG.271 COMPONENT PARTS FOR 1729-203-300-00 ON Fig.24

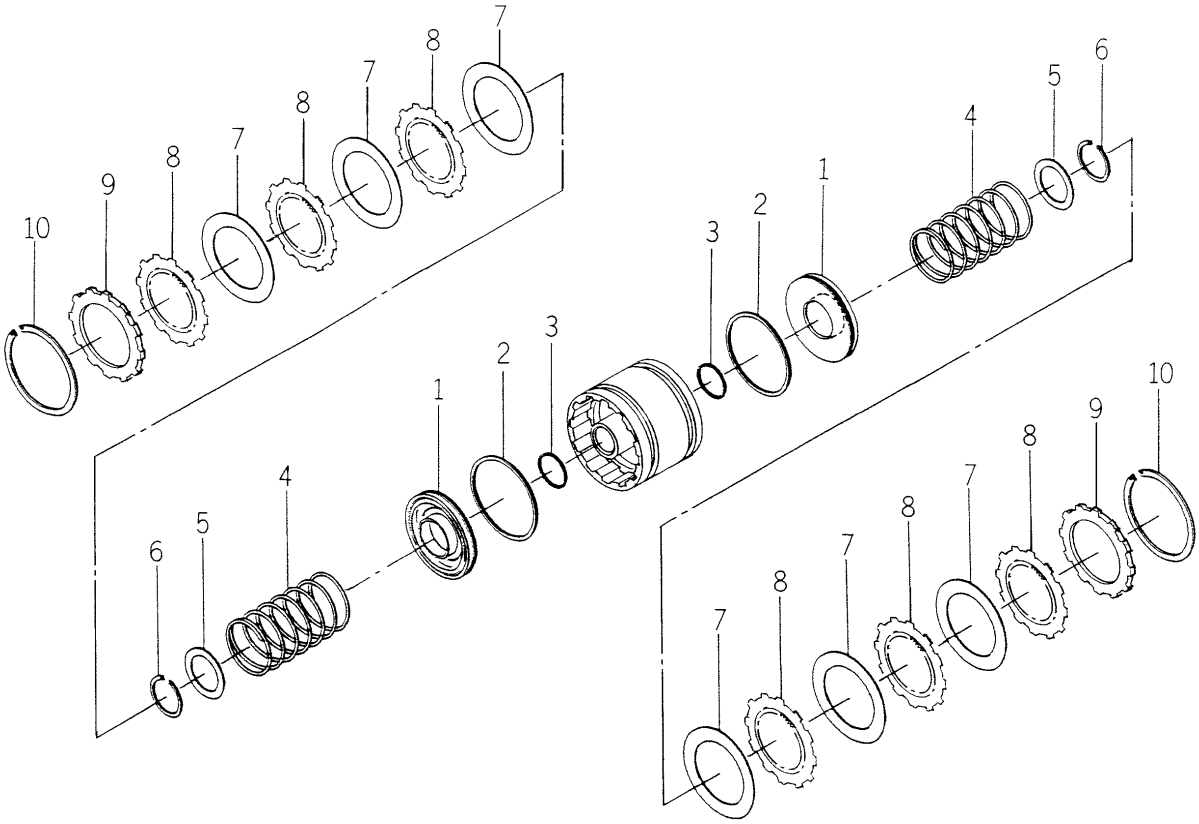

1729-203-300-0A

KEY	PART CODE	DESCRIPTION	SPC	TYPE OF MODEL TG5330 E4	TG5330 E6	TG5390 E4	TG5390 E6	ITC	COL	GRP	REMARKS
1	1690-203-211-00	PISTON	*	2	2	2	2				
2	1650-203-213-00	RING/96	*	2	2	2	2				
3	1650-203-214-00	RING/40	*	2	2	2	2				
4	1650-203-215-00	SPRING/HC	*	2	2	2	2				
5	1650-203-216-00	WASHER	*	2	2	2	2				
6	1650-203-217-00	RING/SNAP/CS40	*	2	2	2	2				
7	1641-217-312-00	PLATE/FRICTION	*	6	6	6	6				
8	1729-203-302-00	PLATE/SEPARATOR	*	6	6	6	6				
9	1729-203-303-00	PLATE/BACK	*	2	2	2	2				
10	1650-203-222-00	RING/SNAP/CH100	*	2	2	2	2				

FIG.272 COMPONENT PARTS FOR 1729-209-200-00 ON Fig.29

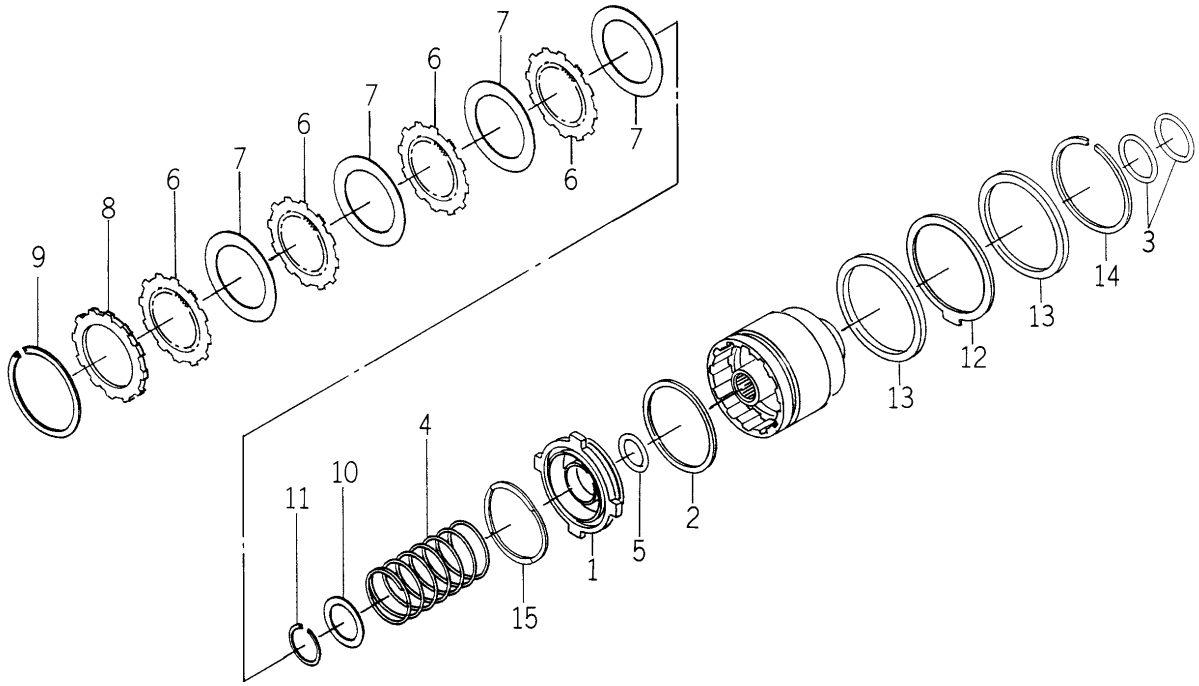

1729-209-200-0B

KEY	PART CODE	DESCRIPTION	SPC	TYPE OF MODEL TG5330 E4	TG5330 E6	TG5390 E4	TG5390 E6	ITC	COL	GRP	REMARKS
1	1729-209-202-00	PISTON	*	1 60-	1 60-						
2	1561-221-503-00	SEALRING	*	1 60-	1 60-						
3	1561-221-504-00	SEALRING	*	2 60-	2 60-						
4	1561-221-505-00	SPRING	*	1 60-	1 60-						
5	1650-203-214-00	RING/40	*	1 60-	1 60-						
6	1729-203-302-00	PLATE/SEPARATOR	*	4 60-	4 60-						
7	1650-203-218-00	PLATE/FRICTION	*	4 60-	4 60-						
8	1729-203-303-00	PLATE/BACK	*	1 60-	1 60-						
9	1719-209-202-00	RING/SNAP/CH102	*	1 60-	1 60-						
10	1561-221-509-00	WASH	*	1 60-	1 60-						
11	1650-203-217-00	RING/SNAP/CS40	*	1 60-	1 60-						
12	1561-221-506-00	BRAKE/DISK	*	1 60-	1 60-						
13	1729-209-203-00	BRAKE/PRESSURE	*	2 60-	2 60-						
14	1561-221-508-00	RING/SNAP/CS105	*	1 60-	1 60-						
15	1692-209-203-00	SPRING/WAVE	*	1 60-	1 60-						

FIG.273 COMPONENT PARTS FOR 1729-782-510-00-20 ON Fig.215

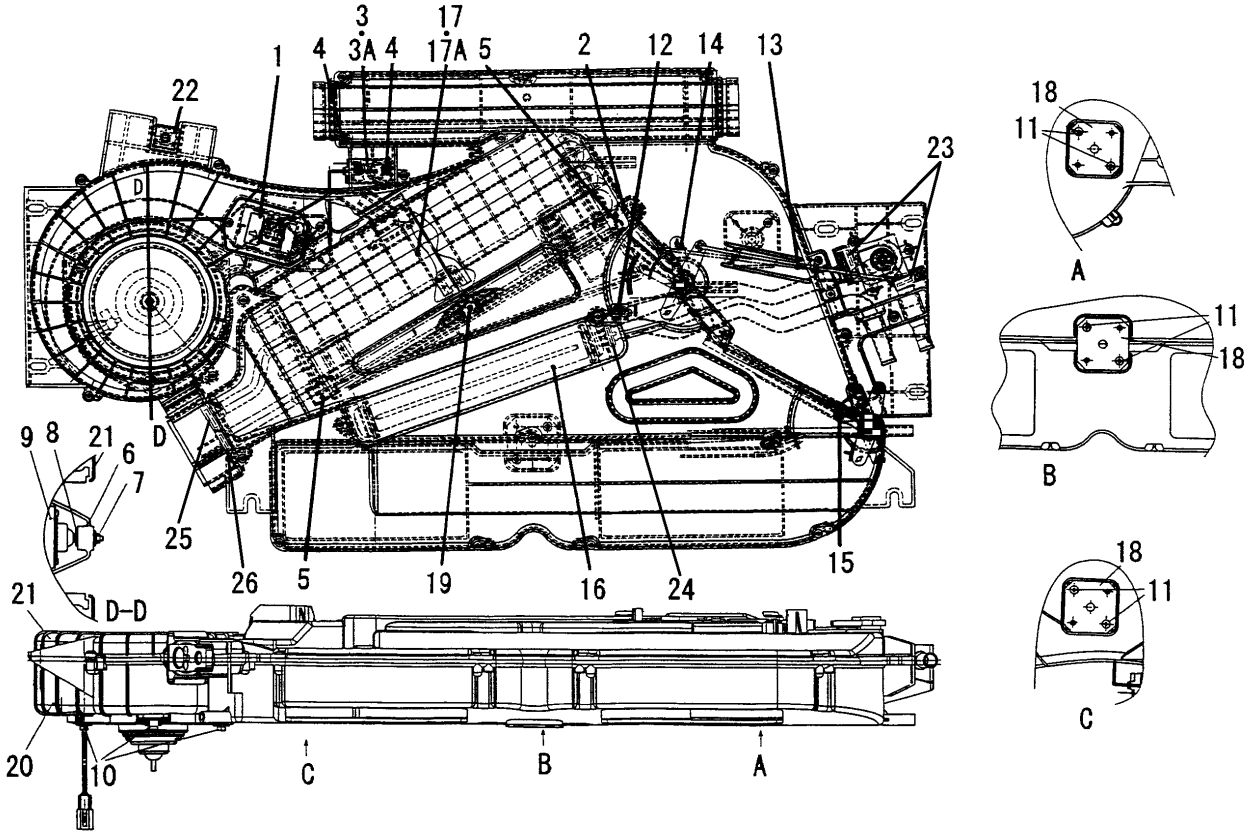

1729-782-510-1E

KEY	PART CODE	DESCRIPTION	SPC	TYPE OF MODEL TG5330 E4	TG5330 E6	TG5390 E4	TG5390 E6	ITC	COL	GRP	REMARKS
1	1729-782-511-00	RESISTOR/BLOWER	*	1		1					
2	1729-782-512-00	DOOR ASSY	*	1		1					
3	3824-248-531-00	THERMOSTAT ASSY	*	1 -952		1 -1282					
3A	3824-248-531-10	THERMOSTAT ASSY	*	1 953-		1 1283-		2			
4	3824-248-532-00	SCREW	*	2		2					
5	3824-248-542-00	INSULATOR	*	2		2					
6	3824-248-524-00	FAN/BLOWER	*	1		1					
7	3824-248-525-00	NUT	*	1		1					
8	3824-248-526-00	WASHER	*	1		1					
9	1729-782-513-00	MOTOR ASSY	*	1		1					
10	3824-248-529-00	SCREW/TAPPING	*	3		3					
11	3824-248-536-00	SCREW/TAPPING	*	36		36					
12	3824-248-538-00	CLAMP/LOCK	*	2		2					
13	1729-782-514-00	ROD	*	1		1					
14	1729-782-515-00	LEVER	*	2		2					
15	1729-782-516-00	DOOR ASSY	*	1		1					
16	1729-782-517-00	CORE/HEATER ASSY	*	1		1					
17	1729-782-518-00	EVAPORATOR ASSY	*	1 -259		1 -567					
17A	1729-782-518-10	EVAPORATOR ASSY	*	1 260-		1 568-		1			
18	1729-782-519-00	PLATE	*	3		3					
19	1729-782-521-00	NET	*	1		1					
20	1729-782-522-00	CASE/UNIT/LOWER	*	1		1					
21	1729-782-523-00	CASE/UNIT/UPPER	*	1		1					
22	1729-782-524-00	NUT	*	1		1					
23	1729-782-525-00	O-RING	*	2 961-		2 1329-					
24	1729-782-526-00	O-RING	*	2 961-		2 1329-					
25	3824-248-312-00	O-RING	*	1 961-		1 1329-					
26	3824-248-342-00	O-RING	*	1 961-		1 1329-					

FIG.274 COMPONENT PARTS FOR 1731-658-230-20,30 ON Fig.251

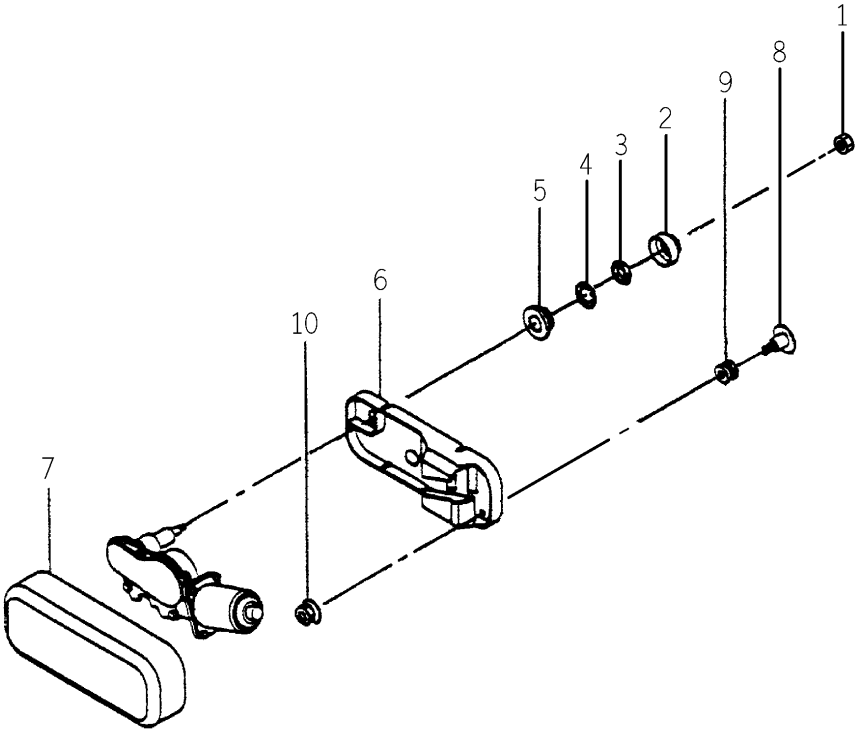

1731-658-230-3D

KEY	PART CODE	DESCRIPTION	SPC	TYPE OF MODEL				ITC	COL	GRP	REMARKS
				TG5330 E4	TG5330 E6	TG5390 E4	TG5390 E6				
1	V301-260-006-00	NUT/M6	T	1		1					
2	3824-246-205-00	CAP	T	1		1					
3	3824-246-204-00	NUT	T	1		1					
4	1650-658-313-00	WASHER	T	1		1					
5	1731-658-232-00	GROMMET/16X20X05	T	1		1					
6	1731-658-233-10	BRACKET/MOTOR	T	1		1					
7	1731-658-234-00	COVER/MOTOR	T	1		1					
8	1731-658-235-10	SCREW/M06X25	T	2		2					
9	1731-658-236-00	GROMMET/08X15X05	T	2		2					
10	V360-260-006-00	NUT/M6	T	2		2					

FIG.275 COMPONENT PARTS FOR 1742-209-210-00 ON Fig.27,28

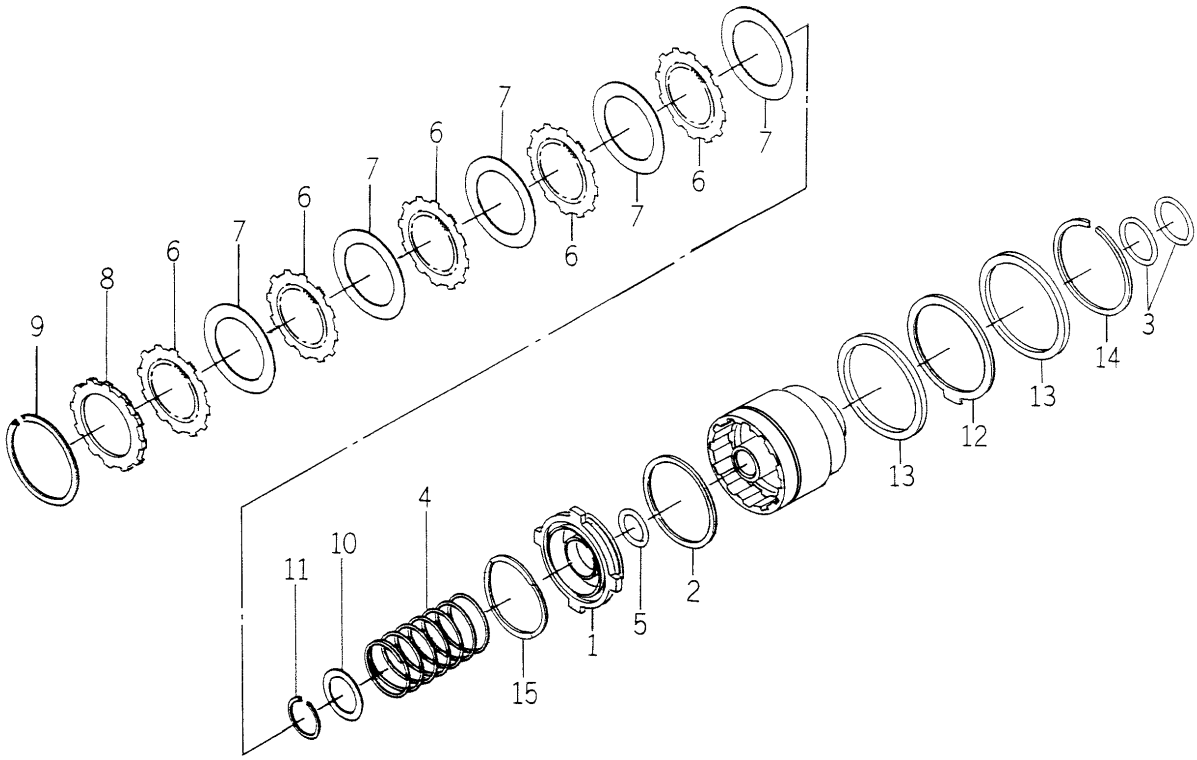

1742-209-210-0C

KEY	PART CODE	DESCRIPTION	SPC	TYPE OF MODEL TG5330 E4	TG5330 E6	TG5390 E4	TG5390 E6	ITC	COL	GRP	REMARKS
1	1729-209-202-00	PISTON	*	1 -59	1 -59	1	1				
2	1561-221-503-00	SEALRING	*	1 -59	1 -59	1	1				
3	1561-221-504-00	SEALRING	*	2 -59	2 -59	2	2				
4	1561-221-505-00	SPRING	*	1 -59	1 -59	1	1				
5	1650-203-214-00	RING/40	*	1 -59	1 -59	1	1				
6	1729-203-302-00	PLATE/SEPARATOR	*	5 -59	5 -59	5	5				
7	1650-203-218-00	PLATE/FRICTION	*	5 -59	5 -59	5	5				
8	1729-203-303-00	PLATE/BACK	*	1 -59	1 -59	1	1				
9	1719-209-202-00	RING/SNAP/CH102	*	1 -59	1 -59	1	1				
10	1561-221-509-00	WASH	*	1 -59	1 -59	1	1				
11	1650-203-217-00	RING/SNAP/CS40	*	1 -59	1 -59	1	1				
12	1561-221-506-00	BRAKE/DISK	*	1 -59	1 -59	1	1				
13	1729-209-203-00	BRAKE/PRESSURE	*	2 -59	2 -59	2	2				
14	1561-221-508-00	RING/SNAP/CS105	*	1 -59	1 -59	1	1				
15	1692-209-203-00	SPRING/WAVE	*	1 -59	1 -59	1	1				

FIG.276 COMPONENT PARTS FOR 1742-656-200-00 ON Fig.186

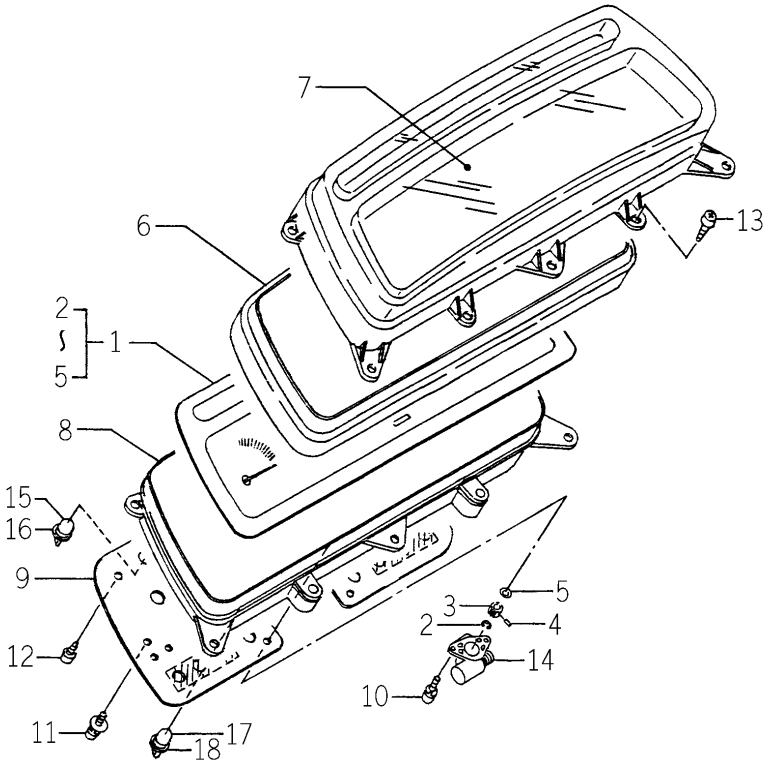

1742-656-200-0B

KEY	PART CODE	DESCRIPTION	SPC	TYPE OF MODEL TG5330 E4	TG5330 E6	TG5390 E4	TG5390 E6	ITC	COL	GRP	REMARKS
1	1742-656-210-00	METER ASSY	*	1	1	1	1				
2	1640-658-322-00	RING/E	*	2	2	2	2				
3	1673-658-214-00	GEAR	*	1	1	1	1				
4	1640-658-324-00	PIN	*	1	1	1	1				
5	1640-658-325-00	WASHER	*	1	1	1	1				
6	1614-670-240-00	ESCUTCHEON	*	1	1	1	1				
7	1614-670-201-00	GLASS	*	1	1	1	1				
8	1614-670-250-00	HOUSING ASSY	*	1	1	1	1				
9	1614-670-260-00	BOARD/WIREING ASSY	*	1	1	1	1				
10	V120-264-001-20	BOLT/M4X12	*	2	2	2	2				
11	1560-658-202-00	SCREW	*	6	6	6	6				
12	V195-163-010-40	SCREW/TAPPING	*	5	5	5	5				
13	V195-164-016-40	SCREW/4X16	*	4	4	4	4				
14	1675-670-230-00	CASE ASSY	*	1	1	1	1				
15	3650-270-214-00	BULB	*	8	8	8	8				
16	1560-658-282-40	SOCKET	*	8	8	8	8				
17	1614-670-281-00	BULB/LAMP/12V/1.7W	*	4	4	4	4				
18	1560-658-282-40	SOCKET	*	4	4	4	4				

FIG.277 COMPONENT PARTS FOR 1743-203-510-10 ON Fig.25

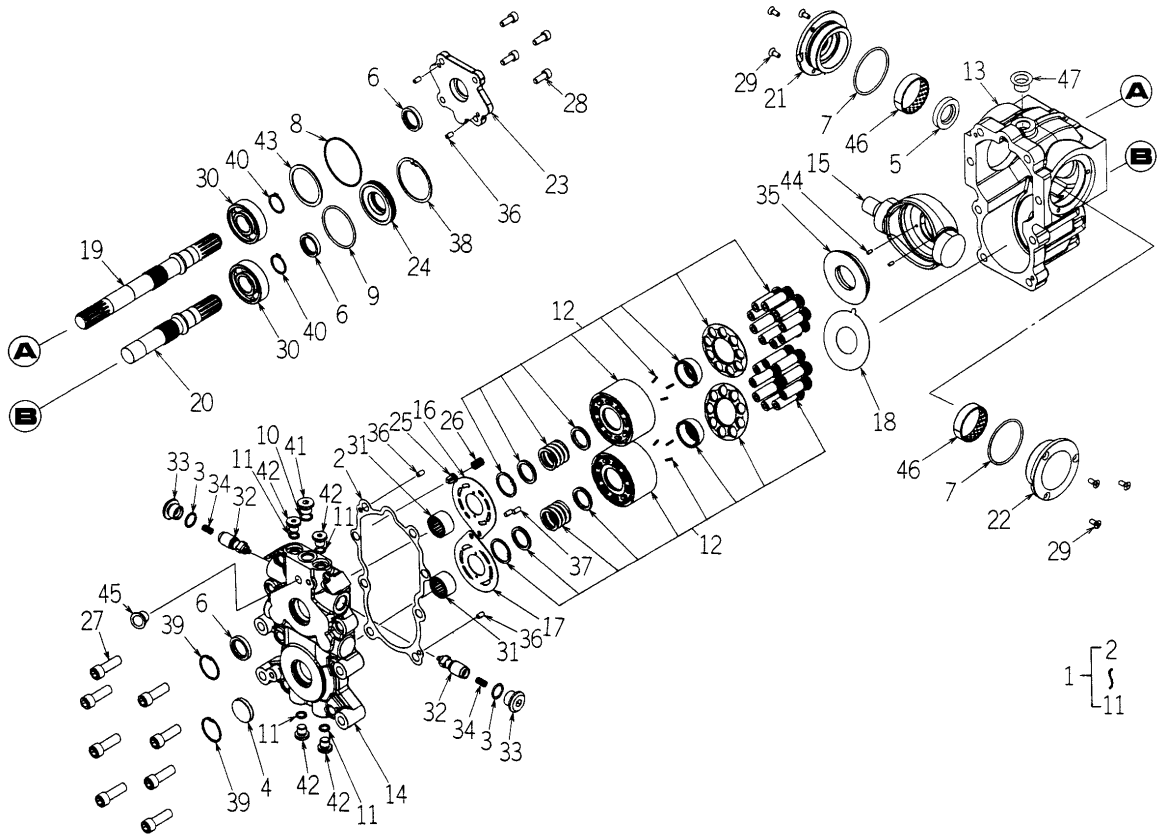

1743-203-510-1B

KEY	PART CODE	DESCRIPTION	SPC	TYPE OF MODEL TG5330 E4	TG5330 E6	TG5390 E4	TG5390 E6	ITC	COL	GRP	REMARKS
1	1743-203-540-00	SEAL/HST SET	*			1	1				
2	1641-217-561-00	GASKET	*			1	1				
3	V720-112-401-80	O-RING/P18	*			2	2				
4	1743-203-541-00	PLUG	*			1	1				
5	1743-203-542-00	SEAL/OIL	*			1	1				
6	1641-217-563-00	SEAL/OIL	*			3	3				
7	V721-103-106-50	O-RING/G65	*			2	2				
8	V723-102-007-10	RING/O	*			1	1				
9	V721-103-106-00	O-RING/G60	*			1	1				
10	V720-112-401-40	O-RING/P14	*			1	1				
11	V720-112-401-10	RING/O	*			4	4				
12	1743-203-550-00	BLOCK/CYLINDER ASSY	*			1	1				
13	1743-203-511-00	CASE/HST	*			1	1				
14	1743-203-512-00	BLOCK/PORT	*			1	1				
15	1743-203-513-00	PLATE/SWASH	*			1	1				
16	1743-203-514-00	PLATE/VALVE	*			1	1				
17	1641-217-503-00	PLATE/VALVE	*			1	1				
18	1641-217-504-00	PLATE/THRUST	*			1	1				
19	1743-203-515-00	SHAFT/PUMP	*			1	1				
20	1743-203-516-00	SHAFT/MOTOR	*			1	1				
21	1641-217-507-00	COVER	*			1	1				
22	1641-217-508-00	COVER	*			1	1				
23	1646-217-516-00	COVER	*			1	1				
24	1743-203-517-00	METAL/SEAL	*			1	1				
25	1620-202-517-00	VALVE	*			1	1				
26	1620-202-518-00	SPRING	*			1	1				
27	1641-217-512-00	SCREW/SOCKET	*			8	8				
28	V220-540-802-00	SCREW/SOCKET	*			4	4				
29	1641-217-513-00	SCREW/FLAT	*			6	6				
30	1641-217-514-00	BEARING/BALL	*			2	2				

FIG.277 COMPONENT PARTS FOR 1743-203-510-10 ON Fig.25

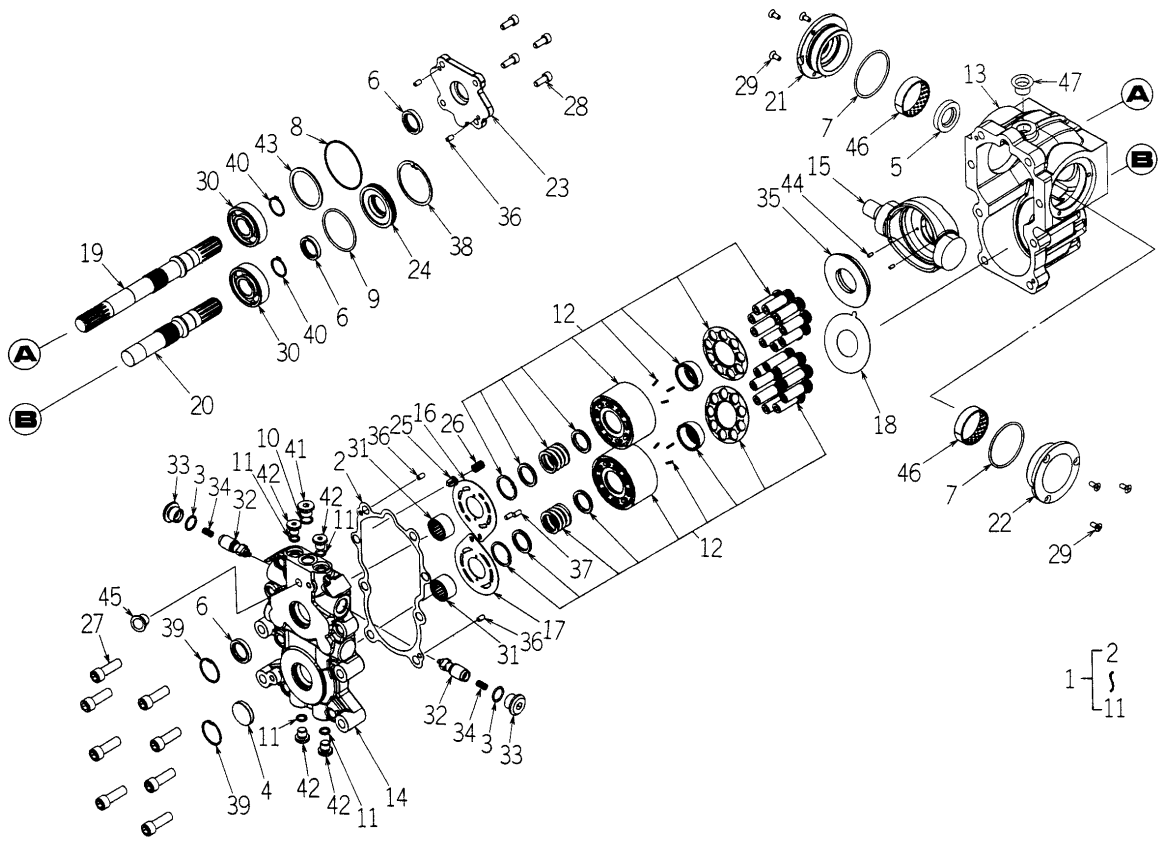

1743-203-510-1B

KEY	PART CODE	DESCRIPTION	SPC	TYPE OF MODEL				ITC	COL	GRP	REMARKS
				TG5330 E4	TG5330 E6	TG5390 E4	TG5390 E6				
31	1641-217-515-00	BEARING/NEEDLE	*			2	2				
32	1743-203-518-00	VALVE/RELIEF ASSY	*			2	2				
33	1641-217-517-00	PLUG	*			2	2				
34	1641-217-518-00	SPRING	*			2	2				
35	1641-217-519-00	PLATE/THRUST	*			1	1				
36	1743-203-519-00	PIN	*			4	4				
37	1743-203-521-00	PIN	*			2	2				
38	1641-217-523-00	RING/SNAP	*			1	1				
39	1641-217-524-00	RING/SNAP	*			2	2				
40	V704-140-025-00	RING,SNAP/25 C	*			2	2				
41	1683-202-522-00	PLUG	*			1	1				
42	1683-202-523-00	PLUG	*			4	4				
43	1641-217-525-00	COLLAR	*			1	1				
44	1620-202-534-00	PIN	*			2	2				
45	1646-217-533-00	SHIPPING/PLUG	*			1	1				
46	1641-217-527-00	BUSH	*			2	2				
47	1620-202-537-00	SHIPPINGPLUG	*			2	2				

FIG.278 COMPONENT PARTS FOR 1746-781-220-00,10 ON Fig.215

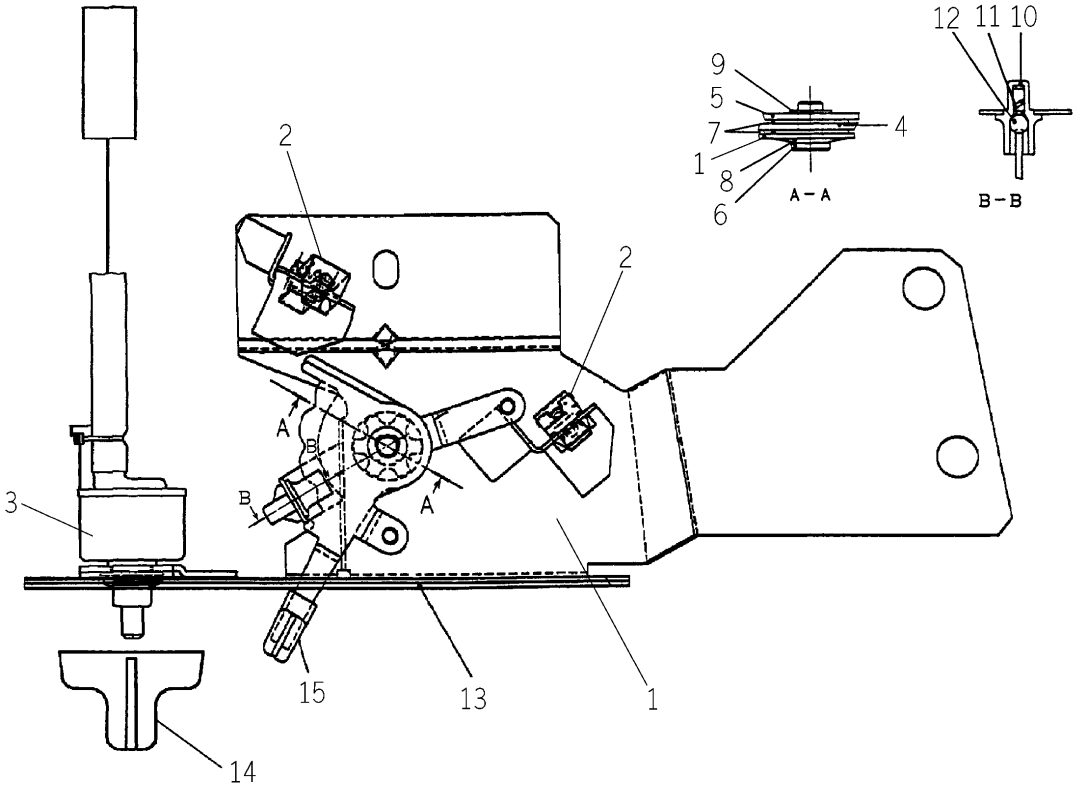

1746-781-220-1F

KEY	PART CODE	DESCRIPTION	SPC	TYPE OF MODEL TG5330 E4	TG5330 E6	TG5390 E4	TG5390 E6	ITC	COL	GRP	REMARKS
1	1746-781-222-00	BRACKET/PANEL/CONTRO	*	1		1					
2	1746-781-222-00	BRACKET/PANEL/CONTRO	*	1		1					
3	3824-248-044-00	CLAMP/CABLE	*	2		2					
4	1746-781-221-10	SWITCH ASSY	*	1		1					
5	1729-782-613-00	LEVER	*	1		1					
6	1729-782-614-00	LEVER	*	1		1					
7	1729-782-615-00	PIN	*	1		1					
8	3824-248-493-00	WASHER	*	2		2					
9	3824-248-494-00	WASHER	*	1		1					
10	3824-248-495-00	RING	*	1		1					
11	1729-705-004-00	COVER/BEARING	*	1		1					
12	1729-705-011-00	SPRING	*	1		1					
13	1729-705-013-00	BALL/STEEL	*	1		1					
14	1729-782-032-00	LABEL/PANEL/A/C	*	1		1					
15	1746-781-223-00	KNOB/HEATER	*	1		1					
16	1729-705-014-00	KNOB	*	2		2					

FIG.279 COMPONENT PARTS FOR 6281-200-015-00 ON Fig.254,255

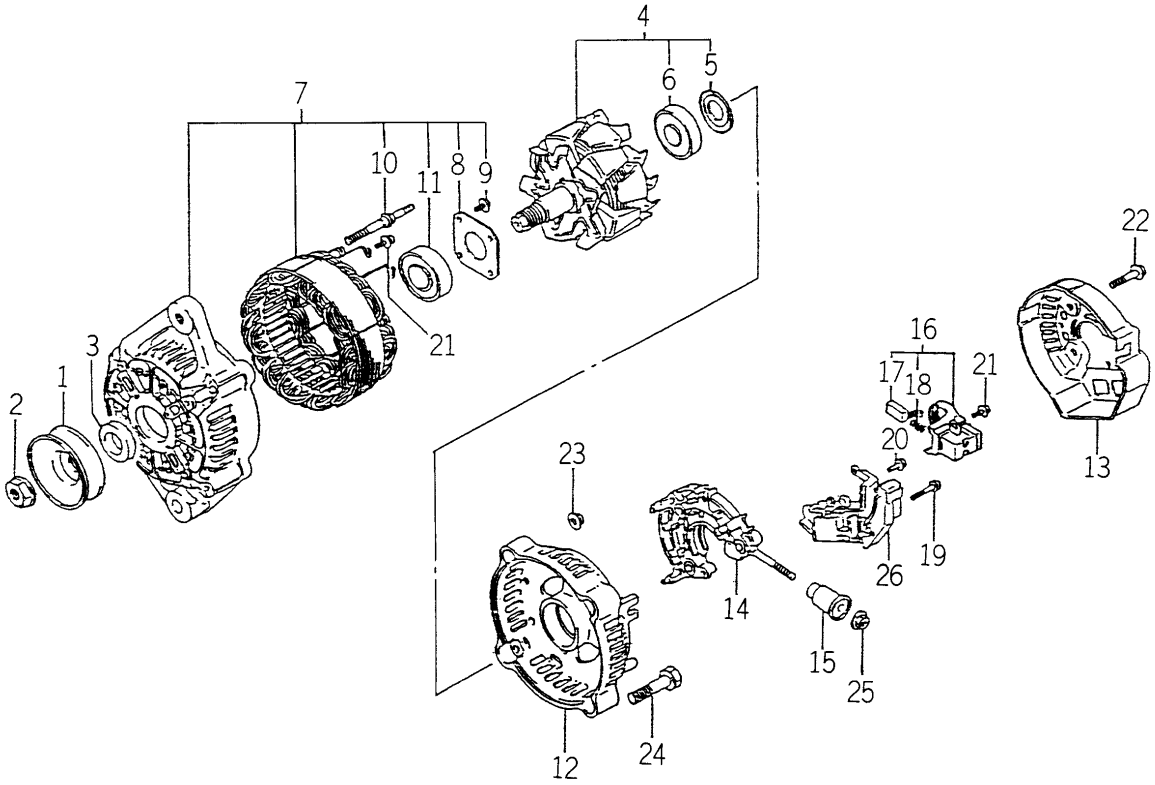

6281-200-015-0B

KEY	PART CODE	DESCRIPTION	SPC	TYPE OF MODEL TG5330 E4	TG5330 E6	TG5390 E4	TG5390 E6	ITC	COL	GRP	REMARKS
1	6281-222-002-00	PULLEY	T	1	1	1	1				
2	6281-229-002-00	NUT	T	1	1	1	1				
3	6281-229-003-00	COLLOR	T	1	1	1	1				
4	6281-221-004-00	ROTOR ASSY	T	1	1	1	1				
5	6281-229-004-00	COVER,BEARING	T	1	1	1	1				
6	6281-229-032-00	BEARING/BALL	T	1	1	1	1				
7	6281-213-013-00	FRAME/DRIVEEND ASSY	T	1	1	1	1				
8	6281-229-006-00	PLATE	T	1	1	1	1				
9	6281-229-007-00	BOLT	T	4	4	4	4				
10	6281-229-008-00	BOLT	T	2	2	2	2				
11	6281-229-033-00	BEARING/BALL	T	1	1	1	1				
12	6281-214-007-00	FRAME/END/REAR	T	1	1	1	1				
13	6281-214-008-00	COVER/END/REAR	T	1	1	1	1				
14	6281-229-040-00	HOLDER/RECTIFIE ASSY	T	1	1	1	1				
15	6281-229-011-00	BUSH	T	1	1	1	1				
16	6281-217-002-00	HOLDER/BRUSH ASSY	T	1	1	1	1				
17	6281-215-001-00	BRUSH	T	2	2	2	2				
18	6281-216-001-00	SPRING	T	2	2	2	2				
19	6281-229-012-00	BOLT	T	2	2	2	2				
20	6281-229-013-00	BOLT	T	6	6	6	6				
21	6281-229-014-00	BOLT	T	1	1	1	1				
22	6281-229-015-00	BOLT	T	3	3	3	3				
23	6281-229-016-00	NUT	T	2	2	2	2				
24	6281-229-017-00	BOLT	T	2	2	2	2				
25	6281-229-018-00	NUT	T	1	1	1	1				
26	6281-271-002-00	REGULATOR ASSY	T	1	1	1	1				

WIRING DIAGRAM (E4) (OLD) (1)

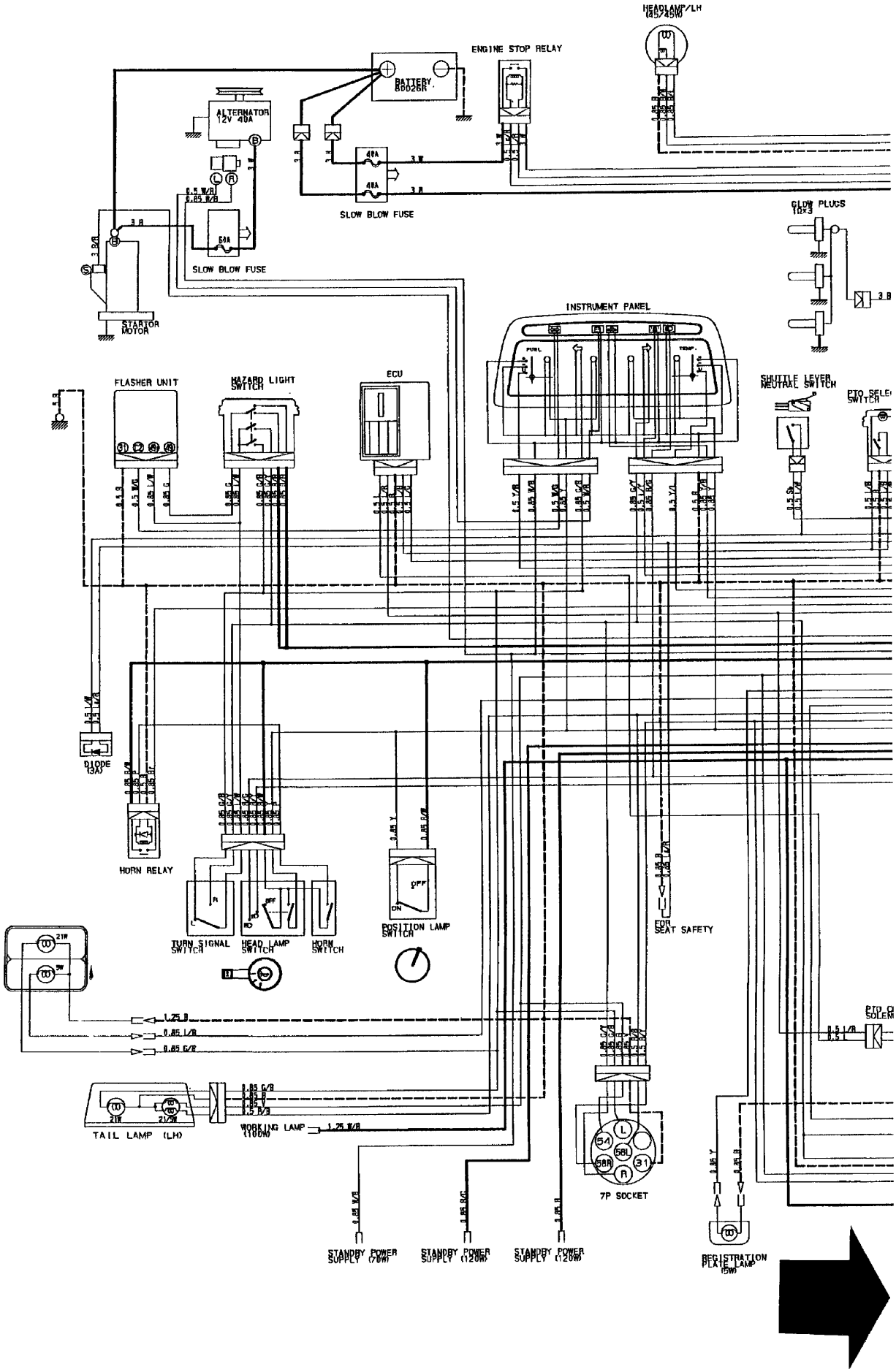

WIRING DIAGRAM (E4) (OLD) (2)

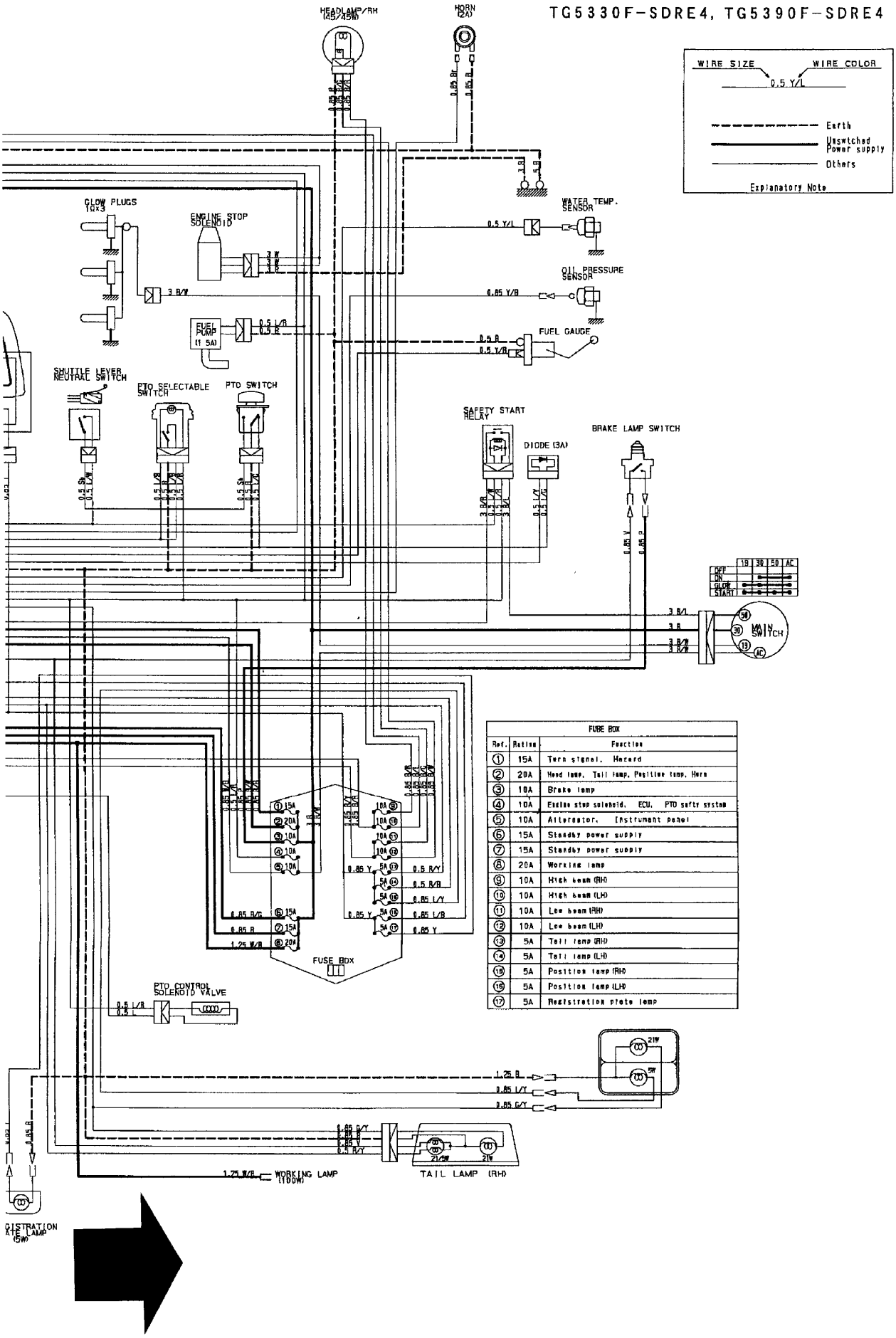

FUSE BOX		
Ref.	Rating	Function
①	15A	Turn signal, Hazard
②	20A	Head lamp, Tail lamp, Position lamp, Horn
③	10A	Brake lamp
④	10A	Engine stop solenoid, ECU, PTO safty system
⑤	10A	Alternator, Instrument panel
⑥	15A	Standby power supply
⑦	15A	Standby power supply
⑧	20A	Working lamp
⑨	10A	High beam (RH)
⑩	10A	High beam (LH)
⑪	10A	Low beam (RH)
⑫	10A	Low beam (LH)
⑬	5A	Tail lamp (RH)
⑭	5A	Tail lamp (LH)
⑮	5A	Position lamp (RH)
⑯	5A	Position lamp (LH)
⑰	5A	Registration plate lamp

WIRING DIAGRAM (E4) (NEW) (1)

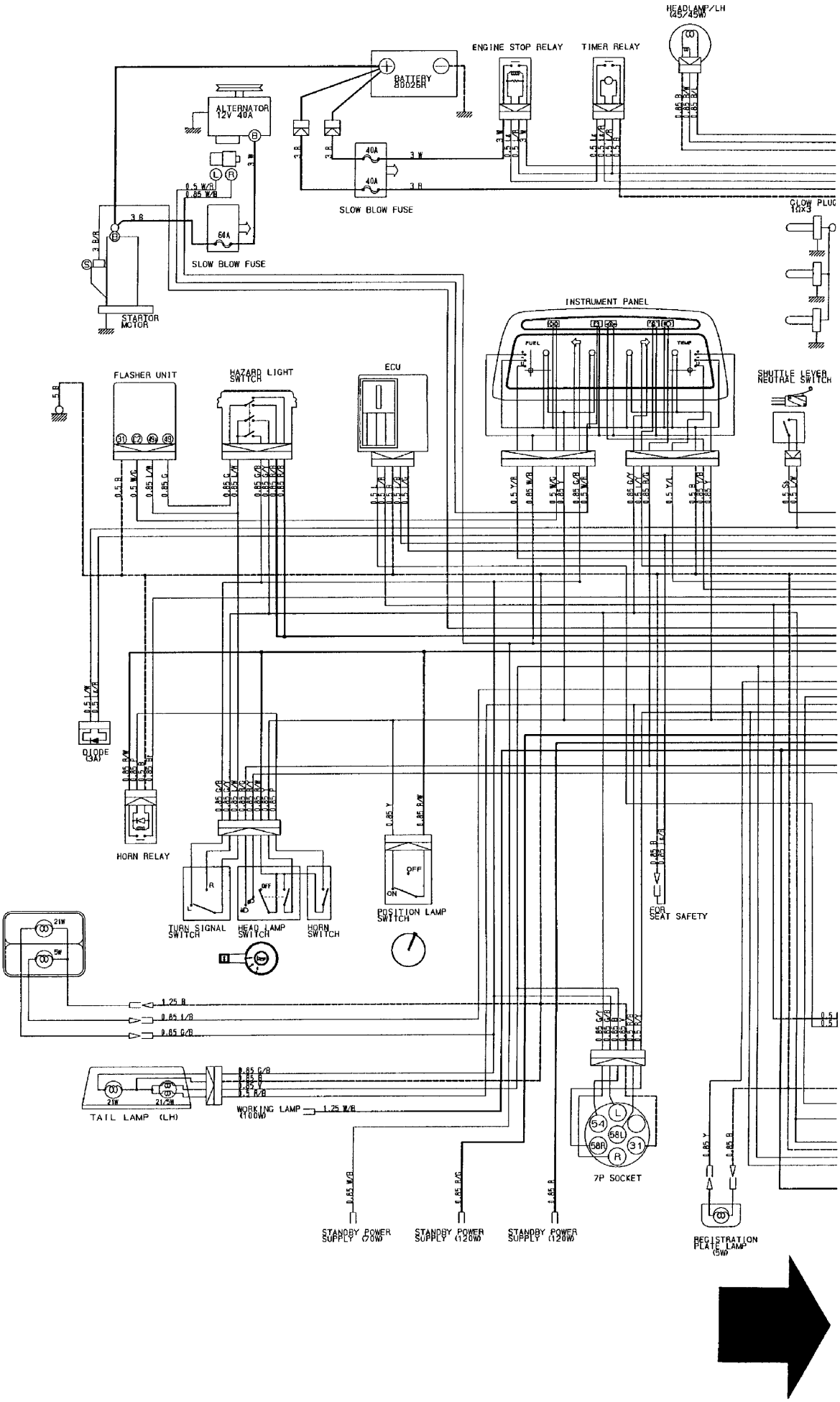

WIRING DIAGRAM (E4) (NEW) (2)

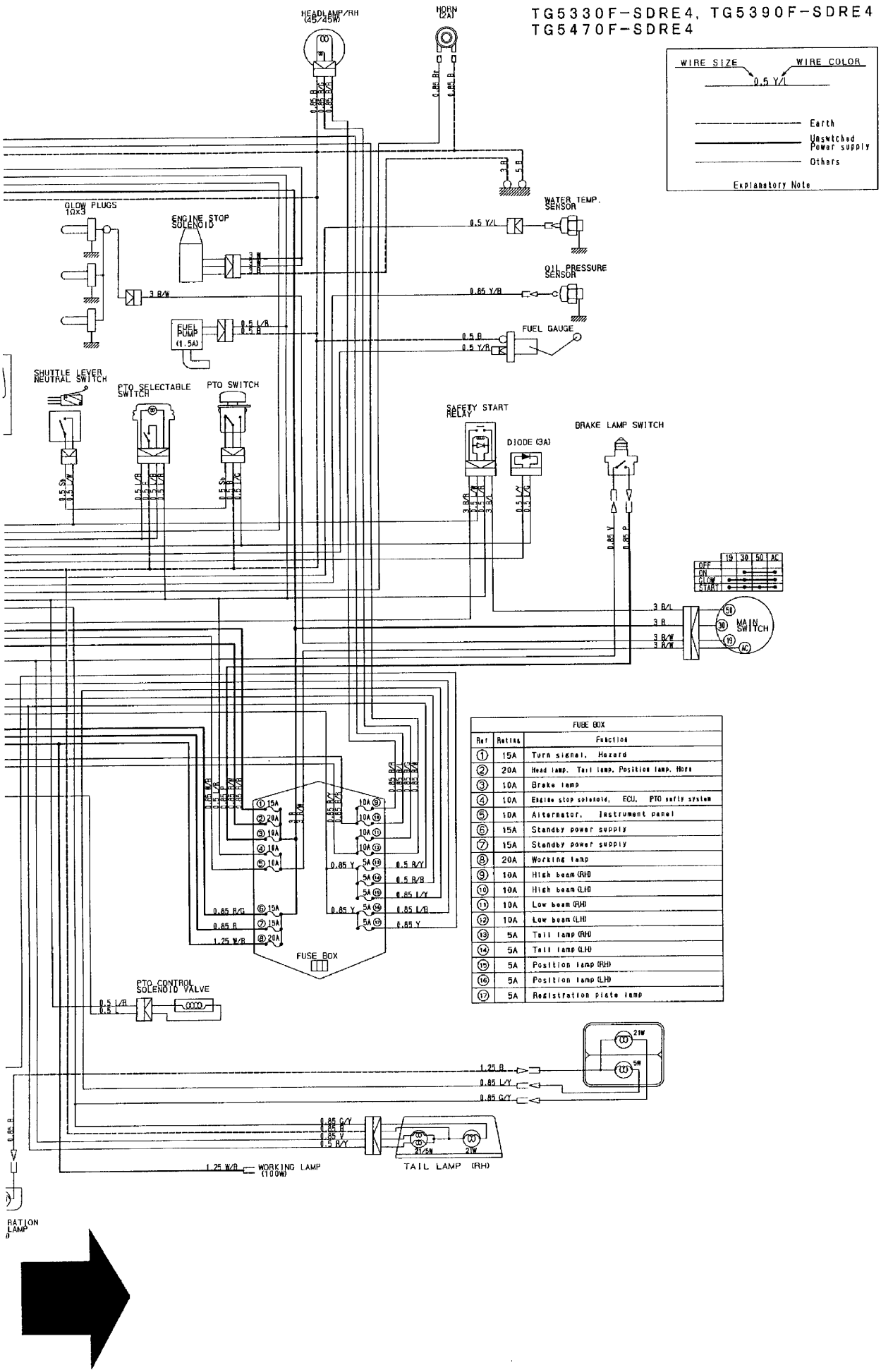

FUSE BOX		
Ref	Rating	Function
①	15A	Turn signal, Hazard
②	20A	Head lamp, Tail lamp, Position lamp, Horn
③	10A	Brake lamp
④	10A	Engine stop solenoid, ECU, PTO safty system
⑤	10A	Alternator, Instrument panel
⑥	15A	Standby power supply
⑦	15A	Standby power supply
⑧	20A	Working lamp
⑨	10A	High beam (RH)
⑩	10A	High beam (LH)
⑪	10A	Low beam (RH)
⑫	10A	Low beam (LH)
⑬	5A	Tail lamp (RH)
⑭	5A	Tail lamp (LH)
⑮	5A	Position lamp (RH)
⑯	5A	Position lamp (LH)
⑰	5A	Registration plate lamp

WIRING DIAGRAM (E6/P) (1)

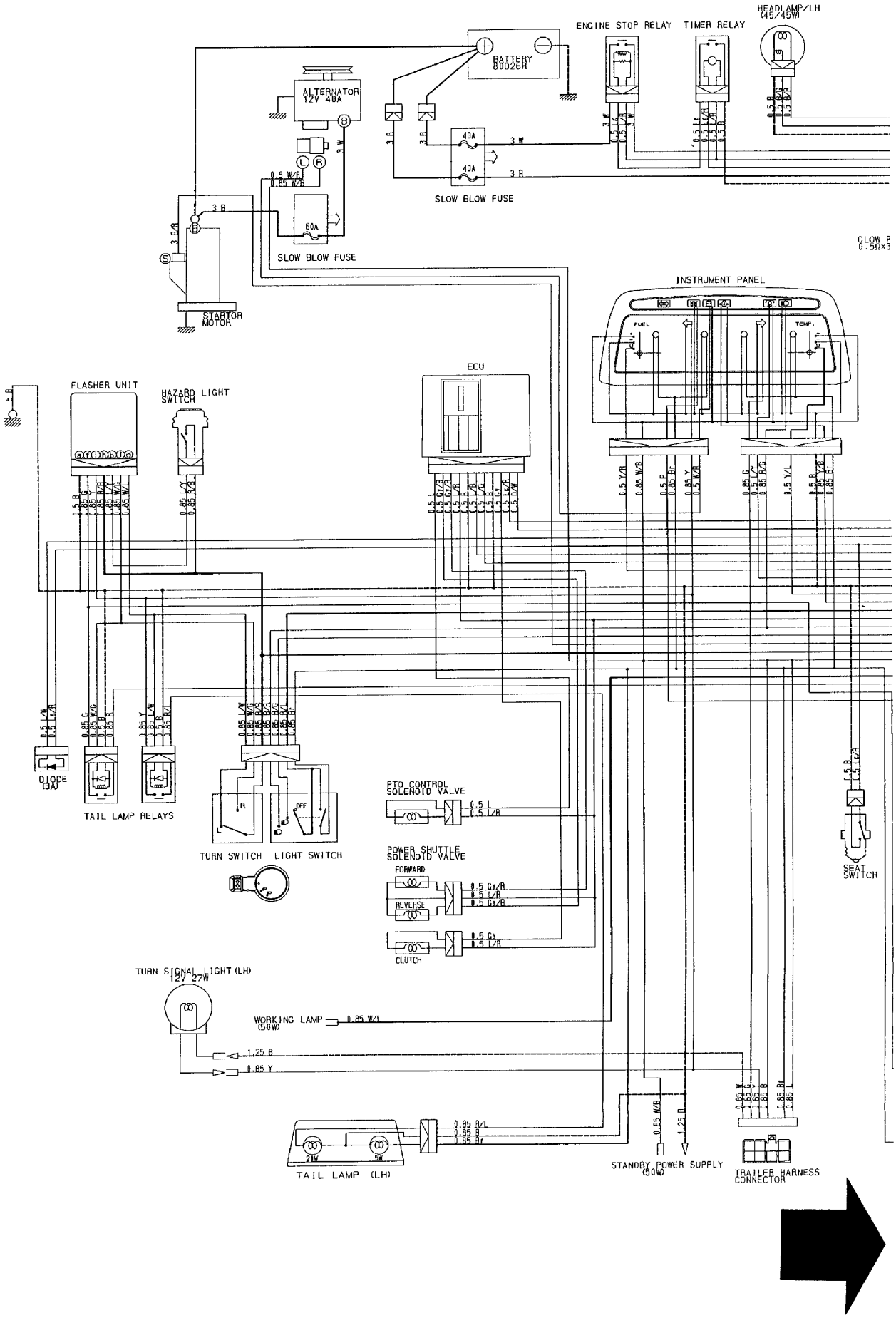

WIRING DIAGRAM (E6/P) (2)

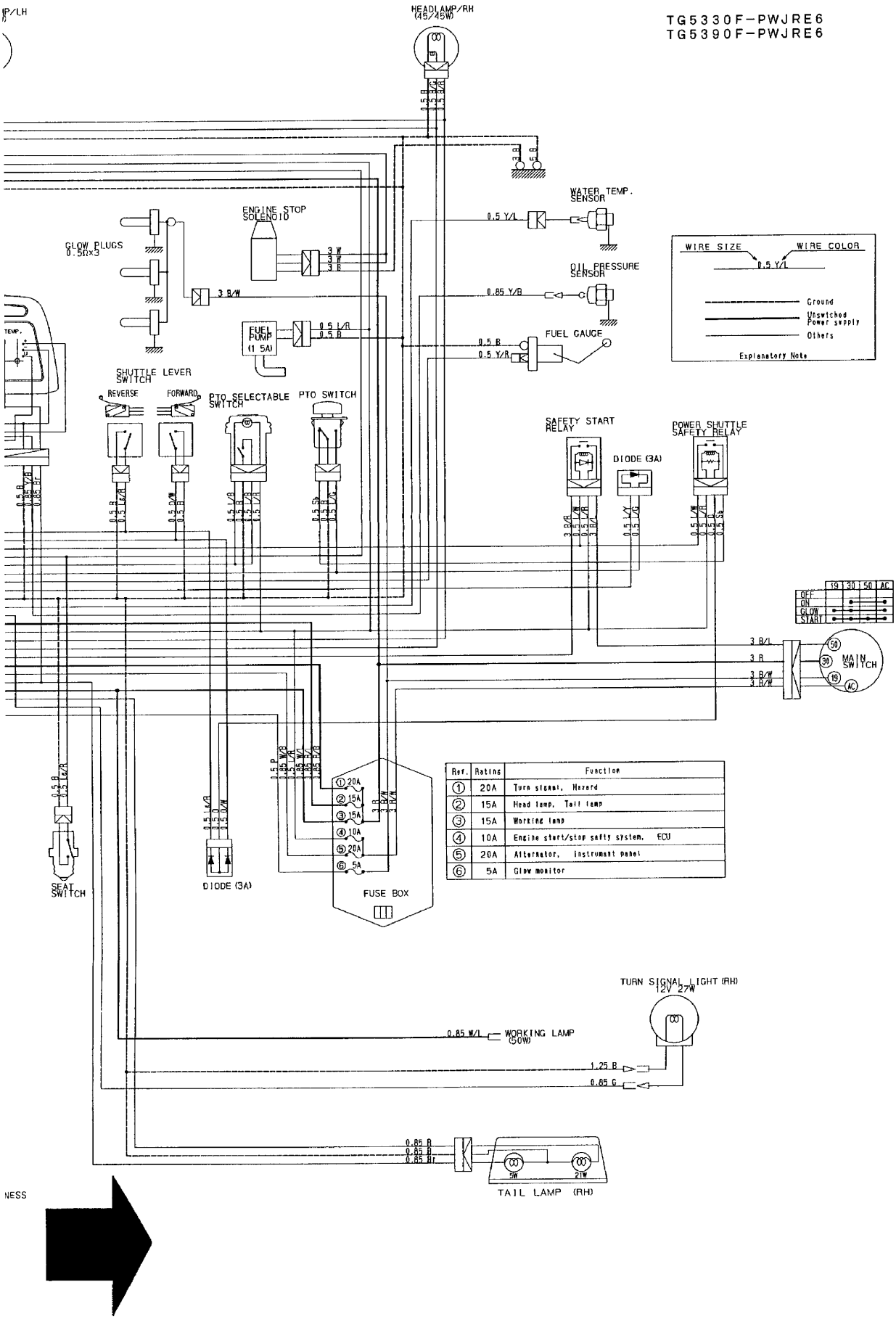

Ref.	Rating	Function
①	20A	Turn signal, Hazard
②	15A	Head lamp, Tail lamp
③	15A	Working lamp
④	10A	Engine start/stop safty system, ECU
⑤	20A	Alternator, Instrument panel
⑥	5A	Glow monitor

WIRING DIAGRAM (E4/H) (1)

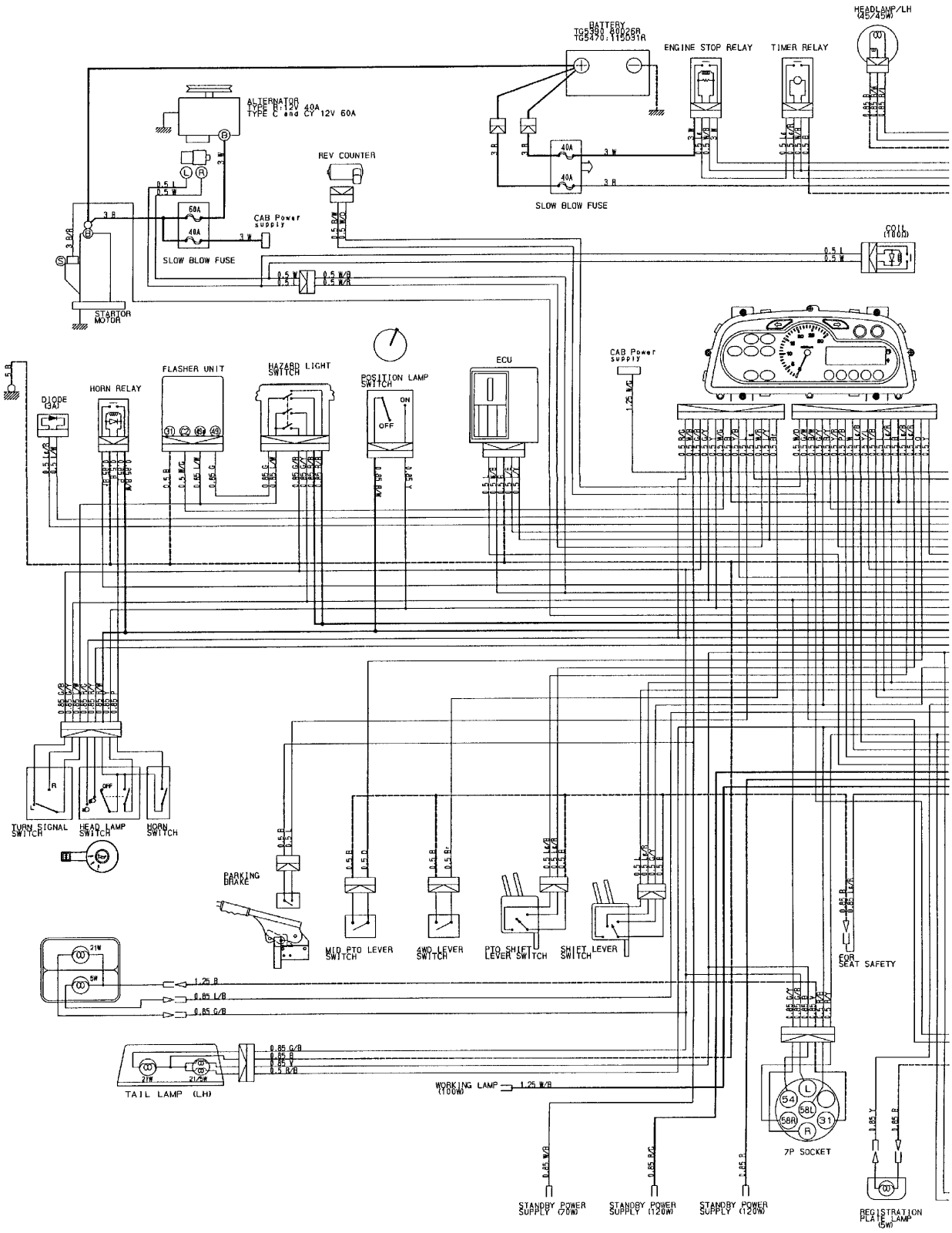

WIRING DIAGRAM (E4/H) (2)

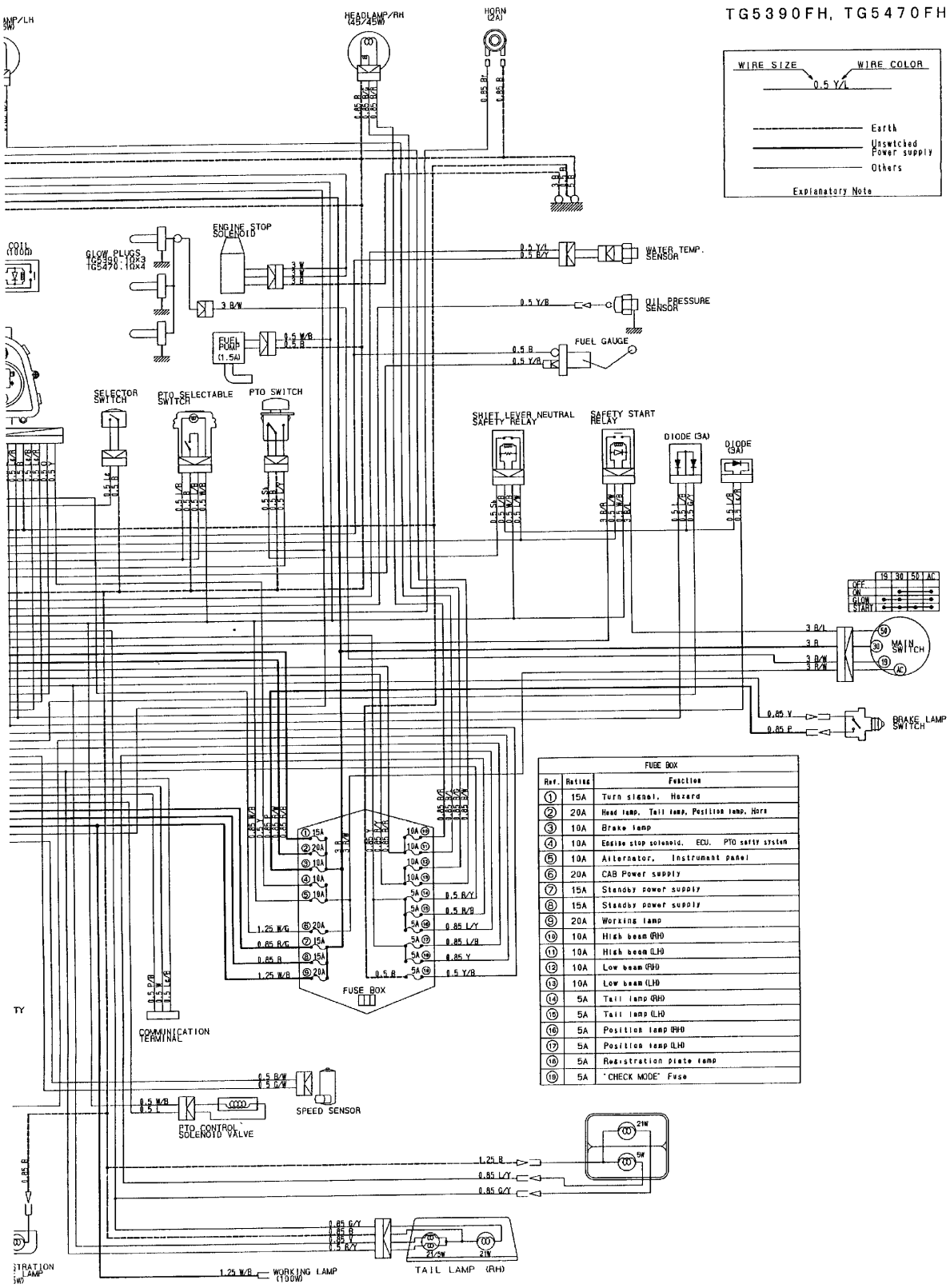

FUSE BOX		
Ref.	Rating	Function
①	15A	Turn signal, Hazard
②	20A	Head lamp, Tail lamp, Position lamp, Horn
③	10A	Brake lamp
④	10A	Engine stop solenoid, ECU, PTO safty system
⑤	10A	Alternator, Instrument panel
⑥	20A	CAB Power supply
⑦	15A	Standby power supply
⑧	15A	Standby power supply
⑨	20A	Working lamp
⑩	10A	High beam (RH)
⑪	10A	High beam (LH)
⑫	10A	Low beam (RH)
⑬	10A	Low beam (LH)
⑭	5A	Tail lamp (RH)
⑮	5A	Tail lamp (LH)
⑯	5A	Position lamp (RH)
⑰	5A	Position lamp (LH)
⑱	5A	Registration plate lamp
⑲	5A	"CHECK MODE" Fuse

WIRING DIAGRAM (E6/H) (1)

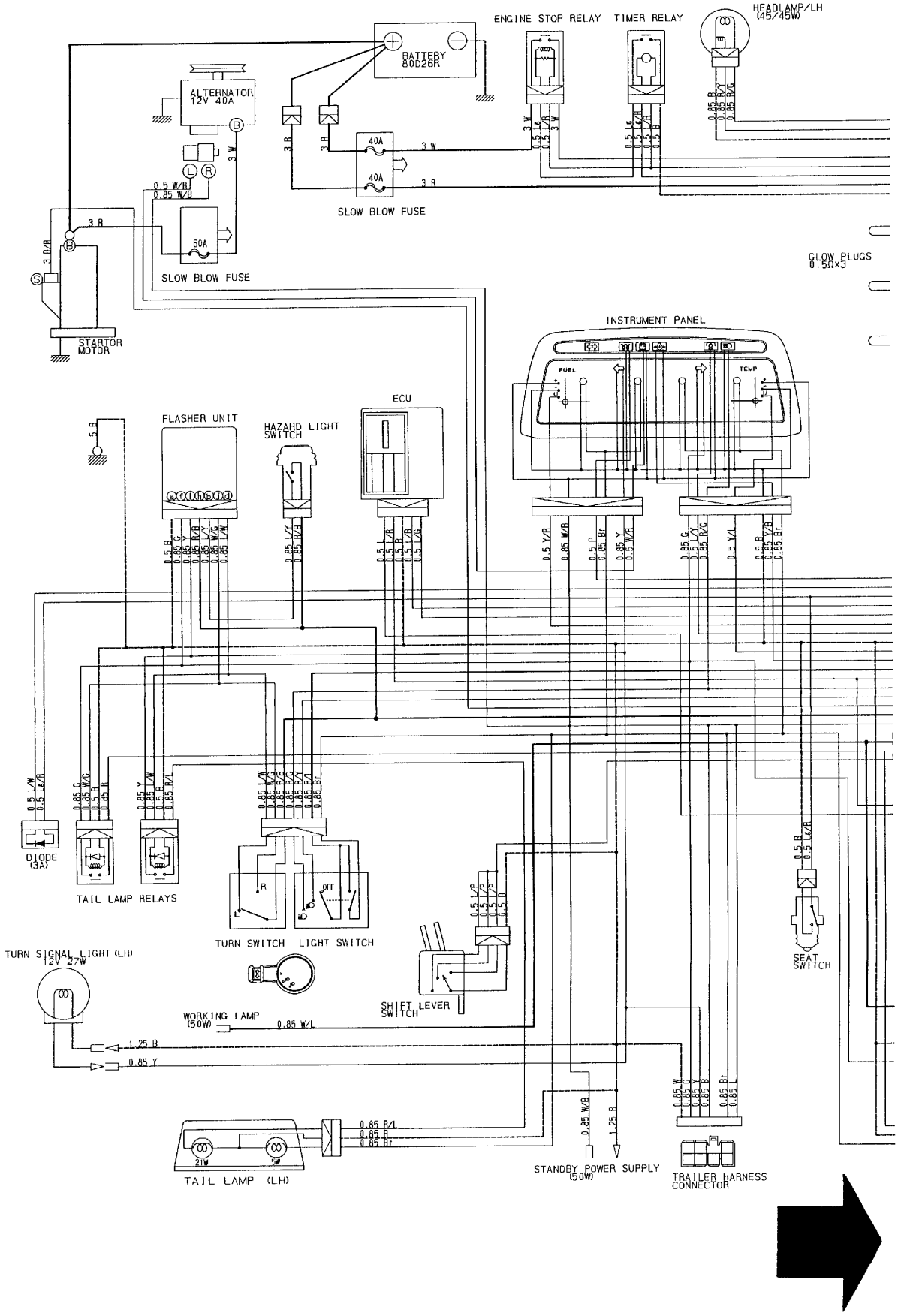

WIRING DIAGRAM (E6/H) (2)

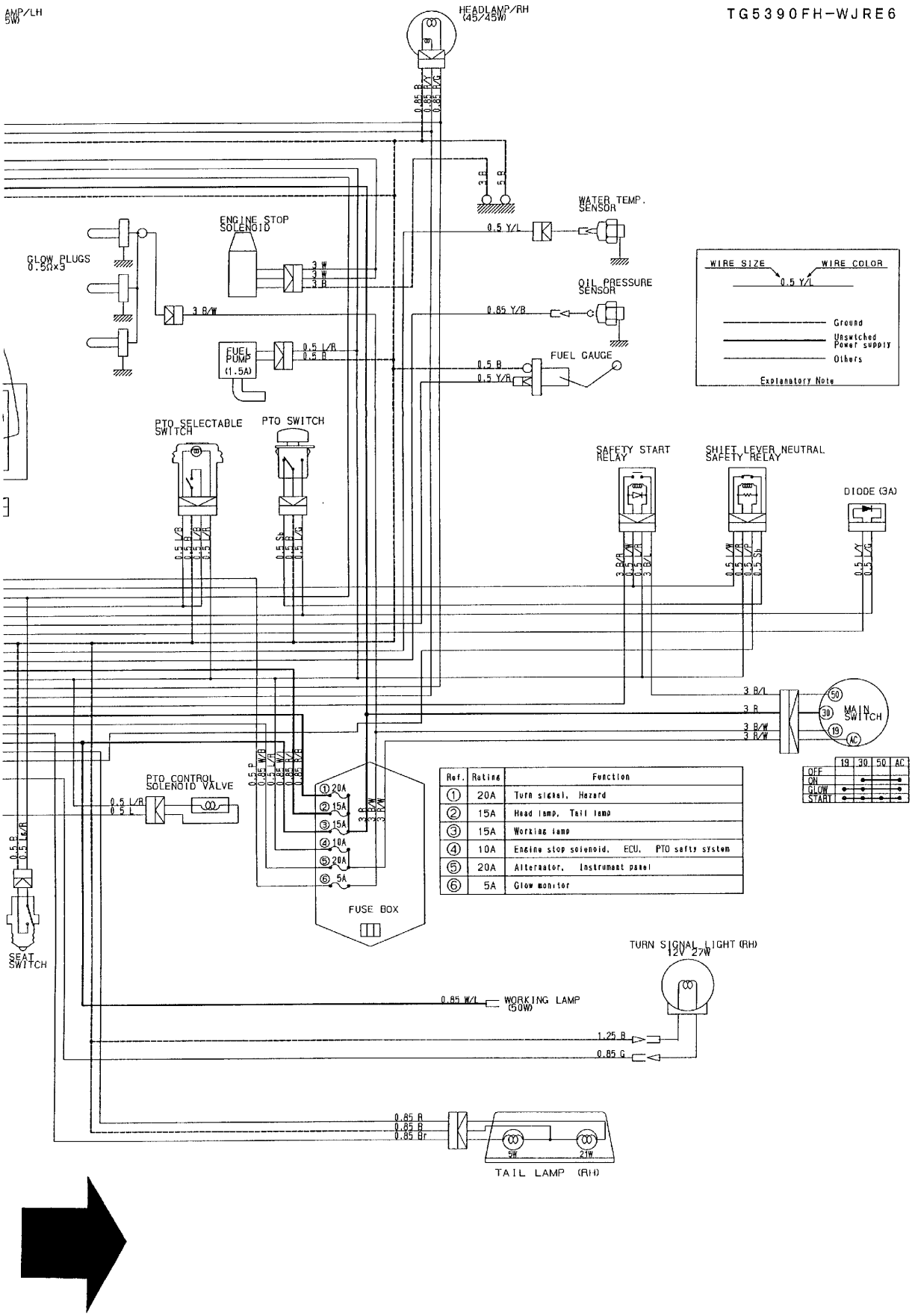

Ref.	Rating	Function
①	20A	Turn signal, Hazard
②	15A	Head lamp, Tail lamp
③	15A	Working lamp
④	10A	Engine stop solenoid, ECU, PTO safty system
⑤	20A	Alternator, Instrument panel
⑥	5A	Glow monitor

	19	30	50	AC
OFF				
ON		●		●
GLOW	●	●		●
START	●	●	●	●

WIRING DIAGRAM (E4/Q) (1)

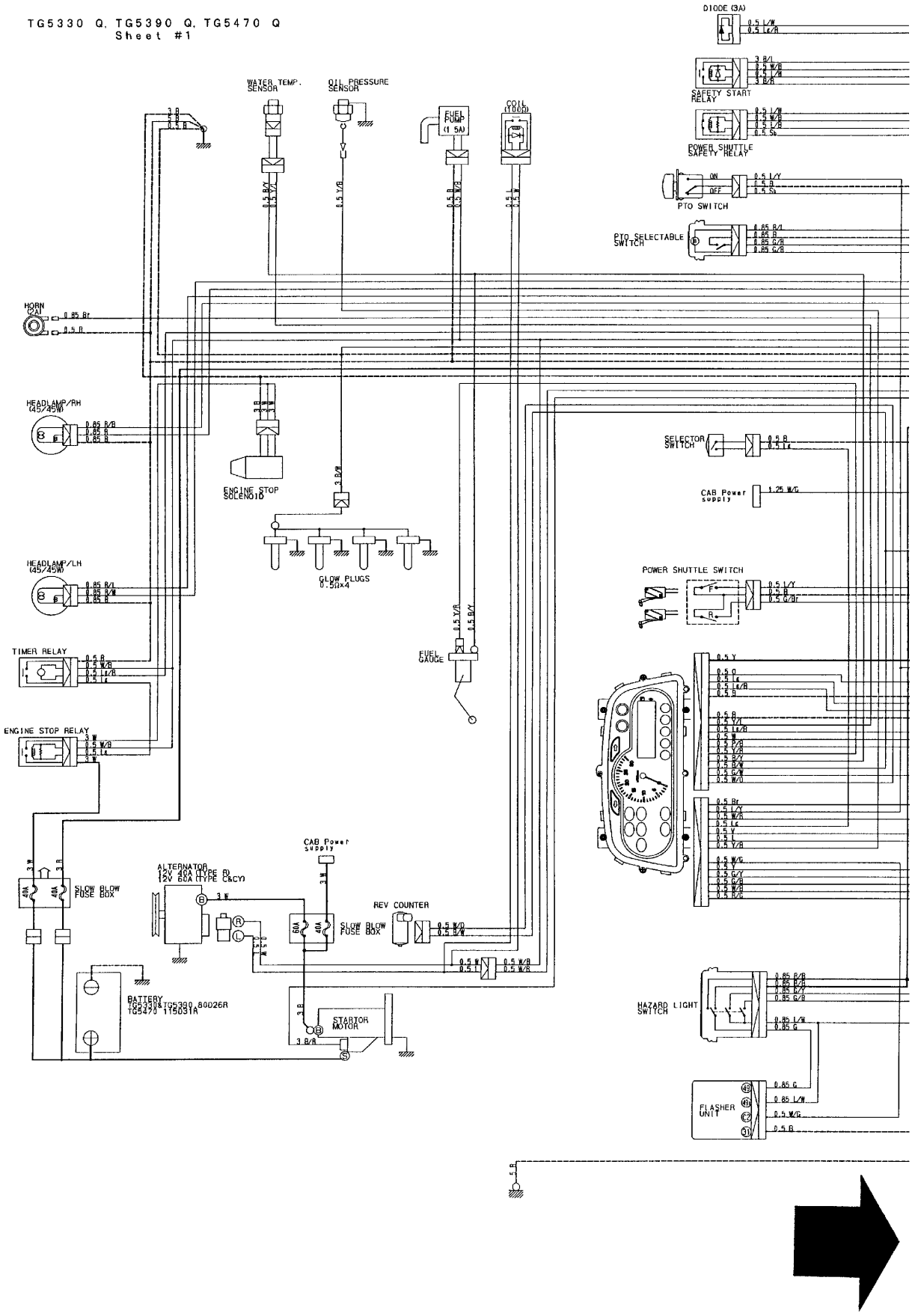

WIRING DIAGRAM (E4/Q) (2)

FUSE BOX					
Ref.	Rating	Function	Ref.	Rating	Function
①	15A	Turn signal, Hazard	⑪	10A	High beam (RH)
②	20A	Head lamp, Tail lamp, Position lamp, Horn	⑫	10A	High beam (LH)
③	10A	Brake lamp	⑬	10A	Low beam (RH)
④	10A	Instrument panel	⑭	10A	Low beam (LH)
⑤	15A	Alternator, Fuel pump, Engine start safty system, etc.	⑮	5A	Tail lamp (RH)
⑥	10A	ECU and control system	⑯	5A	Tail lamp (LH)
⑦	20A	CAB Power supply	⑰	5A	Position lamp (RH)
⑧	15A	Spare power supply	⑱	5A	Position lamp (LH)
⑨	15A	Spare power supply	⑲	5A	Registration plate lamp
⑩	20A	Working lamp	⑳	5A	"CHECK MODE" Fuse

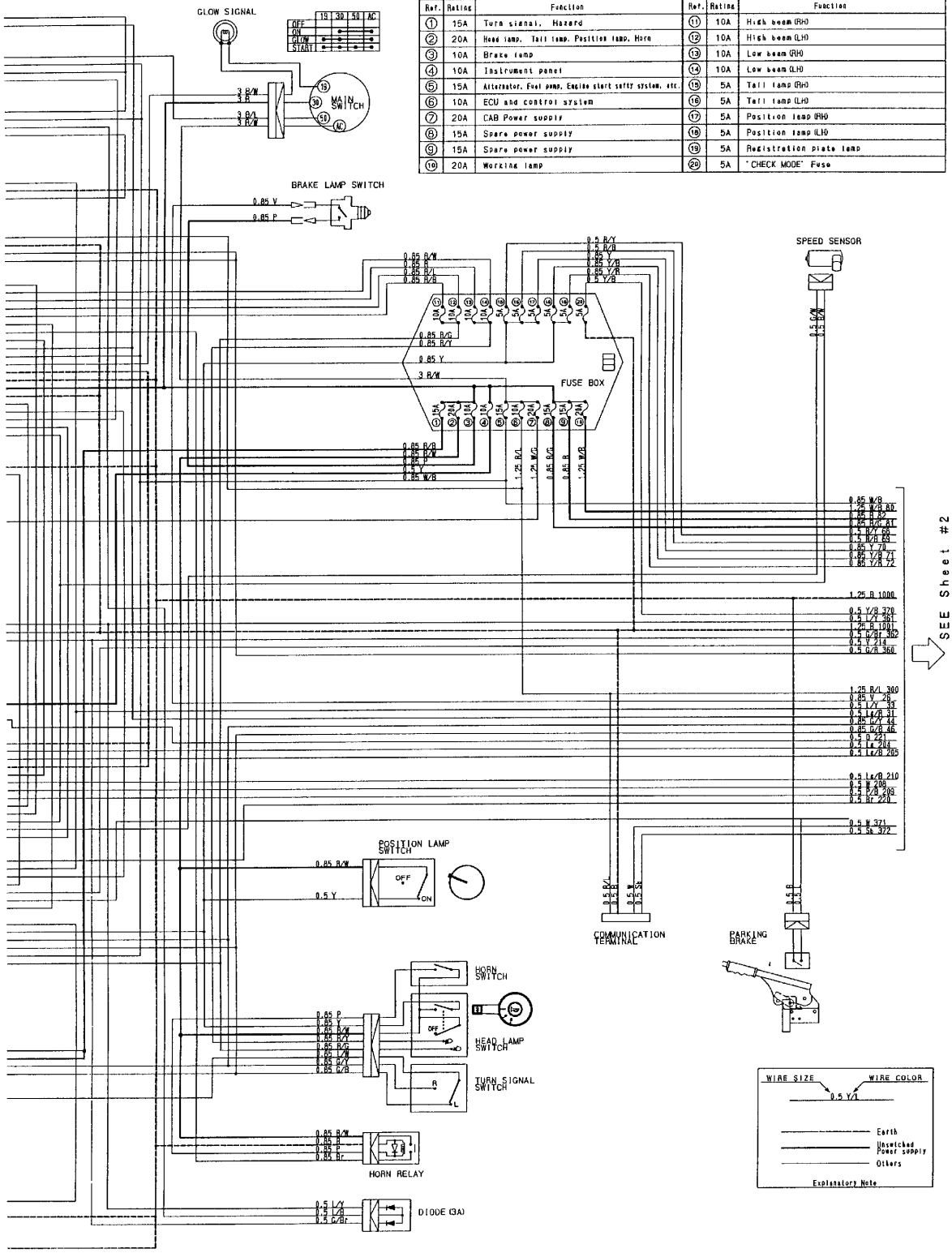

WIRING DIAGRAM (E4/Q) (3)

TG5330 Q, TG5390 Q, TG5470 Q
Sheet #2

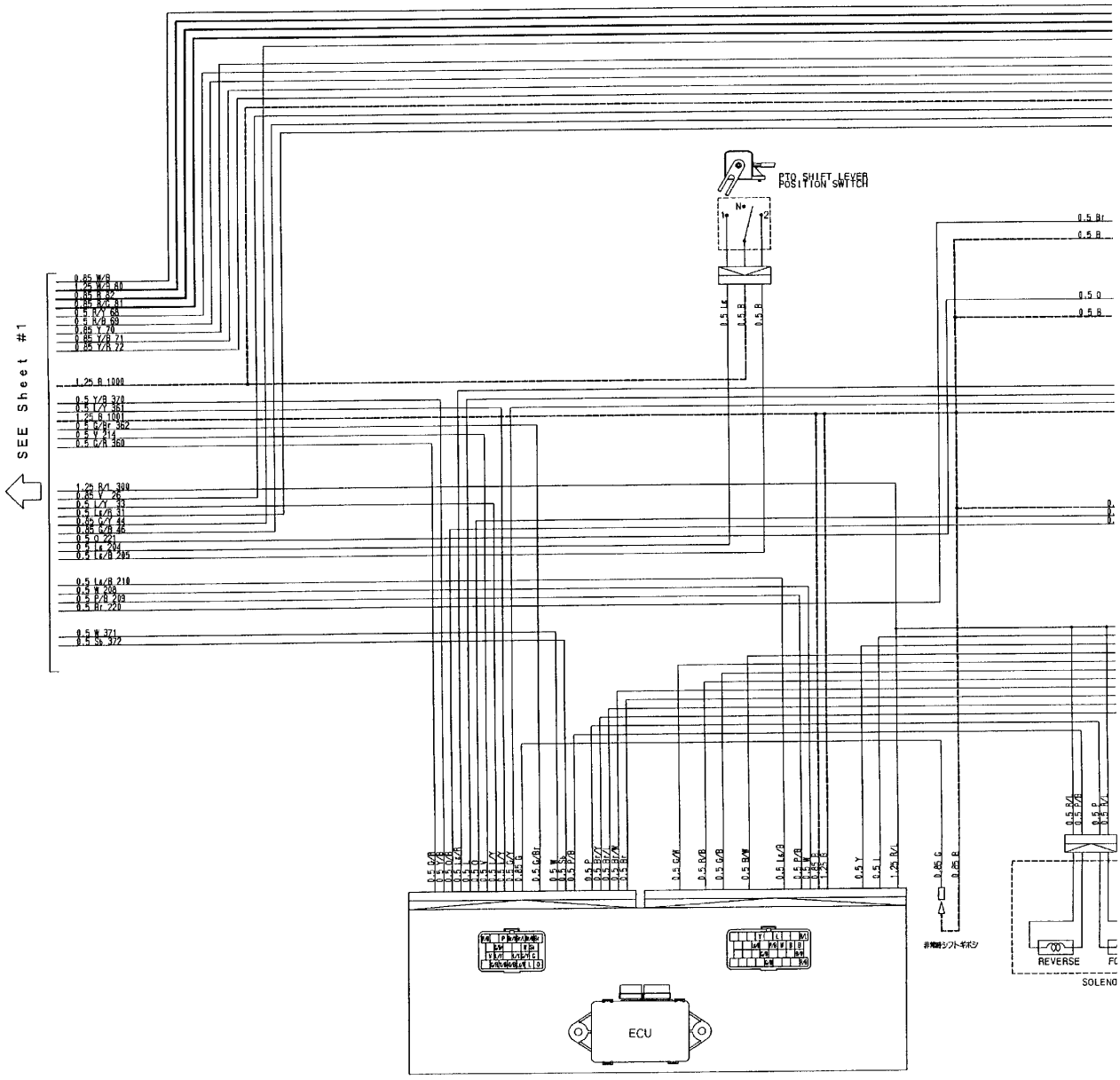

WIRING DIAGRAM (E4/Q) (4)

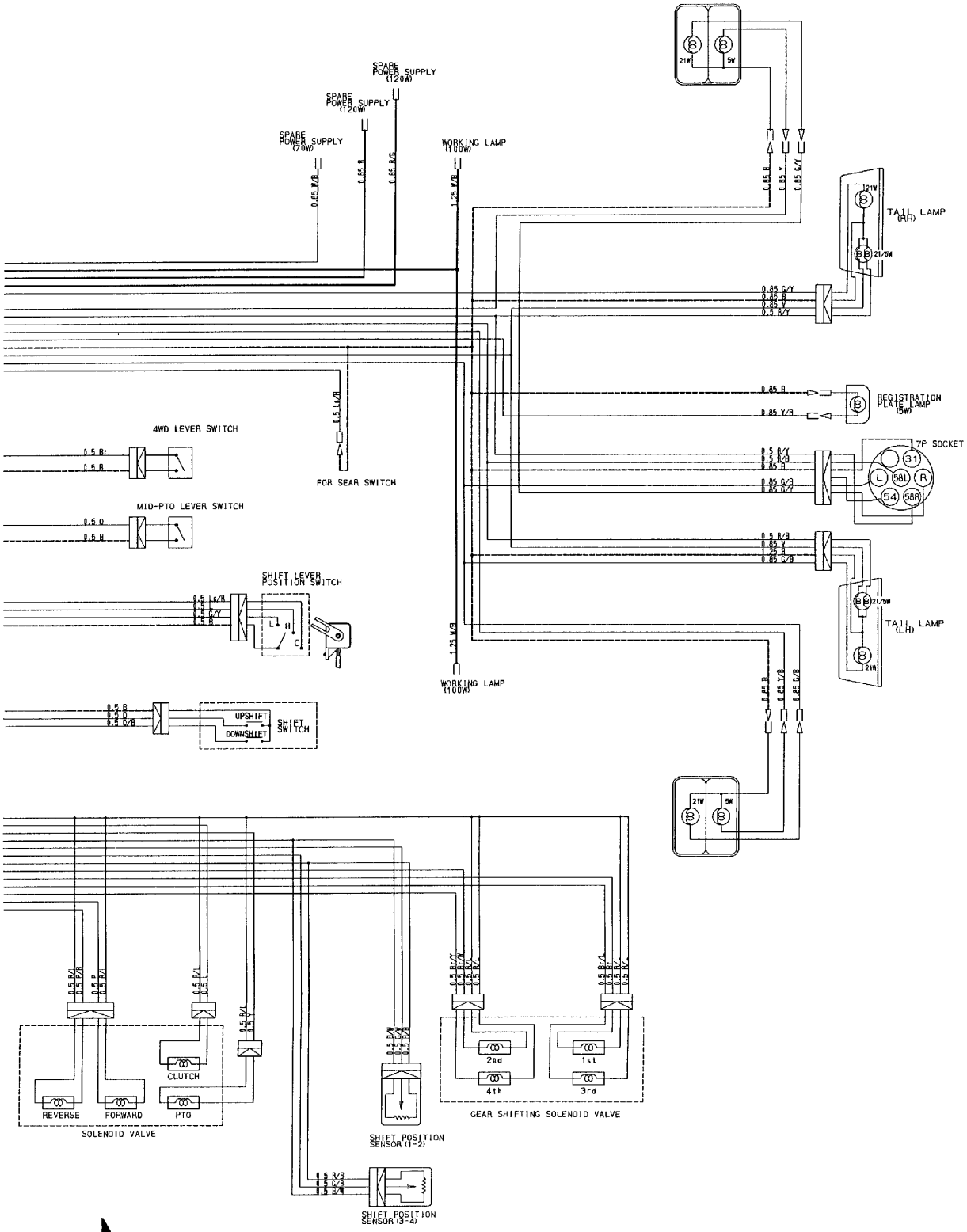

WIRING DIAGRAM (E4/CY) (1)

CAB SYSTEM
(TYPE C&CY: E4)

FUSE LIST

Ref.	Rating	Function
①	5A	Radio cassette player (OPT)
②	15A	Front working lamp
③	15A	Rear working lamp (OPT)
④	10A	Windshield wiper
⑤	10A	Rear shield wiper (OPT)
⑥	5A	Courtesy light
⑦	15A	Blower (A/C)
⑧	15A	Socket
⑨	7.5A	Air conditioner
⑩	10A	Radio cassette player (OPT)

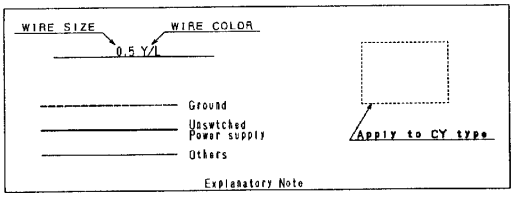

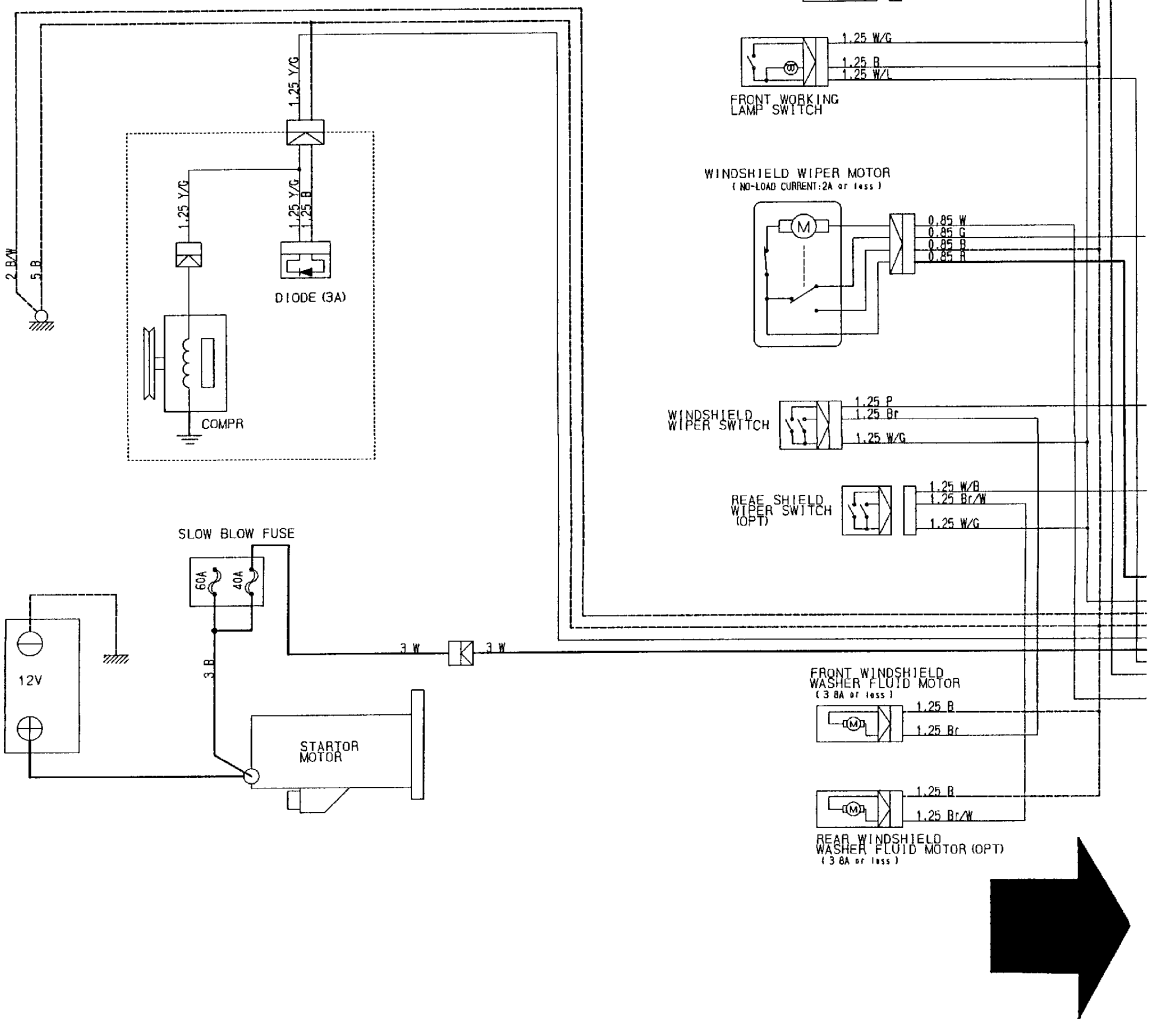

WIRING DIAGRAM (E4/CY) (2)

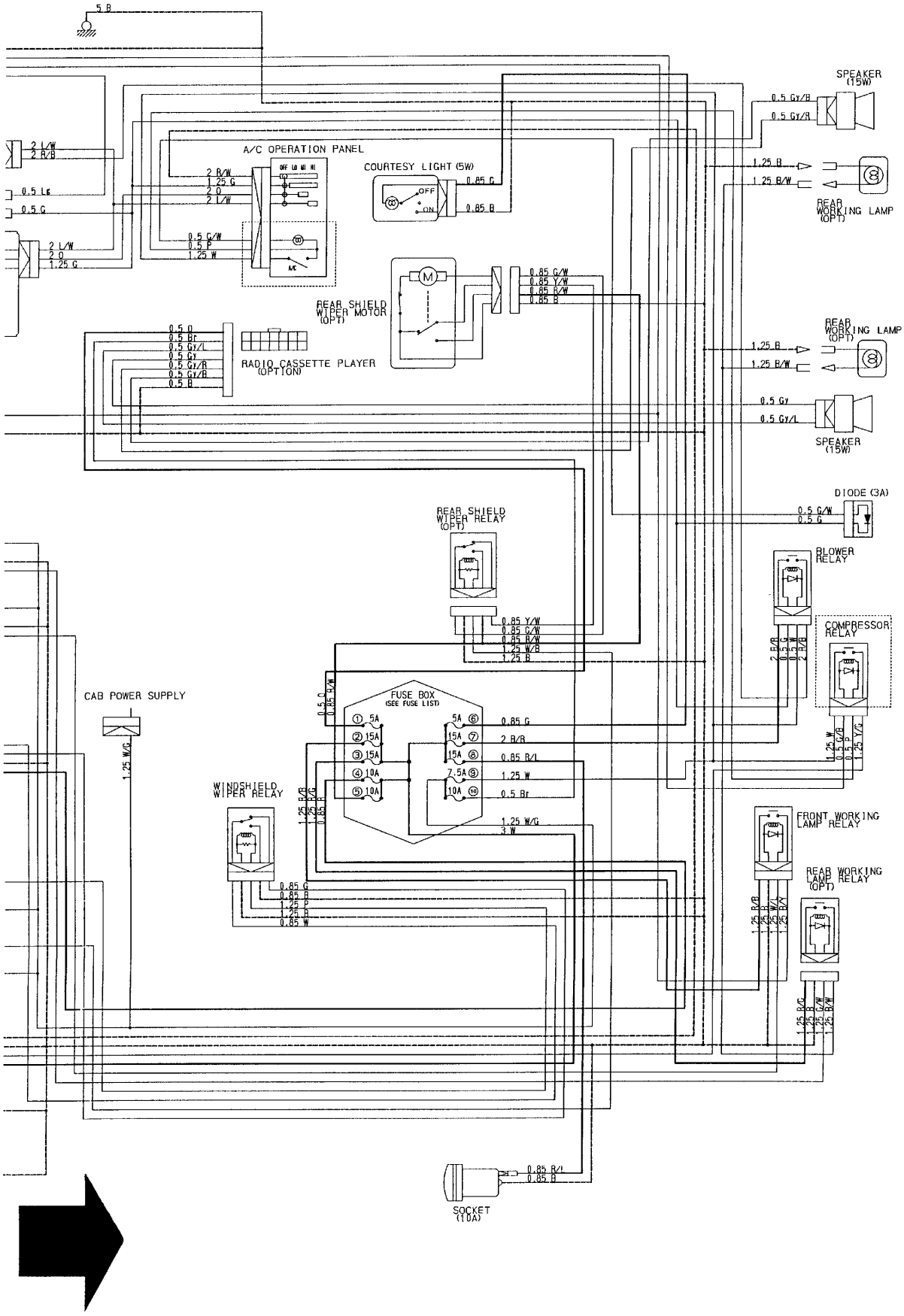

WIRING DIAGRAM (E4/A) (1)

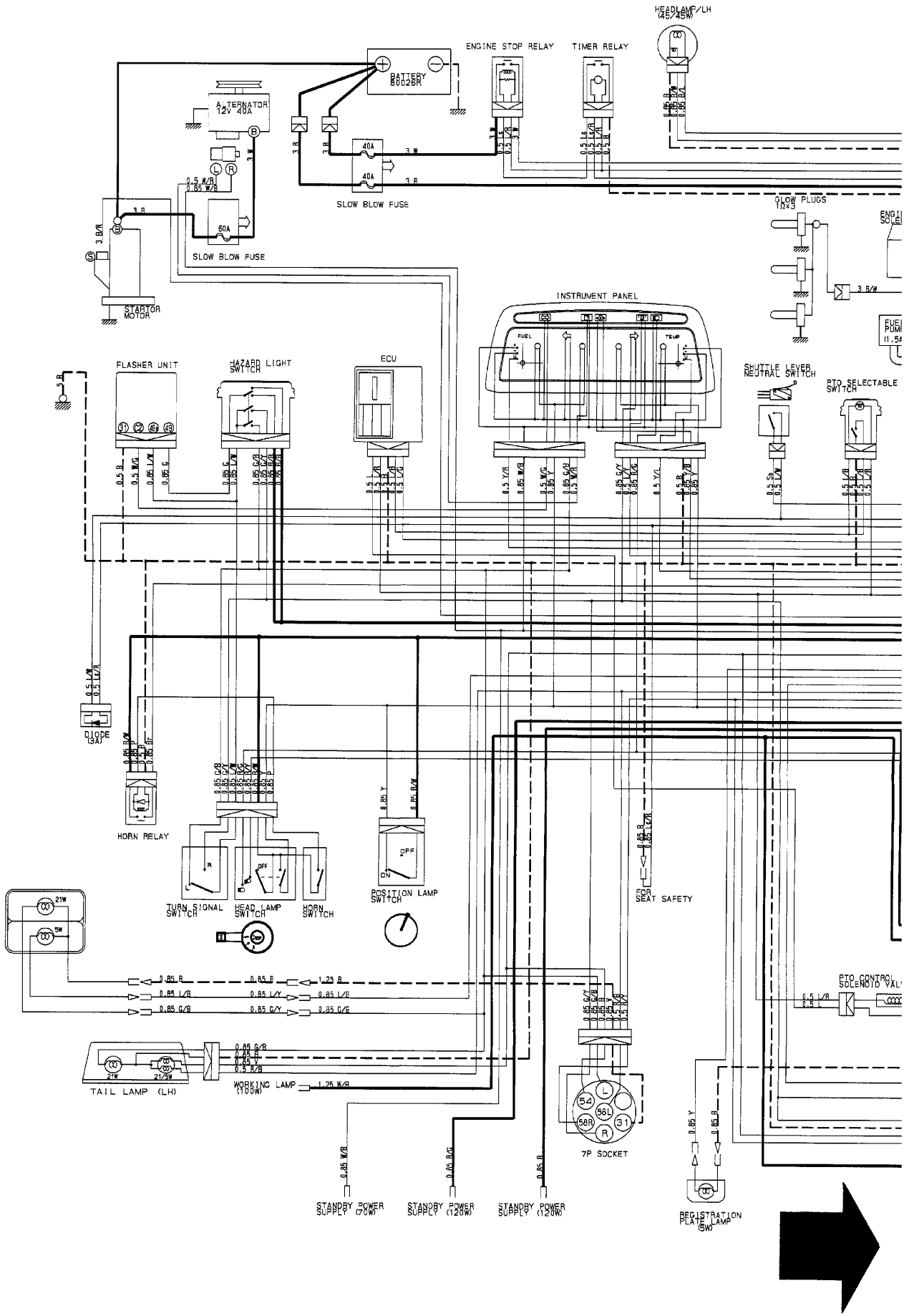

WIRING DIAGRAM (E4/A) (2)

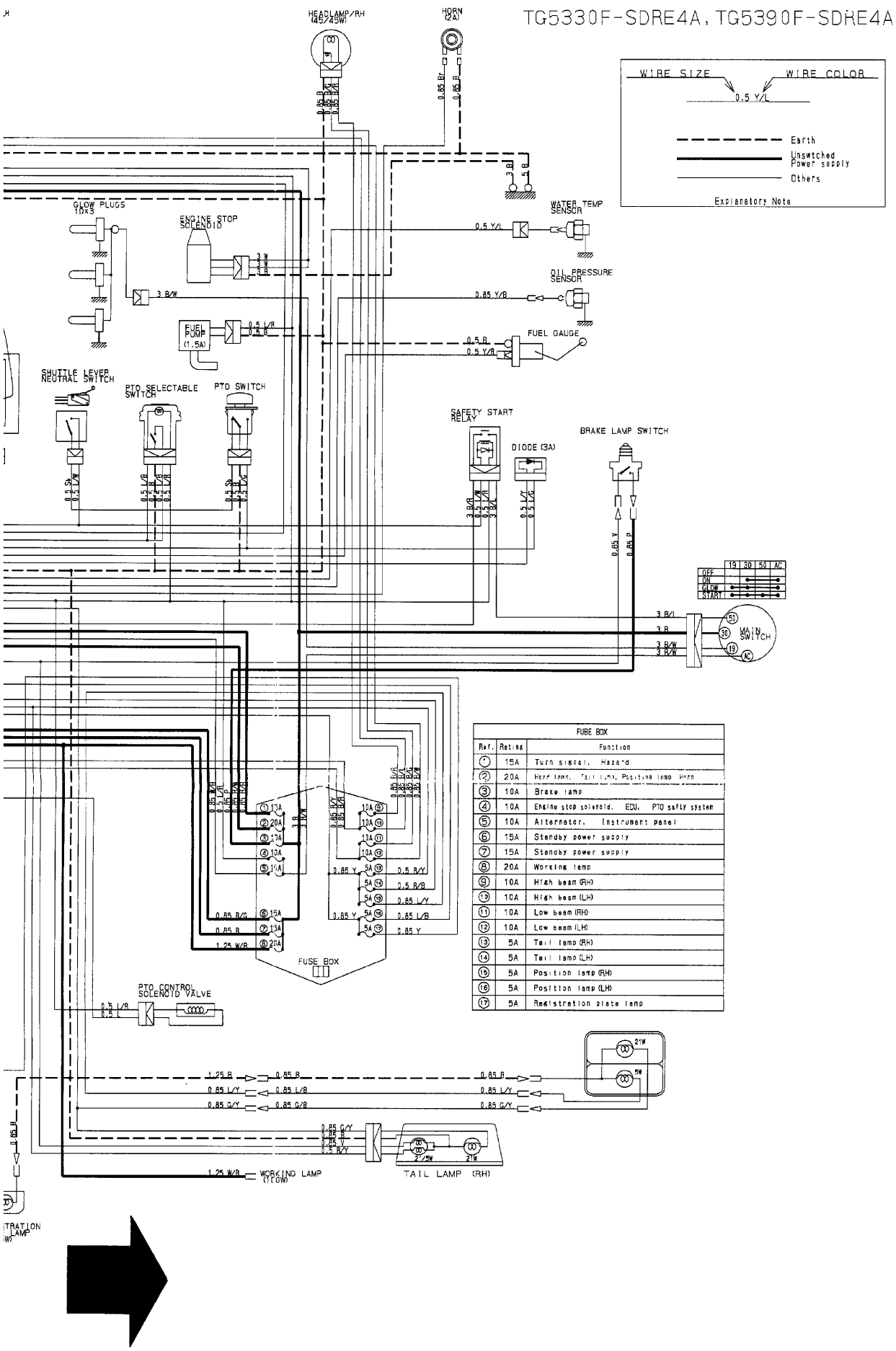

FUSE BOX		
Ref.	Rating	Function
①	15A	Turn signal, Hazard
②	20A	Head lamp, Tail lamp, Position lamp, Horn
③	10A	Brake lamp
④	10A	Engine stop solenoid, ECU, PTO safty system
⑤	10A	Alternator, Instrument panel
⑥	15A	Standby power supply
⑦	15A	Standby power supply
⑧	20A	Working lamp
⑨	10A	High beam (RH)
⑩	10A	High beam (LH)
⑪	10A	Low beam (RH)
⑫	10A	Low beam (LH)
⑬	5A	Tail lamp (RH)
⑭	5A	Tail lamp (LH)
⑮	5A	Position lamp (RH)
⑯	5A	Position lamp (LH)
⑰	5A	Registration plate lamp

Part Code	Fig.	Key	Part Code	Fig.	Key	Part Code	Fig.	Key
1373-121-001-00	27	4	6209-605-003-10	10	2-B	6211-310-009-60	10	1
	28	4	6209-605-004-10	2	3	6211-310-009-70	10	1-A
1650-650-015-00	10	16	6209-605-007-00	6	7-A	6211-310-009-80	10	1-B
3625-540-004-00	10	40	6209-610-001-10	6	4	6211-311-013-20	10	41
3640-586-004-00	24	5	6209-610-003-00	2	2	6211-312-005-10	10	29
3805-355-002-20	8	2		6	6		30	14
3817-401-001-00	10	12	6209-610-004-00	10	3	6211-312-006-10	10	42
	12	20	6209-610-007-00	6	3		30	15
	19	13	6209-610-009-00	6	5	6211-319-003-00	10	44
	19	19	6209-625-002-00	10	7	6211-341-073-00	9	1
	20	14		30	12	6211-342-003-10	9	2
	20	20	6209-625-003-20	6	15	6211-361-038-10	8	1
	23	8		30	10	6211-510-008-00	6	11
6005-010-139-00	1	1	6209-630-002-10	29	7	6211-511-007-00	6	12
6115-639-008-00	32	51		30	22	6211-511-008-00	6	13
6209-000-002-00	12	18	6209-730-005-00	13	3	6211-530-008-00	7	1
6209-000-005-00	2	7		23	11	6211-540-008-00	7	3
6209-000-006-00	6	2	6209-730-006-00	16	4	6211-599-004-00	6	14
6209-000-041-00	16	9		17	4		7	2
	17	9	6209-740-001-00	10	28		7	4
6209-000-043-00	17	12	6209-740-005-00	6	18	6211-751-001-10	3	5
6209-030-043-00	23	17	6209-740-006-00	10	28-A	6211-751-002-00	6	31
6209-030-048-00	21	4	6209-749-001-20	6	16	6211-760-046-00	6	29
6209-030-091-00	9	4		10	46	6211-760-046-10	6	29-A
6209-046-007-00	21	4-A	6209-800-010-00	23	13	6211-766-033-00	6	30
6209-050-001-00	10	34	6209-800-011-00	10	49	6211-777-021-00	11	2
6209-050-002-00	10	35	6209-920-002-00	10	22	6212-111-095-30	14	1
6209-300-014-00	2	8	6209-940-004-00	12	14	6212-114-095-30	15	1
6209-360-011-00	24	3	6211-110-084-10	2	1	6212-116-095-30	15	3
6209-360-109-00	3	9	6211-110-084-20	2	1-A	6212-121-028-00	14	2
6209-360-109-10	3	9-A	6211-141-057-10	2	6	6212-121-028-10	14	2-A
6209-409-001-00	10	20		30	3	6212-124-028-00	15	2
6209-409-003-00	12	17	6211-170-007-30	3	1	6212-124-028-10	15	2-A
6209-440-005-00	29	4	6211-173-005-00	3	6	6212-126-028-00	15	4
6209-490-002-10	3	7		30	4	6212-126-028-10	15	4-A
6209-500-003-00	10	18	6211-179-011-20	3	2	6212-211-002-00	14	3
	10	27	6211-210-081-00	6	1	6212-230-011-30	14	5
	30	13	6211-258-001-00	6	9	6212-235-004-00	14	6
6209-500-006-00	10	10		30	8	6212-235-004-10	14	6-A
6209-572-003-00	3	8	6211-258-002-00	6	10	6212-271-009-00	14	7
	30	5		30	9	6212-273-009-00	7	5
6209-580-002-10	23	27	6211-291-010-00	3	3	6212-274-009-00	7	6
6209-600-004-00	10	26	6211-291-015-20	6	25	6212-310-011-40	16	1
6209-605-003-00	10	2	6211-292-001-20	6	26		17	1
6209-605-003-10	10	2-A		30	11	6212-330-075-10	16	5

Numerical Index

Part Code	Fig.	Key	Part Code	Fig.	Key	Part Code	Fig.	Key
6215-537-002-10	23	33	6215-629-051-00	32	40	6281-115-010-00	33	23
6215-541-001-10	23	19	6215-629-052-00	32	41	6281-115-011-00	33	10
6215-541-016-30	25	2	6215-629-053-00	32	42	6281-115-016-00	33	20
	26	2	6215-629-054-00	32	43	6281-116-004-00	33	11
6215-541-016-40	26	2-A	6215-629-055-00	32	44	6281-121-006-00	33	2
6215-541-024-30	23	25	6215-629-056-00	32	45	6281-123-005-00	33	8
6215-541-045-00	23	25-A	6215-629-058-00	32	46	6281-124-007-10	33	5
6215-541-045-10	23	25-B	6215-629-059-00	32	47	6281-129-003-00	33	19
6215-542-004-20	10	23	6215-629-060-00	32	17	6281-129-038-00	33	3
6215-542-005-10	10	25	6215-629-061-00	32	18	6281-129-039-00	33	4
6215-542-006-00	23	21	6215-629-062-00	32	19	6281-129-040-00	33	7
6215-543-002-10	23	20	6215-629-063-00	32	20	6281-129-042-00	33	15
6215-546-003-10	10	19	6215-629-064-00	32	21	6281-129-043-00	33	16
6215-548-058-00	25	1	6215-629-065-00	32	22	6281-129-044-00	33	18
6215-548-069-00	26	1	6215-629-066-00	32	23	6281-129-045-10	33	9
6215-549-007-10	23	28	6215-629-067-00	32	24	6281-129-062-00	33	14
6215-549-013-00	6	28	6215-631-015-00	32	2	6281-151-017-10	33	13
6215-549-031-10	23	23	6215-634-003-00	32	14	6281-151-020-00	33	13-A
6215-549-039-00	23	32	6215-635-004-00	32	8	6281-151-023-00	33	13-B
6215-549-076-00	23	28-A	6215-635-005-00	32	49	6281-200-020-00	27	1
6215-549-076-10	23	28-B	6215-637-004-00	32	48		28	1
6215-600-104-20	23	1	6215-639-008-00	32	15	6281-213-017-00	34	7
6215-611-015-00	32	1	6215-639-009-00	32	16	6281-214-003-00	34	12
6215-619-023-00	32	50	6215-641-002-00	32	3	6281-214-004-00	34	13
6215-619-024-00	32	52	6215-643-005-00	32	4	6281-215-001-00	34	17
6215-621-017-10	23	9	6215-644-009-00	32	6	6281-216-001-00	34	18
6215-622-003-00	32	11	6215-649-008-00	32	5	6281-217-003-00	34	16
6215-629-017-00	32	12	6215-649-011-00	32	10	6281-221-007-00	34	4
6215-629-035-00	32	13	6215-649-013-00	32	9	6281-222-012-00	34	1
6215-629-036-00	32	25	6215-649-014-00	32	7	6281-229-002-00	34	2
6215-629-037-00	32	26	6219-310-003-20	10	37	6281-229-003-00	34	3
6215-629-038-00	32	27	6219-732-012-00	29	5	6281-229-004-00	34	5
6215-629-039-00	32	28	6219-732-017-00	29	5-A	6281-229-006-00	34	8
6215-629-040-00	32	29	6219-752-006-00	23	2	6281-229-007-00	34	9
6215-629-041-00	32	30	6219-752-007-00	23	3	6281-229-008-00	34	10
6215-629-042-00	32	31	6219-752-008-00	23	4	6281-229-011-00	34	15
6215-629-043-00	32	32	6219-752-009-00	23	5	6281-229-012-00	34	19
	32	32	6219-752-010-00	23	6	6281-229-013-00	34	20
6215-629-044-00	32	33	6219-752-044-00	23	4-A	6281-229-014-00	34	21
6215-629-045-00	32	34	6219-752-045-00	23	2-A	6281-229-015-00	34	22
6215-629-046-00	32	35	6219-752-046-00	23	5-A	6281-229-016-00	34	23
6215-629-047-00	32	36	6219-752-047-00	23	6-A	6281-229-017-00	34	24
6215-629-048-00	32	37	6281-100-007-20	27	7	6281-229-018-00	34	25
6215-629-049-00	32	38		28	7	6281-229-029-00	34	14
6215-629-050-00	32	39	6281-111-005-00	33	1	6281-229-032-00	34	6

Numerical Index

Part Code	Fig.	Key	Part Code	Fig.	Key	Part Code	Fig.	Key
1373-121-001-00	27	4	6209-605-003-10	10	2-A	6211-292-001-20	30	11
	28	4		10	2-B	6211-310-040-00	10	1
1650-650-015-00	10	16	6209-605-004-10	2	3	6211-310-040-10	10	1-A
1690-654-200-00	10	37	6209-605-007-00	6	7-A	6211-310-040-20	10	1-B
3625-540-004-00	10	39	6209-610-001-10	6	4	6211-311-013-20	10	40
3640-586-004-00	24	5	6209-610-003-00	2	2	6211-312-005-10	10	29
3805-355-002-20	8	2		6	6		30	14
3817-401-001-00	10	12	6209-610-004-00	10	3	6211-312-006-10	10	41
	12	20	6209-610-007-00	6	3		30	15
	19	13	6209-610-009-00	6	5	6211-319-003-00	10	43
	19	19	6209-625-002-00	10	7	6211-341-073-00	9	1
	20	14		30	12	6211-342-003-10	9	2
	20	20	6209-625-003-20	6	15	6211-361-038-10	8	1
	23	8		30	10	6211-510-008-00	6	11
6005-010-139-00	1	1	6209-630-002-10	29	7	6211-511-007-00	6	12
6115-639-008-00	32	51		30	22	6211-511-008-00	6	13
6209-000-002-00	12	18	6209-730-005-00	13	3	6211-530-008-00	7	1
6209-000-005-00	2	7		23	11	6211-540-008-00	7	3
6209-000-006-00	6	2	6209-730-006-00	16	4	6211-599-004-00	6	14
6209-000-041-00	16	9		17	4		7	2
	17	9	6209-740-001-00	10	28		7	4
6209-000-043-00	17	12	6209-740-005-00	6	18	6211-751-001-10	3	5
6209-030-043-00	23	17	6209-740-006-00	10	28-A	6211-751-002-00	6	31
6209-030-048-00	21	4	6209-749-001-20	6	16	6211-760-046-00	6	29
6209-030-091-00	9	4		10	45	6211-760-046-10	6	29-A
6209-046-007-00	21	4-A	6209-800-010-00	23	13	6211-766-033-00	6	30
6209-050-001-00	10	34	6209-800-011-00	10	48	6211-777-021-00	11	2
6209-050-002-00	10	35	6209-920-002-00	10	22	6212-111-095-30	14	1
6209-300-014-00	2	8	6209-940-004-00	12	14	6212-114-095-30	15	1
6209-360-011-00	24	3	6211-110-084-10	2	1	6212-116-095-30	15	3
6209-360-109-00	3	9	6211-110-084-20	2	1-A	6212-121-028-00	14	2
6209-360-109-10	3	9-A	6211-141-057-10	2	6	6212-121-028-10	14	2-A
6209-409-001-00	10	20		30	3	6212-124-028-00	15	2
6209-409-003-00	12	17	6211-170-007-30	3	1	6212-124-028-10	15	2-A
6209-440-005-00	29	4	6211-173-005-00	3	6	6212-126-028-00	15	4
6209-490-002-10	3	7		30	4	6212-126-028-10	15	4-A
6209-500-003-00	10	18	6211-179-011-20	3	2	6212-211-002-00	14	3
	10	27	6211-210-081-00	6	1	6212-230-011-30	14	5
	30	13	6211-258-001-00	6	9	6212-235-004-00	14	6
6209-500-006-00	10	10		30	8	6212-235-004-10	14	6-A
6209-572-003-00	3	8	6211-258-002-00	6	10	6212-271-009-00	14	7
	30	5		30	9	6212-273-009-00	7	5
6209-580-002-10	23	27	6211-291-010-00	3	3	6212-274-009-00	7	6
6209-600-004-00	10	26	6211-291-015-20	6	25	6212-310-011-40	16	1
6209-605-003-00	10	2	6211-292-001-20	6	26		17	1

Numerical Index

Part Code	Fig.	Key	Part Code	Fig.	Key	Part Code	Fig.	Key
6215-531-010-00	23	24	6215-629-050-00	32	39	6281-115-010-00	33	23
6215-537-002-10	23	33	6215-629-051-00	32	40	6281-115-011-00	33	10
6215-541-001-10	23	19	6215-629-052-00	32	41	6281-115-016-00	33	20
6215-541-016-30	25	2	6215-629-053-00	32	42	6281-116-004-00	33	11
	26	2	6215-629-054-00	32	43	6281-121-006-00	33	2
6215-541-016-40	26	2-A	6215-629-055-00	32	44	6281-123-005-00	33	8
6215-541-024-30	23	25	6215-629-056-00	32	45	6281-124-007-10	33	5
6215-541-045-00	23	25-A	6215-629-058-00	32	46	6281-129-003-00	33	19
6215-541-045-10	23	25-B	6215-629-059-00	32	47	6281-129-038-00	33	3
6215-542-004-20	10	23	6215-629-060-00	32	17	6281-129-039-00	33	4
6215-542-005-10	10	25	6215-629-061-00	32	18	6281-129-040-00	33	7
6215-542-006-00	23	21	6215-629-062-00	32	19	6281-129-042-00	33	15
6215-543-002-10	23	20	6215-629-063-00	32	20	6281-129-043-00	33	16
6215-546-003-10	10	19	6215-629-064-00	32	21	6281-129-044-00	33	18
6215-548-058-00	25	1	6215-629-065-00	32	22	6281-129-045-10	33	9
6215-548-069-00	26	1	6215-629-066-00	32	23	6281-129-062-00	33	14
6215-549-007-10	23	28	6215-629-067-00	32	24	6281-151-017-10	33	13
6215-549-013-00	6	28	6215-631-015-00	32	2	6281-151-020-00	33	13-A
6215-549-031-10	23	23	6215-634-003-00	32	14	6281-151-023-00	33	13-B
6215-549-039-00	23	32	6215-635-004-00	32	8	6281-200-020-00	27	1
6215-549-076-00	23	28-A	6215-635-005-00	32	49		28	1
6215-549-076-10	23	28-B	6215-637-004-00	32	48	6281-213-017-00	34	7
6215-600-104-20	23	1	6215-639-008-00	32	15	6281-214-003-00	34	12
6215-611-015-00	32	1	6215-639-009-00	32	16	6281-214-004-00	34	13
6215-619-023-00	32	50	6215-641-002-00	32	3	6281-215-001-00	34	17
6215-619-024-00	32	52	6215-643-005-00	32	4	6281-216-001-00	34	18
6215-621-017-10	23	9	6215-644-009-00	32	6	6281-217-003-00	34	16
6215-622-003-00	32	11	6215-649-008-00	32	5	6281-221-007-00	34	4
6215-629-017-00	32	12	6215-649-011-00	32	10	6281-222-012-00	34	1
6215-629-035-00	32	13	6215-649-013-00	32	9	6281-229-002-00	34	2
6215-629-036-00	32	25	6215-649-014-00	32	7	6281-229-003-00	34	3
6215-629-037-00	32	26	6219-732-012-00	29	5	6281-229-004-00	34	5
6215-629-038-00	32	27	6219-732-017-00	29	5-A	6281-229-006-00	34	8
6215-629-039-00	32	28	6219-752-006-00	23	2	6281-229-007-00	34	9
6215-629-040-00	32	29	6219-752-007-00	23	3	6281-229-008-00	34	10
6215-629-041-00	32	30	6219-752-008-00	23	4	6281-229-011-00	34	15
6215-629-042-00	32	31	6219-752-009-00	23	5	6281-229-012-00	34	19
6215-629-043-00	32	32	6219-752-010-00	23	6	6281-229-013-00	34	20
	32	32	6219-752-044-00	23	4-A	6281-229-014-00	34	21
6215-629-044-00	32	33	6219-752-045-00	23	2-A	6281-229-015-00	34	22
6215-629-045-00	32	34	6219-752-046-00	23	5-A	6281-229-016-00	34	23
6215-629-046-00	32	35	6219-752-047-00	23	6-A	6281-229-017-00	34	24
6215-629-047-00	32	36	6281-100-007-20	27	7	6281-229-018-00	34	25
6215-629-048-00	32	37		28	7	6281-229-029-00	34	14
6215-629-049-00	32	38	6281-111-005-00	33	1	6281-229-032-00	34	6

Numerical Index

Part Code	Fig.	Key	Part Code	Fig.	Key	Part Code	Fig.	Key
1373-121-001-00	24	4	6209-605-007-00	6	7-A	6211-311-013-20	10	40
	25	4	6209-610-001-10	6	4	6211-312-005-10	10	29
1650-650-015-00	10	16	6209-610-003-00	2	2		27	14
1690-654-200-00	10	37		6	6	6211-312-006-10	10	41
3625-540-004-00	10	39	6209-610-004-00	10	3		27	15
3640-586-004-00	22	5	6209-610-007-00	6	3	6211-319-003-00	10	43
3805-355-002-20	8	2	6209-610-009-00	6	5	6211-341-073-00	9	1
3817-401-001-00	10	12	6209-625-002-00	10	7	6211-342-003-10	9	2
	12	20		27	12	6211-361-038-10	8	1
	18	14	6209-625-003-20	6	15	6211-510-008-00	6	11
	18	20		27	10	6211-511-007-00	6	12
	21	7	6209-630-002-10	26	7	6211-511-008-00	6	13
6005-010-139-00	1	1		27	22	6211-530-008-00	7	1
6115-639-008-00	29	51	6209-730-005-00	13	3	6211-540-008-00	7	3
6209-000-002-00	12	18		21	10	6211-599-004-00	6	14
6209-000-005-00	2	7	6209-730-006-00	16	4		7	2
6209-000-006-00	6	2	6209-740-001-00	10	28		7	4
6209-000-041-00	16	9	6209-740-005-00	6	18	6211-751-001-10	3	5
6209-000-043-00	16	13-A	6209-740-006-00	10	28-A	6211-751-002-00	6	31
6209-030-043-00	21	16	6209-749-001-20	6	16	6211-760-046-00	6	29
6209-030-048-00	19	4		10	45	6211-760-046-10	6	29-A
6209-030-091-00	9	4	6209-800-010-00	21	12	6211-766-033-00	6	30
6209-046-007-00	19	4-A	6209-800-011-00	10	48	6211-777-021-00	11	2
6209-050-001-00	10	34	6209-920-002-00	10	22	6212-111-095-30	14	1
6209-050-002-00	10	35	6209-940-004-00	12	14	6212-114-095-30	15	1
6209-300-014-00	2	8	6211-110-084-10	2	1	6212-116-095-30	15	3
6209-360-011-00	22	3	6211-110-084-20	2	1-A	6212-121-028-00	14	2
6209-360-109-00	3	9	6211-141-057-10	2	6	6212-121-028-10	14	2-A
6209-360-109-10	3	9-A		27	3	6212-124-028-00	15	2
6209-409-001-00	10	20	6211-170-007-30	3	1	6212-124-028-10	15	2-A
6209-409-003-00	12	17	6211-173-005-00	3	6	6212-126-028-00	15	4
6209-440-005-00	26	4		27	4	6212-126-028-10	15	4-A
6209-490-002-10	3	7	6211-179-011-20	3	2	6212-211-002-00	14	3
6209-500-003-00	10	18	6211-210-081-00	6	1	6212-230-011-30	14	5
	10	27	6211-258-001-00	6	9	6212-235-004-00	14	6
	27	13		27	8	6212-235-004-10	14	6-A
6209-500-006-00	10	10	6211-258-002-00	6	10	6212-271-009-00	14	7
6209-572-003-00	3	8		27	9	6212-273-009-00	7	5
	27	5	6211-291-010-00	3	3	6212-274-009-00	7	6
6209-580-002-10	21	26	6211-291-015-20	6	25	6212-310-011-40	16	1
6209-600-004-00	10	26	6211-292-001-20	6	26	6212-330-075-10	16	5
6209-605-003-00	10	2		27	11	6212-333-002-00	16	6
6209-605-003-10	10	2-A	6211-310-040-00	10	1	6212-339-009-10	16	10
	10	2-B	6211-310-040-10	10	1-A	6212-371-034-10	16	11
6209-605-004-10	2	3	6211-310-040-20	10	1-B	6212-379-001-00	16	12

Numerical Index

Part Code	Fig.	Key	Part Code	Fig.	Key	Part Code	Fig.	Key
6212-511-005-00	13	1	6213-614-013-00	18	13	6215-345-046-00	28	4
6212-521-008-00	16	3		27	18	6215-345-047-00	28	5
6212-522-004-10	13	2	6213-614-014-00	18	16	6215-345-048-00	28	6
6212-523-021-00	13	6		27	19	6215-345-049-00	28	7
6212-524-012-30	21	9	6213-619-002-00	18	11	6215-345-050-00	28	8
6212-530-017-00	10	47	6213-619-003-00	18	10	6215-345-051-00	28	9
6212-531-008-20	6	8	6213-619-006-00	18	15	6215-345-052-00	28	10
6212-531-008-30	6	8-A	6213-619-009-00	18	12	6215-345-053-00	28	11
6212-535-007-00	13	4	6213-621-003-00	18	6	6215-359-003-00	28	17
6212-535-009-00	21	13	6213-622-002-10	18	5	6215-359-004-00	28	18
6212-551-020-10	12	1	6213-631-002-00	18	3	6215-359-006-00	29	53
6212-552-008-00	12	2	6213-631-005-00	18	4	6215-411-133-00	20	6
6212-561-003-00	12	3	6213-641-022-10	19	2	6215-411-134-00	20	7
6212-563-001-00	12	4	6213-642-002-00	18	7	6215-411-135-00	20	8
6212-565-001-00	12	5	6213-660-015-00	19	1	6215-411-136-00	22	2
6212-569-002-00	2	4	6213-669-009-00	19	3	6215-412-004-00	22	1
	27	2	6213-671-029-00	19	5	6215-520-007-10	21	15
6212-571-002-30	12	6	6213-674-006-20	24	2	6215-526-004-00	21	17
6212-575-003-00	12	7		25	2	6215-531-010-00	21	23
6212-600-009-20	12	8	6213-711-003-20	18	28	6215-537-002-10	21	32
6212-611-004-10	12	9	6213-716-004-10	18	23	6215-541-001-10	21	18
6212-616-002-00	12	16	6213-721-007-00	6	23	6215-541-016-30	23	2
6212-620-008-20	12	10	6213-729-013-10	18	21	6215-541-016-40	23	2-A
6212-626-002-10	12	11	6213-743-002-10	18	24	6215-541-024-30	21	24
6212-628-010-10	12	12		27	20	6215-541-045-00	21	24-A
6212-628-011-10	12	13	6214-110-003-00	4	1	6215-541-045-10	21	24-B
6213-100-004-30	17	1	6214-115-003-10	4	2	6215-542-004-20	10	23
6213-111-002-20	17	2		27	6	6215-542-005-10	10	25
6213-119-001-00	17	6	6214-141-044-00	5	1	6215-542-006-00	21	20
6213-120-002-30	17	3	6214-145-004-20	5	2	6215-543-002-10	21	19
6213-125-002-10	17	4		27	7	6215-546-003-10	10	19
6213-129-003-00	17	5	6215-300-045-00	20	1	6215-548-069-00	23	1
6213-129-006-00	6	17	6215-300-045-10	20	1-A	6215-549-007-10	21	27
6213-140-013-00	17	8	6215-311-036-00	28	16	6215-549-013-00	6	28
6213-149-003-20	17	10	6215-315-002-00	20	2	6215-549-031-10	21	22
6213-160-003-10	10	30	6215-315-005-00	20	4	6215-549-039-00	21	31
6213-160-005-00	10	30-A	6215-315-006-00	20	3	6215-549-076-00	21	27-A
6213-161-003-10	10	31	6215-315-007-00	20	5	6215-549-076-10	21	27-B
6213-164-001-00	10	32	6215-330-028-00	28	1	6215-600-104-20	21	1
6213-240-002-10	17	12	6215-332-014-00	28	15	6215-611-015-00	29	1
6213-319-001-00	6	24	6215-339-004-00	28	14	6215-619-023-00	29	50
6213-610-011-10	18	1	6215-342-013-00	28	13	6215-619-024-00	29	52
6213-611-006-00	18	2	6215-343-010-00	28	12	6215-621-017-10	21	8
6213-612-004-00	18	9	6215-345-044-00	28	2	6215-622-003-00	29	11
6213-613-002-10	18	8	6215-345-045-00	28	3	6215-629-017-00	29	12

Part Code	Fig.	Key	Part Code	Fig.	Key	Part Code	Fig.	Key
6215-629-035-00	29	13	6215-649-013-00	29	9	6281-229-008-00	31	10
6215-629-036-00	29	25	6215-649-014-00	29	7	6281-229-011-00	31	15
6215-629-037-00	29	26	6219-732-012-00	26	5	6281-229-012-00	31	19
6215-629-038-00	29	27	6219-732-017-00	26	5-A	6281-229-013-00	31	20
6215-629-039-00	29	28	6219-752-044-00	21	3	6281-229-014-00	31	21
6215-629-040-00	29	29	6219-752-045-00	21	2	6281-229-015-00	31	22
6215-629-041-00	29	30	6219-752-046-00	21	4	6281-229-016-00	31	23
6215-629-042-00	29	31	6219-752-047-00	21	5	6281-229-017-00	31	24
6215-629-043-00	29	32	6281-100-007-20	24	7	6281-229-018-00	31	25
	29	32		25	7	6281-229-029-00	31	14
6215-629-044-00	29	33	6281-111-005-00	30	1	6281-229-032-00	31	6
6215-629-045-00	29	34	6281-115-010-00	30	23	6281-229-033-00	31	11
6215-629-046-00	29	35	6281-115-011-00	30	10	6281-229-041-00	30	22
6215-629-047-00	29	36	6281-115-016-00	30	20	6281-271-002-00	31	26
6215-629-048-00	29	37	6281-116-004-00	30	11	6281-410-023-00	26	3
6215-629-049-00	29	38	6281-121-006-00	30	2	6281-410-023-10	26	3-A
6215-629-050-00	29	39	6281-123-005-00	30	8	6281-910-011-00	26	6
6215-629-051-00	29	40	6281-124-007-10	30	5	6281-971-003-00	26	1
6215-629-052-00	29	41	6281-129-003-00	30	19	6282-450-007-00	26	2
6215-629-053-00	29	42	6281-129-038-00	30	3	6287-810-040-00	27	1
6215-629-054-00	29	43	6281-129-039-00	30	4	6294-453-002-00	6	22
6215-629-055-00	29	44	6281-129-040-00	30	7	6509-030-037-00	5	4
6215-629-056-00	29	45	6281-129-042-00	30	15	6509-605-019-10	6	7
6215-629-058-00	29	46	6281-129-043-00	30	16	6513-770-022-10	18	27
6215-629-059-00	29	47	6281-129-044-00	30	18	6581-117-007-00	30	12
6215-629-060-00	29	17	6281-129-045-10	30	9	6581-129-092-00	30	17
6215-629-061-00	29	18	6281-129-062-00	30	14	6581-129-099-00	30	6
6215-629-062-00	29	19	6281-151-017-10	30	13	6901-066-645-00	16	13
6215-629-063-00	29	20	6281-151-020-00	30	13-A	6901-910-612-00	13	5
6215-629-064-00	29	21	6281-151-023-00	30	13-B		21	14
6215-629-065-00	29	22	6281-200-020-00	24	1	6901-910-635-00	8	4
6215-629-066-00	29	23		25	1	6901-911-020-00	11	1
6215-629-067-00	29	24	6281-213-017-00	31	7	6901-931-240-00	25	8
6215-631-015-00	29	2	6281-214-003-00	31	12	6902-050-816-00	10	42
6215-634-003-00	29	14	6281-214-004-00	31	13	6904-110-822-00	6	21
6215-635-004-00	29	8	6281-215-001-00	31	17		10	4
6215-635-005-00	29	49	6281-216-001-00	31	18		10	46
6215-637-004-00	29	48	6281-217-003-00	31	16	6904-110-840-00	6	19
6215-639-008-00	29	15	6281-221-007-00	31	4		18	17
6215-639-009-00	29	16	6281-222-012-00	31	1	6904-110-850-00	10	6
6215-641-002-00	29	3	6281-229-002-00	31	2	6904-110-855-00	10	5
6215-643-005-00	29	4	6281-229-003-00	31	3	6904-411-025-00	5	5
6215-644-009-00	29	6	6281-229-004-00	31	5	6909-110-406-00	10	36
6215-649-008-00	29	5	6281-229-006-00	31	8		21	28
6215-649-011-00	29	10	6281-229-007-00	31	9	6909-110-408-00	10	49

Numerical Index

Numerical Index

Part Code	Fig.	Key	Part Code	Fig.	Key	Part Code	Fig.	Key
6213-669-009-00	23	3	6215-359-004-00	33	18	6215-619-023-00	34	50
6213-671-029-00	23	5	6215-359-006-00	34	53	6215-619-024-00	34	52
6213-674-006-20	29	2	6215-411-133-00	24	6	6215-621-017-10	25	9
	30	2	6215-411-134-00	24	7	6215-622-003-00	34	11
6213-711-003-20	21	27	6215-411-135-00	24	8	6215-629-017-00	34	12
	22	28	6215-411-136-00	26	2	6215-629-035-00	34	13
6213-716-001-50	21	22	6215-412-004-00	26	1	6215-629-036-00	34	25
6213-716-004-10	22	23	6215-520-007-10	25	16	6215-629-037-00	34	26
6213-721-007-00	6	23	6215-526-004-00	25	18	6215-629-038-00	34	27
	7	23	6215-531-010-00	25	24	6215-629-039-00	34	28
6213-729-011-00	22	31	6215-537-002-10	25	33	6215-629-040-00	34	29
6213-729-013-10	21	20	6215-541-001-10	25	19	6215-629-041-00	34	30
	22	21	6215-541-016-30	27	2	6215-629-042-00	34	31
6213-743-002-10	21	23		28	2	6215-629-043-00	34	32
	22	24	6215-541-016-40	28	2-A		34	32
	32	20	6215-541-024-30	25	25	6215-629-044-00	34	33
6214-110-003-00	4	1	6215-541-045-00	25	25-A	6215-629-045-00	34	34
6214-115-003-10	4	2	6215-541-045-10	25	25-B	6215-629-046-00	34	35
	32	6	6215-542-004-20	11	24	6215-629-047-00	34	36
6214-141-044-00	5	1		12	25	6215-629-048-00	34	37
6214-145-004-20	5	2	6215-542-005-10	11	26	6215-629-049-00	34	38
	32	7		12	27	6215-629-050-00	34	39
6215-300-045-00	24	1	6215-542-006-00	25	21	6215-629-051-00	34	40
6215-300-045-10	24	1-A	6215-543-002-10	25	20	6215-629-052-00	34	41
6215-311-036-00	33	16	6215-546-006-00	11	18	6215-629-053-00	34	42
6215-315-002-00	24	2		12	19	6215-629-054-00	34	43
6215-315-005-00	24	4	6215-548-058-00	27	1	6215-629-055-00	34	44
6215-315-006-00	24	3	6215-548-069-00	28	1	6215-629-056-00	34	45
6215-315-007-00	24	5	6215-549-007-10	25	28	6215-629-058-00	34	46
6215-330-028-00	33	1	6215-549-013-00	6	28	6215-629-059-00	34	47
6215-332-014-00	33	15		7	28	6215-629-060-00	34	17
6215-339-004-00	33	14	6215-549-031-10	25	23	6215-629-061-00	34	18
6215-342-013-00	33	13	6215-549-039-00	25	32	6215-629-062-00	34	19
6215-343-010-00	33	12	6215-549-057-00	11	19	6215-629-063-00	34	20
6215-345-044-00	33	2		12	20	6215-629-064-00	34	21
6215-345-045-00	33	3	6215-549-058-10	11	21	6215-629-065-00	34	22
6215-345-046-00	33	4		12	22	6215-629-066-00	34	23
6215-345-047-00	33	5	6215-549-059-00	11	36	6215-629-067-00	34	24
6215-345-048-00	33	6		12	37	6215-631-015-00	34	2
6215-345-049-00	33	7	6215-549-060-10	11	38	6215-634-003-00	34	14
6215-345-050-00	33	8	6215-549-068-10	12	39	6215-635-004-00	34	8
6215-345-051-00	33	9	6215-549-076-00	25	28-A	6215-635-005-00	34	49
6215-345-052-00	33	10	6215-549-076-10	25	28-B	6215-637-004-00	34	48
6215-345-053-00	33	11	6215-600-104-20	25	1	6215-639-008-00	34	15
6215-359-003-00	33	17	6215-611-015-00	34	1	6215-639-009-00	34	16

Numerical Index

Part Code	Fig.	Key	Part Code	Fig.	Key	Part Code	Fig.	Key
V230-360-601-60	11	43	V401-160-008-00	11	54			
	12	44		11	56			
V231-360-801-60	11	12		12	56			
	12	13		12	58			
	20	11	V401-160-012-00	29	9			
V231-360-802-00	21	18	V411-260-006-00	25	30			
	21	24	V523-100-601-80	18	7			
	22	19		19	7			
	22	25	V523-101-001-80	10	3			
	25	7		18	2			
	29	3		19	2			
	30	3	V600-110-620-30	25	12			
V231-360-802-50	4	3	V600-150-600-20	18	8			
	21	29	V600-350-600-20	18	8-A			
	22	30		19	8			
V231-360-803-00	11	16	V682-200-000-60	2	5			
	12	17	V704-140-016-00	14	15			
V231-360-804-50	21	17	V705-140-012-00	11	34			
	22	18		12	35			
V231-360-805-00	11	13	V710-140-004-00	25	22			
	12	14	V720-101-900-80	25	26			
V231-360-805-50	14	19	V720-102-401-80	9	3			
V231-360-806-00	11	14	V720-103-502-20	20	9			
	12	15		32	17			
V231-360-807-00	11	10	V720-103-502-50	6	32			
V231-360-807-50	11	9		7	32			
	12	9	V721-103-104-00	21	12			
	21	25		22	13			
	22	26		32	18			
V231-360-808-50	11	8	V721-113-105-00	21	15			
	12	8		22	16			
V233-361-007-00	29	5		32	19			
	30	5	V723-102-002-40	11	42			
V251-340-806-00	6	20		12	43			
	7	20	V723-102-005-00	11	48			
V301-260-006-00	11	40		12	50			
	12	41-A		32	16			
	25	29-A	V723-102-005-50	21	28			
V304-260-008-00	11	53		22	29			
	11	55		32	21			
	12	55-A	V780-140-000-2B	11	23-B			
	12	57-A						
V334-260-010-00	30	6-A						
V401-160-006-00	25	31						
	31	9						

Numerical Index

Part Code	Fig.	Key	Part Code	Fig.	Key	Part Code	Fig.	Key
6211-312-006-10	29	15	6212-333-002-00	18	6	6213-240-005-10	19	9
6211-319-003-00	11	44	6212-339-009-10	18	10	6213-311-055-00	19	13
	12	45	6212-371-035-10	18	11	6213-311-057-00	19	10
6211-341-073-00	10	1	6212-379-001-00	18	12	6213-311-061-00	7	32
6211-342-003-10	10	2	6212-511-005-00	15	1	6213-342-007-00	7	36
6211-361-074-00	9	1	6212-521-008-00	18	3	6213-342-008-00	7	35
6211-510-008-00	7	11	6212-522-004-10	15	2	6213-342-008-10	7	35-A
6211-511-007-00	7	12	6212-523-021-00	15	6	6213-610-011-10	20	1
6211-511-008-00	7	13	6212-524-012-30	23	10	6213-611-006-00	20	2
6211-530-008-00	8	1	6212-530-017-00	11	48	6213-612-004-00	20	9
6211-540-008-00	8	3		12	49	6213-613-002-10	20	8
6211-599-004-00	7	14	6212-531-008-20	7	8	6213-614-013-00	20	13-A
	8	2	6212-531-008-30	7	8-A		29	18-A
	8	4	6212-535-007-00	15	4	6213-614-014-00	20	29-A
6211-740-007-00	7	43	6212-535-009-00	23	14		29	19-A
6211-740-008-00	7	39	6212-551-019-00	14	1	6213-619-002-00	20	11
6211-740-009-00	7	40	6212-552-008-00	14	2	6213-619-003-00	20	10
6211-740-010-00	7	49	6212-561-003-00	14	3	6213-619-006-00	20	28
6211-742-014-00	7	38	6212-563-001-00	14	4	6213-619-009-00	20	12
6211-744-001-00	7	47	6212-565-001-00	14	5	6213-621-003-00	20	6
6211-751-001-10	3	5	6212-569-002-00	2	4	6213-622-002-10	20	5
6211-751-002-00	7	33		29	2	6213-631-002-00	20	3
6211-760-041-20	7	30-B	6212-571-002-30	14	6	6213-631-005-00	20	4
6211-760-046-00	7	30	6212-575-003-00	14	7	6213-641-022-10	21	2
6211-760-046-10	7	30-A	6212-600-009-20	14	8	6213-642-002-00	20	7
6211-766-033-00	7	31	6212-611-004-10	14	9	6213-660-015-00	21	1
6211-777-021-00	13	2	6212-616-002-00	14	16	6213-669-009-00	21	3
6212-111-095-30	16	1	6212-620-008-20	14	10	6213-671-031-00	21	5
6212-114-095-30	17	1	6212-626-002-10	14	11	6213-674-006-20	27	2
6212-116-095-30	17	3	6212-628-010-10	14	12	6213-711-003-20	20	25
6212-121-029-10	16	2	6212-628-011-10	14	13	6213-716-003-10	20	20
6212-121-029-20	16	2-A	6213-100-010-00	19	1	6213-719-002-00	20	17
6212-124-029-10	17	2	6213-119-001-00	7	48	6213-721-001-00	9	5
6212-124-029-20	17	2-A		19	3	6213-721-005-00	7	24
6212-126-029-10	17	4	6213-129-003-00	19	2		7	46
6212-126-029-20	17	4-A	6213-129-006-00	7	17	6213-721-007-00	7	23
6212-211-002-00	16	3	6213-140-013-00	19	5	6213-729-004-10	20	15
6212-230-011-30	16	5	6213-149-003-20	19	7	6213-729-011-00	20	34
6212-235-004-00	16	6	6213-160-003-10	11	30	6213-729-013-10	20	16
6212-235-004-10	16	6-A	6213-160-005-00	11	30-A	6213-743-002-10	20	21
6212-271-009-00	16	7		12	32		29	20
6212-273-009-00	8	5	6213-161-003-10	11	31	6214-111-023-00	4	1
6212-274-009-00	8	6		12	33	6214-115-003-10	4	2
6212-310-011-40	18	1	6213-164-001-00	11	32		29	6
6212-330-075-10	18	5		12	34	6214-141-048-00	5	1

Numerical Index

Part Code	Fig.	Key	Part Code	Fig.	Key	Part Code	Fig.	Key
6281-111-005-00	32	1	6281-229-033-00	33	11	J061-213-018-00	3	11
6281-115-010-00	32	23	6281-229-041-00	32	22		7	53
6281-115-011-00	32	10	6281-271-002-00	33	26		9	8
6281-115-016-00	32	20	6281-410-023-00	28	3	J061-216-020-00	3	10
6281-116-004-00	32	11	6281-410-023-10	28	3-A		7	54
6281-121-006-00	32	2	6281-910-011-00	28	6		19	24
6281-123-005-00	32	8	6281-971-003-00	28	1		20	19
6281-124-007-10	32	5	6282-450-006-00	28	2	J061-220-024-00	7	56
6281-129-003-00	32	19	6287-810-041-10	29	1		20	35
6281-129-038-00	32	3	6294-453-002-00	7	22	J061-238-046-00	6	8
6281-129-039-00	32	4	6509-605-019-10	7	7	J061-252-063-00	6	10
6281-129-040-00	32	7	6513-770-022-10	20	24	J062-076-082-00	24	4
6281-129-042-00	32	15	6581-117-007-00	32	12	P117-303-003-00	11	24
6281-129-043-00	32	16	6581-129-092-00	32	17		12	26
6281-129-044-00	32	18	6581-129-099-00	32	6	V195-164-008-30	3	3
6281-129-045-10	32	9	6901-066-645-00	18	13		7	45
6281-129-062-00	32	14	6901-910-612-00	15	5	V201-360-807-50	11	11
6281-151-017-10	32	13		23	15	V210-560-603-50	9	4-A
6281-151-020-00	32	13-A	6901-910-635-00	9	4	V211-560-802-50	5	3
6281-151-023-00	32	13-B	6901-911-020-00	13	1	V220-540-601-60	28	8
6281-200-021-00	27	1	6901-931-240-00	27	8	V220-540-602-00	19	4
6281-213-018-00	33	7	6902-050-816-00	11	43	V230-360-601-20	7	28
6281-214-003-00	33	12		12	44	V230-360-601-60	11	39
6281-214-004-00	33	13	6904-110-822-00	7	20		12	41
6281-215-001-00	33	17		11	4	V231-360-801-60	11	13
6281-216-001-00	33	18		11	47		12	12
6281-217-002-00	33	16		12	4		19	8
6281-221-007-00	33	4		12	48	V231-360-802-00	20	22
6281-222-012-00	33	1	6904-110-840-00	7	19		20	32
6281-229-002-00	33	2		20	30		23	7
6281-229-003-00	33	3	6904-110-850-00	11	6		27	3
6281-229-004-00	33	5		12	6	V231-360-802-50	4	3
6281-229-006-00	33	8	6904-110-855-00	11	5		20	27
6281-229-007-00	33	9		12	5	V231-360-803-00	11	17
6281-229-008-00	33	10	6909-110-406-00	11	36		12	17
6281-229-011-00	33	15		23	29	V231-360-804-50	20	31
6281-229-012-00	33	19	6909-110-408-00	11	50	V231-360-805-00	11	14
6281-229-013-00	33	20		11	52		12	13
6281-229-014-00	33	21	6909-110-410-00	27	6	V231-360-805-50	14	19
6281-229-015-00	33	22	6909-111-508-00	32	21	V231-360-806-00	11	15
6281-229-016-00	33	23	6909-902-299-00	7	25		12	14
6281-229-017-00	33	24	6909-950-115-00	16	4	V231-360-807-00	11	11-A
6281-229-018-00	33	25	J061-116-025-00	19	18		12	10
6281-229-029-00	33	14	J061-210-015-00	9	7	V231-360-807-50	11	9
6281-229-032-00	33	6		20	18		12	9

Numerical Index

Part Code	Fig.	Key	Part Code	Fig.	Key	Part Code	Fig.	Key
V231-360-807-50	20	23	V721-113-105-00	20	29			
V231-360-808-50	7	50		29	19			
	11	8	V723-102-002-40	11	38			
	12	8		12	40			
V233-361-007-00	27	5	V723-102-005-00	11	45			
V251-340-802-50	6	5		12	46			
V251-340-806-00	7	21		29	16			
V301-260-006-00	11	36-A	V723-102-005-50	20	26			
	12	38		29	21			
	23	29-A						
V304-260-008-00	11	50-A						
	11	52-A						
	12	51						
	12	53						
V304-700-008-00	6	3						
V334-260-010-00	27	6-A						
V341-120-008-00	11	21						
	12	23						
V401-160-006-00	19	15						
	23	31						
	28	9						
V401-160-008-00	11	51						
	11	53						
	12	52						
	12	54						
V411-260-006-00	23	30						
V411-700-008-00	6	4						
V523-100-601-80	18	7						
V523-101-001-80	10	3						
	18	2						
V600-110-620-30	23	12						
V600-150-600-20	18	8						
V600-350-600-20	18	8-A						
V682-200-000-60	2	5						
V704-140-016-00	14	15						
V705-140-012-00	11	33						
	12	35						
V710-140-004-00	23	22						
V720-101-900-80	23	26						
V720-102-401-80	9	3						
V720-103-502-20	19	6						
	29	17						
V720-103-502-50	7	34						
V721-103-104-00	20	13						
	29	18						

Part Code	Fig.	Key	Part Code	Fig.	Key	Part Code	Fig.	Key
1373-121-001-00	27	4	6209-366-010-00	3	9	6209-740-001-00	11	28
1425-621-004-00	12	16	6209-366-011-00	7	51	6209-740-005-00	7	18
1650-650-015-00	11	16	6209-409-001-00	11	20	6209-740-006-00	11	28-A
	12	15		12	20		12	30
1690-654-200-00	11	37	6209-409-003-00	14	17	6209-740-008-00	7	37
	12	39	6209-440-005-00	28	4	6209-749-001-20	7	16
3625-540-004-00	11	39	6209-490-002-10	3	7		11	45
3640-586-004-00	24	5	6209-500-003-00	11	18		12	46
3737-172-010-00	7	52		11	27	6209-800-010-00	23	13
3805-355-002-20	9	2		12	18	6209-800-011-00	11	48
3817-401-001-00	11	12		12	29		12	49
	12	11		29	13	6209-920-002-00	11	22
	14	20	6209-500-006-00	11	10		12	24
	20	14	6209-572-003-00	3	8	6209-920-003-00	19	12
	20	33		29	5		29	24
	23	8	6209-580-002-10	23	27	6209-940-004-00	14	14
6005-010-140-00	1	1	6209-600-004-00	11	26	6211-110-088-10	2	1
6115-639-008-00	31	51		12	28	6211-110-088-20	2	1-A
6209-000-002-00	14	18	6209-605-003-00	11	2	6211-141-057-10	2	6
6209-000-005-00	2	7	6209-605-003-10	11	2-A		29	3
6209-000-006-00	7	2		11	2-B	6211-170-007-30	3	1
6209-000-041-00	18	9		12	2	6211-173-005-00	3	6
6209-000-043-00	18	13-A	6209-605-004-10	2	3		29	4
6209-030-043-00	23	17	6209-605-007-00	7	7-A	6211-173-017-00	3	4
6209-030-048-00	21	4	6209-610-001-10	7	4	6211-179-013-10	7	41
6209-030-091-00	10	4	6209-610-003-00	2	2	6211-179-018-00	7	42
6209-030-094-00	19	14		7	6	6211-179-019-00	7	44
6209-046-007-00	21	4-A	6209-610-004-00	11	3	6211-179-026-00	3	2
6209-050-001-00	11	34		12	3	6211-210-084-00	7	1
	12	36	6209-610-007-00	7	3	6211-258-001-00	7	9
6209-050-002-00	11	35	6209-610-009-00	7	5		29	8
	12	37	6209-625-002-00	11	7	6211-258-002-00	7	10
6209-060-004-00	19	11		12	7		29	9
6209-300-014-00	2	8		29	12	6211-291-015-20	7	26
6209-300-026-00	5	4	6209-625-003-20	7	15	6211-292-001-20	7	27
6209-360-011-00	24	3		29	10		29	11
6209-360-071-10	19	22	6209-630-002-10	28	7	6211-310-040-00	11	1
6209-360-072-20	19	23		29	22	6211-310-040-10	11	1-A
6209-360-076-10	19	17	6209-630-004-10	19	16		12	1
6209-360-076-20	19	17-A		29	25	6211-310-040-20	12	1-A
6209-360-108-00	6	9-A	6209-630-004-20	19	16-A	6211-311-013-20	11	40
6209-360-112-00	6	7		29	25-A		12	41
6209-360-113-00	9	6	6209-730-005-00	15	3	6211-312-005-10	11	29
6209-360-114-00	6	9		23	11		12	31
6209-360-116-10	7	55	6209-730-006-00	18	4		29	14

Numerical Index

Part Code	Fig.	Key	Part Code	Fig.	Key	Part Code	Fig.	Key
6211-312-006-10	11	41	6212-310-011-40	18	1	6213-164-001-00	11	32
	12	42	6212-330-075-10	18	5		12	34
	29	15	6212-333-002-00	18	6	6213-240-005-10	19	9
6211-319-003-00	11	43	6212-339-009-10	18	10	6213-311-055-00	19	13
	12	44	6212-371-035-10	18	11	6213-311-057-00	19	10
6211-341-073-00	10	1	6212-379-001-00	18	12	6213-311-061-00	7	32
6211-342-003-10	10	2	6212-511-005-00	15	1	6213-342-007-00	7	36
6211-361-074-00	9	1	6212-521-008-00	18	3	6213-342-008-00	7	35
6211-510-008-00	7	11	6212-522-004-10	15	2	6213-342-008-10	7	35-A
6211-511-007-00	7	12	6212-523-021-00	15	6	6213-610-011-10	20	1
6211-511-008-00	7	13	6212-524-012-30	23	10	6213-611-006-00	20	2
6211-530-008-00	8	1	6212-530-017-00	11	47	6213-612-004-00	20	9
6211-540-008-00	8	3		12	48	6213-613-002-10	20	8
6211-599-004-00	7	14	6212-531-008-20	7	8	6213-614-013-00	20	13-A
	8	2	6212-531-008-30	7	8-A		29	18-A
	8	4	6212-535-007-00	15	4	6213-614-014-00	20	29-A
6211-740-007-00	7	43	6212-535-009-00	23	14		29	19-A
6211-740-008-00	7	39	6212-551-019-00	14	1	6213-619-002-00	20	11
6211-740-009-00	7	40	6212-552-008-00	14	2	6213-619-003-00	20	10
6211-740-010-00	7	49	6212-561-003-00	14	3	6213-619-006-00	20	28
6211-742-014-00	7	38	6212-563-001-00	14	4	6213-619-009-00	20	12
6211-744-001-00	7	47	6212-565-001-00	14	5	6213-621-003-00	20	6
6211-751-001-10	3	5	6212-569-002-00	2	4	6213-622-002-10	20	5
6211-751-002-00	7	33		29	2	6213-631-002-00	20	3
6211-760-041-20	7	30-B	6212-571-002-30	14	6	6213-631-005-00	20	4
6211-760-046-00	7	30	6212-575-003-00	14	7	6213-641-022-10	21	2
6211-760-046-10	7	30-A	6212-600-009-20	14	8	6213-642-002-00	20	7
6211-766-033-00	7	31	6212-611-004-10	14	9	6213-660-015-00	21	1
6211-777-021-00	13	2	6212-616-002-00	14	16	6213-669-009-00	21	3
6212-111-095-30	16	1	6212-620-008-20	14	10	6213-671-031-00	21	5
6212-114-095-30	17	1	6212-626-002-10	14	11	6213-674-006-20	27	2
6212-116-095-30	17	3	6212-628-010-10	14	12	6213-711-003-20	20	25
6212-121-029-10	16	2	6212-628-011-10	14	13	6213-716-003-10	20	20
6212-121-029-20	16	2-A	6213-100-010-00	19	1	6213-719-002-00	20	17
6212-124-029-10	17	2	6213-119-001-00	7	48	6213-721-001-00	9	5
6212-124-029-20	17	2-A		19	3	6213-721-005-00	7	24
6212-126-029-10	17	4	6213-129-003-00	19	2		7	46
6212-126-029-20	17	4-A	6213-129-006-00	7	17	6213-721-007-00	7	23
6212-211-002-00	16	3	6213-140-013-00	19	5	6213-729-004-10	20	15
6212-230-011-30	16	5	6213-149-003-20	19	7	6213-729-011-00	20	34
6212-235-004-00	16	6	6213-160-003-10	11	30	6213-729-013-10	20	16
6212-235-004-10	16	6-A	6213-160-005-00	11	30-A	6213-743-002-10	20	21
6212-271-009-00	16	7		12	32		29	20
6212-273-009-00	8	5	6213-161-003-10	11	31	6214-111-023-00	4	1
6212-274-009-00	8	6		12	33	6214-115-003-10	4	2

Part Code	Fig.	Key	Part Code	Fig.	Key	Part Code	Fig.	Key
6214-115-003-10	29	6	6215-541-024-30	23	25	6215-629-051-00	31	40
6214-141-048-00	5	1	6215-541-045-00	23	25-A	6215-629-052-00	31	41
6214-145-004-20	5	2	6215-541-045-10	23	25-B	6215-629-053-00	31	42
	29	7	6215-542-004-20	11	23	6215-629-054-00	31	43
6214-145-009-00	6	2		12	25	6215-629-055-00	31	44
	29	23	6215-542-005-10	11	25	6215-629-056-00	31	45
6214-400-009-10	6	1		12	27	6215-629-058-00	31	46
6214-435-026-00	6	6	6215-542-006-00	23	21	6215-629-059-00	31	47
6215-300-037-00	22	1	6215-543-002-10	23	20	6215-629-060-00	31	17
6215-311-005-00	30	16	6215-546-003-10	11	19	6215-629-061-00	31	18
6215-315-002-00	22	2		12	19	6215-629-062-00	31	19
6215-315-005-00	22	4	6215-548-029-00	25	1	6215-629-063-00	31	20
6215-315-006-00	22	3	6215-548-070-00	26	1	6215-629-064-00	31	21
6215-315-007-00	22	5	6215-549-007-10	23	28	6215-629-065-00	31	22
6215-330-022-00	30	1	6215-549-013-00	7	29	6215-629-066-00	31	23
6215-332-006-00	30	15	6215-549-031-10	23	23	6215-629-067-00	31	24
6215-339-004-00	30	14	6215-549-039-00	23	32	6215-631-008-00	31	2
6215-342-002-00	30	13	6215-549-073-00	12	21	6215-634-003-00	31	14
6215-343-002-00	30	12	6215-549-074-00	12	22	6215-635-004-00	31	8
6215-345-044-00	30	2	6215-549-076-00	23	28-A	6215-635-005-00	31	49
6215-345-045-00	30	3	6215-549-076-10	23	28-B	6215-637-004-00	31	48
6215-345-046-00	30	4	6215-600-078-10	23	1	6215-639-008-00	31	15
6215-345-047-00	30	5	6215-611-015-00	31	1	6215-639-009-00	31	16
6215-345-048-00	30	6	6215-619-023-00	31	50	6215-641-002-00	31	3
6215-345-049-00	30	7	6215-619-024-00	31	52	6215-643-005-00	31	4
6215-345-050-00	30	8	6215-621-018-10	23	9	6215-644-009-00	31	6
6215-345-051-00	30	9	6215-622-003-00	31	11	6215-649-008-00	31	5
6215-345-052-00	30	10	6215-629-017-00	31	12	6215-649-011-00	31	10
6215-345-053-00	30	11	6215-629-035-00	31	13	6215-649-013-00	31	9
6215-359-003-00	30	17	6215-629-036-00	31	25	6215-649-014-00	31	7
6215-359-004-00	30	18	6215-629-037-00	31	26	6219-732-012-00	28	5
6215-359-006-00	31	53	6215-629-038-00	31	27	6219-732-017-00	28	5-A
6215-411-136-00	24	2	6215-629-039-00	31	28	6219-752-006-00	23	2
6215-411-137-00	22	6	6215-629-040-00	31	29	6219-752-007-00	23	3
6215-411-138-00	22	7	6215-629-041-00	31	30	6219-752-008-00	23	4
6215-411-139-00	22	8	6215-629-042-00	31	31	6219-752-009-00	23	5
6215-412-004-00	24	1	6215-629-043-00	31	32	6219-752-010-00	23	6
6215-520-007-10	23	16		31	32	6219-752-044-00	23	4-A
6215-526-004-00	23	18	6215-629-044-00	31	33	6219-752-045-00	23	2-A
6215-531-019-00	23	24	6215-629-045-00	31	34	6219-752-046-00	23	5-A
6215-537-002-10	23	33	6215-629-046-00	31	35	6219-752-047-00	23	6-A
6215-541-001-10	23	19	6215-629-047-00	31	36	6221-700-004-00	19	19
6215-541-016-30	25	2	6215-629-048-00	31	37	6221-726-006-00	19	20
	26	2	6215-629-049-00	31	38	6221-726-008-00	19	21
6215-541-016-40	26	2-A	6215-629-050-00	31	39	6281-100-007-20	27	7

Numerical Index

Part Code	Fig.	Key	Part Code	Fig.	Key	Part Code	Fig.	Key
6281-111-005-00	32	1	6281-229-033-00	33	11	J061-213-018-00	3	11
6281-115-010-00	32	23	6281-229-041-00	32	22		7	53
6281-115-011-00	32	10	6281-271-002-00	33	26		9	8
6281-115-016-00	32	20	6281-410-023-00	28	3	J061-216-020-00	3	10
6281-116-004-00	32	11	6281-410-023-10	28	3-A		7	54
6281-121-006-00	32	2	6281-910-011-00	28	6		19	24
6281-123-005-00	32	8	6281-971-003-00	28	1		20	19
6281-124-007-10	32	5	6282-450-007-00	28	2	J061-220-024-00	7	56
6281-129-003-00	32	19	6287-810-041-10	29	1		20	35
6281-129-038-00	32	3	6294-453-002-00	7	22	J061-238-046-00	6	8
6281-129-039-00	32	4	6509-605-019-10	7	7	J061-252-063-00	6	10
6281-129-040-00	32	7	6513-770-022-10	20	24	J062-076-082-00	24	4
6281-129-042-00	32	15	6581-117-007-00	32	12	P117-303-003-00	11	24
6281-129-043-00	32	16	6581-129-092-00	32	17		12	26
6281-129-044-00	32	18	6581-129-099-00	32	6	V195-164-008-30	3	3
6281-129-045-10	32	9	6901-066-645-00	18	13		7	45
6281-129-062-00	32	14	6901-910-612-00	15	5	V201-360-807-50	11	11
6281-151-017-10	32	13		23	15	V210-560-603-50	9	4-A
6281-151-020-00	32	13-A	6901-910-635-00	9	4	V211-560-802-50	5	3
6281-151-023-00	32	13-B	6901-911-020-00	13	1	V220-540-601-60	28	8
6281-200-021-00	27	1	6901-931-240-00	27	8	V220-540-602-00	19	4
6281-213-018-00	33	7	6902-050-816-00	11	42	V230-360-601-20	7	28
6281-214-003-00	33	12		12	43	V230-360-601-60	11	38
6281-214-004-00	33	13	6904-110-822-00	7	20		12	40
6281-215-001-00	33	17		11	4	V231-360-801-60	11	13
6281-216-001-00	33	18		11	46		12	12
6281-217-002-00	33	16		12	4		19	8
6281-221-007-00	33	4		12	47	V231-360-802-00	20	22
6281-222-012-00	33	1	6904-110-840-00	7	19		20	32
6281-229-002-00	33	2		20	30		23	7
6281-229-003-00	33	3	6904-110-850-00	11	6		27	3
6281-229-004-00	33	5		12	6	V231-360-802-50	4	3
6281-229-006-00	33	8	6904-110-855-00	11	5		20	27
6281-229-007-00	33	9		12	5	V231-360-803-00	11	17
6281-229-008-00	33	10	6909-110-406-00	11	36		12	17
6281-229-011-00	33	15		23	29	V231-360-804-50	20	31
6281-229-012-00	33	19	6909-110-408-00	11	49	V231-360-805-00	11	14
6281-229-013-00	33	20		11	51		12	13
6281-229-014-00	33	21	6909-110-410-00	27	6	V231-360-805-50	14	19
6281-229-015-00	33	22	6909-111-508-00	32	21	V231-360-806-00	11	15
6281-229-016-00	33	23	6909-902-299-00	7	25		12	14
6281-229-017-00	33	24	6909-950-115-00	16	4	V231-360-807-00	11	11-A
6281-229-018-00	33	25	J061-116-025-00	19	18		12	10
6281-229-029-00	33	14	J061-210-015-00	9	7	V231-360-807-50	11	9
6281-229-032-00	33	6		20	18		12	9

Part Code	Fig.	Key	Part Code	Fig.	Key	Part Code	Fig.	Key
V231-360-807-50	20	23	V721-113-105-00	20	29			
V231-360-808-50	7	50		29	19			
	11	8	V723-102-005-00	11	44			
	12	8		12	45			
V233-361-007-00	27	5		29	16			
V251-340-802-50	6	5	V723-102-005-50	20	26			
V251-340-806-00	7	21		29	21			
V301-260-006-00	11	36-A						
	12	38						
	23	29-A						
V304-260-008-00	11	49-A						
	11	51-A						
	12	50						
	12	52						
V304-700-008-00	6	3						
V334-260-010-00	27	6-A						
V341-120-008-00	11	21						
	12	23						
V401-160-006-00	19	15						
	23	31						
	28	9						
V401-160-008-00	11	50						
	11	52						
	12	51						
	12	53						
V411-260-006-00	23	30						
V411-700-008-00	6	4						
V523-100-601-80	18	7						
V523-101-001-80	10	3						
	18	2						
V600-110-620-30	23	12						
V600-150-600-20	18	8						
V600-350-600-20	18	8-A						
V682-200-000-60	2	5						
V704-140-016-00	14	15						
V705-140-012-00	11	33						
	12	35						
V710-140-004-00	23	22						
V720-101-900-80	23	26						
V720-102-401-80	9	3						
V720-103-502-20	19	6						
	29	17						
V720-103-502-50	7	34						
V721-103-104-00	20	13						
	29	18						

Numerical Index

Part Code	Fig.	Key	Part Code	Fig.	Key	Part Code	Fig.	Key
6211-312-006-10	11	41	6212-310-011-40	18	1	6213-164-001-00	11	32
	12	42	6212-330-075-10	18	5		12	34
	29	15	6212-333-002-00	18	6	6213-240-005-10	19	9
6211-319-003-00	11	43	6212-339-009-10	18	10	6213-311-055-00	19	13
	12	44	6212-371-035-10	18	11	6213-311-057-00	19	10
6211-341-073-00	10	1	6212-379-001-00	18	12	6213-311-061-00	7	32
6211-342-003-10	10	2	6212-511-005-00	15	1	6213-342-007-00	7	36
6211-361-074-00	9	1	6212-521-008-00	18	3	6213-342-008-00	7	35
6211-510-008-00	7	11	6212-522-004-10	15	2	6213-342-008-10	7	35-A
6211-511-007-00	7	12	6212-523-021-00	15	6	6213-610-011-10	20	1
6211-511-008-00	7	13	6212-524-012-30	23	9	6213-611-006-00	20	2
6211-530-008-00	8	1	6212-530-017-00	11	47	6213-612-004-00	20	9
6211-540-008-00	8	3		12	48	6213-613-002-10	20	8
6211-599-004-00	7	14	6212-531-008-20	7	8	6213-614-013-00	20	13
	8	2	6212-531-008-30	7	8-A		29	18
	8	4	6212-535-007-00	15	4	6213-614-014-00	20	29
6211-740-007-00	7	43	6212-535-009-00	23	13		29	19
6211-740-008-00	7	39	6212-551-019-00	14	1	6213-619-002-00	20	11
6211-740-009-00	7	40	6212-552-008-00	14	2	6213-619-003-00	20	10
6211-740-010-00	7	49	6212-561-003-00	14	3	6213-619-006-00	20	28
6211-742-014-00	7	38	6212-563-001-00	14	4	6213-619-009-00	20	12
6211-744-001-00	7	47	6212-565-001-00	14	5	6213-621-003-00	20	6
6211-751-001-10	3	5	6212-569-002-00	2	4	6213-622-002-10	20	5
6211-751-002-00	7	33		29	2	6213-631-002-00	20	3
6211-760-041-20	7	30-B	6212-571-002-30	14	6	6213-631-005-00	20	4
6211-760-046-00	7	30	6212-575-003-00	14	7	6213-641-022-10	21	2
6211-760-046-10	7	30-A	6212-600-009-20	14	8	6213-642-002-00	20	7
6211-766-033-00	7	31	6212-611-004-10	14	9	6213-660-015-00	21	1
6211-777-021-00	13	2	6212-616-002-00	14	16	6213-669-009-00	21	3
6212-111-095-30	16	1	6212-620-008-20	14	10	6213-671-031-00	21	5
6212-114-095-30	17	1	6212-626-002-10	14	11	6213-674-006-20	27	2
6212-116-095-30	17	3	6212-628-010-10	14	12	6213-711-003-20	20	25
6212-121-029-10	16	2	6212-628-011-10	14	13	6213-716-003-10	20	20
6212-121-029-20	16	2-A	6213-100-010-00	19	1	6213-719-002-00	20	17
6212-124-029-10	17	2	6213-119-001-00	7	48	6213-721-001-00	9	5
6212-124-029-20	17	2-A		19	3	6213-721-005-00	7	24
6212-126-029-10	17	4	6213-129-003-00	19	2		7	46
6212-126-029-20	17	4-A	6213-129-006-00	7	17	6213-721-007-00	7	23
6212-211-002-00	16	3	6213-140-013-00	19	5	6213-729-004-10	20	15
6212-230-011-30	16	5	6213-149-003-20	19	7	6213-729-013-10	20	16
6212-235-004-00	16	6	6213-160-003-10	11	30	6213-743-002-10	20	21
6212-235-004-10	16	6-A	6213-160-005-00	11	30-A		29	20
6212-271-009-00	16	7		12	32	6214-111-023-00	4	1
6212-273-009-00	8	5	6213-161-003-10	11	31	6214-115-003-10	4	2
6212-274-009-00	8	6		12	33		29	6

Numerical Index

Part Code	Fig.	Key	Part Code	Fig.	Key	Part Code	Fig.	Key
6281-123-005-00	32	8	6281-971-003-00	28	1	J061-216-020-00	20	19
6281-124-007-10	32	5	6282-450-007-00	28	2	J061-220-024-00	7	56
6281-129-003-00	32	19	6287-810-041-10	29	1	J061-238-046-00	6	8
6281-129-038-00	32	3	6294-453-002-00	7	22	J061-252-063-00	6	10
6281-129-039-00	32	4	6509-605-019-10	7	7	J062-076-082-00	24	4
6281-129-040-00	32	7	6513-770-022-10	20	24	P117-303-003-00	11	24
6281-129-042-00	32	15	6581-117-007-00	32	12		12	26
6281-129-043-00	32	16	6581-129-092-00	32	17	V195-164-008-30	3	3
6281-129-044-00	32	18	6581-129-099-00	32	6		7	45
6281-129-045-10	32	9	6901-066-645-00	18	13	V201-360-807-50	11	11
6281-129-062-00	32	14	6901-910-612-00	15	5	V210-560-603-50	9	4-A
6281-151-017-10	32	13		23	14	V211-560-802-50	5	3
6281-151-020-00	32	13-A	6901-910-635-00	9	4	V220-540-601-60	28	8
6281-151-023-00	32	13-B	6901-911-020-00	13	1	V220-540-602-00	19	4
6281-200-021-00	27	1	6901-931-240-00	27	8	V230-360-601-20	7	28
6281-213-018-00	33	7	6902-050-816-00	11	42	V230-360-601-60	11	38
6281-214-003-00	33	12		12	43		12	40
6281-214-004-00	33	13	6904-110-822-00	7	20	V231-360-801-60	11	13
6281-215-001-00	33	17		11	4		12	12
6281-216-001-00	33	18		11	46		19	8
6281-217-002-00	33	16		12	4	V231-360-802-00	20	22
6281-221-007-00	33	4		12	47		20	32
6281-222-012-00	33	1	6904-110-840-00	7	19		23	6
6281-229-002-00	33	2		20	30		27	3
6281-229-003-00	33	3	6904-110-850-00	11	6	V231-360-802-50	4	3
6281-229-004-00	33	5		12	6		20	27
6281-229-006-00	33	8	6904-110-855-00	11	5	V231-360-803-00	11	17
6281-229-007-00	33	9		12	5		12	17
6281-229-008-00	33	10	6909-110-406-00	11	36	V231-360-804-50	20	31
6281-229-011-00	33	15		23	28	V231-360-805-00	11	14
6281-229-012-00	33	19	6909-110-408-00	11	49		12	13
6281-229-013-00	33	20		11	51	V231-360-805-50	14	19
6281-229-014-00	33	21	6909-110-410-00	27	6	V231-360-806-00	11	15
6281-229-015-00	33	22	6909-111-508-00	32	21		12	14
6281-229-016-00	33	23	6909-902-299-00	7	25	V231-360-807-00	11	11-A
6281-229-017-00	33	24	6909-950-115-00	16	4		12	10
6281-229-018-00	33	25	J061-116-025-00	19	18	V231-360-807-50	11	9
6281-229-029-00	33	14	J061-210-015-00	9	7		12	9
6281-229-032-00	33	6		20	18		20	23
6281-229-033-00	33	11	J061-213-018-00	3	11	V231-360-808-50	7	50
6281-229-041-00	32	22		7	53		11	8
6281-271-002-00	33	26		9	8		12	8
6281-410-023-00	28	3	J061-216-020-00	3	10	V233-361-007-00	27	5
6281-410-023-10	28	3-A		7	54	V251-340-802-50	6	5
6281-910-011-00	28	6		19	24	V251-340-806-00	7	21

Numerical Index

Part Code	Fig.	Key	Part Code	Fig.	Key	Part Code	Fig.	Key
V301-260-006-00	11	36-A						
	12	38						
	23	28-A						
V304-260-008-00	11	49-A						
	11	51-A						
	12	50						
	12	52						
V304-700-008-00	6	3						
V334-260-010-00	27	6-A						
V341-120-008-00	11	21						
	12	23						
V401-160-006-00	19	15						
	23	30						
	28	9						
V401-160-008-00	11	50						
	11	52						
	12	51						
	12	53						
V411-260-006-00	23	29						
V411-700-008-00	6	4						
V523-100-601-80	18	7						
V523-101-001-80	10	3						
	18	2						
V600-110-620-30	23	11						
V600-150-600-20	18	8						
V600-350-600-20	18	8-A						
V682-200-000-60	2	5						
V704-140-016-00	14	15						
V705-140-012-00	11	33						
	12	35						
V710-140-004-00	23	21						
V720-101-900-80	23	25						
V720-102-401-80	9	3						
V720-103-502-20	19	6						
	29	17						
V720-103-502-50	7	34						
V723-102-005-00	11	44						
	12	45						
	29	16						
V723-102-005-50	20	26						
	29	21						

Part Code	Fig.	Key	Part Code	Fig.	Key	Part Code	Fig.	Key
1373-121-001-00	28	4	6209-360-116-10	8	57	6209-625-003-20	30	10
1425-621-004-00	13	16	6209-366-010-00	3	9	6209-630-002-10	29	7
1650-650-015-00	12	16	6209-366-011-00	7	51		30	22
	13	15		8	53	6209-630-004-10	20	16
3625-540-004-00	12	45	6209-409-003-00	15	17		30	25
3640-586-004-00	25	5	6209-440-005-00	29	4	6209-630-004-20	20	16-A
3737-172-010-00	7	52	6209-490-002-10	3	7		30	25-A
	8	54	6209-500-003-00	12	18	6209-730-005-00	16	3
3805-355-002-20	10	2		12	29		24	11
3817-401-001-00	12	12		13	18	6209-730-006-00	19	4
	13	11		13	29	6209-740-001-00	12	30
	15	20		30	13	6209-740-005-00	7	18
	21	14	6209-500-006-00	12	10		8	18
	21	33	6209-572-003-00	3	8	6209-740-006-00	12	30-A
	24	8		30	5		13	30
6005-010-140-00	1	1	6209-580-002-10	24	27	6209-740-008-00	7	37
6115-639-008-00	32	51	6209-587-006-10	12	21		8	39
6209-000-002-00	15	18		12	38	6209-749-001-20	7	16
6209-000-005-00	2	7		13	21		8	16
6209-000-006-00	7	2		13	38		12	51
	8	2	6209-600-004-00	12	28		13	50
6209-000-041-00	19	9		13	28	6209-800-010-00	24	13
6209-000-043-00	19	13-A	6209-605-003-00	12	2	6209-800-011-00	12	54
6209-030-043-00	24	17	6209-605-003-10	12	2-A		13	53
6209-030-048-00	22	4		12	2-B	6209-920-002-00	12	23
6209-030-091-00	11	4		13	2		13	23
6209-030-094-00	20	14	6209-605-004-10	2	3	6209-920-003-00	20	12
6209-046-007-00	22	4-A	6209-605-007-00	8	7-A		30	24
6209-050-002-00	12	40		12	24-A	6209-940-004-00	15	14
	13	40	6209-610-001-10	7	4	6211-110-088-10	2	1
6209-050-003-00	12	36		8	4	6211-110-088-20	2	1-A
	13	36	6209-610-003-00	2	2	6211-141-057-10	2	6
6209-060-004-00	20	11		7	6		30	3
6209-300-014-00	2	8		8	6	6211-170-007-30	3	1
6209-300-026-00	5	4	6209-610-004-00	12	3	6211-173-005-00	3	6
6209-360-011-00	25	3		13	3		30	4
6209-360-071-10	20	22	6209-610-007-00	7	3	6211-173-017-00	3	4
6209-360-072-20	20	23		8	3	6211-179-013-10	7	41
6209-360-076-10	20	17	6209-610-009-00	7	5		8	43
6209-360-076-20	20	17-A		8	5	6211-179-018-00	7	42
6209-360-108-00	6	9-A	6209-625-002-00	12	7		8	44
6209-360-112-00	6	7		13	7	6211-179-019-00	7	44
6209-360-113-00	10	6		30	12		8	46
6209-360-114-00	6	9	6209-625-003-20	7	15	6211-179-026-00	3	2
6209-360-116-10	7	55		8	15	6211-210-084-00	7	1

Numerical Index

Part Code	Fig.	Key	Part Code	Fig.	Key	Part Code	Fig.	Key
6213-311-061-00	7	32	6214-115-003-10	4	2	6215-541-016-40	27	2-A
	8	32		30	6	6215-541-024-30	24	25
6213-342-007-00	7	36	6214-141-048-00	5	1	6215-541-045-00	24	25-A
	8	38	6214-145-004-20	5	2	6215-541-045-10	24	25-B
6213-342-008-00	7	35		30	7	6215-542-004-20	12	25
	8	37	6214-145-009-00	6	2		13	25
6213-342-008-10	8	37-A		30	23	6215-542-005-10	12	27
6213-610-011-10	21	1	6214-400-009-10	6	1		13	27
6213-611-006-00	21	2	6214-435-026-00	6	6	6215-542-006-00	24	21
6213-612-004-00	21	9	6215-300-037-00	23	1	6215-543-002-10	24	20
6213-613-002-10	21	8	6215-311-005-00	31	16	6215-546-006-00	12	19
6213-614-013-00	21	13-A	6215-315-002-00	23	2		13	19
	30	18-A	6215-315-005-00	23	4	6215-548-029-00	26	1
6213-614-014-00	21	29-A	6215-315-006-00	23	3	6215-548-070-00	27	1
	30	19-A	6215-315-007-00	23	5	6215-549-007-10	24	28
6213-619-002-00	21	11	6215-330-022-00	31	1	6215-549-013-00	7	29
6213-619-003-00	21	10	6215-332-006-00	31	15		8	29
6213-619-006-00	21	28	6215-339-004-00	31	14	6215-549-031-10	24	23
6213-619-009-00	21	12	6215-342-002-00	31	13	6215-549-039-00	24	32
6213-621-003-00	21	6	6215-343-002-00	31	12	6215-549-057-00	12	20
6213-622-002-10	21	5	6215-345-044-00	31	2		13	20
6213-631-002-00	21	3	6215-345-045-00	31	3	6215-549-058-10	12	22
6213-631-005-00	21	4	6215-345-046-00	31	4		13	22
6213-641-022-10	22	2	6215-345-047-00	31	5	6215-549-059-00	12	37
6213-642-002-00	21	7	6215-345-048-00	31	6		13	37
6213-660-015-00	22	1	6215-345-049-00	31	7	6215-549-060-10	12	39-A
6213-669-009-00	22	3	6215-345-050-00	31	8		13	39
6213-671-031-00	22	5	6215-345-051-00	31	9	6215-549-067-00	12	39
6213-674-006-20	28	2	6215-345-052-00	31	10	6215-549-076-00	24	28-A
6213-711-003-20	21	25	6215-345-053-00	31	11	6215-549-076-10	24	28-B
6213-716-003-10	21	20	6215-359-003-00	31	17	6215-600-078-10	24	1
6213-719-002-00	21	17	6215-359-004-00	31	18	6215-611-015-00	32	1
6213-721-001-00	10	5	6215-359-006-00	32	53	6215-619-023-00	32	50
6213-721-005-00	7	24	6215-411-136-00	25	2	6215-619-024-00	32	52
	7	46	6215-411-137-00	23	6	6215-621-018-10	24	9
	8	24	6215-411-138-00	23	7	6215-622-003-00	32	11
	8	48	6215-411-139-00	23	8	6215-629-017-00	32	12
6213-721-007-00	7	23	6215-412-004-00	25	1	6215-629-035-00	32	13
	8	23	6215-520-007-10	24	16	6215-629-036-00	32	25
6213-729-004-10	21	15	6215-526-004-00	24	18	6215-629-037-00	32	26
6213-729-011-00	21	34	6215-531-019-00	24	24	6215-629-038-00	32	27
6213-729-013-10	21	16	6215-537-002-10	24	33	6215-629-039-00	32	28
6213-743-002-10	21	21	6215-541-001-10	24	19	6215-629-040-00	32	29
	30	20	6215-541-016-30	26	2	6215-629-041-00	32	30
6214-111-023-00	4	1		27	2	6215-629-042-00	32	31

Numerical Index

Numerical Index

Part Code	Fig.	Key
1421-507-014-00	139	7
	140	7
	141	6
	142	6
	143	6
	144	6
	145	6
1421-602-005-10	74	20
	75	20
	76	20
	77	20
	133	2
	134	2
	135	22
	147	15
	147	15-A
	150	14
	203	14
1421-603-004-00	1	27
	2	27
	3	27
	4	27
	135	12
1421-621-038-00	203	19
1421-906-001-00	235	1
1423-616-004-00	1	25
	2	25
	3	25
	4	25
	133	4
	134	4
1424-101-203-00	1	14
	2	14
	3	14
	4	14
1424-101-204-00	1	15
	2	15
	3	15
	4	15
1425-433-018-00	43	4
1425-621-004-00	20	18
	22	18
	23	18
	170	50
	171	46

Part Code	Fig.	Key
1426-361-211-00	238	8
	238	18
1427-120-002-00	95	32
	95	37
1427-201-016-00	93	10
	93	18
1427-251-004-00	20	16-A
	22	16-A
	23	16-A
1427-301-004-00	92	10
1427-301-004-10	92	10-A
1427-317-003-00	122	20-A
1427-432-016-00	92	7
1427-601-003-00	53	9
1429-406-205-00	81	3
	82	2
	83	3
1431-361-211-00	237	8
	237	18
1432-120-004-00	17	6
1432-242-001-00	18	11
	19	11
	74	15
	75	15
	76	15
	77	15
	170	37
	170	41
	171	35
	171	39
1432-616-002-00	151	3
	152	3
	153	3
	154	3
	155	1
	156	1
	170	44
	171	42
1432-616-004-00	11	15
	12	15
	13	16
	14	16
1432-621-006-10	176	50
	177	50
	178	55

Part Code	Fig.	Key
1432-621-006-10	181	57
1432-621-011-00	147	5
	148	6
	149	6
1432-651-028-00	188	59
1434-611-002-10	162	31
	165	28
	210	23
1435-203-001-00	31	28-A
	33	28-A
1442-313-202-00	79	2
1443-452-007-00	64	10
1444-102-202-00	11	20
	12	20
	13	21
	14	21
1444-102-204-00	11	25
	12	25
	13	26
	14	26
1444-122-002-00	18	8
	19	8
	74	12
	75	12
	76	12
	77	12
	79	11
1444-314-004-10	32	11
	38	9
1444-314-009-10	41	24
	42	23
	43	8
	236	24
1444-318-004-00	64	9
1444-318-007-00	64	14
1444-328-272-00	79	4
1444-328-273-00	79	3
1444-410-002-10	91	8
1444-411-012-00	92	5
1444-411-013-00	92	6
1444-514-003-00	125	8
	126	8
1444-514-005-10	101	12
1444-514-006-00	101	11
1444-601-015-00	133	24

Numerical Index

Numerical Index

Part Code	Fig.	Key	Part Code	Fig.	Key	Part Code	Fig.	Key
1594-314-001-00	79	12	1614-102-006-00	13	17	1614-505-004-00	100	52
1594-609-200-00	139	5		14	17		101	35
	140	5	1614-105-200-00	11	19	1614-505-007-00	100	58
	141	4		12	19	1614-626-001-00	147	12
	142	4		13	20		150	11
	143	4		14	20	1614-670-201-00	276	7
	144	4	1614-244-002-00	41	21	1614-670-240-00	276	6
	145	4		42	20	1614-670-250-00	276	8
1595-320-210-20	237	1		236	21	1614-670-260-00	276	9
1595-320-210-30	237	1-A	1614-244-005-00	41	22	1614-670-281-00	276	17
1595-320-220-20	237	11		42	21	1617-730-005-00	11	11
1595-320-220-30	237	11-A		236	22		12	11
1596-105-001-00	5	2	1614-261-006-00	56	15		13	12
1596-760-500-10	253	7	1614-261-301-00	176	27		14	12
1600-502-003-00	117	24-A	1614-262-006-00	58	8		188	58-A
	118	23-A		60	8	1620-202-517-00	277	25
1600-505-007-00	15	3		61	12	1620-202-518-00	277	26
	16	3		62	16	1620-202-534-00	277	44
	100	50		100	57	1620-202-537-00	277	47
	101	32		101	40	1620-255-208-00	41	27
1600-505-007-10	15	3-A		119	14		42	26
	16	3-A		120	12		236	27
	100	50-A		121	12	1620-255-220-00	41	26
	101	32-A		246	14		236	26
1600-606-002-00	117	34		247	12	1620-255-220-10	41	26-A
	118	33		248	14		42	25
1600-623-002-00	176	20		249	11		236	26-A
	177	21	1614-262-007-00	41	42	1620-401-001-20	81	5
	178	22		236	42		82	4
	181	21	1614-306-007-00	69	9		83	5
1600-623-002-10	176	20-A		70	9	1620-401-001-30	81	5-A
	177	21-A		71	9		82	4-A
	178	22-A		72	9		83	5-A
	181	21-A		73	9	1620-514-005-00	122	26
1600-624-004-10	172	37	1614-308-004-10	67	4		123	23
	174	35		68	4		124	23
	175	37	1614-312-001-00	69	14	1627-122-008-00	79	27
1600-624-201-00	198	1		70	14	1627-205-223-00	26	19
1602-321-004-00	31	5	1614-312-001-10	69	14-A		31	12
	33	5		70	14-A		31	22
1608-207-014-00	168	63	1614-432-001-00	92	4		33	12
1611-437-220-00	240	2	1614-433-002-00	93	6		33	22
	240	7		94	6	1632-273-200-00	38	11
1614-102-006-00	11	16	1614-501-003-10	98	23		39	11
	12	16		99	23	1635-303-005-00	64	4-A

Numerical Index

Part Code	Fig.	Key
1641-217-561-00	277	2
1641-217-563-00	277	6
1641-320-210-20	238	1
1641-320-210-30	238	1-A
1641-320-220-20	238	11
1641-320-220-30	238	11-A
1641-320-240-02	238	2
	238	12
1641-320-240-12	238	2-A
	238	12-A
1641-437-210-00	240	1
1641-437-211-00	240	3
	240	8
1641-437-212-00	240	4
	240	9
1641-437-220-00	240	6
1643-515-202-10	102	5
	103	5
	104	5
1643-515-203-00	102	6
	103	6
	103	6-A
	103	6-B
	104	6
	104	6-A
	104	6-B
	105	6
	106	6
	107	6
	109	6
	110	4
	245	4
1646-116-051-10	15	2
	16	2
	52	2
	53	2
1646-207-055-00	25	10
1646-217-516-00	277	23
1646-217-533-00	277	45
1646-226-053-00	45	6
	167	2
	168	2
	169	2
1646-226-512-00	45	2
1646-407-560-00	112	35
1646-407-560-10	112	35-A
1646-407-560-20	112	35-B
	114	41
	116	41
1646-407-590-10	112	31
	112	39
1646-407-590-20	112	31-A
	112	39-A
	114	37
	114	45
1646-407-590-30	112	31-B
	112	39-B
	114	37-A
	114	45-A
	116	37
	116	45
1646-516-690-00	112	53
	114	59
	116	59
1646-516-692-00	112	54
	114	60
	116	60
1646-516-710-00	112	47
	112	58
	114	53
	114	64
	116	53
	116	64
1646-640-001-00	167	58
	168	58
	169	18
1646-640-002-00	167	8
	167	38
	168	8
	168	38
	169	48
1646-640-006-00	167	30
	168	30
	169	26
1646-640-058-00	169	6
1646-640-221-00	167	25
	168	25
	169	21
1646-901-061-00	222	7
1650-102-004-00	1	3
1650-102-004-00	2	3
	3	3
	4	3
1650-102-006-00	1	6
	2	6
	3	6
1650-102-006-10	1	6-A
	2	6-A
	3	6-A
	4	6
1650-102-007-00	1	7
	2	7
	3	7
1650-102-007-10	1	7-A
	2	7-A
	3	7-A
	4	7
1650-102-202-10	1	2
	2	2
	3	2
	4	2
1650-104-200-00	7	1
	10	1
1650-104-200-10	7	1-A
	10	1-A
1650-104-201-00	7	3
	8	4
	9	4
	10	3
1650-104-203-00	7	4
	8	5
	9	5
	10	4
1650-104-203-10	7	4-A
	8	5-A
	9	5-A
	10	4-A
1650-104-210-00	7	2
	8	3
	9	3
	10	2
1650-111-034-00	11	35
	11	37
	11	41
	12	35

Numerical Index

Numerical Index

Numerical Index

Numerical Index

Part Code	Fig.	Key
1729-203-303-00	272	8
	275	8
1729-209-200-00	29	13
1729-209-202-00	272	1
	275	1
1729-209-203-00	272	13
	275	13
1729-214-023-00	31	15
	31	25
	33	15
	33	25
1729-214-025-00	31	17
	31	19
	33	17
	33	19
1729-214-049-00	24	12
	24	30
	26	12
	26	28
	27	7
	27	15
	28	14
	29	7
	29	15
	31	29
	32	14
	33	29
	34	4
	36	4
1729-215-007-00	24	26
	26	25
	31	7
	33	7
1729-216-006-00	26	24
	31	9
	33	9
	35	4
1729-218-012-10	37	3
1729-218-013-00	37	4
1729-254-013-00	47	13
1729-254-014-00	47	16
1729-263-200-00	53	5
1729-266-035-00	100	37
1729-301-001-00	63	3
1729-301-002-00	63	4

Part Code	Fig.	Key
1729-306-001-00	65	1-A
1729-306-001-10	65	1-B
1729-306-001-20	65	1-C
1729-306-002-00	65	2
	66	2
1729-306-002-10	65	2-A
	66	2-A
1729-306-002-20	65	2-B
	66	2-B
1729-306-003-00	65	11
	66	11
1729-306-004-00	65	25
	66	25
1729-306-005-00	65	16-A
	66	16-A
1729-306-005-10	65	16-B
	66	16-B
1729-308-003-00	67	3
1729-308-200-10	67	12
	68	11
1729-308-220-00	67	16
1729-310-001-00	69	27
	70	26
	71	29
	72	27
	73	26
1729-310-002-00	69	28
	70	27
	71	30
	72	28
	73	27
1729-310-201-10	69	1
	70	1
	71	1
	72	1
	73	1
1729-310-202-00	69	2
	69	6
	70	2
	70	6
	71	2
	71	6
	72	2
	72	6
	73	2

Part Code	Fig.	Key
1729-310-202-00	73	6
1729-310-203-00	69	3
	69	7
	70	3
	70	7
	71	3
	71	7
	72	3
	72	7
	73	3
	73	7
1729-310-211-10	69	5
	70	5
	71	5
	72	5
	73	5
1729-310-220-10	69	12
	70	12
	71	12
	72	12
	73	12
1729-310-220-20	69	12-A
	70	12-A
	71	12-A
	72	12-A
	73	12-A
1729-310-260-00	69	24
	70	23
	71	26
	72	24
	73	23
1729-310-270-00	69	25
	70	24
	71	27
	72	25
	73	24
1729-313-200-10	78	1
1729-401-003-00	80	11-A
1729-410-002-00	85	15
	86	15
	87	5
	88	5
	90	18
1729-434-001-00	95	1
1729-434-001-10	95	1-A

Numerical Index

Part Code	Fig.	Key	Part Code	Fig.	Key	Part Code	Fig.	Key
1729-604-003-00	136	8	1729-630-053-20	156	16	1729-652-212-00	179	4
	137	3	1729-630-053-30	155	16-A		180	4
	137	8		156	16-A		181	4
1729-604-004-10	136	17	1729-630-056-10	155	7	1729-652-232-00	177	15
	137	17		156	7		178	16
1729-604-004-20	136	17-A	1729-630-057-00	155	8		181	15
	137	17-A		156	8	1729-652-272-00	176	2
1729-604-004-30	136	17-B	1729-630-058-00	155	17		177	2
	137	17-B		156	17		178	2
1729-604-005-00	136	22	1729-630-270-10	151	14		179	2
	137	20		152	13		180	2
1729-604-006-00	136	23		153	15		181	2
	137	21		154	13	1729-652-273-00	176	3
1729-604-051-00	136	20		155	11		177	3
1729-604-052-00	136	21		156	11		178	3
1729-604-240-00	136	11	1729-631-006-00	162	3		179	3
	137	11		165	3		180	3
1729-604-250-00	136	12	1729-631-053-00	162	9		181	3
	137	12		165	9	1729-652-290-00	178	30
1729-604-260-10	136	13	1729-631-054-00	162	30		180	31
	137	13		165	27	1729-656-202-00	187	3
1729-606-001-00	138	3	1729-631-054-10	162	30-A	1729-656-205-00	187	6
1729-606-002-00	138	7		165	27-A	1729-656-206-00	187	7
1729-606-002-10	138	7-A	1729-631-056-10	162	6		187	7-A
1729-606-002-20	138	7-B		165	6	1729-656-207-00	187	12
1729-630-001-20	151	8	1729-631-057-00	162	7	1729-656-208-00	187	9
	152	7		165	7	1729-656-209-00	187	10
	153	9	1729-631-058-00	162	8	1729-656-210-00	177	36
	154	7		165	8		178	53
1729-630-001-30	151	8-A	1729-650-002-00	172	26		181	43
	152	7-A		173	26	1729-656-310-00	187	4
	153	9-A		174	26	1729-656-321-00	187	13
	154	7-A		175	26	1729-656-330-00	187	8
1729-630-006-20	152	11	1729-650-210-10	172	6	1729-656-330-20	187	8-A
	154	11		173	6	1729-658-001-00	188	34
	156	9		174	6		188	38
1729-630-051-20	155	4		175	6	1729-658-003-00	188	49
	156	4	1729-650-260-00	173	36	1729-658-003-10	188	49-A
1729-630-051-30	155	4-A		175	36	1729-658-003-20	188	49-B
	156	4-A	1729-652-005-00	176	54	1729-658-004-00	188	41
1729-630-052-20	155	15		178	58	1729-658-007-00	188	35
	156	15		180	49	1729-658-008-00	188	58
1729-630-052-30	155	15-A	1729-652-212-00	176	4	1729-658-202-00	188	3
	156	15-A		177	4	1729-658-210-00	188	15
1729-630-053-20	155	16		178	4	1729-658-212-00	188	16

Numerical Index

Part Code	Fig.	Key	Part Code	Fig.	Key	Part Code	Fig.	Key
1742-111-210-30	14	15-A	1742-203-013-00	26	27	1742-214-018-00	31	34
1742-111-220-00	11	4	1742-203-014-00	24	24		33	34
	12	4	1742-203-200-00	24	13	1742-214-200-10	31	1
	13	4	1742-203-230-00	26	17	1742-214-200-20	31	1-A
	14	4	1742-203-232-00	26	18	1742-214-210-00	31	10
1742-111-240-00	11	44		31	11		31	20
	12	44		31	21		33	10
	13	45		33	11		33	20
	14	45		33	21	1742-216-001-00	34	3
1742-116-210-00	15	1	1742-209-001-00	27	1		36	3
	16	1	1742-209-001-10	27	1-A	1742-216-002-00	34	6
1742-116-210-10	15	1-A		29	1		36	6
	16	1-A	1742-209-002-00	27	6	1742-216-003-00	34	7
1742-116-220-00	15	12		29	6		36	7
	16	12	1742-209-003-00	27	9	1742-216-004-00	34	9
1742-116-220-10	15	12-A		28	10		36	9
	16	12-A		29	9	1742-216-005-00	34	11
1742-116-230-00	15	16	1742-209-004-10	27	14		36	11
1742-116-230-10	15	16-A		29	14	1742-216-006-00	34	1
1742-120-002-00	17	5	1742-209-004-20	27	14-A	1742-216-011-00	34	1-A
1742-120-200-00	17	1		29	14-A	1742-218-001-00	37	1
1742-120-250-00	17	2	1742-209-210-00	27	13	1742-218-002-10	37	2
1742-201-200-00	20	1		28	9	1742-218-004-00	37	8
1742-201-200-10	20	1-A	1742-214-001-00	31	4	1742-219-001-00	38	1
1742-201-210-00	23	1		33	4		39	1
1742-201-210-10	23	1-A	1742-214-001-10	31	4-A	1742-219-005-00	38	6
1742-201-210-20	23	1-B		33	4-A	1742-219-006-10	38	5
1742-203-001-00	24	1	1742-214-003-10	31	16	1742-229-001-00	40	1
	26	1		33	16	1742-229-001-10	40	1-A
1742-203-002-00	24	5	1742-214-004-10	31	18	1742-229-002-00	41	2
	26	5		33	18		236	2
1742-203-003-00	24	11	1742-214-005-10	31	26	1742-229-002-10	41	2-A
	26	11		33	26		42	1
1742-203-004-00	24	19	1742-214-005-20	31	26-A		236	2-A
1742-203-005-10	24	17		33	26-A	1742-229-003-00	41	9
1742-203-006-00	24	32	1742-214-006-00	31	30		42	7
	26	30		33	30		236	9
1742-203-009-00	26	13	1742-214-008-00	31	35	1742-229-004-00	41	11
1742-203-010-00	26	15		33	35		42	9
1742-203-011-00	26	23	1742-214-009-00	31	36		236	11
1742-203-012-10	24	3		33	36	1742-229-005-10	41	14
	26	3	1742-214-010-00	31	37		42	13
1742-203-012-20	24	3-A		33	37		236	14
	26	3-A	1742-214-017-10	31	8	1742-229-006-00	41	23
1742-203-013-00	24	29		33	8		42	22

Numerical Index

Part Code	Fig.	Key
1742-501-200-00	98	1
	99	1
1742-501-210-00	98	19
	99	19
1742-501-210-10	98	19-A
	99	19-A
1742-504-001-00	100	1
1742-504-003-00	100	12
1742-504-004-00	100	44
1742-504-005-10	100	55
1742-504-005-20	100	55-A
1742-504-005-30	100	55-B
1742-504-007-00	100	23
1742-504-008-00	100	36
1742-504-200-00	100	5
1742-504-210-00	100	8
1742-504-230-00	100	30
1742-504-250-00	100	40
1742-504-260-00	100	49
1742-504-270-00	100	32
1742-506-001-00	101	9
1742-506-001-10	101	9-A
1742-506-002-00	101	15
1742-506-003-00	101	27
1742-506-004-10	101	38
1742-506-004-20	101	38-A
1742-506-005-00	101	10
1742-506-220-10	101	22
1742-506-240-00	101	31
1742-506-250-00	101	34
1742-506-260-30	101	1
1742-506-260-40	101	1-A
1742-506-260-50	101	1-B
1742-506-270-00	101	2
1742-506-270-10	101	2-A
1742-506-280-10	101	7
1742-506-290-00	101	24
1742-508-002-00	104	34
1742-508-002-10	104	34-A
	109	35
1742-508-004-00	264	46
1742-508-005-00	102	8
	103	8
	104	8
	105	8

Part Code	Fig.	Key
1742-508-005-00	106	8
	109	8
1742-508-007-00	102	13
	103	13
	104	13
1742-508-008-00	108	1
1742-508-009-00	102	51
	103	51
	104	46
	105	55
	106	55
	107	55
	109	47
1742-508-011-00	102	13-A
1742-508-200-10	102	4
	103	4
	104	4
1742-508-210-20	102	1
	103	1
	104	1
	105	1
	106	1
	107	1
	109	1
1742-508-210-30	103	1-A
	104	1-A
	105	1-A
	106	1-A
	107	1-A
	109	1-A
1742-508-220-10	102	10
	104	10
1742-508-220-20	102	10-A
	103	10
	104	10-A
1742-508-230-00	102	17
	104	16
1742-508-230-10	102	17-A
	104	16-A
1742-508-240-00	102	17-B
	104	16-B
1742-508-240-10	104	16-C
1742-508-250-00	102	26
	103	26
	104	25

Part Code	Fig.	Key
1742-508-250-10	104	25-A
1742-508-270-00	102	47
	103	47
	104	42
	105	51
	106	51
	107	51
	109	43
1742-508-270-10	103	47-A
	104	42-A
	105	51-A
	106	51-A
	107	51-A
	109	43-A
1742-508-280-00	102	73
	106	77
1742-508-300-00	102	22
	103	21
	104	21
1742-508-310-00	102	30
	103	30
	104	29
	105	30
	106	30
	107	30
	109	30
1742-508-310-10	103	30-A
	104	29-A
	105	30-A
	106	30-A
	107	30-A
	109	30-A
1742-508-320-00	102	67
	103	67
	104	62
	105	71
	106	71
	107	71
	109	63
1742-508-330-00	102	4-A
	103	4-A
	104	4-A
	105	4
	106	4
	107	4

Numerical Index

Part Code	Fig.	Key
1742-512-002-10	120	10-A
	246	11-A
1742-512-003-00	119	12
	246	12
1742-512-003-10	119	12-A
	246	12-A
1742-512-004-00	120	28
	121	28
	246	34
	247	28
	248	34
1742-512-005-00	246	35
	248	35
	249	26
1742-512-006-00	119	34
1742-512-007-00	119	35
1742-512-200-00	119	7
	120	7
	246	7
1742-512-200-10	119	7-A
	120	7-A
	121	7
	246	7-A
	247	7
	248	7
1742-512-210-00	119	8
	246	8
1742-512-210-10	119	8-A
	246	8-A
	248	8
	249	6
1742-512-220-00	119	5
	120	5
	121	5
	246	5
	247	5
	248	5
	249	4
1742-512-300-00	119	20
	120	16
	121	16
	246	20
	247	16
	248	20
1742-512-300-10	119	20-A

Part Code	Fig.	Key
1742-512-300-10	120	16-A
	121	16-A
	246	20-A
	247	16-A
	248	20-A
1742-512-310-00	119	21
	120	17
	121	17
	246	21
	247	17
	248	21
1742-512-310-10	119	21-A
	120	17-A
	121	17-A
	246	21-A
	247	17-A
	248	21-A
1742-512-320-00	119	22
	246	22
	248	22
1742-512-320-10	119	22-A
	246	22-A
	248	22-A
	249	15
1742-512-330-00	119	23
	246	23
	248	23
1742-512-330-10	119	23-A
	246	23-A
	248	23-A
	249	16
1742-512-340-00	120	1
1742-512-340-10	120	1-A
1742-512-340-20	120	1-B
1742-512-340-30	120	1-C
1742-512-350-10	246	1
1742-512-350-20	246	1-A
1742-512-350-30	246	1-B
1742-512-350-40	246	1-C
1742-512-370-00	247	1
1742-512-380-00	248	1
1742-512-380-10	248	1-A
1742-512-420-10	121	1
1742-512-420-20	121	1-A
1742-512-430-10	249	1

Part Code	Fig.	Key
1742-514-001-10	122	28
	123	25
1742-514-200-10	122	1
	123	1
	124	1
1742-514-210-00	122	15
1742-514-240-00	123	11
	124	11
1742-514-250-00	122	8
1742-515-001-00	125	7
	126	7
1742-515-200-00	125	6
1742-515-230-00	125	11
1742-515-240-00	126	6
1742-515-250-00	126	11
1742-520-001-00	129	5
	130	1
1742-520-200-00	127	1
	129	1
1742-520-200-10	127	1-A
	129	1-A
1742-520-210-00	127	5
1742-521-001-10	131	6
1742-521-002-10	132	6
	250	7
1742-521-003-00	132	20
	250	21
1742-521-003-10	132	20-A
	250	21-A
1742-521-200-30	131	1
1742-521-210-20	132	1
	250	2
1742-521-210-30	132	1-A
	250	2-A
1742-521-300-20	250	1
1742-601-260-20	133	41
	134	43
1742-601-270-00	133	36
1742-601-270-10	133	36-A
	134	38
1742-601-270-20	133	36-B
	134	38-A
1742-601-270-30	133	36-C
	134	38-B
1742-604-240-10	136	14

Numerical Index

Numerical Index

Numerical Index

Numerical Index

Numerical Index

Numerical Index

Part Code	Fig.	Key	Part Code	Fig.	Key	Part Code	Fig.	Key
K200-197-000-00	103	35-A	K211-074-100-10	264	1-A	K231-008-000-10	105	61
K200-197-002-00	262	1	K211-074-103-00	264	8		106	61
K200-197-003-00	262	3		264	29		107	61
K211-001-006-20	263	5	K211-074-103-10	264	8-A		109	53
K211-001-008-00	263	9		264	29-A	K233-013-000-00	116	71
K211-003-002-00	263	1	K211-074-104-10	264	12	K234-006-000-20	116	70
K211-004-006-00	267	7	K211-074-105-00	264	14	K250-008-005-00	265	7
	267	7		264	35	K250-016-000-00	102	54
	269	7	K211-074-106-00	264	11		103	54
	269	7		264	32		104	49
K211-004-007-00	264	2	K211-074-108-00	264	13		105	58
	264	23		264	34		106	58
	267	6	K211-074-109-00	264	17		107	58
	267	6		264	38		109	50
	267	16	K211-074-110-00	264	10	K250-039-002-00	112	19
	267	16		264	31		114	25
	269	6	K211-074-111-00	264	4		116	25
	269	6		264	25	K250-039-003-00	112	20
	269	16	K211-074-112-00	264	6		114	26
	269	16		264	27		116	26
K211-008-009-00	263	4	K211-074-113-00	264	16	K250-039-004-10	112	21
K211-008-010-00	263	3-A		264	37		114	27
K211-008-011-00	263	8	K211-074-115-00	264	15		116	27
	265	2		264	36	K250-049-000-00	112	18
K211-008-018-10	263	3	K211-074-200-00	264	22		114	24
K211-012-006-00	267	5	K211-074-200-10	264	22-A		116	24
	267	5	K211-074-203-00	264	43	K250-049-001-00	112	23
	269	5	K211-074-204-10	264	33		114	29
	269	5	K231-004-006-00	102	60		116	29
K211-066-103-00	116	75		103	60	K250-057-000-00	102	42
K211-073-000-00	102	50		104	55		103	42
	103	50		105	64		104	35
	104	45		106	64		105	46
	105	54		107	64		106	46
	106	54		109	56		107	46
	107	54	K231-004-007-00	102	62		109	36
	109	46		103	62		262	5
K211-073-004-00	263	6		104	57	K256-001-004-10	265	1
K211-073-005-00	263	7		105	66	K256-001-005-00	265	4
K211-074-000-00	117	2		106	66	K256-001-006-00	265	5
K211-074-000-10	117	2-A		107	66	K256-001-007-10	265	10
	118	1		109	58	K256-004-000-00	113	9
K211-074-002-00	108	8	K231-008-000-10	102	57		114	9
	264	51		103	57		115	9
K211-074-100-00	264	1		104	52	K270-001-003-10	260	3

Numerical Index

Numerical Index

Numerical Index

Part Code	Fig.	Key	Part Code	Fig.	Key	Part Code	Fig.	Key
V231-360-801-20	106	15	V231-360-801-60	1	16	V231-360-801-60	107	12
	106	34		1	21		108	12
	106	83		2	16		109	9
	107	3		2	21		109	12
	107	15		3	16		110	7
	107	34		3	21		111	20
	107	83		4	16		112	32
	109	3		4	21		112	40
	109	15		24	10		112	50
	109	34		26	10		112	55
	111	20-A		41	13		112	57
	112	45		42	11		113	26
	112	52		44	8		114	38
	113	26-A		54	5		114	46
	113	37		55	2		114	56
	113	40		67	17		114	61
	114	51		69	22		114	63
	114	58		69	29		115	26
	114	78		70	21		116	38
	115	26-A		70	28		116	46
	115	37		71	24		116	56
	115	40		71	31		116	61
	116	51		72	22		116	63
	116	58		72	29		119	6
	119	13		73	21		119	25-A
	119	25		73	28		119	28-A
	119	28		74	7		119	32
	120	11		75	7		120	6
	120	19		76	7		120	19-A
	120	22		77	7		120	22-A
	136	19-A		79	6		120	26
	137	19-A		80	16		121	6
	138	6		81	8		121	19
	162	2		84	16		121	22
	162	10		102	9		121	26
	165	2		102	12-A		133	33
	165	10		103	9		134	35
	170	51		103	12-A		136	19
	205	30		104	9		137	19
	208	32		104	12-A		138	4
	236	25		105	9		138	4-A
	236	28		105	12		139	4
	246	13		106	9		140	4
	246	25		106	12		141	3
	246	28		107	9		142	3

Part Code	Fig.	Key	Part Code	Fig.	Key	Part Code	Fig.	Key
V231-360-801-60	143	3	V231-360-801-60	167	4	V231-360-801-60	248	6
	144	3		167	21		248	25
	145	3		168	4		248	28
	151	2		168	21		248	32
	152	2		169	37		249	5
	153	2		169	56		249	18
	154	2		169	67		249	21
	158	4		170	9		249	25
	158	7		170	14	V231-360-802-00	6	4
	158	10		170	21		7	6
	158	15		170	48		7	8
	158	17		170	57		8	7
	158	19		171	9		8	9
	159	4		171	19		9	7
	159	7		172	10		9	9
	159	10		172	18		10	6
	159	15		173	10		10	8
	159	17		173	18		11	3
	159	19		174	10		11	18
	160	4		174	18		12	3
	160	7		175	10		12	18
	160	10		175	18		13	3
	160	15		176	52		13	19
	160	17		177	52		14	3
	160	19		178	57		14	19
	162	13		181	59		17	3
	163	4		183	27		24	2
	163	7		184	27		26	2
	163	10		188	30		41	41
	163	15		194	4		42	40
	163	17		196	4		45	4
	163	19		205	25		49	6
	164	4		206	26		50	6
	164	7		208	26		56	13
	164	10		214	6		57	15
	164	15		236	13		58	6
	164	17		245	7		60	6
	164	19		246	6		61	10
	165	13		246	25-A		68	16
	166	4		246	28-A		117	20
	166	7		246	32		117	44
	166	10		247	6		118	19
	166	15		247	19		118	43
	166	17		247	22		133	35
	166	19		247	26		133	37

Numerical Index

Part Code	Fig.	Key
V251-341-205-00	30	4
V251-341-206-00	20	8
	22	8
	23	8
	30	5
V251-441-003-50	65	9-A
	66	9-A
V251-441-403-50	93	3
	94	3
V300-460-016-00	237	5
	237	15
	238	5
	238	15
V301-260-006-00	47	21
	172	4
	172	21
	173	4
	173	21
	174	4
	174	21
	175	4
	175	21
	188	17
	194	8
	194	13
	196	8
	196	13
	274	1
V302-460-016-00	237	6
	237	16
	238	6
	238	16
V304-260-008-00	15	28
	18	5
	18	9
	19	5
	19	9
	71	19
	74	14
	74	21
	75	14
	75	21
	76	14
	76	21
	77	14

Part Code	Fig.	Key
V304-260-008-00	77	21
	79	13
	81	13
	82	12
	83	13
	100	17
	100	46
	101	19
	102	23
	102	69
	103	23
	103	23-A
	103	69
	104	23
	104	64
	105	23
	105	73
	106	22
	106	73
	107	23
	107	73
	109	23
	109	65
	111	3
	112	3
	113	3
	114	3
	115	3
	116	3
	117	25
	117	29
	117	32
	118	24
	118	28
	118	31
	124	30
	133	14
	134	16
	147	16
	147	16-A
	150	15
	167	14
	167	14-A
	167	33
	167	44

Part Code	Fig.	Key
V304-260-008-00	167	54
	168	14
	168	14-A
	168	33
	168	44
	168	54
	169	10
	169	54
	169	62
	169	74
	172	13
	173	13
	174	13
	175	13
	203	15
V304-260-010-00	102	65
	103	65
	104	60
	105	69
	106	69
	107	69
	109	61
	117	10
	118	9
	127	7
	138	8
	167	23
	168	23
	169	13
	169	31
	201	4
	202	4
V304-260-012-00	79	23
	93	8
	94	8
	167	29
	168	29
V304-260-016-00	201	9
	202	9
V304-460-008-00	116	92
	133	3
	134	3
	167	10
	167	40
	167	50

Numerical Index

Part Code	Fig.	Key
V363-260-008-00	85	14
	86	14
	90	17
	117	45
	118	44
	124	29
	135	17
	135	23
	138	5
	162	11
	165	11
	169	38
	184	34
	188	42
	195	2
	196	2
	205	26
	205	29
	205	31
	206	27
	208	27
	208	33
	214	7
V363-260-010-00	129	7
	130	3
V401-160-005-00	212	19
V401-160-006-00	47	11
	47	20
	102	21
	102	72
	103	20
	103	20-A
	103	72
	104	20
	104	67
	105	20
	105	76
	106	20
	106	76
	107	20
	107	76
	109	20
	109	68
	110	14
	110	20

Part Code	Fig.	Key
V401-160-006-00	110	27
	110	33
	111	8
	112	8
	113	8
	114	8
	115	8
	116	8
	116	12
	116	114
	172	22
	173	22
	174	22
	175	22
	194	9
	194	14
	196	9
	196	14
	212	11
	245	14
	245	20
	245	27
	245	33
	264	45
V401-160-008-00	11	29
	12	29
	13	30
	14	30
	80	13
	100	19
	102	24
	103	25
	104	24
	105	25
	106	24
	107	25
	109	25
	111	4
	112	4
	113	4
	114	4
	115	4
	116	4
	116	91
	116	93

Part Code	Fig.	Key
V401-160-008-00	117	33
	118	32
	167	13
	167	13-A
	167	43
	167	53
	168	13
	168	13-A
	168	43
	168	53
	169	9
	169	53
	169	61
	169	73
	172	14
	173	14
	174	14
	175	14
	210	20
	213	8
	267	14
	267	14
	269	14
	269	14
V401-160-010-00	5	3
	41	6
	42	4
	64	5
	65	21
	66	21
	84	12
	100	35
	108	7
	117	11
	118	10
	118	51
	119	4
	120	4
	121	4
	133	32
	134	34
	138	9
	146	15
	236	6
	246	4

Numerical Index

Numerical Index

Numerical Index

Part Code	Fig.	Key
V720-112-401-00	265	6
V720-112-401-10	47	30
	102	75
	102	77
	103	75
	103	77
	105	79
	105	81
	106	79
	106	81
	107	79
	107	81
	111	13
	111	16
	111	22
	111	24
	112	13
	112	16
	112	27
	112	29
	113	20
	113	22
	113	28
	113	30
	113	33
	113	35
	113	54
	113	56
	114	20
	114	22
	114	33
	114	35
	114	72
	114	75
	115	20
	115	22
	115	28
	115	30
	115	33
	115	35
	115	54
	115	56
	116	20
	116	22
	116	33

Part Code	Fig.	Key
V720-112-401-10	116	35
	116	99
	277	11
V720-112-401-20	102	45
	102	55
	103	45
	103	55
	104	40
	104	50
	105	49
	105	59
	106	49
	106	59
	107	49
	107	59
	108	3
	109	41
	109	51
	263	11
	264	7
	264	19
	264	28
	264	40
	264	48
	267	21
	267	21
	269	21
	269	21
V720-112-401-40	35	9
	98	6
	98	7
	98	24
	99	6
	99	7
	99	24
	102	32
	102	46
	102	49
	103	32
	103	46
	103	49
	104	31
	104	41
	104	44
	105	32

Part Code	Fig.	Key
V720-112-401-40	105	50
	105	53
	106	32
	106	50
	106	53
	107	32
	107	50
	107	53
	109	32
	109	42
	109	45
	112	25
	112	62
	113	18
	114	18
	114	31
	114	68
	115	18
	116	15
	116	18
	116	31
	116	68
	117	4
	117	6
	118	3
	118	5
	119	17
	119	19
	120	15
	121	15
	246	17
	246	19
	247	15
	248	17
	248	19
	249	14
	263	10
	263	13
	265	3
	267	28
	267	28
	269	28
	269	28
	277	10
V720-112-401-60	102	64

Numerical Index

Numerical Index

Alpabetical Index

Alpabetical Index

6005-097-570-30

Alpabetical Index

Alpabetical Index

6005-097-570-30

Alpabetical Index

Alpabetical Index

6005-097-580-30

Alpabetical Index

6005-097-580-30

Alpabetical Index

Alpabetical Index

6005-097-680-20

Alpabetical Index

6005-097-680-20

Alpabetical Index

Alpabetical Index

6005-097-610-30

Alpabetical Index

Alpabetical Index

6005-097-590-30

Alpabetical Index

6005-097-590-30

Alpabetical Index

6005-097-590-30

Alpabetical Index

Alpabetical Index

6005-097-600-30

Alpabetical Index

Alpabetical Index

6005-097-600-30

Alpabetical Index

6005-097-690-20

Alpabetical Index

Alpabetical Index

6005-097-690-20

Alpabetical Index

6005-097-690-20

Alpabetical Index

Alpabetical Index

6005-097-620-30

Alpabetical Index

Alpabetical Index

6005-097-620-30

Alpabetical Index

Alpabetical Index

Alpabetical Index

Alpabetical Index

Alpabetical Index

Alpabetical Index

Alpabetical Index

Alpabetical Index

Alpabetical Index

Alpabetical Index

Alpabetical Index

Alpabetical Index

Alpabetical Index

Alpabetical Index

Alpabetical Index

Alpabetical Index

Alpabetical Index

Alpabetical Index

Alpabetical Index

Alpabetical Index

Alpabetical Index

Alpabetical Index

Alpabetical Index

Alpabetical Index

Alpabetical Index

Alpabetical Index

Alpabetical Index

Alpabetical Index

Alpabetical Index

Alpabetical Index