Directions for use of Parts Catalogue

1. Applicable model of machines

All component and option parts used for SSM72 Mower are listed in this parts catalogue.

NOTES: SSM72-TG5390E4F・・・・・ FOR TG5390
SSM72-TG5390ME4F・・・・ FOR TG5390

2. Explanation for head paragraph

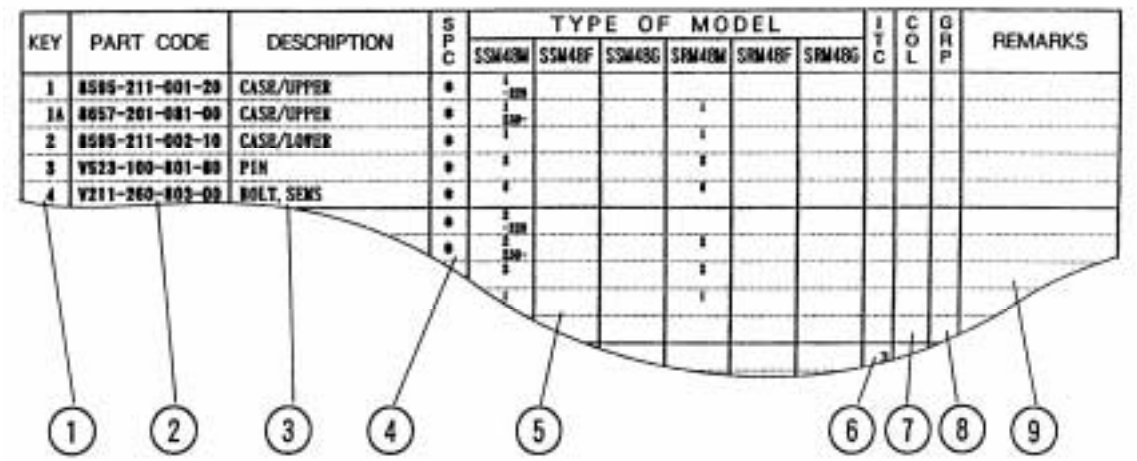

KEY	PART CODE	DESCRIPTION	SPC	TYPE OF MODEL						ITC	COL	GRP	REMARKS
				SSM48M	SSM48F	SSM48G	SRM48M	SRM48F	SRM48G				
1	8585-211-001-20	CASE/UPPER	*	1									
1A	8657-201-081-00	CASE/UPPER	*	1			1						
2	8585-211-002-10	CASE/LOWER	*	1			1						
3	V523-100-801-80	PIN	*	4			4						
4	V211-260-802-00	BOLT, SEMS	*	4			4						
			*	2									
			*	2			2						
				1			1						

① ② ③ ④ ⑤ ⑥ ⑦ ⑧ ⑨

① KEY shows the location of parts diagramed in the illustration.

② Parts numbers begin with `V´ and `W´ are standard parts of the market.

③ `LH´ and `RH´ on the parts name are described against the moving direction of the machine or are described on the condition how to install parts on the machines.

④ SPC : The following symbol classifies parts to be used for machines.
`*´ means standard parts.
`T´ shows that the parts can be installed as optional parts.
`R´ shows that the parts can be used as applicable parts to replace originally equipped parts.

⑤ Upper column : QTY shows the number of parts to be used for one unit of machine.

`M´ is indicated for parts supplied by a meter long.

`l´ is indicated for parts supplied by liter.

`AR´ is indicated for parts need to be adjusted or regulated.

Lower column : serial number

—229 means serial number up to 229.

230— means serial number 230 and after.

⑥ ITC : Interchangeability

`1´…OLD ← NEW

New parts can be used in place of the old parts.

`2´…OLD → NEW

Old parts can be used in place of the new parts.

`3´…OLD →← NEW

Old parts and new parts can not be replaced each other.

⑦ COL : Color code

Color is signified with color code number for colored parts.

Please see the color list shown in the next page.

⑧ GRP : Parts shown in this column can be replaced by SET parts.

Example : Parts marked Ⓐ can be replaced by parts marked Ⓑ, and Ⓓ for Ⓒ, so the rest follow in the same alphabetical order.

⑨ Remarks

＊Other maker's part code number is shown in this column.

＊When Fig. No. is shown in the Remark column of SET parts or ASSY parts, each of their component parts are listed in said Fig. No.

3. Color :

The following colors are used color parts.

COLOR CODE	COLOR	SPRAY TYPE PARTS CODE	PAINTS 4K DRUM PARTS CODE	PAINTS 16K DRUM PARTS CODE
7 F	MIRROR BLACK	1300-954-001-10	1300-954-003-00	1300-954-004-00

NOTE : Color code is signified only for the parts assigned by the maker as color parts.

4. Serial Numbers :

For chassies serial number is shown on the LABEL.

Please see

5. Parts Order

1) Parts numbers listed in the parts catalogue are all registered in “ISEKI on-line computer”.
2) When you order parts, please make sure of correct numbers.
3) When substitute parts is available, the part number ordered will be automatically turned to a new part number.
4) Please be sure to use “ISEKI GENUINE PARTS”.
   Any other similar parts other than ISEKI parts when used may cause a trouble that makes us unable to repair or guarantee the warrant.

*** Structure Table of Model ***

MODEL / FIG.	SSM72TG5390F	E4F	ME4F								
1	*	*									
2	*	*									
3	*	*									
4	*	*									
5	*	*									
6	T	*									
7	*	*									
8	*	*									
9	*	*									
10	*	*									
11	*	*									
12	*	*									
13	*	*									
14	*	*									
15	*	*									
16	*	*									
17	R	R									
18	R	R									
19	R	R									

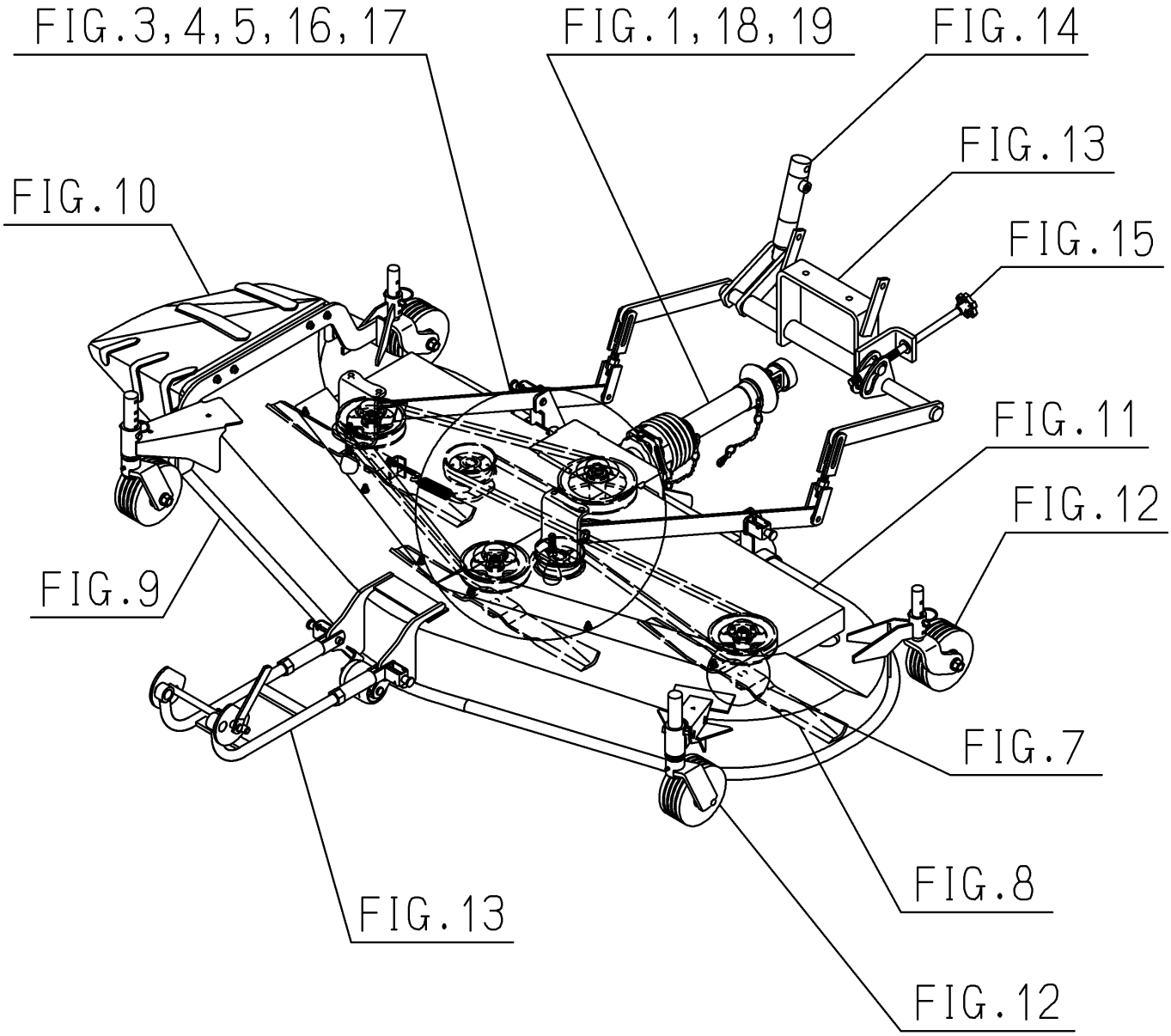
FIG.3,4,5,16,17
FIG.1,18,19
FIG.14
FIG.13
FIG.10
FIG.15
FIG.11
FIG.12
FIG.9
FIG.7
FIG.8
FIG.13
FIG.12

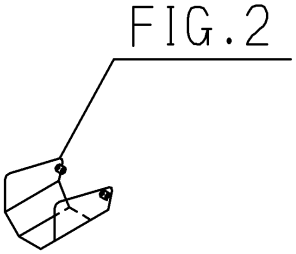
FIG.2

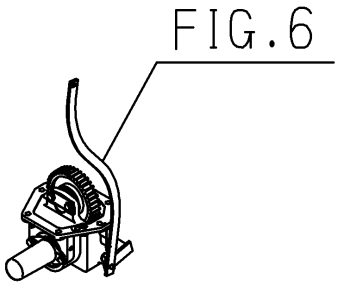
FIG.6

Contents

SSM72

JOINT(UNIVERSAL)SYSTEM····· Fig. 1
COVER(JOINT)SYSTEM····· Fig. 2
CASE(BEVEL)SYSTEM····· Fig. 3
PULLEY SYSTEM····· Fig. 4
BELT SYSTEM····· Fig. 5
MID PTO SYSTEM(M TYPE)····· Fig. 6
METAL SYSTEM····· Fig. 7
BLADE SYSTEM····· Fig. 8
DECK(MOWER)SYSTEM····· Fig. 9
COVER(DISCHARGE)SYSTEM····· Fig. 10
COVER(BELT)SYSTEM····· Fig. 11
WHEEL(GAUGE)SYSTEM····· Fig. 12
LINK(LIFT)SYSTEM(1/2)(2/2)····· Fig. 13
CYLINDER SYSTEM····· Fig. 14
ADJUST(HEIGHT)SYSTEM····· Fig. 15
LABEL····· Fig. 16

OPTIONAL PARTS

CASE(BEVEL)ASSY(REPAIR)····· Fig. 17
F(AT)KIT(REPAIR)····· Fig. 18

COMPONENT PARTS

COMPONENT PARTS
FOR 8655-101-450-00 ON Fig.1····· Fig. 19

FIG. 1 JOINT(UNIVERSAL)SYSTEM

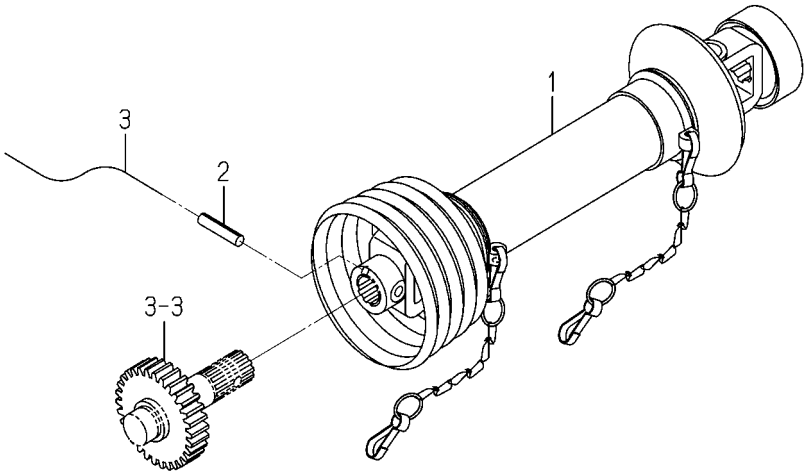

8655-101C-0100

KEY	PART CODE	DESCRIPTION	SPC	TYPE OF MODEL SSM72 TG5390F		ITC	COL	GRP	REMARKS
1	8655-101-450-00	JOINT/UNIVERSAL SET	*	1					FIG 019
2	V580-140-804-00	PIN,SPRING/8 X40 W	*	1					
3		WIRE	*	1					

FIG. 2 COVER(JOINT)SYSTEM

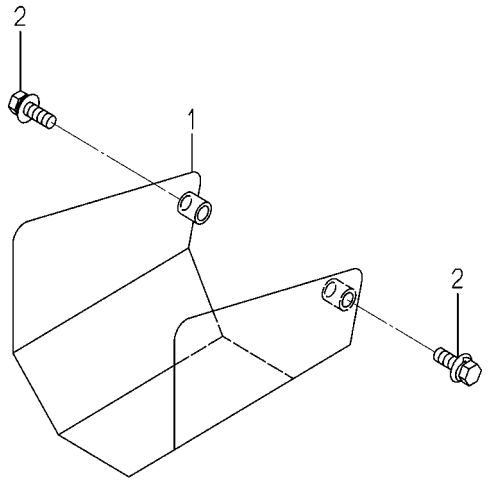

8655-150 -0100

KEY	PART CODE	DESCRIPTION	SPC	TYPE OF MODEL SSM72 TG5390F		ITC	COL	GRP	REMARKS
1	8655-150-450-00	COVER/JOINT COMP	*	1					
2	V211-360-802-50	BOLT/SP	*	2					

FIG. 3 CASE(BEVEL)SYSTEM

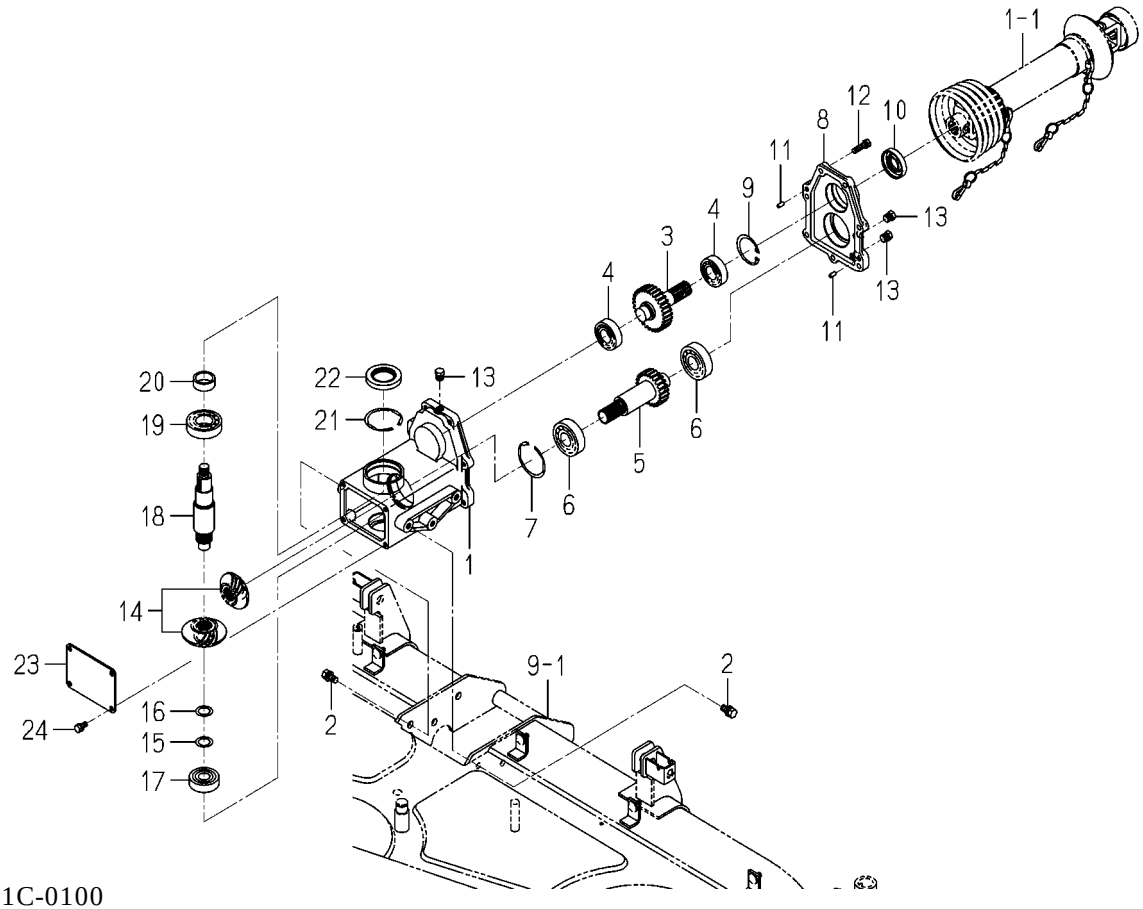

8655-201C-0100

KEY	PART CODE	DESCRIPTION	SPC	TYPE OF MODEL SSM72 TG5390F		ITC	COL	GRP	REMARKS
1	8655-201-071-00	CASE/BEVEL	*	1					
2	V211-561-002-00	BOLT/M10X20	*	6					
3	8655-201-073-00	GEAR/SPUR/30	*	1					
4	1594-221-001-00	BEARING/BALL 6205SH2	*	2					
5	8655-201-074-00	GEAR/SPUR/23	*	1					
6	1594-218-001-00	BEARING/BALL 6305SH2	*	2					
7	V707-140-062-00	RING/SNAP	*	1					
8	8655-201-072-00	COVER/CASE	*	1					
9	V705-140-052-00	RING,SNAP/52 C	*	1					
10	V744-125-521-00	SEAL,OIL/TC255210	*	1					
11	8658-306-003-00	PIN/PARALLEL	*	2					
12	V211-560-803-00	BOLT/M8X30	*	7					
13	7955-201-026-00	PLUG,DRAIN (1/4)	*	3					
14	8662-201-210-00	GEAR/BEVEL/21-2 SET	*	1					
15	2500-311-018-00	SHIM/0.5	*	1					
16	2500-311-019-00	SHIM/0.3X20X30	*	1					
17	1560-214-003-00	BEARING/BALL/6304SH2	*	1					
18	8655-201-075-00	SHAFT/OUTPUT	*	1					
19	V600-110-620-60	BEARING,RB/6206	*	1					
20	1614-244-002-00	SLEEVE	*	1					
21	V707-140-062-00	RING/SNAP	*	1					
22	1614-244-005-00	SEAL/OIL	*	1					
23	8655-201-076-00	COVER/CASE	*	1					
24	V211-260-801-60	BOLT,SEMS (S) M8X16	*	4					

FIG. 4 PULLEY SYSTEM

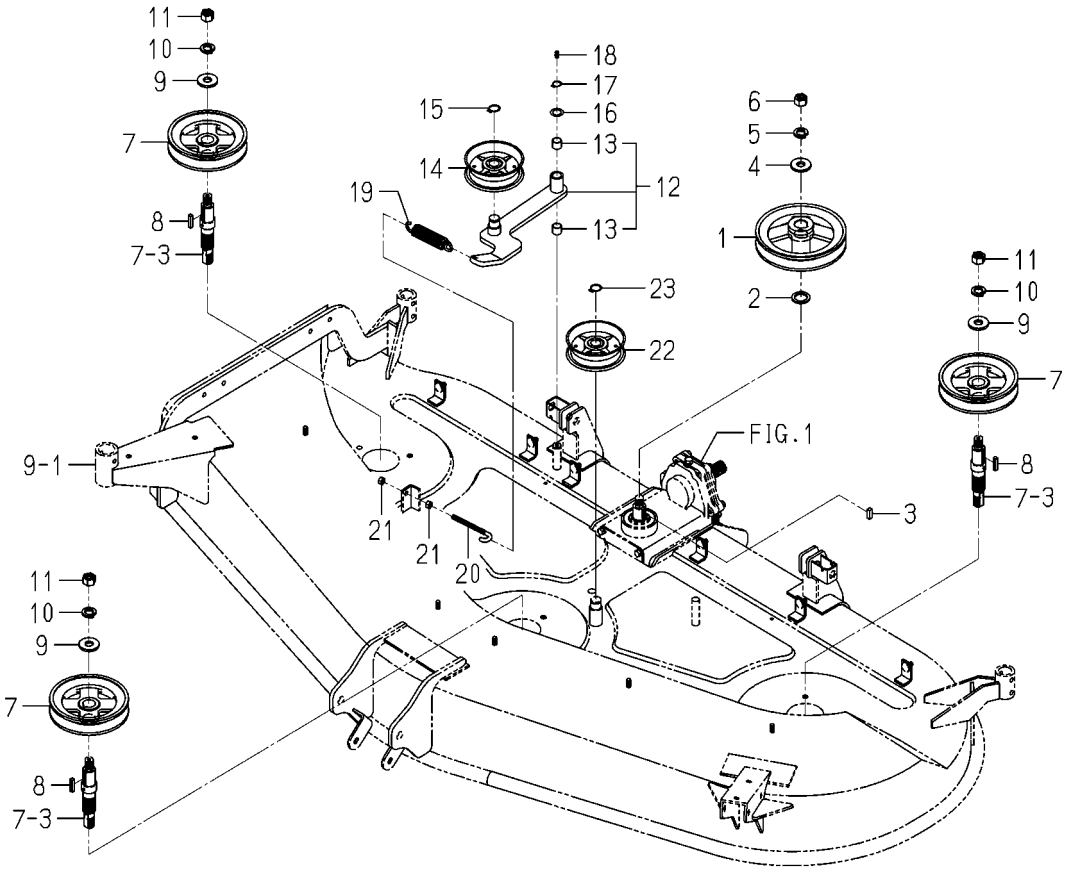

8655-202D-0100

KEY	PART CODE	DESCRIPTION	SPC	TYPE OF MODEL SSM72 TG5390F		ITC	COL	GRP	REMARKS
1	8655-202-051-00	PULLEY/VC173	*	1					
2	1434-211-004-00	COLLAR/26X36X3	*	1					
3	3670-520-001-00	KEY/08X07X20	*	1					
4	3746-111-011-00	WASHER	*	1					
5	V401-160-016-00	WASHER,SP/M16	*	1					
6	V305-460-016-00	NUT	*	1					
7	8655-202-062-00	PULLEY/VC150	*	3					
8	8654-202-016-00	KEY/06X06X28	*	3					
9	3746-111-011-00	WASHER	*	3					
10	V401-160-016-00	WASHER,SP/M16	*	3					
11	V304-460-016-00	NUT/M16	*	3					
12	8655-202-400-00	ARM/TENSION ASSY	*	1					
13	8597-202-501-00	BUSH/16X18X15	*	2					
14	3100-703-230-10	PULLEY,TENSION/100	*	1					
15	V704-140-020-00	RING,SNAP/20C	*	1					
16	3621-211-003-00	WASHER	*	1					
17	V704-140-016-00	RING,SNAP/16 C	*	1					
18	V760-150-000-00	NIPPLE,GREASE	*	1					
19	3737-341-006-00	SPRING,CHAIN TENSION	*	1					
20	3737-341-007-00	ROD,CHAIN TENSION	*	1					
21	V304-260-008-00	NUT	*	2					
22	3100-703-230-10	PULLEY,TENSION/100	*	1					
23	V704-140-020-00	RING,SNAP/20C	*	1					

FIG. 5 BELT SYSTEM

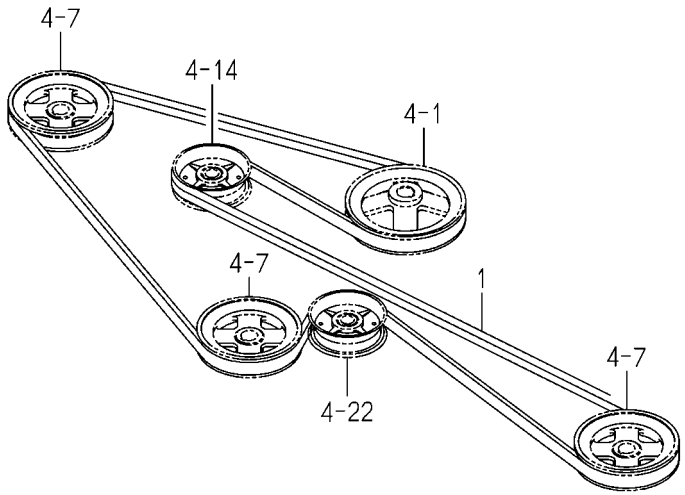

8655-203C-0100

KEY	PART CODE	DESCRIPTION	SPC	TYPE OF MODEL SSM72 TG5390F		ITC	COL	GRP	REMARKS
1	8655-203-051-00	BELT/VC164	*	1					

FIG. 6 MID PTO SYSTEM(M TYPE)

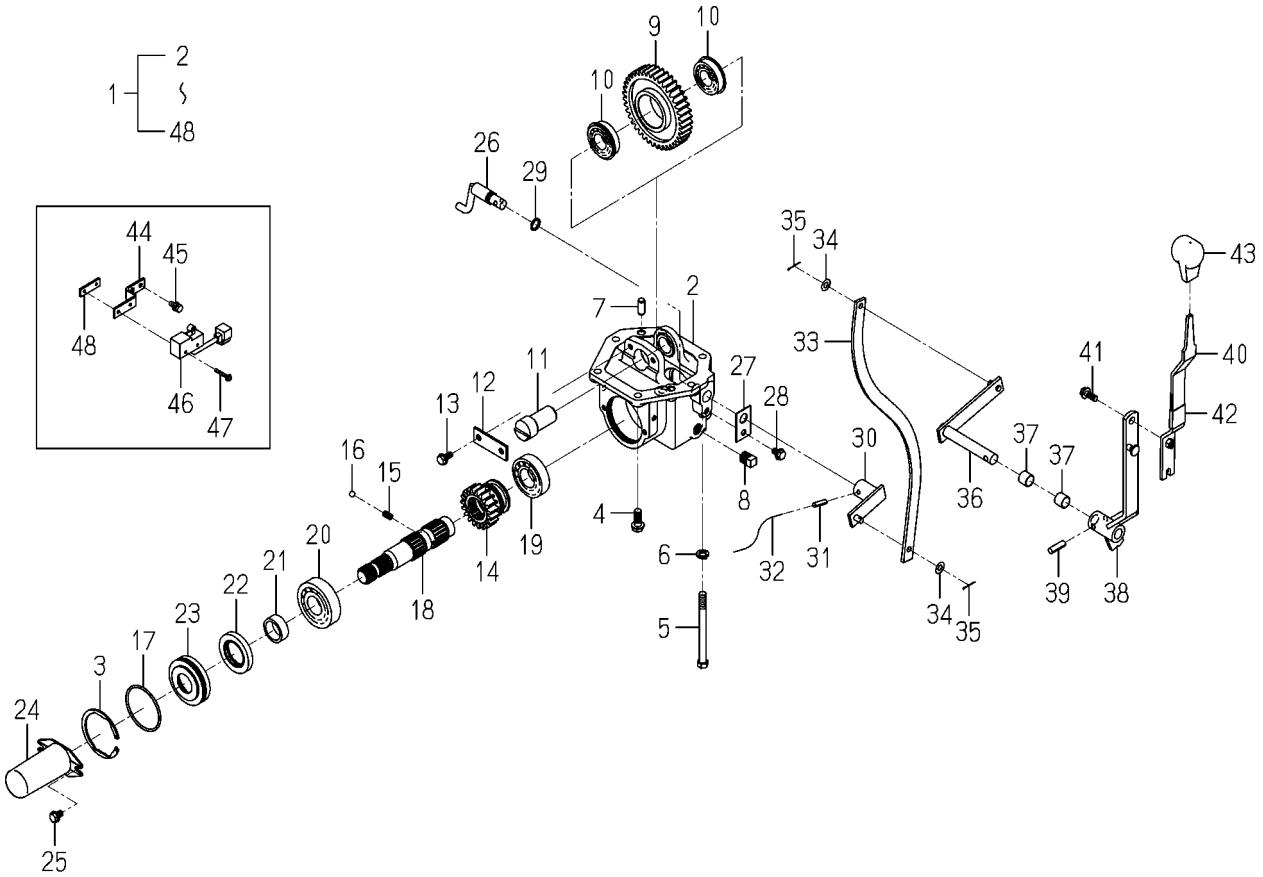

1746-229 -0100

KEY	PART CODE	DESCRIPTION	SPC	TYPE OF MODEL SSM72 TG5390F		ITC	COL	GRP	REMARKS
1	1746-229-200-20	MIDPTO/E4/19/Q SET	*	1					
2	1742-229-002-10	CASE/PTO	*	1					
3	V707-140-072-00	RING/SNAP	*	1					
4	V231-361-002-50	FLANGEBOLT	*	4					
5	V201-361-012-00	BOLT/M10X120 9T	*	2					
6	V401-160-010-00	WASHER,SP/M10	*	2					
7	V523-101-002-40	PIN	*	2					
8	V781-160-000-6B	PLUG/SCREW/SEAL	*	1					
9	1742-229-003-00	GEAR/SPUR/40	*	1					
10	V607-110-620-50	BEARING,RB/6205NR	*	2					
11	1742-229-004-00	SHAFT	*	1					
12	1594-272-006-00	PLATE	*	1					
13	V231-360-801-60	FLANGEBOLT	*	2					
14	1742-229-005-10	GEAR/SPUR/19	*	1					
15	1302-225-003-00	SPRING,SHIFTER	*	1					
16	V682-200-001-00	BALL	*	1					
17	1524-244-005-00	O-RING	*	1					
18	1742-229-007-20	SHAFT/PTO/E3	*	1					
19	V600-410-620-60	BEARING/BALL	*	1					
20	V600-410-630-60	BEARING/BALL	*	1					
21	1614-244-002-00	SLEEVE	*	1					
22	1614-244-005-00	SEAL/OIL	*	1					
23	1742-229-006-00	METAL/SEAL	*	1					
24	1444-314-009-10	CAP,PTO SHAFT	*	1					
25	V231-360-801-20	FLANGEBOLT	*	2					
26	1620-255-220-10	ARM/SHIFT/MID COMP	*	1					
27	1620-255-208-00	PLATE/I/30X50	*	1					
28	V231-360-801-20	FLANGEBOLT	*	1					
29	V720-102-401-40	O-RING/P14	*	1					
30	1742-229-200-00	ARM/PLATE/MID COMP	*	1					

FIG. 6 MID PTO SYSTEM(M TYPE)

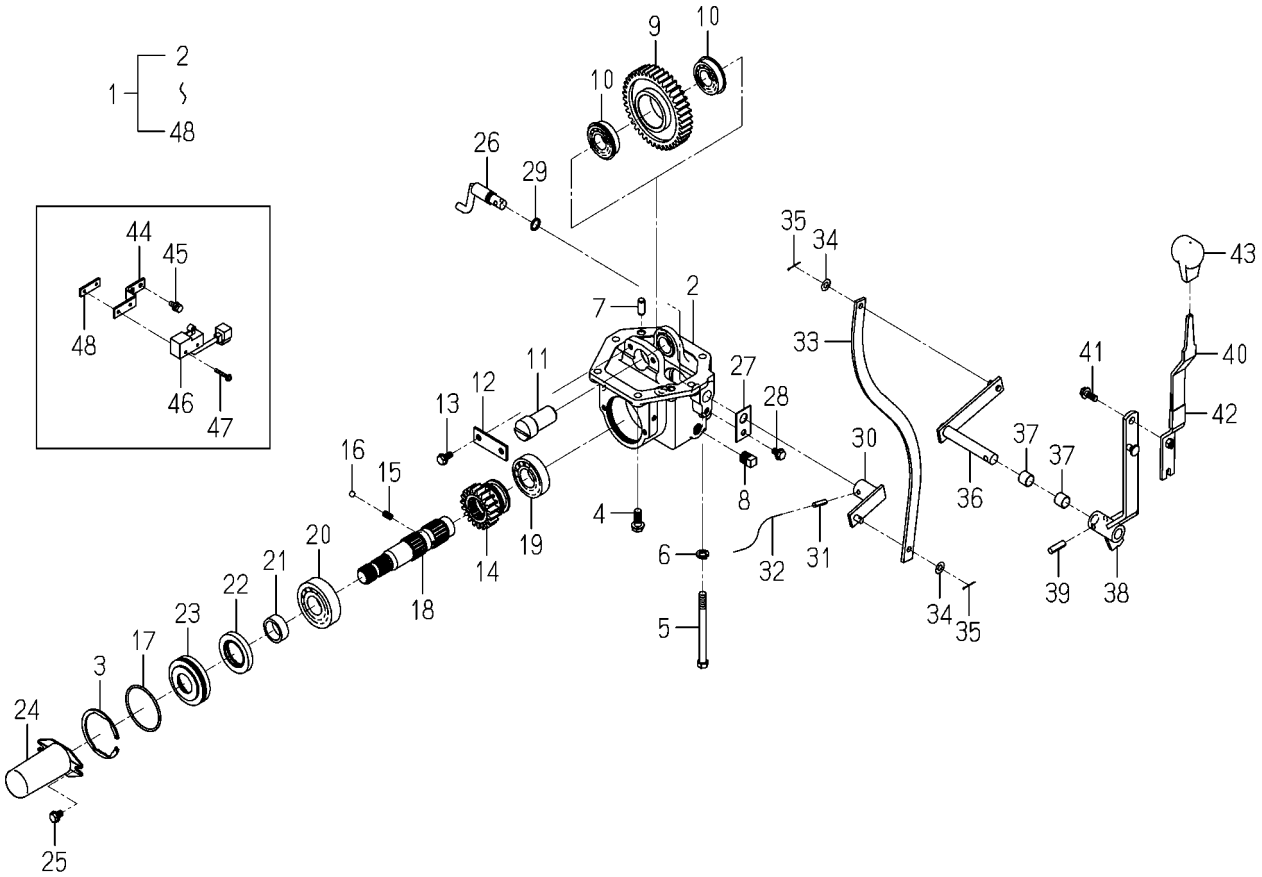

1746-229 -0100

KEY	PART CODE	DESCRIPTION	SPC	TYPE OF MODEL SSM72 TG5390F		ITC	COL	GRP	REMARKS
31	V580-140-602-50	PIN,SPRING/6 X25 W	*	1					
32		WIRE	*	1					
33	1742-229-009-00	PLATE/MID	*	1					
34	V411-260-008-00	WASHER,PL/M 8	*	2					
35	V500-162-002-00	PIN,SPLIT/2 X20	*	2					
36	1742-229-210-00	ARM/SHIFT/MID COMP	*	1					
37	3640-111-001-10	BUSH/16X18X15	*	2					
38	1742-229-230-10	ARM/LEVER/MID COMP	*	1					
39	V580-140-802-80	PIN,SPRING/8 X28 W	*	1					
40	1742-229-220-00	LEVER/MID COMP	*	1					
41	V231-360-802-00	FLANGEBOLT	*	1					
42	1560-511-101-00	PROTECTER	*	1					
43	1688-265-001-00	GRIP/MID/PTO	*	1					
44	1746-229-001-00	PLATE/Z/16X86	*	1					
45	V210-360-601-60	BOLT(SP)/M6X16	*	2					
46	1518-621-470-00	SWITCH,SAFETY ASSY	*	1					
47	V120-364-003-00	SCREW/M4X30	*	2					
48	3656-271-001-00	PLATE/I,13X40	*	1					

FIG. 7 METAL SYSTEM

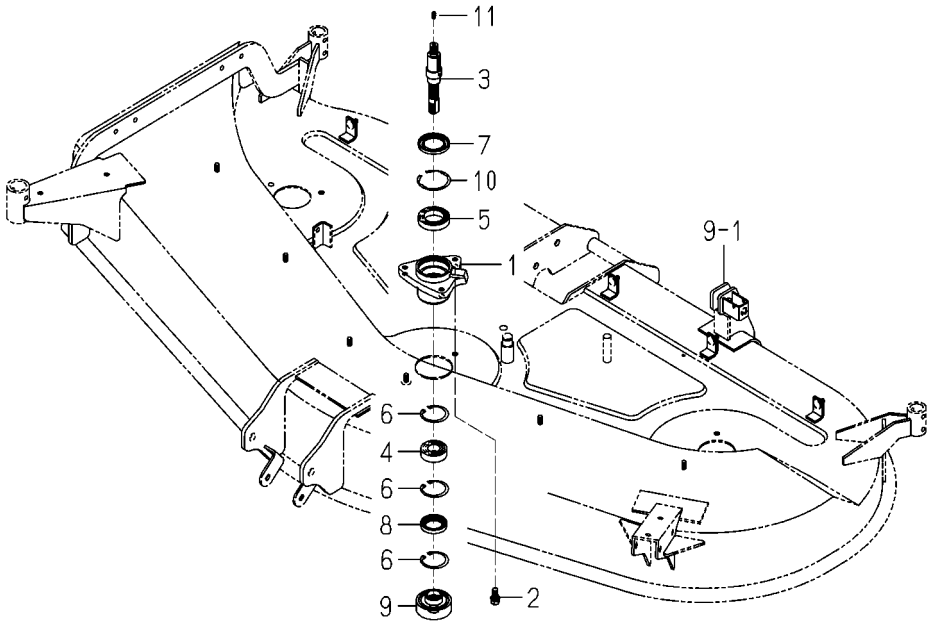

8662-301 -0100

KEY	PART CODE	DESCRIPTION	SPC	TYPE OF MODEL SSM72 TG5390F		ITC	COL	GRP	REMARKS
1	8657-301-004-00	METAL/SIDE	*	3					
2	V211-261-002-50	BOLT(S) M10X25	*	9					
3	8654-301-085-00	SHAFT/SIDE	*	3					
4	1594-221-001-00	BEARING/BALL 6205SH2	*	3					
5	V600-110-690-80	BEARING	*	3					
6	V705-140-052-00	RING,SNAP/52 C	*	9					
7	8654-301-004-00	SEAL/OIL	*	3					
8	V744-135-520-80	SEAL,OIL/TC35528	*	3					
9	8658-301-001-00	COLLAR/BRADE	*	3					
10	V707-140-062-00	RING/SNAP	*	3					
11	V760-150-000-00	NIPPLE,GREASE	*	3					

FIG. 8 BLADE SYSTEM

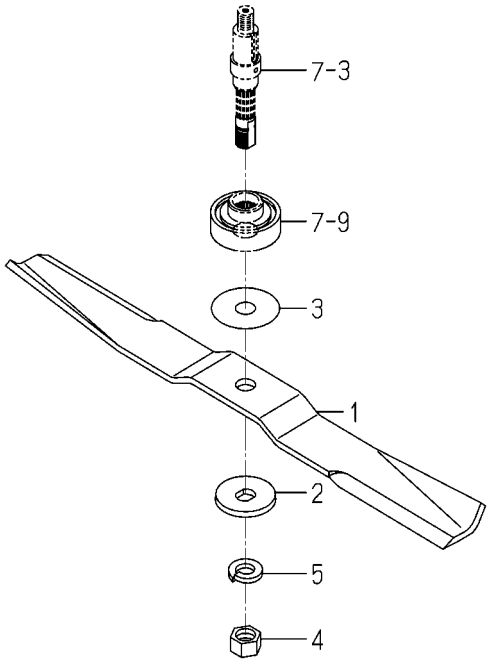

8655-306 -0100

KEY	PART CODE	DESCRIPTION	SPC	TYPE OF MODEL SSM72 TG5390F		ITC	COL	GRP	REMARKS
1	8655-306-003-10	BLADE/60X630/C	*	3					
2	8595-306-005-10	WASHER/20X60X06	*	3					
3	8595-306-006-00	SHIM/1.2	*	6					
4	8595-306-007-00	NUT/M20X1.5	*	3					
5	V401-160-020-00	WASHER,SP/M20	*	3					

FIG. 9 DECK(MOWER)SYSTEM

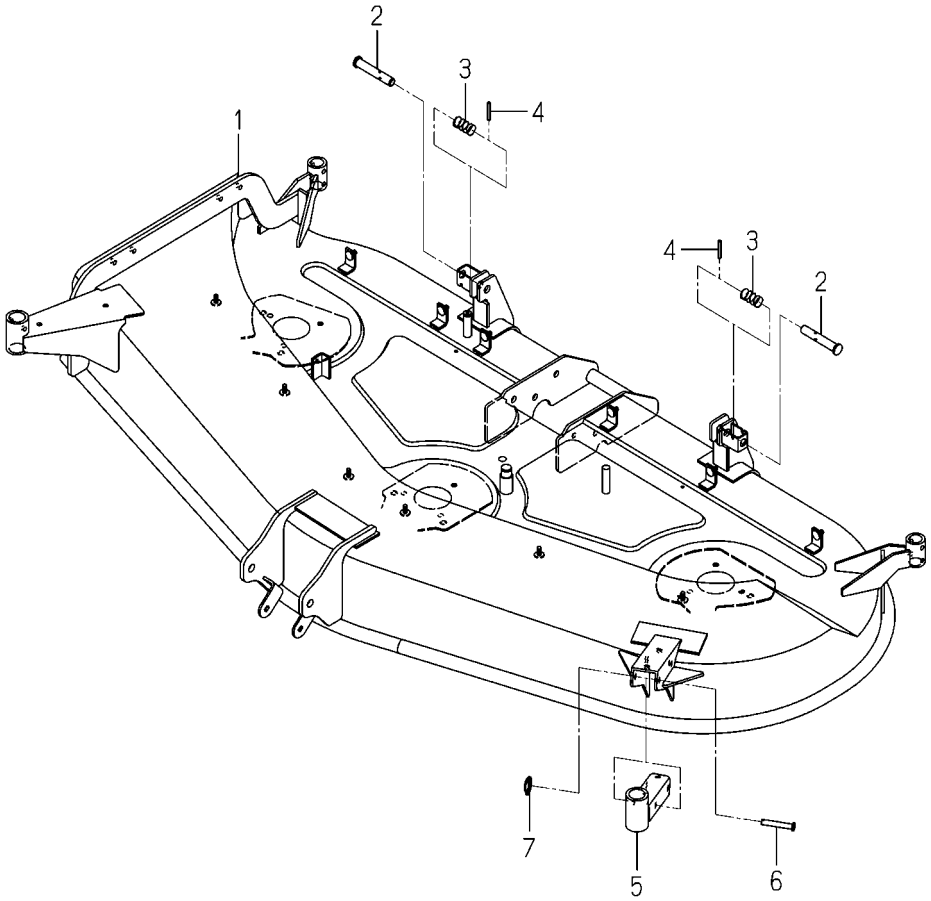

8655-403G-0100

KEY	PART CODE	DESCRIPTION	SPC	TYPE OF MODEL SSM72	TG5390F	ITC	COL	GRP	REMARKS
1	8655-403-450-00	DECK/MOWER/72/AT/F	*	1			7F		
2	8595-608-082-10	PIN/16X96	*	2					
3	1560-601-028-00	SPRING/HC042	*	2					
4	V580-140-504-00	PIN,SPRING/5 X40 W	*	2					
5	8662-402-550-00	HUB/GAUGE COMP	*	1					
6	2144-519-003-00	PIN/10X64	*	2					
7	1427-317-003-00	CLIP,PIN	*	2					

FIG. 10 COVER(DISCHARGE)SYSTEM

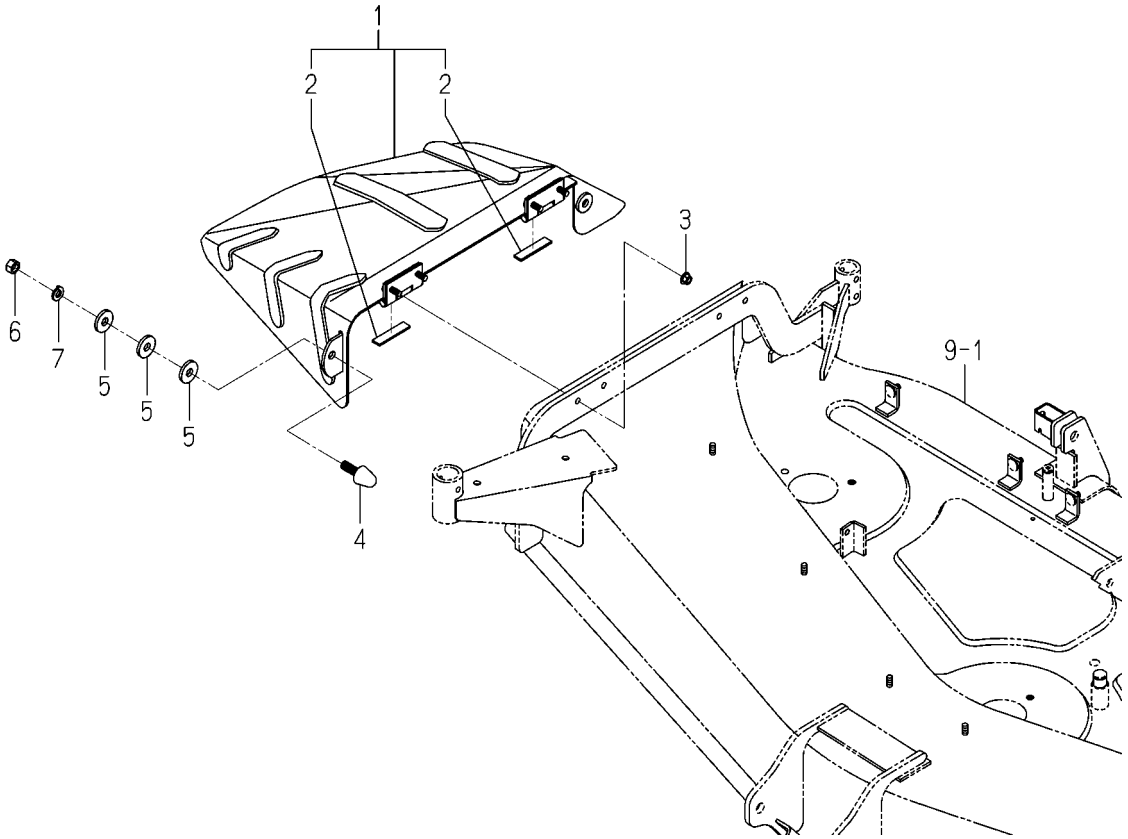

8655-406A-0100

KEY	PART CODE	DESCRIPTION	SPC	TYPE OF MODEL SSM72 TG5390F		ITC	COL	GRP	REMARKS
1	8655-406-210-21	COVER/DISCHARGE COMP	*	1					
2	P115-810-011-00	PLATE/03X15X65	*	2					
3	V363-260-008-00	NUT/WASHER	*	4					
4	8654-406-001-00	STOPPER/COVER	*	2					
5	3805-701-018-00	WASHER(13X34X05)	*	6					
6	V304-260-012-00	NUT/M12	*	2					
7	V401-160-012-00	WASHER,SP/M12	*	2					

FIG. 11 COVER(BELT)SYSTEM

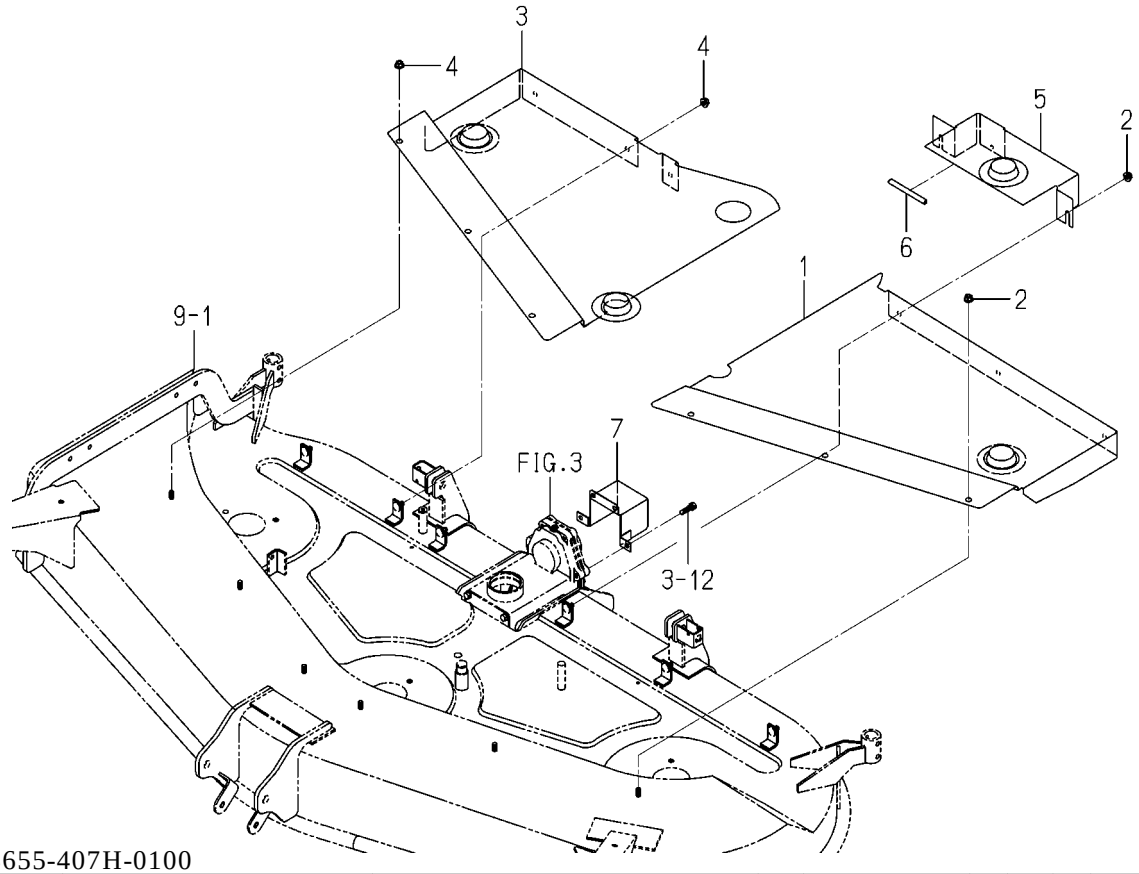

8655-407H-0100

KEY	PART CODE	DESCRIPTION	SPC	TYPE OF MODEL SSM72 TG5390F		ITC	COL	GRP	REMARKS
1	8655-407-450-00	COVER/B/L/AT/F COMP	*	1			7F		
2	V363-260-008-00	NUT/WASHER	*	6					
3	8655-407-460-00	COVER/B/R/AT/F COMP	*	1			7F		
4	V363-260-008-00	NUT/WASHER	*	6					
5	8655-407-470-00	COVER/PULLEY COMP	*	1					
6	3805-210-021-10	INSULATOR	*	1					
7	8654-407-960-00	COVER/UNIVERSAL COMP	*	1			7F		

FIG. 12 WHEEL(GAUGE)SYSTEM

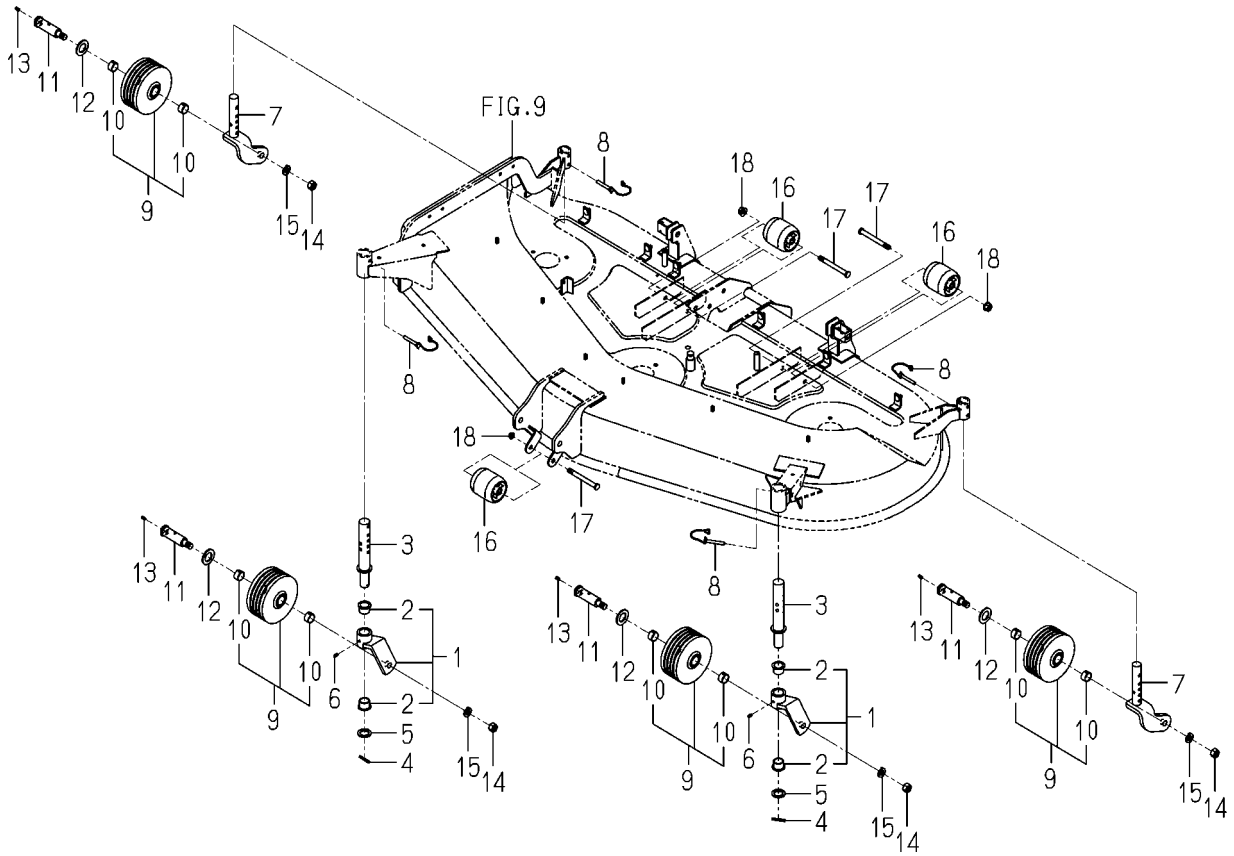

8655-501F-0100

KEY	PART CODE	DESCRIPTION	SPC	TYPE OF MODEL SSM72 TG5390F		ITC	COL	GRP	REMARKS
1	8655-501-400-00	FORK/WHEEL/FRON ASSY	*	2					
2	8657-501-501-00	BUSH/26X30X20	*	4					
3	8655-501-820-00	PIN/GAUGE COMP	*	2					
4	V580-140-504-00	PIN,SPRING/5 X40 W	*	2					
5	1564-275-007-00	WASHER/27X40X2	*	2					
6	V760-150-000-00	NIPPLE,GREASE	*	2					
7	8655-501-830-00	FORK/WHEEL/REAR COMP	*	2					
8	8663-501-240-00	PIN/08X60 COMP	*	4					
9	8654-501-720-10	WHEEL/GAUGE ASSY	*	4					
10	8654-203-201-00	BUSH/25X28X15	*	8					
11	8655-501-041-00	PIN/25X109	*	4					
12	3670-780-004-00	WASHER/28X48X03	*	4					
13	V760-150-000-00	NIPPLE,GREASE	*	4					
14	V304-460-016-00	NUT/M16	*	4					
15	V401-160-016-00	WASHER,SP/M16	*	4					
16	8595-501-001-20	WHEEL/GAUGE/FRONT	*	3					
17	8595-505-051-30	PIN/12X117	*	3					
18	V360-260-012-00	NUT/WASHER	*	3					

FIG. 13 LINK(LIFT)SYSTEM(1/2)

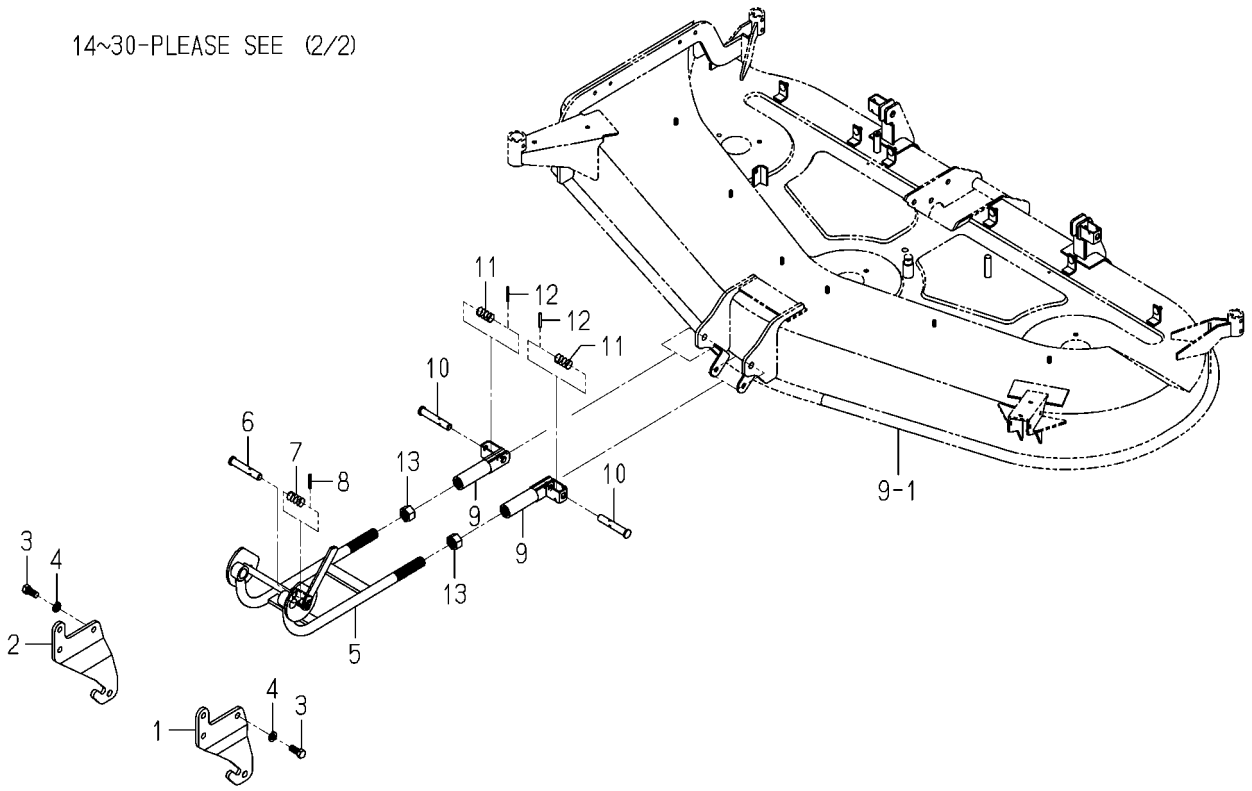

8655-608C-0100

KEY	PART CODE	DESCRIPTION	SPC	TYPE OF MODEL SSM72	TG5390F	ITC	COL	GRP	REMARKS
1	8655-608-041-00	BRACKET/FRONT/LH	*	1					
2	8655-608-042-00	BRACKET/FRONT/RH	*	1					
3	V201-361-403-00	BOLT/M14X30	*	6					
4	V401-160-014-00	WASHER,SP/M14	*	6					
5	8654-608-620-00	ARM/FRONT COMP	*	1			7F		
6	8595-608-082-10	PIN/16X96	*	1					
7	1560-601-028-00	SPRING/HC042	*	1					
8	V580-140-504-00	PIN,SPRING/5 X40 W	*	1					
9	8595-608-820-00	HITCH/ARM COMP	*	2			7F		
10	8595-608-082-10	PIN/16X96	*	2					
11	1560-601-028-00	SPRING/HC042	*	2					
12	V580-140-504-00	PIN,SPRING/5 X40 W	*	2					
13	8654-608-066-00	NUT/M24X1.5	*	2					
14	8655-608-410-10	BRACKET/MID COMP	*	2					
15	V201-361-203-00	BOLT/M12X30	*	4					
16	V401-160-012-00	WASHER,SP/M12	*	4					
17	8655-608-045-00	SCREW/M14X115	*	2					
18	1602-215-001-00	KNOB	*	2					
19	V304-260-014-00	NUT/M14	*	2					
20	8655-608-430-00	ARM/MID COMP	*	2					
21	8657-608-052-00	PIN/16X43	*	2					
22	1427-317-003-00	CLIP,PIN	*	2					
23	8655-608-810-00	LINK/REAR COMP	*	1					
24	V760-150-000-00	NIPPLE,GREASE	*	1					
25	V201-361-403-00	BOLT/M14X30	*	2					
26	V401-160-014-00	WASHER,SP/M14	*	2					
27	V201-361-203-00	BOLT/M12X30	*	2					
28	V401-160-012-00	WASHER,SP/M12	*	2					
29	8657-608-590-10	FORK/A COMP	*	2					
30	8657-608-610-10	FORK/B COMP	*	2					

FIG. 13 LINK(LIFT)SYSTEM(2/2)

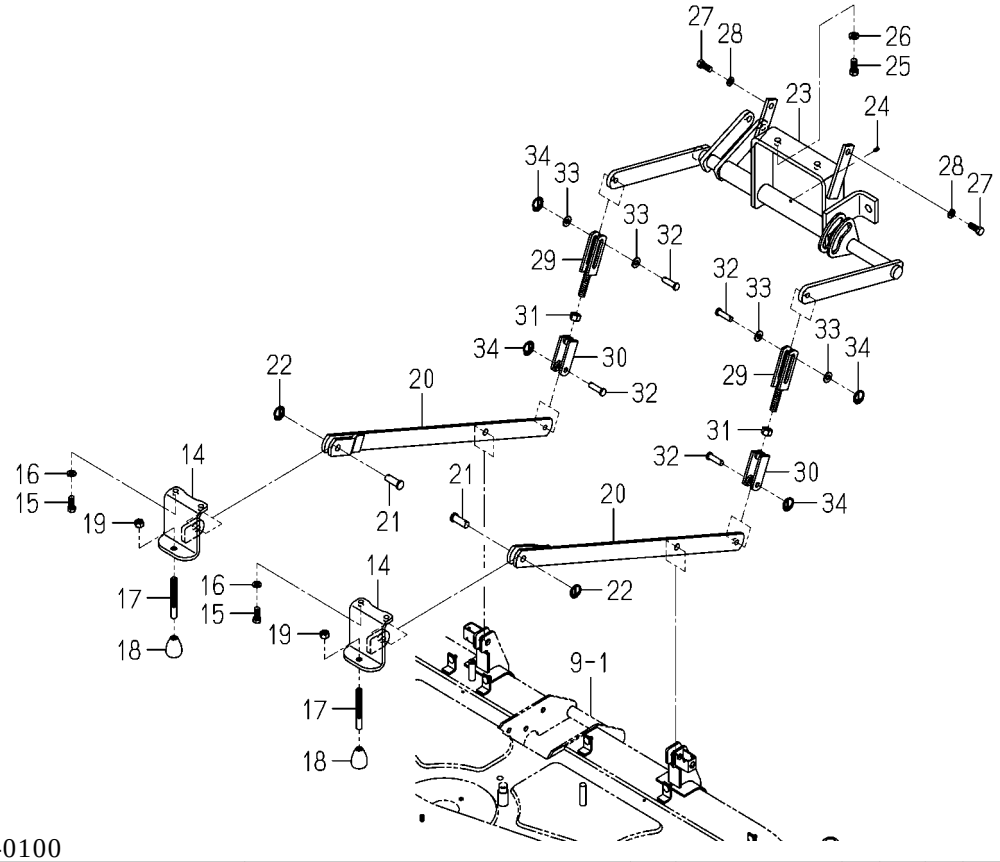

8655-608C-0100

KEY	PART CODE	DESCRIPTION	SPC	TYPE OF MODEL SSM72 TG5390F		ITC	COL	GRP	REMARKS
31	V304-260-016-00	NUT/M16	*	2					
32	8657-608-053-10	PIN/12X42	*	4					
33	V411-260-012-00	WASHER /M12	*	4					
34	1427-317-003-00	CLIP,PIN	*	4					

FIG. 14 CYLINDER SYSTEM

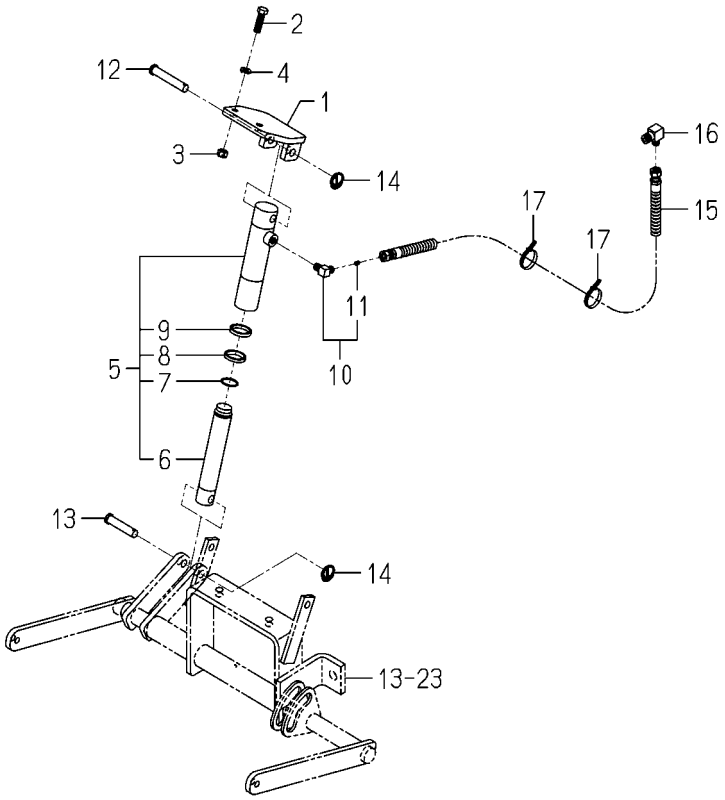

8655-610A-0100

KEY	PART CODE	DESCRIPTION	SPC	TYPE OF MODEL SSM72 TG5390F		ITC	COL	GRP	REMARKS
1	8655-610-810-00	BRACKET/CYLINDE COMP	*	1					
2	V201-361-204-00	BOLT/M12X40	*	2					
3	V304-460-012-00	NUT/M12	*	2					
4	V401-160-012-00	WASHER,SP/M12	*	2					
5	K182-032-000-00	CYLINDER ASSY	*	1					
6	K182-032-001-00	PISTON	*	1					
7	K182-002-002-00	STOPPER,PISTON	*	1					
8	K182-032-002-00	ROD PACKING	*	1					
9	K182-032-003-00	DUST/SEAL	*	1					
10	8655-610-520-00	ADAPTER/L/ORI/1.3	*	1					
11	K211-004-014-00	SCREW,ORIFICE	*	1					
12	8657-610-051-00	PIN/15X88	*	1					
13	8654-610-001-00	PIN/15X71	*	1					
14	1427-317-003-00	CLIP,PIN	*	2					
15	3650-380-220-10	HOSE/HYDRAULIC/900	*	1					
16	1683-273-054-00	ELBOW/1/4-PT3/8	*	1					
17	1342-402-006-00	BAND/WIRE/250	*	2					

FIG. 15 ADJUST(HEIGHT)SYSTEM

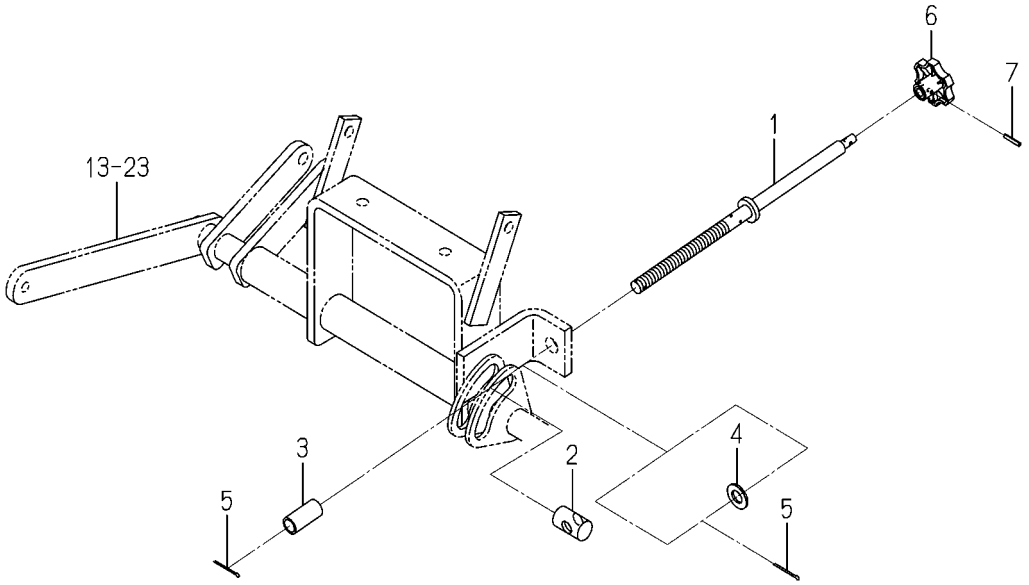

8655-611A-0100

KEY	PART CODE	DESCRIPTION	SPC	TYPE OF MODEL SSM72 TG5390F		ITC	COL	GRP	REMARKS
1	8655-611-810-00	SHAFT/ADJUST COMP	*	1					
2	8655-611-081-00	NUT/ADJUST	*	1					
3	8655-611-082-00	COLLAR/17X22X45	*	1					
4	V411-260-016-00	WASHER / M16	*	1					
5	V500-163-003-50	PIN,SPLIT/3 X35	*	2					
6	1719-611-624-00	KNOB ASSY	*	1					
7	V580-140-402-50	PIN,SPRING/4 X25	*	1					

FIG. 16 LABEL

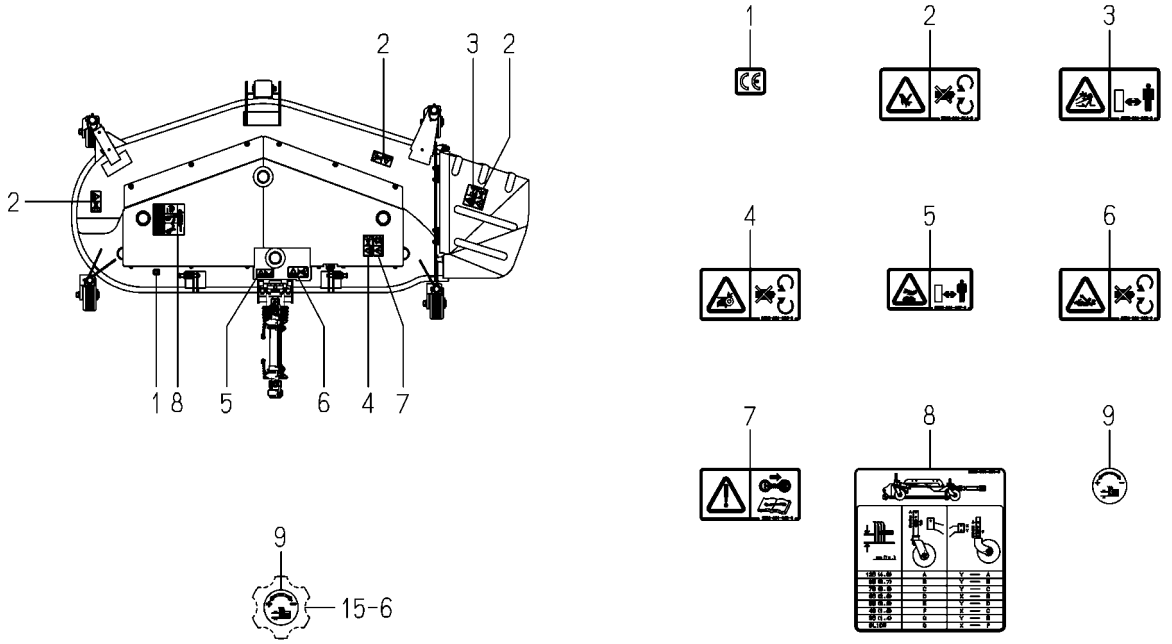

8655-901F-0100

KEY	PART CODE	DESCRIPTION	SPC	TYPE OF MODEL SSM72 TG5390F		ITC	COL	GRP	REMARKS
1	2500-901-027-00	LABEL/CE	*	1					
2	2500-901-014-30	LABEL/DANGER	*	3					
3	8595-901-005-00	LABEL/DANGER/DISCHAR	*	1					
4	8595-901-006-00	LABEL/WARNING/BELT	*	1					
5	8595-901-007-00	LABEL/WARNING/HOT	*	1					
6	8654-901-002-00	LABEL/PTO	*	1					
7	1593-901-015-00	LABEL/MAINTENANCE	*	1					
8	8655-901-081-00	LABEL/GAUGEWHEEL	*	1					
9	8657-901-001-00	LABEL/ADJUST	*	1					

FIG. 17 CASE(BEVEL)ASSY(REPAIR)

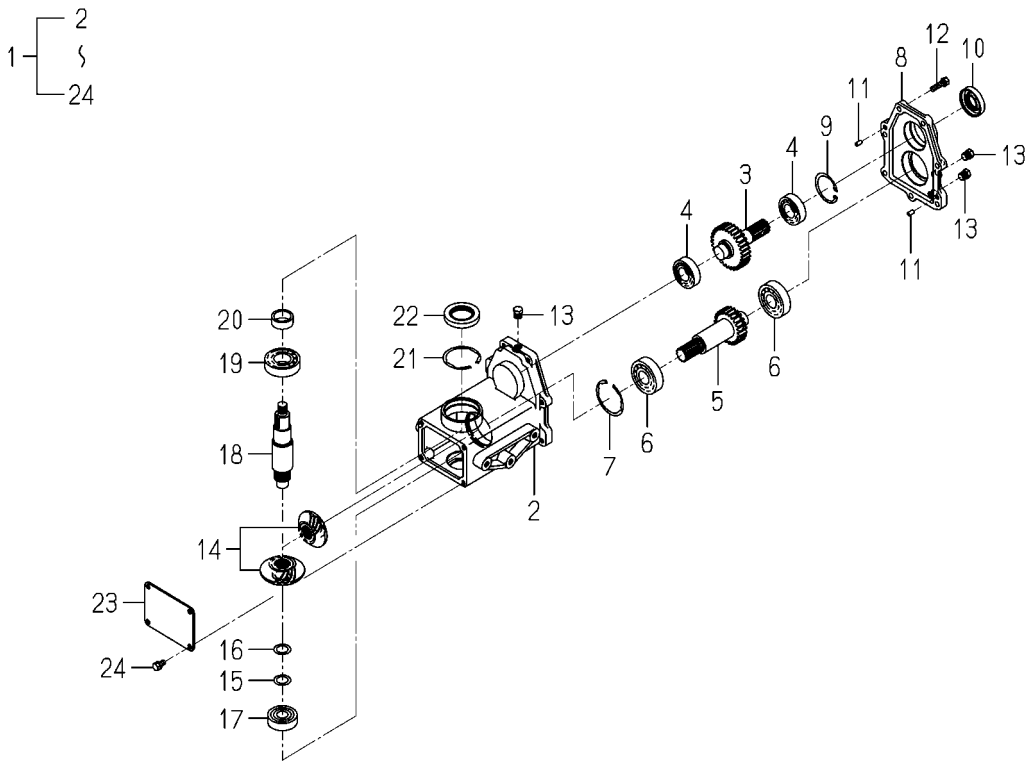

8655-201Z-0100

KEY	PART CODE	DESCRIPTION	SPC	TYPE OF MODEL SSM72 TG5390F		ITC	COL	GRP	REMARKS
1	8655-201-400-00	CASE/BEVEL ASSY	R	1					
2	8655-201-071-00	CASE/BEVEL	R	1					
3	8655-201-073-00	GEAR/SPUR/30	R	1					
4	1594-221-001-00	BEARING/BALL 6205SH2	R	2					
5	8655-201-074-00	GEAR/SPUR/23	R	1					
6	1594-218-001-00	BEARING/BALL 6305SH2	R	2					
7	V707-140-062-00	RING/SNAP	R	1					
8	8655-201-072-00	COVER/CASE	R	1					
9	V705-140-052-00	RING,SNAP/52 C	R	1					
10	V744-125-521-00	SEAL,OIL/TC255210	R	1					
11	8658-306-003-00	PIN/PARALLEL	R	2					
12	V211-560-803-00	BOLT/M8X30	R	7					
13	7955-201-026-00	PLUG,DRAIN (1/4)	R	3					
14	8662-201-210-00	GEAR/BEVEL/21-2 SET	R	1					
15	2500-311-018-00	SHIM/0.5	R	1					
16	2500-311-019-00	SHIM/0.3X20X30	R	1					
17	1560-214-003-00	BEARING/BALL/6304SH2	R	1					
18	8655-201-075-00	SHAFT/OUTPUT	R	1					
19	V600-110-620-60	BEARING,RB/6206	R	1					
20	1614-244-002-00	SLEEVE	R	1					
21	V707-140-062-00	RING/SNAP	R	1					
22	1614-244-005-00	SEAL/OIL	R	1					
23	8655-201-076-00	COVER/CASE	R	1					
24	V211-260-801-60	BOLT,SEMS (S) M8X16	R	4					

FIG. 18 F(AT)KIT(REPAIR)

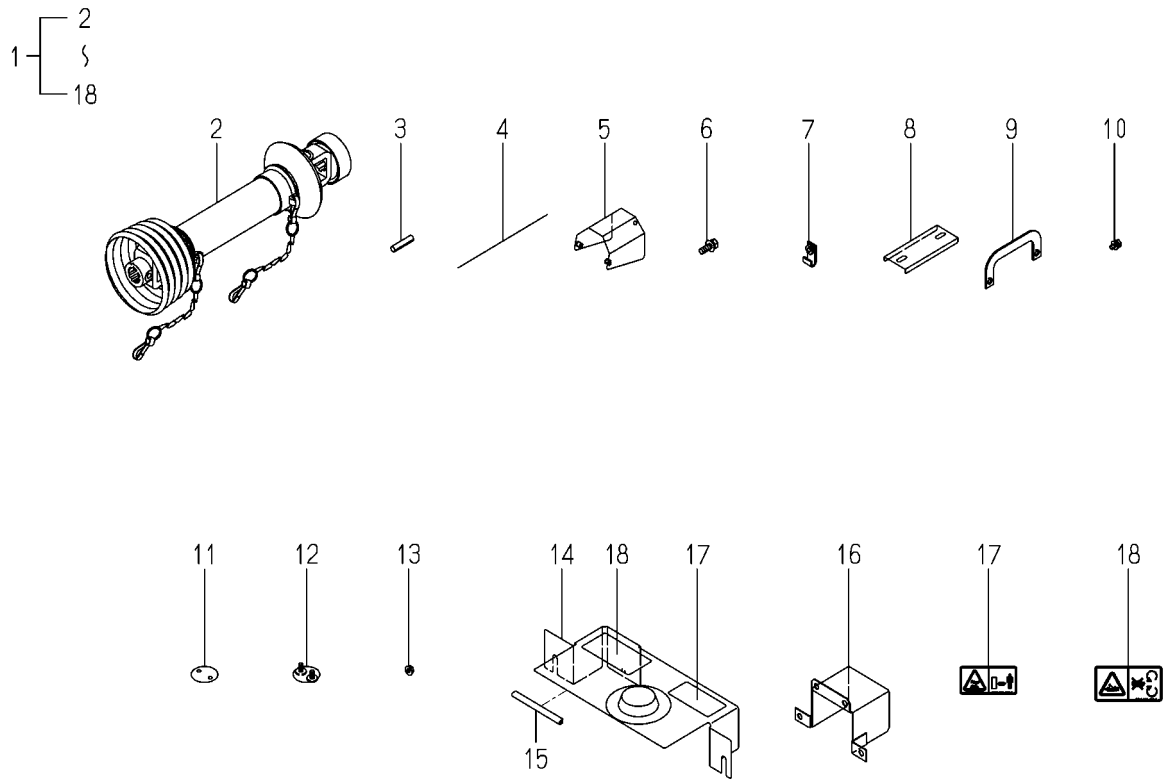

8655-950 -0100

KEY	PART CODE	DESCRIPTION	SPC	TYPE OF MODEL SSM72	TG5390F	ITC	COL	GRP	REMARKS
1	8655-950-200-10	F(AT)KIT	R	1					
2	8655-101-450-00	JOINT/UNIVERSAL SET	R	1					FIG 019
3	V580-140-804-00	PIN,SPRING/8 X40 W	R	1					
4		WIRE	R	1					
5	8655-150-450-00	COVER/JOINT COMP	R	1					
6	V211-360-802-50	BOLT/SP	R	2					
7	8657-407-470-00	PLATE/FOOK COMP	R	6					
8	8657-407-047-00	PLATE/U/42X07	R	1					
9	8655-407-097-00	PLATE/FOOK	R	2					
10	V210-360-601-20	BOLT,SEMS	R	6					
11	8654-407-048-00	CAP/COVER	R	2					
12	8654-407-480-00	CAP/COVER COMP	R	2					
13	V360-260-006-00	NUT/M6	R	4					
14	8655-407-470-00	COVER/PULLEY COMP	R	1					
15	3805-210-021-10	INSULATOR	R	1					
16	8654-407-960-00	COVER/UNIVERSAL COMP	R	1			7F		
17	8595-901-007-00	LABEL/WARNING/HOT	R	1					
18	8654-901-002-00	LABEL/PTO	R	1					

FIG. 19 COMPONENT PARTS FOR 8655-101-450-00 ON Fig.1

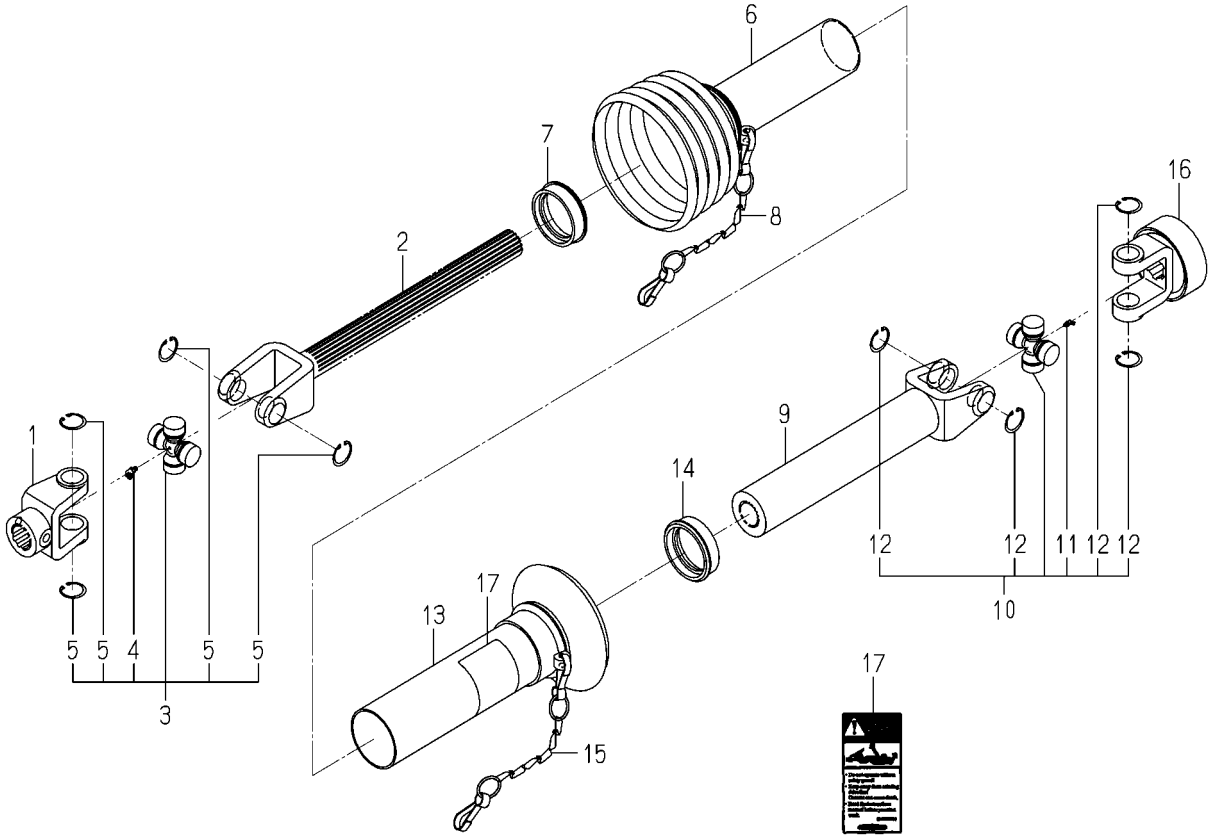

8655-101-450-0B

KEY	PART CODE	DESCRIPTION	SPC	TYPE OF MODEL SSM72 TG5390F		ITC	COL	GRP	REMARKS
1	8654-101-221-00	FITTINGYOKE	*	1					
2	8663-101-211-00	SHAFTYOKE	*	1					
3	8654-101-230-00	JOURNALCROSSE ASSY	*	1					
4	8654-101-232-00	GREASENIPPLE	*	1					
5	8654-101-233-00	SURCLIP/HOLE	*	4					
6	8655-101-461-00	SAFETYGUARD/IN	*	1					
7	7821-102-008-00	RING/SLIDE	*	1					
8	7821-102-220-00	CHAIN ASSY	*	1					
9	8654-101-471-00	SLEEVEYOKE	*	1					
10	8654-101-230-00	JOURNALCROSSE ASSY	*	1					
11	8654-101-232-00	GREASENIPPLE	*	1					
12	8654-101-233-00	SURCLIP/HOLE	*	4					
13	8655-101-471-00	SAFETYGUARD/OUT	*	1					
14	7821-102-008-00	RING/SLIDE	*	1					
15	7821-102-220-00	CHAIN ASSY	*	1					
16	8657-101-501-00	AS YOKE ASSY	*	1					
17	8658-101-674-00	LABEL/DANGER/JOINT/G	*	1					

Numerical Index

Part Code	Fig.	Key	Part Code	Fig.	Key	Part Code	Fig.	Key
1302-225-003-00	6	15	1742-229-220-00	6	40	8597-202-501-00	4	13
1342-402-006-00	14	17	1742-229-230-10	6	38	8654-101-221-00	19	1
1427-317-003-00	9	7	1746-229-001-00	6	44	8654-101-230-00	19	3
	13	22	1746-229-200-20	6	1		19	10
	13	34	2144-519-003-00	9	6	8654-101-232-00	19	4
	14	14	2500-311-018-00	3	15		19	11
1434-211-004-00	4	2		17	15	8654-101-233-00	19	5
1444-314-009-10	6	24	2500-311-019-00	3	16		19	12
1518-621-470-00	6	46		17	16	8654-101-471-00	19	9
1524-244-005-00	6	17	2500-901-014-30	16	2	8654-202-016-00	4	8
1560-214-003-00	3	17	2500-901-027-00	16	1	8654-203-201-00	12	10
	17	17	3100-703-230-10	4	14	8654-301-004-00	7	7
1560-511-101-00	6	42		4	22	8654-301-085-00	7	3
1560-601-028-00	9	3	3621-211-003-00	4	16	8654-406-001-00	10	4
	13	7	3640-111-001-10	6	37	8654-407-048-00	18	11
	13	11	3650-380-220-10	14	15	8654-407-480-00	18	12
1564-275-007-00	12	5	3656-271-001-00	6	48	8654-407-960-00	11	7
1593-901-015-00	16	7	3670-520-001-00	4	3		18	16
1594-218-001-00	3	6	3670-780-004-00	12	12	8654-501-720-10	12	9
	17	6	3737-341-006-00	4	19	8654-608-066-00	13	13
1594-221-001-00	3	4	3737-341-007-00	4	20	8654-608-620-00	13	5
	7	4	3746-111-011-00	4	4	8654-610-001-00	14	13
	17	4		4	9	8654-901-002-00	16	6
1594-272-006-00	6	12	3805-210-021-10	11	6		18	18
1602-215-001-00	13	18		18	15	8655-101-450-00	1	1
1614-244-002-00	3	20	3805-701-018-00	10	5		18	2
	6	21	7821-102-008-00	19	7	8655-101-461-00	19	6
	17	20		19	14	8655-101-471-00	19	13
1614-244-005-00	3	22	7821-102-220-00	19	8	8655-150-450-00	2	1
	6	22		19	15		18	5
	17	22	7955-201-026-00	3	13	8655-201-071-00	3	1
1620-255-208-00	6	27		17	13		17	2
1620-255-220-10	6	26	8595-306-005-10	8	2	8655-201-072-00	3	8
1683-273-054-00	14	16	8595-306-006-00	8	3		17	8
1688-265-001-00	6	43	8595-306-007-00	8	4	8655-201-073-00	3	3
1719-611-624-00	15	6	8595-501-001-20	12	16		17	3
1742-229-002-10	6	2	8595-505-051-30	12	17	8655-201-074-00	3	5
1742-229-003-00	6	9	8595-608-082-10	9	2		17	5
1742-229-004-00	6	11		13	6	8655-201-075-00	3	18
1742-229-005-10	6	14		13	10		17	18
1742-229-006-00	6	23	8595-608-820-00	13	9	8655-201-076-00	3	23
1742-229-007-20	6	18	8595-901-005-00	16	3		17	23
1742-229-009-00	6	33	8595-901-006-00	16	4	8655-201-400-00	17	1
1742-229-200-00	6	30	8595-901-007-00	16	5	8655-202-051-00	4	1
1742-229-210-00	6	36		18	17	8655-202-062-00	4	7

Numerical Index

8655-097-230-00

Part Code	Fig.	Key	Part Code	Fig.	Key	Part Code	Fig.	Key
8655-202-400-00	4	12	8663-101-211-00	19	2	V401-160-012-00	10	7
8655-203-051-00	5	1	8663-501-240-00	12	8		13	16
8655-306-003-10	8	1	K182-002-002-00	14	7		13	28
8655-403-450-00	9	1	K182-032-000-00	14	5		14	4
8655-406-210-21	10	1	K182-032-001-00	14	6	V401-160-014-00	13	4
8655-407-097-00	18	9	K182-032-002-00	14	8		13	26
8655-407-450-00	11	1	K182-032-003-00	14	9	V401-160-016-00	4	5
8655-407-460-00	11	3	K211-004-014-00	14	11		4	10
8655-407-470-00	11	5	P115-810-011-00	10	2		12	15
	18	14	V120-364-003-00	6	47	V401-160-020-00	8	5
8655-501-041-00	12	11	V201-361-012-00	6	5	V411-260-008-00	6	34
8655-501-400-00	12	1	V201-361-203-00	13	15	V411-260-012-00	13	33
8655-501-820-00	12	3		13	27	V411-260-016-00	15	4
8655-501-830-00	12	7	V201-361-204-00	14	2	V500-162-002-00	6	35
8655-608-041-00	13	1	V201-361-403-00	13	3	V500-163-003-50	15	5
8655-608-042-00	13	2		13	25	V523-101-002-40	6	7
8655-608-045-00	13	17	V210-360-601-20	18	10	V580-140-402-50	15	7
8655-608-410-10	13	14	V210-360-601-60	6	45	V580-140-504-00	9	4
8655-608-430-00	13	20	V211-260-801-60	3	24		12	4
8655-608-810-00	13	23		17	24		13	8
8655-610-520-00	14	10	V211-261-002-50	7	2		13	12
8655-610-810-00	14	1	V211-360-802-50	2	2	V580-140-602-50	6	31
8655-611-081-00	15	2		18	6	V580-140-802-80	6	39
8655-611-082-00	15	3	V211-560-803-00	3	12	V580-140-804-00	1	2
8655-611-810-00	15	1		17	12		18	3
8655-901-081-00	16	8	V211-561-002-00	3	2	V600-110-620-60	3	19
8655-950-200-10	18	1	V231-360-801-20	6	25		17	19
8657-101-501-00	19	16		6	28	V600-110-690-80	7	5
8657-301-004-00	7	1	V231-360-801-60	6	13	V600-410-620-60	6	19
8657-407-047-00	18	8	V231-360-802-00	6	41	V600-410-630-60	6	20
8657-407-470-00	18	7	V231-361-002-50	6	4	V607-110-620-50	6	10
8657-501-501-00	12	2	V304-260-008-00	4	21	V682-200-001-00	6	16
8657-608-052-00	13	21	V304-260-012-00	10	6	V704-140-016-00	4	17
8657-608-053-10	13	32	V304-260-014-00	13	19	V704-140-020-00	4	15
8657-608-590-10	13	29	V304-260-016-00	13	31		4	23
8657-608-610-10	13	30	V304-460-012-00	14	3	V705-140-052-00	3	9
8657-610-051-00	14	12	V304-460-016-00	4	11		7	6
8657-901-001-00	16	9		12	14		17	9
8658-101-674-00	19	17	V305-460-016-00	4	6	V707-140-062-00	3	7
8658-301-001-00	7	9	V360-260-006-00	18	13		3	21
8658-306-003-00	3	11	V360-260-012-00	12	18		7	10
	17	11	V363-260-008-00	10	3		17	7
8662-201-210-00	3	14		11	2		17	21
	17	14		11	4	V707-140-072-00	6	3
8662-402-550-00	9	5	V401-160-010-00	6	6	V720-102-401-40	6	29

Numerical Index

Part Code	Fig.	Key	Part Code	Fig.	Key	Part Code	Fig.	Key
V744-125-521-00	3	10						
	17	10						
V744-135-520-80	7	8						
V760-150-000-00	4	18						
	7	11						
	12	6						
	12	13						
	13	24						
V781-160-000-6B	6	8						

Alpabetical Index

8655-097-230-00

Description	Fig.	Key
ADAPTER/L/ORI/1.3	14	10
ARM/FRONT COMP	13	5
ARM/LEVER/MID COMP	6	38
ARM/MID COMP	13	20
ARM/PLATE/MID COMP	6	30
ARM/SHIFT/MID COMP	6	26
	6	36
ARM/TENSION ASSY	4	12
AS YOKE ASSY	19	16
BALL	6	16
BAND/WIRE/250	14	17
BEARING	7	5
BEARING,RB/6205NR	6	10
BEARING,RB/6206	3	19
	17	19
BEARING/BALL	6	19
	6	20
BEARING/BALL 6205SH2	3	4
	7	4
	17	4
BEARING/BALL 6305SH2	3	6
	17	6
BEARING/BALL/6304SH2	3	17
	17	17
BELT/VC164	5	1
BLADE/60X630/C	8	1
BOLT(S) M10X25	7	2
BOLT(SP)/M6X16	6	45
BOLT,SEMS	18	10
BOLT,SEMS (S) M8X16	3	24
	17	24
BOLT/M10X120 9T	6	5
BOLT/M10X20	3	2
BOLT/M12X30	13	15
	13	27
BOLT/M12X40	14	2
BOLT/M14X30	13	3
	13	25
BOLT/M8X30	3	12
	17	12
BOLT/SP	2	2
	18	6
BRACKET/CYLINDE COMP	14	1
BRACKET/FRONT/LH	13	1
BRACKET/FRONT/RH	13	2

Description	Fig.	Key
BRACKET/MID COMP	13	14
BUSH/16X18X15	4	13
	6	37
BUSH/25X28X15	12	10
BUSH/26X30X20	12	2
CAP,PTO SHAFT	6	24
CAP/COVER	18	11
CAP/COVER COMP	18	12
CASE/BEVEL	3	1
	17	2
CASE/BEVEL ASSY	17	1
CASE/PTO	6	2
CHAIN ASSY	19	8
	19	15
CLIP,PIN	9	7
	13	22
	13	34
	14	14
COLLAR/17X22X45	15	3
COLLAR/26X36X3	4	2
COLLAR/BRADE	7	9
COVER/B/L/AT/F COMP	11	1
COVER/B/R/AT/F COMP	11	3
COVER/CASE	3	8
	3	23
	17	8
	17	23
COVER/DISCHARGE COMP	10	1
COVER/JOINT COMP	2	1
	18	5
COVER/PULLEY COMP	11	5
	18	14
COVER/UNIVERSAL COMP	11	7
	18	16
CYLINDER ASSY	14	5
DECK/MOWER/72/AT/F	9	1
DUST/SEAL	14	9
ELBOW/1/4-PT3/8	14	16
F(AT)KIT	18	1
FITTINGYOKE	19	1
FLANGEBOLT	6	4
	6	13
	6	25
	6	28
	6	41

Description	Fig.	Key
FORK/A COMP	13	29
FORK/B COMP	13	30
FORK/WHEEL/FRON ASSY	12	1
FORK/WHEEL/REAR COMP	12	7
GEAR/BEVEL/21-2 SET	3	14
	17	14
GEAR/SPUR/19	6	14
GEAR/SPUR/23	3	5
	17	5
GEAR/SPUR/30	3	3
	17	3
GEAR/SPUR/40	6	9
GREASENIPPLE	19	4
	19	11
GRIP/MID/PTO	6	43
HITCH/ARM COMP	13	9
HOSE/HYDRAULIC/900	14	15
HUB/GAUGE COMP	9	5
INSULATOR	11	6
	18	15
JOINT/UNIVERSAL SET	1	1
	18	2
JOURNALCROSSE ASSY	19	3
	19	10
KEY/06X06X28	4	8
KEY/08X07X20	4	3
KNOB	13	18
KNOB ASSY	15	6
LABEL/ADJUST	16	9
LABEL/CE	16	1
LABEL/DANGER	16	2
LABEL/DANGER/DISCHAR	16	3
LABEL/DANGER/JOINT/G	19	17
LABEL/GAUGEWHEEL	16	8
LABEL/MAINTENANCE	16	7
LABEL/PTO	16	6
	18	18
LABEL/WARNING/BELT	16	4
LABEL/WARNING/HOT	16	5
	18	17
LEVER/MID COMP	6	40
LINK/REAR COMP	13	23
METAL/SEAL	6	23
METAL/SIDE	7	1
MIDPTO/E4/19/Q SET	6	1

Alpabetical Index

Description	Fig.	Key
NIPPLE,GREASE	4	18
	7	11
	12	6
	12	13
	13	24
NUT	4	6
	4	21
NUT/ADJUST	15	2
NUT/M12	10	6
	14	3
NUT/M14	13	19
NUT/M16	4	11
	12	14
	13	31
NUT/M20X1.5	8	4
NUT/M24X1.5	13	13
NUT/M6	18	13
NUT/WASHER	10	3
	11	2
	11	4
	12	18
O-RING	6	17
O-RING/P14	6	29
PIN	6	7
PIN,SPLIT/2 X20	6	35
PIN,SPLIT/3 X35	15	5
PIN,SPRING/4 X25	15	7
PIN,SPRING/5 X40 W	9	4
	12	4
	13	8
	13	12
PIN,SPRING/6 X25 W	6	31
PIN,SPRING/8 X28 W	6	39
PIN,SPRING/8 X40 W	1	2
	18	3
PIN/08X60 COMP	12	8
PIN/10X64	9	6
PIN/12X117	12	17
PIN/12X42	13	32
PIN/15X71	14	13
PIN/15X88	14	12
PIN/16X43	13	21
PIN/16X96	9	2
	13	6
	13	10
PIN/25X109	12	11
PIN/GAUGE COMP	12	3
PIN/PARALLEL	3	11
	17	11
PISTON	14	6
PLATE	6	12
PLATE/03X15X65	10	2
PLATE/FOOK	18	9
PLATE/FOOK COMP	18	7
PLATE/I,13X40	6	48
PLATE/I/30X50	6	27
PLATE/MID	6	33
PLATE/U/42X07	18	8
PLATE/Z/16X86	6	44
PLUG,DRAIN (1/4)	3	13
	17	13
PLUG/SCREW/SEAL	6	8
PROTECTER	6	42
PULLEY,TENSION/100	4	14
	4	22
PULLEY/VC150	4	7
PULLEY/VC173	4	1
RING,SNAP/16 C	4	17
RING,SNAP/20C	4	15
	4	23
RING,SNAP/52 C	3	9
	7	6
	17	9
RING/SLIDE	19	7
	19	14
RING/SNAP	3	7
	3	21
	6	3
	7	10
	17	7
	17	21
ROD PACKING	14	8
ROD,CHAIN TENSION	4	20
SAFETYGUARD/IN	19	6
SAFETYGUARD/OUT	19	13
SCREW,ORIFICE	14	11
SCREW/M14X115	13	17
SCREW/M4X30	6	47
SEAL,OIL/TC255210	3	10
	17	10
SEAL,OIL/TC35528	7	8
SEAL/OIL	3	22
	6	22
	7	7
	17	22
SHAFT	6	11
SHAFT/ADJUST COMP	15	1
SHAFT/OUTPUT	3	18
	17	18
SHAFT/PTO/E3	6	18
SHAFT/SIDE	7	3
SHAFTYOKE	19	2
SHIM/0.3X20X30	3	16
	17	16
SHIM/0.5	3	15
	17	15
SHIM/1.2	8	3
SLEEVE	3	20
	6	21
	17	20
SLEEVEYOKE	19	9
SPRING,CHAIN TENSION	4	19
SPRING,SHIFTER	6	15
SPRING/HC042	9	3
	13	7
	13	11
STOPPER,PISTON	14	7
STOPPER/COVER	10	4
SURCLIP/HOLE	19	5
	19	12
SWITCH,SAFETY ASSY	6	46
WASHER	4	4
	4	9
	4	16
WASHER / M16	15	4
WASHER /M12	13	33
WASHER(13X34X05)	10	5
WASHER,PL/M 8	6	34
WASHER,SP/M10	6	6
WASHER,SP/M12	10	7
	13	16
	13	28
	14	4
WASHER,SP/M14	13	4
	13	26

Alpabetical Index

8655-097-230-00

Description	Fig.	Key	Description	Fig.	Key	Description	Fig.	Key
WASHER,SP/M16	4	5						
	4	10						
	12	15						
WASHER,SP/M20	8	5						
WASHER/20X60X06	8	2						
WASHER/27X40X2	12	5						
WASHER/28X48X03	12	12						
WHEEL/GAUGE ASSY	12	9						
WHEEL/GAUGE/FRONT	12	16						