Directions for use of Parts Catalogue

1. Applicable model of machines

All component and option parts used for SZ330 RE42C/42F2 riding mower are listed in this parts catalogue.

1) MODEL TYPE

R····· ROPS

2) AREA CODE

E42F2·· FRANCE

E42C··· FOR EUROPE

2. Explanation for head paragraph

KEY	PART CODE	DESCRIPTION	SPC	TYPE OF MODEL						ITC	COL	GRP	REMARKS
				SSM48M	SSM48F	SSM48G	SRM48M	SRM48F	SRM48G				
1	8595-211-001-20	CASE/UPPER	*	1 -229									
1A	8657-201-081-00	CASE/UPPER	*	1 230-			1						
2	8595-211-002-10	CASE/LOWER	*	1			1						
3	V523-100-801-80	PIN	*	2			2						
4	V211-260-803-00	BOLT, SEMS	*	6			6						
			*	2 -229									
			*	2 230-			2						
				2			2						
				1			1						
										3			

① ② ③ ④ ⑤ ⑥ ⑦ ⑧ ⑨

① KEY shows the location of parts diagramed in the illustration.

② Parts numbers begin with `V´ and `W´ are standard parts of the market.

③ `LH´ and `RH´ on the parts name are described against the moving direction of the machine or are described on the condition how to install parts on the machines.

④ SPC : The following symbol classifies parts to be used for machines.

`*´ means standard parts.

`T´ shows that the parts can be installed as optional parts.

`R´ shows that the parts can be used as applicable parts to replace originally equipped parts.

⑤ Upper column : QTY shows the number of parts to be used for one unit of machine.

`M´ is indicated for parts supplied by a meter long.

` l ´ is indicated for parts supplied by liter.

`AR´ is indicated for parts need to be adjusted or regulated.

Lower column : serial number

—229 means serial number up to 229.

230— means serial number 230 and after.

⑥ ITC : Interchangeability

`1´…OLD ← NEW

New parts can be used in place of the old parts.

`2´…OLD → NEW

Old parts can be used in place of the new parts.

`3´…OLD →← NEW

Old parts and new parts can not be replaced each other.

⑦ COL : Color code

Color is signified with color code number for colored parts.

Please see the color list shown in the next page.

⑧ GRP : Parts shown in this column can be replaced by SET parts.

Example : Parts marked Ⓐ can be replaced by parts marked Ⓑ, and Ⓓ for Ⓒ, so the rest follow in the same alphabetical order.

⑨ Remarks

＊Other maker's part code number is shown in this column.

＊When Fig. No. is shown in the Remark column of SET parts or ASSY parts, each of their component parts are listed in said Fig. No.

3. Color :

The following colors are used color parts.

COLOR CODE	COLOR	SPRAY TYPE PARTS CODE	PAINTS 4K DRUM PARTS CODE	PAINTS 16K DRUM PARTS CODE
4 L	NEO BLUE	1300-985-001-10	1300-985-003-00	――――――
6 G	SUMMER WHITE	1300-958-001-10	1300-958-003-00	1300-958-004-00
7 F	MIRROR BLACK	1300-954-001-10	1300-954-003-00	1300-954-004-00

NOTE : Color code is signified only for the parts assigned by the maker as color parts.

4. Serial Numbers :

1) For engines serial number is stamped on CYLINDER BLOCK ASSY.
   Please see Fig. No. 5－1.
2) For chassies serial number is shown on the LABEL.
   Please see

5. Parts Order

1) Parts numbers listed in the parts catalogue are all registered in “ISEKI on-line computer”.
2) When you order parts, please make sure of correct numbers.
3) When substitute parts is available, the part number ordered will be automatically turned to a new part number.
4) Please be sure to use “ISEKI GENUINE PARTS”.
   Any other similar parts other than ISEKI parts when used may cause a trouble that makes us unable to repair or guarantee the warrant.

*** Structure Table of Model ***

MODEL / FIG.	SZ330	RE422C	RE422F2									
101	*	*										
102	*	*										
103	*	*										
104	*	*										
105	*	*										
106	*	*										
107	*	*										
108	*	*										
109	*	*										
201	*	*										
202	*	*										
203	*	*										
301	*	*										
302	*	*										
303	*	*										
304	*	*										
305	*	*										
401	*	*										
402	*	*										
403	*	*										
404	*	*										
501	*	*										
502	*	*										
503	*	*										
504	*	*										
505	*	*										
506	*	*										
507	*	*										
508	*	*										
601	*	*										
602	*	*										
603	*											
604		*										
605	*	*										
606	*	*										
607		*										
608	*											
701	*	*										
901	*	*										
902	*	*										
903	*	*										
P01	T	T										
P02	T	T										
P03	T	T										
P04	T	T										

*** Structure Table of Model ***

MODEL / FIG.	SZ330 / RE42C	RE42F2									
P05	T	T									
P06	T	T									
P07	T	T									
S01	*	*									
S02	*	*									
S03	*	*									

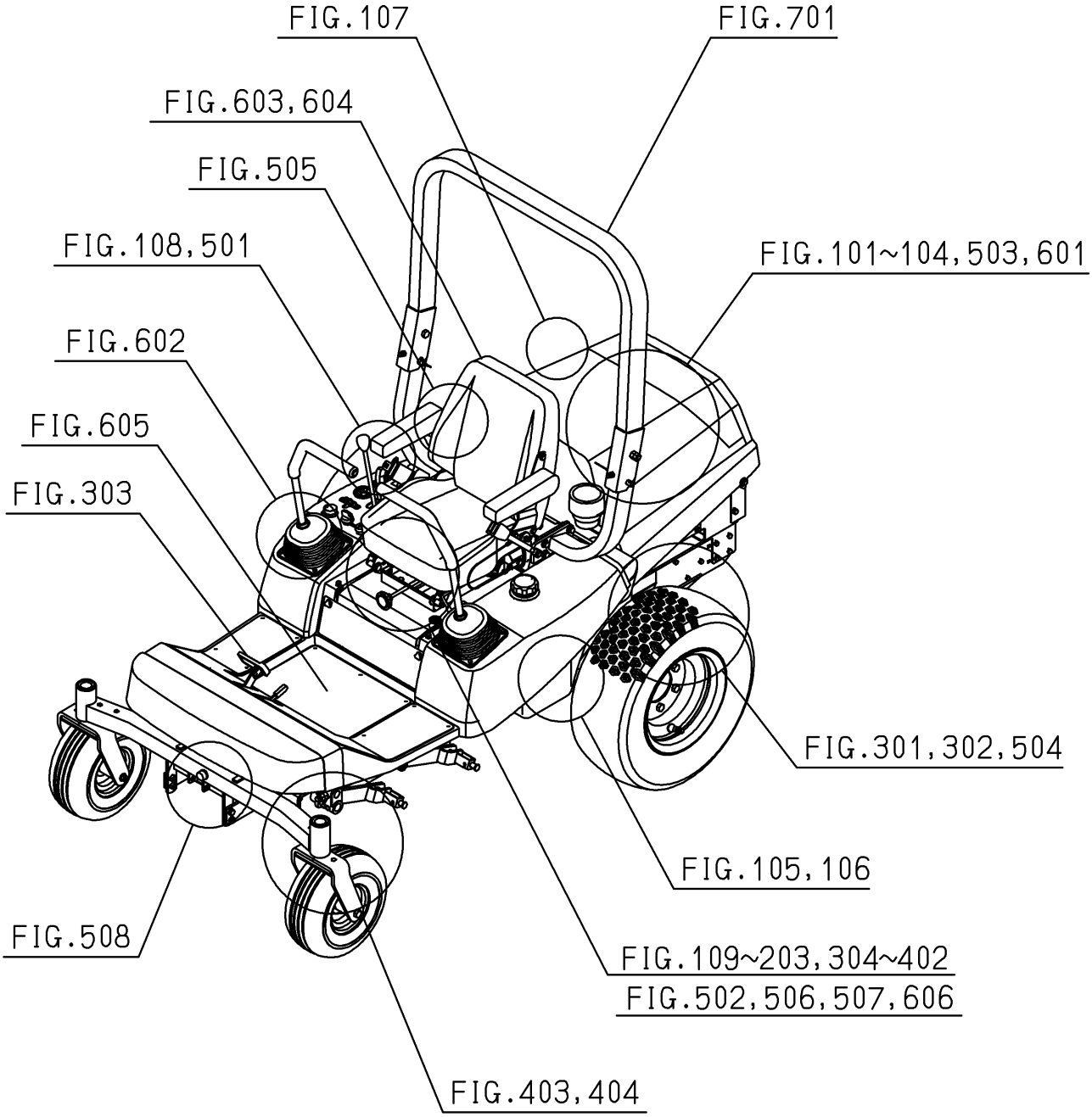
FIG.107
FIG.701
FIG.603,604
FIG.505
FIG.108,501
FIG.101~104,503,601
FIG.602
FIG.605
FIG.303
FIG.301,302,504
FIG.105,106
FIG.508
FIG.109~203,304~402
FIG.502,506,507,606
FIG.403,404

Contents

SZ330

ENGINE(E3CDVG02)

CYLINDER HEAD····· Fig.101
CYLINDER HEAD COVER····· Fig.102
INLET MANIFOLD····· Fig.103
EXHAUST MANIFOLD····· Fig.104
CYLINDER BLOCK····· Fig.201
OIL PAN····· Fig.202
REAR PLATE····· Fig.203
TIMING GEAR CASE····· Fig.204
HANGER····· Fig.205
VALVE····· Fig.301
CAM SHAFT····· Fig.302
PISTON····· Fig.303
CRANK SHAFT····· Fig.304
OIL PUMP····· Fig.401
WATER PUMP····· Fig.402
COOLING FAN····· Fig.403
INJECTION NOZZLE····· Fig.501
INJECTION PUMP····· Fig.502
FUEL PIPE····· Fig.503
ADAPTER····· Fig.504
ELECTRIC (1)····· Fig.801
ELECTRIC (2)····· Fig.802
SHORT BLOCK ENGIASSY····· Fig.P01
BEARING/UNDER SIZE (OPTION)····· Fig.P02

PISTON/OVER SIZE (OPTION)……Fig.P03
REPAIR PARTS (OPTION)……Fig.P04
COMPONENT PARTS
FOR 6215-300-045-10 ON Fig.501……Fig.S01
COMPONENT PARTS
FOR 6215-600-104-20 ON Fig.502……Fig.S02
COMPONENT PARTS
FOR 6281-100-002-30 ON Fig.801……Fig.S03
COMPONENT PARTS
FOR 6281-200-020-00 ON Fig.801……Fig.S04

Contents

CHASSIS

BRACKET(ENGINE)SYSTEM Fig.101
RADIATOR SYSTEM Fig.102
MUFFLER SYSTEM Fig.103
CLEANER(AIR)SYSTEM Fig.104
PUMP(FUEL)SYSTEM Fig.105
TANK(FUEL)SYSTEM Fig.106
BATTERY SYSTEM Fig.107
LEVER(ACCELERATOR)SYSTEM Fig.108
SHAFT(INPUT)SYSTEM Fig.109
PUMP(HST)SYSTEM(1/5)-(5/5) Fig.201
LINK(HST)SYSTEM Fig.202
LEVER(HST)SYSTEM Fig.203
BOLT(AXLE/REAR)SYSTEM Fig.301
MOTOR(HST)SYSTEM(1/2)(2/2) Fig.302
PEDAL(BRAKE)SYSTEM Fig.303
BRAKE(PARKING)SYSTEM Fig.304
TIRE(TURF/26X12.0)SYSTEM Fig.305
FRAME SYSTEM Fig.401
AXLE(FRONT)SYSTEM Fig.402
FORK(WHEEL)SYSTEM Fig.403
TIRE(FRONT)SYSTEM Fig.404
LEVER(LIFT)SYSTEM(1/2)(2/2) Fig.501
CYLINDER(LIFT)SYSTEM Fig.502
PIPING(SUCTION)SYSTEM(1/2)(2/2) Fig.503
PIPING(DELIVERY)SYSTEM Fig.504
TANK(OIL)SYSTEM Fig.505
LINK(MOWER)SYSTEM Fig.506

ADJUST(HEIGHT)SYSTEM····· Fig.507
JACK UP SYSTEM····· Fig.508
HOOD SYSTEM(1/2)(2/2)····· Fig.601
FENDER SYSTEM·····Fig.602
SEAT SYSTEM(EXCEPT F TYPE)····· Fig.603
SEAT SYSTEM(F TYPE)····· Fig.604
FLOOR SYSTEM·····Fig.605
PANEL SYSTEM·····Fig.606
HARNESS SYSTEM(F TYPE)(1/2)(2/2)····· Fig.607
HARNESS SYSTEM(EXCEPT F TYPE)(1/2)(2/2)····· Fig.608
ROPS SYSTEM····· Fig.701
ORNAMENT·····Fig.901
LABEL(CONTROL)·····Fig.902
LABEL(CAUTION)····· Fig.903

OPTIONAL PARTS

ELEMENT(INNER)ASSY(OPTION)·····Fig.P01
TIRE(26X12.0-4PR)SET(OPTION)·····Fig.P02
HITCH(WEIGHT)(OPTION)····· Fig.P03
PIN(LOCK)(OPTION)····· Fig.P04
SETTING PARTS(TIRE/15X6)SET(OPTION)····· Fig.P05
STAY(JACK/REAR)(OPTION)····· Fig.P06
BUMPER(REAR)SET(OPTION)·····Fig.P07

COMPONENT PARTS

COMPONENT PARTS
FOR K216-012-000-0A ON Fig.501····· Fig.S01
COMPONENT PARTS
FOR 1752-202-450-10 ON Fig.201·····Fig.S02
COMPONENT PARTS
FOR 1752-202-470-10 ON Fig.201·····Fig.S03

WIRING DIAGRAM

WIRING DIAGRAM(1/2)

WIRING DIAGRAM(2/2)

E N G I N E

E3CDVG02···SZ330

6005-095-653-00

FIG.101 CYLINDER HEAD

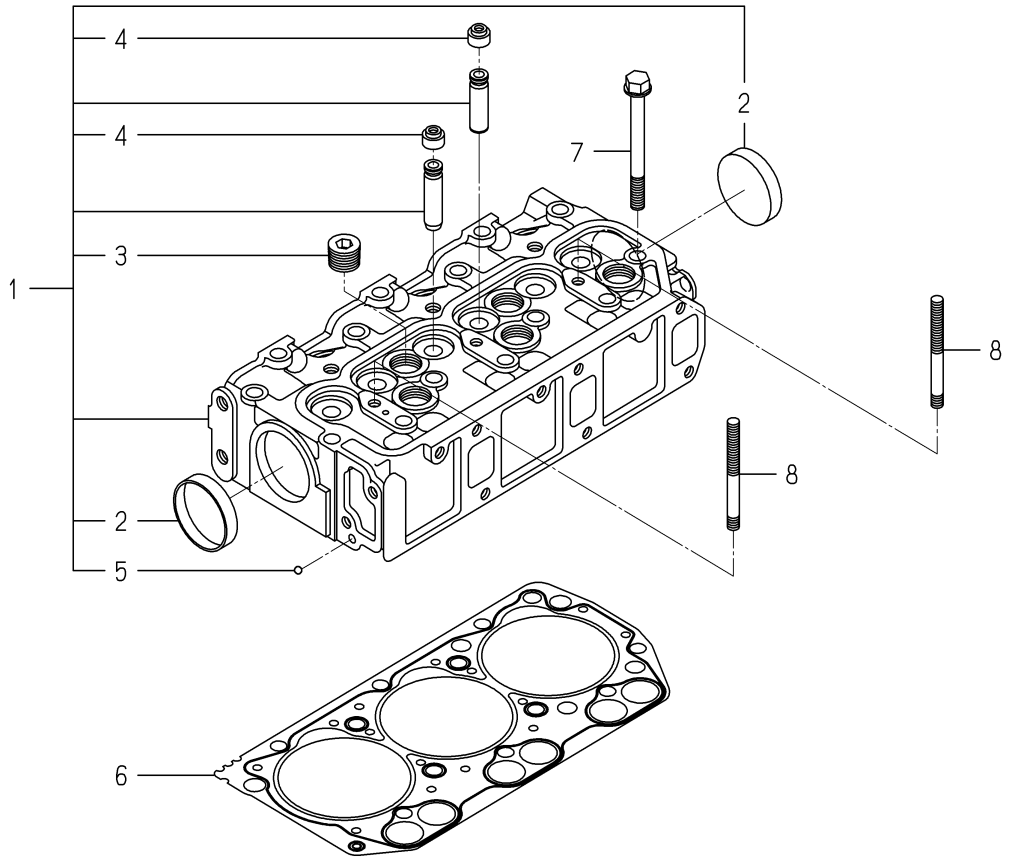

6005-101S-0100,6005-101S-0200

KEY	PART CODE	DESCRIPTION	SPC	TYPE OF MODEL E3CD VG02		ITC	COL	GRP	REMARKS
1	- - - - - -	BLANK	*						- - - - - -
1	6211-110-084-20	CYLINDERHEAD ASSY	*	1					
2	6209-610-003-00	CUP/SEALING/50	*	2					
3	6209-605-004-10	PLUG/PT1/2	*	5					
4	6212-569-002-00	SEAL,OIL	*	6					
5	V682-200-000-60	BALL	*	1					
6	6211-141-057-10	GASKET/CYLINDERHEAD	*	1					
7	6209-000-005-00	BOLT	*	14					
8	6209-300-014-00	STUD	*	2					

FIG.102 CYLINDER HEAD COVER

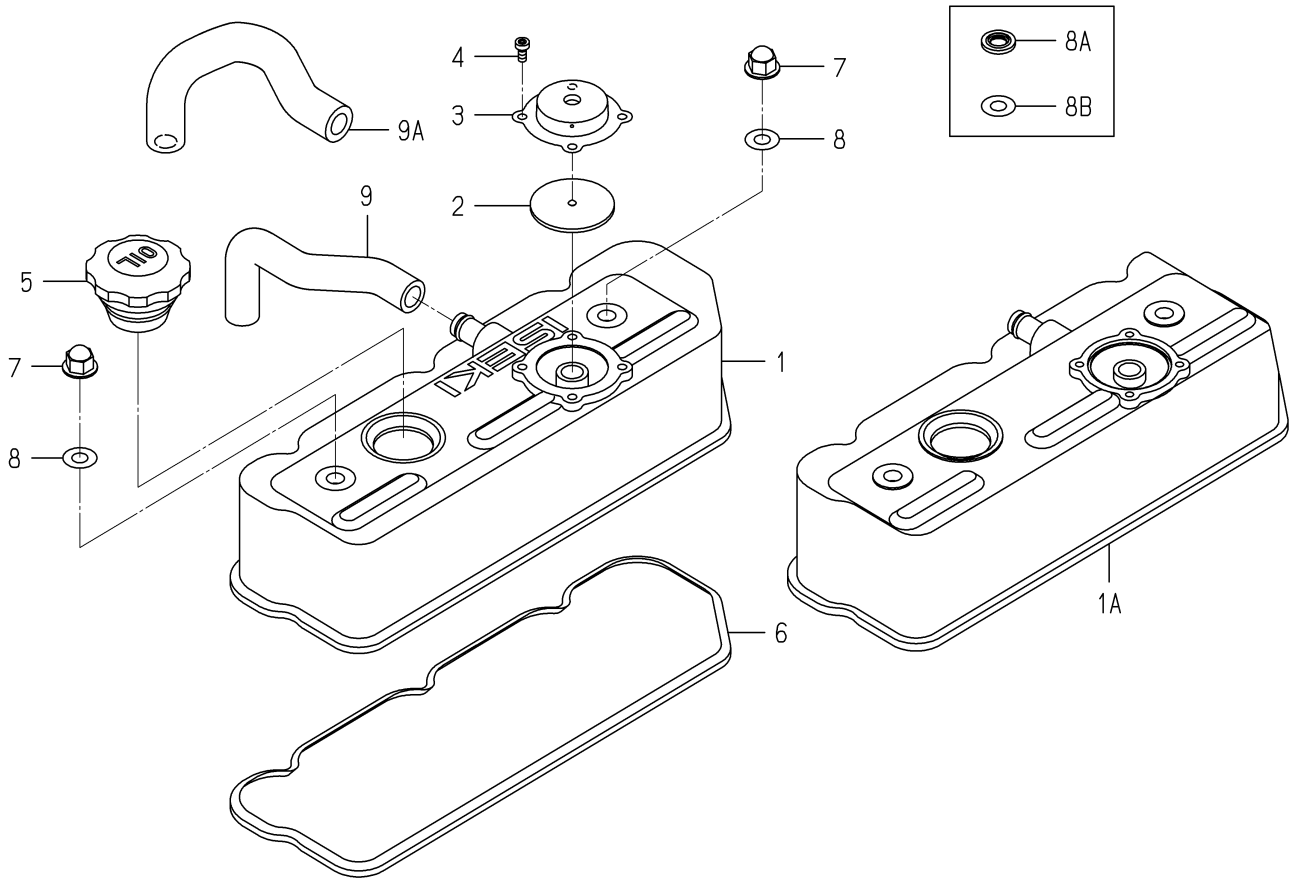

6005-110 -0100

KEY	PART CODE	DESCRIPTION	SPC	TYPE OF MODEL E3CD VG02		ITC	COL	GRP	REMARKS
1	- - - - - -	BLANK	*						- - - - - -
1A	6211-170-007-30	COVER/CYLINDER HEAD	*	1					
2	6211-179-011-20	RUBBERFLANGE	*	1					
3	6211-291-010-00	COVER/BLOWBY	*	1					
4	V195-164-008-30	SCREW/TAPPING	*	4					
5	6211-751-001-10	CAP,OIL FILLER	*	1					
6	6211-173-005-00	SEAL/CYL HEAD/UNDER	*	1					
7	- - - - - -	BLANK	*						- - - - - -
7	6209-490-002-10	NUT/CAP	*	2					
8	- - - - - -	BLANK	*						- - - - - -
8A	- - - - - -	BLANK	*						- - - - - -
8B	6209-572-003-00	GASKET	*	2					
9	- - - - - -	BLANK	*						- - - - - -
9A	- - - - - -	BLANK	*						- - - - - -
9A	6209-360-109-10	HOSE/RUBBER	*	1					

FIG.103 INLET MANIFOLD

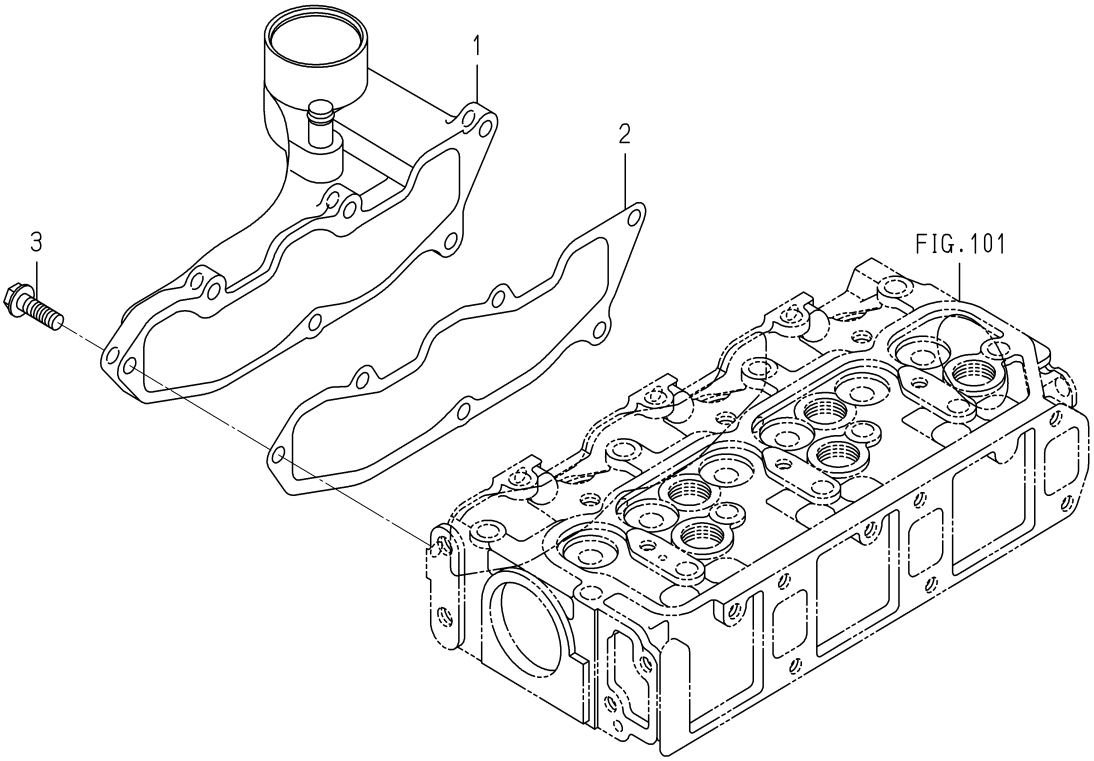

6005-120 -0100

KEY	PART CODE	DESCRIPTION	SPC	TYPE OF MODEL E3CD VG02		ITC	COL	GRP	REMARKS
1	6214-110-003-00	MANIFOLD/INLET ASSY	*	1					
2	6214-115-003-10	GASKET/INLETMANIFOLD	*	1					
3	- - - - - -	BLANK	*						- - - - - -
3	- - - - - -	BLANK	*						- - - - - -
3	V231-360-802-50	FLANGEBOLT	*	6					

FIG.104 EXHAUST MANIFOLD

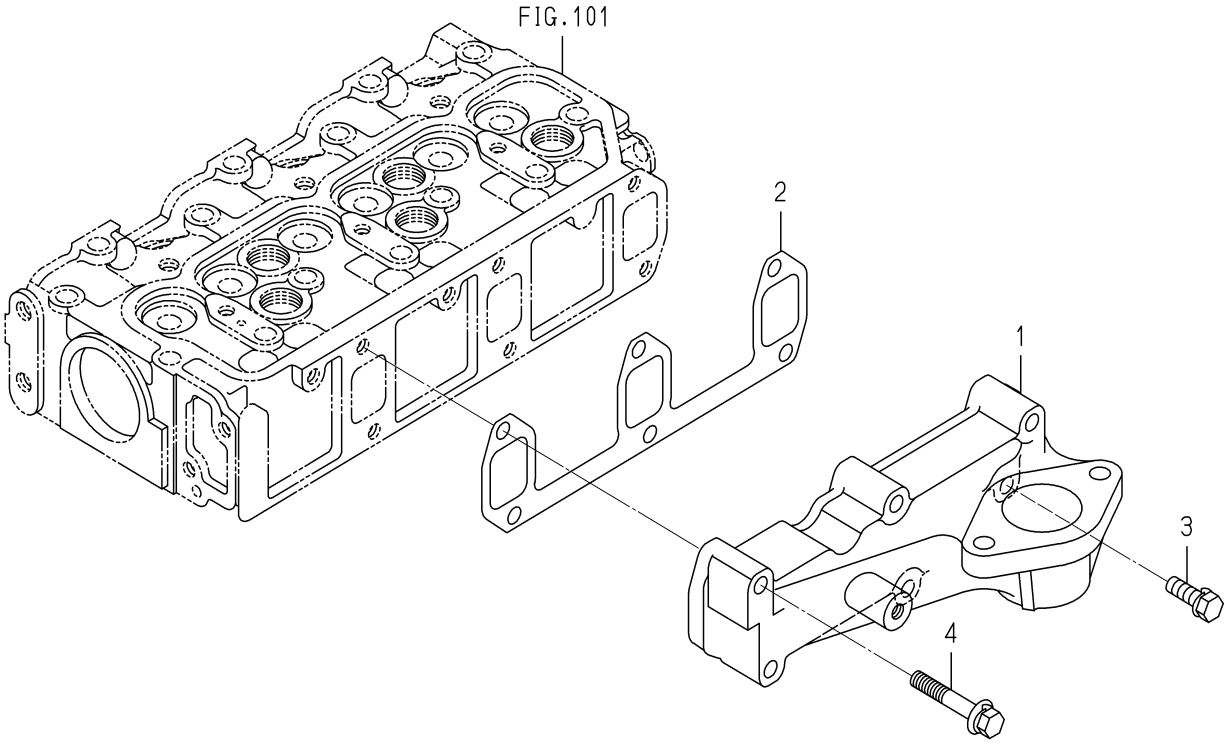

6005-140C-0100

KEY	PART CODE	DESCRIPTION	SPC	TYPE OF MODEL E3CD VG02		ITC	COL	GRP	REMARKS
1	6214-141-026-10	MANIFOLD/EXHAUST	*	1					
2	6214-145-004-20	GASHET/EXH MANIFOLD	*	1					
3	V211-560-802-50	BOLT,SEMS/M8X25 7T	*	1					
4	6509-030-037-00	BOLT	*	5					

FIG.201 CYLINDER BLOCK

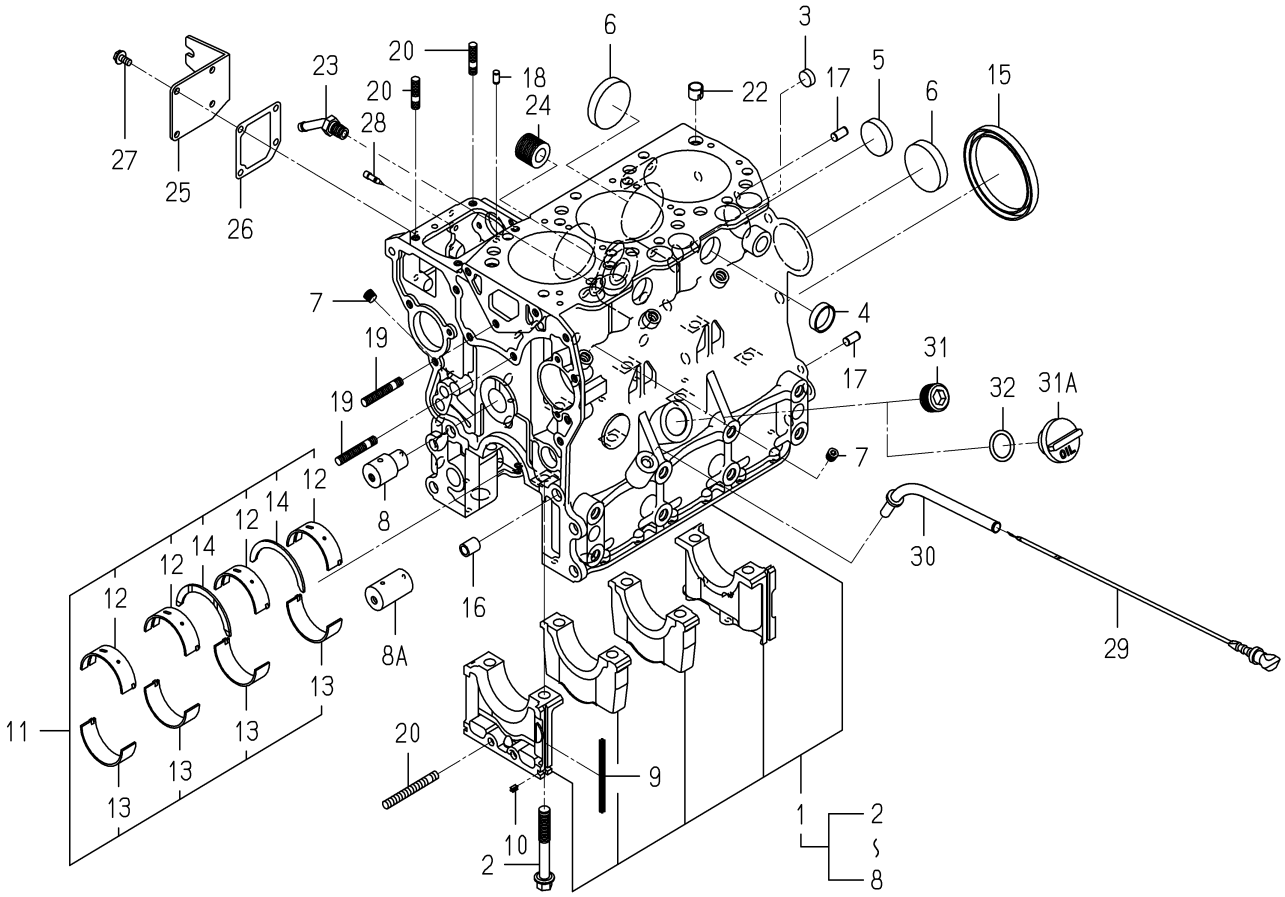

6005-203D-0100

KEY	PART CODE	DESCRIPTION	SPC	TYPE OF MODEL E3CD VG02		ITC	COL	GRP	REMARKS
1	6211-210-056-70	CYLINDERBLOCK ASSY	*	1					
2	6209-000-006-00	BOLT	*	8					
3	6209-610-007-00	CUP/SEALING/16	*	2					
4	6209-610-001-10	CUP/SEALING/28	*	2					
5	6209-610-009-00	CUP/SEALING/36	*	1					
6	6209-610-003-00	CUP/SEALING/50	*	3					
7	- - - - - -	BLANK	*						- - - - - -
7	6209-605-007-00	PLUG/PT1/8	*	8					
8	- - - - - -	BLANK	*						- - - - - -
8A	6212-531-008-30	PIN/IDLEGEAR	*	1					
9	6211-258-001-00	SEAL,BEARING CAP	*	4					
10	6211-258-002-00	SEAL,BEARING CAP/7	*	2					
11	6211-510-008-00	BEARING/CRANK SET	*	1					
12	6211-511-007-00	BEARING/CRANK/UPPER	*	4					
13	6211-511-008-00	BEARING/CRANK/LOWER	*	4					
14	6211-599-004-00	BEARING/THRUST/CRANK	*	2					
15	6209-625-003-20	OILSEAL	*	1					
16	6209-749-001-20	PIN/TUBE	*	2					
17	6213-129-006-00	PIN/STRAIGHT	*	2					
18	6209-740-005-00	PIN	*	2					
19	6904-110-840-00	STUD/M8X40	*	2					
20	6904-110-822-00	STUD	*	2					
21	V251-340-806-00	BOLT/STUD	*	1					
22	6294-453-002-00	DOWEL	*	2					
23	6213-721-007-00	PIPE/WATERDRAIN	*	1					
24	6213-319-001-00	CONNECTOR,OIL FILTER	*	1					
25	6211-291-007-20	COVER/INJECTIONPUMP	*	1					
26	6211-292-001-20	GASKET/COVER	*	1					
27	V230-360-601-20	FLANGEBOLT	*	4					
28	6215-549-013-00	PIN	*	1					

FIG.201 CYLINDER BLOCK

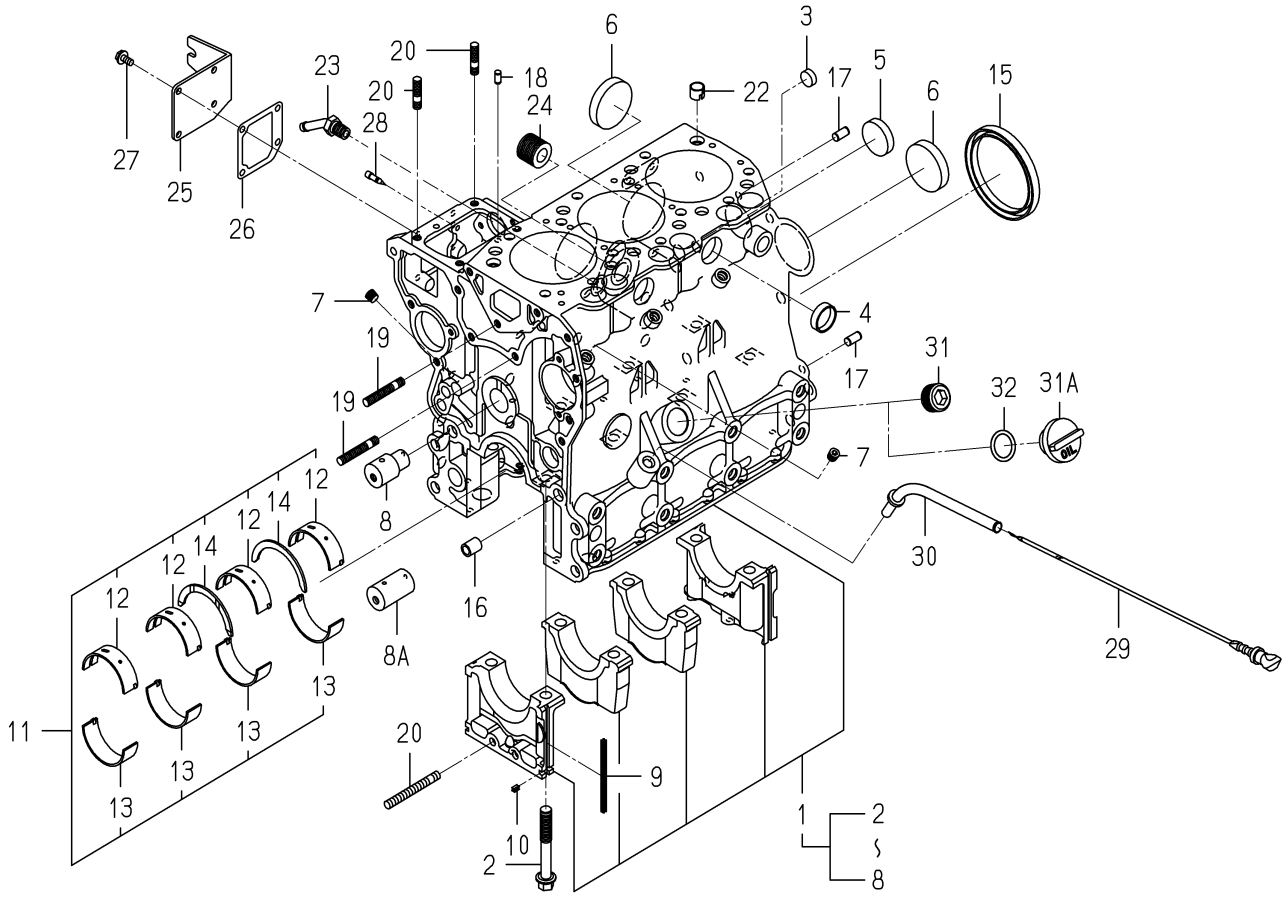

6005-203D-0100

KEY	PART CODE	DESCRIPTION	SPC	TYPE OF MODEL E3CD VG02		ITC	COL	GRP	REMARKS
29	- - - - - -	BLANK	*						- - - - - -
29	- - - - - -	BLANK	*						- - - - - -
29	6211-760-041-20	LEVELGAGE	*	1					
30	6211-766-033-00	GUIDE/LEVELGAGE COMP	*	1					
31	- - - - - -	BLANK	*						- - - - - -
31A	6211-751-002-00	CAP/OILFILLER	*	1					
32	V720-103-502-50	O-RING/P25	*	1					

FIG.202 OIL PAN

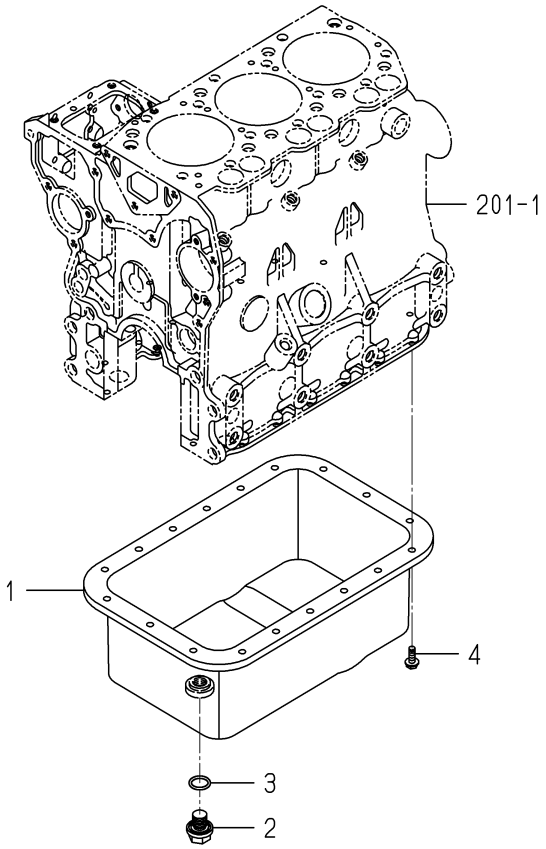

6005-210I-0100

KEY	PART CODE	DESCRIPTION	SPC	TYPE OF MODEL E3CD VG02		ITC	COL	GRP	REMARKS
1	6211-361-076-00	OILPAN COMP	*	1					
2	3805-355-002-20	PLUG/M14X1.5	*	1					
3	V720-102-401-80	O-RING/P18	*	1					
4	V230-360-601-00	FLANGEBOLT	*	18					

FIG.203 REAR PLATE

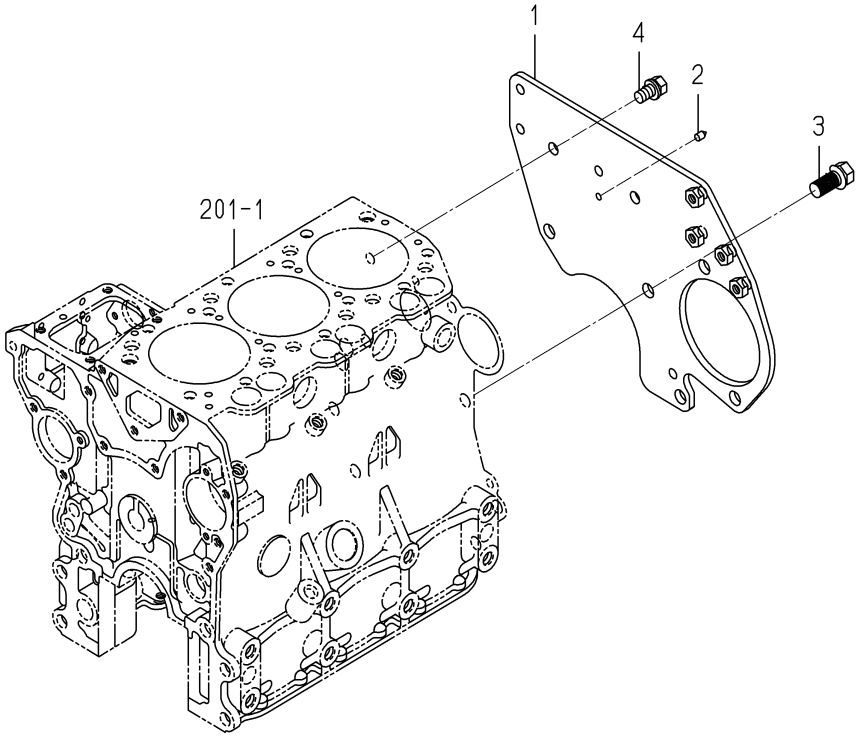

6005-220E-0100

KEY	PART CODE	DESCRIPTION	SPC	TYPE OF MODEL E3CD VG02		ITC	COL	GRP	REMARKS
1	6211-340-003-00	PLATE/REAR COMP	*	1					
2	6211-342-003-10	POINTER	*	1					
3	6209-030-091-00	BOLT/WS	*	3					
4	6901-911-020-00	BOLT,SEMS/M10X20	*	2					

FIG.204 TIMING GEAR CASE

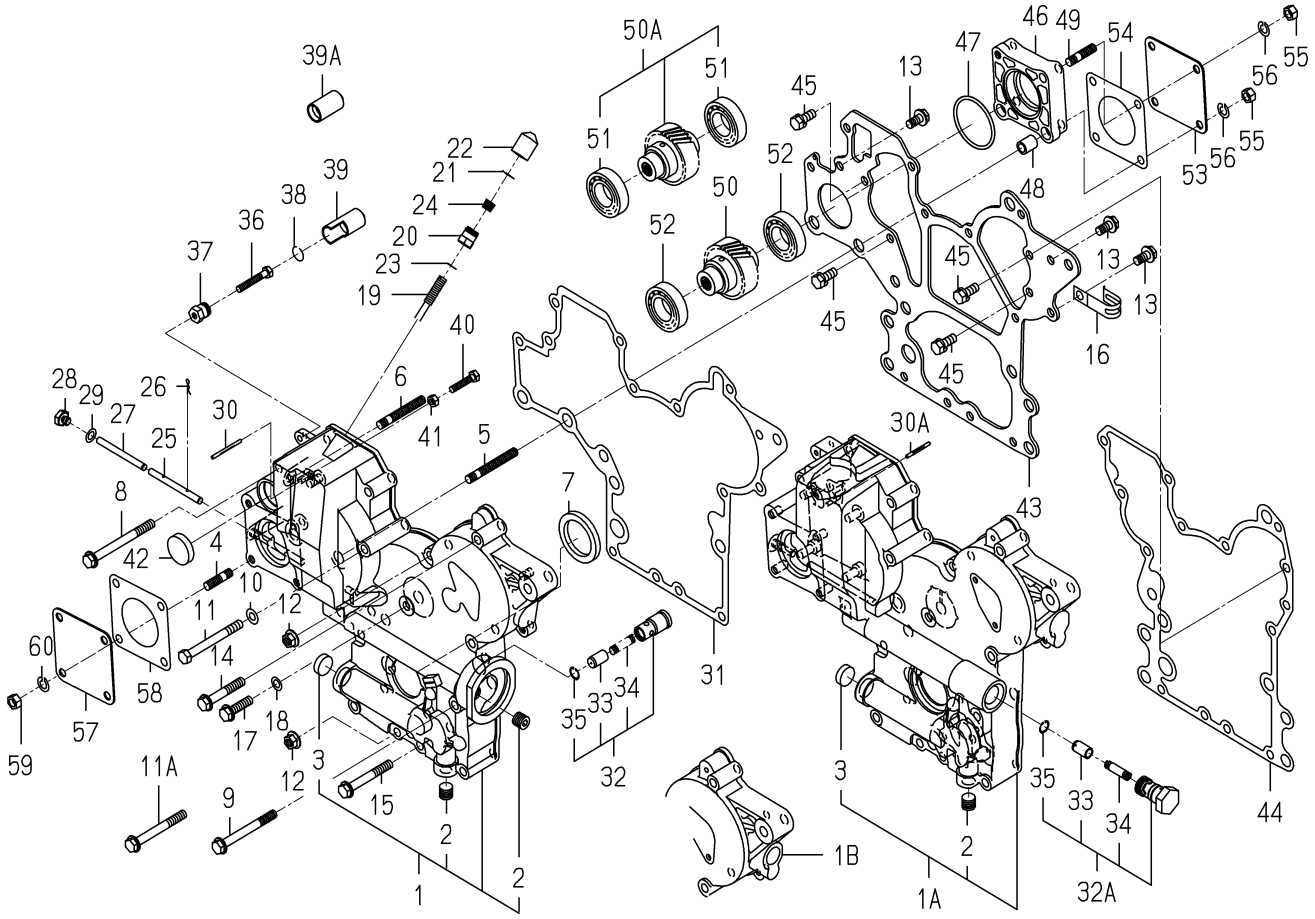

6005-241D-0100,6005-241D-0200

KEY	PART CODE	DESCRIPTION	SPC	TYPE OF MODEL E3CD VG02		ITC	COL	GRP	REMARKS
1	- - - - - -	BLANK	*						- - - - - -
1A	- - - - - -	BLANK	*						- - - - - -
1B	6211-310-013-80	GEARCASE ASSY	*	1					
2	- - - - - -	BLANK	*						- - - - - -
2	- - - - - -	BLANK	*						- - - - - -
2	6209-605-003-10	PLUG/PT1/4	*	1					
3	6209-610-004-00	CUP/SEALING/20	*	1					
4	6904-110-822-00	STUD	*	4					
5	6904-110-855-00	STUD	*	2					
6	6904-110-850-00	STUD	*	1					
7	6209-625-002-00	SEAL,OIL	*	1					
8	V231-360-808-50	FLANGEBOLT	*	1					
9	V231-360-807-50	FLANGEBOLT	*	1					
10	- - - - - -	BLANK	*						- - - - - -
11	- - - - - -	BLANK	*						- - - - - -
11A	V231-360-807-00	FLANGEBOLT	*	1					
12	3817-401-001-00	NUT/M08	*	2					
13	V231-360-801-60	FLANGEBOLT	*	3					
14	V231-360-805-00	FLANGEBOLT	*	3					
15	V231-360-806-00	FLANGEBOLT	*	4					
16	1425-621-004-00	HOLDER/JE/9-9	*	1					
17	V231-360-803-00	FLANGEBOLT	*	1					
18	6209-500-003-00	WASHER/08X14X01	*	1					
19	6215-546-006-00	STOPPER/MAX POWER ST	*	1					
20	6215-549-057-00	NUT/MAXPOWERSTOPPER	*	1					
21	6209-587-006-10	RING/TAMPER REGISTAN	*	1					
22	6215-549-058-10	CAP/MAXPOWERSTOPPER	*	1					
23	6209-920-002-00	PACKING	*	1					
24	- - - - - -	BLANK	*						- - - - - -
24	- - - - - -	BLANK	*						- - - - - -

FIG.204 TIMING GEAR CASE

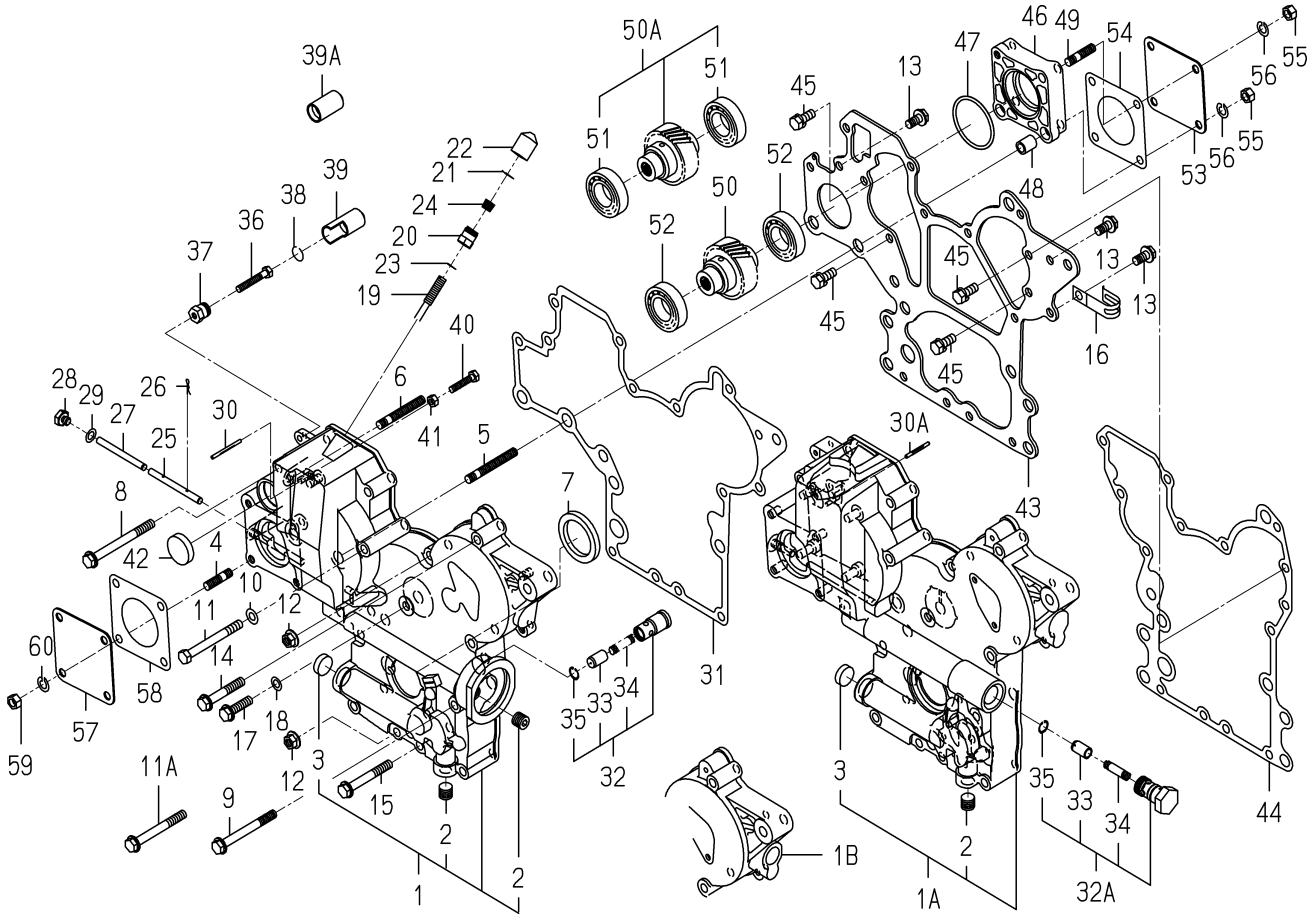

6005-241D-0100,6005-241D-0200

KEY	PART CODE	DESCRIPTION	SPC	TYPE OF MODEL E3CD VG02		ITC	COL	GRP	REMARKS
24	V780-140-000-2B	PLUG/SCREW/SEAL	*	1					
25	6215-542-004-20	PIN/ARM	*	1					
26	P117-303-003-00	PIN/SNAP	*	2					
27	6215-542-005-10	PIN	*	1					
28	6209-600-004-00	PLUG/SCREW	*	1					
29	6209-500-003-00	WASHER/08X14X01	*	1					
30	- - - - - -	BLANK	*						- - - - - -
30A	6209-740-006-00	PIN/GROOVE	*	1					
31	6211-312-005-10	GASKET/GEARCASE	*	1					
32	- - - - - -	BLANK	*						- - - - - -
32A	6213-160-005-00	VALVE/RELIEF ASSY	*	1					
33	- - - - - -	BLANK	*						- - - - - -
33	6213-161-003-10	PISTON/VALVE/RELIEF	*	1					
34	- - - - - -	BLANK	*						- - - - - -
34	6213-164-001-00	SPRING/RELIEF VALVE	*	1					
35	- - - - - -	BLANK	*						- - - - - -
35	V705-140-012-00	RING,SNAP/12 C	*	1					
36	6209-050-003-00	BOLT/HI-IDLESTOPPER	*	1					
37	6215-549-059-00	NUT/HI-IDLESTOPPER	*	1					
38	6209-587-006-10	RING/TAMPER REGISTAN	*	1					
39	- - - - - -	BLANK	*						- - - - - -
39A	6215-549-060-10	CAP/MAXPOWERSTOPPER	*	1					
40	6209-050-002-00	BOLT/M6	*	1					
41	- - - - - -	BLANK	*						- - - - - -
41	V301-260-006-00	NUT/M6	*	1					
42	- - - - - -	BLANK	*						- - - - - -
43	6211-311-013-20	PLATE/FRONT	*	1					
44	6211-312-006-10	GASKET/PLATE	*	1					
45	6902-050-816-00	BOLT	*	4					
46	6211-319-003-00	SPACER	*	1					

FIG.204 TIMING GEAR CASE

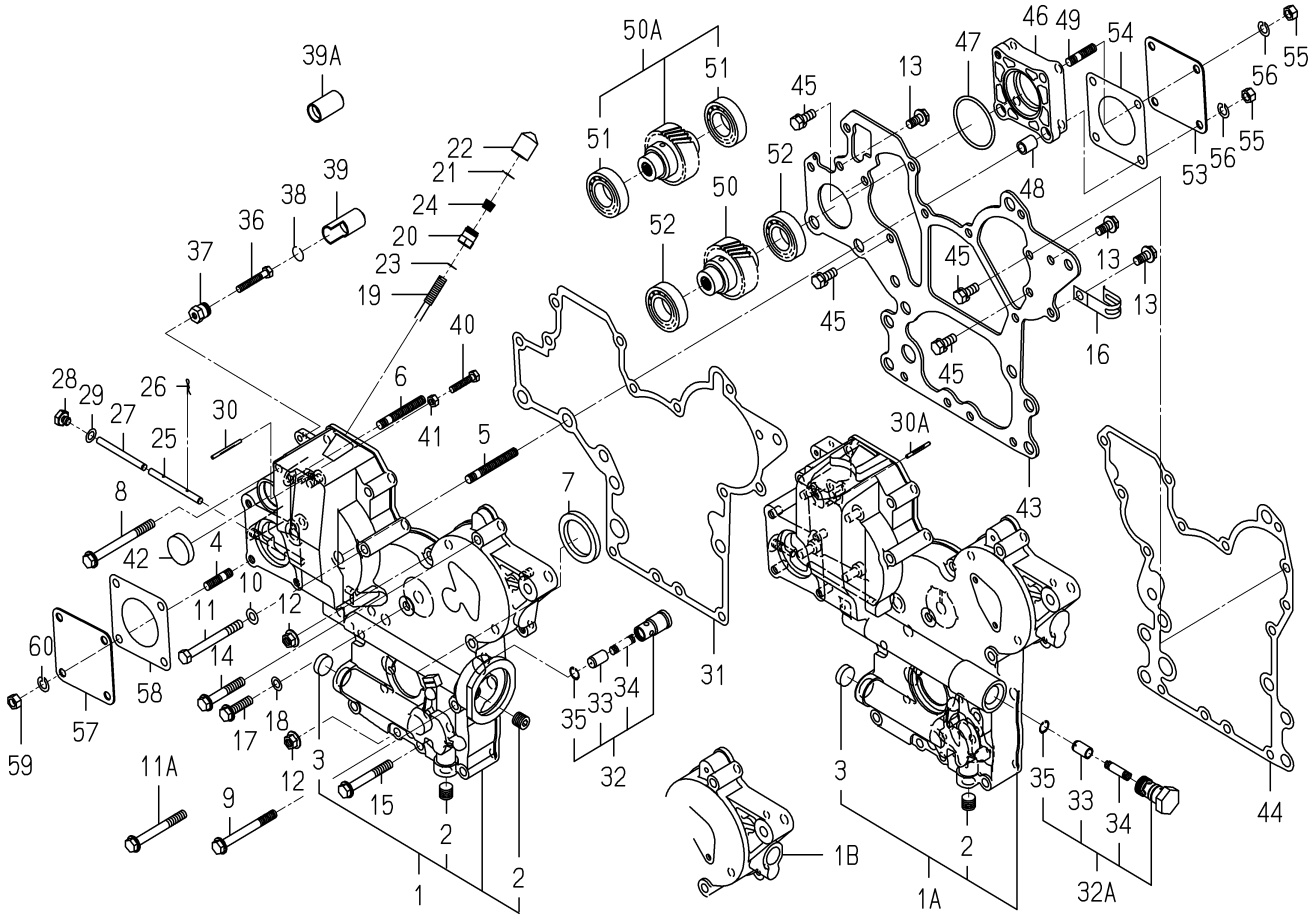

6005-241D-0100,6005-241D-0200

KEY	PART CODE	DESCRIPTION	SPC	TYPE OF MODEL E3CD VG02		ITC	COL	GRP	REMARKS
47	V723-102-005-00	O-RING 1A S50	*	1					
48	6209-749-001-20	PIN/TUBE	*	2					
49	6904-110-822-00	STUD	*	1					
50	- - - - - -	BLANK	*						- - - - - -
50A	6212-530-005-30	SHAFT/HYDRAULIC ASSY	*	1					
51	V600-110-600-50	BEARING,RB/6005	*	2					
52	- - - - - -	BLANK	*						- - - - - -
53	- - - - - -	BLANK	*						- - - - - -
53	6211-321-022-00	COVER/HYDRAULIC	*	1					
54	6211-322-002-00	GASKET/COVER	*	1					
55	- - - - - -	BLANK	*						- - - - - -
55	V304-260-008-00	NUT	*	4					
56	V401-160-008-00	WASHER,SP/M 8	*	4					
57	- - - - - -	BLANK	*						- - - - - -
57	6211-321-022-00	COVER/HYDRAULIC	*	1					
58	6211-322-002-00	GASKET/COVER	*	1					
59	- - - - - -	BLANK	*						- - - - - -
59	V304-260-008-00	NUT	*	4					
60	V401-160-008-00	WASHER,SP/M 8	*	4					

FIG.205 HANGER

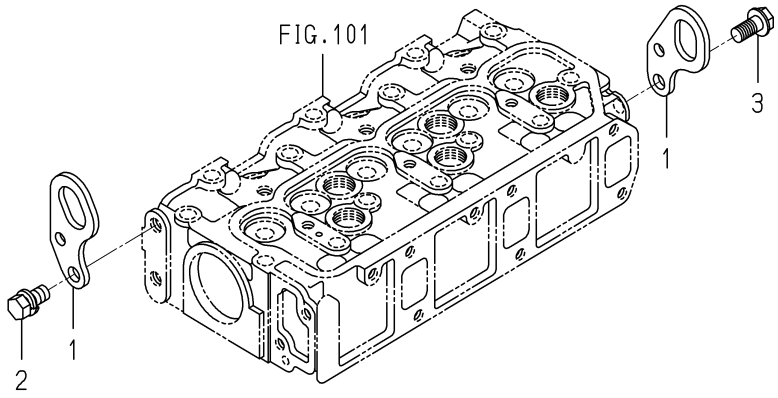

6005-290 -0100

KEY	PART CODE	DESCRIPTION	SPC	TYPE OF MODEL E3CD VG02		ITC	COL	GRP	REMARKS
1	6211-777-007-30	HANGER	*	2					
2	6901-911-020-00	BOLT,SEMS/M10X20	*	1					
3	- - - - - -	BLANK	*						- - - - - -
3	V233-361-002-00	FLANGEBOLT	*	1					

FIG.301 VALVE

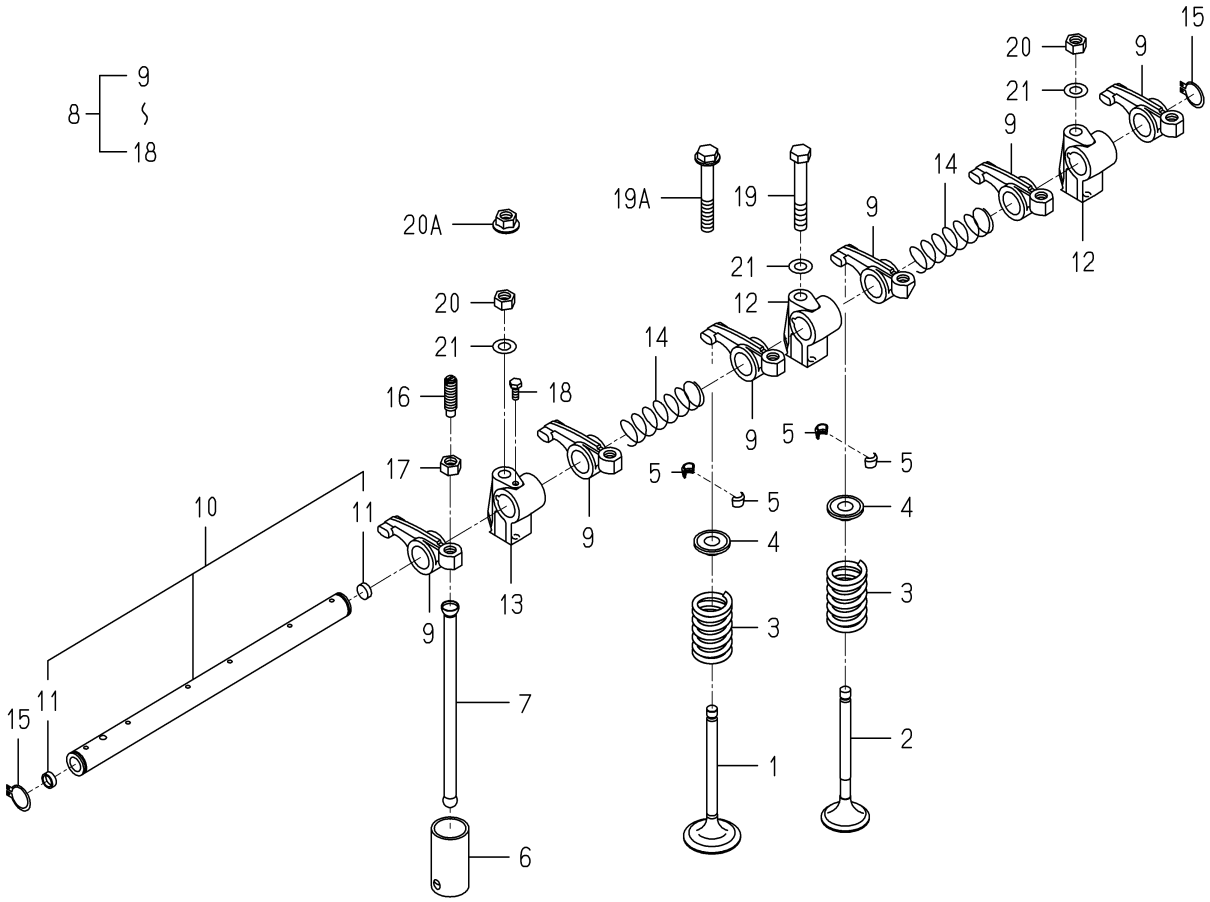

6005-301B-0100

KEY	PART CODE	DESCRIPTION	SPC	TYPE OF MODEL E3CD VG02		ITC	COL	GRP	REMARKS
1	- - - - - -	BLANK	*						- - - - - -
1	- - - - - -	BLANK	*						- - - - - -
1	6212-551-020-10	VALVE/INTAKE	*	3					
2	6212-552-008-00	VALVE/EXHAUST	*	3					
3	6212-561-003-00	SPRING/VALVE	*	6					
4	6212-563-001-00	SEAT,VALVE SPRING	*	6					
5	6212-565-001-00	CUTTER,VALVE	*	12					
6	- - - - - -	BLANK	*						- - - - - -
6	6212-571-002-30	TAPPET	*	6					
7	6212-575-003-00	PUSHROD	*	6					
8	- - - - - -	BLANK	*						- - - - - -
8	6212-600-009-20	ROCKERSHAFT ASSY	*	1					
9	6212-611-004-10	ROCKERARM	*	6					
10	- - - - - -	BLANK	*						- - - - - -
10	6212-620-008-20	SHAFT/ROCKERARM ASSY	*	1					
11	6212-626-002-10	PLUG	*	2					
12	- - - - - -	BLANK	*						- - - - - -
12	6212-628-010-10	BRACKET/ROCKERSHAFT	*	2					
13	- - - - - -	BLANK	*						- - - - - -
13	6212-628-011-10	BRACKET/ROCKERSHAFT	*	1					
14	6209-940-004-00	SPRING	*	2					
15	V704-140-016-00	RING,SNAP/16 C	*	2					
16	6212-616-002-00	SCREW ADJUST	*	6					
17	6209-409-003-00	NUT	*	6					
18	6209-000-002-00	BOLT	*	1					
19	- - - - - -	BLANK	*						- - - - - -
19A	- - - - - -	BLANK	*						- - - - - -
19A	V231-360-805-50	FLANGEBOLT	*	1					
20	- - - - - -	BLANK	*						- - - - - -
20A	3817-401-001-00	NUT/M08	*	2					

FIG.301 VALVE

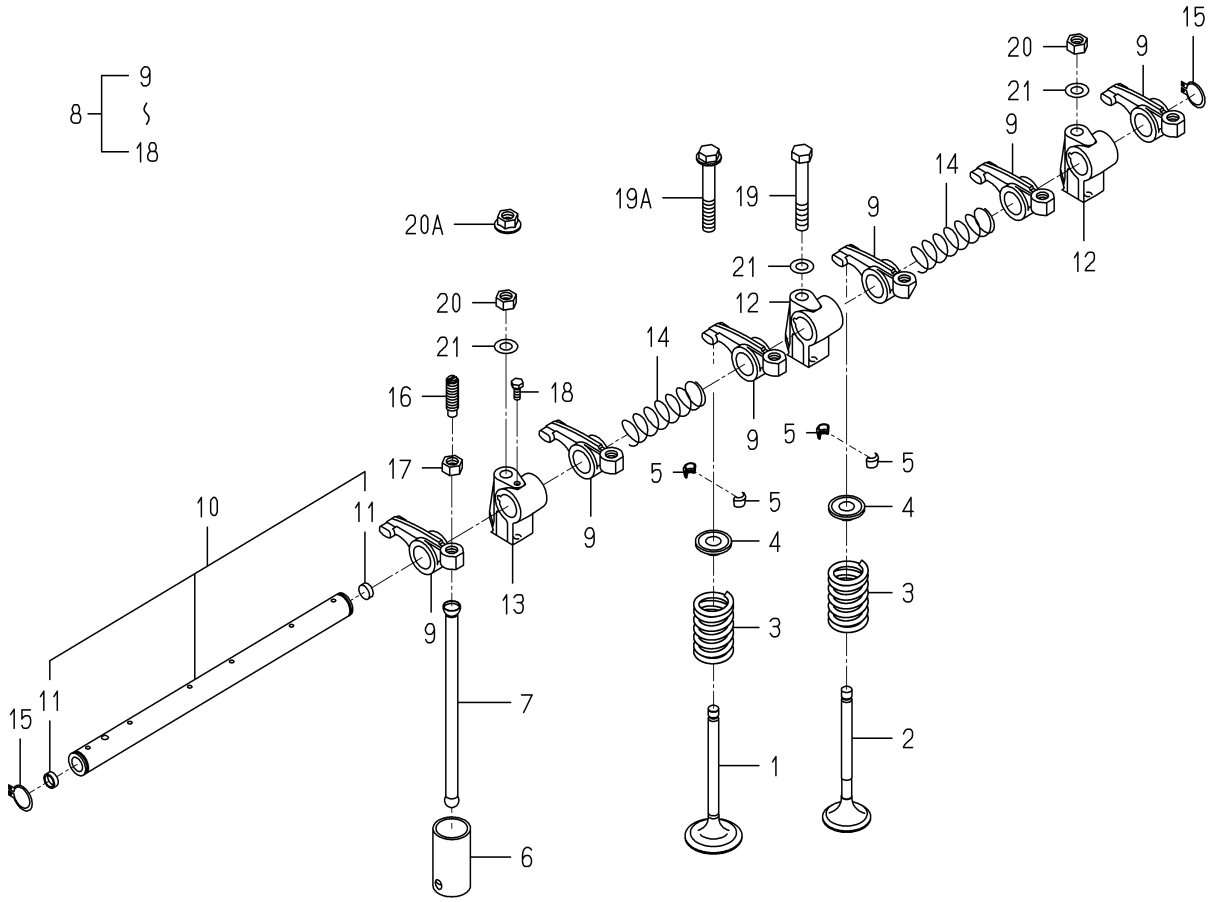

6005-301B-0100

KEY	PART CODE	DESCRIPTION	SPC	TYPE OF MODEL E3CD VG02		ITC	COL	GRP	REMARKS
21	- - - - - -	BLANK	*						- - - - - -
21	- - - - - -	BLANK	*						- - - - - -

FIG.302 CAM SHAFT

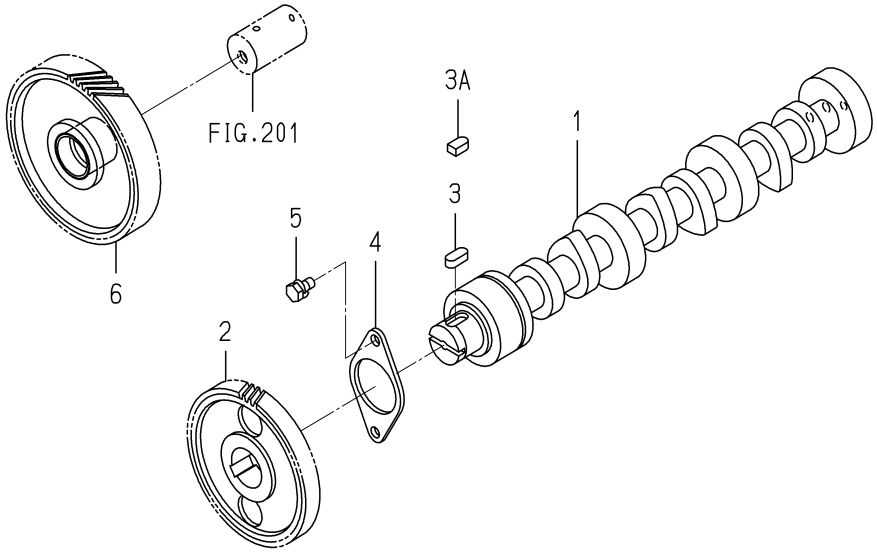

6005-310 -0100

KEY	PART CODE	DESCRIPTION	SPC	TYPE OF MODEL E3CD VG02		ITC	COL	GRP	REMARKS
1	6212-511-005-00	CAMSHAFT	*	1					
2	- - - - - -	BLANK	*						- - - - - -
2	6212-522-004-10	GEAR/CAMSHAFT	*	1					
3	- - - - - -	BLANK	*						- - - - - -
3A	6209-730-005-00	KEY/07X05X09	*	1					
4	6212-535-007-00	PLATE/THRUST	*	1					
5	6901-910-612-00	BOLT,SEMS/M6X12	*	2					
6	- - - - - -	BLANK	*						- - - - - -
6	- - - - - -	BLANK	*						- - - - - -
6	6212-523-006-50	GEAR/IDLE ASSY	*	1					

FIG.303 PISTON

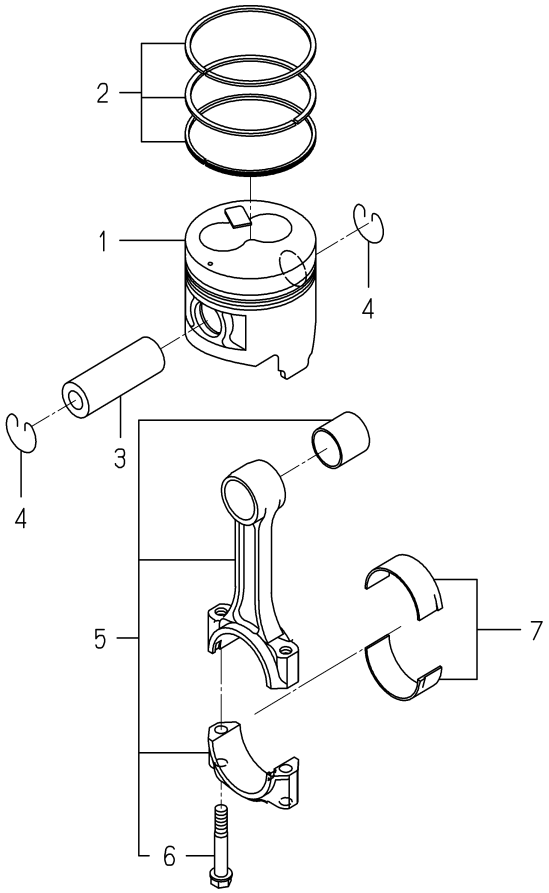

6005-340P-0100

KEY	PART CODE	DESCRIPTION	SPC	TYPE OF MODEL E3CD VG02		ITC	COL	GRP	REMARKS
1	6212-111-095-30	PISTON	*	3					
2	- - - - - -	BLANK	*						- - - - - -
2	6212-121-028-10	RING/PISTONSET	*	3					
3	6212-211-002-00	PIN/PISTON	*	3					
4	6909-950-115-00	RING SNAP	*	6					
5	6212-230-011-30	CONNECTINGROD ASSY	*	3					
6	- - - - - -	BLANK	*						- - - - - -
6	6212-235-004-10	BOLT/CONNECTINGROD	*	6					
7	6212-271-009-00	BEARING/CONNECTING R	*	3					

FIG.304 CRANK SHAFT

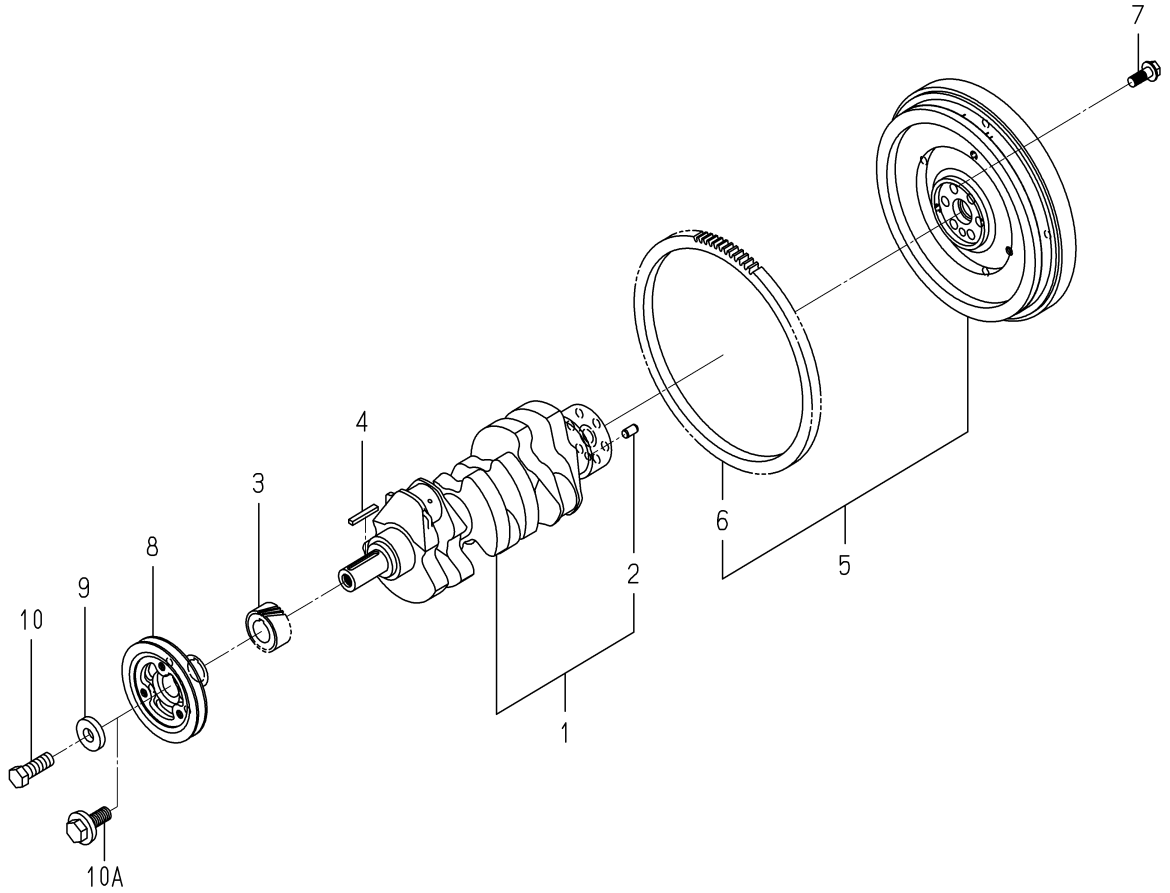

6005-351F-0100

KEY	PART CODE	DESCRIPTION	SPC	TYPE OF MODEL E3CD VG02		ITC	COL	GRP	REMARKS
1	6212-310-011-40	CRANKSHAFT ASSY	*	1					
2	V523-101-001-80	PIN	*	1					
3	6212-521-008-00	GEAR/CRANK	*	1					
4	6209-730-006-00	KEY/07X05X43	*	1					
5	6212-330-031-50	FLYWHEEL ASSY	*	1					
6	6212-333-002-00	RINGGEAR	*	1					
7	6209-046-015-00	BOLT/FLANGE	*	6					
8	6212-371-035-10	PULLEY/CRANK	*	1					
9	- - - - - -	BLANK	*						- - - - - -
10	- - - - - -	BLANK	*						- - - - - -
10A	6209-000-043-00	BOLT/CRANK	*	1					

FIG.401 OIL PUMP

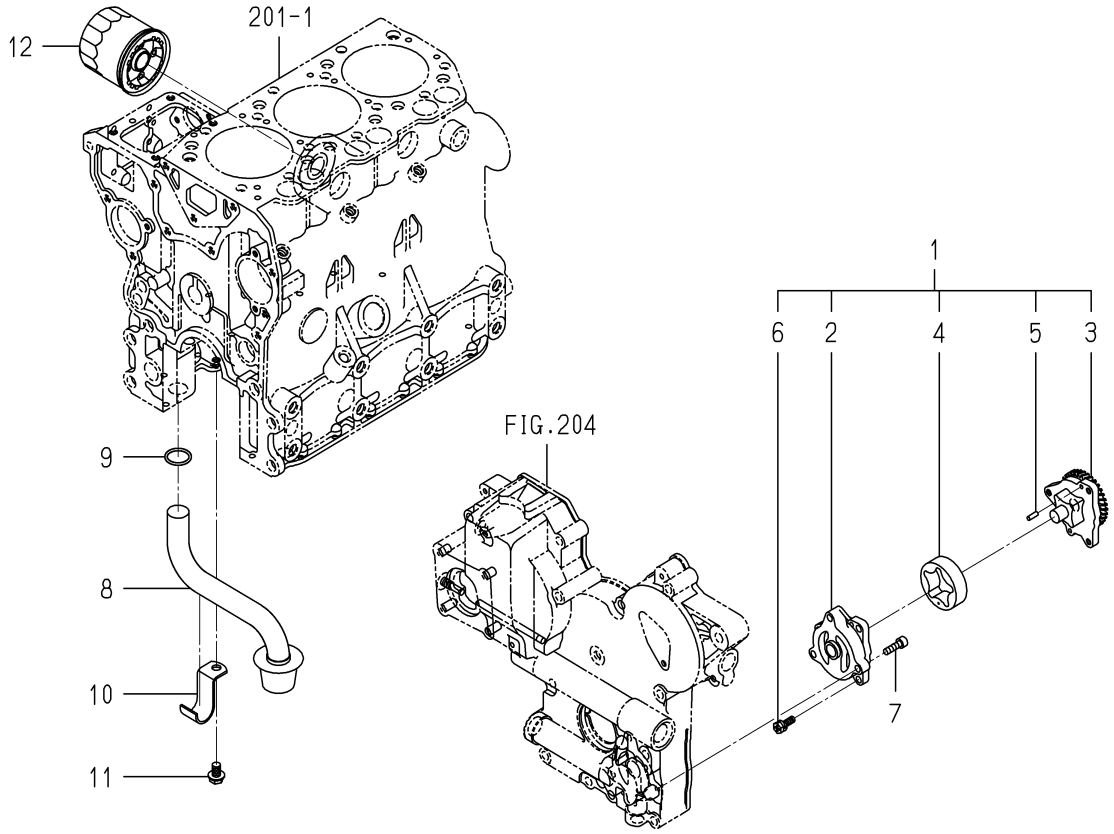

6005-401C-0100

KEY	PART CODE	DESCRIPTION	SPC	TYPE OF MODEL E3CD VG02		ITC	COL	GRP	REMARKS
1	6213-100-004-30	OILPUMP ASSY	*	1					
2	6213-111-002-20	BODY/OILPUMP	*	1					
3	6213-120-002-30	GEAR/OILPUMP ASSY	*	1					
4	6213-125-002-10	ROTOR/OUTER	*	1					
5	6213-129-003-00	PIN/STRAIGHT	*	2					
6	6213-119-001-00	BOLT/WS	*	3					
7	V220-540-602-00	SCREW/SOCKET	*	3					
8	6213-140-005-10	STRAINER COMP	*	1					
9	- - - - - -	BLANK	*						- - - - - -
9	V720-103-502-20	O-RING/P22	*	1					
10	6213-149-003-20	CLAMP/STRAINER	*	1					
11	- - - - - -	BLANK	*						- - - - - -
11	- - - - - -	BLANK	*						- - - - - -
11	V231-360-801-60	FLANGEBOLT	*	1					
12	6213-240-002-10	CARTRIDGE/OILFILTER	*	1					

FIG.402 WATER PUMP

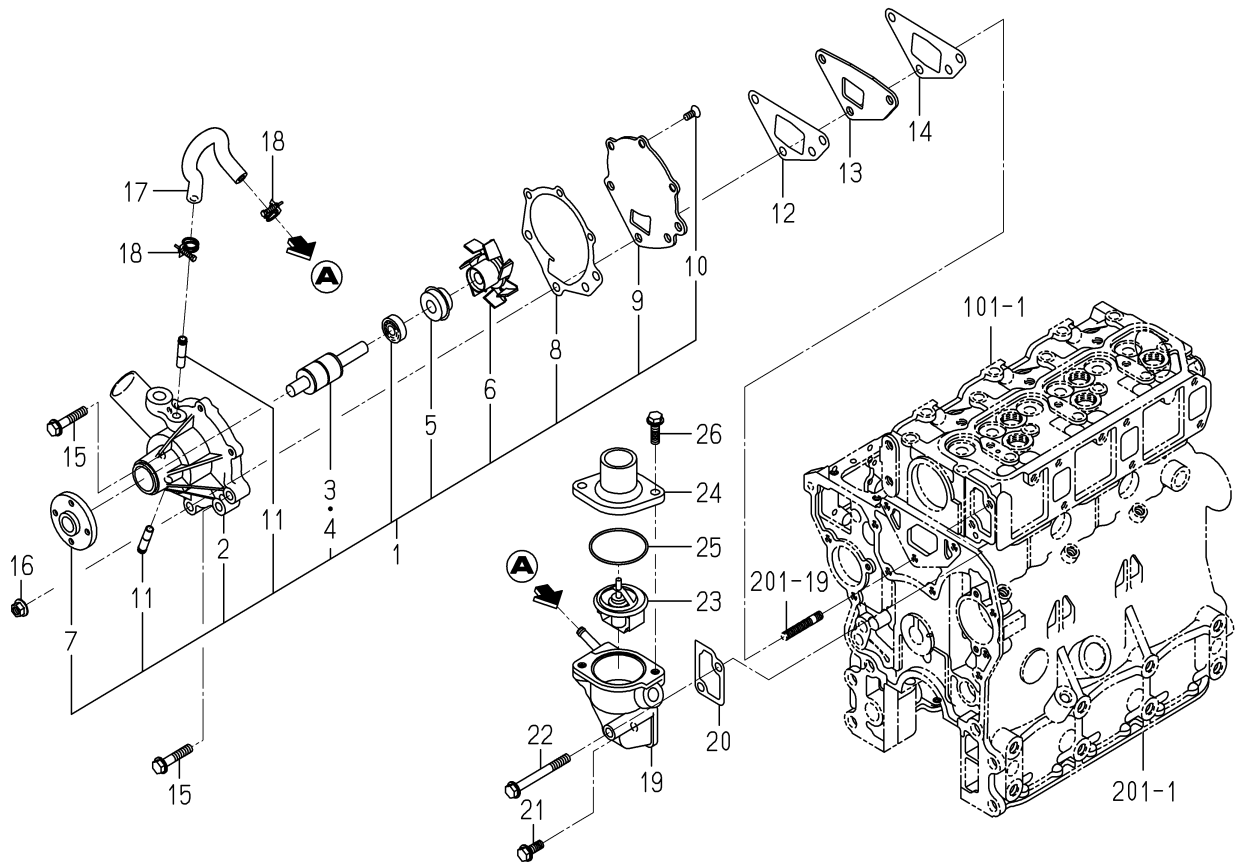

6005-420A-0100

KEY	PART CODE	DESCRIPTION	SPC	TYPE OF MODEL E3CD VG02		ITC	COL	GRP	REMARKS
1	6213-610-004-40	WATERPUMP ASSY	*	1					
2	6213-611-003-20	BODY/WATERPUMP	*	1					
3	6213-631-002-00	BEARING/WATER PUMP	*	1					
4	6213-631-005-00	BEARING/WATERPUMP	*	1					
5	6213-622-002-10	SEAL SET/WATER PUMP	*	1					
6	6213-621-003-00	ROTOR/WATERPUMP	*	1					
7	6213-642-002-00	SEAL/WATER PUMPPULLE	*	1					
8	6213-613-002-10	GASKET	*	1					
9	6213-612-004-00	PLATE/WATER PUMP	*	1					
10	6213-619-003-00	SCREW/WATER PUMP	*	3					
11	6213-619-002-00	PIPE/WATER PUMP	*	2					
12	6213-614-001-10	GASKET,WATER PUMP	*	1					
13	6213-619-007-10	SPACER/WATERPUMP	*	1					
14	6213-614-001-10	GASKET,WATER PUMP	*	1					
15	- - - - - -	BLANK	*						- - - - - -
15	V231-360-804-00	FLANGEBOLT	*	2					
16	3817-401-001-00	NUT/M08	*	1					
17	6213-729-013-10	HOSE/RUBBER	*	1					
18	J061-210-015-00	CLAMP/WIRE/10-15	*	2					
19	6213-716-001-50	HOUSING/THERMOSTAT	*	1					
20	6213-743-002-10	GASKET/HOUSING	*	1					
21	- - - - - -	BLANK	*						- - - - - -
21	V231-360-802-00	FLANGEBOLT	*	1					
22	- - - - - -	BLANK	*						- - - - - -
22	V231-360-807-50	FLANGEBOLT	*	1					
23	6513-770-022-10	THERMOSTAT	*	1					
24	6213-711-003-20	PIPE,WATER OUTLET	*	1					
25	V723-102-005-50	O-RING	*	1					
26	- - - - - -	BLANK	*						- - - - - -
26	V231-360-802-50	FLANGEBOLT	*	2					

FIG.403 COOLING FAN

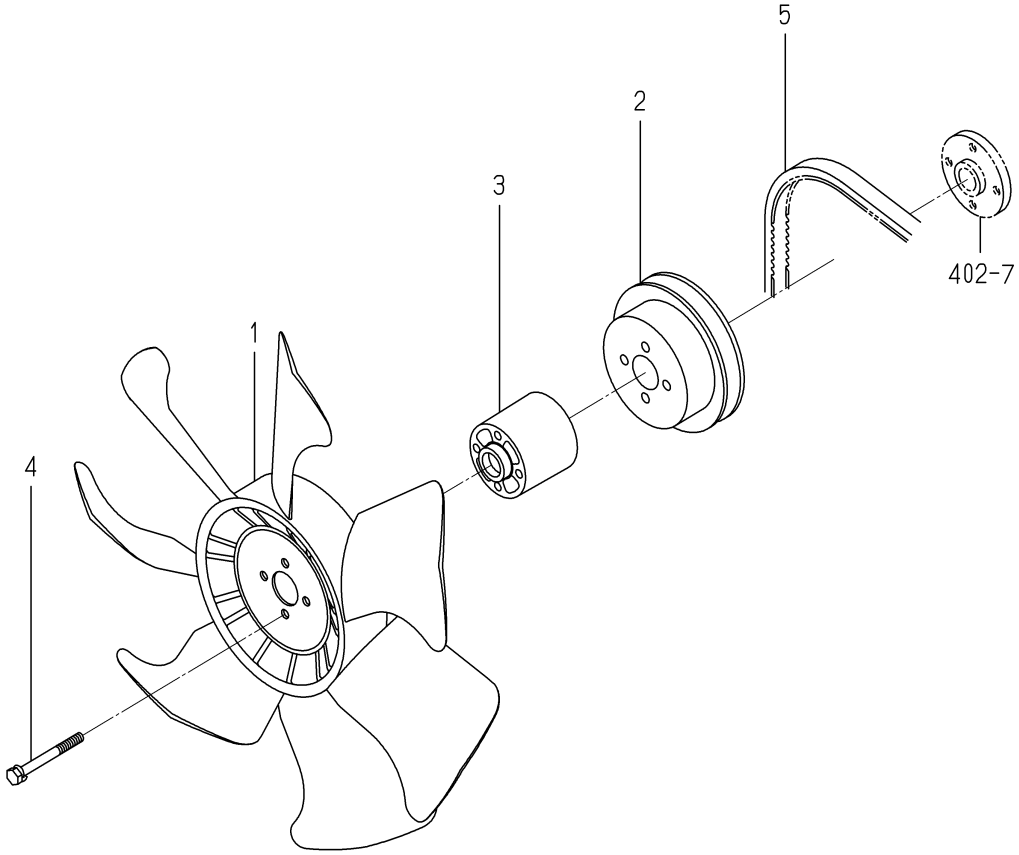

6005-480S-0100

KEY	PART CODE	DESCRIPTION	SPC	TYPE OF MODEL E3CD VG02		ITC	COL	GRP	REMARKS
1	6213-660-016-00	FAN/COOLING	*	1					
2	- - - - - -	BLANK	*						- - - - - -
2	6213-641-022-10	PULLEY/WATERPUMP	*	1					
3	6213-669-008-00	SPACER/FAN/48	*	1					
4	6209-030-044-00	BOLT/WS	*	4					
5	6213-671-030-00	BELT/VR5A39.0	*	1					

FIG.501 INJECTION NOZZLE

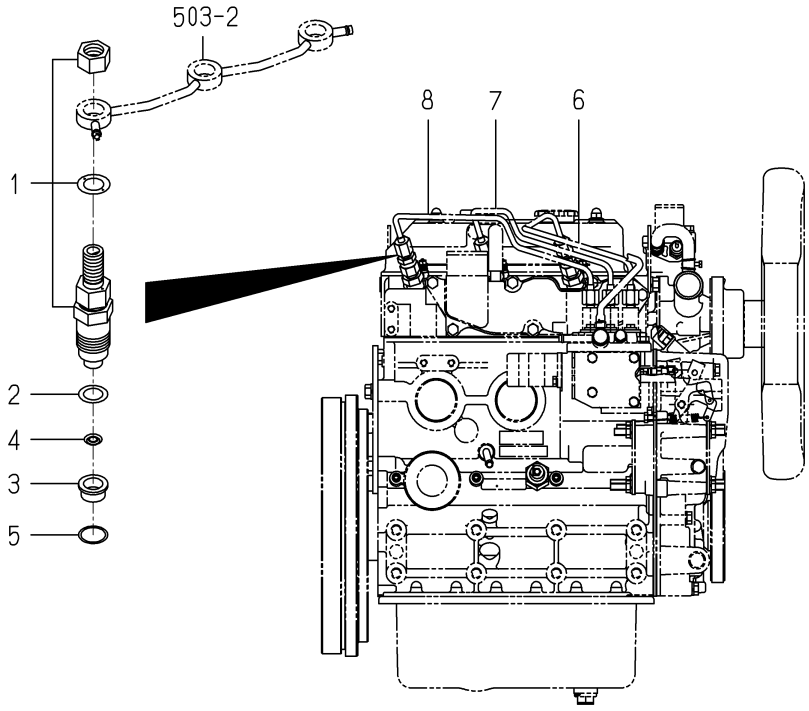

6005-501E-0100

KEY	PART CODE	DESCRIPTION	SPC	TYPE OF MODEL E3CD VG02		ITC	COL	GRP	REMARKS
1	- - - - - -	BLANK	*						- - - - - -
1	6215-300-045-10	INJECTIONNOZZLE ASSY	*	3					FIG S01
2	6215-315-002-00	GASKET,NOZZLE	*	3					
3	6215-315-006-00	HEATSHILD/NOZZLE	*	3					
4	6215-315-005-00	WASHER/CORRUGATE	*	3					
5	6215-315-007-00	GASKET	*	3					
6	6215-411-133-00	PIPE/INJECTION ASSY	*	1					
7	6215-411-134-00	PIPE/INJECTION ASSY	*	1					
8	6215-411-135-00	PIPE/INJECTION ASSY	*	1					

FIG.502 INJECTION PUMP

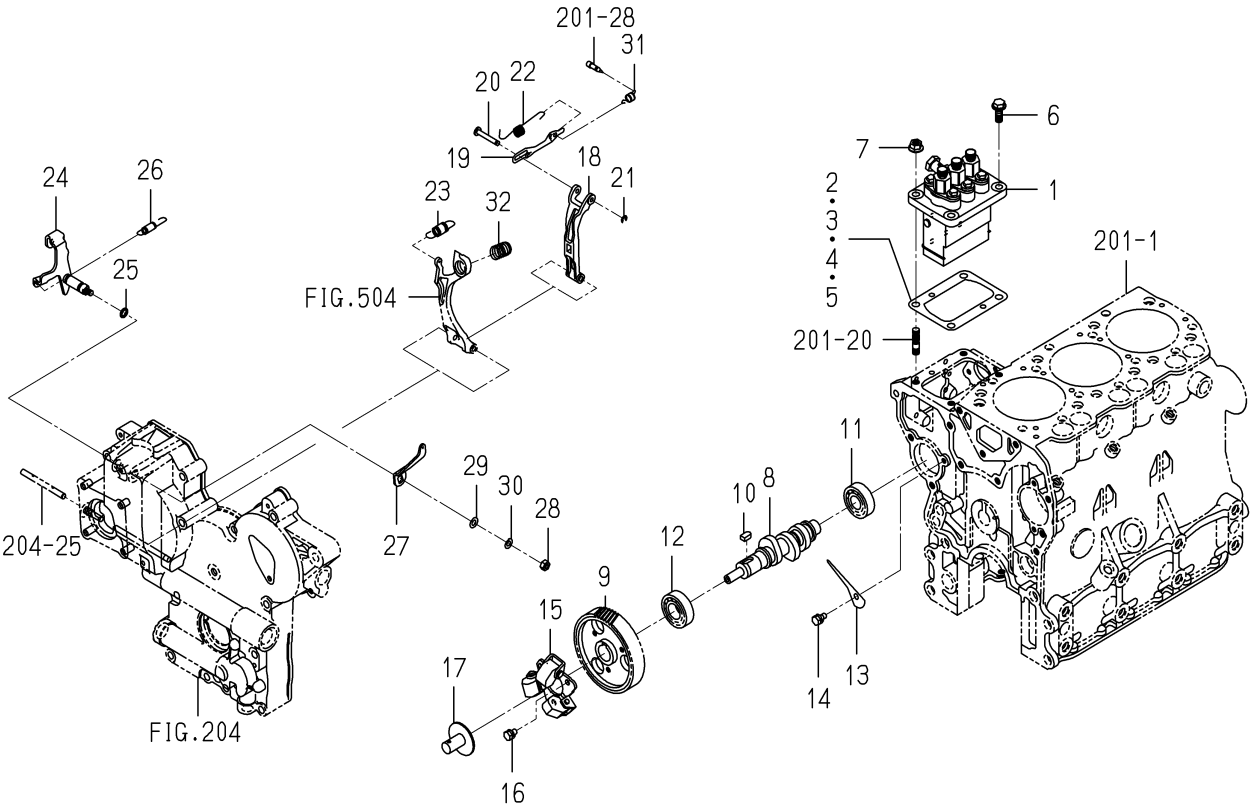

6005-510X-0100

KEY	PART CODE	DESCRIPTION	SPC	TYPE OF MODEL E3CD VG02		ITC	COL	GRP	REMARKS
1	6215-600-104-20	INJECTIONPUMP ASSY	*	1					FIG S02
2	6219-752-045-00	SHIM/INJECTIONPUMP	*	1					
3	6219-752-044-00	SHIM/INJECTIONPUMP	*	1					
4	6219-752-046-00	SHIM/INJECTIONPUMP	*	1					
5	6219-752-047-00	SHIM/INJECTIONPUMP	*	1					
6	V231-360-802-00	FLANGEBOLT	*	2					
7	3817-401-001-00	NUT/M08	*	2					
8	6215-621-017-10	CAMSHAFT/INJPUMP	*	1					
9	6212-524-006-30	GEAR/INJECTIONPUMP	*	1					
10	6209-730-005-00	KEY/07X05X09	*	1					
11	V600-110-620-30	BEARING,RB/6203	*	1					
12	V600-110-600-40	BEARING,RB/6004	*	1					
13	6212-535-009-00	PLATE/THRUST/INJPUMP	*	1					
14	6901-910-612-00	BOLT,SEMS/M6X12	*	1					
15	6215-520-007-10	FLYWEIGHT ASSY	*	1					
16	6209-030-043-00	BOLT/M6X10	*	3					
17	6215-526-004-00	THRUSTPIECE	*	1					
18	6215-541-001-10	ARM/FLOATING COMP	*	1					
19	6215-543-002-10	RINK/CONTROL	*	1					
20	6215-542-006-00	PIN,CONTROL	*	1					
21	V710-140-004-00	RING,SNAP/ 4 E	*	1					
22	6215-549-031-10	SPRING/SETTING	*	1					
23	6215-531-010-00	SPRING/GOVERNOR	*	1					
24	- - - - - -	BLANK	*						- - - - - -
24	6215-541-044-00	LEVER/CONTROL COMP	*	1					
25	V720-101-900-80	O-RING/P 8	*	1					
26	6209-580-002-10	SPRING,RETURN	*	1					
27	- - - - - -	BLANK	*						- - - - - -
27	- - - - - -	BLANK	*						- - - - - -
27	6215-549-076-10	ARM/CONTROL	*	1					

FIG.502 INJECTION PUMP

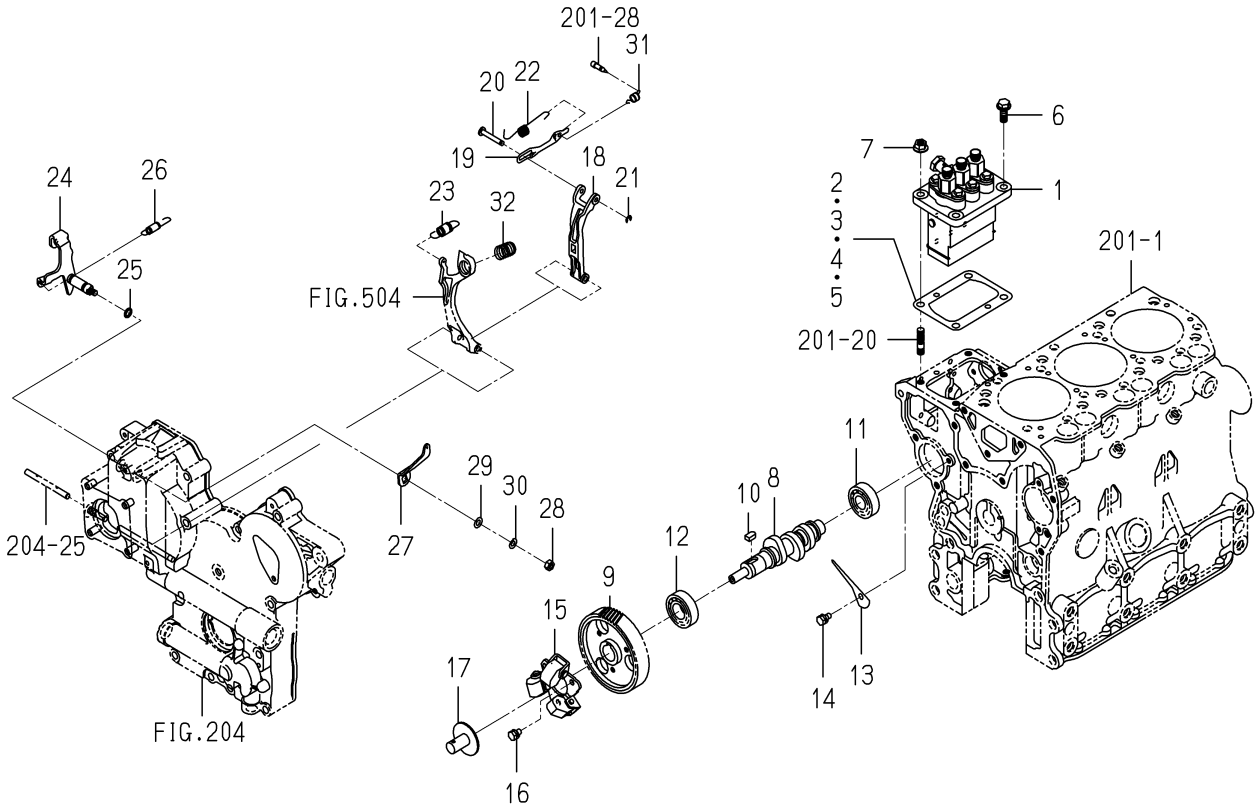

6005-510X-0100

KEY	PART CODE	DESCRIPTION	SPC	TYPE OF MODEL E3CD VG02		ITC	COL	GRP	REMARKS
28	- - - - - -	BLANK	*						- - - - - -
28	V301-260-006-00	NUT/M6	*	1					
29	V411-260-006-00	WASHER / M6	*	1					
30	V401-160-006-00	WASHER,SP/M 6	*	1					
31	6215-549-039-00	SPRING/STARTING	*	1					
32	6215-537-002-10	SPRING/IDLE	*	1					

FIG.503 FUEL PIPE

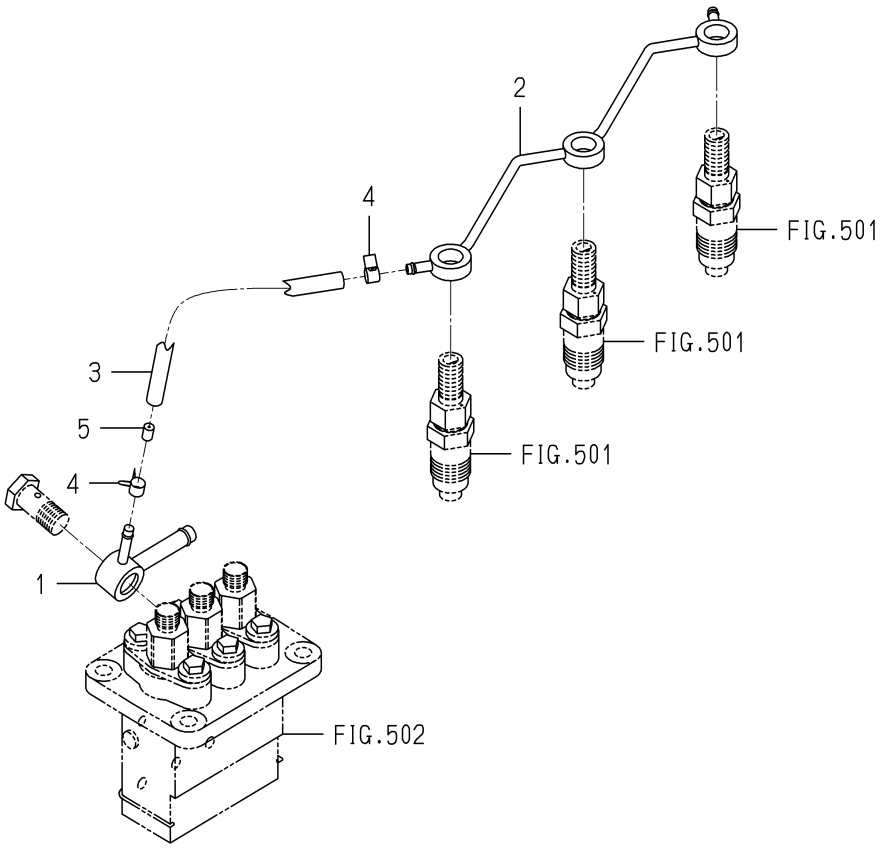

6005-550F-0100

KEY	PART CODE	DESCRIPTION	SPC	TYPE OF MODEL E3CD VG02		ITC	COL	GRP	REMARKS
1	6215-412-004-00	CONNECTOR/FUEL	*	1					
2	6215-411-136-00	PIPE/FUEL	*	1					
3	6209-360-011-00	HOSE/RUBBER	*	1					
4	J062-076-082-00	CLIP/HOSE/7.6-8.2	*	2					
5	3640-586-004-00	RESISTANCE/1.0	*	1					

FIG.504 ADAPTER

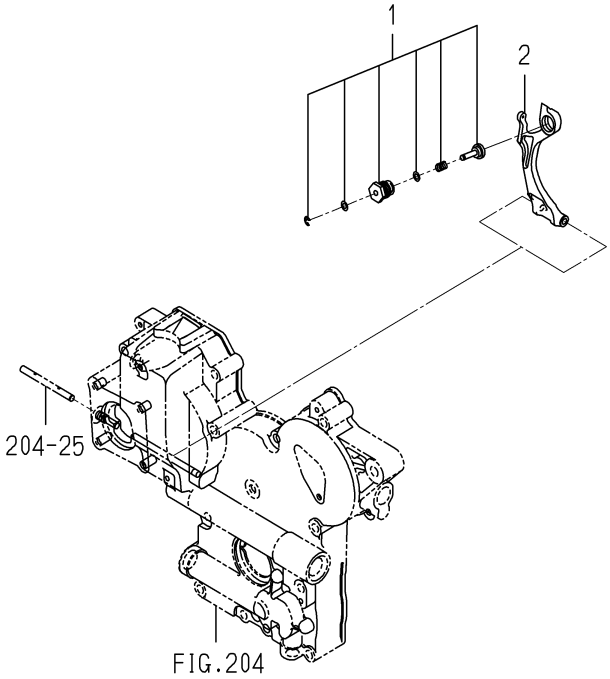

6005-560X-0100

KEY	PART CODE	DESCRIPTION	SPC	TYPE OF MODEL E3CD VG02		ITC	COL	GRP	REMARKS
1	6215-548-069-00	ADAPTER/260X120 ASSY	*	1					
2	- - - - - -	BLANK	*						- - - - - -
2	6215-541-016-40	ARM/TENSION	*	1					

FIG.801 ELECTRIC (1)

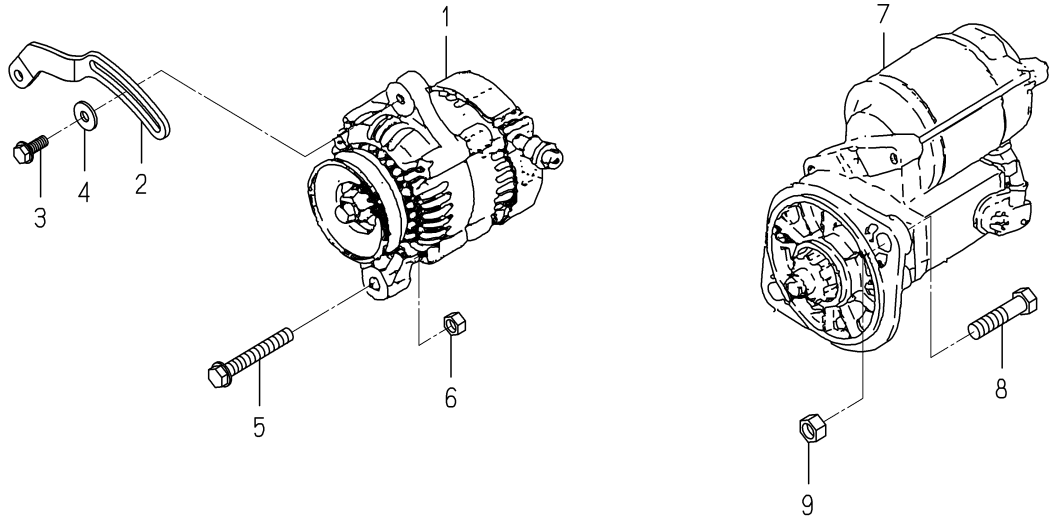

6005-801R-0100,6005-801R-0200

KEY	PART CODE	DESCRIPTION	SPC	TYPE OF MODEL E3CD VG02		ITC	COL	GRP	REMARKS
1	6281-200-020-00	GENERATOR ASSY	*	1					FIG S04
2	6213-674-006-20	PLATE/ADJUST	*	1					
3	V231-360-802-00	FLANGEBOLT	*	1					
4	1373-121-001-00	WASHER/9X22X2	*	1					
5	V233-361-007-00	FLANGEBOLT	*	1					
6	- - - - - -	BLANK	*						- - - - - -
6	V334-260-010-00	NUT/M10	*	1					
7	6281-100-002-30	STARTER ASSY	*	1					FIG S03
8	6901-931-240-00	BOLT	*	2					
9	V304-260-012-00	NUT/M12	*	2					

FIG.802 ELECTRIC (2)

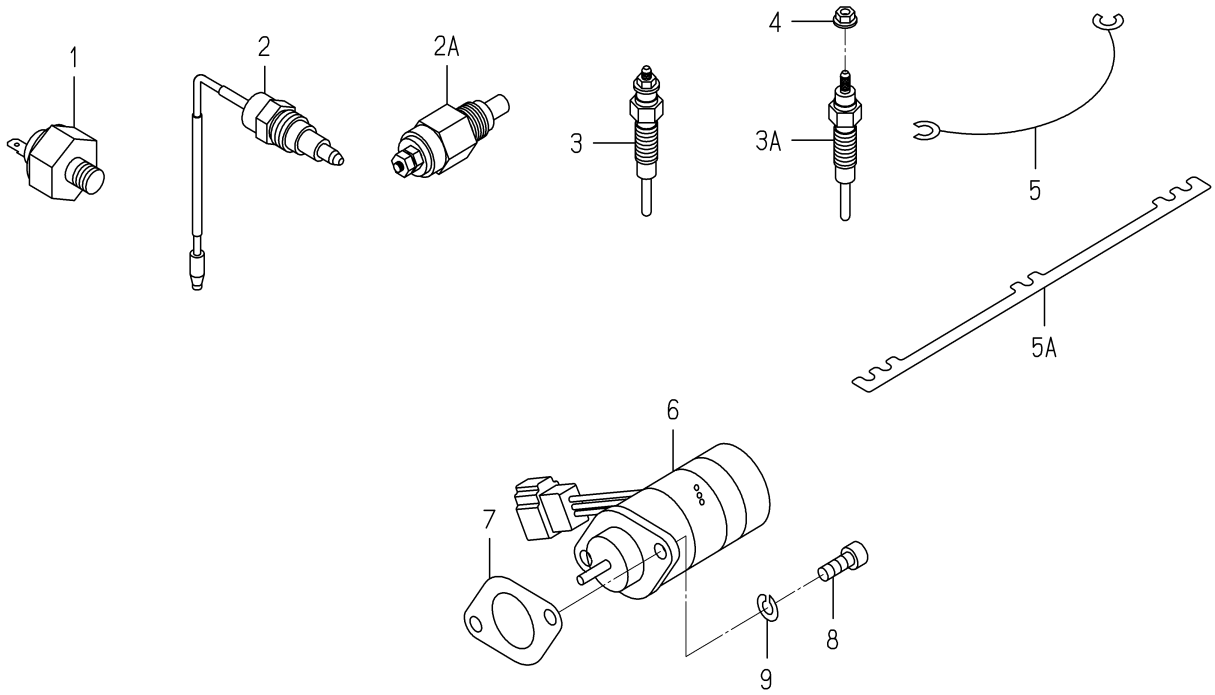

6005-820P-0100,6005-820P-0200

KEY	PART CODE	DESCRIPTION	SPC	TYPE OF MODEL E3CD VG02		ITC	COL	GRP	REMARKS
1	6281-971-001-10	SWITCH/OILPRESSURE	*	1					
2	- - - - - -	BLANK	*						- - - - - -
2A	6282-450-008-00	SWITCH/OVERHEAT	*	1					
3	- - - - - -	BLANK	*						- - - - - -
3A	6281-410-023-10	GLOWPLUG	*	3					
4	6209-440-005-00	NUT/FLANGE	*	3					
5	- - - - - -	BLANK	*						- - - - - -
5A	6219-732-017-00	CONNECTOR/GLOWPLUG	*	1					
6	6281-910-011-00	SOLENOID	*	1					
7	6209-630-002-10	GASKET	*	1					
8	V220-540-601-60	BOLT	*	2					
9	V401-160-006-00	WASHER,SP/M 6	*	2					

FIG.P01 SHORT BLOCK ENGIASSY

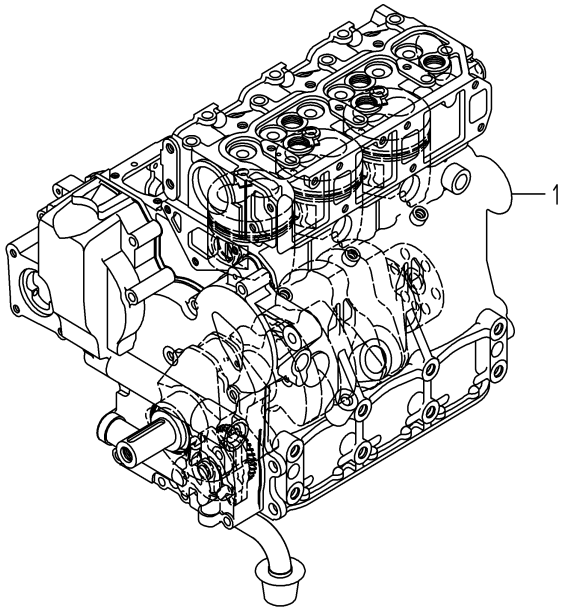

6005-015J-0100

KEY	PART CODE	DESCRIPTION	SPC	TYPE OF MODEL E3CD VG02		ITC	COL	GRP	REMARKS
1	6005-010-148-00	SHORTBLOCKENGIN ASSY	T	1					

FIG.P02 BEARING/UNDER SIZE (OPTION)

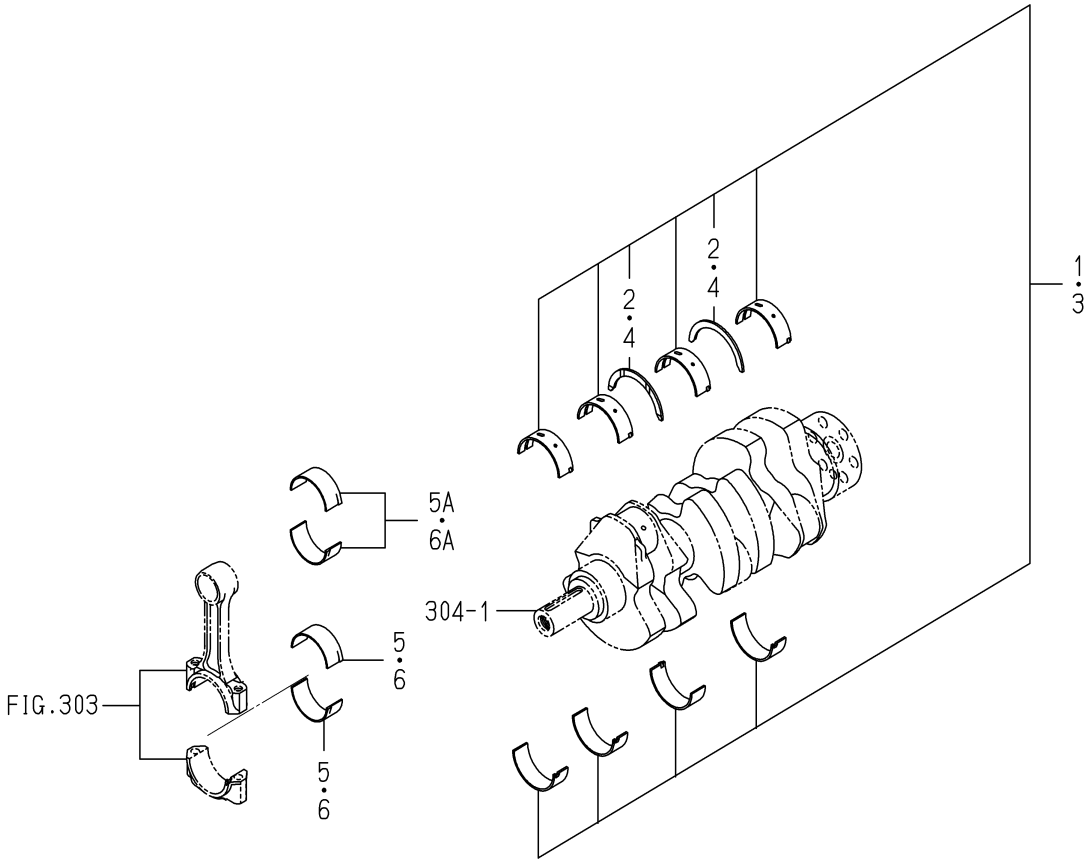

6005-209 -0100

KEY	PART CODE	DESCRIPTION	SPC	TYPE OF MODEL E3CD VG02		ITC	COL	GRP	REMARKS
1	6211-530-008-00	BEARING/CRANK/UNDER	T	1					
2	6211-599-004-00	BEARING/THRUST/CRANK	T	2					
3	6211-540-008-00	BEARING/CRANK/UNDER	T	1					
4	6211-599-004-00	BEARING/THRUST/CRANK	T	2					
5	- - - - - -	BLANK	T						- - - - - -
5A	6212-273-009-00	BEARING/CONNECTING R	T	3					
6	- - - - - -	BLANK	T						- - - - - -
6A	6212-274-009-00	BEARING/CONNECTING R	T	3					

FIG.P03 PISTON/OVER SIZE (OPTION)

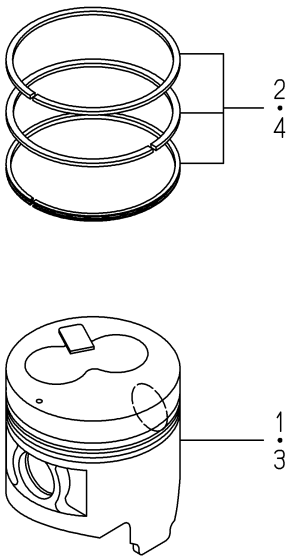

6005-349P-0100

KEY	PART CODE	DESCRIPTION	SPC	TYPE OF MODEL E3CD VG02		ITC	COL	GRP	REMARKS
1	6212-114-095-30	PISTON/OV	T	3					
2	- - - - - -	BLANK	T						- - - - - -
2	6212-124-028-10	RING/PISTON/OVSET	T	3					
3	6212-116-095-30	PISTON/OV	T	3					
4	- - - - - -	BLANK	T						- - - - - -
4	6212-126-028-10	RING/PISTON/OVSET	T	3					

FIG.P04 REPAIR PARTS (OPTION)

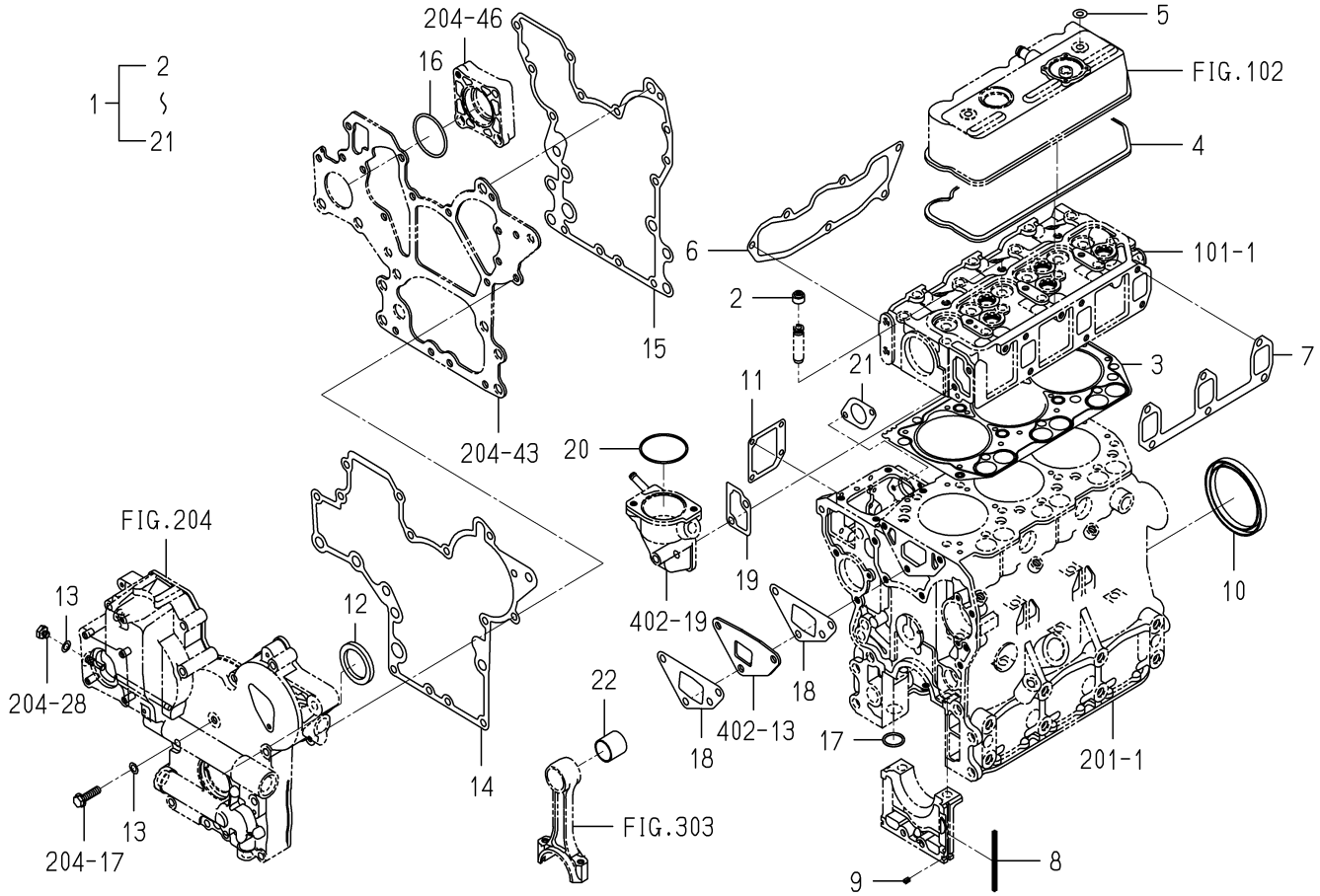

6005-999I-0100

KEY	PART CODE	DESCRIPTION	SPC	TYPE OF MODEL E3CD VG02		ITC	COL	GRP	REMARKS
1	6287-810-032-10	REPAIR/ENGINESET	T	1					
2	6212-569-002-00	SEAL,OIL	T	6					
3	6211-141-057-10	GASKET/CYLINDERHEAD	T	1					
4	6211-173-005-00	SEAL/CYL HEAD/UNDER	T	1					
5	6209-572-003-00	GASKET	T	2					
6	6214-115-003-10	GASKET/INLETMANIFOLD	T	1					
7	6214-145-004-20	GASHET/EXH MANIFOLD	T	1					
8	6211-258-001-00	SEAL,BEARING CAP	T	4					
9	6211-258-002-00	SEAL,BEARING CAP/7	T	2					
10	6209-625-003-20	OILSEAL	T	1					
11	6211-292-001-20	GASKET/COVER	T	1					
12	6209-625-002-00	SEAL,OIL	T	1					
13	6209-500-003-00	WASHER/08X14X01	T	2					
14	6211-312-005-10	GASKET/GEARCASE	T	1					
15	6211-312-006-10	GASKET/PLATE	T	1					
16	V723-102-005-00	O-RING 1A S50	T	1					
17	V720-103-502-20	O-RING/P22	T	1					
18	6213-614-001-10	GASKET,WATER PUMP	T	2					
19	6213-743-002-10	GASKET/HOUSING	T	1					
20	V723-102-005-50	O-RING	T	1					
21	6209-630-002-10	GASKET	T	1					
22	- - - - - -	BLANK	T						- - - - - -

FIG.S01 COMPONENT PARTS FOR 6215-300-045-10 ON Fig.501

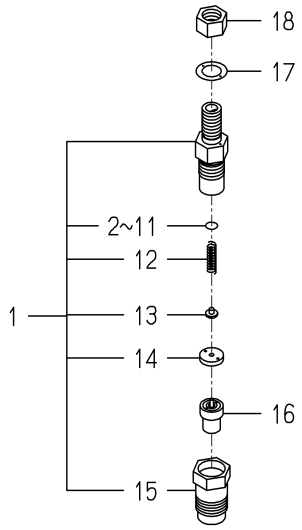

6215-300-045-1B

KEY	PART CODE	DESCRIPTION	SPC	TYPE OF MODEL E3CD VG02		ITC	COL	GRP	REMARKS
1	6215-330-028-00	HOLDER/NOZZLEASSY	*	3					
2	6215-345-044-00	SHIM/0.10	*	3					
3	6215-345-045-00	SHIM/0.20	*	3					
4	6215-345-046-00	SHIM/0.30	*	3					
5	6215-345-047-00	SHIM/0.40	*	3					
6	6215-345-048-00	SHIM/0.50	*	3					
7	6215-345-049-00	SHIM/0.52	*	3					
8	6215-345-050-00	SHIM/0.54	*	3					
9	6215-345-051-00	SHIM/0.56	*	3					
10	6215-345-052-00	SHIM/0.58	*	3					
11	6215-345-053-00	SHIM/0.80	*	3					
12	6215-343-010-00	SPRINGNOZZLE	*	3					
13	6215-342-013-00	SPRINGSEAT	*	3					
14	6215-339-004-00	SPACER	*	3					
15	6215-332-014-00	NUT/NOZZLERETAINING	*	3					
16	6215-311-036-00	NOZZLE	*	3					
17	6215-359-003-00	GASKET	*	3					
18	6215-359-004-00	NUT	*	3					

FIG.S02 COMPONENT PARTS FOR 6215-600-104-20 ON Fig.502

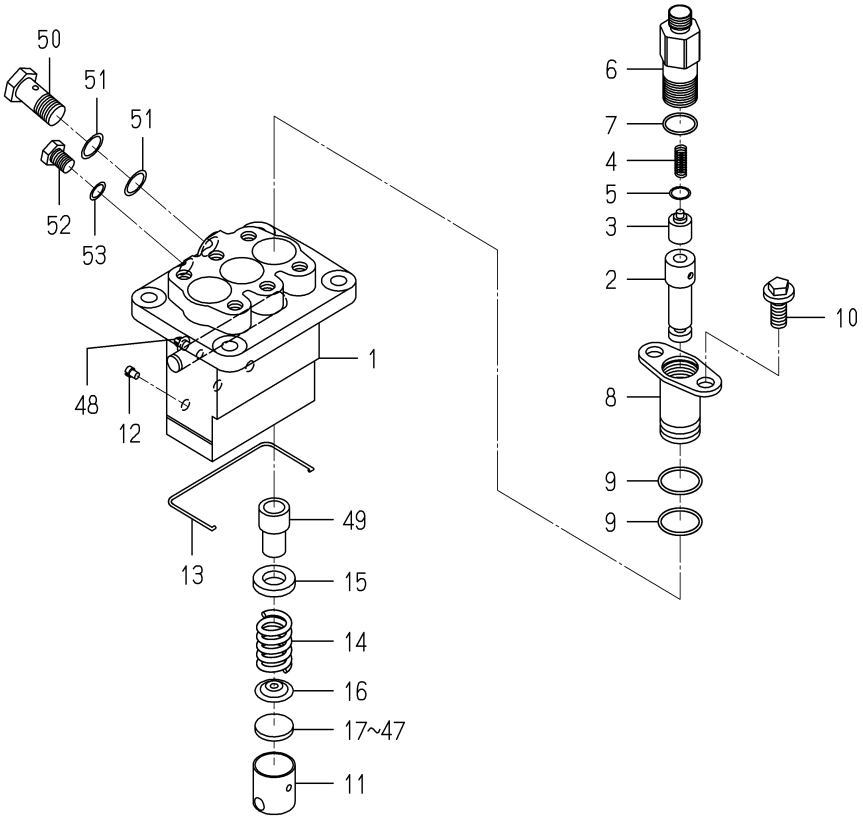

6215-600-104-2E

KEY	PART CODE	DESCRIPTION	SPC	TYPE OF MODEL E3CD VG02		ITC	COL	GRP	REMARKS
1	6215-611-015-00	HOUSING/PUMP	*	1					
2	6215-631-015-00	PLUNGER ASSY	*	3					
3	6215-641-002-00	VALVE,DELIVERY	*	3					
4	6215-643-005-00	SPRING/DELIVERYVALVE	*	3					
5	6215-649-008-00	GASKET	*	3					
6	6215-644-009-00	HOLDER/DELIVERYVALVE	*	3					
7	6215-649-014-00	ORING	*	3					
8	6215-635-004-00	SLEEVEFLANGE	*	3					
9	6215-649-013-00	ORING	*	6					
10	6215-649-011-00	BOLT	*	6					
11	6215-622-003-00	TAPPET	*	3					
12	6215-629-017-00	PIN	*	3					
13	6215-629-035-00	SNAPRING	*	1					
14	6215-634-003-00	SPRING/PLUNGER	*	3					
15	6215-639-008-00	SPRINGSEAT	*	3					
16	6215-639-009-00	SPRINGSEAT	*	3					
17	6215-629-060-00	PLATE/T=2.60	*	1					
18	6215-629-061-00	PLATE/T=2.65	*	1					
19	6215-629-062-00	PLATE/T=2.70	*	1					
20	6215-629-063-00	PLATE/T=2.75	*	1					
21	6215-629-064-00	PLATE/T=2.80	*	1					
22	6215-629-065-00	PLATE/T=2.85	*	1					
23	6215-629-066-00	PLATE/T=2.90	*	1					
24	6215-629-067-00	PLATE/T=2.95	*	1					
25	6215-629-036-00	PLATE/T=3.00	*	1					
26	6215-629-037-00	PLATE/T=3.05	*	1					
27	6215-629-038-00	PLATE/T=3.10	*	1					
28	6215-629-039-00	PLATE/T=3.15	*	1					
29	6215-629-040-00	PLATE/T=3.20	*	1					
30	6215-629-041-00	PLATE/T=3.25	*	1					

FIG.S02 COMPONENT PARTS FOR 6215-600-104-20 ON Fig.502

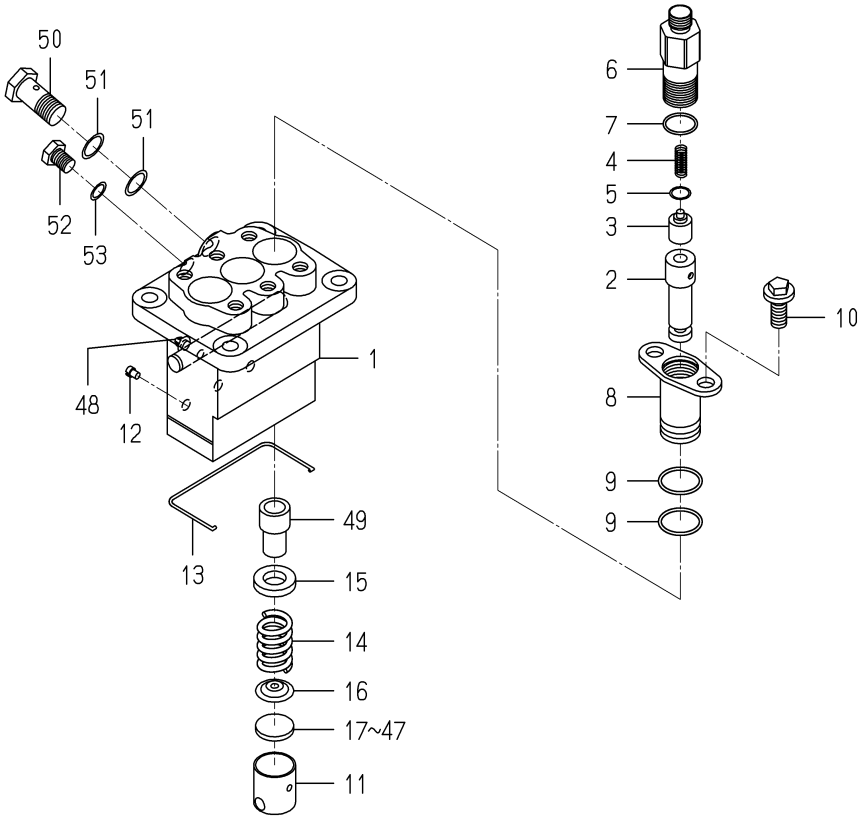

6215-600-104-2E

KEY	PART CODE	DESCRIPTION	SPC	TYPE OF MODEL E3CD VG02		ITC	COL	GRP	REMARKS
31	6215-629-042-00	PLATE/T=3.30	*	1					
32	- - - - - -	BLANK	*						- - - - - -
32	6215-629-043-00	PLATE/T=3.35	*	1					
33	6215-629-044-00	PLATE/T=3.40	*	1					
34	6215-629-045-00	PLATE/T=3.45	*	1					
35	6215-629-046-00	PLATE/T=3.50	*	1					
36	6215-629-047-00	PLATE/T=3.55	*	1					
37	6215-629-048-00	PLATE/T=3.60	*	1					
38	6215-629-049-00	PLATE/T=3.65	*	1					
39	6215-629-050-00	PLATE/T=3.70	*	1					
40	6215-629-051-00	PLATE/T=3.75	*	1					
41	6215-629-052-00	PLATE/T=3.80	*	1					
42	6215-629-053-00	PLATE/T=3.85	*	1					
43	6215-629-054-00	PLATE/T=3.90	*	1					
44	6215-629-055-00	PLATE/T=3.95	*	1					
45	6215-629-056-00	PLATE/T=4.00	*	1					
46	6215-629-058-00	PLATE/T=4.05	*	1					
47	6215-629-059-00	PLATE/T=4.10	*	1					
48	6215-637-004-00	CONTROLRACK	*	1					
49	6215-635-005-00	CONTROLSLEEVE	*	3					
50	6215-619-023-00	EYEBOLT	*	1					
51	6115-639-008-00	GASKET	*	2					
52	6215-619-024-00	BOLT	*	1					
53	6215-359-006-00	GASKET	*	1					

FIG.S03 COMPONENT PARTS FOR 6281-100-002-30 ON Fig.801

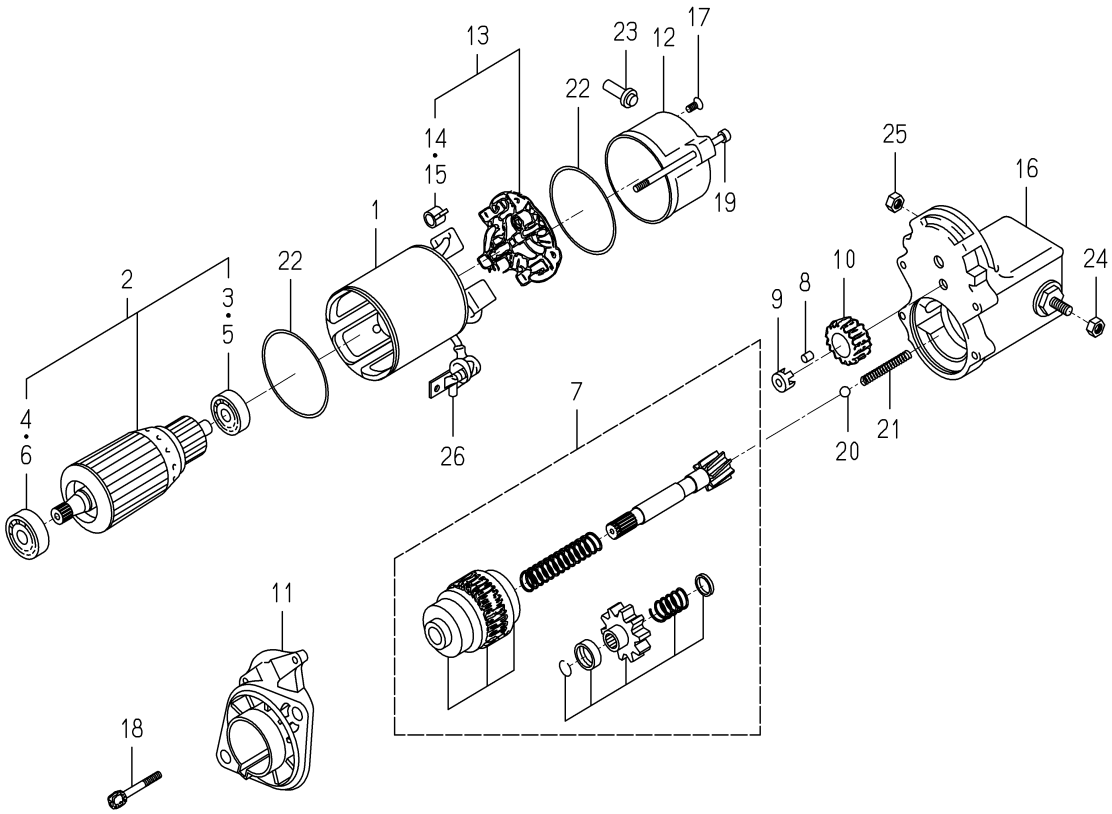

6281-100-002-3K

KEY	PART CODE	DESCRIPTION	SPC	TYPE OF MODEL E3CD VG02		ITC	COL	GRP	REMARKS
1	6281-111-005-00	YOKE/STARTER ASSY	*	1					
2	6281-121-006-00	ARMATURE/STARTE ASSY	*	1					
3	6281-129-038-00	BEARING	*	1					
4	6281-129-039-00	BEARING	*	1					
5	- - - - - -	BLANK	*						- - - - - -
6	- - - - - -	BLANK	*						- - - - - -
7	6281-124-007-10	CLUTCH/STARTER ASSY	*	1					
8	6581-129-099-00	RORA	*	5					
9	6281-129-040-00	RETAINER	*	1					
10	6281-123-005-00	PINION/STARTER	*	1					
11	6281-129-041-10	HOUSING/STARTER ASSY	*	1					
12	6281-115-008-00	FRAME/STARTEREND	*	1					
13	6281-116-004-00	HOLDER/STARTER ASSY	*	1					
14	6581-117-007-00	SPRING,BRUSH	*	4					
15	- - - - - -	BLANK	*						- - - - - -
16	- - - - - -	BLANK	*						- - - - - -
16A	6281-151-021-00	SWITCH/MAGNETIC ASSY	*	1					
17	6281-129-062-00	SCREW	*	2					
18	6281-129-042-00	BOLT/WS	*	2					
19	6281-129-043-00	BOLT/THROUGH	*	2					
20	6581-129-092-00	BALL	*	1					
21	6281-129-044-00	SPRING/RETURN	*	1					
22	6281-129-003-00	O-RING	*	2					
23	6281-115-016-00	BUSHING/DRAIN	*	1					
24	6909-111-508-00	NUT	*	1					
25	6281-229-041-00	NUT	*	1					
26	6281-115-010-00	COVER	*	1					

FIG.S04 COMPONENT PARTS FOR 6281-200-020-00 ON Fig.801

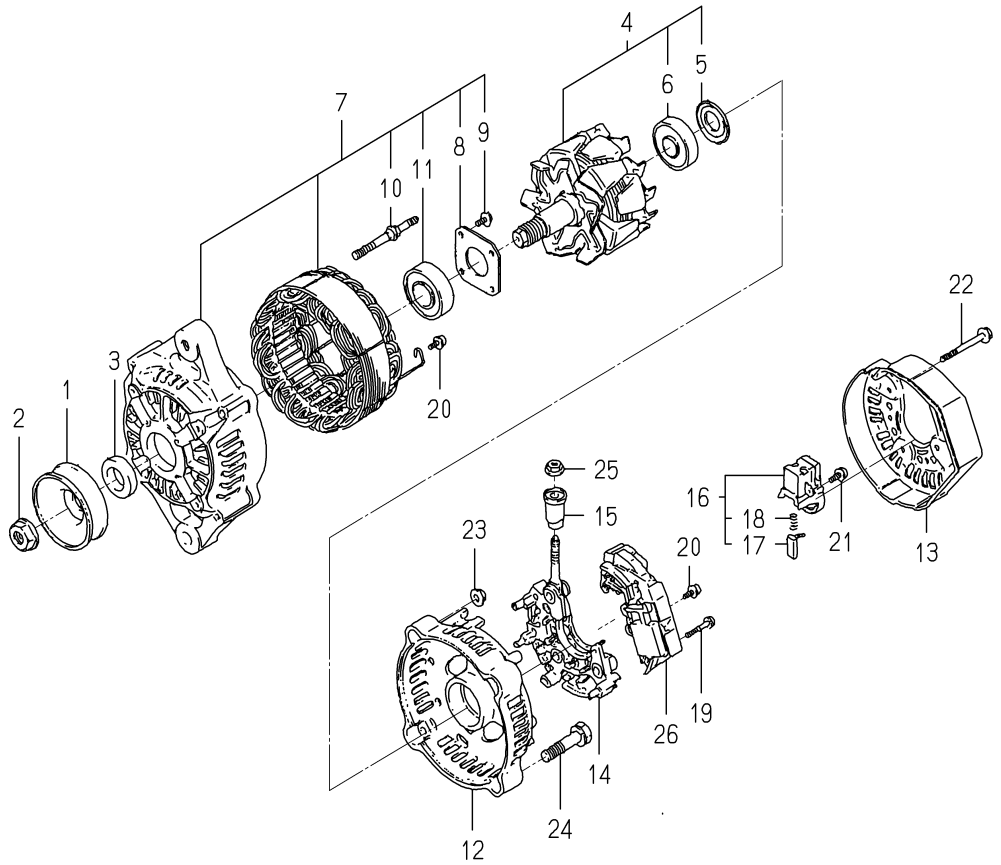

6281-200-020-0B

KEY	PART CODE	DESCRIPTION	SPC	TYPE OF MODEL E3CD VG02		ITC	COL	GRP	REMARKS
1	6281-222-012-00	PULLEY	*	1					
2	6281-229-002-00	NUT	*	1					
3	6281-229-003-00	COLLOR	*	1					
4	6281-221-007-00	ROTOR ASSY	*	1					
5	6281-229-004-00	COVER,BEARING	*	1					
6	6281-229-032-00	BEARING/BALL	*	1					
7	6281-213-017-00	FRAME/DRIVEEND ASSY	*	1					
8	6281-229-006-00	PLATE	*	1					
9	6281-229-007-00	BOLT	*	4					
10	6281-229-008-00	BOLT	*	2					
11	6281-229-033-00	BEARING/BALL	*	1					
12	6281-214-003-00	FRAME	*	1					
13	6281-214-004-00	COVER	*	1					
14	6281-229-029-00	HOLDER ASSY	*	1					
15	6281-229-011-00	BUSH	*	1					
16	6281-217-003-00	HOLDER/BRUSH ASSY	*	1					
17	6281-215-001-00	BRUSH	*	2					
18	6281-216-001-00	SPRING	*	2					
19	6281-229-012-00	BOLT	*	2					
20	6281-229-013-00	BOLT	*	6					
21	6281-229-014-00	BOLT	*	1					
22	6281-229-015-00	BOLT	*	3					
23	6281-229-016-00	NUT	*	2					
24	6281-229-017-00	BOLT	*	2					
25	6281-229-018-00	NUT	*	1					
26	6281-271-002-00	REGULATOR ASSY	*	1					

C H A S S I S

FIG.101 BRACKET(ENGINE)SYSTEM

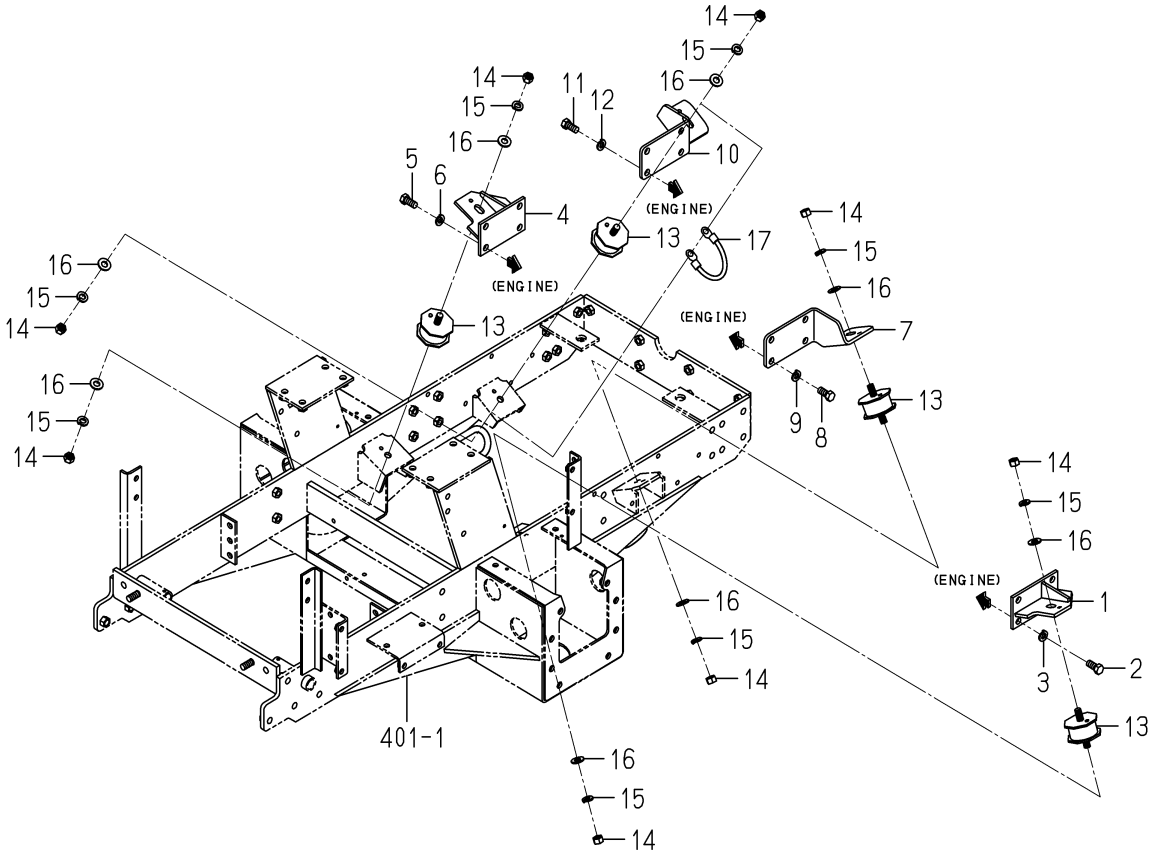

1752-101 -0100

KEY	PART CODE	DESCRIPTION	SPC	TYPE OF MODEL SZ330		ITC	COL	GRP	REMARKS
1	1752-101-200-00	BRACKET/FRONT/L COMP	*	1					
2	V201-361-202-50	BOLT/M12X25	*	4					
3	V401-160-012-00	WASHER,SP/M12	*	4					
4	1752-101-210-00	BRACKET/FRONT/R COMP	*	1					
5	V201-361-202-50	BOLT/M12X25	*	4					
6	V401-160-012-00	WASHER,SP/M12	*	4					
7	1752-101-001-00	BRACKET/REAR/LH	*	1					
8	V201-361-202-50	BOLT/M12X25	*	4					
9	V401-160-012-00	WASHER,SP/M12	*	4					
10	1752-101-002-00	BRACKET/REAR/RH	*	1					
11	V201-361-202-50	BOLT/M12X25	*	4					
12	V401-160-012-00	WASHER,SP/M12	*	4					
13	- - - - - -	BLANK	*						- - - - - -
13	3623-150-003-10	INSULATOR/MOUNT/LH	*	4					
14	V304-260-012-00	NUT/M12	*	8					
15	V401-160-012-00	WASHER,SP/M12	*	8					
16	V411-260-012-00	WASHER /M12	*	4					
17	3623-263-001-00	WIRE,LEAD	*	1					

FIG.102 RADIATOR SYSTEM

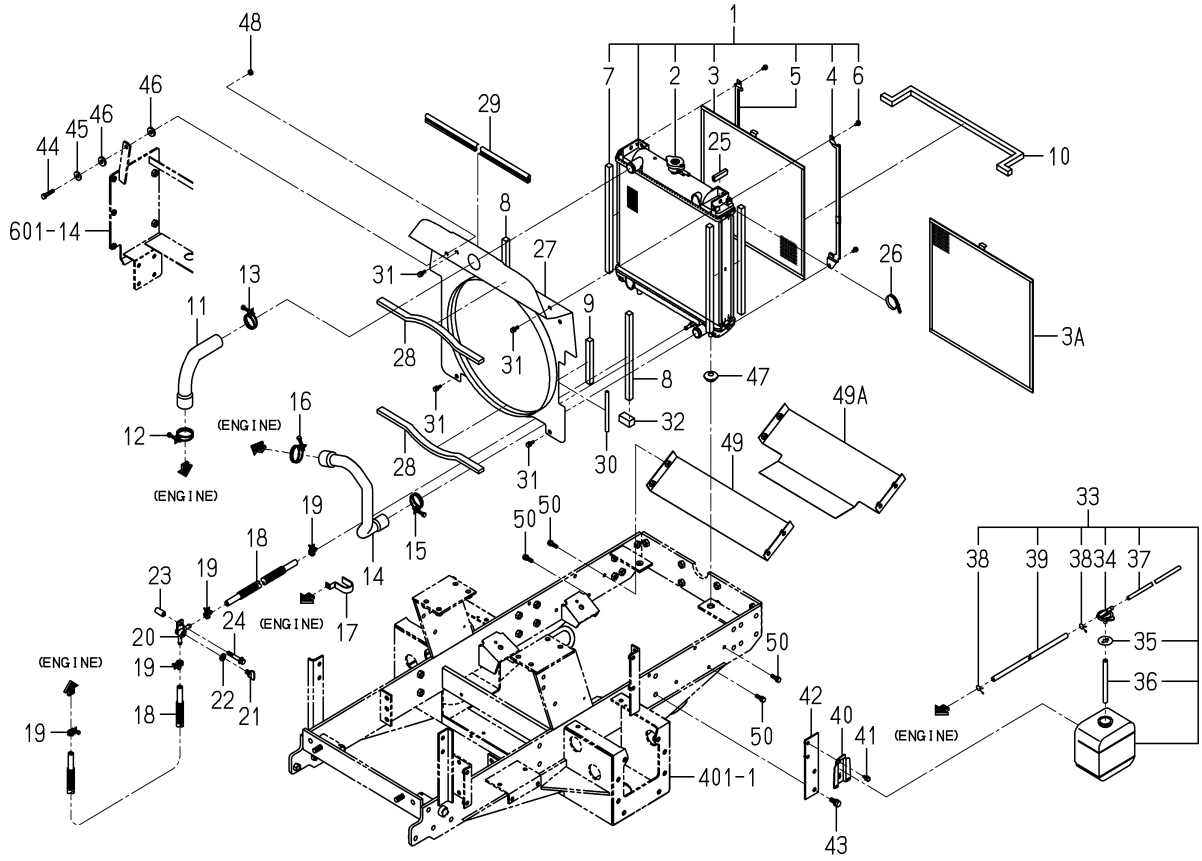

1752-102 -0100

KEY	PART CODE	DESCRIPTION	SPC	TYPE OF MODEL SZ330		ITC	COL	GRP	REMARKS
1	- - - - - -	BLANK	*						- - - - - -
1	1752-102-310-00	RADIATOR ASSY	*	1					
2	- - - - - -	BLANK	*						- - - - - -
2	1650-102-202-10	CAP	*	1					
3	- - - - - -	BLANK	*						- - - - - -
3A	1752-102-311-00	PROTECTOR	*	1					
4	- - - - - -	BLANK	*						- - - - - -
4	1740-102-503-00	GUIDE/LH	*	1					
5	- - - - - -	BLANK	*						- - - - - -
5	1740-102-504-00	GUIDE/RH	*	1					
6	- - - - - -	BLANK	*						- - - - - -
6	1703-102-203-00	SCREW/P	*	4					
7	- - - - - -	BLANK	*						- - - - - -
7	1740-102-505-00	PACKING	*	4					
8	1752-102-005-00	INSULATOR/15X15X280	*	2					
9	1752-102-006-00	INSULATOR/15X15X140	*	1					
10	1752-102-007-00	INSULATOR/15X15X650	*	2					
11	1752-102-001-00	HOSE/RADIATOR/UPPER	*	1					
12	- - - - - -	BLANK	*						- - - - - -
12	J061-236-044-00	CLAMP/WIRE/36-44	*	1					
13	J061-230-038-00	CLAMP/WIRE/30-38	*	1					
14	1752-102-002-00	HOSE/RADIATOR/LOWER	*	1					
15	J061-230-038-00	CLAMP/WIRE/30-38	*	1					
16	- - - - - -	BLANK	*						- - - - - -
16	J061-236-044-00	CLAMP/WIRE/36-44	*	1					
17	1617-102-007-00	CLAMP	*	1					
18	1752-102-011-00	HOSE/350	*	2					
19	J061-210-015-00	CLAMP/WIRE/10-15	*	4					
20	1560-104-010-40	CONNECTOR	*	1					
21	1424-101-203-00	PLUG	*	1					

FIG.102 RADIATOR SYSTEM

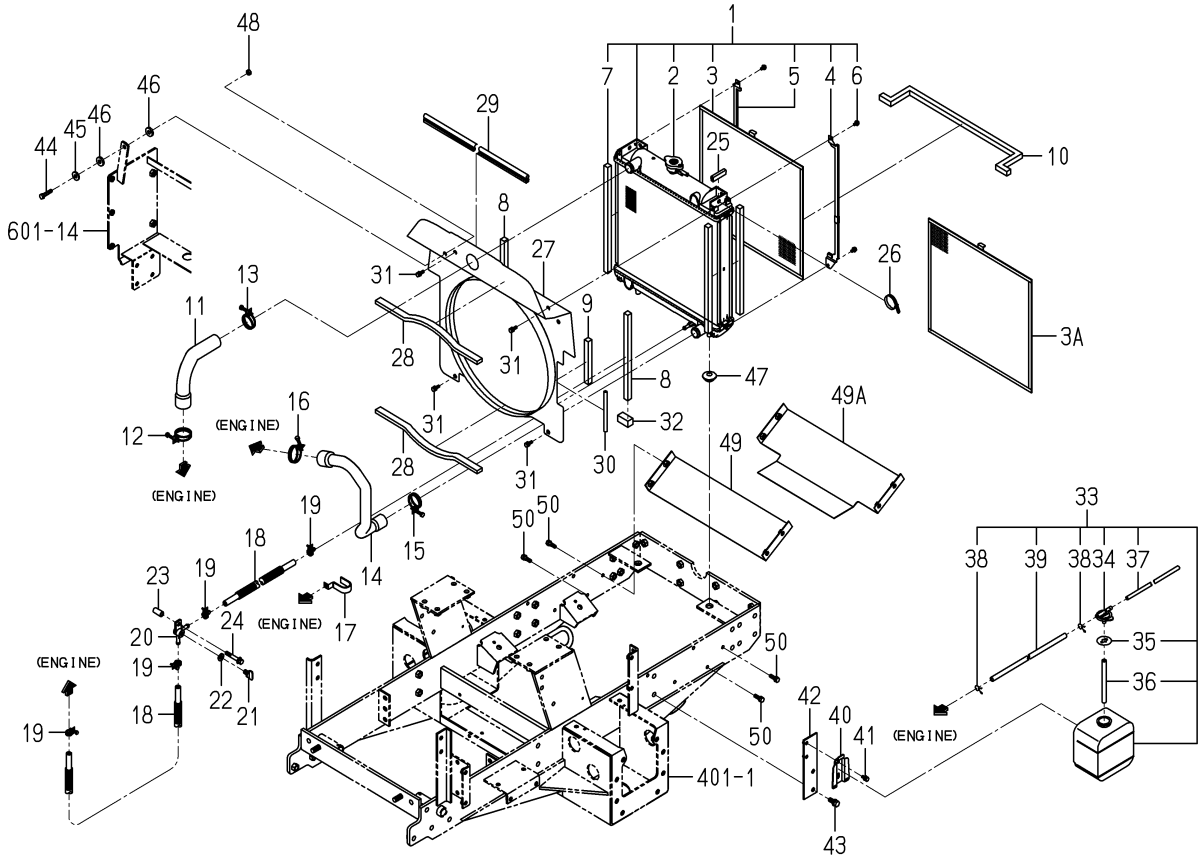

1752-102 -0100

KEY	PART CODE	DESCRIPTION	SPC	TYPE OF MODEL SZ330		ITC	COL	GRP	REMARKS
22	1424-101-204-00	PACKING	*	1					
23	1636-102-012-00	COLLAR/09X13X28	*	1					
24	V211-360-805-50	BOLT/M8X55	*	1					
25	- - - - - -	BLANK	*						- - - - - -
25	3666-202-005-10	PAD/50	*	1					
26	1376-402-003-00	BAND,WIRE/140	*	2					
27	1752-102-210-00	SHROUD COMP	*	1					
28	1675-102-002-00	INSULATOR	*	2					
29	1752-102-004-00	INSULATOR/1100	*	1					
30	1705-102-014-00	TRIM/130	*	1					
31	V210-360-602-00	BOLT/SP	*	4					
32	1752-102-008-00	INSULATOR/20X20X40	*	2					
33	1690-102-210-00	RESERVETANK ASSY	*	1					
34	1690-102-212-00	CAP	*	1					
35	1690-102-213-00	PACKING	*	1					
36	1690-102-214-00	HOSE/RUBBER	*	1					
37	1690-102-215-00	HOSE/RUBBER	*	1					
38	1690-102-216-00	CLUMP	*	2					
39	1690-102-217-00	HOSE/RUBBER	*	1					
40	1650-658-333-00	BRACKET	*	1					
41	V210-360-601-60	BOLT(SP)/M6X16	*	2					
42	1752-102-250-00	STAY/TANK COMP	*	1					
43	V211-261-002-50	BOLT(S) M10X25	*	2					
44	V201-260-803-50	BOLT/M 8X35	*	2					
45	4101-102-038-00	WASHER/24X9X3.2	*	2					
46	1423-616-004-00	CUSHION/RUBBER/10X25	*	4					
47	1421-603-004-00	BUSH,LEVER	*	2					
48	V304-260-008-00	NUT	*	2					
49	- - - - - -	BLANK	*						- - - - - -
49A	1752-102-270-10	PLATE/LOWER COMP	*	1					

FIG.102 RADIATOR SYSTEM

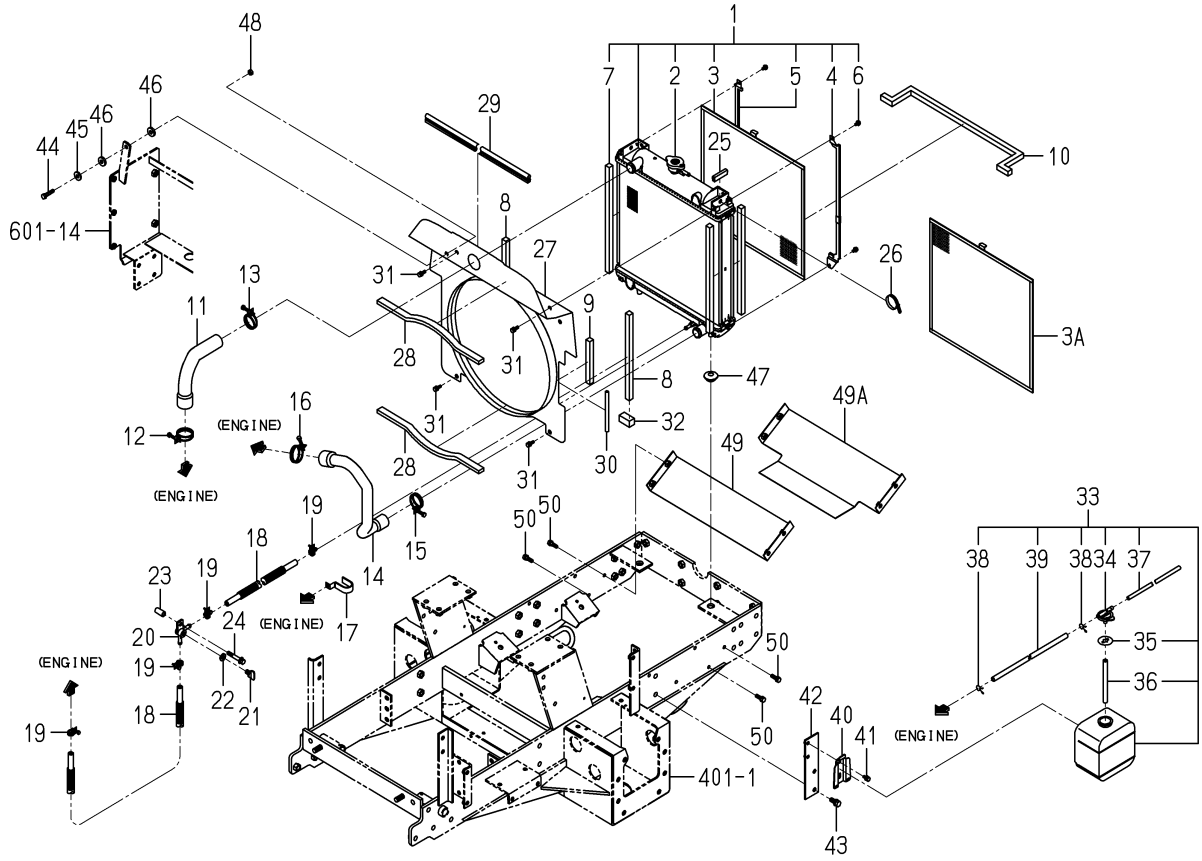

1752-102 -0100

KEY	PART CODE	DESCRIPTION	SPC	TYPE OF MODEL SZ330		ITC	COL	GRP	REMARKS
50	V211-260-802-50	BOLT/S	*	4					

FIG.103 MUFFLER SYSTEM

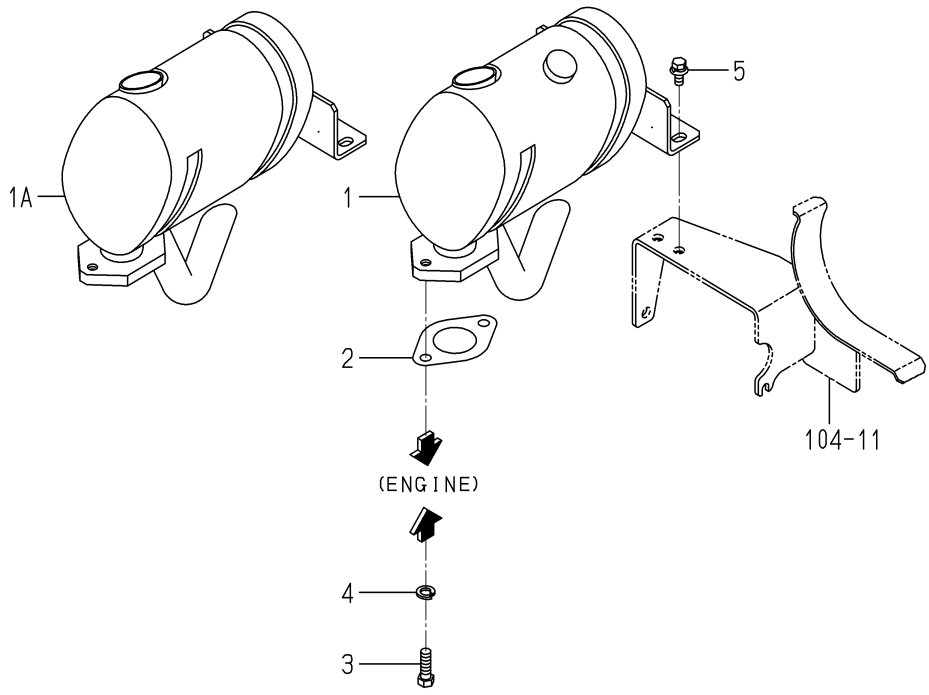

1752-103 -0100

KEY	PART CODE	DESCRIPTION	SPC	TYPE OF MODEL SZ330		ITC	COL	GRP	REMARKS
1	- - - - - -	BLANK	*						- - - - - -
1A	- - - - - -	BLANK	*						- - - - - -
1A	- - - - - -	BLANK	*						- - - - - -
1A	1752-103-200-30	MUFFLER COMP	*	1					
2	- - - - - -	BLANK	*						- - - - - -
2	1596-105-001-00	GASKET	*	1					
3	V203-361-003-00	BOLT	*	2					
4	V401-160-010-00	WASHER,SP/M10	*	2					
5	V211-660-802-00	BOLT/8X20	*	2					

FIG.104 CLEANER(AIR)SYSTEM

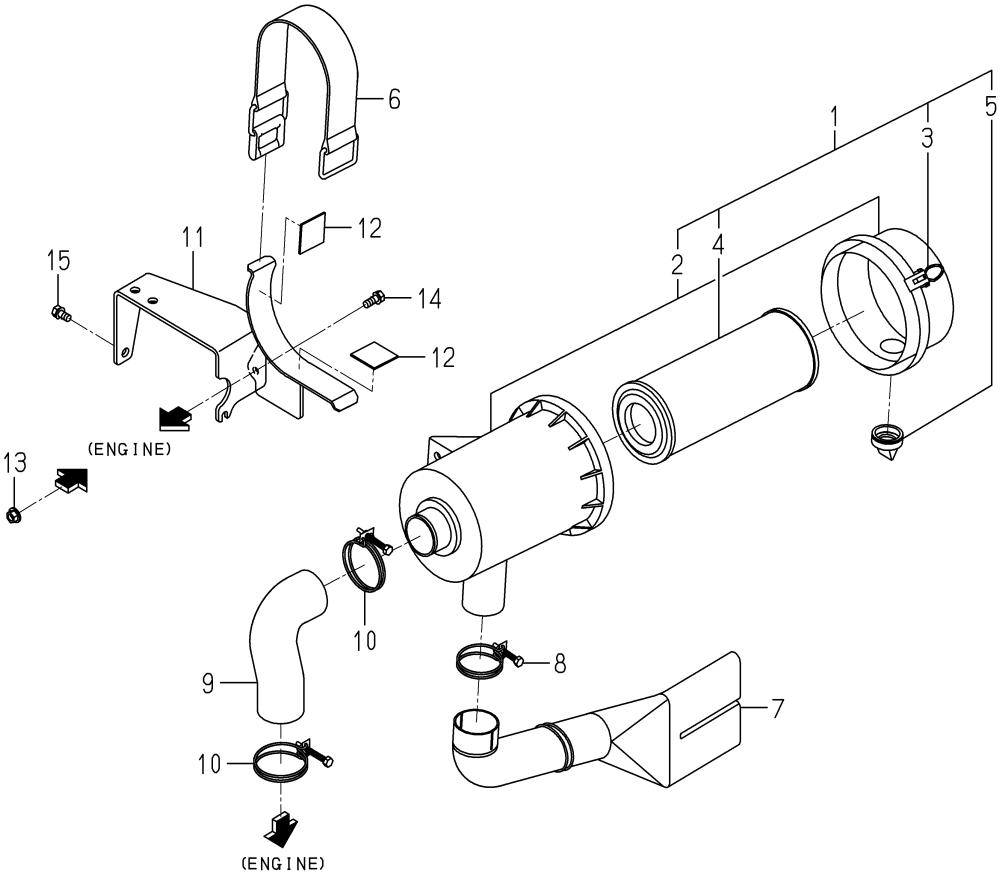

1752-104 -0100

KEY	PART CODE	DESCRIPTION	SPC	TYPE OF MODEL SZ330		ITC	COL	GRP	REMARKS
1	1650-104-200-10	CLEANER/AIR ASSY	*	1					
2	1650-104-210-00	COVER ASSY	*	1					
3	1650-104-201-00	CLIP	*	2					
4	1650-104-203-10	ELEMENT ASSY	*	1					
5	1544-104-205-00	VALVE	*	1					
6	- - - - - -	BLANK	*						- - - - - -
6	1614-104-001-10	BAND/CLEANER	*	1					
7	1677-104-001-00	PIPE/CLEANER/INLET	*	1					
8	J061-247-055-00	CLAMP/WIRE/47-55	*	1					
9	1678-104-002-00	HOSE/CLEANER/OUTLET	*	1					
10	J061-252-063-00	CLAMP/WIRE/52-63	*	2					
11	1752-104-200-00	BRACKET/CLEANER COMP	*	1					
12	1427-111-229-00	CUSHION,RUBBER	*	2					
13	V362-260-008-00	NUT/WASHER	*	1					
14	- - - - - -	BLANK	*						- - - - - -
14	V211-660-802-00	BOLT/8X20	*	2					
15	- - - - - -	BLANK	*						- - - - - -

FIG.105 PUMP(FUEL)SYSTEM

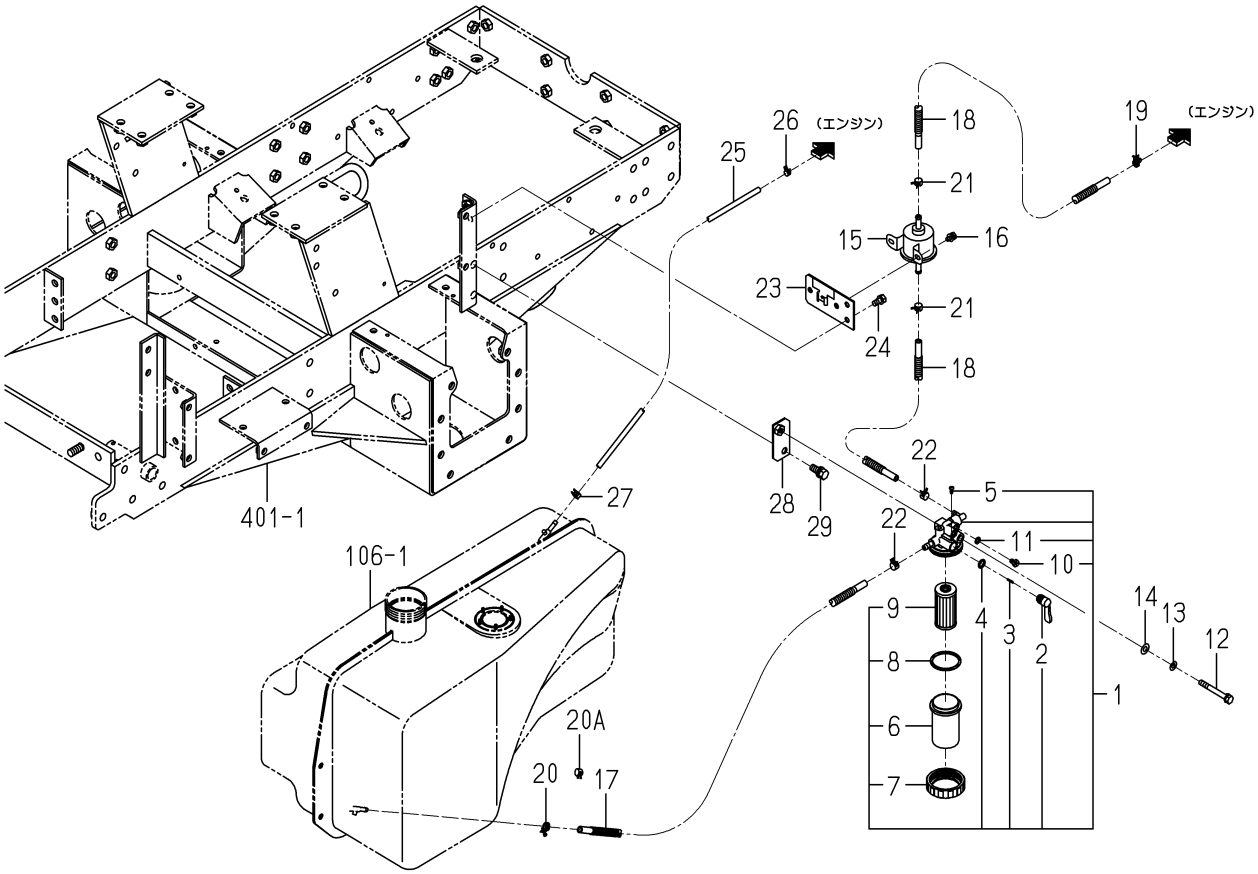

1752-105 -0100

KEY	PART CODE	DESCRIPTION	SPC	TYPE OF MODEL SZ330		ITC	COL	GRP	REMARKS
1	- - - - - -	BLANK	*						- - - - - -
1	1716-105-200-10	FILTER/FUEL ASSY	*	1					
2	1444-102-202-00	LEVER	*	1					
3	1415-102-007-00	SPRING,VALVE	*	1					
4	V720-102-401-00	O-RING/P10A	*	1					
5	1415-102-008-00	VIS	*	1					
6	1440-103-201-00	CAP	*	1					
7	1444-102-204-00	NUT,RING	*	1					
8	V720-103-504-40	O-RING/P44	*	1					
9	1672-105-211-00	ELEMENT	*	1					
10	1572-102-003-00	BOLT/M06X08/APSET	*	2					
11	1415-102-013-00	PACKING	*	2					
12	V201-260-806-50	BOLT/M 8X65	*	1					
13	V401-160-008-00	WASHER,SP/M 8	*	1					
14	V411-260-008-00	WASHER,PL/M 8	*	1					
15	3829-311-200-00	PUMP/FUEL ASSY	*	1					
16	V210-360-601-20	BOLT,SEMS	*	2					
17	1752-105-005-00	HOSE/06X10X620	*	1					
18	1427-111-007-00	HOSE/220 ASSY	*	2					
19	J061-210-012-00	CLAMP/WIRE/10-12	*	1					
20	- - - - - -	BLANK	*						- - - - - -
20A	J062-104-111-00	CLIP/HOSE/10.4-11.1	*	1					
21	J062-111-120-00	CLIP/HOSE/11.1-12	*	2					
22	J062-111-120-00	CLIP/HOSE/11.1-12	*	2					
23	1752-105-210-00	PLATE/PUMP COMP	*	1					
24	V211-260-801-60	BOLT,SEMS (S) M8X16	*	2					
25	1560-111-007-00	HOSE/500	*	1					
26	J062-087-093-00	CLIP/HOSE/8.7-9.3	*	1					
27	J062-104-111-00	CLIP/HOSE/10.4-11.1	*	1					
28	1752-105-200-00	PLATE COMP	*	1					

FIG.105 PUMP(FUEL)SYSTEM

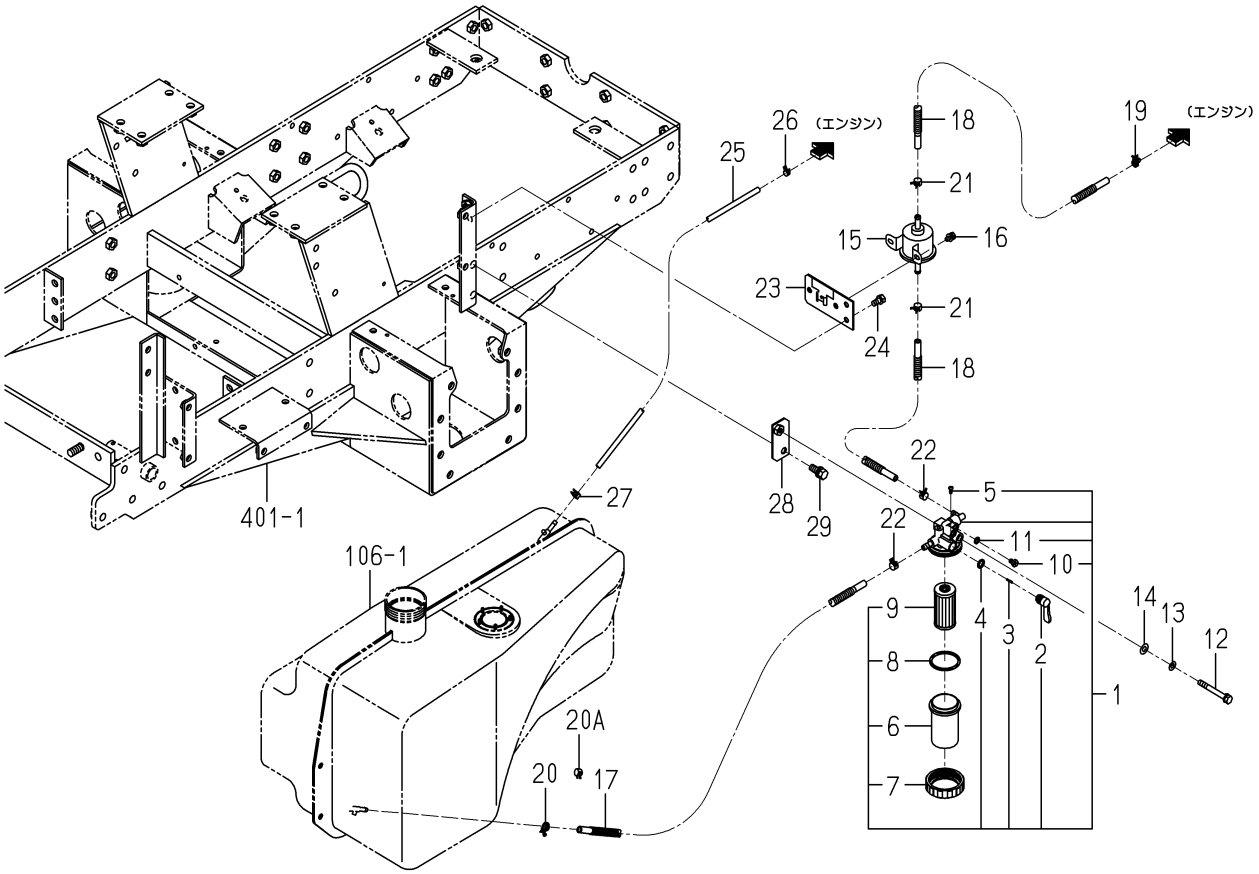

1752-105 -0100

KEY	PART CODE	DESCRIPTION	SPC	TYPE OF MODEL SZ330		ITC	COL	GRP	REMARKS
29	V211-561-002-50	BOLT/M10X25	*	1					

FIG.106 TANK(FUEL)SYSTEM

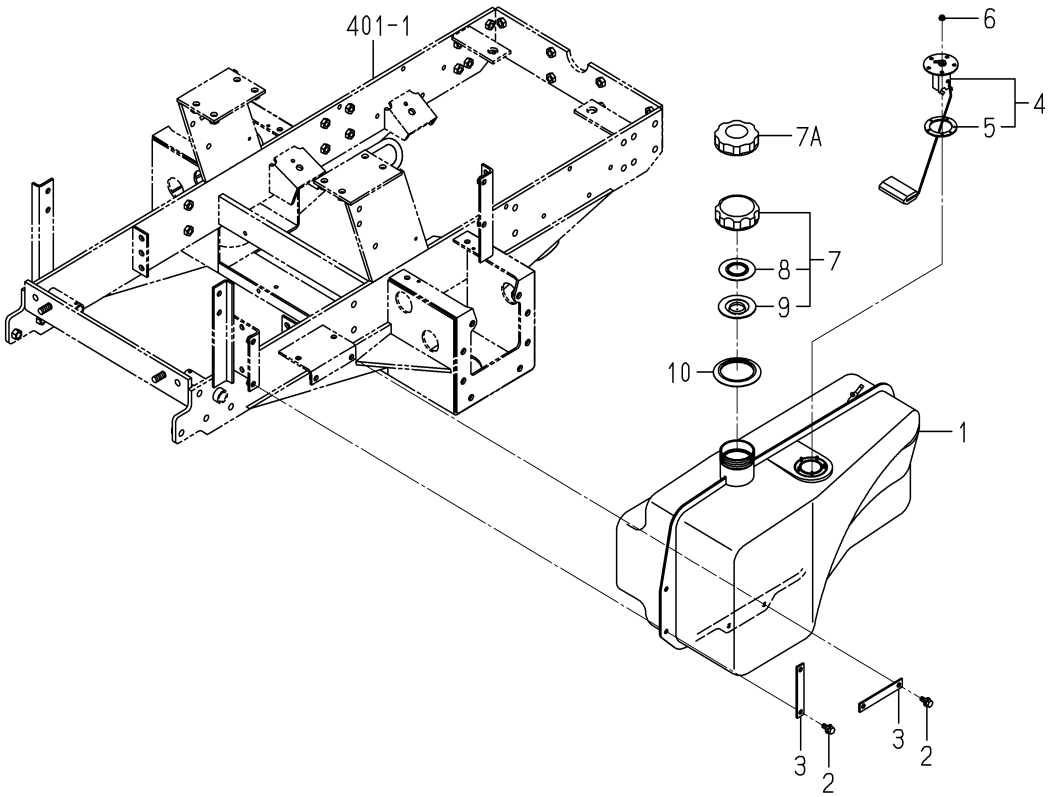

1752-111 -0100

KEY	PART CODE	DESCRIPTION	SPC	TYPE OF MODEL SZ330		ITC	COL	GRP	REMARKS
1	1752-111-001-00	TANK/FUEL	*	1					
2	- - - - - -	BLANK	*						- - - - - -
2	V211-360-802-50	BOLT/SP	*	4					
3	1557-312-241-00	FORK	*	2					
4	3676-310-210-00	GAUGE/FUEL ASSY	*	1					
5	1416-621-037-00	PACKING/RUBBER	*	1					
6	1617-730-005-00	NUT/WASHER	*	5					
7	- - - - - -	BLANK	*						- - - - - -
7A	1729-111-280-10	CAP/TANK/NONLEA ASSY	*	1					
8	- - - - - -	BLANK	*						- - - - - -
8	1729-111-283-00	PLATE	*	1					
9	- - - - - -	BLANK	*						- - - - - -
9	1729-111-284-00	PACKING	*	1					
10	1560-111-003-20	COVER	*	1					

FIG.107 BATTERY SYSTEM

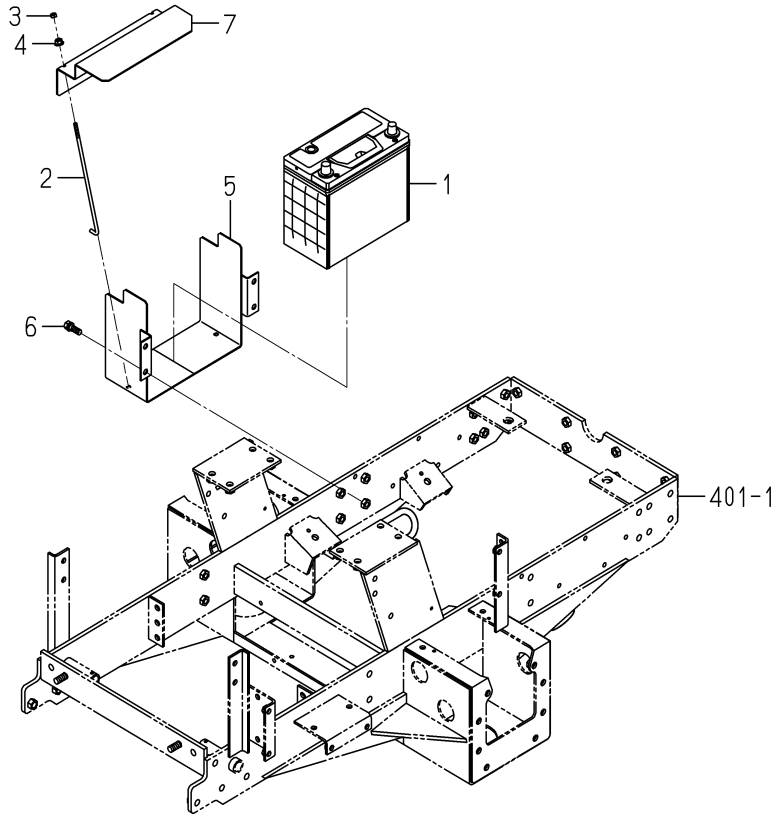

1752-112 -0100

KEY	PART CODE	DESCRIPTION	SPC	TYPE OF MODEL SZ330		ITC	COL	GRP	REMARKS
1	1684-112-300-20	BATTERY/55B24R/ ASSY	*	1					
2	1675-112-002-00	BOLT/BATTERY	*	2					
3	V301-260-006-00	NUT/M6	*	2					
4	V360-260-006-00	NUT/M6	*	2					
5	1752-112-220-00	BASE/BATTERY COMP	*	1					
6	- - - - - -	BLANK	*						- - - - - -
6	V211-561-002-50	BOLT/M10X25	*	4					
7	1752-112-001-00	COVER/BATTERY	*	1					

FIG.108 LEVER(ACCELERATOR)SYSTEM

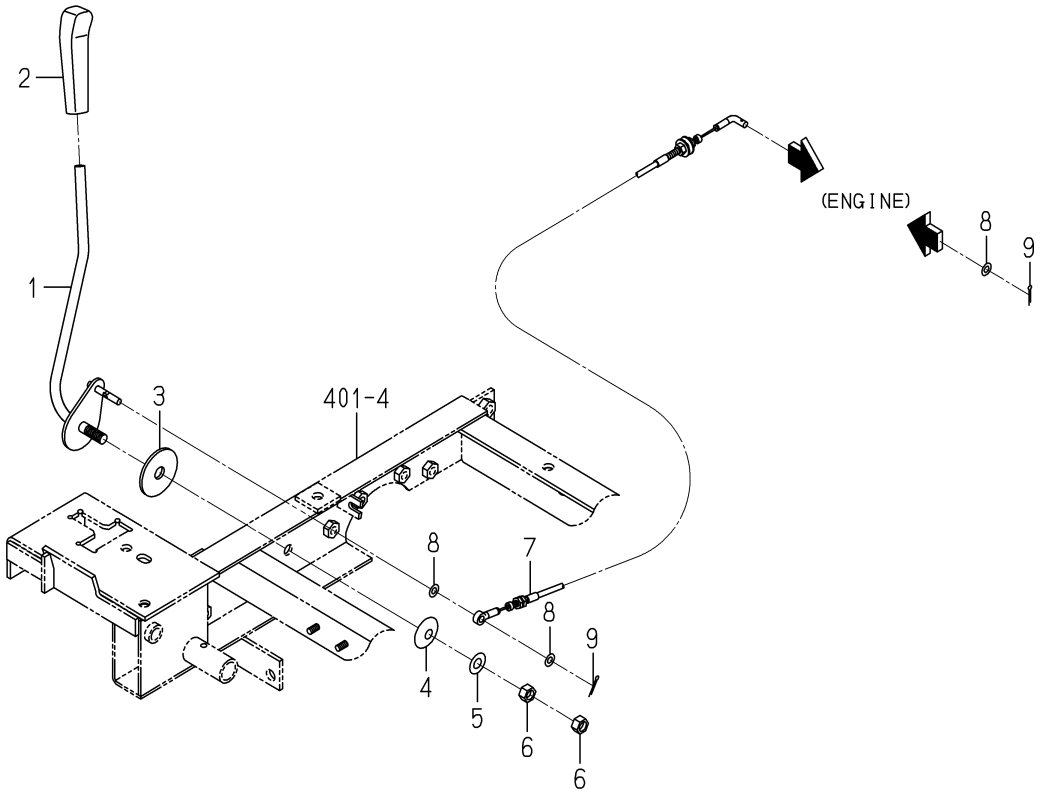

1752-117 -0100

KEY	PART CODE	DESCRIPTION	SPC	TYPE OF MODEL SZ330		ITC	COL	GRP	REMARKS
1	- - - - - -	BLANK	*						- - - - - -
1	1752-117-200-10	LEVER/ACCELERATOR	*	1					
2	1646-116-051-10	GRIP/THROTTLE	*	1					
3	- - - - - -	BLANK	*						- - - - - -
3	1600-505-007-10	LINING/13X50X03	*	1					
4	1593-117-003-10	SPRING,DISK	*	1					
5	V411-260-010-00	WASHER/M10	*	1					
6	V304-260-010-00	NUT	*	2					
7	- - - - - -	BLANK	*						- - - - - -
7	1752-117-210-10	CABLE/ACCELERATOR	*	1					
8	V411-260-006-00	WASHER / M6	*	3					
9	V500-162-501-50	PIN,SPLIT/2.5X15	*	2					

FIG.109 SHAFT(INPUT)SYSTEM

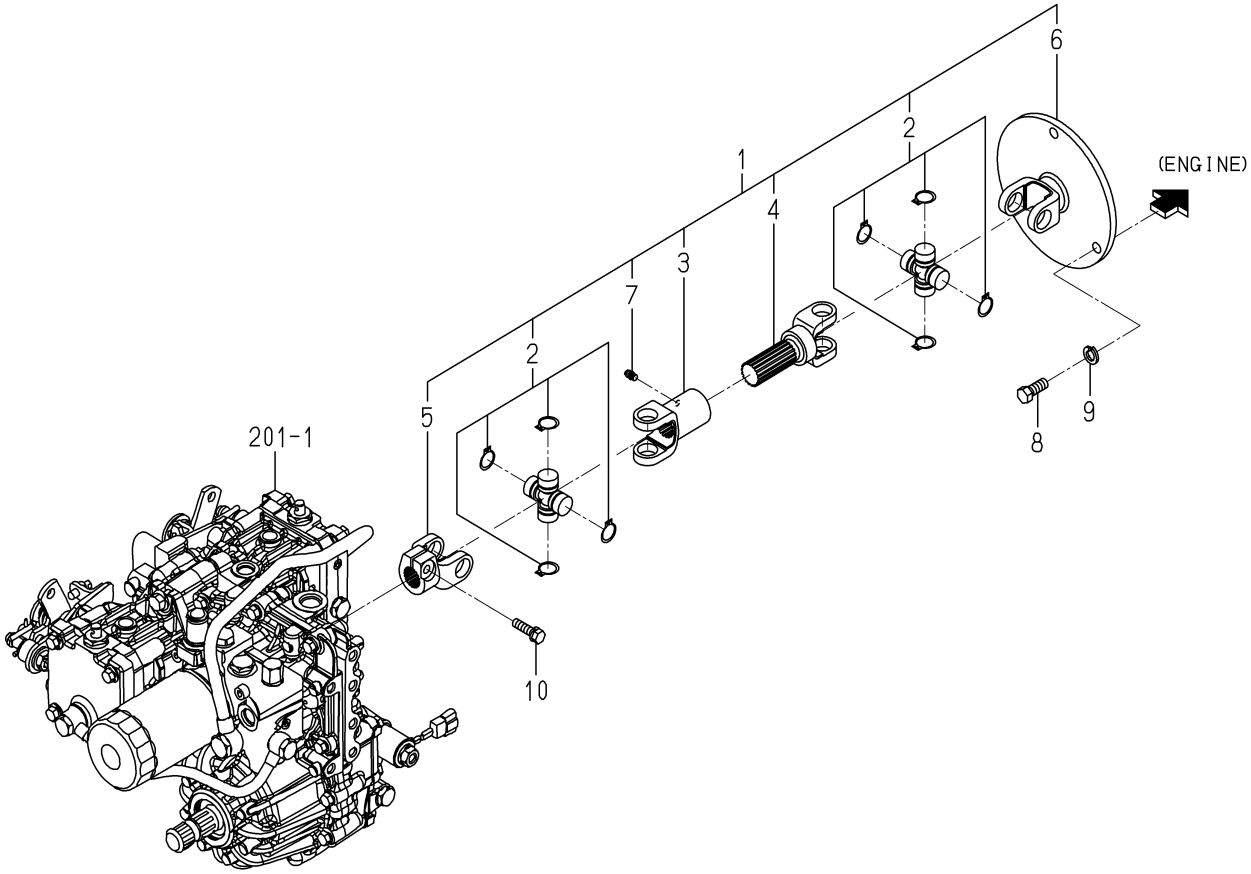

1752-120 -0100

KEY	PART CODE	DESCRIPTION	SPC	TYPE OF MODEL SZ330		ITC	COL	GRP	REMARKS
1	1752-120-200-00	SHAFT/INPUT SET	*	1					
2	1752-120-201-00	JOINT/UNIVERSAL ASSY	*	2					
3	1752-120-202-00	SLEEVE/YOKE	*	1					
4	1752-120-203-00	SHAFT/YOKE	*	1					
5	1752-120-204-00	CLAMP/YOKE	*	1					
6	1752-120-205-00	FLANGE/YOKE	*	1					
7	1752-120-206-00	NIPPLE/GREASE	*	1					
8	V203-361-002-50	BOLT	*	3					
9	V401-160-010-00	WASHER,SP/M10	*	3					
10	V211-560-803-00	BOLT/M8X30	*	1					

FIG.201 PUMP(HST)SYSTEM(1/5)

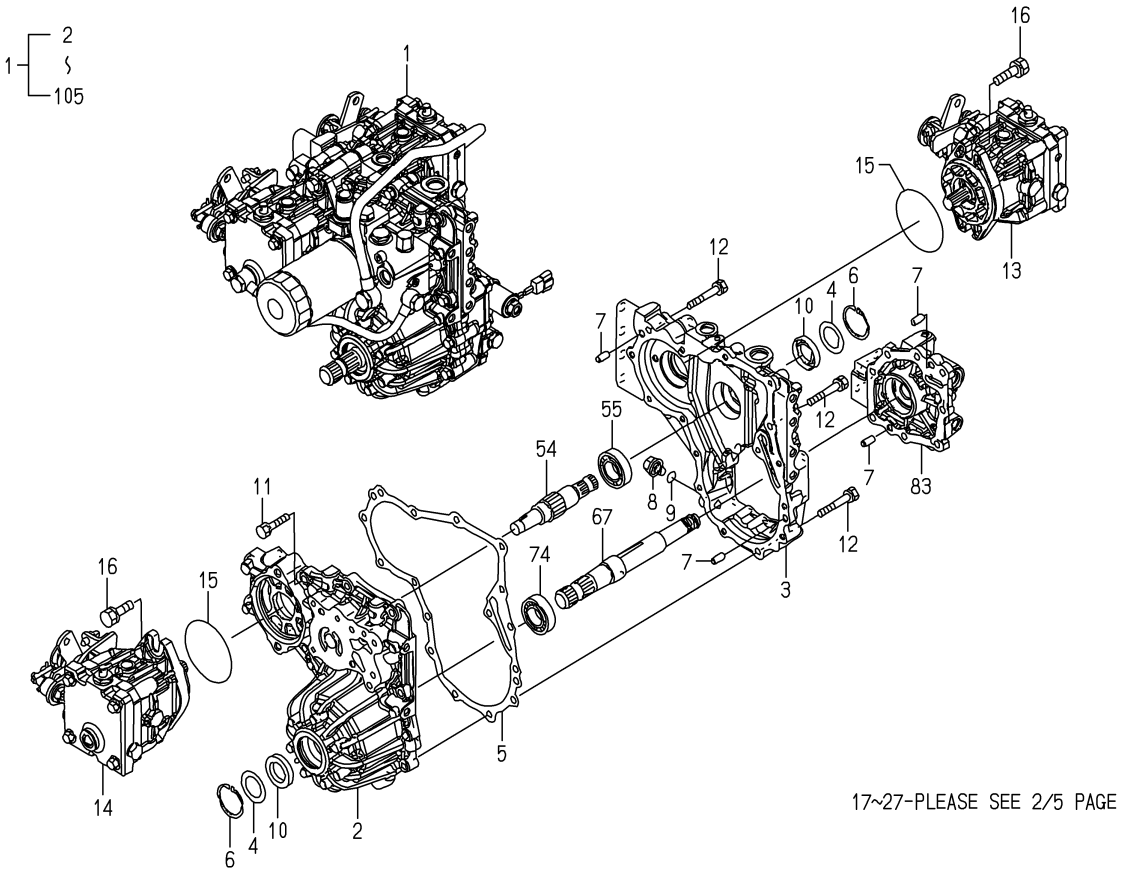

1752-202 -0100

KEY	PART CODE	DESCRIPTION	SPC	TYPE OF MODEL SZ330		ITC	COL	GRP	REMARKS
1	- - - - - -	BLANK	*						- - - - - -
1	1752-202-200-10	PUMP SET	*	1					
2	1752-202-211-00	HOUSING/PTO	*	1					
3	1752-202-212-00	HOUSING/INPUT	*	1					
4	1752-202-213-00	SPACER	*	2					
5	1752-202-214-00	PACKING	*	1					
6	1752-202-215-00	RING	*	2					
7	1752-202-216-00	PIN	*	4					
8	1752-202-217-00	PLUG	*	1					
9	1752-202-218-00	RING/O	*	1					
10	1752-202-219-00	SEAL/OIL	*	2					
11	1752-202-221-00	BOLT	*	12					
12	1752-202-222-00	BOLT	*	3					
13	- - - - - -	BLANK	*						- - - - - -
13	1752-202-450-10	PUMP/KPL/13CRZ ASSY	*	1					
14	- - - - - -	BLANK	*						- - - - - -
14	1752-202-470-10	PUMP/KPL/13ALZ ASSY	*	1					
15	1752-202-231-00	RING/O	*	2					
16	1752-202-232-00	BOLT	*	4					
17	1752-202-241-00	PLUG	*	1					
18	1752-202-510-00	PUMP/BODY COMP	*	1					
19	1752-202-511-00	ORIFICE/1.0	*	1					
20	1752-202-512-00	KEY	*	1					
21	1752-202-513-00	RING/O	*	1					
22	1752-202-514-00	PIN	*	2					
23	1752-202-515-00	PLUG	*	1					
24	1752-202-516-00	RING/O	*	3					
25	1752-202-517-00	RING/O	*	1					
26	1752-202-242-00	STOPPER	*	1					
27	1752-202-531-00	PIPE/SHORT	*	1					

FIG.201 PUMP(HST)SYSTEM(2/5)

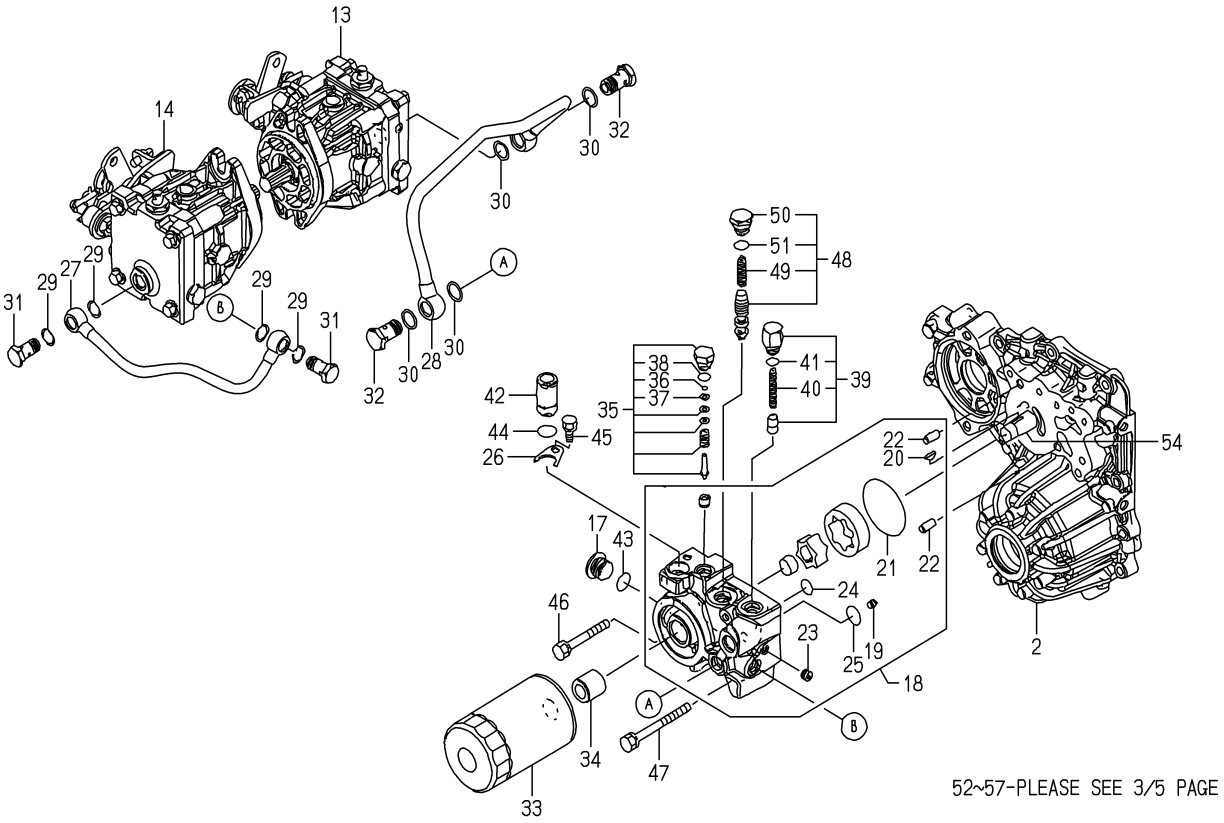

1752-202 -0100

KEY	PART CODE	DESCRIPTION	SPC	TYPE OF MODEL SZ330		ITC	COL	GRP	REMARKS
28	1752-202-532-00	PIPE/LONG	*	1					
29	1752-202-533-00	GASKET	*	4					
30	1752-202-534-00	GASKET	*	4					
31	1752-202-535-00	BOLT/JOINT/8	*	2					
32	1752-202-536-00	BOLT/JOINT/10	*	2					
33	1752-202-571-00	FILTER/OIL	*	1					
34	1752-202-572-00	JOINT/STRAINER	*	1					
35	1752-202-550-00	VALVE/RELIEF ASSY	*	1					
36	1752-202-551-00	RING/O	*	1					
37	1752-202-552-00	WASHER	*	1					
38	1752-202-553-00	RING/O	*	1					
39	1752-202-560-00	VALVE ASSY	*	1					
40	1752-202-561-00	SPRING	*	1					
41	1752-202-562-00	RING/O	*	1					
42	1752-202-243-00	PIPE	*	1					
43	1752-202-244-00	RING/O	*	1					
44	1752-202-245-00	RING/O	*	1					
45	1752-202-246-00	BOLT	*	1					
46	1752-202-247-00	BOLT	*	3					
47	1752-202-248-00	BOLT	*	1					
48	1752-202-540-00	VALVE/REDUCE COMP	*	1					
49	1752-202-541-00	SPRING	*	1					
50	1752-202-542-00	PLUG	*	1					
51	1752-202-543-00	RING/O	*	1					
52	1752-202-261-00	GEAR/DRIVE	*	1					
53	1752-202-262-00	GEAR/DRIVE	*	1					
54	1752-202-263-00	SHAFT/INPUT	*	1					
55	1752-202-264-00	R.B.B	*	4					
56	1752-202-580-00	CLUTCH/CYLINDER COMP	*	1					
57	1752-202-581-00	CLUTCH/CYLINDER	*	1					

FIG.201 PUMP(HST)SYSTEM(3/5)

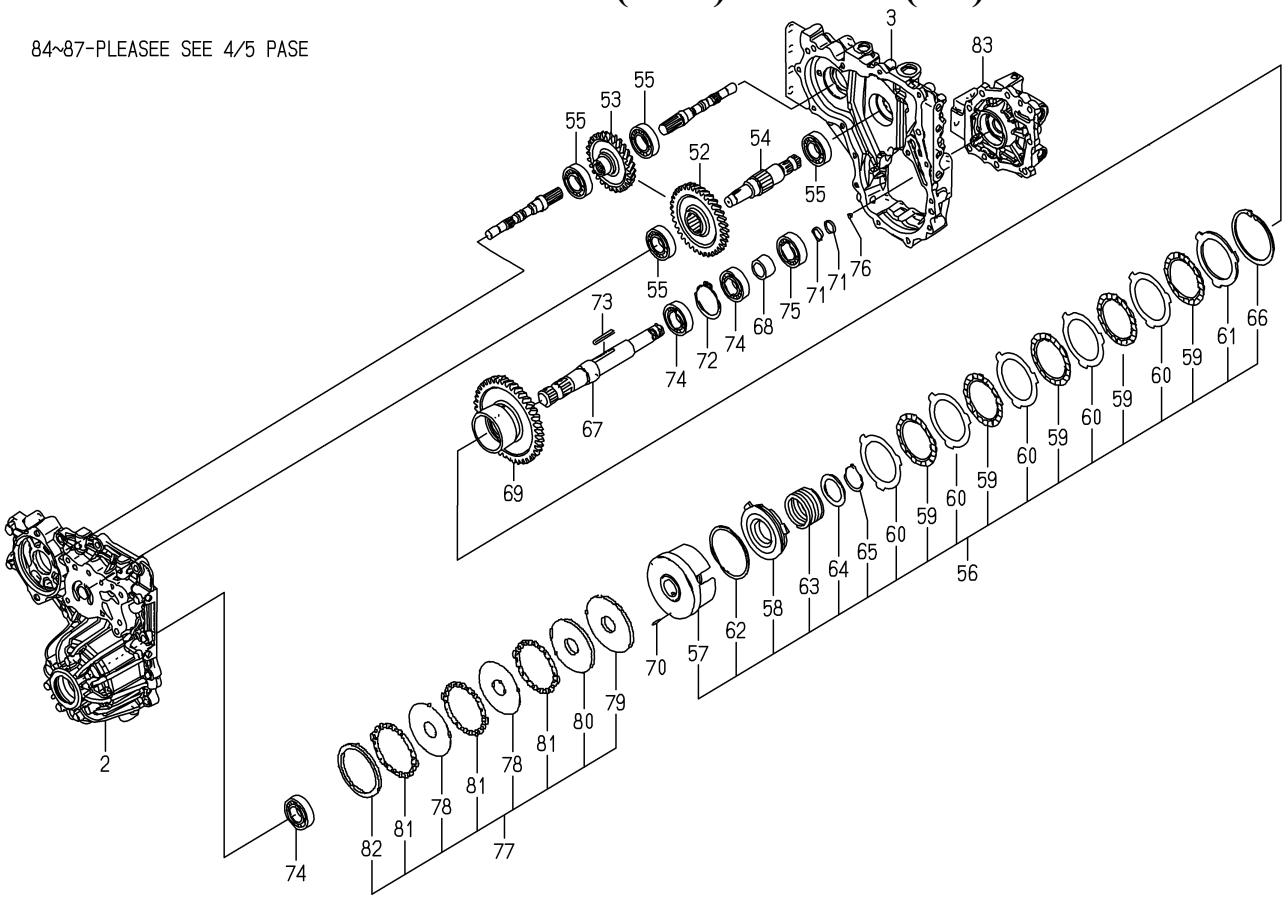

1752-202 -0100

KEY	PART CODE	DESCRIPTION	SPC	TYPE OF MODEL SZ330		ITC	COL	GRP	REMARKS
58	1752-202-582-00	PISTON/CLUTCH	*	1					
59	1752-202-583-00	DISC/FRICTION	*	5					
60	1752-202-584-00	PLATE/1.2	*	5					
61	1752-202-585-00	PLATE/3.2	*	1					
62	1752-202-586-00	RING/D/80	*	1					
63	1752-202-587-00	SPRING/RETURN	*	1					
64	1752-202-588-00	WASHER/34X48X2	*	1					
65	1752-202-589-00	RING/34	*	1					
66	1752-202-591-00	RING/80	*	1					
67	1752-202-271-00	SHAFT/PTO	*	1					
68	1752-202-272-00	COLLAR	*	1					
69	1752-202-273-00	GEAR/PTO/47T	*	1					
70	1752-202-274-00	ROD	*	3					
71	1752-202-275-00	RING/SEAL	*	2					
72	1752-202-276-00	RING	*	1					
73	1752-202-277-00	KEY	*	1					
74	1752-202-278-00	R.B.B	*	3					
75	1752-202-279-00	R.B.B	*	1					
76	1752-202-281-00	SCREW	*	1					
77	1752-202-290-00	BRAKE/INERTIA ASSY	*	1					
78	1752-202-291-00	PLATE/A	*	2					
79	1752-202-292-00	PLATE/B	*	1					
80	1752-202-293-00	PLATE/C	*	1					
81	1752-202-294-00	PLATE/FRICTION	*	3					
82	1752-202-295-00	SPACER/73X87X3	*	1					
83	1752-202-401-00	COVER/PTO	*	1					
84	1752-202-402-00	PACKING	*	1					
85	1752-202-611-00	PLUG	*	1					
86	1752-202-612-00	SPRING/PTO	*	1					
87	1752-202-613-00	VALVE	*	1					

FIG.201 PUMP(HST)SYSTEM(4/5)

106~111-PLAEASE SEE 5/5 PAGE

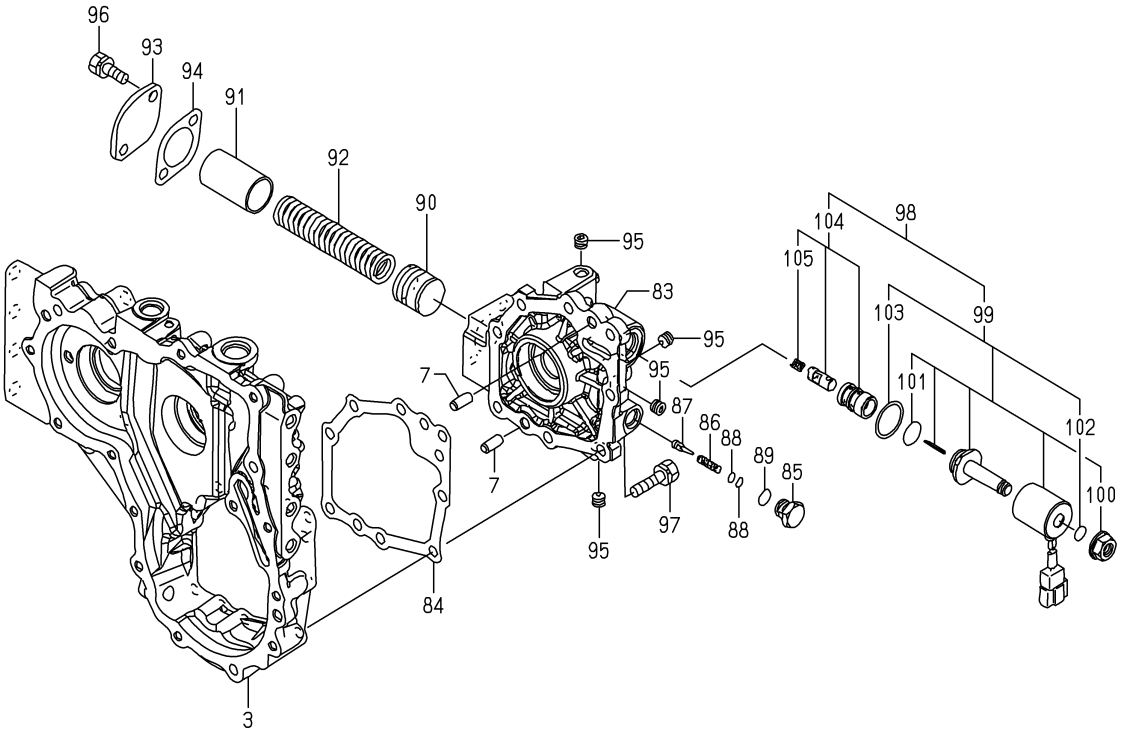

1752-202 -0100

KEY	PART CODE	DESCRIPTION	SPC	TYPE OF MODEL SZ330		ITC	COL	GRP	REMARKS
88	- - - - - -	BLANK	*						- - - - - -
88	1752-202-614-00	SHIM	*	2					
89	1752-202-615-00	RING/O	*	1					
90	1752-202-403-00	PISTON	*	1					
91	1752-202-404-00	COLLAR	*	1					
92	1752-202-405-00	SPRING	*	1					
93	1752-202-406-00	COVER/ACC	*	1					
94	1752-202-407-00	GASKET	*	1					
95	1752-202-408-00	PLUG	*	4					
96	1752-202-409-00	BOLT	*	2					
97	1752-202-411-00	BOLT	*	8					
98	1752-202-420-00	VALVE/SOLENOID ASSY	*	1					
99	1752-202-620-00	SOLENOID ASSY	*	1					
100	1752-202-641-00	NUT	*	1					
101	1752-202-642-00	RING/O	*	1					
102	1752-202-621-00	GASKET	*	1					
103	1752-202-622-00	RING/O	*	1					
104	1752-202-630-00	VALVE ASSY	*	1					
105	1752-202-631-00	SPRING	*	1					
106	- - - - - -	BLANK	*						- - - - - -
106	- - - - - -	BLANK	*						- - - - - -
106	1752-202-310-20	BRACKET/LH COMP	*	1					
107	V211-561-002-50	BOLT/M10X25	*	4					
108	- - - - - -	BLANK	*						- - - - - -
108	V211-661-003-00	BOLT/SP	*	2					
109	- - - - - -	BLANK	*						- - - - - -
109	- - - - - -	BLANK	*						- - - - - -
109	1752-202-320-20	BRACKET/RH COMP	*	1					
110	V211-561-002-50	BOLT/M10X25	*	4					
111	- - - - - -	BLANK	*						- - - - - -

FIG.201 PUMP(HST)SYSTEM(5/5)

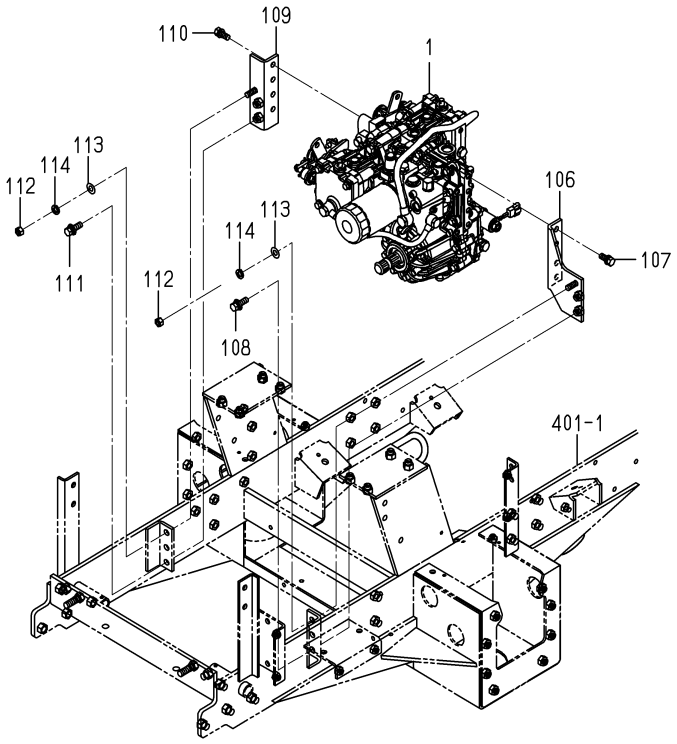

1752-202 -0100

KEY	PART CODE	DESCRIPTION	SPC	TYPE OF MODEL		ITC	COL	GRP	REMARKS
				SZ330					
111	V211-661-003-00	BOLT/SP	*	2					
112	V304-460-010-00	NUT/M10	*	2					
113	V401-160-010-00	WASHER,SP/M10	*	2					
114	V411-260-010-00	WASHER/M10	*	2					

FIG.202 LINK(HST)SYSTEM

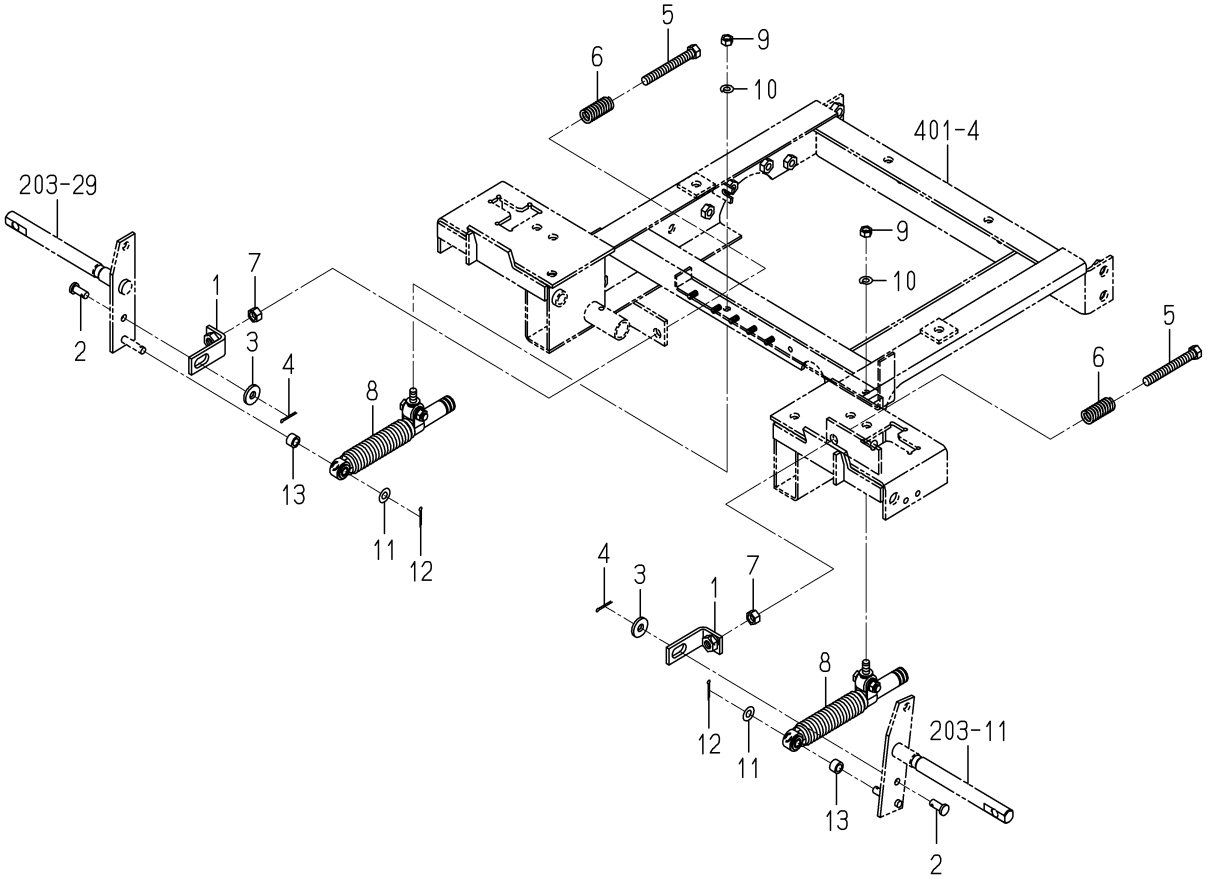

1752-271 -0100

KEY	PART CODE	DESCRIPTION	SPC	TYPE OF MODEL SZ330		ITC	COL	GRP	REMARKS
1	1752-271-210-00	ARM/RETURN COMP	*	2					
2	- - - - - -	BLANK	*						- - - - - -
2	1620-313-004-00	PIN/08X19	*	2					
3	- - - - - -	BLANK	*						- - - - - -
3	4101-102-038-00	WASHER/24X9X3.2	*	2					
4	V500-162-502-00	PIN,SPLIT/2.5X20	*	2					
5	W201-361-008-00	BOLT	*	2					
6	1752-271-003-00	SPRING/HC040	*	2					
7	V304-260-010-00	NUT	*	2					
8	1646-640-580-00	DAMPER/OIL ASSY	*	2					
9	V304-260-008-00	NUT	*	2					
10	V401-160-008-00	WASHER,SP/M 8	*	2					
11	V411-260-008-00	WASHER,PL/M 8	*	2					
12	V500-162-502-00	PIN,SPLIT/2.5X20	*	2					
13	1646-640-008-10	COLLAR/09X14X09	*	2					

FIG.203 LEVER(HST)SYSTEM

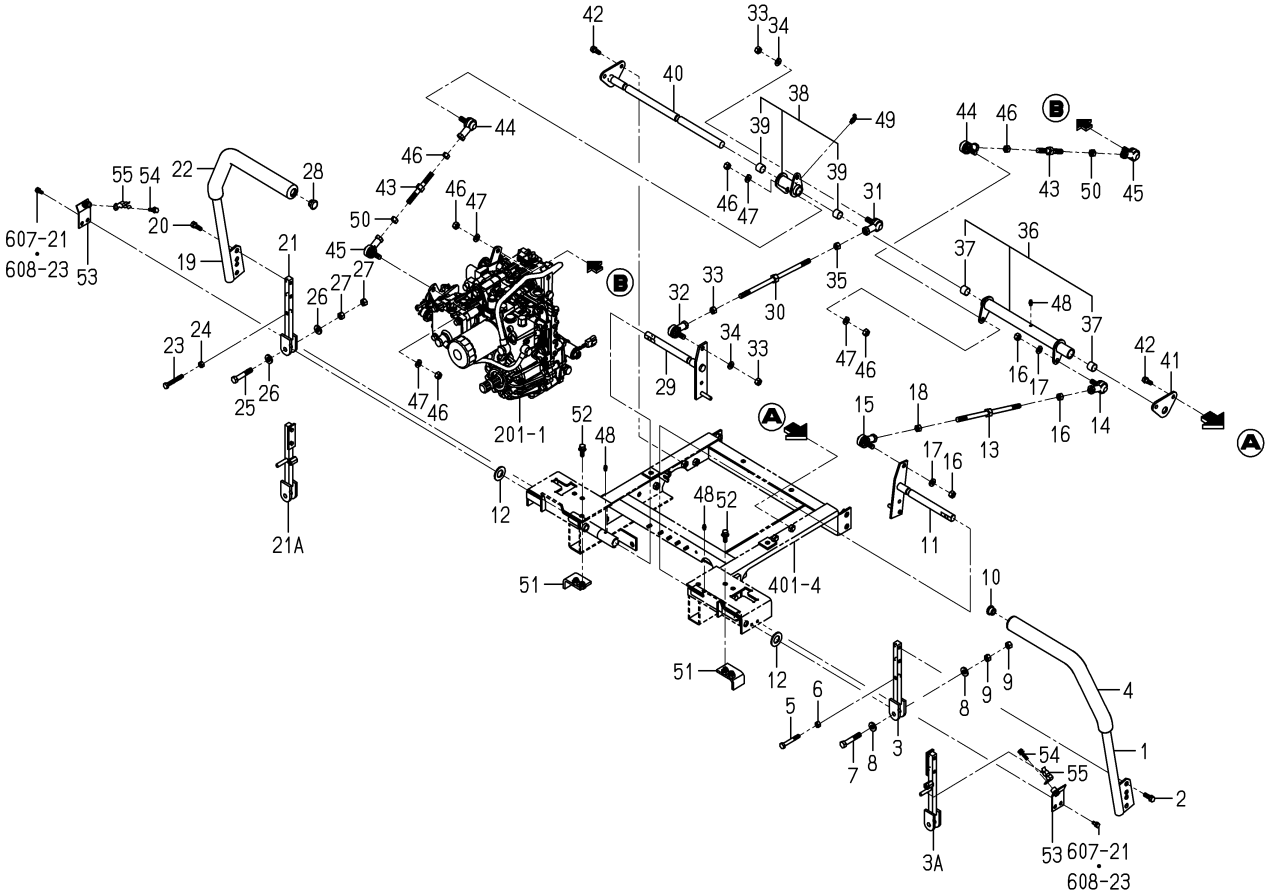

1752-272 -0100

KEY	PART CODE	DESCRIPTION	SPC	TYPE OF MODEL SZ330		ITC	COL	GRP	REMARKS
1	- - - - - -	BLANK	*						- - - - - -
1	1752-272-200-20	LEVER/RUNNING/L COMP	*	1					
2	- - - - - -	BLANK	*						- - - - - -
2	V211-660-802-50	BOLT/M8X25	*	2					
3	- - - - - -	BLANK	*						- - - - - -
3	- - - - - -	BLANK	*						- - - - - -
3	- - - - - -	BLANK	*						- - - - - -
3A	1752-272-530-00	LEVER/NEUTRAL/L COMP	*	1					
4	1752-272-002-00	GRIP	*	1					
5	- - - - - -	BLANK	*						- - - - - -
5	W201-360-805-50	BOLT	*	1					
6	V304-260-008-00	NUT	*	1					
7	- - - - - -	BLANK	*						- - - - - -
7	V201-461-005-50	BOLT/M10X55	*	1					
8	1376-121-001-00	WASHER/11X22X3	*	2					
9	V304-460-010-00	NUT/M10	*	2					
10	2140-730-001-00	CAP/RUBBER/15A	*	1					
11	- - - - - -	BLANK	*						- - - - - -
11	1752-272-230-10	ARM/HST/LH	*	1					
12	V411-260-018-00	WASHER,PL/M18	*	2					
13	1752-272-250-00	ROD/LH COMP	*	1					
14	1656-664-002-00	JOINT/BALL/RH ASSY	*	1					
15	1752-272-006-00	JOINT/BALL/LH ASSY	*	1					
16	V334-260-010-00	NUT/M10	*	3					
17	V401-160-010-00	WASHER,SP/M10	*	2					
18	1752-272-007-00	NUT/LH/M10X1.25	*	1					
19	- - - - - -	BLANK	*						- - - - - -
19	1752-272-210-20	LEVER/RUNNING/R COMP	*	1					
20	- - - - - -	BLANK	*						- - - - - -
20	V211-660-802-50	BOLT/M8X25	*	2					

FIG.203 LEVER(HST)SYSTEM

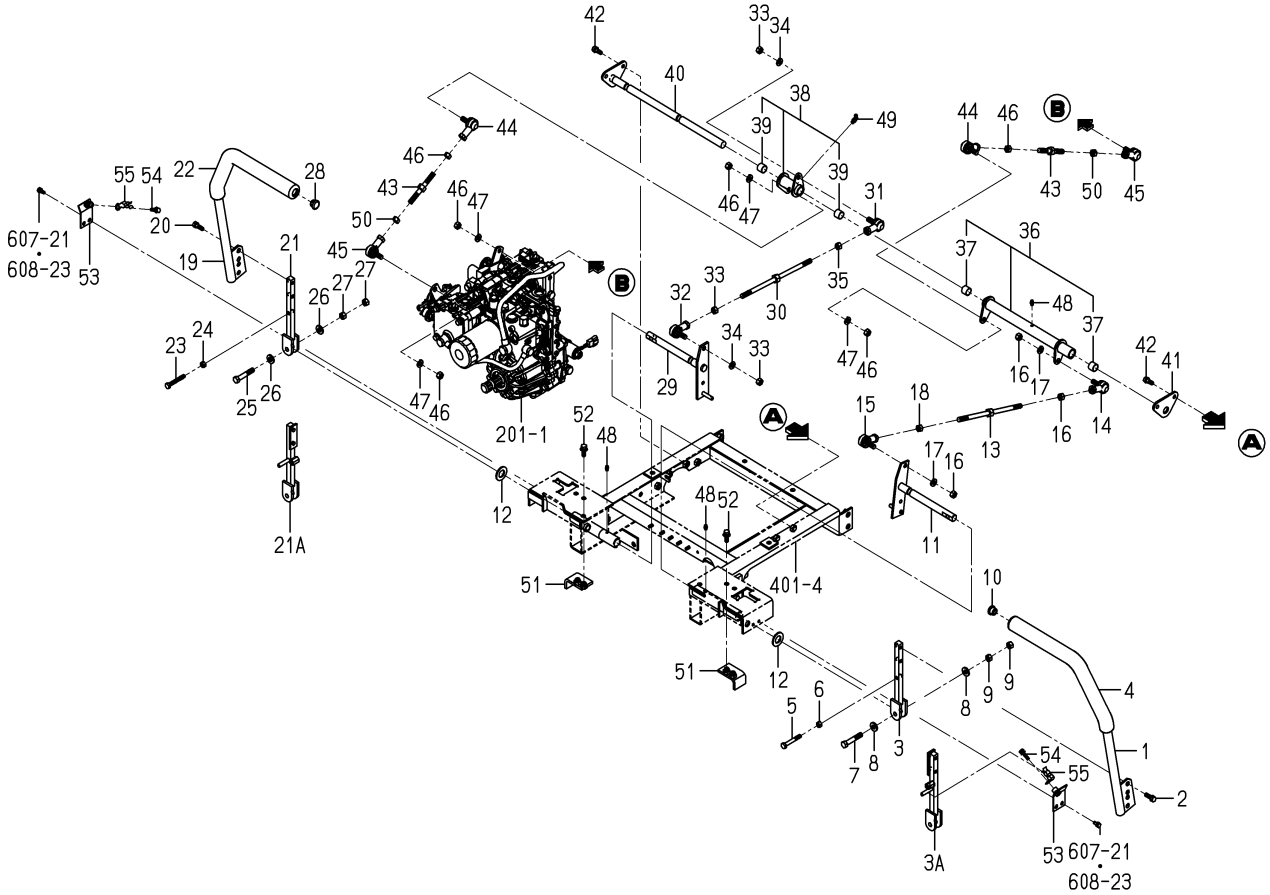

1752-272 -0100

KEY	PART CODE	DESCRIPTION	SPC	TYPE OF MODEL SZ330		ITC	COL	GRP	REMARKS
21	- - - - - -	BLANK	*						- - - - - -
21	- - - - - -	BLANK	*						- - - - - -
21	- - - - - -	BLANK	*						- - - - - -
21A	1752-272-540-00	LEVER/NEUTRAL/R COMP	*	1					
22	1752-272-002-00	GRIP	*	1					
23	W201-360-805-50	BOLT	*	1					
24	V304-260-008-00	NUT	*	1					
25	- - - - - -	BLANK	*						- - - - - -
25	V201-461-005-50	BOLT/M10X55	*	1					
26	1376-121-001-00	WASHER/11X22X3	*	2					
27	V304-460-010-00	NUT/M10	*	2					
28	2140-730-001-00	CAP/RUBBER/15A	*	1					
29	- - - - - -	BLANK	*						- - - - - -
29	1752-272-240-10	ARM/HST/RH COMP	*	1					
30	1752-272-260-00	ROD/RH COMP	*	1					
31	1656-664-002-00	JOINT/BALL/RH ASSY	*	1					
32	1752-272-006-00	JOINT/BALL/LH ASSY	*	1					
33	V334-260-010-00	NUT/M10	*	3					
34	V401-160-010-00	WASHER,SP/M10	*	2					
35	1752-272-007-00	NUT/LH/M10X1.25	*	1					
36	1752-272-400-00	TUBE ASSY	*	1					
37	3659-203-204-10	BUSH/17X19X15	*	2					
38	1752-272-410-00	TUBE ASSY	*	1					
39	3659-203-204-10	BUSH/17X19X15	*	2					
40	1752-272-300-00	BAR COMP	*	1					
41	1752-272-009-00	PLATE	*	1					
42	V211-260-802-00	BOLT/S	*	4					
43	1752-272-290-00	ROD/95 COMP	*	2					
44	1656-664-002-00	JOINT/BALL/RH ASSY	*	2					
45	1752-272-006-00	JOINT/BALL/LH ASSY	*	2					

FIG.203 LEVER(HST)SYSTEM

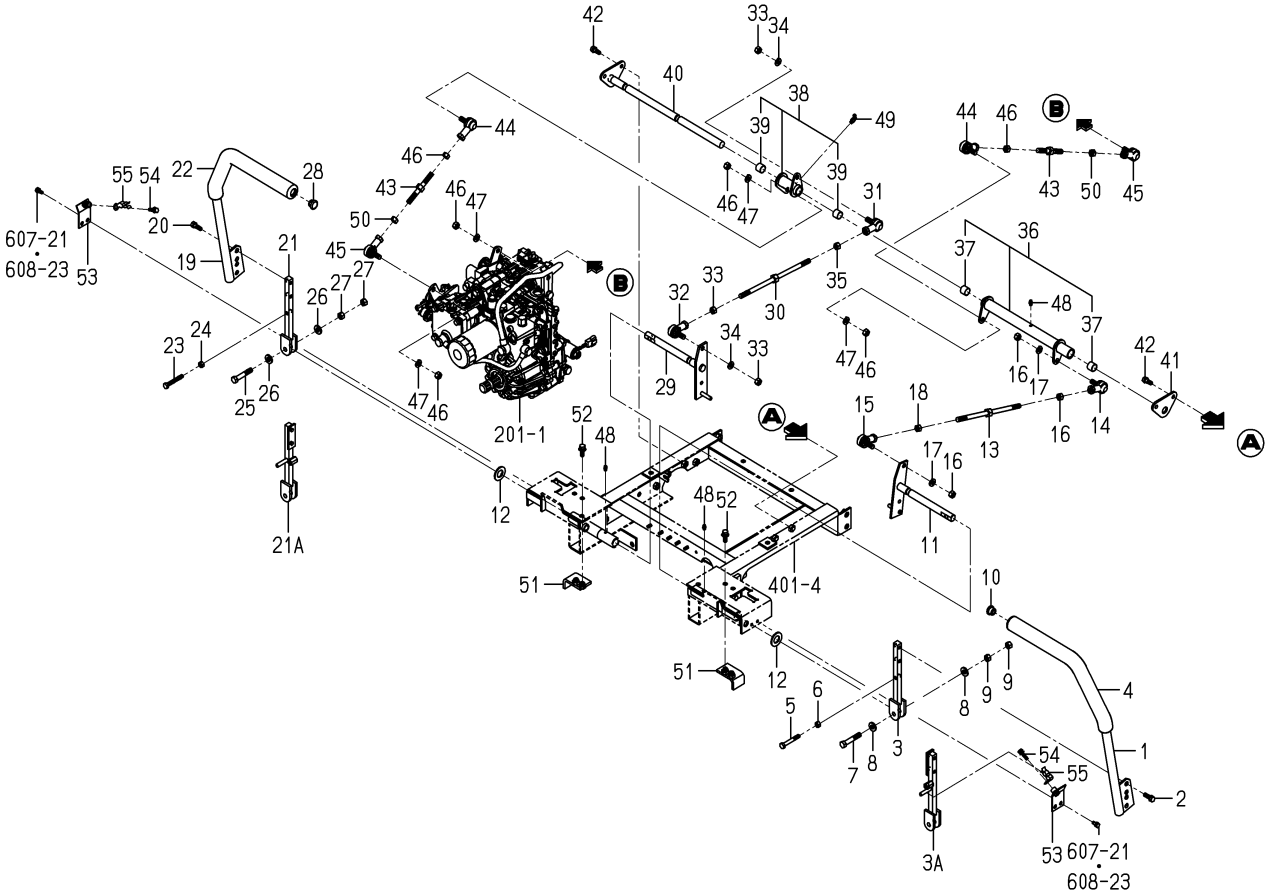

1752-272 -0100

KEY	PART CODE	DESCRIPTION	SPC	TYPE OF MODEL SZ330		ITC	COL	GRP	REMARKS
46	V334-260-010-00	NUT/M10	*	6					
47	V401-160-010-00	WASHER,SP/M10	*	4					
48	V760-150-000-00	NIPPLE,GREASE	*	3					
49	V762-150-000-00	NIPPLE,GREASE/B-M6F	*	1					
50	1752-272-007-00	NUT/LH/M10X1.25	*	2					
51	- - - - - -	BLANK	*						- - - - - -
51	1752-272-340-10	PLATE COMP	*	2					
52	V211-660-802-50	BOLT/M8X25	*	4					
53	1752-272-450-00	PLATE COMP	*	2					
54	V210-360-602-50	BOLT/SP	*	2					
55	3610-631-002-00	HANGER,SUPPORT	*	2					

FIG.301 BOLT(AXLE/REAR)SYSTEM

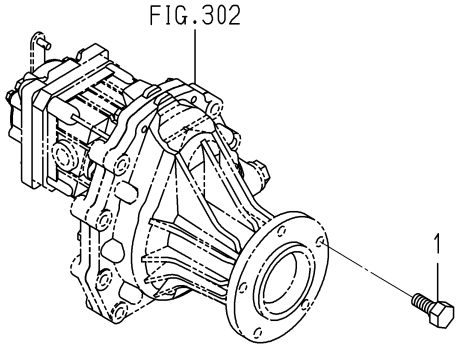

1752-306 -0100

KEY	PART CODE	DESCRIPTION	SPC	TYPE OF MODEL SZ330		ITC	COL	GRP	REMARKS
1	- - - - - -	BLANK	*						- - - - - -
1	1725-308-003-20	BOLT/M12X1.5	*	10					

FIG.302 MOTOR(HST)SYSTEM(1/2)

2~27-PLEASE SEE NEXT PAGE

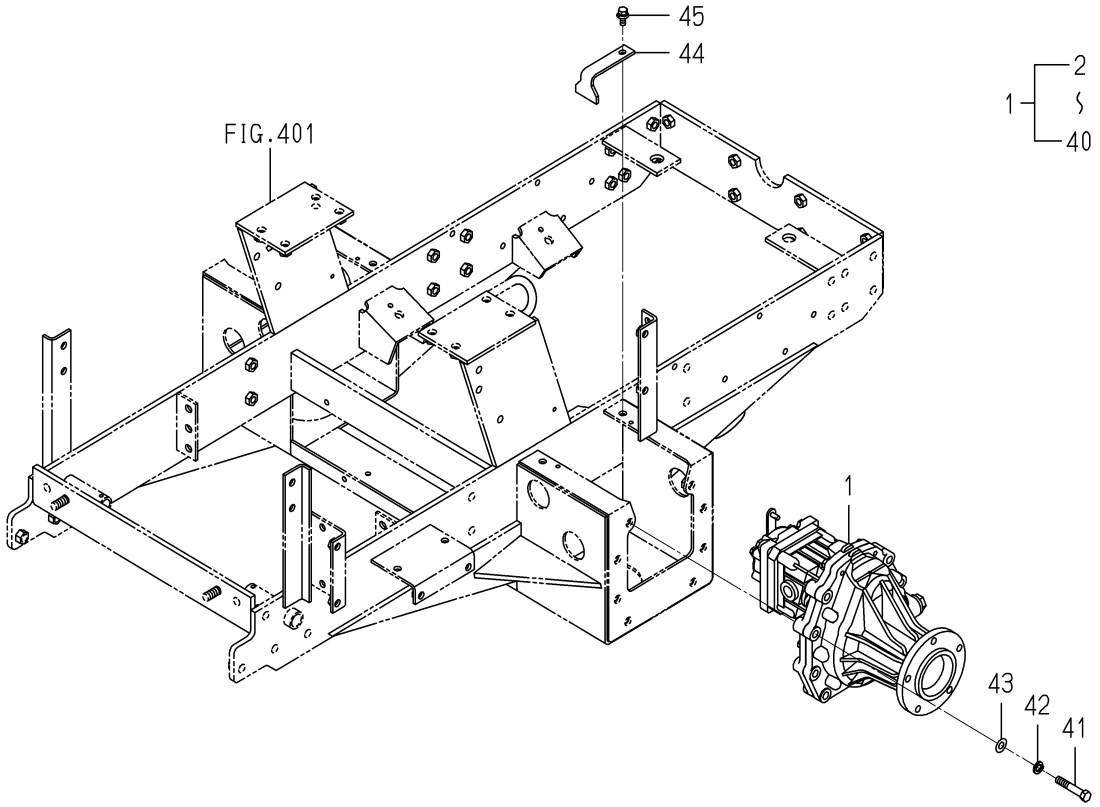

1752-307 -0100

KEY	PART CODE	DESCRIPTION	SPC	TYPE OF MODEL SZ330		ITC	COL	GRP	REMARKS
1	- - - - - -	BLANK	*						- - - - - -
1	1752-307-200-10	MOTOR SET	*	2					
2	1752-307-230-00	MOTOR/KML ASSY	*	2					
3	1752-307-231-00	SEAL/OIL	*	2					
4	1752-307-232-00	PIN	*	4					
5	1752-307-233-00	BOLT	*	4					
6	1752-307-234-00	PACKING	*	2					
7	1752-307-240-00	BRAKE ASSY	*	2					
8	1752-307-241-00	SPRING/BRAKE	*	2					
9	1752-307-242-00	COVER/BRAKE COMP	*	2					
10	1752-307-243-00	DRUM/BRAKE COMP	*	2					
11	1752-307-244-00	SHOE/BRAKE SET	*	2					
12	1752-307-211-00	CASE/BRAKE	*	2					
13	- - - - - -	BLANK	*						- - - - - -
14	- - - - - -	BLANK	*						- - - - - -
14	1752-307-213-00	WASHER	*	4					
15	1752-307-214-00	KEY	*	2					
16	1752-307-215-00	RING/O	*	2					
17	1752-307-216-00	RING/O	*	2					
18	1752-307-217-00	RING/O	*	2					
19	1752-307-218-00	BOLT	*	6					
20	1752-307-219-00	BOLT	*	4					
21	1752-307-221-00	BOLT	*	4					
22	1752-307-222-00	NUT	*	2					
23	1752-307-260-00	BOLT/DRAIN	*	2					
24	1752-307-262-00	RING/O	*	2					
25	1752-307-251-00	CASE/AXLE/OUT	*	2					
26	1752-307-252-00	CASE/AXLE/IN	*	2					
27	- - - - - -	BLANK	*						- - - - - -
27	1752-307-253-10	PACKING	*	2					

FIG.302 MOTOR(HST)SYSTEM(2/2)

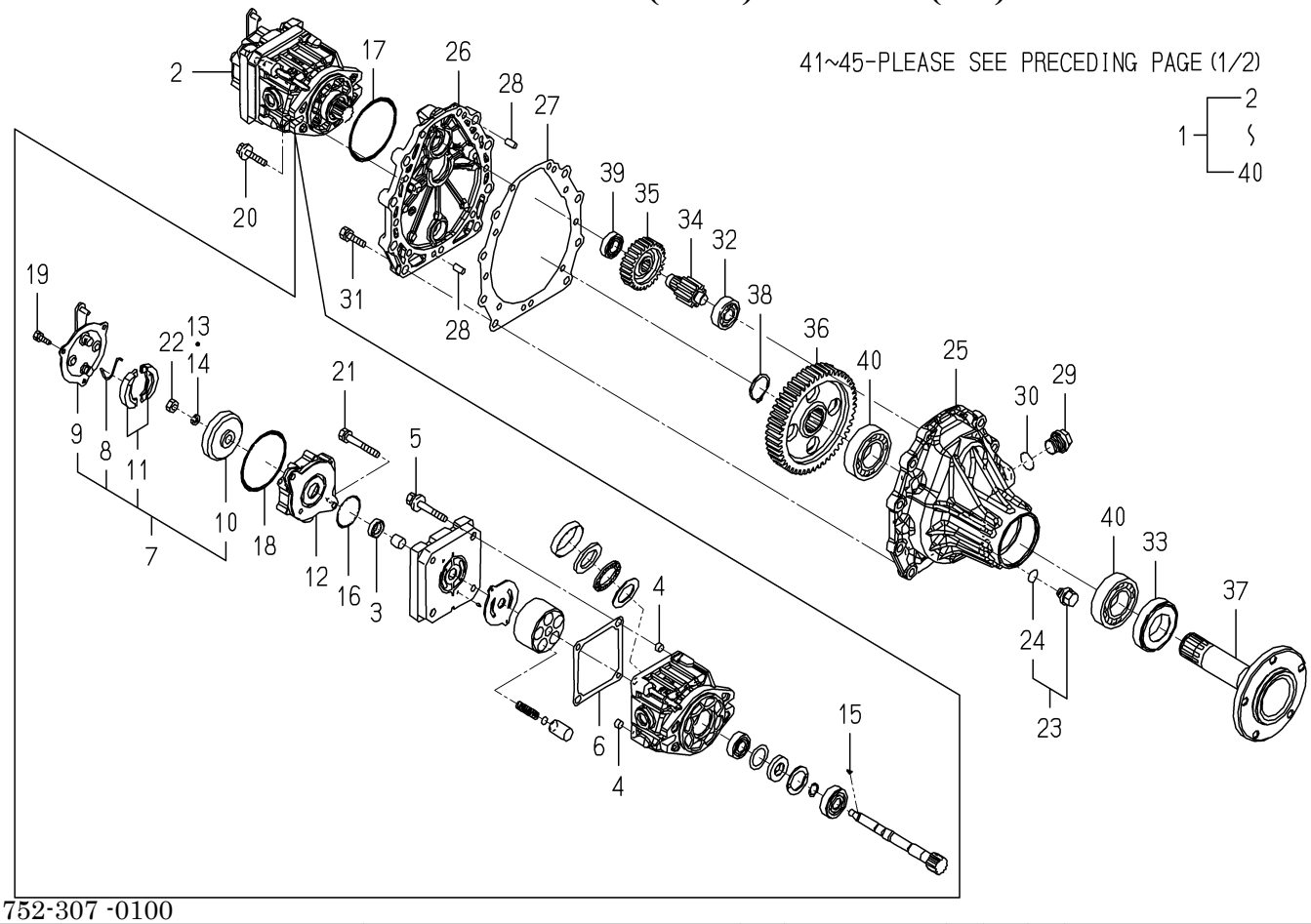

1752-307 -0100

KEY	PART CODE	DESCRIPTION	SPC	TYPE OF MODEL SZ330		ITC	COL	GRP	REMARKS
28	1752-307-254-00	PIN	*	4					
29	1752-307-255-00	PLUG	*	2					
30	1752-307-256-00	RING/O	*	2					
31	1752-307-257-00	BOLT	*	18					
32	1752-307-271-00	R.B.B	*	2					
33	1752-307-272-00	SEAL/OIL	*	2					
34	1752-307-273-00	SHAFT/9T	*	2					
35	1752-307-274-00	GEAR/32T	*	2					
36	1752-307-275-00	GEAR/51T	*	2					
37	1752-307-276-00	SHAFT/AXLE	*	2					
38	1752-307-277-00	RING	*	2					
39	1752-307-278-00	R.B.B	*	2					
40	1752-307-279-00	R.B.B	*	4					
41	V201-361-005-50	BOLT	*	16					
42	V401-160-010-00	WASHER,SP/M10	*	16					
43	V411-260-010-00	WASHER/M10	*	16					
44	1752-307-001-00	PLATE/L/44X92	*	2					
45	V211-360-802-00	BOLT/SP	*	2					

FIG.303 PEDAL(BRAKE)SYSTEM

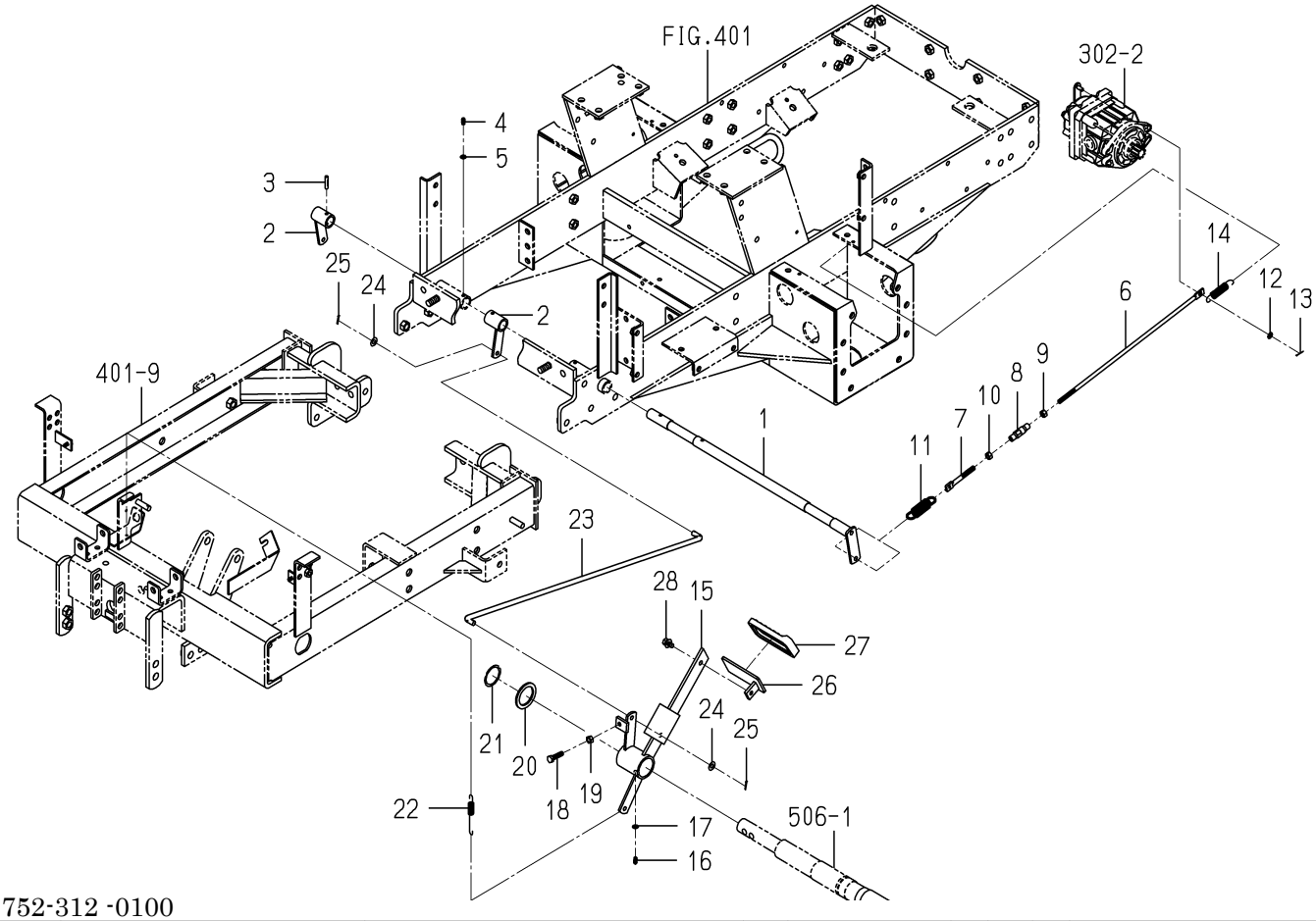

1752-312 -0100

KEY	PART CODE	DESCRIPTION	SPC	TYPE OF MODEL SZ330		ITC	COL	GRP	REMARKS
1	- - - - - -	BLANK	*						- - - - - -
1	1752-312-210-10	SHAFT/BRAKE COMP	*	1					
2	- - - - - -	BLANK	*						- - - - - -
2	1752-312-220-10	HUB/BRAKE/REAR COMP	*	2					
3	- - - - - -	BLANK	*						- - - - - -
3	V530-240-602-80	PIN/GROOVE	*	2					
4	V760-150-000-00	NIPPLE,GREASE	*	2					
5	V401-160-006-00	WASHER,SP/M 6	*	2					
6	- - - - - -	BLANK	*						- - - - - -
6	1703-505-004-10	ROD/M08X420	*	2					
7	3104-210-004-10	ROD/M08X72/LH	*	2					
8	1444-122-002-00	TURNBUCKLE/M8	*	2					
9	V304-260-008-00	NUT	*	2					
10	1560-132-007-30	NUT/M8	*	2					
11	1560-404-002-30	SPRING	*	2					
12	V411-260-006-00	WASHER / M6	*	2					
13	V500-162-001-50	PIN,SPLIT/2 X15	*	2					
14	4136-405-002-00	SPRING/HE074	*	2					
15	- - - - - -	BLANK	*						- - - - - -
15	1752-312-240-10	ARM/BRAKE COMP	*	1					
16	V760-150-000-00	NIPPLE,GREASE	*	1					
17	V401-160-006-00	WASHER,SP/M 6	*	1					
18	V201-260-803-00	BOLT/M 8X30	*	1					
19	V304-260-008-00	NUT	*	1					
20	2142-572-008-00	WASHER/41X55X03	*	1					
21	V706-140-040-00	RING/SNAP	*	1					
22	1575-117-002-00	SPRING/95	*	1					
23	- - - - - -	BLANK	*						- - - - - -
23	1752-312-002-10	ROD/BRAKE	*	1					
24	V411-260-008-00	WASHER,PL/M 8	*	2					

FIG.303 PEDAL(BRAKE)SYSTEM

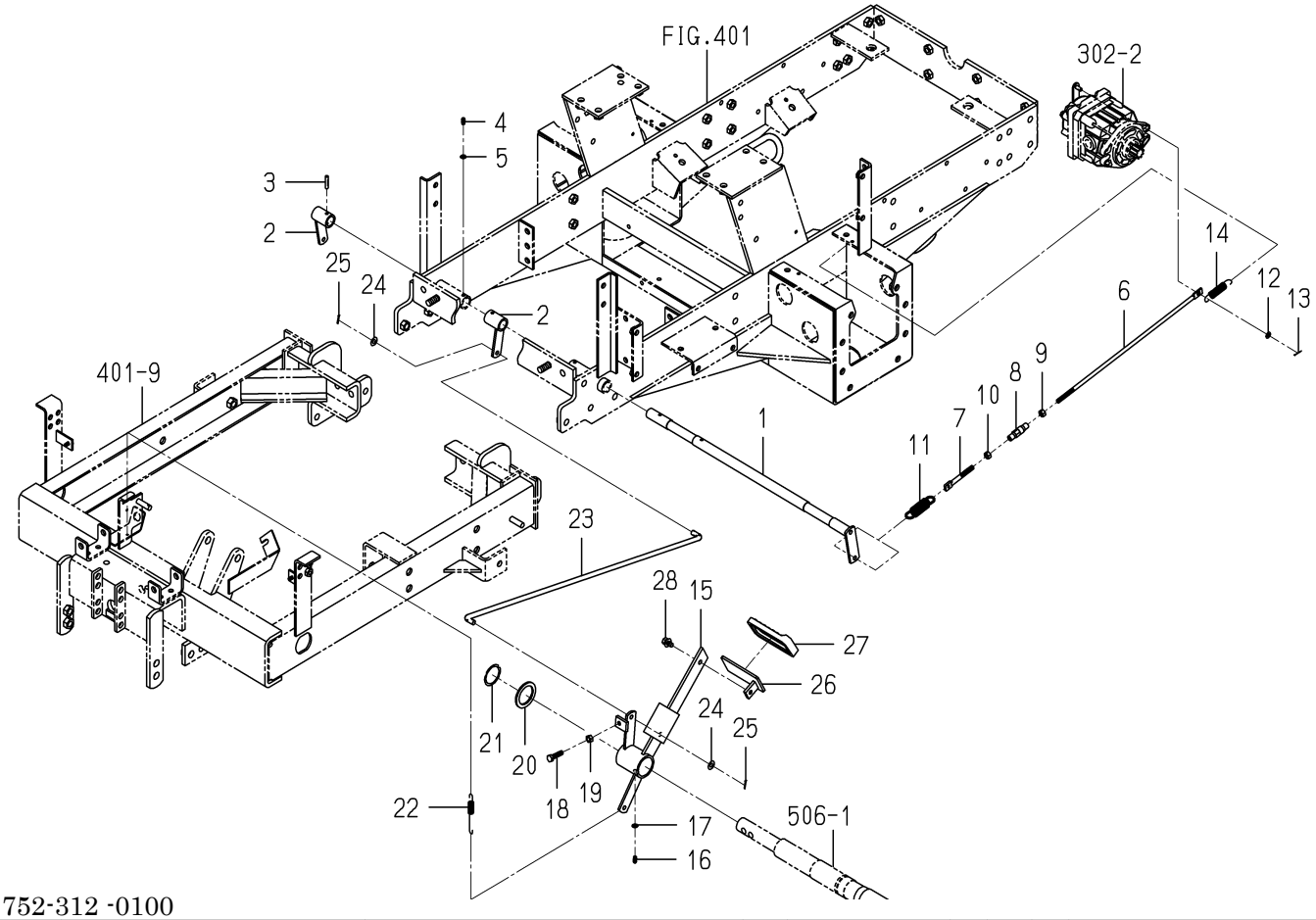

1752-312 -0100

KEY	PART CODE	DESCRIPTION	SPC	TYPE OF MODEL SZ330		ITC	COL	GRP	REMARKS
25	V500-162-501-50	PIN,SPLIT/2.5X15	*	2					
26	1752-312-230-00	PEDAL/BRAKE COMP	*	1					
27	1524-122-001-00	PAD	*	1					
28	V211-260-801-60	BOLT,SEMS (S) M8X16	*	1					

FIG.304 BRAKE(PARKING)SYSTEM

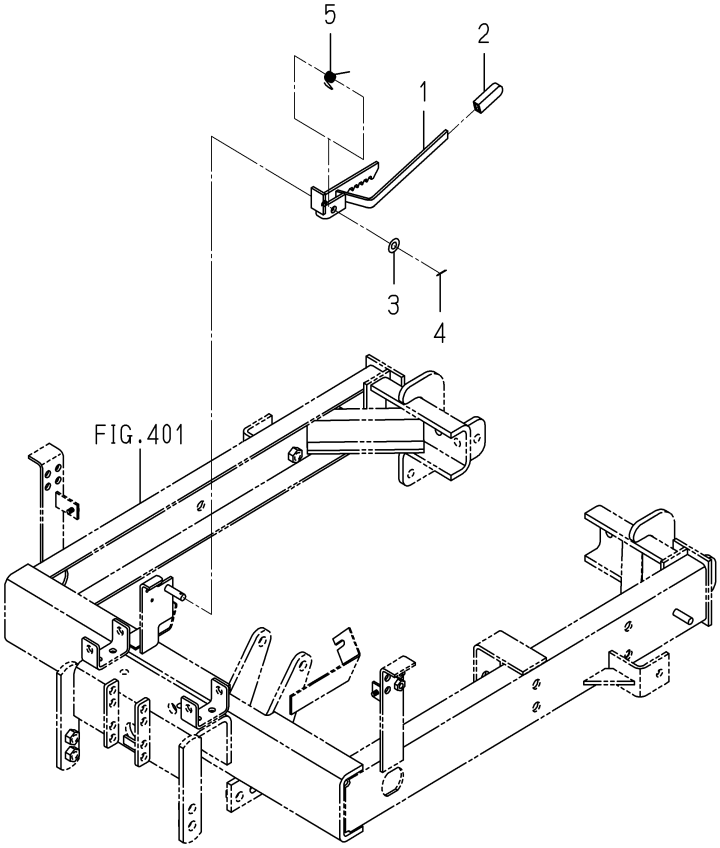

1752-313 -0100

KEY	PART CODE	DESCRIPTION	SPC	TYPE OF MODEL SZ330		ITC	COL	GRP	REMARKS
1	- - - - - -	BLANK	*						- - - - - -
1	1752-313-210-10	LEVER/PARKING COMP	*	1					
2	3600-201-013-00	GRIP,BRAKE	*	1					
3	V411-260-010-00	WASHER/M10	*	1					
4	V500-162-501-50	PIN,SPLIT/2.5X15	*	1					
5	1752-313-001-00	SPRING/HT013	*	1					

FIG.305 TIRE(TURF/26X12.0)SYSTEM

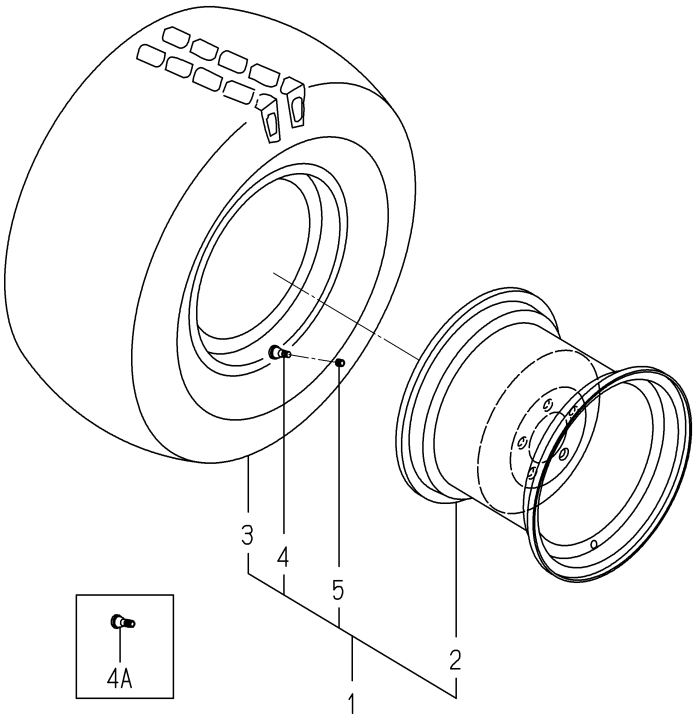

1739-317A-0100

KEY	PART CODE	DESCRIPTION	SPC	TYPE OF MODEL SZ330		ITC	COL	GRP	REMARKS
1	- - - - - -	BLANK	*						- - - - - -
1	1739-317-240-11	TIRE/TURF/26X12.0	*	2			6G		
2	- - - - - -	BLANK	*						- - - - - -
2	1739-317-230-11	WHEEL/12X10.5 COMP	*	2			6G		
3	1739-317-241-00	TIRE/TURF/26X12.0	*	2					
4	- - - - - -	BLANK	*						- - - - - -
4A	1739-317-260-00	VALVE/TYRE ASSY	*	2					
5	- - - - - -	BLANK	*						- - - - - -

FIG.401 FRAME SYSTEM

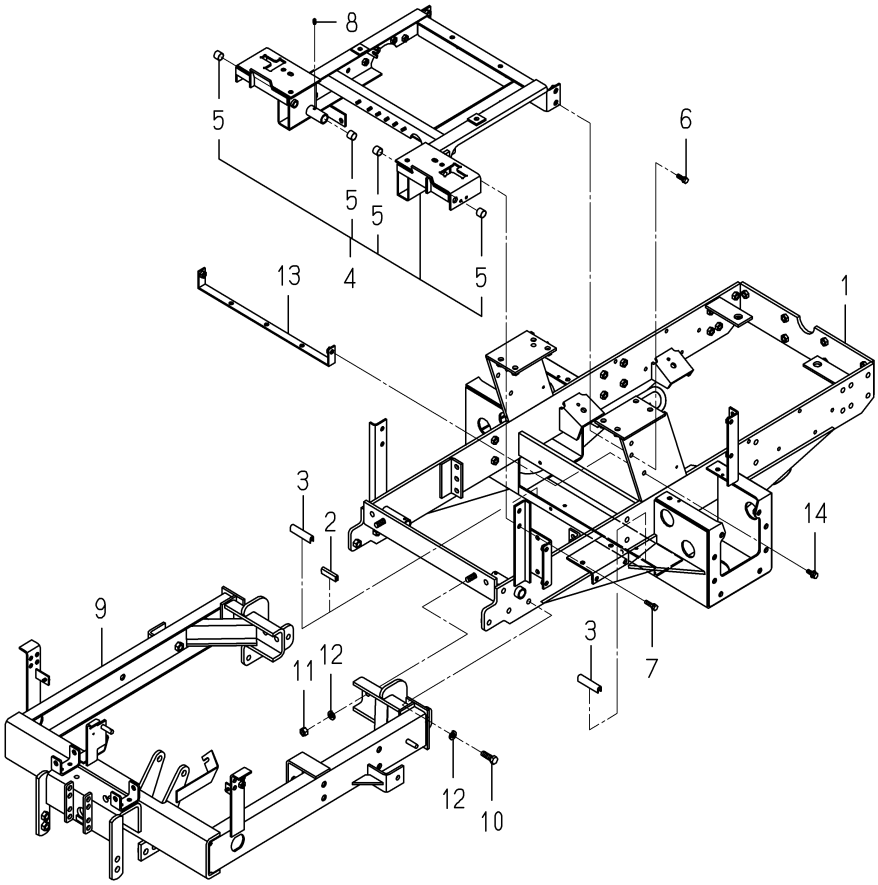

1752-410 -0100

KEY	PART CODE	DESCRIPTION	SPC	TYPE OF MODEL SZ330		ITC	COL	GRP	REMARKS
1	- - - - - -	BLANK	*						- - - - - -
1	- - - - - -	BLANK	*						- - - - - -
1	1752-410-200-20	FRAME/LOWER COMP	*	1					
2	- - - - - -	BLANK	*						- - - - - -
3	P113-201-007-00	TRIM/70	*	2					
4	- - - - - -	BLANK	*						- - - - - -
4	1752-410-350-10	FRAME/SEAT ASSY	*	1					
5	3659-203-204-10	BUSH/17X19X15	*	4					
6	V211-561-002-50	BOLT/M10X25	*	4					
7	V211-561-003-00	BOLT/M10X30	*	4					
8	V760-150-000-00	NIPPLE,GREASE	*	2					
9	- - - - - -	BLANK	*						- - - - - -
9	1752-410-400-10	FRAME/FRONT COMP	*	1					
10	V201-361-203-50	BOLT/M12X35	*	10					
11	V304-460-012-00	NUT/M12	*	2					
12	V401-160-012-00	WASHER,SP/M12	*	12					
13	1752-410-500-00	PLATE COMP	*	1					
14	- - - - - -	BLANK	*						- - - - - -
14	V211-360-802-50	BOLT/SP	*	2					

FIG.402 AXLE(FRONT)SYSTEM

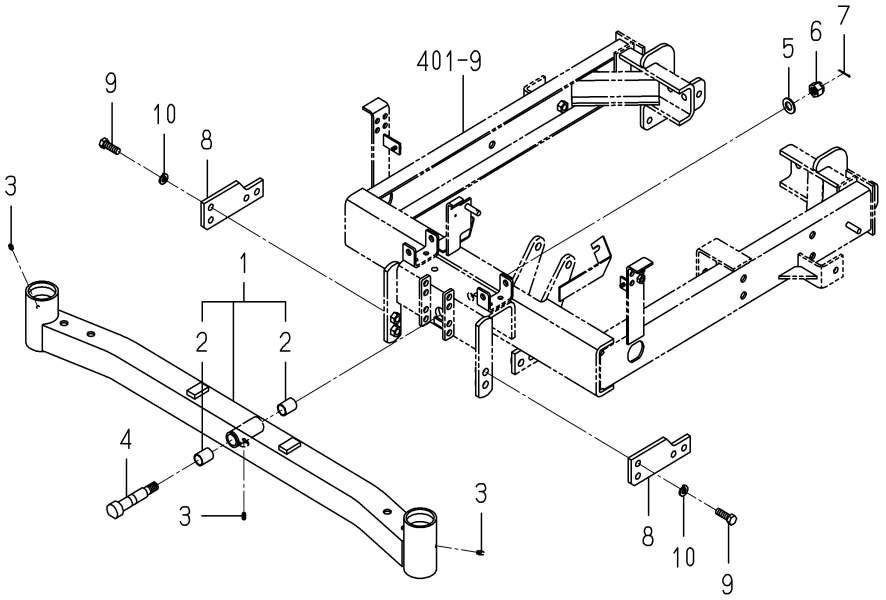

1752-433 -0100

KEY	PART CODE	DESCRIPTION	SPC	TYPE OF MODEL SZ330		ITC	COL	GRP	REMARKS
1	- - - - - -	BLANK	*						- - - - - -
1	1752-433-200-10	AXLE/FRONT ASSY	*	1					
2	1427-401-001-00	BUSH/20X24X30	*	2					
3	V760-150-000-00	NIPPLE,GREASE	*	3					
4	- - - - - -	BLANK	*						- - - - - -
4	- - - - - -	BLANK	*						- - - - - -
4	- - - - - -	BLANK	*						- - - - - -
4	1752-433-001-30	PIN/PIVOT	*	1					
5	V411-260-016-00	WASHER / M16	*	1					
6	V327-261-216-00	NUT,CASTTLE/M16X1.5	*	1					
7	V500-163-002-50	PIN,SPLIT/3 X25	*	1					
8	1752-433-002-00	PLATE/AXLE	*	2					
9	V201-361-203-50	BOLT/M12X35	*	8					
10	V401-160-012-00	WASHER,SP/M12	*	8					

FIG.403 FORK(WHEEL)SYSTEM

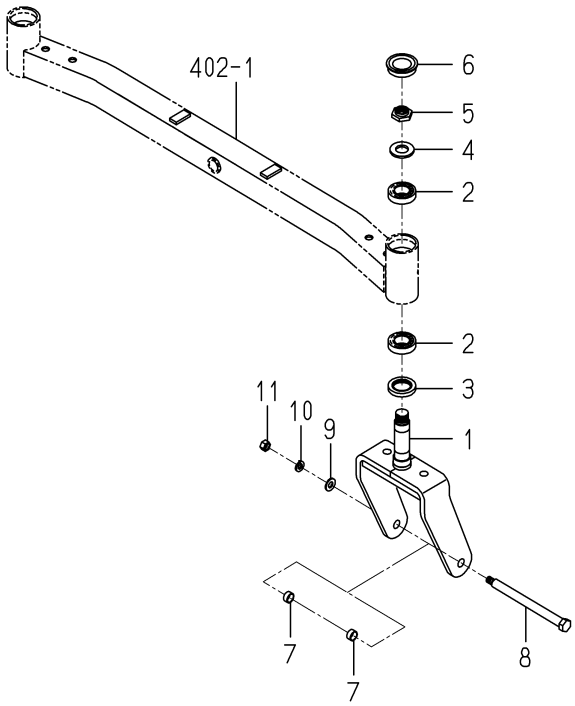

1752-441 -0100

KEY	PART CODE	DESCRIPTION	SPC	TYPE OF MODEL SZ330		ITC	COL	GRP	REMARKS
1	- - - - - -	BLANK	*						- - - - - -
1	1752-441-240-10	FORK/WHEEL COMP	*	2					
2	V635-113-200-60	BEARING	*	4					
3	1752-441-006-00	SEAL/OIL	*	2					
4	V411-260-024-00	WASHER	*	2					
5	1614-432-001-00	NUT/M25	*	2					
6	7947-205-011-00	SEAL,CAP/56	*	2					
7	1752-441-002-00	COLLAR/17X20X10	*	4					
8	1752-441-003-00	PIN/17X211	*	2					
9	V411-260-012-00	WASHER /M12	*	2					
10	V401-160-012-00	WASHER,SP/M12	*	2					
11	V304-260-012-00	NUT/M12	*	2					

FIG.404 TIRE(FRONT)SYSTEM

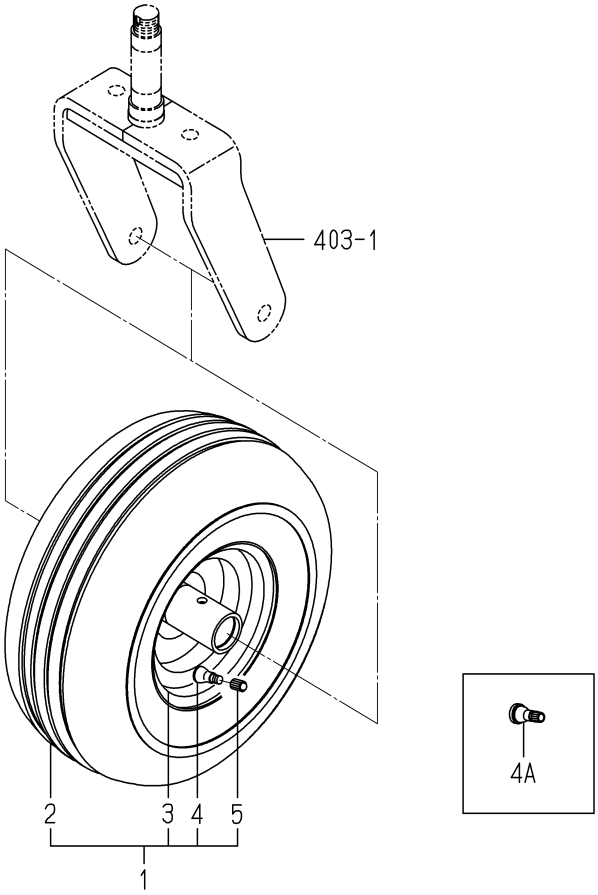

1752-441A-0100

KEY	PART CODE	DESCRIPTION	SPC	TYPE OF MODEL SZ330		ITC	COL	GRP	REMARKS
1	1752-441-210-00	TIRE/15X6 ASSY	*	2			6G		
2	1752-441-211-00	TIRE/15X6	*	2					
3	1752-441-220-00	WHEEL/6X4.5 COMP	*	2			6G		
4	- - - - - -	BLANK	*						- - - - - -
4A	1739-317-260-00	VALVE/TYRE ASSY	*	2					
5	- - - - - -	BLANK	*						- - - - - -

FIG.501 LEVER(LIFT)SYSTEM(1/2)

KEY26,27-PLEASE SEE 2/2 PAGE

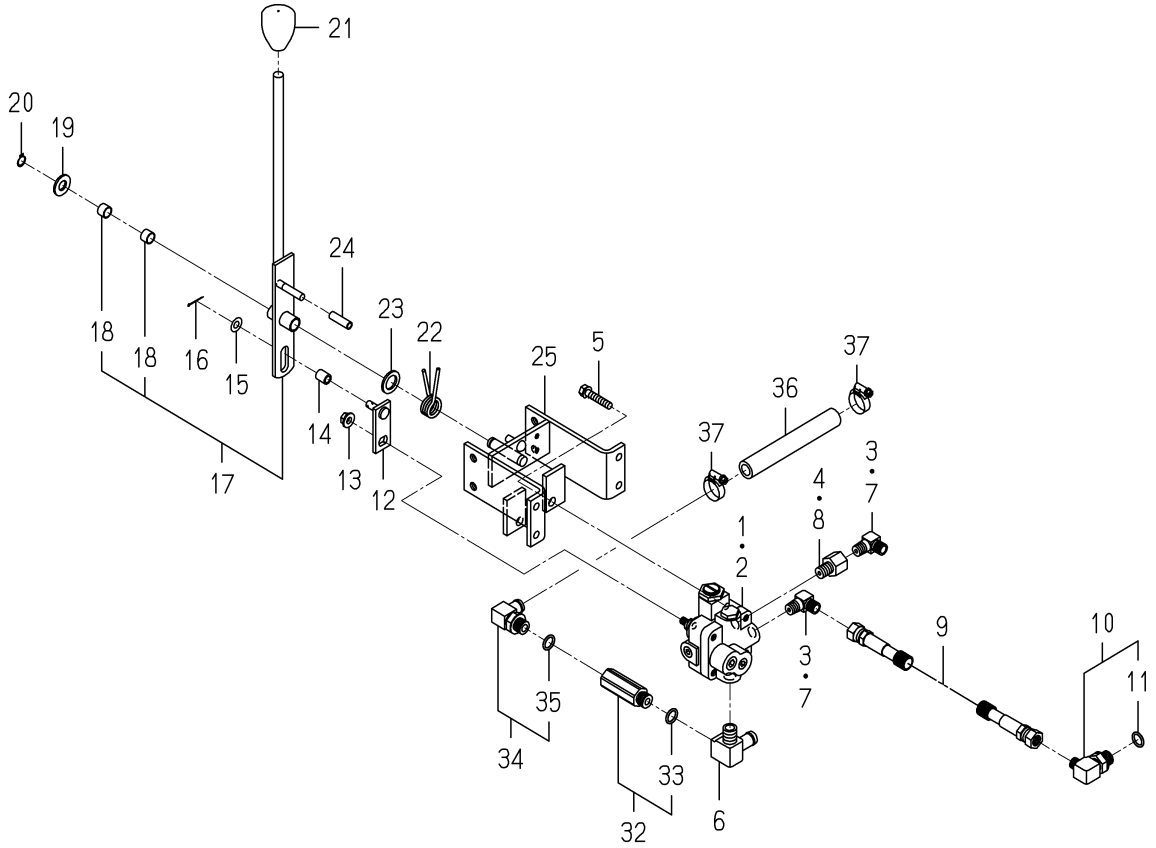

1752-503 -0100

KEY	PART CODE	DESCRIPTION	SPC	TYPE OF MODEL SZ330		ITC	COL	GRP	REMARKS
1	- - - - - -	BLANK	*						- - - - - -
2	K216-012-000-00	ROTARY VALVE	*	1					FIG S01
3	3768-185-022-10	ADAPTER(90ß/PUMP)	*	2					
4	- - - - - -	BLANK	*						- - - - - -
4	1560-140-011-10	CONNECTOR	*	1					
5	V211-260-804-00	BOLT,SEMS	*	2					
6	- - - - - -	BLANK	*						- - - - - -
6	1752-503-007-10	ADAPTER	*	1					
7	- - - - - -	BLANK	*						- - - - - -
8	- - - - - -	BLANK	*						- - - - - -
9	1752-504-220-00	HOSE/CP-CV ASSY	*	1					
10	P103-521-006-10	ELBOW/90ß ASSY	*	1					
11	V720-112-401-40	O-RING/P14	*	1					
12	1752-504-240-00	PLATE COMP	*	1					
13	V363-260-008-00	NUT/WASHER	*	1					
14	1608-207-224-00	HUB/8X12X15	*	1					
15	V411-260-008-00	WASHER,PL/M 8	*	1					
16	V500-162-002-00	PIN,SPLIT/2 X20	*	1					
17	1752-504-300-00	PLATE/LIFT/MOWE ASSY	*	1					
18	3656-115-002-00	BUSH/12X14X10	*	2					
19	V411-260-012-00	WASHER /M12	*	1					
20	V704-140-012-00	RING,SNAP/12 C	*	1					
21	1544-219-005-00	KNOB,LEVER/12	*	1					
22	1752-503-005-00	SPRING/HT021	*	1					
23	3768-211-011-00	WASHER	*	1					
24	1716-601-009-00	TUBE/07X09X30	*	1					
25	- - - - - -	BLANK	*						- - - - - -
25	1752-503-210-10	BRACKET COMP	*	1					
26	V211-260-802-00	BOLT/S	*	4					
27	V201-361-002-50	BOLT/M10X25	*	2					

FIG.501 LEVER(LIFT)SYSTEM(2/2)

KEY32~37-PLEASE SEE 1/2 PAGE

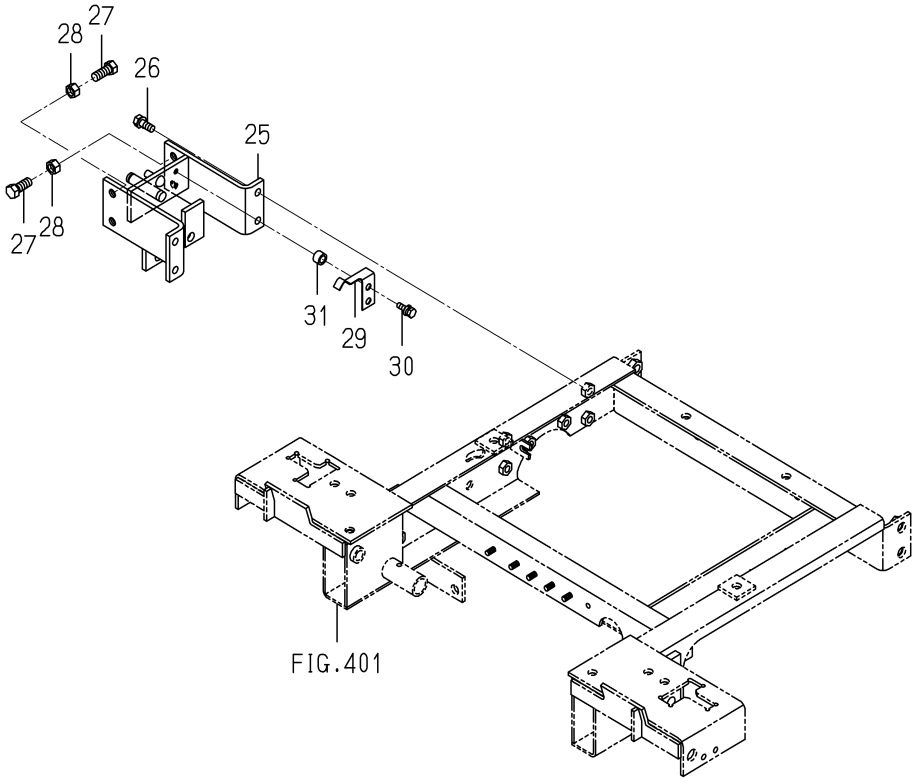

1752-503 -0100

KEY	PART CODE	DESCRIPTION	SPC	TYPE OF MODEL SZ330		ITC	COL	GRP	REMARKS
28	V304-260-010-00	NUT	*	2					
29	1752-554-003-00	STOPPER/DIAL	*	1					
30	V210-360-602-00	BOLT/SP	*	2					
31	1646-640-008-10	COLLAR/09X14X09	*	2					
32	K220-002-000-00	VALVE/CHECK ASSY	*	1					
33	V720-112-401-40	O-RING/P14	*	1					
34	P112-521-200-00	ELBOW/90ß ASSY	*	1					
35	V720-102-401-40	O-RING/P14	*	1					
36	1752-503-008-00	HOSE/150	*	1					
37	J061-116-025-00	CLAMP/WORM/16-25	*	2					

FIG.502 CYLINDER(LIFT)SYSTEM

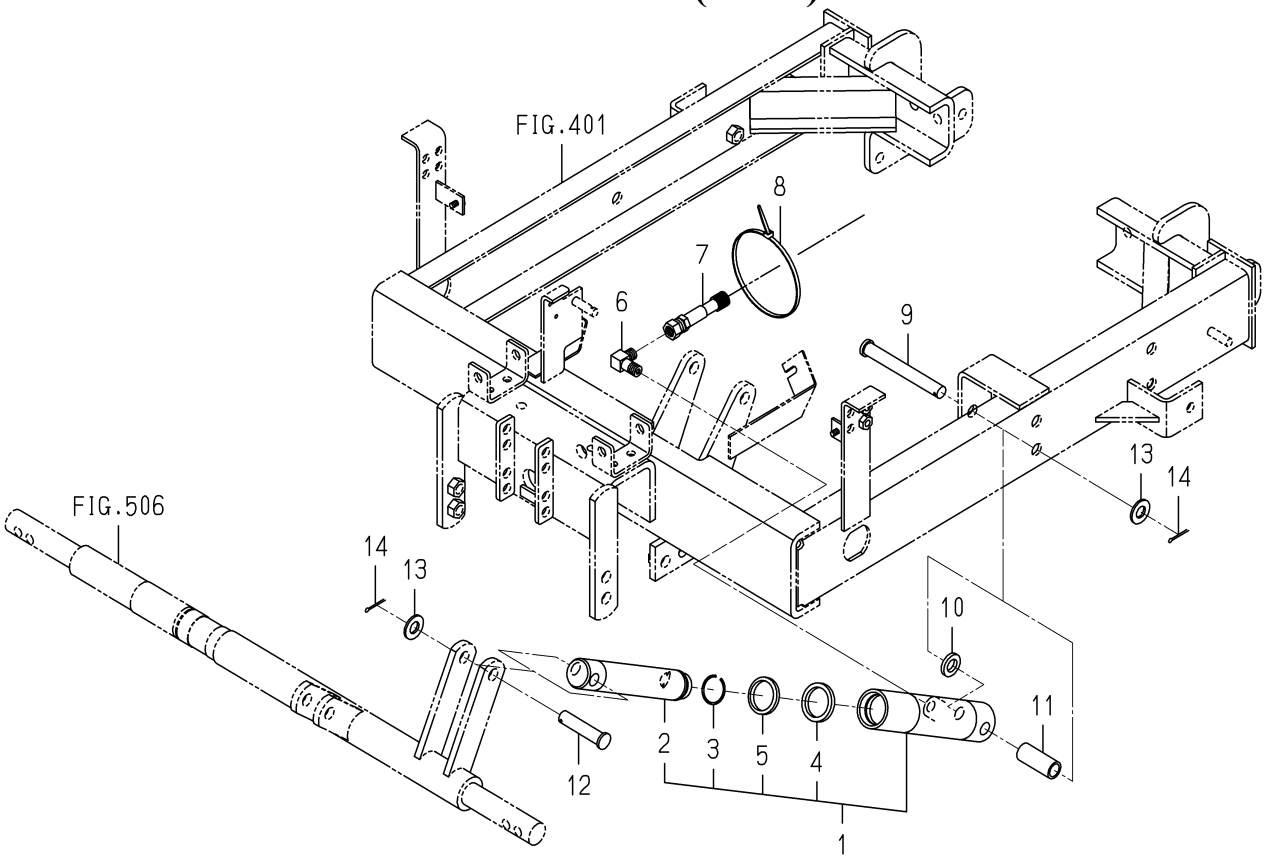

1752-504 -0100

KEY	PART CODE	DESCRIPTION	SPC	TYPE OF MODEL SZ330		ITC	COL	GRP	REMARKS
1	K182-032-000-00	CYLINDER ASSY	*	1					
2	K182-032-001-00	PISTON	*	1					
3	K182-002-002-00	STOPPER,PISTON	*	1					
4	K182-032-002-00	ROD PACKING	*	1					
5	K182-032-003-00	DUST/SEAL	*	1					
6	3676-374-005-00	ADAPTOR/90ß	*	1					
7	1752-504-230-00	HOSE/CV-CYL ASSY	*	1					
8	3746-185-014-00	BAND,HOSE	*	1					
9	2194-128-002-00	PIN/15X118	*	1					
10	3650-780-022-00	WASHER/16X28X5	*	1					
11	3651-151-522-00	COLLAR/16X22X53	*	1					
12	1752-504-002-00	PIN/15X68	*	1					
13	- - - - - -	BLANK	*						- - - - - -
13	1427-601-003-00	WASHER/15X24X2	*	2					
14	V500-163-002-50	PIN,SPLIT/3 X25	*	2					

FIG.503 PIPING(SUCTION)SYSTEM(1/2)

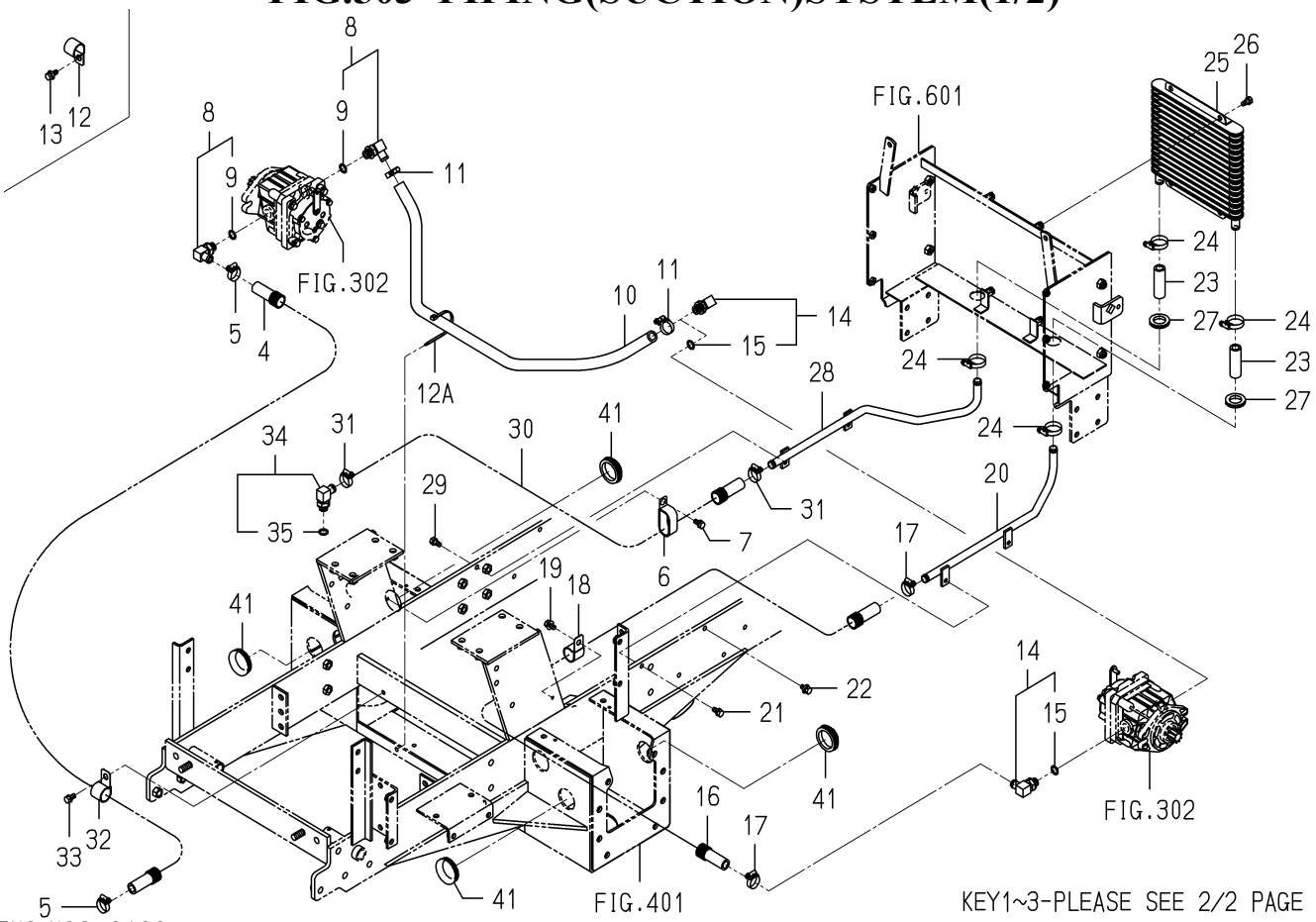

1752-508 -0100

KEY	PART CODE	DESCRIPTION	SPC	TYPE OF MODEL SZ330		ITC	COL	GRP	REMARKS
1	1752-508-001-00	HOSE/SUCTION	*	1					
2	J061-120-032-00	CLAMP/WORM/20-32	*	2					
3	1342-402-006-00	BAND/WIRE/250	*	1					
4	- - - - - -	BLANK	*						- - - - - -
4	1752-508-011-00	HOSE/550	*	1					
5	J061-116-025-00	CLAMP/WORM/16-25	*	2					
6	3650-261-001-00	CLAMP/25X50	*	1					
7	V211-360-802-00	BOLT/SP	*	1					
8	P112-521-200-00	ELBOW/90ß ASSY	*	2					
9	V720-102-401-40	O-RING/P14	*	2					
10	1752-508-005-00	HOSE/DRAIN/MOTER	*	1					
11	J061-116-025-00	CLAMP/WORM/16-25	*	2					
12	- - - - - -	BLANK	*						- - - - - -
12A	- - - - - -	BLANK	*						- - - - - -
12A	3737-172-010-00	BAND/202	*	3					
13	- - - - - -	BLANK	*						- - - - - -
14	P112-521-200-00	ELBOW/90ß ASSY	*	2					
15	V720-102-401-40	O-RING/P14	*	2					
16	3670-354-003-00	HOSE/610	*	1					
17	J061-116-025-00	CLAMP/WORM/16-25	*	2					
18	1518-786-508-00	CLIP B	*	1					
19	- - - - - -	BLANK	*						- - - - - -
19	V211-360-802-00	BOLT/SP	*	1					
20	1752-508-350-00	PIPE/COOLER/LH COMP	*	1					
21	- - - - - -	BLANK	*						- - - - - -
22	- - - - - -	BLANK	*						- - - - - -
22	- - - - - -	BLANK	*						- - - - - -
22	V211-360-802-00	BOLT/SP	*	2					
23	1752-508-003-00	HOSE/COOLER/2ND	*	2					
24	J061-116-025-00	CLAMP/WORM/16-25	*	4					

FIG.503 PIPING(SUCTION)SYSTEM(2/2)

KEY25~35,41-PLEASE SEE 1/2 PAGE

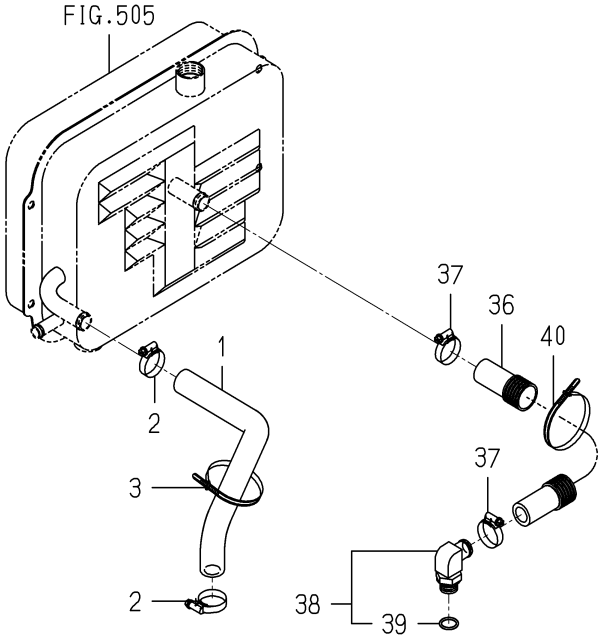

1752-508 -0100

KEY	PART CODE	DESCRIPTION	SPC	TYPE OF MODEL SZ330		ITC	COL	GRP	REMARKS
25	3817-358-200-00	COOLER/OIL	*	1					
26	- - - - - -	BLANK	*						- - - - - -
26	V211-260-802-00	BOLT/S	*	4					
27	1440-602-003-00	GROMMET/25X31X2	*	2					
28	1752-508-360-00	PIPE/COOLER/RH COMP	*	1					
29	V211-260-801-60	BOLT,SEMS (S) M8X16	*	2					
30	- - - - - -	BLANK	*						- - - - - -
30	3670-354-003-00	HOSE/610	*	1					
31	J061-116-025-00	CLAMP/WORM/16-25	*	2					
32	1518-786-508-00	CLIP B	*	1					
33	- - - - - -	BLANK	*						- - - - - -
33	V211-360-802-00	BOLT/SP	*	1					
34	P112-521-200-00	ELBOW/90ß ASSY	*	1					
35	V720-102-401-40	O-RING/P14	*	1					
36	1752-508-007-10	HOSE/DRAIN	*	1					
37	J061-120-032-00	CLAMP/WORM/20-32	*	2					
38	3659-354-001-10	ADAPTOR/90ßPF1/2ASSY	*	1					
39	V720-102-401-80	O-RING/P18	*	1					
40	1342-402-006-00	BAND/WIRE/250	*	3					
41	1364-301-003-00	CAP,HANDLE	*	4					

FIG.504 PIPING(DELIVERY)SYSTEM

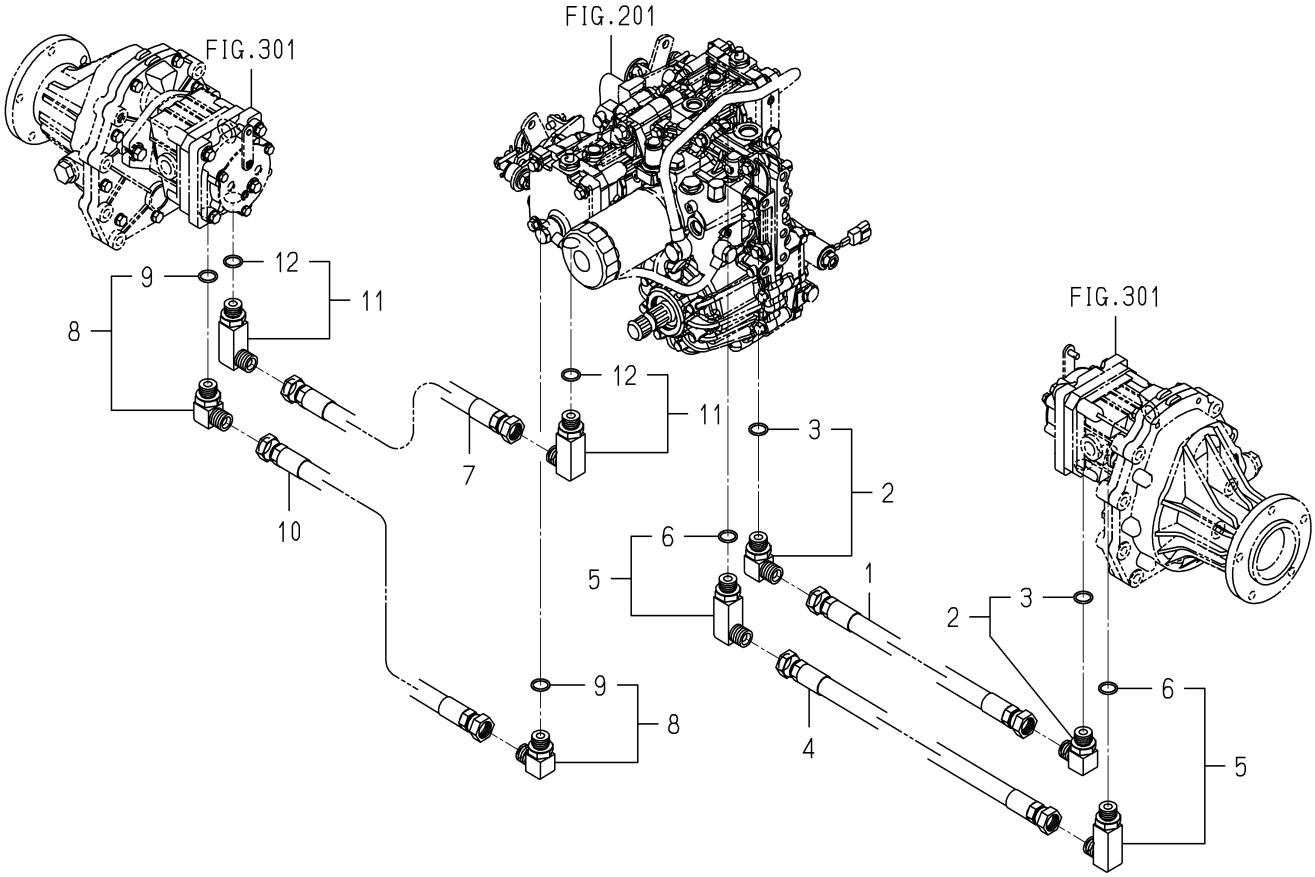

1752-509 -0100

KEY	PART CODE	DESCRIPTION	SPC	TYPE OF MODEL SZ330		ITC	COL	GRP	REMARKS
1	1752-509-250-00	HOSE/F/LH ASSY	*	1					
2	1752-509-310-00	ADAPTER/90/G/1/ ASSY	*	2					
3	1752-509-302-00	RING/O	*	2					
4	1752-509-260-00	HOSE/R/LH ASSY	*	1					
5	1752-509-300-00	ADAPTER/90/G/1/ ASSY	*	2					
6	1752-509-302-00	RING/O	*	2					
7	1752-509-270-00	HOSE/F/RH ASSY	*	1					
8	1752-509-310-00	ADAPTER/90/G/1/ ASSY	*	2					
9	1752-509-302-00	RING/O	*	2					
10	1752-509-280-00	HOSE/R/RH ASSY	*	1					
11	1752-509-300-00	ADAPTER/90/G/1/ ASSY	*	2					
12	1752-509-302-00	RING/O	*	2					

FIG.505 TANK(OIL)SYSTEM

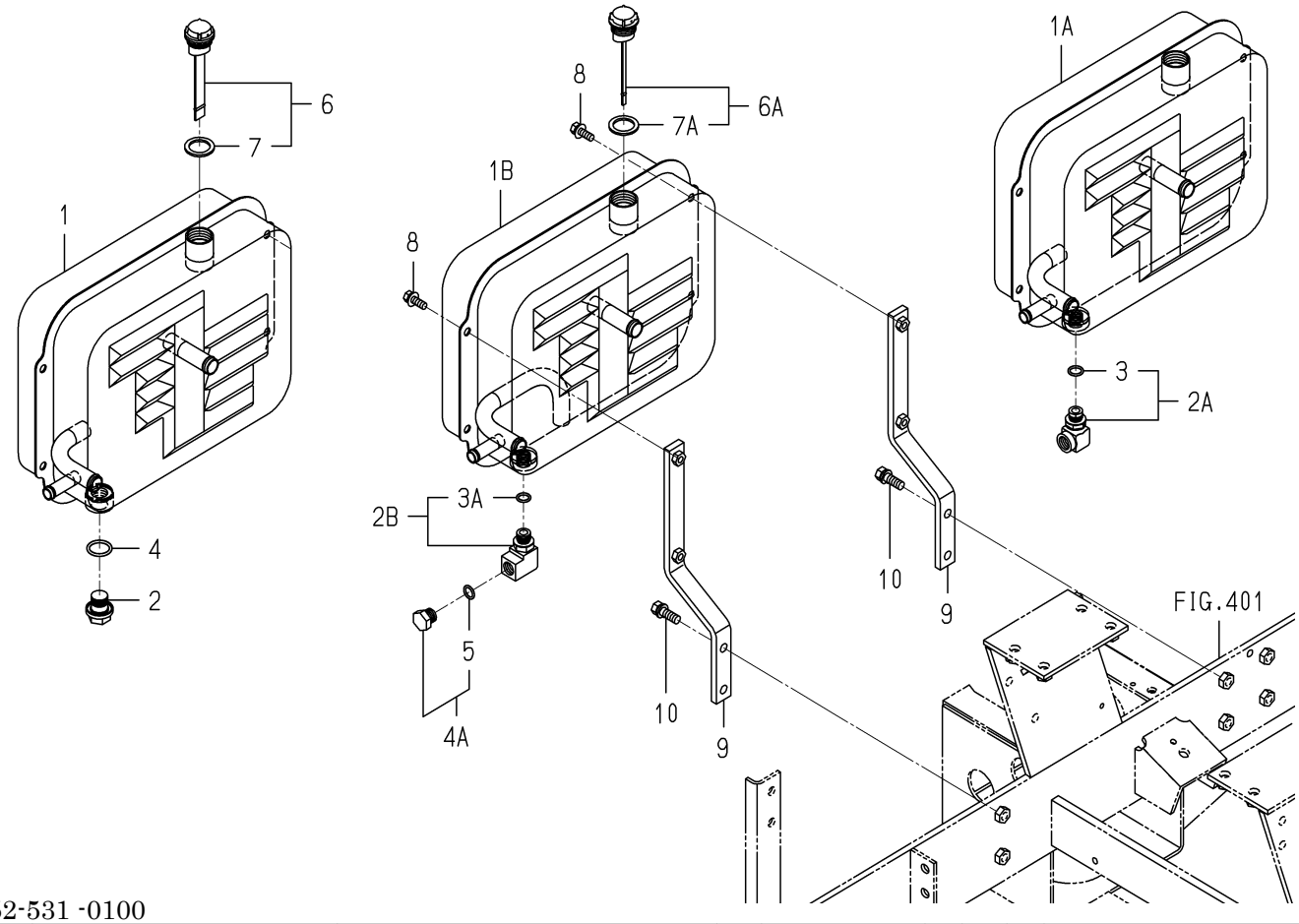

1752-531 -0100

KEY	PART CODE	DESCRIPTION	SPC	TYPE OF MODEL SZ330		ITC	COL	GRP	REMARKS
1	- - - - - -	BLANK	*						- - - - - -
1A	- - - - - -	BLANK	*						- - - - - -
1B	1752-531-200-20	TANK/OIL COMP	*	1					
2	- - - - - -	BLANK	*						- - - - - -
2A	- - - - - -	BLANK	*						- - - - - -
2B	1752-531-250-00	ADAPTER/90ß/G3/ ASSY	*	1					
3	- - - - - -	BLANK	*						- - - - - -
3A	V720-112-401-40	O-RING/P14	*	1					
4	- - - - - -	BLANK	*						- - - - - -
4A	1725-203-210-00	PLUG/G3/8 ASSY	*	1					
5	V720-112-401-40	O-RING/P14	*	1					
6	- - - - - -	BLANK	*						- - - - - -
6A	1518-407-240-10	CAP,OIL/A	*	1					
7	- - - - - -	BLANK	*						- - - - - -
7	- - - - - -	BLANK	*						- - - - - -
7A	1518-306-203-10	PACKING	*	1					
8	V211-360-802-50	BOLT/SP	*	4					
9	1752-531-240-00	PLATE/TANK COMP	*	2					
10	V211-261-003-00	BOLT(S) M10X30	*	4					

FIG.506 LINK(MOWER)SYSTEM

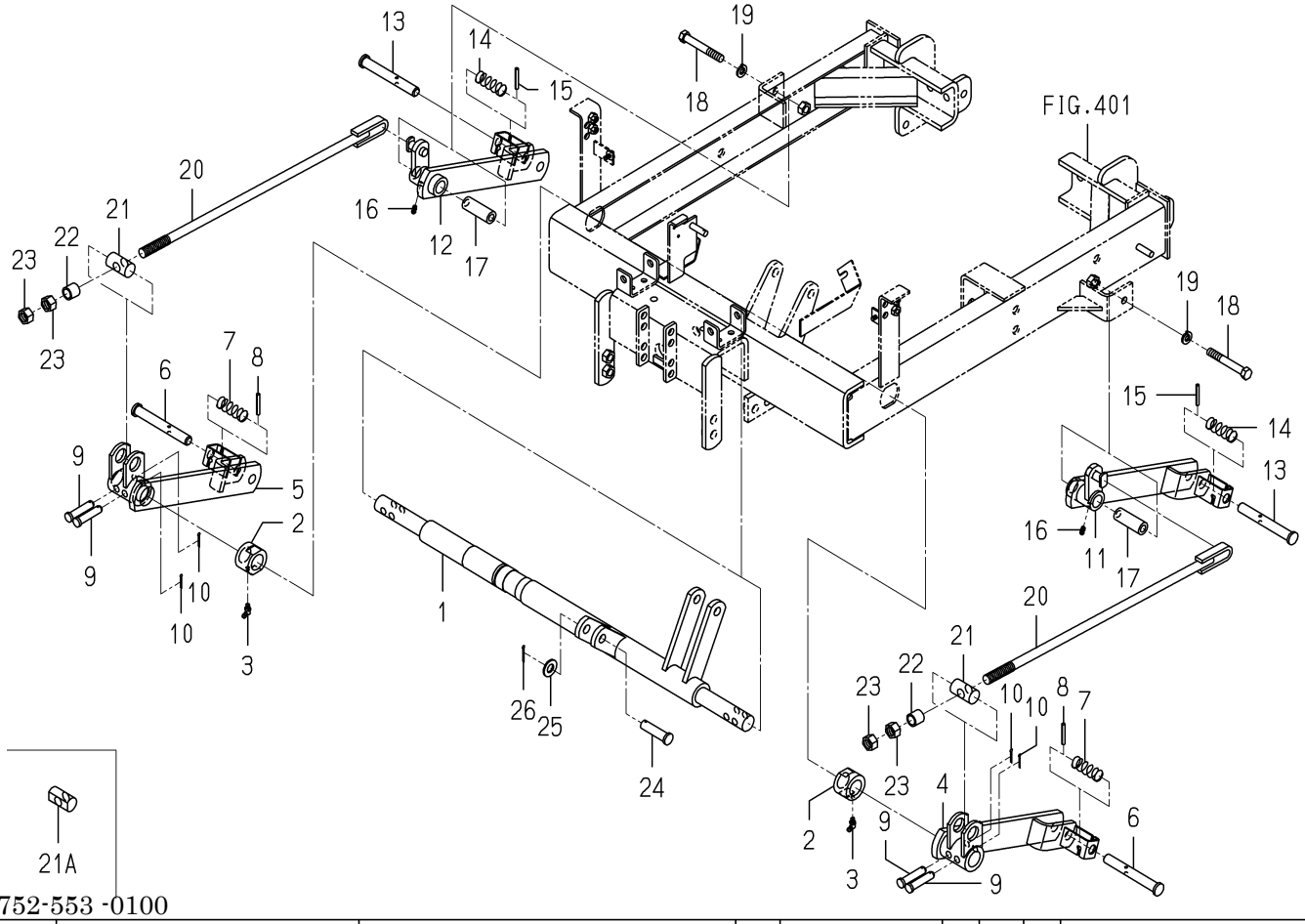

1752-553 -0100

KEY	PART CODE	DESCRIPTION	SPC	TYPE OF MODEL SZ330		ITC	COL	GRP	REMARKS
1	1752-553-210-00	SHAFT/LIFT COMP	*	1					
2	1752-553-001-00	HUB/28X45X30	*	2					
3	V762-150-000-00	NIPPLE,GREASE/B-M6F	*	2					
4	1752-553-220-10	ARM/FRONT/LH COMP	*	1					
5	1752-553-240-10	ARM/FRONT/RH COMP	*	1					
6	8654-501-047-00	PIN/16X124	*	2					
7	8654-501-048-00	SPRING/HC056	*	2					
8	V580-140-504-00	PIN,SPRING/5 X40 W	*	2					
9	7963-611-003-00	PIN/12X48	*	4					
10	V500-163-002-00	PIN,SPLIT/3 X20	*	4					
11	1752-553-230-10	ARM/REAR/LH COMP	*	1					
12	1752-553-250-10	ARM/REAR/RH COMP	*	1					
13	8654-501-047-00	PIN/16X124	*	2					
14	8654-501-048-00	SPRING/HC056	*	2					
15	V580-140-504-00	PIN,SPRING/5 X40 W	*	2					
16	V760-150-000-00	NIPPLE,GREASE	*	2					
17	1752-553-002-00	HUB/13X22X60	*	2					
18	V201-361-208-50	BOLT	*	2					
19	V401-160-012-00	WASHER,SP/M12	*	2					
20	1752-553-260-00	ROD/LINK COMP	*	2					
21	- - - - - -	BLANK	*						- - - - - -
21A	1752-553-004-10	PIN/25X45	*	2					
22	- - - - - -	BLANK	*						- - - - - -
22	- - - - - -	BLANK	*						- - - - - -
22	1752-553-005-10	COLLAR/16X25X20	*	2					
23	V334-460-016-00	NUT	*	4					
24	3814-221-004-00	PIN/15X61	*	1					
25	V411-260-014-00	WASHER,PL/M14	*	1					
26	V500-163-002-50	PIN,SPLIT/3 X25	*	1					

FIG.507 ADJUST(HEIGHT)SYSTEM

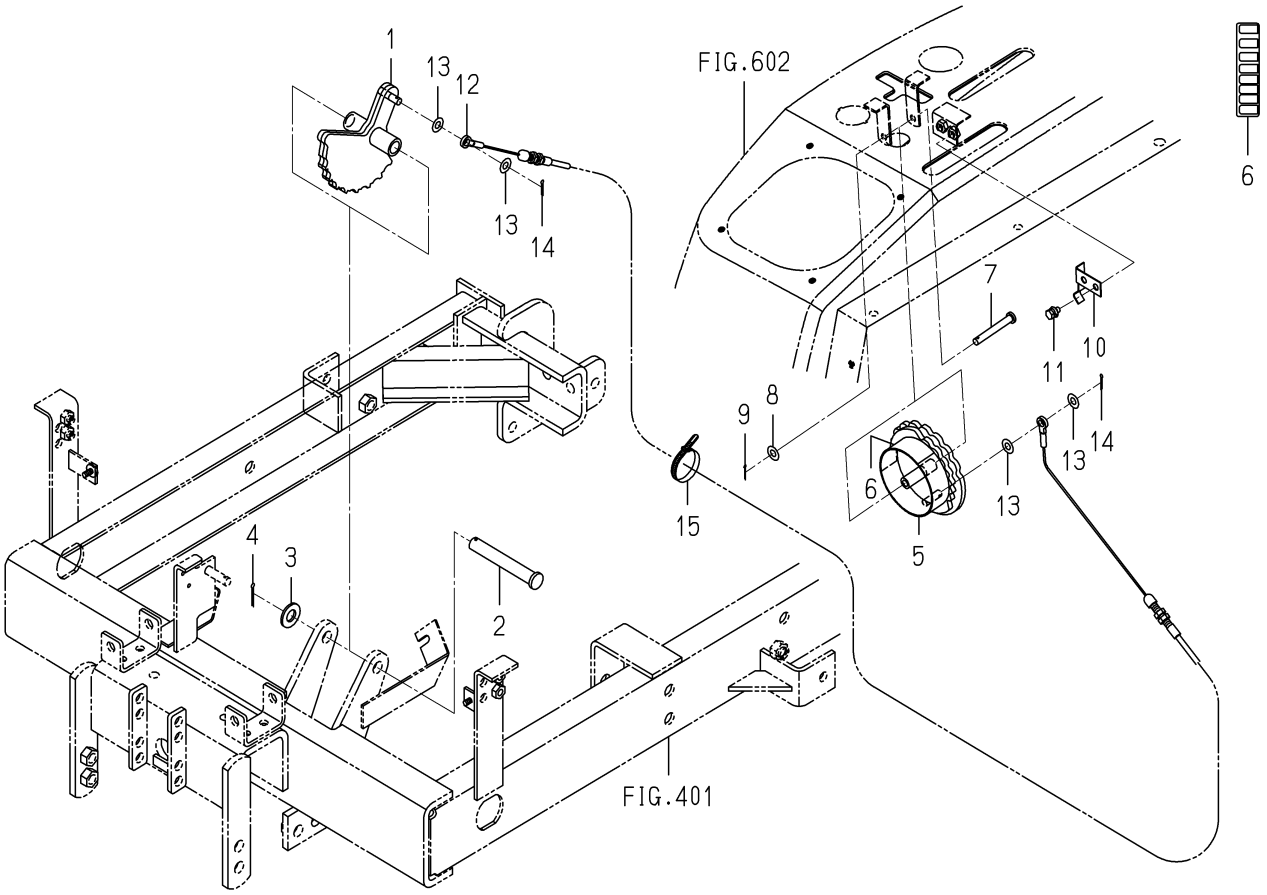

1752-554A-0100

KEY	PART CODE	DESCRIPTION	SPC	TYPE OF MODEL SZ330		ITC	COL	GRP	REMARKS
1	1752-554-210-00	PLATE/ADJUST COMP	*	1					
2	2188-336-003-00	PIN/15X108	*	1					
3	V411-260-014-00	WASHER,PL/M14	*	1					
4	V500-163-002-50	PIN,SPLIT/3 X25	*	1					
5	1752-554-230-00	DIAL/GAUGE COMP	*	1					
6	1752-554-055-00	LABEL/DIAL	*	1					
7	3676-155-002-00	PIN/08X60	*	1					
8	V411-260-008-00	WASHER,PL/M 8	*	1					
9	V500-162-501-50	PIN,SPLIT/2.5X15	*	1					
10	1752-554-003-00	STOPPER/DIAL	*	1					
11	V210-360-601-20	BOLT,SEMS	*	2					
12	1752-554-220-00	CABLE/GAUGE ASSY	*	1					
13	V411-260-008-00	WASHER,PL/M 8	*	4					
14	V500-162-501-50	PIN,SPLIT/2.5X15	*	2					
15	1376-402-003-00	BAND,WIRE/140	*	1					

FIG.508 JACK UP SYSTEM

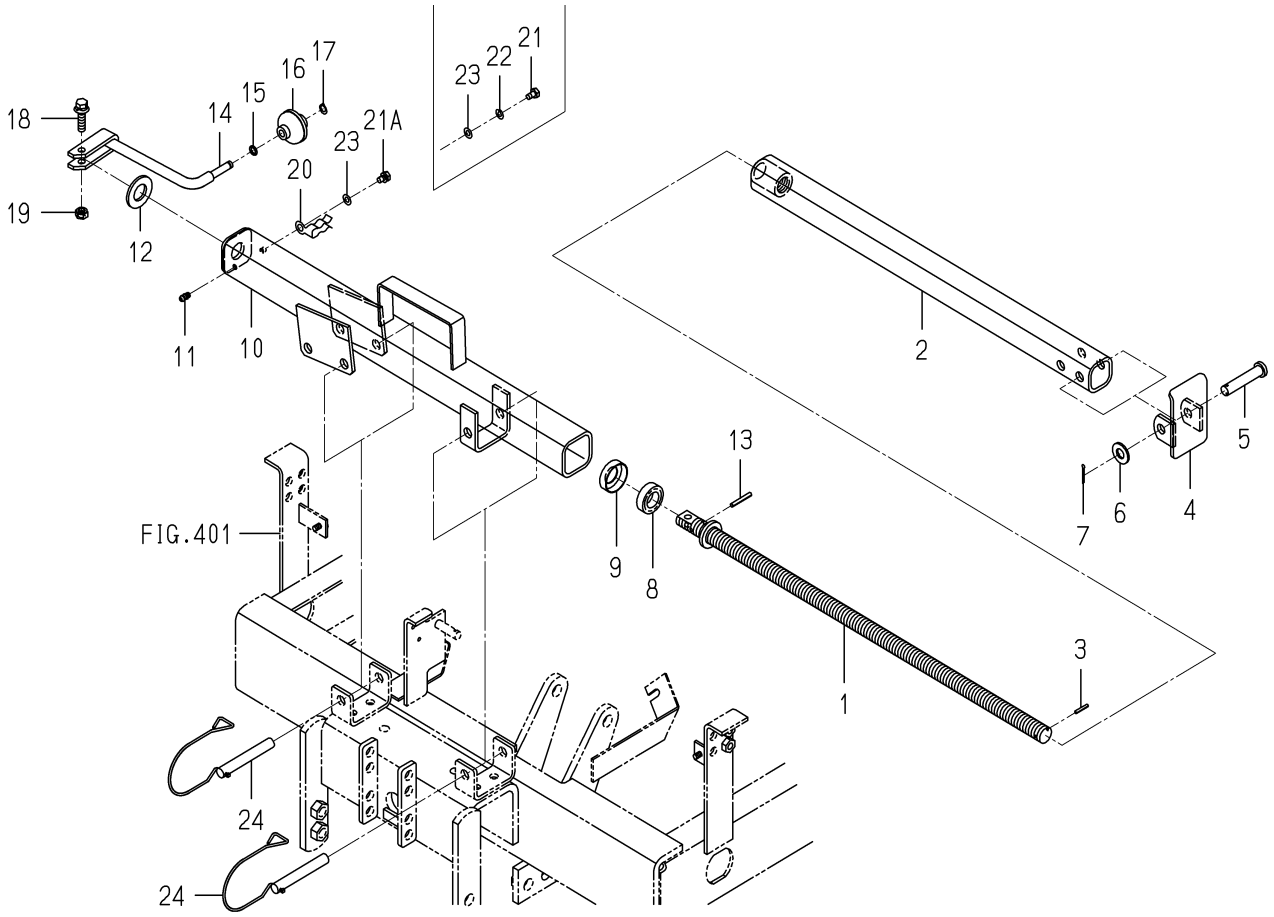

1752-555 -0100

KEY	PART CODE	DESCRIPTION	SPC	TYPE OF MODEL SZ330		ITC	COL	GRP	REMARKS
1	1752-555-210-00	SCREW/LH/TR20 COMP	*	1					
2	1752-555-230-00	TUBE/LH/TR20 COMP	*	1					
3	V580-140-302-00	PIN/SPRING	*	1					
4	1752-555-220-00	STAND/LIFT COMP	*	1					
5	2186-124-057-10	PIN/12X55	*	1					
6	V411-260-012-00	WASHER /M12	*	1					
7	V500-162-502-00	PIN,SPLIT/2.5X20	*	1					
8	V610-115-110-40	BEARING,TB/51104	*	1					
9	7981-501-001-00	COVER,THRUST	*	1					
10	- - - - - -	BLANK	*						- - - - - -
10	1752-555-250-10	COVER/JACK COMP	*	1					
11	V760-150-000-00	NIPPLE,GREASE	*	1					
12	V411-260-020-00	WASHER/M20	*	1					
13	V580-140-403-20	PIN/SPRING	*	1					
14	1752-555-240-00	HANDLE COMP	*	1					
15	V720-101-900-80	O-RING/P 8	*	1					
16	1302-726-502-00	GRIP	*	1					
17	7843-501-012-00	RING/STOP/GRIP/8	*	1					
18	V211-360-803-50	BOLT/SP	*	1					
19	2144-117-002-00	NUT/M8	*	1					
20	3610-631-002-00	HANGER,SUPPORT	*	1					
21	- - - - - -	BLANK	*						- - - - - -
21A	V210-260-601-00	BOLT/S M6X10	*	1					
22	- - - - - -	BLANK	*						- - - - - -
23	V411-260-006-00	WASHER / M6	*	1					
24	1752-555-260-00	PIN/12X86 COMP	*	2					

FIG.601 HOOD SYSTEM(1/2)

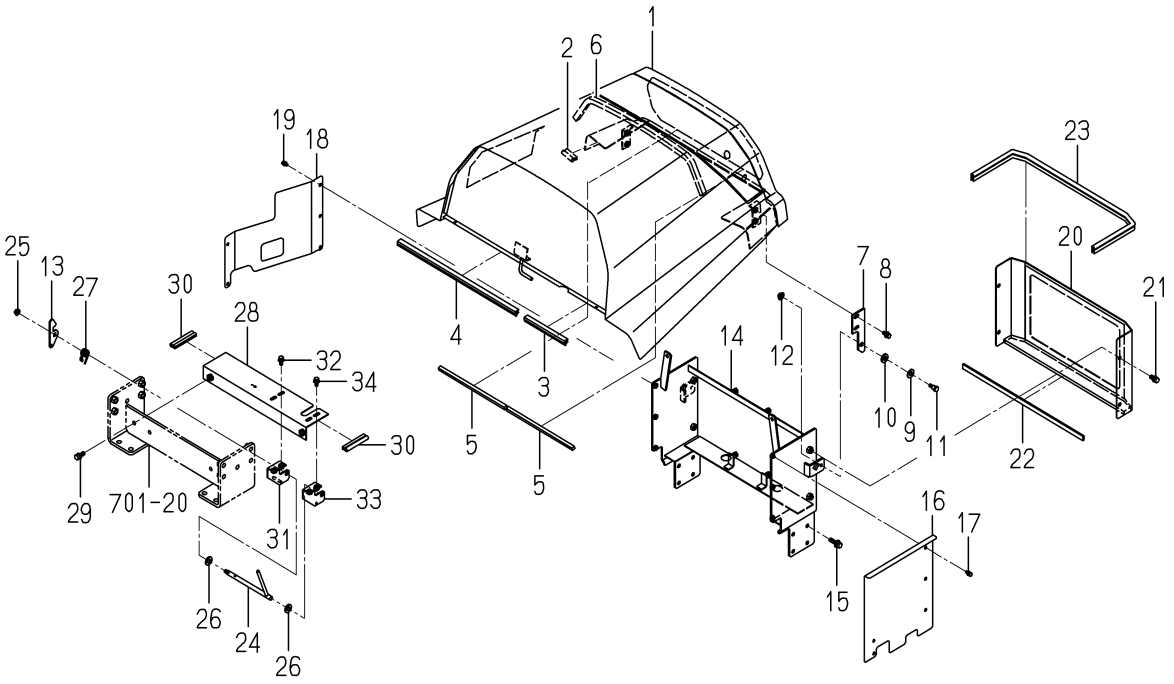

1752-601A-0100

KEY	PART CODE	DESCRIPTION	SPC	TYPE OF MODEL SZ330		ITC	COL	GRP	REMARKS
1	1752-601-210-20	HOOD/ENGINE COMP	*	1			4L		
2	1673-780-011-00	TRIM/50	*	2					
3	1752-601-024-00	INSULATOR/170	*	1					
4	1752-601-025-00	INSULATOR/500	*	1					
5	1752-601-021-00	INSULATOR/10X10X280	*	2					
6	1752-102-007-00	INSULATOR/15X15X650	*	1					
7	1752-601-010-00	PLATE/I/50X150	*	2					
8	V211-360-802-00	BOLT/SP	*	4					
9	V411-260-012-00	WASHER /M12	*	2					
10	1689-621-007-00	WASHER/12X26X04	*	2					
11	1689-621-008-10	BOLT	*	2					
12	2502-601-005-00	NUT/CONICALWASHER	*	2					
13	1650-601-003-00	PLATE/HOOK	*	1					
14	1752-601-240-00	FRAME/HOOD COMP	*	1					
15	V211-661-003-50	BOLT/SP	*	8					
16	1752-601-008-20	PLATE/SIDE/LH	*	1			7F		
17	V210-360-601-60	BOLT(SP)/M6X16	*	3					
18	1752-601-015-10	PLATE/MUFFLER	*	1					
19	V210-360-601-60	BOLT(SP)/M6X16	*	3					
20	1752-601-260-10	COVER/REAR COMP	*	1			7F		
21	V211-261-002-00	BOLT,SEMS	*	4					
22	1752-601-005-00	INSULATOR/15X510	*	1					
23	1752-601-029-10	INSULATOR/865	*	1					
24	1752-601-270-00	LEVER COMP	*	1					
25	V362-260-008-00	NUT/WASHER	*	1					
26	V411-260-012-00	WASHER /M12	*	2					
27	1110-404-004-10	SPRING/HT018	*	1					
28	1752-601-370-00	PLATE/L/435X95 COMP	*	1					
29	V211-261-002-50	BOLT(S) M10X25	*	2					
30	1650-601-009-00	TRIM/90	*	2					

FIG.601 HOOD SYSTEM(2/2)

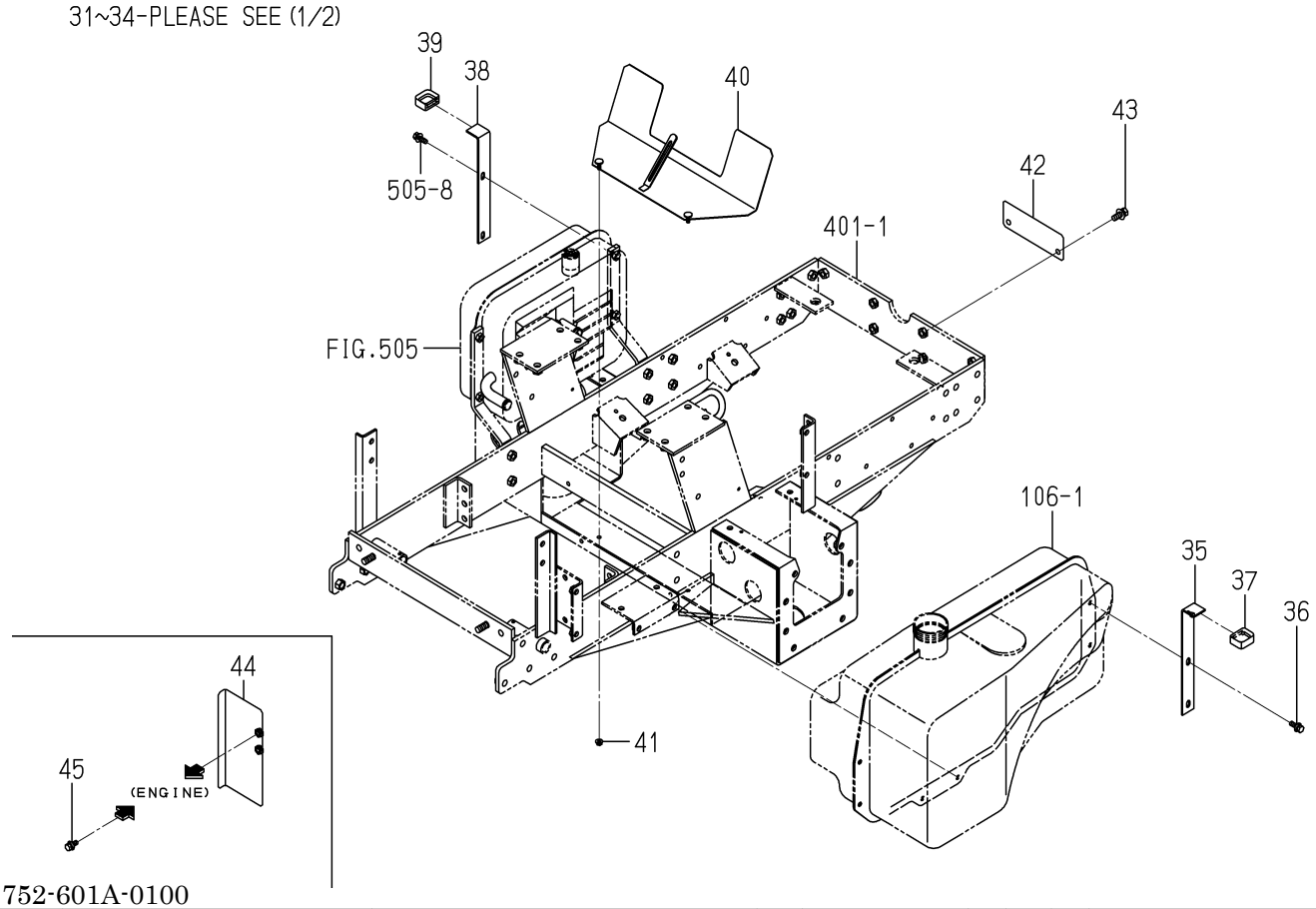

1752-601A-0100

KEY	PART CODE	DESCRIPTION	SPC	TYPE OF MODEL SZ330		ITC	COL	GRP	REMARKS
31	1752-601-290-10	PLATE/L/85X90/A COMP	*	1					
32	V211-360-802-00	BOLT/SP	*	2					
33	1752-601-310-10	PLATE/L/85X90/B COMP	*	1					
34	V211-360-802-00	BOLT/SP	*	2					
35	1752-601-330-00	PLATE/L/250X32 COMP	*	1					
36	V211-360-802-50	BOLT/SP	*	2					
37	1593-101-012-00	STOPPER	*	1					
38	1752-601-014-00	PLATE/L/250X32/RH	*	1					
39	1593-101-012-00	STOPPER	*	1					
40	1752-601-360-00	PLATE/UNDER COMP	*	1					
41	V360-260-006-00	NUT/M6	*	2					
42	1752-601-032-00	PLATE/I/60X170	*	1					
43	V211-361-002-50	BOLT/SP	*	2					
44	1752-601-410-10	PLATE/L/105X20 COMP	*	1					
45	V211-360-802-00	BOLT/SP	*	2					

FIG.602 FENDER SYSTEM

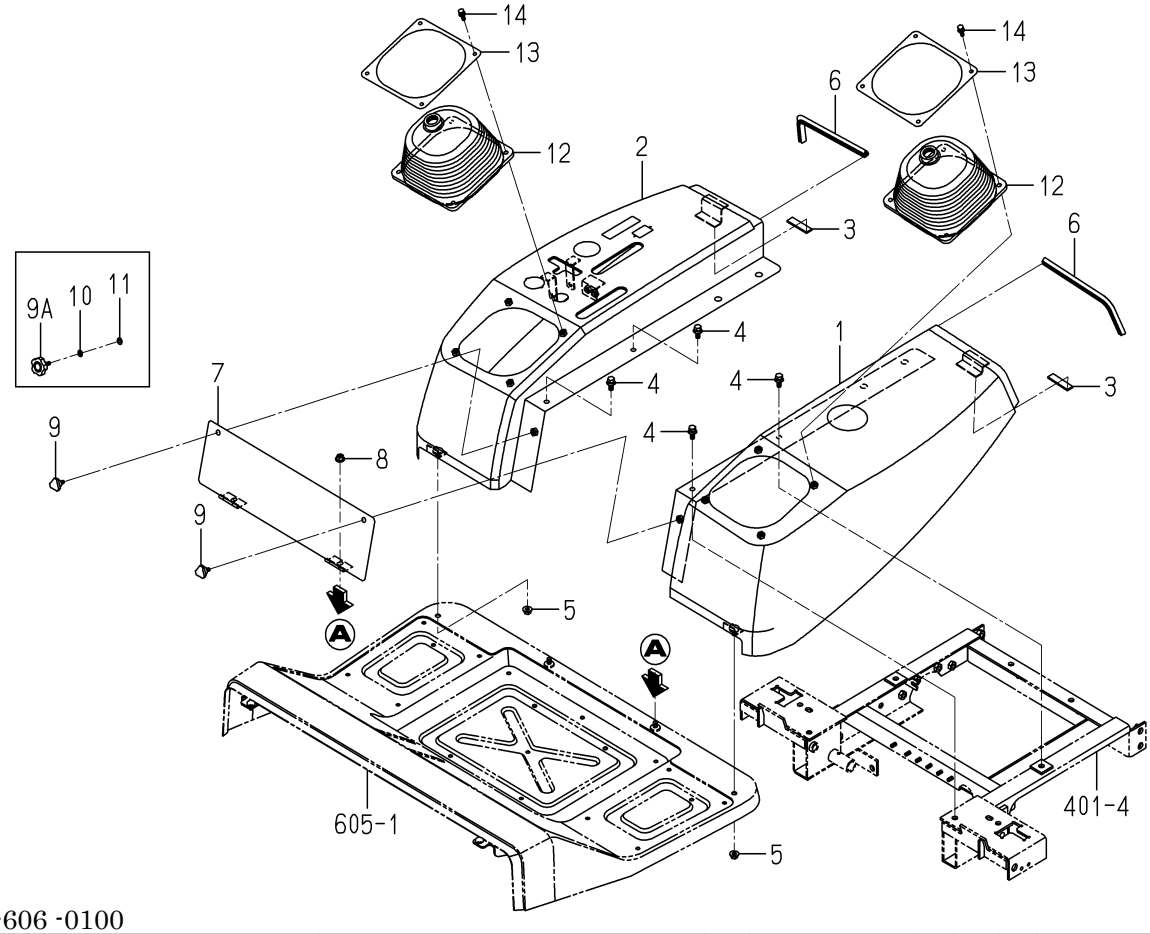

1752-606 -0100

KEY	PART CODE	DESCRIPTION	SPC	TYPE OF MODEL SZ330		ITC	COL	GRP	REMARKS
1	1752-606-210-10	FENDER/LH COMP	*	1			4L		
2	1752-606-220-10	FENDER/RH COMP	*	1			4L		
3	1752-606-004-00	INSULATOR/15X55X03	*	2					
4	V211-360-802-00	BOLT/SP	*	4					
5	V362-260-008-00	NUT/WASHER	*	2					
6	1752-606-006-00	INSULATOR/250	*	2					
7	1752-606-230-00	COVER/CENTER COMP	*	1			4L		
8	V362-260-008-00	NUT/WASHER	*	2					
9	- - - - - -	BLANK	*						- - - - - -
9A	- - - - - -	BLANK	*						- - - - - -
9A	1102-611-006-10	KNOB/SET/M06X15	*	2					
10	V401-160-006-00	WASHER,SP/M 6	*	2					
11	- - - - - -	BLANK	*						- - - - - -
11	3560-503-302-00	WASHER,WIRE TENSION	*	2					
12	1752-606-001-00	B00T	*	2					
13	1752-606-003-00	PLATE/BOOT	*	2					
14	V210-370-602-00	BOLT/SP	*	8					

FIG.603 SEAT SYSTEM(EXCEPT F TYPE)

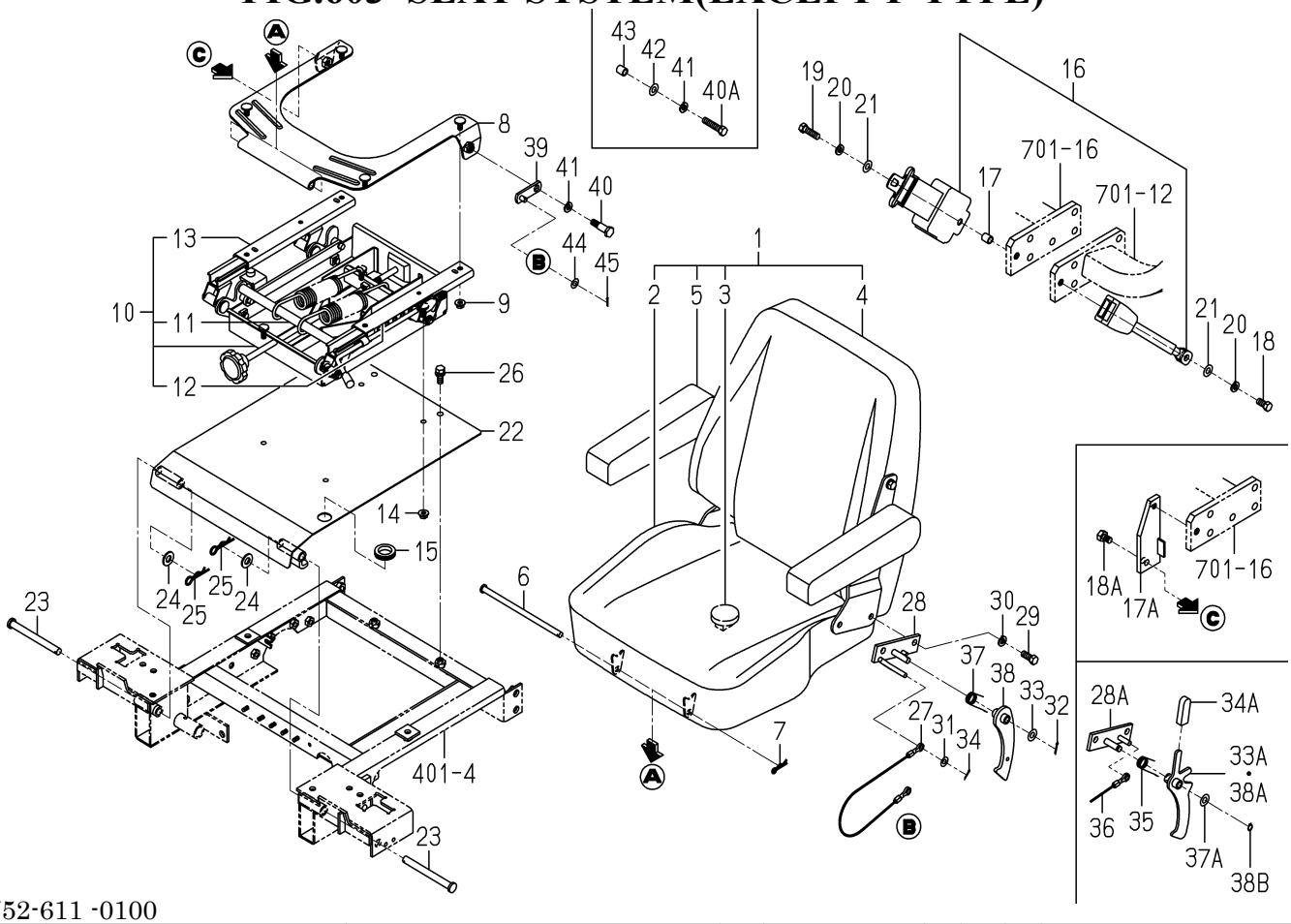

1752-611 -0100

KEY	PART CODE	DESCRIPTION	SPC	TYPE OF MODEL SZ330		ITC	COL	GRP	REMARKS
1	- - - - - -	BLANK	*						- - - - - -
1	1752-611-200-10	SEAT/SZ ASSY	*	1					
2	1752-611-210-00	CUSHION ASSY	*	1					
3	1742-611-222-00	SWITCH/SEAT ASSY	*	1					
4	1752-611-220-00	BACK ASSY	*	1					
5	1752-611-230-00	ARMREST ASSY	*	2					
6	1488-611-003-10	PIN,SEAT SET	*	1					
7	1305-241-001-00	PIN,HAIR	*	1					
8	1719-611-610-20	BRACKET/SEAT COMP	*	1					
9	V362-260-008-00	NUT/WASHER	*	4					
10	- - - - - -	BLANK	*						- - - - - -
10	- - - - - -	BLANK	*						- - - - - -
10	1752-611-350-10	SUSPENSHION/SEA ASSY	*	1					
11	- - - - - -	BLANK	*						- - - - - -
11	- - - - - -	BLANK	*						- - - - - -
11	1752-611-351-10	SUSPENSHION/SEAT	*	1					
12	- - - - - -	BLANK	*						- - - - - -
12	1719-611-622-00	RAIL/SLIDE/SEAT/L	*	1					
13	- - - - - -	BLANK	*						- - - - - -
13	1719-611-623-00	RAIL/SLIDE/SEAT/R	*	1					
14	V362-260-008-00	NUT/WASHER	*	4					
15	3650-432-014-00	GROMMET/(16X25X2)	*	1					
16	1742-611-240-00	BELT/SEAT SET	*	1					
17	- - - - - -	BLANK	*						- - - - - -
17A	1752-611-320-00	STAY/BELT/SEAT COMP	*	1					
18	- - - - - -	BLANK	*						- - - - - -
18A	1741-611-003-00	BOLT/M10X16/10T	*	1					
19	- - - - - -	BLANK	*						- - - - - -
19	V201-461-002-50	BOLT/M10X25	*	1					
20	V401-160-010-00	WASHER,SP/M10	*	2					

FIG.603 SEAT SYSTEM(EXCEPT F TYPE)

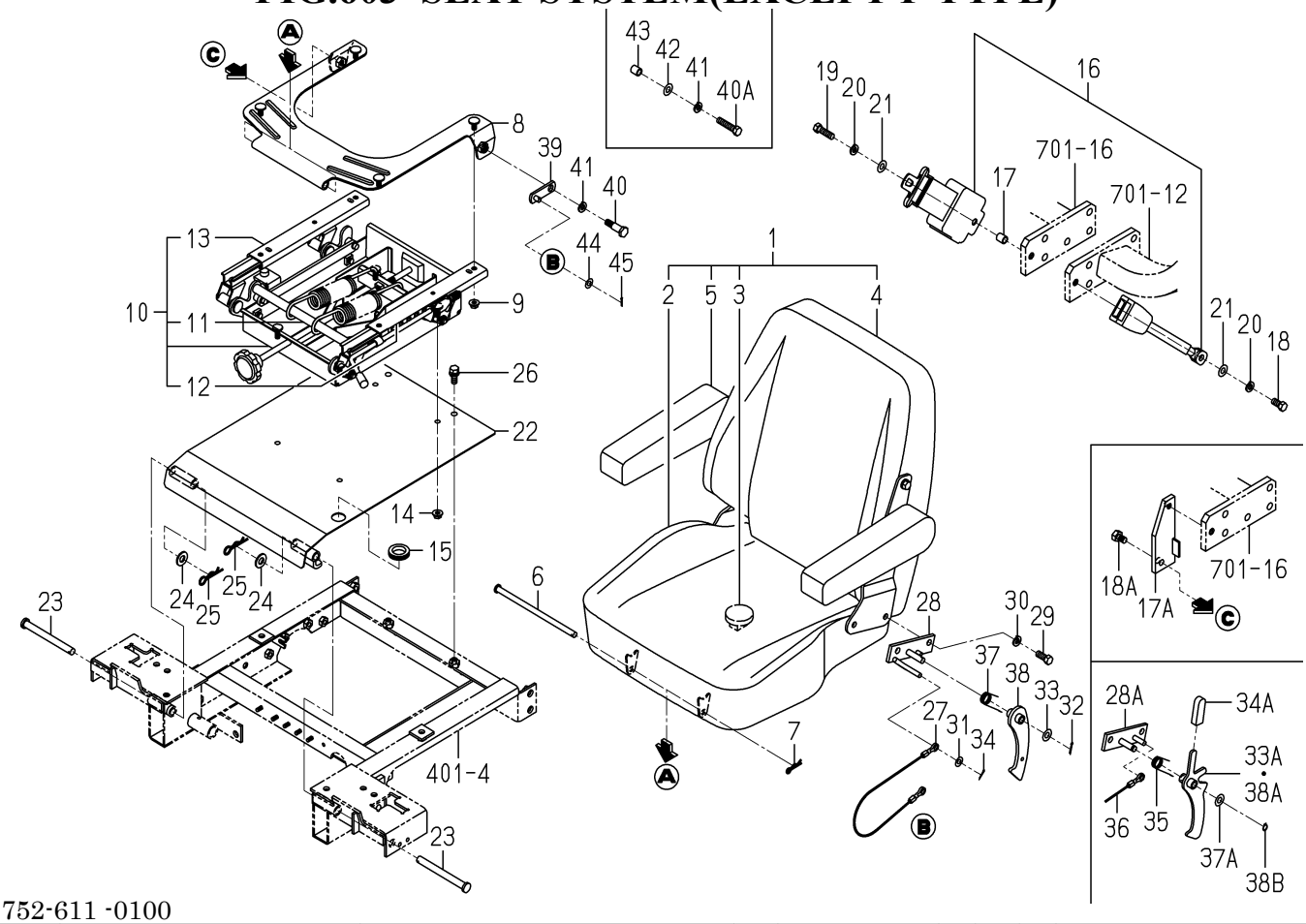

1752-611 -0100

KEY	PART CODE	DESCRIPTION	SPC	TYPE OF MODEL SZ330		ITC	COL	GRP	REMARKS
21	V411-260-010-00	WASHER/M10	*	2					
22	- - - - - -	BLANK	*						- - - - - -
22	1752-611-250-10	PLATE/SEAT COMP	*	1			4L		
23	1752-611-001-00	PIN/12X124	*	2					
24	V411-260-012-00	WASHER /M12	*	2					
25	1305-931-003-00	PIN,HAIR	*	2					
26	V211-561-002-50	BOLT/M10X25	*	2					
27	- - - - - -	BLANK	*						- - - - - -
27	- - - - - -	BLANK	*						- - - - - -
28	- - - - - -	BLANK	*						- - - - - -
28A	1752-611-270-10	STAYHOOK COMP	*	1					
29	- - - - - -	BLANK	*						- - - - - -
29	V203-261-003-00	BOLT M10X30	*	2					
30	V401-160-010-00	WASHER,SP/M10	*	2					
31	- - - - - -	BLANK	*						- - - - - -
31	- - - - - -	BLANK	*						- - - - - -
32	- - - - - -	BLANK	*						- - - - - -
33	- - - - - -	BLANK	*						- - - - - -
33A	1752-611-280-10	HOOK/SEAT COMP	*	1					
34	- - - - - -	BLANK	*						- - - - - -
34A	3600-201-013-00	GRIP,BRAKE	*	1					
35	8664-355-007-00	SPRING/HT020	*	1					
36	1752-611-009-10	CABLE/480	*	1					
37	- - - - - -	BLANK	*						- - - - - -
37A	V411-260-010-00	WASHER/M10	*	1					
38	- - - - - -	BLANK	*						- - - - - -
38A	- - - - - -	BLANK	*						- - - - - -
38B	V704-140-010-00	RING,SNAP/10 C	*	1					
39	1752-611-310-00	PLATE/IR/19X62 COMP	*	1					
40	- - - - - -	BLANK	*						- - - - - -

FIG.603 SEAT SYSTEM(EXCEPT F TYPE)

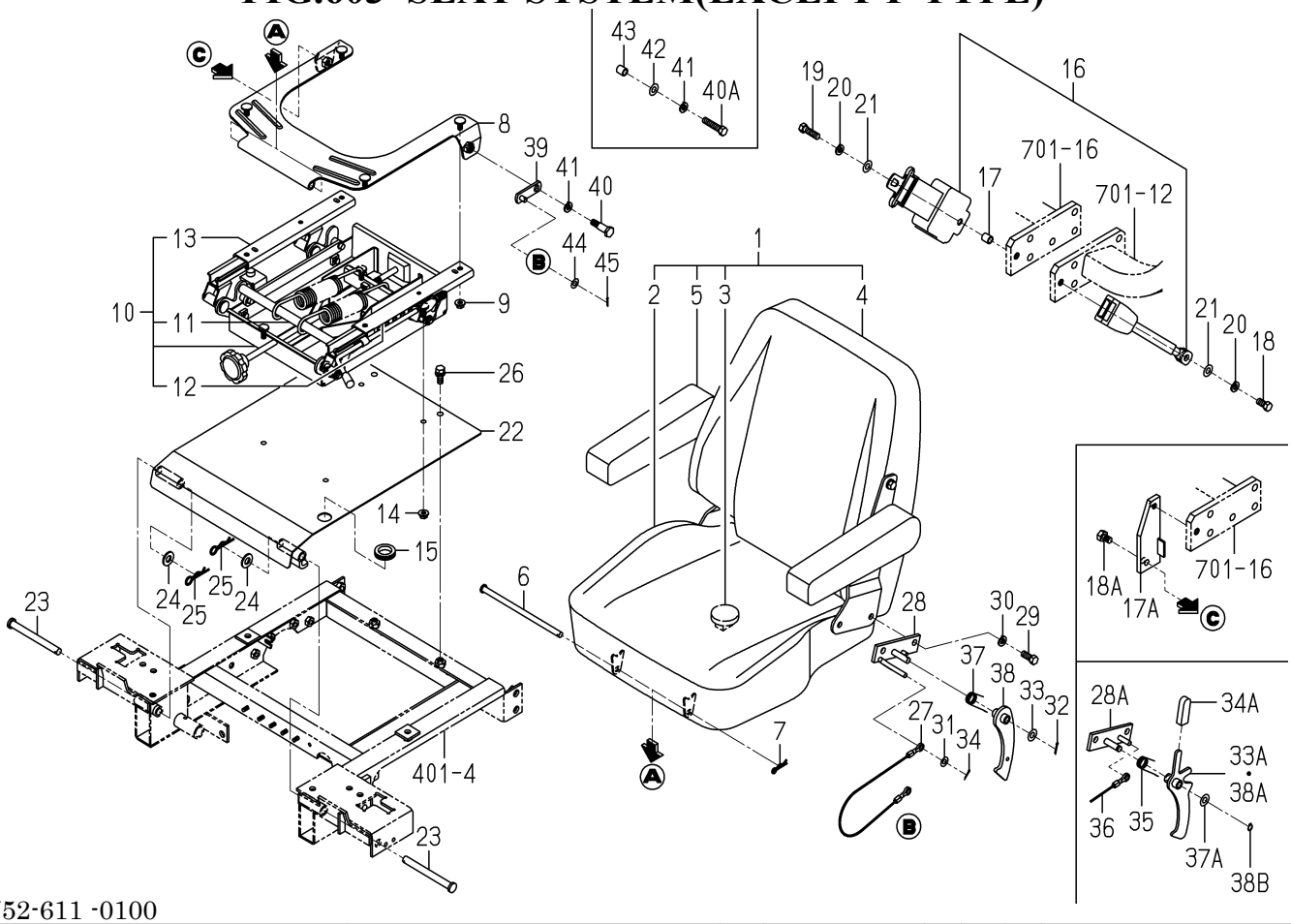

1752-611 -0100

KEY	PART CODE	DESCRIPTION	SPC	TYPE OF MODEL SZ330		ITC	COL	GRP	REMARKS
40A	V201-461-004-50	BOLT/M10X45	*	1					
41	V401-160-010-00	WASHER,SP/M10	*	1					
42	V411-260-010-00	WASHER/M10	*	1					
43	1636-402-004-00	COLLAR/10X14X15	*	1					
44	V411-260-008-00	WASHER,PL/M 8	*	1					
45	- - - - - -	BLANK	*						- - - - - -
45	V500-162-501-50	PIN,SPLIT/2.5X15	*	1					

FIG.604 SEAT SYSTEM(F TYPE)

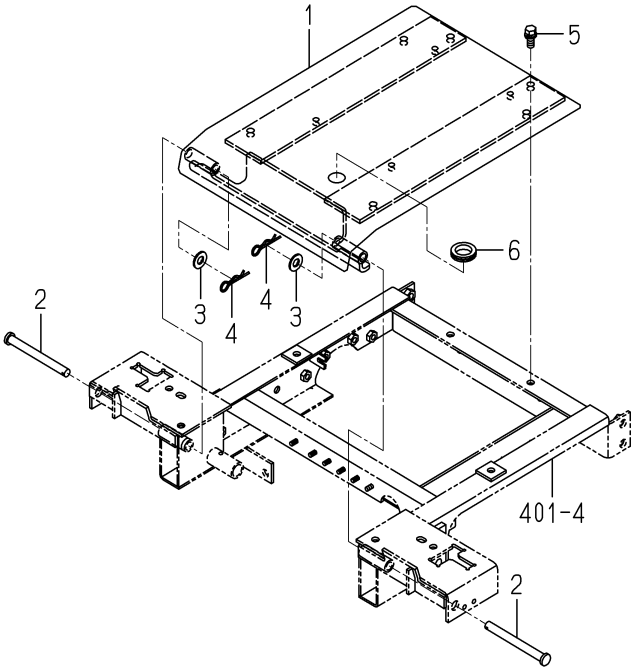

1752-611A-0100

KEY	PART CODE	DESCRIPTION	SPC	TYPE OF MODEL SZ330		ITC	COL	GRP	REMARKS
1	1752-611-510-00	PLATE/SEAT COMP	*	1			4L		
2	1752-611-001-00	PIN/12X124	*	2					
3	V411-260-012-00	WASHER /M12	*	2					
4	1305-931-003-00	PIN,HAIR	*	2					
5	V211-561-002-50	BOLT/M10X25	*	2					
6	3650-432-014-00	GROMMET/(16X25X2)	*	1					

FIG.605 FLOOR SYSTEM

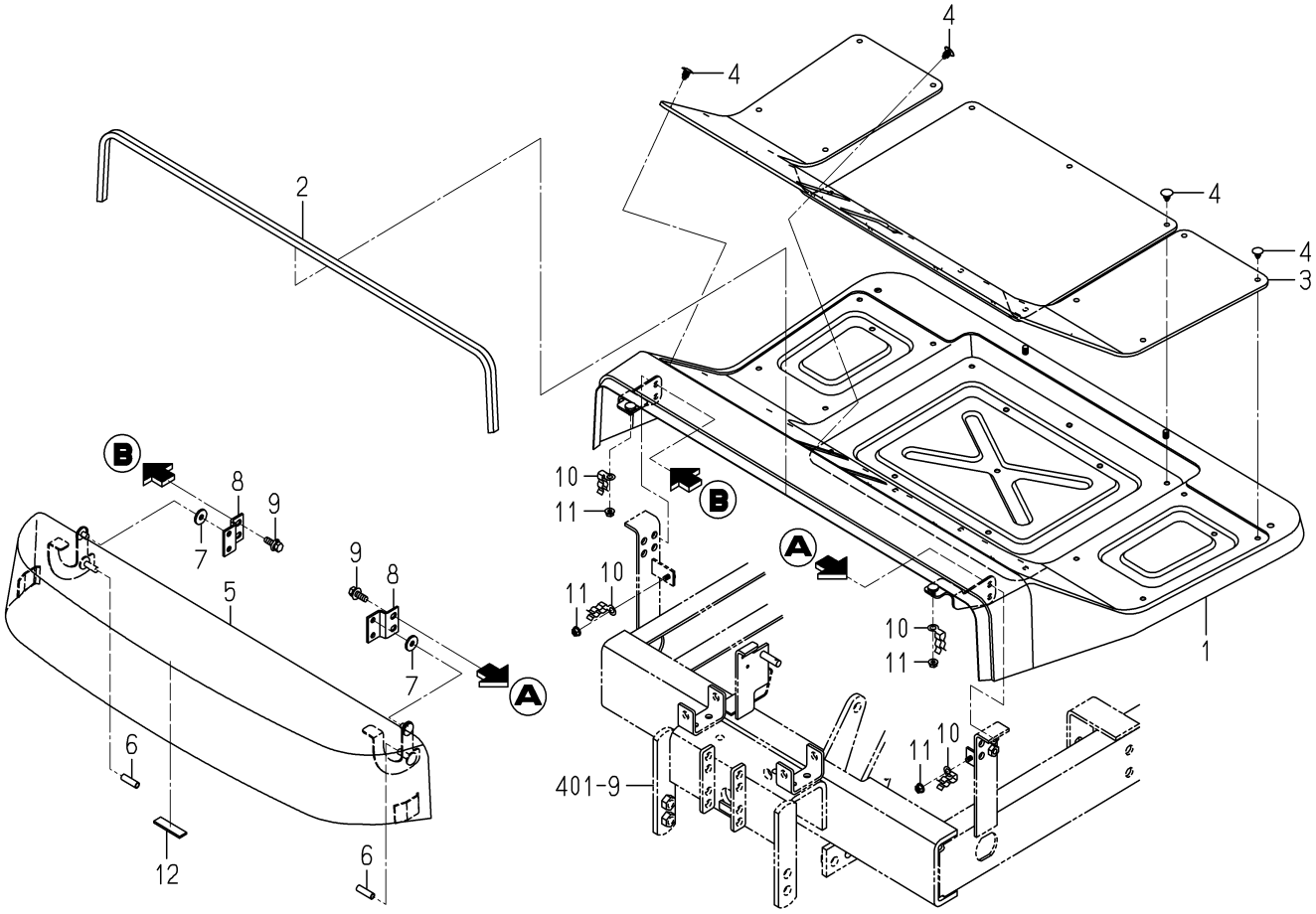

1752-630 -0100

KEY	PART CODE	DESCRIPTION	SPC	TYPE OF MODEL SZ330		ITC	COL	GRP	REMARKS
1	1752-630-210-00	FLOOR COMP	*	1			4L		
2	1752-630-003-00	INSULATOR/10X1000	*	1					
3	1752-630-001-00	MAT	*	1					
4	1527-604-002-00	CLIP(B)	*	33					
5	1752-630-220-00	COVER/FLOOR COMP	*	1			4L		
6	1716-601-009-00	TUBE/07X09X30	*	2					
7	1544-603-004-00	RUBBER,CUSHION	*	2					
8	1752-630-005-00	STAY/COVER	*	2					
9	V211-360-802-50	BOLT/SP	*	4					
10	3610-631-002-00	HANGER,SUPPORT	*	4					
11	V360-260-006-00	NUT/M6	*	4					
12	1752-606-004-00	INSULATOR/15X55X03	*	1					

FIG.606 PANEL SYSTEM

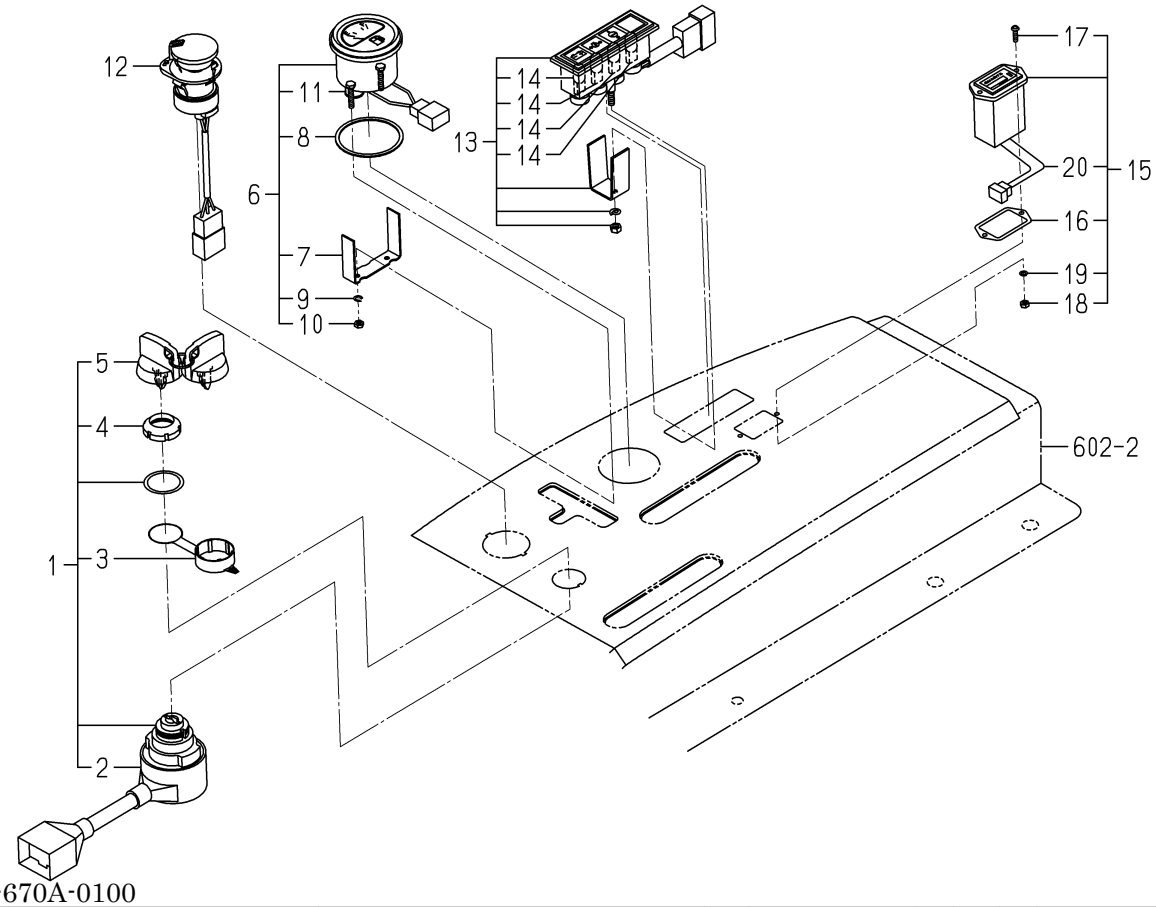

1752-670A-0100

KEY	PART CODE	DESCRIPTION	SPC	TYPE OF MODEL SZ330		ITC	COL	GRP	REMARKS
1	1593-621-250-10	SWITCH(STARTER) ASSY	*	1					
2	1593-621-252-00	COVER	*	1					
3	1444-621-311-00	CAP	*	1					
4	1444-621-312-00	NUT,RING/M28X1.0	*	1					
5	3614-261-002-00	KEY ASSY	*	1					
6	1703-670-320-00	METER/FUEL ASSY	*	1					
7	1703-670-322-00	HOLDER	*	1					
8	1703-670-323-00	INSULATOR	*	1					
9	1703-670-324-00	WASHER	*	2					
10	1703-670-325-00	NUT	*	2					
11	1703-670-326-00	PLUG	*	1					
12	- - - - - -	BLANK	*						- - - - - -
12	- - - - - -	BLANK	*						- - - - - -
12	1742-652-300-20	SWITCH/PTO ASSY	*	1					
13	1689-613-240-00	LAMP/MONITOR ASSY	*	1					
14	3650-270-214-00	BULB	*	4					
15	1703-670-230-00	METER/HOUR ASSY	*	1					
16	P117-303-522-00	PACKING	*	1					
17	P117-303-523-00	SCREW	*	2					
18	P117-303-524-00	NUT	*	2					
19	P117-303-525-00	WASHER	*	2					
20	P117-303-526-00	HARNESS	*	1					

FIG.607 HARNESS SYSTEM(F TYPE)(1/2)

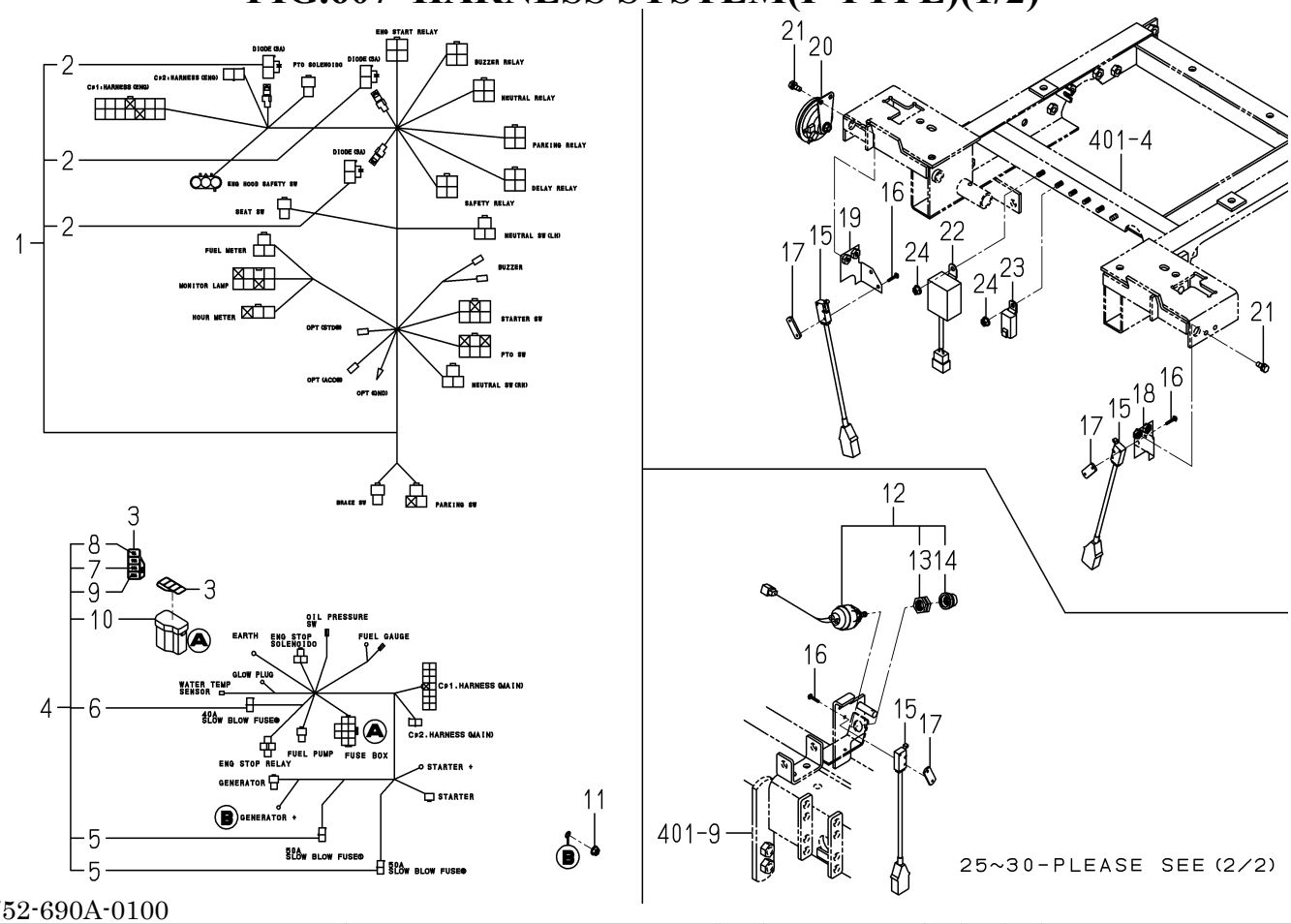

1752-690A-0100

KEY	PART CODE	DESCRIPTION	SPC	TYPE OF MODEL SZ330		ITC	COL	GRP	REMARKS
1	1752-690-510-10	HARNESS/MAIN ASSY	*	1					
2	3650-262-202-00	DIODE/3.0A	*	3					
3	1728-690-001-00	LABEL/FUSE	*	1					
4	1752-690-520-10	HARNESS/ENGINE ASSY	*	1					
5	1614-690-202-00	FUSE/SLOWBLOW	*	2					
6	1650-650-222-00	FUSE/SLOWBLOW	*	1					
7	1575-623-010-00	FUSE/32V10A	*	2					
8	1575-623-009-00	FUSE/32V03A	*	1					
9	1593-623-203-00	FUSE/32V20A	*	2					
10	1672-690-212-00	CAP/FUSEBOX/5P	*	1					
11	V360-260-006-00	NUT/M6	*	1					
12	1560-664-250-00	SWITCH/PUSH SET	*	1					
13	1560-664-252-00	NUT	*	1					
14	1560-664-253-00	BOOT	*	1					
15	1593-623-520-00	SWITCH,MERIT	*	3					
16	1614-129-003-00	SCREW/M03X20	*	6					
17	3642-496-007-10	PLATE,SWITCH	*	3					
18	1752-690-260-00	PLATE/SWITCH/LH COMP	*	1					
19	1752-690-270-00	PLATE/SWITCH/RH COMP	*	1					
20	1740-680-530-00	HORN ASSY	*	1					
21	V210-360-602-00	BOLT/SP	*	4					
22	1742-650-320-00	UNIT/TIMER ASSY	*	1					
23	1650-658-270-00	RELAY/4P ASSY	*	5					
24	V360-260-006-00	NUT/M6	*	6					
25	1725-681-200-00	RELAY/35A ASSY	*	1					
26	V360-260-005-00	NUT/M5	*	1					
27	1752-690-400-00	CABLE/BATTERY ASSY	*	1					
28	V362-260-008-00	NUT/WASHER	*	1					
29	3768-171-003-00	STRAP,GROUND	*	1					
30	1568-650-004-10	BOLT/M08X32	*	1					

FIG.607 HARNESS SYSTEM(F TYPE)(2/2)

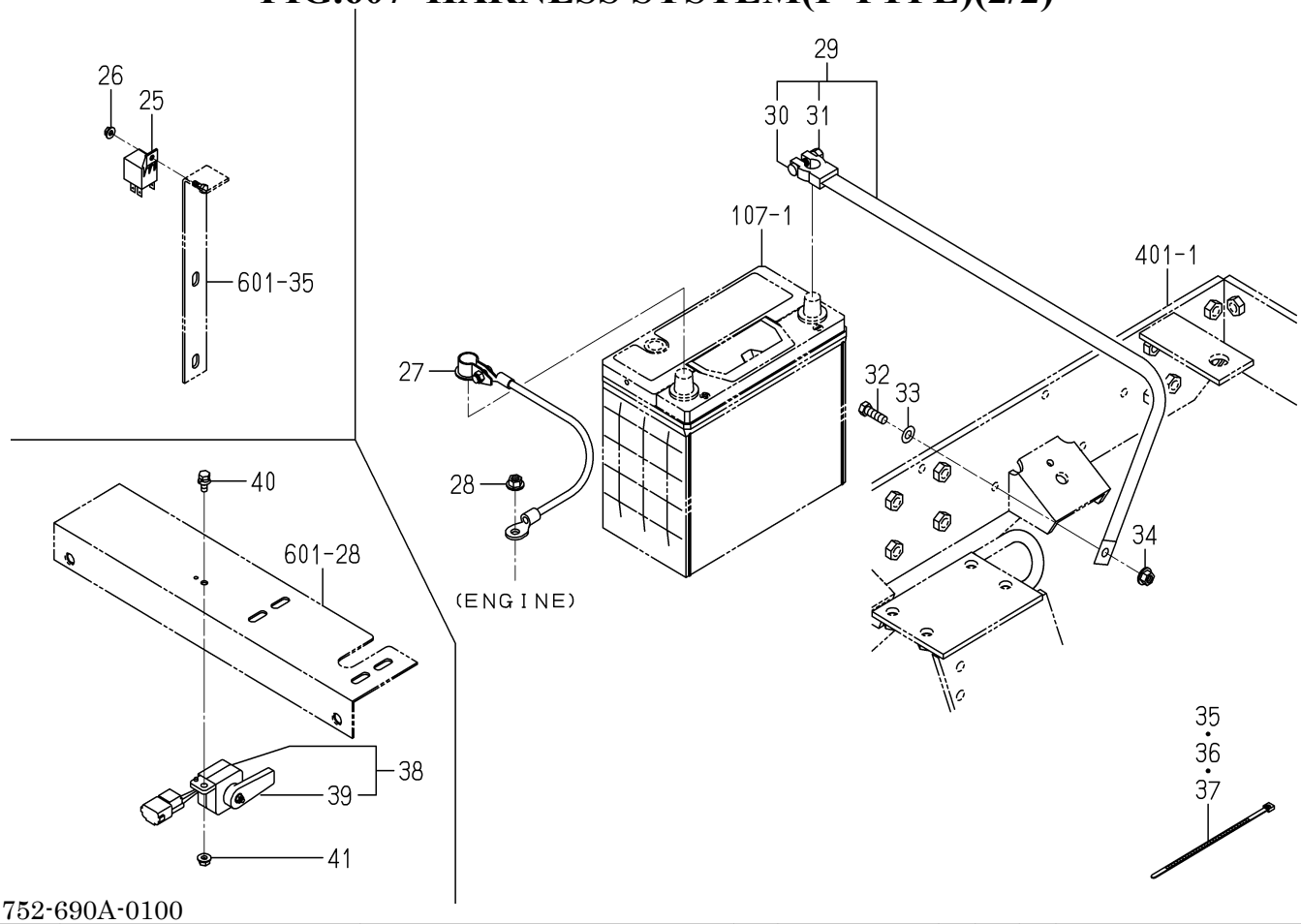

1752-690A-0100

KEY	PART CODE	DESCRIPTION	SPC	TYPE OF MODEL SZ330		ITC	COL	GRP	REMARKS
31	1568-650-005-10	NUT/M08	*	1					
32	V201-260-802-50	BOLT/M 8X25	*	1					
33	V411-260-008-00	WASHER,PL/M 8	*	1					
34	V362-260-008-00	NUT/WASHER	*	1					
35	1342-402-006-00	BAND/WIRE/250	*	7					
36	1376-402-003-00	BAND,WIRE/140	*	12					
37	3746-172-013-00	BAND,HARNESS	*	1					
38	1716-680-330-00	SWITCH/LEVER ASSY	*	1					
39	1716-680-222-00	ARM	*	1					
40	V210-360-601-60	BOLT(SP)/M6X16	*	1					
41	V360-260-006-00	NUT/M6	*	1					

FIG.608 HARNESS SYSTEM(EXCEPT F TYPE)(1/2)

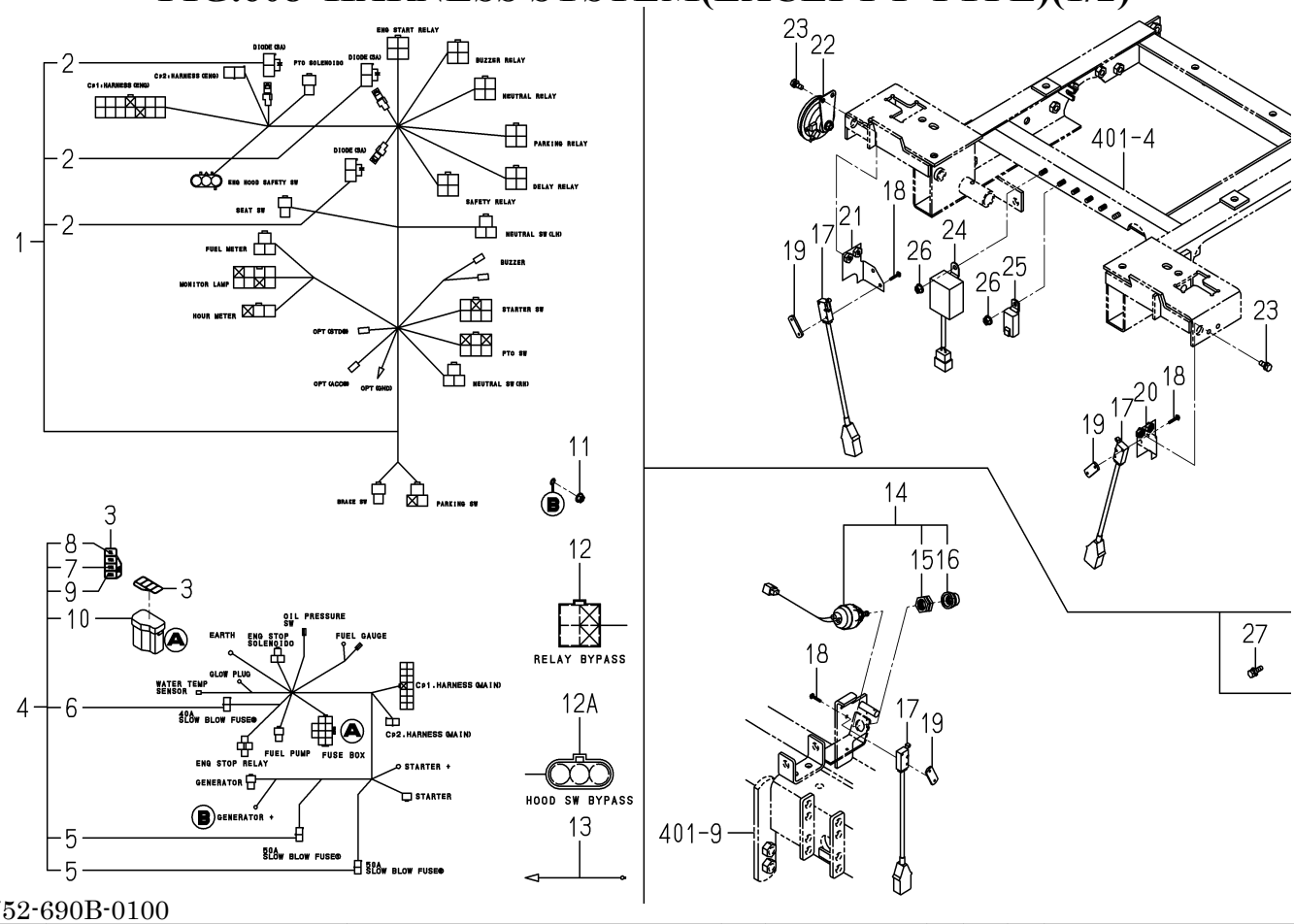

1752-690B-0100

KEY	PART CODE	DESCRIPTION	SPC	TYPE OF MODEL SZ330		ITC	COL	GRP	REMARKS
1	- - - - - -	BLANK	*						- - - - - -
1	1752-690-510-10	HARNESS/MAIN ASSY	*	1					
2	3650-262-202-00	DIODE/3.0A	*	3					
3	1728-690-001-00	LABEL/FUSE	*	1					
4	- - - - - -	BLANK	*						- - - - - -
4	1752-690-520-10	HARNESS/ENGINE ASSY	*	1					
5	1614-690-202-00	FUSE/SLOWBLOW	*	2					
6	1650-650-222-00	FUSE/SLOWBLOW	*	1					
7	1575-623-010-00	FUSE/32V10A	*	2					
8	1575-623-009-00	FUSE/32V03A	*	1					
9	1593-623-203-00	FUSE/32V20A	*	2					
10	1672-690-212-00	CAP/FUSEBOX/5P	*	1					
11	V360-260-006-00	NUT/M6	*	1					
12	- - - - - -	BLANK	*						- - - - - -
12A	1752-690-530-10	CONNECTOR/JOINT ASSY	*	1					
13	- - - - - -	BLANK	*						- - - - - -
14	1560-664-250-00	SWITCH/PUSH SET	*	1					
15	1560-664-252-00	NUT	*	1					
16	1560-664-253-00	BOOT	*	1					
17	1593-623-520-00	SWITCH,MERIT	*	3					
18	1614-129-003-00	SCREW/M03X20	*	6					
19	3642-496-007-10	PLATE,SWITCH	*	3					
20	1752-690-260-00	PLATE/SWITCH/LH COMP	*	1					
21	1752-690-270-00	PLATE/SWITCH/RH COMP	*	1					
22	1740-680-530-00	HORN ASSY	*	1					
23	V210-360-602-00	BOLT/SP	*	4					
24	1742-650-320-00	UNIT/TIMER ASSY	*	1					
25	- - - - - -	BLANK	*						- - - - - -
25	1650-658-270-00	RELAY/4P ASSY	*	5					
26	- - - - - -	BLANK	*						- - - - - -

FIG.608 HARNESS SYSTEM(EXCEPT F TYPE)(2/2)

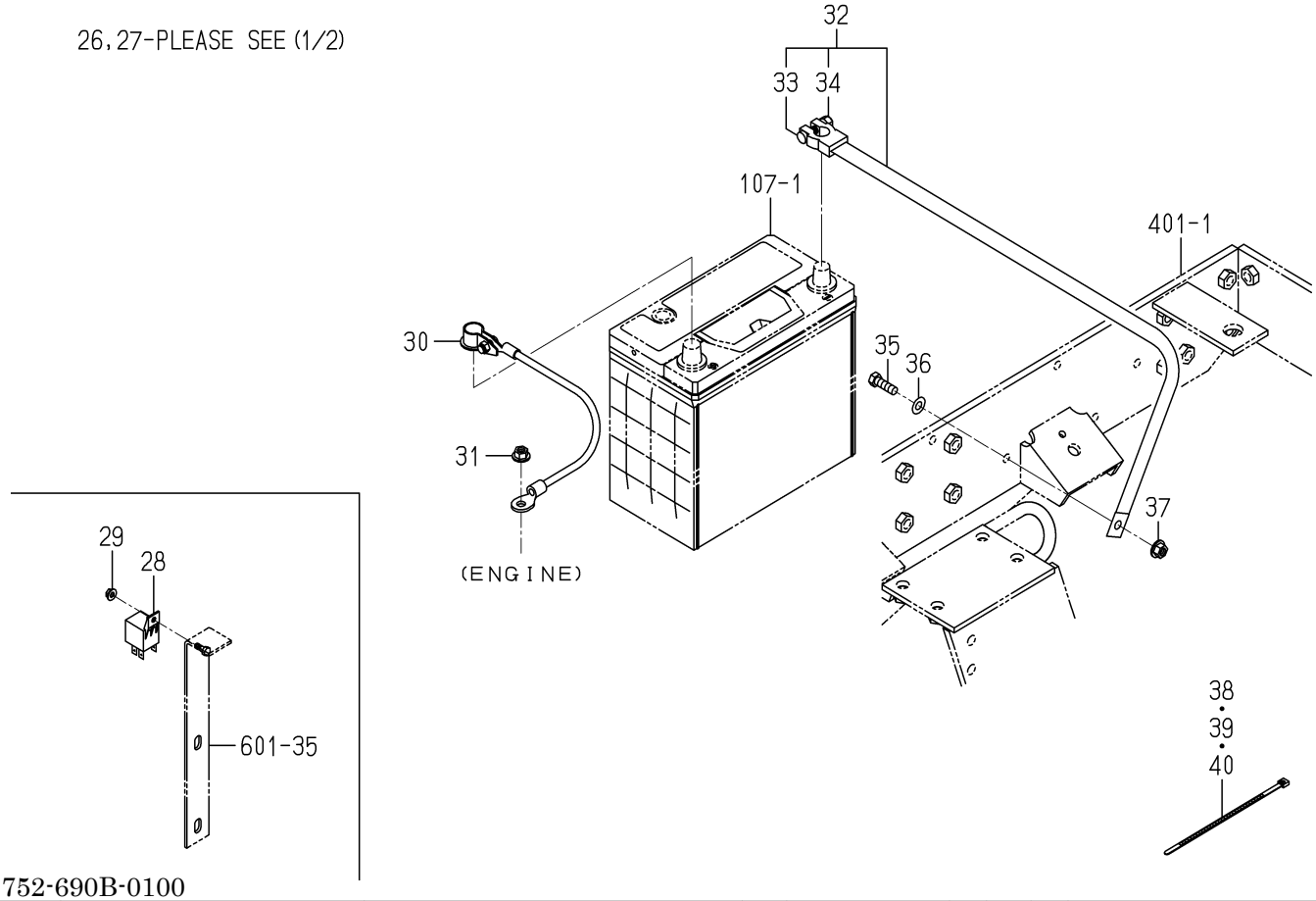

1752-690B-0100

KEY	PART CODE	DESCRIPTION	SPC	TYPE OF MODEL SZ330		ITC	COL	GRP	REMARKS
26	V360-260-006-00	NUT/M6	*	6					
27	- - - - - -	BLANK	*						- - - - - -
28	1725-681-200-00	RELAY/35A ASSY	*	1					
29	V360-260-005-00	NUT/M5	*	1					
30	1752-690-400-00	CABLE/BATTERY ASSY	*	1					
31	V362-260-008-00	NUT/WASHER	*	1					
32	3768-171-003-00	STRAP,GROUND	*	1					
33	1568-650-004-10	BOLT/M08X32	*	1					
34	1568-650-005-10	NUT/M08	*	1					
35	V201-260-802-50	BOLT/M 8X25	*	1					
36	V411-260-008-00	WASHER,PL/M 8	*	1					
37	V362-260-008-00	NUT/WASHER	*	1					
38	1342-402-006-00	BAND/WIRE/250	*	7					
39	1376-402-003-00	BAND,WIRE/140	*	12					
40	3746-172-013-00	BAND,HARNESS	*	1					

FIG.701 ROPS SYSTEM

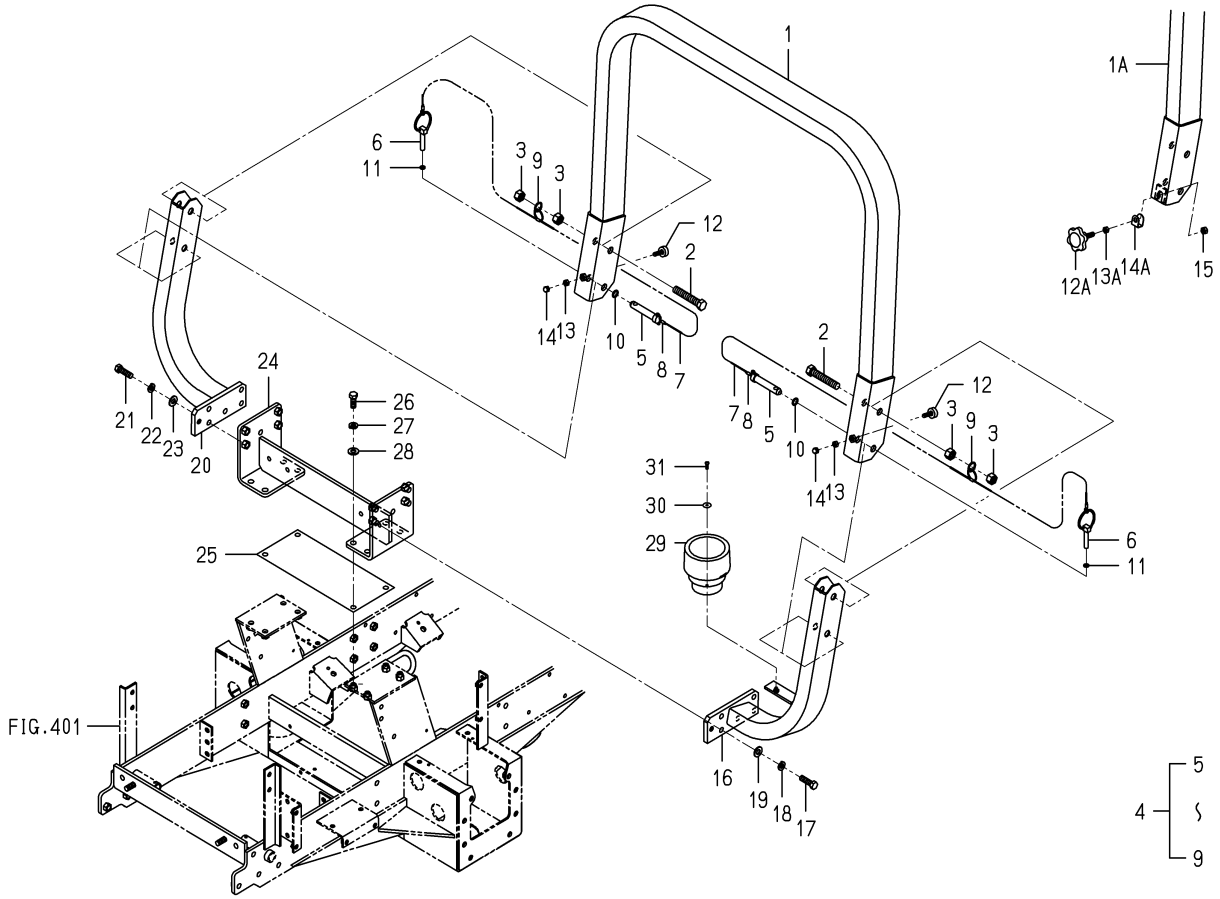

1752-701 -0100

KEY	PART CODE	DESCRIPTION	SPC	TYPE OF MODEL SZ330		ITC	COL	GRP	REMARKS
1	- - - - - -	BLANK	*						- - - - - -
1A	1752-701-240-10	ROPS/CENTER COMP	*	1			7F		
2	W201-461-609-00	BOLT M16X90 9T	*	2					
3	V304-460-016-00	NUT/M16	*	4					
4	1636-701-250-00	PIN ASSY	*	2					
5	1636-701-251-00	PIN/19X94	*	2					
6	1673-525-002-30	LINKPIN	*	2					
7	1614-702-551-00	BAND	*	2					
8	1614-702-552-00	RING	*	6					
9	V720-102-402-00	O-RING/P20	*	2					
10	V720-112-401-40	O-RING/P14	*	2					
11	V720-101-900-90	O-RING/P 9	*	2					
12	- - - - - -	BLANK	*						- - - - - -
12	- - - - - -	BLANK	*						- - - - - -
12A	1773-702-012-00	NOB/LOCK	*	2					
13	- - - - - -	BLANK	*						- - - - - -
13A	V304-260-010-00	NUT	*	2					
14	- - - - - -	BLANK	*						- - - - - -
14A	1773-702-011-00	PLATE	*	2					
15	1725-611-087-00	U-NUT/M10X1.5	*	2					
16	- - - - - -	BLANK	*						- - - - - -
16	1752-701-220-10	ROPS/SIDE/LH COMP	*	1			7F		
17	V201-461-204-00	BOLT/M12X40	*	4					
18	V401-160-012-00	WASHER,SP/M12	*	4					
19	V411-260-012-00	WASHER /M12	*	4					
20	- - - - - -	BLANK	*						- - - - - -
20	1752-701-230-10	ROPS/SIDE/RH COMP	*	1			7F		
21	V201-461-204-00	BOLT/M12X40	*	4					
22	V401-160-012-00	WASHER,SP/M12	*	4					
23	V411-260-012-00	WASHER /M12	*	4					

FIG.701 ROPS SYSTEM

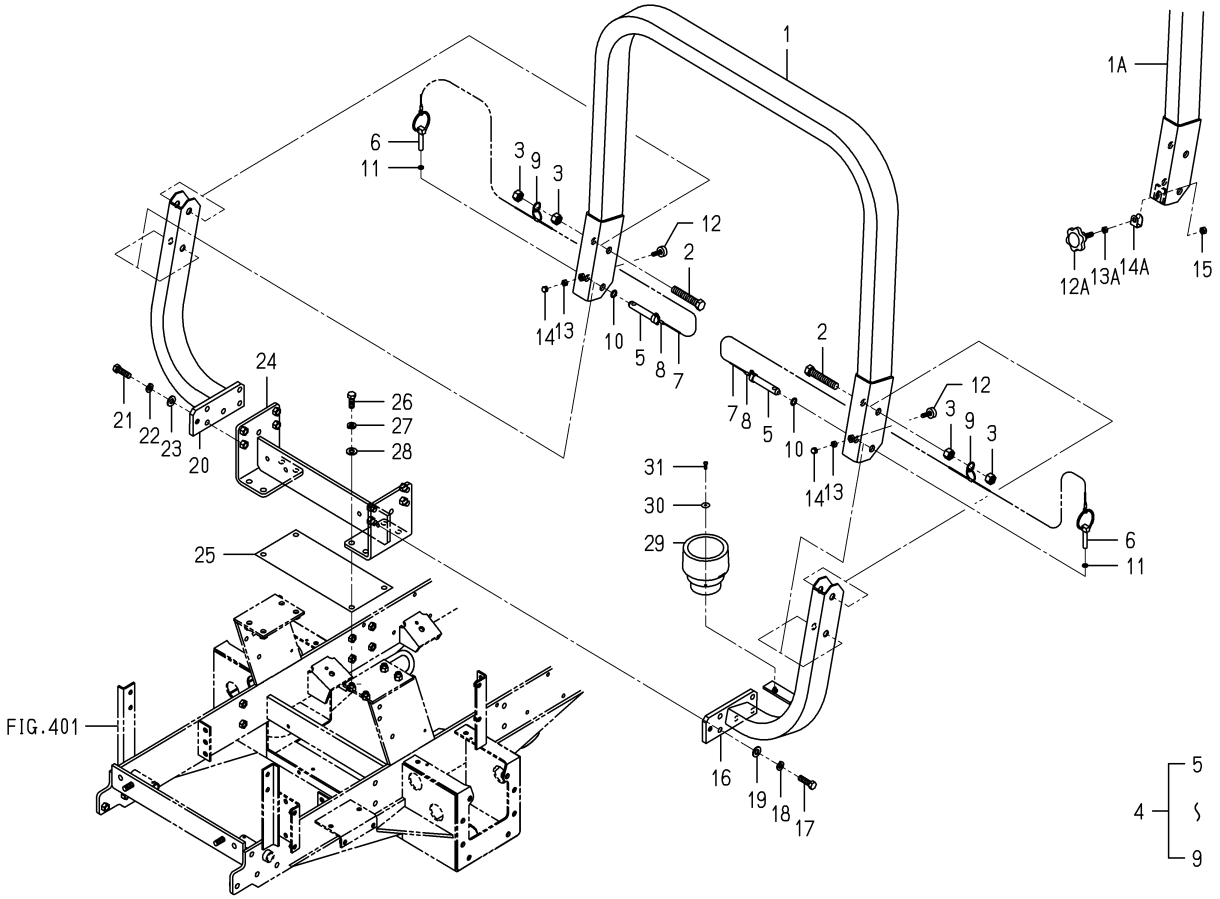

1752-701 -0100

KEY	PART CODE	DESCRIPTION	SPC	TYPE OF MODEL SZ330		ITC	COL	GRP	REMARKS
24	1752-701-210-00	FRAME/LOWER COMP	*	1			7F		
25	1752-701-001-10	PLATE/I/145X342)	*	1					
26	- - - - - -	BLANK	*						- - - - - -
26	V201-461-203-50	BOLT/M12X35	*	8					
27	V401-160-012-00	WASHER,SP/M12	*	8					
28	V411-260-012-00	WASHER /M12	*	8					
29	1742-606-001-10	TRAY/BOTTLE	*	1					
30	3829-248-003-00	WASHER/05X20X01	*	1					
31	V120-265-001-60	SCREW SENS/M5X16	*	1					

FIG.901 ORNAMENT

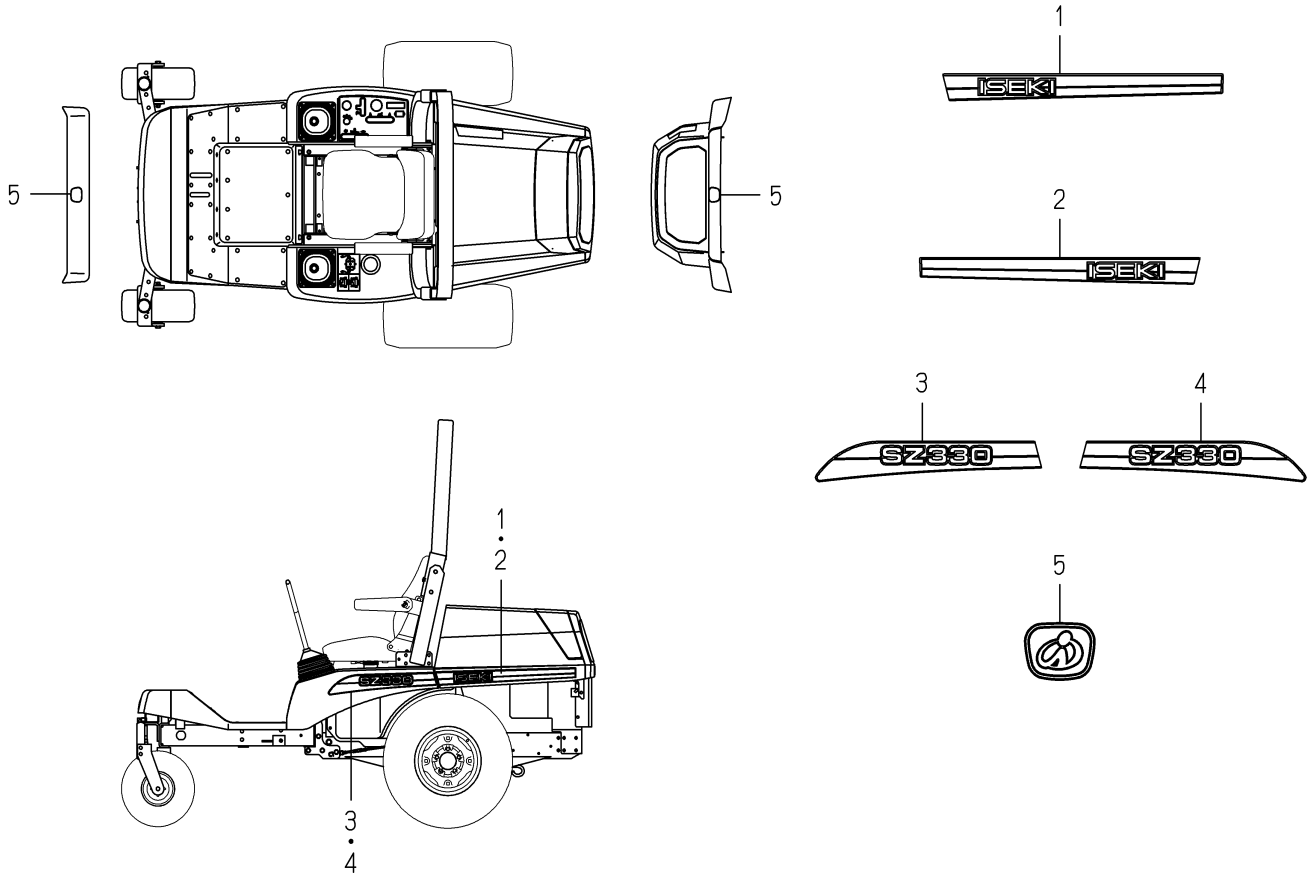

1752-901B-0100

KEY	PART CODE	DESCRIPTION	SPC	TYPE OF MODEL SZ330		ITC	COL	GRP	REMARKS
1	1752-901-051-00	ORNAMENT/HOOD/LH	*	1					
2	1752-901-052-00	ORNAMENT/HOOD/RH	*	1					
3	1752-901-053-00	ORNAMENT/FENDER/LH	*	1					
4	1752-901-054-00	ORNAMENT/FENDER/RH	*	1					
5	3533-901-012-00	ORNAMENT/ISEKI	*	2					

FIG.902 LABEL(CONTROL)

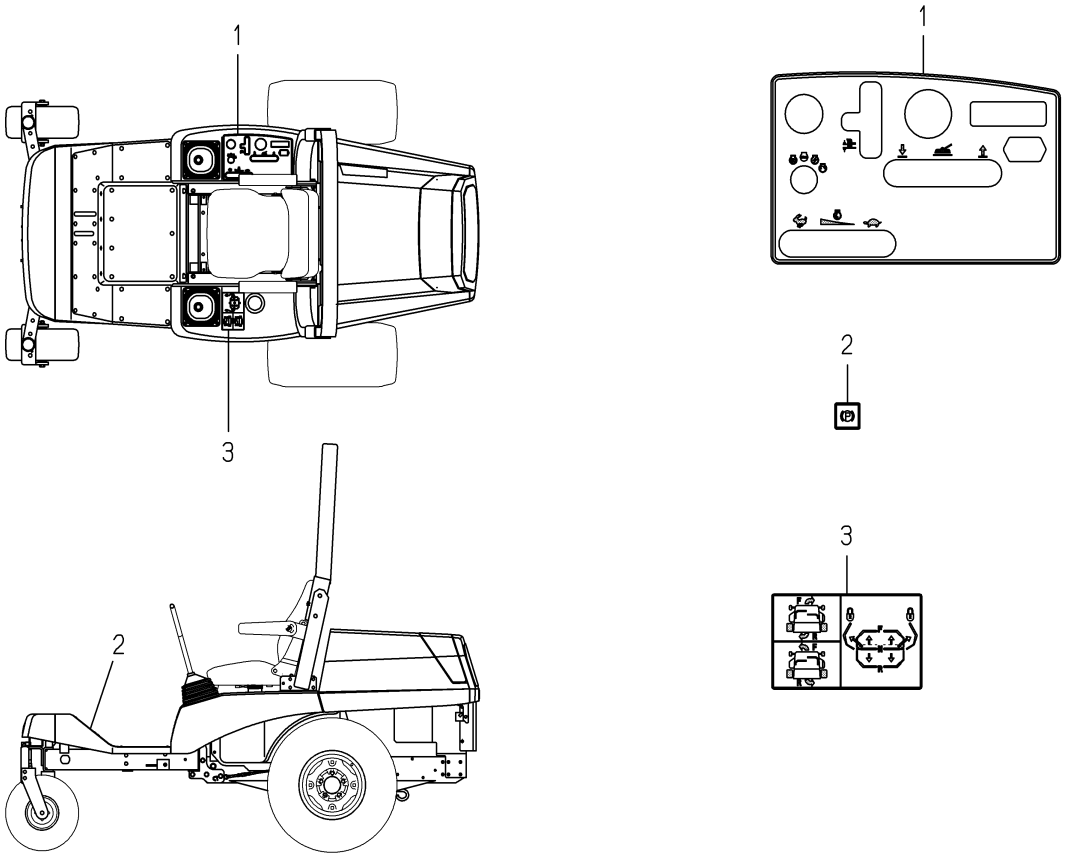

1752-902 -0100

KEY	PART CODE	DESCRIPTION	SPC	TYPE OF MODEL SZ330		ITC	COL	GRP	REMARKS
1	1752-902-001-00	LABEL/CONTROL	*	1					
2	1682-902-014-00	LABEL/CONTROL/PARKIN	*	1					
3	1752-902-003-00	LABEL/CONTROL/LEVER	*	1					

FIG.903 LABEL(CAUTION)

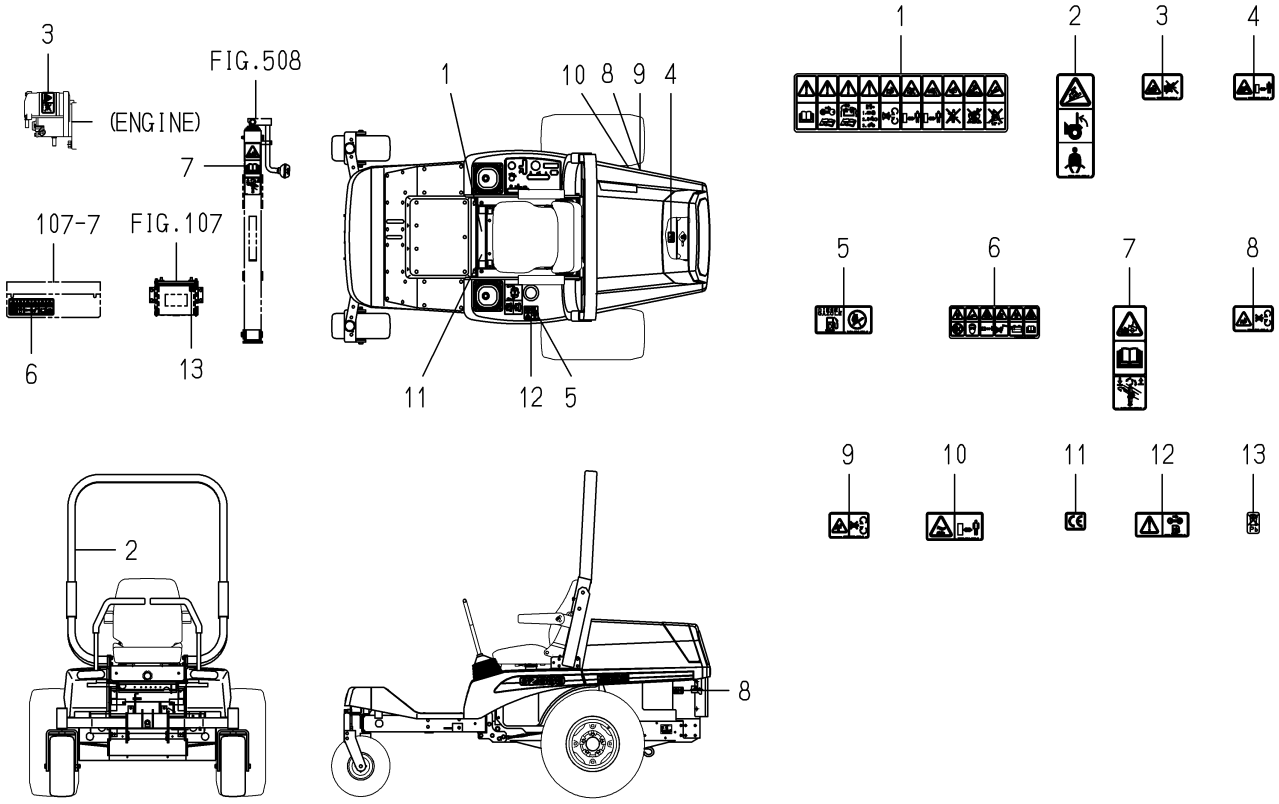

1752-903A-0100

KEY	PART CODE	DESCRIPTION	SPC	TYPE OF MODEL SZ330		ITC	COL	GRP	REMARKS
1	1705-904-004-00	LABEL/CAUTION	*	1					
2	1674-904-005-00	LABEL/ROPS	*	1					
3	1705-902-007-00	LABEL/W/STARTER	*	1					
4	1705-902-008-00	LABEL/W/RADIATOR	*	1					
5	1705-904-001-00	LABEL/FUEL	*	1					
6	1705-904-002-10	LABEL/BATTERY	*	1					
7	1752-903-052-00	LABEL/C/JACK	*	1					
8	1674-904-008-00	LABEL/WARNING/BELT	*	2					
9	1705-902-006-00	LABEL/W/FAN	*	1					
10	8595-901-007-00	LABEL/WARNING/HOT	*	1					
11	2500-901-027-00	LABEL/CE	*	1					
12	1728-903-002-00	LABEL/WARNING/FUEL	*	1					
13	1728-903-003-00	LABEL/BATTERY	*	1					

FIG.P01 ELEMENT(INNER)ASSY(OPTION)

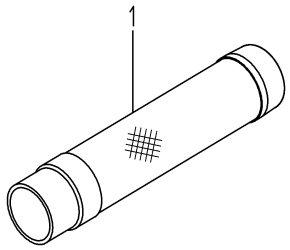

1752-104A-0100

KEY	PART CODE	DESCRIPTION	SPC	TYPE OF MODEL		ITC	COL	GRP	REMARKS
				SZ330					
1	1742-104-211-00	ELEMENT/INNER ASSY	T	1					

FIG.P02 TIRE(26X12.0-4PR)SET(OPTION)

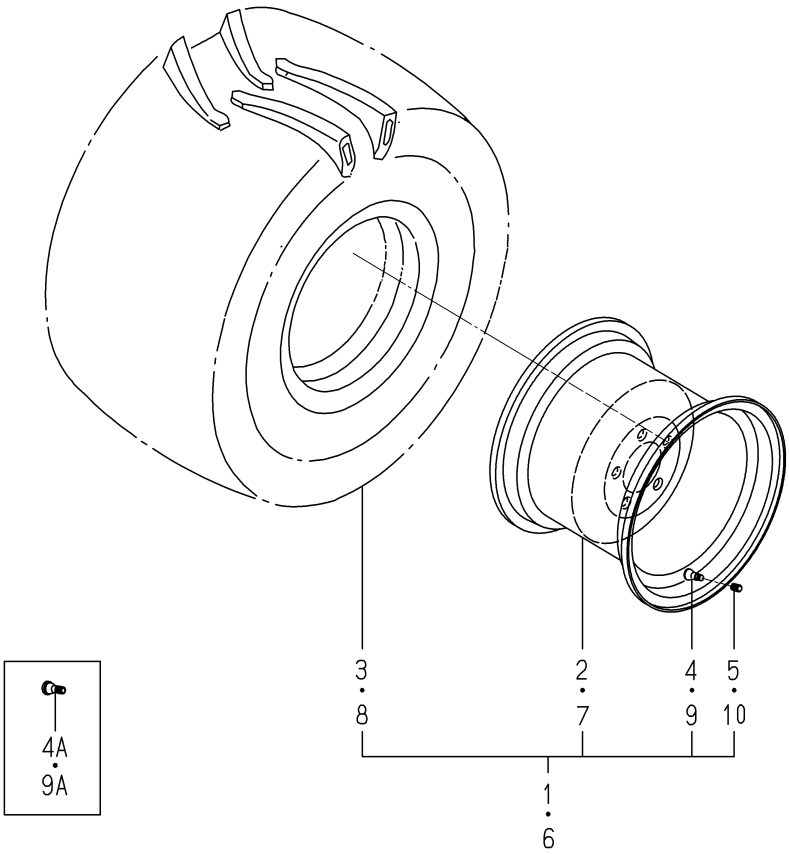

1739-317 -0100

KEY	PART CODE	DESCRIPTION	SPC	TYPE OF MODEL SZ330		ITC	COL	GRP	REMARKS
1	- - - - - -	BLANK	T						- - - - - -
1	1739-317-210-11	TIRE/26X12.0/LH	T	1			6G		
2	- - - - - -	BLANK	T						- - - - - -
2	1739-317-230-11	WHEEL/12X10.5 COMP	T	1			6G		
3	1739-317-211-00	TIRE/26X12.0-4PR	T	1					
4	- - - - - -	BLANK	T						- - - - - -
4A	1739-317-260-00	VALVE/TYRE ASSY	T	1					
5	- - - - - -	BLANK	T						- - - - - -
6	- - - - - -	BLANK	T						- - - - - -
6	1739-317-220-11	TIRE/26X12.0/RH	T	1			6G		
7	- - - - - -	BLANK	T						- - - - - -
7	1739-317-230-11	WHEEL/12X10.5 COMP	T	1			6G		
8	1739-317-211-00	TIRE/26X12.0-4PR	T	1					
9	- - - - - -	BLANK	T						- - - - - -
9A	1739-317-260-00	VALVE/TYRE ASSY	T	1					
10	- - - - - -	BLANK	T						- - - - - -

FIG.P03 HITCH(WEIGHT)(OPTION)

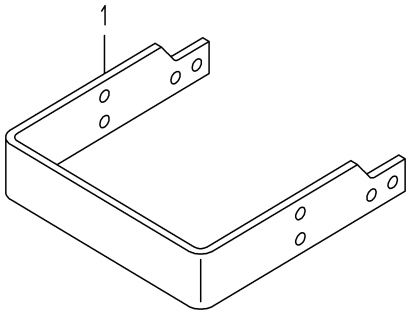

1752-433A-0100

KEY	PART CODE	DESCRIPTION	SPC	TYPE OF MODEL		ITC	COL	GRP	REMARKS
				SZ330					
1	1752-433-003-00	HITCH/WEIGHT	T	1					

FIG.P04 PIN(LOCK)(OPTION)

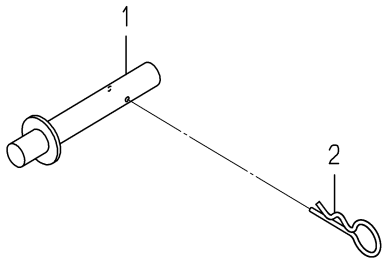

1752-441B-0100

KEY	PART CODE	DESCRIPTION	SPC	TYPE OF MODEL SZ330		ITC	COL	GRP	REMARKS
1	1752-441-250-00	PIN/15X92 COMP	T	2					
2	7957-405-003-00	PIN/HAIR	T	2					

FIG.P05 SETTING PARTS(TIRE/15X6)SET(OPTION)

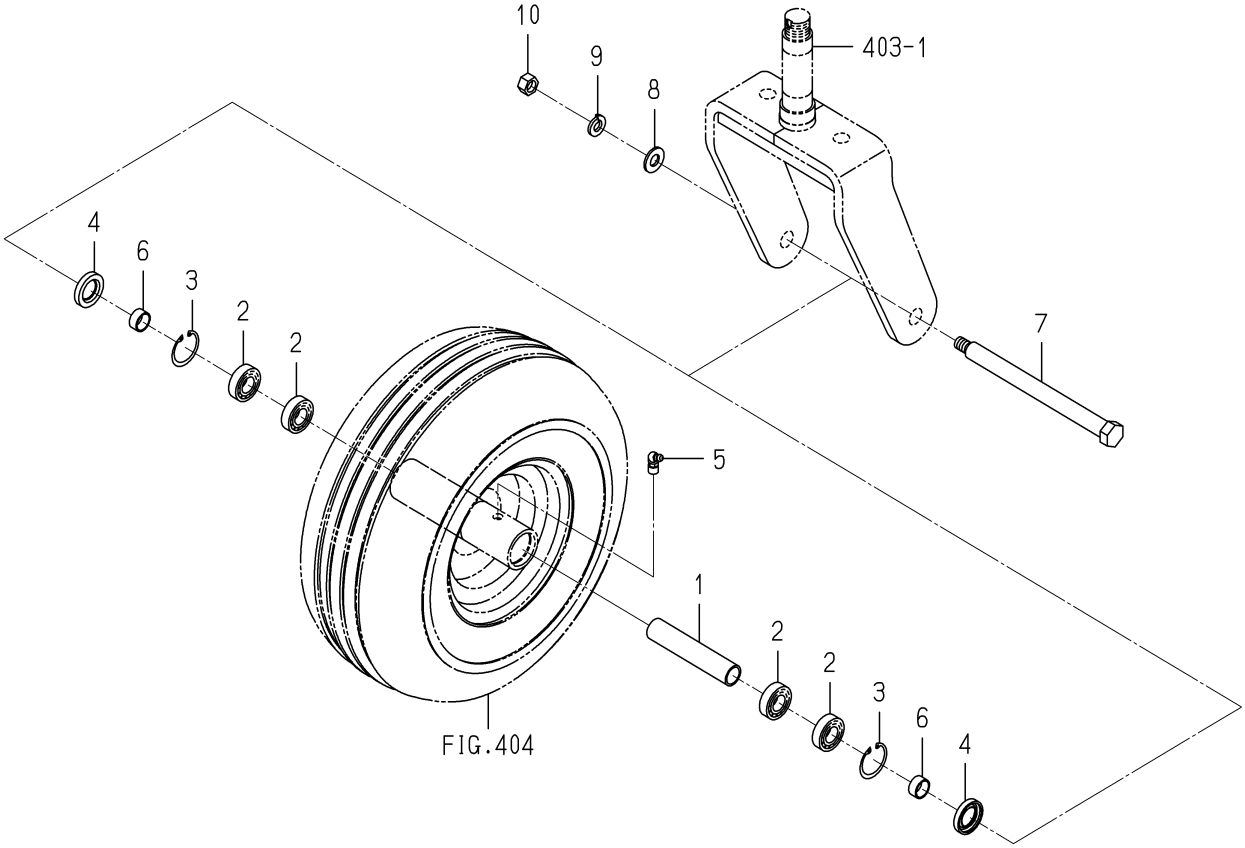

1752-441C-0100

KEY	PART CODE	DESCRIPTION	SPC	TYPE OF MODEL SZ330		ITC	COL	GRP	REMARKS
1	1752-441-004-00	COLLAR/18X22X111	T	2					
2	V600-110-600-30	BEARING,RB/6003	T	8					
3	V705-140-035-00	RING,CIRCLIP	T	4					
4	V742-120-350-60	SEAL,OIL/VC20356	T	4					
5	V763-150-000-00	NIPPLE,GREASE/PT1/8	T	2					
6	- - - - - -	BLANK	T						- - - - - -
7	- - - - - -	BLANK	T						- - - - - -
8	- - - - - -	BLANK	T						- - - - - -
9	- - - - - -	BLANK	T						- - - - - -
10	- - - - - -	BLANK	T						- - - - - -

FIG.P06 STAY(JACK/REAR)(OPTION)

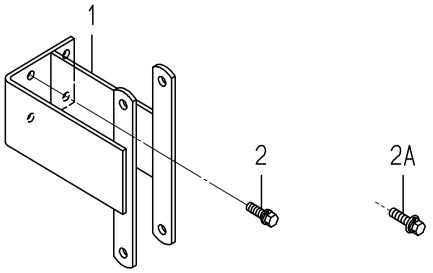

1752-555A-0100

KEY	PART CODE	DESCRIPTION	SPC	TYPE OF MODEL SZ330		ITC	COL	GRP	REMARKS
1	1752-555-270-00	STAY/JACK COMP	T	1					
2	- - - - - -	BLANK	T						- - - - - -
2A	V211-661-004-00	BOLT/SP	T	4					

FIG.P07 BUMPER(REAR)SET(OPTION)

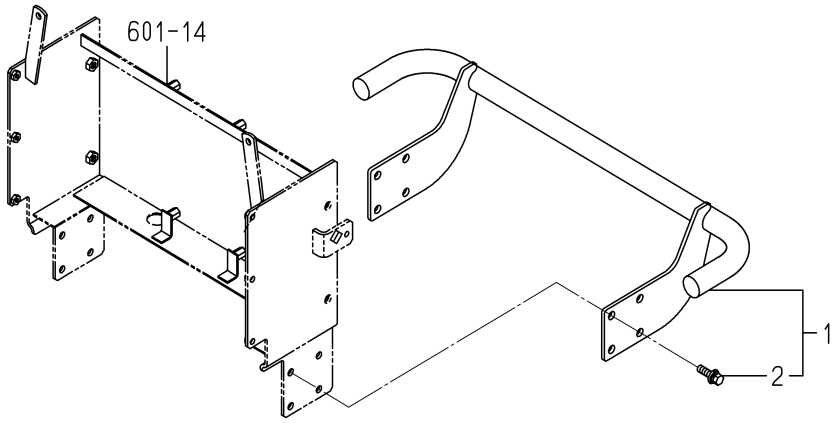

1752-603Y-0100

KEY	PART CODE	DESCRIPTION	SPC	TYPE OF MODEL		ITC	COL	GRP	REMARKS
				SZ330					
1	1752-603-220-00	BUMPER/REAR/E4 SET	T	1					
2	- - - - - -	BLANK	T						- - - - - -
2	V211-661-003-50	BOLT/SP	T	8					

FIG.S01 COMPONENT PARTS FOR K216-012-000-0A ON Fig.501

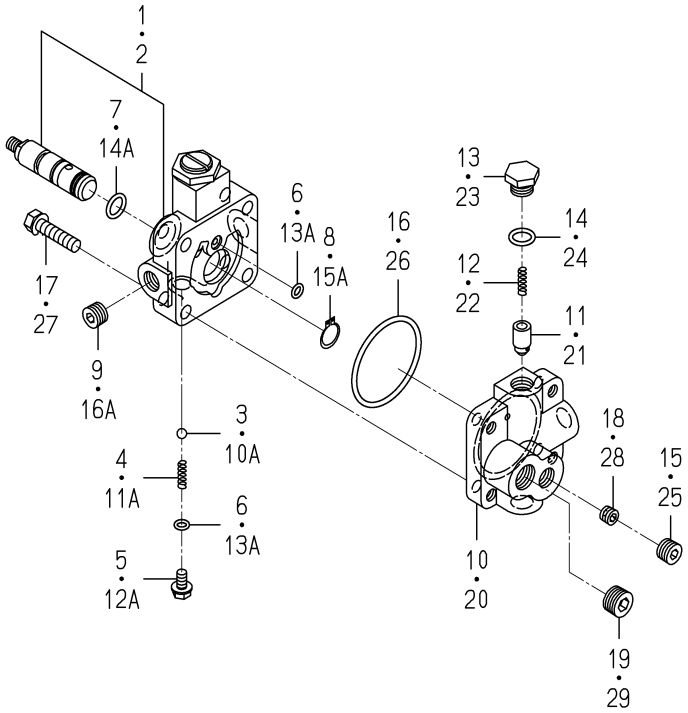

K216-012-000-0A

KEY	PART CODE	DESCRIPTION	SPC	TYPE OF MODEL SZ330		ITC	COL	GRP	REMARKS
1	- - - - - -	BLANK	*						- - - - - -
2	K216-012-110-10	VALVE SUB SET	*	1					
3	V682-200-000-60	BALL	*	1					
4	K216-001-002-00	GUIDE/SPRING	*	1					
5	K216-008-002-00	SET BOLT	*	1					
6	V720-101-900-60	O-RING/P 6	*	2					
7	V720-102-401-20	O-RING/P12	*	1					
8	V704-140-015-00	RING,SNAP/15 C	*	1					
9	V780-140-000-4T	PLUG/SCREW/SEAL	*	1					
10	- - - - - -	BLANK	*						- - - - - -
10	K216-012-002-00	COVER	*	1					
11	- - - - - -	BLANK	*						- - - - - -
11	K216-012-003-00	POPPET	*	1					
12	- - - - - -	BLANK	*						- - - - - -
12	K211-008-010-00	SPRING/HC19	*	1					
13	- - - - - -	BLANK	*						- - - - - -
13A	K211-001-008-00	PLUG	*	1					
14	- - - - - -	BLANK	*						- - - - - -
14A	V720-102-401-20	O-RING/P12	*	1					
15	- - - - - -	BLANK	*						- - - - - -
15A	V780-140-000-4T	PLUG/SCREW/SEAL	*	1					
16	- - - - - -	BLANK	*						- - - - - -
16A	V721-103-105-50	O-RING/G55	*	1					
17	V211-260-803-50	BOLT(S) M8X35	*	2					
18	K216-012-004-00	ORIFICE SCREW/3.5	*	1					
19	V780-140-000-6T	PLUG/SCREW/SEAL	*	1					
20	- - - - - -	BLANK	*						- - - - - -
21	- - - - - -	BLANK	*						- - - - - -
22	- - - - - -	BLANK	*						- - - - - -
23	- - - - - -	BLANK	*						- - - - - -

FIG.S01 COMPONENT PARTS FOR K216-012-000-0A ON Fig.501

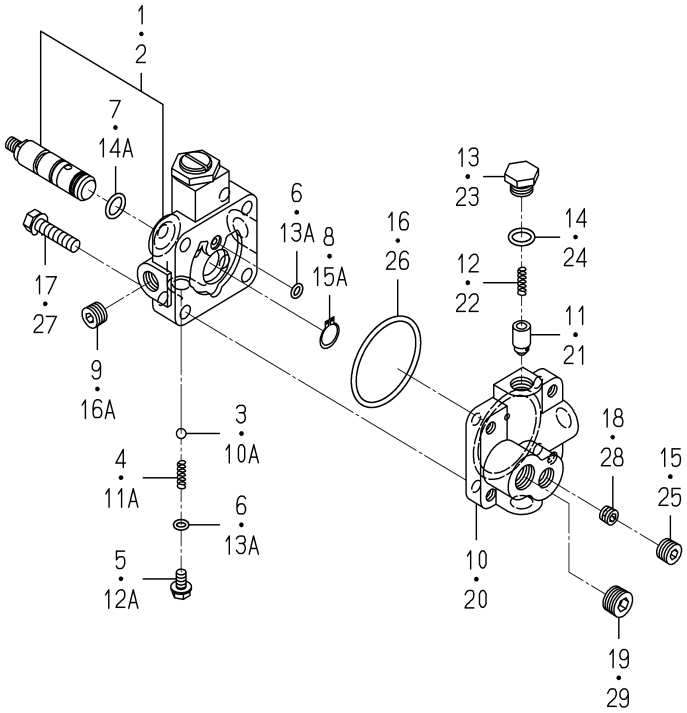

K216-012-000-0A

KEY	PART CODE	DESCRIPTION	SPC	TYPE OF MODEL		ITC	COL	GRP	REMARKS
				SZ330					
24	- - - - - -	BLANK	*						- - - - - -
25	- - - - - -	BLANK	*						- - - - - -
26	- - - - - -	BLANK	*						- - - - - -
27	- - - - - -	BLANK	*						- - - - - -
28	- - - - - -	BLANK	*						- - - - - -
29	- - - - - -	BLANK	*						- - - - - -

FIG.S02 COMPONENT PARTS FOR 1752-202-450-10 ON Fig.201

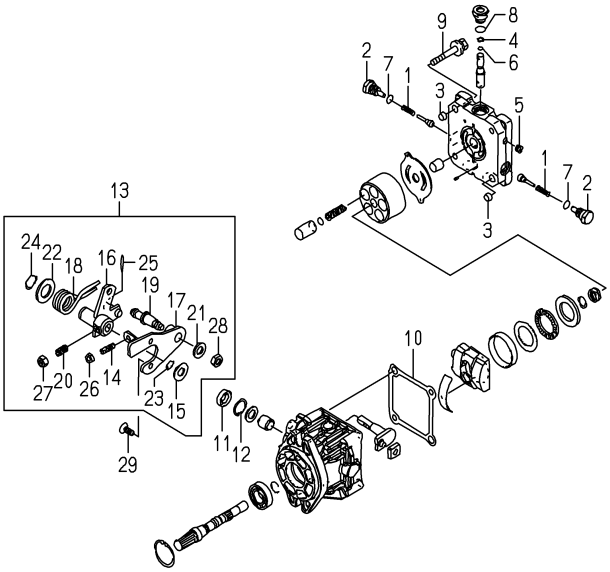

1752-202-450-1A

KEY	PART CODE	DESCRIPTION	SPC	TYPE OF MODEL SZ330		ITC	COL	GRP	REMARKS
1	1752-202-451-00	SPRING	*	2					
2	1752-202-452-00	PLUG	*	2					
3	1752-202-453-00	PIN	*	2					
4	1752-202-454-00	RING/BACKUP	*	1					
5	1752-202-455-00	PLUG	*	1					
6	1752-202-456-00	RING/O	*	1					
7	1752-202-457-00	RING/O	*	2					
8	1752-202-458-00	RING/O	*	1					
9	1752-202-459-00	BOLT	*	4					
10	1752-202-461-00	PACKING	*	1					
11	1752-202-462-00	SEAL/OIL	*	1					
12	1752-202-463-00	RING	*	1					
13	1752-202-651-00	LEVER/NEUTRAL COMP	*	1					
14	1752-202-652-00	SCREW	*	1					
15	1752-202-653-00	WASHER	*	1					
16	1752-202-654-00	LEVER	*	1					
17	------	BLANK	*						------
17	1752-202-655-10	PLATE	*	1					
18	1752-202-656-00	SPRING	*	1					
19	1752-202-657-00	PIN	*	1					
20	1752-202-658-00	SCREW	*	1					
21	1752-202-659-00	WASHER	*	1					
22	1752-202-661-00	WASHER	*	1					
23	1752-202-662-00	RING	*	1					
24	1752-202-663-00	RING	*	1					
25	1752-202-664-00	PIN	*	1					
26	1752-202-665-00	NUT	*	1					
27	1752-202-666-00	NUT	*	1					
28	1752-202-667-00	NUT	*	1					
29	1752-202-668-00	BOLT	*	2					

FIG.S03 COMPONENT PARTS FOR 1752-202-470-10 ON Fig.201

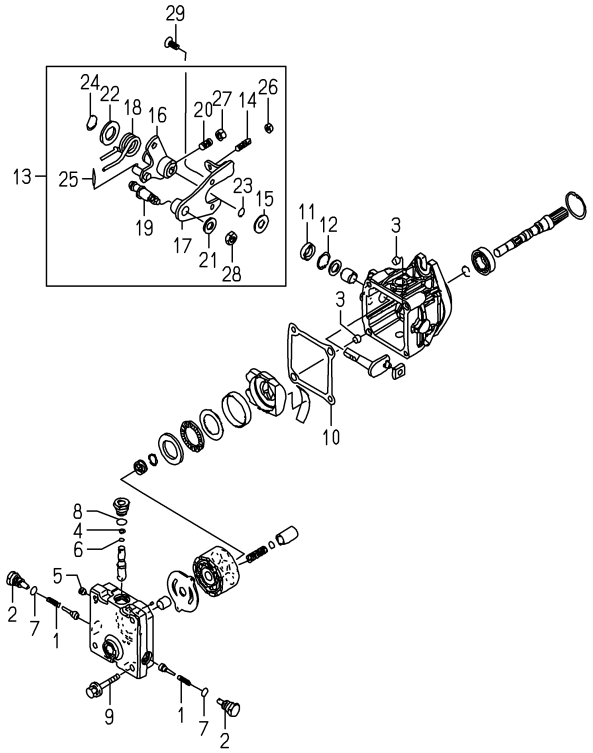

1752-202-470-1A

KEY	PART CODE	DESCRIPTION	SPC	TYPE OF MODEL SZ330		ITC	COL	GRP	REMARKS
1	1752-202-451-00	SPRING	*	2					
2	1752-202-452-00	PLUG	*	2					
3	1752-202-453-00	PIN	*	2					
4	1752-202-454-00	RING/BACKUP	*	1					
5	1752-202-455-00	PLUG	*	1					
6	1752-202-456-00	RING/O	*	1					
7	1752-202-457-00	RING/O	*	2					
8	1752-202-458-00	RING/O	*	1					
9	1752-202-459-00	BOLT	*	4					
10	1752-202-461-00	PACKING	*	1					
11	1752-202-462-00	SEAL/OIL	*	1					
12	1752-202-463-00	RING	*	1					
13	1752-202-671-00	LEVER/NEUTRAL COMP	*	1					
14	1752-202-652-00	SCREW	*	1					
15	1752-202-653-00	WASHER	*	1					
16	1752-202-672-00	LEVER	*	1					
17	- - - - - -	BLANK	*						- - - - - -
17	1752-202-673-10	PLATE	*	1					
18	1752-202-656-00	SPRING	*	1					
19	1752-202-657-00	PIN	*	1					
20	1752-202-658-00	SCREW	*	1					
21	1752-202-659-00	WASHER	*	1					
22	1752-202-661-00	WASHER	*	1					
23	1752-202-662-00	RING	*	1					
24	1752-202-663-00	RING	*	1					
25	1752-202-664-00	PIN	*	1					
26	1752-202-665-00	NUT	*	1					
27	1752-202-666-00	NUT	*	1					
28	1752-202-667-00	NUT	*	1					
29	1752-202-668-00	BOLT	*	2					

WIRING DIAGRAM(1/2)

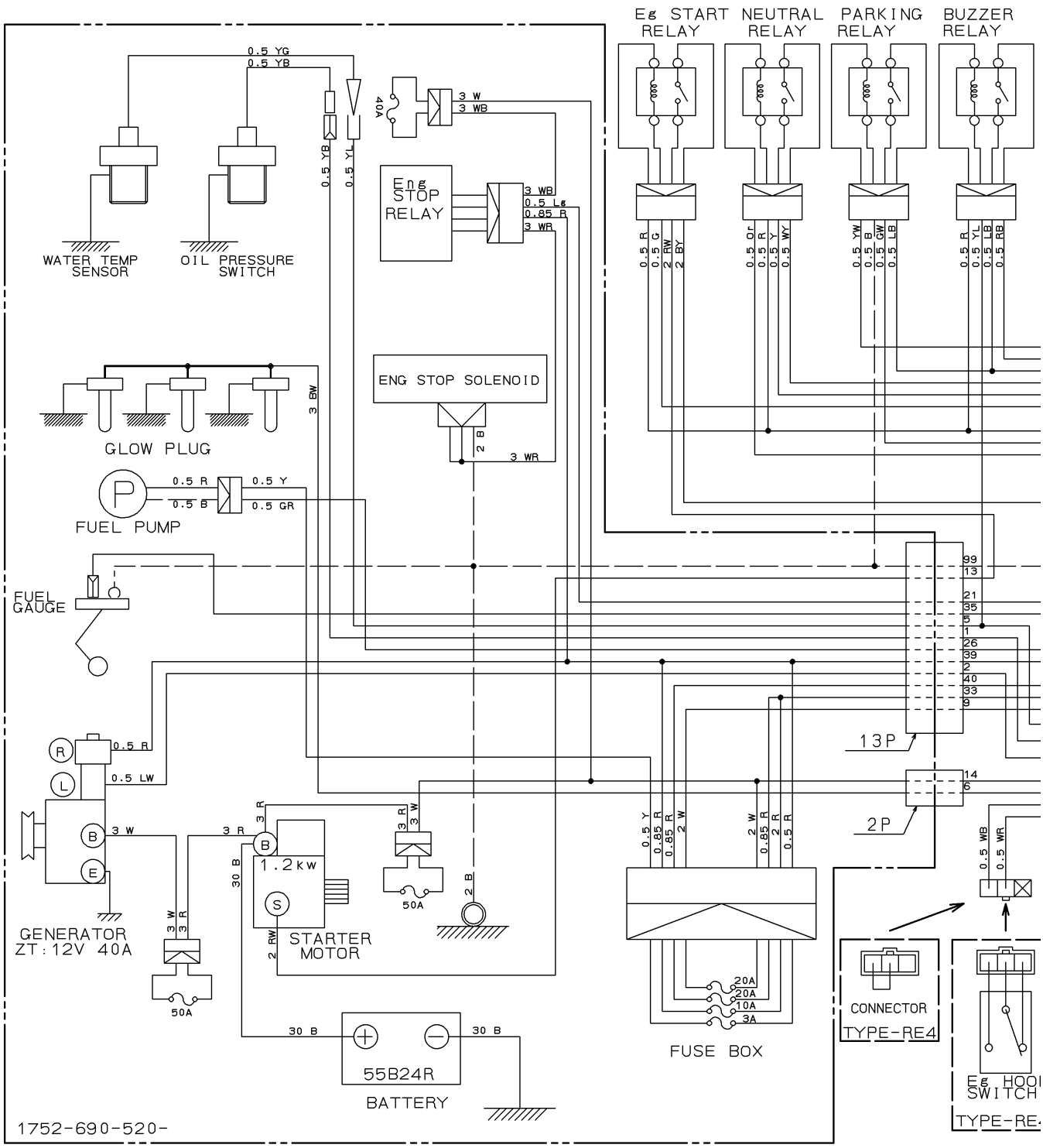

WIRING DIAGRAM(2/2)

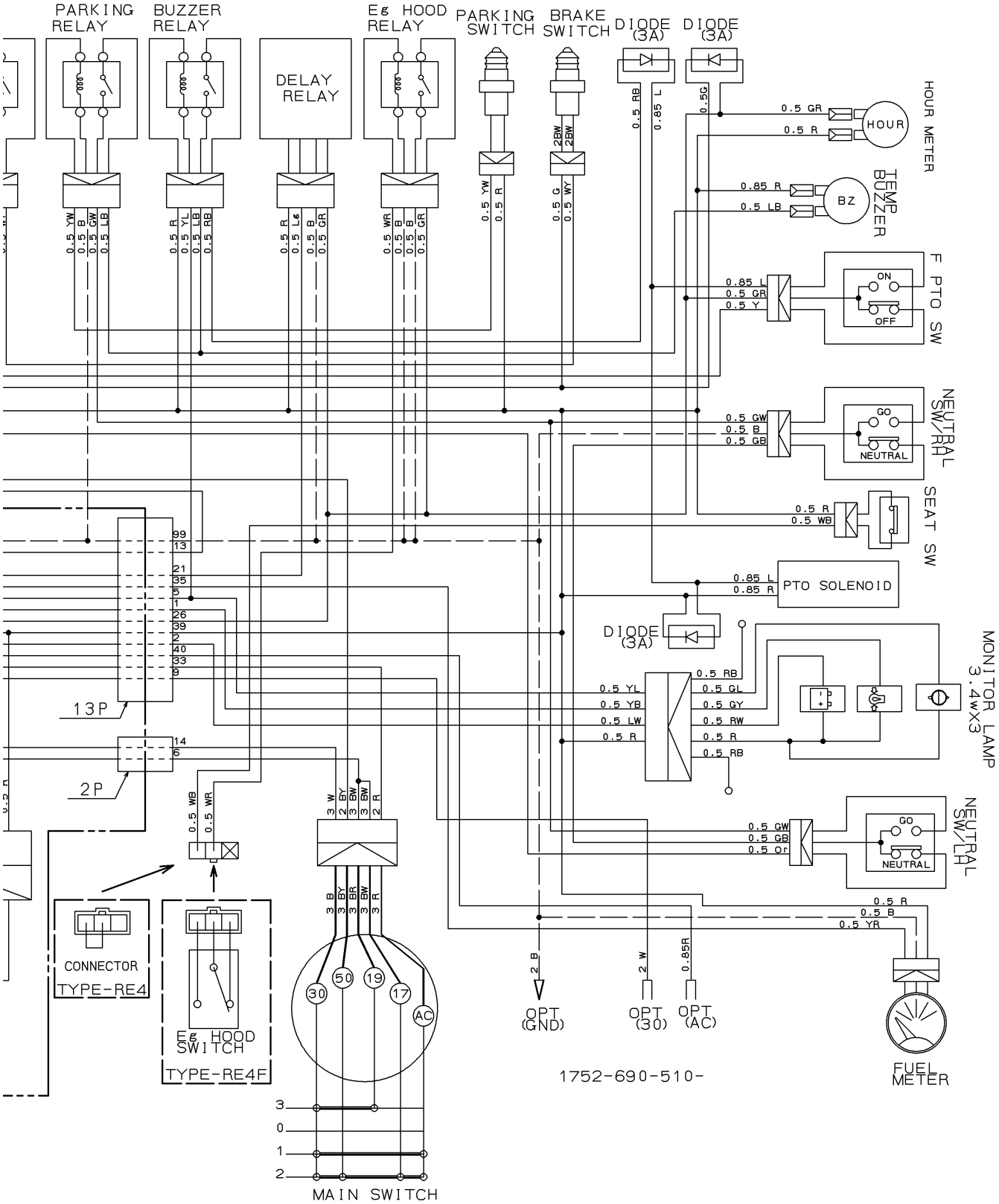

Numerical Index

Part Code	Fig.	Key	Part Code	Fig.	Key	Part Code	Fig.	Key
1373-121-001-00	801	4	6209-625-002-00	P04	12	6211-511-007-00	201	12
1425-621-004-00	204	16	6209-625-003-20	201	15	6211-511-008-00	201	13
3640-586-004-00	503	5		P04	10	6211-530-008-00	P02	1
3805-355-002-20	202	2	6209-630-002-10	802	7	6211-540-008-00	P02	3
3817-401-001-00	204	12		P04	21	6211-599-004-00	201	14
	301	20-A	6209-730-005-00	302	3-A		P02	2
	402	16		502	10		P02	4
	502	7	6209-730-006-00	304	4	6211-751-001-10	102	5
6005-010-148-00	P01	1	6209-740-005-00	201	18	6211-751-002-00	201	31-A
6115-639-008-00	S02	51	6209-740-006-00	204	30-A	6211-760-041-20	201	29
6209-000-002-00	301	18	6209-749-001-20	201	16	6211-766-033-00	201	30
6209-000-005-00	101	7		204	48	6211-777-007-30	205	1
6209-000-006-00	201	2	6209-920-002-00	204	23	6212-111-095-30	303	1
6209-000-043-00	304	10-A	6209-940-004-00	301	14	6212-114-095-30	P03	1
6209-030-043-00	502	16	6211-110-084-20	101	1	6212-116-095-30	P03	3
6209-030-044-00	403	4	6211-141-057-10	101	6	6212-121-028-10	303	2
6209-030-091-00	203	3		P04	3	6212-124-028-10	P03	2
6209-046-015-00	304	7	6211-170-007-30	102	1-A	6212-126-028-10	P03	4
6209-050-002-00	204	40	6211-173-005-00	102	6	6212-211-002-00	303	3
6209-050-003-00	204	36		P04	4	6212-230-011-30	303	5
6209-300-014-00	101	8	6211-179-011-20	102	2	6212-235-004-10	303	6
6209-360-011-00	503	3	6211-210-056-70	201	1	6212-271-009-00	303	7
6209-360-109-10	102	9-A	6211-258-001-00	201	9	6212-273-009-00	P02	5-A
6209-409-003-00	301	17		P04	8	6212-274-009-00	P02	6-A
6209-440-005-00	802	4	6211-258-002-00	201	10	6212-310-011-40	304	1
6209-490-002-10	102	7		P04	9	6212-330-031-50	304	5
6209-500-003-00	204	18	6211-291-007-20	201	25	6212-333-002-00	304	6
	204	29	6211-291-010-00	102	3	6212-371-035-10	304	8
	P04	13	6211-292-001-20	201	26	6212-511-005-00	302	1
6209-572-003-00	102	8-B		P04	11	6212-521-008-00	304	3
	P04	5	6211-310-013-80	204	1-B	6212-522-004-10	302	2
6209-580-002-10	502	26	6211-311-013-20	204	43	6212-523-006-50	302	6
6209-587-006-10	204	21	6211-312-005-10	204	31	6212-524-006-30	502	9
	204	38		P04	14	6212-530-005-30	204	50-A
6209-600-004-00	204	28	6211-312-006-10	204	44	6212-531-008-30	201	8-A
6209-605-003-10	204	2		P04	15	6212-535-007-00	302	4
6209-605-004-10	101	3	6211-319-003-00	204	46	6212-535-009-00	502	13
6209-605-007-00	201	7	6211-321-022-00	204	53	6212-551-020-10	301	1
6209-610-001-10	201	4		204	57	6212-552-008-00	301	2
6209-610-003-00	101	2	6211-322-002-00	204	54	6212-561-003-00	301	3
	201	6		204	58	6212-563-001-00	301	4
6209-610-004-00	204	3	6211-340-003-00	203	1	6212-565-001-00	301	5
6209-610-007-00	201	3	6211-342-003-10	203	2	6212-569-002-00	101	4
6209-610-009-00	201	5	6211-361-076-00	202	1		P04	2
6209-625-002-00	204	7	6211-510-008-00	201	11	6212-571-002-30	301	6

Numerical Index

Part Code	Fig.	Key	Part Code	Fig.	Key	Part Code	Fig.	Key
6212-575-003-00	301	7	6213-729-013-10	402	17	6215-542-004-20	204	25
6212-600-009-20	301	8	6213-743-002-10	402	20	6215-542-005-10	204	27
6212-611-004-10	301	9		P04	19	6215-542-006-00	502	20
6212-616-002-00	301	16	6214-110-003-00	103	1	6215-543-002-10	502	19
6212-620-008-20	301	10	6214-115-003-10	103	2	6215-546-006-00	204	19
6212-626-002-10	301	11		P04	6	6215-548-069-00	504	1
6212-628-010-10	301	12	6214-141-026-10	104	1	6215-549-013-00	201	28
6212-628-011-10	301	13	6214-145-004-20	104	2	6215-549-031-10	502	22
6213-100-004-30	401	1		P04	7	6215-549-039-00	502	31
6213-111-002-20	401	2	6215-300-045-10	501	1	6215-549-057-00	204	20
6213-119-001-00	401	6	6215-311-036-00	S01	16	6215-549-058-10	204	22
6213-120-002-30	401	3	6215-315-002-00	501	2	6215-549-059-00	204	37
6213-125-002-10	401	4	6215-315-005-00	501	4	6215-549-060-10	204	39-A
6213-129-003-00	401	5	6215-315-006-00	501	3	6215-549-076-10	502	27
6213-129-006-00	201	17	6215-315-007-00	501	5	6215-600-104-20	502	1
6213-140-005-10	401	8	6215-330-028-00	S01	1	6215-611-015-00	S02	1
6213-149-003-20	401	10	6215-332-014-00	S01	15	6215-619-023-00	S02	50
6213-160-005-00	204	32-A	6215-339-004-00	S01	14	6215-619-024-00	S02	52
6213-161-003-10	204	33	6215-342-013-00	S01	13	6215-621-017-10	502	8
6213-164-001-00	204	34	6215-343-010-00	S01	12	6215-622-003-00	S02	11
6213-240-002-10	401	12	6215-345-044-00	S01	2	6215-629-017-00	S02	12
6213-319-001-00	201	24	6215-345-045-00	S01	3	6215-629-035-00	S02	13
6213-610-004-40	402	1	6215-345-046-00	S01	4	6215-629-036-00	S02	25
6213-611-003-20	402	2	6215-345-047-00	S01	5	6215-629-037-00	S02	26
6213-612-004-00	402	9	6215-345-048-00	S01	6	6215-629-038-00	S02	27
6213-613-002-10	402	8	6215-345-049-00	S01	7	6215-629-039-00	S02	28
6213-614-001-10	402	12	6215-345-050-00	S01	8	6215-629-040-00	S02	29
	402	14	6215-345-051-00	S01	9	6215-629-041-00	S02	30
	P04	18	6215-345-052-00	S01	10	6215-629-042-00	S02	31
6213-619-002-00	402	11	6215-345-053-00	S01	11	6215-629-043-00	S02	32
6213-619-003-00	402	10	6215-359-003-00	S01	17	6215-629-044-00	S02	33
6213-619-007-10	402	13	6215-359-004-00	S01	18	6215-629-045-00	S02	34
6213-621-003-00	402	6	6215-359-006-00	S02	53	6215-629-046-00	S02	35
6213-622-002-10	402	5	6215-411-133-00	501	6	6215-629-047-00	S02	36
6213-631-002-00	402	3	6215-411-134-00	501	7	6215-629-048-00	S02	37
6213-631-005-00	402	4	6215-411-135-00	501	8	6215-629-049-00	S02	38
6213-641-022-10	403	2	6215-411-136-00	503	2	6215-629-050-00	S02	39
6213-642-002-00	402	7	6215-412-004-00	503	1	6215-629-051-00	S02	40
6213-660-016-00	403	1	6215-520-007-10	502	15	6215-629-052-00	S02	41
6213-669-008-00	403	3	6215-526-004-00	502	17	6215-629-053-00	S02	42
6213-671-030-00	403	5	6215-531-010-00	502	23	6215-629-054-00	S02	43
6213-674-006-20	801	2	6215-537-002-10	502	32	6215-629-055-00	S02	44
6213-711-003-20	402	24	6215-541-001-10	502	18	6215-629-056-00	S02	45
6213-716-001-50	402	19	6215-541-016-40	504	2	6215-629-058-00	S02	46
6213-721-007-00	201	23	6215-541-044-00	502	24	6215-629-059-00	S02	47

Numerical Index

Part Code	Fig.	Key	Part Code	Fig.	Key	Part Code	Fig.	Key
6215-629-060-00	S02	17	6281-151-021-00	S03	16-A	6902-050-816-00	204	45
6215-629-061-00	S02	18	6281-200-020-00	801	1	6904-110-822-00	201	20
6215-629-062-00	S02	19	6281-213-017-00	S04	7		204	4
6215-629-063-00	S02	20	6281-214-003-00	S04	12		204	49
6215-629-064-00	S02	21	6281-214-004-00	S04	13	6904-110-840-00	201	19
6215-629-065-00	S02	22	6281-215-001-00	S04	17	6904-110-850-00	204	6
6215-629-066-00	S02	23	6281-216-001-00	S04	18	6904-110-855-00	204	5
6215-629-067-00	S02	24	6281-217-003-00	S04	16	6909-111-508-00	S03	24
6215-631-015-00	S02	2	6281-221-007-00	S04	4	6909-950-115-00	303	4
6215-634-003-00	S02	14	6281-222-012-00	S04	1	J061-210-015-00	402	18
6215-635-004-00	S02	8	6281-229-002-00	S04	2	J062-076-082-00	503	4
6215-635-005-00	S02	49	6281-229-003-00	S04	3	P117-303-003-00	204	26
6215-637-004-00	S02	48	6281-229-004-00	S04	5	V195-164-008-30	102	4
6215-639-008-00	S02	15	6281-229-006-00	S04	8	V211-560-802-50	104	3
6215-639-009-00	S02	16	6281-229-007-00	S04	9	V220-540-601-60	802	8
6215-641-002-00	S02	3	6281-229-008-00	S04	10	V220-540-602-00	401	7
6215-643-005-00	S02	4	6281-229-011-00	S04	15	V230-360-601-00	202	4
6215-644-009-00	S02	6	6281-229-012-00	S04	19	V230-360-601-20	201	27
6215-649-008-00	S02	5	6281-229-013-00	S04	20	V231-360-801-60	204	13
6215-649-011-00	S02	10	6281-229-014-00	S04	21		401	11
6215-649-013-00	S02	9	6281-229-015-00	S04	22	V231-360-802-00	402	21
6215-649-014-00	S02	7	6281-229-016-00	S04	23		502	6
6219-732-017-00	802	5-A	6281-229-017-00	S04	24		801	3
6219-752-044-00	502	3	6281-229-018-00	S04	25	V231-360-802-50	103	3
6219-752-045-00	502	2	6281-229-029-00	S04	14		402	26
6219-752-046-00	502	4	6281-229-032-00	S04	6	V231-360-803-00	204	17
6219-752-047-00	502	5	6281-229-033-00	S04	11	V231-360-804-00	402	15
6281-100-002-30	801	7	6281-229-041-00	S03	25	V231-360-805-00	204	14
6281-111-005-00	S03	1	6281-271-002-00	S04	26	V231-360-805-50	301	19-A
6281-115-008-00	S03	12	6281-410-023-10	802	3-A	V231-360-806-00	204	15
6281-115-010-00	S03	26	6281-910-011-00	802	6	V231-360-807-00	204	11-A
6281-115-016-00	S03	23	6281-971-001-10	802	1	V231-360-807-50	204	9
6281-116-004-00	S03	13	6282-450-008-00	802	2-A		402	22
6281-121-006-00	S03	2	6287-810-032-10	P04	1	V231-360-808-50	204	8
6281-123-005-00	S03	10	6294-453-002-00	201	22	V233-361-002-00	205	3
6281-124-007-10	S03	7	6509-030-037-00	104	4	V233-361-007-00	801	5
6281-129-003-00	S03	22	6513-770-022-10	402	23	V251-340-806-00	201	21
6281-129-038-00	S03	3	6581-117-007-00	S03	14	V301-260-006-00	204	41
6281-129-039-00	S03	4	6581-129-092-00	S03	20		502	28
6281-129-040-00	S03	9	6581-129-099-00	S03	8	V304-260-008-00	204	55
6281-129-041-10	S03	11	6901-910-612-00	302	5		204	59
6281-129-042-00	S03	18		502	14	V304-260-012-00	801	9
6281-129-043-00	S03	19	6901-911-020-00	203	4	V334-260-010-00	801	6
6281-129-044-00	S03	21		205	2	V401-160-006-00	502	30
6281-129-062-00	S03	17	6901-931-240-00	801	8		802	9

Numerical Index

6005-095-653-00

Part Code	Fig. Key		Part Code	Fig. Key	Part Code	Fig. Key
V401-160-008-00	204	56				
	204	60				
V411-260-006-00	502	29				
V523-101-001-80	304	2				
V600-110-600-40	502	12				
V600-110-600-50	204	51				
V600-110-620-30	502	11				
V682-200-000-60	101	5				
V704-140-016-00	301	15				
V705-140-012-00	204	35				
V710-140-004-00	502	21				
V720-101-900-80	502	25				
V720-102-401-80	202	3				
V720-103-502-20	401	9				
	P04	17				
V720-103-502-50	201	32				
V723-102-005-00	204	47				
	P04	16				
V723-102-005-50	402	25				
	P04	20				
V780-140-000-2B	204	24				

Numerical Index

Part Code	Fig.	Key	Part Code	Fig.	Key	Part Code	Fig.	Key
1102-611-006-10	602	9-A	1544-603-004-00	605	7	1617-730-005-00	106	6
1110-404-004-10	601	27	1557-312-241-00	106	3	1620-313-004-00	202	2
1302-726-502-00	508	16	1560-104-010-40	102	20	1636-102-012-00	102	23
1305-241-001-00	603	7	1560-111-003-20	106	10	1636-402-004-00	603	43
1305-931-003-00	603	25	1560-111-007-00	105	25	1636-701-250-00	701	4
	604	4	1560-132-007-30	303	10	1636-701-251-00	701	5
1342-402-006-00	503	3	1560-140-011-10	501	4	1646-116-051-10	108	2
	503	40	1560-404-002-30	303	11	1646-640-008-10	202	13
	607	35	1560-664-250-00	607	12		501	31
	608	38		608	14	1646-640-580-00	202	8
1364-301-003-00	503	41	1560-664-252-00	607	13	1650-102-202-10	102	2
1376-121-001-00	203	8		608	15	1650-104-200-10	104	1
	203	26	1560-664-253-00	607	14	1650-104-201-00	104	3
1376-402-003-00	102	26		608	16	1650-104-203-10	104	4
	507	15	1568-650-004-10	607	30	1650-104-210-00	104	2
	607	36		608	33	1650-601-003-00	601	13
	608	39	1568-650-005-10	607	31	1650-601-009-00	601	30
1415-102-007-00	105	3		608	34	1650-650-222-00	607	6
1415-102-008-00	105	5	1572-102-003-00	105	10		608	6
1415-102-013-00	105	11	1575-117-002-00	303	22	1650-658-270-00	607	23
1416-621-037-00	106	5	1575-623-009-00	607	8		608	25
1421-603-004-00	102	47		608	8	1650-658-333-00	102	40
1423-616-004-00	102	46	1575-623-010-00	607	7	1656-664-002-00	203	14
1424-101-203-00	102	21		608	7		203	31
1424-101-204-00	102	22	1593-101-012-00	601	37		203	44
1427-111-007-00	105	18		601	39	1672-105-211-00	105	9
1427-111-229-00	104	12	1593-117-003-10	108	4	1672-690-212-00	607	10
1427-401-001-00	402	2	1593-621-250-10	606	1		608	10
1427-601-003-00	502	13	1593-621-252-00	606	2	1673-525-002-30	701	6
1440-103-201-00	105	6	1593-623-203-00	607	9	1673-780-011-00	601	2
1440-602-003-00	503	27		608	9	1674-904-005-00	903	2
1444-102-202-00	105	2	1593-623-520-00	607	15	1674-904-008-00	903	8
1444-102-204-00	105	7		608	17	1675-102-002-00	102	28
1444-122-002-00	303	8	1596-105-001-00	103	2	1675-112-002-00	107	2
1444-621-311-00	606	3	1600-505-007-10	108	3	1677-104-001-00	104	7
1444-621-312-00	606	4	1608-207-224-00	501	14	1678-104-002-00	104	9
1488-611-003-10	603	6	1614-104-001-10	104	6	1682-902-014-00	902	2
1518-306-203-10	505	7-A	1614-129-003-00	607	16	1684-112-300-20	107	1
1518-407-240-10	505	6-A		608	18	1689-613-240-00	606	13
1518-786-508-00	503	18	1614-432-001-00	403	5	1689-621-007-00	601	10
	503	32	1614-690-202-00	607	5	1689-621-008-10	601	11
1524-122-001-00	303	27		608	5	1690-102-210-00	102	33
1527-604-002-00	605	4	1614-702-551-00	701	7	1690-102-212-00	102	34
1544-104-205-00	104	5	1614-702-552-00	701	8	1690-102-213-00	102	35
1544-219-005-00	501	21	1617-102-007-00	102	17	1690-102-214-00	102	36

Numerical Index

Part Code	Fig.	Key	Part Code	Fig.	Key	Part Code	Fig.	Key
1690-102-215-00	102	37	1739-317-230-11	P02	7	1752-112-220-00	107	5
1690-102-216-00	102	38	1739-317-240-11	305	1	1752-117-200-10	108	1
1690-102-217-00	102	39	1739-317-241-00	305	3	1752-117-210-10	108	7
1703-102-203-00	102	6	1739-317-260-00	305	4-A	1752-120-200-00	109	1
1703-505-004-10	303	6		404	4-A	1752-120-201-00	109	2
1703-670-230-00	606	15		P02	4-A	1752-120-202-00	109	3
1703-670-320-00	606	6		P02	9-A	1752-120-203-00	109	4
1703-670-322-00	606	7	1740-102-503-00	102	4	1752-120-204-00	109	5
1703-670-323-00	606	8	1740-102-504-00	102	5	1752-120-205-00	109	6
1703-670-324-00	606	9	1740-102-505-00	102	7	1752-120-206-00	109	7
1703-670-325-00	606	10	1740-680-530-00	607	20	1752-202-200-10	201	1
1703-670-326-00	606	11		608	22	1752-202-211-00	201	2
1705-102-014-00	102	30	1741-611-003-00	603	18-A	1752-202-212-00	201	3
1705-902-006-00	903	9	1742-104-211-00	P01	1	1752-202-213-00	201	4
1705-902-007-00	903	3	1742-606-001-10	701	29	1752-202-214-00	201	5
1705-902-008-00	903	4	1742-611-222-00	603	3	1752-202-215-00	201	6
1705-904-001-00	903	5	1742-611-240-00	603	16	1752-202-216-00	201	7
1705-904-002-10	903	6	1742-650-320-00	607	22	1752-202-217-00	201	8
1705-904-004-00	903	1		608	24	1752-202-218-00	201	9
1716-105-200-10	105	1	1742-652-300-20	606	12	1752-202-219-00	201	10
1716-601-009-00	501	24	1752-101-001-00	101	7	1752-202-221-00	201	11
	605	6	1752-101-002-00	101	10	1752-202-222-00	201	12
1716-680-222-00	607	39	1752-101-200-00	101	1	1752-202-231-00	201	15
1716-680-330-00	607	38	1752-101-210-00	101	4	1752-202-232-00	201	16
1719-611-610-20	603	8	1752-102-001-00	102	11	1752-202-241-00	201	17
1719-611-622-00	603	12	1752-102-002-00	102	14	1752-202-242-00	201	26
1719-611-623-00	603	13	1752-102-004-00	102	29	1752-202-243-00	201	42
1725-203-210-00	505	4-A	1752-102-005-00	102	8	1752-202-244-00	201	43
1725-308-003-20	301	1	1752-102-006-00	102	9	1752-202-245-00	201	44
1725-611-087-00	701	15	1752-102-007-00	102	10	1752-202-246-00	201	45
1725-681-200-00	607	25		601	6	1752-202-247-00	201	46
	608	28	1752-102-008-00	102	32	1752-202-248-00	201	47
1728-690-001-00	607	3	1752-102-011-00	102	18	1752-202-261-00	201	52
	608	3	1752-102-210-00	102	27	1752-202-262-00	201	53
1728-903-002-00	903	12	1752-102-250-00	102	42	1752-202-263-00	201	54
1728-903-003-00	903	13	1752-102-270-10	102	49-A	1752-202-264-00	201	55
1729-111-280-10	106	7-A	1752-102-310-00	102	1	1752-202-271-00	201	67
1729-111-283-00	106	8	1752-102-311-00	102	3-A	1752-202-272-00	201	68
1729-111-284-00	106	9	1752-103-200-30	103	1-A	1752-202-273-00	201	69
1739-317-210-11	P02	1	1752-104-200-00	104	11	1752-202-274-00	201	70
1739-317-211-00	P02	3	1752-105-005-00	105	17	1752-202-275-00	201	71
	P02	8	1752-105-200-00	105	28	1752-202-276-00	201	72
1739-317-220-11	P02	6	1752-105-210-00	105	23	1752-202-277-00	201	73
1739-317-230-11	305	2	1752-111-001-00	106	1	1752-202-278-00	201	74
	P02	2	1752-112-001-00	107	7	1752-202-279-00	201	75

Numerical Index

Part Code	Fig.	Key	Part Code	Fig.	Key	Part Code	Fig.	Key
1752-202-281-00	201	76	1752-202-470-10	201	14	1752-202-621-00	201	102
1752-202-290-00	201	77	1752-202-510-00	201	18	1752-202-622-00	201	103
1752-202-291-00	201	78	1752-202-511-00	201	19	1752-202-630-00	201	104
1752-202-292-00	201	79	1752-202-512-00	201	20	1752-202-631-00	201	105
1752-202-293-00	201	80	1752-202-513-00	201	21	1752-202-641-00	201	100
1752-202-294-00	201	81	1752-202-514-00	201	22	1752-202-642-00	201	101
1752-202-295-00	201	82	1752-202-515-00	201	23	1752-202-651-00	S02	13
1752-202-310-20	201	106	1752-202-516-00	201	24	1752-202-652-00	S02	14
1752-202-320-20	201	109	1752-202-517-00	201	25		S03	14
1752-202-401-00	201	83	1752-202-531-00	201	27	1752-202-653-00	S02	15
1752-202-402-00	201	84	1752-202-532-00	201	28		S03	15
1752-202-403-00	201	90	1752-202-533-00	201	29	1752-202-654-00	S02	16
1752-202-404-00	201	91	1752-202-534-00	201	30	1752-202-655-10	S02	17
1752-202-405-00	201	92	1752-202-535-00	201	31	1752-202-656-00	S02	18
1752-202-406-00	201	93	1752-202-536-00	201	32		S03	18
1752-202-407-00	201	94	1752-202-540-00	201	48	1752-202-657-00	S02	19
1752-202-408-00	201	95	1752-202-541-00	201	49		S03	19
1752-202-409-00	201	96	1752-202-542-00	201	50	1752-202-658-00	S02	20
1752-202-411-00	201	97	1752-202-543-00	201	51		S03	20
1752-202-420-00	201	98	1752-202-550-00	201	35	1752-202-659-00	S02	21
1752-202-450-10	201	13	1752-202-551-00	201	36		S03	21
1752-202-451-00	S02	1	1752-202-552-00	201	37	1752-202-661-00	S02	22
	S03	1	1752-202-553-00	201	38		S03	22
1752-202-452-00	S02	2	1752-202-560-00	201	39	1752-202-662-00	S02	23
	S03	2	1752-202-561-00	201	40		S03	23
1752-202-453-00	S02	3	1752-202-562-00	201	41	1752-202-663-00	S02	24
	S03	3	1752-202-571-00	201	33		S03	24
1752-202-454-00	S02	4	1752-202-572-00	201	34	1752-202-664-00	S02	25
	S03	4	1752-202-580-00	201	56		S03	25
1752-202-455-00	S02	5	1752-202-581-00	201	57	1752-202-665-00	S02	26
	S03	5	1752-202-582-00	201	58		S03	26
1752-202-456-00	S02	6	1752-202-583-00	201	59	1752-202-666-00	S02	27
	S03	6	1752-202-584-00	201	60		S03	27
1752-202-457-00	S02	7	1752-202-585-00	201	61	1752-202-667-00	S02	28
	S03	7	1752-202-586-00	201	62		S03	28
1752-202-458-00	S02	8	1752-202-587-00	201	63	1752-202-668-00	S02	29
	S03	8	1752-202-588-00	201	64		S03	29
1752-202-459-00	S02	9	1752-202-589-00	201	65	1752-202-671-00	S03	13
	S03	9	1752-202-591-00	201	66	1752-202-672-00	S03	16
1752-202-461-00	S02	10	1752-202-611-00	201	85	1752-202-673-10	S03	17
	S03	10	1752-202-612-00	201	86	1752-271-003-00	202	6
1752-202-462-00	S02	11	1752-202-613-00	201	87	1752-271-210-00	202	1
	S03	11	1752-202-614-00	201	88	1752-272-002-00	203	4
1752-202-463-00	S02	12	1752-202-615-00	201	89		203	22
	S03	12	1752-202-620-00	201	99	1752-272-006-00	203	15

Numerical Index

Part Code	Fig.	Key	Part Code	Fig.	Key	Part Code	Fig.	Key
1752-272-006-00	203	32	1752-307-254-00	302	28	1752-504-230-00	502	7
	203	45	1752-307-255-00	302	29	1752-504-240-00	501	12
1752-272-007-00	203	18	1752-307-256-00	302	30	1752-504-300-00	501	17
	203	35	1752-307-257-00	302	31	1752-508-001-00	503	1
	203	50	1752-307-260-00	302	23	1752-508-003-00	503	23
1752-272-009-00	203	41	1752-307-262-00	302	24	1752-508-005-00	503	10
1752-272-200-20	203	1	1752-307-271-00	302	32	1752-508-007-10	503	36
1752-272-210-20	203	19	1752-307-272-00	302	33	1752-508-011-00	503	4
1752-272-230-10	203	11	1752-307-273-00	302	34	1752-508-350-00	503	20
1752-272-240-10	203	29	1752-307-274-00	302	35	1752-508-360-00	503	28
1752-272-250-00	203	13	1752-307-275-00	302	36	1752-509-250-00	504	1
1752-272-260-00	203	30	1752-307-276-00	302	37	1752-509-260-00	504	4
1752-272-290-00	203	43	1752-307-277-00	302	38	1752-509-270-00	504	7
1752-272-300-00	203	40	1752-307-278-00	302	39	1752-509-280-00	504	10
1752-272-340-10	203	51	1752-307-279-00	302	40	1752-509-300-00	504	5
1752-272-400-00	203	36	1752-312-002-10	303	23		504	11
1752-272-410-00	203	38	1752-312-210-10	303	1	1752-509-302-00	504	3
1752-272-450-00	203	53	1752-312-220-10	303	2		504	6
1752-272-530-00	203	3-A	1752-312-230-00	303	26		504	9
1752-272-540-00	203	21-A	1752-312-240-10	303	15		504	12
1752-307-001-00	302	44	1752-313-001-00	304	5	1752-509-310-00	504	2
1752-307-200-10	302	1	1752-313-210-10	304	1		504	8
1752-307-211-00	302	12	1752-410-200-20	401	1	1752-531-200-20	505	1-B
1752-307-213-00	302	14	1752-410-350-10	401	4	1752-531-240-00	505	9
1752-307-214-00	302	15	1752-410-400-10	401	9	1752-531-250-00	505	2-B
1752-307-215-00	302	16	1752-410-500-00	401	13	1752-553-001-00	506	2
1752-307-216-00	302	17	1752-433-001-30	402	4	1752-553-002-00	506	17
1752-307-217-00	302	18	1752-433-002-00	402	8	1752-553-004-10	506	21-A
1752-307-218-00	302	19	1752-433-003-00	P03	1	1752-553-005-10	506	22
1752-307-219-00	302	20	1752-433-200-10	402	1	1752-553-210-00	506	1
1752-307-221-00	302	21	1752-441-002-00	403	7	1752-553-220-10	506	4
1752-307-222-00	302	22	1752-441-003-00	403	8	1752-553-230-10	506	11
1752-307-230-00	302	2	1752-441-004-00	P05	1	1752-553-240-10	506	5
1752-307-231-00	302	3	1752-441-006-00	403	3	1752-553-250-10	506	12
1752-307-232-00	302	4	1752-441-210-00	404	1	1752-553-260-00	506	20
1752-307-233-00	302	5	1752-441-211-00	404	2	1752-554-003-00	501	29
1752-307-234-00	302	6	1752-441-220-00	404	3		507	10
1752-307-240-00	302	7	1752-441-240-10	403	1	1752-554-055-00	507	6
1752-307-241-00	302	8	1752-441-250-00	P04	1	1752-554-210-00	507	1
1752-307-242-00	302	9	1752-503-005-00	501	22	1752-554-220-00	507	12
1752-307-243-00	302	10	1752-503-007-10	501	6	1752-554-230-00	507	5
1752-307-244-00	302	11	1752-503-008-00	501	36	1752-555-210-00	508	1
1752-307-251-00	302	25	1752-503-210-10	501	25	1752-555-220-00	508	4
1752-307-252-00	302	26	1752-504-002-00	502	12	1752-555-230-00	508	2
1752-307-253-10	302	27	1752-504-220-00	501	9	1752-555-240-00	508	14

Numerical Index

Part Code	Fig.	Key	Part Code	Fig.	Key	Part Code	Fig.	Key
1752-555-250-10	508	10	1752-611-351-10	603	11	3600-201-013-00	603	34-A
1752-555-260-00	508	24	1752-611-510-00	604	1	3610-631-002-00	203	55
1752-555-270-00	P06	1	1752-630-001-00	605	3		508	20
1752-601-005-00	601	22	1752-630-003-00	605	2		605	10
1752-601-008-20	601	16	1752-630-005-00	605	8	3614-261-002-00	606	5
1752-601-010-00	601	7	1752-630-210-00	605	1	3623-150-003-10	101	13
1752-601-014-00	601	38	1752-630-220-00	605	5	3623-263-001-00	101	17
1752-601-015-10	601	18	1752-690-260-00	607	18	3642-496-007-10	607	17
1752-601-021-00	601	5		608	20		608	19
1752-601-024-00	601	3	1752-690-270-00	607	19	3650-261-001-00	503	6
1752-601-025-00	601	4		608	21	3650-262-202-00	607	2
1752-601-029-10	601	23	1752-690-400-00	607	27		608	2
1752-601-032-00	601	42		608	30	3650-270-214-00	606	14
1752-601-210-20	601	1	1752-690-510-10	607	1	3650-432-014-00	603	15
1752-601-240-00	601	14		608	1		604	6
1752-601-260-10	601	20	1752-690-520-10	607	4	3650-780-022-00	502	10
1752-601-270-00	601	24		608	4	3651-151-522-00	502	11
1752-601-290-10	601	31	1752-690-530-10	608	12-A	3656-115-002-00	501	18
1752-601-310-10	601	33	1752-701-001-10	701	25	3659-203-204-10	203	37
1752-601-330-00	601	35	1752-701-210-00	701	24		203	39
1752-601-360-00	601	40	1752-701-220-10	701	16		401	5
1752-601-370-00	601	28	1752-701-230-10	701	20	3659-354-001-10	503	38
1752-601-410-10	601	44	1752-701-240-10	701	1-A	3666-202-005-10	102	25
1752-603-220-00	P07	1	1752-901-051-00	901	1	3670-354-003-00	503	16
1752-606-001-00	602	12	1752-901-052-00	901	2		503	30
1752-606-003-00	602	13	1752-901-053-00	901	3	3676-155-002-00	507	7
1752-606-004-00	602	3	1752-901-054-00	901	4	3676-310-210-00	106	4
	605	12	1752-902-001-00	902	1	3676-374-005-00	502	6
1752-606-006-00	602	6	1752-902-003-00	902	3	3737-172-010-00	503	12-A
1752-606-210-10	602	1	1752-903-052-00	903	7	3746-172-013-00	607	37
1752-606-220-10	602	2	1773-702-011-00	701	14-A		608	40
1752-606-230-00	602	7	1773-702-012-00	701	12-A	3746-185-014-00	502	8
1752-611-001-00	603	23	2140-730-001-00	203	10	3768-171-003-00	607	29
	604	2		203	28		608	32
1752-611-009-10	603	36	2142-572-008-00	303	20	3768-185-022-10	501	3
1752-611-200-10	603	1	2144-117-002-00	508	19	3768-211-011-00	501	23
1752-611-210-00	603	2	2186-124-057-10	508	5	3814-221-004-00	506	24
1752-611-220-00	603	4	2188-336-003-00	507	2	3817-358-200-00	503	25
1752-611-230-00	603	5	2194-128-002-00	502	9	3829-248-003-00	701	30
1752-611-250-10	603	22	2500-901-027-00	903	11	3829-311-200-00	105	15
1752-611-270-10	603	28-A	2502-601-005-00	601	12	4101-102-038-00	102	45
1752-611-280-10	603	33-A	3104-210-004-10	303	7		202	3
1752-611-310-00	603	39	3533-901-012-00	901	5	4136-405-002-00	303	14
1752-611-320-00	603	17-A	3560-503-302-00	602	11	7843-501-012-00	508	17
1752-611-350-10	603	10	3600-201-013-00	304	2	7947-205-011-00	403	6

Numerical Index

1752-095-300-00

Part Code	Fig.	Key	Part Code	Fig.	Key	Part Code	Fig.	Key
7957-405-003-00	P04	2	P103-521-006-10	501	10	V210-360-602-00	607	21
7963-611-003-00	506	9	P112-521-200-00	501	34		608	23
7981-501-001-00	508	9		503	8	V210-360-602-50	203	54
8595-901-007-00	903	10		503	14	V210-370-602-00	602	14
8654-501-047-00	506	6		503	34	V211-260-801-60	105	24
	506	13	P113-201-007-00	401	3		303	28
8654-501-048-00	506	7	P117-303-522-00	606	16		503	29
	506	14	P117-303-523-00	606	17	V211-260-802-00	203	42
8664-355-007-00	603	35	P117-303-524-00	606	18		501	26
J061-116-025-00	501	37	P117-303-525-00	606	19		503	26
	503	5	P117-303-526-00	606	20	V211-260-802-50	102	50
	503	11	V120-265-001-60	701	31	V211-260-803-50	S01	17
	503	17	V201-260-802-50	607	32	V211-260-804-00	501	5
	503	24		608	35	V211-261-002-00	601	21
	503	31	V201-260-803-00	303	18	V211-261-002-50	102	43
J061-120-032-00	503	2	V201-260-803-50	102	44		601	29
	503	37	V201-260-806-50	105	12	V211-261-003-00	505	10
J061-210-012-00	105	19	V201-361-002-50	501	27	V211-360-802-00	302	45
J061-210-015-00	102	19	V201-361-005-50	302	41		503	7
J061-230-038-00	102	13	V201-361-202-50	101	2		503	19
	102	15		101	5		503	22
J061-236-044-00	102	12		101	8		503	33
	102	16		101	11		601	8
J061-247-055-00	104	8	V201-361-203-50	401	10		601	32
J061-252-063-00	104	10		402	9		601	34
J062-087-093-00	105	26	V201-361-208-50	506	18		601	45
J062-104-111-00	105	20-A	V201-461-002-50	603	19		602	4
	105	27	V201-461-004-50	603	40-A	V211-360-802-50	106	2
J062-111-120-00	105	21	V201-461-005-50	203	7		401	14
	105	22		203	25		505	8
K182-002-002-00	502	3	V201-461-203-50	701	26		601	36
K182-032-000-00	502	1	V201-461-204-00	701	17		605	9
K182-032-001-00	502	2		701	21	V211-360-803-50	508	18
K182-032-002-00	502	4	V203-261-003-00	603	29	V211-360-805-50	102	24
K182-032-003-00	502	5	V203-361-002-50	109	8	V211-361-002-50	601	43
K211-001-008-00	S01	13-A	V203-361-003-00	103	3	V211-560-803-00	109	10
K211-008-010-00	S01	12	V210-260-601-00	508	21-A	V211-561-002-50	105	29
K216-001-002-00	S01	4	V210-360-601-20	105	16		107	6
K216-008-002-00	S01	5		507	11		201	107
K216-012-000-00	501	2	V210-360-601-60	102	41		201	110
K216-012-002-00	S01	10		601	17		401	6
K216-012-003-00	S01	11		601	19		603	26
K216-012-004-00	S01	18		607	40		604	5
K216-012-110-10	S01	2	V210-360-602-00	102	31	V211-561-003-00	401	7
K220-002-000-00	501	32		501	30	V211-660-802-00	103	5

Numerical Index

Part Code	Fig.	Key
V211-660-802-00	104	14
V211-660-802-50	203	2
	203	20
	203	52
V211-661-003-00	201	108
	201	111
V211-661-003-50	601	15
	P07	2
V211-661-004-00	P06	2-A
V301-260-006-00	107	3
V304-260-008-00	102	48
	202	9
	203	6
	203	24
	303	9
	303	19
V304-260-010-00	108	6
	202	7
	501	28
	701	13-A
V304-260-012-00	101	14
	403	11
V304-460-010-00	201	112
	203	9
	203	27
V304-460-012-00	401	11
V304-460-016-00	701	3
V327-261-216-00	402	6
V334-260-010-00	203	16
	203	33
	203	46
V334-460-016-00	506	23
V360-260-005-00	607	26
	608	29
V360-260-006-00	107	4
	601	41
	605	11
	607	11
	607	24
	607	41
	608	11
	608	26
V362-260-008-00	104	13
	601	25
	602	5
V362-260-008-00	602	8
	603	9
	603	14
	607	28
	607	34
	608	31
	608	37
V363-260-008-00	501	13
V401-160-006-00	303	5
	303	17
	602	10
V401-160-008-00	105	13
	202	10
V401-160-010-00	103	4
	109	9
	201	113
	203	17
	203	34
	203	47
	302	42
	603	20
	603	30
	603	41
V401-160-012-00	101	3
	101	6
	101	9
	101	12
	101	15
	401	12
	402	10
	403	10
	506	19
	701	18
	701	22
	701	27
V411-260-006-00	108	8
	303	12
	508	23
V411-260-008-00	105	14
	202	11
	303	24
	501	15
	507	8
	507	13
	603	44
V411-260-008-00	607	33
	608	36
V411-260-010-00	108	5
	201	114
	302	43
	304	3
	603	21
	603	37-A
	603	42
V411-260-012-00	101	16
	403	9
	501	19
	508	6
	601	9
	601	26
	603	24
	604	3
	701	19
	701	23
	701	28
V411-260-014-00	506	25
	507	3
V411-260-016-00	402	5
V411-260-018-00	203	12
V411-260-020-00	508	12
V411-260-024-00	403	4
V500-162-001-50	303	13
V500-162-002-00	501	16
V500-162-501-50	108	9
	303	25
	304	4
	507	9
	507	14
	603	45
V500-162-502-00	202	4
	202	12
	508	7
V500-163-002-00	506	10
V500-163-002-50	402	7
	502	14
	506	26
	507	4
V530-240-602-80	303	3
V580-140-302-00	508	3
V580-140-403-20	508	13

Numerical Index

Part Code	Fig.	Key	Part Code	Fig.	Key	Part Code	Fig.	Key
V580-140-504-00	506	8	W201-360-805-50	203	23			
	506	15	W201-361-008-00	202	5			
V600-110-600-30	P05	2	W201-461-609-00	701	2			
V610-115-110-40	508	8						
V635-113-200-60	403	2						
V682-200-000-60	S01	3						
V704-140-010-00	603	38-B						
V704-140-012-00	501	20						
V704-140-015-00	S01	8						
V705-140-035-00	P05	3						
V706-140-040-00	303	21						
V720-101-900-60	S01	6						
V720-101-900-80	508	15						
V720-101-900-90	701	11						
V720-102-401-00	105	4						
V720-102-401-20	S01	7						
	S01	14-A						
V720-102-401-40	501	35						
	503	9						
	503	15						
	503	35						
V720-102-401-80	503	39						
V720-102-402-00	701	9						
V720-103-504-40	105	8						
V720-112-401-40	501	11						
	501	33						
	505	3-A						
	505	5						
	701	10						
V721-103-105-50	S01	16-A						
V742-120-350-60	P05	4						
V760-150-000-00	203	48						
	303	4						
	303	16						
	401	8						
	402	3						
	506	16						
	508	11						
V762-150-000-00	203	49						
	506	3						
V763-150-000-00	P05	5						
V780-140-000-4T	S01	9						
	S01	15-A						
V780-140-000-6T	S01	19						
W201-360-805-50	203	5						

Alpabetical Index

Description	Fig.	Key
ADAPTER/260X120 ASSY	504	1
ARM/CONTROL	502	27
ARM/FLOATING COMP	502	18
ARM/TENSION	504	2
ARMATURE/STARTE ASSY	S03	2
BALL	101	5
	S03	20
BEARING	S03	3
	S03	4
BEARING,RB/6004	502	12
BEARING,RB/6005	204	51
BEARING,RB/6203	502	11
BEARING/BALL	S04	6
	S04	11
BEARING/CONNECTING R	303	7
	P02	5-A
	P02	6-A
BEARING/CRANK SET	201	11
BEARING/CRANK/LOWER	201	13
BEARING/CRANK/UNDER	P02	1
	P02	3
BEARING/CRANK/UPPER	201	12
BEARING/THRUST/CRANK	201	14
	P02	2
	P02	4
BEARING/WATER PUMP	402	3
BEARING/WATERPUMP	402	4
BELT/VR5A39.0	403	5
BODY/OILPUMP	401	2
BODY/WATERPUMP	402	2
BOLT	101	7
	104	4
	201	2
	204	45
	301	18
	801	8
	802	8
	S02	10
	S02	52
	S04	9
	S04	10
	S04	19
	S04	20
	S04	21
	S04	22
BOLT	S04	24
BOLT,SEMS/M10X20	203	4
	205	2
BOLT,SEMS/M6X12	302	5
	502	14
BOLT,SEMS/M8X25 7T	104	3
BOLT/CONNECTINGROD	303	6
BOLT/CRANK	304	10-A
BOLT/FLANGE	304	7
BOLT/HI-IDLESTOPPER	204	36
BOLT/M6	204	40
BOLT/M6X10	502	16
BOLT/STUD	201	21
BOLT/THROUGH	S03	19
BOLT/WS	203	3
	401	6
	403	4
	S03	18
BRACKET/ROCKERSHAFT	301	12
	301	13
BRUSH	S04	17
BUSH	S04	15
BUSHING/DRAIN	S03	23
CAMSHAFT	302	1
CAMSHAFT/INJPUMP	502	8
CAP,OIL FILLER	102	5
CAP/MAXPOWERSTOPPER	204	22
	204	39-A
CAP/OILFILLER	201	31-A
CARTRIDGE/OILFILTER	401	12
CLAMP/STRAINER	401	10
CLAMP/WIRE/10-15	402	18
CLIP/HOSE/7.6-8.2	503	4
CLUTCH/STARTER ASSY	S03	7
COLLOR	S04	3
CONNECTINGROD ASSY	303	5
CONNECTOR,OIL FILTER	201	24
CONNECTOR/FUEL	503	1
CONNECTOR/GLOWPLUG	802	5-A
CONTROLRACK	S02	48
CONTROLSLEEVE	S02	49
COVER	S03	26
	S04	13
COVER,BEARING	S04	5
COVER/BLOWBY	102	3
COVER/CYLINDER HEAD	102	1-A
COVER/HYDRAULIC	204	53
	204	57
COVER/INJECTIONPUMP	201	25
CRANKSHAFT ASSY	304	1
CUP/SEALING/16	201	3
CUP/SEALING/20	204	3
CUP/SEALING/28	201	4
CUP/SEALING/36	201	5
CUP/SEALING/50	101	2
	201	6
CUTTER,VALVE	301	5
CYLINDERBLOCK ASSY	201	1
CYLINDERHEAD ASSY	101	1
DOWEL	201	22
EYEBOLT	S02	50
FAN/COOLING	403	1
FLANGEBOLT	103	3
	201	27
	202	4
	204	8
	204	9
	204	11-A
	204	13
	204	14
	204	15
	204	17
	205	3
	301	19-A
	401	11
	402	15
	402	21
	402	22
	402	26
	502	6
	801	3
	801	5
FLYWEIGHT ASSY	502	15
FLYWHEEL ASSY	304	5
FRAME	S04	12
FRAME/DRIVEEND ASSY	S04	7
FRAME/STARTEREND	S03	12
GASHET/EXH MANIFOLD	104	2
	P04	7
GASKET	102	8-B

Alpabetical Index

6005-095-653-00

Description	Fig.	Key
GASKET	402	8
	501	5
	802	7
	P04	5
	P04	21
	S01	17
	S02	5
	S02	51
	S02	53
GASKET,NOZZLE	501	2
GASKET,WATER PUMP	402	12
	402	14
	P04	18
GASKET/COVER	201	26
	204	54
	204	58
	P04	11
GASKET/CYLINDERHEAD	101	6
	P04	3
GASKET/GEARCASE	204	31
	P04	14
GASKET/HOUSING	402	20
	P04	19
GASKET/INLETMANIFOLD	103	2
	P04	6
GASKET/PLATE	204	44
	P04	15
GEAR/CAMSHAFT	302	2
GEAR/CRANK	304	3
GEAR/IDLE ASSY	302	6
GEAR/INJECTIONPUMP	502	9
GEAR/OILPUMP ASSY	401	3
GEARCASE ASSY	204	1-B
GENERATOR ASSY	801	1
GLOWPLUG	802	3-A
GUIDE/LEVELGAGE COMP	201	30
HANGER	205	1
HEATSHILD/NOZZLE	501	3
HOLDER ASSY	S04	14
HOLDER/BRUSH ASSY	S04	16
HOLDER/DELIVERYVALVE	S02	6
HOLDER/JE/9-9	204	16
HOLDER/NOZZLEASSY	S01	1
HOLDER/STARTER ASSY	S03	13
HOSE/RUBBER	102	9-A
HOSE/RUBBER	402	17
	503	3
HOUSING/PUMP	S02	1
HOUSING/STARTER ASSY	S03	11
HOUSING/THERMOSTAT	402	19
INJECTIONNOZZLE ASSY	501	1
INJECTIONPUMP ASSY	502	1
KEY/07X05X09	302	3-A
	502	10
KEY/07X05X43	304	4
LEVELGAGE	201	29
LEVER/CONTROL COMP	502	24
MANIFOLD/EXHAUST	104	1
MANIFOLD/INLET ASSY	103	1
NOZZLE	S01	16
NUT	204	55
	204	59
	301	17
	S01	18
	S03	24
	S03	25
	S04	2
	S04	23
	S04	25
NUT/CAP	102	7
NUT/FLANGE	802	4
NUT/HI-IDLESTOPPER	204	37
NUT/M08	204	12
	301	20-A
	402	16
	502	7
NUT/M10	801	6
NUT/M12	801	9
NUT/M6	204	41
	502	28
NUT/MAXPOWERSTOPPER	204	20
NUT/NOZZLERETAINING	S01	15
OILPAN COMP	202	1
OILPUMP ASSY	401	1
OILSEAL	201	15
	P04	10
O-RING	402	25
	P04	20
	S03	22
ORING	S02	7
ORING	S02	9
O-RING 1A S50	204	47
	P04	16
O-RING/P 8	502	25
O-RING/P18	202	3
O-RING/P22	401	9
	P04	17
O-RING/P25	201	32
PACKING	204	23
PIN	201	18
	201	28
	204	27
	304	2
	S02	12
PIN,CONTROL	502	20
PIN/ARM	204	25
PIN/GROOVE	204	30-A
PIN/IDLEGEAR	201	8-A
PIN/PISTON	303	3
PIN/SNAP	204	26
PIN/STRAIGHT	201	17
	401	5
PIN/TUBE	201	16
	204	48
PINION/STARTER	S03	10
PIPE,WATER OUTLET	402	24
PIPE/FUEL	503	2
PIPE/INJECTION ASSY	501	6
	501	7
	501	8
PIPE/WATER PUMP	402	11
PIPE/WATERDRAIN	201	23
PISTON	303	1
PISTON/OV	P03	1
	P03	3
PISTON/VALVE/RELIEF	204	33
PLATE	S04	8
PLATE/ADJUST	801	2
PLATE/FRONT	204	43
PLATE/REAR COMP	203	1
PLATE/T=2.60	S02	17
PLATE/T=2.65	S02	18
PLATE/T=2.70	S02	19
PLATE/T=2.75	S02	20
PLATE/T=2.80	S02	21

Alpabetical Index

Description	Fig.	Key
PLATE/T=2.85	S02	22
PLATE/T=2.90	S02	23
PLATE/T=2.95	S02	24
PLATE/T=3.00	S02	25
PLATE/T=3.05	S02	26
PLATE/T=3.10	S02	27
PLATE/T=3.15	S02	28
PLATE/T=3.20	S02	29
PLATE/T=3.25	S02	30
PLATE/T=3.30	S02	31
PLATE/T=3.35	S02	32
PLATE/T=3.40	S02	33
PLATE/T=3.45	S02	34
PLATE/T=3.50	S02	35
PLATE/T=3.55	S02	36
PLATE/T=3.60	S02	37
PLATE/T=3.65	S02	38
PLATE/T=3.70	S02	39
PLATE/T=3.75	S02	40
PLATE/T=3.80	S02	41
PLATE/T=3.85	S02	42
PLATE/T=3.90	S02	43
PLATE/T=3.95	S02	44
PLATE/T=4.00	S02	45
PLATE/T=4.05	S02	46
PLATE/T=4.10	S02	47
PLATE/THRUST	302	4
PLATE/THRUST/INJPUMP	502	13
PLATE/WATER PUMP	402	9
PLUG	301	11
PLUG/M14X1.5	202	2
PLUG/PT1/2	101	3
PLUG/PT1/4	204	2
PLUG/PT1/8	201	7
PLUG/SCREW	204	28
PLUG/SCREW/SEAL	204	24
PLUNGER ASSY	S02	2
POINTER	203	2
PULLEY	S04	1
PULLEY/CRANK	304	8
PULLEY/WATERPUMP	403	2
PUSHROD	301	7
REGULATOR ASSY	S04	26
REPAIR/ENGINESET	P04	1
RESISTANCE/1.0	503	5
RETAINER	S03	9
RING SNAP	303	4
RING,SNAP/ 4 E	502	21
RING,SNAP/12 C	204	35
RING,SNAP/16 C	301	15
RING/PISTON/OVSET	P03	2
	P03	4
RING/PISTONSET	303	2
RING/TAMPER REGISTAN	204	21
	204	38
RINGGEAR	304	6
RINK/CONTROL	502	19
ROCKERARM	301	9
ROCKERSHAFT ASSY	301	8
RORA	S03	8
ROTOR ASSY	S04	4
ROTOR/OUTER	401	4
ROTOR/WATERPUMP	402	6
RUBBERFLANGE	102	2
SCREW	S03	17
SCREW ADJUST	301	16
SCREW/SOCKET	401	7
SCREW/TAPPING	102	4
SCREW/WATER PUMP	402	10
SEAL SET/WATER PUMP	402	5
SEAL,BEARING CAP	201	9
	P04	8
SEAL,BEARING CAP/7	201	10
	P04	9
SEAL,OIL	101	4
	204	7
	P04	2
	P04	12
SEAL/CYL HEAD/UNDER	102	6
	P04	4
SEAL/WATER PUMPPULLE	402	7
SEAT,VALVE SPRING	301	4
SHAFT/HYDRAULIC ASSY	204	50-A
SHAFT/ROCKERARM ASSY	301	10
SHIM/0.10	S01	2
SHIM/0.20	S01	3
SHIM/0.30	S01	4
SHIM/0.40	S01	5
SHIM/0.50	S01	6
SHIM/0.52	S01	7
SHIM/0.54	S01	8
SHIM/0.56	S01	9
SHIM/0.58	S01	10
SHIM/0.80	S01	11
SHIM/INJECTIONPUMP	502	2
	502	3
	502	4
	502	5
SHORTBLOCKENGIN ASSY	P01	1
SLEEVEFLANGE	S02	8
SNAPRING	S02	13
SOLENOID	802	6
SPACER	204	46
	S01	14
SPACER/FAN/48	403	3
SPACER/WATERPUMP	402	13
SPRING	301	14
	S04	18
SPRING,BRUSH	S03	14
SPRING,RETURN	502	26
SPRING/DELIVERYVALVE	S02	4
SPRING/GOVERNOR	502	23
SPRING/IDLE	502	32
SPRING/PLUNGER	S02	14
SPRING/RELIEF VALVE	204	34
SPRING/RETURN	S03	21
SPRING/SETTING	502	22
SPRING/STARTING	502	31
SPRING/VALVE	301	3
SPRINGNOZZLE	S01	12
SPRINGSEAT	S01	13
	S02	15
	S02	16
STARTER ASSY	801	7
STOPPER/MAX POWER ST	204	19
STRAINER COMP	401	8
STUD	101	8
	201	20
	204	4
	204	5
	204	6
	204	49
STUD/M8X40	201	19
SWITCH/MAGNETIC ASSY	S03	16-A
SWITCH/OILPRESSURE	802	1

Alpabetical Index

6005-095-653-00

Description	Fig.	Key	Description	Fig.	Key	Description	Fig.	Key
SWITCH/OVERHEAT	802	2-A						
TAPPET	301	6						
	S02	11						
THERMOSTAT	402	23						
THRUSTPIECE	502	17						
VALVE, DELIVERY	S02	3						
VALVE/EXHAUST	301	2						
VALVE/INTAKE	301	1						
VALVE/RELIEF ASSY	204	32-A						
WASHER / M6	502	29						
WASHER, SP/M 6	502	30						
	802	9						
WASHER, SP/M 8	204	56						
	204	60						
WASHER/08X14X01	204	18						
	204	29						
	P04	13						
WASHER/9X22X2	801	4						
WASHER/CORRUGATE	501	4						
WATERPUMP ASSY	402	1						
YOKE/STARTER ASSY	S03	1						

Alpabetical Index

Description	Fig.	Key
ADAPTER	501	6
ADAPTER(90ß/PUMP)	501	3
ADAPTER/90/G/1/ ASSY	504	2
	504	5
	504	8
	504	11
ADAPTER/90ß/G3/ ASSY	505	2-B
ADAPTOR/90ß	502	6
ADAPTOR/90ßPF1/2ASSY	503	38
ARM	607	39
ARM/BRAKE COMP	303	15
ARM/FRONT/LH COMP	506	4
ARM/FRONT/RH COMP	506	5
ARM/HST/LH	203	11
ARM/HST/RH COMP	203	29
ARM/REAR/LH COMP	506	11
ARM/REAR/RH COMP	506	12
ARM/RETURN COMP	202	1
ARMREST ASSY	603	5
AXLE/FRONT ASSY	402	1
BOOT	602	12
BACK ASSY	603	4
BALL	S01	3
BAND	701	7
BAND,HARNESS	607	37
	608	40
BAND,HOSE	502	8
BAND,WIRE/140	102	26
	507	15
	607	36
	608	39
BAND/202	503	12-A
BAND/CLEANER	104	6
BAND/WIRE/250	503	3
	503	40
	607	35
	608	38
BAR COMP	203	40
BASE/BATTERY COMP	107	5
BATTERY/55B24R/ ASSY	107	1
BEARING	403	2
BEARING,RB/6003	P05	2
BEARING,TB/51104	508	8
BELT/SEAT SET	603	16
BOLT	103	3
BOLT	109	8
	201	11
	201	12
	201	16
	201	45
	201	46
	201	47
	201	96
	201	97
	202	5
	203	5
	203	23
	302	5
	302	19
	302	20
	302	21
	302	31
	302	41
	506	18
	601	11
	S02	9
	S02	29
	S03	9
	S03	29
BOLT M10X30	603	29
BOLT M16X90 9T	701	2
BOLT(S) M10X25	102	43
	601	29
BOLT(S) M10X30	505	10
BOLT(S) M8X35	S01	17
BOLT(SP)/M6X16	102	41
	601	17
	601	19
	607	40
BOLT,SEMS	105	16
	501	5
	507	11
	601	21
BOLT,SEMS (S) M8X16	105	24
	303	28
	503	29
BOLT/8X20	103	5
	104	14
BOLT/BATTERY	107	2
BOLT/DRAIN	302	23
BOLT/JOINT/10	201	32
BOLT/JOINT/8	201	31
BOLT/M 8X25	607	32
	608	35
BOLT/M 8X30	303	18
BOLT/M 8X35	102	44
BOLT/M 8X65	105	12
BOLT/M06X08/APSET	105	10
BOLT/M08X32	607	30
	608	33
BOLT/M10X16/10T	603	18-A
BOLT/M10X25	105	29
	107	6
	201	107
	201	110
	401	6
	501	27
	603	19
	603	26
	604	5
BOLT/M10X30	401	7
BOLT/M10X45	603	40-A
BOLT/M10X55	203	7
	203	25
BOLT/M12X1.5	301	1
BOLT/M12X25	101	2
	101	5
	101	8
	101	11
BOLT/M12X35	401	10
	402	9
	701	26
BOLT/M12X40	701	17
	701	21
BOLT/M8X25	203	2
	203	20
	203	52
BOLT/M8X30	109	10
BOLT/M8X55	102	24
BOLT/S	102	50
	203	42
	501	26
	503	26
BOLT/S M6X10	508	21-A
BOLT/SP	102	31

Alpabetical Index

1752-095-300-00

Description	Fig.	Key
BOLT/SP	106	2
	201	108
	201	111
	203	54
	302	45
	401	14
	501	30
	503	7
	503	19
	503	22
	503	33
	505	8
	508	18
	601	8
	601	15
	601	32
	601	34
	601	36
	601	43
	601	45
	602	4
	602	14
	605	9
	607	21
	608	23
	P06	2-A
	P07	2
BOOT	607	14
	608	16
BRACKET	102	40
BRACKET COMP	501	25
BRACKET/CLEANER COMP	104	11
BRACKET/FRONT/L COMP	101	1
BRACKET/FRONT/R COMP	101	4
BRACKET/LH COMP	201	106
BRACKET/REAR/LH	101	7
BRACKET/REAR/RH	101	10
BRACKET/RH COMP	201	109
BRACKET/SEAT COMP	603	8
BRAKE ASSY	302	7
BRAKE/INERTIA ASSY	201	77
BULB	606	14
BUMPER/REAR/E4 SET	P07	1
BUSH, LEVER	102	47
BUSH/12X14X10	501	18
BUSH/17X19X15	203	37
	203	39
	401	5
BUSH/20X24X30	402	2
CABLE/480	603	36
CABLE/ACCELERATOR	108	7
CABLE/BATTERY ASSY	607	27
	608	30
CABLE/GAUGE ASSY	507	12
CAP	102	2
	102	34
	105	6
	606	3
CAP, HANDLE	503	41
CAP, OIL/A	505	6-A
CAP/FUSEBOX/5P	607	10
	608	10
CAP/RUBBER/15A	203	10
	203	28
CAP/TANK/NONLEA ASSY	106	7-A
CASE/AXLE/IN	302	26
CASE/AXLE/OUT	302	25
CASE/BRAKE	302	12
CLAMP	102	17
CLAMP/25X50	503	6
CLAMP/WIRE/10-12	105	19
CLAMP/WIRE/10-15	102	19
CLAMP/WIRE/30-38	102	13
	102	15
CLAMP/WIRE/36-44	102	12
	102	16
CLAMP/WIRE/47-55	104	8
CLAMP/WIRE/52-63	104	10
CLAMP/WORM/16-25	501	37
	503	5
	503	11
	503	17
	503	24
	503	31
CLAMP/WORM/20-32	503	2
	503	37
CLAMP/YOKE	109	5
CLEANER/AIR ASSY	104	1
CLIP	104	3
CLIP B	503	18
CLIP B	503	32
CLIP(B)	605	4
CLIP/HOSE/10.4-11.1	105	20-A
	105	27
CLIP/HOSE/11.1-12	105	21
	105	22
CLIP/HOSE/8.7-9.3	105	26
CLUMP	102	38
CLUTCH/CYLINDER	201	57
CLUTCH/CYLINDER COMP	201	56
COLLAR	201	68
	201	91
COLLAR/09X13X28	102	23
COLLAR/09X14X09	202	13
	501	31
COLLAR/10X14X15	603	43
COLLAR/16X22X53	502	11
COLLAR/16X25X20	506	22
COLLAR/17X20X10	403	7
COLLAR/18X22X111	P05	1
CONNECTOR	102	20
	501	4
CONNECTOR/JOINT ASSY	608	12-A
COOLER/OIL	503	25
COVER	106	10
	606	2
	S01	10
COVER ASSY	104	2
COVER, THRUST	508	9
COVER/ACC	201	93
COVER/BATTERY	107	7
COVER/BRAKE COMP	302	9
COVER/CENTER COMP	602	7
COVER/FLOOR COMP	605	5
COVER/JACK COMP	508	10
COVER/PTO	201	83
COVER/REAR COMP	601	20
CUSHION ASSY	603	2
CUSHION, RUBBER	104	12
CUSHION/RUBBER/10X25	102	46
CYLINDER ASSY	502	1
DAMPER/OIL ASSY	202	8
DIAL/GAUGE COMP	507	5
DIODE/3.0A	607	2
	608	2

Alpabetical Index

Description	Fig.	Key
DISC/FRICTION	201	59
DRUM/BRAKE COMP	302	10
DUST/SEAL	502	5
ELBOW/90ß ASSY	501	10
	501	34
	503	8
	503	14
	503	34
ELEMENT	105	9
ELEMENT ASSY	104	4
ELEMENT/INNER ASSY	P01	1
FENDER/LH COMP	602	1
FENDER/RH COMP	602	2
FILTER/FUEL ASSY	105	1
FILTER/OIL	201	33
FLANGE/YOKE	109	6
FLOOR COMP	605	1
FORK	106	3
FORK/WHEEL COMP	403	1
FRAME/FRONT COMP	401	9
FRAME/HOOD COMP	601	14
FRAME/LOWER COMP	401	1
	701	24
FRAME/SEAT ASSY	401	4
FUSE/32V03A	607	8
	608	8
FUSE/32V10A	607	7
	608	7
FUSE/32V20A	607	9
	608	9
FUSE/SLOWBLOW	607	5
	607	6
	608	5
	608	6
GASKET	103	2
	201	29
	201	30
	201	94
	201	102
GAUGE/FUEL ASSY	106	4
GEAR/32T	302	35
GEAR/51T	302	36
GEAR/DRIVE	201	52
	201	53
GEAR/PTO/47T	201	69
GRIP	203	4
	203	22
	508	16
GRIP,BRAKE	304	2
	603	34-A
GRIP/THROTTLE	108	2
GROMMET/(16X25X2)	603	15
	604	6
GROMMET/25X31X2	503	27
GUIDE/LH	102	4
GUIDE/RH	102	5
GUIDE/SPRING	S01	4
HANDLE COMP	508	14
HANGER,SUPPORT	203	55
	508	20
	605	10
HARNESS	606	20
HARNESS/ENGINE ASSY	607	4
	608	4
HARNESS/MAIN ASSY	607	1
	608	1
HITCH/WEIGHT	P03	1
HOLDER	606	7
HOOD/ENGINE COMP	601	1
HOOK/SEAT COMP	603	33-A
HORN ASSY	607	20
	608	22
HOSE/06X10X620	105	17
HOSE/150	501	36
HOSE/220 ASSY	105	18
HOSE/350	102	18
HOSE/500	105	25
HOSE/550	503	4
HOSE/610	503	16
	503	30
HOSE/CLEANER/OUTLET	104	9
HOSE/COOLER/2ND	503	23
HOSE/CP-CV ASSY	501	9
HOSE/CV-CYL ASSY	502	7
HOSE/DRAIN	503	36
HOSE/DRAIN/MOTER	503	10
HOSE/F/LH ASSY	504	1
HOSE/F/RH ASSY	504	7
HOSE/R/LH ASSY	504	4
HOSE/R/RH ASSY	504	10
HOSE/RADIATOR/LOWER	102	14
HOSE/RADIATOR/UPPER	102	11
HOSE/RUBBER	102	36
	102	37
	102	39
HOSE/SUCTION	503	1
HOUSING/INPUT	201	3
HOUSING/PTO	201	2
HUB/13X22X60	506	17
HUB/28X45X30	506	2
HUB/8X12X15	501	14
HUB/BRAKE/REAR COMP	303	2
INSULATOR	102	28
	606	8
INSULATOR/10X1000	605	2
INSULATOR/10X10X280	601	5
INSULATOR/1100	102	29
INSULATOR/15X15X140	102	9
INSULATOR/15X15X280	102	8
INSULATOR/15X15X650	102	10
	601	6
INSULATOR/15X510	601	22
INSULATOR/15X55X03	602	3
	605	12
INSULATOR/170	601	3
INSULATOR/20X20X40	102	32
INSULATOR/250	602	6
INSULATOR/500	601	4
INSULATOR/865	601	23
INSULATOR/MOUNT/LH	101	13
JOINT/BALL/LH ASSY	203	15
	203	32
	203	45
JOINT/BALL/RH ASSY	203	14
	203	31
	203	44
JOINT/STRAINER	201	34
JOINT/UNIVERSAL ASSY	109	2
KEY	201	20
	201	73
	302	15
KEY ASSY	606	5
KNOB,LEVER/12	501	21
KNOB/SET/M06X15	602	9-A
LABEL/BATTERY	903	6

Alpabetical Index

1752-095-300-00

Description	Fig.	Key
LABEL/BATTERY	903	13
LABEL/C/JACK	903	7
LABEL/CAUTION	903	1
LABEL/CE	903	11
LABEL/CONTROL	902	1
LABEL/CONTROL/LEVER	902	3
LABEL/CONTROL/PARKIN	902	2
LABEL/DIAL	507	6
LABEL/FUEL	903	5
LABEL/FUSE	607	3
	608	3
LABEL/ROPS	903	2
LABEL/W/FAN	903	9
LABEL/W/RADIATOR	903	4
LABEL/W/STARTER	903	3
LABEL/WARNING/BELT	903	8
LABEL/WARNING/FUEL	903	12
LABEL/WARNING/HOT	903	10
LAMP/MONITOR ASSY	606	13
LEVER	105	2
	S02	16
	S03	16
LEVER COMP	601	24
LEVER/ACCELERATOR	108	1
LEVER/NEUTRAL COMP	S02	13
	S03	13
LEVER/NEUTRAL/L COMP	203	3-A
LEVER/NEUTRAL/R COMP	203	21-A
LEVER/PARKING COMP	304	1
LEVER/RUNNING/L COMP	203	1
LEVER/RUNNING/R COMP	203	19
LINING/13X50X03	108	3
LINKPIN	701	6
MAT	605	3
METER/FUEL ASSY	606	6
METER/HOUR ASSY	606	15
MOTOR SET	302	1
MOTOR/KML ASSY	302	2
MUFFLER COMP	103	1-A
NIPPLE,GREASE	203	48
	303	4
	303	16
	401	8
	402	3
	506	16
NIPPLE,GREASE	508	11
NIPPLE,GREASE/B-M6F	203	49
	506	3
NIPPLE,GREASE/PT1/8	P05	5
NIPPLE/GREASE	109	7
NOB/LOCK	701	12-A
NUT	102	48
	108	6
	201	100
	202	7
	202	9
	203	6
	203	24
	302	22
	303	9
	303	19
	501	28
	506	23
	606	10
	606	18
	607	13
	608	15
	701	13-A
	S02	26
	S02	27
	S02	28
	S03	26
	S03	27
	S03	28
NUT,CASTTLE/M16X1.5	402	6
NUT,RING	105	7
NUT,RING/M28X1.0	606	4
NUT/CONICALWASHER	601	12
NUT/LH/M10X1.25	203	18
	203	35
	203	50
NUT/M08	607	31
	608	34
NUT/M10	201	112
	203	9
	203	16
	203	27
	203	33
	203	46
NUT/M12	101	14
NUT/M12	401	11
	403	11
NUT/M16	701	3
NUT/M25	403	5
NUT/M5	607	26
	608	29
NUT/M6	107	3
	107	4
	601	41
	605	11
	607	11
	607	24
	607	41
	608	11
	608	26
NUT/M8	303	10
	508	19
NUT/WASHER	104	13
	106	6
	501	13
	601	25
	602	5
	602	8
	603	9
	603	14
	607	28
	607	34
	608	31
	608	37
ORIFICE SCREW/3.5	S01	18
ORIFICE/1.0	201	19
O-RING/G55	S01	16-A
O-RING/P 6	S01	6
O-RING/P 8	508	15
O-RING/P 9	701	11
O-RING/P10A	105	4
O-RING/P12	S01	7
	S01	14-A
O-RING/P14	501	11
	501	33
	501	35
	503	9
	503	15
	503	35
	505	3-A

Alpabetical Index

Description	Fig.	Key
O-RING/P14	505	5
	701	10
O-RING/P18	503	39
O-RING/P20	701	9
O-RING/P44	105	8
ORNAMENT/FENDER/LH	901	3
ORNAMENT/FENDER/RH	901	4
ORNAMENT/HOOD/LH	901	1
ORNAMENT/HOOD/RH	901	2
ORNAMENT/ISEKI	901	5
PACKING	102	7
	102	22
	102	35
	105	11
	106	9
	201	5
	201	84
	302	6
	302	27
	505	7-A
	606	16
	S02	10
	S03	10
PACKING/RUBBER	106	5
PAD	303	27
PAD/50	102	25
PEDAL/BRAKE COMP	303	26
PIN	201	7
	201	22
	302	4
	302	28
	S02	3
	S02	19
	S02	25
	S03	3
	S03	19
	S03	25
PIN ASSY	701	4
PIN, HAIR	603	7
	603	25
	604	4
PIN, SEAT SET	603	6
PIN, SPLIT/2 X15	303	13
PIN, SPLIT/2 X20	501	16
PIN, SPLIT/2.5X15	108	9
PIN, SPLIT/2.5X15	303	25
	304	4
	507	9
	507	14
	603	45
PIN, SPLIT/2.5X20	202	4
	202	12
	508	7
PIN, SPLIT/3 X20	506	10
PIN, SPLIT/3 X25	402	7
	502	14
	506	26
	507	4
PIN, SPRING/5 X40 W	506	8
	506	15
PIN/08X19	202	2
PIN/08X60	507	7
PIN/12X124	603	23
	604	2
PIN/12X48	506	9
PIN/12X55	508	5
PIN/12X86 COMP	508	24
PIN/15X108	507	2
PIN/15X118	502	9
PIN/15X61	506	24
PIN/15X68	502	12
PIN/15X92 COMP	P04	1
PIN/16X124	506	6
	506	13
PIN/17X211	403	8
PIN/19X94	701	5
PIN/25X45	506	21-A
PIN/GROOVE	303	3
PIN/HAIR	P04	2
PIN/PIVOT	402	4
PIN/SPRING	508	3
	508	13
PIPE	201	42
PIPE/CLEANER/INLET	104	7
PIPE/COOLER/LH COMP	503	20
PIPE/COOLER/RH COMP	503	28
PIPE/LONG	201	28
PIPE/SHORT	201	27
PISTON	201	90
	502	2
PISTON/CLUTCH	201	58
PLATE	106	8
	203	41
	701	14-A
	S02	17
	S03	17
PLATE COMP	105	28
	203	51
	203	53
	401	13
	501	12
PLATE, SWITCH	607	17
	608	19
PLATE/1.2	201	60
PLATE/3.2	201	61
PLATE/A	201	78
PLATE/ADJUST COMP	507	1
PLATE/AXLE	402	8
PLATE/B	201	79
PLATE/BOOT	602	13
PLATE/C	201	80
PLATE/FRICTION	201	81
PLATE/HOOK	601	13
PLATE/I/145X342)	701	25
PLATE/I/50X150	601	7
PLATE/I/60X170	601	42
PLATE/IR/19X62 COMP	603	39
PLATE/L/105X20 COMP	601	44
PLATE/L/250X32 COMP	601	35
PLATE/L/250X32/RH	601	38
PLATE/L/435X95 COMP	601	28
PLATE/L/44X92	302	44
PLATE/L/85X90/A COMP	601	31
PLATE/L/85X90/B COMP	601	33
PLATE/LIFT/MOWE ASSY	501	17
PLATE/LOWER COMP	102	49-A
PLATE/MUFFLER	601	18
PLATE/PUMP COMP	105	23
PLATE/SEAT COMP	603	22
	604	1
PLATE/SIDE/LH	601	16
PLATE/SWITCH/LH COMP	607	18
	608	20
PLATE/SWITCH/RH COMP	607	19
	608	21

Alpabetical Index

1752-095-300-00

Description	Fig.	Key
PLATE/TANK COMP	505	9
PLATE/UNDER COMP	601	40
PLUG	102	21
	201	8
	201	17
	201	23
	201	50
	201	85
	201	95
	302	29
	606	11
	S01	13-A
	S02	2
	S02	5
	S03	2
	S03	5
PLUG/G3/8 ASSY	505	4-A
PLUG/SCREW/SEAL	S01	9
	S01	15-A
	S01	19
POPPET	S01	11
PROTECTOR	102	3-A
PUMP SET	201	1
PUMP/BODY COMP	201	18
PUMP/FUEL ASSY	105	15
PUMP/KPL/13ALZ ASSY	201	14
PUMP/KPL/13CRZ ASSY	201	13
R.B.B	201	55
	201	74
	201	75
	302	32
	302	39
	302	40
RADIATOR ASSY	102	1
RAIL/SLIDE/SEAT/L	603	12
RAIL/SLIDE/SEAT/R	603	13
RELAY/35A ASSY	607	25
	608	28
RELAY/4P ASSY	607	23
	608	25
RESERVETANK ASSY	102	33
RING	201	6
	201	72
	302	38
	701	8
RING	S02	12
	S02	23
	S02	24
	S03	12
	S03	23
	S03	24
RING,CIRCLIP	P05	3
RING,SNAP/10 C	603	38-B
RING,SNAP/12 C	501	20
RING,SNAP/15 C	S01	8
RING/34	201	65
RING/80	201	66
RING/BACKUP	S02	4
	S03	4
RING/D/80	201	62
RING/O	201	9
	201	15
	201	21
	201	24
	201	25
	201	36
	201	38
	201	41
	201	43
	201	44
	201	51
	201	89
	201	101
	201	103
	302	16
	302	17
	302	18
	302	24
	302	30
	504	3
	504	6
	504	9
	504	12
	S02	6
	S02	7
	S02	8
	S03	6
	S03	7
	S03	8
RING/SEAL	201	71
RING/SNAP	303	21
RING/STOP/GRIP/8	508	17
ROD	201	70
ROD PACKING	502	4
ROD/95 COMP	203	43
ROD/BRAKE	303	23
ROD/LH COMP	203	13
ROD/LINK COMP	506	20
ROD/M08X420	303	6
ROD/M08X72/LH	303	7
ROD/RH COMP	203	30
ROPS/CENTER COMP	701	1-A
ROPS/SIDE/LH COMP	701	16
ROPS/SIDE/RH COMP	701	20
ROTARY VALVE	501	2
RUBBER,CUSHION	605	7
SCREW	201	76
	606	17
	S02	14
	S02	20
	S03	14
	S03	20
SCREW SENS/M5X16	701	31
SCREW/LH/TR20 COMP	508	1
SCREW/M03X20	607	16
	608	18
SCREW/P	102	6
SEAL,CAP/56	403	6
SEAL,OIL/VC20356	P05	4
SEAL/OIL	201	10
	302	3
	302	33
	403	3
	S02	11
	S03	11
SEAT/SZ ASSY	603	1
SET BOLT	S01	5
SHAFT/9T	302	34
SHAFT/AXLE	302	37
SHAFT/BRAKE COMP	303	1
SHAFT/INPUT	201	54
SHAFT/INPUT SET	109	1
SHAFT/LIFT COMP	506	1
SHAFT/PTO	201	67
SHAFT/YOKE	109	4

Alpabetical Index

Description	Fig.	Key
SHIM	201	88
SHOE/BRAKE SET	302	11
SHROUD COMP	102	27
SLEEVE/YOKE	109	3
SOLENOID ASSY	201	99
SPACER	201	4
SPACER/73X87X3	201	82
SPRING	201	40
	201	49
	201	92
	201	105
	303	11
	S02	1
	S02	18
	S03	1
	S03	18
SPRING, DISK	108	4
SPRING, VALVE	105	3
SPRING/95	303	22
SPRING/BRAKE	302	8
SPRING/HC040	202	6
SPRING/HC056	506	7
	506	14
SPRING/HC19	S01	12
SPRING/HE074	303	14
SPRING/HT013	304	5
SPRING/HT018	601	27
SPRING/HT020	603	35
SPRING/HT021	501	22
SPRING/PTO	201	86
SPRING/RETURN	201	63
STAND/LIFT COMP	508	4
STAY/BELT/SEAT COMP	603	17-A
STAY/COVER	605	8
STAY/JACK COMP	P06	1
STAY/TANK COMP	102	42
STAYHOOK COMP	603	28-A
STOPPER	201	26
	601	37
	601	39
STOPPER, PISTON	502	3
STOPPER/DIAL	501	29
	507	10
STRAP, GROUND	607	29
	608	32
SUSPENSHION/SEA ASSY	603	10
SUSPENSHION/SEAT	603	11
SWITCH(STARTER) ASSY	606	1
SWITCH, MERIT	607	15
	608	17
SWITCH/LEVER ASSY	607	38
SWITCH/PTO ASSY	606	12
SWITCH/PUSH SET	607	12
	608	14
SWITCH/SEAT ASSY	603	3
TANK/FUEL	106	1
TANK/OIL COMP	505	1-B
TIRE/15X6	404	2
TIRE/15X6 ASSY	404	1
TIRE/26X12.0/LH	P02	1
TIRE/26X12.0/RH	P02	6
TIRE/26X12.0-4PR	P02	3
	P02	8
TIRE/TURF/26X12.0	305	1
	305	3
TRAY/BOTTLE	701	29
TRIM/130	102	30
TRIM/50	601	2
TRIM/70	401	3
TRIM/90	601	30
TUBE ASSY	203	36
	203	38
TUBE/07X09X30	501	24
	605	6
TUBE/LH/TR20 COMP	508	2
TURNBUCKLE/M8	303	8
UNIT/TIMER ASSY	607	22
	608	24
U-NUT/M10X1.5	701	15
VALVE	104	5
	201	87
VALVE ASSY	201	39
	201	104
VALVE SUB SET	S01	2
VALVE/CHECK ASSY	501	32
VALVE/REDUCE COMP	201	48
VALVE/RELIEF ASSY	201	35
VALVE/SOLENOID ASSY	201	98
VALVE/TYRE ASSY	305	4-A
	404	4-A
VALVE/TYRE ASSY	P02	4-A
	P02	9-A
VIS	105	5
WASHER	201	37
	302	14
	403	4
	501	23
	606	9
	606	19
	S02	15
	S02	21
	S02	22
	S03	15
	S03	21
	S03	22
WASHER / M16	402	5
WASHER / M6	108	8
	303	12
	508	23
WASHER /M12	101	16
	403	9
	501	19
	508	6
	601	9
	601	26
	603	24
	604	3
	701	19
	701	23
	701	28
WASHER, PL/M 8	105	14
	202	11
	303	24
	501	15
	507	8
	507	13
	603	44
	607	33
	608	36
WASHER, PL/M14	506	25
	507	3
WASHER, PL/M18	203	12
WASHER, SP/M 6	303	5
	303	17
	602	10

Alpabetical Index

1752-095-300-00

Description	Fig.	Key
WASHER,SP/M 8	105	13
	202	10
WASHER,SP/M10	103	4
	109	9
	201	113
	203	17
	203	34
	203	47
	302	42
	603	20
	603	30
	603	41
WASHER,SP/M12	101	3
	101	6
	101	9
	101	12
	101	15
	401	12
	402	10
	403	10
	506	19
	701	18
	701	22
	701	27
WASHER,WIRE TENSION	602	11
WASHER/05X20X01	701	30
WASHER/11X22X3	203	8
	203	26
WASHER/12X26X04	601	10
WASHER/15X24X2	502	13
WASHER/16X28X5	502	10
WASHER/24X9X3.2	102	45
	202	3
WASHER/34X48X2	201	64
WASHER/41X55X03	303	20
WASHER/M10	108	5
	201	114
	302	43
	304	3
	603	21
	603	37-A
	603	42
WASHER/M20	508	12
WHEEL/12X10.5 COMP	305	2
	P02	2
WHEEL/12X10.5 COMP	P02	7
WHEEL/6X4.5 COMP	404	3
WIRE,LEAD	101	17