目　　次

SMM54SXG chassis

Universal Joint,case (Bevel) System..... Fig. 1
Pulley,v Belt System..... Fig. 2
Metal,blade (Dummy) System..... Fig. 3
Mower Deck,belt Cover System..... Fig. 4
Gauge Wheel System..... Fig. 5
Link System..... Fig. 6
Label..... Fig. 7
Component Parts..... Fig. 8

Directions for use of Parts Catalogue

1. Applicable model of machines

All component and option parts used for SMM54-SXG22 Mower are listed in this parts catalogue.

NOTES: SMM54-SXG22E4··· FOR SXG22

2. Explanation for head paragraph

KEY	PART CODE	DESCRIPTION	SPC	TYPE OF MODEL						ITC	COL	GRP	REMARKS
				SSM48M	SSM48F	SSM48G	SRM48M	SRM48F	SRM48G				
1	8595-211-001-20	CASE/UPPER	*	1 -219									
1A	8657-201-081-00	CASE/UPPER	*	1 -230			1						
2	8595-211-002-10	CASE/LOWER	*	1			1						
3	V523-100-801-80	PIN	*	2			2						
4	V211-260-803-00	BOLT, SEMS	*	6			6						
			*	2 -219									
			*	2 -230			3						
				2			2						
				1			1						

① ② ③ ④ ⑤ ⑥ ⑦ ⑧ ⑨

① KEY shows the location of parts diagramed in the illustration.

② Parts numbers begin with `V´ and `W´ are standard parts of the market.

③ `LH´ and `RH´ on the parts name are described against the moving direction of the machine or are described on the condition how to install parts on the machines.

④ SPC : The following symbol classifies parts to be used for machines.

`*´ means standard parts.

`T´ shows that the parts can be installed as optional parts.

`R´ shows that the parts can be used as applicable parts to replace originally equipped parts.

2

⑤ Upper column : QTY shows the number of parts to be used for one unit of machine.

`M´ is indicated for parts supplied by a meter long.

`ℓ´ is indicated for parts supplied by liter.

`AR´ is indicated for parts need to be adjusted or regulated.

Lower column : serial number

－229 means serial number up to 229.

230－ means serial number 230 and after.

⑥ ITC : Interchangeability

`1´…OLD ← NEW

New parts can be used in place of the old parts.

`2´…OLD → NEW

Old parts can be used in place of the new parts.

`3´…OLD →← NEW

Old parts and new parts can not be replaced each other.

⑦ COL : Color code

Color is signified with color code number for colored parts.

Please see the color list shown in the next page.

⑧ GRP : Parts shown in this column can be replaced by SET parts.

Example : Parts marked Ⓐ can be replaced by parts marked Ⓑ, and Ⓓ for Ⓒ, so the rest follow in the same alphabetical order.

⑨ Remarks

＊ Other maker's part code number is shown in this column.

＊ When Fig. No. is shown in the Remark column of SET parts or ASSY parts, each of their component parts are listed in said Fig. No.

3. Color :

The following colors are used color parts.

COLOR CODE	COLOR	SPRAY TYPE CODE NUMBER	PAINTS 4K DRUM	PAINTS 16K DRUM
7 F	MIRROR BLACK	1300-954-001-10	1300-954-003-00	1300-954-004-00

NOTE : Color code is signified only for the parts assigned by the maker as color parts.

4. Serial Numbers :

For chassies serial number is shown on the LABEL.

Please see

5. Parts Order

1) Parts numbers listed in the parts catalogue are all registered in "ISEKI on-line computer".
2) When you order parts, please make sure of correct numbers.
3) When substitute parts is available, the part number ordered will be automatically turned to a new part number.
4) Please be sure to use "ISEKI GENUINE PARTS".
   Any other similar parts other than ISEKI parts when used may cause a trouble that makes us unable to repair or guarantee the warrant.

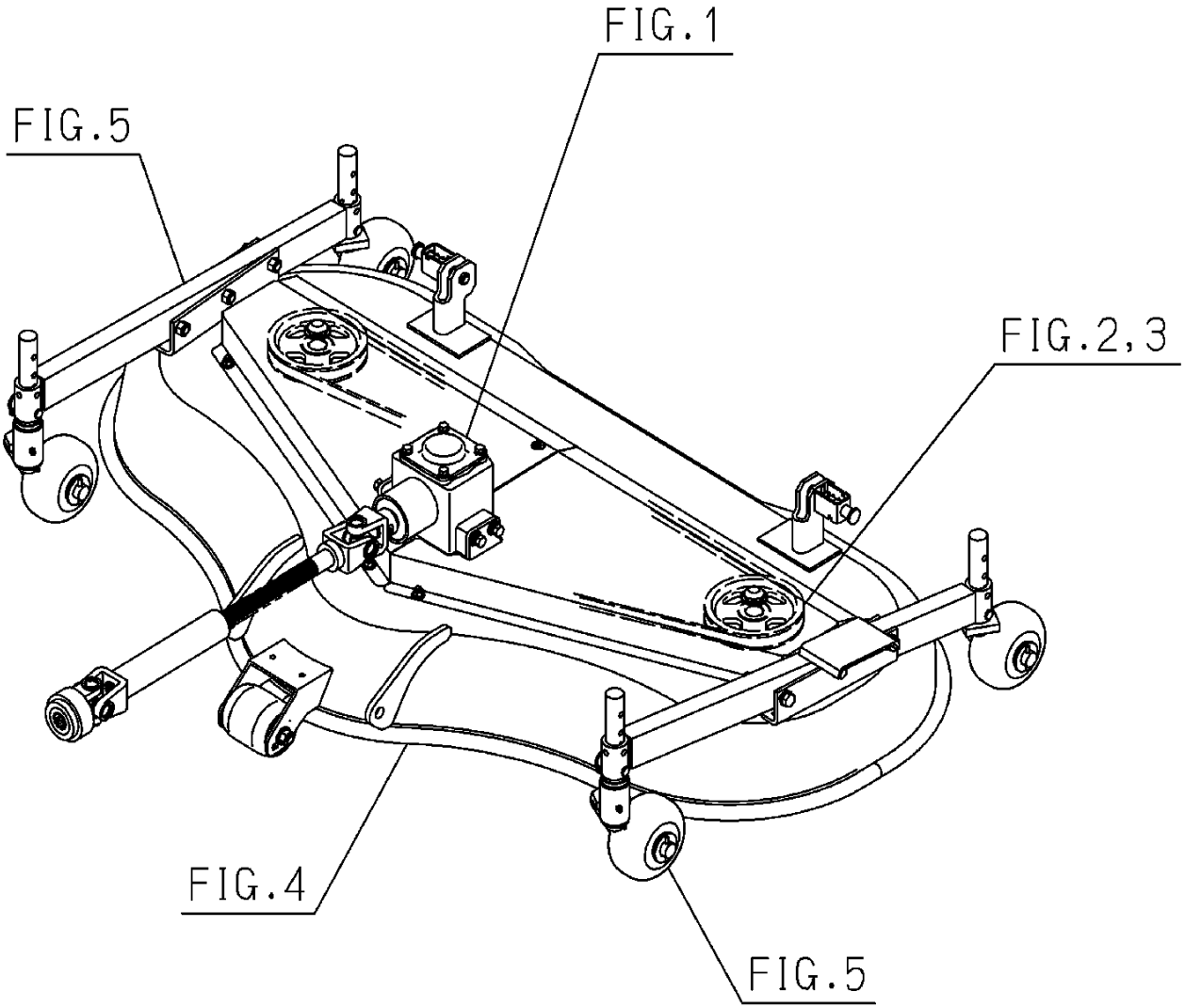
FIG.1
FIG.5
FIG.2,3
FIG.4
FIG.5

Fig.001 Universal Joint,case (Bevel) System

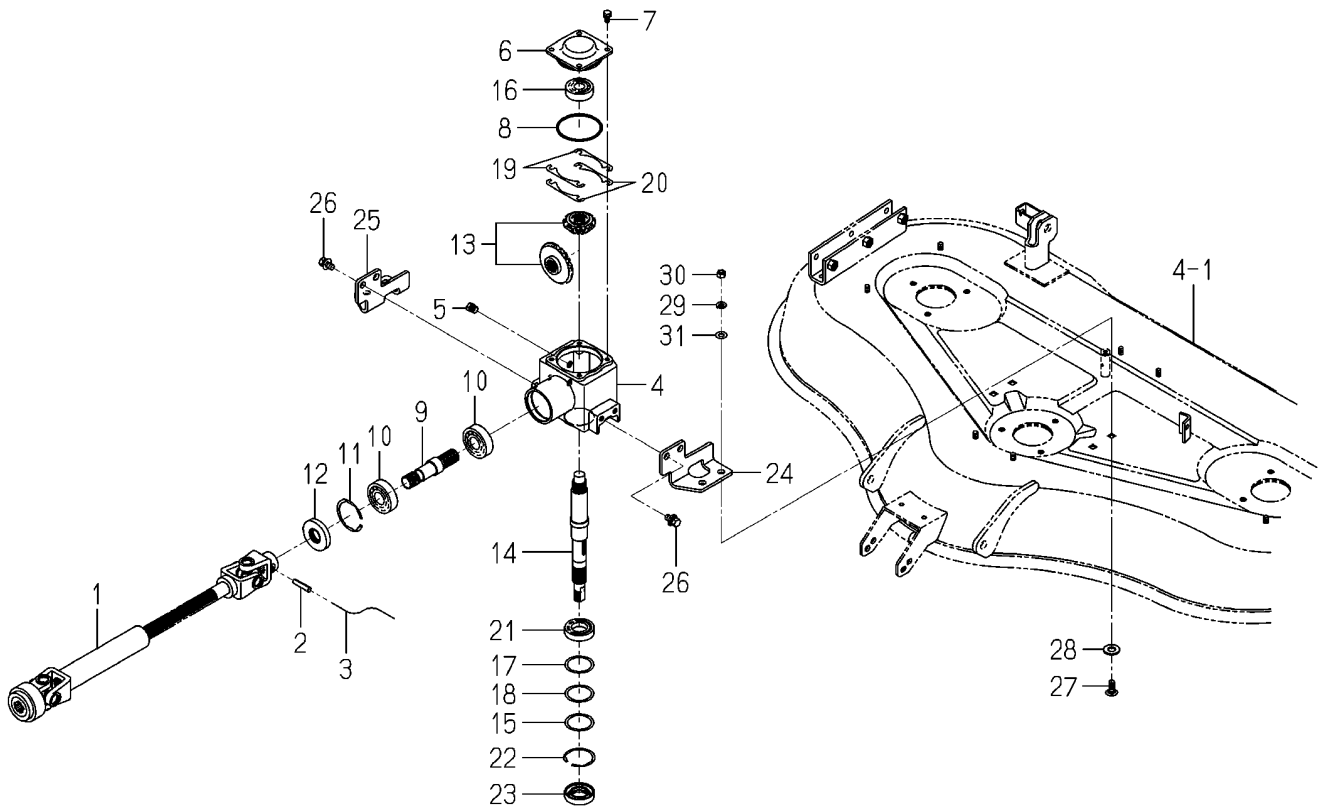

図番	部品コード	品名	仕様	型式 SMM54 SXG22						代替性	色番号	グループ	備考
1	8658-101-310-10	JOINT/UNIVERSAL SET	*	1									008
2	V580-140-804-00	PIN,SPRING/8 X40 W	*	1									
3		WIRE	*	1									
4	8595-201-011-00	CASE/BEVEL	*	1									
5	7955-201-026-00	PLUG,DRAIN (1/4)	*	2									
6	8595-201-012-00	COVER/CASE	*	1									
7	V211-260-801-60	BOLT,SEMS (S) M8X16	*	4									
8	V721-103-108-00	O-RING/G80	*	1									
9	8595-201-013-00	SHAFT/INPUT	*	1									
10	1594-218-001-00	BEARING/BALL 6305SH2	*	2									
11	V707-140-062-00	RING/SNAP	*	1									
12	8595-201-025-00	SEAL/OIL	*	1									
13	8595-201-410-00	GEAR/BEVEL/28-1 SET	*	1									
14	8658-201-031-00	SHAFT/OUTPUT	*	1									
15	8595-201-015-00	WASHER/45X55X01	*	1									
16	V600-110-630-40	BEARING,RB/6304	*	1									
17	8595-201-016-00	SHIM/0.1	*	1									
18	8595-201-017-00	SHIM/0.2	*	1									
19	8595-201-021-00	SHIM/0.1	*	1									
20	8595-201-022-00	SHIM/0.2	*	1									
21	V600-110-600-60	BEARING,RB 6006	*	1									
22	V707-140-055-00	RING/SNAP	*	1									
23	V744-130-551-20	SEAL,OIL/TC305512	*	1									
24	8659-201-002-00	BRACKET/CASE/LH	*	1									
25	8659-201-003-00	BRACKET/CASE/RH	*	1									
26	V211-661-002-00	BOLT/M10X20	*	4									
27	8597-301-002-00	BLOT/M10X25	*	4									
28	V411-260-014-00	WASHER,PL/M14	*	4									
29	V401-160-010-00	WASHER,SP/M10	*	4									
30	V304-260-010-00	NUT	*	4									

Fig.001 Universal Joint,case (Bevel) System

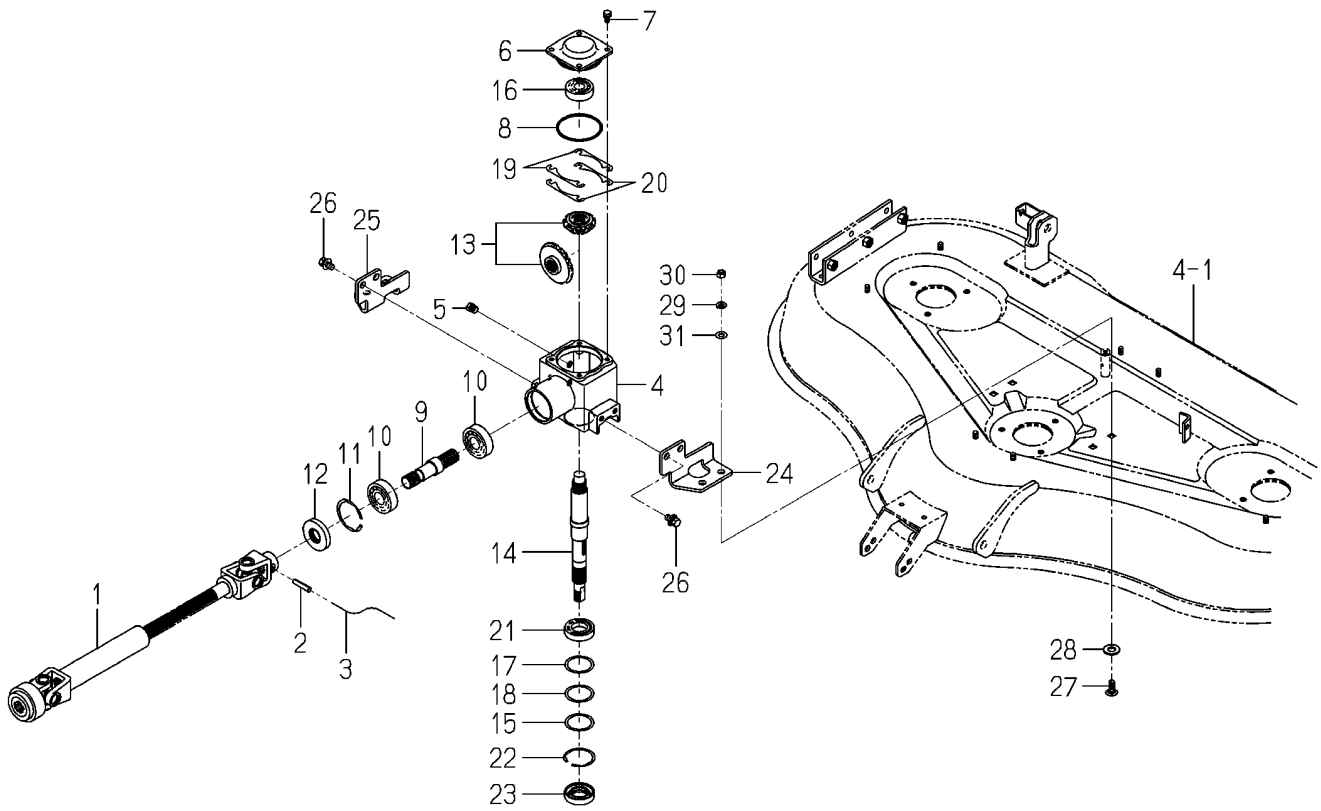

図番	部品コード	品名	仕様	型式 SMM54 SXG22						代替性	色番号	グループ	備考
31	V411-260-010-00	WASHER/M10	*	4									

Fig.002 Pulley,v Belt System

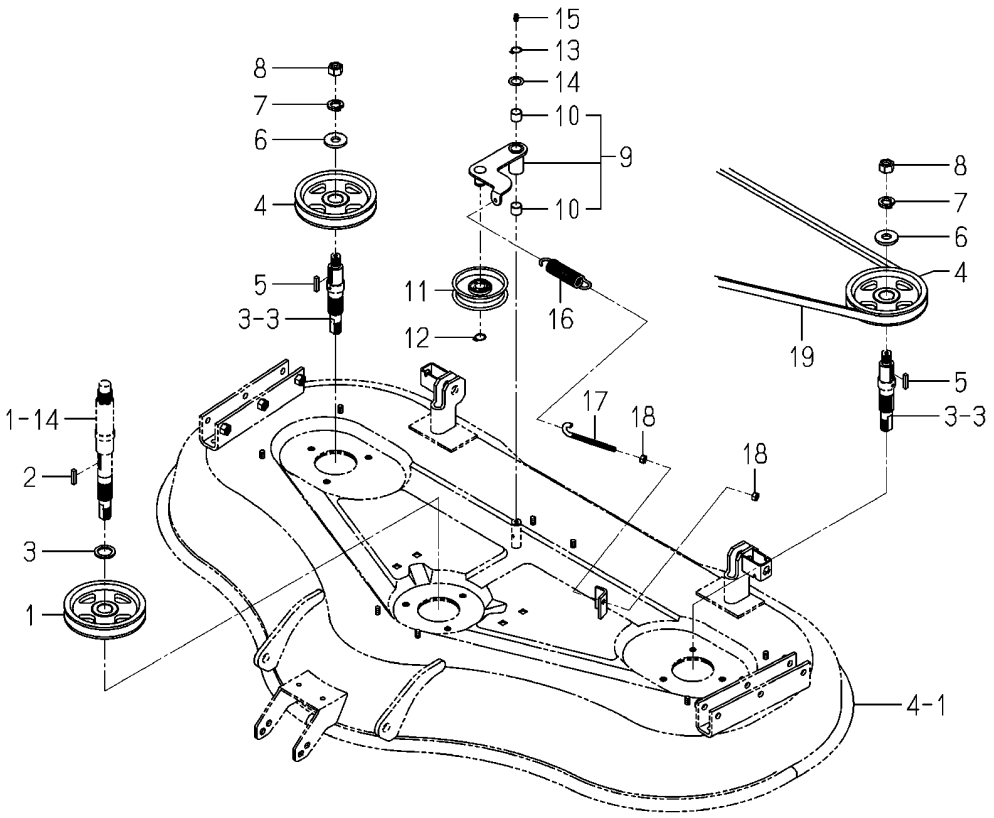

図番	部品コード	品名	仕様	型式 SMM54 SXG22						代替性	色番号	グループ	備考
1	8657-202-003-10	PULLEY/VB137	*	1									
2	8654-202-016-00	KEY/06X06X28	*	1									
3	1434-211-004-00	COLLAR/26X36X3	*	1									
4	8657-202-003-10	PULLEY/VB137	*	2									
5	8654-202-016-00	KEY/06X06X28	*	2									
6	3746-111-011-00	WASHER	*	2									
7	V401-160-016-00	WASHER,SP/M16	*	2									
8	V304-460-016-00	NUT/M16	*	2									
9	8658-202-200-00	ARM/TENSION ASSY	*	1									
10	8597-202-501-00	BUSH/16X18X15	*	2									
11	8593-014-200-10	PULLEY COMP	*	1									
12	V704-140-017-00	RING,SNAP/17 C	*	1									
13	V704-140-016-00	RING,SNAP/16 C	*	1									
14	3621-211-003-00	WASHER	*	1									
15	V760-150-000-00	NIPPLE,GREASE	*	1									
16	3737-341-006-00	SPRING,CHAIN TENSION	*	1									
17	3737-341-007-00	ROD,CHAIN TENSION	*	1									
18	V304-260-008-00	NUT	*	2									
19	8657-203-001-00	BELT/VB101	*	1									

Fig.003 Metal,blade (Dummy) System

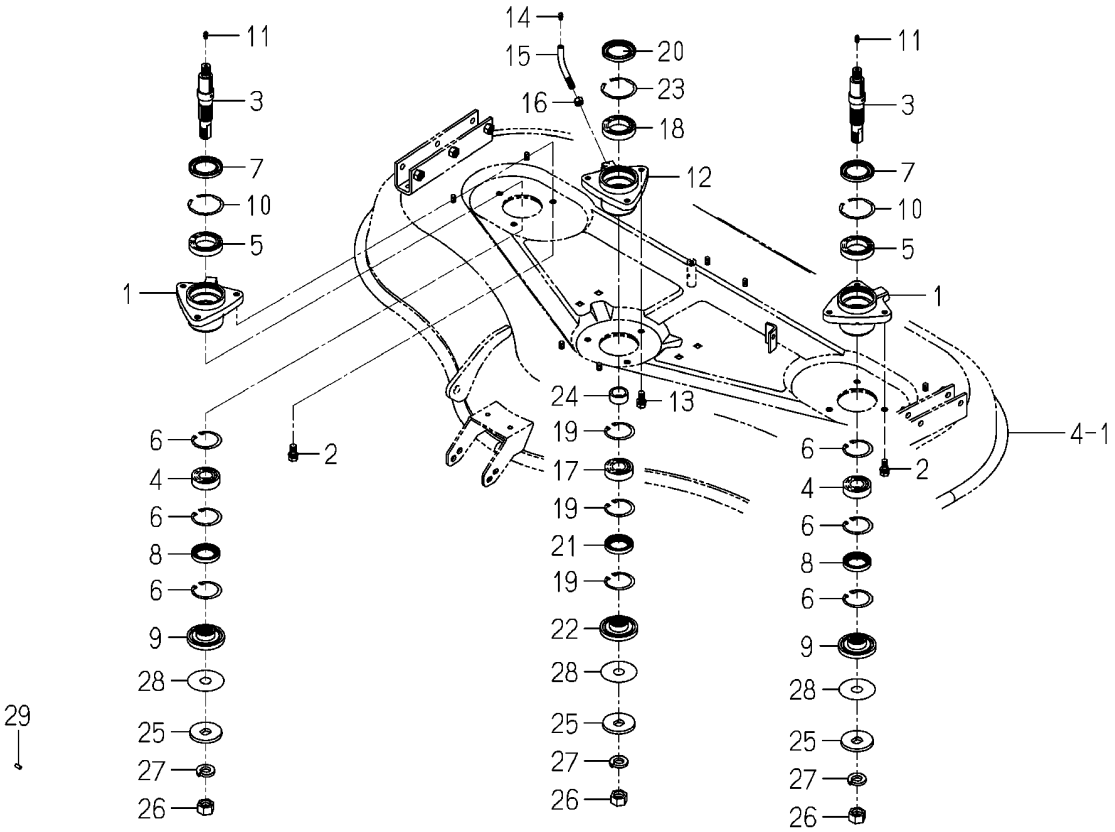

図番	部品コード	品名	仕様	型式						代替性	色番号	グループ	備考
				SMM54 SXG22									
1	8657-301-004-00	METAL/SIDE	*	2									
2	V211-261-002-50	BOLT(S) M10X25	*	6									
3	8654-301-081-10	SHAFT/SIDE	*	2									
4	1594-221-001-00	BEARING/BALL 6205SH2	*	2									
5	V600-110-690-80	BEARING	*	2									
6	V705-140-052-00	RING,SNAP/52 C	*	6									
7	8654-301-004-00	SEAL/OIL	*	2									
8	V744-135-520-80	SEAL,OIL/TC35528	*	2									
9	8658-301-001-00	COLLAR/BRADE	*	2									
10	V707-140-062-00	RING/SNAP	*	2									
11	V760-150-000-00	NIPPLE,GREASE	*	2									
12	8657-301-005-00	METAL/CENTER	*	1									
13	V211-261-002-50	BOLT(S) M10X25	*	3									
14	V760-150-000-00	NIPPLE,GREASE	*	1									
15	8657-301-009-00	PIPE/GREASE	*	1									
16	V304-260-010-00	NUT	*	1									
17	1594-221-001-00	BEARING/BALL 6205SH2	*	1									
18	V600-110-690-80	BEARING	*	1									
19	V705-140-052-00	RING,SNAP/52 C	*	3									
20	8654-301-004-00	SEAL/OIL	*	1									
21	V744-135-520-80	SEAL,OIL/TC35528	*	1									
22	8658-301-001-00	COLLAR/BRADE	*	1									
23	V707-140-062-00	RING/SNAP	*	1									
24	8657-301-008-00	COLLER/26X34X15	*	1									
25	8595-306-005-00	WASHER/20X60X06	*	3									
26	8595-306-007-00	NUT/M20X1.5	*	3									
27	V401-160-020-00	WASHER,SP/M20	*	3									
28	8595-306-006-00	SHIM/1.2	*	3									
29	8658-306-003-00	PIN/PARALLEL	*	6									

Fig.004 Mower Deck,belt Cover System

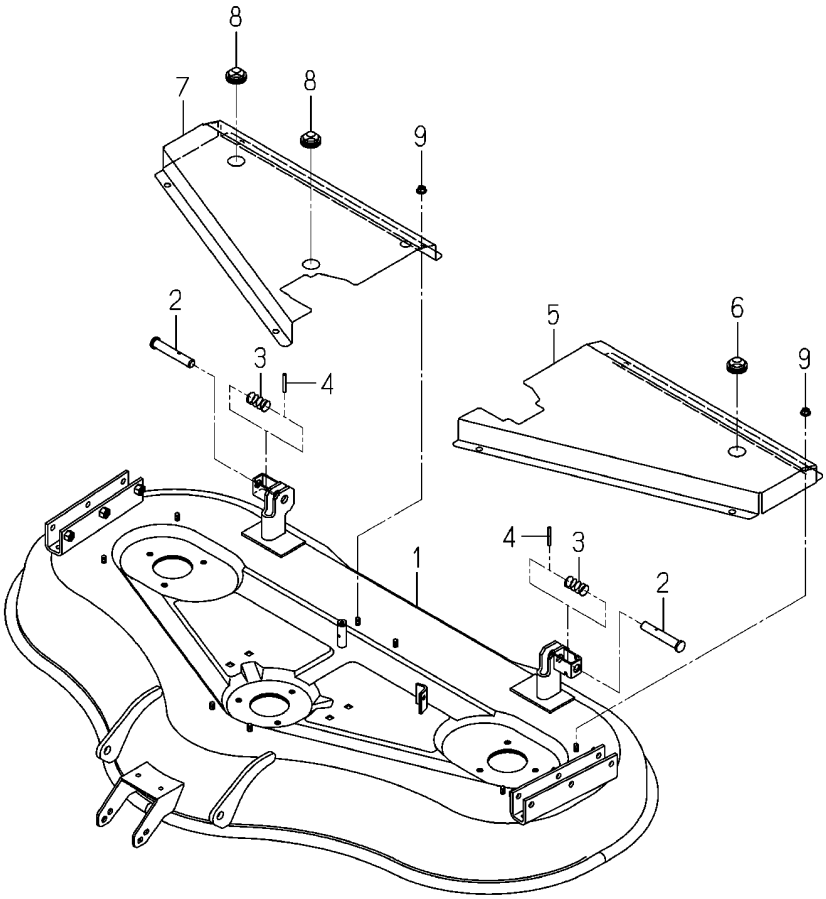

図番	部品コード	品名	仕様	型式						代替性	色番号	グループ	備考
				SMM54 SXG22									
1	8658-402-310-10	DECK/MOWER/54/SXG	*	1							7F		
2	8595-608-082-00	PIN/16X96	*	2									
3	1560-601-028-00	SPRING/HC042	*	2									
4	V580-140-504-00	PIN,SPRING/5 X40 W	*	2									
5	8659-407-001-00	COVER/BELT/LH	*	1							7F		
6	2149-602-012-00	CAP/32	*	1									
7	8658-407-001-00	COVER/BELT/RH	*	1							7F		
8	2149-602-012-00	CAP/32	*	2									
9	V362-260-008-00	NUT/WASHER	*	8									

Fig.005 Gauge Wheel System

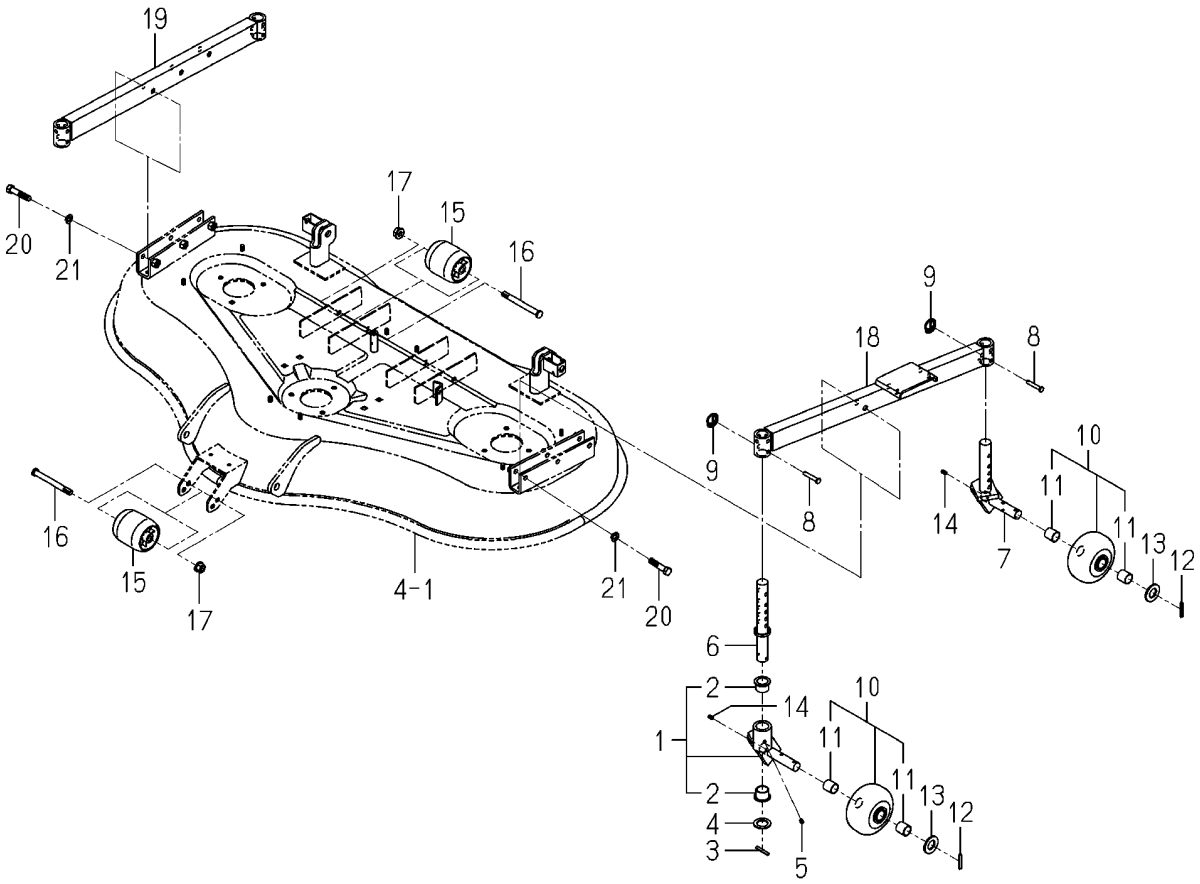

図番	部品コード	品名	仕様	型式 SMM54 SXG22						代替性	色番号	グループ	備考
1	8657-501-500-10	FORK/WHEEL ASSY	*	2							7F		
2	8657-501-501-00	BUSH/26X30X20	*	4									
3	V580-140-504-00	PIN,SPRING/5 X40 W	*	2									
4	1564-275-007-00	WASHER/27X40X2	*	2									
5	V760-150-000-00	NIPPLE,GREASE	*	2									
6	8657-501-520-10	PIN/GAUGE COMP	*	2							7F		
7	8657-501-540-10	FORK/WHEEL/R COMP	*	2							7F		
8	8595-505-002-00	PIN/08X44	*	4									
9	1427-317-003-00	CLIP,PIN	*	4									
10	8657-501-530-00	WHEEL/GAUGE ASSY	*	4									
11	8654-501-283-00	BUSH/22X25X25	*	8									
12	V580-140-504-00	PIN,SPRING/5 X40 W	*	4									
13	V411-260-022-00	WASHER,PL/M22	*	4									
14	V760-150-000-00	NIPPLE,GREASE	*	4									
15	8595-501-001-10	WHEEL/GAUGE/FRONT	*	3									
16	8595-505-051-30	PIN/12X117	*	3									
17	V360-260-012-00	NUT/WASHER	*	3									
18	8659-501-310-00	ARM/GAUGE/LH COMP	*	1							7F		
19	8659-501-320-00	ARM/GAUGE/RH COMP	*	1							7F		
20	V201-261-205-50	BOLT/M12X55	*	6									
21	V401-160-012-00	WASHER,SP/M12	*	6									

Fig.006 Link System

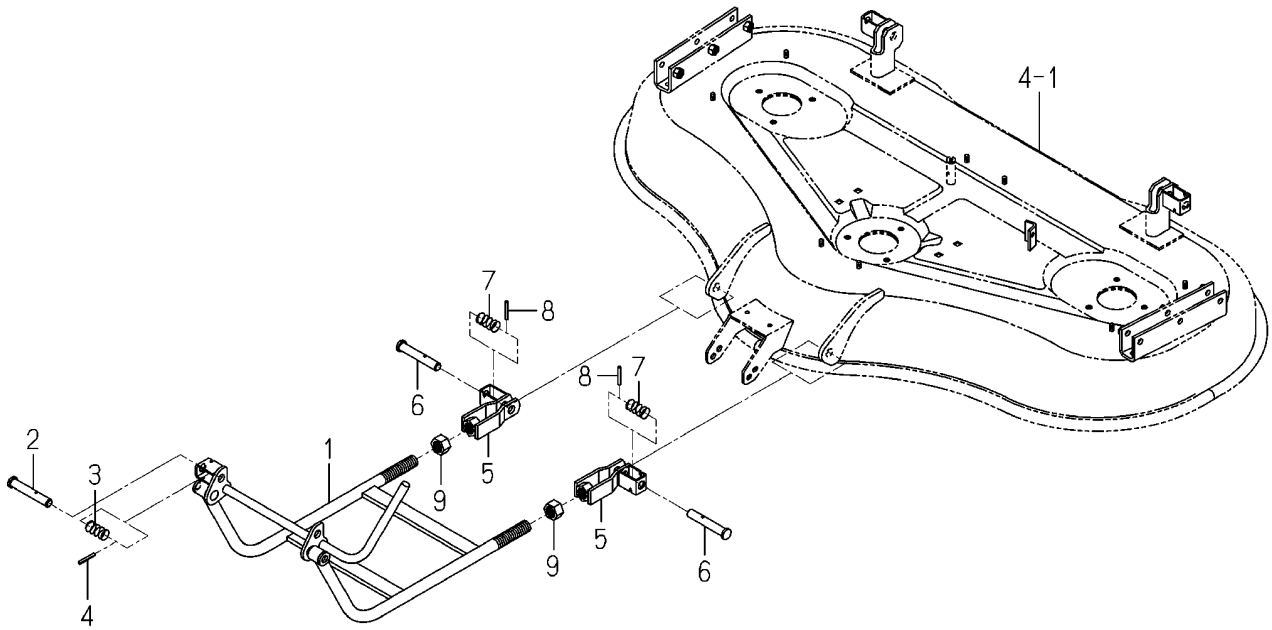

図番	部品コード	品名	仕様	型式 SMM54 SXG22						代替性	色番号	グループ	備考
1	8663-608-210-00	ARM/FRONT COMP	*	1							7F		
2	8595-608-082-00	PIN/16X96	*	1									
3	1560-601-028-00	SPRING/HC042	*	1									
4	V580-140-504-00	PIN,SPRING/5 X40 W	*	1									
5	8657-608-720-00	FORK/M22 COMP	*	2									
6	8595-608-082-00	PIN/16X96	*	2									
7	1560-601-028-00	SPRING/HC042	*	2									
8	V580-140-504-00	PIN,SPRING/5 X40 W	*	2									
9	V334-460-022-00	NUT	*	2									

Fig.007 Label

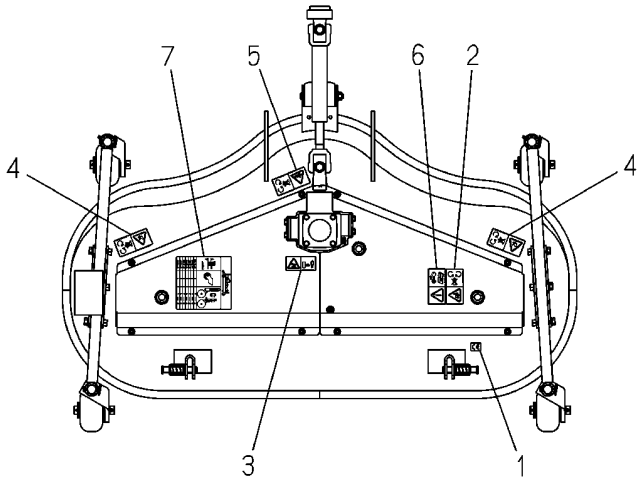

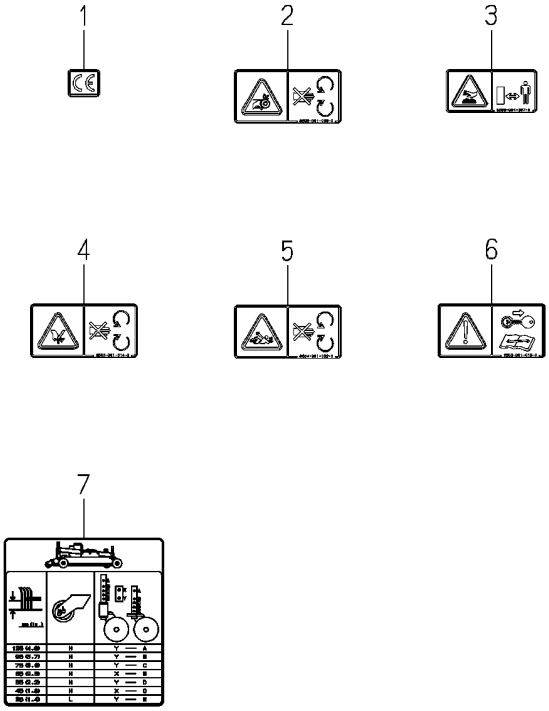

図番	部品コード	品名	仕様	型式						代替性	色番号	グループ	備考
				SMM54 SXG22									
1	2500-901-027-00	LABEL/CE	*	1									
2	8595-901-006-00	LABEL/WARNING/BELT	*	1									
3	8595-901-007-00	LABEL/WARNING/HOT	*	1									
4	2500-901-014-30	LABEL/DANGER	*	2									
5	8654-901-002-00	LABEL/PTO	*	1									
6	1593-901-015-00	LABEL/MAINTENANCE	*	1									
7	8658-901-031-00	LABEL/CUTTING	*	1									

Fig.008 Component Partsfor 8658-101-310-10 On Fig.1

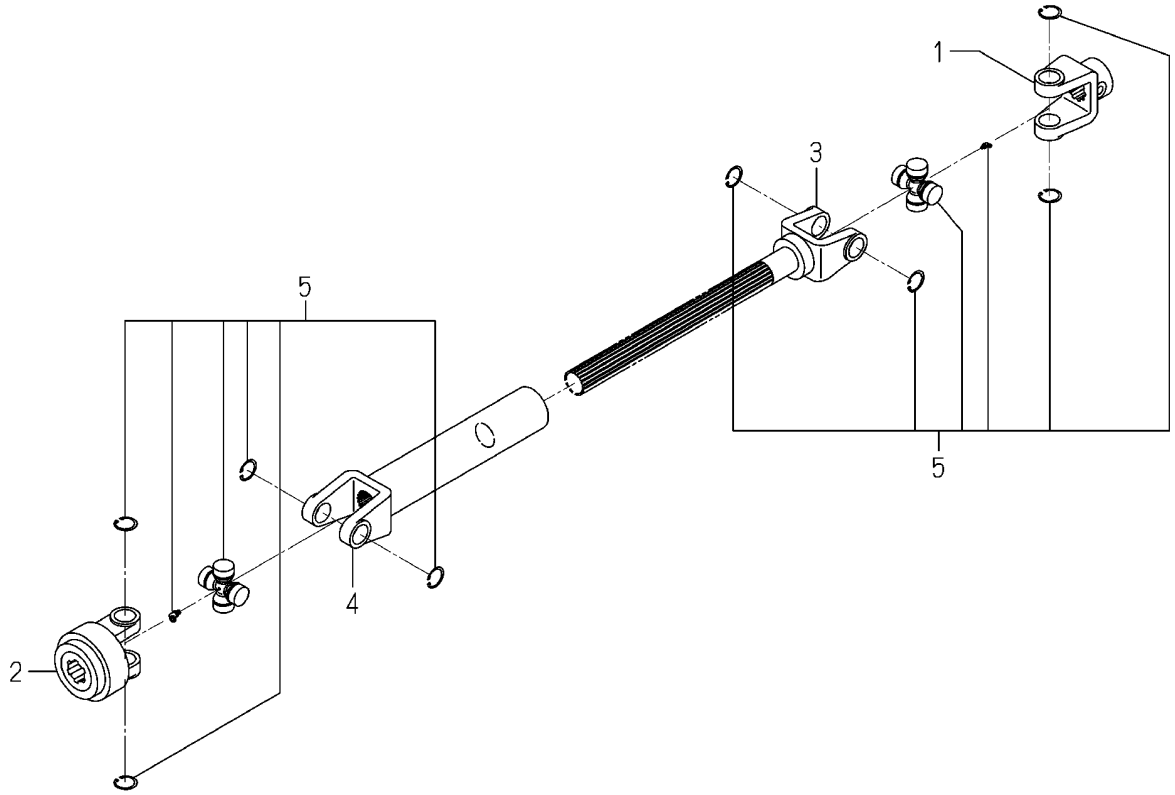

図番	部品コード	品名	仕様	型式						代替性	色番号	グループ	備考
				SMM54 SXG22									
1	8654-101-221-00	FITTINGYOKE	*	1									
2	8657-101-501-00	AS YOKE ASSY	*	1									
3	8654-101-711-00	SHAFTYOKE	*	1									
4	8658-101-311-00	SLEEVEYOKE	*	1									
5	8654-101-230-00	JOURNALCROSSE ASSY	*	2									