ISEKI

Parts Catalogue

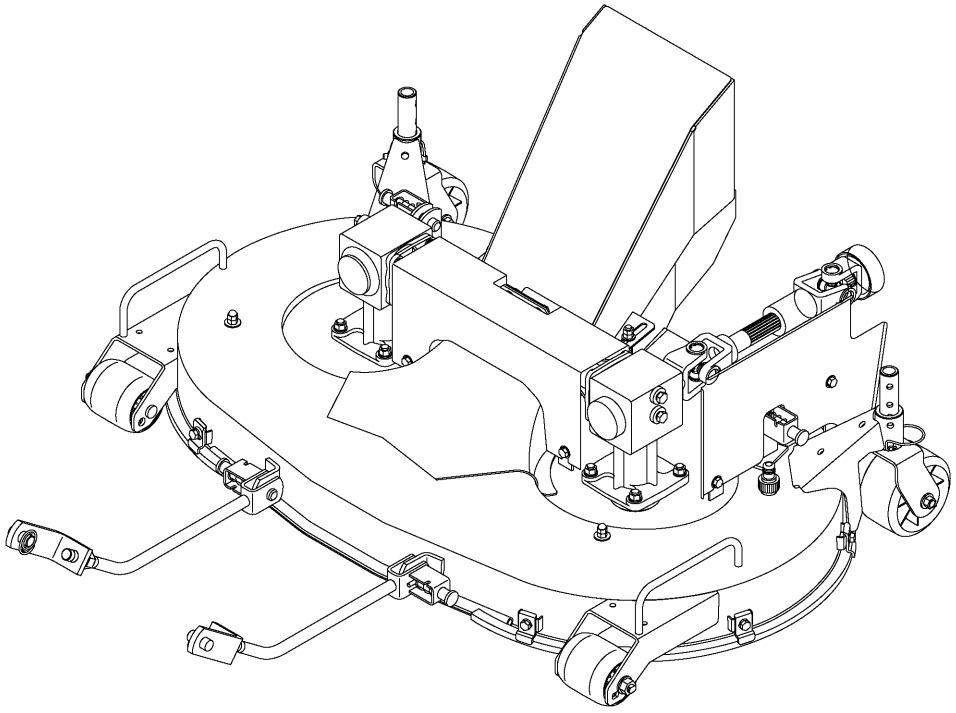

MOWER SCMA40

SCMA40-SXG216E4

8670-097-210-10

Printed in Japan June,2017

Directions for use of Parts Catalogue

1. Applicable model of machines

All component and option parts used for SCMA40 Mower are listed in this parts catalogue.

NOTES: SCMA40-SXG216E4F・・・・・ FOR SXG216

2. Details of the Structure Table of Model

*** **Structure Table of Model** ***

MODEL	SF310XWE46	SF3FHUXWE4									
FIG.											
1	***	***									
2	*	*									
3		***									
4	***										
5		***									
6	***										
7	***	***									
8											

① ③ ②

① FIG. : Parts structure of the machine is classified by its functions. FIG. number corresponds to the number written at the top of the parts illustration.

② Model : Shows the name of the model.

③ Structure Table : Shows which functions are originally equipped or can be

equipped afterwards for each machines

`＊´ Standard Parts

`T´ Optional Parts

`R´ Repair Parts (parts which can only be used for repairs)

3. Explanation for head paragraph

KEY	PART CODE	DESCRIPTION	SPC	TYPE OF MODEL						ITC	COL	GRP	REMARKS
				SSM48M	SSM48F	SSM48G	SRM48M	SRM48F	SRM48G				
1	8595-211-001-20	CASE/UPPER	*	1 -229									
1A	8657-201-081-00	CASE/UPPER	*	1 230-			1						
2	8595-211-002-10	CASE/LOWER	*	1			1						
3	V523-100-801-80	PIN	*	2			2						
4	V211-260-803-00	BOLT, SEMS	*	6			6						
			*	2 -229									
			*	2 230-			3						
				2			2						
				1			1						

① ② ③ ④ ⑤ ⑥ ⑦ ⑧ ⑨

① KEY shows the location of parts diagramed in the illustration.

② Parts numbers begin with `V´ and `W´ are standard parts of the market.

③ `LH´ and `RH´ on the parts name are described against the moving direction of the machine or are described on the condition how to install parts on the machines.

④ SPC : The following symbol classifies parts to be used for machines.

`＊´ means standard parts.

`T´ shows that the parts can be installed as optional parts.

`R´ shows that the parts can be used as applicable parts to replace originally equipped parts.

⑤ Upper column : QTY shows the number of parts to be used for one unit of machine.

`M´ is indicated for parts supplied by a meter long.

`l´ is indicated for parts supplied by liter.

`AR´ is indicated for parts need to be adjusted or regulated.

Lower column : serial number

—229 means serial number up to 229.

230— means serial number 230 and after.

⑥ ITC : Interchangeability

`1´…OLD ← NEW

New parts can be used in place of the old parts.

`2´…OLD → NEW

Old parts can be used in place of the new parts.

`3´…OLD →← NEW

Old parts and new parts can not be replaced each other.

⑦ COL : Color code

Color is signified with color code number for colored parts.

Please see the color list shown in the next page.

⑧ GRP : Parts shown in this column can be replaced by SET parts.

Example : Parts marked Ⓐ can be replaced by parts marked Ⓑ, and Ⓓ for Ⓒ, so the rest follow in the same alphabetical order.

⑨ Remarks

＊Other maker's part code number is shown in this column.

＊When Fig. No. is shown in the Remark column of SET parts or ASSY parts, each of their component parts are listed in said Fig. No.

4. Color :

The following colors are used color parts.

COLOR CODE	COLOR	SPRAY TYPE PARTS CODE	PAINTS 4K DRUM PARTS CODE	PAINTS 16K DRUM PARTS CODE
7 F	MIRROR BLACK	1300-954-001-20	1300-954-003-00	1300-954-004-00

NOTE : Color code is signified only for the parts assigned by the maker as color parts.

5. Serial Numbers :

For chassies serial number is shown on the LABEL.

Please see

6. Parts Order

1) When you order parts, please make sure of correct numbers.
2) When substitute parts is available, the part number ordered will be automatically turned to a new part number.
3) Please be sure to use “ISEKI GENUINE PARTS”.
   Any other similar parts other than ISEKI parts when used may cause a trouble that makes us unable to repair or guarantee the warrant.

*** Structure Table of Model ***

MODEL FIG.	SCMA40SXG216 ME4										
1	*										
2	*										
3	*										
4	*										
5	*										
6	*										
7	*										
8	*										
9	*										
10	*										
11	*										
12	*										
13	R										
14	T										
15	*										

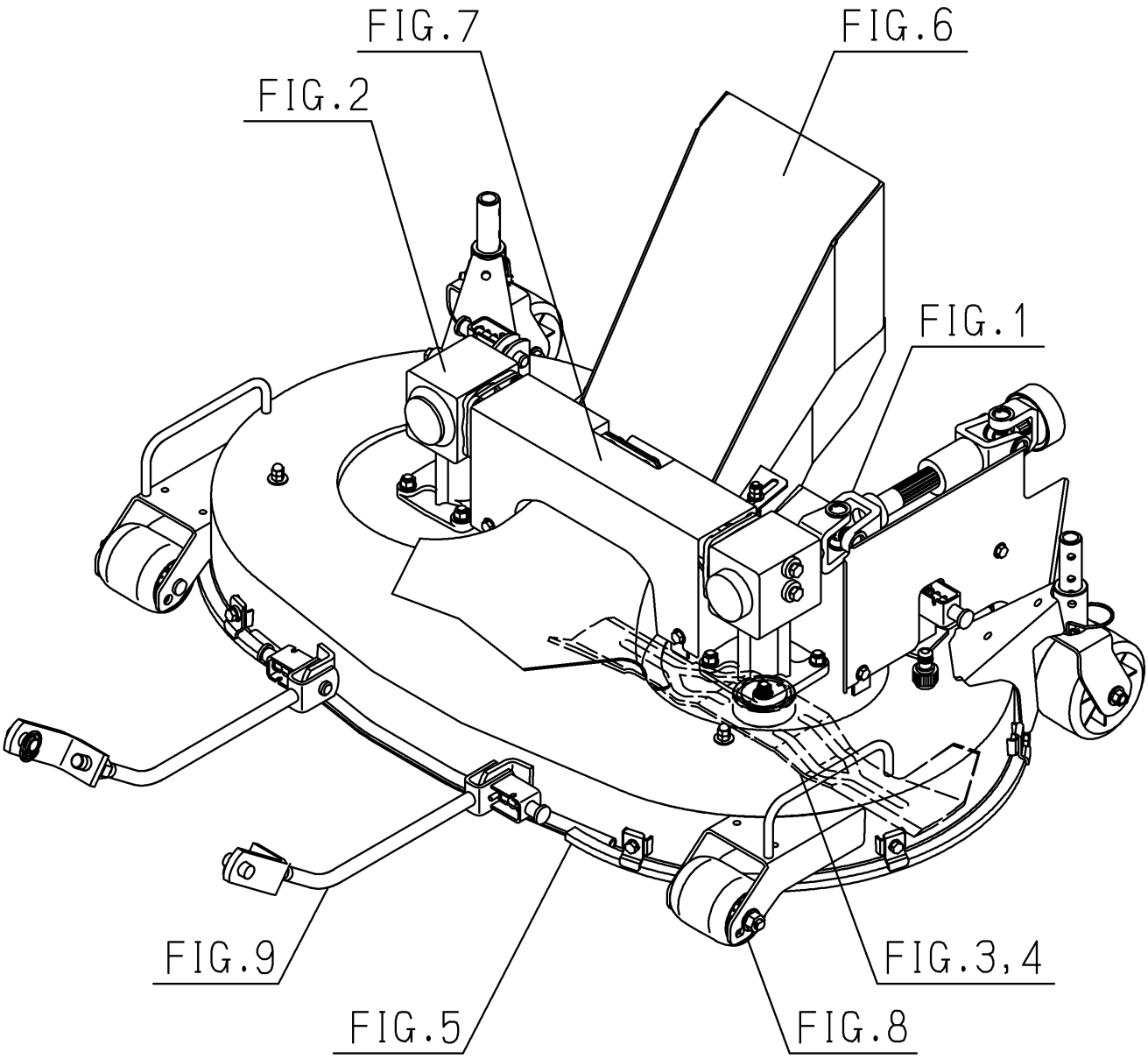
FIG.7
FIG.6
FIG.2
FIG.1
FIG.9
FIG.3,4
FIG.5
FIG.8

Contents

SCMA40

JOINT(UNIVERSAL)SYSTEM ····· Fig. 1
CASE(BEVEL)SYSTEM ····· Fig. 2
COLLAR(BLADE)SYSTEM ····· Fig. 3
BLADE SYSTEM ····· Fig. 4
DECK(MOWER)SYSTEM ····· Fig. 5
COVER(DISCHARGE)SYSTEM ····· Fig. 6
COVER SYSTEM ····· Fig. 7
WHEEL(GAUGE)SYSTEM ····· Fig. 8
LINK(LIFT)SYSTEM ····· Fig. 9
LABEL(CAUTION) ····· Fig. 10
LABEL(CE) ····· Fig. 11
PIN(SAFETY) ····· Fig. 12

OPTIONAL PARTS

CASE(BEVEL)ASSY(REPAIR)(1/2)(2/2) ····· Fig. 13
MULCHING KIT(OPTION) ····· Fig. 14

COMPONENT PARTS

COMPONENT PARTS
FOR 8670-101-210-00 ON Fig.1 ····· Fig. 15

FIG. 1 JOINT(UNIVERSAL)SYSTEM

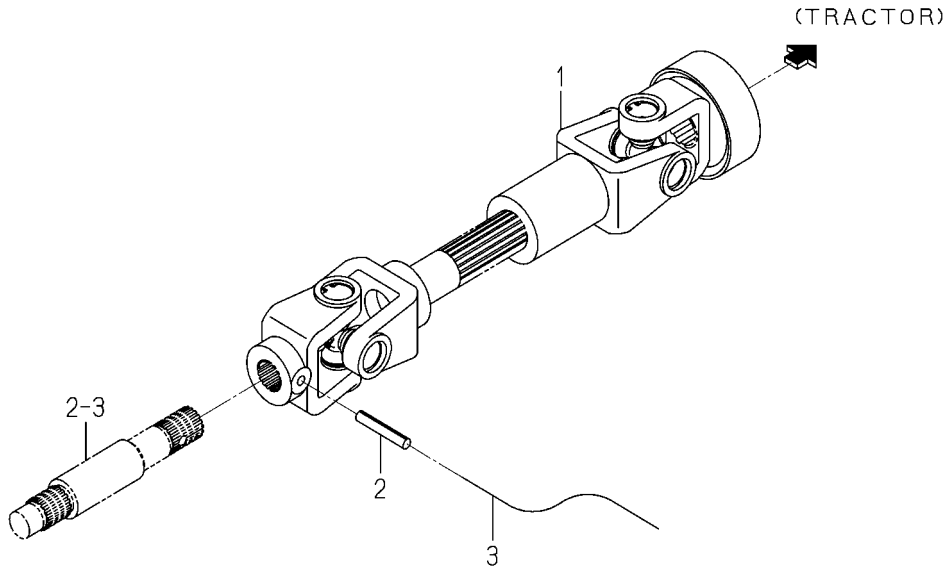

8670-101 -0100

KEY	PART CODE	DESCRIPTION	SPC	TYPE OF MODEL SCMA40 SXG216		ITC	COL	GRP	REMARKS
1	8670-101-210-00	JOINT/UNIVERSAL SET	*	1					FIG 015
2	V580-140-604-00	PIN,SPRING/6X40 W	*	1					
3	8674-101-001-00	WIRE/1.6X150	*	1					

FIG. 2 CASE(BEVEL)SYSTEM

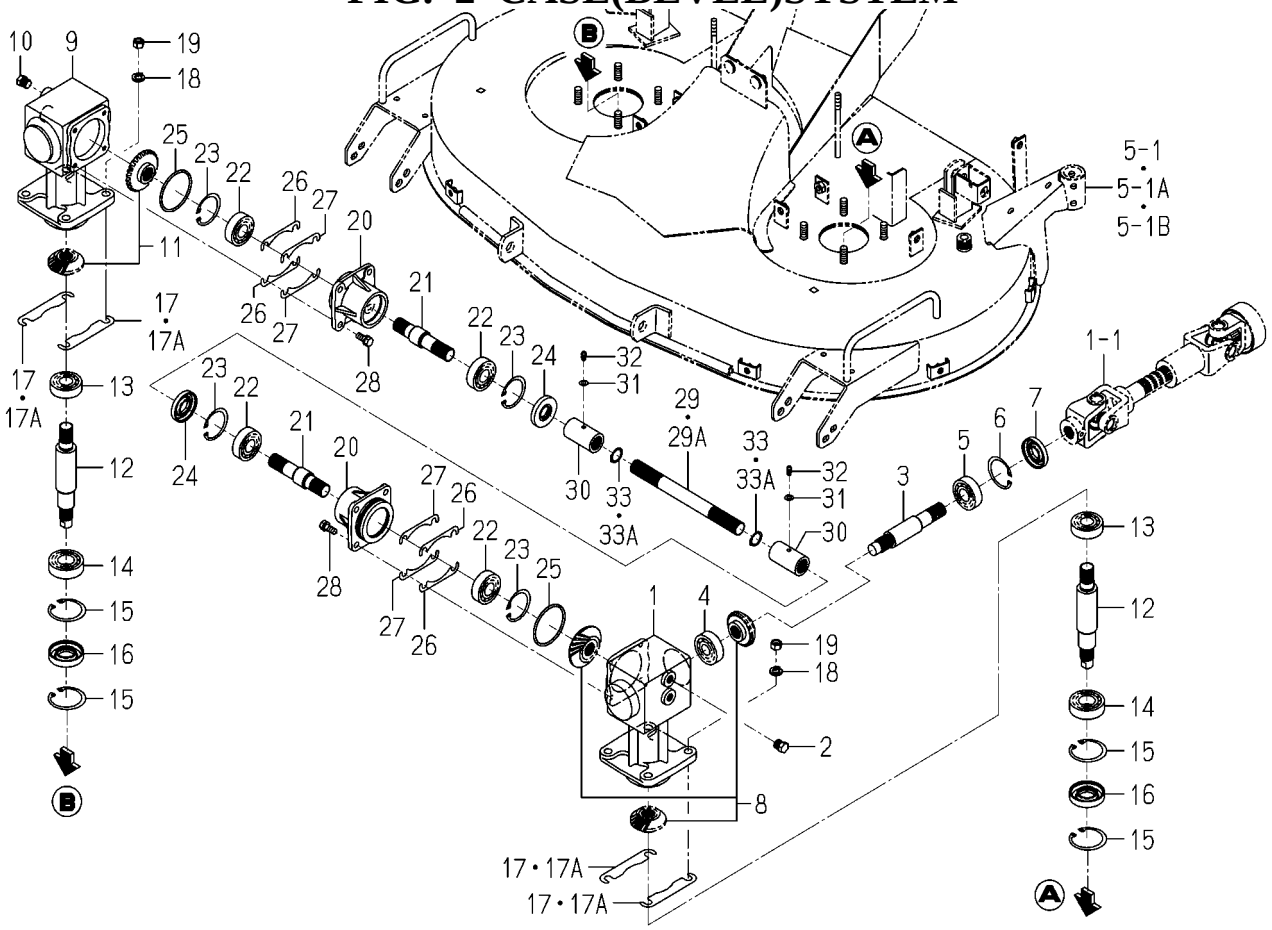

8670-201B-0100

KEY	PART CODE	DESCRIPTION	SPC	TYPE OF MODEL SCMA40 SXG216		ITC	COL	GRP	REMARKS
1	8670-201-001-00	CASE/BEVEL/LH	*	1					
2	7955-201-026-00	PLUG,DRAIN (1/4)	*	2					
3	8670-201-002-00	SHAFT/INPUT	*	1					
4	V600-110-630-30	BEARING,RB/6303	*	1					
5	V600-110-620-40	BEARING,RB/6204	*	1					
6	V705-140-047-00	RING,SNAP/47 C	*	1					
7	V744-120-470-70	SEAL,OIL/TC20477	*	1					
8	8670-201-210-00	GEAR/BEVEL/19-23-19	*	1					
9	8670-201-003-00	CASE/BEVEL/RH	*	1					
10	7955-201-026-00	PLUG,DRAIN (1/4)	*	2					
11	8670-201-220-00	GEAR/BEVEL/23-1 SET	*	1					
12	8670-201-004-00	SHAFT/BLADE	*	2					
13	V600-110-620-40	BEARING,RB/6204	*	2					
14	V600-110-620-50	BEARING,RB/6205	*	2					
15	V705-140-052-00	RING,SNAP/52 C	*	4					
16	V744-125-521-00	SEAL,OIL/TC255210	*	2					
17	8670-201-005-00	SHIM/0.2	*	4 -29					
17A	8670-201-005-10	SHIM/0.2	*	4 30-		1			
18	V401-160-010-00	WASHER,SP/M10	*	8					
19	V304-260-010-00	NUT/M10	*	8					
20	8670-201-006-00	METAL/CASE	*	2					
21	8670-201-007-00	SHAFT/CASE	*	2					
22	V600-110-620-40	BEARING,RB/6204	*	4					
23	V705-140-047-00	RING,SNAP/47 C	*	4					
24	V744-120-470-70	SEAL,OIL/TC20477	*	2					
25	V721-103-106-00	O-RING/1A,G60	*	2					
26	8663-202-055-00	SHIM/0.1	*	8					
27	8663-202-056-00	SHIM/0.2	*	4					
28	V211-260-802-00	BOLT,S/M8X20	*	8					
29	8670-201-008-00	SHAFT/JOINT	*	1 -79					

FIG. 2 CASE(BEVEL)SYSTEM

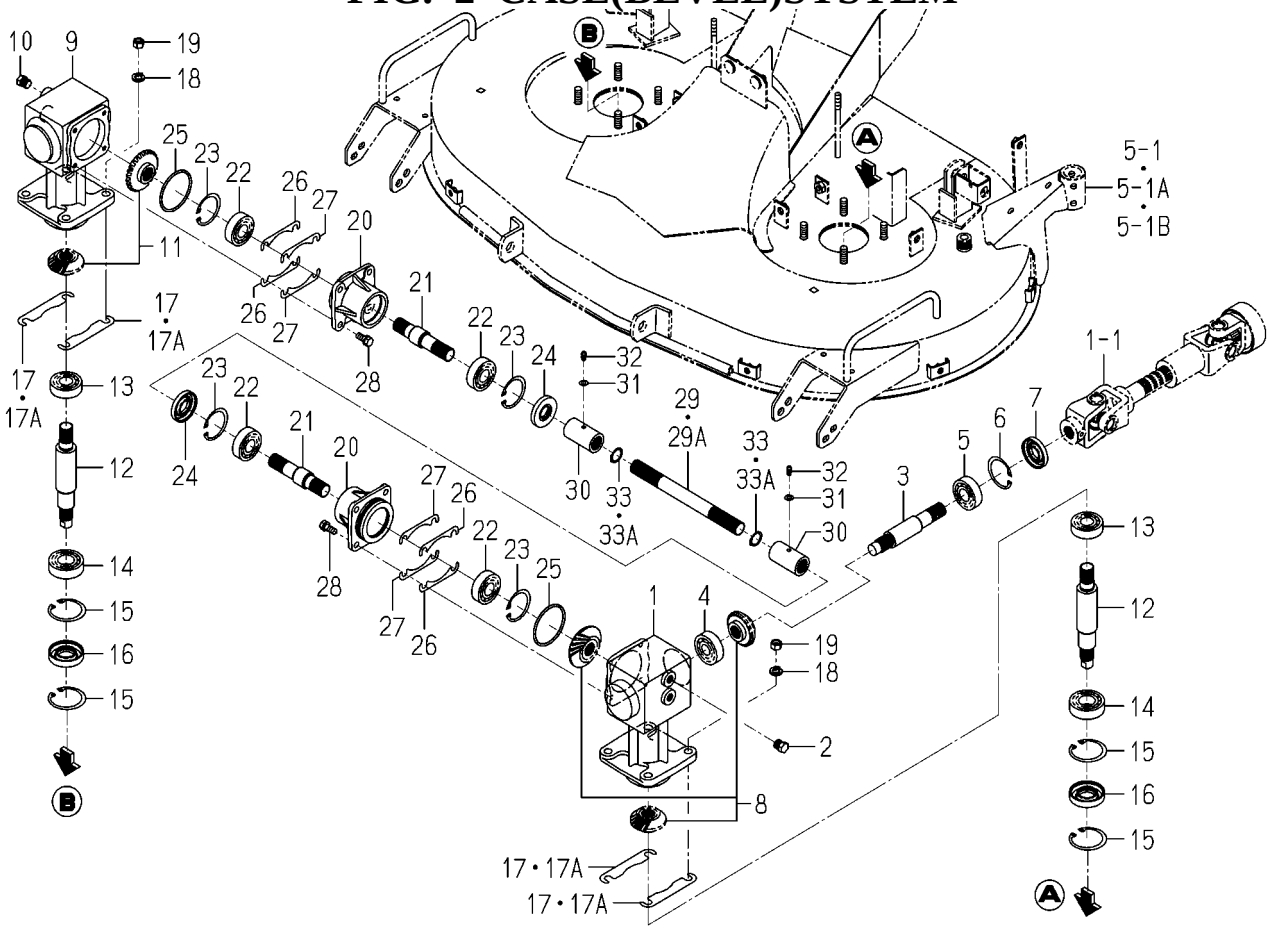

8670-201B-0100

KEY	PART CODE	DESCRIPTION	SPC	TYPE OF MODEL SCMA40 SXG216		ITC	COL	GRP	REMARKS
29A	8670-201-008-10	SHAFT/JOINT	*	1 80-		1			
30	1782-122-051-00	COUPLING/18X30X55	*	2			7F		
31	V411-260-006-00	WASHER,PL/M6	*	2					
32	V760-150-000-00	NIPPLE,GREASE	*	2					
33	V704-140-020-00	RING,SNAP/20 C	*	2 -79					
33A	8674-202-012-00	RING/SNAP/CS20	*	2 80-					

FIG. 3 COLLAR(BLADE)SYSTEM

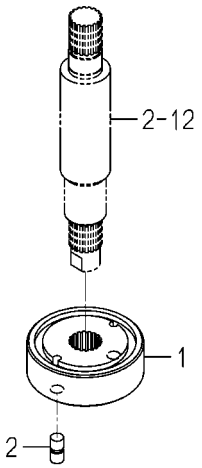

8670-301 -0100

KEY	PART CODE	DESCRIPTION	SPC	TYPE OF MODEL SCMA40 SXG216		ITC	COL	GRP	REMARKS
1	8670-301-001-00	COLLAR/BLADE	*	2					
2	8670-301-002-10	PIN/08X16	*	4					

FIG. 4 BLADE SYSTEM

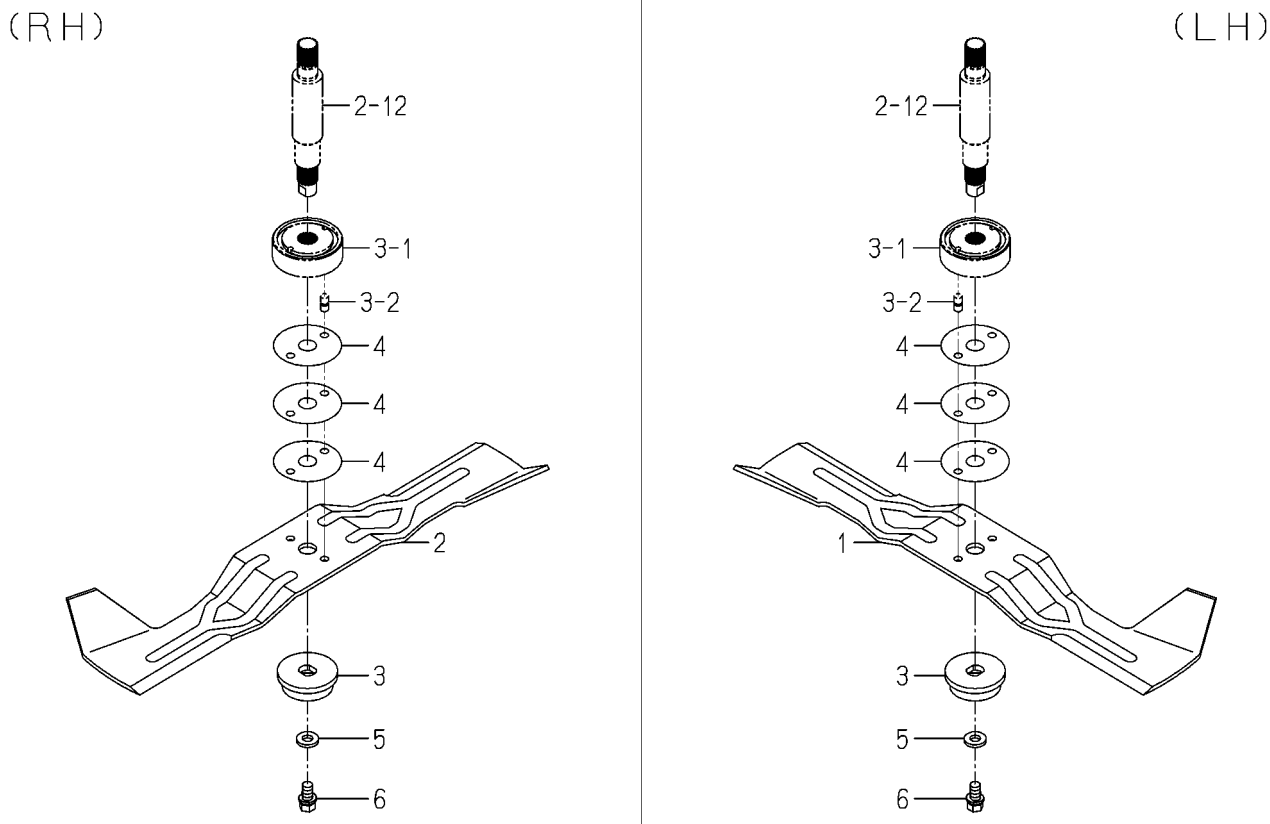

8670-306 -0100

KEY	PART CODE	DESCRIPTION	SPC	TYPE OF MODEL SCMA40 SXG216		ITC	COL	GRP	REMARKS
1	8670-306-001-20	BLADE/60X538/A	*	1					
2	8670-306-002-20	BLADE/60X538/B	*	1					
3	8670-306-210-00	PLATE/BLADE COMP	*	2					
4	8670-306-003-00	SHIM/1.2	*	6					
5	8670-306-005-00	WASHER/11X22X03	*	2					
6	V211-561-002-00	BOLT,S/M10X20/7T	*	2					

FIG. 5 DECK(MOWER)SYSTEM

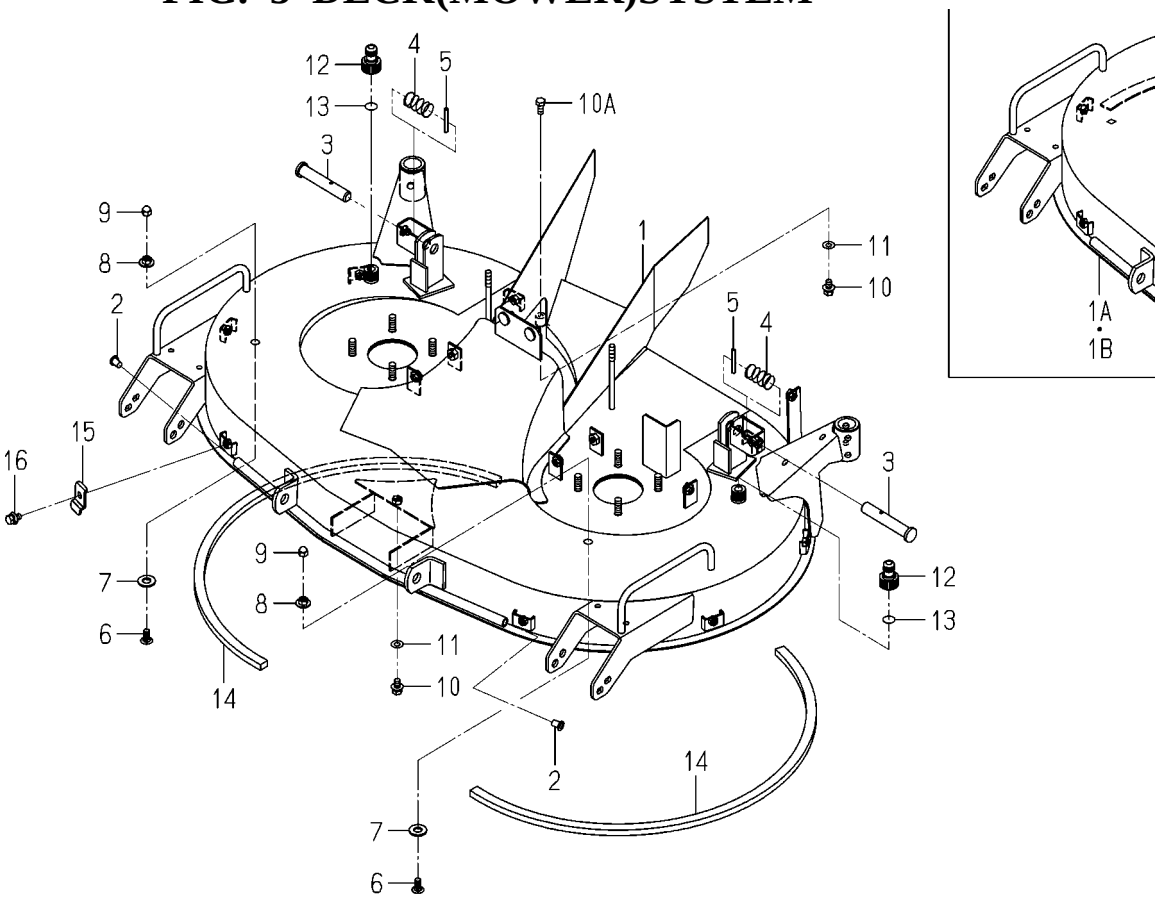

8670-402A-0100

KEY	PART CODE	DESCRIPTION	SPC	TYPE OF MODEL SCMA40 SXG216		ITC	COL	GRP	REMARKS
1	8670-402-710-00	DECK/MOWER/40/216	*	1 -2250			7F		
1A	8670-402-710-10	DECK/MOWER/40/216	*	1 -2456		1	7F		
1B	8670-402-710-20	DECK/MOWER/40/216	*	1 2457-		1	7F		
2	1427-120-002-00	CAP,BLANK/M10	*	2 -2250					
3	8595-608-082-10	PIN/16X96	*	2					
4	1560-601-028-00	SPRING/HC042	*	2					
5	V580-140-504-00	PIN,SPRING/5X40 W	*	2					
6	7866-405-016-00	CUP HEAD SQUARE NECK	*	2					
7	V411-260-012-00	WASHER,PL/M12	*	2					
8	V363-260-008-00	NUT/WASHER/M8	*	2					
9	V341-120-008-00	NUT,CAP/M8	*	2					
10	V211-360-801-60	BOLT,SP/M8X16	*	2 -79					
10A	V201-260-801-60	BOLT/M8X16	*	1 80-					
11	V411-260-008-00	WASHER,PL/M8	*	2 -79					
12	8663-402-002-10	PLUG/HOSE	*	2					
13	8674-402-002-00	PLATE/PIPE	*	2 1929-					
14	3852-335-004-00	INSULATOR/860	*	2					
15	8670-402-001-10	STAY/INSULATOR	*	8					
16	V211-360-801-60	BOLT,SP/M8X16	*	8					

FIG. 6 COVER(DISCHARGE)SYSTEM

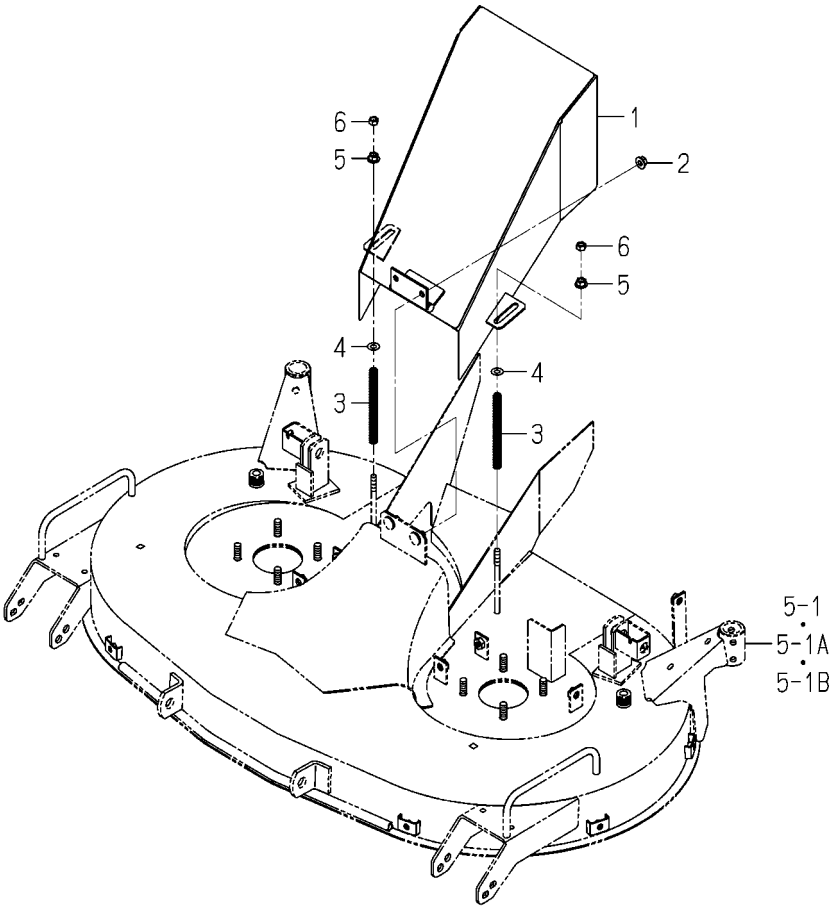

8670-406A-0100

KEY	PART CODE	DESCRIPTION	SPC	TYPE OF MODEL SCMA40 SXG216		ITC	COL	GRP	REMARKS
1	8670-406-710-00	COVER/DISCHARGE COMP	*	1			7F		
2	V363-260-008-00	NUT/WASHER/M8	*	2					
3	8670-406-071-00	SPRING/HC130	*	2					
4	V411-260-008-00	WASHER,PL/M8	*	2					
5	V363-260-008-00	NUT/WASHER/M8	*	2					
6	V304-260-008-00	NUT/M8	*	2					

FIG. 7 COVER SYSTEM

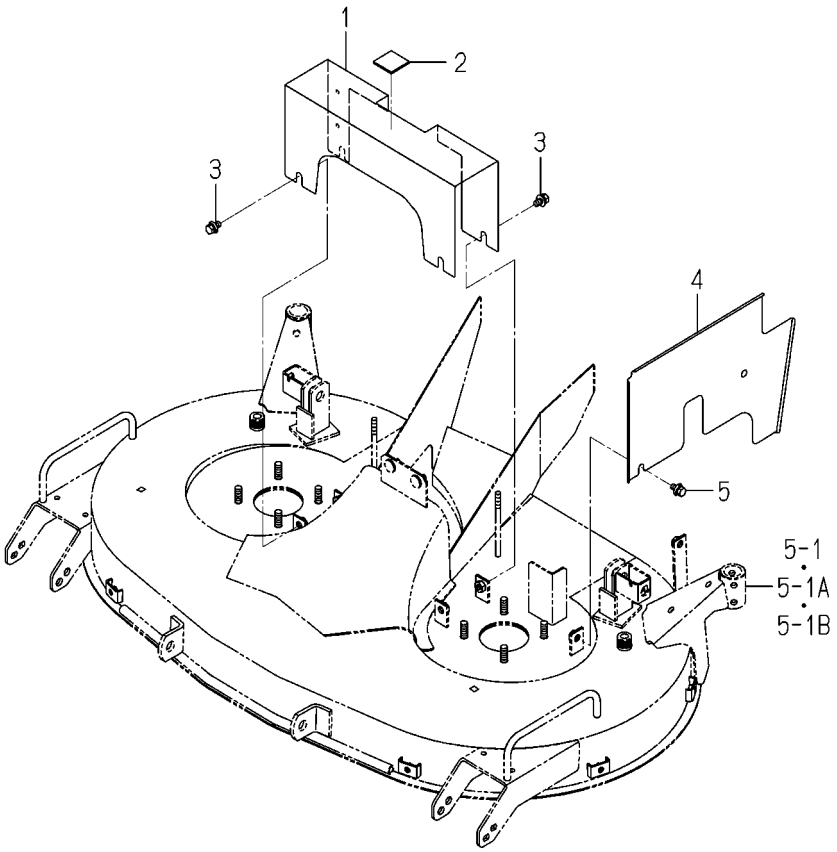

8670-407A-0100

KEY	PART CODE	DESCRIPTION	SPC	TYPE OF MODEL SCMA40	SXG216	ITC	COL	GRP	REMARKS
1	8670-407-011-10	COVER/SHAFT	*	1					
2	8670-407-004-00	INSULATOR/38X38X03	*	1					
3	V211-360-801-60	BOLT,SP/M8X16	*	4					
4	8670-407-013-10	COVER/JOINT	*	1			7F		
5	V211-360-801-60	BOLT,SP/M8X16	*	2					

FIG. 8 WHEEL(GAUGE)SYSTEM

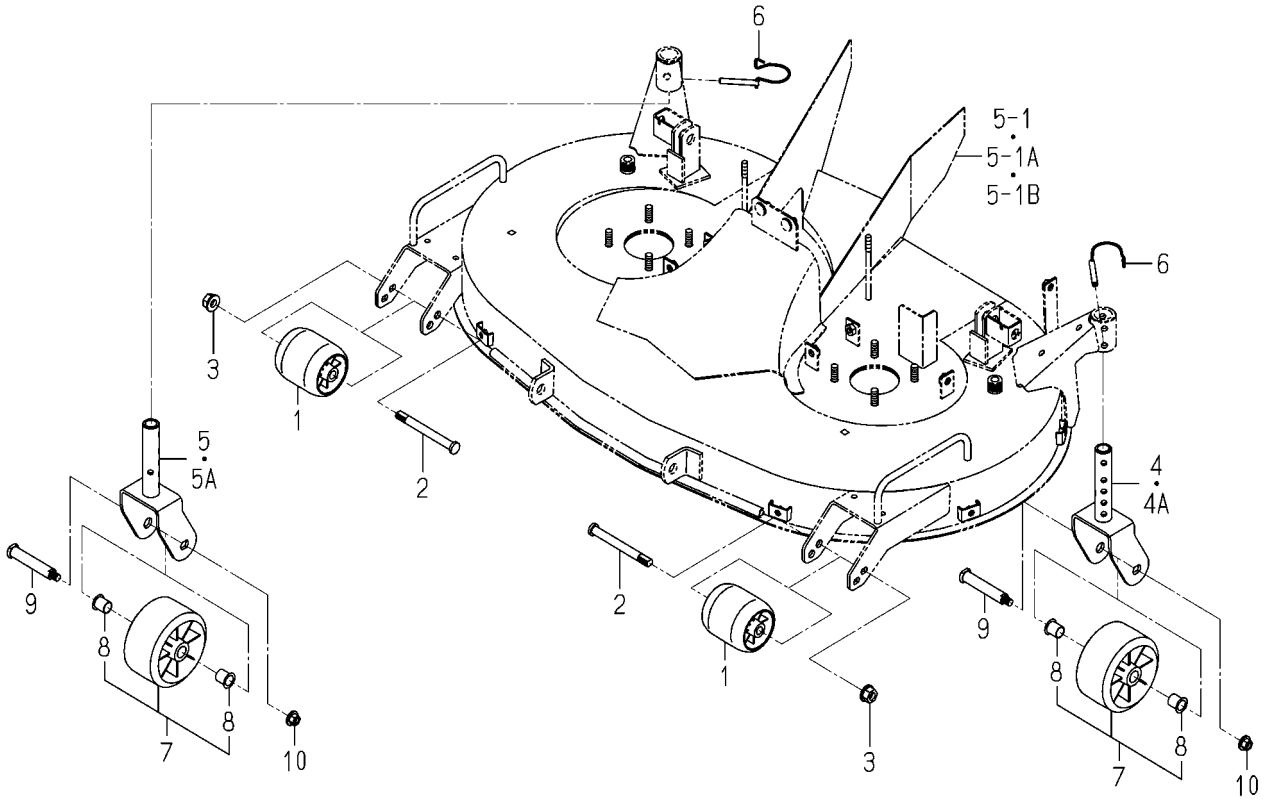

8670-501 -0100

KEY	PART CODE	DESCRIPTION	SPC	TYPE OF MODEL SCMA40 SXG216		ITC	COL	GRP	REMARKS
1	8595-501-001-20	WHEEL/GAUGE/FRONT	*	2					
2	8663-501-051-00	PIN/12X117	*	2					
3	V360-260-012-00	NUT/WASHER/M12	*	2					
4	8670-501-220-00	FORK/WHEEL/REAR/LH	*	1 -2345			7F		
4A	8670-501-220-10	FORK/WHEEL/REAR/LH	*	1 2346-		1	7F		
5	8670-501-230-00	FORK/WHEEL/REAR/RH	*	1 -2345			7F		
5A	8670-501-230-10	FORK/WHEEL/REAR/RH	*	1 2346-		1	7F		
6	8663-501-240-00	PIN/08X60 COMP	*	2					
7	8595-501-510-00	WHEEL,GAUGE ASSY	*	2					
8	1560-285-006-20	BUSH/16X24X21	*	4					
9	8595-501-005-20	PIN/16X94	*	2					
10	V363-260-010-00	NUT/WASHER/M10	*	2					

FIG. 9 LINK(LIFT)SYSTEM

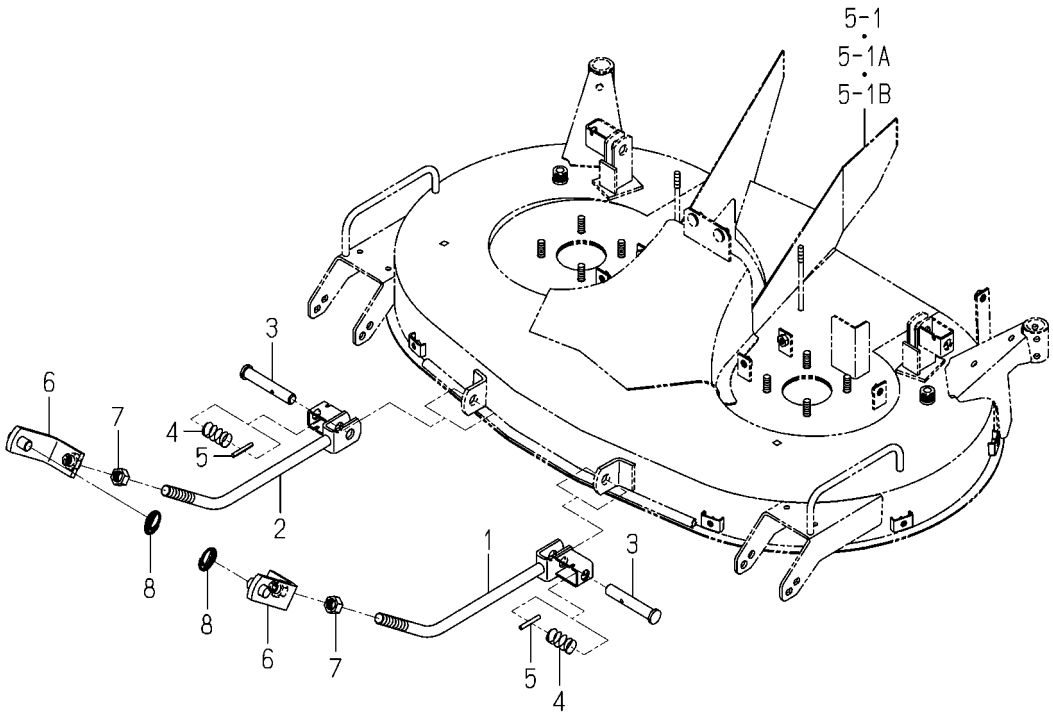

8670-608A-0100

KEY	PART CODE	DESCRIPTION	SPC	TYPE OF MODEL SCMA40 SXG216		ITC	COL	GRP	REMARKS
1	8670-608-210-00	ARM/FRONT/LH COMP	*	1			7F		
2	8670-608-230-00	ARM/FRONT/RH COMP	*	1			7F		
3	8595-608-082-10	PIN/16X96	*	2					
4	1560-601-028-00	SPRING/HC042	*	2					
5	V580-140-504-00	PIN,SPRING/5X40 W	*	2					
6	8670-608-220-00	PLATE/L/38X110 COMP	*	2					
7	V304-260-016-00	NUT/M16	*	2					
8	1427-317-003-00	CLIP,PIN	*	2					

FIG. 10 LABEL(CAUTION)

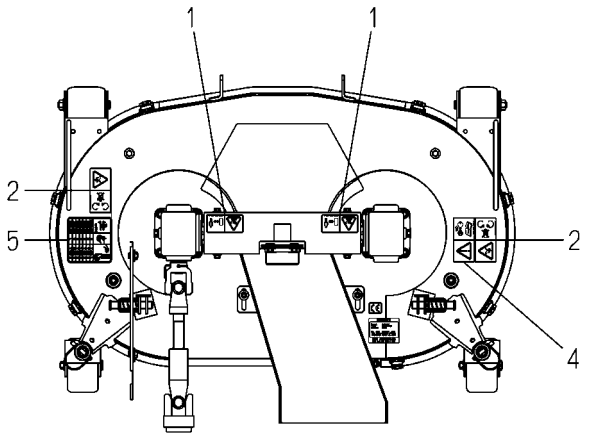

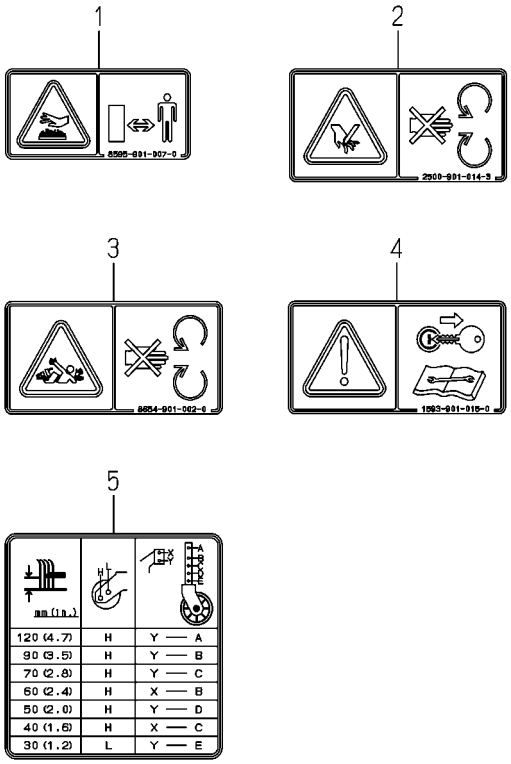

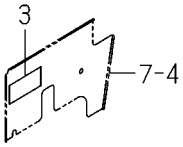

8670-901A-0100

KEY	PART CODE	DESCRIPTION	SPC	TYPE OF MODEL SCMA40 SXG216		ITC	COL	GRP	REMARKS
1	8595-901-007-00	LABEL/WARNING/HOT	*	2					
2	2500-901-014-30	LABEL/DANGER	*	2					
3	8654-901-002-00	LABEL/PTO	*	1					
4	1593-901-015-00	LABEL/MAINTENANCE	*	1					
5	8670-901-001-00	LABEL/GAUGEWHEEL	*	1					

FIG. 11 LABEL(CE)

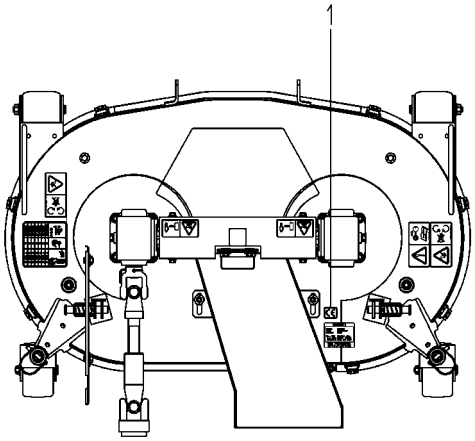

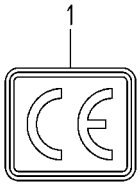

8670-905 -0100

KEY	PART CODE	DESCRIPTION	SPC	TYPE OF MODEL SCMA40 SXG216		ITC	COL	GRP	REMARKS
1	2500-901-027-00	LABEL/CE	*	1					

FIG. 12 PIN(SAFETY)

8670-930 -0100

KEY	PART CODE	DESCRIPTION	SPC	TYPE OF MODEL SCMA40 SXG216		ITC	COL	GRP	REMARKS
1	8670-301-002-10	PIN/08X16	*	4					

FIG. 13 CASE(BEVEL)ASSY(REPAIR)(1/2)

24~30-PLEASE SEE 2/2 PAGE

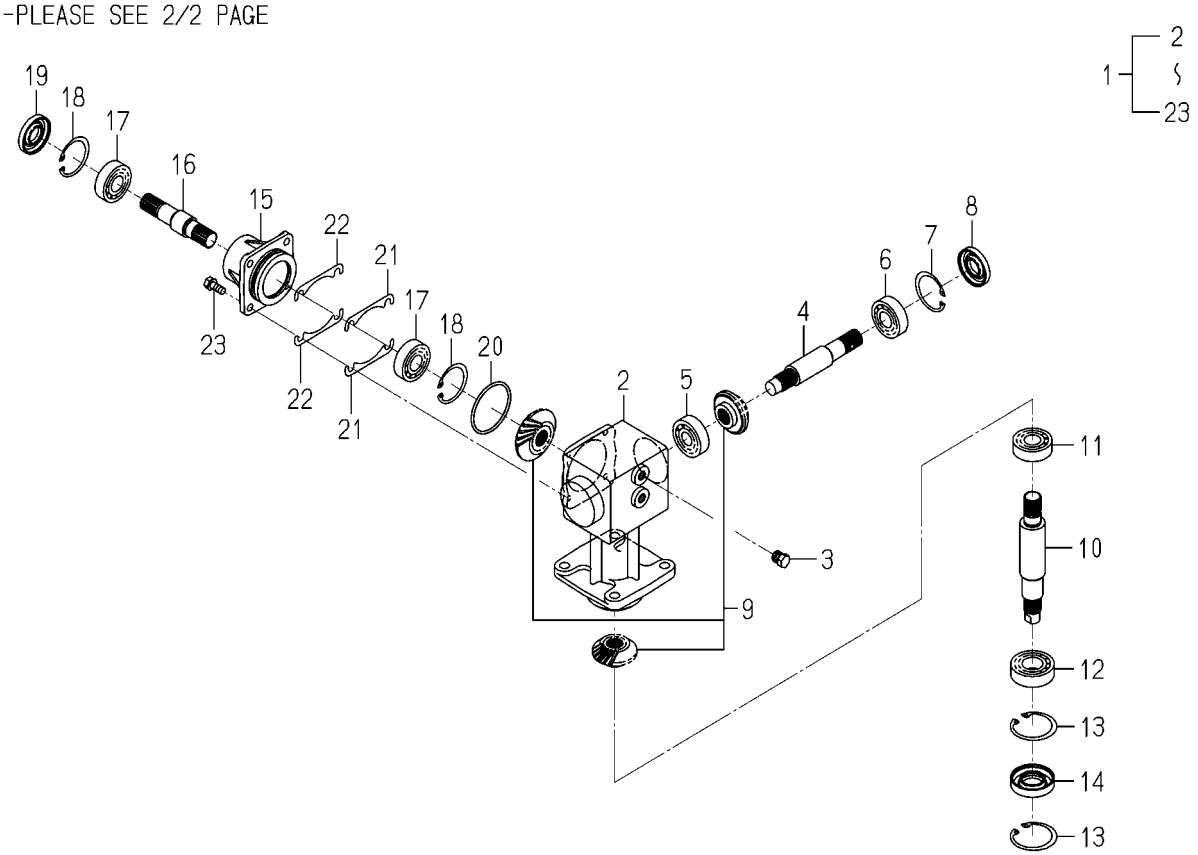

8670-201Z-0100

KEY	PART CODE	DESCRIPTION	SPC	TYPE OF MODEL SCMA40 SXG216		ITC	COL	GRP	REMARKS
1	8670-201-260-00	CASE/BEVEL/LH ASSY	R	1					
2	8670-201-001-00	CASE/BEVEL/LH	R	1					
3	7955-201-026-00	PLUG,DRAIN (1/4)	R	2					
4	8670-201-002-00	SHAFT/INPUT	R	1					
5	V600-110-630-30	BEARING,RB/6303	R	1					
6	V600-110-620-40	BEARING,RB/6204	R	1					
7	V705-140-047-00	RING,SNAP/47 C	R	1					
8	V744-120-470-70	SEAL,OIL/TC20477	R	1					
9	8670-201-210-00	GEAR/BEVEL/19-23-19	R	1					
10	8670-201-004-00	SHAFT/BLADE	R	1					
11	V600-110-620-40	BEARING,RB/6204	R	1					
12	V600-110-620-50	BEARING,RB/6205	R	1					
13	V705-140-052-00	RING,SNAP/52 C	R	2					
14	V744-125-521-00	SEAL,OIL/TC255210	R	1					
15	8670-201-006-00	METAL/CASE	R	1					
16	8670-201-007-00	SHAFT/CASE	R	1					
17	V600-110-620-40	BEARING,RB/6204	R	2					
18	V705-140-047-00	RING,SNAP/47 C	R	2					
19	V744-120-470-70	SEAL,OIL/TC20477	R	1					
20	V721-103-106-00	O-RING/1A,G60	R	1					
21	8663-202-055-00	SHIM/0.1	R	4					
22	8663-202-056-00	SHIM/0.2	R	2					
23	V211-260-802-00	BOLT,S/M8X20	R	4					
24	8670-201-270-00	CASE/BEVEL/RH ASSY	R	1					
25	8670-201-003-00	CASE/BEVEL/RH	R	1					
26	7955-201-026-00	PLUG,DRAIN (1/4)	R	2					
27	8670-201-220-00	GEAR/BEVEL/23-1 SET	R	1					
28	8670-201-004-00	SHAFT/BLADE	R	1					
29	V600-110-620-40	BEARING,RB/6204	R	1					
30	V600-110-620-50	BEARING,RB/6205	R	1					

FIG. 13 CASE(BEVEL)ASSY(REPAIR)(2/2)

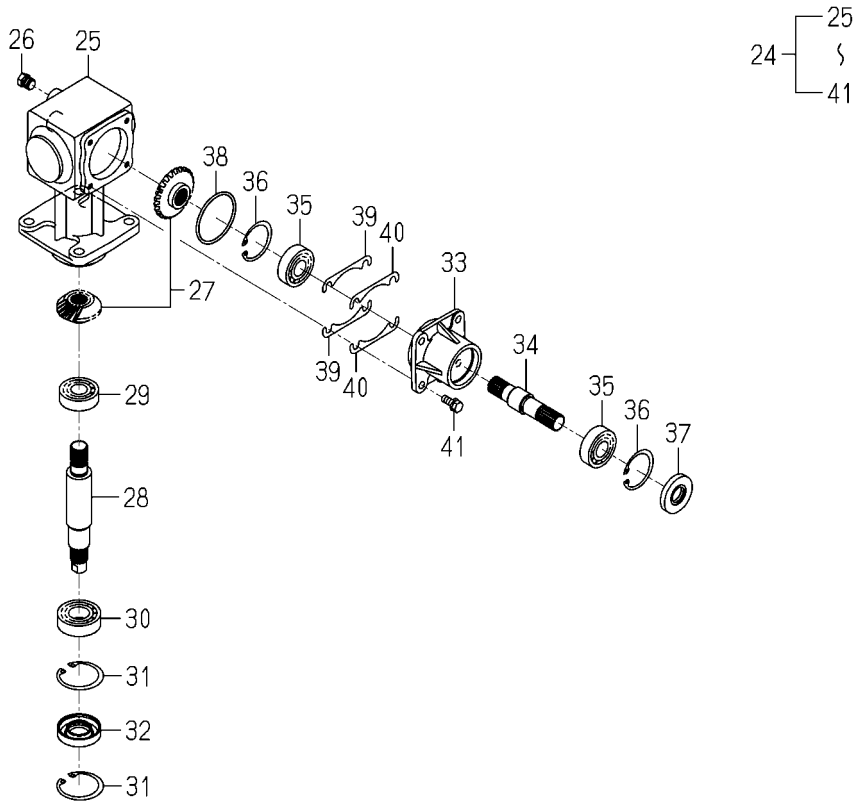

8670-201Z-0100

KEY	PART CODE	DESCRIPTION	SPC	TYPE OF MODEL SCMA40 SXG216		ITC	COL	GRP	REMARKS
31	V705-140-052-00	RING,SNAP/52 C	R	2					
32	V744-125-521-00	SEAL,OIL/TC255210	R	1					
33	8670-201-006-00	METAL/CASE	R	1					
34	8670-201-007-00	SHAFT/CASE	R	1					
35	V600-110-620-40	BEARING,RB/6204	R	2					
36	V705-140-047-00	RING,SNAP/47 C	R	2					
37	V744-120-470-70	SEAL,OIL/TC20477	R	1					
38	V721-103-106-00	O-RING/1A,G60	R	1					
39	8663-202-055-00	SHIM/0.1	R	4					
40	8663-202-056-00	SHIM/0.2	R	2					
41	V211-260-802-00	BOLT,S/M8X20	R	4					

FIG. 14 MULCHING KIT(OPTION)

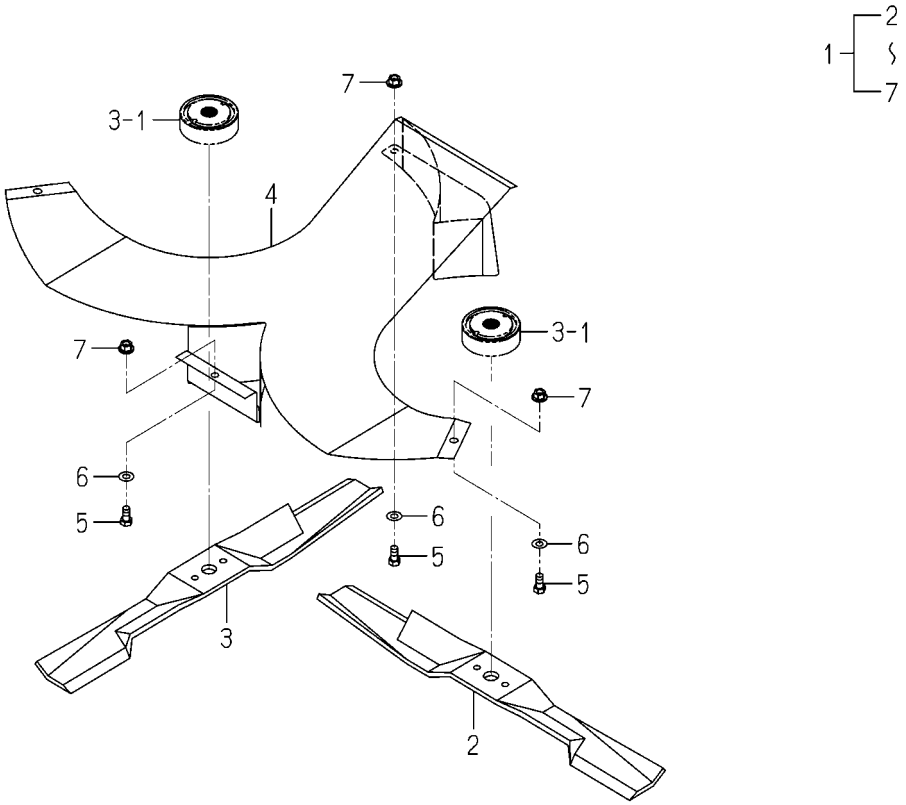

8670-701Z-0100

KEY	PART CODE	DESCRIPTION	SPC	TYPE OF MODEL SCMA40 SXG216		ITC	COL	GRP	REMARKS
1	8670-701-200-10	MULCHINGKIT	T	1					
2	8670-701-001-00	BLADE/60X536/Y	T	1					
3	8670-701-002-00	BLADE/60X536/Z	T	1					
4	8670-701-210-10	PLATE/DECK COMP	T	1					
5	V201-260-801-60	BOLT/M8X16	T	4					
6	V411-260-008-00	WASHER,PL/M8	T	4					
7	V362-260-008-00	NUT/WASHER/M8	T	4					

FIG. 15 COMPONENT PARTS FOR 8670-101-210-00 ON Fig.1

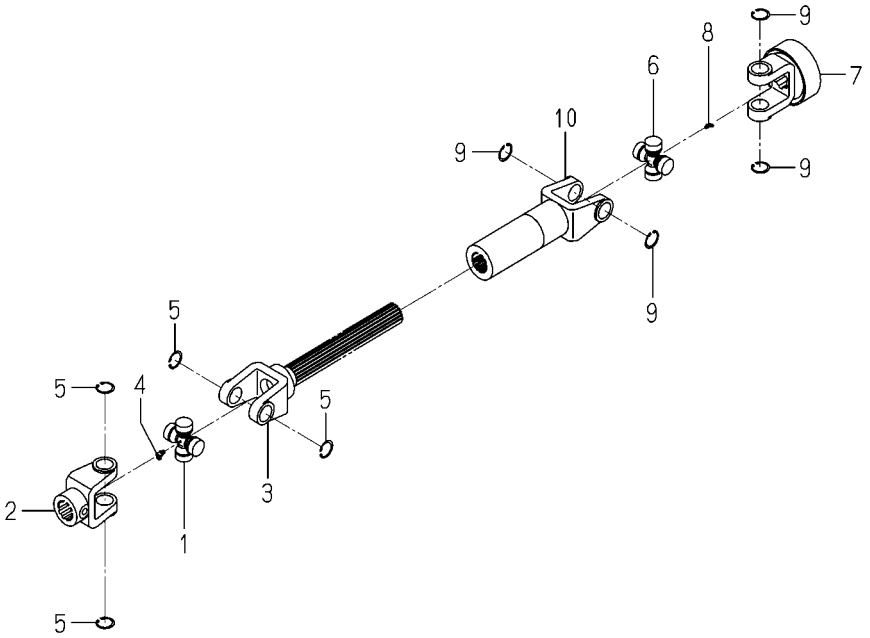

8670-101-210-0D

KEY	PART CODE	DESCRIPTION	SPC	TYPE OF MODEL SCMA40 SXG216		ITC	COL	GRP	REMARKS
1	8654-101-911-00	JOINTKIT	*	1					
2	8670-101-221-00	CLANPYOKE	*	1					
3	8670-101-222-00	SPLINEYOKE	*	1					
4	8654-101-917-00	GREASENIPPLE	*	1					
5	8654-101-918-00	SNAPRING	*	4					
6	8654-101-911-00	JOINTKIT	*	1					
7	8670-101-231-00	ONETOUCHJOINT/B	*	1					
8	8654-101-917-00	GREASENIPPLE	*	1					
9	8654-101-918-00	SNAPRING	*	4					
10	8670-101-232-00	SLEEVEYOKE	*	1					

Numerical Index

Part Code	Fig.	Key	Part Code	Fig.	Key	Part Code	Fig.	Key
1427-120-002-00	5	2	8670-201-002-00	13	4	8670-608-230-00	9	2
1427-317-003-00	9	8	8670-201-003-00	2	9	8670-701-001-00	14	2
1560-285-006-20	8	8		13	25	8670-701-002-00	14	3
1560-601-028-00	5	4	8670-201-004-00	2	12	8670-701-200-10	14	1
	9	4		13	10	8670-701-210-10	14	4
1593-901-015-00	10	4		13	28	8670-901-001-00	10	5
1782-122-051-00	2	30	8670-201-005-00	2	17	8674-101-001-00	1	3
2500-901-014-30	10	2	8670-201-005-10	2	17-A	8674-202-012-00	2	33-A
2500-901-027-00	11	1	8670-201-006-00	2	20	8674-402-002-00	5	13
3852-335-004-00	5	14		13	15	V201-260-801-60	5	10-A
7866-405-016-00	5	6		13	33		14	5
7955-201-026-00	2	2	8670-201-007-00	2	21	V211-260-802-00	2	28
	2	10		13	16		13	23
	13	3		13	34		13	41
	13	26	8670-201-008-00	2	29	V211-360-801-60	5	10
8595-501-001-20	8	1	8670-201-008-10	2	29-A		5	16
8595-501-005-20	8	9	8670-201-210-00	2	8		7	3
8595-501-510-00	8	7		13	9		7	5
8595-608-082-10	5	3	8670-201-220-00	2	11	V211-561-002-00	4	6
	9	3		13	27	V304-260-008-00	6	6
8595-901-007-00	10	1	8670-201-260-00	13	1	V304-260-010-00	2	19
8654-101-911-00	15	1	8670-201-270-00	13	24	V304-260-016-00	9	7
	15	6	8670-301-001-00	3	1	V341-120-008-00	5	9
8654-101-917-00	15	4	8670-301-002-10	3	2	V360-260-012-00	8	3
	15	8		12	1	V362-260-008-00	14	7
8654-101-918-00	15	5	8670-306-001-20	4	1	V363-260-008-00	5	8
	15	9	8670-306-002-20	4	2		6	2
8654-901-002-00	10	3	8670-306-003-00	4	4		6	5
8663-202-055-00	2	26	8670-306-005-00	4	5	V363-260-010-00	8	10
	13	21	8670-306-210-00	4	3	V401-160-010-00	2	18
	13	39	8670-402-001-10	5	15	V411-260-006-00	2	31
8663-202-056-00	2	27	8670-402-710-00	5	1	V411-260-008-00	5	11
	13	22	8670-402-710-10	5	1-A		6	4
	13	40	8670-402-710-20	5	1-B		14	6
8663-402-002-10	5	12	8670-406-071-00	6	3	V411-260-012-00	5	7
8663-501-051-00	8	2	8670-406-710-00	6	1	V580-140-504-00	5	5
8663-501-240-00	8	6	8670-407-004-00	7	2		9	5
8670-101-210-00	1	1	8670-407-011-10	7	1	V580-140-604-00	1	2
8670-101-221-00	15	2	8670-407-013-10	7	4	V600-110-620-40	2	5
8670-101-222-00	15	3	8670-501-220-00	8	4		2	13
8670-101-231-00	15	7	8670-501-220-10	8	4-A		2	22
8670-101-232-00	15	10	8670-501-230-00	8	5		13	6
8670-201-001-00	2	1	8670-501-230-10	8	5-A		13	11
	13	2	8670-608-210-00	9	1		13	17
8670-201-002-00	2	3	8670-608-220-00	9	6		13	29

Numerical Index

Part Code	Fig.	Key	Part Code	Fig.	Key	Part Code	Fig.	Key
V600-110-620-40	13	35						
V600-110-620-50	2	14						
	13	12						
	13	30						
V600-110-630-30	2	4						
	13	5						
V704-140-020-00	2	33						
V705-140-047-00	2	6						
	2	23						
	13	7						
	13	18						
	13	36						
V705-140-052-00	2	15						
	13	13						
	13	31						
V721-103-106-00	2	25						
	13	20						
	13	38						
V744-120-470-70	2	7						
	2	24						
	13	8						
	13	19						
	13	37						
V744-125-521-00	2	16						
	13	14						
	13	32						
V760-150-000-00	2	32						

Alpabetical Index

8670-097-210-10

Description	Fig.	Key
ARM/FRONT/LH COMP	9	1
ARM/FRONT/RH COMP	9	2
BEARING,RB/6204	2	5
	2	13
	2	22
	13	6
	13	11
	13	17
	13	29
	13	35
BEARING,RB/6205	2	14
	13	12
	13	30
BEARING,RB/6303	2	4
	13	5
BLADE/60X536/Y	14	2
BLADE/60X536/Z	14	3
BLADE/60X538/A	4	1
BLADE/60X538/B	4	2
BOLT,S/M10X20/7T	4	6
BOLT,S/M8X20	2	28
	13	23
	13	41
BOLT,SP/M8X16	5	10
	5	16
	7	3
	7	5
BOLT/M8X16	5	10-A
	14	5
BUSH/16X24X21	8	8
CAP,BLANK/M10	5	2
CASE/BEVEL/LH	2	1
	13	2
CASE/BEVEL/LH ASSY	13	1
CASE/BEVEL/RH	2	9
	13	25
CASE/BEVEL/RH ASSY	13	24
CLANPYOKE	15	2
CLIP,PIN	9	8
COLLAR/BLADE	3	1
COUPLING/18X30X55	2	30
COVER/DISCHARGE COMP	6	1
COVER/JOINT	7	4
COVER/SHAFT	7	1
CUP HEAD SQUARE NECK	5	6

Description	Fig.	Key
DECK/MOWER/40/216	5	1
	5	1-A
	5	1-B
FORK/WHEEL/REAR/LH	8	4
	8	4-A
FORK/WHEEL/REAR/RH	8	5
	8	5-A
GEAR/BEVEL/19-23-19	2	8
	13	9
GEAR/BEVEL/23-1 SET	2	11
	13	27
GREASENIPPLE	15	4
	15	8
INSULATOR/38X38X03	7	2
INSULATOR/860	5	14
JOINT/UNIVERSAL SET	1	1
JOINTKIT	15	1
	15	6
LABEL/CE	11	1
LABEL/DANGER	10	2
LABEL/GAUGEWHEEL	10	5
LABEL/MAINTENANCE	10	4
LABEL/PTO	10	3
LABEL/WARNING/HOT	10	1
METAL/CASE	2	20
	13	15
	13	33
MULCHINGKIT	14	1
NIPPLE,GREASE	2	32
NUT,CAP/M8	5	9
NUT/M10	2	19
NUT/M16	9	7
NUT/M8	6	6
NUT/WASHER/M10	8	10
NUT/WASHER/M12	8	3
NUT/WASHER/M8	5	8
	6	2
	6	5
	14	7
ONETOUCHJOINT/B	15	7
O-RING/1A,G60	2	25
	13	20
	13	38
PIN,SPRING/5X40 W	5	5
	9	5

Description	Fig.	Key
PIN,SPRING/6X40 W	1	2
PIN/08X16	3	2
	12	1
PIN/08X60 COMP	8	6
PIN/12X117	8	2
PIN/16X94	8	9
PIN/16X96	5	3
	9	3
PLATE/BLADE COMP	4	3
PLATE/DECK COMP	14	4
PLATE/L/38X110 COMP	9	6
PLATE/PIPE	5	13
PLUG,DRAIN (1/4)	2	2
	2	10
	13	3
	13	26
PLUG/HOSE	5	12
RING,SNAP/20 C	2	33
RING,SNAP/47 C	2	6
	2	23
	13	7
	13	18
	13	36
RING,SNAP/52 C	2	15
	13	13
	13	31
RING/SNAP/CS20	2	33-A
SEAL,OIL/TC20477	2	7
	2	24
	13	8
	13	19
	13	37
SEAL,OIL/TC255210	2	16
	13	14
	13	32
SHAFT/BLADE	2	12
	13	10
	13	28
SHAFT/CASE	2	21
	13	16
	13	34
SHAFT/INPUT	2	3
	13	4
SHAFT/JOINT	2	29
	2	29-A

Alpabetical Index

Description	Fig.	Key	Description	Fig.	Key	Description	Fig.	Key
SHIM/0.1	2	26						
	13	21						
	13	39						
SHIM/0.2	2	17						
	2	17-A						
	2	27						
	13	22						
	13	40						
SHIM/1.2	4	4						
SLEEVEYOKE	15	10						
SNAPRING	15	5						
	15	9						
SPLINEYOKE	15	3						
SPRING/HC042	5	4						
	9	4						
SPRING/HC130	6	3						
STAY/INSULATOR	5	15						
WASHER,PL/M12	5	7						
WASHER,PL/M6	2	31						
WASHER,PL/M8	5	11						
	6	4						
	14	6						
WASHER,SP/M10	2	18						
WASHER/11X22X03	4	5						
WHEEL,GAUGE ASSY	8	7						
WHEEL/GAUGE/FRONT	8	1						
WIRE/1.6X150	1	3						