ISEKI

Parts Catalogue

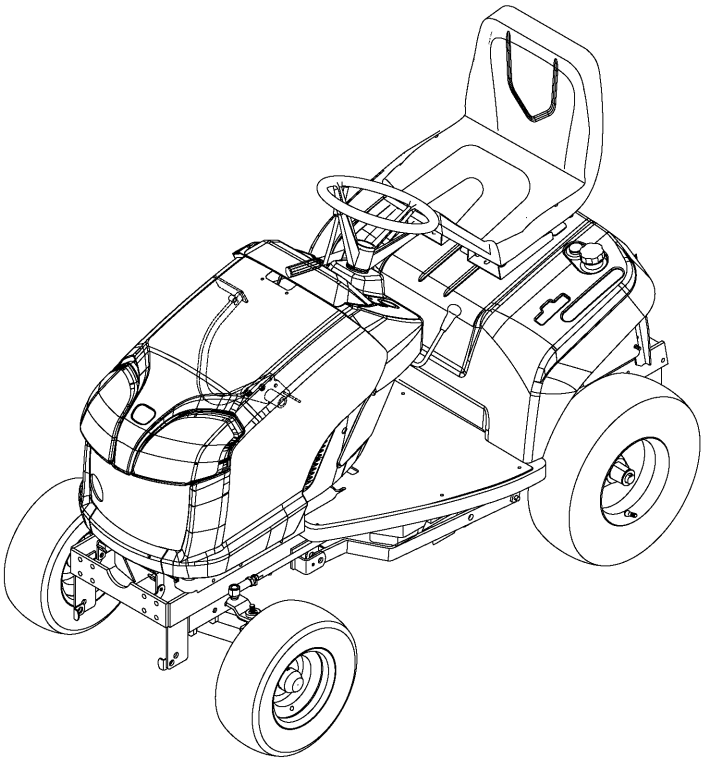

GARDEN TRACTOR SXG216H5

SXG216H5-RE42,SRE42

1782-097-320-00

Printed in Japan June,2017

Directions for use of Parts Catalogue

1. Applicable model of machines

All component and option parts used for SXG216H5 lawn & garden tractors are listed in this parts catalogue.

1) MODEL TYPE

H····· HST

R····· ROPS

S····· WITH SEAT

5····· ISO5395

2) AREA CODE

E4····· EUROPE, OCEANIA

2. Details of the Structure Table of Model

*** Structure Table of Model ***

MODEL	S F 3 1 0	F H U X W E 4 6	F H U X W E G E 4									
FIG.												
1	***	***										
2	*	*										
3		***										
4	***											
5		***										
6	***											
7	***	***										
8	*[illegible]											

① ③ ②

① FIG. : Parts structure of the machine is classified by its functions. FIG. number corresponds to the number written at the top of the parts illustration.

② Model : Shows the name of the model.

③ Structure Table : Shows which functions are originally equipped or can be

equipped afterwards for each machines

`*´ Standard Parts

`T´ Optional Parts

`R´ Repair Parts (parts which can only be used for repairs)

3. Explanation for head paragraph

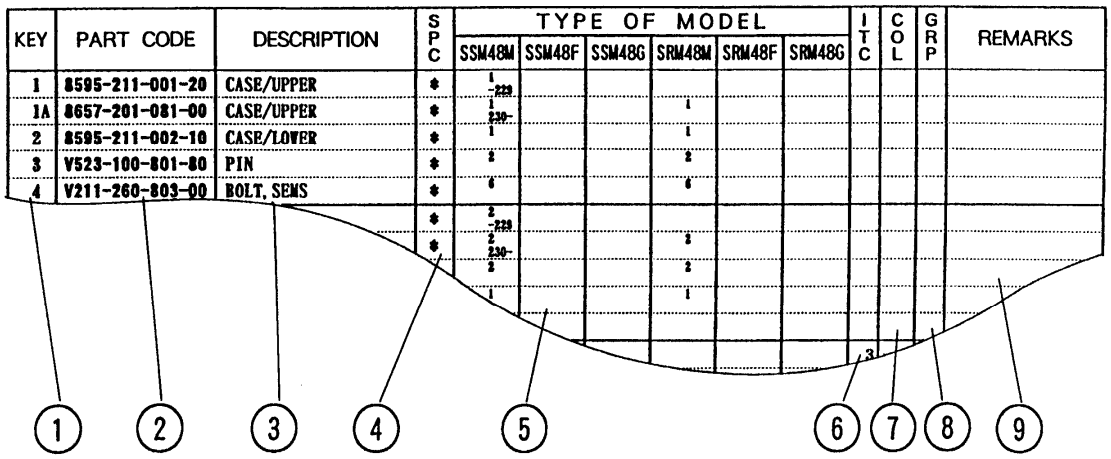

KEY	PART CODE	DESCRIPTION	SPC	TYPE OF MODEL						ITC	COL	GRP	REMARKS
				SSM48M	SSM48F	SSM48G	SRM48M	SRM48F	SRM48G				
1	8595-211-001-20	CASE/UPPER	*	1 -229									
1A	8657-201-081-00	CASE/UPPER	*	1 230-			1						
2	8595-211-002-10	CASE/LOWER	*	1			1						
3	V523-100-801-80	PIN	*	2			2						
4	V211-260-803-00	BOLT, SEMS	*	6			6						
			*	2 -229									
			*	2 230-			2						
				2			2						
				1			1						

① KEY shows the location of parts diagramed in the illustration.

② Parts numbers begin with `V´ and `W´ are standard parts of the market.

③ `LH´ and `RH´ on the parts name are described against the moving direction of the machine or are described on the condition how to install parts on the machines.

④ SPC : The following symbol classifies parts to be used for machines.

`*´ means standard parts.

`T´ shows that the parts can be installed as optional parts.

`R´ shows that the parts can be used as applicable parts to replace originally equipped parts.

⑤ Upper column : QTY shows the number of parts to be used for one unit of machine.

`M´ is indicated for parts supplied by a meter long.

`l´ is indicated for parts supplied by liter.

`AR´ is indicated for parts need to be adjusted or regulated.

Lower column : serial number

—229 means serial number up to 229.

230— means serial number 230 and after.

⑥ ITC : Interchangeability

`1´…OLD ← NEW

New parts can be used in place of the old parts.

`2´…OLD → NEW

Old parts can be used in place of the new parts.

`3´…OLD →← NEW

Old parts and new parts can not be replaced each other.

⑦ COL : Color code

Color is signified with color code number for colored parts.

Please see the color list shown in the next page.

⑧ GRP : Parts shown in this column can be replaced by SET parts.

Example : Parts marked Ⓐ can be replaced by parts marked Ⓑ, and Ⓓ for Ⓒ, so the rest follow in the same alphabetical order.

⑨ Remarks

＊Other maker's part code number is shown in this column.

＊When Fig. No. is shown in the Remark column of SET parts or ASSY parts, each of their component parts are listed in said Fig. No.

4. Color :

The following colors are used color parts.

COLOR CODE	COLOR	SPRAY TYPE PARTS CODE	PAINTS 4K DRUM PARTS CODE	PAINTS 16K DRUM PARTS CODE
4L	NEO BLUE	1300-985-001-20	1300-985-003-00	1300-985-004-00
6G	SUMMER WHITE	1300-958-001-20	1300-958-003-00	1300-958-004-00
7F	MIRROR BLACK	1300-954-001-20	1300-954-003-00	1300-954-004-00

NOTE : Color code is signified only for the parts assigned by the maker as color parts.

5. Serial Numbers :

For chassies&engines serial number is shown on the LABEL.

Please see

chassies

engines

6. Parts Order

1) When you order parts, please make sure of correct numbers.
2) When substitute parts is available, the part number ordered will be automatically turned to a new part number.
3) Please be sure to use “ISEKI GENUINE PARTS”.
   Any other similar parts other than ISEKI parts when used may cause a trouble that makes us unable to repair or guarantee the warrant.

*** Structure Table of Model ***

MODEL / FIG.	SXG216H5	SRE42									
1	*	*									
2	*	*									
3	*	*									
4	*	*									
5	*	*									
6	*	*									
7	*	*									
8	*	*									
9	*	*									
10	*	*									
11	*	*									
12	*	*									
13	*	*									
14	*	*									
15	*	*									
16	*	*									
17	*	*									
18	*	*									
19	*	*									
20	*	*									
21	*	*									
22	*	*									
23	*	*									
24	*	*									
25	*	*									
26	*	*									
27	*	*									
28	*	*									
29	*	*									
30	*	*									
31	T	*									
32	T	*									
33	*	*									
34	*	*									
35	*	*									
36	*	*									
37	*	*									
38	*	*									
39	*	*									
40	*	*									
41	*	*									
42	*	*									
43	*	*									

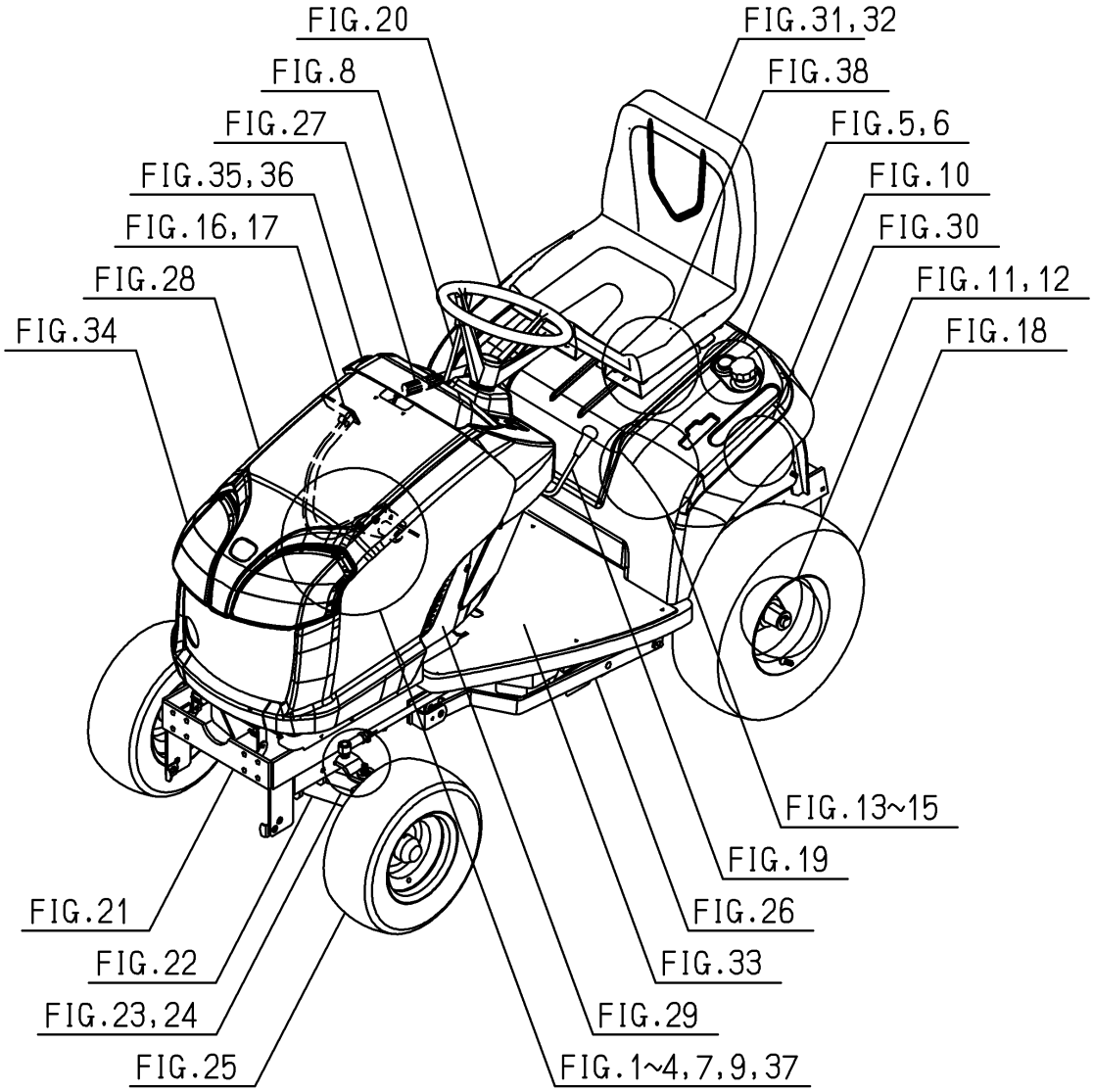
FIG.20
FIG.8
FIG.27
FIG.35,36
FIG.16,17
FIG.28
FIG.34
FIG.31,32
FIG.38
FIG.5,6
FIG.10
FIG.30
FIG.11,12
FIG.18
FIG.13~15
FIG.19
FIG.26
FIG.33
FIG.29
FIG.1~4,7,9,37
FIG.21
FIG.22
FIG.23,24
FIG.25

Contents

SXG216H5

ENGINE(E269G)

SHORT BLOCK ENGIASSY ..... Fig. 1
CYLINDER HEAD ..... Fig. 2
CYLINDER HEAD COVER ..... Fig. 3
INLET MANIFOLD ..... Fig. 4
EXHAUST MANIFOLD ..... Fig. 5
CYLINDER BLOCK ..... Fig. 6
BEARING/UNDER SIZE (OPTION) ..... Fig. 7
OIL PAN ..... Fig. 8
REAR PLATE ..... Fig. 9
TIMING GEAR CASE ..... Fig. 10
HANGER ..... Fig. 11
VALVE ..... Fig. 12
CAM SHAFT ..... Fig. 13
PISTON ..... Fig. 14
PISTON/OVER SIZE (OPTION) ..... Fig. 15
CRANK SHAFT ..... Fig. 16
OIL PUMP ..... Fig. 17
WATER PUMP ..... Fig. 18
COOLING FAN ..... Fig. 19
INJECTION NOZZLE ..... Fig. 20
INJECTION PUMP ..... Fig. 21
FUEL FILTER ..... Fig. 22
FUEL PIPE ..... Fig. 23
ADAPTER ..... Fig. 24

ELECTRIC (1)····· Fig. 25
ELECTRIC (2)····· Fig. 26
REPAIR PARTS(OPTION)·····Fig. 27
COMPONENT PARTS
FOR 6215-300-045-10 ON Fig.020·····Fig. 28
COMPONENT PARTS
FOR 6215-600-147-00 ON Fig.021·····Fig. 29
COMPONENT PARTS
FOR 6281-100-014-00 ON Fig.025·····Fig. 30

Contents

CHASSIS

BRACKET(ENGINE)SYSTEM ..... Fig. 1
RADIATOR SYSTEM ..... Fig. 2
MUFFLER SYSTEM ..... Fig. 3
CLEANER(AIR)SYSTEM ..... Fig. 4
PUMP(FUEL)SYSTEM ..... Fig. 5
TANK(FUEL)SYSTEM ..... Fig. 6
BATTERY SYSTEM ..... Fig. 7
LEVER(ACCELERATOR)SYSTEM ..... Fig. 8
SHAFT(INPUT)SYSTEM ..... Fig. 9
METAL(COUNTER)SYSTEM ..... Fig. 10
MISSON(HST)SYSTEM ..... Fig. 11
MOUNT(HST)SYSTEM ..... Fig. 12
LINK(HST)SYSTEM ..... Fig. 13
PEDAL(HST)SYSTEM ..... Fig. 14
LOCK(PEDAL)SYSTEM ..... Fig. 15
PEDAL(BRAKE)SYSTEM ..... Fig. 16
BRAKE(PARKING)SYSTEM ..... Fig. 17
WHEEL(REAR)SYSTEM ..... Fig. 18
PTO(MOWER)SYSTEM ..... Fig. 19
SHAFT(STEERING)SYSTEM ..... Fig. 20
FRAME(MAIN)SYSTEM ..... Fig. 21
AXLE(FRONT)SYSTEM ..... Fig. 22
SPINDLE(KNUCKLE)SYSTEM ..... Fig. 23
ROD(TIE)SYSTEM ..... Fig. 24
WHEEL(FRONT/16X6.50-8)SYSTEM ..... Fig. 25
LINK(MOWER)SYSTEM ..... Fig. 26
LEVER(LIFT)SYSTEM ..... Fig. 27

HOOD SYSTEM····· Fig. 28
COVER SYSTEM····· Fig. 29
FENDER SYSTEM····· Fig. 30
SEAT SYSTEM(S TYPE-STANDARD/
EXCEPT S TYPE-OPTION)····· Fig. 31
BELT(SEAT)SYSTEM····· Fig. 32
FLOOR SYSTEM····· Fig. 33
LAMP(HEAD)SYSTEM····· Fig. 34
PANEL SYSTEM····· Fig. 35
SWITCH(PANEL)SYSTEM····· Fig. 36
HARNESS SYSTEM····· Fig. 37
CHUTER SYSTEM····· Fig. 38
ORNAMENT····· Fig. 39
LABEL(CONTROL)····· Fig. 40
LABEL(CAUTION)····· Fig. 41
LABEL(CE)····· Fig. 42

COMPONENT PARTS

COMPONENT PARTS
FOR 1782-201-200-40 ON Fig.11····· Fig. 43

E N G I N E

E269G···SXG216H5

6003-097-263-00

FIG. 1 SHORT BLOCK ENGIASSY

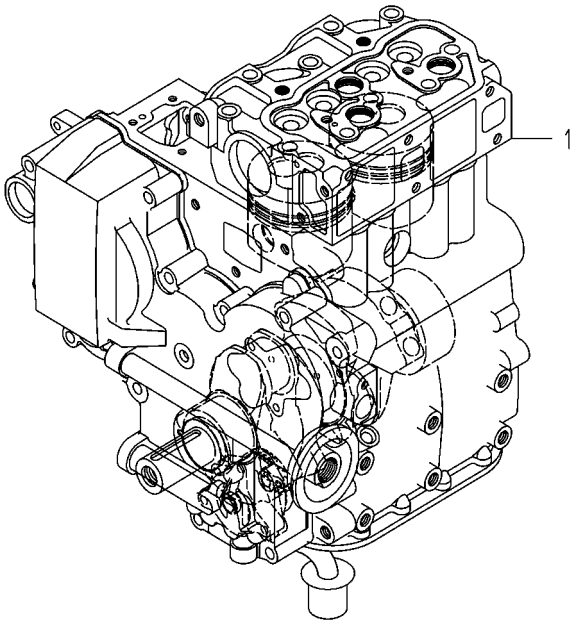

6003-012V-0100

KEY	PART CODE	DESCRIPTION	SPC	TYPE OF MODEL		ITC	COL	GRP	REMARKS
				E269G					
1	6003-010-080-00	SHORTBLOCKENGIN ASSY	T	1					

FIG. 2 CYLINDER HEAD

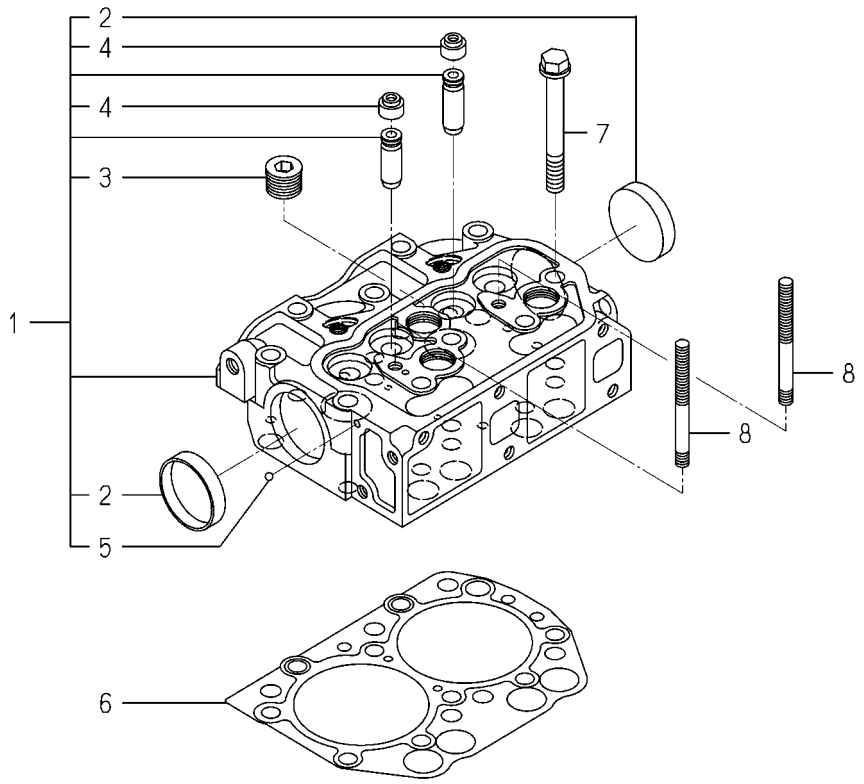

6003-101J-0100,6003-101J-0200

KEY	PART CODE	DESCRIPTION	SPC	TYPE OF MODEL E269G		ITC	COL	GRP	REMARKS
1	6211-110-094-20	CYLINDERHEAD ASSY	*	1					
2	6911-129-006-00	CAP,SEALING	*	2					
3	6209-605-004-10	PLUG/PT1/2	*	3					
4	6212-569-002-00	SEAL,OIL	*	4					
5	V682-200-000-60	BALL,STEEL	*	1					
6	6211-141-016-10	GASKET/CYLINDERHEAD	*	1					
7	6209-000-044-00	BOLT	*	10					
8	6209-300-014-00	STUD	*	2					

FIG. 3 CYLINDER HEAD COVER

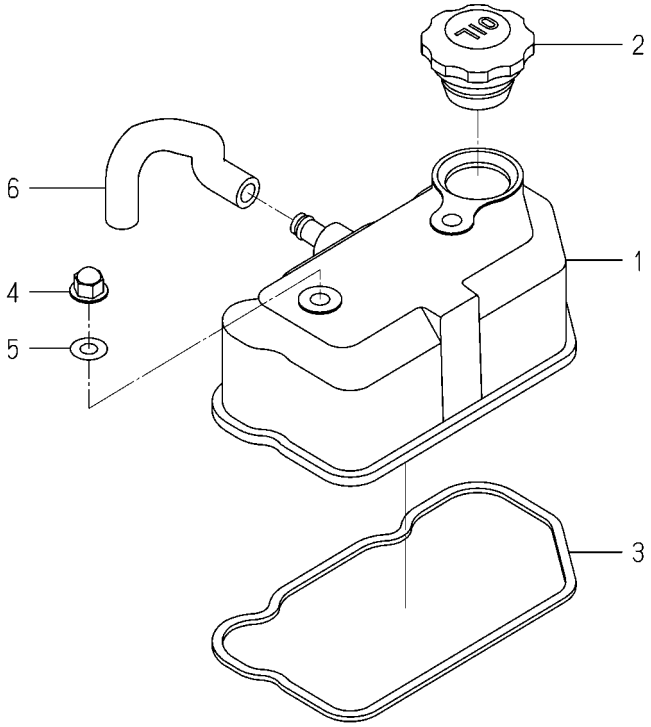

6003-110A-0100

KEY	PART CODE	DESCRIPTION	SPC	TYPE OF MODEL		ITC	COL	GRP	REMARKS
				E269G					
1	6211-170-006-20	COVER/CYLINDER/HEAD	*	1					
2	6211-751-001-10	CAP,OIL FILLER	*	1					
3	6211-173-004-00	SEAL,CYL COVER	*	1					
4	6209-490-002-10	NUT/CAP	*	2					
5	6209-572-003-00	GASKET	*	2					
6	6209-360-028-20	HOSE/RUBBER	*	1					

FIG. 4 INLET MANIFOLD

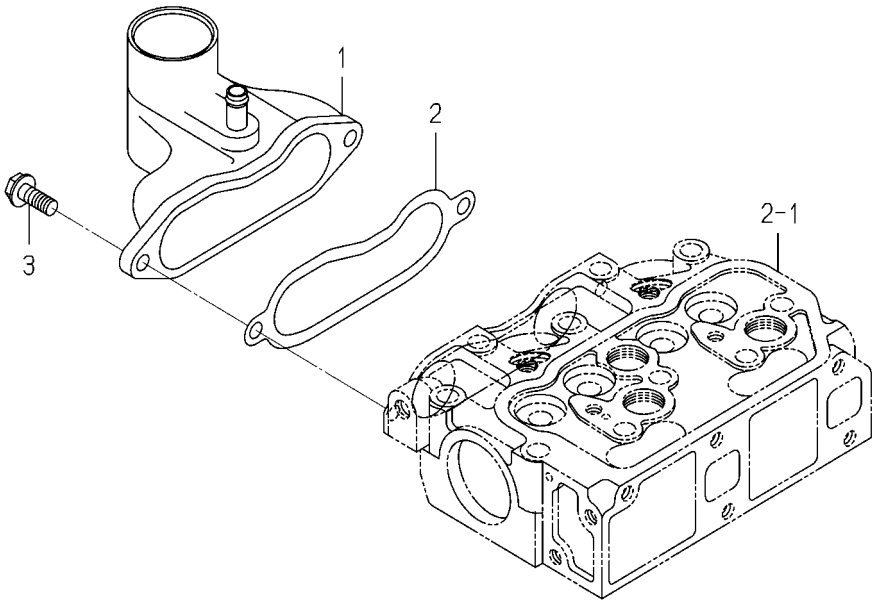

6003-120A-0100

KEY	PART CODE	DESCRIPTION	SPC	TYPE OF MODEL		ITC	COL	GRP	REMARKS
				E269G					
1	6214-111-014-00	MANIFOLD ASSY	*	1					
2	6214-115-002-20	GASKET	*	1					
3	V231-360-802-00	FLANGEBOLT/M8X20	*	2					

FIG. 5 EXHAUST MANIFOLD

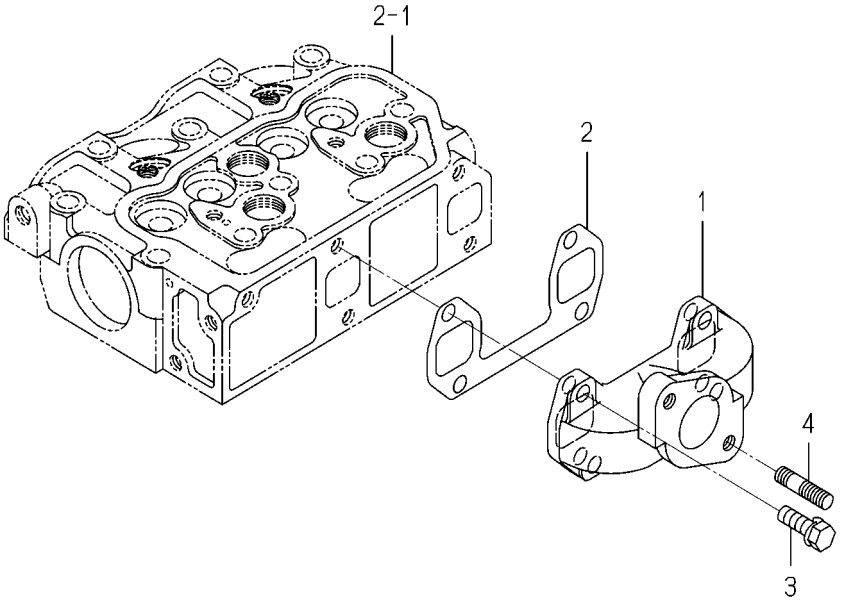

6003-140A-0100

KEY	PART CODE	DESCRIPTION	SPC	TYPE OF MODEL		ITC	COL	GRP	REMARKS
				E269G					
1	6214-141-012-00	MANIFOLD EXHAUST	*	1					
2	6214-145-006-10	GASKET EXHAUST MANIF	*	1					
3	V211-560-802-50	BOLT,S/M8X25/7T	*	4					
4	6904-110-822-00	STUD	*	2					

FIG. 6 CYLINDER BLOCK

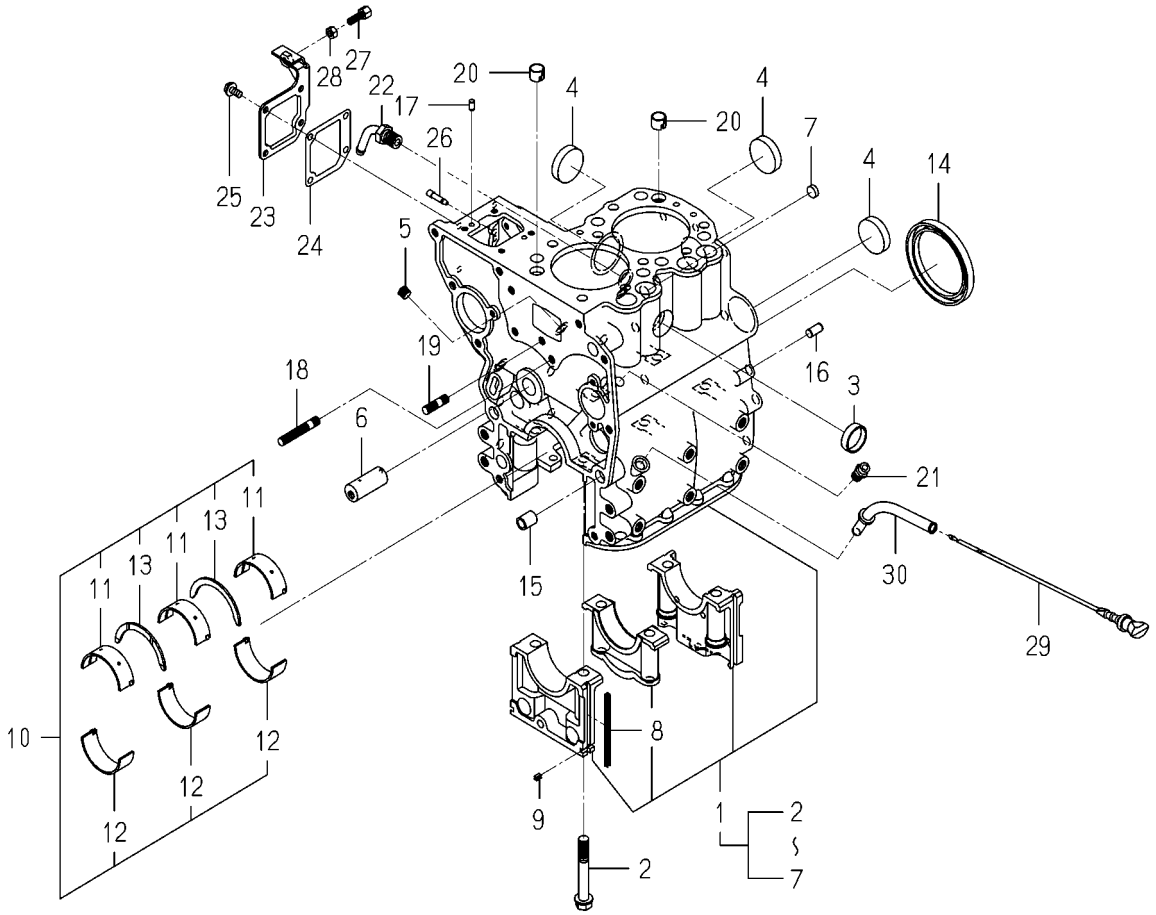

6003-202R-0100

KEY	PART CODE	DESCRIPTION	SPC	TYPE OF MODEL E269G		ITC	COL	GRP	REMARKS
1	6211-210-024-90	CYLINDERBLOCK ASSY	*	1					
2	6209-000-004-10	BOLT	*	6					
3	6209-610-001-10	CUP/SEALING/28	*	1					
4	6209-610-009-00	CUP/SEALING/36	*	3					
5	6209-605-007-10	PLUG/PT1/8	*	2					
6	6212-531-014-00	PIN/IDLEGEAR	*	1					
7	6209-610-008-00	CUP/SEALING/12	*	1					
8	6211-258-001-00	SEAL,BEARING CAP	*	4					
9	6211-258-002-00	SEAL,BEARING CAP/7	*	2					
10	6211-510-020-00	BEARING/CRANKSET	*	1					
11	6211-511-023-00	BEARING/CRANK/UPPER	*	3					
12	6211-511-024-00	BEARING/CRANK/LOWER	*	3					
13	6211-599-012-00	BEARING/THRUST/CRANK	*	2					
14	6209-625-001-00	SEAL,OIL	*	1					
15	6209-749-001-20	PIN/TUBE	*	2					
16	6213-129-006-00	PIN/STRAIGHT	*	2					
17	6213-129-005-00	PIN/STRAIGHT	*	2					
18	6904-110-840-00	STUD/M8X40	*	1					
19	6904-110-818-00	STUD	*	1					
20	6294-453-002-00	DOWEL	*	2					
21	6909-902-299-00	NIPPLE	*	1					
22	6213-721-001-00	PIPE,WATER DRAIN	*	1					
23	6211-291-001-10	COVER,INJ PUMP	*	1					
24	6211-292-001-20	GASKET/COVER	*	1					
25	V230-360-601-20	FLANGEBOLT/M6X12	*	4					
26	6215-549-001-10	PIN,STARTING SPRING	*	1					
27	6209-788-001-00	BOLT,ADJUST	*	1					
28	V301-260-006-00	NUT/M6	*	1					
29	6211-760-026-40	LEVEL/GAGE	*	1					
30	6211-766-012-10	GUIDE/LEVELGAGE COMP	*	1					

FIG. 7 BEARING/UNDER SIZE (OPTION)

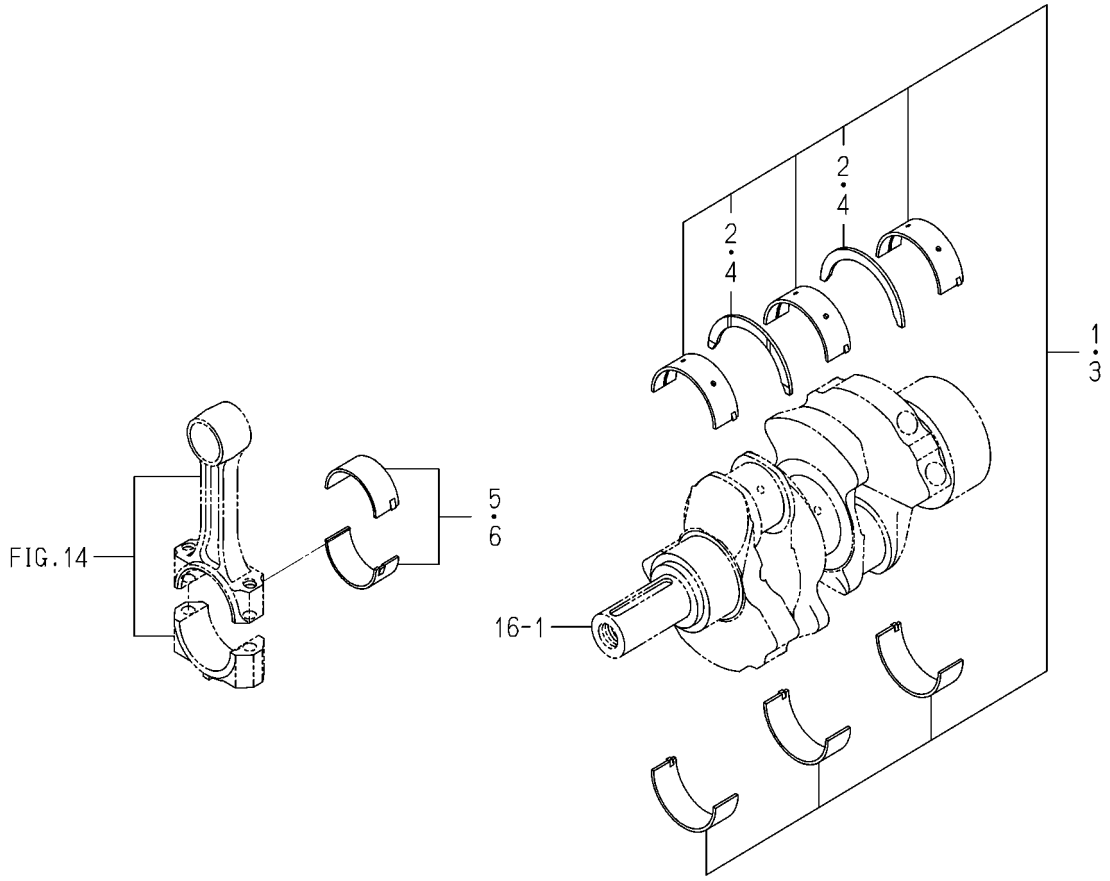

6003-209A-0100

KEY	PART CODE	DESCRIPTION	SPC	TYPE OF MODEL E269G		ITC	COL	GRP	REMARKS
1	6211-540-017-00	BEARING/CRANK/UNSET	T	1					050
2	6211-599-012-00	BEARING/THRUST/CRANK	T	2					
3	6211-560-006-00	BEARING/CRANK/UNSET	T	1					100
4	6211-599-012-00	BEARING/THRUST/CRANK	T	2					
5	6212-274-016-00	BEARING/CONNECTING R	T	2					050
6	6212-276-016-00	BEARING/CONNECTING R	T	2					100

FIG. 8 OIL PAN

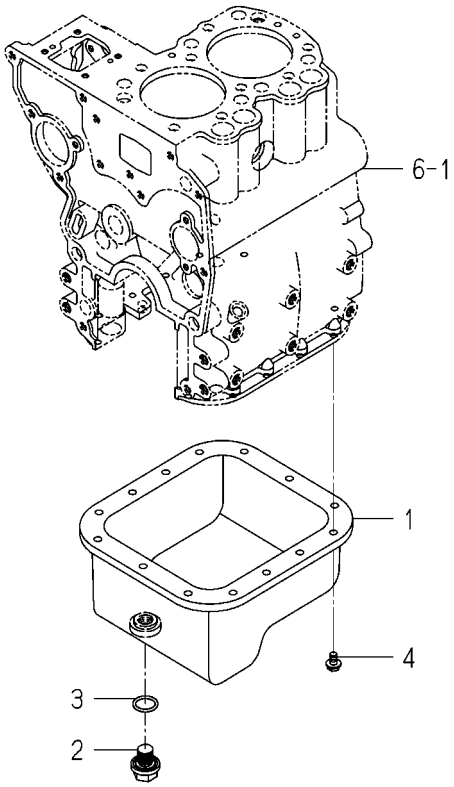

6003-210F-0100

KEY	PART CODE	DESCRIPTION	SPC	TYPE OF MODEL E269G		ITC	COL	GRP	REMARKS
1	6211-361-019-20	OILPAN COMP	*	1					
2	3805-355-002-20	PLUG/M14X1.5	*	1					
3	V720-102-401-80	O-RING/1A,P18	*	1					
4	V230-360-601-00	FLANGEBOLT/M6X10	*	14					

FIG. 9 REAR PLATE

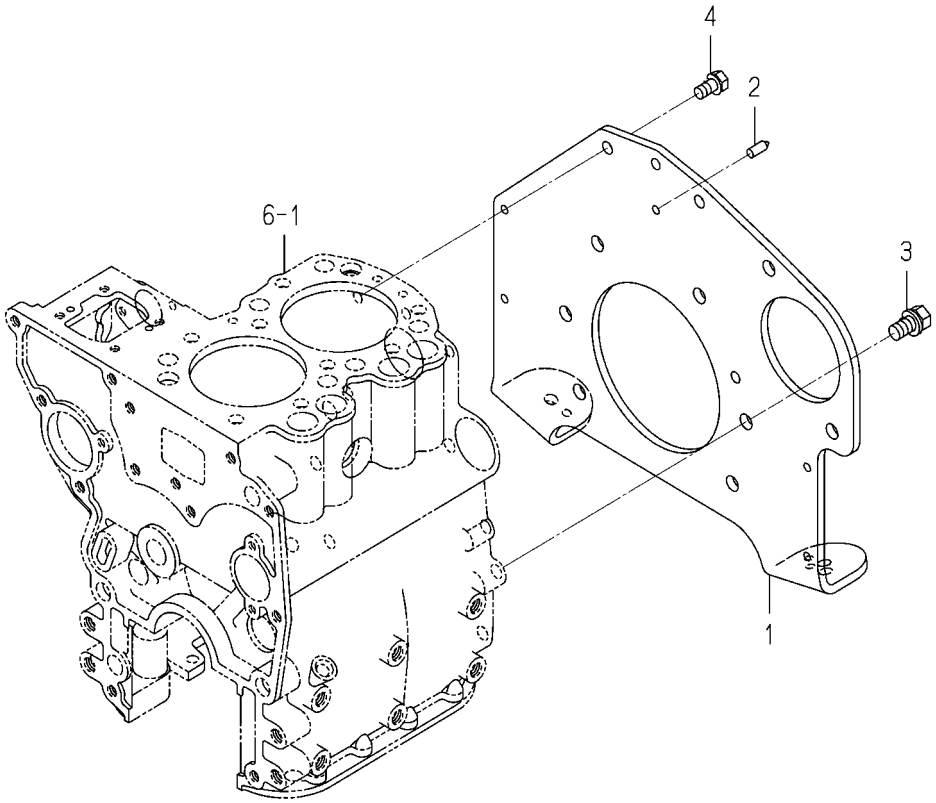

6003-220M-0100

KEY	PART CODE	DESCRIPTION	SPC	TYPE OF MODEL		ITC	COL	GRP	REMARKS
				E269G					
1	6211-341-086-00	PLATE/REAR	*	1					
2	6211-342-002-10	POINTER	*	1					
3	6901-911-020-00	BOLT,SEMS/M10X20,7T	*	6					
4	6901-910-816-00	BOLT,SEMS/M8X16	*	2					

FIG. 10 TIMING GEAR CASE

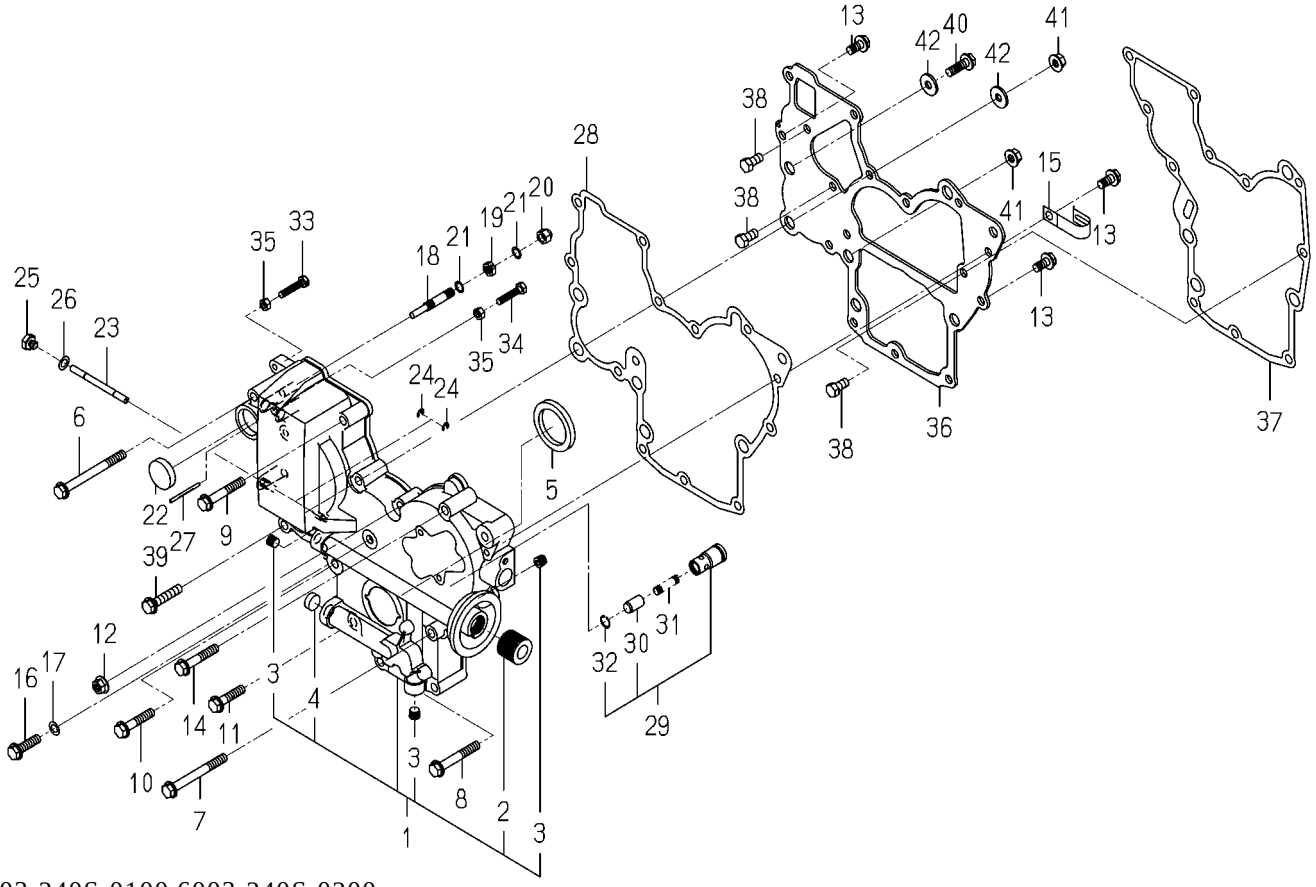

6003-240S-0100,6003-240S-0200

KEY	PART CODE	DESCRIPTION	SPC	TYPE OF MODEL E269G		ITC	COL	GRP	REMARKS
1	6211-310-006-50	GEARCASE ASSY	*	1					
2	6213-319-001-00	CONNECTOR,OIL FILTER	*	1					
3	6209-605-007-10	PLUG/PT1/8	*	3					
4	6209-610-007-00	CUP/SEALING/16	*	1					
5	6209-625-002-00	SEAL,OIL	*	1					
6	V231-360-808-50	FLANGEBOLT/M8X85	*	1					
7	V231-360-807-50	FLANGEBOLT/M8X75	*	1					
8	V231-360-805-50	FLANGEBOLT/M8X55	*	2					
9	V231-360-805-00	FLANGEBOLT/M8X50	*	2					
10	V231-360-804-00	FLANGEBOLT/M8X40	*	1					
11	V231-360-803-50	FLANGEBOLT/M8X35	*	1					
12	3817-401-001-00	NUT/M08	*	1					
13	V231-360-801-60	FLANGEBOLT/M8X16	*	3					
14	V231-360-804-50	FLANGEBOLT/M8X45	*	1					
15	1425-621-004-00	HOLDER/JE/9-9	*	1					
16	V231-360-803-00	FLANGEBOLT/M8X30	*	1					
17	6209-500-003-00	WASHER/08X14X01	*	1					
18	6215-546-001-00	STOPPER,FULL-LOAD	*	1					
19	6209-409-001-00	NUT/M8	*	1					
20	V341-120-008-00	NUT,CAP/M8	*	1					
21	6209-920-002-00	PACKING	*	2					
22	3625-540-004-00	CAP,BLANK/30	*	1					
23	6215-542-001-10	PIN/ARM	*	1					
24	V710-140-004-00	RING,SNAP/4 E	*	2					
25	6209-600-004-00	PLUG/SCREW	*	1					
26	6209-500-003-00	WASHER/08X14X01	*	1					
27	6209-740-001-00	PIN,GROOVE	*	1					
28	6211-312-001-30	GASKET/GEARCASE	*	1					
29	6213-160-002-20	VALVE/RELIEF ASSY	*	1					
30	6213-161-001-20	PISTON/VALVE/RELIEF	*	1					

FIG. 10 TIMING GEAR CASE

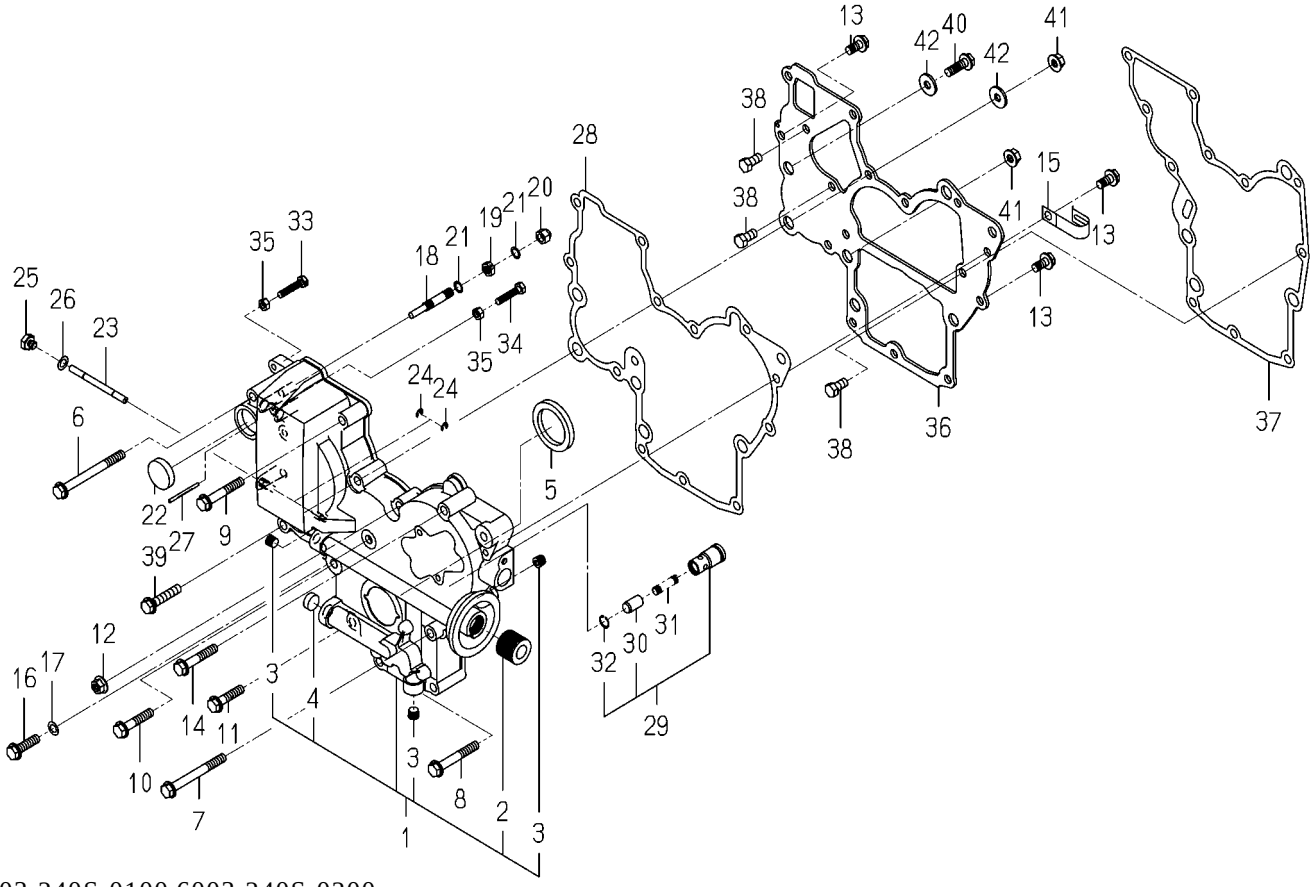

6003-240S-0100,6003-240S-0200

KEY	PART CODE	DESCRIPTION	SPC	TYPE OF MODEL E269G		ITC	COL	GRP	REMARKS
31	6213-164-001-00	SPRING/RELIEF VALVE	*	1					
32	V705-140-012-00	RING,SNAP/12 C	*	1					
33	6209-050-001-00	BOLT/M6	*	1					
34	6209-050-002-00	BOLT/M6	*	1					
35	V301-260-006-00	NUT/M6	*	2					
36	6211-311-005-30	PLATE/FRONT	*	1					
37	6211-312-002-30	GASKET/PLATE	*	1					
38	6902-050-816-00	BOLT	*	3					
39	V231-360-804-00	FLANGEBOLT/M8X40	*	2					
40	V231-360-802-50	FLANGEBOLT/M8X25	*	1					
41	3817-401-001-00	NUT/M08	*	2					
42	1373-121-001-00	WASHER/9X22X2	*	2					

FIG. 11 HANGER

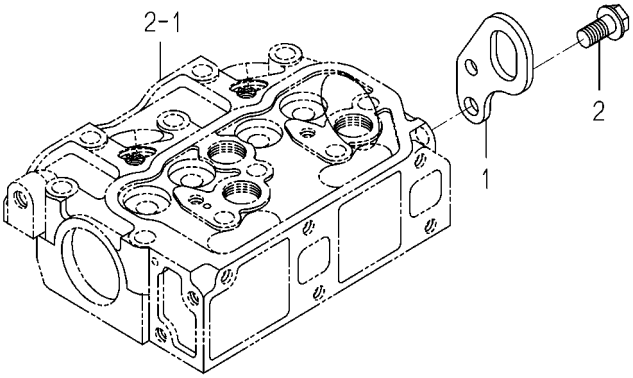

6005-290B-0100

KEY	PART CODE	DESCRIPTION	SPC	TYPE OF MODEL		ITC	COL	GRP	REMARKS
				E269G					
1	6211-777-007-30	HANGER	*	1					
2	V233-361-002-00	FLANGEBOLT/M10X20	*	1					

FIG. 12 VALVE

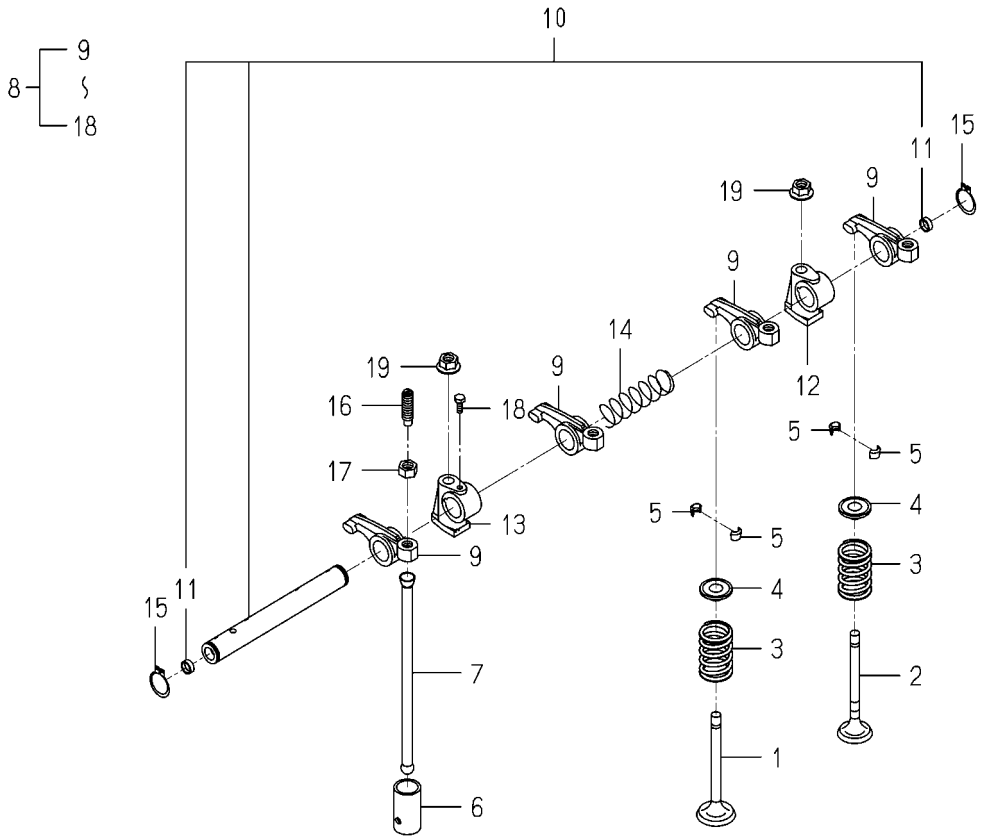

6003-301A-0100

KEY	PART CODE	DESCRIPTION	SPC	TYPE OF MODEL E269G		ITC	COL	GRP	REMARKS
1	6212-551-028-00	VALVE/INTAKE	*	2					
2	6212-552-014-00	VALVE/EXHAUST	*	2					
3	6212-561-001-10	SPRING/VALVE	*	4					
4	6212-563-005-00	SEAT/VALVESPRING	*	4					
5	6212-565-001-00	CUTTER,VALVE	*	8					
6	6212-571-006-00	TAPPET	*	4					
7	6212-575-001-00	ROD,PUSH	*	4					
8	6212-600-003-30	ROCKERSHAFT ASSY	*	1					
9	6212-611-004-10	ROCKERARM	*	4					
10	6212-620-002-20	SHAFT/ROCKERARM ASSY	*	1					
11	6212-626-002-10	PLUG	*	2					
12	6212-628-004-00	BRACKET ROCKER SHAFT	*	1					
13	6212-628-005-00	BRACKET,ROCKER SHAFT	*	1					
14	6209-940-004-00	SPRING	*	1					
15	V704-140-016-00	RING,SNAP/16 C	*	2					
16	6212-616-002-00	SCREW ADJUST	*	4					
17	6209-409-003-00	NUT	*	4					
18	6209-000-002-00	BOLT	*	1					
19	3817-401-001-00	NUT/M08	*	2					

FIG. 13 CAM SHAFT

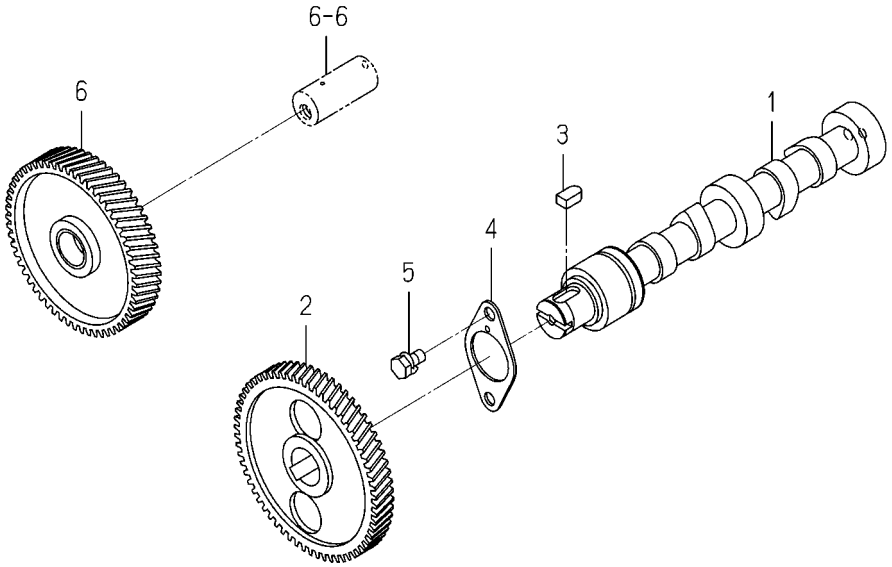

6003-310A-0100

KEY	PART CODE	DESCRIPTION	SPC	TYPE OF MODEL		ITC	COL	GRP	REMARKS
				E269G					
1	6212-511-004-00	SHAFT,CAM	*	1					
2	6212-522-010-00	GEAR/CAMSHAFT	*	1					
3	6209-730-005-00	KEY/07X05X09	*	1					
4	6212-535-014-00	PLATE/THRUST	*	1					
5	V210-560-601-20	BOLT,S/M6X12/7T	*	2					
6	6212-523-023-00	GEAR/IDLE ASSY	*	1					

FIG. 14 PISTON

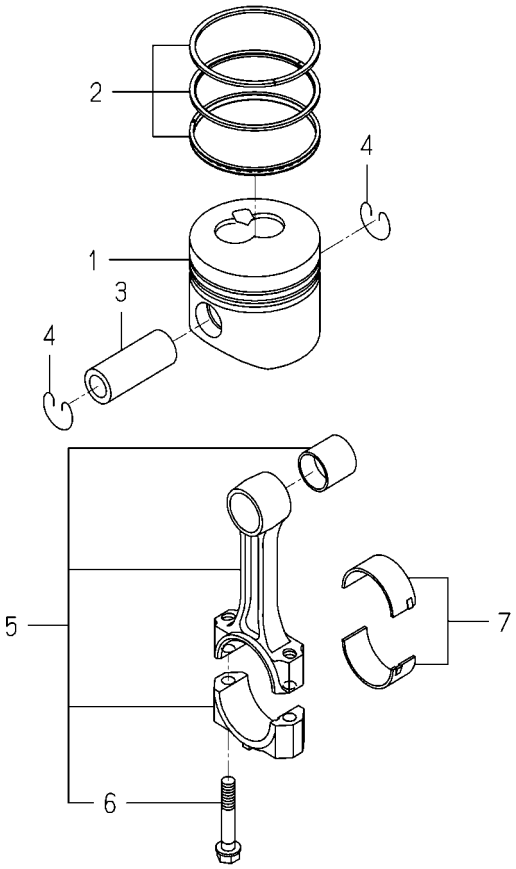

6003-340L-0100

KEY	PART CODE	DESCRIPTION	SPC	TYPE OF MODEL		ITC	COL	GRP	REMARKS
				E269G					
1	6212-111-100-00	PISTON	*	2					
2	6212-121-009-20	RING/PISTON SET	*	2					
3	6212-211-001-10	PIN,PISTON	*	2					
4	6209-587-001-00	RING,SNAP	*	4					
5	6212-230-003-10	CONNECTINGROD ASSY	*	2					
6	6212-235-005-00	BOLT/CONNECTINGROD	*	4					
7	6212-271-016-00	BEARING/CONNECTING R	*	2					

FIG. 15 PISTON/OVER SIZE (OPTION)

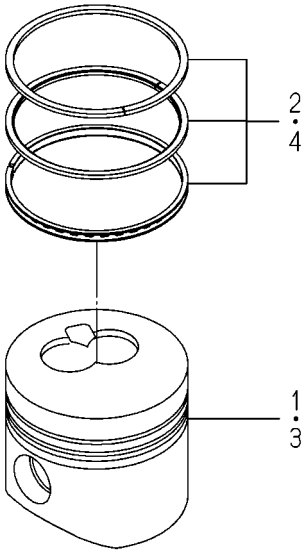

6003-349L-0100

KEY	PART CODE	DESCRIPTION	SPC	TYPE OF MODEL E269G		ITC	COL	GRP	REMARKS
1	6212-114-100-00	PISTON/OV	T	2					050
2	6212-124-009-10	RING/PISTON/OV SET	T	2					050
3	6212-116-100-00	PISTON/OV	T	2					100
4	6212-126-009-10	RING/PISTON/OV SET	T	2					100

FIG. 16 CRANK SHAFT

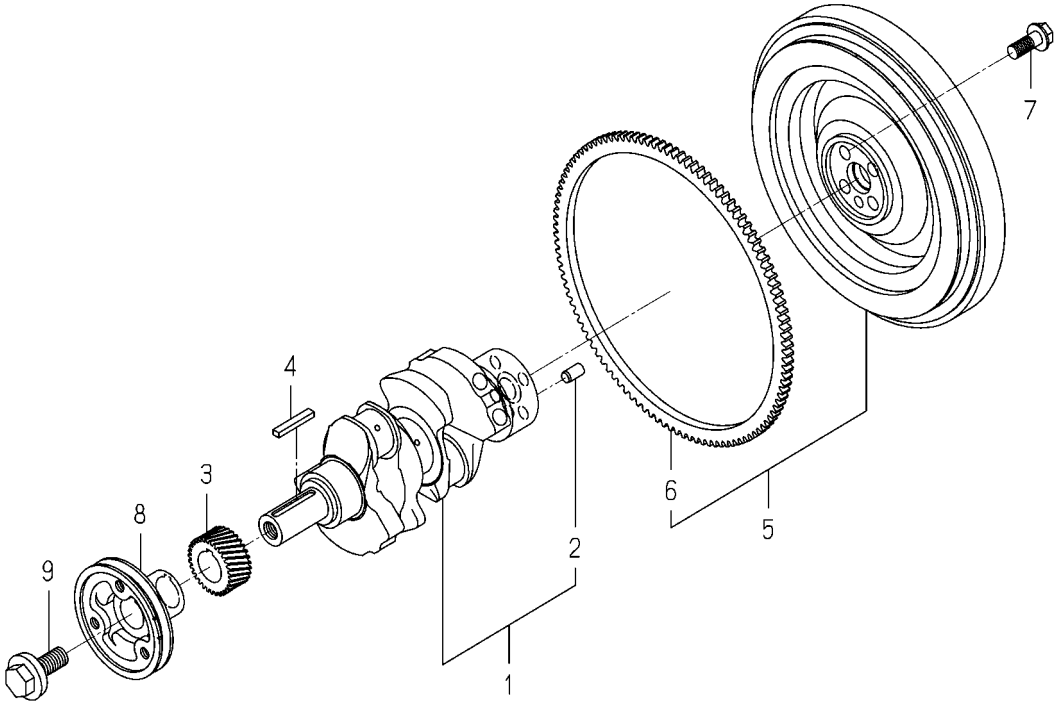

6003-350X-0100

KEY	PART CODE	DESCRIPTION	SPC	TYPE OF MODEL		ITC	COL	GRP	REMARKS
				E269G					
1	6212-310-010-70	CRANKSHAFT ASSY	*	1					
2	V523-101-001-80	PIN,ST,B/10X18	*	1					
3	6212-521-008-00	GEAR/CRANK	*	1					
4	6209-730-006-00	KEY/07X05X43	*	1					
5	6212-330-056-20	FLYWHEEL ASSY	*	1					
6	6212-333-009-00	RINGGEAR	*	1					
7	6209-046-015-00	BOLT/FLANGE	*	4					
8	6212-371-022-10	PULLEY/CRANK	*	1					
9	6209-000-043-00	BOLT/CRANK	*	1					

FIG. 17 OIL PUMP

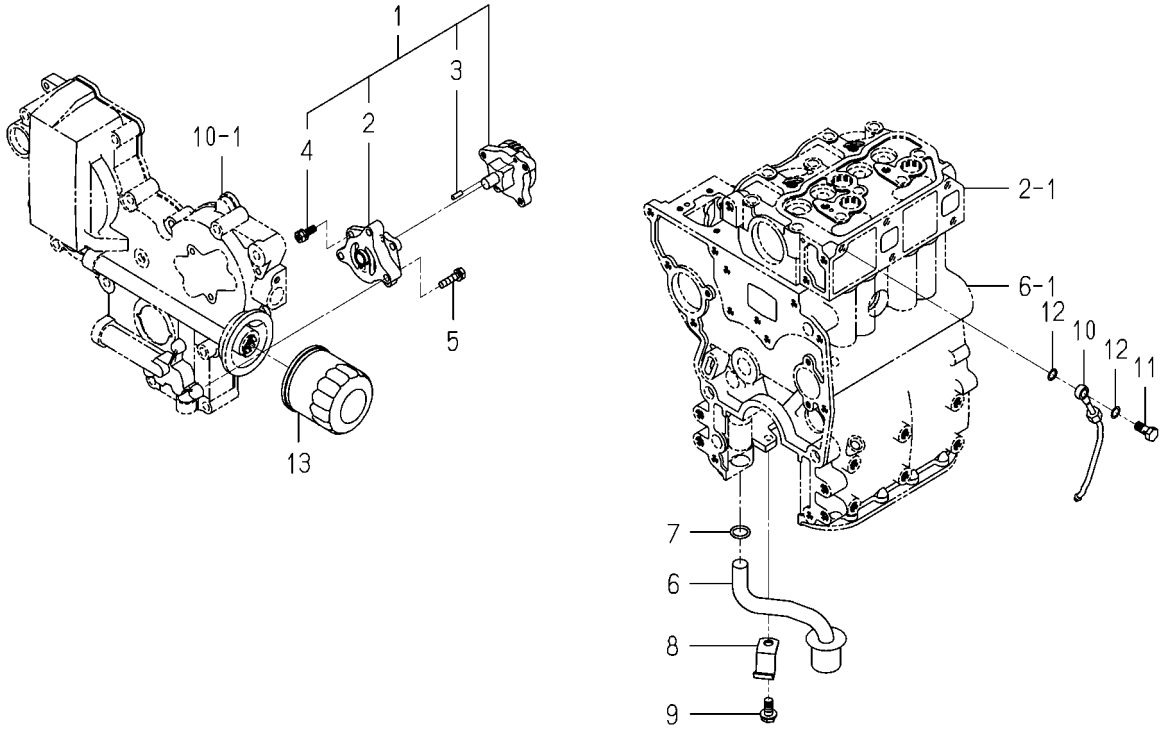

6003-401A-0100

KEY	PART CODE	DESCRIPTION	SPC	TYPE OF MODEL		ITC	COL	GRP	REMARKS
				E269G					
1	6213-100-003-30	OILPUMP ASSY	*	1					
2	6213-111-001-30	BODY/OILPUMP	*	1					
3	6213-129-003-00	PIN/STRAIGHT	*	2					
4	6213-119-001-00	BOLT/WS	*	3					
5	V210-560-602-50	BOLT,S/M6X25/7T	*	3					
6	6213-140-033-10	STRAINER	*	1					
7	V720-102-401-50	O-RING/1A,P15	*	1					
8	6213-149-001-00	CLAMP,STRAINER	*	1					
9	V231-360-801-60	FLANGEBOLT/M8X16	*	1					
10	6213-311-003-10	PIPE,OIL	*	1					
11	6909-906-105-10	BOLT,JOINT	*	1					
12	6209-920-002-00	PACKING	*	2					
13	6213-240-002-20	CARTRIDGE/OILFILTER	*	1					

FIG. 18 WATER PUMP

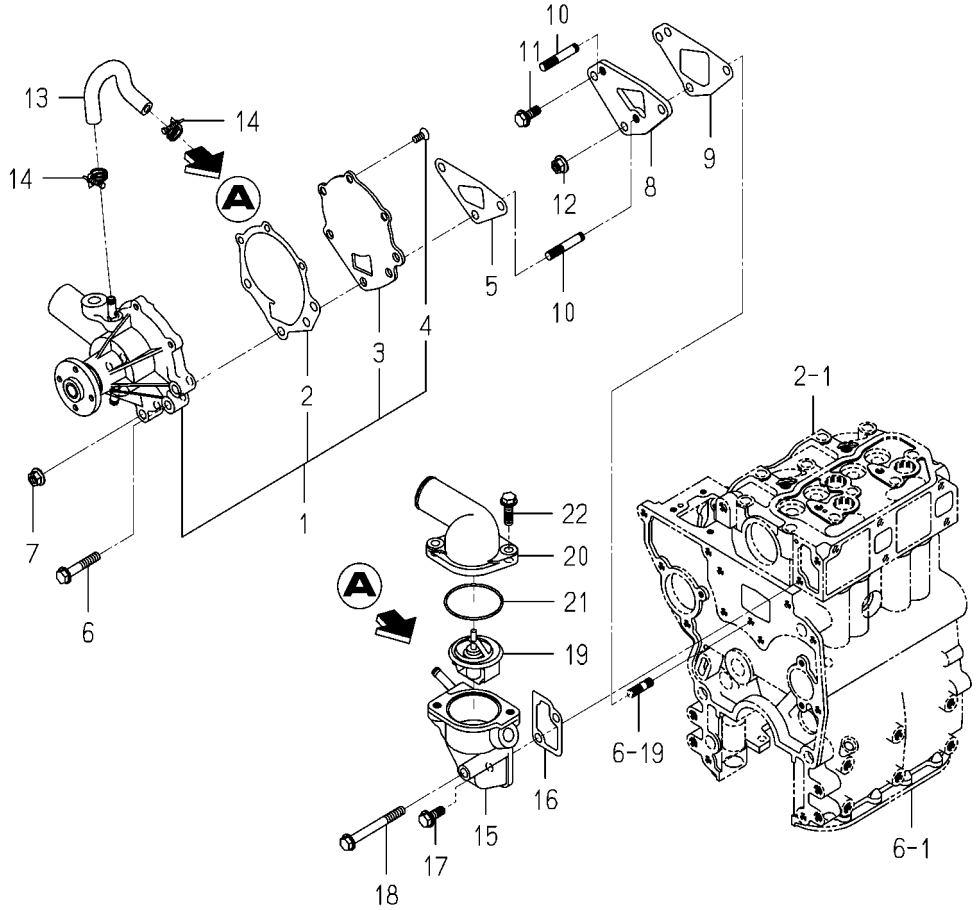

6003-420F-0100

KEY	PART CODE	DESCRIPTION	SPC	TYPE OF MODEL E269G		ITC	COL	GRP	REMARKS
1	6213-610-005-50	WATERPUMP ASSY	*	1					
2	6213-613-002-10	GASKET	*	1					
3	6213-612-004-00	PLATE/WATER PUMP	*	1					
4	6213-619-003-00	SCREW/WATER PUMP	*	3					
5	6213-614-003-10	GASKET/WATER PUMP	*	1					
6	V231-360-804-50	FLANGEBOLT/M8X45	*	1					
7	3817-401-001-00	NUT/M08	*	2					
8	6213-619-005-00	SPACER,WATER PUMP	*	1					
9	6213-614-006-20	GASKET(SPACER)	*	1					
10	6209-300-002-00	STUD	*	2					
11	V231-360-802-00	FLANGEBOLT/M8X20	*	1					
12	3817-401-001-00	NUT/M08	*	1					
13	6213-729-016-00	HOSE/RUBBER	*	1					
14	J061-210-015-00	CLAMP/WIRE/10-15	*	2					
15	6213-716-001-60	HOUSING/THERMOSTAT	*	1					
16	6213-743-002-10	GASKET/HOUSING	*	1					
17	V231-360-802-00	FLANGEBOLT/M8X20	*	1					
18	V231-360-807-50	FLANGEBOLT/M8X75	*	1					
19	6513-770-022-10	THERMOSTAT	*	1					
20	6213-711-004-00	PIPE/WATEROUTLET	*	1					
21	V723-102-005-50	O-RING/1A,S55	*	1					
22	V231-360-802-50	FLANGEBOLT/M8X25	*	2					

FIG. 19 COOLING FAN

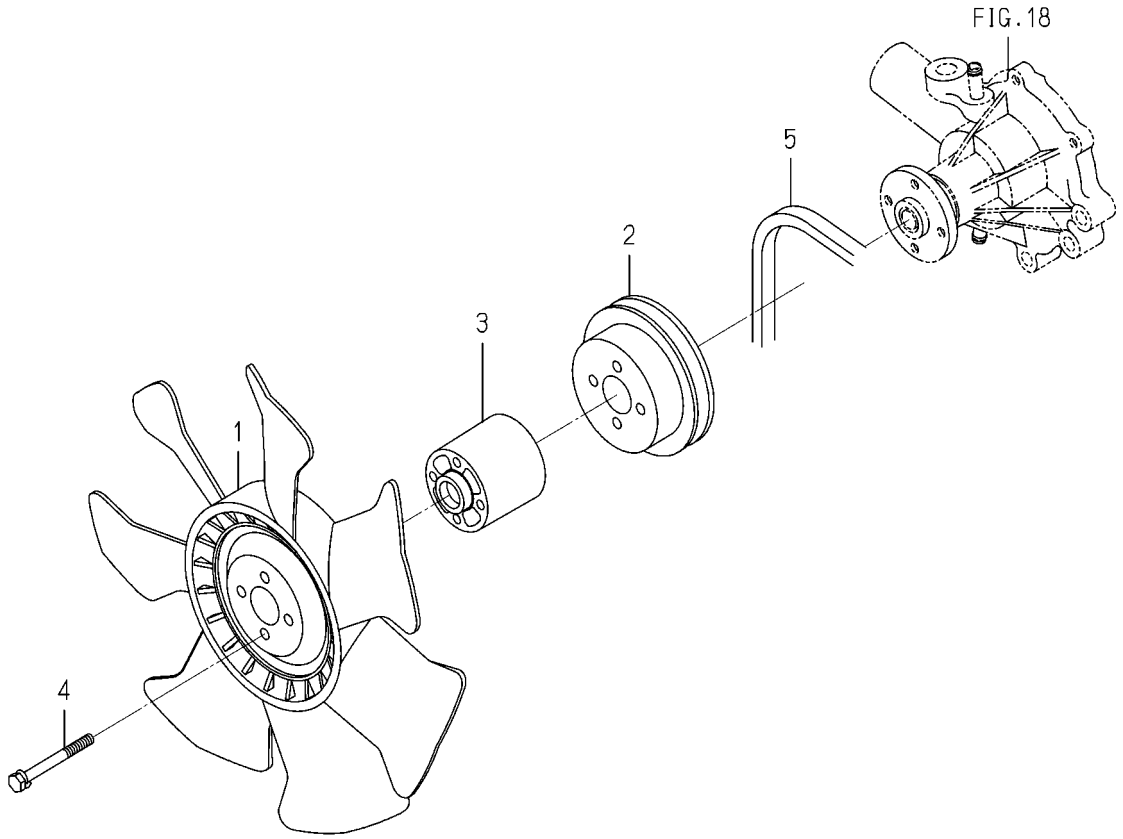

6003-480N-0100

KEY	PART CODE	DESCRIPTION	SPC	TYPE OF MODEL E269G		ITC	COL	GRP	REMARKS
1	6213-660-006-00	FAN,COOLING	*	1					
2	6213-641-004-10	PULLEY,WATER PUMP	*	1					
3	6213-669-008-00	SPACER/FAN/48	*	1					
4	6209-030-044-00	BOLT/WS	*	4					
5	6213-671-012-00	BELT/VHM34.5/FAN	*	1					

FIG. 20 INJECTION NOZZLE

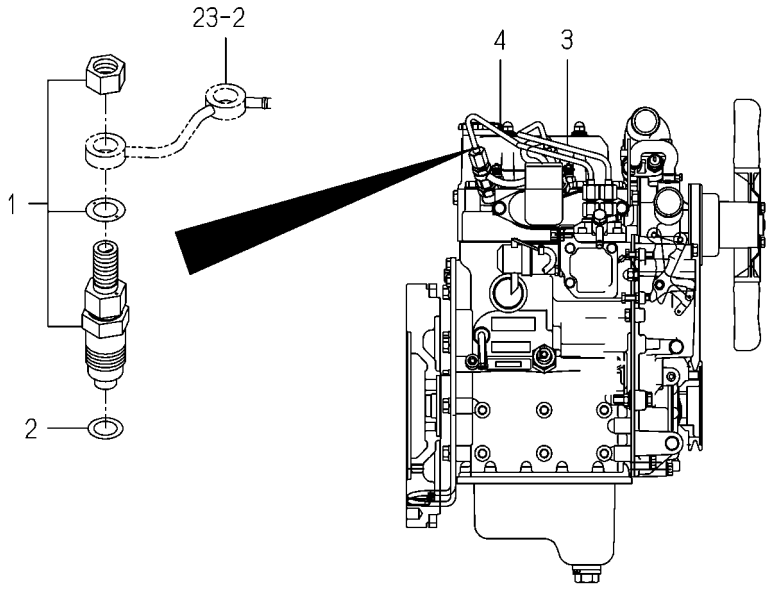

6003-501G-0100

KEY	PART CODE	DESCRIPTION	SPC	TYPE OF MODEL		ITC	COL	GRP	REMARKS
				E269G					
1	6215-300-045-10	INJECTIONNOZZLE ASSY	*	2					FIG 028
2	6215-315-002-00	GASKET,NOZZLE	*	2					
3	6215-411-149-00	PIPE/INJECTION ASSY	*	1					
4	6215-411-150-10	PIPE/INJECTION ASSY	*	1					

FIG. 21 INJECTION PUMP

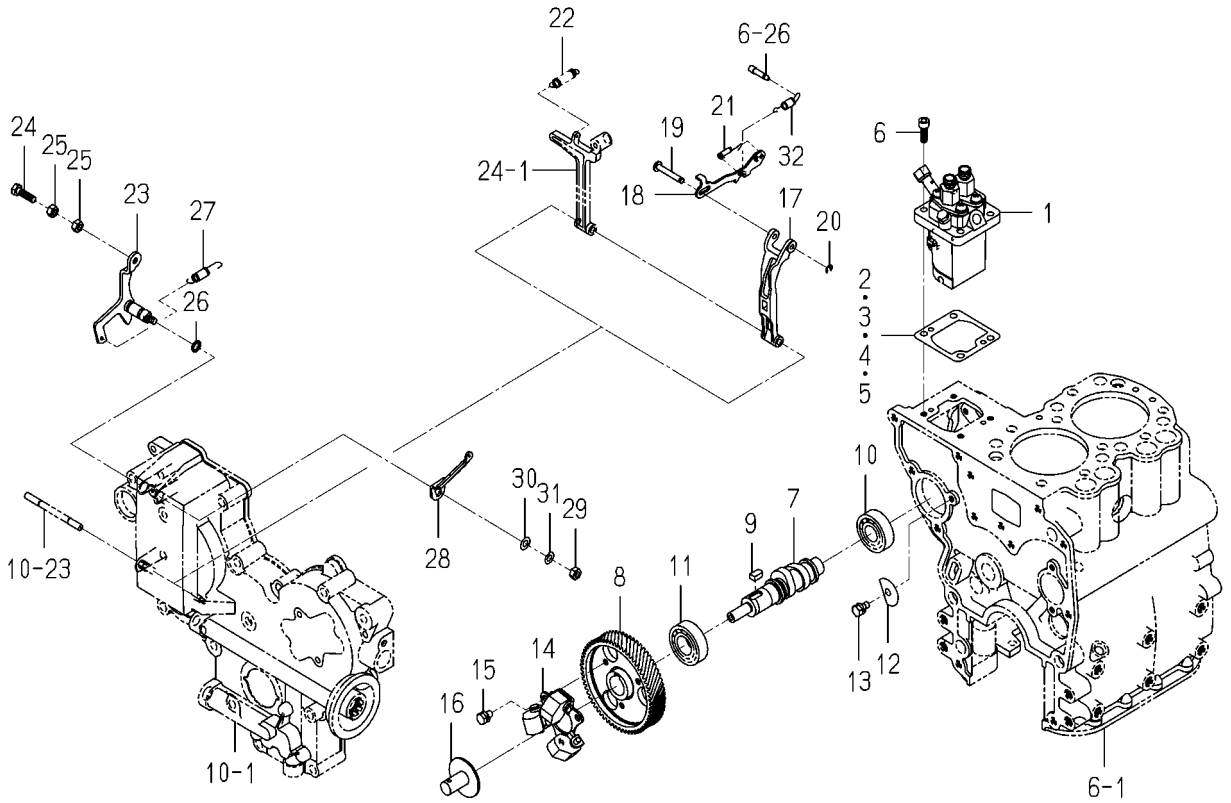

6003-510W-0100

KEY	PART CODE	DESCRIPTION	SPC	TYPE OF MODEL E269G		ITC	COL	GRP	REMARKS
1	6215-600-147-00	INJECTIONPUMPASSY	*	1					FIG 029
2	6219-752-036-00	SHIM/INJECTIONPUMP	*	1					
3	6219-752-037-00	SHIM/INJECTIONPUMP	*	1					
4	6219-752-038-00	SHIM/INJECTIONPUMP	*	1					
5	6219-752-039-00	SHIM/INJECTIONPUMP	*	1					
6	6209-056-001-00	BOLT/M6X18	*	4					
7	6215-621-036-10	CAMSHAFT/INJECTION P	*	1					
8	6212-524-002-40	GEAR/INJECTIONPUMP	*	1					
9	6209-730-005-00	KEY/07X05X09	*	1					
10	V600-110-620-30	BEARING,RB/6203	*	1					
11	1729-202-001-00	BEARING/BALL	*	1					
12	6212-535-010-10	PLATE/THRUST/INJECTI	*	1					
13	V210-560-601-20	BOLT,S/M6X12/7T	*	1					
14	6215-520-001-00	FLYWEIGHT	*	1					
15	6209-030-043-00	BOLT/M6X10	*	3					
16	6215-526-004-00	THRUSTPIECE	*	1					
17	6215-541-001-10	ARM/FLOATING COMP	*	1					
18	6215-543-003-20	LINK/CONTROL	*	1					
19	6215-542-002-00	PIN,CONTROL LINK	*	1					
20	V710-140-004-00	RING,SNAP/4 E	*	1					
21	6215-549-003-00	SPRING,SETTING	*	1					
22	6215-531-001-00	SPRING GOVERNOR	*	1					
23	6215-541-003-10	LEVER,CONTROL	*	1					
24	6209-044-001-00	BOLT/M6X18	*	1					
25	V302-260-006-00	NUT/M6	*	2					
26	V720-101-900-80	O-RING/1A,P8	*	1					
27	6209-580-002-10	SPRING,RETURN	*	1					
28	6215-549-007-10	ARM/CONTROL	*	1					
29	V301-260-006-00	NUT/M6	*	1					
30	V411-260-006-00	WASHER,PL/M6	*	1					

FIG. 21 INJECTION PUMP

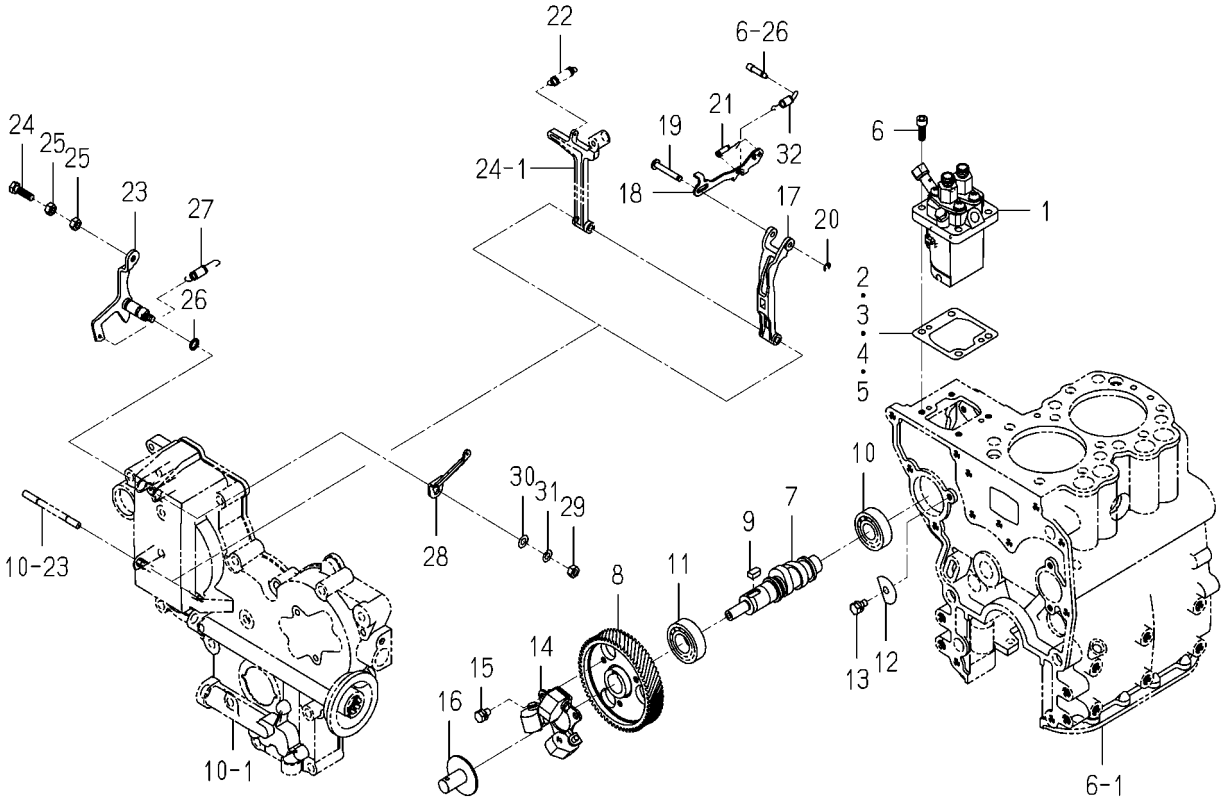

6003-510W-0100

KEY	PART CODE	DESCRIPTION	SPC	TYPE OF MODEL E269G		ITC	COL	GRP	REMARKS
31	V401-160-006-00	WASHER,SP/M6	*	1					
32	6215-549-008-10	SPRING/STARTING	*	1					

FIG. 22 FUEL FILTER

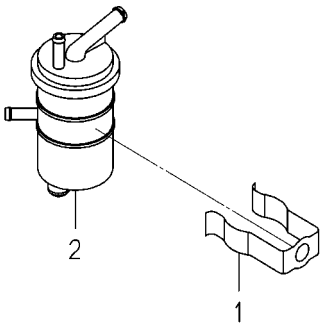

6003-530B-0100

KEY	PART CODE	DESCRIPTION	SPC	TYPE OF MODEL		ITC	COL	GRP	REMARKS
				E269G					
1	6219-755-001-00	HOLDER(FUEL FILTER)	*	1					
2	6213-200-009-00	FILTER/FUEL ASSY	*	1					

FIG. 23 FUEL PIPE

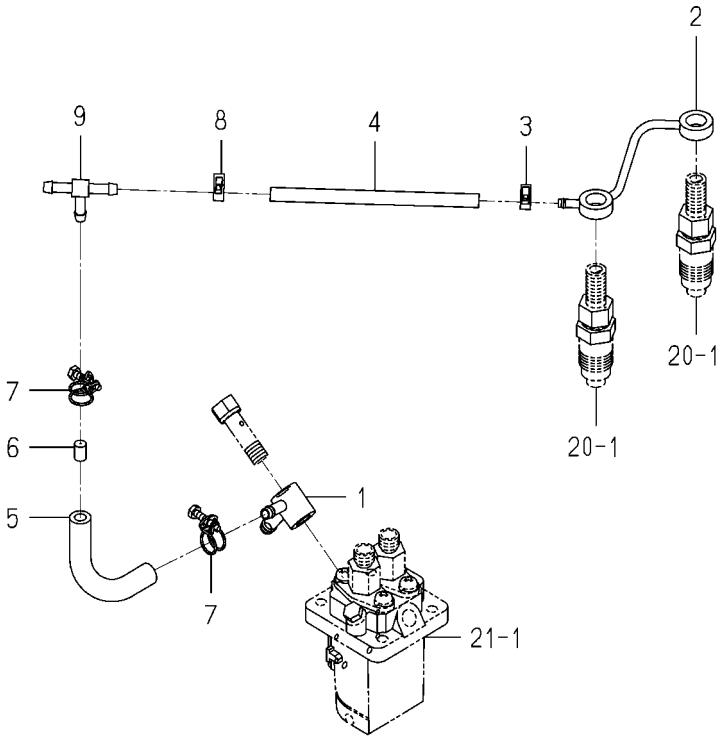

6003-550W-0100

KEY	PART CODE	DESCRIPTION	SPC	TYPE OF MODEL		ITC	COL	GRP	REMARKS
				E269G					
1	6215-412-001-20	CONNECTOR/FUEL	*	1					
2	6215-411-141-00	PIPE/FUEL	*	1					
3	J062-076-082-00	CLIP/HOSE/7.6-8.2	*	1					
4	6209-360-005-00	HOSE,RUBBER	*	1					
5	6209-360-021-00	HOSE/RUBBER	*	1					
6	6215-419-001-00	TUBE,ORIFICE	*	1					
7	6209-704-009-00	CLAMP/WIRE/10-12	*	2					
8	J062-087-093-00	CLIP/HOSE/8.7-9.3	*	1					
9	3632-360-036-00	JOINTT-TYPE 2	*	1					

FIG. 24 ADAPTER

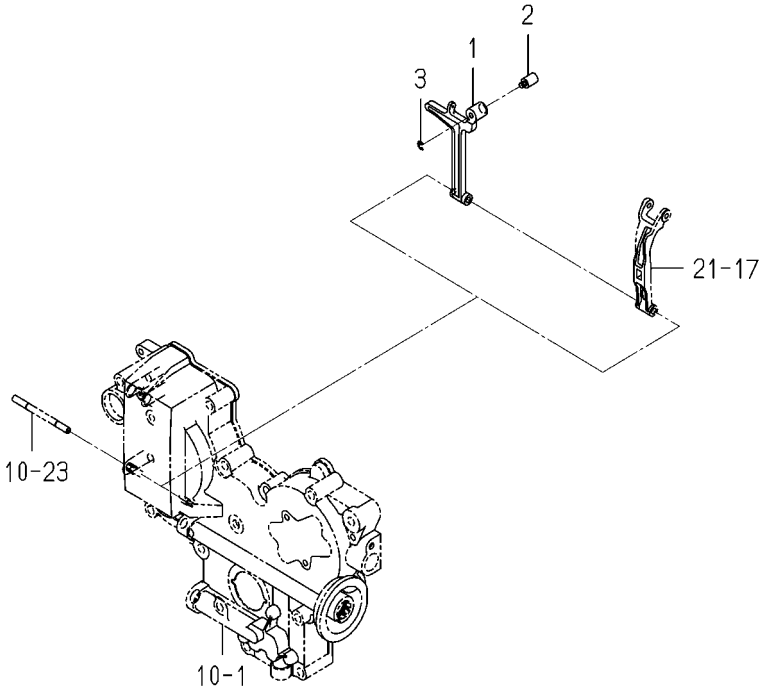

6003-560J-0100

KEY	PART CODE	DESCRIPTION	SPC	TYPE OF MODEL		ITC	COL	GRP	REMARKS
				E269G					
1	6215-541-002-10	ARM,TENSION	*	1					
2	6215-549-029-00	PIN,ADAPTER	*	1					
3	V710-140-004-00	RING,SNAP/4 E	*	1					

FIG. 25 ELECTRIC (1)

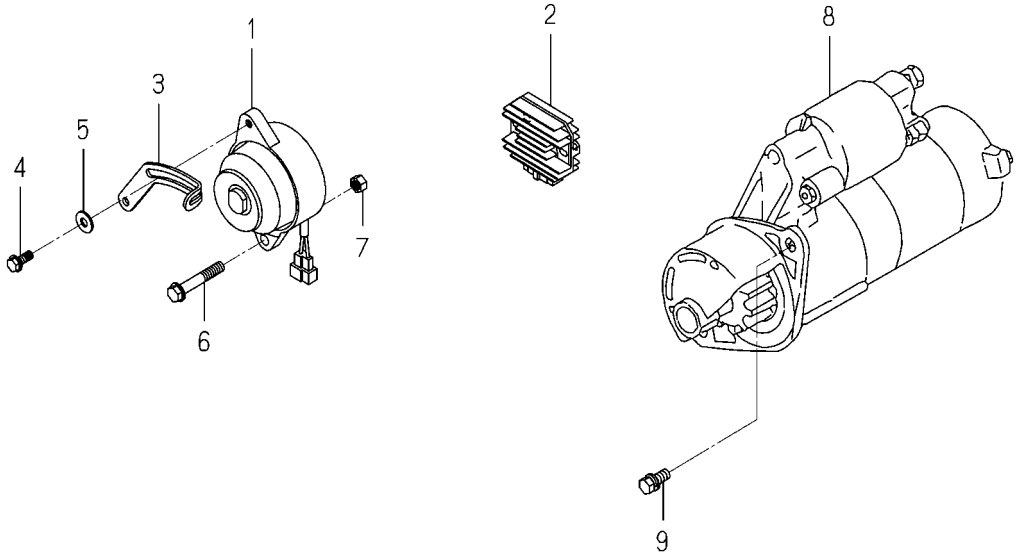

6003-801P-0100,6003-801P-0200

KEY	PART CODE	DESCRIPTION	SPC	TYPE OF MODEL		ITC	COL	GRP	REMARKS
				E269G					
1	6281-200-007-10	GENERATOR ASSY	*	1					
2	6281-270-006-00	REGULATOR	*	1					
3	6213-674-017-10	PLATE/ADJUST	*	1					
4	V231-360-802-00	FLANGEBOLT/M8X20	*	1					
5	1373-121-001-00	WASHER/9X22X2	*	1					
6	V233-361-006-00	FLANGEBOLT/M10X60	*	1					
7	6209-440-007-00	NUT/FLANGE/M10	*	1					
8	6281-100-014-00	STARTER ASSY	*	1					FIG 030
9	6901-911-025-00	BOLT,SEMS/M10X25,7T	*	2					

FIG. 26 ELECTRIC (2)

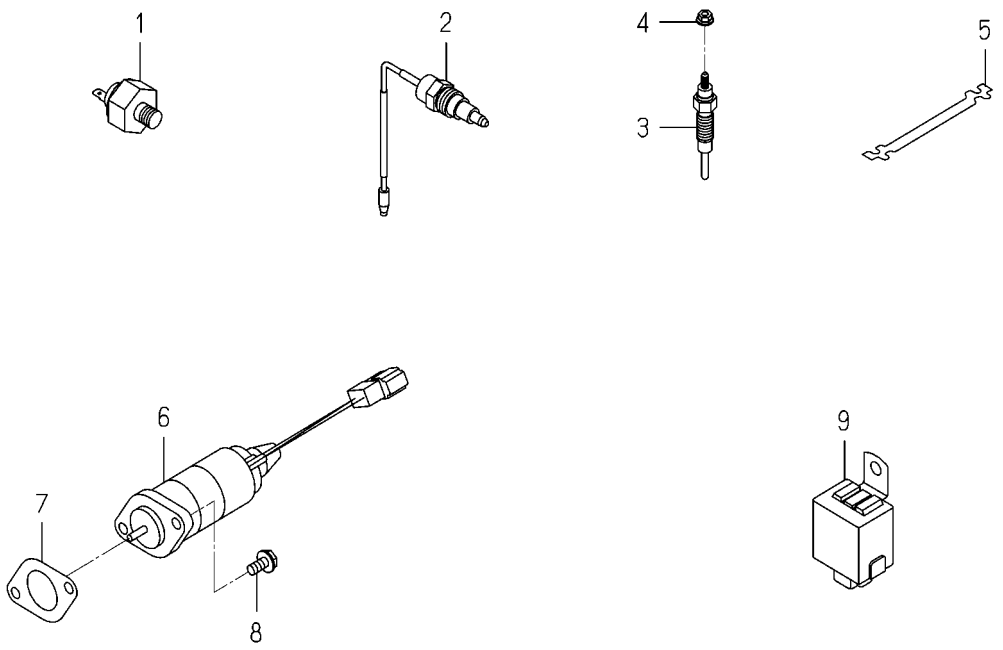

6003-820R-0100,6003-820R-0200

KEY	PART CODE	DESCRIPTION	SPC	TYPE OF MODEL E269G		ITC	COL	GRP	REMARKS
1	6281-971-001-10	SWITCH/OILPRESSURE	*	1					
2	6282-450-002-00	SWITCH/OVERHEAT	*	1					
3	6281-410-023-10	GLOWPLUG	*	2					
4	6209-440-005-00	NUT/FLANGE	*	2					
5	6219-732-003-00	CONNECTOR,GLOW PLUG	*	1					
6	6281-910-015-10	SOLENOID	*	1					
7	6209-630-002-10	GASKET	*	1					
8	V230-360-601-60	FLANGEBOLT/M6X16	*	2					
9	6281-920-001-00	RELAY,SOLENOID	*	1					

FIG. 27 REPAIR PARTS(OPTION)

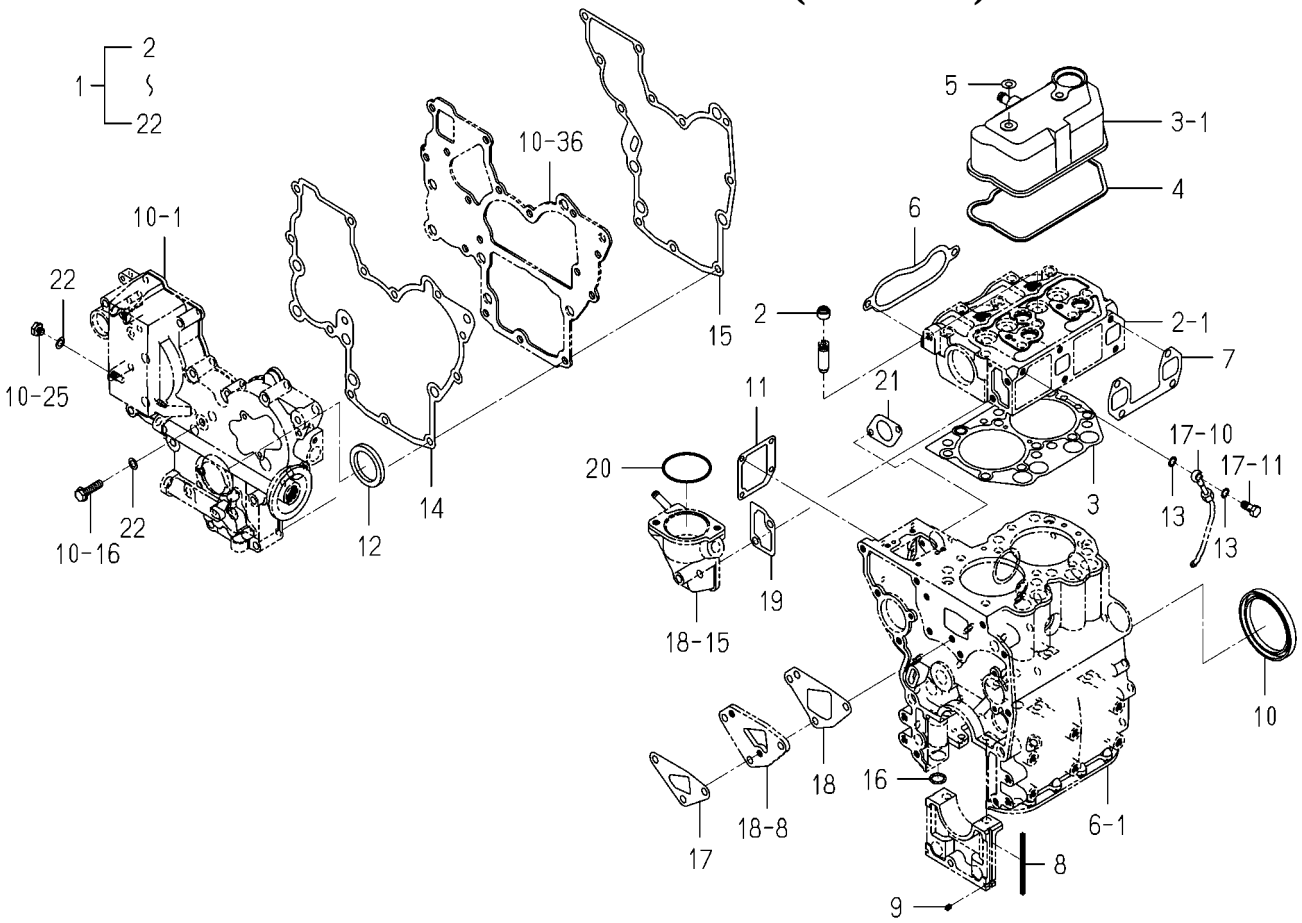

6003-999H-0100

KEY	PART CODE	DESCRIPTION	SPC	TYPE OF MODEL E269G		ITC	COL	GRP	REMARKS
1	6287-810-054-00	REPAIR/ENGINESET	T	1					
2	6212-569-002-00	SEAL,OIL	T	4					
3	6211-141-016-10	GASKET/CYLINDERHEAD	T	1					
4	6211-173-004-00	SEAL,CYL COVER	T	1					
5	6209-572-003-00	GASKET	T	2					
6	6214-115-002-20	GASKET	T	1					
7	6214-145-006-10	GASKET EXHAUST MANIF	T	1					
8	6211-258-001-00	SEAL,BEARING CAP	T	4					
9	6211-258-002-00	SEAL,BEARING CAP/7	T	2					
10	6209-625-001-00	SEAL,OIL	T	1					
11	6211-292-001-20	GASKET/COVER	T	1					
12	6209-625-002-00	SEAL,OIL	T	1					
13	6209-920-002-00	PACKING	T	2					
14	6211-312-001-30	GASKET/GEARCASE	T	1					
15	6211-312-002-30	GASKET/PLATE	T	1					
16	V720-102-401-50	O-RING/1A,P15	T	1					
17	6213-614-003-10	GASKET/WATER PUMP	T	1					
18	6213-614-006-20	GASKET(SPACER)	T	1					
19	6213-743-002-10	GASKET/HOUSING	T	1					
20	V723-102-005-50	O-RING/1A,S55	T	1					
21	6209-630-002-10	GASKET	T	1					
22	6209-500-003-00	WASHER/08X14X01	T	2					

FIG. 28 COMPONENT PARTS FOR 6215-300-045-10 ON Fig.020

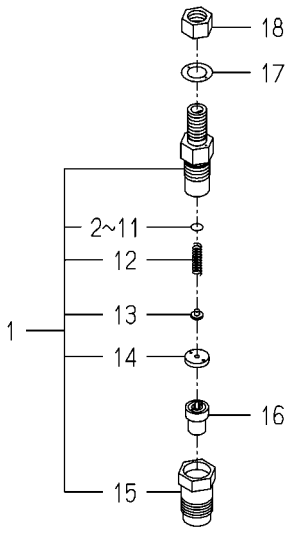

6215-300-045-1B

KEY	PART CODE	DESCRIPTION	SPC	TYPE OF MODEL E269G		ITC	COL	GRP	REMARKS
1	6215-330-028-00	HOLDER/NOZZLEASSY	*	2					
2	6215-345-044-00	SHIM/0.10	*	2					
3	6215-345-045-00	SHIM/0.20	*	2					
4	6215-345-046-00	SHIM/0.30	*	2					
5	6215-345-047-00	SHIM/0.40	*	2					
6	6215-345-048-00	SHIM/0.50	*	2					
7	6215-345-049-00	SHIM/0.52	*	2					
8	6215-345-050-00	SHIM/0.54	*	2					
9	6215-345-051-00	SHIM/0.56	*	2					
10	6215-345-052-00	SHIM/0.58	*	2					
11	6215-345-053-00	SHIM/0.80	*	2					
12	6215-343-010-00	SPRINGNOZZLE	*	2					
13	6215-342-013-00	SPRINGSEAT	*	2					
14	6215-339-004-00	SPACER	*	2					
15	6215-332-014-00	NUT/NOZZLERETAINING	*	2					
16	6215-311-036-00	NOZZLE	*	2					
17	6215-359-003-00	GASKET	*	2					
18	6215-359-004-00	NUT	*	2					

FIG. 29 COMPONENT PARTS FOR 6215-600-147-00 ON Fig.021

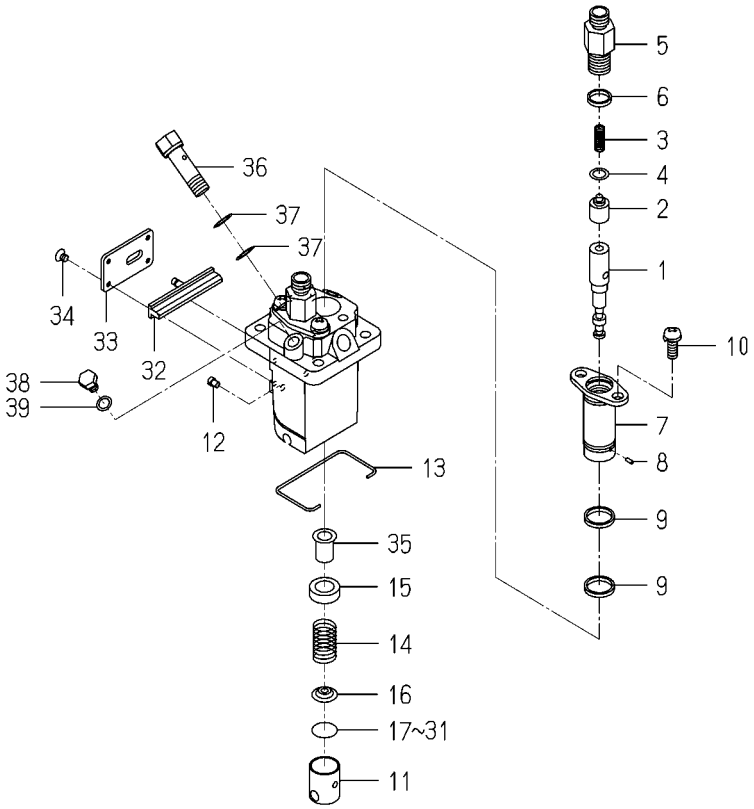

6215-600-147-0C

KEY	PART CODE	DESCRIPTION	SPC	TYPE OF MODEL E269G		ITC	COL	GRP	REMARKS
1	6215-631-017-00	PLUNGER ASSY	*	2					
2	6215-641-002-00	VALVE,DELIVERY	*	2					
3	6215-643-002-00	SPRING DELIVERY VALV	*	2					
4	6215-649-003-00	GASKET	*	2					
5	6215-644-003-00	HOLDER,DELIVERYVALVE	*	2					
6	6215-649-004-10	ORING	*	2					
7	6215-635-002-00	SLEEVE,FRANGE	*	2					
8	6215-649-005-00	PIN	*	2					
9	6215-649-006-10	ORING	*	4					
10	6215-649-007-00	SCREW	*	4					
11	6215-622-002-00	TAPPET	*	2					
12	6215-629-017-00	PIN	*	2					
13	6215-629-019-00	RING SNAP	*	1					
14	6215-634-002-00	SPRING,PLUNGER	*	2					
15	6215-639-006-00	SEAT,SPRING	*	2					
16	6215-639-007-00	SEAT,SPRING	*	2					
17	6215-629-020-00	PLATE/T=1.80	*	1					
18	6215-629-021-00	PLATE/T=1.85	*	1					
19	6215-629-022-00	PLATE/T=1.90	*	1					
20	6215-629-023-00	PLATE/T=1.95	*	1					
21	6215-629-024-00	PLATE/T=2.00	*	1					
22	6215-629-025-00	PLATE/T=2.05	*	1					
23	6215-629-026-00	PLATE/T=2.10	*	1					
24	6215-629-027-00	PLATE/T=2.15	*	1					
25	6215-629-028-00	PLATE/T=2.20	*	1					
26	6215-629-029-00	PLATE/T=2.25	*	1					
27	6215-629-030-00	PLATE/T=2.30	*	1					
28	6215-629-031-00	PLATE/T=2.35	*	1					
29	6215-629-032-00	PLATE/T=2.40	*	1					
30	6215-629-033-00	PLATE/T=2.45	*	1					

FIG. 29 COMPONENT PARTS FOR 6215-600-147-00 ON Fig.021

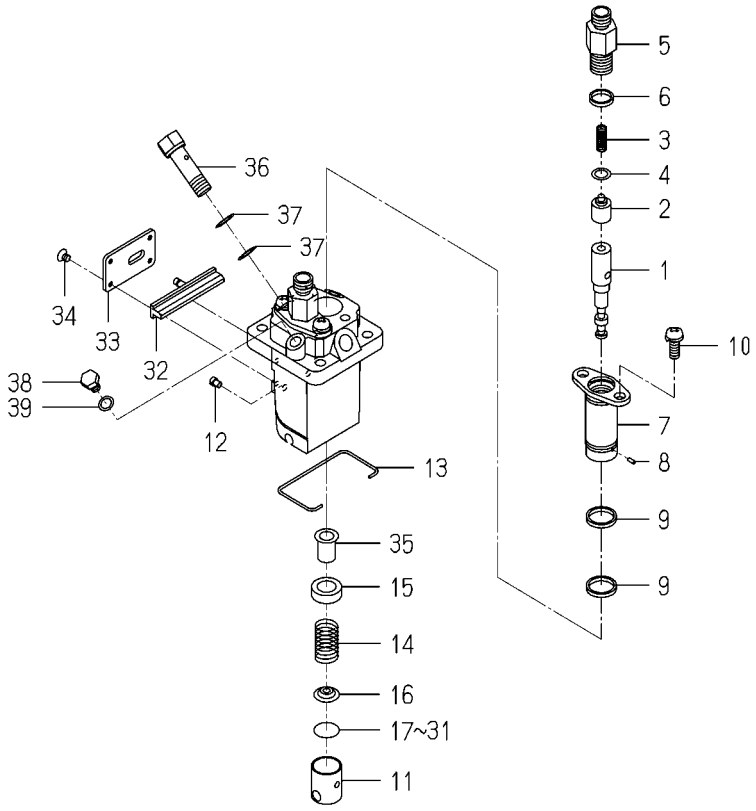

6215-600-147-0C

KEY	PART CODE	DESCRIPTION	SPC	TYPE OF MODEL E269G		ITC	COL	GRP	REMARKS
31	6215-629-034-00	PLATE/T=2.50	*	1					
32	6215-637-003-00	ROD CONTROL	*	1					
33	6215-612-003-00	PLATE	*	1					
34	6215-619-012-00	SCREW	*	4					
35	6215-635-008-00	CONTROLSLEEVE	*	2					
36	6215-619-013-00	BOLT,EYE	*	1					
37	6215-619-014-00	GASKET	*	2					
38	6215-619-015-00	BOLT	*	1					
39	6215-619-016-00	GASKET	*	1					

FIG. 30 COMPONENT PARTS FOR 6281-100-014-00 ON Fig.025

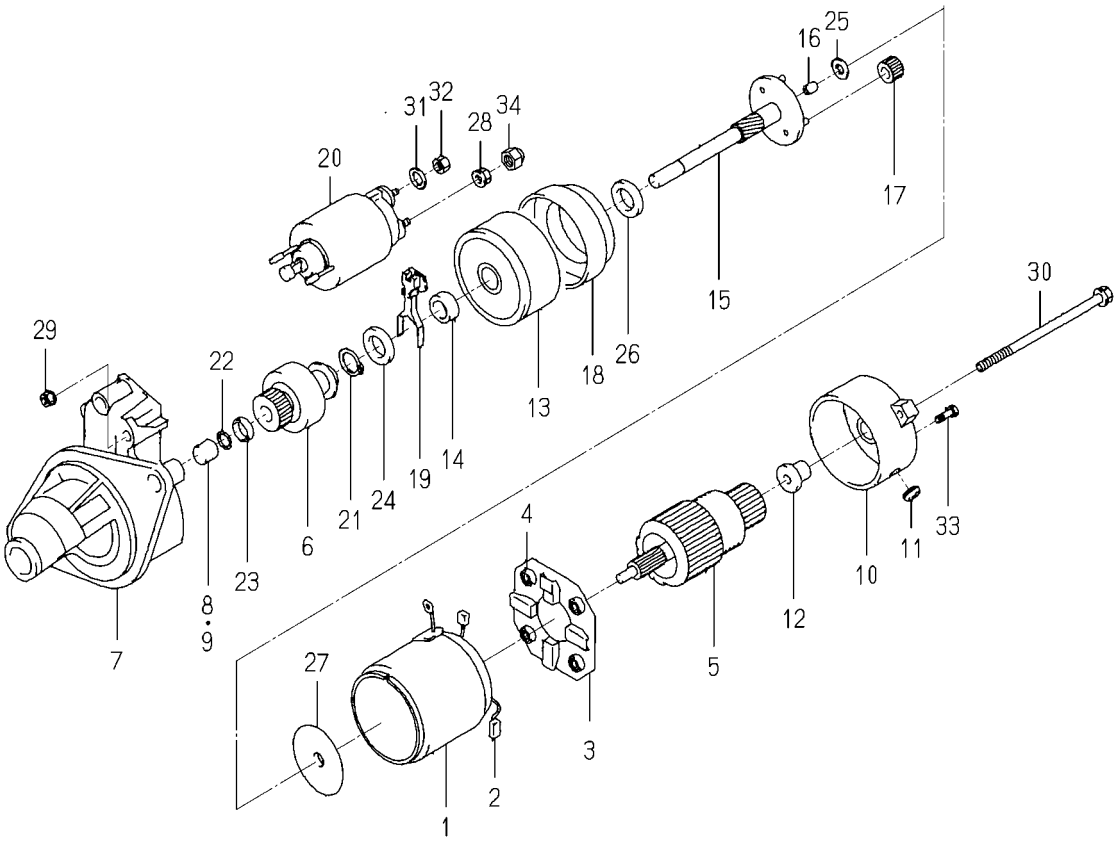

6281-100-014-0A

KEY	PART CODE	DESCRIPTION	SPC	TYPE OF MODEL E269G		ITC	COL	GRP	REMARKS
1	6281-111-009-00	YOKE/STARTER ASSY	*	1					
2	6281-119-009-00	BRUSH/STARTER	*	2					
3	6281-118-007-00	HOLDER/STARTER ASSY	*	1					
4	6281-117-003-00	SPRING/STARTERBRUSH	*	4					
5	6281-121-010-00	ARMATURE/STARTE ASSY	*	1					
6	6281-124-011-00	CLUTCH/STARTER ASSY	*	1					
7	6281-129-064-00	HOUSING/STARTER ASSY	*	1					
8	6281-129-080-00	BEARING/NEEDLE	*	1					
9	6281-129-058-00	BEARING/NEEDLE	*	1					
10	6281-115-017-00	FRAME/COMMUTATOR END	*	1					
11	6281-115-018-00	COVER	*	1					
12	6281-129-065-00	BEARING/OILLESS	*	1					
13	6281-129-066-00	BEARING/WITH SHOCKAB	*	1					
14	6281-129-067-00	BEARING/OILLESS	*	1					
15	6281-129-068-00	SHAFT/STARTER PLANET	*	1					
16	6281-129-069-00	BEARING/OILLESS	*	1					
17	6281-129-070-00	GEAR/STARTER PLANETA	*	3					
18	6281-129-071-00	GEAR/STARTERINTERNAL	*	1					
19	6281-127-003-00	LEVER/PINIONDRIVE	*	1					
20	6281-151-014-00	SWITCH/MAGNETIC ASSY	*	1					
21	6281-129-072-00	RING/SNAP	*	1					
22	6281-129-073-00	RING/SNAP	*	1					
23	6281-129-074-00	NUT/PINIONSTOP	*	1					
24	6281-129-075-00	WASHER/SK	*	1					
25	6281-129-076-00	WASHER/SK	*	1					
26	6281-129-077-00	WASHER/SK	*	1					
27	6281-129-078-00	PLATE	*	1					
28	6281-129-030-00	NUT	*	1					
29	6281-129-029-00	NUT	*	2					
30	6281-129-043-00	BOLT/THROUGH	*	2					

FIG. 30 COMPONENT PARTS FOR 6281-100-014-00 ON Fig.025

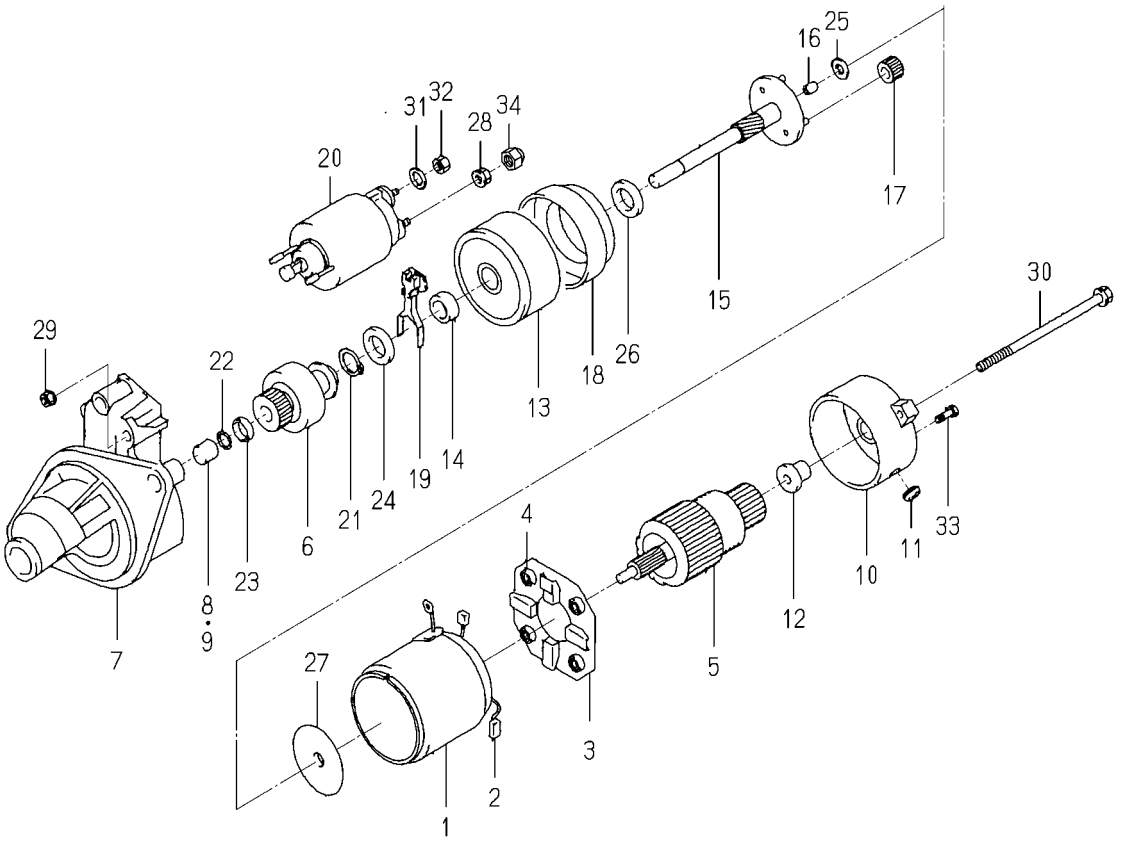

6281-100-014-0A

KEY	PART CODE	DESCRIPTION	SPC	TYPE OF MODEL E269G		ITC	COL	GRP	REMARKS
31	6909-150-508-00	WASHER	*	1					
32	6909-110-408-00	NUT/M8	*	1					
33	6281-129-062-00	SCREW	*	2					
34	6281-129-079-00	NUT	*	1					

C H A S S I S

FIG. 1 BRACKET(ENGINE)SYSTEM

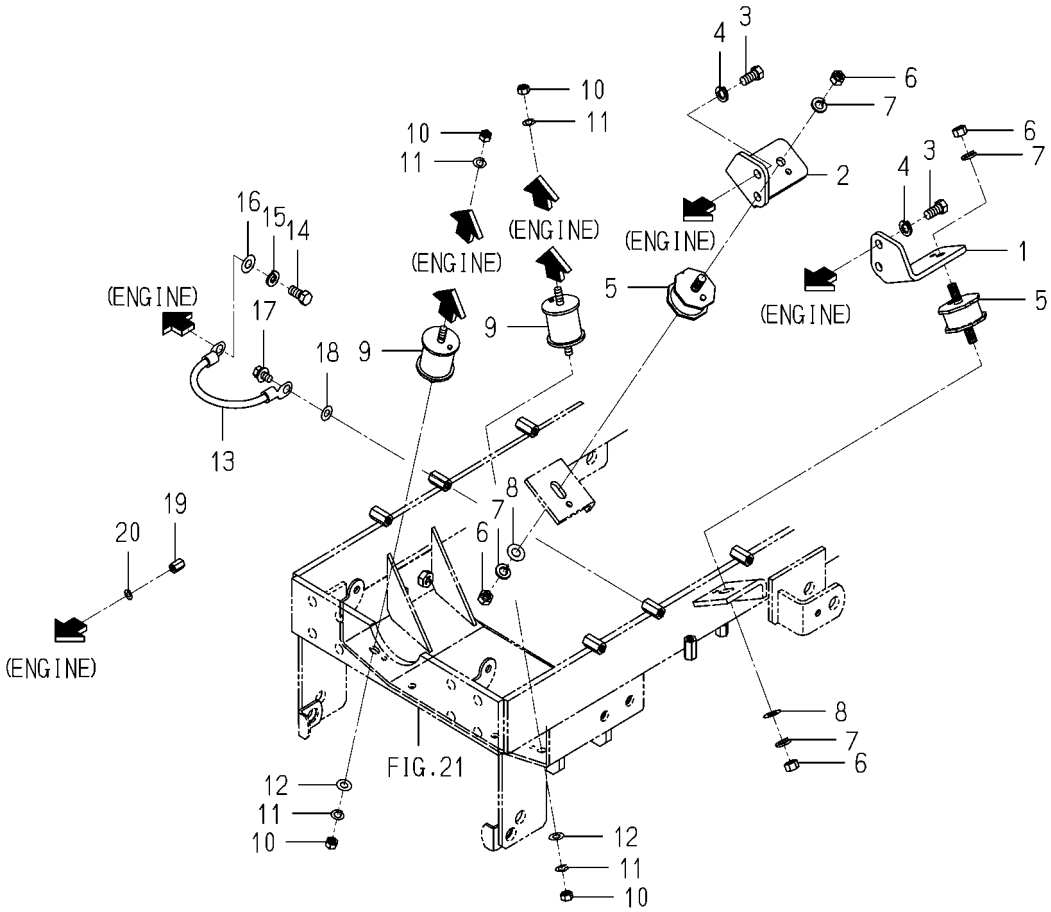

1782-101A-0100

KEY	PART CODE	DESCRIPTION	SPC	TYPE OF MODEL SXG216 H5		ITC	COL	GRP	REMARKS
1	1782-101-002-00	PLATE/LH	*	1					
2	1782-101-003-00	PLATE/RH	*	1					
3	V203-461-002-00	BOLT/M10X20/9T,P1.25	*	4					
4	V401-160-010-00	WASHER,SP/M10	*	4					
5	3623-150-004-10	INSULATOR/MOUNT/RH	*	2					
6	V304-260-010-00	NUT/M10	*	4					
7	V401-160-010-00	WASHER,SP/M10	*	4					
8	V411-260-010-00	WASHER,PL/M10	*	2					
9	1593-101-003-20	INSULATOR	*	2					
10	V304-460-008-00	NUT/M8/7T	*	4					
11	V401-160-008-00	WASHER,SP/M8	*	4					
12	V411-260-008-00	WASHER,PL/M8	*	2					
13	3623-263-001-00	WIRE,LEAD	*	1					
14	V203-461-002-00	BOLT/M10X20/9T,P1.25	*	1					
15	V401-160-010-00	WASHER,SP/M10	*	1					
16	V411-260-010-00	WASHER,PL/M10	*	1					
17	V211-360-801-60	BOLT,SP/M8X16	*	1					
18	V411-260-008-00	WASHER,PL/M8	*	1					
19	1672-603-007-00	NUT/M6X15	*	1					
20	V401-160-006-00	WASHER,SP/M6	*	1					

FIG. 2 RADIATOR SYSTEM

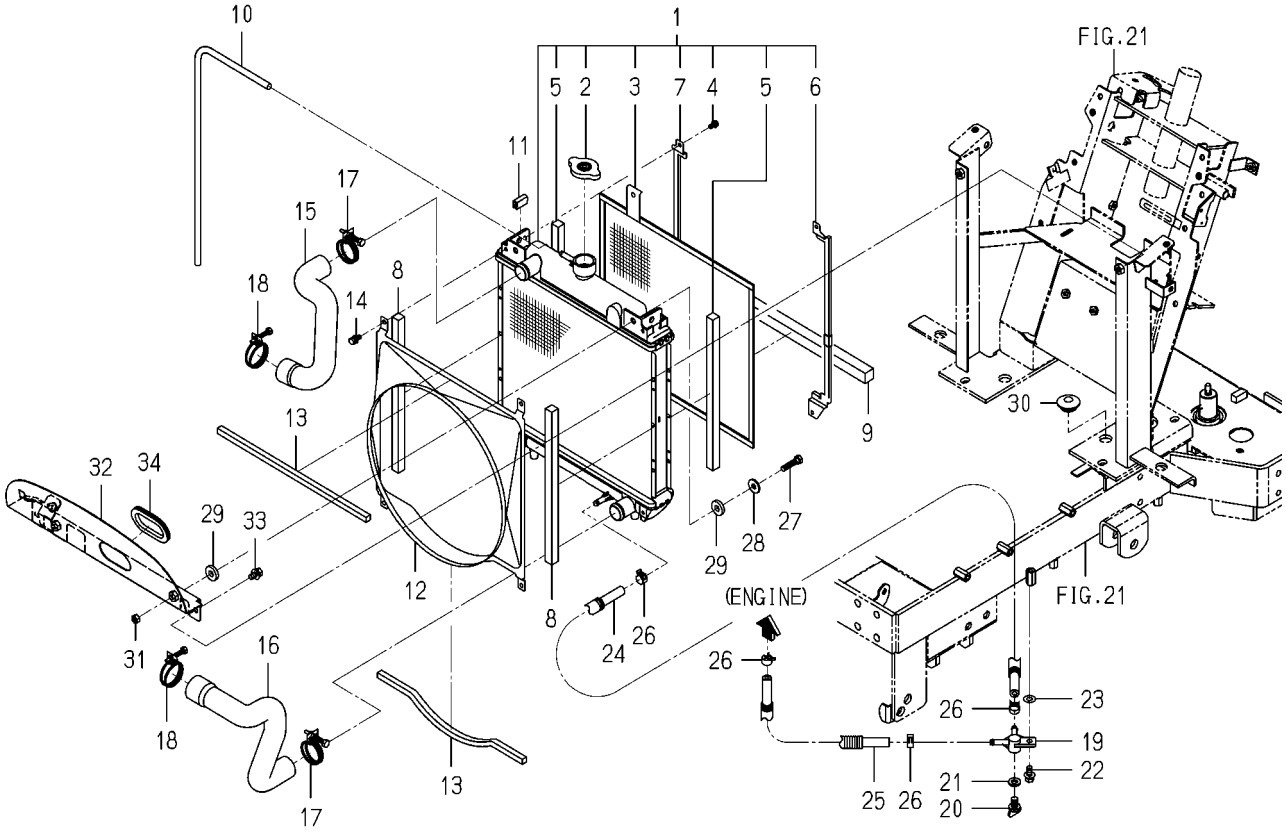

1782-102B-0100

KEY	PART CODE	DESCRIPTION	SPC	TYPE OF MODEL SXG216 H5		ITC	COL	GRP	REMARKS
1	1703-102-200-20	RADIATOR ASSY	*	1					
2	1650-102-202-10	CAP	*	1					
3	1703-102-202-00	PROTECTOR	*	1					
4	1703-102-203-00	SCREW/P	*	4					
5	1703-102-204-00	INSULATOR	*	2					
6	1703-102-205-00	GUIDE	*	1					
7	1703-102-206-00	GUIDE	*	1					
8	1703-102-001-00	INSULATOR	*	2					
9	1782-102-052-00	INSULATOR/20X20X350	*	1					
10	2515-102-003-00	HOSE/08X10X600	*	1					
11	3805-371-007-00	PAD/25	*	1					
12	1782-102-001-00	SHROUD	*	1					
13	1703-102-003-00	INSULATOR	*	2					
14	V210-360-601-20	BOLT,SP/M6X12	*	4					
15	1703-102-004-00	HOSE/RADIATOR/INLET	*	1					
16	1782-102-051-00	HOSE/RADIATOR/OUTLET	*	1					
17	J061-230-038-00	CLAMP/WIRE/30-38	*	2					
18	J061-236-044-00	CLAMP/WIRE/36-44	*	2					
19	1560-104-010-40	CONNECTOR	*	1					
20	1424-101-203-00	PLUG	*	1					
21	1424-101-204-00	PACKING	*	1					
22	V211-360-803-50	BOLT,SP/M8X35	*	1					
23	V411-260-008-00	WASHER,PL/M8	*	1					
24	1728-102-220-00	HOSE/290 ASSY	*	1					
25	1728-102-220-00	HOSE/290 ASSY	*	1					
26	J062-147-159-00	CLIP/HOSE/14.7-15.9	*	4					
27	V201-260-803-50	BOLT/M8X35	*	2					
28	4101-102-038-00	WASHER/24X9X3.2	*	2					
29	1423-616-004-00	CUSHION/RUBBER/10X25	*	4					
30	1421-603-004-00	BUSH,LEVER	*	2					

FIG. 2 RADIATOR SYSTEM

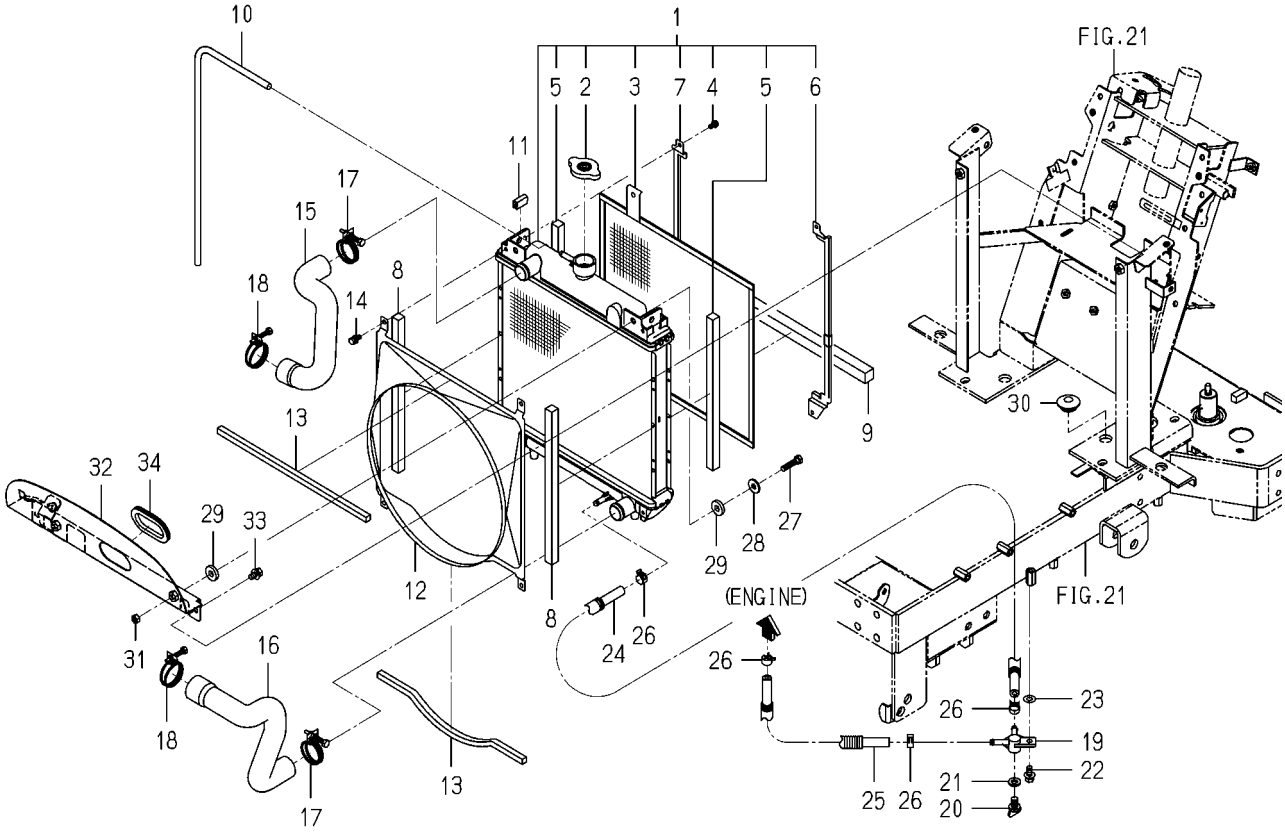

1782-102B-0100

KEY	PART CODE	DESCRIPTION	SPC	TYPE OF MODEL SXG216 H5		ITC	COL	GRP	REMARKS
31	V304-260-008-00	NUT/M8	*	2					
32	1782-102-710-00	PANEL/RADIATOR COMP	*	1					
33	V211-360-801-60	BOLT,SP/M8X16	*	2					
34	1724-102-012-00	TRIM/188	*	1					

FIG. 3 MUFFLER SYSTEM

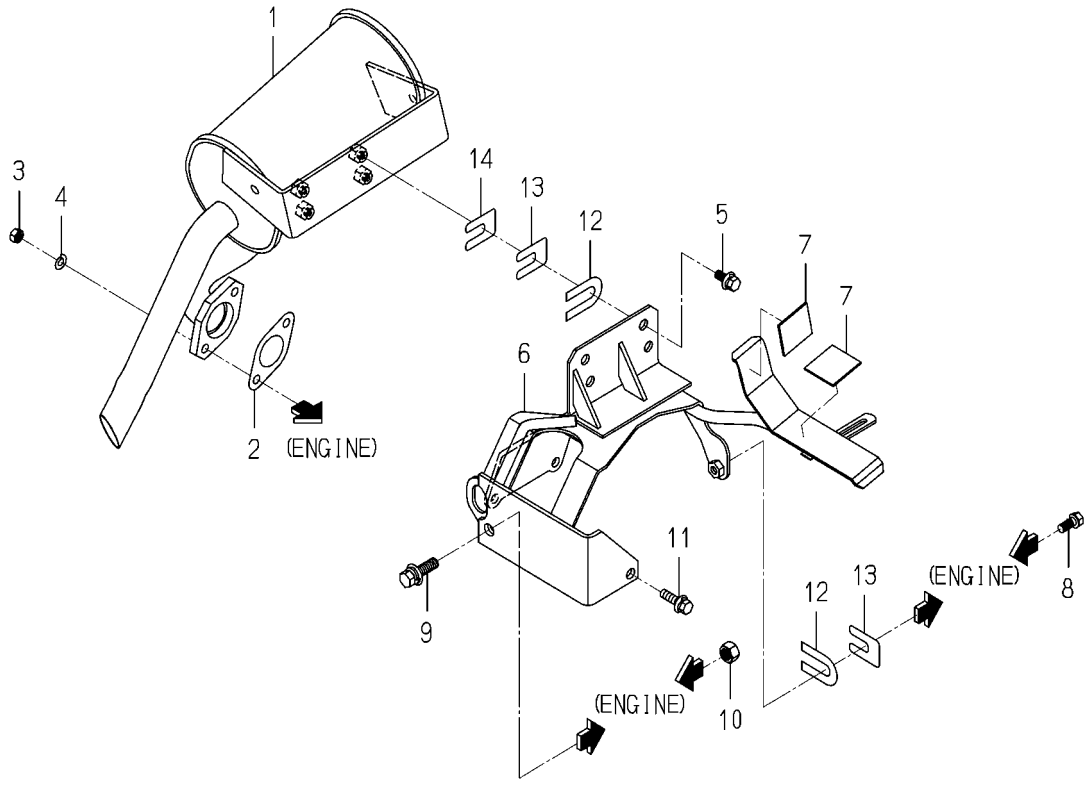

1782-103A-0100

KEY	PART CODE	DESCRIPTION	SPC	TYPE OF MODEL SXG216 H5		ITC	COL	GRP	REMARKS
1	1782-103-700-00	MUFFLER COMP	*	1					
2	1689-103-004-00	GASKET/MUFFLER	*	1					
3	V304-700-008-00	NUT,SUS/M8	*	2					
4	V401-700-008-00	WASHER,SP/M8	*	2					
5	V211-660-802-00	BOLT,SP/M8X20/7T	*	4					
6	1782-103-510-20	BRACKET/MUFFLER COMP	*	1					
7	1427-111-229-00	CUSHION,RUBBER	*	2					
8	V211-660-802-00	BOLT,SP/M8X20/7T	*	1					
9	6209-030-085-00	BOLT/WS	*	1					
10	V304-260-012-00	NUT/M12	*	1					
11	V211-660-803-00	BOLT,SP/M8X30/7T	*	1					
12	3814-302-023-00	SHIM, 1.2	*	8					
13	1725-103-002-00	SHIM/0.6/B	*	4					
14	1782-103-051-00	SHIM/0.3	*	1					

FIG. 4 CLEANER(AIR)SYSTEM

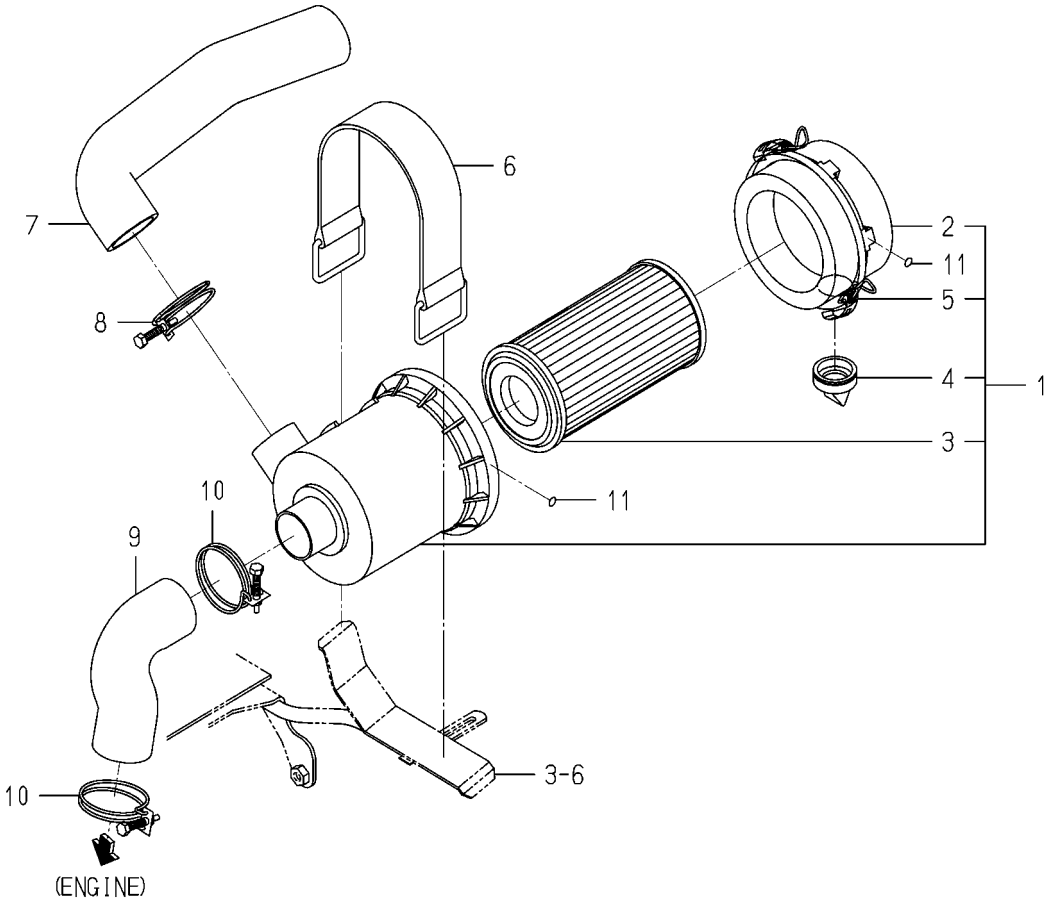

1782-104A-0100

KEY	PART CODE	DESCRIPTION	SPC	TYPE OF MODEL SXG216 H5		ITC	COL	GRP	REMARKS
1	1728-104-210-00	CLEANER/AIR ASSY	*	1					
2	1675-104-211-00	COVER ASSY	*	1					
3	1675-104-213-00	ELEMENT ASSY	*	1					
4	1544-104-205-00	VALVE	*	1					
5	1650-104-201-00	CLIP	*	2					
6	1782-104-051-00	BAND/CLEANER	*	1					
7	1782-104-001-00	HOSE/CLEANER/INLET	*	1					
8	J061-247-055-00	CLAMP/WIRE/47-55	*	1					
9	1703-104-002-00	HOSE/CLEANER/OUTLET	*	1					
10	J061-247-055-00	CLAMP/WIRE/47-55	*	2					
11	1782-104-052-00	MARKER/8	*	2					

FIG. 5 PUMP(FUEL)SYSTEM

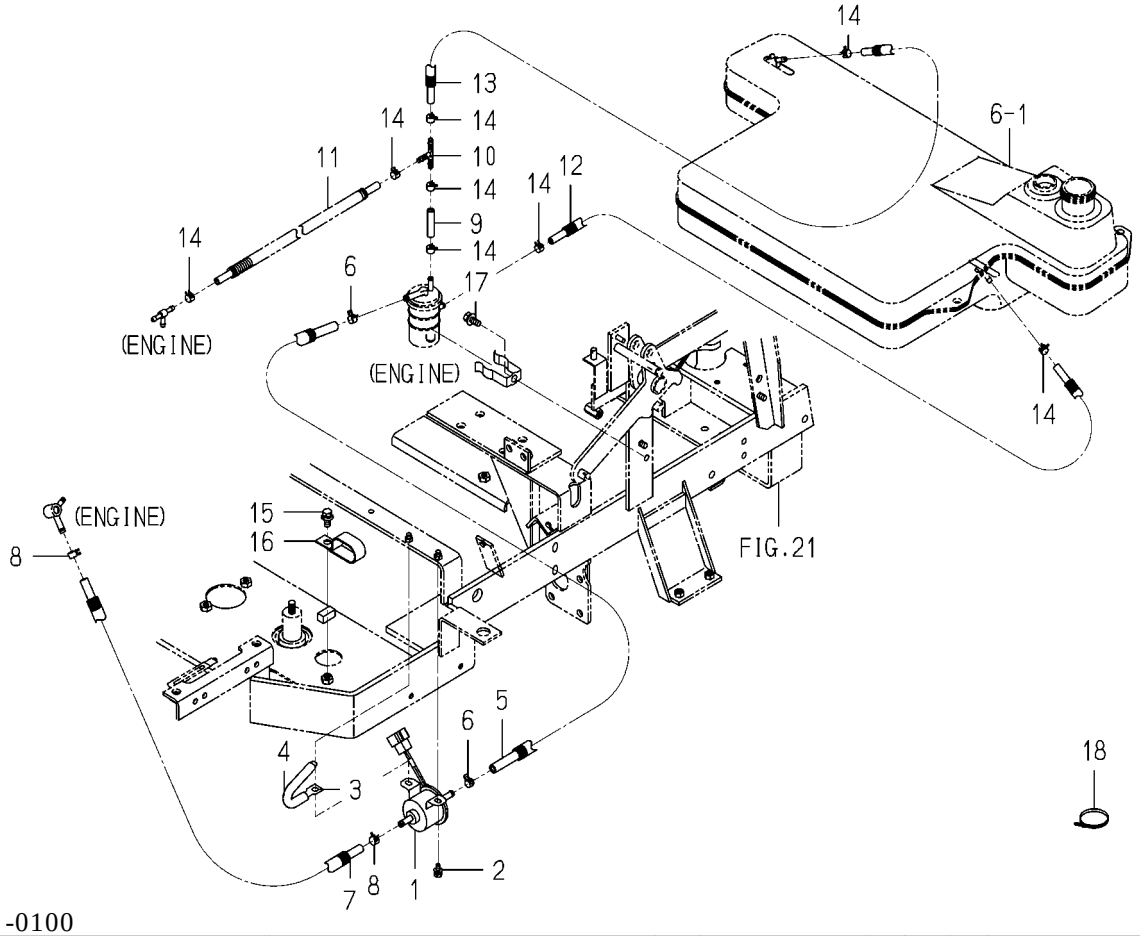

1782-105 -0100

KEY	PART CODE	DESCRIPTION	SPC	TYPE OF MODEL SXG216 H5		ITC	COL	GRP	REMARKS
1	3829-311-200-10	PUMP/FUEL ASSY	*	1					
2	V210-360-601-60	BOLT,SP/M6X16	*	2					
3	1650-650-015-00	CLAMP	*	1					
4	1650-650-017-00	TUBE/120	*	1					
5	1770-105-001-00	HOSE/08X13X370	*	1					
6	1650-111-034-00	CLIP/HOSE/11-13	*	2					
7	1782-105-230-00	HOSE/08X12X1100 ASSY	*	1					
8	J062-119-126-00	CLIP/HOSE/11.9-12.6	*	2					
9	1782-105-001-10	HOSE/06X10X45	*	1					
10	3819-311-013-00	T-JOINT (6X6X6)	*	1					
11	1728-105-230-00	HOSE/06X10X1650 ASSY	*	1					
12	1782-105-210-00	HOSE/06X10X250 ASSY	*	1					
13	1782-105-240-00	HOSE/06X10X800 ASSY	*	1					
14	J062-104-111-00	CLIP/HOSE/10.4-11.1	*	8					
15	V211-360-802-00	BOLT,SP/M8X20	*	1					
16	1444-101-016-10	CLAMP,RADIATOR HOSE	*	1					
17	V211-360-801-60	BOLT,SP/M8X16	*	1					
18	1342-402-006-00	BAND,WIRE/250	*	2					

FIG. 6 TANK(FUEL)SYSTEM

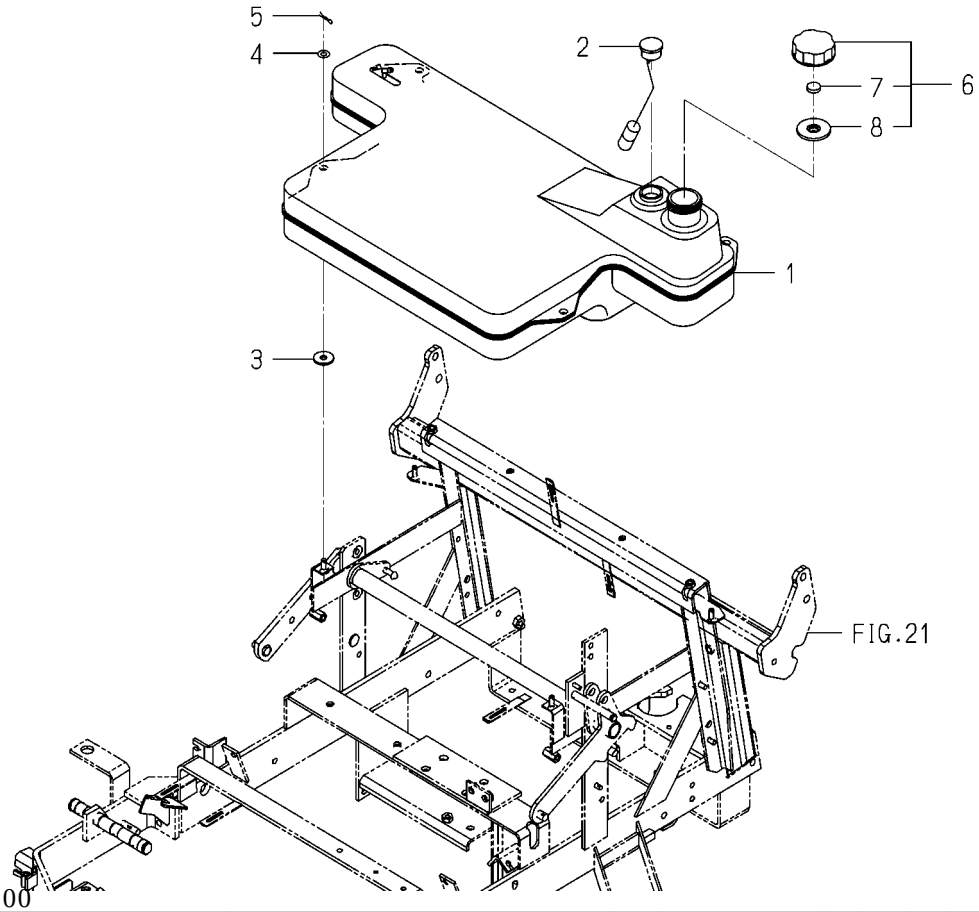

1782-111 -0100

KEY	PART CODE	DESCRIPTION	SPC	TYPE OF MODEL SXG216 H5		ITC	COL	GRP	REMARKS
1	1782-111-001-00	TANK/FUEL	*	1					
2	1782-111-210-00	GAUGE/FUEL ASSY	*	1					
3	1593-612-005-00	INSULATOR/10X30X03	*	4					
4	V411-260-008-00	WASHER,PL/M8	*	4					
5	V560-160-008-00	PIN/SNAP	*	4					
6	1593-612-220-10	CAP,TANK	*	1					
7	2706-501-003-00	BREATHER,TANK CAP	*	1					
8	2706-501-004-00	GASKET	*	1					

FIG. 7 BATTERY SYSTEM

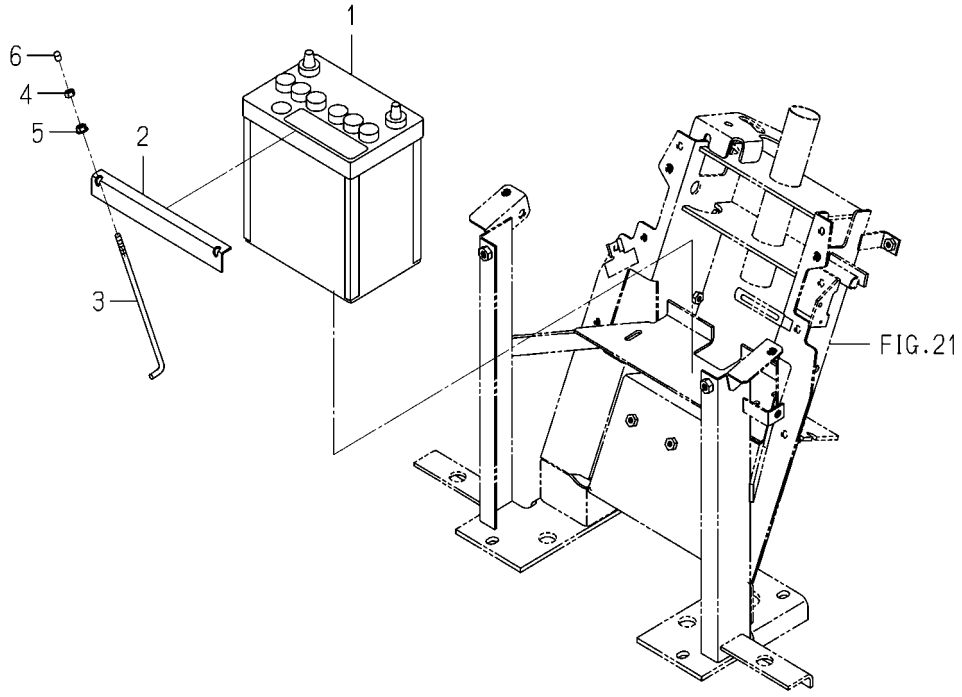

1782-112A-0100

KEY	PART CODE	DESCRIPTION	SPC	TYPE OF MODEL SXG216 H5		ITC	COL	GRP	REMARKS
1	1728-112-250-10	BATTERY/44B19L ASSY	*	1					
2	1782-112-071-00	HOLDER/BATTERY	*	1					
3	1675-112-002-00	BOLT/BATTERY	*	2					
4	V301-260-006-00	NUT/M6	*	2					
5	V360-260-006-00	NUT/WASHER/M6	*	2					
6	1782-112-072-00	CAP/5	*	2					

FIG. 8 LEVER(ACCELERATOR)SYSTEM

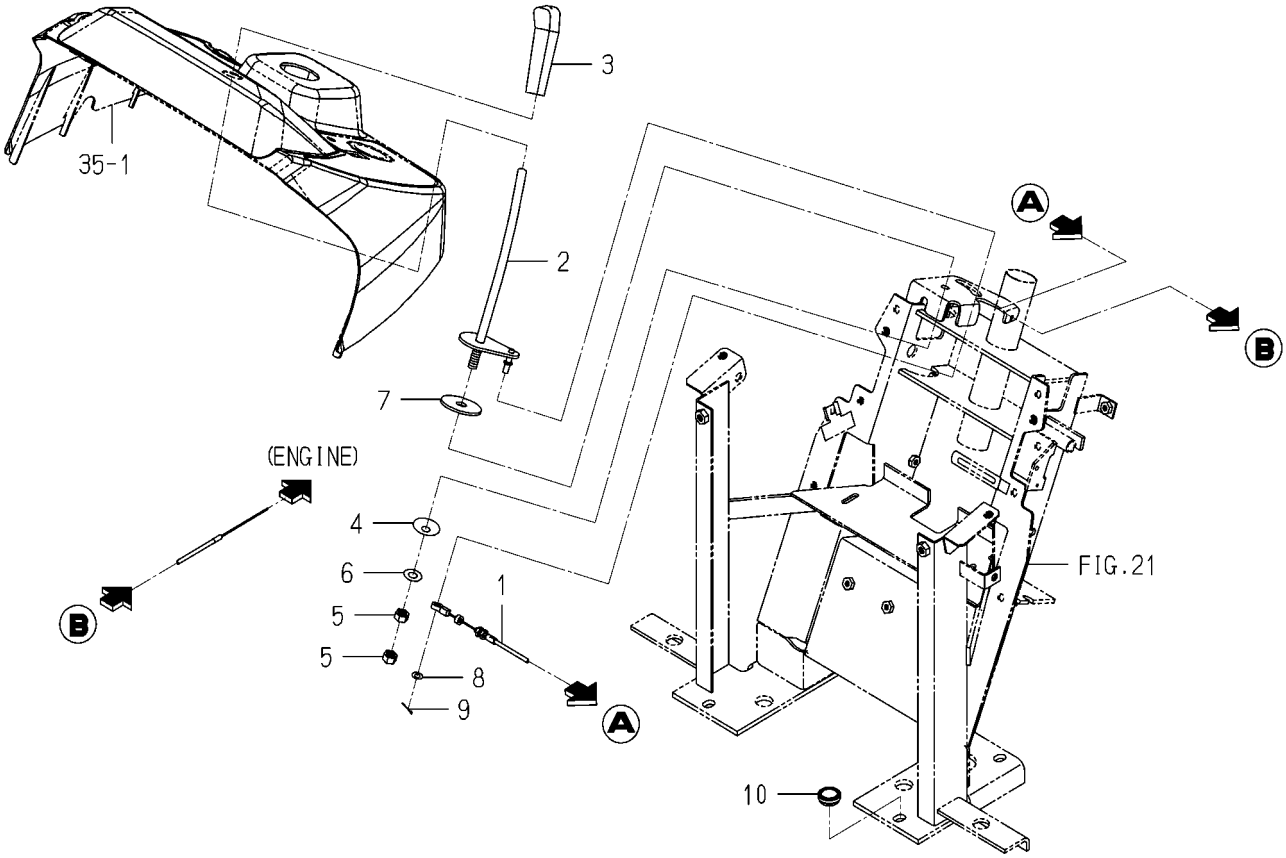

1782-117A-0100

KEY	PART CODE	DESCRIPTION	SPC	TYPE OF MODEL SXG216 H5		ITC	COL	GRP	REMARKS
1	1782-117-520-00	CABLE/ACCELERATOR	*	1					
2	1728-117-700-10	LEVER/ACCELERATOR	*	1					
3	1646-116-051-10	GRIP/THROTTLE	*	1					
4	1593-117-003-10	SPRING,DISK	*	1					
5	V304-260-010-00	NUT/M10	*	2					
6	V411-260-010-00	WASHER,PL/M10	*	1					
7	1600-505-007-10	LINING/13X50X03	*	1					
8	V411-260-006-00	WASHER,PL/M6	*	1					
9	V500-162-501-50	PIN,SPLIT/2.5X15	*	1					
10	1689-613-301-00	CAP/20	*	1					

FIG. 9 SHAFT(INPUT)SYSTEM

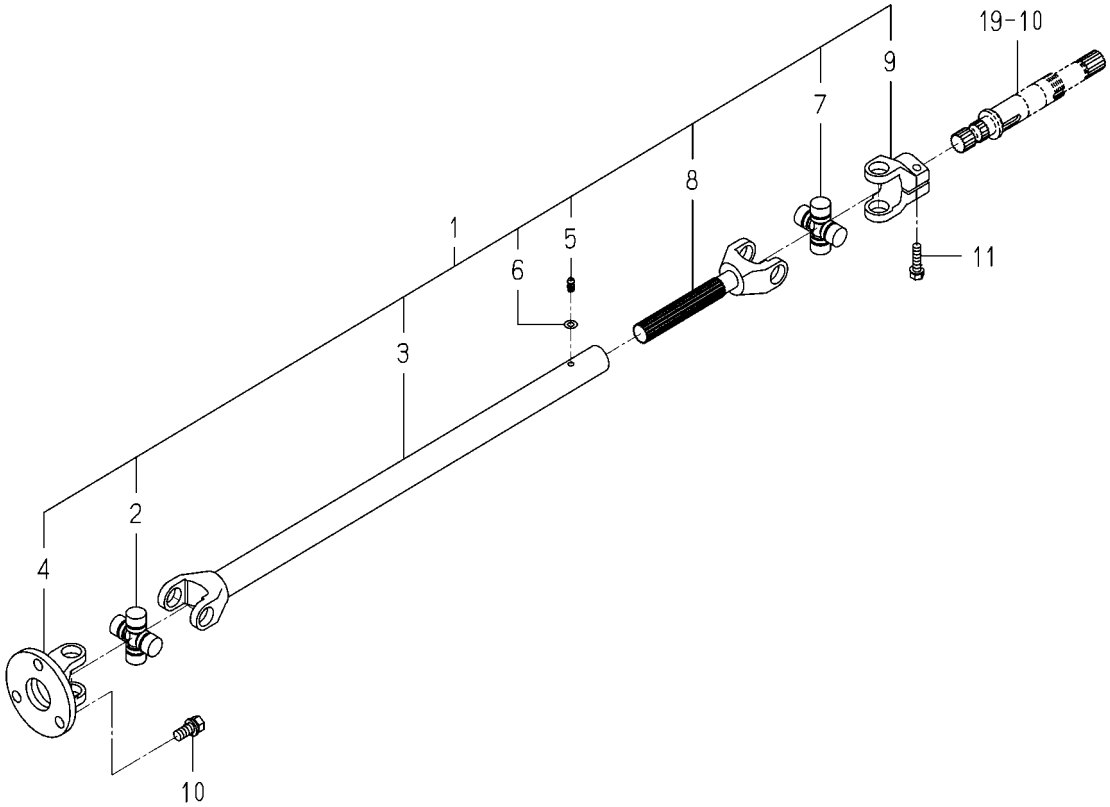

1782-120 -0100

KEY	PART CODE	DESCRIPTION	SPC	TYPE OF MODEL SXG216 H5		ITC	COL	GRP	REMARKS
1	1782-120-220-00	JOINT/UNIVERSAL SET	*	1					
2	1752-120-201-00	JOINT/UNIVERSAL ASSY	*	1					
3	1782-120-232-00	SLEEVEYOKE	*	1					
4	1728-120-221-00	FRANGE/YOKE	*	1					
5	1752-120-206-00	NIPPLE/GREASE	*	1					
6	1782-120-235-00	WASHER	*	1					
7	1752-120-201-00	JOINT/UNIVERSAL ASSY	*	1					
8	1782-120-241-00	SHAFTYOKE	*	1					
9	1752-120-204-00	CLAMP/YOKE	*	1					
10	6901-911-025-00	BOLT,SEMS/M10X25,7T	*	3					
11	V211-560-803-00	BOLT,S/M8X30/7T	*	1					

FIG. 10 METAL(COUNTER)SYSTEM

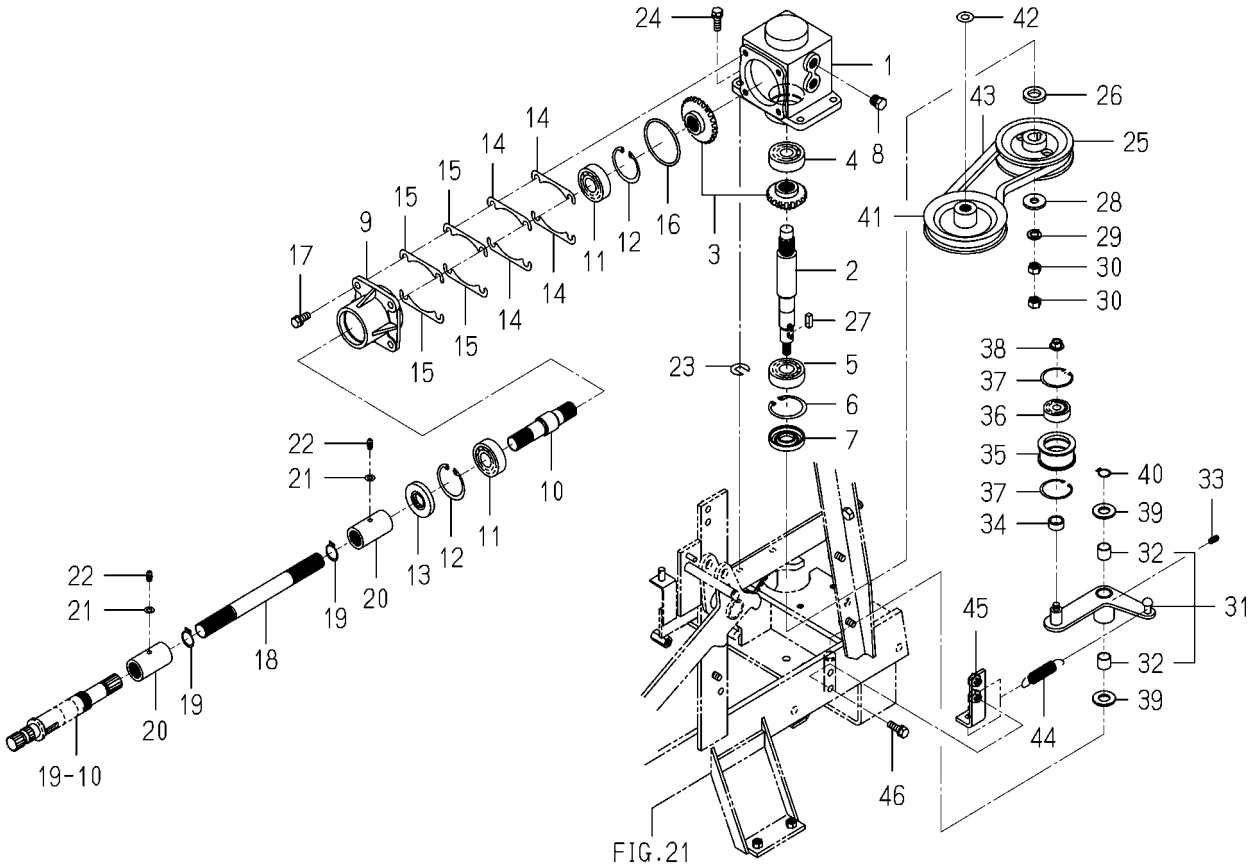

1782-122A-0100

KEY	PART CODE	DESCRIPTION	SPC	TYPE OF MODEL SXG216 H5		ITC	COL	GRP	REMARKS
1	1782-122-001-10	METAL/COUNTER	*	1					
2	1782-122-002-10	SHAFT/OUTPUT	*	1					
3	8670-201-220-00	GEAR/BEVEL/23-1 SET	*	1					
4	V600-110-630-30	BEARING,RB/6303	*	1					
5	V600-110-620-40	BEARING,RB/6204	*	1					
6	V705-140-047-00	RING,SNAP/47 C	*	1					
7	V744-120-470-70	SEAL,OIL/TC20477	*	1					
8	7955-201-026-00	PLUG,DRAIN (1/4)	*	2					
9	8670-201-006-00	METAL/CASE	*	1					
10	8670-201-007-00	SHAFT/CASE	*	1					
11	V600-110-620-40	BEARING,RB/6204	*	2					
12	V705-140-047-00	RING,SNAP/47 C	*	2					
13	V744-120-470-70	SEAL,OIL/TC20477	*	1					
14	8663-202-055-00	SHIM/0.1	*	4					
15	8663-202-056-00	SHIM/0.2	*	4					
16	V721-103-106-00	O-RING/1A,G60	*	1					
17	V211-260-802-00	BOLT,S/M8X20	*	4					
18	8670-201-008-10	SHAFT/JOINT	*	1					
19	8674-202-012-00	RING/SNAP/CS20	*	2					
20	1782-122-051-00	COUPLING/18X30X55	*	2			7F		
21	V411-260-006-00	WASHER,PL/M6	*	2					
22	V760-150-000-00	NIPPLE,GREASE	*	2					
23	2120-340-004-00	SHIM,PLANTING B/0.5	*	4					
24	V211-660-802-50	BOLT,SP/M8X25/7T	*	4					
25	1782-122-003-00	PULLEY/VB097	*	1					
26	1782-122-013-00	WASHER/17X30X05	*	1					
27	3750-121-011-00	KEY	*	1					
28	3659-170-003-00	WASHER/11X30X3	*	1					
29	V401-160-010-00	WASHER,SP/M10	*	1					
30	V304-260-010-00	NUT/M10	*	2					

FIG. 10 METAL(COUNTER)SYSTEM

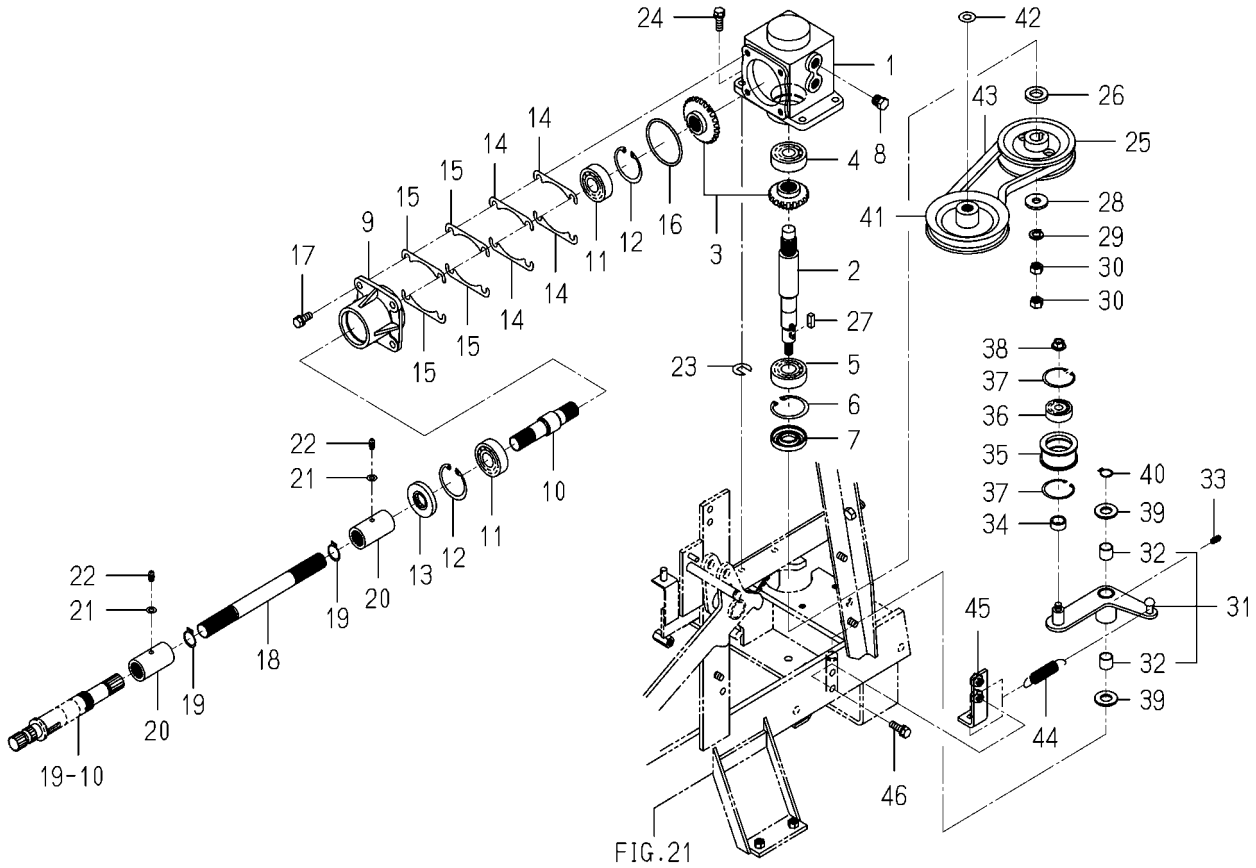

1782-122A-0100

KEY	PART CODE	DESCRIPTION	SPC	TYPE OF MODEL SXG216 H5		ITC	COL	GRP	REMARKS
31	1782-122-700-10	ARM/TENSION/HST ASSY	*	1					
32	3676-133-013-00	BUSH,15X17X15	*	2					
33	V760-150-000-00	NIPPLE,GREASE	*	1					
34	1782-122-052-00	COLLAR/15X20X09	*	1					
35	1782-122-014-00	PULLY/FT045X020	*	1					
36	V600-150-620-20	BEARING,RB/6202SS	*	1					
37	V705-140-035-00	RING,SNAP/35 C	*	2					
38	V362-260-008-00	NUT/WASHER/M8	*	1					
39	V411-260-014-00	WASHER,PL/M14	*	2					
40	V704-140-015-00	RING,SNAP/15 C	*	1					
41	1782-122-210-10	PULLEY/VB101 COMP	*	1					
42	V411-260-010-00	WASHER,PL/M10	*	1					
43	1782-122-012-00	BELT/VB027	*	1					
44	1104-410-007-00	SPRING/HE074	*	1					
45	1782-122-720-00	PLATE/L/25X81 COMP	*	1					
46	V211-560-802-50	BOLT,S/M8X25/7T	*	2					

FIG. 11 MISSON(HST)SYSTEM

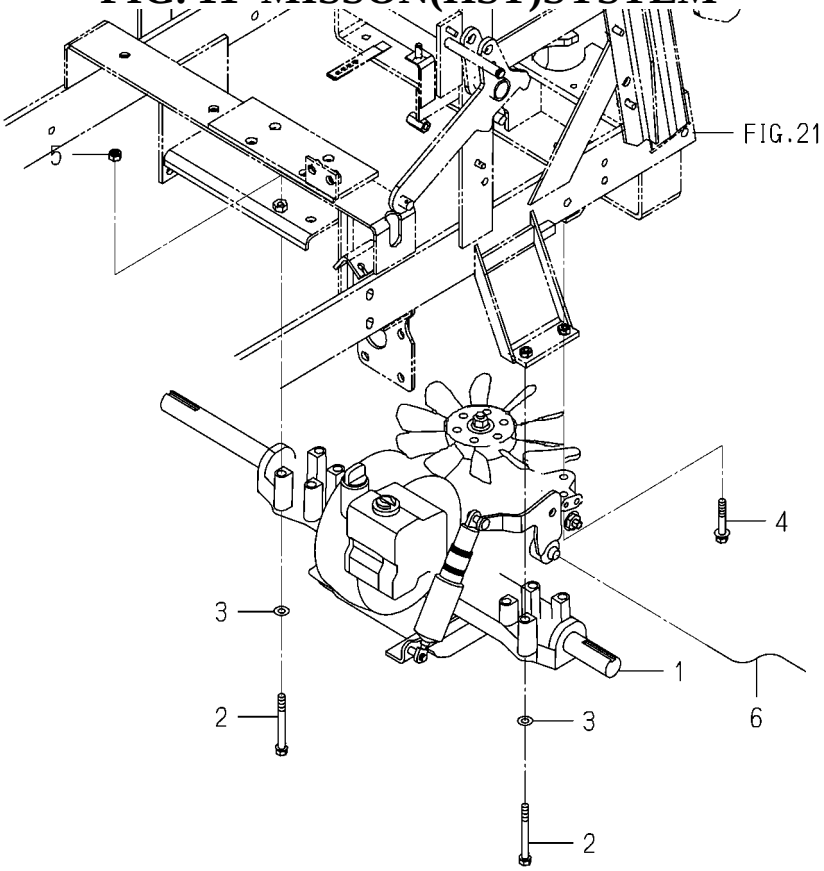

1782-201 -0100

KEY	PART CODE	DESCRIPTION	SPC	TYPE OF MODEL SXG216 H5		ITC	COL	GRP	REMARKS
1	1782-201-200-40	HST/K66AH ASSY	*	1					FIG 043
2	6209-030-006-00	BOLT/M8X75	*	4					
3	V411-260-008-00	WASHER,PL/M8	*	4					
4	V211-660-805-00	BOLT,SP/M8X50/7T	*	1					
5	1719-312-001-00	U-NUT	*	5					
6		WIRE	*	1					

FIG. 12 MOUNT(HST)SYSTEM

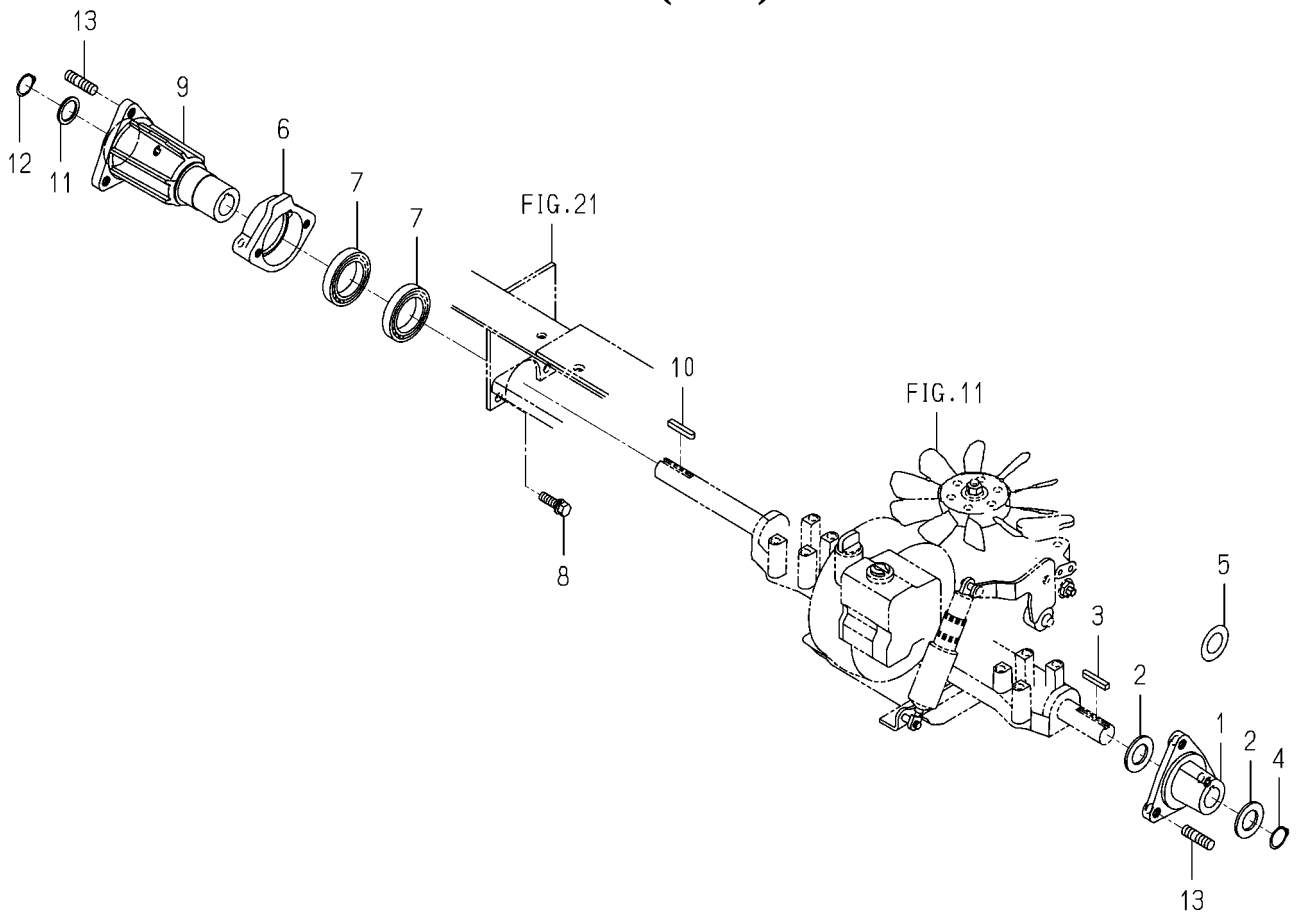

1782-202 -0100

KEY	PART CODE	DESCRIPTION	SPC	TYPE OF MODEL SXG216 H5		ITC	COL	GRP	REMARKS
1	1782-202-001-30	HUB/WHEEL/LH	*	1					
2	1782-202-002-00	WASHER/26X45X02	*	2					
3	1782-202-054-00	KEY/06X06X40	*	1					
4	1725-218-006-00	RING/SNAP/CS25	*	1					
5	1782-202-009-00	WASHER/26X45X02	*	1					
6	1782-202-052-00	METAL/WHEELSHAFT	*	1					
7	1782-202-056-00	BEARING/BALL	*	2					
8	V211-561-003-50	BOLT,S/M10X35/7T	*	2					
9	1782-202-051-10	HUB/WHEEL/RH	*	1					
10	1782-202-054-00	KEY/06X06X40	*	1					
11	3666-222-003-00	WASHER/26X34X2	*	1					
12	1725-218-006-00	RING/SNAP/CS25	*	1					
13	V251-341-202-50	STUD/M12X25/7T	*	6					

FIG. 13 LINK(HST)SYSTEM

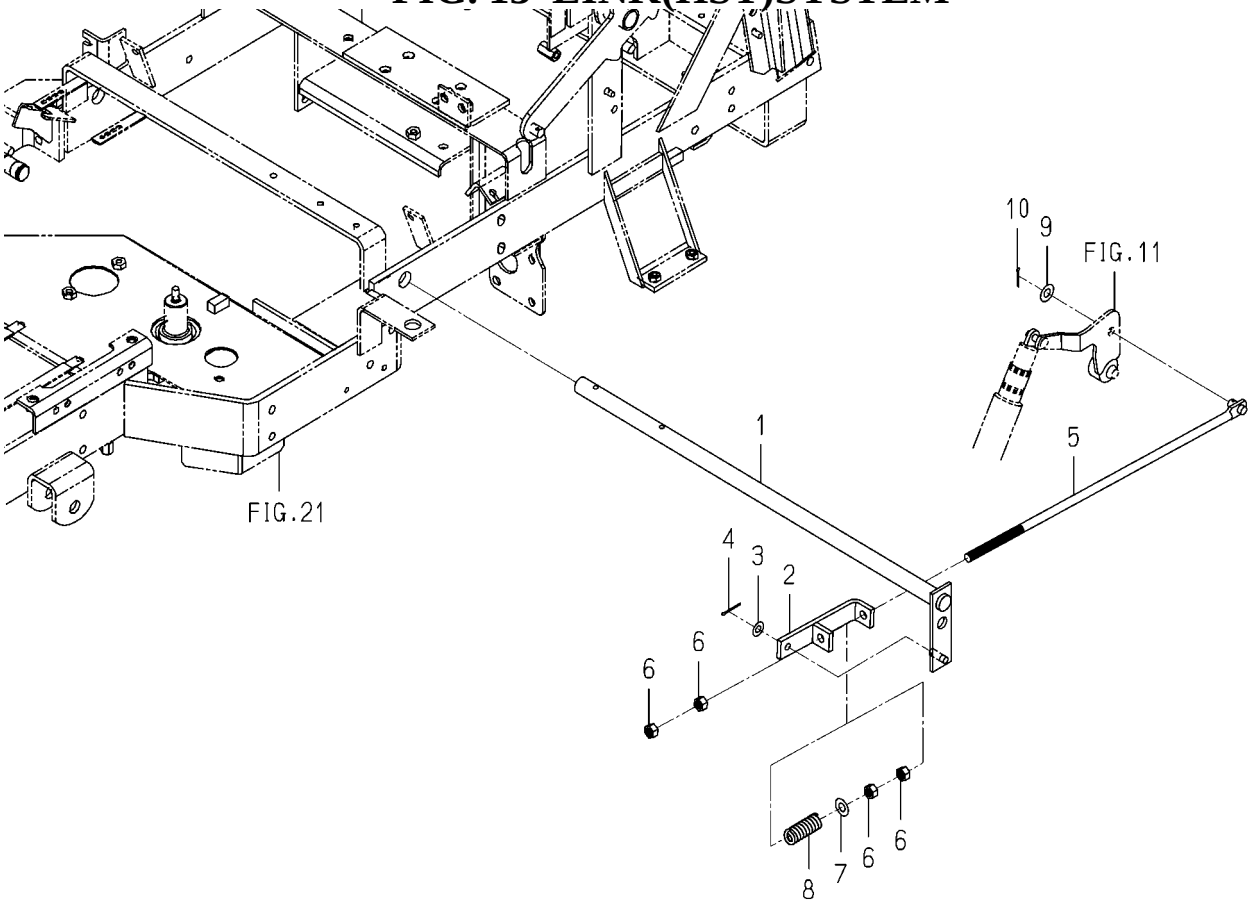

1782-271A-0100

KEY	PART CODE	DESCRIPTION	SPC	TYPE OF MODEL SXG216 H5		ITC	COL	GRP	REMARKS
1	1782-271-520-00	PIN/HST COMP	*	1					
2	1782-271-230-20	PLATE/L/25X132 COMP	*	1					
3	V411-260-008-00	WASHER,PL/M8	*	1					
4	V500-162-502-00	PIN,SPLIT/2.5X20	*	1					
5	1782-271-210-20	ROD/M10X463 COMP	*	1					
6	V304-260-010-00	NUT/M10	*	4					
7	V411-260-010-00	WASHER,PL/M10	*	1					
8	1782-271-003-00	SPRING/HC047	*	1					
9	V411-260-010-00	WASHER,PL/M10	*	1					
10	V500-162-502-00	PIN,SPLIT/2.5X20	*	1					

FIG. 14 PEDAL(HST)SYSTEM

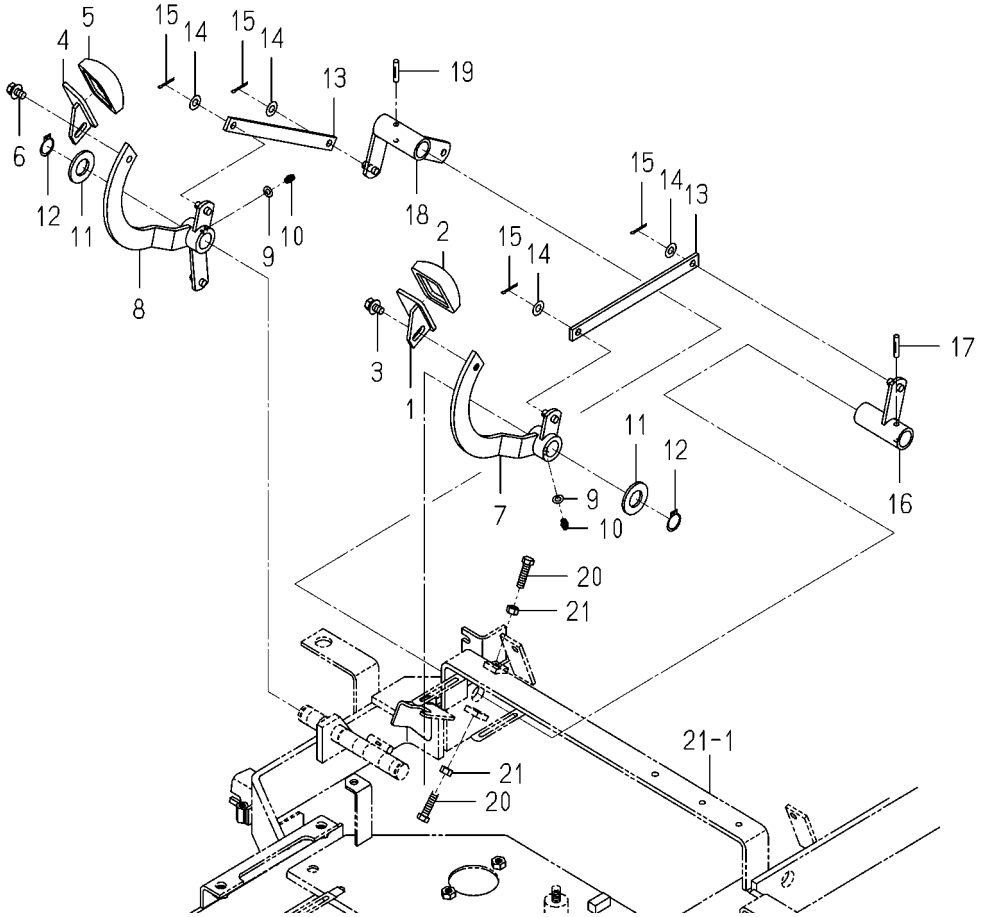

1782-272B-0100

KEY	PART CODE	DESCRIPTION	SPC	TYPE OF MODEL SXG216 H5		ITC	COL	GRP	REMARKS
1	1740-272-620-00	PEDAL/HST/R COMP	*	1					
2	1774-272-062-10	PAD/HST/R	*	1					
3	V211-660-801-60	BOLT,SP/M8X16/7T	*	1					
4	1689-272-240-00	PEDAL/HST/RH COMP	*	1					
5	1774-272-062-10	PAD/HST/R	*	1					
6	V211-660-801-60	BOLT,SP/M8X16/7T	*	1					
7	1782-272-510-00	ARM/HST COMP	*	1					
8	1782-272-540-00	ARM/HST/R COMP	*	1					
9	V411-260-006-00	WASHER,PL/M6	*	2					
10	V760-150-000-00	NIPPLE,GREASE	*	2					
11	V411-260-020-00	WASHER,PL/M20	*	2					
12	V704-140-020-00	RING,SNAP/20 C	*	2					
13	1782-272-001-00	PLATE/I/16X214	*	2					
14	V411-260-008-00	WASHER,PL/M8	*	4					
15	V500-162-502-00	PIN,SPLIT/2.5X20	*	4					
16	1782-272-210-10	ARM/COUNTER/F COMP	*	1					
17	V530-240-602-80	PIN/GROOVE	*	1					
18	1782-272-220-10	ARM/COUNTER/R COMP	*	1					
19	V530-240-602-80	PIN/GROOVE	*	1					
20	V201-360-803-00	BOLT/M8X30/7T	*	2					
21	V304-260-008-00	NUT/M8	*	2					

FIG. 15 LOCK(PEDAL)SYSTEM

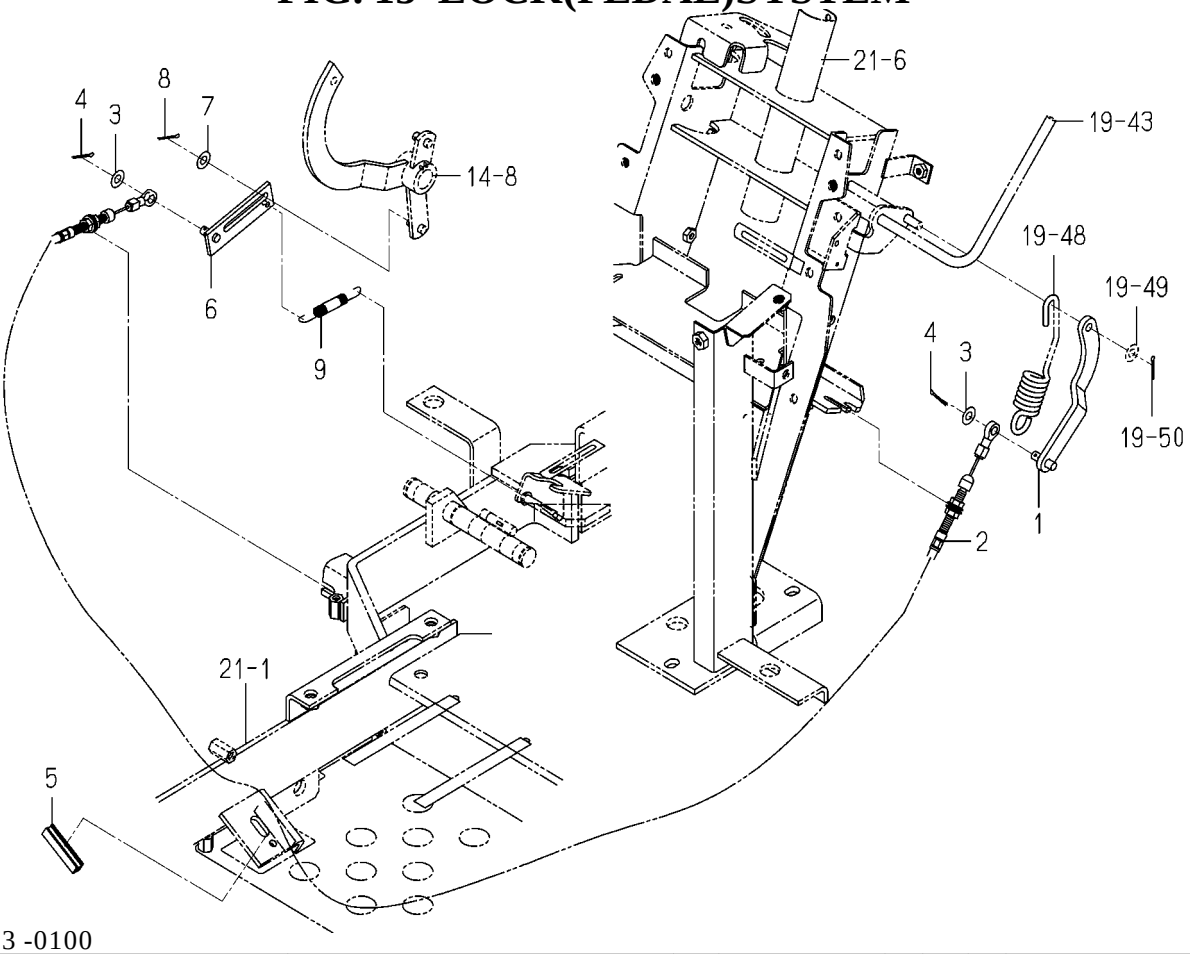

1782-273 -0100

KEY	PART CODE	DESCRIPTION	SPC	TYPE OF MODEL SXG216 H5		ITC	COL	GRP	REMARKS
1	1728-273-240-00	PLATE/PULL/CABL COMP	*	1					
2	1728-273-230-10	CABLE/HST ASSY	*	1					
3	V411-260-008-00	WASHER,PL/M8	*	2					
4	V500-162-502-00	PIN,SPLIT/2.5X20	*	2					
5	3666-202-005-10	PAD/50	*	1					
6	1782-273-240-00	PLATE/STOPPER COMP	*	1					
7	V411-260-008-00	WASHER,PL/M8	*	1					
8	V500-162-502-00	PIN,SPLIT/2.5X20	*	1					
9	1415-120-006-00	SPRING,TENSION/86	*	1					

FIG. 16 PEDAL(BRAKE)SYSTEM

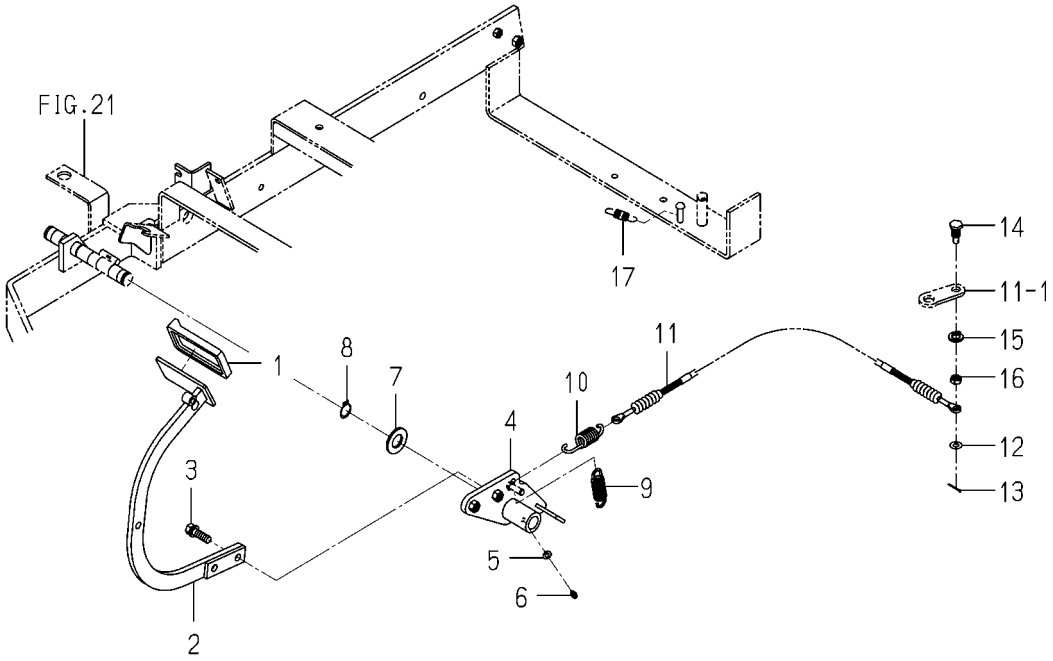

1782-312A-0100

KEY	PART CODE	DESCRIPTION	SPC	TYPE OF MODEL SXG216 H5		ITC	COL	GRP	REMARKS
1	1524-122-001-00	PAD	*	1					
2	1782-312-510-10	PEDAL/BRAKE/216 COMP	*	1					
3	V211-561-003-50	BOLT,S/M10X35/7T	*	2					
4	1782-312-530-00	ARM/BRAKE/216 COMP	*	1					
5	V411-260-006-00	WASHER,PL/M6	*	1					
6	V760-150-000-00	NIPPLE,GREASE	*	1					
7	V411-260-020-00	WASHER,PL/M20	*	1					
8	V704-140-020-00	RING,SNAP/20 C	*	1					
9	1560-404-002-30	SPRING	*	1					
10	3829-133-011-00	SPRING/HE075	*	1					
11	1782-312-260-10	CABLE/BRAKE ASSY	*	1					
12	V411-260-008-00	WASHER,PL/M8	*	1					
13	V500-162-502-00	PIN,SPLIT/2.5X20	*	1					
14	1782-312-001-00	PIN/BRAKE	*	1					
15	V401-160-012-00	WASHER,SP/M12	*	1					
16	V305-260-012-00	NUT/M12	*	1					
17	1480-117-002-00	SPRING,TENSION (52)	*	1					

FIG. 17 BRAKE(PARKING)SYSTEM

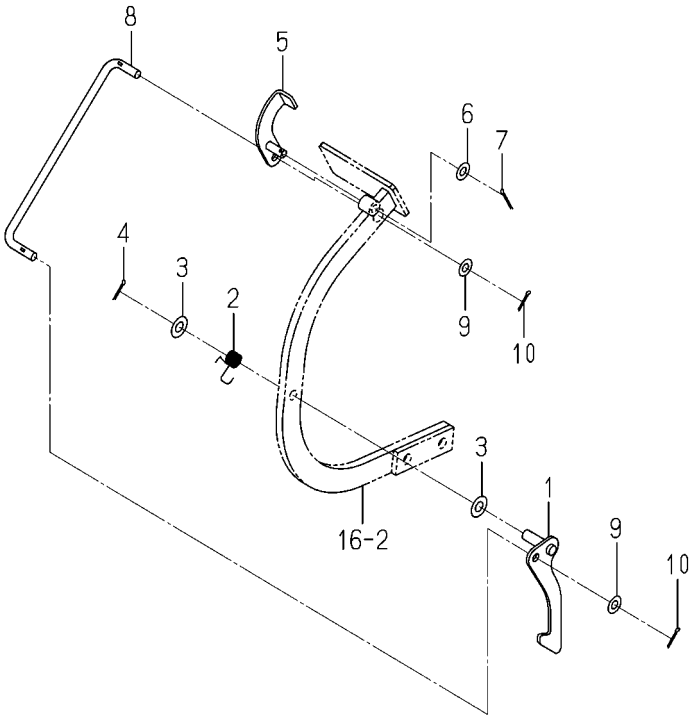

1782-313A-0100

KEY	PART CODE	DESCRIPTION	SPC	TYPE OF MODEL SXG216 H5		ITC	COL	GRP	REMARKS
1	1782-313-510-00	ROCK/PARKING COMP	*	1					
2	1782-313-054-00	SPRING/HT014	*	1					
3	V411-260-010-00	WASHER,PL/M10	*	2					
4	V500-162-502-00	PIN,SPLIT/2.5X20	*	1					
5	1782-313-530-00	PLATE/PARKING COMP	*	1					
6	V411-260-008-00	WASHER,PL/M8	*	1					
7	V500-162-502-00	PIN,SPLIT/2.5X20	*	1					
8	1782-313-052-00	ROD/PARKING	*	1					
9	V411-260-008-00	WASHER,PL/M8	*	2					
10	V500-162-502-00	PIN,SPLIT/2.5X20	*	2					

FIG. 18 WHEEL(REAR)SYSTEM

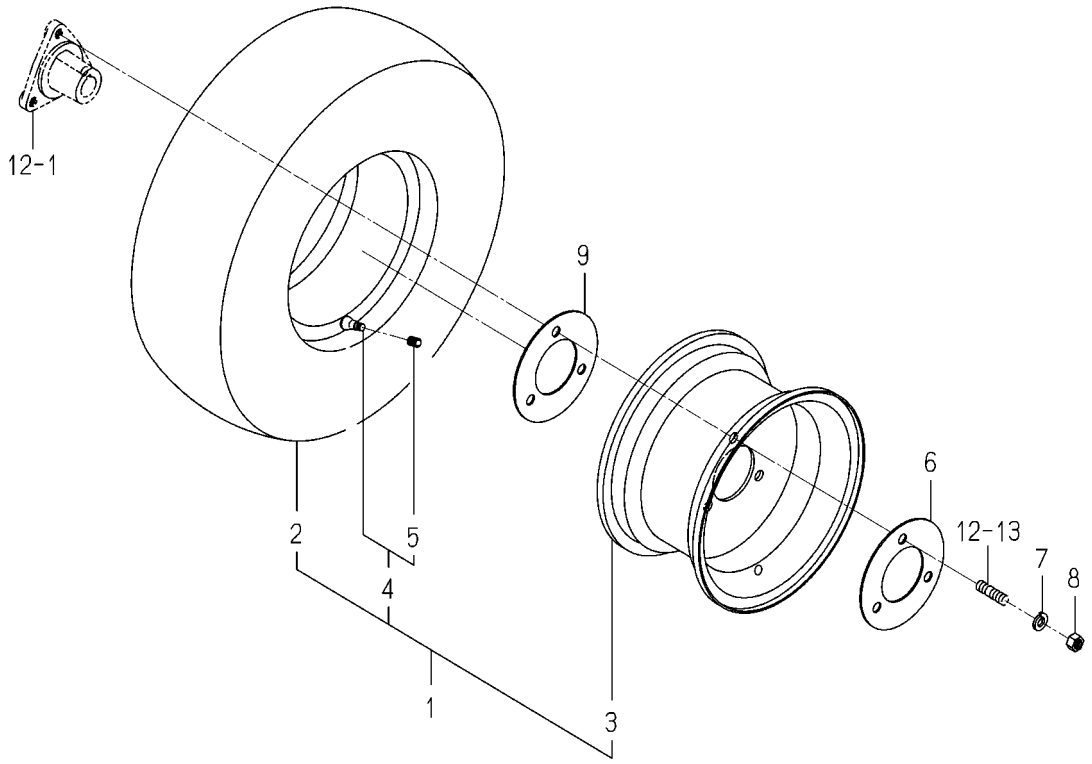

1782-317 -0100

KEY	PART CODE	DESCRIPTION	SPC	TYPE OF MODEL SXG216 H5		ITC	COL	GRP	REMARKS
1	1782-317-250-00	TIRE/20X8.0-10 ASSY	*	2			6G		
2	1782-317-251-00	TIRE/TURF/20-10	*	2					
3	1782-317-260-00	RIM/WHEEL COMP	*	2			6G		
4	1728-441-220-00	RIMVALVE ASSY	*	2					
5	V999-200-003-00	CAP,TIRE VALVE	*	2					
6	1782-317-051-00	RING/HUB/100	*	2					
7	V401-160-012-00	WASHER,SP/M12	*	6					
8	V304-460-012-00	NUT/M12/7T	*	6					
9	1782-317-052-00	RING/HUB/INNER	*	2					

FIG. 19 PTO(MOWER)SYSTEM

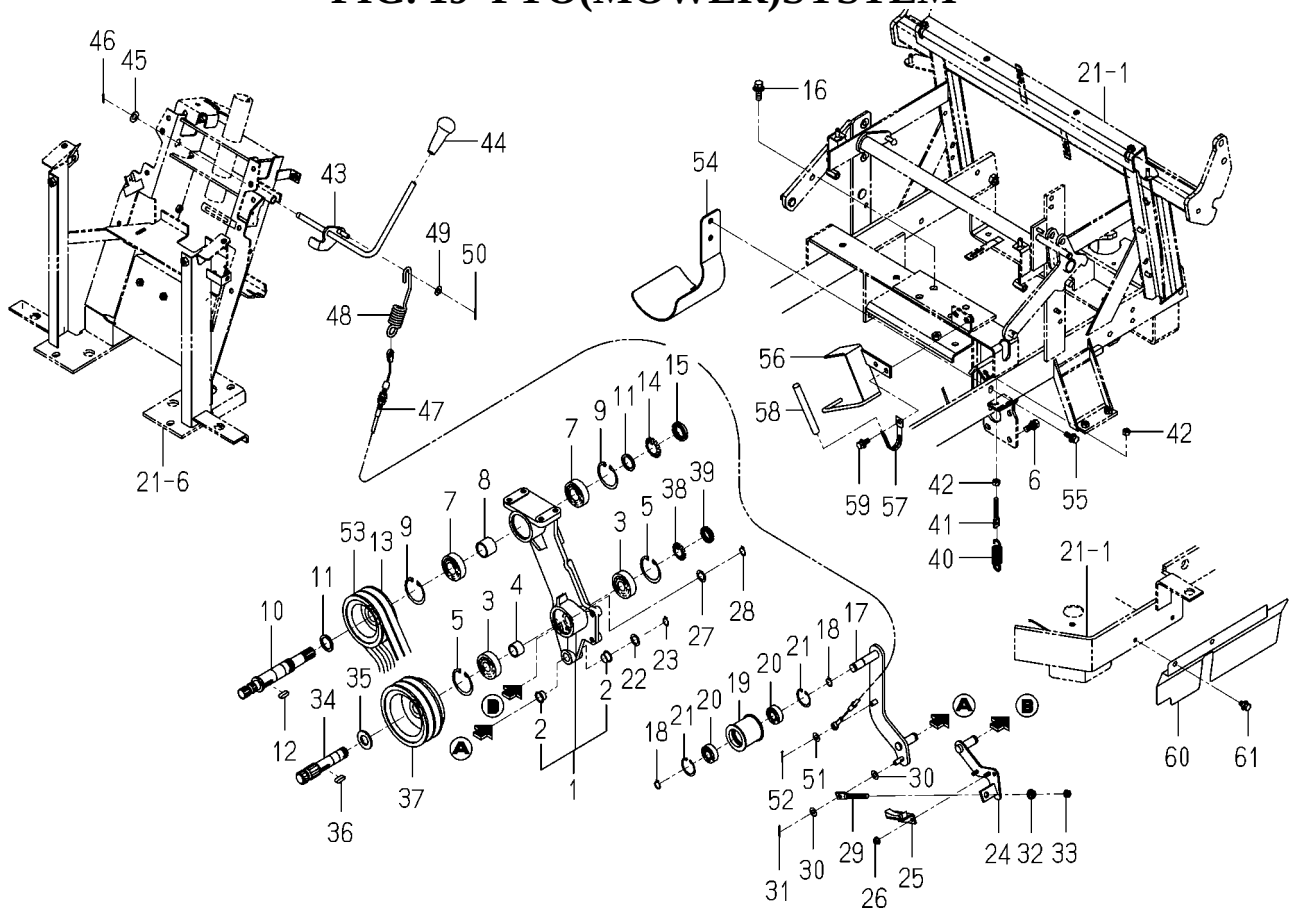

1782-334C-0100

KEY	PART CODE	DESCRIPTION	SPC	TYPE OF MODEL SXG216 H5		ITC	COL	GRP	REMARKS
1	1782-334-310-20	METAL/PTO ASSY	*	1					
2	2502-407-001-10	BUSH/15X17X11	*	4					
3	V600-150-630-40	BEARING,RB/6304SS	*	2					
4	1782-334-006-00	COLLAR/21X25X18	*	1					
5	V705-140-052-00	RING,SNAP/52 C	*	2					
6	V211-561-002-50	BOLT,S/M10X25/7T	*	3					
7	1729-202-015-00	BEARING/BALL	*	2					
8	1782-334-003-00	COLLAR/26X32X25	*	1					
9	V705-140-052-00	RING,SNAP/52 C	*	2					
10	1782-334-023-00	SHAFT/INPUT	*	1					
11	3670-520-008-00	WASHER/25X34X02	*	2					
12	1118-716-001-00	KEY/7X7X22	*	1					
13	1782-334-021-00	PULLEY/V2B104	*	1					
14	V671-400-005-00	WASHER,ADAPTER/AW05	*	1					
15	V670-200-005-00	NUT,ADAPTER/AN05	*	1					
16	V211-661-003-00	BOLT,SP/M10X30/7T	*	4					
17	1782-334-410-00	ARM/TENSION COMP	*	1					
18	V704-140-015-00	RING,SNAP/15 C	*	2					
19	8663-201-062-10	PULLY/FT050X046	*	1					
20	V600-150-620-20	BEARING,RB/6202SS	*	2					
21	V705-140-035-00	RING,SNAP/35 C	*	2					
22	3517-205-007-00	WASHER	*	1					
23	V704-140-015-00	RING,SNAP/15 C	*	1					
24	1782-334-270-10	ARM/PTO/BRAKE COMP	*	1					
25	1728-334-280-00	LINING/PTOBRAKE COMP	*	1					
26	V360-260-006-00	NUT/WASHER/M6	*	2					
27	3517-205-007-00	WASHER	*	1					
28	V704-140-015-00	RING,SNAP/15 C	*	1					
29	3814-114-001-00	ROD/M8X92	*	1					
30	V411-260-008-00	WASHER,PL/M8	*	2					

FIG. 19 PTO(MOWER)SYSTEM

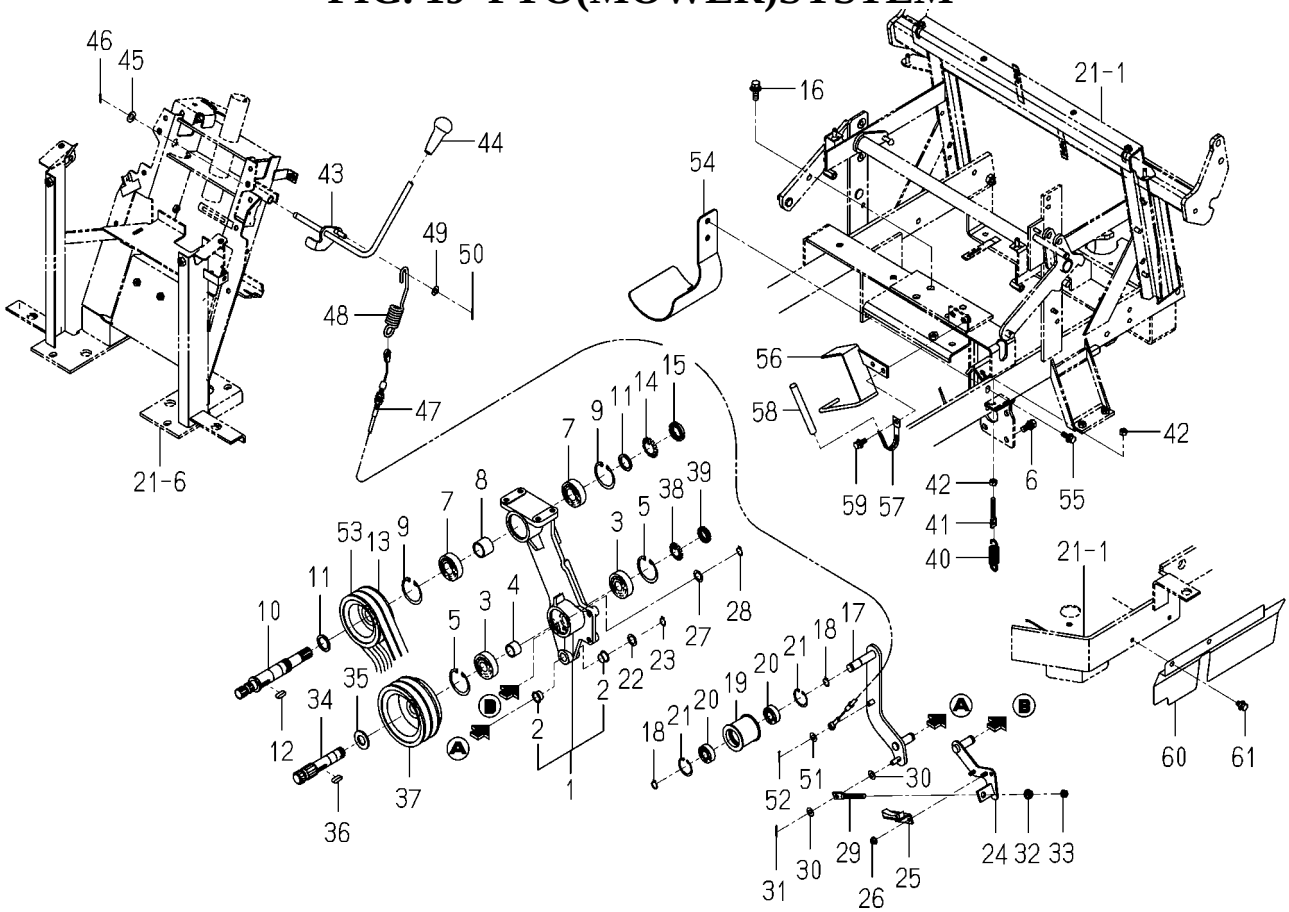

1782-334C-0100

KEY	PART CODE	DESCRIPTION	SPC	TYPE OF MODEL SXG216 H5		ITC	COL	GRP	REMARKS
31	V500-162-502-00	PIN,SPLIT/2.5X20	*	1					
32	V362-260-008-00	NUT/WASHER/M8	*	1					
33	V304-260-008-00	NUT/M8	*	1					
34	1782-334-024-00	SHAFT/PTO	*	1					
35	7970-505-005-00	WASHER	*	1					
36	1118-716-001-00	KEY/7X7X22	*	1					
37	1782-334-022-00	PULLEY/V2B123	*	1					
38	V671-400-004-00	WASHER,ADAPTER/AW04	*	1					
39	V670-200-004-00	NUT,ADAPTER/AN04	*	1					
40	1105-410-003-00	SPRING/HE067	*	1					
41	3838-203-001-00	ROD/08X057	*	1					
42	V304-260-008-00	NUT/M8	*	2					
43	1728-334-910-00	LEVER/PTO COMP	*	1					
44	1705-333-001-00	GRIP/PTO	*	1					
45	V411-260-010-00	WASHER,PL/M10	*	1					
46	V500-162-502-00	PIN,SPLIT/2.5X20	*	1					
47	1782-334-530-10	CABLE/PTO ASSY	*	1					
48	1705-332-006-00	SPRING/HE138	*	1					
49	V411-260-008-00	WASHER,PL/M8	*	1					
50	V500-162-502-00	PIN,SPLIT/2.5X20	*	1					
51	V411-260-008-00	WASHER,PL/M8	*	1					
52	V500-162-502-00	PIN,SPLIT/2.5X20	*	1					
53	1782-334-025-00	BELT/VB031	*	2					
54	1782-334-710-00	GUIDE/BELT/LOWE COMP	*	1					
55	V211-360-802-50	BOLT,SP/M8X25	*	2					
56	1782-334-440-00	STOPPER/BELT COMP	*	1					
57	1650-650-015-00	CLAMP	*	1					
58	1650-650-017-00	TUBE/120	*	1					
59	V211-360-802-00	BOLT,SP/M8X20	*	2					
60	1782-334-014-30	COVER/JOINT	*	1					

FIG. 19 PTO(MOWER)SYSTEM

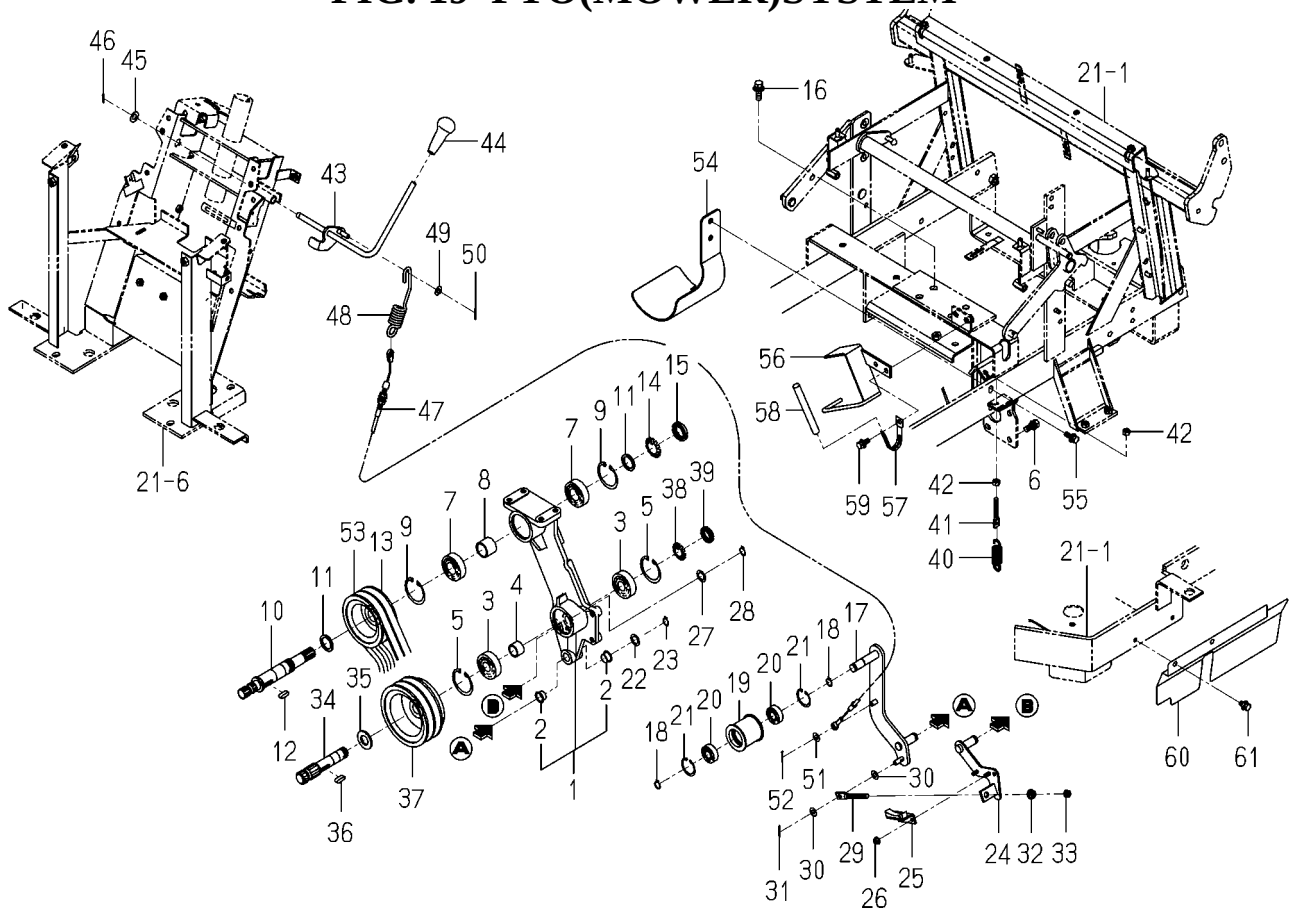

1782-334C-0100

KEY	PART CODE	DESCRIPTION	SPC	TYPE OF MODEL SXG216 H5		ITC	COL	GRP	REMARKS
61	V211-360-801-60	BOLT,SP/M8X16	*	2					

FIG. 20 SHAFT(STEERING)SYSTEM

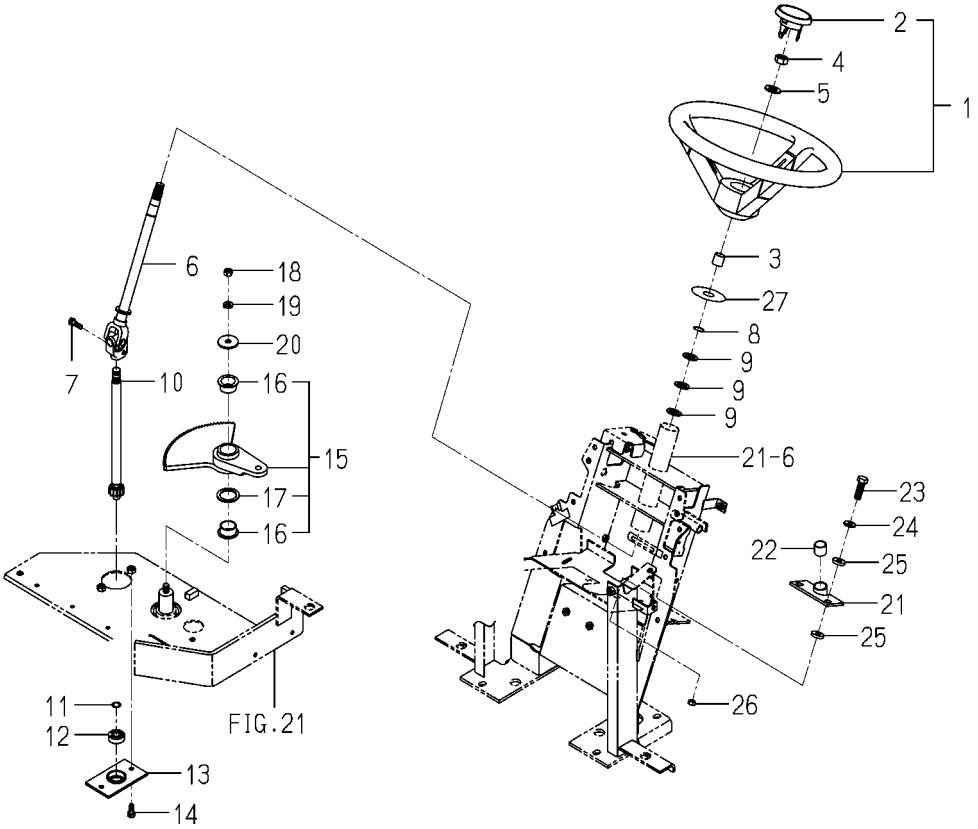

1782-407A-0100

KEY	PART CODE	DESCRIPTION	SPC	TYPE OF MODEL SXG216 H5		ITC	COL	GRP	REMARKS
1	1739-401-700-00	WHEEL/STEERING ASSY	*	1					
2	1773-401-202-10	CAP/WHEEL	*	1					
3	1782-407-051-10	TUBE/20	*	1					
4	V335-260-016-00	NUT/M16,P=1.5	*	1					
5	V411-260-016-00	WASHER,PL/M16	*	1					
6	1782-407-510-10	SHAFT/STEERING/ COMP	*	1					
7	V211-560-802-50	BOLT,S/M8X25/7T	*	1					
8	V704-140-019-00	RING,SNAP/19 C	*	1					
9	1782-407-006-00	WASHER/19X30X02	*	3					
10	1782-407-250-20	SHAFT/STEERING/ COMP	*	1					
11	1330-726-013-00	WASHER	*	1					
12	V600-150-620-10	BEARING,RB/6201SS	*	1					
13	1782-407-260-10	HUB/STEERING COMP	*	1					
14	V211-560-802-00	BOLT,S/M8X20/7T	*	2					
15	1782-407-310-10	GEAR/SPUR/37 ASSY	*	1					
16	1782-407-003-20	BUSH/28X32X15	*	2					
17	1560-263-011-00	WASHER/33X40X02	*	1					
18	V304-260-010-00	NUT/M10	*	1					
19	V401-160-010-00	WASHER,SP/M10	*	1					
20	1782-407-004-00	WASHER/11X40X3.2	*	1					
21	1782-407-270-10	HUB COMP	*	1					
22	3670-703-008-00	BUSH/20X23X20	*	1					
23	V201-260-803-50	BOLT/M8X35	*	2					
24	4101-102-038-00	WASHER/24X9X3.2	*	2					
25	1423-616-004-00	CUSHION/RUBBER/10X25	*	4					
26	V304-260-008-00	NUT/M8	*	2					
27	1782-407-052-00	COVER/STEERING	*	1					

FIG. 21 FRAME(MAIN)SYSTEM

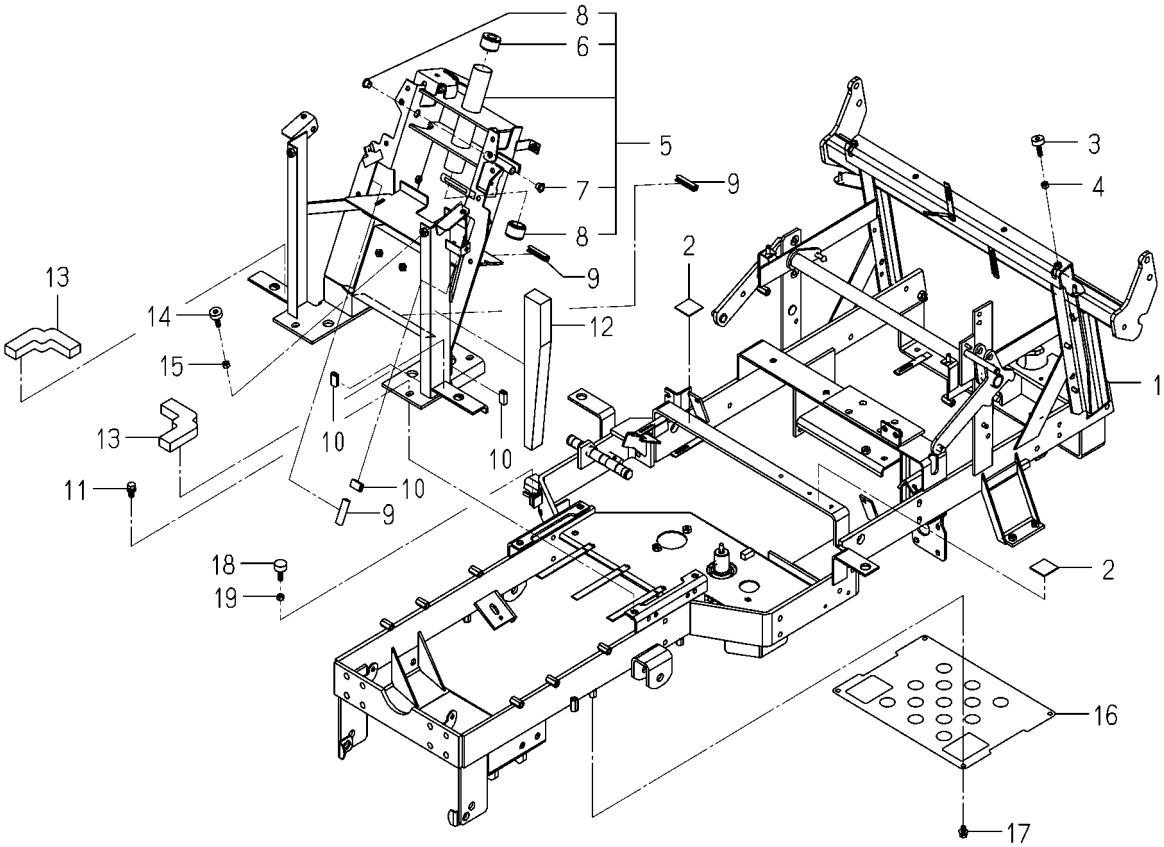

1782-410D-0100

KEY	PART CODE	DESCRIPTION	SPC	TYPE OF MODEL SXG216 H5		ITC	COL	GRP	REMARKS
1	1782-410-810-10	FRAME/MAIN/R COMP	*	1					
2	1427-111-229-00	CUSHION,RUBBER	*	2					
3	1729-702-003-00	INSULATOR	*	2					
4	V304-260-008-00	NUT/M8	*	2					
5	1782-410-780-10	POST/STEERING ASSY	*	1					
6	1429-406-205-10	INSULATOR/STEERING	*	1					
7	1426-406-203-00	BUSH,COLUMN	*	1					
8	1564-512-001-00	BUSH/10X12X10	*	2					
9	3666-202-005-10	PAD/50	*	3					
10	3805-371-007-00	PAD/25	*	3					
11	V211-661-002-50	BOLT,SP/M10X25/7T	*	4					
12	1782-410-052-00	SEAL/30X45X355	*	2					
13	1782-410-058-00	INSULATOR/20X30X200	*	2					
14	1421-602-005-10	CUSHION,B/ RUBBER	*	2					
15	V304-260-008-00	NUT/M8	*	2					
16	1782-410-006-10	GUARD/UNDER	*	1					
17	V211-360-801-60	BOLT,SP/M8X16	*	4					
18	1729-702-003-00	INSULATOR	*	1					
19	V304-260-008-00	NUT/M8	*	1					

FIG. 22 AXLE(FRONT)SYSTEM

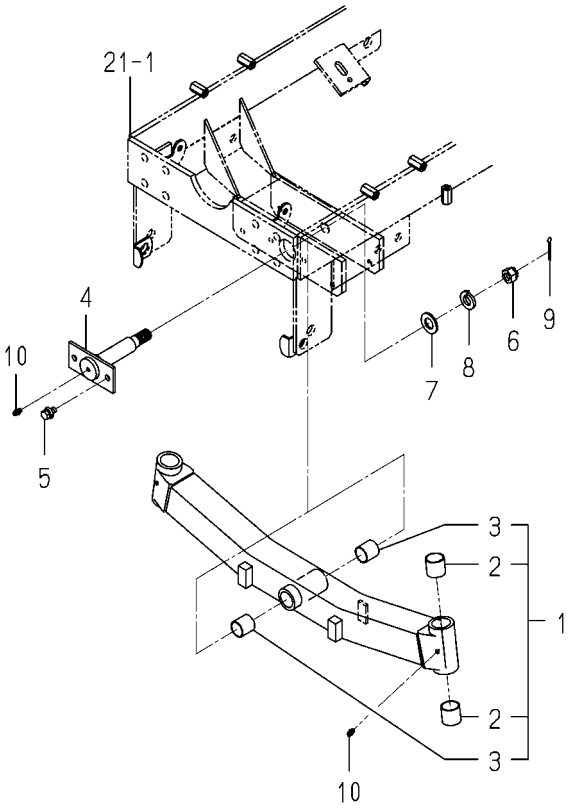

1782-433A-0100

KEY	PART CODE	DESCRIPTION	SPC	TYPE OF MODEL SXG216 H5		ITC	COL	GRP	REMARKS
1	1782-433-530-10	AXLE/FRONT ASSY	*	1					
2	1593-402-051-10	BUSH/25X28X25	*	4					
3	1725-433-202-10	BUSH/22X25X25	*	2					
4	1782-433-510-00	PIN/PIVOT COMP	*	1					
5	V211-660-802-00	BOLT,SP/M8X20/7T	*	2					
6	V327-261-216-00	NUT,CASTLE/M16 P=1.5	*	1					
7	V411-260-016-00	WASHER,PL/M16	*	1					
8	V401-160-016-00	WASHER,SP/M16	*	1					
9	V500-164-003-00	PIN,SPLIT/4X30	*	1					
10	V760-150-000-00	NIPPLE,GREASE	*	3					

FIG. 23 SPINDLE(KNUCKLE)SYSTEM

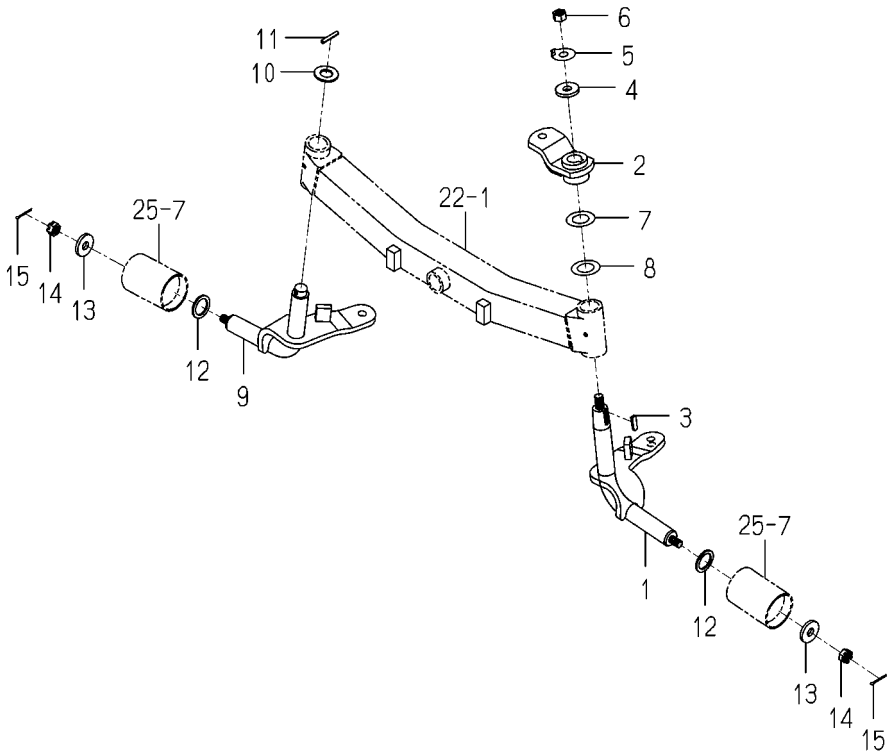

1782-434A-0100

KEY	PART CODE	DESCRIPTION	SPC	TYPE OF MODEL SXG216 H5		ITC	COL	GRP	REMARKS
1	1782-434-700-10	SPINDLE/KNUCKLE/LH	*	1					
2	1782-434-220-10	ARM/KNUCKLE COMP	*	1					
3	1326-708-005-00	KEY,ROTARY TOP SHAFT	*	1					
4	1421-403-007-00	WASHER,LOCK/M12	*	1					
5	1421-403-008-00	WASHER/13X35X5	*	1					
6	V304-260-012-00	NUT/M12	*	1					
7	1421-951-006-00	SHIM,A/0.5	*	1					
8	1421-951-007-00	SHIM,A/1.0	*	1					
9	1782-434-710-10	SPINDLE/KNUCKLE/RH	*	1					
10	V411-260-018-00	WASHER,PL/M18	*	1					
11	V580-140-503-20	PIN,SPRING/5X32 W	*	1					
12	1415-216-602-00	WASHER/26X35X2	*	2					
13	3621-702-003-00	WASHER,PULLEY	*	2					
14	V328-262-112-00	NUT,CASTLE/M12 P1.25	*	2					
15	V500-163-002-00	PIN,SPLIT/3X20	*	2					

FIG. 24 ROD(TIE)SYSTEM

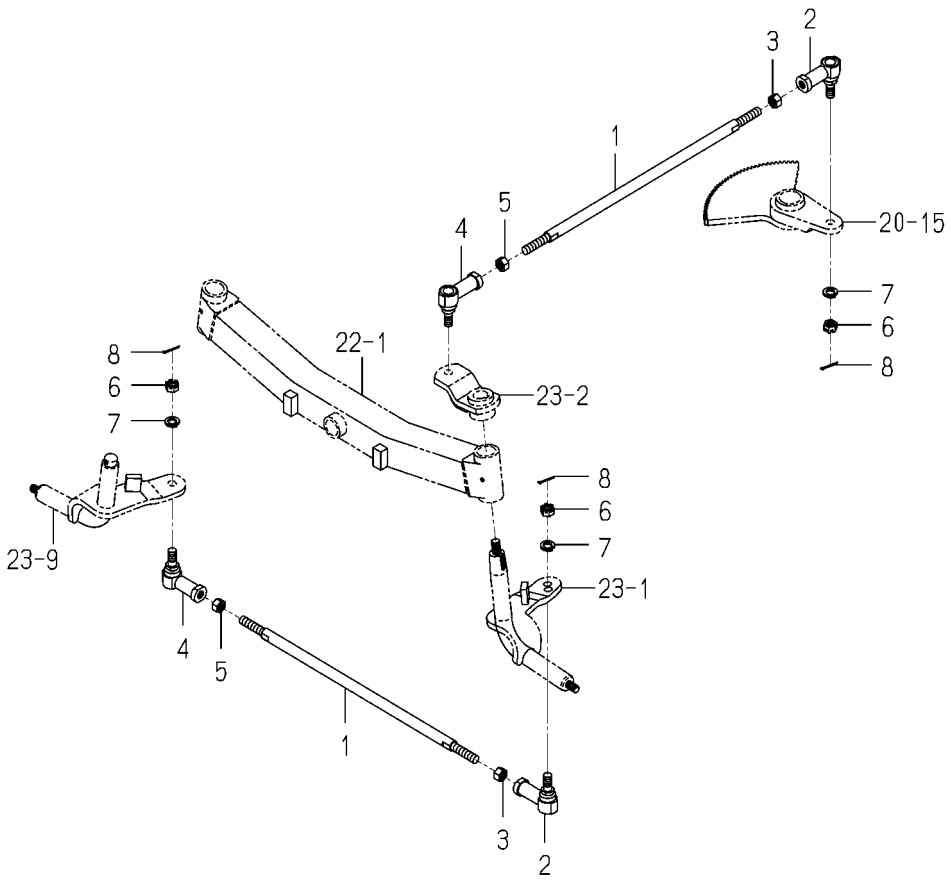

1782-436 -0100

KEY	PART CODE	DESCRIPTION	SPC	TYPE OF MODEL SXG216 H5		ITC	COL	GRP	REMARKS
1	1782-436-001-10	ROD/M12X495	*	2					
2	1593-403-005-00	JOINT,BALL	*	2					
3	V334-260-012-00	NUT/M12	*	2					
4	1705-436-300-00	JOINT/BALL ASSY	*	2					
5	1703-135-002-00	NUT/SM/LH/M12X1.25	*	2					
6	V328-262-112-00	NUT,CASTLE/M12 P1.25	*	4					
7	V401-160-012-00	WASHER,SP/M12	*	4					
8	V500-163-002-00	PIN,SPLIT/3X20	*	4					

FIG. 25 WHEEL(FRONT/16X6.50-8)SYSTEM

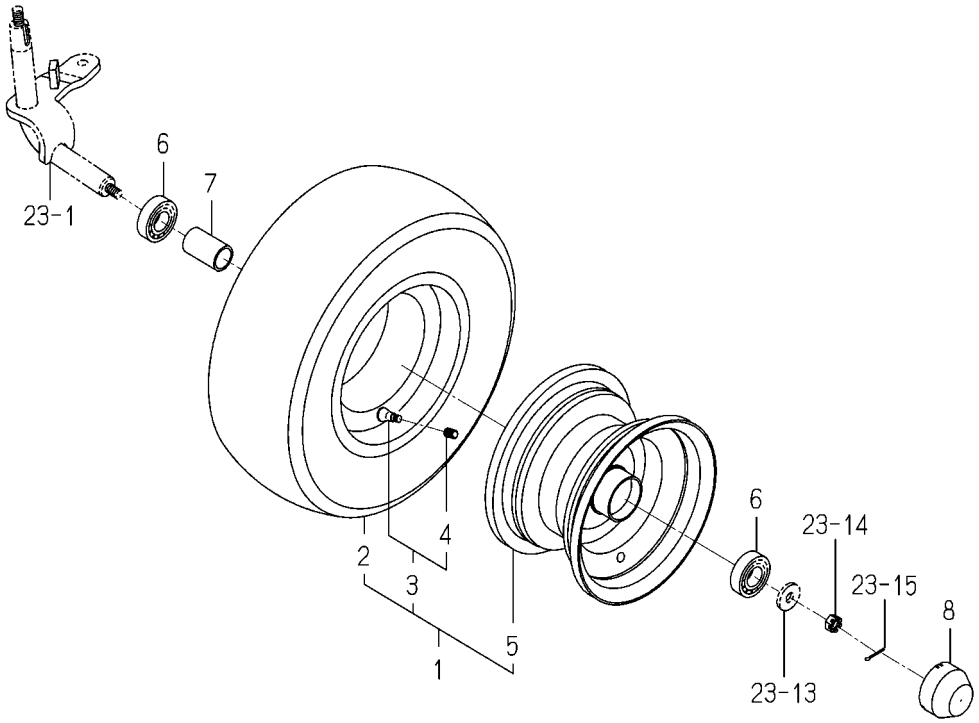

1728-441 -0100

KEY	PART CODE	DESCRIPTION	SPC	TYPE OF MODEL SXG216 H5		ITC	COL	GRP	REMARKS
1	1728-441-230-00	TIRE/16X6.50-8 ASSY	*	2			6G		
2	1728-441-201-00	TIRE/TURF/16X6.50-8	*	2					
3	1728-441-220-00	RIMVALVE ASSY	*	2					
4	V999-200-003-00	CAP,TIRE VALVE	*	2					
5	1728-441-210-00	WHEEL/8XW5.4 COMP	*	2			6G		
6	1729-202-015-00	BEARING/BALL	*	4					
7	1593-411-001-10	COLLAR/26X32X53	*	2					
8	1593-411-053-20	CAP/WHEEL	*	2					

FIG. 26 LINK(MOWER)SYSTEM

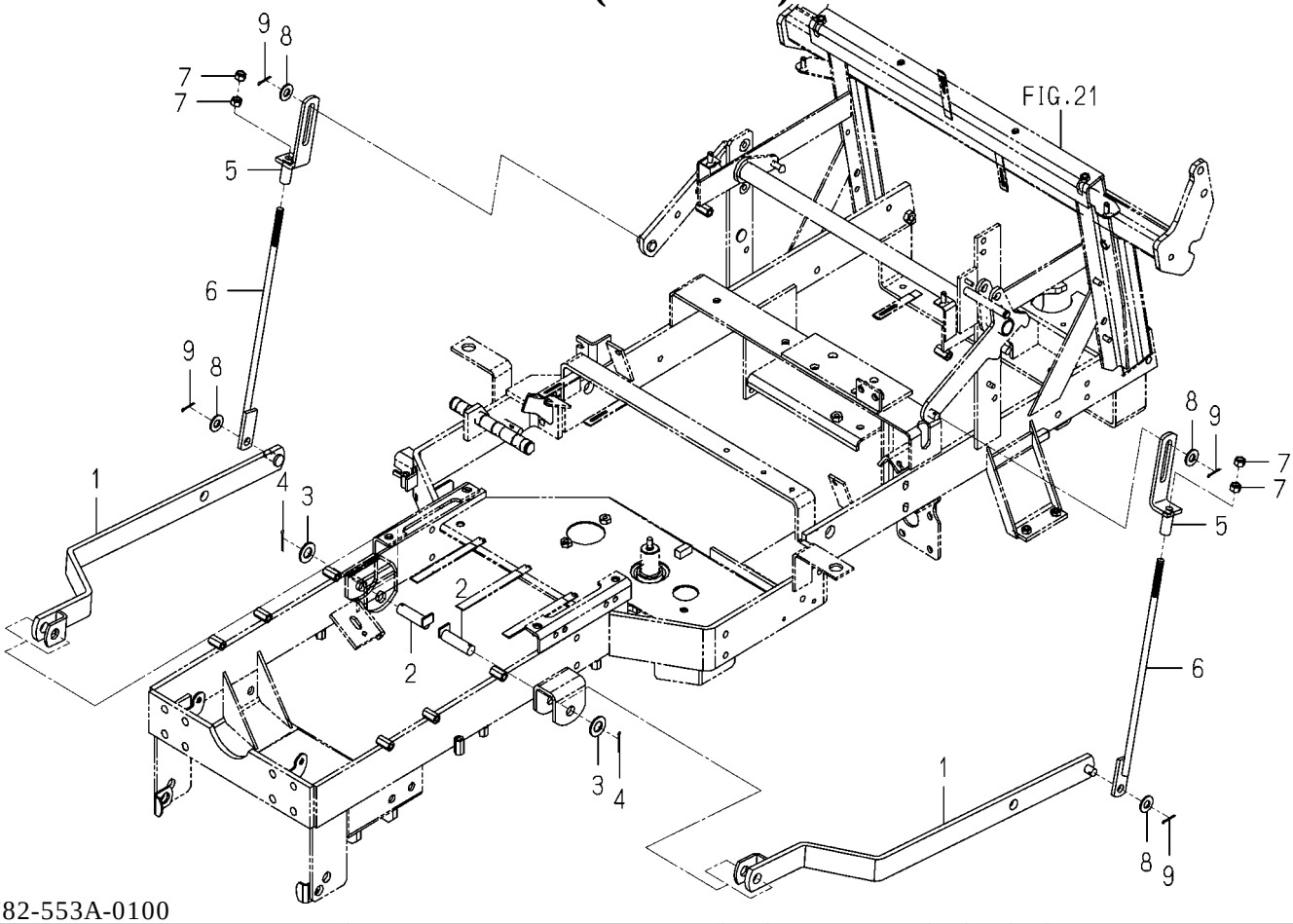

1782-553A-0100

KEY	PART CODE	DESCRIPTION	SPC	TYPE OF MODEL SXG216 H5		ITC	COL	GRP	REMARKS
1	1782-553-210-20	ARM/MID COMP	*	2					
2	1782-553-730-00	PIN/16X57 COMP	*	2					
3	V411-260-016-00	WASHER,PL/M16	*	2					
4	V500-163-002-50	PIN,SPLIT/3X25	*	2					
5	1782-553-260-00	PLATE/L/32X120 COMP	*	2					
6	1782-553-250-00	ROD/LIFT COMP	*	2					
7	V304-260-010-00	NUT/M10	*	4					
8	V411-260-012-00	WASHER,PL/M12	*	4					
9	V500-163-002-00	PIN,SPLIT/3X20	*	4					

FIG. 27 LEVER(LIFT)SYSTEM

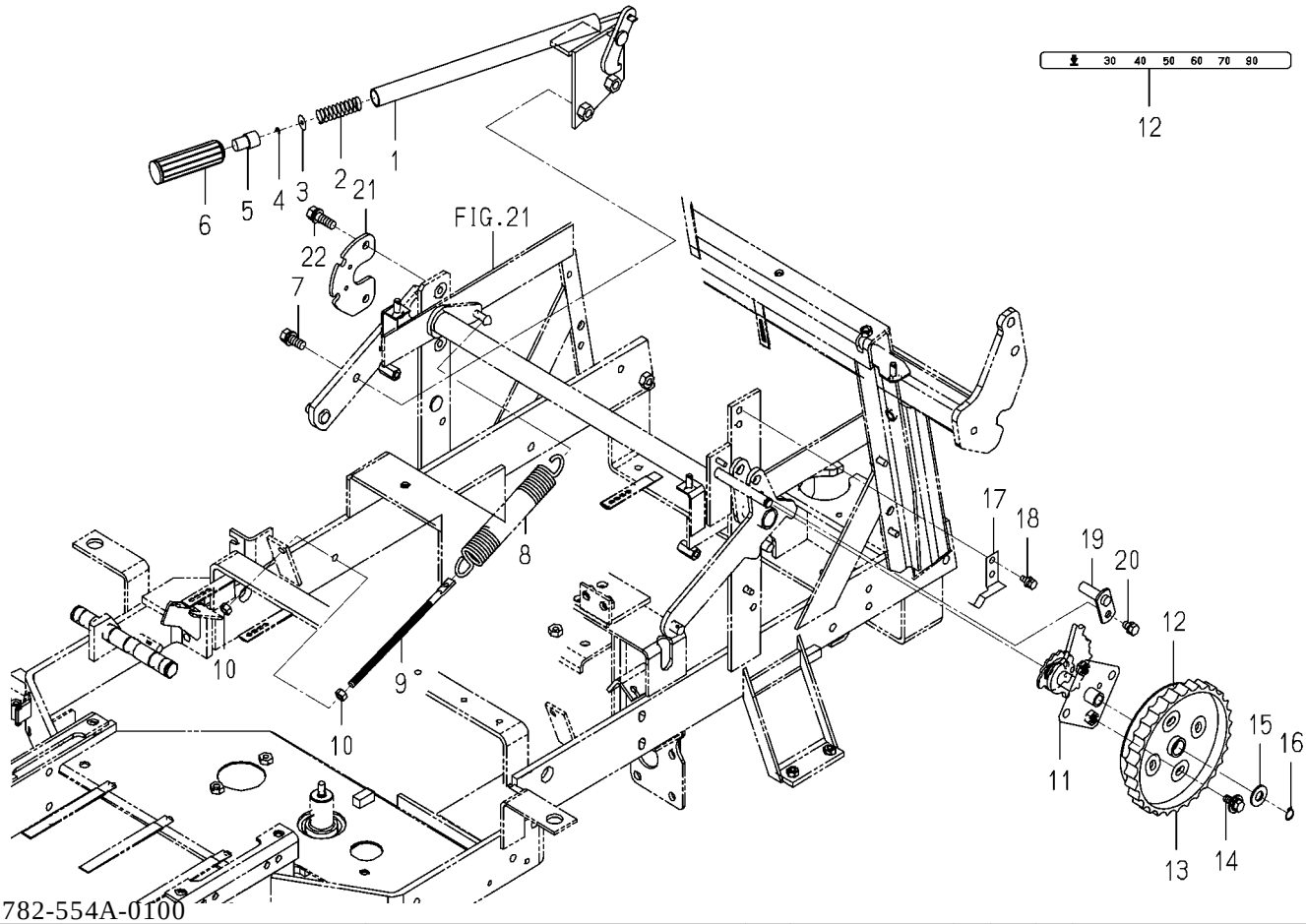

1782-554A-0100

KEY	PART CODE	DESCRIPTION	SPC	TYPE OF MODEL SXG216 H5		ITC	COL	GRP	REMARKS
1	1782-554-650-00	LEVER/LIFT/216 COMP	*	1					
2	2502-554-007-00	SPRING/HC057	*	1					
3	1782-554-009-00	WASHER/05X18X01	*	1					
4	V710-140-004-00	RING,SNAP/4 E	*	1					
5	2502-554-003-10	PIN/PUSH	*	1					
6	2502-554-004-10	GRIP/LIFT	*	1					
7	V211-561-002-50	BOLT,S/M10X25/7T	*	2					
8	1782-554-071-00	SPRING/HE190	*	2					
9	3814-354-013-40	ROD/M8X175	*	2					
10	V304-260-008-00	NUT/M8	*	4					
11	1782-554-510-00	DIAL/GAUGE COMP	*	1					
12	1782-554-056-00	LABEL/ADJUST	*	1					
13	1782-554-082-00	GRIP/ADJUST	*	1					
14	2144-415-003-00	BOLT/M8X20(22)	*	2					
15	V411-260-012-00	WASHER,PL/M12	*	1					
16	V704-140-012-00	RING,SNAP/12 C	*	1					
17	1752-554-003-00	STOPPER/DIAL	*	1					
18	V210-360-601-60	BOLT,SP/M6X16	*	2					
19	1782-554-520-00	PIN/12X35 COMP	*	1					
20	V211-260-801-20	BOLT,S/M8X12	*	1					
21	1782-554-072-00	CAM/LIFT	*	2					
22	V211-561-002-50	BOLT,S/M10X25/7T	*	2					

FIG. 28 HOOD SYSTEM

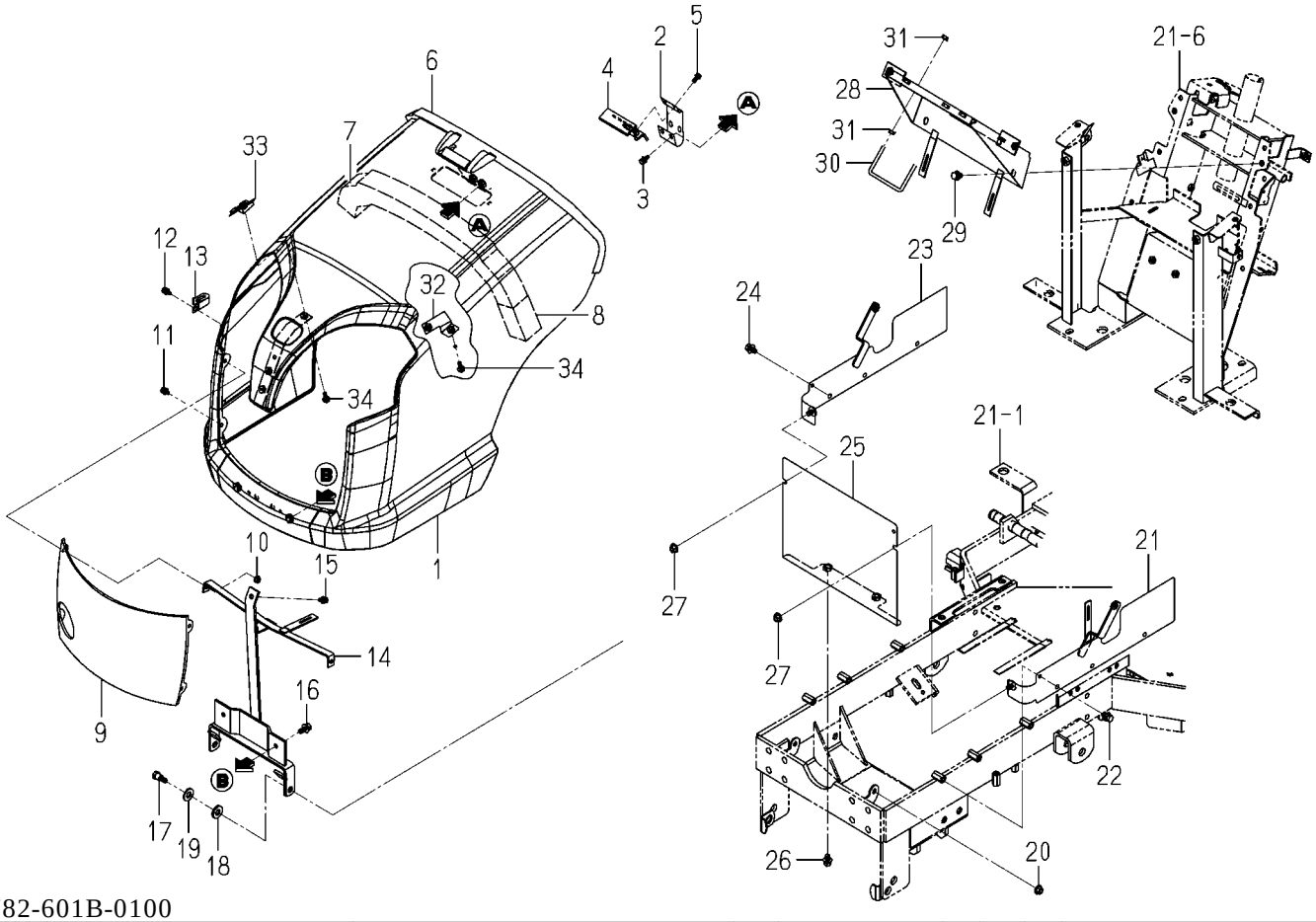

1782-601B-0100

KEY	PART CODE	DESCRIPTION	SPC	TYPE OF MODEL SXG216 H5		ITC	COL	GRP	REMARKS
1	1782-601-710-20	HOOD COMP	*	1			4L		
2	1739-601-076-00	PLATE/LOCK	*	1					
3	V210-360-601-60	BOLT,SP/M6X16	*	2					
4	1739-601-760-10	HANDLE COMP	*	1					
5	V120-366-001-60	SCREW,SP/M6X16	*	2					
6	1739-601-075-40	INSULATOR	*	1					
7	1782-601-052-10	SEAL/45X45X640	*	1					
8	1725-410-006-00	SEAL/45X50X80	*	2					
9	1739-601-071-10	NET/FRONT	*	1			7F		
10	V360-260-006-00	NUT/WASHER/M6	*	4					
11	V210-360-601-20	BOLT,SP/M6X12	*	2					
12	V210-360-601-60	BOLT,SP/M6X16	*	2					
13	1425-621-004-00	HOLDER/JE/9-9	*	2					
14	1782-601-760-00	ARM/HOOD COMP	*	1					
15	V210-360-601-60	BOLT,SP/M6X16	*	1					
16	V211-360-802-00	BOLT,SP/M8X20	*	2					
17	1689-621-008-10	BOLT	*	2					
18	1689-621-007-00	WASHER/12X26X04	*	2					
19	V411-260-012-00	WASHER,PL/M12	*	2					
20	V363-260-008-00	NUT/WASHER/M8	*	2					
21	1782-601-740-00	COVER/SIDE/LH COMP	*	1			7F		
22	V231-360-801-20	FLANGEBOLT/M8X12	*	3					
23	1782-601-750-00	COVER/SIDE/RH COMP	*	1			7F		
24	V231-360-801-20	FLANGEBOLT/M8X12	*	3					
25	1782-601-720-00	COVER/ENGINE/F COMP	*	1			7F		
26	V231-360-801-20	FLANGEBOLT/M8X12	*	2					
27	V362-260-008-00	NUT/WASHER/M8	*	2					
28	1739-601-740-10	BRACKET COMP	*	1					
29	V211-360-801-60	BOLT,SP/M8X16	*	2					
30	1725-601-093-00	LEVER/LOCK	*	1					

FIG. 28 HOOD SYSTEM

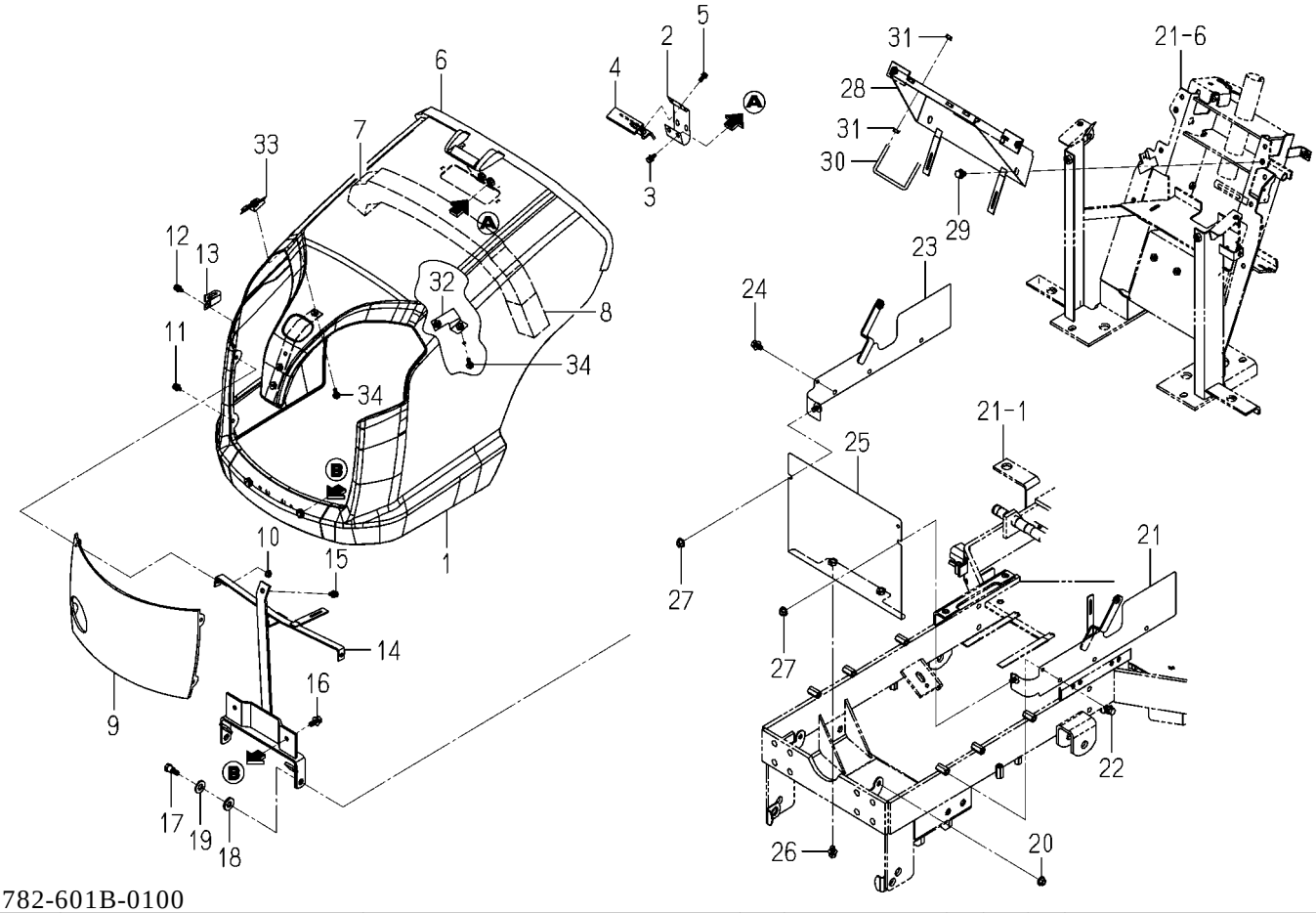

1782-601B-0100

KEY	PART CODE	DESCRIPTION	SPC	TYPE OF MODEL SXG216 H5		ITC	COL	GRP	REMARKS
31	V360-260-006-00	NUT/WASHER/M6	*	4					
32	1782-601-770-00	STAY/LH COMP	*	1					
33	1782-601-780-00	STAY/RH COMP	*	1					
34	V210-360-601-60	BOLT,SP/M6X16	*	2					

FIG. 29 COVER SYSTEM

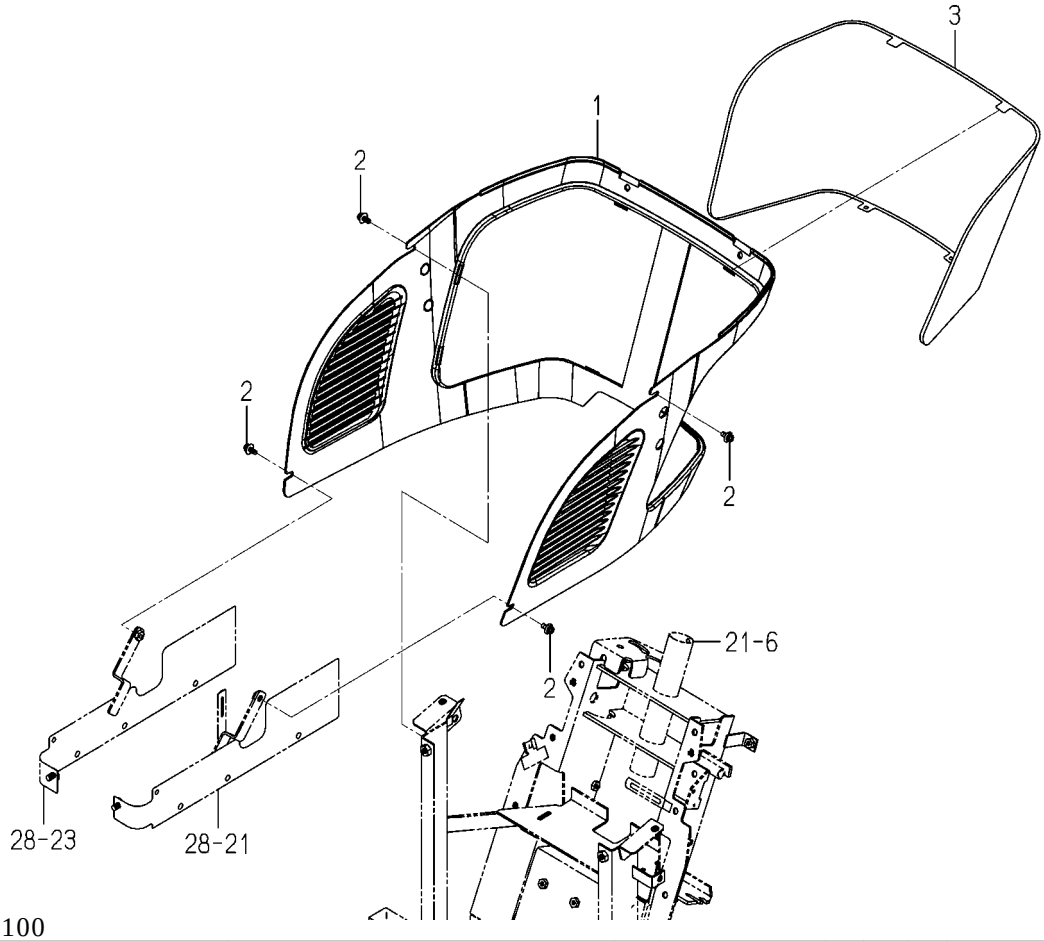

1782-604B-0100

KEY	PART CODE	DESCRIPTION	SPC	TYPE OF MODEL SXG216 H5		ITC	COL	GRP	REMARKS
1	1782-604-071-00	COVER/LOWER	*	1					
2	1725-604-051-00	SCREW/SP/M06X16	*	6					
3	1739-603-072-00	NET/LOWER	*	1			7F		

FIG. 30 FENDER SYSTEM

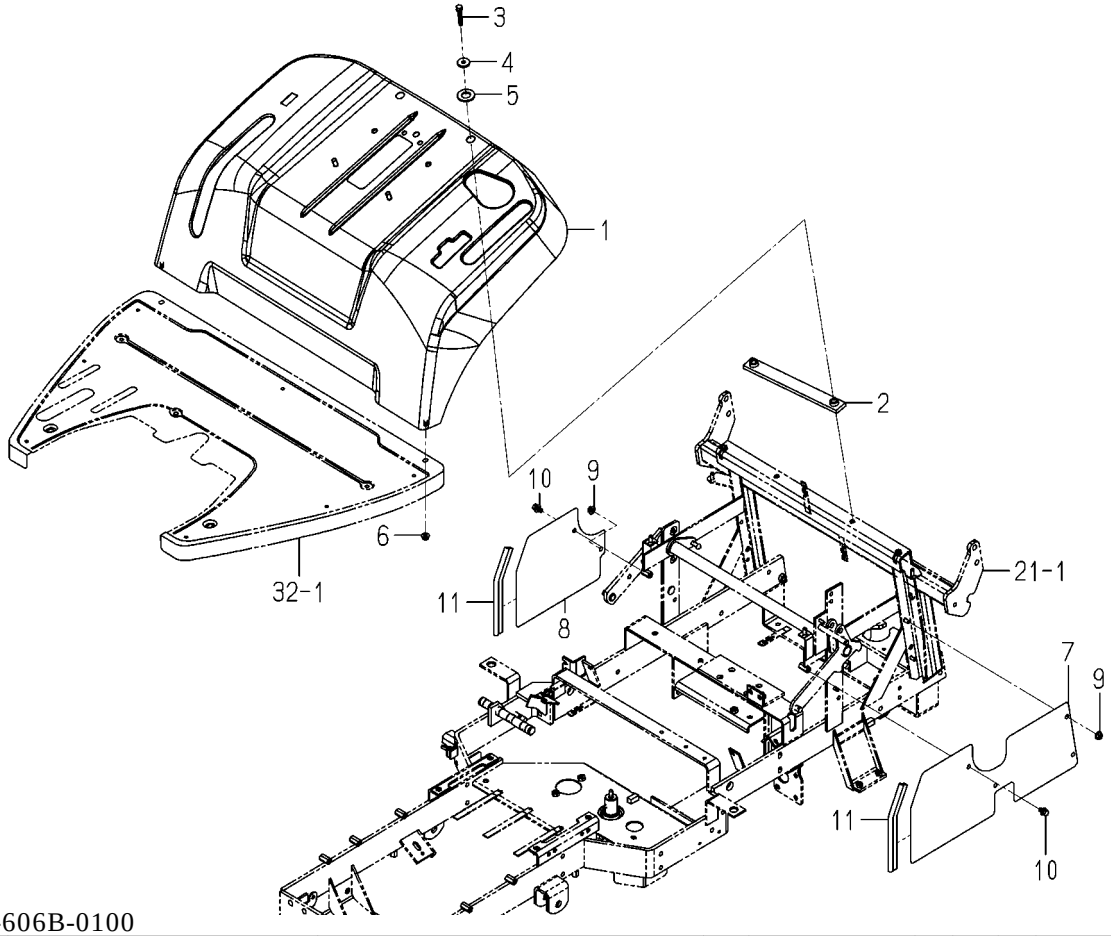

1782-606B-0100

KEY	PART CODE	DESCRIPTION	SPC	TYPE OF MODEL SXG216 H5		ITC	COL	GRP	REMARKS
1	1782-606-710-00	FENDER COMP	*	1			4L		
2	1728-606-760-00	FRAME/FENDER COMP	*	1					
3	V211-560-804-50	BOLT,S/M8X45/7T	*	2					
4	3814-440-006-00	WASHER/09X28X05	*	2					
5	V411-260-020-00	WASHER,PL/M20	*	2					
6	V362-260-008-00	NUT/WASHER/M8	*	2					
7	1782-606-004-20	COVER/SIDE	*	1			7F		
8	1782-606-053-00	COVER/SIDE/RH	*	1			7F		
9	V362-260-008-00	NUT/WASHER/M8	*	4					
10	3805-208-016-00	BOLT(SP/M8X16)	*	2					
11	1689-603-012-00	INSULATOR/220	*	2					

FIG. 31 SEAT SYSTEM(S TYPE-STANDARD/ EXCEPT S TYPE-OPTION)

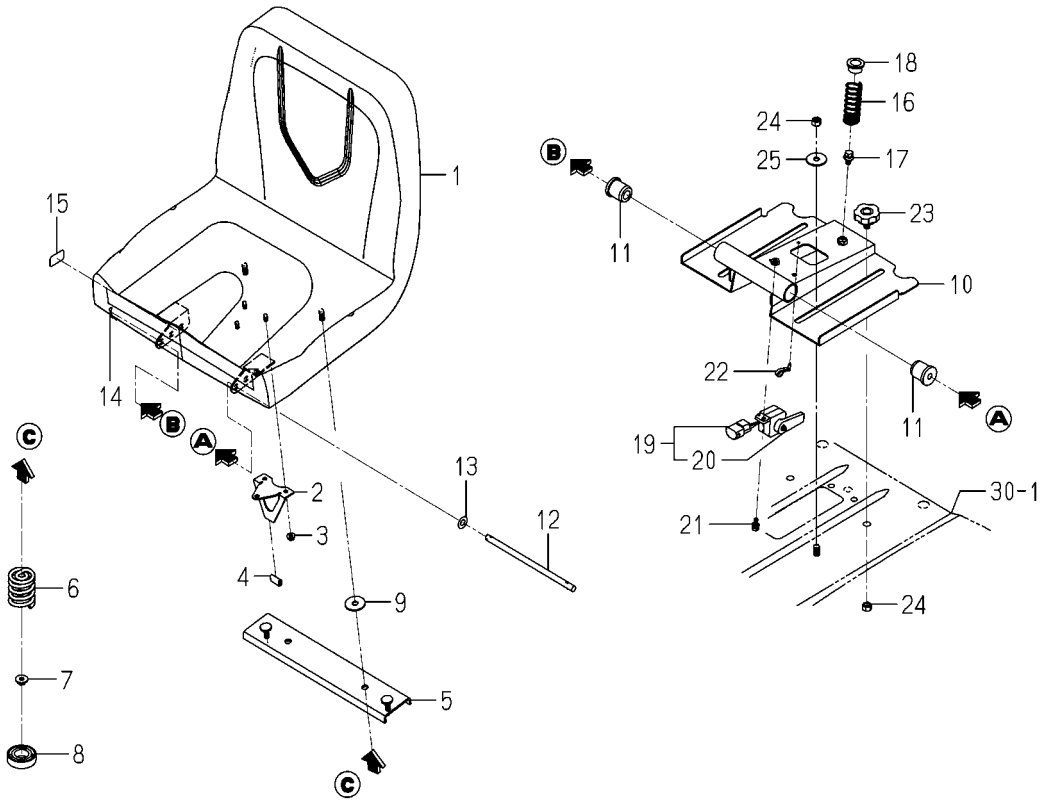

1782-611A-0100

KEY	PART CODE	DESCRIPTION	SPC	TYPE OF MODEL SXG216 H5		ITC	COL	GRP	REMARKS
1	1782-611-710-00	SEAT ASSY	*	1					
2	1782-611-071-00	BRACKET/PUSH	*	1					
3	V360-260-006-00	NUT/WASHER/M6	*	3					
4	1650-602-223-00	PAD/20	*	1					
5	1782-611-730-00	PLATE/U/59X350 COMP	*	1					
6	1593-611-014-00	SPRING/D=6	*	2					
7	V363-260-008-00	NUT/WASHER/M8	*	2					
8	1782-611-006-00	CAP/SPRING	*	2					
9	1593-611-001-00	WASHER/11X35X02	*	2					
10	1782-611-720-00	STAY/SEAT COMP	*	1			4L		
11	1488-611-001-00	RUBBER,CUSHION (A)	*	2					
12	1782-611-072-00	PIN/10X208	*	1					
13	V411-260-010-00	WASHER,PL/M10	*	1					
14	V560-160-008-00	PIN/SNAP	*	1					
15	1782-611-007-00	SEAL	*	2					
16	1782-611-051-00	SPRING/HC072	*	1					
17	V211-360-801-60	BOLT,SP/M8X16	*	1					
18	7821-501-005-00	BUSH/19X30X14	*	1					
19	1716-680-330-10	SWITCH/LEVER ASSY	*	1					
20	1716-680-222-00	ARM	*	1					
21	V210-360-601-60	BOLT,SP/M6X16	*	1					
22	1444-621-008-00	CLAMP	*	1					
23	1593-611-058-00	BOLT,KMOB	*	2					
24	V305-260-010-00	NUT/M10	*	4					
25	1593-611-001-00	WASHER/11X35X02	*	2					

FIG. 32 BELT(SEAT)SYSTEM

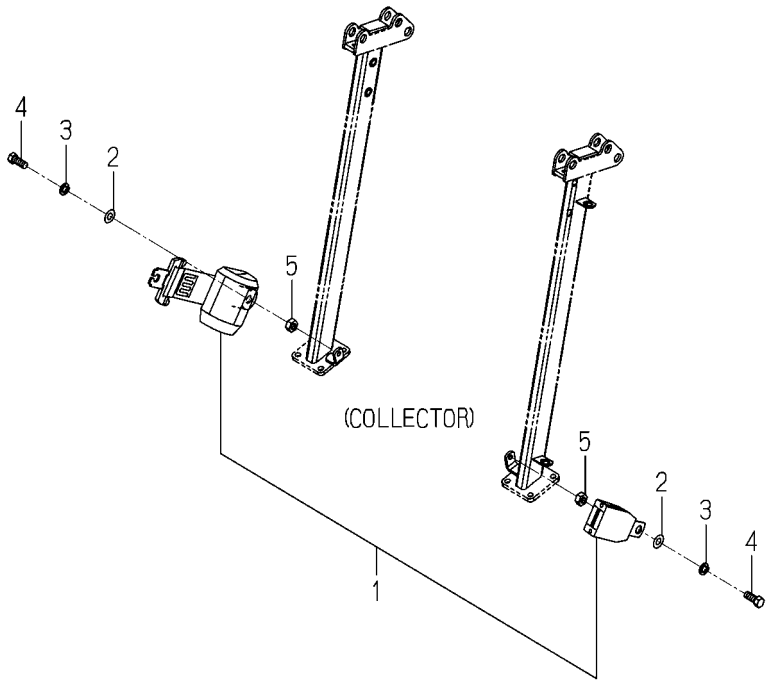

1782-611B-0100

KEY	PART CODE	DESCRIPTION	SPC	TYPE OF MODEL SXG216 H5		ITC	COL	GRP	REMARKS
1	1776-612-250-00	BELT/SEAT SET	*	1					
2	V411-260-010-00	WASHER,PL/M10	*	2					
3	V401-160-010-00	WASHER,SP/M10	*	2					
4	V201-461-002-50	BOLT/M10X25/9T	*	2					
5	1725-611-006-00	NUT/M10	*	2					

FIG. 33 FLOOR SYSTEM

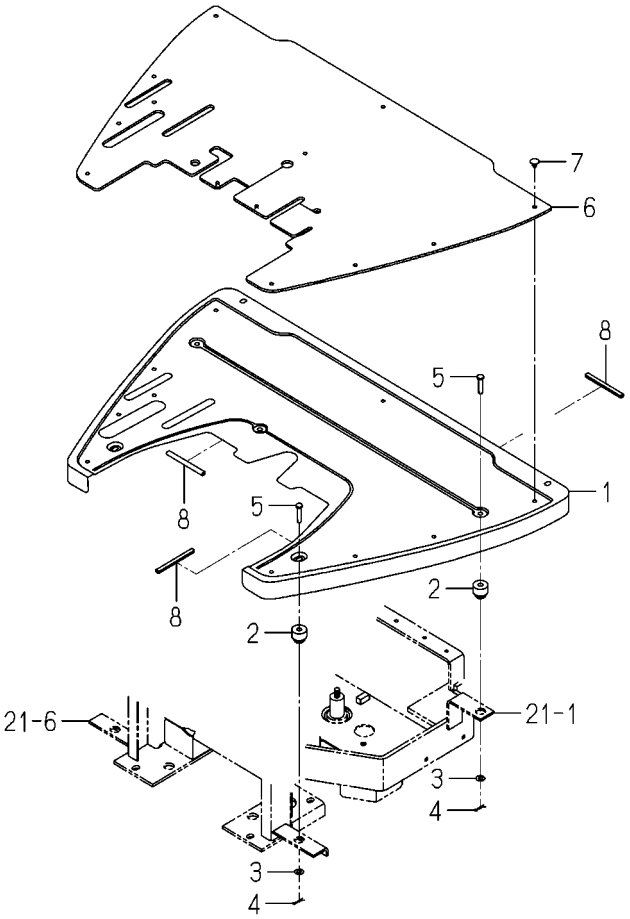

1782-630A-0100

KEY	PART CODE	DESCRIPTION	SPC	TYPE OF MODEL SXG216 H5		ITC	COL	GRP	REMARKS
1	1782-630-071-10	STEP	*	1			4L		
2	1593-616-004-20	GROMMET/10X30X5	*	4					
3	V411-260-008-00	WASHER,PL/M8	*	4					
4	V560-160-008-00	PIN/SNAP	*	4					
5	1593-606-006-10	PIN/8X36	*	4					
6	1782-630-072-20	MAT/STEP	*	1					
7	1527-604-002-00	CLIP(B)	*	11					
8	2504-165-002-10	INSULATOR	*	3					

FIG. 34 LAMP(HEAD)SYSTEM

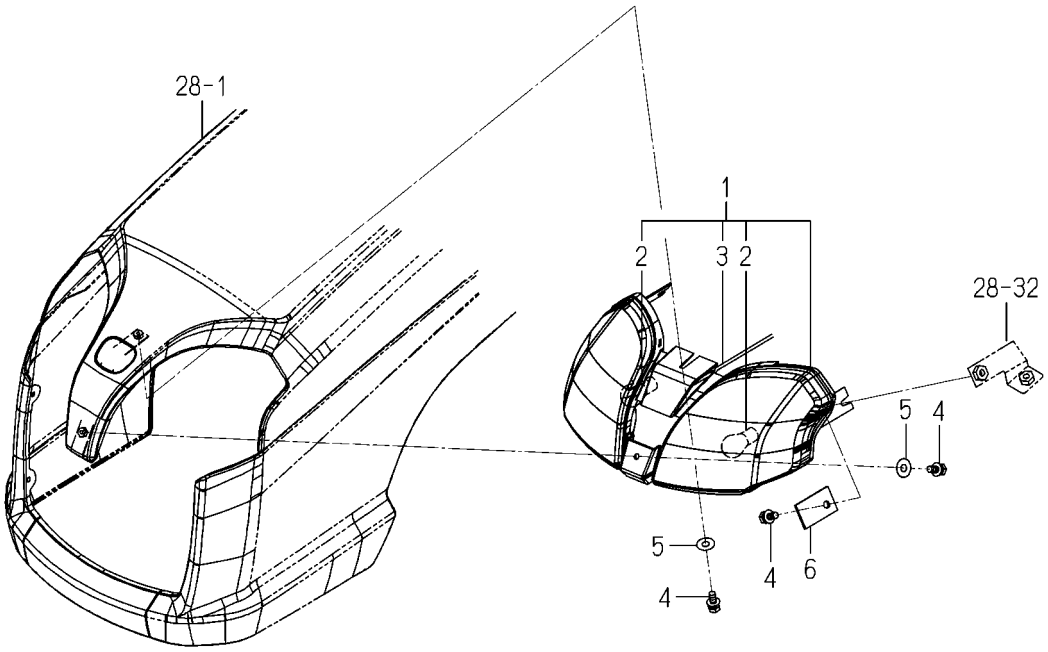

1782-650 -0100

KEY	PART CODE	DESCRIPTION	SPC	TYPE OF MODEL SXG216 H5		ITC	COL	GRP	REMARKS
1	1782-650-710-00	LAMP/HEAD/2 ASSY	*	1					
2	1426-621-002-00	BULB/12V23W	*	2					
3	1782-650-730-00	HARNESS/LAMP/2 ASSY	*	1					
4	V210-360-601-60	BOLT,SP/M6X16	*	4					
5	3740-162-005-00	WASHER	*	2					
6	1789-650-001-00	PLATE/I/25X45	*	2					

FIG. 35 PANEL SYSTEM

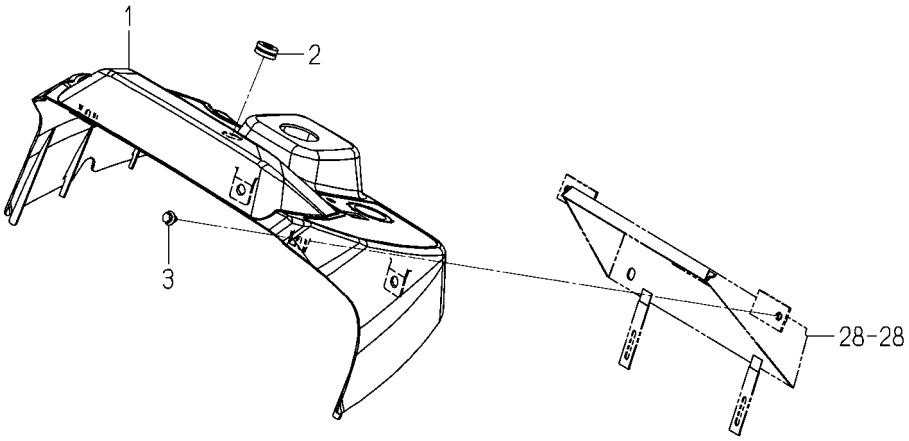

1782-670A-0100

KEY	PART CODE	DESCRIPTION	SPC	TYPE OF MODEL SXG216 H5		ITC	COL	GRP	REMARKS
1	1782-670-720-00	COVER/PANEL COMP	*	1					
2	1414-606-002-00	GROMMET/12X19	*	1					
3	2144-610-001-00	BOLT/M6X14/16	*	2					

FIG. 36 SWITCH(PANEL)SYSTEM

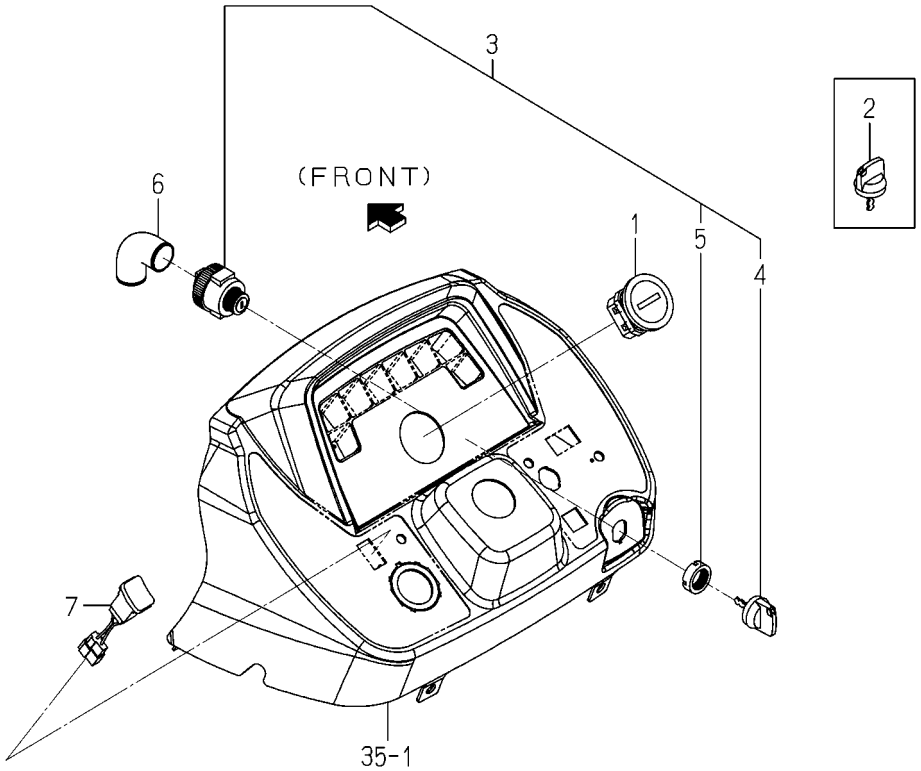

1782-680 -0100

KEY	PART CODE	DESCRIPTION	SPC	TYPE OF MODEL SXG216 H5		ITC	COL	GRP	REMARKS
1	1689-613-260-00	METER/HOUR ASSY	*	1					
2	3843-261-201-00	KEY	*	1					
3	3843-261-200-20	SWITCH/MAIN ASSY	*	1					
4	3843-261-201-00	KEY	*	1					
5	2186-536-212-00	NUT/RING	*	1					
6	1716-680-006-00	COVER/SWITCH	*	1					
7	1782-680-210-00	SWITCH/LAMP ASSY	*	1					

FIG. 37 HARNESS SYSTEM

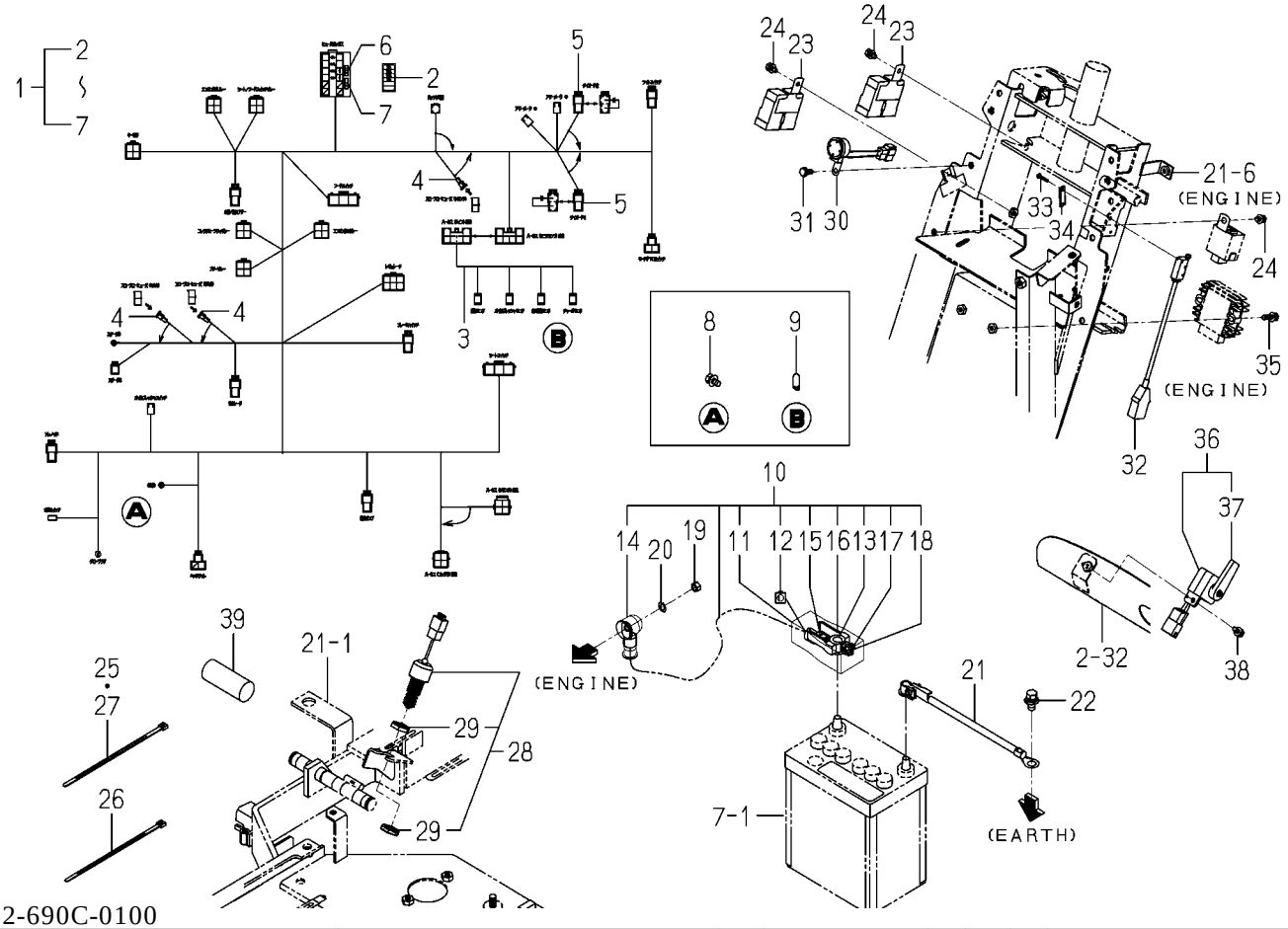

1782-690C-0100

KEY	PART CODE	DESCRIPTION	SPC	TYPE OF MODEL SXG216 H5		ITC	COL	GRP	REMARKS
1	1782-690-500-10	HARNESS/MAIN ASSY	*	1					
2	1782-690-502-00	LABEL/FUSE	*	1					
3	1782-690-510-00	HARNESS/MONITOR LUMP	*	1					
4	1650-650-222-00	FUSE/SLOWBLOW	*	3					40A
5	1773-652-212-00	DIODE/3A	*	2					
6	3821-262-202-00	FUSE/BLADE/32V10A	*	3					
7	3824-247-202-00	FUSE/BLADE/32V05A	*	3					
8	V211-360-801-60	BOLT,SP/M8X16	*	1					
9	3650-270-214-00	BULB/12V3.4W	*	4					
10	1782-690-250-20	CABLE/BATTERY ASSY	*	1					
11	1782-690-252-00	COVER/BATTERY	*	1					
12	1782-690-253-00	HARNESS ASSY	*	1					
13	1782-690-254-00	TERMINAL/BATTERY/+	*	1					
14	1650-650-293-00	COVER/BATTERY/STARTO	*	1					
15	1650-650-295-00	NUT	*	1					
16	1650-650-296-00	INSULATOR	*	1					
17	1560-666-005-00	BOLT	*	1					
18	1560-666-006-00	NUT	*	1					
19	V304-260-008-00	NUT/M8	*	1					
20	V401-160-008-00	WASHER,SP/M8	*	1					
21	1728-112-230-00	CABLE/EARTH ASSY	*	1					
22	V211-661-002-00	BOLT,SP/M10X20/7T	*	1					
23	1690-658-360-10	RELAY/4P-2 ASSY	*	2					
24	V210-360-601-20	BOLT,SP/M6X12	*	3					
25	1342-402-006-00	BAND,WIRE/250	*	3					
26	1376-402-003-00	BAND,WIRE/140	*	3					
27	1342-402-006-00	BAND,WIRE/250	*	1					
28	1772-654-250-10	SWITCH/PUSH ASSY	*	1					
29	1772-654-251-00	NUT	*	2					
30	2515-665-210-00	BUZZER	*	1					

FIG. 37 HARNESS SYSTEM

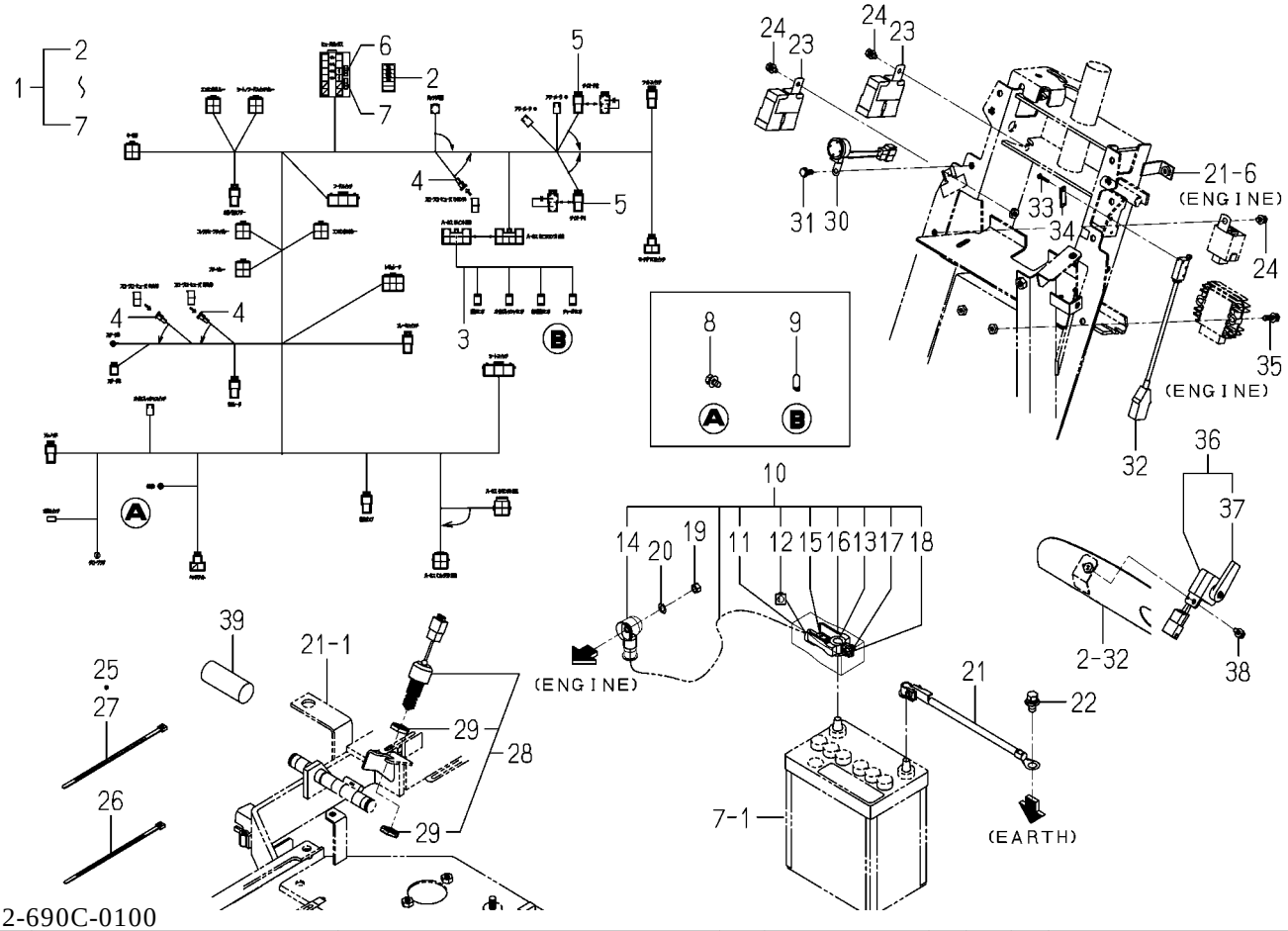

1782-690C-0100

KEY	PART CODE	DESCRIPTION	SPC	TYPE OF MODEL SXG216 H5		ITC	COL	GRP	REMARKS
31	V210-360-601-20	BOLT,SP/M6X12	*	1					
32	1593-623-520-00	SWITCH,MERIT	*	1					
33	1614-129-003-00	SCREW/M03X20	*	2					
34	3642-496-007-10	PLATE,SWITCH	*	1					
35	V210-360-602-50	BOLT,SP/M6X25	*	2					
36	1716-680-330-10	SWITCH/LEVER ASSY	*	1					
37	1716-680-222-00	ARM	*	1					
38	V210-360-601-60	BOLT,SP/M6X16	*	1					
39	1782-690-051-10	TUBE/80	*	1					

FIG. 38 CHUTER SYSTEM

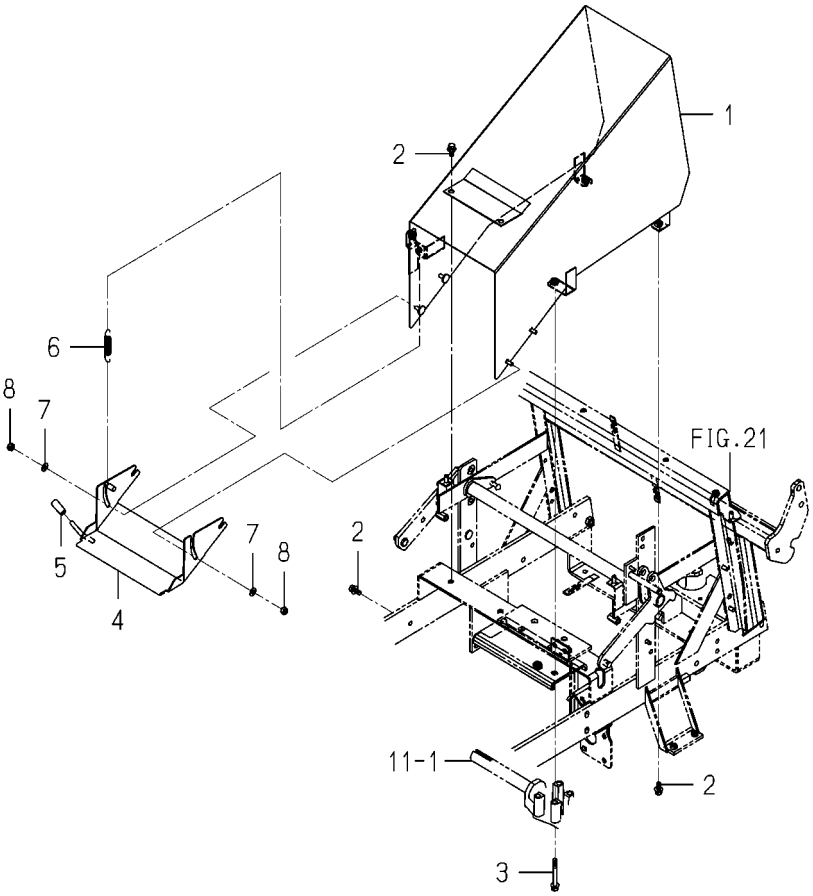

1782-801B-0100

KEY	PART CODE	DESCRIPTION	SPC	TYPE OF MODEL SXG216 H5		ITC	COL	GRP	REMARKS
1	1782-801-810-00	CHUTE	*	1					
2	V211-360-802-00	BOLT,SP/M8X20	*	5					
3	1782-201-051-00	BOLT/SP/M8X70	*	1					
4	1782-801-230-10	PLATE/BOTTOM COMP	*	1					
5	1444-507-003-00	GRIP,LEVER	*	1					
6	4136-405-002-00	SPRING/HE074	*	1					
7	V411-260-008-00	WASHER,PL/M8	*	4					
8	1719-312-001-00	U-NUT	*	4					

FIG. 39 ORNAMENT

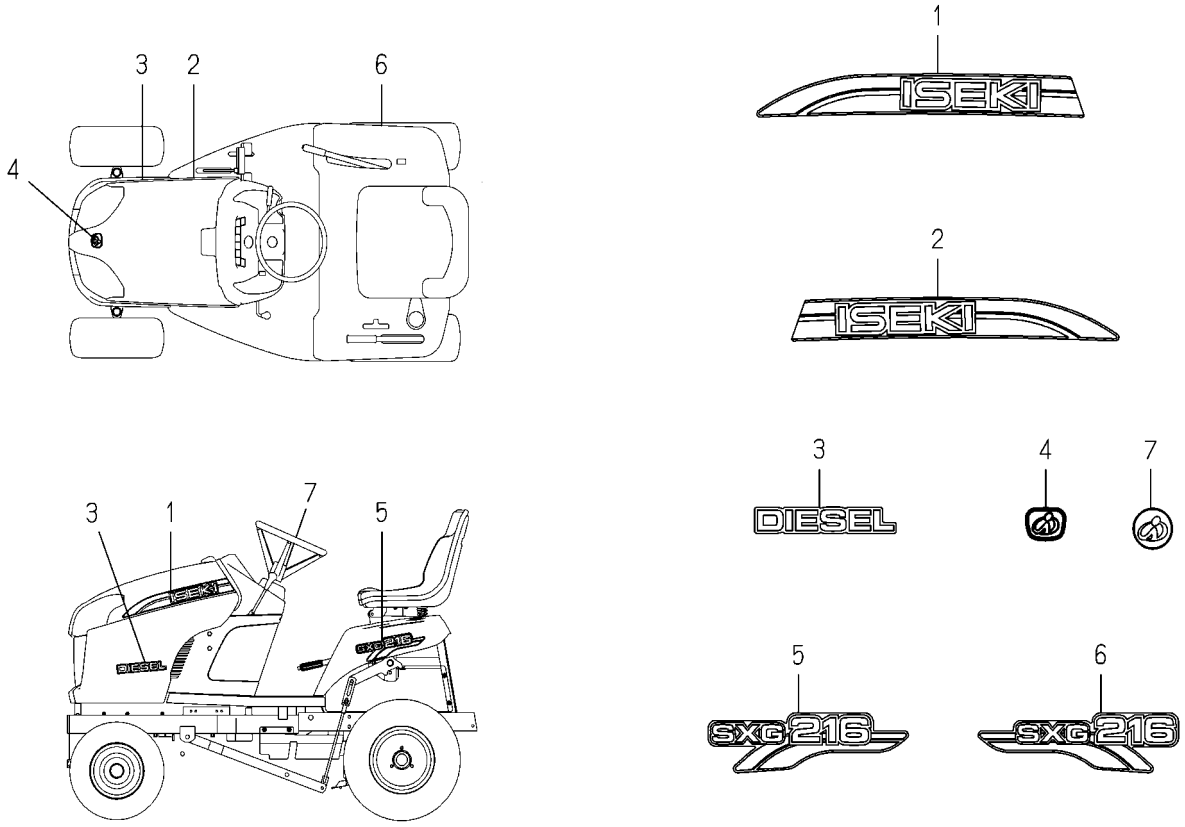

1782-901A-0100

KEY	PART CODE	DESCRIPTION	SPC	TYPE OF MODEL SXG216 H5		ITC	COL	GRP	REMARKS
1	1782-901-051-00	ORNAMENT/ISEKI/LH	*	1					
2	1782-901-052-00	ORNAMENT/ISEKI/RH	*	1					
3	1739-901-073-00	ORNAMENT/DIESEL	*	2					
4	1118-901-002-00	ORNAMENT/I	*	1					
5	1782-901-053-00	ORNAMENT/SXG216/LH	*	1					
6	1782-901-054-00	ORNAMENT/SXG216/RH	*	1					
7	1696-901-006-00	ORNAMENT/STEERING	*	1					

FIG. 40 LABEL(CONTROL)

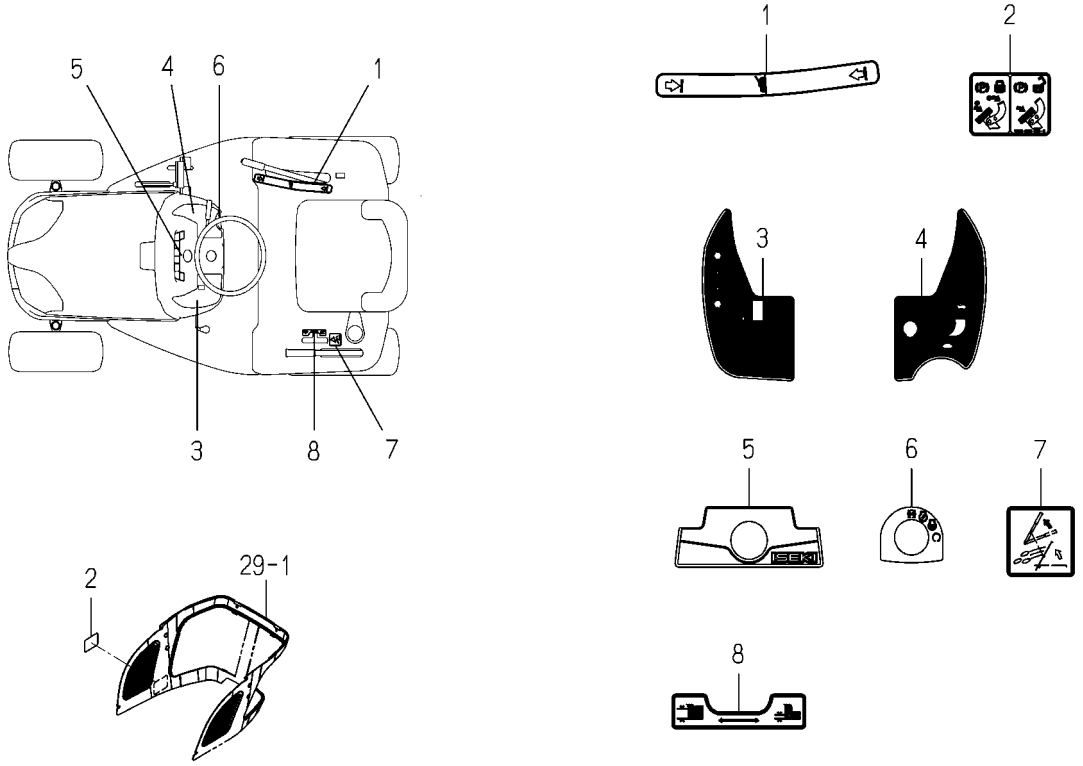

1782-902A-0100

KEY	PART CODE	DESCRIPTION	SPC	TYPE OF MODEL SXG216 H5		ITC	COL	GRP	REMARKS
1	1782-902-001-00	LABEL/LIFT/MOWER	*	1					
2	1782-902-051-00	LABEL/PARKING	*	1					
3	1782-902-052-00	LABEL/CONTROL/LH	*	1					
4	1782-902-053-00	LABEL/CONTROL/RH	*	1					
5	1782-902-054-00	LABEL/PANEL	*	1					
6	1739-902-003-00	LABEL/SWITCH/MAIN	*	1					
7	1782-902-055-00	LABEL/CLEANER	*	1					
8	1782-902-056-00	LABEL/ADJUST	*	1					

FIG. 41 LABEL(CAUTION)

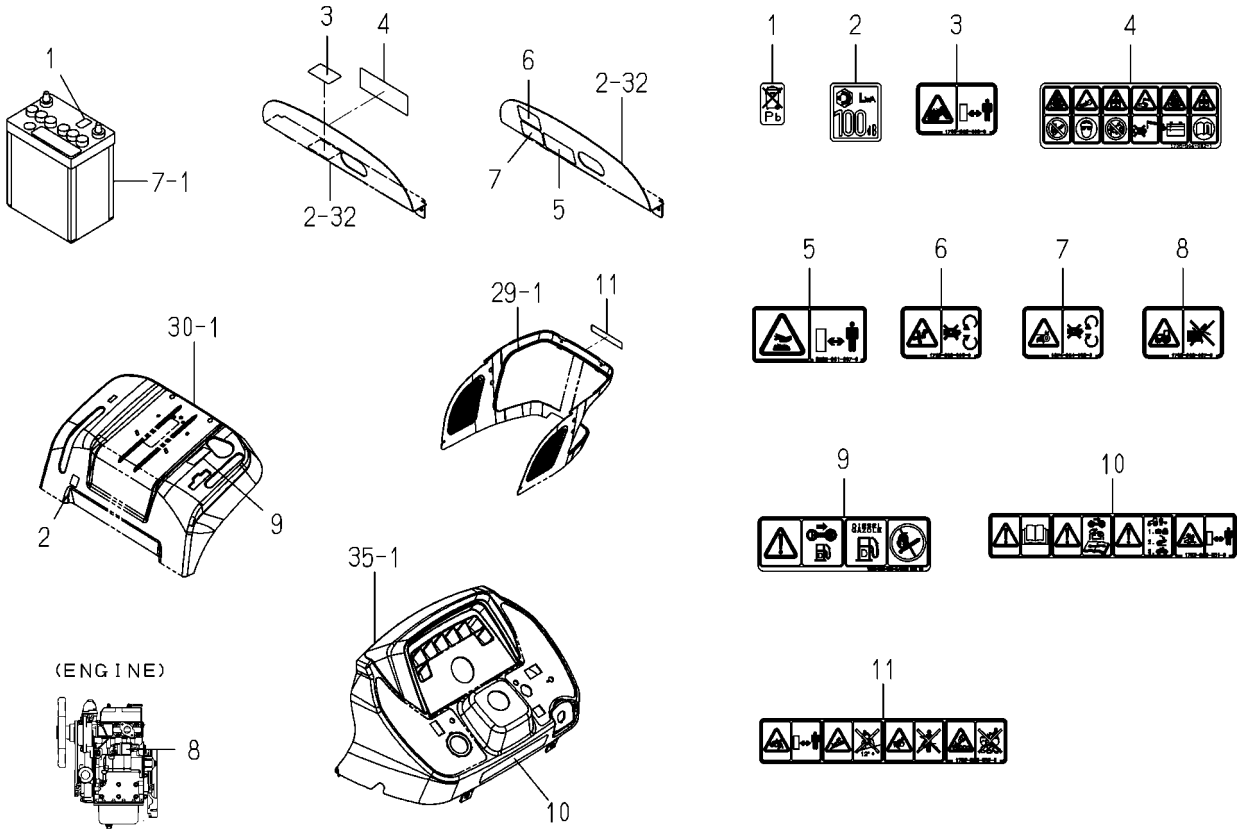

1782-903A-0100

KEY	PART CODE	DESCRIPTION	SPC	TYPE OF MODEL SXG216 H5		ITC	COL	GRP	REMARKS
1	1728-903-003-00	LABEL/BATTERY	*	1					
2	2500-901-031-00	LABEL/NOISE/LWA/100	*	1					
3	1705-902-008-00	LABEL/W/RADIATOR	*	1					
4	1705-904-002-10	LABEL/BATTERY	*	1					
5	8595-901-007-00	LABEL/WARNING/HOT	*	1					
6	1705-902-006-00	LABEL/W/FAN	*	1					
7	1674-904-008-00	LABEL/WARNING/BELT	*	1					
8	1705-902-007-00	LABEL/W/STARTER	*	1					
9	1739-904-004-00	LABEL/FUEL	*	1					
10	1782-903-051-00	LABEL/CAUTION/A	*	1					
11	1782-903-052-00	LABEL/CAUTION/B	*	1					

FIG. 42 LABEL(CE)

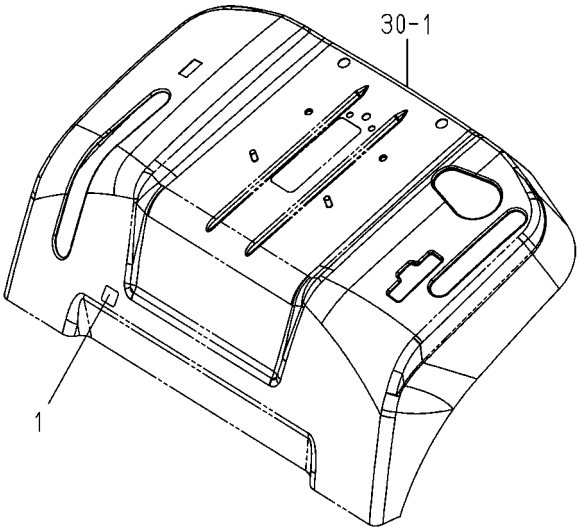

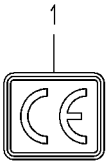

1709-905 -0100

KEY	PART CODE	DESCRIPTION	SPC	TYPE OF MODEL SXG216 H5		ITC	COL	GRP	REMARKS
1	2500-901-027-00	LABEL/CE	*	1					

FIG. 43 COMPONENT PARTS FOR 1782-201-200-40 ON Fig.11

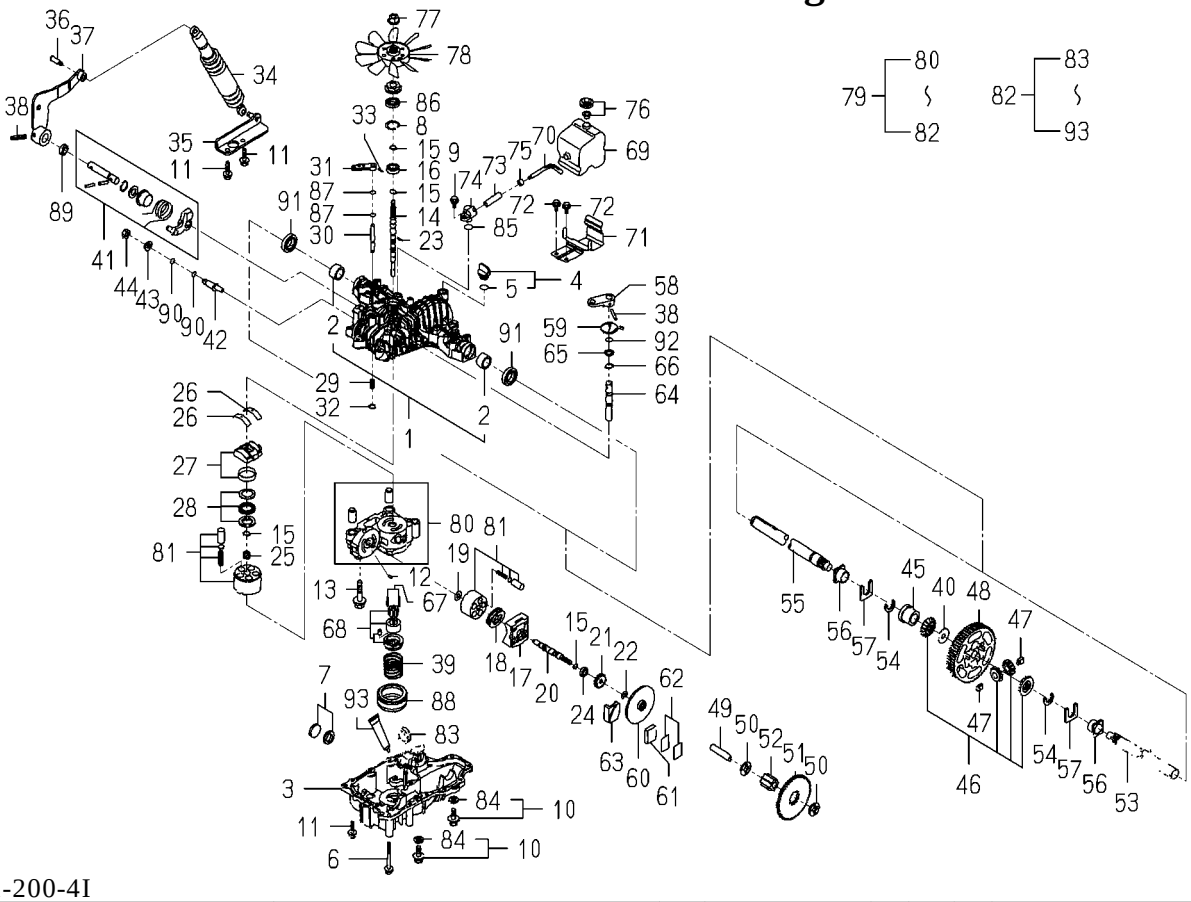

1782-201-200-4I

KEY	PART CODE	DESCRIPTION	SPC	TYPE OF MODEL SXG216 H5		ITC	COL	GRP	REMARKS
1	1782-201-510-00	UPPERCASEKIT	*	1					
2	1782-201-511-00	BUSHING25.4	*	2					
3	1782-201-203-00	LOWERCASE	*	1					
4	1782-201-520-00	OILCAPM20B ASSY	*	1					
5	1782-201-521-00	O-RINGP18	*	1					
6	1782-201-207-00	CAPSCREW8X75	*	1					
7	1782-201-209-00	MAGNET	*	1					
8	1782-201-212-00	SNAPRINGC35	*	1					
9	1782-201-215-00	BOLT8X20	*	1					
10	1782-201-530-00	DRAINBOLTKIT	*	2					
11	1782-201-217-00	TAPPINGSCREW8X30	*	3					
12	1782-201-221-00	PIN3X9.8	*	1					
13	1782-201-223-00	BOLT10X65	*	1					
14	1782-201-225-00	PUMPSHAFT	*	1					
15	1782-201-226-00	SNAPRINGS15	*	4					
16	1782-201-227-00	BEARING6202C3	*	1					
17	1782-201-228-00	MOTORHOUSING	*	1					
18	1782-201-229-00	THRUSTBEARING	*	1					
19	1782-201-231-00	WASHER/12X24X1	*	1					
20	1782-201-232-00	MOTORSHAFT	*	1					
21	1782-201-233-00	MOTORGEAR(17T)	*	1					
22	1782-201-234-00	E-RING(MOTOR)	*	1					
23	1782-201-235-00	PIN3X13.8	*	1					
24	1782-201-236-00	BEARING6302DUC3	*	1					
25	1782-201-237-00	PUMPSPRING	*	1					
26	1782-201-238-00	THRUSTMETAL	*	2					
27	1782-201-550-00	SWASHPLATE ASSY	*	1					
28	1782-201-560-00	THRUSTBEARING ASSY	*	1					
29	1782-201-243-00	SPRING25	*	1					
30	1782-201-244-00	BYPASSSHAFT	*	1					

FIG. 43 COMPONENT PARTS FOR 1782-201-200-40 ON Fig.11

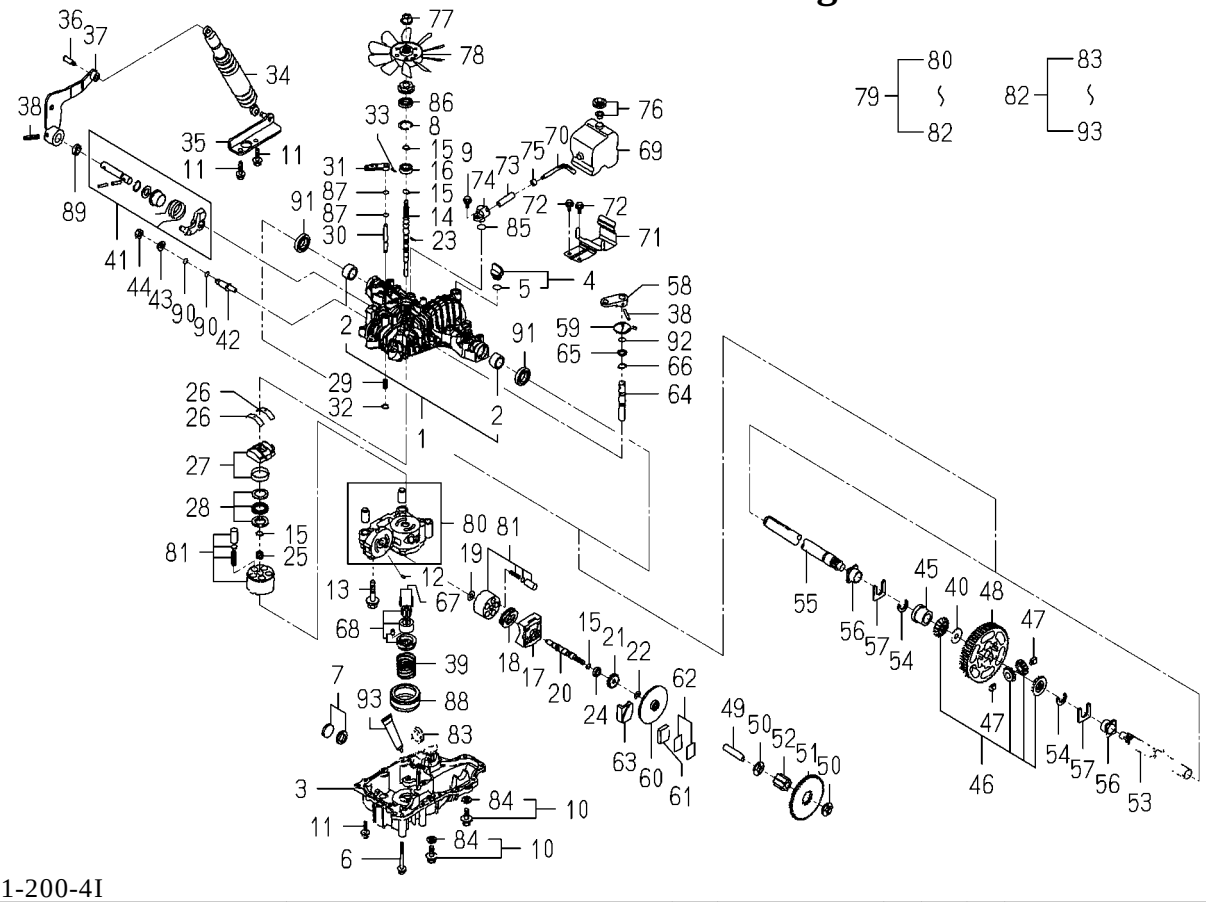

1782-201-200-4I

KEY	PART CODE	DESCRIPTION	SPC	TYPE OF MODEL SXG216 H5		ITC	COL	GRP	REMARKS
31	1782-201-245-00	BYPASSLEVER	*	1					
32	1782-201-246-00	SNAPRING10	*	1					
33	1782-201-247-00	PIN3.0AX20	*	1					
34	1782-201-248-00	SHOCKABSORBERK65	*	1					
35	1782-201-249-00	SHOCKSTAY	*	1					
36	1782-201-250-00	PINSHOCK	*	1					
37	1782-201-251-00	CONTROLLEVER	*	1					
38	1782-201-254-00	ROLLPIN6X40	*	2					
39	1782-201-256-00	CHARGESPRING	*	1					
40	1782-201-258-00	WASHER/17X36X6.4	*	1					
41	1782-201-570-00	CONTROLSHAFTKIT	*	1					
42	1782-201-261-00	FULCRUM	*	1					
43	1782-201-262-00	WASHER/12	*	1					
44	1782-201-264-00	NUT12	*	1					
45	1782-201-265-00	COLLAR25.4	*	1					
46	1782-201-580-00	DIFFGEARKIT	*	1					
47	1782-201-267-00	PIN17X24	*	2					
48	1782-201-268-00	FINALGEAR(67T)	*	1					
49	1782-201-269-00	FINALPINIONSHAFT	*	1					
50	1782-201-270-00	WASHER/15X35X3.2	*	2					
51	1782-201-271-00	REDUCTIONGEAR(53T)	*	1					
52	1782-201-272-00	FINALPINIONGEAR(11T)	*	1					
53	1782-201-276-10	AXLESHAFTLEFT	*	1					
54	1782-201-277-00	RETAININGRING	*	2					
55	1782-201-278-10	AXLESHAFTRIGHT	*	1					
56	1782-201-279-00	BUSHING	*	2					
57	1782-201-282-00	THRUSTWASHER	*	2					
58	1782-201-285-00	BRAKELEVER	*	1					
59	1782-201-286-00	BRAKERETURNSPRING	*	1					
60	1782-201-287-00	BRAKEDISK	*	1					

FIG. 43 COMPONENT PARTS FOR 1782-201-200-40 ON Fig.11

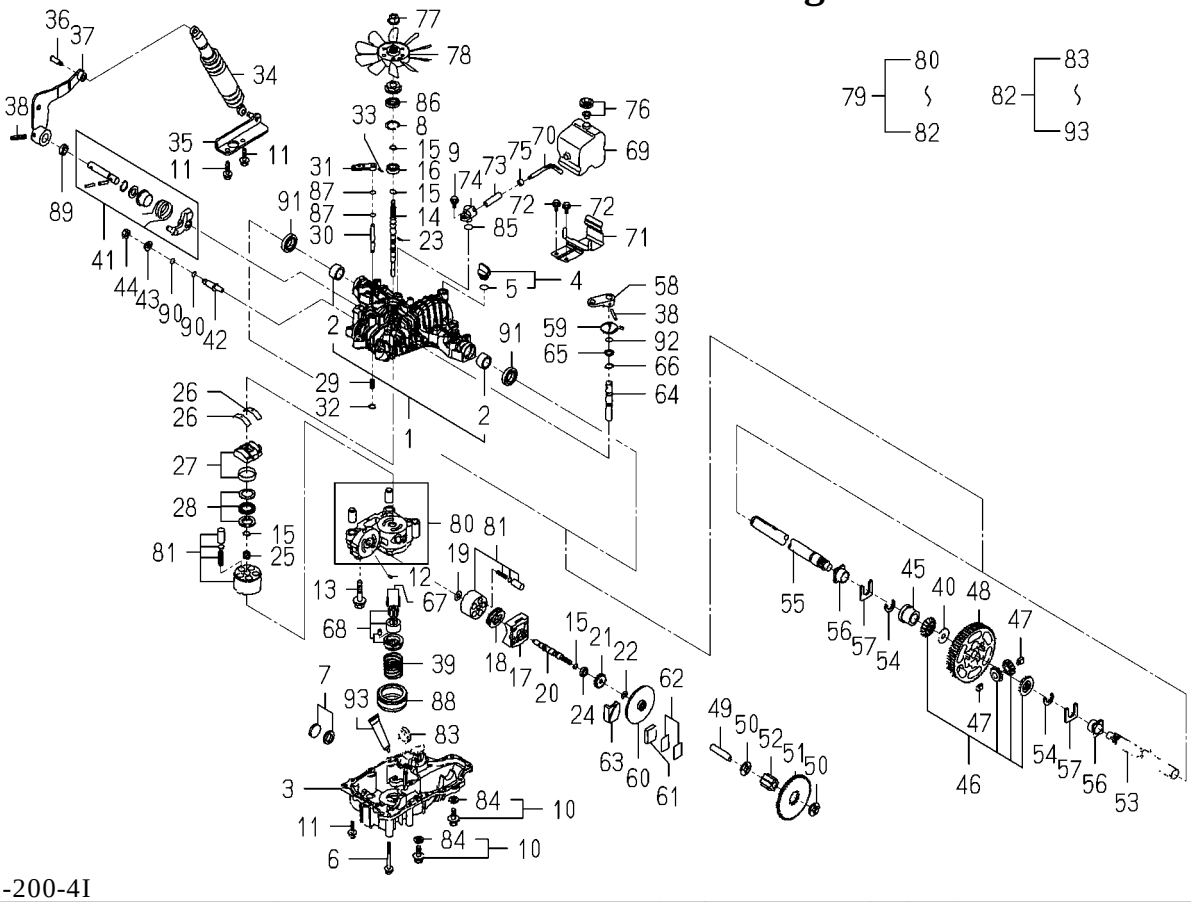

1782-201-200-4I

KEY	PART CODE	DESCRIPTION	SPC	TYPE OF MODEL SXG216 H5		ITC	COL	GRP	REMARKS
61	1782-201-288-00	BRAKESHOE	*	1					
62	1782-201-590-00	SHIMKIT	*	1					
63	1782-201-290-00	BRAKEACTUATOR	*	1					
64	1782-201-291-00	BRAKESHAFT	*	1					
65	1782-201-292-00	WASHER/16X23X1.6	*	1					
66	1782-201-300-00	SNAPRING	*	1					
67	1782-201-331-00	SPRINGPIN4X18	*	2					
68	1782-201-600-00	CHARGEPUMPKIT	*	1					
69	1782-201-338-00	RESERVOLRTANK	*	1					
70	1782-201-339-00	PIPE8	*	1					
71	1782-201-340-00	TANKBRACKET	*	1					
72	1782-201-341-00	TAPPINGSCREW8X20	*	2					
73	1782-201-342-00	TANKSPACER	*	1					
74	1782-201-344-00	FITTING	*	1					
75	1782-201-345-00	SEAL8	*	1					
76	1782-201-610-00	VENTVALVE15 ASSY	*	1					
77	1782-201-351-00	LOCKNUT10	*	1					
78	1782-201-353-00	NOTCHEDFAN8.4DIA	*	1					
79	1782-201-450-00	REPAIRKIT	*	1					
80	1782-201-218-00	CENTERCASEBB	*	1					
81	1782-201-540-00	CYLINDERBLOCKKIT	*	2					
82	1782-201-400-00	SEALKIT	*	1					
83	1782-201-208-00	FILTER	*	1					
84	1782-201-531-00	SEALWASHER10	*	2					
85	1782-201-521-00	O-RINGP18	*	1					
86	1782-201-214-00	SEALTC153507	*	1					
87	1782-201-220-00	O-RING1AP10A	*	2					
88	1782-201-222-00	FILTER	*	1					
89	1782-201-259-00	SEALTC162606	*	1					
90	1782-201-263-00	O-RING1AP14	*	2					

FIG. 43 COMPONENT PARTS FOR 1782-201-200-40 ON Fig.11

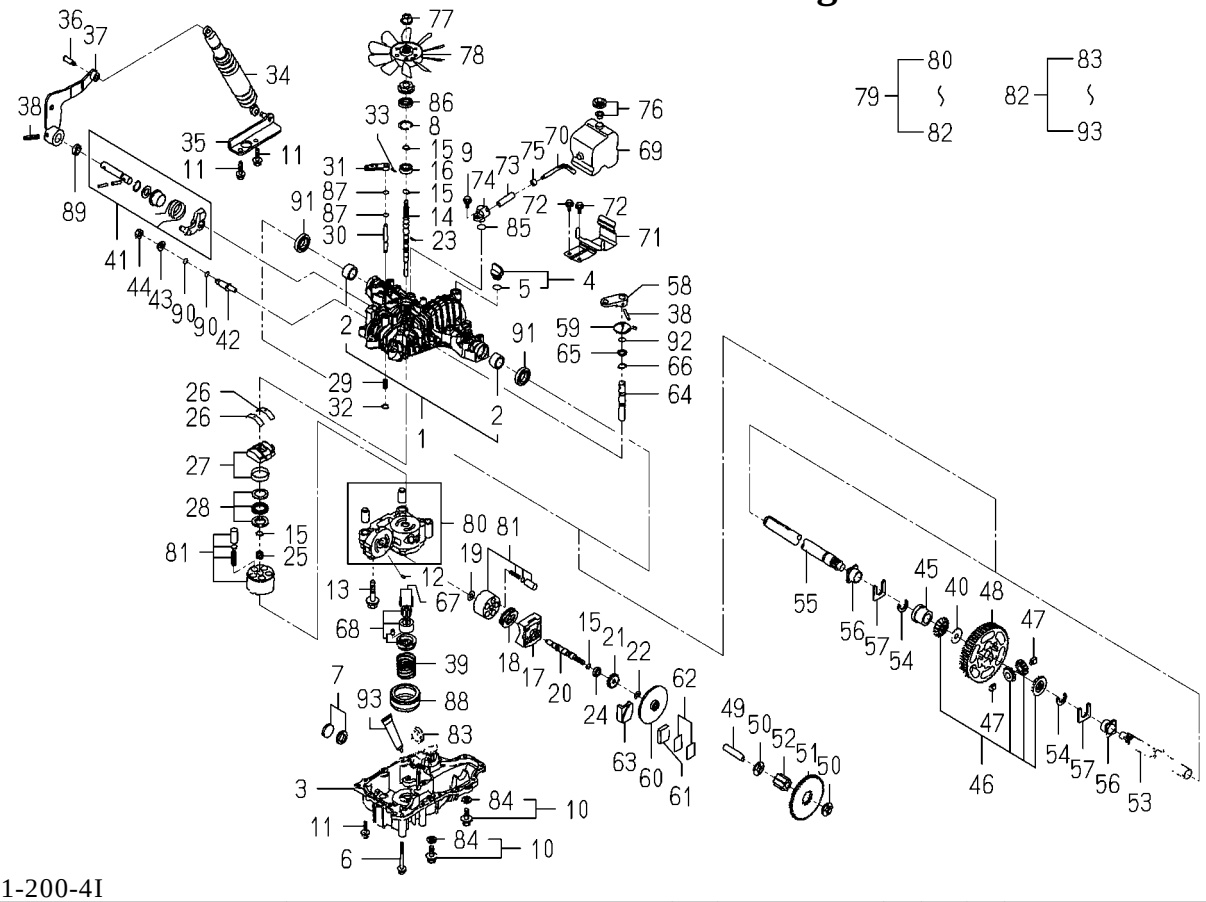

1782-201-200-4I

KEY	PART CODE	DESCRIPTION	SPC	TYPE OF MODEL SXG216 H5		ITC	COL	GRP	REMARKS
91	1782-201-281-00	SEALS25.4X42X8	*	2					
92	1782-201-293-00	O-RING1AP12	*	1					
93	1782-201-299-00	SEALANT	*	1					

Numerical Index

Part Code	Fig.	Key	Part Code	Fig.	Key	Part Code	Fig.	Key
1373-121-001-00	10	42	6209-610-001-10	6	3	6211-511-023-00	6	11
	25	5	6209-610-007-00	10	4	6211-511-024-00	6	12
1425-621-004-00	10	15	6209-610-008-00	6	7	6211-540-017-00	7	1
1729-202-001-00	21	11	6209-610-009-00	6	4	6211-560-006-00	7	3
3625-540-004-00	10	22	6209-625-001-00	6	14	6211-599-012-00	6	13
3632-360-036-00	23	9		27	10		7	2
3805-355-002-20	8	2	6209-625-002-00	10	5		7	4
3817-401-001-00	10	12		27	12	6211-751-001-10	3	2
	10	41	6209-630-002-10	26	7	6211-760-026-40	6	29
	12	19		27	21	6211-766-012-10	6	30
	18	7	6209-704-009-00	23	7	6211-777-007-30	11	1
	18	12	6209-730-005-00	13	3	6212-111-100-00	14	1
6003-010-080-00	1	1		21	9	6212-114-100-00	15	1
6209-000-002-00	12	18	6209-730-006-00	16	4	6212-116-100-00	15	3
6209-000-004-10	6	2	6209-740-001-00	10	27	6212-121-009-20	14	2
6209-000-043-00	16	9	6209-749-001-20	6	15	6212-124-009-10	15	2
6209-000-044-00	2	7	6209-788-001-00	6	27	6212-126-009-10	15	4
6209-030-043-00	21	15	6209-920-002-00	10	21	6212-211-001-10	14	3
6209-030-044-00	19	4		17	12	6212-230-003-10	14	5
6209-044-001-00	21	24		27	13	6212-235-005-00	14	6
6209-046-015-00	16	7	6209-940-004-00	12	14	6212-271-016-00	14	7
6209-050-001-00	10	33	6211-110-094-20	2	1	6212-274-016-00	7	5
6209-050-002-00	10	34	6211-141-016-10	2	6	6212-276-016-00	7	6
6209-056-001-00	21	6		27	3	6212-310-010-70	16	1
6209-300-002-00	18	10	6211-170-006-20	3	1	6212-330-056-20	16	5
6209-300-014-00	2	8	6211-173-004-00	3	3	6212-333-009-00	16	6
6209-360-005-00	23	4		27	4	6212-371-022-10	16	8
6209-360-021-00	23	5	6211-210-024-90	6	1	6212-511-004-00	13	1
6209-360-028-20	3	6	6211-258-001-00	6	8	6212-521-008-00	16	3
6209-409-001-00	10	19		27	8	6212-522-010-00	13	2
6209-409-003-00	12	17	6211-258-002-00	6	9	6212-523-023-00	13	6
6209-440-005-00	26	4		27	9	6212-524-002-40	21	8
6209-440-007-00	25	7	6211-291-001-10	6	23	6212-531-014-00	6	6
6209-490-002-10	3	4	6211-292-001-20	6	24	6212-535-010-10	21	12
6209-500-003-00	10	17		27	11	6212-535-014-00	13	4
	10	26	6211-310-006-50	10	1	6212-551-028-00	12	1
	27	22	6211-311-005-30	10	36	6212-552-014-00	12	2
6209-572-003-00	3	5	6211-312-001-30	10	28	6212-561-001-10	12	3
	27	5		27	14	6212-563-005-00	12	4
6209-580-002-10	21	27	6211-312-002-30	10	37	6212-565-001-00	12	5
6209-587-001-00	14	4		27	15	6212-569-002-00	2	4
6209-600-004-00	10	25	6211-341-086-00	9	1		27	2
6209-605-004-10	2	3	6211-342-002-10	9	2	6212-571-006-00	12	6
6209-605-007-10	6	5	6211-361-019-20	8	1	6212-575-001-00	12	7
	10	3	6211-510-020-00	6	10	6212-600-003-30	12	8

Numerical Index

Part Code	Fig.	Key	Part Code	Fig.	Key	Part Code	Fig.	Key
6212-611-004-10	12	9	6214-145-006-10	5	2	6215-619-013-00	29	36
6212-616-002-00	12	16		27	7	6215-619-014-00	29	37
6212-620-002-20	12	10	6215-300-045-10	20	1	6215-619-015-00	29	38
6212-626-002-10	12	11	6215-311-036-00	28	16	6215-619-016-00	29	39
6212-628-004-00	12	12	6215-315-002-00	20	2	6215-621-036-10	21	7
6212-628-005-00	12	13	6215-330-028-00	28	1	6215-622-002-00	29	11
6213-100-003-30	17	1	6215-332-014-00	28	15	6215-629-017-00	29	12
6213-111-001-30	17	2	6215-339-004-00	28	14	6215-629-019-00	29	13
6213-119-001-00	17	4	6215-342-013-00	28	13	6215-629-020-00	29	17
6213-129-003-00	17	3	6215-343-010-00	28	12	6215-629-021-00	29	18
6213-129-005-00	6	17	6215-345-044-00	28	2	6215-629-022-00	29	19
6213-129-006-00	6	16	6215-345-045-00	28	3	6215-629-023-00	29	20
6213-140-033-10	17	6	6215-345-046-00	28	4	6215-629-024-00	29	21
6213-149-001-00	17	8	6215-345-047-00	28	5	6215-629-025-00	29	22
6213-160-002-20	10	29	6215-345-048-00	28	6	6215-629-026-00	29	23
6213-161-001-20	10	30	6215-345-049-00	28	7	6215-629-027-00	29	24
6213-164-001-00	10	31	6215-345-050-00	28	8	6215-629-028-00	29	25
6213-200-009-00	22	2	6215-345-051-00	28	9	6215-629-029-00	29	26
6213-240-002-20	17	13	6215-345-052-00	28	10	6215-629-030-00	29	27
6213-311-003-10	17	10	6215-345-053-00	28	11	6215-629-031-00	29	28
6213-319-001-00	10	2	6215-359-003-00	28	17	6215-629-032-00	29	29
6213-610-005-50	18	1	6215-359-004-00	28	18	6215-629-033-00	29	30
6213-612-004-00	18	3	6215-411-141-00	23	2	6215-629-034-00	29	31
6213-613-002-10	18	2	6215-411-149-00	20	3	6215-631-017-00	29	1
6213-614-003-10	18	5	6215-411-150-10	20	4	6215-634-002-00	29	14
	27	17	6215-412-001-20	23	1	6215-635-002-00	29	7
6213-614-006-20	18	9	6215-419-001-00	23	6	6215-635-008-00	29	35
	27	18	6215-520-001-00	21	14	6215-637-003-00	29	32
6213-619-003-00	18	4	6215-526-004-00	21	16	6215-639-006-00	29	15
6213-619-005-00	18	8	6215-531-001-00	21	22	6215-639-007-00	29	16
6213-641-004-10	19	2	6215-541-001-10	21	17	6215-641-002-00	29	2
6213-660-006-00	19	1	6215-541-002-10	24	1	6215-643-002-00	29	3
6213-669-008-00	19	3	6215-541-003-10	21	23	6215-644-003-00	29	5
6213-671-012-00	19	5	6215-542-001-10	10	23	6215-649-003-00	29	4
6213-674-017-10	25	3	6215-542-002-00	21	19	6215-649-004-10	29	6
6213-711-004-00	18	20	6215-543-003-20	21	18	6215-649-005-00	29	8
6213-716-001-60	18	15	6215-546-001-00	10	18	6215-649-006-10	29	9
6213-721-001-00	6	22	6215-549-001-10	6	26	6215-649-007-00	29	10
6213-729-016-00	18	13	6215-549-003-00	21	21	6219-732-003-00	26	5
6213-743-002-10	18	16	6215-549-007-10	21	28	6219-752-036-00	21	2
	27	19	6215-549-008-10	21	32	6219-752-037-00	21	3
6214-111-014-00	4	1	6215-549-029-00	24	2	6219-752-038-00	21	4
6214-115-002-20	4	2	6215-600-147-00	21	1	6219-752-039-00	21	5
	27	6	6215-612-003-00	29	33	6219-755-001-00	22	1
6214-141-012-00	5	1	6215-619-012-00	29	34	6281-100-014-00	25	8

Numerical Index

6003-097-263-00

Part Code	Fig.	Key	Part Code	Fig.	Key	Part Code	Fig.	Key
6281-111-009-00	30	1	6902-050-816-00	10	38	V401-160-006-00	21	31
6281-115-017-00	30	10	6904-110-818-00	6	19	V411-260-006-00	21	30
6281-115-018-00	30	11	6904-110-822-00	5	4	V523-101-001-80	16	2
6281-117-003-00	30	4	6904-110-840-00	6	18	V600-110-620-30	21	10
6281-118-007-00	30	3	6909-110-408-00	30	32	V682-200-000-60	2	5
6281-119-009-00	30	2	6909-150-508-00	30	31	V704-140-016-00	12	15
6281-121-010-00	30	5	6909-902-299-00	6	21	V705-140-012-00	10	32
6281-124-011-00	30	6	6909-906-105-10	17	11	V710-140-004-00	10	24
6281-127-003-00	30	19	6911-129-006-00	2	2		21	20
6281-129-029-00	30	29	J061-210-015-00	18	14		24	3
6281-129-030-00	30	28	J062-076-082-00	23	3	V720-101-900-80	21	26
6281-129-043-00	30	30	J062-087-093-00	23	8	V720-102-401-50	17	7
6281-129-058-00	30	9	V210-560-601-20	13	5		27	16
6281-129-062-00	30	33		21	13	V720-102-401-80	8	3
6281-129-064-00	30	7	V210-560-602-50	17	5	V723-102-005-50	18	21
6281-129-065-00	30	12	V211-560-802-50	5	3		27	20
6281-129-066-00	30	13	V230-360-601-00	8	4			
6281-129-067-00	30	14	V230-360-601-20	6	25			
6281-129-068-00	30	15	V230-360-601-60	26	8			
6281-129-069-00	30	16	V231-360-801-60	10	13			
6281-129-070-00	30	17		17	9			
6281-129-071-00	30	18	V231-360-802-00	4	3			
6281-129-072-00	30	21		18	11			
6281-129-073-00	30	22		18	17			
6281-129-074-00	30	23		25	4			
6281-129-075-00	30	24	V231-360-802-50	10	40			
6281-129-076-00	30	25		18	22			
6281-129-077-00	30	26	V231-360-803-00	10	16			
6281-129-078-00	30	27	V231-360-803-50	10	11			
6281-129-079-00	30	34	V231-360-804-00	10	10			
6281-129-080-00	30	8		10	39			
6281-151-014-00	30	20	V231-360-804-50	10	14			
6281-200-007-10	25	1		18	6			
6281-270-006-00	25	2	V231-360-805-00	10	9			
6281-410-023-10	26	3	V231-360-805-50	10	8			
6281-910-015-10	26	6	V231-360-807-50	10	7			
6281-920-001-00	26	9		18	18			
6281-971-001-10	26	1	V231-360-808-50	10	6			
6282-450-002-00	26	2	V233-361-002-00	11	2			
6287-810-054-00	27	1	V233-361-006-00	25	6			
6294-453-002-00	6	20	V301-260-006-00	6	28			
6513-770-022-10	18	19		10	35			
6901-910-816-00	9	4		21	29			
6901-911-020-00	9	3	V302-260-006-00	21	25			
6901-911-025-00	25	9	V341-120-008-00	10	20			

Numerical Index

Part Code	Fig.	Key	Part Code	Fig.	Key	Part Code	Fig.	Key
1104-410-007-00	10	44	1593-117-003-10	8	4	1703-102-004-00	2	15
1105-410-003-00	19	40	1593-402-051-10	22	2	1703-102-200-20	2	1
1118-716-001-00	19	12	1593-403-005-00	24	2	1703-102-202-00	2	3
	19	36	1593-411-001-10	25	7	1703-102-203-00	2	4
1118-901-002-00	39	4	1593-411-053-20	25	8	1703-102-204-00	2	5
1326-708-005-00	23	3	1593-606-006-10	33	5	1703-102-205-00	2	6
1330-726-013-00	20	11	1593-611-001-00	31	9	1703-102-206-00	2	7
1342-402-006-00	5	18		31	25	1703-104-002-00	4	9
	37	25	1593-611-014-00	31	6	1703-135-002-00	24	5
	37	27	1593-611-058-00	31	23	1705-332-006-00	19	48
1376-402-003-00	37	26	1593-612-005-00	6	3	1705-333-001-00	19	44
1414-606-002-00	35	2	1593-612-220-10	6	6	1705-436-300-00	24	4
1415-120-006-00	15	9	1593-616-004-20	33	2	1705-902-006-00	41	6
1415-216-602-00	23	12	1593-623-520-00	37	32	1705-902-007-00	41	8
1421-403-007-00	23	4	1600-505-007-10	8	7	1705-902-008-00	41	3
1421-403-008-00	23	5	1614-129-003-00	37	33	1705-904-002-10	41	4
1421-602-005-10	21	14	1646-116-051-10	8	3	1716-680-006-00	36	6
1421-603-004-00	2	30	1650-102-202-10	2	2	1716-680-222-00	31	20
1421-951-006-00	23	7	1650-104-201-00	4	5		37	37
1421-951-007-00	23	8	1650-111-034-00	5	6	1716-680-330-10	31	19
1423-616-004-00	2	29	1650-602-223-00	31	4		37	36
	20	25	1650-650-015-00	5	3	1719-312-001-00	11	5
1424-101-203-00	2	20		19	57		38	8
1424-101-204-00	2	21	1650-650-017-00	5	4	1724-102-012-00	2	34
1425-621-004-00	28	13		19	58	1725-103-002-00	3	13
1426-406-203-00	21	7	1650-650-222-00	37	4	1725-218-006-00	12	4
1426-621-002-00	34	2	1650-650-293-00	37	14		12	12
1427-111-229-00	3	7	1650-650-295-00	37	15	1725-410-006-00	28	8
	21	2	1650-650-296-00	37	16	1725-433-202-10	22	3
1429-406-205-10	21	6	1672-603-007-00	1	19	1725-601-093-00	28	30
1444-101-016-10	5	16	1674-904-008-00	41	7	1725-604-051-00	29	2
1444-507-003-00	38	5	1675-104-211-00	4	2	1725-611-006-00	32	5
1444-621-008-00	31	22	1675-104-213-00	4	3	1728-102-220-00	2	24
1480-117-002-00	16	17	1675-112-002-00	7	3		2	25
1488-611-001-00	31	11	1689-103-004-00	3	2	1728-104-210-00	4	1
1524-122-001-00	16	1	1689-272-240-00	14	4	1728-105-230-00	5	11
1527-604-002-00	33	7	1689-603-012-00	30	11	1728-112-230-00	37	21
1544-104-205-00	4	4	1689-613-260-00	36	1	1728-112-250-10	7	1
1560-104-010-40	2	19	1689-613-301-00	8	10	1728-117-700-10	8	2
1560-263-011-00	20	17	1689-621-007-00	28	18	1728-120-221-00	9	4
1560-404-002-30	16	9	1689-621-008-10	28	17	1728-273-230-10	15	2
1560-666-005-00	37	17	1690-658-360-10	37	23	1728-273-240-00	15	1
1560-666-006-00	37	18	1696-901-006-00	39	7	1728-334-280-00	19	25
1564-512-001-00	21	8	1703-102-001-00	2	8	1728-334-910-00	19	43
1593-101-003-20	1	9	1703-102-003-00	2	13	1728-441-201-00	25	2

Numerical Index

Part Code	Fig.	Key	Part Code	Fig.	Key	Part Code	Fig.	Key
1728-441-210-00	25	5	1782-104-052-00	4	11	1782-201-231-00	43	19
1728-441-220-00	18	4	1782-105-001-10	5	9	1782-201-232-00	43	20
	25	3	1782-105-210-00	5	12	1782-201-233-00	43	21
1728-441-230-00	25	1	1782-105-230-00	5	7	1782-201-234-00	43	22
1728-606-760-00	30	2	1782-105-240-00	5	13	1782-201-235-00	43	23
1728-903-003-00	41	1	1782-111-001-00	6	1	1782-201-236-00	43	24
1729-202-015-00	19	7	1782-111-210-00	6	2	1782-201-237-00	43	25
	25	6	1782-112-071-00	7	2	1782-201-238-00	43	26
1729-702-003-00	21	3	1782-112-072-00	7	6	1782-201-243-00	43	29
	21	18	1782-117-520-00	8	1	1782-201-244-00	43	30
1739-401-700-00	20	1	1782-120-220-00	9	1	1782-201-245-00	43	31
1739-601-071-10	28	9	1782-120-232-00	9	3	1782-201-246-00	43	32
1739-601-075-40	28	6	1782-120-235-00	9	6	1782-201-247-00	43	33
1739-601-076-00	28	2	1782-120-241-00	9	8	1782-201-248-00	43	34
1739-601-740-10	28	28	1782-122-001-10	10	1	1782-201-249-00	43	35
1739-601-760-10	28	4	1782-122-002-10	10	2	1782-201-250-00	43	36
1739-603-072-00	29	3	1782-122-003-00	10	25	1782-201-251-00	43	37
1739-901-073-00	39	3	1782-122-012-00	10	43	1782-201-254-00	43	38
1739-902-003-00	40	6	1782-122-013-00	10	26	1782-201-256-00	43	39
1739-904-004-00	41	9	1782-122-014-00	10	35	1782-201-258-00	43	40
1740-272-620-00	14	1	1782-122-051-00	10	20	1782-201-259-00	43	89
1752-120-201-00	9	2	1782-122-052-00	10	34	1782-201-261-00	43	42
	9	7	1782-122-210-10	10	41	1782-201-262-00	43	43
1752-120-204-00	9	9	1782-122-700-10	10	31	1782-201-263-00	43	90
1752-120-206-00	9	5	1782-122-720-00	10	45	1782-201-264-00	43	44
1752-554-003-00	27	17	1782-201-051-00	38	3	1782-201-265-00	43	45
1770-105-001-00	5	5	1782-201-200-40	11	1	1782-201-267-00	43	47
1772-654-250-10	37	28	1782-201-203-00	43	3	1782-201-268-00	43	48
1772-654-251-00	37	29	1782-201-207-00	43	6	1782-201-269-00	43	49
1773-401-202-10	20	2	1782-201-208-00	43	83	1782-201-270-00	43	50
1773-652-212-00	37	5	1782-201-209-00	43	7	1782-201-271-00	43	51
1774-272-062-10	14	2	1782-201-212-00	43	8	1782-201-272-00	43	52
	14	5	1782-201-214-00	43	86	1782-201-276-10	43	53
1776-612-250-00	32	1	1782-201-215-00	43	9	1782-201-277-00	43	54
1782-101-002-00	1	1	1782-201-217-00	43	11	1782-201-278-10	43	55
1782-101-003-00	1	2	1782-201-218-00	43	80	1782-201-279-00	43	56
1782-102-001-00	2	12	1782-201-220-00	43	87	1782-201-281-00	43	91
1782-102-051-00	2	16	1782-201-221-00	43	12	1782-201-282-00	43	57
1782-102-052-00	2	9	1782-201-222-00	43	88	1782-201-285-00	43	58
1782-102-710-00	2	32	1782-201-223-00	43	13	1782-201-286-00	43	59
1782-103-051-00	3	14	1782-201-225-00	43	14	1782-201-287-00	43	60
1782-103-510-20	3	6	1782-201-226-00	43	15	1782-201-288-00	43	61
1782-103-700-00	3	1	1782-201-227-00	43	16	1782-201-290-00	43	63
1782-104-001-00	4	7	1782-201-228-00	43	17	1782-201-291-00	43	64
1782-104-051-00	4	6	1782-201-229-00	43	18	1782-201-292-00	43	65

Numerical Index

Part Code	Fig.	Key	Part Code	Fig.	Key	Part Code	Fig.	Key
1782-201-293-00	43	92	1782-272-510-00	14	7	1782-433-510-00	22	4
1782-201-299-00	43	93	1782-272-540-00	14	8	1782-433-530-10	22	1
1782-201-300-00	43	66	1782-273-240-00	15	6	1782-434-220-10	23	2
1782-201-331-00	43	67	1782-312-001-00	16	14	1782-434-700-10	23	1
1782-201-338-00	43	69	1782-312-260-10	16	11	1782-434-710-10	23	9
1782-201-339-00	43	70	1782-312-510-10	16	2	1782-436-001-10	24	1
1782-201-340-00	43	71	1782-312-530-00	16	4	1782-553-210-20	26	1
1782-201-341-00	43	72	1782-313-052-00	17	8	1782-553-250-00	26	6
1782-201-342-00	43	73	1782-313-054-00	17	2	1782-553-260-00	26	5
1782-201-344-00	43	74	1782-313-510-00	17	1	1782-553-730-00	26	2
1782-201-345-00	43	75	1782-313-530-00	17	5	1782-554-009-00	27	3
1782-201-351-00	43	77	1782-317-051-00	18	6	1782-554-056-00	27	12
1782-201-353-00	43	78	1782-317-052-00	18	9	1782-554-071-00	27	8
1782-201-400-00	43	82	1782-317-250-00	18	1	1782-554-072-00	27	21
1782-201-450-00	43	79	1782-317-251-00	18	2	1782-554-082-00	27	13
1782-201-510-00	43	1	1782-317-260-00	18	3	1782-554-510-00	27	11
1782-201-511-00	43	2	1782-334-003-00	19	8	1782-554-520-00	27	19
1782-201-520-00	43	4	1782-334-006-00	19	4	1782-554-650-00	27	1
1782-201-521-00	43	5	1782-334-014-30	19	60	1782-601-052-10	28	7
	43	85	1782-334-021-00	19	13	1782-601-710-20	28	1
1782-201-530-00	43	10	1782-334-022-00	19	37	1782-601-720-00	28	25
1782-201-531-00	43	84	1782-334-023-00	19	10	1782-601-740-00	28	21
1782-201-540-00	43	81	1782-334-024-00	19	34	1782-601-750-00	28	23
1782-201-550-00	43	27	1782-334-025-00	19	53	1782-601-760-00	28	14
1782-201-560-00	43	28	1782-334-270-10	19	24	1782-601-770-00	28	32
1782-201-570-00	43	41	1782-334-310-20	19	1	1782-601-780-00	28	33
1782-201-580-00	43	46	1782-334-410-00	19	17	1782-604-071-00	29	1
1782-201-590-00	43	62	1782-334-440-00	19	56	1782-606-004-20	30	7
1782-201-600-00	43	68	1782-334-530-10	19	47	1782-606-053-00	30	8
1782-201-610-00	43	76	1782-334-710-00	19	54	1782-606-710-00	30	1
1782-202-001-30	12	1	1782-407-003-20	20	16	1782-611-006-00	31	8
1782-202-002-00	12	2	1782-407-004-00	20	20	1782-611-007-00	31	15
1782-202-009-00	12	5	1782-407-006-00	20	9	1782-611-051-00	31	16
1782-202-051-10	12	9	1782-407-051-10	20	3	1782-611-071-00	31	2
1782-202-052-00	12	6	1782-407-052-00	20	27	1782-611-072-00	31	12
1782-202-054-00	12	3	1782-407-250-20	20	10	1782-611-710-00	31	1
	12	10	1782-407-260-10	20	13	1782-611-720-00	31	10
1782-202-056-00	12	7	1782-407-270-10	20	21	1782-611-730-00	31	5
1782-271-003-00	13	8	1782-407-310-10	20	15	1782-630-071-10	33	1
1782-271-210-20	13	5	1782-407-510-10	20	6	1782-630-072-20	33	6
1782-271-230-20	13	2	1782-410-006-10	21	16	1782-650-710-00	34	1
1782-271-520-00	13	1	1782-410-052-00	21	12	1782-650-730-00	34	3
1782-272-001-00	14	13	1782-410-058-00	21	13	1782-670-720-00	35	1
1782-272-210-10	14	16	1782-410-780-10	21	5	1782-680-210-00	36	7
1782-272-220-10	14	18	1782-410-810-10	21	1	1782-690-051-10	37	39

Numerical Index

Part Code	Fig.	Key	Part Code	Fig.	Key	Part Code	Fig.	Key
1782-690-250-20	37	10	3659-170-003-00	10	28	J061-247-055-00	4	8
1782-690-252-00	37	11	3666-202-005-10	15	5		4	10
1782-690-253-00	37	12		21	9	J062-104-111-00	5	14
1782-690-254-00	37	13	3666-222-003-00	12	11	J062-119-126-00	5	8
1782-690-500-10	37	1	3670-520-008-00	19	11	J062-147-159-00	2	26
1782-690-502-00	37	2	3670-703-008-00	20	22	V120-366-001-60	28	5
1782-690-510-00	37	3	3676-133-013-00	10	32	V201-260-803-50	2	27
1782-801-230-10	38	4	3740-162-005-00	34	5		20	23
1782-801-810-00	38	1	3750-121-011-00	10	27	V201-360-803-00	14	20
1782-901-051-00	39	1	3805-208-016-00	30	10	V201-461-002-50	32	4
1782-901-052-00	39	2	3805-371-007-00	2	11	V203-461-002-00	1	3
1782-901-053-00	39	5		21	10		1	14
1782-901-054-00	39	6	3814-114-001-00	19	29	V210-360-601-20	2	14
1782-902-001-00	40	1	3814-302-023-00	3	12		28	11
1782-902-051-00	40	2	3814-354-013-40	27	9		37	24
1782-902-052-00	40	3	3814-440-006-00	30	4		37	31
1782-902-053-00	40	4	3819-311-013-00	5	10	V210-360-601-60	5	2
1782-902-054-00	40	5	3821-262-202-00	37	6		27	18
1782-902-055-00	40	7	3824-247-202-00	37	7		28	3
1782-902-056-00	40	8	3829-133-011-00	16	10		28	12
1782-903-051-00	41	10	3829-311-200-10	5	1		28	15
1782-903-052-00	41	11	3838-203-001-00	19	41		28	34
1789-650-001-00	34	6	3843-261-200-20	36	3		31	21
2120-340-004-00	10	23	3843-261-201-00	36	2		34	4
2144-415-003-00	27	14		36	4		37	38
2144-610-001-00	35	3	4101-102-038-00	2	28	V210-360-602-50	37	35
2186-536-212-00	36	5		20	24	V211-260-801-20	27	20
2500-901-027-00	42	1	4136-405-002-00	38	6	V211-260-802-00	10	17
2500-901-031-00	41	2	6209-030-006-00	11	2	V211-360-801-60	1	17
2502-407-001-10	19	2	6209-030-085-00	3	9		2	33
2502-554-003-10	27	5	6901-911-025-00	9	10		5	17
2502-554-004-10	27	6	7821-501-005-00	31	18		19	61
2502-554-007-00	27	2	7955-201-026-00	10	8		21	17
2504-165-002-10	33	8	7970-505-005-00	19	35		28	29
2515-102-003-00	2	10	8595-901-007-00	41	5		31	17
2515-665-210-00	37	30	8663-201-062-10	19	19		37	8
2706-501-003-00	6	7	8663-202-055-00	10	14	V211-360-802-00	5	15
2706-501-004-00	6	8	8663-202-056-00	10	15		19	59
3517-205-007-00	19	22	8670-201-006-00	10	9		28	16
	19	27	8670-201-007-00	10	10		38	2
3621-702-003-00	23	13	8670-201-008-10	10	18	V211-360-802-50	19	55
3623-150-004-10	1	5	8670-201-220-00	10	3	V211-360-803-50	2	22
3623-263-001-00	1	13	8674-202-012-00	10	19	V211-560-802-00	20	14
3642-496-007-10	37	34	J061-230-038-00	2	17	V211-560-802-50	10	46
3650-270-214-00	37	9	J061-236-044-00	2	18		20	7

Numerical Index

Part Code	Fig.	Key
V211-560-803-00	9	11
V211-560-804-50	30	3
V211-561-002-50	19	6
	27	7
	27	22
V211-561-003-50	12	8
	16	3
V211-660-801-60	14	3
	14	6
V211-660-802-00	3	5
	3	8
	22	5
V211-660-802-50	10	24
V211-660-803-00	3	11
V211-660-805-00	11	4
V211-661-002-00	37	22
V211-661-002-50	21	11
V211-661-003-00	19	16
V231-360-801-20	28	22
	28	24
	28	26
V251-341-202-50	12	13
V301-260-006-00	7	4
V304-260-008-00	2	31
	14	21
	19	33
	19	42
	20	26
	21	4
	21	15
	21	19
	27	10
	37	19
V304-260-010-00	1	6
	8	5
	10	30
	13	6
	20	18
	26	7
V304-260-012-00	3	10
	23	6
V304-460-008-00	1	10
V304-460-012-00	18	8
V304-700-008-00	3	3
V305-260-010-00	31	24

Part Code	Fig.	Key
V305-260-012-00	16	16
V327-261-216-00	22	6
V328-262-112-00	23	14
	24	6
V334-260-012-00	24	3
V335-260-016-00	20	4
V360-260-006-00	7	5
	19	26
	28	10
	28	31
	31	3
V362-260-008-00	10	38
	19	32
	28	27
	30	6
	30	9
V363-260-008-00	28	20
	31	7
V401-160-006-00	1	20
V401-160-008-00	1	11
	37	20
V401-160-010-00	1	4
	1	7
	1	15
	10	29
	20	19
	32	3
V401-160-012-00	16	15
	18	7
	24	7
V401-160-016-00	22	8
V401-700-008-00	3	4
V411-260-006-00	8	8
	10	21
	14	9
	16	5
V411-260-008-00	1	12
	1	18
	2	23
	6	4
	11	3
	13	3
	14	14
	15	3
	15	7

Part Code	Fig.	Key
V411-260-008-00	16	12
	17	6
	17	9
	19	30
	19	49
	19	51
	33	3
	38	7
V411-260-010-00	1	8
	1	16
	8	6
	10	42
	13	7
	13	9
	17	3
	19	45
	31	13
	32	2
V411-260-012-00	26	8
	27	15
	28	19
V411-260-014-00	10	39
V411-260-016-00	20	5
	22	7
	26	3
V411-260-018-00	23	10
V411-260-020-00	14	11
	16	7
	30	5
V500-162-501-50	8	9
V500-162-502-00	13	4
	13	10
	14	15
	15	4
	15	8
	16	13
	17	4
	17	7
	17	10
	19	31
	19	46
	19	50
	19	52
V500-163-002-00	23	15
	24	8

Numerical Index

Part Code	Fig.	Key	Part Code	Fig. Key	Part Code	Fig. Key
V500-163-002-00	26	9				
V500-163-002-50	26	4				
V500-164-003-00	22	9				
V530-240-602-80	14	17				
	14	19				
V560-160-008-00	6	5				
	31	14				
	33	4				
V580-140-503-20	23	11				
V600-110-620-40	10	5				
	10	11				
V600-110-630-30	10	4				
V600-150-620-10	20	12				
V600-150-620-20	10	36				
	19	20				
V600-150-630-40	19	3				
V670-200-004-00	19	39				
V670-200-005-00	19	15				
V671-400-004-00	19	38				
V671-400-005-00	19	14				
V704-140-012-00	27	16				
V704-140-015-00	10	40				
	19	18				
	19	23				
	19	28				
V704-140-019-00	20	8				
V704-140-020-00	14	12				
	16	8				
V705-140-035-00	10	37				
	19	21				
V705-140-047-00	10	6				
	10	12				
V705-140-052-00	19	5				
	19	9				
V710-140-004-00	27	4				
V721-103-106-00	10	16				
V744-120-470-70	10	7				
	10	13				
V760-150-000-00	10	22				
	10	33				
	14	10				
	16	6				
	22	10				
V999-200-003-00	18	5				
	25	4				

Alpabetical Index

Description	Fig.	Key
ARM,TENSION	24	1
ARM/CONTROL	21	28
ARM/FLOATING COMP	21	17
ARMATURE/STARTE ASSY	30	5
BALL,STEEL	2	5
BEARING,RB/6203	21	10
BEARING/BALL	21	11
BEARING/CONNECTING R	7	5
	7	6
	14	7
BEARING/CRANK/LOWER	6	12
BEARING/CRANK/UNSET	7	1
	7	3
BEARING/CRANK/UPPER	6	11
BEARING/CRANKSET	6	10
BEARING/NEEDLE	30	8
	30	9
BEARING/OILLESS	30	12
	30	14
	30	16
BEARING/THRUST/CRANK	6	13
	7	2
	7	4
BEARING/WITH SHOCKAB	30	13
BELT/VHM34.5/FAN	19	5
BODY/OILPUMP	17	2
BOLT	2	7
	6	2
	10	38
	12	18
	29	38
BOLT,ADJUST	6	27
BOLT,EYE	29	36
BOLT,JOINT	17	11
BOLT,S/M6X12/7T	13	5
	21	13
BOLT,S/M6X25/7T	17	5
BOLT,S/M8X25/7T	5	3
BOLT,SEMS/M10X20,7T	9	3
BOLT,SEMS/M10X25,7T	25	9
BOLT,SEMS/M8X16	9	4
BOLT/CONNECTINGROD	14	6
BOLT/CRANK	16	9
BOLT/FLANGE	16	7
BOLT/M6	10	33
BOLT/M6	10	34
BOLT/M6X10	21	15
BOLT/M6X18	21	6
	21	24
BOLT/THROUGH	30	30
BOLT/WS	17	4
	19	4
BRACKET ROCKER SHAFT	12	12
BRACKET,ROCKER SHAFT	12	13
BRUSH/STARTER	30	2
CAMSHAFT/INJECTION P	21	7
CAP,BLANK/30	10	22
CAP,OIL FILLER	3	2
CAP,SEALING	2	2
CARTRIDGE/OILFILTER	17	13
CLAMP,STRAINER	17	8
CLAMP/WIRE/10-12	23	7
CLAMP/WIRE/10-15	18	14
CLIP/HOSE/7.6-8.2	23	3
CLIP/HOSE/8.7-9.3	23	8
CLUTCH/STARTER ASSY	30	6
CONNECTINGROD ASSY	14	5
CONNECTOR,GLOW PLUG	26	5
CONNECTOR,OIL FILTER	10	2
CONNECTOR/FUEL	23	1
CONTROLSLEEVE	29	35
COVER	30	11
COVER,INJ PUMP	6	23
COVER/CYLINDER/HEAD	3	1
CRANKSHAFT ASSY	16	1
CUP/SEALING/12	6	7
CUP/SEALING/16	10	4
CUP/SEALING/28	6	3
CUP/SEALING/36	6	4
CUTTER,VALVE	12	5
CYLINDERBLOCK ASSY	6	1
CYLINDERHEAD ASSY	2	1
DOWEL	6	20
FAN,COOLING	19	1
FILTER/FUEL ASSY	22	2
FLANGEBOLT/M10X20	11	2
FLANGEBOLT/M10X60	25	6
FLANGEBOLT/M6X10	8	4
FLANGEBOLT/M6X12	6	25
FLANGEBOLT/M6X16	26	8
FLANGEBOLT/M8X16	10	13
	17	9
FLANGEBOLT/M8X20	4	3
	18	11
	18	17
	25	4
FLANGEBOLT/M8X25	10	40
	18	22
FLANGEBOLT/M8X30	10	16
FLANGEBOLT/M8X35	10	11
FLANGEBOLT/M8X40	10	10
	10	39
FLANGEBOLT/M8X45	10	14
	18	6
FLANGEBOLT/M8X50	10	9
FLANGEBOLT/M8X55	10	8
FLANGEBOLT/M8X75	10	7
	18	18
FLANGEBOLT/M8X85	10	6
FLYWEIGHT	21	14
FLYWHEEL ASSY	16	5
FRAME/COMMUTATOR END	30	10
GASKET	3	5
	4	2
	18	2
	26	7
	27	5
	27	6
	27	21
	28	17
	29	4
	29	37
	29	39
GASKET EXHAUST MANIF	5	2
	27	7
GASKET(SPACER)	18	9
	27	18
GASKET,NOZZLE	20	2
GASKET/COVER	6	24
	27	11
GASKET/CYLINDERHEAD	2	6
	27	3
GASKET/GEARCASE	10	28
	27	14
GASKET/HOUSING	18	16

Alpabetical Index

6003-097-263-00

Description	Fig.	Key
GASKET/HOUSING	27	19
GASKET/PLATE	10	37
	27	15
GASKET/WATER PUMP	18	5
	27	17
GEAR/CAMSHAFT	13	2
GEAR/CRANK	16	3
GEAR/IDLE ASSY	13	6
GEAR/INJECTIONPUMP	21	8
GEAR/STARTER PLANETA	30	17
GEAR/STARTERINTERNAL	30	18
GEARCASE ASSY	10	1
GENERATOR ASSY	25	1
GLOWPLUG	26	3
GUIDE/LEVELGAGE COMP	6	30
HANGER	11	1
HOLDER(FUEL FILTER)	22	1
HOLDER,DELIVERYVALVE	29	5
HOLDER/JE/9-9	10	15
HOLDER/NOZZLEASSY	28	1
HOLDER/STARTER ASSY	30	3
HOSE,RUBBER	23	4
HOSE/RUBBER	3	6
	18	13
	23	5
HOUSING/STARTER ASSY	30	7
HOUSING/THERMOSTAT	18	15
INJECTIONNOZZLE ASSY	20	1
INJECTIONPUMPASSY	21	1
JOINTT-TYPE 2	23	9
KEY/07X05X09	13	3
	21	9
KEY/07X05X43	16	4
LEVEL/GAGE	6	29
LEVER,CONTROL	21	23
LEVER/PINIONDRIVE	30	19
LINK/CONTROL	21	18
MANIFOLD ASSY	4	1
MANIFOLD EXHAUST	5	1
NIPPLE	6	21
NOZZLE	28	16
NUT	12	17
	28	18
	30	28
	30	29
NUT	30	34
NUT,CAP/M8	10	20
NUT/CAP	3	4
NUT/FLANGE	26	4
NUT/FLANGE/M10	25	7
NUT/M08	10	12
	10	41
	12	19
	18	7
	18	12
NUT/M6	6	28
	10	35
	21	25
	21	29
NUT/M8	10	19
	30	32
NUT/NOZZLERETAINING	28	15
NUT/PINIONSTOP	30	23
OILPAN COMP	8	1
OILPUMP ASSY	17	1
ORING	29	6
	29	9
O-RING/1A,P15	17	7
	27	16
O-RING/1A,P18	8	3
O-RING/1A,P8	21	26
O-RING/1A,S55	18	21
	27	20
PACKING	10	21
	17	12
	27	13
PIN	29	8
	29	12
PIN,ADAPTER	24	2
PIN,CONTROL LINK	21	19
PIN,GROOVE	10	27
PIN,PISTON	14	3
PIN,ST,B/10X18	16	2
PIN,STARTING SPRING	6	26
PIN/ARM	10	23
PIN/IDLEGEAR	6	6
PIN/STRAIGHT	6	16
	6	17
	17	3
PIN/TUBE	6	15
PIPE,OIL	17	10
PIPE,WATER DRAIN	6	22
PIPE/FUEL	23	2
PIPE/INJECTION ASSY	20	3
	20	4
PIPE/WATEROUTLET	18	20
PISTON	14	1
PISTON/OV	15	1
	15	3
PISTON/VALVE/RELIEF	10	30
PLATE	29	33
	30	27
PLATE/ADJUST	25	3
PLATE/FRONT	10	36
PLATE/REAR	9	1
PLATE/T=1.80	29	17
PLATE/T=1.85	29	18
PLATE/T=1.90	29	19
PLATE/T=1.95	29	20
PLATE/T=2.00	29	21
PLATE/T=2.05	29	22
PLATE/T=2.10	29	23
PLATE/T=2.15	29	24
PLATE/T=2.20	29	25
PLATE/T=2.25	29	26
PLATE/T=2.30	29	27
PLATE/T=2.35	29	28
PLATE/T=2.40	29	29
PLATE/T=2.45	29	30
PLATE/T=2.50	29	31
PLATE/THRUST	13	4
PLATE/THRUST/INJECTI	21	12
PLATE/WATER PUMP	18	3
PLUG	12	11
PLUG/M14X1.5	8	2
PLUG/PT1/2	2	3
PLUG/PT1/8	6	5
	10	3
PLUG/SCREW	10	25
PLUNGER ASSY	29	1
POINTER	9	2
PULLEY,WATER PUMP	19	2
PULLEY/CRANK	16	8
REGULATOR	25	2
RELAY,SOLENOID	26	9

Alpabetical Index

6003-097-263-00

Description	Fig.	Key
REPAIR/ENGINESET	27	1
RING SNAP	29	13
RING,SNAP	14	4
RING,SNAP/12 C	10	32
RING,SNAP/16 C	12	15
RING,SNAP/4 E	10	24
	21	20
	24	3
RING/PISTON SET	14	2
RING/PISTON/OV SET	15	2
	15	4
RING/SNAP	30	21
	30	22
RINGGEAR	16	6
ROCKERARM	12	9
ROCKERSHAFT ASSY	12	8
ROD CONTROL	29	32
ROD,PUSH	12	7
SCREW	29	10
	29	34
	30	33
SCREW ADJUST	12	16
SCREW/WATER PUMP	18	4
SEAL,BEARING CAP	6	8
	27	8
SEAL,BEARING CAP/7	6	9
	27	9
SEAL,CYL COVER	3	3
	27	4
SEAL,OIL	2	4
	6	14
	10	5
	27	2
	27	10
	27	12
SEAT,SPRING	29	15
	29	16
SEAT/VALVESPRING	12	4
SHAFT,CAM	13	1
SHAFT/ROCKERARM ASSY	12	10
SHAFT/STARTER PLANET	30	15
SHIM/0.10	28	2
SHIM/0.20	28	3
SHIM/0.30	28	4
SHIM/0.40	28	5
SHIM/0.50	28	6
SHIM/0.52	28	7
SHIM/0.54	28	8
SHIM/0.56	28	9
SHIM/0.58	28	10
SHIM/0.80	28	11
SHIM/INJECTIONPUMP	21	2
	21	3
	21	4
	21	5
SHORTBLOCKENGIN ASSY	1	1
SLEEVE,FRANGE	29	7
SOLENOID	26	6
SPACER	28	14
SPACER,WATER PUMP	18	8
SPACER/FAN/48	19	3
SPRING	12	14
SPRING DELIVERY VALV	29	3
SPRING GOVERNOR	21	22
SPRING,PLUNGER	29	14
SPRING,RETURN	21	27
SPRING,SETTING	21	21
SPRING/RELIEF VALVE	10	31
SPRING/STARTERBRUSH	30	4
SPRING/STARTING	21	32
SPRING/VALVE	12	3
SPRINGNOZZLE	28	12
SPRINGSEAT	28	13
STARTER ASSY	25	8
STOPPER,FULL-LOAD	10	18
STRAINER	17	6
STUD	2	8
	5	4
	6	19
	18	10
STUD/M8X40	6	18
SWITCH/MAGNETIC ASSY	30	20
SWITCH/OILPRESSURE	26	1
SWITCH/OVERHEAT	26	2
TAPPET	12	6
	29	11
THERMOSTAT	18	19
THRUSTPIECE	21	16
TUBE,ORIFICE	23	6
VALVE,DELIVERY	29	2
VALVE/EXHAUST	12	2
VALVE/INTAKE	12	1
VALVE/RELIEF ASSY	10	29
WASHER	30	31
WASHER,PL/M6	21	30
WASHER,SP/M6	21	31
WASHER/08X14X01	10	17
	10	26
	27	22
WASHER/9X22X2	10	42
	25	5
WASHER/SK	30	24
	30	25
	30	26
WATERPUMP ASSY	18	1
YOKE/STARTER ASSY	30	1

Alpabetical Index

1782-097-320-00

Description	Fig.	Key
ARM	31	20
	37	37
ARM/BRAKE/216 COMP	16	4
ARM/COUNTER/F COMP	14	16
ARM/COUNTER/R COMP	14	18
ARM/HOOD COMP	28	14
ARM/HST COMP	14	7
ARM/HST/R COMP	14	8
ARM/KNUCKLE COMP	23	2
ARM/MID COMP	26	1
ARM/PTO/BRAKE COMP	19	24
ARM/TENSION COMP	19	17
ARM/TENSION/HST ASSY	10	31
AXLE/FRONT ASSY	22	1
AXLESHAFTLEFT	43	53
AXLESHAFTRIGHT	43	55
BAND,WIRE/140	37	26
BAND,WIRE/250	5	18
	37	25
	37	27
BAND/CLEANER	4	6
BATTERY/44B19L ASSY	7	1
BEARING,RB/6201SS	20	12
BEARING,RB/6202SS	10	36
	19	20
BEARING,RB/6204	10	5
	10	11
BEARING,RB/6303	10	4
BEARING,RB/6304SS	19	3
BEARING/BALL	12	7
	19	7
	25	6
BEARING6202C3	43	16
BEARING6302DUC3	43	24
BELT/SEAT SET	32	1
BELT/VB027	10	43
BELT/VB031	19	53
BOLT	28	17
	37	17
BOLT(SP/M8X16)	30	10
BOLT,KMOB	31	23
BOLT,S/M10X25/7T	19	6
	27	7
	27	22
BOLT,S/M10X35/7T	12	8
BOLT,S/M10X35/7T	16	3
BOLT,S/M8X12	27	20
BOLT,S/M8X20	10	17
BOLT,S/M8X20/7T	20	14
BOLT,S/M8X25/7T	10	46
	20	7
BOLT,S/M8X30/7T	9	11
BOLT,S/M8X45/7T	30	3
BOLT,SEMS/M10X25,7T	9	10
BOLT,SP/M10X20/7T	37	22
BOLT,SP/M10X25/7T	21	11
BOLT,SP/M10X30/7T	19	16
BOLT,SP/M6X12	2	14
	28	11
	37	24
	37	31
BOLT,SP/M6X16	5	2
	27	18
	28	3
	28	12
	28	15
	28	34
	31	21
	34	4
	37	38
BOLT,SP/M6X25	37	35
BOLT,SP/M8X16	1	17
	2	33
	5	17
	19	61
	21	17
	28	29
	31	17
	37	8
BOLT,SP/M8X16/7T	14	3
	14	6
BOLT,SP/M8X20	5	15
	19	59
	28	16
	38	2
BOLT,SP/M8X20/7T	3	5
	3	8
	22	5
BOLT,SP/M8X25	19	55
BOLT,SP/M8X25/7T	10	24
BOLT,SP/M8X30/7T	3	11
BOLT,SP/M8X35	2	22
BOLT,SP/M8X50/7T	11	4
BOLT/BATTERY	7	3
BOLT/M10X20/9T,P1.25	1	3
	1	14
BOLT/M10X25/9T	32	4
BOLT/M6X14/16	35	3
BOLT/M8X20(22)	27	14
BOLT/M8X30/7T	14	20
BOLT/M8X35	2	27
	20	23
BOLT/M8X75	11	2
BOLT/SP/M8X70	38	3
BOLT/WS	3	9
BOLT10X65	43	13
BOLT8X20	43	9
BRACKET COMP	28	28
BRACKET/MUFFLER COMP	3	6
BRACKET/PUSH	31	2
BRAKEACTUATOR	43	63
BRAKEDISK	43	60
BRAKELEVER	43	58
BRAKERETURNSPRING	43	59
BRAKESHAFT	43	64
BRAKESHOE	43	61
BREATHER,TANK CAP	6	7
BULB/12V23W	34	2
BULB/12V3.4W	37	9
BUSH,15X17X15	10	32
BUSH,COLUMN	21	7
BUSH,LEVER	2	30
BUSH/10X12X10	21	8
BUSH/15X17X11	19	2
BUSH/19X30X14	31	18
BUSH/20X23X20	20	22
BUSH/22X25X25	22	3
BUSH/25X28X25	22	2
BUSH/28X32X15	20	16
BUSHING	43	56
BUSHING25.4	43	2
BUZZER	37	30
BYPASSLEVER	43	31
BYPASSSHAFT	43	30
CABLE/ACCELERATOR	8	1

Alpabetical Index

Description	Fig.	Key
CABLE/BATTERY ASSY	37	10
CABLE/BRAKE ASSY	16	11
CABLE/EARTH ASSY	37	21
CABLE/HST ASSY	15	2
CABLE/PTO ASSY	19	47
CAM/LIFT	27	21
CAP	2	2
CAP,TANK	6	6
CAP,TIRE VALVE	18	5
	25	4
CAP/20	8	10
CAP/5	7	6
CAP/SPRING	31	8
CAP/WHEEL	20	2
	25	8
CAPSCREW8X75	43	6
CENTERCASEBB	43	80
CHARGEPUMPKIT	43	68
CHARGESPRING	43	39
CHUTE	38	1
CLAMP	5	3
	19	57
	31	22
CLAMP,RADIATOR HOSE	5	16
CLAMP/WIRE/30-38	2	17
CLAMP/WIRE/36-44	2	18
CLAMP/WIRE/47-55	4	8
	4	10
CLAMP/YOKE	9	9
CLEANER/AIR ASSY	4	1
CLIP	4	5
CLIP(B)	33	7
CLIP/HOSE/10.4-11.1	5	14
CLIP/HOSE/11.9-12.6	5	8
CLIP/HOSE/11-13	5	6
CLIP/HOSE/14.7-15.9	2	26
COLLAR/15X20X09	10	34
COLLAR/21X25X18	19	4
COLLAR/26X32X25	19	8
COLLAR/26X32X53	25	7
COLLAR25.4	43	45
CONNECTOR	2	19
CONTROLLEVER	43	37
CONTROLSHAFTKIT	43	41
COUPLING/18X30X55	10	20

Description	Fig.	Key
COVER ASSY	4	2
COVER/BATTERY	37	11
COVER/BATTERY/STARTO	37	14
COVER/ENGINE/F COMP	28	25
COVER/JOINT	19	60
COVER/LOWER	29	1
COVER/PANEL COMP	35	1
COVER/SIDE	30	7
COVER/SIDE/LH COMP	28	21
COVER/SIDE/RH	30	8
COVER/SIDE/RH COMP	28	23
COVER/STEERING	20	27
COVER/SWITCH	36	6
CUSHION,B/ RUBBER	21	14
CUSHION,RUBBER	3	7
	21	2
CUSHION/RUBBER/10X25	2	29
	20	25
CYLINDERBLOCKKIT	43	81
DIAL/GAUGE COMP	27	11
DIFFGEARKIT	43	46
DIODE/3A	37	5
DRAINBOLTKIT	43	10
ELEMENT ASSY	4	3
E-RING(MOTOR)	43	22
FENDER COMP	30	1
FILTER	43	83
	43	88
FINALGEAR(67T)	43	48
FINALPINIONGEAR(11T)	43	52
FINALPINIONSHAFT	43	49
FITTING	43	74
FLANGEBOLT/M8X12	28	22
	28	24
	28	26
FRAME/FENDER COMP	30	2
FRAME/MAIN/R COMP	21	1
FRANGE/YOKE	9	4
FULCRUM	43	42
FUSE/BLADE/32V05A	37	7
FUSE/BLADE/32V10A	37	6
FUSE/SLOWBLOW	37	4
GASKET	6	8
GASKET/MUFFLER	3	2
GAUGE/FUEL ASSY	6	2

Description	Fig.	Key
GEAR/BEVEL/23-1 SET	10	3
GEAR/SPUR/37 ASSY	20	15
GRIP,LEVER	38	5
GRIP/ADJUST	27	13
GRIP/LIFT	27	6
GRIP/PTO	19	44
GRIP/THROTTLE	8	3
GROMMET/10X30X5	33	2
GROMMET/12X19	35	2
GUARD/UNDER	21	16
GUIDE	2	6
	2	7
GUIDE/BELT/LOWE COMP	19	54
HANDLE COMP	28	4
HARNESS ASSY	37	12
HARNESS/LAMP/2 ASSY	34	3
HARNESS/MAIN ASSY	37	1
HARNESS/MONITOR LUMP	37	3
HOLDER/BATTERY	7	2
HOLDER/JE/9-9	28	13
HOOD COMP	28	1
HOSE/06X10X1650 ASSY	5	11
HOSE/06X10X250 ASSY	5	12
HOSE/06X10X45	5	9
HOSE/06X10X800 ASSY	5	13
HOSE/08X10X600	2	10
HOSE/08X12X1100 ASSY	5	7
HOSE/08X13X370	5	5
HOSE/290 ASSY	2	24
	2	25
HOSE/CLEANER/INLET	4	7
HOSE/CLEANER/OUTLET	4	9
HOSE/RADIATOR/INLET	2	15
HOSE/RADIATOR/OUTLET	2	16
HST/K66AH ASSY	11	1
HUB COMP	20	21
HUB/STEERING COMP	20	13
HUB/WHEEL/LH	12	1
HUB/WHEEL/RH	12	9
INSULATOR	1	9
	2	5
	2	8
	2	13
	21	3
	21	18

Alpabetical Index

Description	Fig.	Key
INSULATOR	28	6
	33	8
	37	16
INSULATOR/10X30X03	6	3
INSULATOR/20X20X350	2	9
INSULATOR/20X30X200	21	13
INSULATOR/220	30	11
INSULATOR/MOUNT/RH	1	5
INSULATOR/STEERING	21	6
JOINT,BALL	24	2
JOINT/BALL ASSY	24	4
JOINT/UNIVERSAL ASSY	9	2
	9	7
JOINT/UNIVERSAL SET	9	1
KEY	10	27
	36	2
	36	4
KEY,ROTARY TOP SHAFT	23	3
KEY/06X06X40	12	3
	12	10
KEY/7X7X22	19	12
	19	36
LABEL/ADJUST	27	12
	40	8
LABEL/BATTERY	41	1
	41	4
LABEL/CAUTION/A	41	10
LABEL/CAUTION/B	41	11
LABEL/CE	42	1
LABEL/CLEANER	40	7
LABEL/CONTROL/LH	40	3
LABEL/CONTROL/RH	40	4
LABEL/FUEL	41	9
LABEL/FUSE	37	2
LABEL/LIFT/MOWER	40	1
LABEL/NOISE/LWA/100	41	2
LABEL/PANEL	40	5
LABEL/PARKING	40	2
LABEL/SWITCH/MAIN	40	6
LABEL/W/FAN	41	6
LABEL/W/RADIATOR	41	3
LABEL/W/STARTER	41	8
LABEL/WARNING/BELT	41	7
LABEL/WARNING/HOT	41	5
LAMP/HEAD/2 ASSY	34	1
LEVER/ACCELERATOR	8	2
LEVER/LIFT/216 COMP	27	1
LEVER/LOCK	28	30
LEVER/PTO COMP	19	43
LINING/13X50X03	8	7
LINING/PTOBRAKE COMP	19	25
LOCKNUT10	43	77
LOWERCASE	43	3
MAGNET	43	7
MARKER/8	4	11
MAT/STEP	33	6
METAL/CASE	10	9
METAL/COUNTER	10	1
METAL/PTO ASSY	19	1
METAL/WHEELSHAFT	12	6
METER/HOUR ASSY	36	1
MOTORGEAR(17T)	43	21
MOTORHOUSING	43	17
MOTORSHAFT	43	20
MUFFLER COMP	3	1
NET/FRONT	28	9
NET/LOWER	29	3
NIPPLE,GREASE	10	22
	10	33
	14	10
	16	6
	22	10
NIPPLE/GREASE	9	5
NOTCHEDFAN8.4DIA	43	78
NUT	37	15
	37	18
	37	29
NUT,ADAPTER/AN04	19	39
NUT,ADAPTER/AN05	19	15
NUT,CASTLE/M12 P1.25	23	14
	24	6
NUT,CASTLE/M16 P=1.5	22	6
NUT,SUS/M8	3	3
NUT/M10	1	6
	8	5
	10	30
	13	6
	20	18
	26	7
	31	24
NUT/M10	32	5
NUT/M12	3	10
	16	16
	23	6
	24	3
NUT/M12/7T	18	8
NUT/M16,P=1.5	20	4
NUT/M6	7	4
NUT/M6X15	1	19
NUT/M8	2	31
	14	21
	19	33
	19	42
	20	26
	21	4
	21	15
	21	19
	27	10
	37	19
NUT/M8/7T	1	10
NUT/RING	36	5
NUT/SM/LH/M12X1.25	24	5
NUT/WASHER/M6	7	5
	19	26
	28	10
	28	31
	31	3
NUT/WASHER/M8	10	38
	19	32
	28	20
	28	27
	30	6
	30	9
	31	7
NUT12	43	44
OILCAPM20B ASSY	43	4
O-RING/1A,G60	10	16
O-RING1AP10A	43	87
O-RING1AP12	43	92
O-RING1AP14	43	90
O-RINGP18	43	5
	43	85
ORNAMENT/DIESEL	39	3
ORNAMENT/I	39	4
ORNAMENT/ISEKI/LH	39	1

Alpabetical Index

Description	Fig.	Key
ORNAMENT/ISEKI/RH	39	2
ORNAMENT/STEERING	39	7
ORNAMENT/SXG216/LH	39	5
ORNAMENT/SXG216/RH	39	6
PACKING	2	21
PAD	16	1
PAD/20	31	4
PAD/25	2	11
	21	10
PAD/50	15	5
	21	9
PAD/HST/R	14	2
	14	5
PANEL/RADIATOR COMP	2	32
PEDAL/BRAKE/216 COMP	16	2
PEDAL/HST/R COMP	14	1
PEDAL/HST/RH COMP	14	4
PIN,SPLIT/2.5X15	8	9
PIN,SPLIT/2.5X20	13	4
	13	10
	14	15
	15	4
	15	8
	16	13
	17	4
	17	7
	17	10
	19	31
	19	46
	19	50
	19	52
PIN,SPLIT/3X20	23	15
	24	8
	26	9
PIN,SPLIT/3X25	26	4
PIN,SPLIT/4X30	22	9
PIN,SPRING/5X32 W	23	11
PIN/10X208	31	12
PIN/12X35 COMP	27	19
PIN/16X57 COMP	26	2
PIN/8X36	33	5
PIN/BRAKE	16	14
PIN/GROOVE	14	17
	14	19
PIN/HST COMP	13	1

Description	Fig.	Key
PIN/PIVOT COMP	22	4
PIN/PUSH	27	5
PIN/SNAP	6	5
	31	14
	33	4
PIN17X24	43	47
PIN3.0AX20	43	33
PIN3X13.8	43	23
PIN3X9.8	43	12
PINSHOCK	43	36
PIPE8	43	70
PLATE,SWITCH	37	34
PLATE/BOTTOM COMP	38	4
PLATE/I/16X214	14	13
PLATE/I/25X45	34	6
PLATE/L/25X132 COMP	13	2
PLATE/L/25X81 COMP	10	45
PLATE/L/32X120 COMP	26	5
PLATE/LH	1	1
PLATE/LOCK	28	2
PLATE/PARKING COMP	17	5
PLATE/PULL/CABL COMP	15	1
PLATE/RH	1	2
PLATE/STOPPER COMP	15	6
PLATE/U/59X350 COMP	31	5
PLUG	2	20
PLUG,DRAIN (1/4)	10	8
POST/STEERING ASSY	21	5
PROTECTOR	2	3
PULLEY/V2B104	19	13
PULLEY/V2B123	19	37
PULLEY/VB097	10	25
PULLEY/VB101 COMP	10	41
PULLY/FT045X020	10	35
PULLY/FT050X046	19	19
PUMP/FUEL ASSY	5	1
PUMPSHAFT	43	14
PUMPSPRING	43	25
RADIATOR ASSY	2	1
REDUCTIONGEAR(53T)	43	51
RELAY/4P-2 ASSY	37	23
REPAIRKIT	43	79
RESERVOLRTANK	43	69
RETAININGRING	43	54
RIM/WHEEL COMP	18	3

Description	Fig.	Key
RIMVALVE ASSY	18	4
	25	3
RING,SNAP/12 C	27	16
RING,SNAP/15 C	10	40
	19	18
	19	23
	19	28
RING,SNAP/19 C	20	8
RING,SNAP/20 C	14	12
	16	8
RING,SNAP/35 C	10	37
	19	21
RING,SNAP/4 E	27	4
RING,SNAP/47 C	10	6
	10	12
RING,SNAP/52 C	19	5
	19	9
RING/HUB/100	18	6
RING/HUB/INNER	18	9
RING/SNAP/CS20	10	19
RING/SNAP/CS25	12	4
	12	12
ROCK/PARKING COMP	17	1
ROD/08X057	19	41
ROD/LIFT COMP	26	6
ROD/M10X463 COMP	13	5
ROD/M12X495	24	1
ROD/M8X175	27	9
ROD/M8X92	19	29
ROD/PARKING	17	8
ROLLPIN6X40	43	38
RUBBER,CUSHION (A)	31	11
SCREW,SP/M6X16	28	5
SCREW/M03X20	37	33
SCREW/P	2	4
SCREW/SP/M06X16	29	2
SEAL	31	15
SEAL,OIL/TC20477	10	7
	10	13
SEAL/30X45X355	21	12
SEAL/45X45X640	28	7
SEAL/45X50X80	28	8
SEAL8	43	75
SEALANT	43	93
SEALKIT	43	82

Alpabetical Index

1782-097-320-00

Description	Fig.	Key
SEALS25.4X42X8	43	91
SEALTC153507	43	86
SEALTC162606	43	89
SEALWASHER10	43	84
SEAT ASSY	31	1
SHAFT/CASE	10	10
SHAFT/INPUT	19	10
SHAFT/JOINT	10	18
SHAFT/OUTPUT	10	2
SHAFT/PTO	19	34
SHAFT/STEERING/ COMP	20	6
	20	10
SHAFTYOKE	9	8
SHIM, 1.2	3	12
SHIM,A/0.5	23	7
SHIM,A/1.0	23	8
SHIM,PLANTING B/0.5	10	23
SHIM/0.1	10	14
SHIM/0.2	10	15
SHIM/0.3	3	14
SHIM/0.6/B	3	13
SHIMKIT	43	62
SHOCKABSORBERK65	43	34
SHOCKSTAY	43	35
SHROUD	2	12
SLEEVEYOKE	9	3
SNAPRING	43	66
SNAPRING10	43	32
SNAPRINGC35	43	8
SNAPRINGS15	43	15
SPINDLE/KNUCKLE/LH	23	1
SPINDLE/KNUCKLE/RH	23	9
SPRING	16	9
SPRING,DISK	8	4
SPRING,TENSION (52)	16	17
SPRING,TENSION/86	15	9
SPRING/D=6	31	6
SPRING/HC047	13	8
SPRING/HC057	27	2
SPRING/HC072	31	16
SPRING/HE067	19	40
SPRING/HE074	10	44
	38	6
SPRING/HE075	16	10
SPRING/HE138	19	48

Description	Fig.	Key
SPRING/HE190	27	8
SPRING/HT014	17	2
SPRING25	43	29
SPRINGPIN4X18	43	67
STAY/LH COMP	28	32
STAY/RH COMP	28	33
STAY/SEAT COMP	31	10
STEP	33	1
STOPPER/BELT COMP	19	56
STOPPER/DIAL	27	17
STUD/M12X25/7T	12	13
SWASHPLATE ASSY	43	27
SWITCH,MERIT	37	32
SWITCH/LAMP ASSY	36	7
SWITCH/LEVER ASSY	31	19
	37	36
SWITCH/MAIN ASSY	36	3
SWITCH/PUSH ASSY	37	28
TANK/FUEL	6	1
TANKBRACKET	43	71
TANKSPACER	43	73
TAPPINGSCREW8X20	43	72
TAPPINGSCREW8X30	43	11
TERMINAL/BATTERY/+	37	13
THRUSTBEARING	43	18
THRUSTBEARING ASSY	43	28
THRUSTMETAL	43	26
THRUSTWASHER	43	57
TIRE/16X6.50-8 ASSY	25	1
TIRE/20X8.0-10 ASSY	18	1
TIRE/TURF/16X6.50-8	25	2
TIRE/TURF/20-10	18	2
T-JOINT (6X6X6)	5	10
TRIM/188	2	34
TUBE/120	5	4
	19	58
TUBE/20	20	3
TUBE/80	37	39
U-NUT	11	5
	38	8
UPPERCASEKIT	43	1
VALVE	4	4
VENTVALVE15 ASSY	43	76
WASHER	9	6
	19	22

Description	Fig.	Key
WASHER	19	27
	19	35
	20	11
	34	5
WASHER,ADAPTER/AW04	19	38
WASHER,ADAPTER/AW05	19	14
WASHER,LOCK/M12	23	4
WASHER,PL/M10	1	8
	1	16
	8	6
	10	42
	13	7
	13	9
	17	3
	19	45
	31	13
	32	2
WASHER,PL/M12	26	8
	27	15
	28	19
WASHER,PL/M14	10	39
WASHER,PL/M16	20	5
	22	7
	26	3
WASHER,PL/M18	23	10
WASHER,PL/M20	14	11
	16	7
	30	5
WASHER,PL/M6	8	8
	10	21
	14	9
	16	5
WASHER,PL/M8	1	12
	1	18
	2	23
	6	4
	11	3
	13	3
	14	14
	15	3
	15	7
	16	12
	17	6
	17	9
	19	30

Description	Fig.	Key	Description	Fig.	Key	Description	Fig.	Key
WASHER,PL/M8	19	49						
	19	51						
	33	3						
	38	7						
WASHER,PULLEY	23	13						
WASHER,SP/M10	1	4						
	1	7						
	1	15						
	10	29						
	20	19						
	32	3						
WASHER,SP/M12	16	15						
	18	7						
	24	7						
WASHER,SP/M16	22	8						
WASHER,SP/M6	1	20						
WASHER,SP/M8	1	11						
	3	4						
	37	20						
WASHER/05X18X01	27	3						
WASHER/09X28X05	30	4						
WASHER/11X30X3	10	28						
WASHER/11X35X02	31	9						
	31	25						
WASHER/11X40X3.2	20	20						
WASHER/12	43	43						
WASHER/12X24X1	43	19						
WASHER/12X26X04	28	18						
WASHER/13X35X5	23	5						
WASHER/15X35X3.2	43	50						
WASHER/16X23X1.6	43	65						
WASHER/17X30X05	10	26						
WASHER/17X36X6.4	43	40						
WASHER/19X30X02	20	9						
WASHER/24X9X3.2	2	28						
	20	24						
WASHER/25X34X02	19	11						
WASHER/26X34X2	12	11						
WASHER/26X35X2	23	12						
WASHER/26X45X02	12	2						
	12	5						
WASHER/33X40X02	20	17						
WHEEL/8XW5.4 COMP	25	5						
WHEEL/STEERING ASSY	20	1						
WIRE,LEAD	1	13						