Directions for use of Parts Catalogue

1. Applicable model of machines

All component and option parts used for SXG15H lawn & garden tractors are listed in this parts catalogue.

1) MODEL TYPE

H····· HST

S····· WITH SEAT

2) AREA CODE

E42F2·· FRANCE

E42C··· OTHER COUNTRY

2. Explanation for head paragraph

KEY	PART CODE	DESCRIPTION	SPC	TYPE OF MODEL						ITC	COL	GRP	REMARKS
				SSM48M	SSM48F	SSM48G	SRM48M	SRM48F	SRM48G				
1	8595-211-001-20	CASE/UPPER	*	1 -229									
1A	8657-201-081-00	CASE/UPPER	*	1 230-			1						
2	8595-211-002-10	CASE/LOWER	*	1			1						
3	V523-100-801-80	PIN	*	2			2						
4	V211-260-803-00	BOLT, SEMS	*	6			6						
			*	2 -229									
			*	2 230-			2						
				2			2						
				1			1						

① ② ③ ④ ⑤ ⑥ ⑦ ⑧ ⑨

① KEY shows the location of parts diagramed in the illustration.

② Parts numbers begin with `V´ and `W´ are standard parts of the market.

③ `LH´ and `RH´ on the parts name are described against the moving direction of the machine or are described on the condition how to install parts on the machines.

④ SPC : The following symbol classifies parts to be used for machines.

`＊´ means standard parts.

`T´ shows that the parts can be installed as optional parts.

`R´ shows that the parts can be used as applicable parts to replace originally equipped parts.

⑤ Upper column : QTY shows the number of parts to be used for one unit of machine.

`M´ is indicated for parts supplied by a meter long.

`l´ is indicated for parts supplied by liter.

`AR´ is indicated for parts need to be adjusted or regulated.

Lower column : serial number

－229 means serial number up to 229.

230－ means serial number 230 and after.

⑥ ITC : Interchangeability

`1´…OLD ← NEW

New parts can be used in place of the old parts.

`2´…OLD → NEW

Old parts can be used in place of the new parts.

`3´…OLD →← NEW

Old parts and new parts can not be replaced each other.

⑦ COL : Color code

Color is signified with color code number for colored parts.

Please see the color list shown in the next page.

⑧ GRP : Parts shown in this column can be replaced by SET parts.

Example : Parts marked Ⓐ can be replaced by parts marked Ⓑ, and Ⓓ for Ⓒ, so the rest follow in the same alphabetical order.

⑨ Remarks

＊Other maker's part code number is shown in this column.

＊When Fig. No. is shown in the Remark column of SET parts or ASSY parts, each of their component parts are listed in said Fig. No.

3. Color :

The following colors are used color parts.

COLOR CODE	COLOR	SPRAY TYPE PARTS CODE	PAINTS 4K DRUM PARTS CODE	PAINTS 16K DRUM PARTS CODE
4 L	NEO BLUE	1300-985-001-10	1300-985-003-00	――――――
6 G	SUMMER WHITE	1300-958-001-10	1300-958-003-00	1300-958-004-00
7 F	MIRROR BLACK	1300-954-001-10	1300-954-003-00	1300-954-004-00

NOTE : Color code is signified only for the parts assigned by the maker as color parts.

4. Serial Numbers :

1) For engines serial number is stamped on CYLINDER BLOCK ASSY.
   Please see Fig. No. 5－1.
2) For chassies serial number is shown on the LABEL.
   Please see

5. Parts Order

1) Parts numbers listed in the parts catalogue are all registered in “ISEKI on-line computer”.
2) When you order parts, please make sure of correct numbers.
3) When substitute parts is available, the part number ordered will be automatically turned to a new part number.
4) Please be sure to use “ISEKI GENUINE PARTS”.
   Any other similar parts other than ISEKI parts when used may cause a trouble that makes us unable to repair or guarantee the warrant.

*** Structure Table of Model ***

MODEL / FIG.	SXG15HC	EE422C	SE42F2									
101	*	*	*									
102	*	*	*									
103	*	*	*									
104	*	*	*									
105	*	*	*									
106	*	*	*									
107	*	*	*									
108	*	*	*									
109	*	*	*									
110	*	*	*									
201	*	*	*									
202	*	*	*									
203	*	*	*									
204	*	*	*									
301	*	*	*									
302	*	*	*									
303	*	*	*									
304	*	*	*									
401	*	*	*									
402	*	*	*									
403		*										
404	*	*	*									
405	*	*	*									
406	*	*	*									
407	*	*	*									
501	*	*	*									
502	*	*	*									
601	*	*	*									
602	*	*	*									
603	*	*	*									
604	*	*	*									
605	T	T	*									
606	*	*	*									
607	*	*	*									
608	*	*	*									
609		*										
610	*		*									
801	*	*	*									
901	*	*	*									
902	*	*	*									
903	*	*	*									
P01	R	R	R									
P02	R	R	R									
P03	R	R	R									
S01	*	*	*									

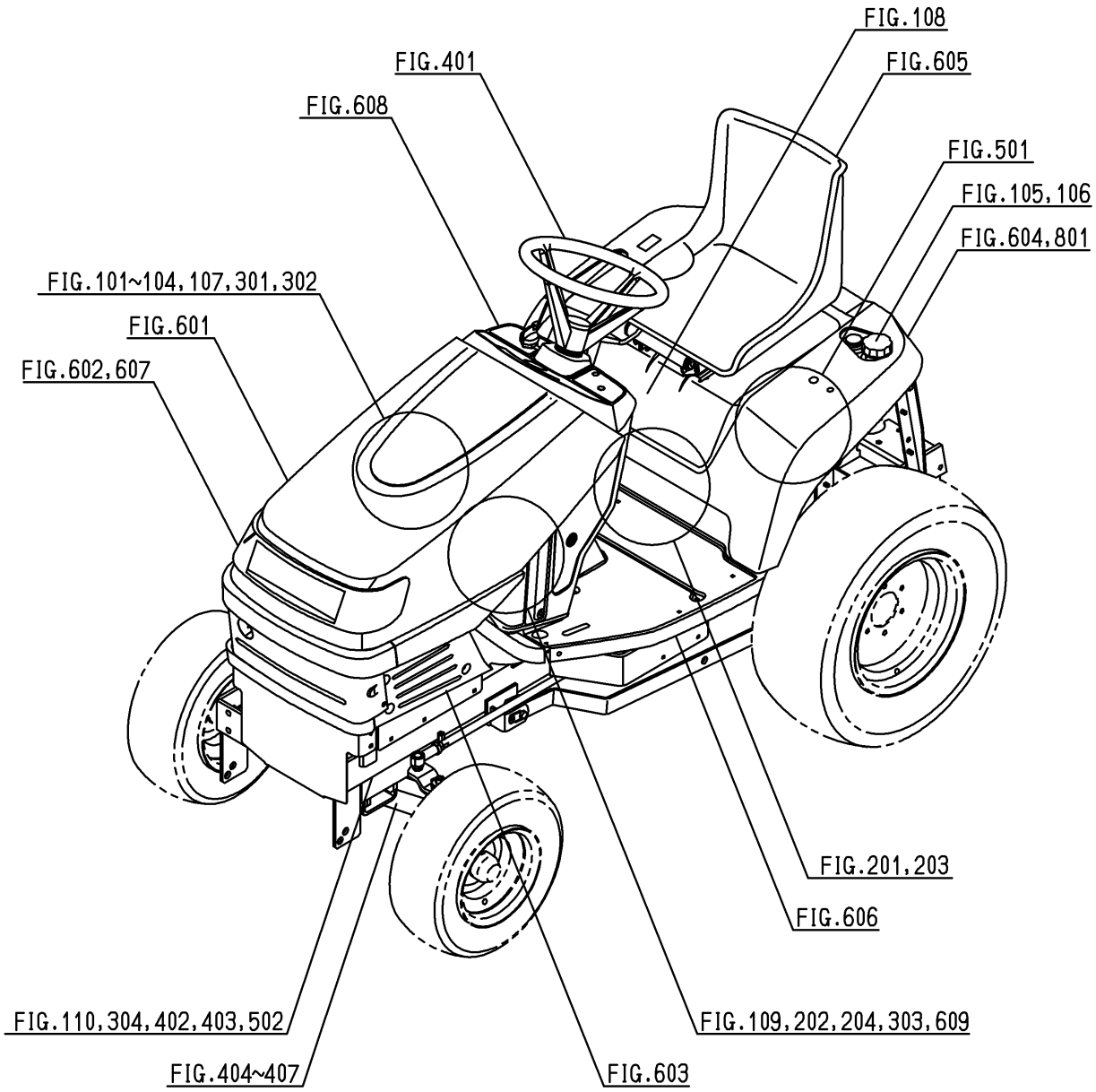
FIG.108
FIG.605
FIG.401
FIG.608
FIG.501
FIG.105,106
FIG.604,801
FIG.101~104,107,301,302
FIG.601
FIG.602,607
FIG.201,203
FIG.606
FIG.110,304,402,403,502
FIG.109,202,204,303,609
FIG.404~407
FIG.603

Contents

SXG15

ENGINE(E269G)

CYLINDER HEAD····· Fig.101
CYLINDER HEAD COVER····· Fig.102
INLET MANIFOLD····· Fig.103
EXHAUST MANIFOLD····· Fig.104
CYLINDER BLOCK····· Fig.201
OIL PAN····· Fig.202
REAR PLATE····· Fig.203
TIMING GEAR CASE····· Fig.204
HANGER····· Fig.205
VALVE····· Fig.301
CAM SHAFT····· Fig.302
PISTON····· Fig.303
CRANK SHAFT····· Fig.304
OIL PUMP····· Fig.401
WATER PUMP····· Fig.402
COOLING FAN····· Fig.403
INJECTION NOZZLE····· Fig.501
INJECTION PUMP····· Fig.502
FUEL FILTER····· Fig.503
FUEL PIPE····· Fig.504
ADAPTER····· Fig.505
ELECTRIC (1)····· Fig.801
ELECTRIC (2)····· Fig.802
SHORT BLOCK ENGIASSY····· Fig.P01

BEARING/UNDER SIZE (OPTION)····· Fig.P02
PISTON/OVER SIZE (OPTION)····· Fig.P03
REPAIR PARTS (OPTION)····· Fig.P04
COMPONENT PARTS
FOR 6215-300-045-10 ON Fig.501····· Fig.S01
COMPONENT PARTS
FOR 6215-600-147-00 ON Fig.502····· Fig.S02
COMPONENT PARTS
FOR 6281-100-014-00 ON Fig.801····· Fig.S03

Contents

CHASSIS

BRACKET(ENGINE)SYSTEM Fig.101
RADIATOR SYSTEM Fig.102
MUFFLER SYSTEM Fig.103
CLEANER(AIR)SYSTEM Fig.104
PUMP(FUEL)SYSTEM Fig.105
TANK(FUEL)SYSTEM Fig.106
BATTERY SYSTEM Fig.107
LEVER(ACCELERATOR)SYSTEM Fig.108
SHAFT(INPUT)SYSTEM Fig.109
METAL(COUNTER)SYSTEM Fig.110
MISSON(HST)SYSTEM Fig.201
MOUNT(HST)SYSTEM Fig.202
LINK(HST)SYSTEM Fig.203
PEDAL(HST)SYSTEM Fig.204
PEDAL(BRAKE)SYSTEM Fig.301
BRAKE(PARKING)SYSTEM Fig.302
WHEEL(REAR)SYSTEM Fig.303
PTO(MOWER)SYSTEM Fig.304
SHAFT(STEERING)SYSTEM Fig.401
FRAME SYSTEM Fig.402
COVER(UNDER)SYSTEM Fig.403
AXLE(FRONT)SYSTEM Fig.404
SPINDLE(KNUCKLE)SYSTEM Fig.405
ROD(TIE)SYSTEM Fig.406
WHEEL(FRONT)SYSTEM Fig.407
LINK(MOWER)SYSTEM Fig.501
LEVER(LIFT)SYSTEM Fig.502

HOOD SYSTEM····· Fig.601
GRILLE SYSTEM····· Fig.602
COVER SYSTEM····· Fig.603
FENDER SYSTEM·····Fig.604
SEAT SYSTEM (SE42C TYPE)
(EXCEPT SE42C TYPE:OPTION)·····Fig.605
FLOOR SYSTEM·····Fig.606
LAMP(HEAD)SYSTEM····· Fig.607
PANEL SYSTEM·····Fig.608
HARNESS(MAIN)SYSTEM(F TYPE)····· Fig.609
HARNESS(MAIN)SYSTEM(C TYPE)····· Fig.610
CHUTER SYSTEM····· Fig.801
ORNAMENT·····Fig.901
LABEL(CONTROL)·····Fig.902
LABEL(CAUTION)····· Fig.903

OPTIONAL PARTS

SUPPORT(MUFFLER)(REPAIR)·····Fig.P01
TENSION(HST)(REPAIR)····· Fig.P02
SUPPORT(HST)(REPAIR)·····Fig.P03

COMPONENT PARTS

COMPONENT PARTS
FOR 1782-201-200-00 ON Fig.201·····Fig.S01

WIRING DIAGRAM

WIRING DIAGRAM(1/2)
WIRING DIAGRAM(2/2)

E N G I N E

E269G···SXG15

6003-095-261-00

FIG.101 CYLINDER HEAD

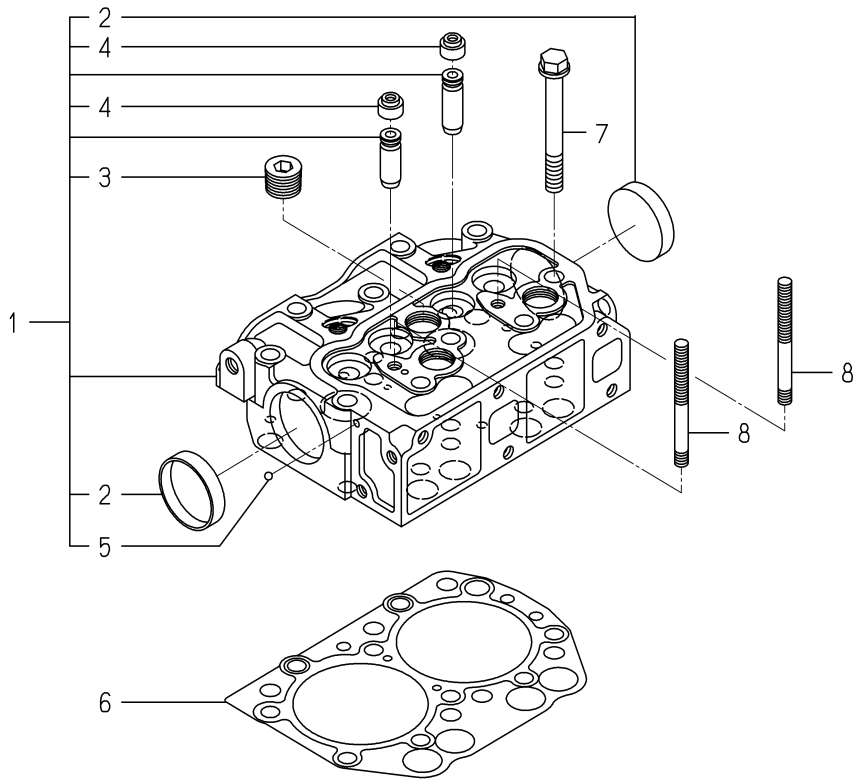

6003-101J-0100,6003-101J-0200

KEY	PART CODE	DESCRIPTION	SPC	TYPE OF MODEL E269G		ITC	COL	GRP	REMARKS
1	6211-110-094-00	CYLINDERHEAD ASSY	*	1					
2	6911-129-006-00	CAP,SEALING	*	2					
3	6209-605-004-10	PLUG/PT1/2	*	3					
4	6212-569-002-00	SEAL,OIL	*	4					
5	V682-200-000-60	BALL	*	1					
6	6211-141-016-10	GASKET/CYLINDERHEAD	*	1					
7	6209-000-044-00	BOLT	*	10					
8	6209-300-014-00	STUD	*	2					

FIG.102 CYLINDER HEAD COVER

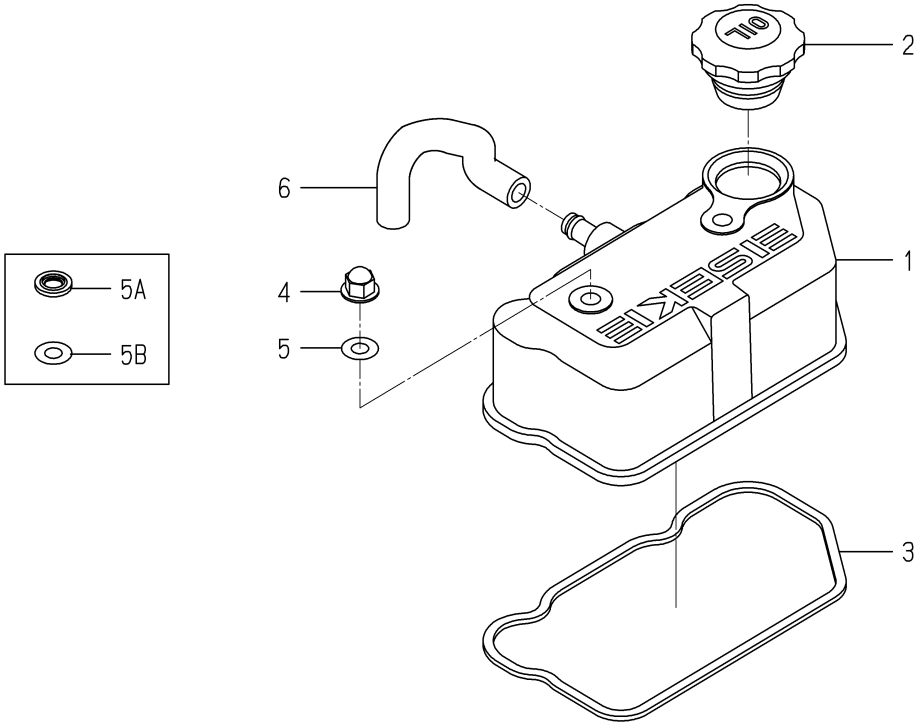

6003-110A-0100

KEY	PART CODE	DESCRIPTION	SPC	TYPE OF MODEL E269G		ITC	COL	GRP	REMARKS
1	6211-170-006-10	COVER/CYLINDER/HEAD	*	1					
2	6211-751-001-10	CAP,OIL FILLER	*	1					
3	6211-173-004-00	SEAL,CYL COVER	*	1					
4	6209-490-002-10	NUT/CAP	*	2					
4	- - - - - -	BLANK	*						- - - - - -
5	- - - - - -	BLANK	*						- - - - - -
5A	- - - - - -	BLANK	*						- - - - - -
5B	6209-572-003-00	GASKET	*	2					
6	6209-360-028-20	HOSE/RUBBER	*	1					
6	- - - - - -	BLANK	*						- - - - - -

FIG.103 INLET MANIFOLD

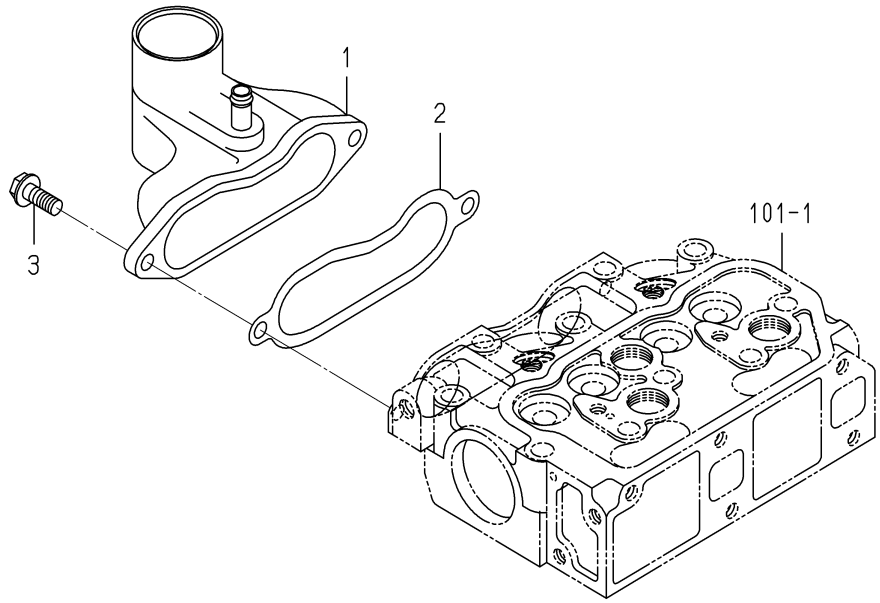

6003-120A-0100

KEY	PART CODE	DESCRIPTION	SPC	TYPE OF MODEL		ITC	COL	GRP	REMARKS
				E269G					
1	6214-111-014-00	MANIFOLD ASSY	*	1					
2	6214-115-002-20	GASKET	*	1					
3	- - - - - -	BLANK	*						- - - - - -
3	V231-360-802-00	FLANGEBOLT	*	2					
3	- - - - - -	BLANK	*						- - - - - -

FIG.104 EXHAUST MANIFOLD

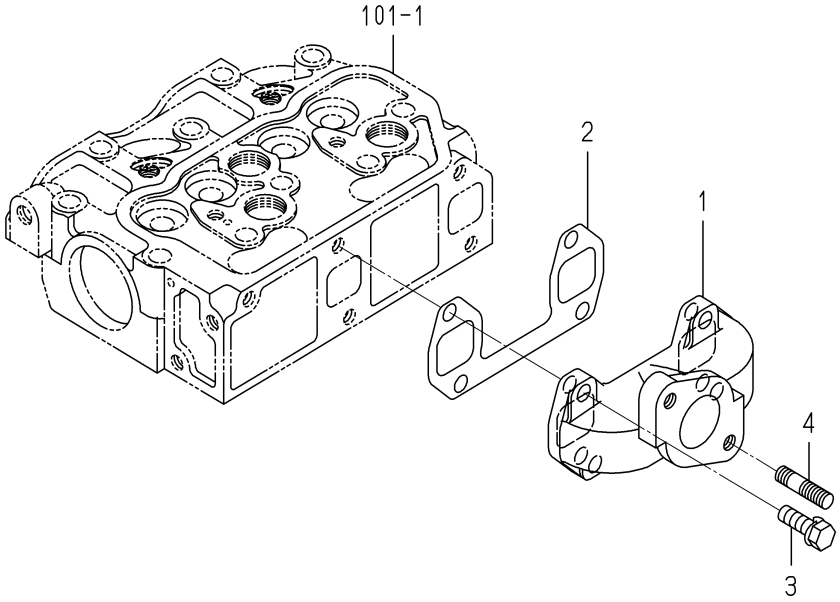

6003-140A-0100

KEY	PART CODE	DESCRIPTION	SPC	TYPE OF MODEL E269G		ITC	COL	GRP	REMARKS
1	6214-141-012-00	MANIFOLD EXHAUST	*	1					
2	6214-145-006-10	GASKET EXHAUST MANIF	*	1					
3	V211-560-802-50	BOLT,SEMS/M8X25 7T	*	4					
4	6904-110-822-00	STUD	*	2					

FIG.201 CYLINDER BLOCK

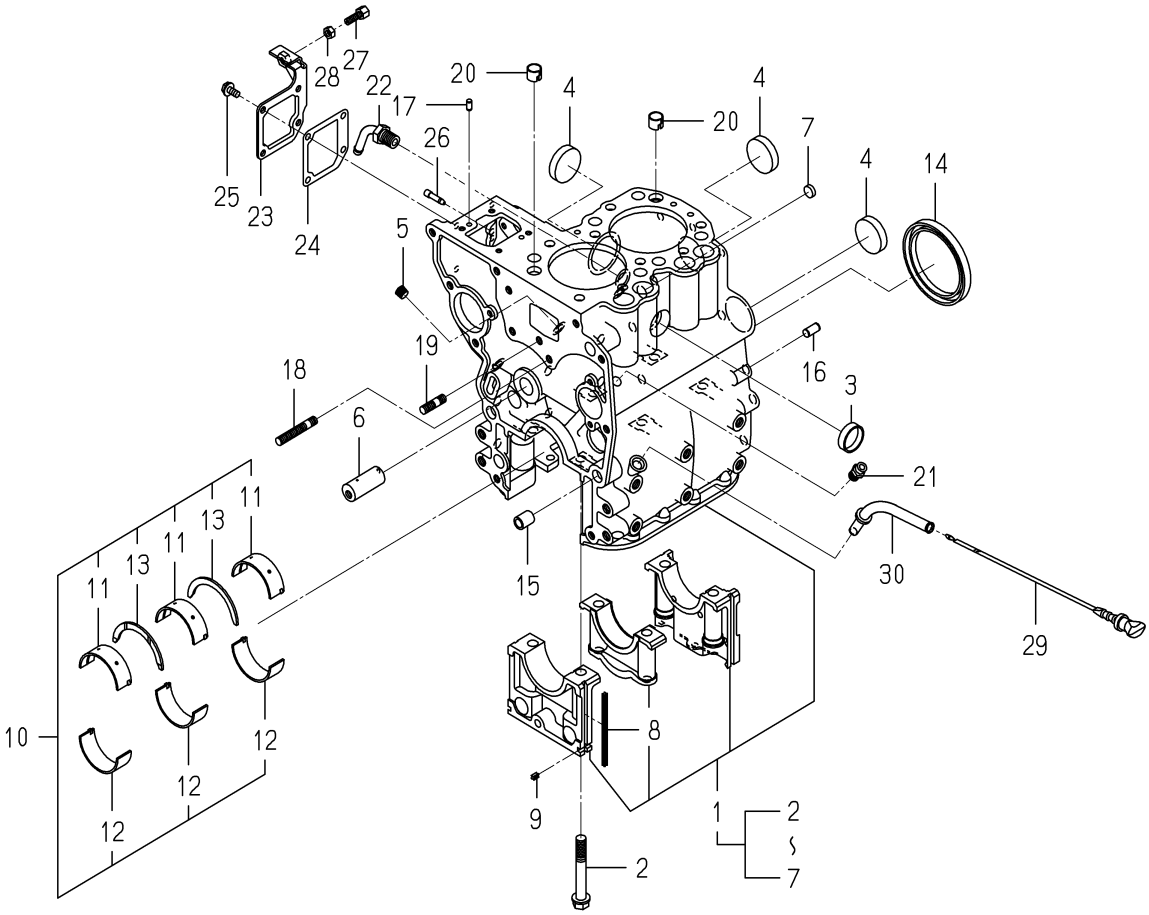

6003-202R-0100

KEY	PART CODE	DESCRIPTION	SPC	TYPE OF MODEL E269G		ITC	COL	GRP	REMARKS
1	6211-210-024-30	CYLINDERBLOCK ASSY	*	1					
2	6209-000-004-10	BOLT	*	6					
3	6209-610-001-10	CUP/SEALING/28	*	1					
4	6209-610-009-00	CUP/SEALING/36	*	3					
5	6209-605-007-00	PLUG/PT1/8	*	2					
6	6212-531-005-10	PIN/IDLEGEAR	*	1					
7	6209-610-008-00	CUP/SEALING/12	*	1					
8	6211-258-001-00	SEAL,BEARING CAP	*	4					
9	6211-258-002-00	SEAL,BEARING CAP/7	*	2					
10	6211-510-002-00	METAL,CRANK	*	1					
11	6211-511-003-00	BEARING/CRANK/UPPER	*	3					
12	6211-511-004-00	BEARING/CRANK/LOWER	*	3					
13	6211-599-001-10	BEARING,THRUST CRANK	*	2					
14	- - - - - -	BLANK	*						- - - - - -
14	6209-625-001-00	SEAL,OIL	*	1					
15	6209-749-001-20	PIN/TUBE	*	2					
16	6213-129-006-00	PIN/STRAIGHT	*	2					
17	6213-129-005-00	PIN/STRAIGHT	*	2					
18	6904-110-840-00	STUD/M8X40	*	1					
19	6904-110-818-00	STUD	*	1					
20	6294-453-002-00	DOWEL	*	2					
21	6909-902-299-00	NIPPLE	*	1					
22	6213-721-001-00	PIPE,WATER DRAIN	*	1					
23	6211-291-001-10	COVER,INJ PUMP	*	1					
24	6211-292-001-20	GASKET/COVER	*	1					
25	V230-360-601-20	FLANGEBOLT	*	4					
26	6215-549-001-10	PIN,STARTING SPRING	*	1					
27	6209-788-001-00	BOLT,ADJUST	*	1					
28	V301-260-006-00	NUT/M6	*	1					
29	- - - - - -	BLANK	*						- - - - - -

FIG.201 CYLINDER BLOCK

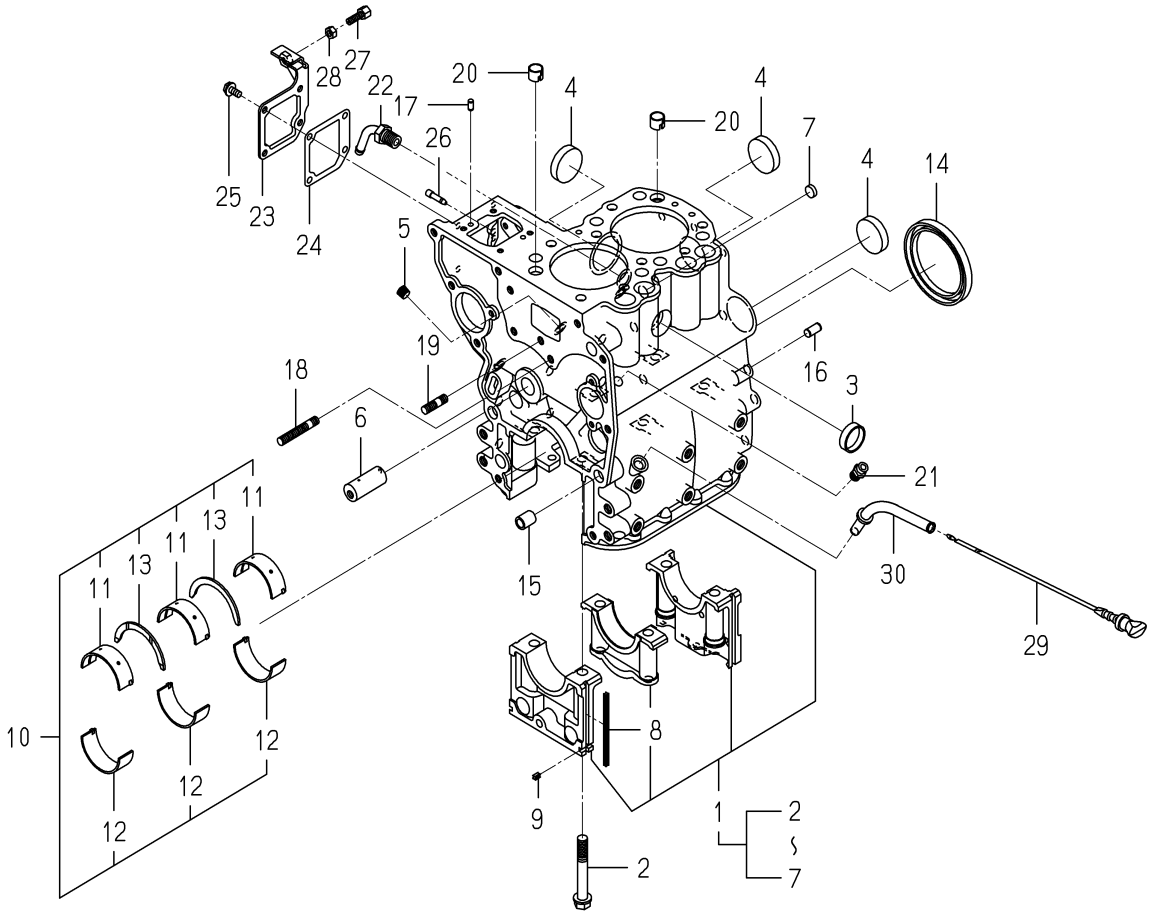

6003-202R-0100

KEY	PART CODE	DESCRIPTION	SPC	TYPE OF MODEL E269G		ITC	COL	GRP	REMARKS
29	6211-760-026-30	LEVEL/GAGE	*	1					
30	6211-766-012-00	GUIDE/LEVELGAGE COMP	*	1					

FIG.202 OIL PAN

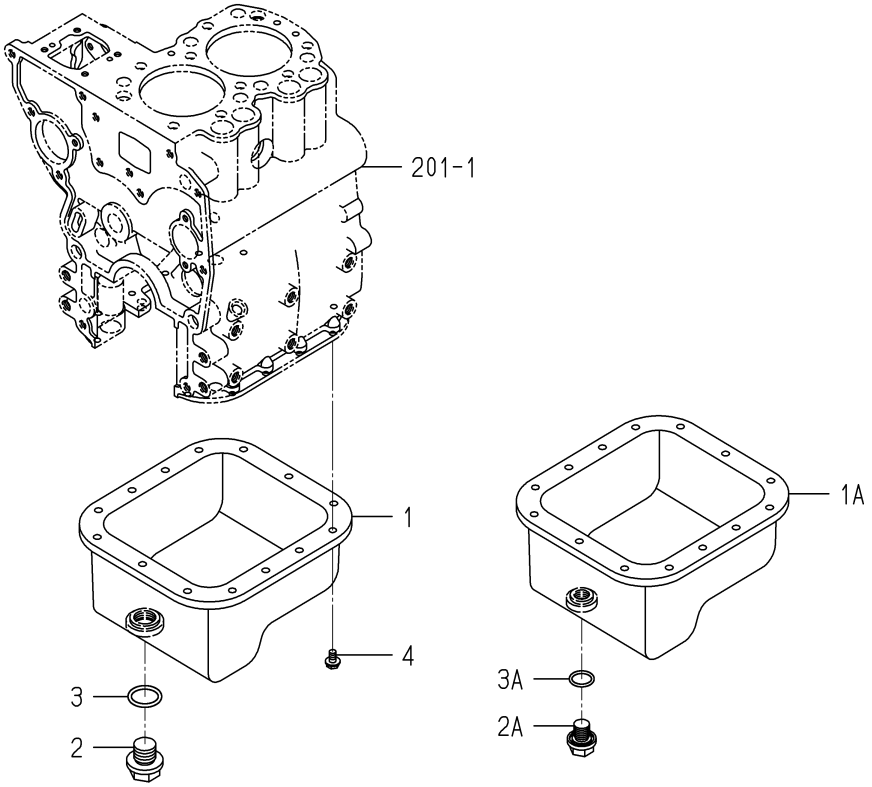

6003-210F-0100

KEY	PART CODE	DESCRIPTION	SPC	TYPE OF MODEL E269G		ITC	COL	GRP	REMARKS
1	- - - - - -	BLANK	*						- - - - - -
1A	6211-361-019-20	OILPAN COMP	*	1					
2	- - - - - -	BLANK	*						- - - - - -
2A	3805-355-002-20	PLUG/M14X1.5	*	1					
3	- - - - - -	BLANK	*						- - - - - -
3A	V720-102-401-80	O-RING/P18	*	1					
4	V230-360-601-00	FLANGEBOLT	*	14					

FIG.203 REAR PLATE

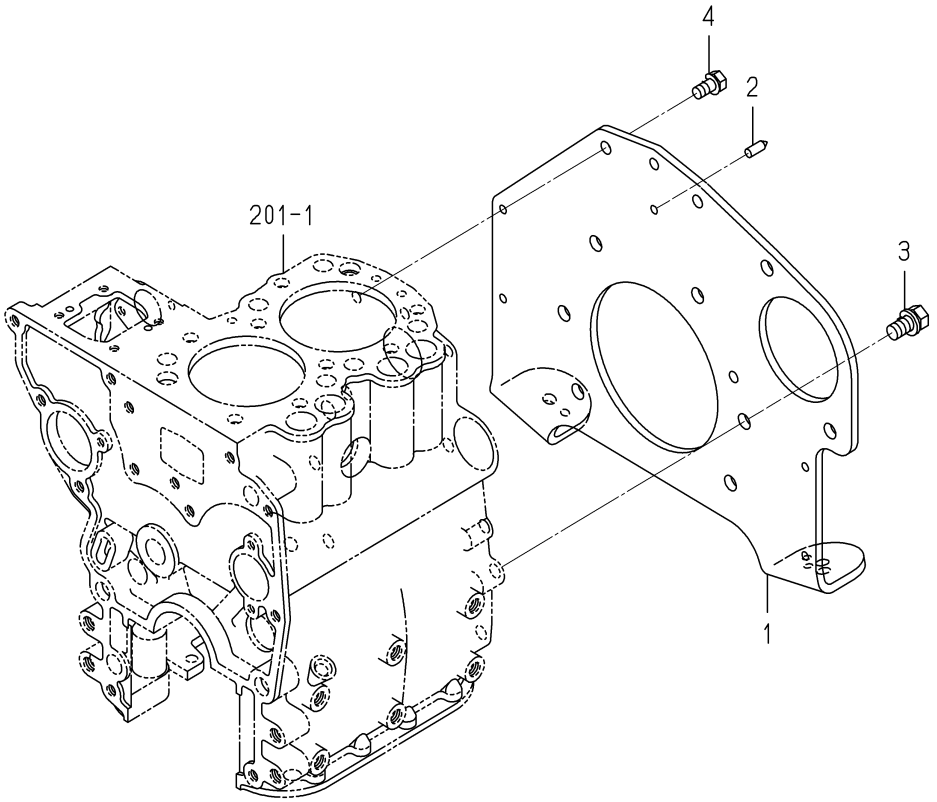

6003-220M-0100

KEY	PART CODE	DESCRIPTION	SPC	TYPE OF MODEL E269G		ITC	COL	GRP	REMARKS
1	6211-341-086-00	PLATE/REAR	*	1					
2	6211-342-002-10	POINTER	*	1					
3	6901-911-020-00	BOLT,SEMS/M10X20	*	6					
4	6901-910-816-00	BOLT,SEMS/M8X16	*	2					

FIG.204 TIMING GEAR CASE

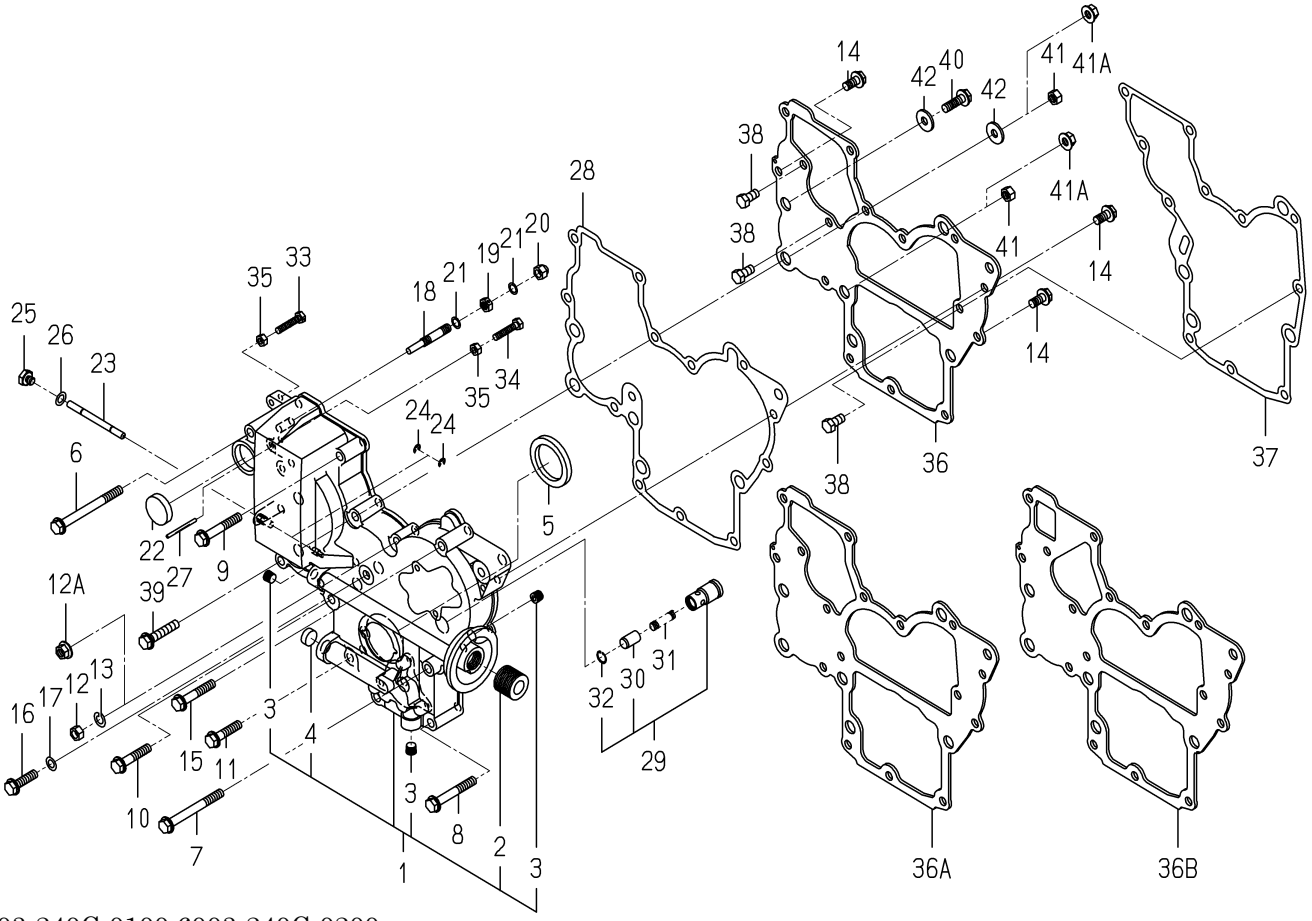

6003-240C-0100,6003-240C-0200

KEY	PART CODE	DESCRIPTION	SPC	TYPE OF MODEL E269G		ITC	COL	GRP	REMARKS
1	6211-310-006-30	GEARCASE ASSY	*	1					
2	6213-319-001-00	CONNECTOR,OIL FILTER	*	1					
3	6209-605-007-00	PLUG/PT1/8	*	3					
3	- - - - - -	BLANK	*						- - - - - -
4	6209-610-007-00	CUP/SEALING/16	*	1					
4	- - - - - -	BLANK	*						- - - - - -
5	6209-625-002-00	SEAL,OIL	*	1					
6	- - - - - -	BLANK	*						- - - - - -
6	V231-360-808-50	FLANGEBOLT	*	1					
6	- - - - - -	BLANK	*						- - - - - -
7	- - - - - -	BLANK	*						- - - - - -
7	V231-360-807-50	FLANGEBOLT	*	1					
7	- - - - - -	BLANK	*						- - - - - -
8	- - - - - -	BLANK	*						- - - - - -
8	V231-360-805-50	FLANGEBOLT	*	2					
8	- - - - - -	BLANK	*						- - - - - -
9	- - - - - -	BLANK	*						- - - - - -
9	V231-360-805-00	FLANGEBOLT	*	2					
9	- - - - - -	BLANK	*						- - - - - -
10	- - - - - -	BLANK	*						- - - - - -
10	V231-360-804-00	FLANGEBOLT	*	1					
10	- - - - - -	BLANK	*						- - - - - -
11	- - - - - -	BLANK	*						- - - - - -
11	V231-360-803-50	FLANGEBOLT	*	1					
11	- - - - - -	BLANK	*						- - - - - -
12	- - - - - -	BLANK	*						- - - - - -
12A	3817-401-001-00	NUT/M08	*	1					
13	- - - - - -	BLANK	*						- - - - - -
14	- - - - - -	BLANK	*						- - - - - -
14	V231-360-801-60	FLANGEBOLT	*	3					

FIG.204 TIMING GEAR CASE

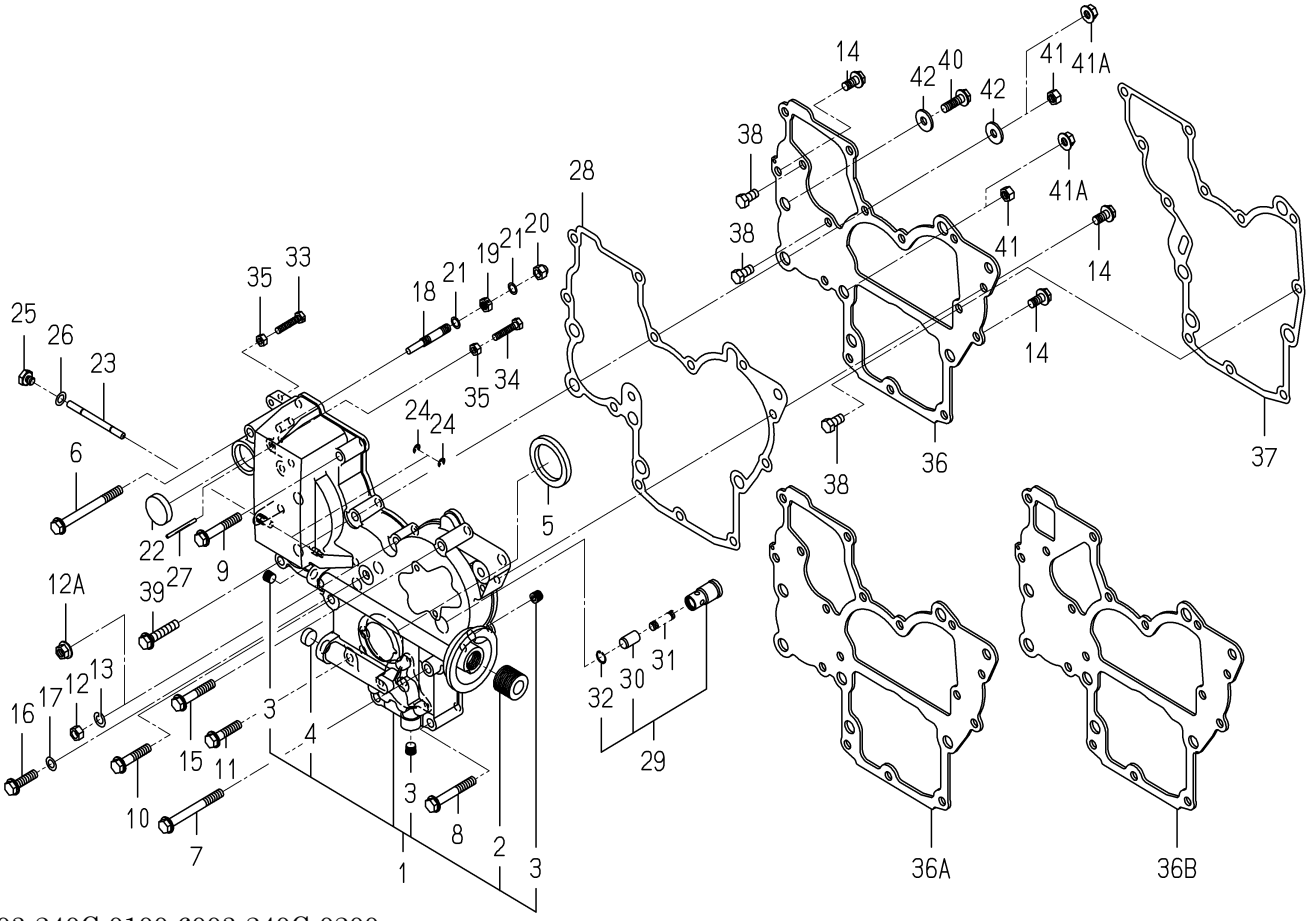

6003-240C-0100,6003-240C-0200

KEY	PART CODE	DESCRIPTION	SPC	TYPE OF MODEL E269G		ITC	COL	GRP	REMARKS
14	- - - - - -	BLANK	*						- - - - - -
15	- - - - - -	BLANK	*						- - - - - -
15	V231-360-804-50	FLANGEBOLT	*	1					
15	- - - - - -	BLANK	*						- - - - - -
16	- - - - - -	BLANK	*						- - - - - -
16	V231-360-803-00	FLANGEBOLT	*	1					
16	- - - - - -	BLANK	*						- - - - - -
17	6209-500-003-00	WASHER/08X14X01	*	1					
18	6215-546-001-00	STOPPER,FULL-LOAD	*	1					
19	6209-409-001-00	NUT/M8	*	1					
20	V341-120-008-00	NUT,CAP/M 8	*	1					
21	6209-920-002-00	PACKING	*	2					
22	3625-540-004-00	CAP,BLANK/30	*	1					
23	6215-542-001-10	PIN/ARM	*	1					
24	V710-140-004-00	RING,SNAP/ 4 E	*	2					
25	6209-600-004-00	PLUG/SCREW	*	1					
25	- - - - - -	BLANK	*						- - - - - -
26	6209-500-003-00	WASHER/08X14X01	*	1					
27	6209-740-001-00	PIN,GROOVE	*	1					
28	6211-312-001-30	GASKET/GEARCASE	*	1					
29	6213-160-002-20	VALVE/RELIEF ASSY	*	1					
30	6213-161-001-20	PISTON/VALVE/RELIEF	*	1					
31	6213-164-001-00	SPRING/RELIEF VALVE	*	1					
32	V705-140-012-00	RING,SNAP/12 C	*	1					
33	6209-050-001-00	BOLT/M6	*	1					
34	6209-050-002-00	BOLT/M6	*	1					
35	V301-260-006-00	NUT/M6	*	2					
35	- - - - - -	BLANK	*						- - - - - -
36	- - - - - -	BLANK	*						- - - - - -
36A	- - - - - -	BLANK	*						- - - - - -

FIG.204 TIMING GEAR CASE

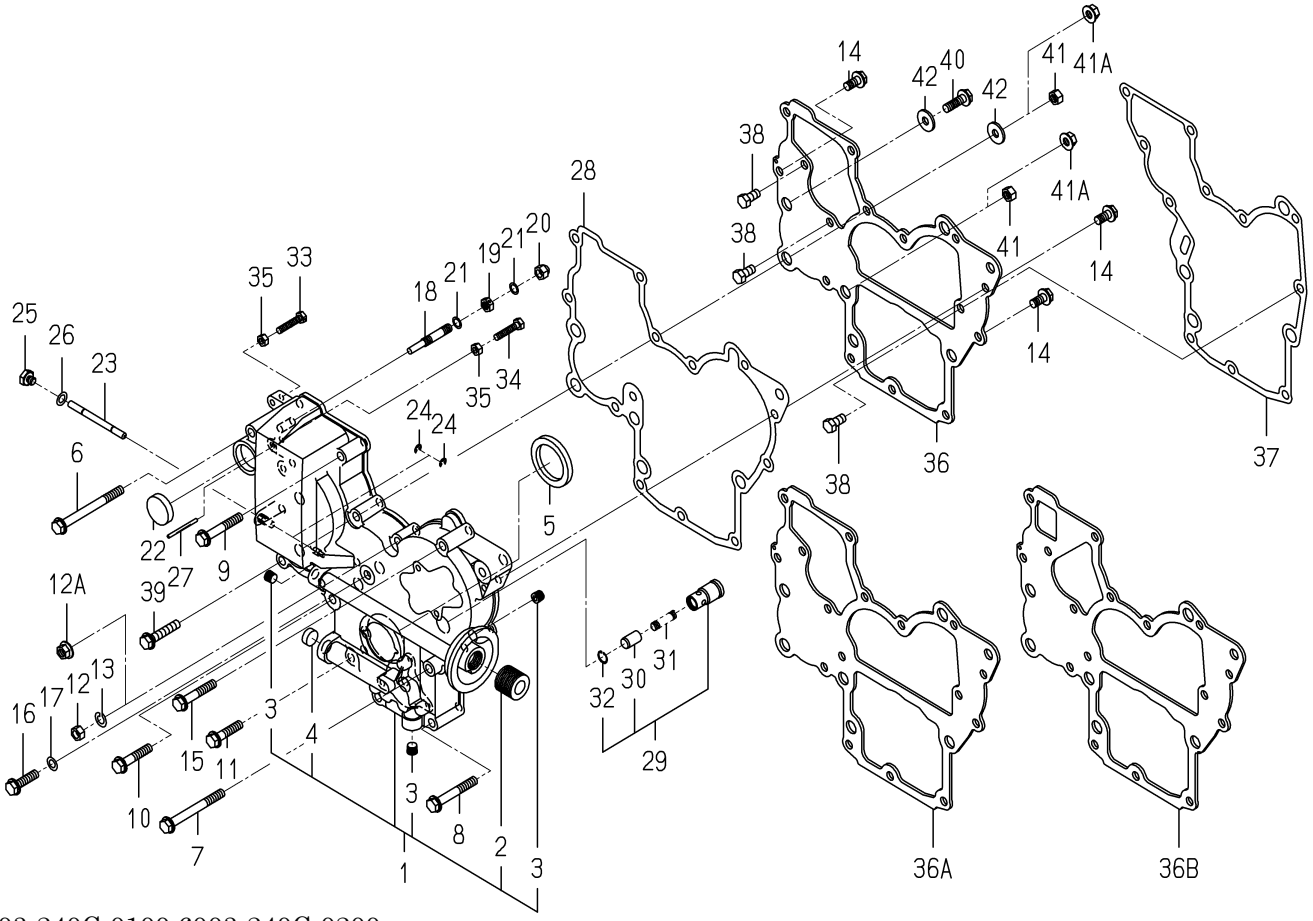

6003-240C-0100,6003-240C-0200

KEY	PART CODE	DESCRIPTION	SPC	TYPE OF MODEL		ITC	COL	GRP	REMARKS
				E269G					
36B	6211-311-005-30	PLATE/FRONT	*	1					
37	6211-312-002-30	GASKET/PLATE	*	1					
38	6902-050-816-00	BOLT	*	3					
39	- - - - - -	BLANK	*						- - - - - -
39	V231-360-804-00	FLANGEBOLT	*	2					
39	- - - - - -	BLANK	*						- - - - - -
40	- - - - - -	BLANK	*						- - - - - -
40	V231-360-802-50	FLANGEBOLT	*	1					
40	- - - - - -	BLANK	*						- - - - - -
41	- - - - - -	BLANK	*						- - - - - -
41A	3817-401-001-00	NUT/M08	*	2					
42	1373-121-001-00	WASHER/9X22X2	*	2					
42	- - - - - -	BLANK	*						- - - - - -

FIG.205 HANGER

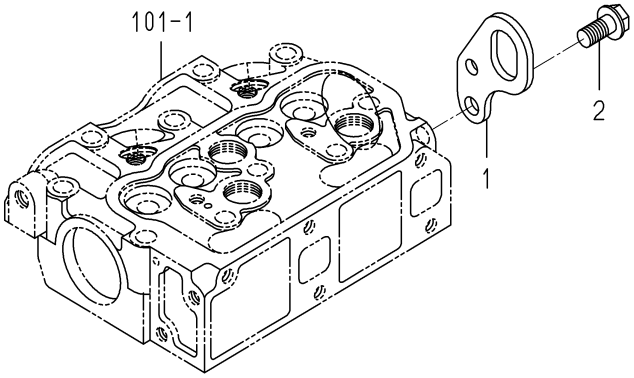

6005-290B-0100

KEY	PART CODE	DESCRIPTION	SPC	TYPE OF MODEL		ITC	COL	GRP	REMARKS
				E269G					
1	6211-777-007-30	HANGER	*	1					
2	V233-361-002-00	FLANGEBOLT	*	1					

FIG.301 VALVE

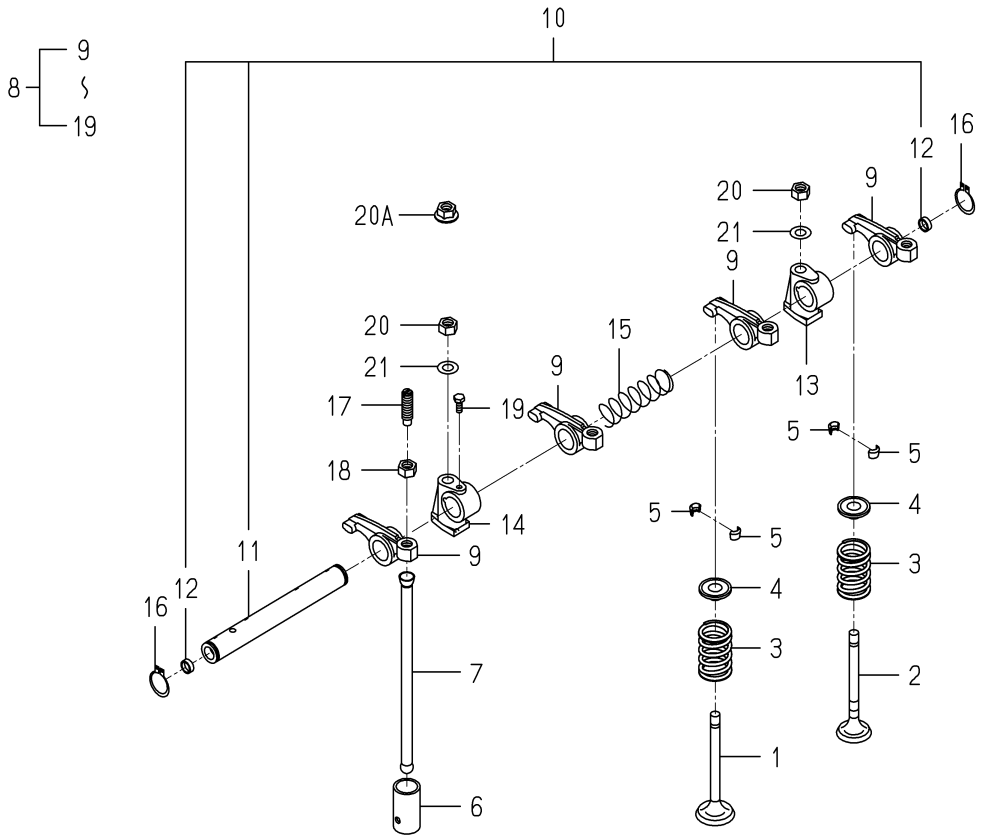

6003-301A-0100

KEY	PART CODE	DESCRIPTION	SPC	TYPE OF MODEL E269G		ITC	COL	GRP	REMARKS
1	- - - - - -	BLANK	*						- - - - - -
1	6212-551-028-00	VALVE/INTAKE	*	2					
1	- - - - - -	BLANK	*						- - - - - -
2	- - - - - -	BLANK	*						- - - - - -
2	6212-552-014-00	VALVE/EXHAUST	*	2					
2	- - - - - -	BLANK	*						- - - - - -
3	6212-561-001-10	SPRING/VALVE	*	4					
3	- - - - - -	BLANK	*						- - - - - -
4	6212-563-001-00	SEAT,VALVE SPRING	*	4					
5	6212-565-001-00	CUTTER,VALVE	*	8					
6	6212-571-006-00	TAPPET	*	4					
6	- - - - - -	BLANK	*						- - - - - -
7	6212-575-001-00	ROD,PUSH	*	4					
8	6212-600-003-10	ROCKERSHAFT ASSY	*	1					
8	- - - - - -	BLANK	*						- - - - - -
9	6212-611-004-10	ROCKERARM	*	4					
10	6212-620-002-20	SHAFT/ROCKERARM ASSY	*	1					
10	- - - - - -	BLANK	*						- - - - - -
11	- - - - - -	BLANK	*						- - - - - -
12	6212-626-002-10	PLUG	*	2					
13	6212-628-004-00	BRACKET ROCKER SHAFT	*	1					
14	6212-628-005-00	BRACKET,ROCKER SHAFT	*	1					
15	6209-940-004-00	SPRING	*	1					
16	V704-140-016-00	RING,SNAP/16 C	*	2					
17	6212-616-002-00	SCREW ADJUST	*	4					
18	6209-409-003-00	NUT	*	4					
19	6209-000-002-00	BOLT	*	1					
20	- - - - - -	BLANK	*						- - - - - -
20A	3817-401-001-00	NUT/M08	*	2					
21	- - - - - -	BLANK	*						- - - - - -

FIG.302 CAM SHAFT

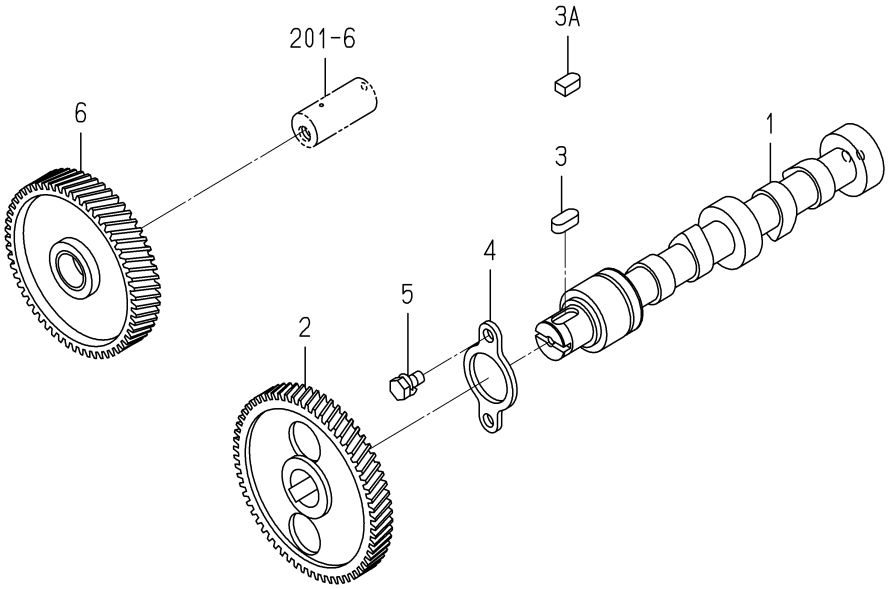

6003-310A-0100

KEY	PART CODE	DESCRIPTION	SPC	TYPE OF MODEL E269G		ITC	COL	GRP	REMARKS
1	6212-511-004-00	SHAFT,CAM	*	1					
2	6212-522-010-00	GEAR/CAMSHAFT	*	1					
2	- - - - - -	BLANK	*						- - - - - -
3	- - - - - -	BLANK	*						- - - - - -
3A	6209-730-005-00	KEY/07X05X09	*	1					
4	6212-535-001-00	PLATE,THRUST	*	1					
5	6901-910-612-00	BOLT,SEMS/M6X12	*	2					
6	- - - - - -	BLANK	*						- - - - - -
6	6212-523-023-00	GEAR/IDLE ASSY	*	1					
6	- - - - - -	BLANK	*						- - - - - -

FIG.303 PISTON

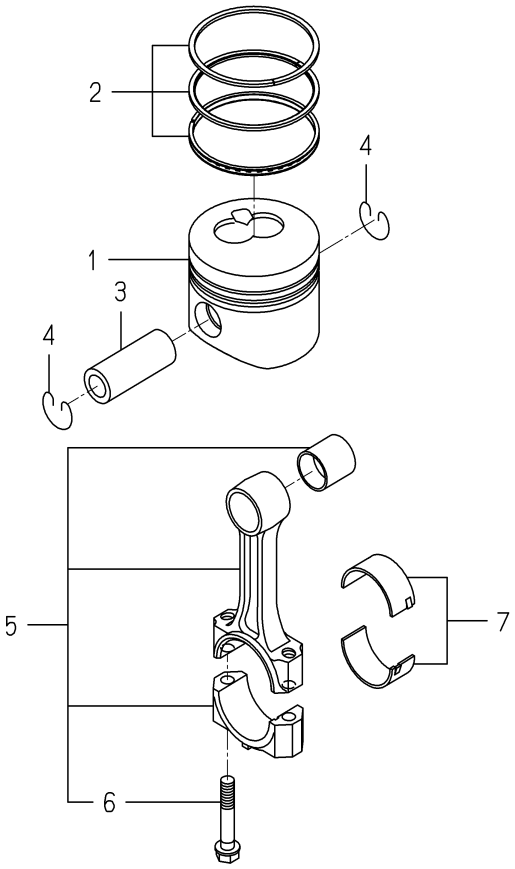

6003-340L-0100

KEY	PART CODE	DESCRIPTION	SPC	TYPE OF MODEL E269G		ITC	COL	GRP	REMARKS
1	6212-111-100-00	PISTON	*	2					
2	6212-121-009-20	RING/PISTON SET	*	2					
3	6212-211-001-10	PIN,PISTON	*	2					
4	6209-587-001-00	RING,SNAP	*	4					
5	6212-230-003-10	CONNECTINGROD ASSY	*	2					
6	6212-235-005-00	BOLT/CONNECTINGROD	*	4					
7	- - - - - -	BLANK	*						- - - - - -
7	6212-271-016-00	BEARING/CONNECTING R	*	2					

FIG.304 CRANK SHAFT

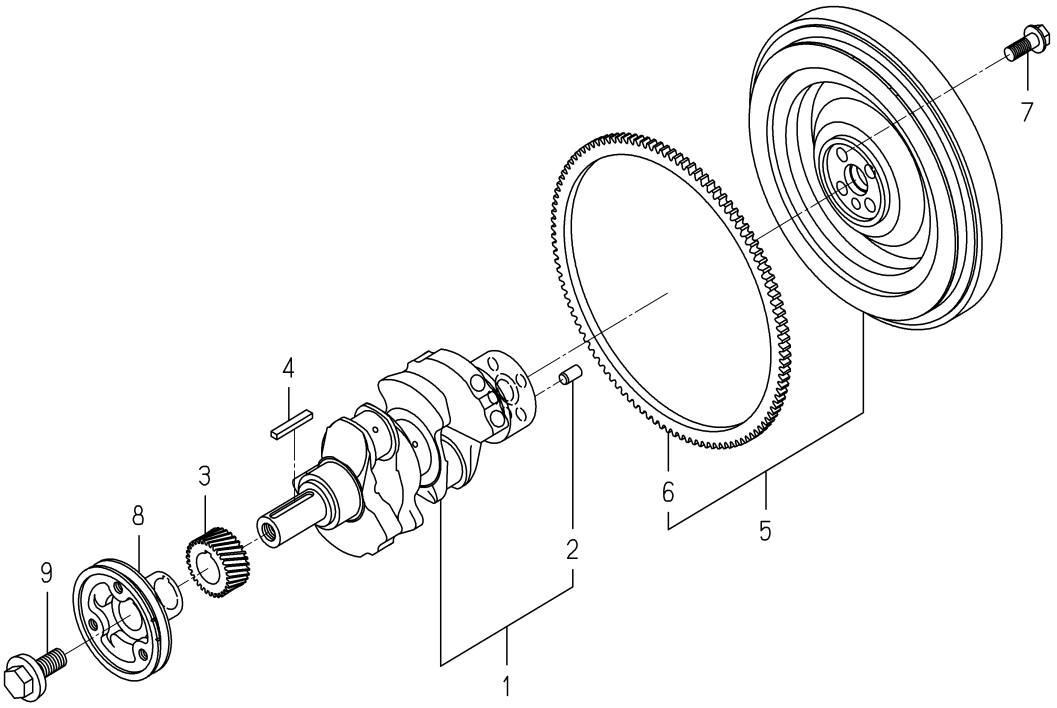

6003-350X-0100

KEY	PART CODE	DESCRIPTION	SPC	TYPE OF MODEL E269G		ITC	COL	GRP	REMARKS
1	6212-310-010-50	CRANKSHAFT ASSY	*	1					
2	V523-101-001-80	PIN	*	1					
3	6212-521-008-00	GEAR/CRANK	*	1					
4	6209-730-006-00	KEY/07X05X43	*	1					
5	6212-330-056-10	FLYWHEEL ASSY	*	1					
6	6212-333-003-00	RINGGEAR	*	1					
7	6209-046-015-00	BOLT/FLANGE	*	4					
8	6212-371-022-00	PULLEY/CRANK	*	1					
9	6209-000-043-00	BOLT/CRANK	*	1					

FIG.401 OIL PUMP

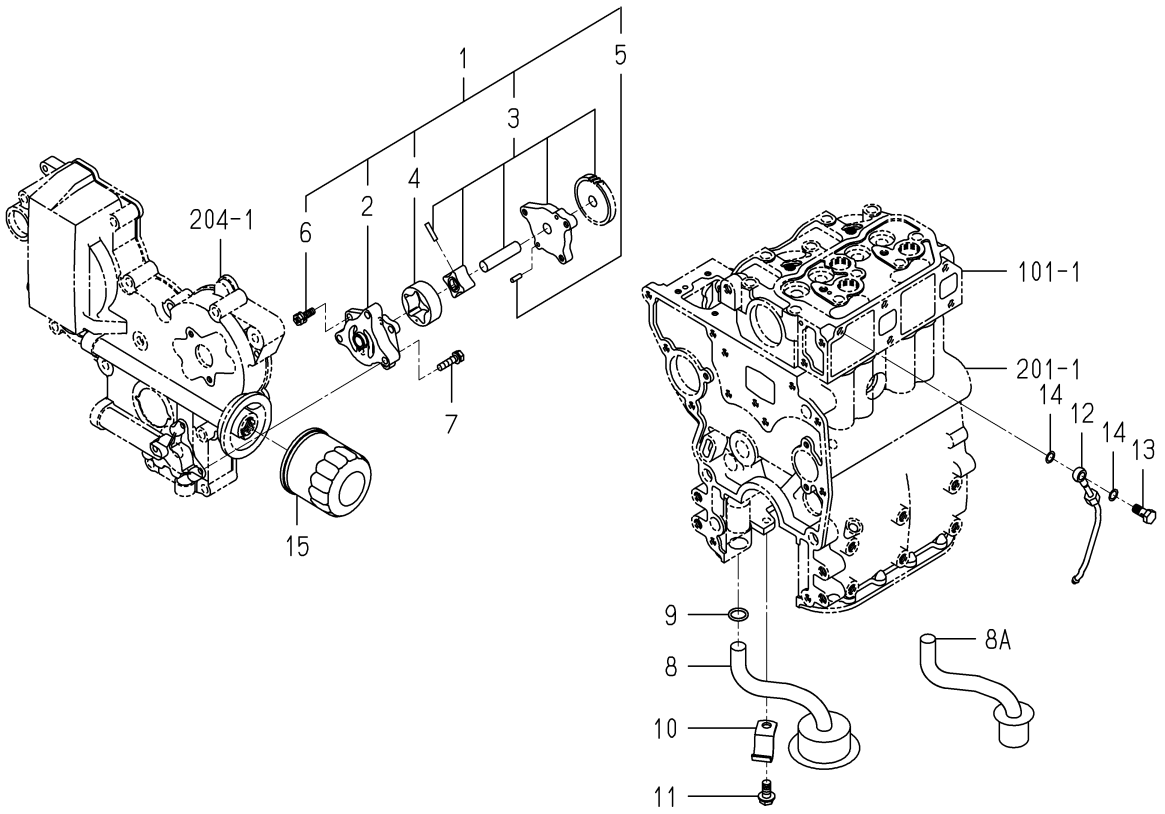

6003-401A-0100

KEY	PART CODE	DESCRIPTION	SPC	TYPE OF MODEL E269G		ITC	COL	GRP	REMARKS
1	6213-100-003-30	OILPUMP ASSY	*	1					
2	6213-111-001-30	BODY/OILPUMP	*	1					
3	6213-120-003-20	GEAR/OILPUMP ASSY	*	1					
4	6213-125-001-00	ROTOR/OUTER	*	1					
5	6213-129-003-00	PIN/STRAIGHT	*	2					
6	6213-119-001-00	BOLT/WS	*	3					
7	6901-910-625-00	BOLT	*	3					
8	- - - - - -	BLANK	*						- - - - - -
8A	6213-140-033-00	STRAINER	*	1					
9	V720-102-401-50	O-RING/P15	*	1					
10	6213-149-001-00	CLAMP,STRAINER	*	1					
11	V231-360-801-60	FLANGEBOLT	*	1					
12	6213-311-003-10	PIPE,OIL	*	1					
13	6909-906-105-10	BOLT,JOINT	*	1					
14	6209-920-002-00	PACKING	*	2					
15	6213-240-002-10	CARTRIDGE/OILFILTER	*	1					

FIG.402 WATER PUMP

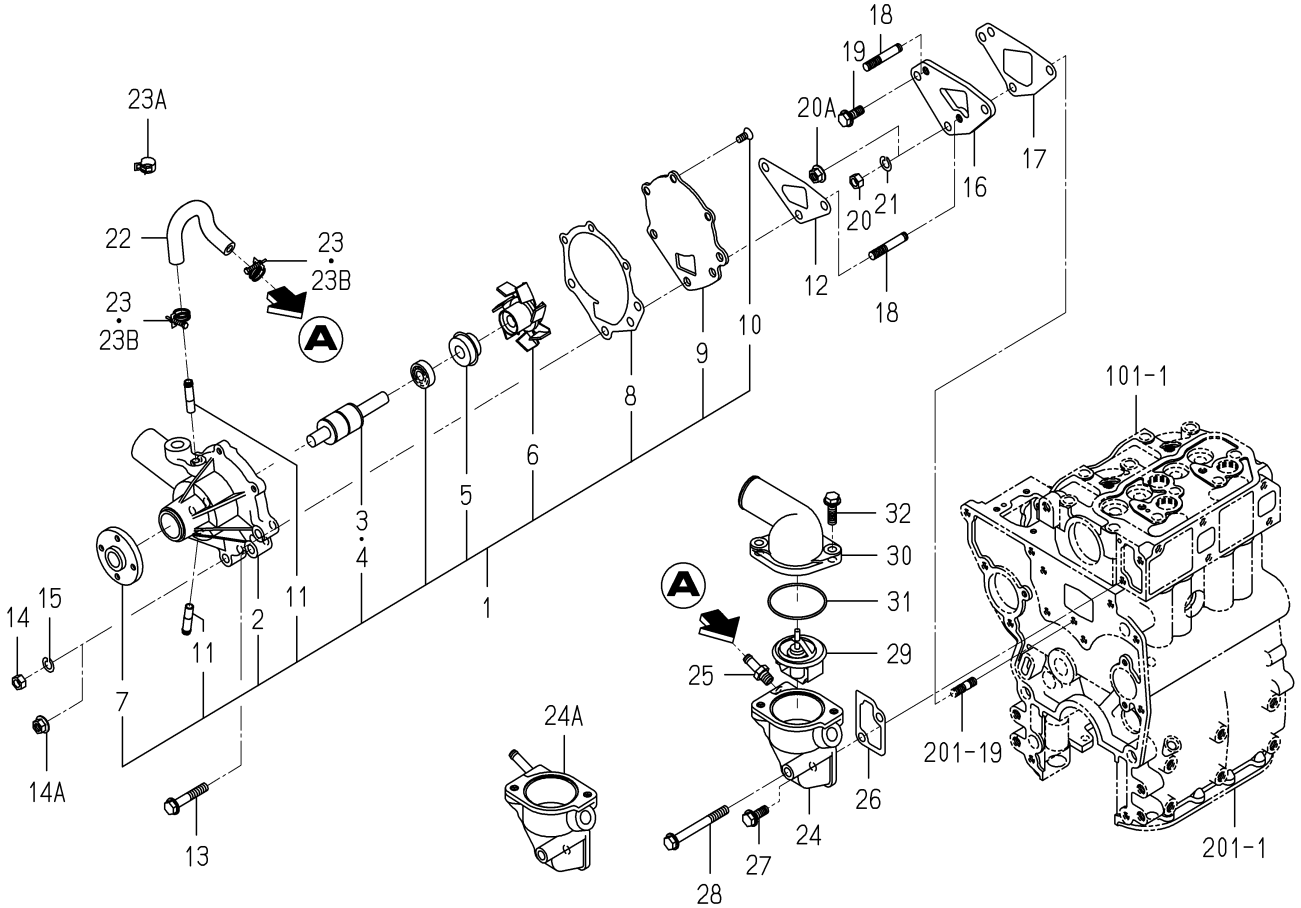

6003-420F-0100

KEY	PART CODE	DESCRIPTION	SPC	TYPE OF MODEL E269G		ITC	COL	GRP	REMARKS
1	6213-610-005-40	WATERPUMP ASSY	*	1					
2	6213-611-003-20	BODY/WATERPUMP	*	1					
3	6213-631-002-00	BEARING/WATER PUMP	*	1					
4	6213-631-005-00	BEARING/WATERPUMP	*	1					
5	6213-622-002-10	SEAL SET/WATER PUMP	*	1					
6	6213-621-003-00	ROTOR/WATERPUMP	*	1					
7	6213-642-002-00	SEAL/WATER PUMPPULLE	*	1					
8	6213-613-002-10	GASKET	*	1					
9	6213-612-004-00	PLATE/WATER PUMP	*	1					
10	6213-619-003-00	SCREW/WATER PUMP	*	3					
11	6213-619-002-00	PIPE/WATER PUMP	*	2					
12	6213-614-003-10	GASKET/WATER PUMP	*	1					
13	- - - - - -	BLANK	*						- - - - - -
13	V231-360-804-50	FLANGEBOLT	*	1					
13	- - - - - -	BLANK	*						- - - - - -
14	- - - - - -	BLANK	*						- - - - - -
14A	3817-401-001-00	NUT/M08	*	2					
15	- - - - - -	BLANK	*						- - - - - -
16	6213-619-005-00	SPACER,WATER PUMP	*	1					
17	6213-614-006-20	GASKET(SPACER)	*	1					
17	- - - - - -	BLANK	*						- - - - - -
18	6209-300-002-00	STUD	*	2					
19	- - - - - -	BLANK	*						- - - - - -
19	V231-360-802-00	FLANGEBOLT	*	1					
19	- - - - - -	BLANK	*						- - - - - -
20	- - - - - -	BLANK	*						- - - - - -
20A	3817-401-001-00	NUT/M08	*	1					
21	- - - - - -	BLANK	*						- - - - - -
22	6213-729-016-00	HOSE/RUBBER	*	1					
23	- - - - - -	BLANK	*						- - - - - -

FIG.402 WATER PUMP

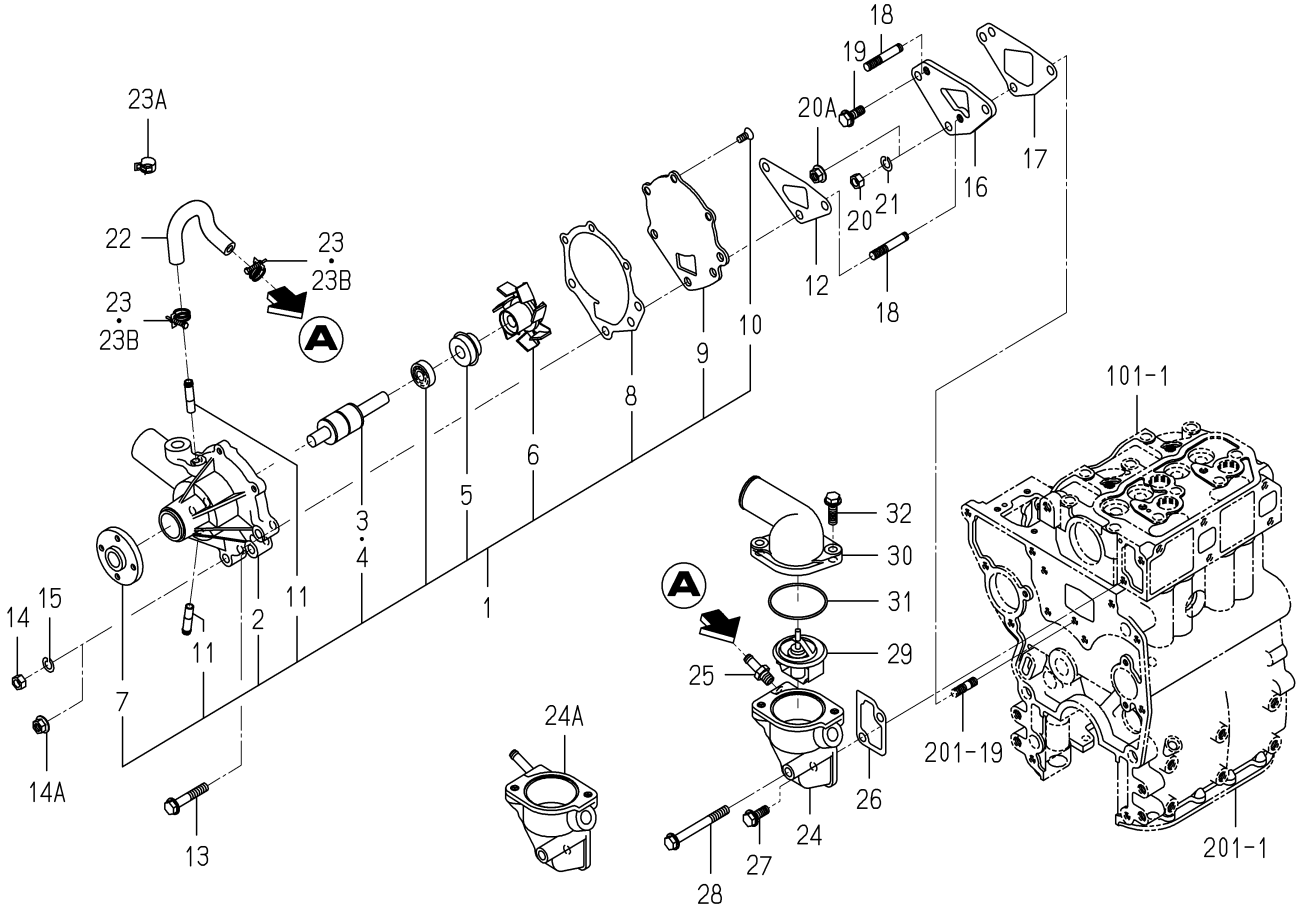

6003-420F-0100

KEY	PART CODE	DESCRIPTION	SPC	TYPE OF MODEL E269G		ITC	COL	GRP	REMARKS
23A	- - - - - -	BLANK	*						- - - - - -
23B	J061-210-015-00	CLAMP/WIRE/10-15	*	2					
24	- - - - - -	BLANK	*						- - - - - -
24A	6213-716-001-50	HOUSING/THERMOSTAT	*	1					
25	- - - - - -	BLANK	*						- - - - - -
26	6213-743-002-10	GASKET/HOUSING	*	1					
27	- - - - - -	BLANK	*						- - - - - -
27	V231-360-802-00	FLANGEBOLT	*	1					
27	- - - - - -	BLANK	*						- - - - - -
28	- - - - - -	BLANK	*						- - - - - -
28	V231-360-807-50	FLANGEBOLT	*	1					
28	- - - - - -	BLANK	*						- - - - - -
29	6513-770-022-10	THERMOSTAT	*	1					
30	6213-711-004-00	PIPE/WATEROUTLET	*	1					
31	V723-102-005-50	O-RING	*	1					
32	- - - - - -	BLANK	*						- - - - - -
32	- - - - - -	BLANK	*						- - - - - -
32	V231-360-802-50	FLANGEBOLT	*	2					
32	- - - - - -	BLANK	*						- - - - - -

FIG.403 COOLING FAN

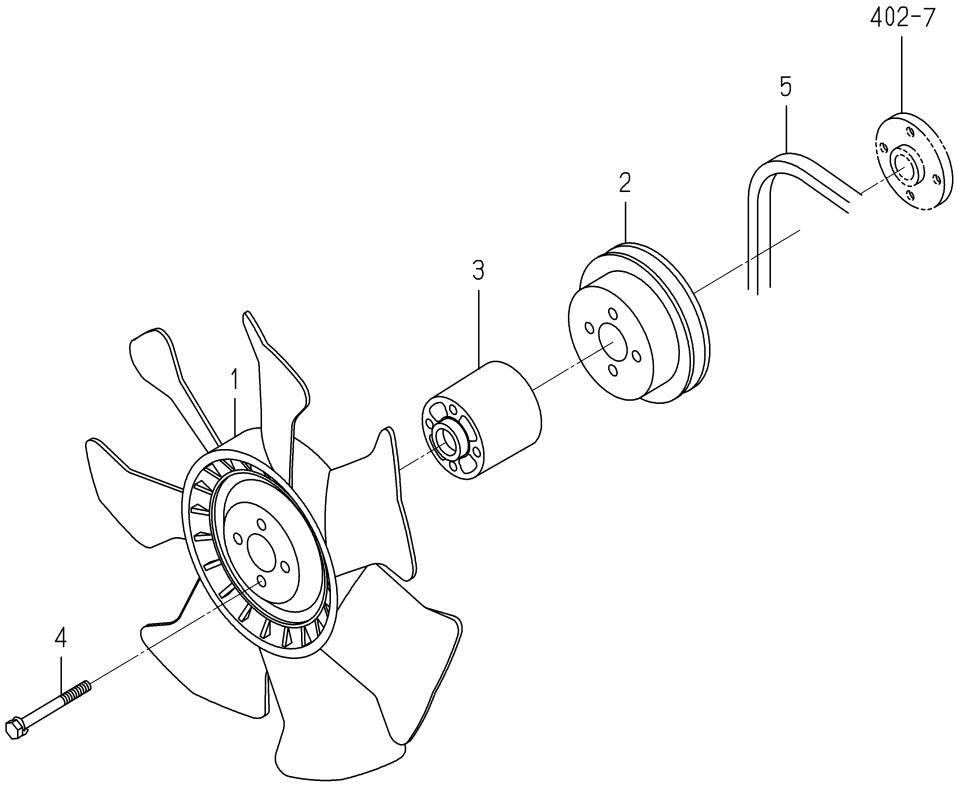

6003-480N-0100

KEY	PART CODE	DESCRIPTION	SPC	TYPE OF MODEL E269G		ITC	COL	GRP	REMARKS
1	6213-660-006-00	FAN,COOLING	*	1					
2	6213-641-004-10	PULLEY,WATER PUMP	*	1					
2	- - - - - -	BLANK	*						- - - - - -
3	6213-669-008-00	SPACER/FAN/48	*	1					
4	6209-030-044-00	BOLT/WS	*	4					
5	6213-671-012-00	BELT/VHM34.5/FAN	*	1					

FIG.501 INJECTION NOZZLE

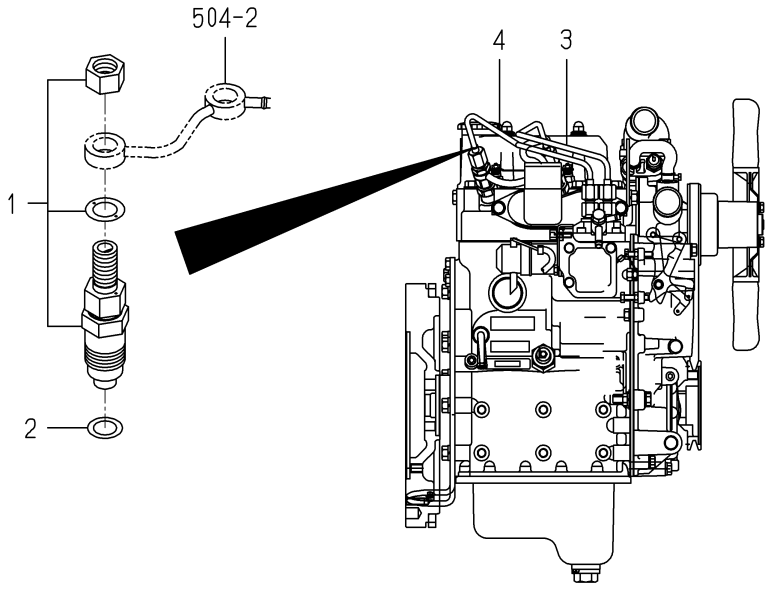

6003-501G-0100

KEY	PART CODE	DESCRIPTION	SPC	TYPE OF MODEL		ITC	COL	GRP	REMARKS
				E269G					
1	- - - - - -	BLANK	*						- - - - - -
1	6215-300-045-10	INJECTIONNOZZLE ASSY	*	2					FIG S01
2	6215-315-002-00	GASKET,NOZZLE	*	2					
3	6215-411-149-00	PIPE/INJECTION ASSY	*	1					
4	6215-411-150-10	PIPE/INJECTION ASSY	*	1					

FIG.502 INJECTION PUMP

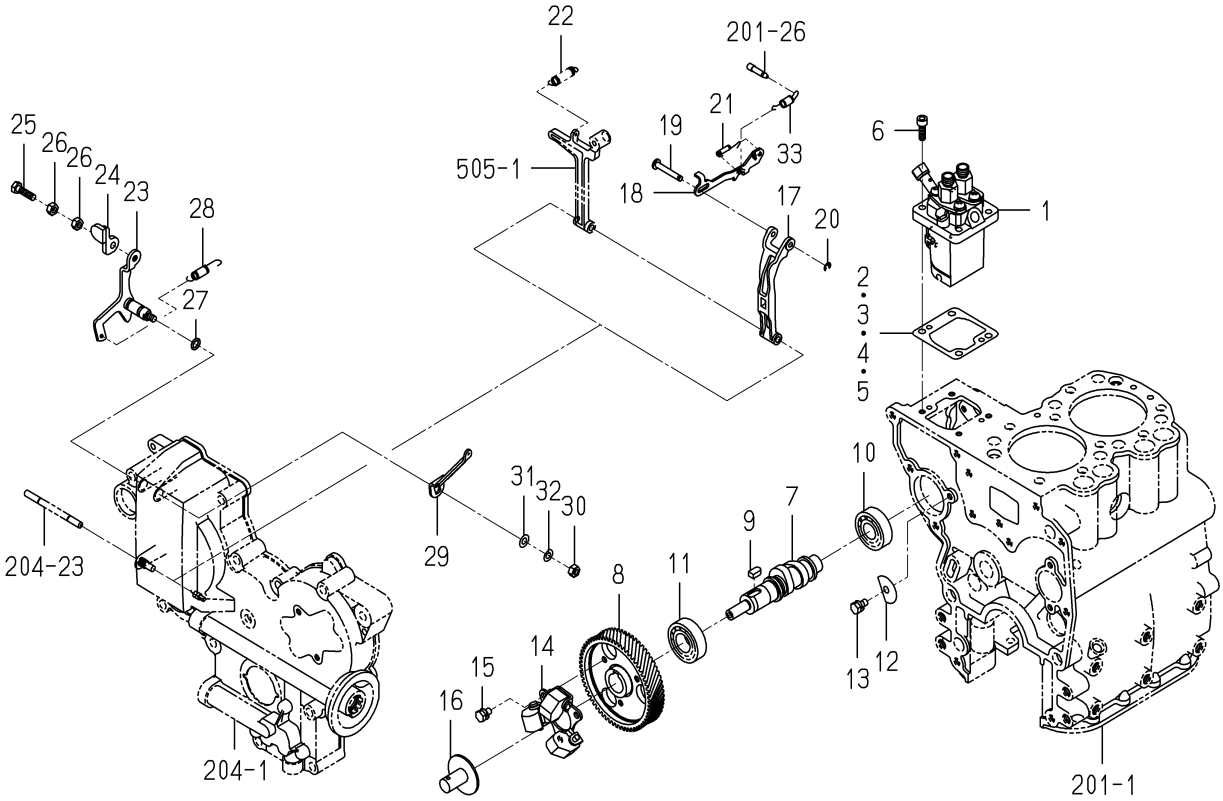

6003-510Y-0100

KEY	PART CODE	DESCRIPTION	SPC	TYPE OF MODEL E269G		ITC	COL	GRP	REMARKS
1	6215-600-147-00	INJECTIONPUMPASSY	*	1					FIG S02
2	6219-752-036-00	SHIM/INJECTIONPUMP	*	1					
3	6219-752-037-00	SHIM/INJECTIONPUMP	*	1					
4	6219-752-038-00	SHIM/INJECTIONPUMP	*	1					
5	6219-752-039-00	SHIM/INJECTIONPUMP	*	1					
6	6209-056-001-00	BOLT/M6X18	*	4					
7	6215-621-036-00	CAMSHAFT/INJECTION P	*	1					
8	6212-524-002-30	GEAR/INJECTIONPUMP	*	1					
9	6209-730-005-00	KEY/07X05X09	*	1					
10	V600-110-620-30	BEARING,RB/6203	*	1					
11	V600-110-600-40	BEARING,RB/6004	*	1					
12	6212-535-002-00	PLATE,THRUST INJPUMP	*	1					
13	6901-910-612-00	BOLT,SEMS/M6X12	*	1					
14	6215-520-001-00	FLYWEIGHT	*	1					
15	6209-030-043-00	BOLT/M6X10	*	3					
16	6215-526-004-00	THRUSTPIECE	*	1					
17	6215-541-001-10	ARM/FLOATING COMP	*	1					
18	6215-543-003-20	LINK/CONTROL	*	1					
19	6215-542-002-00	PIN,CONTROL LINK	*	1					
20	V710-140-004-00	RING,SNAP/ 4 E	*	1					
21	6215-549-003-00	SPRING,SETTING	*	1					
22	6215-531-001-00	SPRING GOVERNOR	*	1					
23	6215-541-003-10	LEVER,CONTROL	*	1					
24	6215-549-021-10	PLATE(CONTROLLEVER)	*	1					
25	6209-044-001-00	BOLT/M6X18	*	1					
26	V302-260-006-00	NUT/M 6	*	2					
27	V720-101-900-80	O-RING/P 8	*	1					
28	6209-580-002-10	SPRING,RETURN	*	1					
29	6215-549-007-10	ARM/CONTROL	*	1					
30	V301-260-006-00	NUT/M6	*	1					

FIG.502 INJECTION PUMP

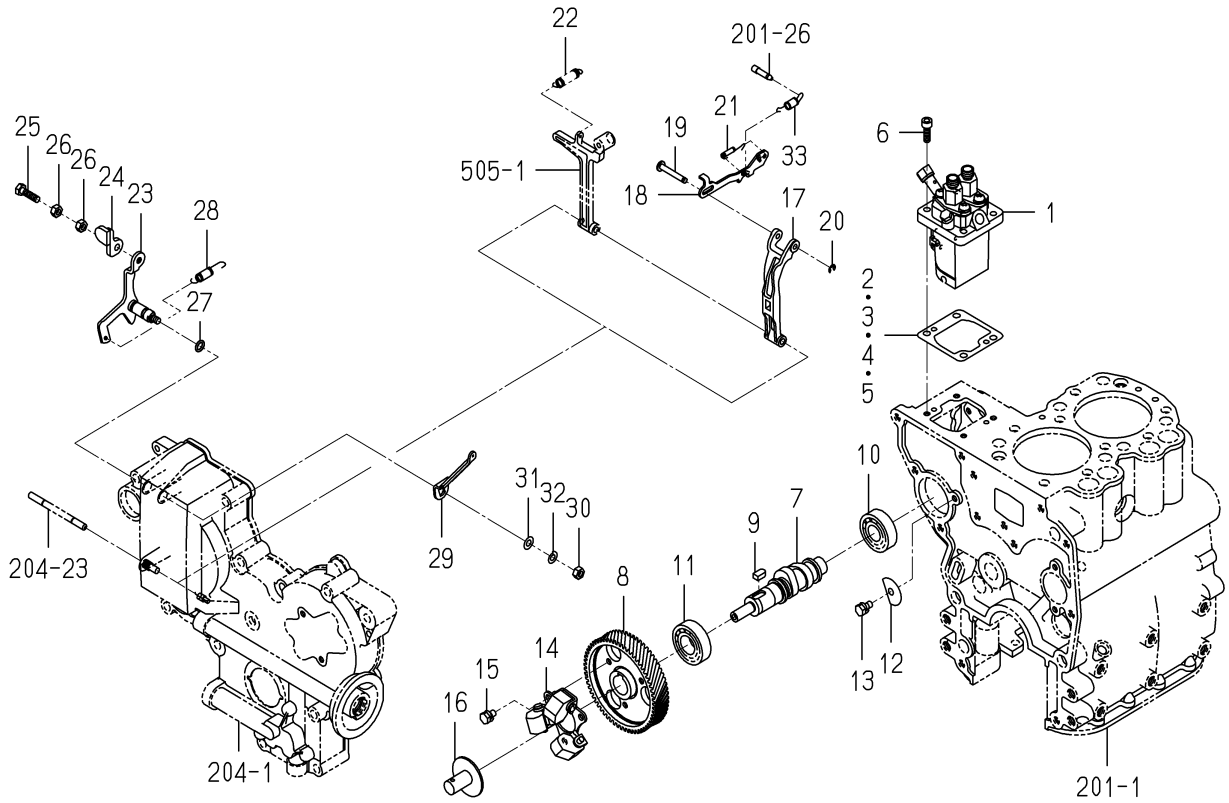

6003-510Y-0100

KEY	PART CODE	DESCRIPTION	SPC	TYPE OF MODEL		ITC	COL	GRP	REMARKS
				E269G					
31	V411-260-006-00	WASHER / M6	*	1					
32	V401-160-006-00	WASHER,SP/M 6	*	1					
33	6215-549-008-10	SPRING/STARTING	*	1					

FIG.503 FUEL FILTER

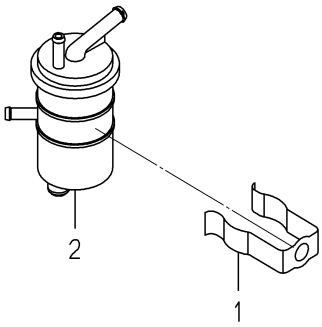

6003-530B-0100

KEY	PART CODE	DESCRIPTION	SPC	TYPE OF MODEL		ITC	COL	GRP	REMARKS
				E269G					
1	6219-755-001-00	HOLDER(FUEL FILTER)	*	1					
2	6213-200-009-00	FILTER/FUEL ASSY	*	1					

FIG.504 FUEL PIPE

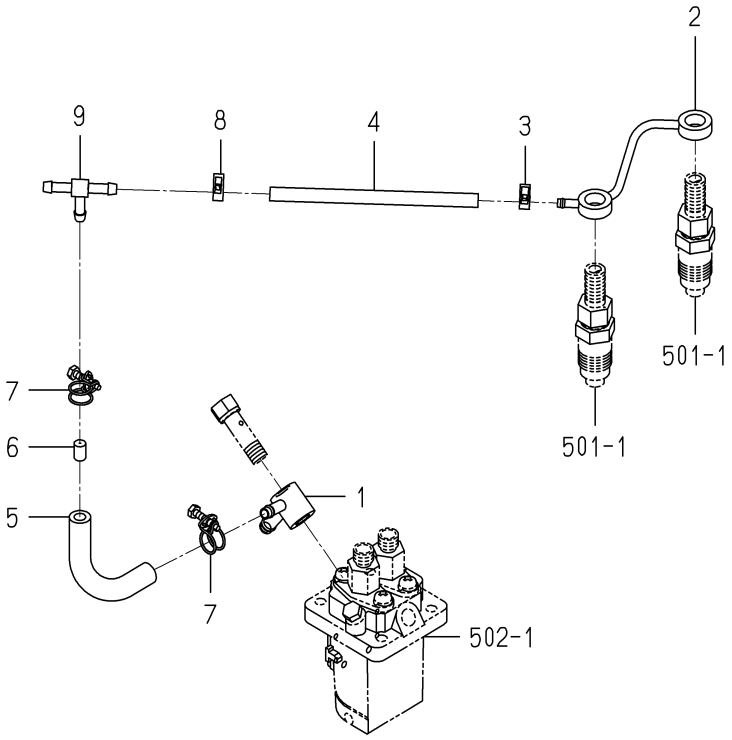

6003-550V-0100

KEY	PART CODE	DESCRIPTION	SPC	TYPE OF MODEL E269G		ITC	COL	GRP	REMARKS
1	6215-412-001-20	CONNECTOR/FUEL	*	1					
2	6215-411-141-00	PIPE/FUEL	*	1					
3	J062-076-082-00	CLIP/HOSE/7.6-8.2	*	1					
4	6209-360-005-00	HOSE,RUBBER	*	1					
5	3659-310-004-00	HOSE/07X13X120	*	1					
6	6215-419-001-00	TUBE,ORIFICE	*	1					
7	6209-704-009-00	CLAMP/WIRE/10-12	*	2					
8	J062-087-093-00	CLIP/HOSE/8.7-9.3	*	1					
9	3632-360-036-00	JOINTT-TYPE 2	*	1					

FIG.505 ADAPTER

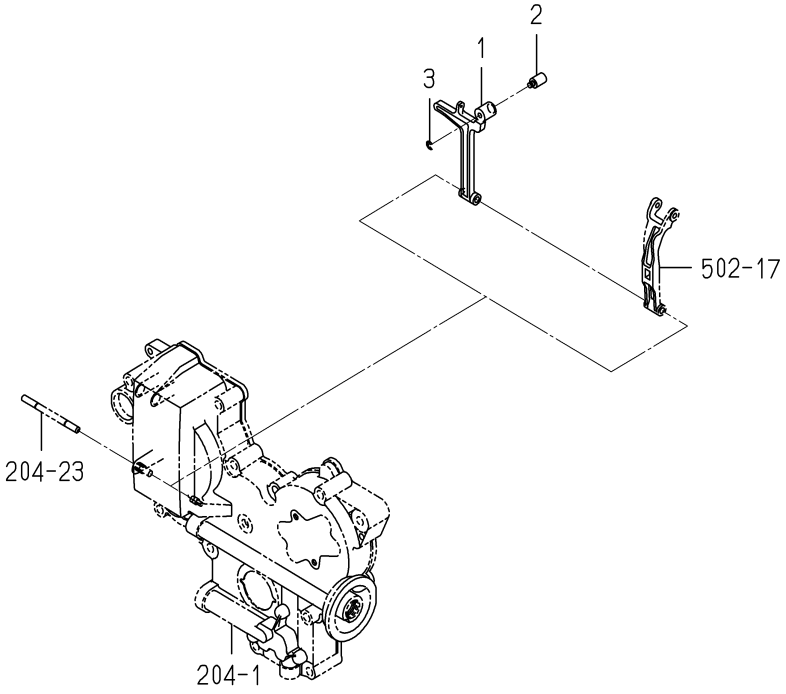

6003-560J-0100

KEY	PART CODE	DESCRIPTION	SPC	TYPE OF MODEL E269G		ITC	COL	GRP	REMARKS
1	6215-541-002-10	ARM,TENSION	*	1					
2	6215-549-029-00	PIN,ADAPTER	*	1					
3	V710-140-004-00	RING,SNAP/ 4 E	*	1					

FIG.801 ELECTRIC (1)

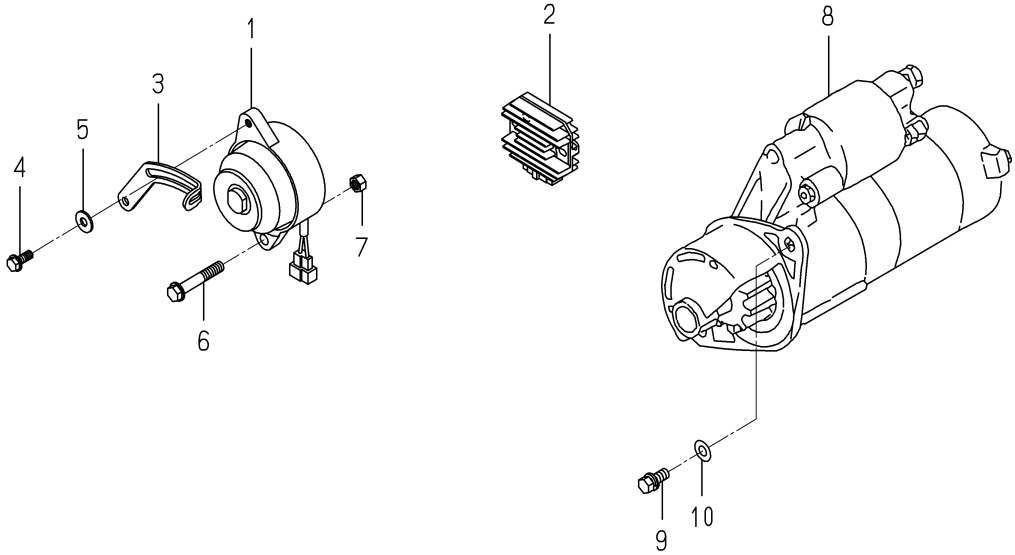

6003-801P-0100,6003-801P-0200

KEY	PART CODE	DESCRIPTION	SPC	TYPE OF MODEL E269G		ITC	COL	GRP	REMARKS
1	- - - - - -	BLANK	*						- - - - - -
1	6281-200-007-10	GENERATOR ASSY	*	1					
2	6281-270-006-00	REGULATOR	*	1					
3	6213-674-017-10	PLATE/ADJUST	*	1					
4	V231-360-802-00	FLANGEBOLT	*	1					
5	1373-121-001-00	WASHER/9X22X2	*	1					
6	V233-361-006-00	FLANGEBOLT	*	1					
7	V334-260-010-00	NUT/M10	*	1					
8	6281-100-014-00	STARTER ASSY	*	1					FIG S03
9	6901-911-025-00	BOLT	*	2					
10	V411-260-010-00	WASHER/M10	*	2					

FIG.802 ELECTRIC (2)

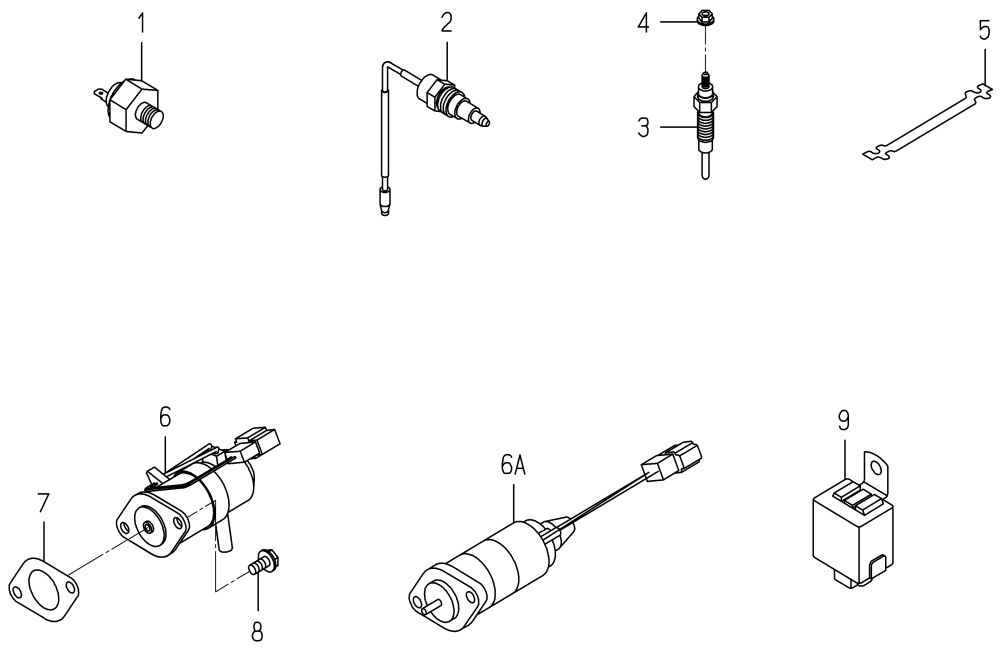

6003-820R-0100,6003-820R-0200

KEY	PART CODE	DESCRIPTION	SPC	TYPE OF MODEL E269G		ITC	COL	GRP	REMARKS
1	6281-971-001-10	SWITCH/OILPRESSURE	*	1					
2	6282-450-002-00	SWITCH/OVERHEAT	*	1					
3	6281-410-023-10	GLOWPLUG	*	2					
4	6209-440-005-00	NUT/FLANGE	*	2					
5	6219-732-003-00	CONNECTOR,GLOW PLUG	*	1					
6	- - - - - -	BLANK	*						- - - - - -
6A	6281-910-015-00	SOLENOID	*	1					
7	6209-630-002-10	GASKET	*	1					
8	- - - - - -	BLANK	*						- - - - - -
8	V230-360-601-60	FLANGEBOLT	*	2					
9	6281-920-001-00	RELAY,SOLENOID	*	1					

FIG.P01 SHORT BLOCK ENGIASSY

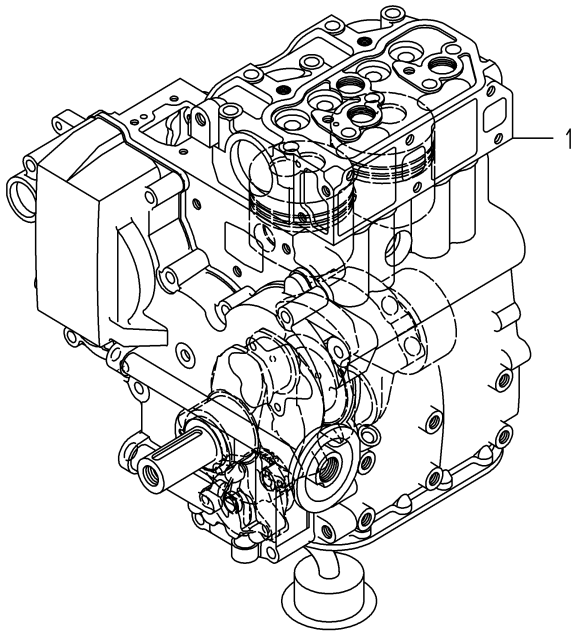

6003-012V-0100

KEY	PART CODE	DESCRIPTION	SPC	TYPE OF MODEL		ITC	COL	GRP	REMARKS
				E269G					
1	6003-010-080-00	SHORTBLOCKENGIN ASSY	T	1					

FIG.P02 BEARING/UNDER SIZE (OPTION)

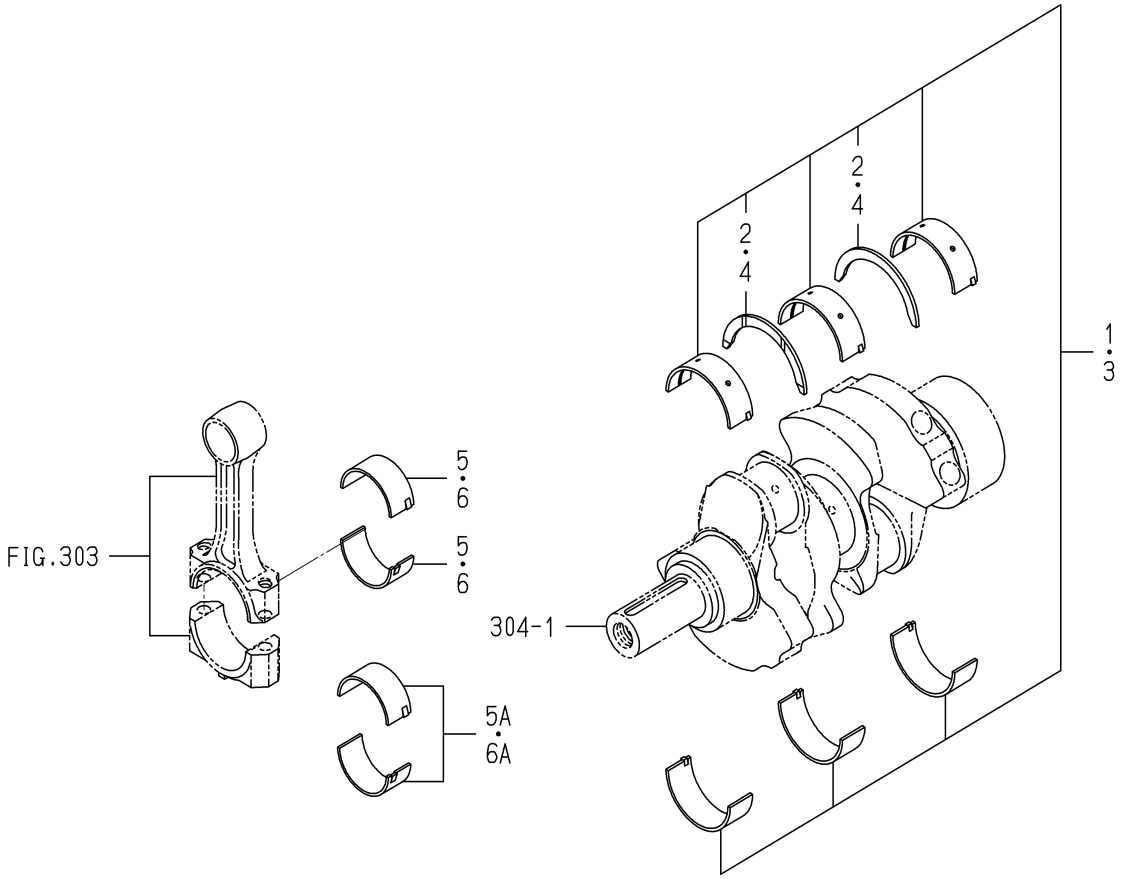

6003-209A-0100

KEY	PART CODE	DESCRIPTION	SPC	TYPE OF MODEL E269G		ITC	COL	GRP	REMARKS
1	6211-540-002-00	METAL,CRANK	T	1					
2	6211-599-001-10	BEARING,THRUST CRANK	T	2					
3	6211-560-002-00	METAL,CRANK	T	1					
4	6211-599-001-10	BEARING,THRUST CRANK	T	2					
5	- - - - - -	BLANK	T						- - - - - -
5A	- - - - - -	BLANK	T						- - - - - -
5A	6212-274-016-00	BEARING/CONNECTING R	T	2					
6	- - - - - -	BLANK	T						- - - - - -
6A	- - - - - -	BLANK	T						- - - - - -
6A	- - - - - -	BLANK	T						- - - - - -
6A	6212-276-016-00	BEARING/CONNECTING R	T	2					

FIG.P03 PISTON/OVER SIZE (OPTION)

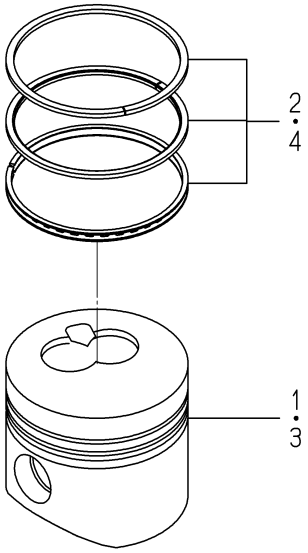

6003-349L-0100

KEY	PART CODE	DESCRIPTION	SPC	TYPE OF MODEL		ITC	COL	GRP	REMARKS
				E269G					
1	6212-114-100-00	PISTON/OV	T	2					
2	6212-124-009-10	RING/PISTON/OV SET	T	2					
3	6212-116-100-00	PISTON/OV	T	2					
4	6212-126-009-10	RING/PISTON/OV SET	T	2					

FIG.P04 REPAIR PARTS (OPTION)

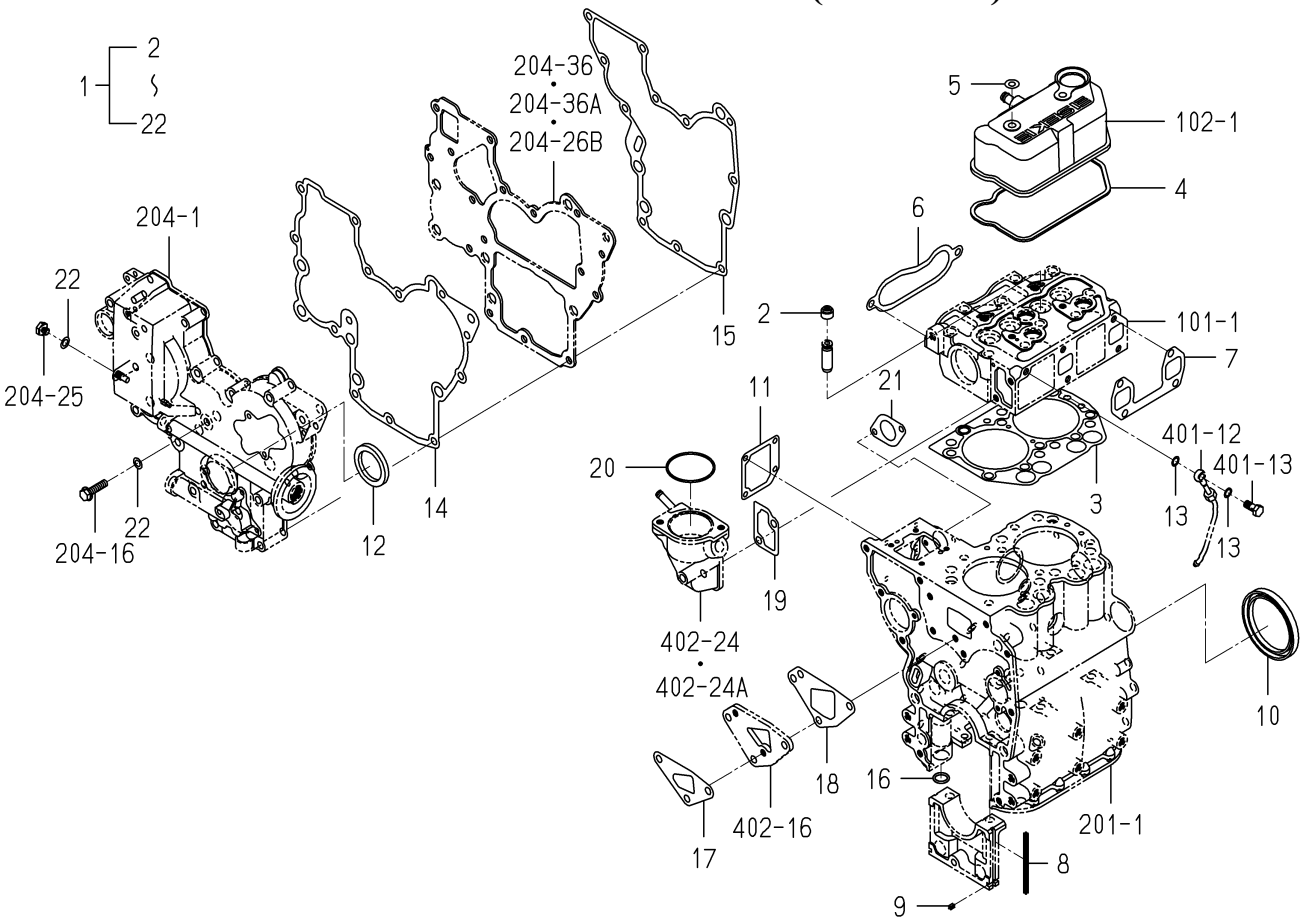

6003-999H-0100

KEY	PART CODE	DESCRIPTION	SPC	TYPE OF MODEL E269G		ITC	COL	GRP	REMARKS
1	6287-810-054-00	REPAIR/ENGINESET	T	1					
2	6212-569-002-00	SEAL,OIL	T	4					
3	6211-141-016-10	GASKET/CYLINDERHEAD	T	1					
4	6211-173-004-00	SEAL,CYL COVER	T	1					
5	6209-572-003-00	GASKET	T	2					
6	6214-115-002-20	GASKET	T	1					
7	6214-145-006-10	GASKET EXHAUST MANIF	T	1					
8	6211-258-001-00	SEAL,BEARING CAP	T	4					
9	6211-258-002-00	SEAL,BEARING CAP/7	T	2					
10	- - - - - -	BLANK	T						- - - - - -
10	6209-625-001-00	SEAL,OIL	T	1					
11	6211-292-001-20	GASKET/COVER	T	1					
12	6209-625-002-00	SEAL,OIL	T	1					
13	6209-920-002-00	PACKING	T	2					
14	6211-312-001-30	GASKET/GEARCASE	T	1					
15	6211-312-002-30	GASKET/PLATE	T	1					
16	V720-102-401-50	O-RING/P15	T	1					
17	6213-614-003-10	GASKET/WATER PUMP	T	1					
18	6213-614-006-20	GASKET(SPACER)	T	1					
19	6213-743-002-10	GASKET/HOUSING	T	1					
20	V723-102-005-50	O-RING	T	1					
21	6209-630-002-10	GASKET	T	1					
22	6209-500-003-00	WASHER/08X14X01	T	2					

FIG.S01 COMPONENT PARTS FOR 6215-300-045-10 ON Fig.501

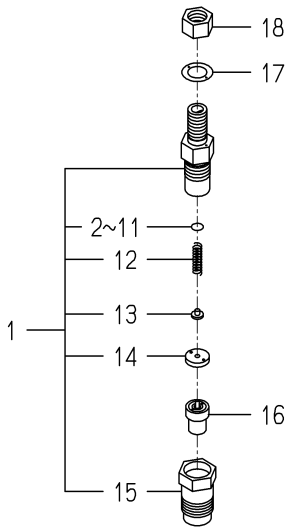

6215-300-045-1B

KEY	PART CODE	DESCRIPTION	SPC	TYPE OF MODEL		ITC	COL	GRP	REMARKS
				E269G					
1	6215-330-028-00	HOLDER/NOZZLEASSY	*	2					
2	6215-345-044-00	SHIM/0.10	*	2					
3	6215-345-045-00	SHIM/0.20	*	2					
4	6215-345-046-00	SHIM/0.30	*	2					
5	6215-345-047-00	SHIM/0.40	*	2					
6	6215-345-048-00	SHIM/0.50	*	2					
7	6215-345-049-00	SHIM/0.52	*	2					
8	6215-345-050-00	SHIM/0.54	*	2					
9	6215-345-051-00	SHIM/0.56	*	2					
10	6215-345-052-00	SHIM/0.58	*	2					
11	6215-345-053-00	SHIM/0.80	*	2					
12	6215-343-010-00	SPRINGNOZZLE	*	2					
13	6215-342-013-00	SPRINGSEAT	*	2					
14	6215-339-004-00	SPACER	*	2					
15	6215-332-014-00	NUT/NOZZLERETAINING	*	2					
16	6215-311-036-00	NOZZLE	*	2					
17	6215-359-003-00	GASKET	*	2					
18	6215-359-004-00	NUT	*	2					

FIG.S02 COMPONENT PARTS FOR 6215-600-147-00 ON Fig.502

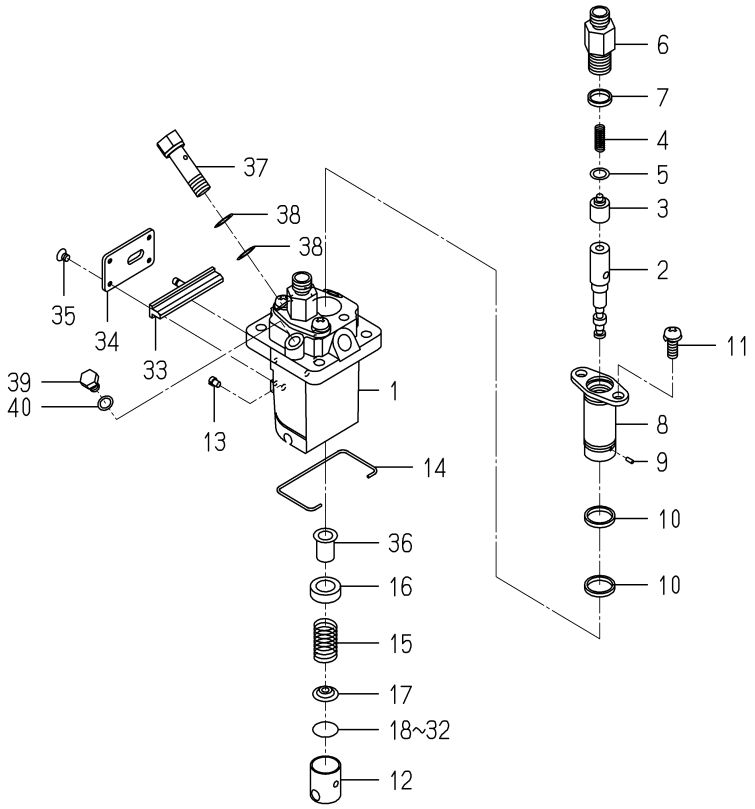

6215-600-147-0C

KEY	PART CODE	DESCRIPTION	SPC	TYPE OF MODEL E269G		ITC	COL	GRP	REMARKS
1	6215-611-003-00	HOUSING PUMP	*	1					
2	6215-631-017-00	PLUNGER ASSY	*	2					
3	6215-641-002-00	VALVE,DELIVERY	*	2					
4	6215-643-002-00	SPRING DELIVERY VALV	*	2					
5	6215-649-003-00	GASKET	*	2					
6	6215-644-003-00	HOLDER,DELIVERYVALVE	*	2					
7	6215-649-004-10	ORING	*	2					
8	6215-635-002-00	SLEEVE,FRANGE	*	2					
9	6215-649-005-00	PIN	*	2					
10	6215-649-006-10	ORING	*	4					
11	6215-649-007-00	SCREW	*	4					
12	6215-622-002-00	TAPPET	*	2					
13	6215-629-017-00	PIN	*	2					
14	6215-629-019-00	RING SNAP	*	1					
15	6215-634-002-00	SPRING,PLUNGER	*	2					
16	6215-639-006-00	SEAT,SPRING	*	2					
17	6215-639-007-00	SEAT,SPRING	*	2					
18	6215-629-020-00	PLATE/T=1.80	*	1					
19	6215-629-021-00	PLATE/T=1.85	*	1					
20	6215-629-022-00	PLATE/T=1.90	*	1					
21	6215-629-023-00	PLATE/T=1.95	*	1					
22	6215-629-024-00	PLATE/T=2.00	*	1					
23	6215-629-025-00	PLATE/T=2.05	*	1					
24	6215-629-026-00	PLATE/T=2.10	*	1					
25	6215-629-027-00	PLATE/T=2.15	*	1					
26	6215-629-028-00	PLATE/T=2.20	*	1					
27	6215-629-029-00	PLATE/T=2.25	*	1					
28	6215-629-030-00	PLATE/T=2.30	*	1					
29	6215-629-031-00	PLATE/T=2.35	*	1					
30	6215-629-032-00	PLATE/T=2.40	*	1					

FIG.S02 COMPONENT PARTS FOR 6215-600-147-00 ON Fig.502

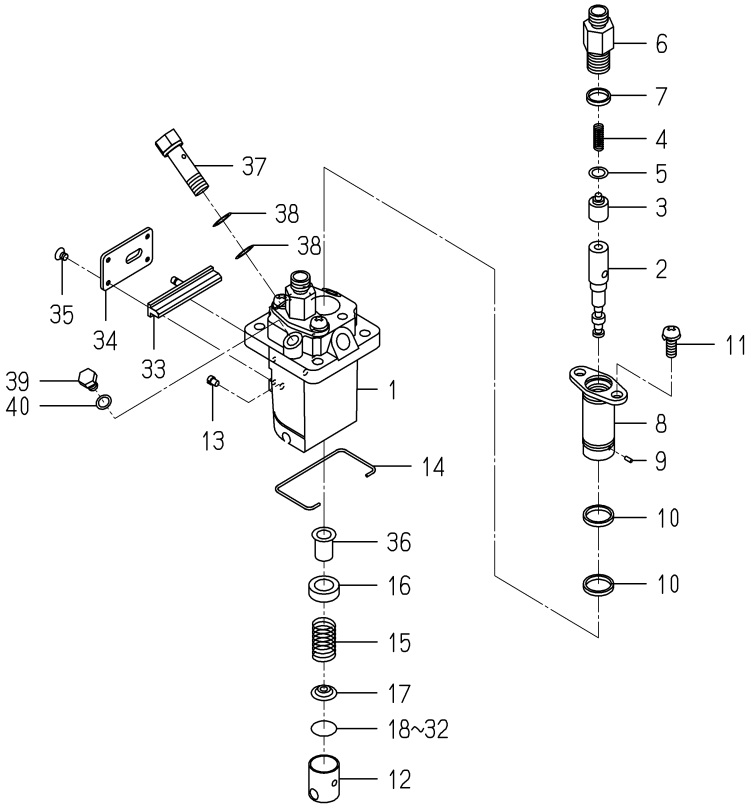

6215-600-147-0C

KEY	PART CODE	DESCRIPTION	SPC	TYPE OF MODEL E269G		ITC	COL	GRP	REMARKS
31	6215-629-033-00	PLATE/T=2.45	*	1					
32	6215-629-034-00	PLATE/T=2.50	*	1					
33	6215-637-003-00	ROD CONTROL	*	1					
34	6215-612-003-00	PLATE	*	1					
35	6215-619-012-00	SCREW	*	4					
36	6215-635-008-00	CONTROLSLEEVE	*	2					
37	6215-619-013-00	BOLT,EYE	*	1					
38	6215-619-014-00	GASKET	*	2					
39	6215-619-015-00	BOLT	*	1					
40	6215-619-016-00	GASKET	*	1					

FIG.S03 COMPONENT PARTS FOR 6281-100-014-00 ON Fig.801

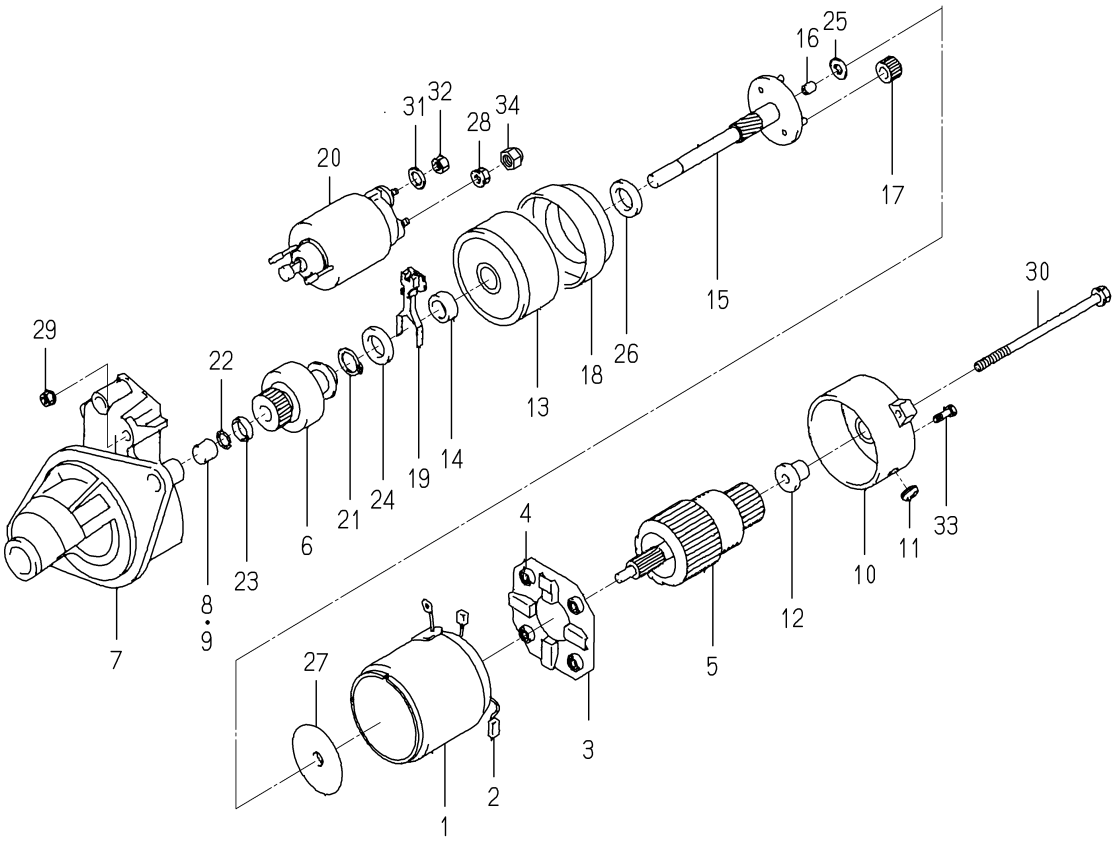

6281-100-014-0A

KEY	PART CODE	DESCRIPTION	SPC	TYPE OF MODEL E269G		ITC	COL	GRP	REMARKS
1	6281-111-009-00	YOKE/STARTER ASSY	*	1					
2	6281-119-009-00	BRUSH/STARTER	*	2					
3	6281-118-007-00	HOLDER/STARTER ASSY	*	1					
4	6281-117-003-00	SPRING/STARTERBRUSH	*	4					
5	6281-121-010-00	ARMATURE/STARTE ASSY	*	1					
6	6281-124-011-00	CLUTCH/STARTER ASSY	*	1					
7	6281-129-064-00	HOUSING/STARTER ASSY	*	1					
8	- - - - - -	BLANK	*						- - - - - -
8	6281-129-080-00	BEARING/NEEDLE	*	1					
9	6281-129-058-00	BEARING/NEEDLE	*	1					
10	6281-115-017-00	FRAME/COMMUTATOR END	*	1					
11	6281-115-018-00	COVER	*	1					
12	6281-129-065-00	BEARING/OILLESS	*	1					
13	6281-129-066-00	BEARING/WITH SHOCKAB	*	1					
14	6281-129-067-00	BEARING/OILLESS	*	1					
15	6281-129-068-00	SHAFT/STARTER PLANET	*	1					
16	6281-129-069-00	BEARING/OILLESS	*	1					
17	6281-129-070-00	GEAR/STARTER PLANETA	*	3					
18	6281-129-071-00	GEAR/STARTERINTERNAL	*	1					
19	6281-127-003-00	LEVER/PINIONDRIVE	*	1					
20	6281-151-014-00	SWITCH/MAGNETIC ASSY	*	1					
21	6281-129-072-00	RING/SNAP	*	1					
22	6281-129-073-00	RING/SNAP	*	1					
23	6281-129-074-00	NUT/PINIONSTOP	*	1					
24	6281-129-075-00	WASHER/SK	*	1					
25	6281-129-076-00	WASHER/SK	*	1					
26	6281-129-077-00	WASHER/SK	*	1					
27	6281-129-078-00	PLATE	*	1					
28	6281-129-030-00	NUT	*	1					
29	6281-129-029-00	NUT	*	2					

FIG.S03 COMPONENT PARTS FOR 6281-100-014-00 ON Fig.801

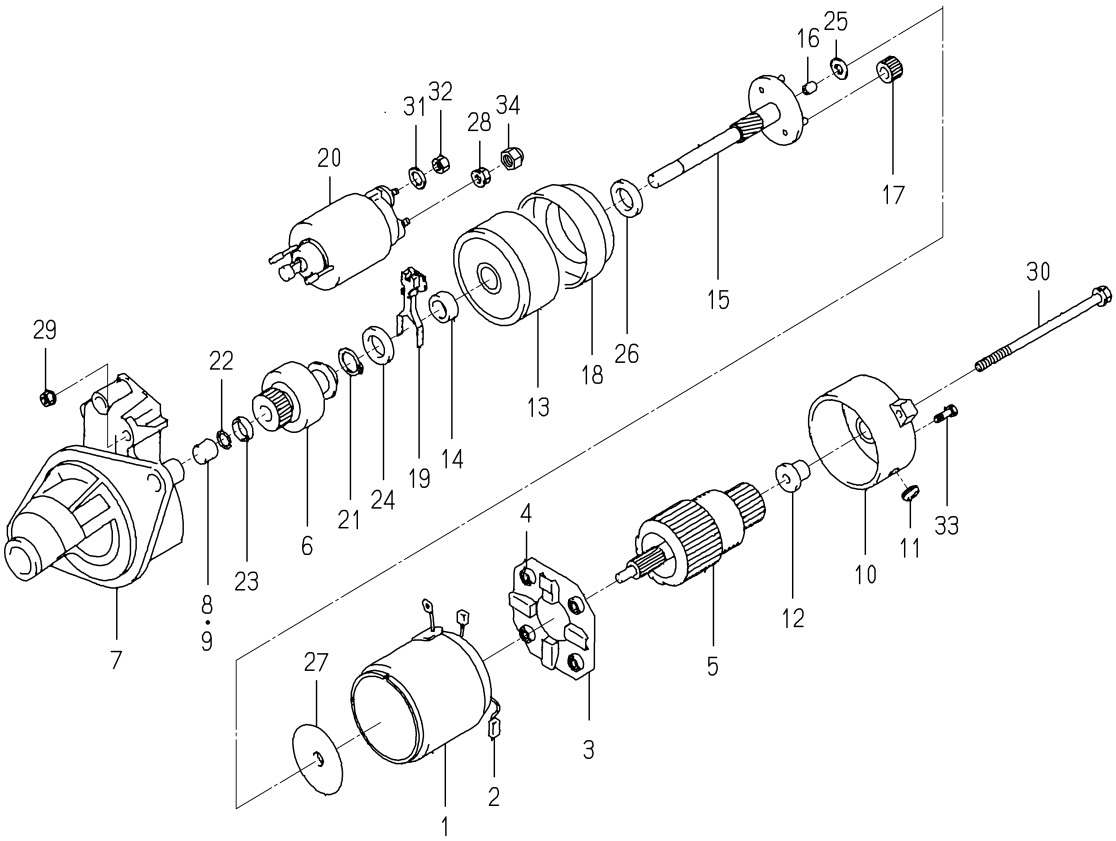

6281-100-014-0A

KEY	PART CODE	DESCRIPTION	SPC	TYPE OF MODEL E269G		ITC	COL	GRP	REMARKS
30	6281-129-043-00	BOLT/THROUGH	*	2					
31	6909-150-508-00	WASHER	*	1					
32	6909-110-408-00	NUT/M8	*	1					
33	6281-129-062-00	SCREW	*	2					
34	6281-129-079-00	NUT	*	1					

C H A S S I S

FIG.101 BRACKET(ENGINE)SYSTEM

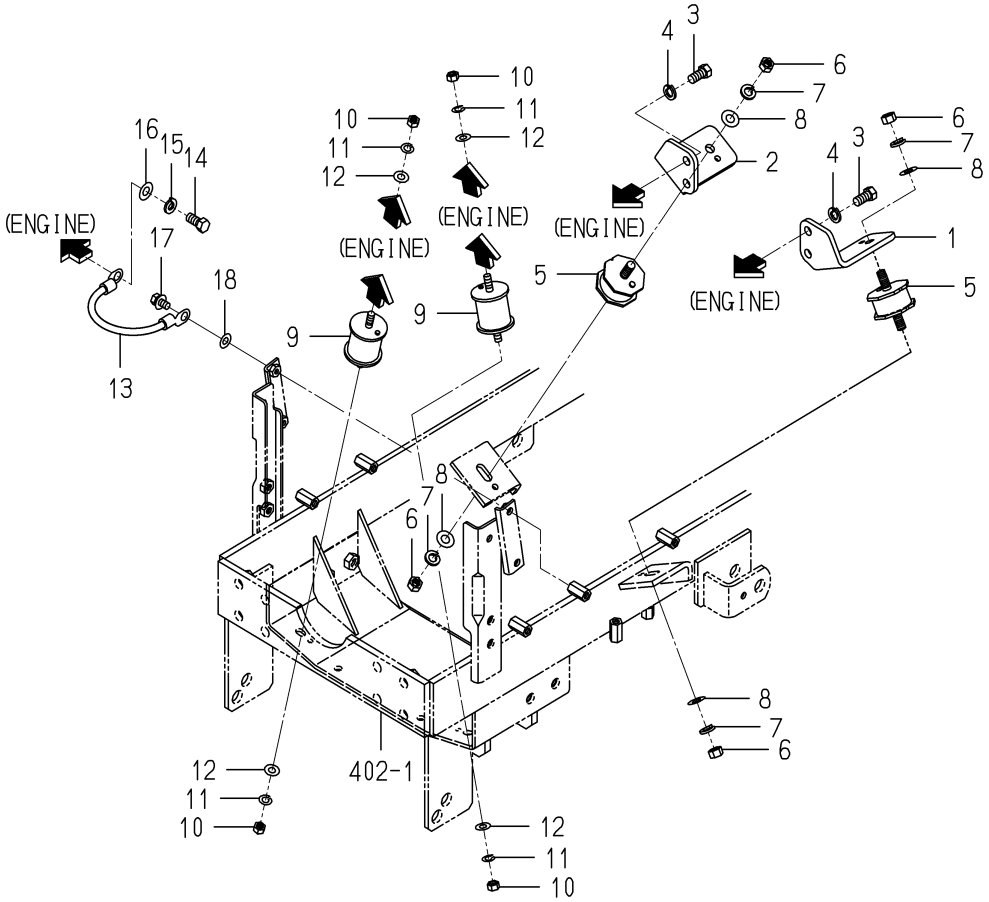

1782-101 -0100

KEY	PART CODE	DESCRIPTION	SPC	TYPE OF MODEL SXG15H		ITC	COL	GRP	REMARKS
1	1782-101-002-00	PLATE/LH	*	1					
2	1782-101-003-00	PLATE/RH	*	1					
3	V203-461-002-00	BOLT/M10X1.25X20	*	4					
4	V401-160-010-00	WASHER,SP/M10	*	4					
5	3623-150-004-10	INSULATOR/MOUNT/RH	*	2					
6	V304-260-010-00	NUT	*	4					
7	V401-160-010-00	WASHER,SP/M10	*	4					
8	V411-260-010-00	WASHER/M10	*	4					
9	1593-101-003-20	INSULATOR	*	2					
10	V304-460-008-00	NUT/M8	*	4					
11	V401-160-008-00	WASHER,SP/M 8	*	4					
12	V411-260-008-00	WASHER,PL/M 8	*	4					
13	3623-263-001-00	WIRE,LEAD	*	1					
14	V203-461-002-00	BOLT/M10X1.25X20	*	1					
15	V401-160-010-00	WASHER,SP/M10	*	1					
16	V411-260-010-00	WASHER/M10	*	1					
17	V211-360-801-60	BOLT,SEMS (SP)	*	1					
18	V411-260-008-00	WASHER,PL/M 8	*	1					

FIG.102 RADIATOR SYSTEM

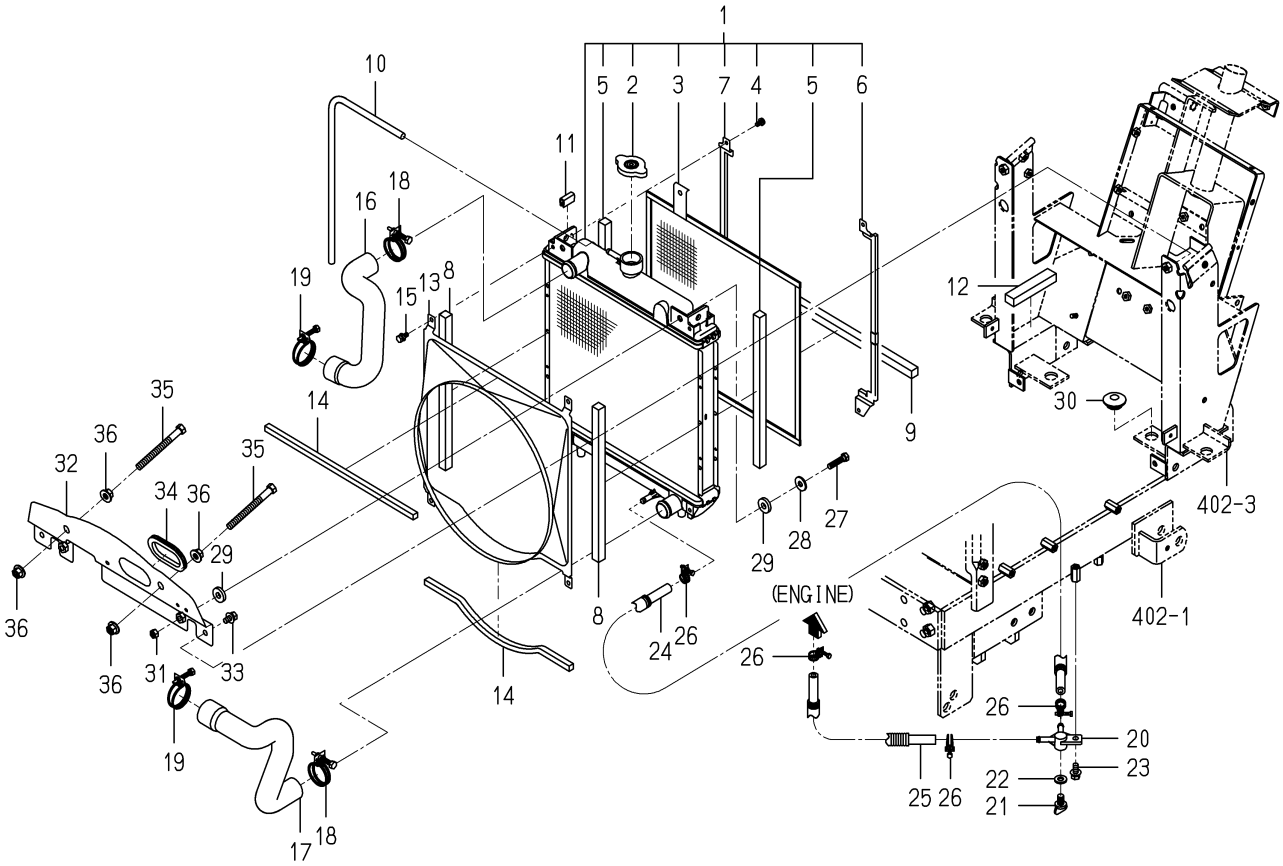

1782-102A-0100

KEY	PART CODE	DESCRIPTION	SPC	TYPE OF MODEL SXG15H		ITC	COL	GRP	REMARKS
1	1703-102-200-20	RADIATOR ASSY	*	1					
2	1650-102-202-10	CAP	*	1					
3	1703-102-202-00	PROTECTOR	*	1					
4	1703-102-203-00	SCREW/P	*	4					
5	1703-102-204-00	INSULATOR	*	2					
6	1703-102-205-00	GUIDE	*	1					
7	1703-102-206-00	GUIDE	*	1					
8	1703-102-001-00	INSULATOR	*	2					
9	1782-102-005-00	SEAL/15X15X350	*	1					
10	1703-102-008-00	HOSE/08X10X500	*	1					
11	3805-371-007-00	PAD/25	*	1					
12	1782-102-006-00	INSULATOR	*	2					
13	1782-102-001-00	SHROUD	*	1					
14	1703-102-003-00	INSULATOR	*	2					
15	V210-360-601-20	BOLT,SEMS	*	4					
16	1703-102-004-00	HOSE/RADIATOR/INLET	*	1					
17	1703-102-005-00	HOSE/RADIATOR/OUTLET	*	1					
18	J061-230-038-00	CLAMP/WIRE/30-38	*	2					
19	J061-234-042-00	CLAMP/WIRE/34-42	*	2					
20	1560-104-010-40	CONNECTOR	*	1					
21	1424-101-203-00	PLUG	*	1					
22	1424-101-204-00	PACKING	*	1					
23	V211-360-802-00	BOLT/SP	*	1					
24	1728-102-220-00	HOSE/290 ASSY	*	1					
25	1728-102-220-00	HOSE/290 ASSY	*	1					
26	J061-210-015-00	CLAMP/WIRE/10-15	*	4					
27	V201-260-803-50	BOLT/M 8X35	*	2					
28	4101-102-038-00	WASHER/24X9X3.2	*	2					
29	1423-616-004-00	CUSHION/RUBBER/10X25	*	4					
30	1421-603-004-00	BUSH,LEVER	*	2					

FIG.102 RADIATOR SYSTEM

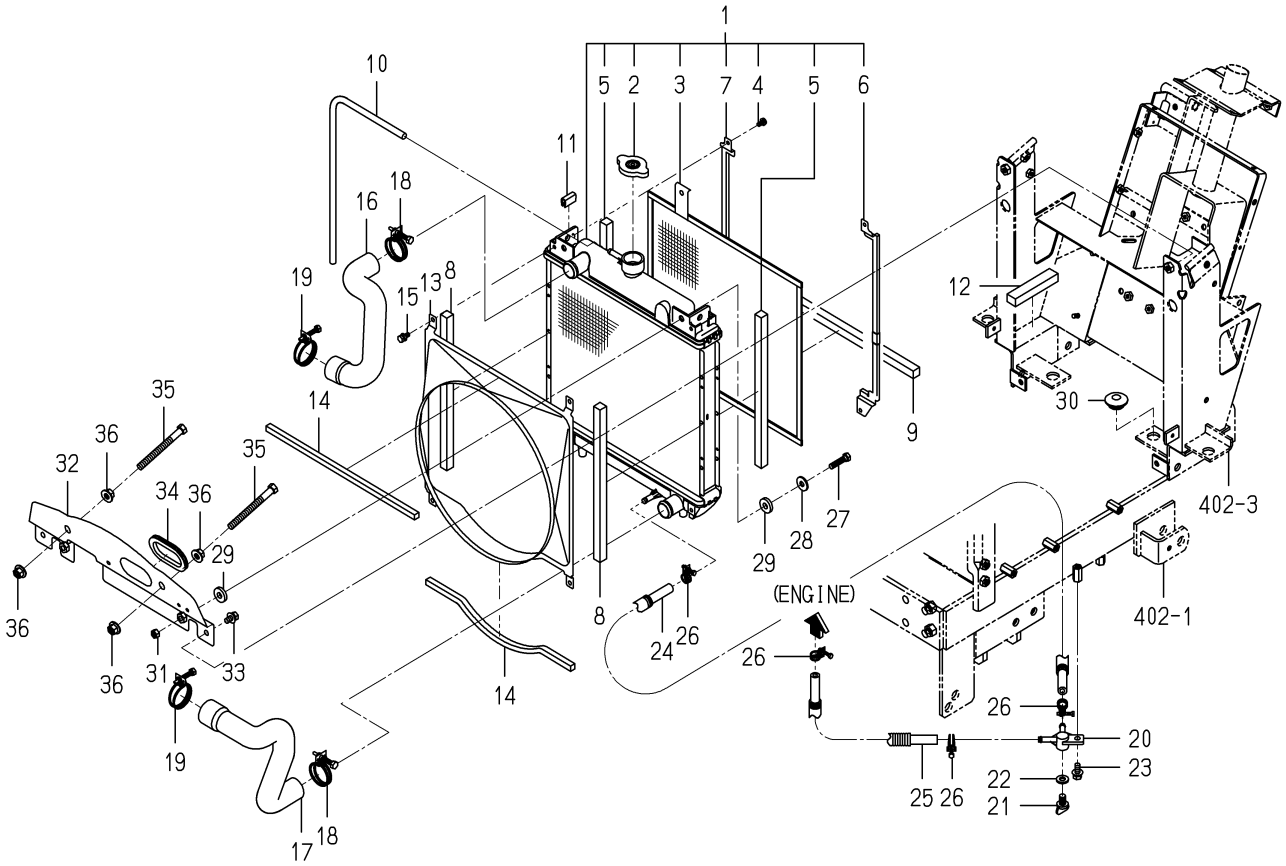

1782-102A-0100

KEY	PART CODE	DESCRIPTION	SPC	TYPE OF MODEL SXG15H		ITC	COL	GRP	REMARKS
31	V304-260-008-00	NUT	*	2					
32	1782-102-510-00	PANEL/RADIATOR COMP	*	1					
33	V211-360-801-60	BOLT,SEMS (SP)	*	2					
34	1724-102-012-00	TRIM/188	*	1					
35	V201-261-010-00	BOLT/M10X100	*	2					
36	V363-260-010-00	NUT/M10	*	4					

FIG.103 MUFFLER SYSTEM

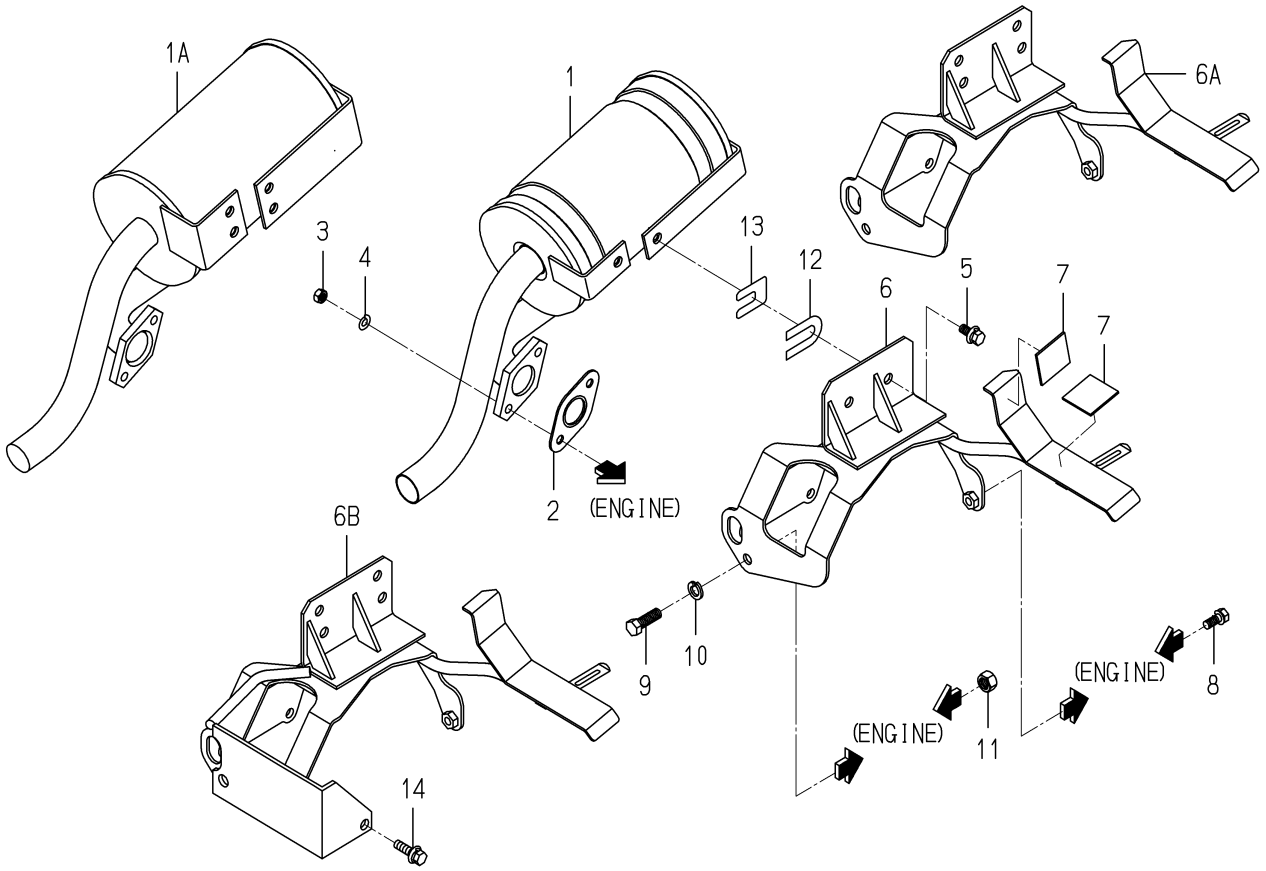

1782-103 -0100

KEY	PART CODE	DESCRIPTION	SPC	TYPE OF MODEL SXG15H		ITC	COL	GRP	REMARKS
1	- - - - - -	BLANK	*						- - - - - -
1A	- - - - - -	BLANK	*						- - - - - -
1A	1782-103-300-10	MUFFLER COMP	*	1					
2	3659-301-001-00	GASKET	*	1					
3	V304-700-008-00	NUT	*	2					
4	V401-700-008-00	WASHER/LOCK	*	2					
5	V211-660-802-00	BOLT/8X20	*	4					
6	- - - - - -	BLANK	*						- - - - - -
6A	- - - - - -	BLANK	*						- - - - - -
6B	1782-103-510-10	BRACKET/MUFFLER COMP	*	1					
7	1427-111-229-00	CUSHION,RUBBER	*	2					
8	V211-660-802-00	BOLT/8X20	*	1					
9	- - - - - -	BLANK	*						- - - - - -
9	V203-361-003-50	BOLT	*	1					
10	V401-160-010-00	WASHER,SP/M10	*	1					
11	V304-260-012-00	NUT/M12	*	1					
12	- - - - - -	BLANK	*						- - - - - -
12	- - - - - -	BLANK	*						- - - - - -
12	3814-302-023-00	SHIM, 1.2	*	8					
13	- - - - - -	BLANK	*						- - - - - -
13	- - - - - -	BLANK	*						- - - - - -
13	1725-103-002-00	SHIM/0.6/B	*	4					
14	V211-660-803-00	BOLT/SP	*	1					

FIG.104 CLEANER(AIR)SYSTEM

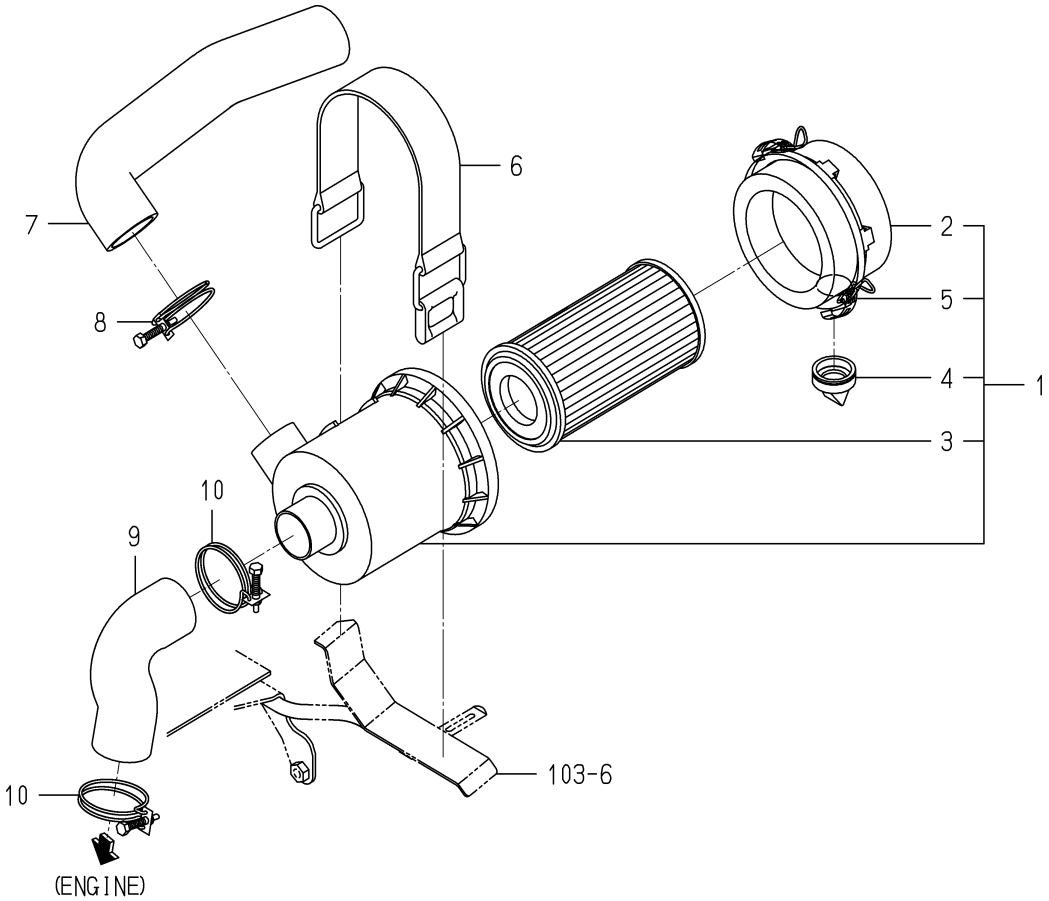

1782-104 -0100

KEY	PART CODE	DESCRIPTION	SPC	TYPE OF MODEL SXG15H		ITC	COL	GRP	REMARKS
1	1728-104-210-00	CLEANER/AIR ASSY	*	1					
2	1675-104-211-00	COVER ASSY	*	1					
3	1675-104-213-00	ELEMENT ASSY	*	1					
4	1544-104-205-00	VALVE	*	1					
5	1650-104-201-00	CLIP	*	2					
6	1614-104-001-10	BAND/CLEANER	*	1					
7	- - - - - -	BLANK	*						- - - - - -
7	1782-104-001-00	HOSE/CLEANER/INLET	*	1					
8	J061-247-055-00	CLAMP/WIRE/47-55	*	1					
9	1703-104-002-00	HOSE/CLEANER/OUTLET	*	1					
10	J061-247-055-00	CLAMP/WIRE/47-55	*	2					

FIG.105 PUMP(FUEL)SYSTEM

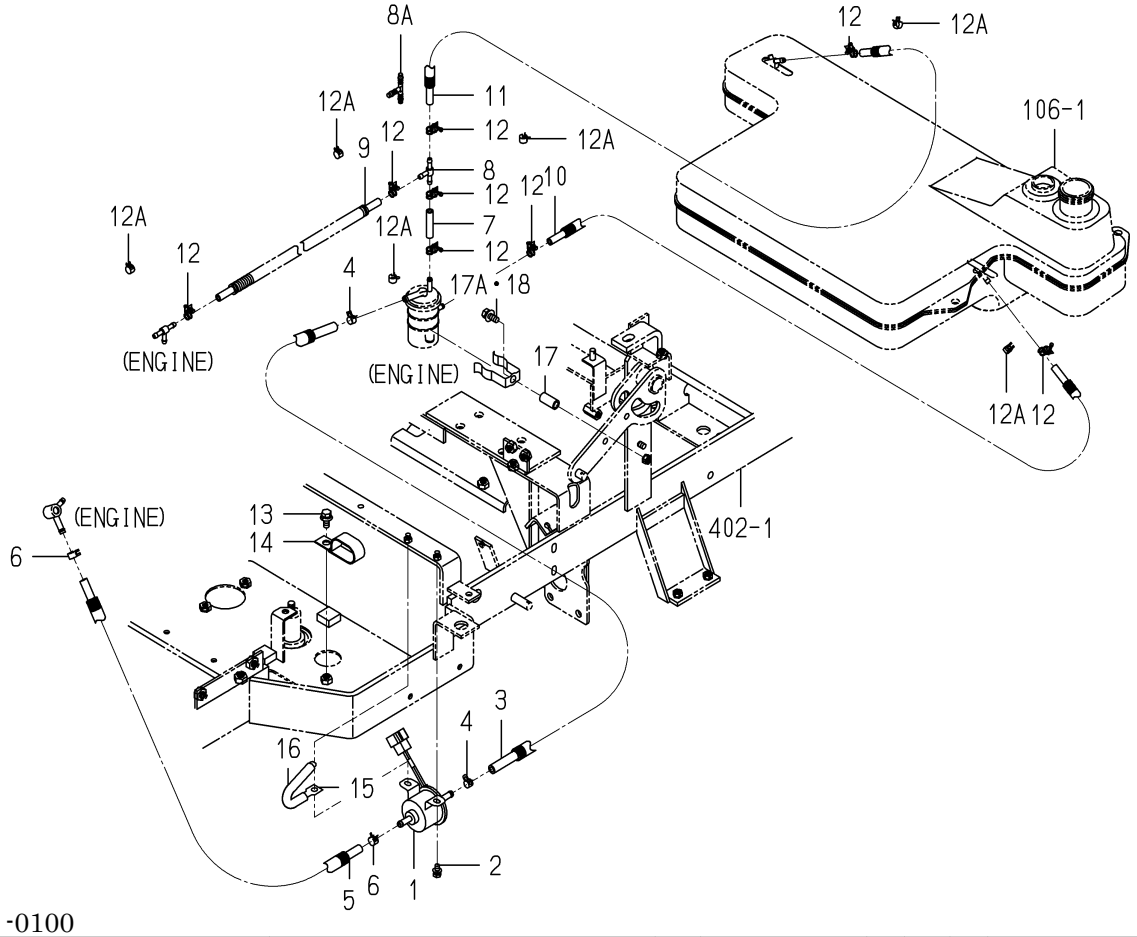

1782-105 -0100

KEY	PART CODE	DESCRIPTION	SPC	TYPE OF MODEL SXG15H		ITC	COL	GRP	REMARKS
1	3829-311-200-00	PUMP/FUEL ASSY	*	1					
2	V210-360-601-60	BOLT(SP)/M6X16	*	2					
3	1770-105-001-00	HOSE/08X13X370	*	1					
4	1650-111-034-00	CLIP/HOSE/11-13	*	2					
5	1782-105-230-00	HOSE/08X12X1100 ASSY	*	1					
6	J062-119-126-00	CLIP/HOSE/11.9-12.6	*	2					
7	------	BLANK	*						------
7	1782-105-001-10	HOSE/06X10X45	*	1					
8	------	BLANK	*						------
8A	3819-311-013-00	T-JOINT (6X6X6)	*	1					
9	1728-105-230-00	HOSE/06X10X1650 ASSY	*	1					
10	1782-105-210-00	HOSE/06X10X250 ASSY	*	1					
11	1782-105-240-00	HOSE/06X10X800 ASSY	*	1					
12	------	BLANK	*						------
12A	J062-104-111-00	CLIP/HOSE/10.4-11.1	*	8					
13	------	BLANK	*						------
13	V211-360-802-00	BOLT/SP	*	1					
14	1444-101-016-10	CLAMP,RADIATOR HOSE	*	1					
15	1650-650-015-00	CLAMP	*	1					
16	1650-650-017-00	TUBE/120	*	1					
17	------	BLANK	*						------
17A	V211-360-801-60	BOLT,SEMS (SP)	*	1					
18	------	BLANK	*						------

FIG.106 TANK(FUEL)SYSTEM

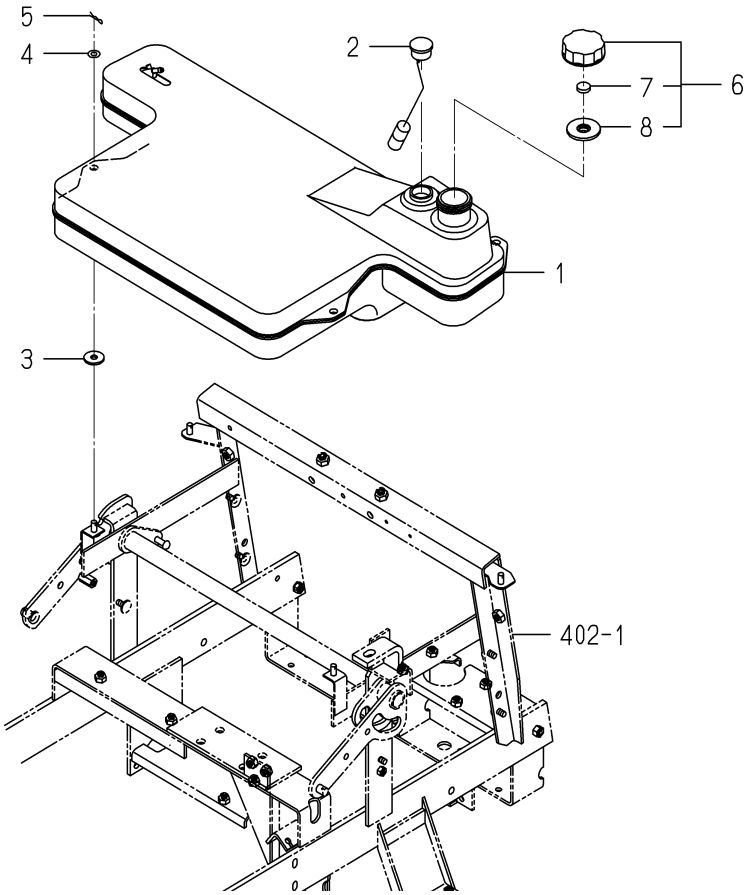

1782-111 -0100

KEY	PART CODE	DESCRIPTION	SPC	TYPE OF MODEL SXG15H		ITC	COL	GRP	REMARKS
1	1782-111-001-00	TANK/FUEL	*	1					
2	1782-111-210-00	GAUGE/FUEL ASSY	*	1					
3	1593-612-005-00	INSULATOR/10X30X03	*	4					
4	V411-260-008-00	WASHER,PL/M 8	*	4					
5	V560-160-008-00	PIN/SNAP	*	4					
6	1593-612-220-10	CAP,TANK	*	1					
7	2706-501-003-00	BREATHER,TANK CAP	*	1					
8	2706-501-004-00	GASKET	*	1					

FIG.107 BATTERY SYSTEM

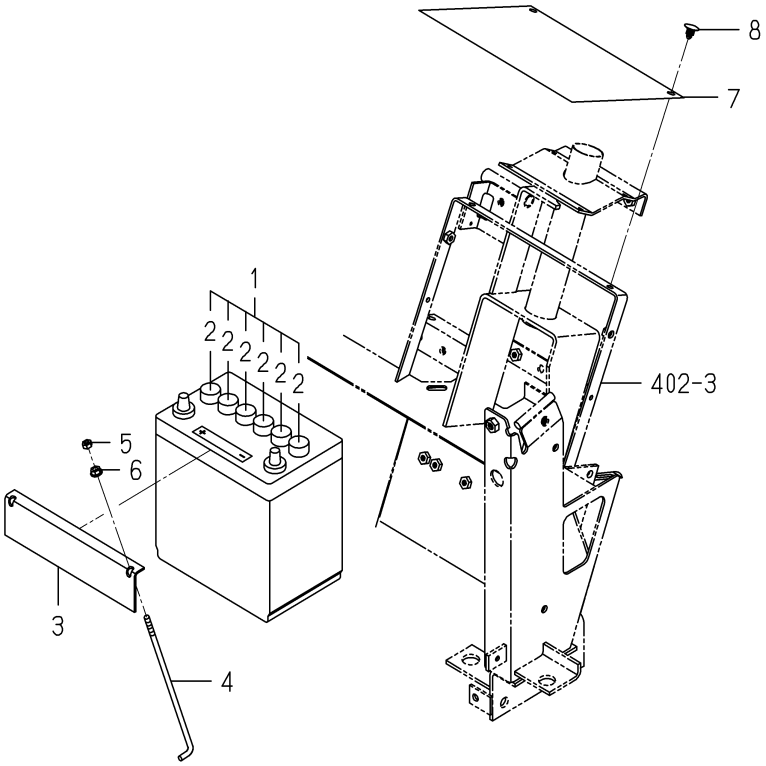

1782-112 -0100

KEY	PART CODE	DESCRIPTION	SPC	TYPE OF MODEL SXG15H		ITC	COL	GRP	REMARKS
1	- - - - - -	BLANK	*						- - - - - -
1	1672-112-240-10	BATTERY/44B19R ASSY	*	1					
2	- - - - - -	BLANK	*						- - - - - -
3	2512-650-002-10	BATTERY CAP	*	1					
4	1675-112-002-00	BOLT/BATTERY	*	2					
5	V301-260-006-00	NUT/M6	*	2					
6	V360-260-006-00	NUT/M6	*	2					
7	- - - - - -	BLANK	*						- - - - - -
8	- - - - - -	BLANK	*						- - - - - -

FIG.108 LEVER(ACCELERATOR)SYSTEM

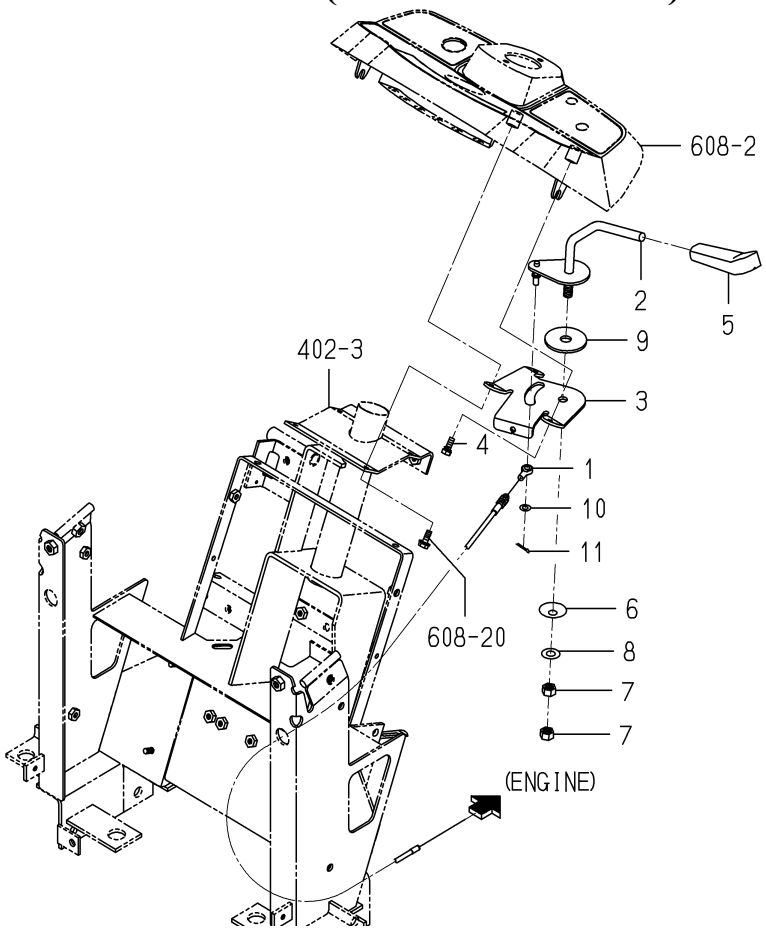

1782-117 -0100

KEY	PART CODE	DESCRIPTION	SPC	TYPE OF MODEL SXG15H		ITC	COL	GRP	REMARKS
1	- - - - - -	BLANK	*						- - - - - -
1	1705-117-230-10	CABLE/ACCELERATOR	*	1					
2	- - - - - -	BLANK	*						- - - - - -
2	1782-117-210-10	LEVER/ACCELERATOR	*	1					
3	1705-117-001-00	PLATE/ACCELERATOR	*	1					
4	V210-360-601-60	BOLT(SP)/M6X16	*	1					
5	1646-116-051-10	GRIP/THROTTLE	*	1					
6	1593-117-003-10	SPRING,DISK	*	1					
7	V304-260-010-00	NUT	*	2					
8	V411-260-010-00	WASHER/M10	*	1					
9	- - - - - -	BLANK	*						- - - - - -
9	1600-505-007-10	LINING/13X50X03	*	1					
10	V411-260-006-00	WASHER / M6	*	1					
11	V500-162-001-50	PIN,SPLIT/2 X15	*	1					

FIG.109 SHAFT(INPUT)SYSTEM

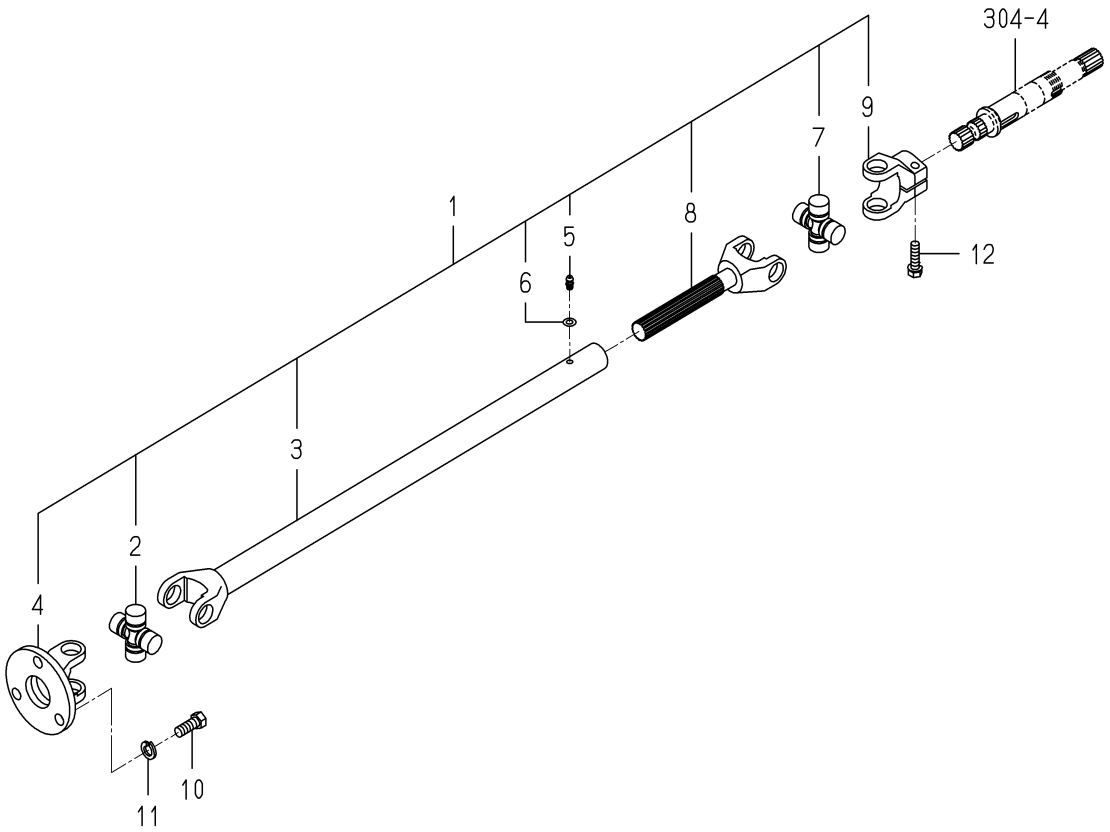

1782-120 -0100

KEY	PART CODE	DESCRIPTION	SPC	TYPE OF MODEL SXG15H		ITC	COL	GRP	REMARKS
1	1782-120-220-00	JOINT/UNIVERSAL SET	*	1					
2	- - - - - -	BLANK	*						- - - - - -
2	1752-120-201-00	JOINT/UNIVERSAL ASSY	*	1					
3	1782-120-232-00	SLEEVEYOKE	*	1					
4	- - - - - -	BLANK	*						- - - - - -
4	1728-120-221-00	FRANGE/YOKE	*	1					
5	- - - - - -	BLANK	*						- - - - - -
5	1752-120-206-00	NIPPLE/GREASE	*	1					
6	1782-120-235-00	WASHER	*	1					
7	- - - - - -	BLANK	*						- - - - - -
7	1752-120-201-00	JOINT/UNIVERSAL ASSY	*	1					
8	1782-120-241-00	SHAFTYOKE	*	1					
9	- - - - - -	BLANK	*						- - - - - -
9	1752-120-204-00	CLAMP/YOKE	*	1					
10	V203-361-002-50	BOLT	*	3					
11	- - - - - -	BLANK	*						- - - - - -
11	V401-160-010-00	WASHER,SP/M10	*	3					
12	V211-560-803-00	BOLT/M8X30	*	1					

FIG.110 METAL(COUNTER)SYSTEM

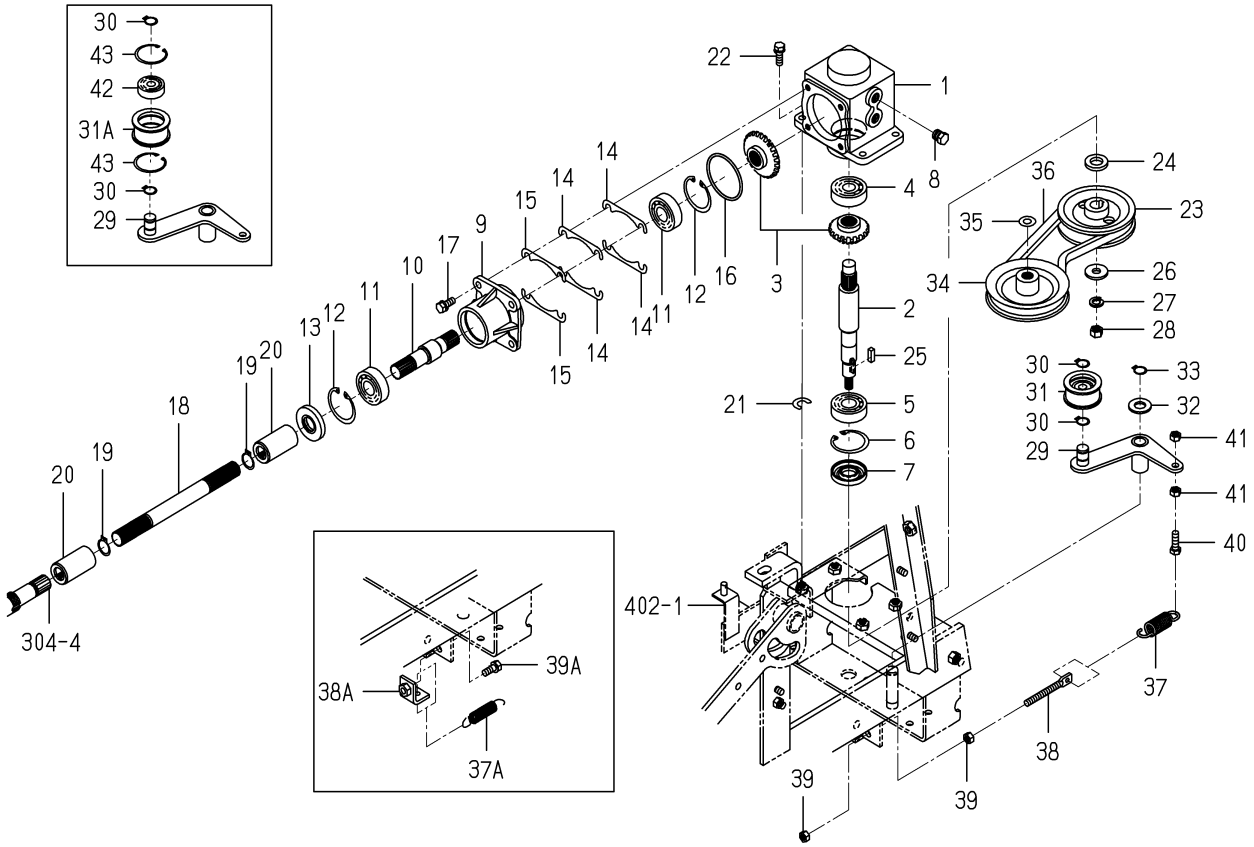

1782-122 -0100

KEY	PART CODE	DESCRIPTION	SPC	TYPE OF MODEL SXG15H		ITC	COL	GRP	REMARKS
1	1782-122-001-00	METAL/COUNTER	*	1					
2	- - - - - -	BLANK	*						- - - - - -
2	1782-122-002-10	SHAFT/OUTPUT	*	1					
3	8670-201-220-00	GEAR/BEVEL/23-1 SET	*	1					
4	V600-110-630-30	BEARING,RB/6303	*	1					
5	V600-110-620-40	BEARING,RB/6204	*	1					
6	V705-140-047-00	RING,SNAP/47 C	*	1					
7	V744-120-470-70	SEAL/OIL	*	1					
8	7955-201-026-00	PLUG,DRAIN (1/4)	*	2					
9	8670-201-006-00	METAL/CASE	*	1					
10	8670-201-007-00	SHAFT/CASE	*	1					
11	V600-110-620-40	BEARING,RB/6204	*	2					
12	V705-140-047-00	RING,SNAP/47 C	*	2					
13	V744-120-470-70	SEAL/OIL	*	1					
14	8663-202-055-00	SHIM/0.1	*	4					
15	- - - - - -	BLANK	*						- - - - - -
15	8663-202-056-00	SHIM/0.2	*	4					
16	V721-103-106-00	O-RING/G60	*	1					
17	V211-260-802-00	BOLT/S	*	4					
18	8670-201-008-00	SHAFT/JOINT	*	1					
19	V704-140-020-00	RING,SNAP/20C	*	2					
20	1602-321-004-00	COUPLING/18X30X55	*	2					
21	- - - - - -	BLANK	*						- - - - - -
21	3822-544-009-00	SHIM/13X25X0.5	*	4					
22	- - - - - -	BLANK	*						- - - - - -
22	V211-660-802-50	BOLT/M8X25	*	4					
23	1782-122-003-00	PULLEY/VB097	*	1					
24	1782-122-013-00	WASHER/17X30X05	*	1					
25	3750-121-011-00	KEY	*	1					
26	3659-170-003-00	WASHER/11X30X3	*	1					

FIG.110 METAL(COUNTER)SYSTEM

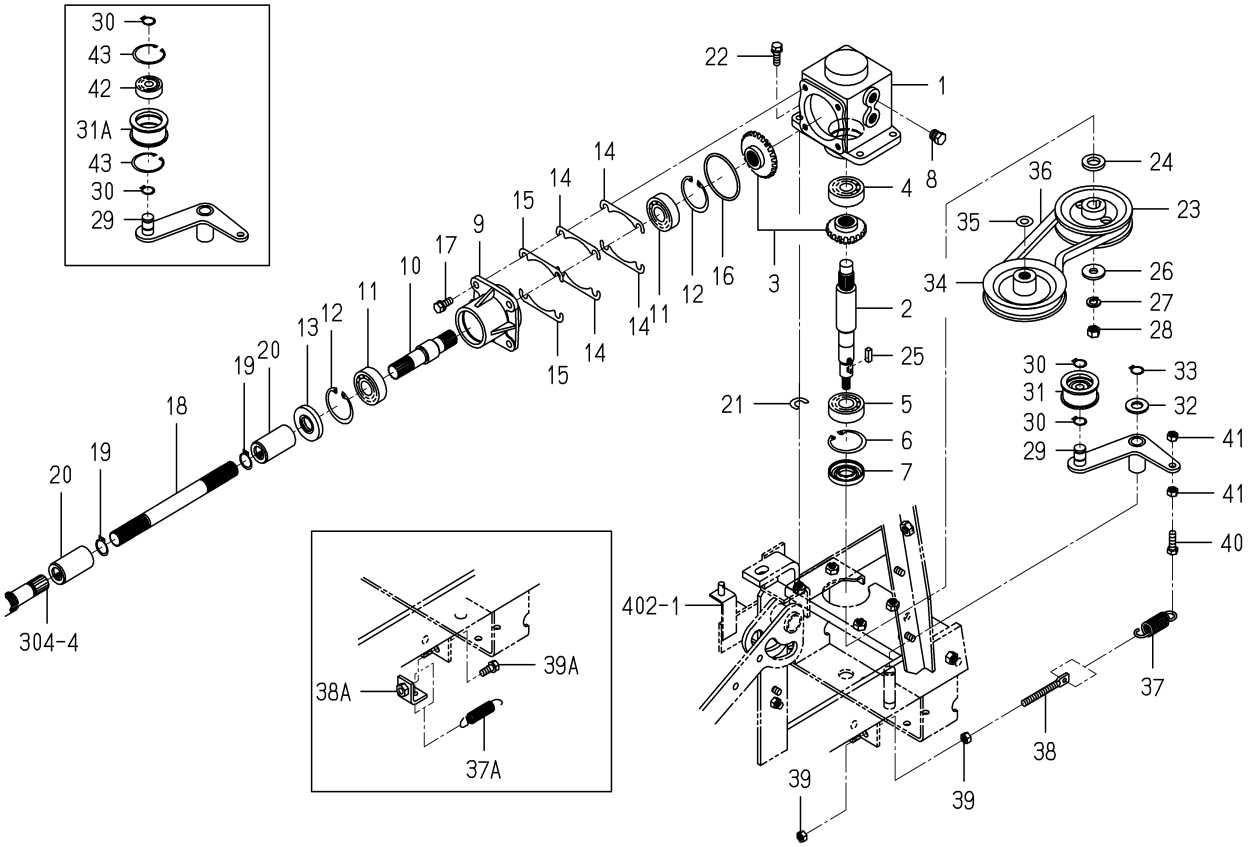

1782-122 -0100

KEY	PART CODE	DESCRIPTION	SPC	TYPE OF MODEL SXG15H		ITC	COL	GRP	REMARKS
27	V401-160-010-00	WASHER,SP/M10	*	1					
28	V304-260-010-00	NUT	*	2					
29	1782-122-220-00	ARM/TENSION/HST COMP	*	1					
30	V704-140-015-00	RING,SNAP/15 C	*	2					
31	- - - - - -	BLANK	*						- - - - - -
31	- - - - - -	BLANK	*						- - - - - -
31A	1782-122-014-00	PULLY/FT045X020	*	1					
32	V411-260-014-00	WASHER,PL/M14	*	1					
33	V704-140-015-00	RING,SNAP/15 C	*	1					
34	1782-122-210-10	PULLEY/VB101 COMP	*	1					
35	V411-260-010-00	WASHER/M10	*	1					
36	1782-122-012-00	BELT/VB027	*	1					
37	- - - - - -	BLANK	*						- - - - - -
37A	1104-410-007-00	SPRING/HE074	*	1					
38	- - - - - -	BLANK	*						- - - - - -
38A	1782-122-310-00	PLATE/L/25X35 COMP	*	1					
39	- - - - - -	BLANK	*						- - - - - -
39A	V211-660-802-00	BOLT/8X20	*	1					
40	V201-360-802-50	BOLT/M 8X25	*	1					
41	V304-260-008-00	NUT	*	2					
42	V600-350-620-20	BEARING,RB/6202RS	*	1					
43	V705-140-035-00	RING,CIRCLIP	*	2					

FIG.201 MISSON(HST)SYSTEM

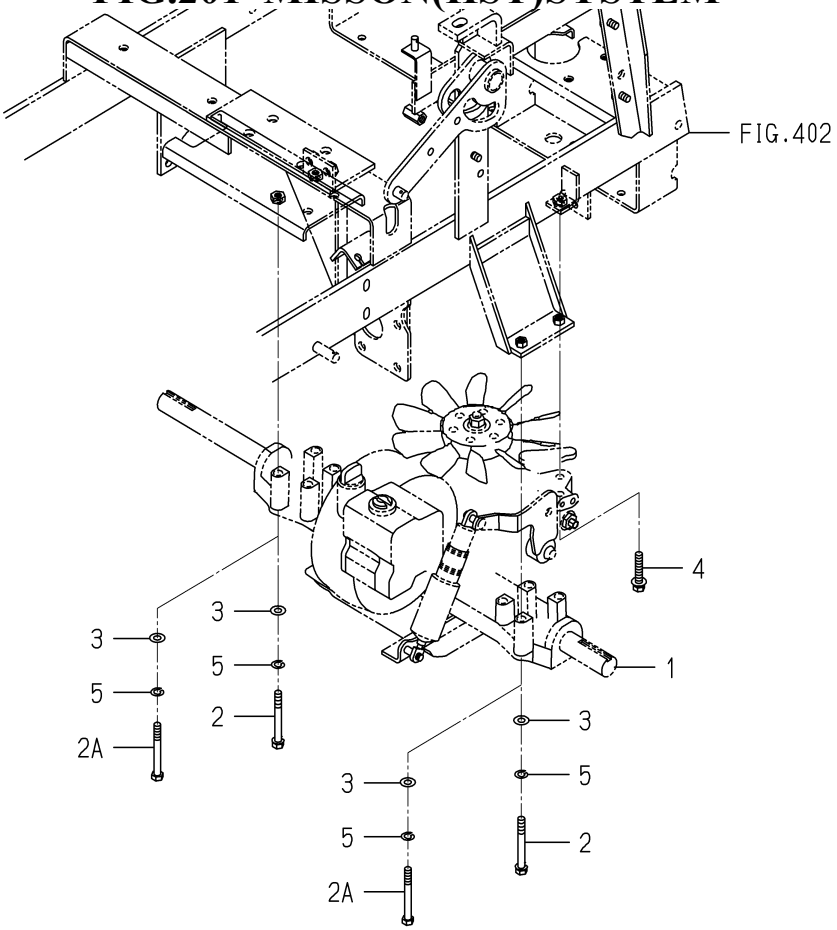

1782-201 -0100

KEY	PART CODE	DESCRIPTION	SPC	TYPE OF MODEL SXG15H		ITC	COL	GRP	REMARKS
1	- - - - - -	BLANK	*						- - - - - -
1	1782-201-200-10	HST/K66AH ASSY	*	1					FIG S01
2	- - - - - -	BLANK	*						- - - - - -
2A	V201-360-807-00	BOLT	*	4					
3	V411-260-008-00	WASHER,PL/M 8	*	4					
4	- - - - - -	BLANK	*						- - - - - -
4	V211-660-804-50	BOLT/SP	*	1					
5	V401-160-008-00	WASHER,SP/M 8	*	4					

FIG.202 MOUNT(HST)SYSTEM

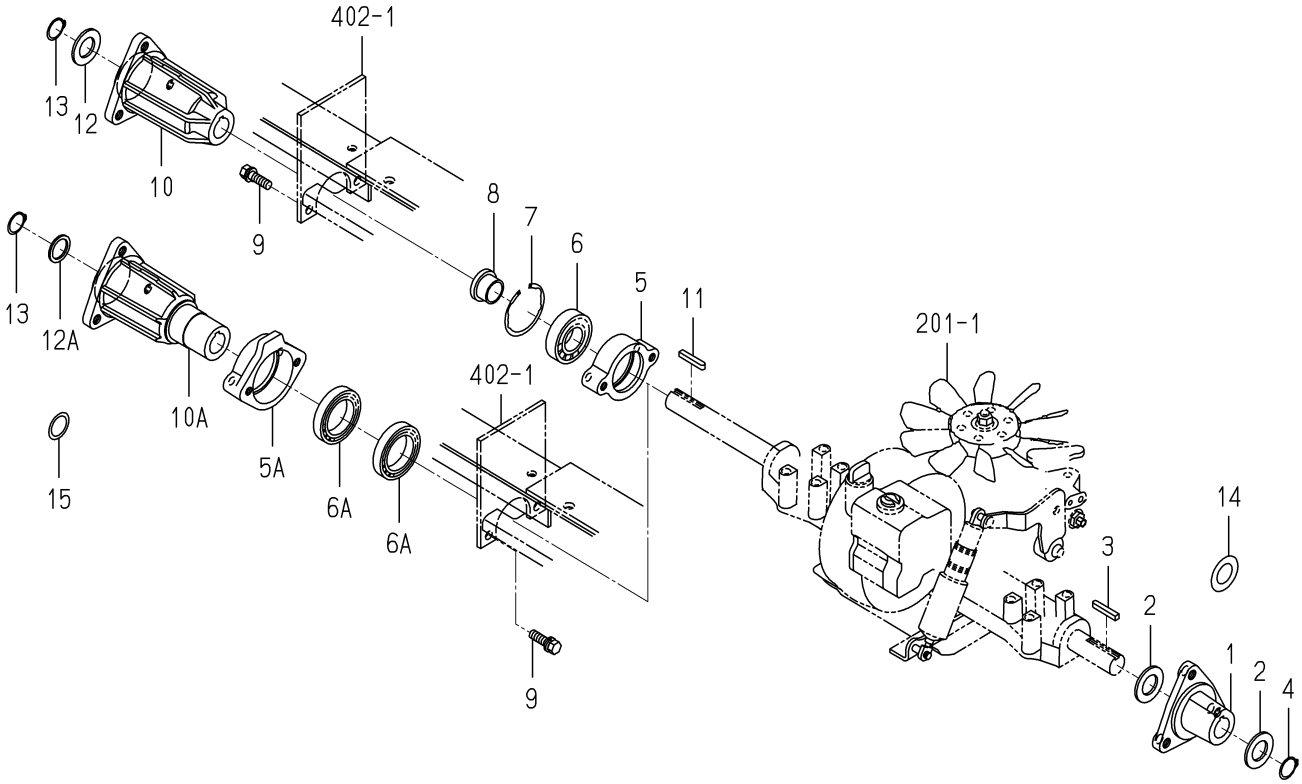

1782-202 -0100

KEY	PART CODE	DESCRIPTION	SPC	TYPE OF MODEL SXG15H		ITC	COL	GRP	REMARKS
1	- - - - - -	BLANK	*						- - - - - -
1	1782-202-001-30	HUB/WHEEL/LH	*	1					
2	1782-202-002-00	WASHER/26X45X02	*	2					
3	- - - - - -	BLANK	*						- - - - - -
3	1782-202-054-00	KEY/06X06X40	*	1					
4	1725-218-006-00	RING/SNAP/CS25	*	1					
5	- - - - - -	BLANK	*						- - - - - -
5	- - - - - -	BLANK	*						- - - - - -
5A	1782-202-052-00	METAL/WHEELSHAFT	*	1					
6	- - - - - -	BLANK	*						- - - - - -
6A	1782-202-056-00	BEARING/BALL	*	2					
7	- - - - - -	BLANK	*						- - - - - -
8	- - - - - -	BLANK	*						- - - - - -
9	V211-561-003-50	BOLT/S	*	2					
10	- - - - - -	BLANK	*						- - - - - -
10	- - - - - -	BLANK	*						- - - - - -
10A	1782-202-051-10	HUB/WHEEL/RH	*	1					
11	- - - - - -	BLANK	*						- - - - - -
11	1782-202-054-00	KEY/06X06X40	*	1					
12	- - - - - -	BLANK	*						- - - - - -
12A	3666-222-003-00	WASHER/26X34X2	*	1					
13	1725-218-006-00	RING/SNAP/CS25	*	1					
14	1782-202-009-00	WASHER/26X45X02	*	1					
15	2161-129-002-00	WASHER	*	1					

FIG.203 LINK(HST)SYSTEM

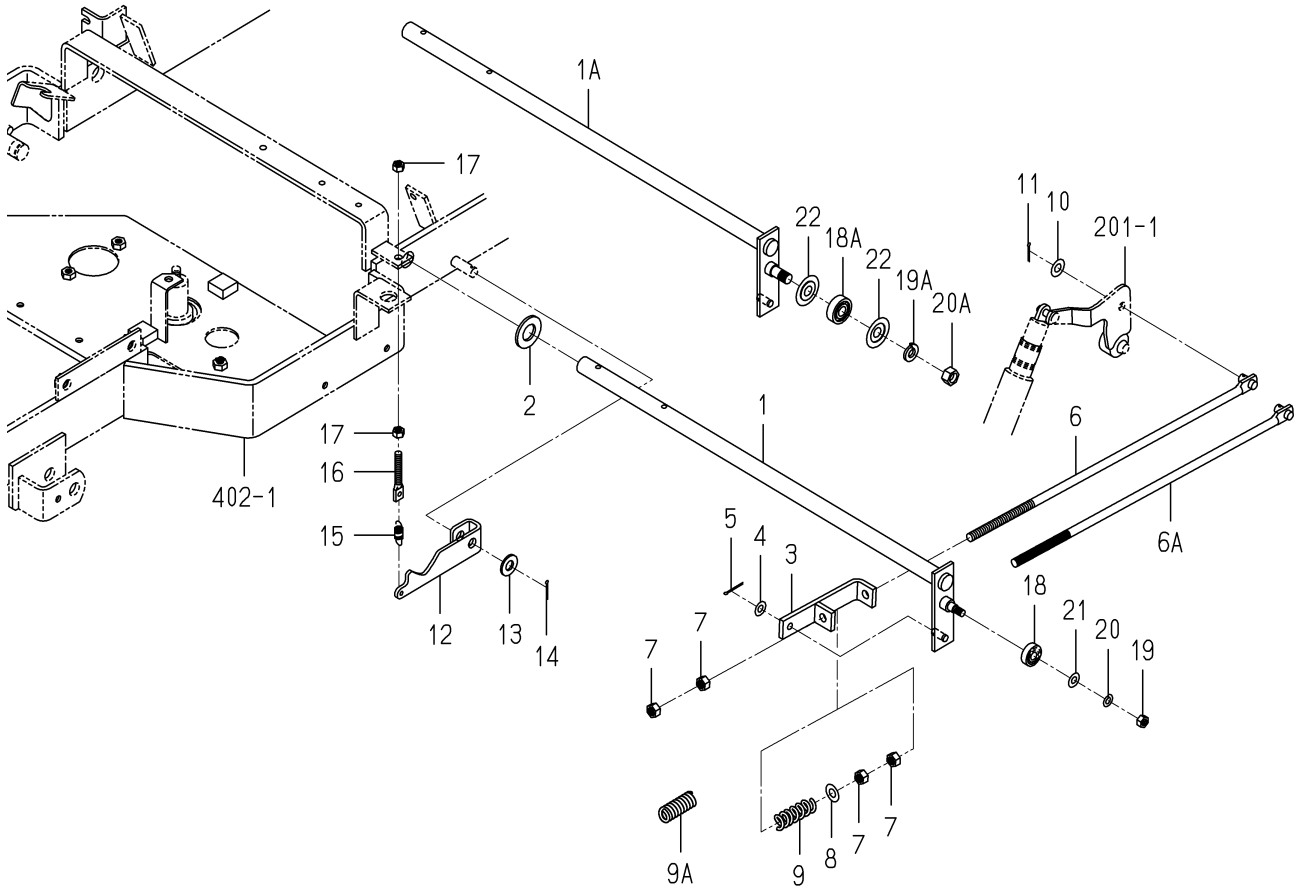

1782-271 -0100

KEY	PART CODE	DESCRIPTION	SPC	TYPE OF MODEL SXG15H		ITC	COL	GRP	REMARKS
1	- - - - - -	BLANK	*						- - - - - -
1A	1782-271-220-10	PIN/HST COMP	*	1					
2	- - - - - -	BLANK	*						- - - - - -
3	- - - - - -	BLANK	*						- - - - - -
3	1782-271-230-10	PLATE/L/25X132 COMP	*	1					
4	V411-260-008-00	WASHER,PL/M 8	*	1					
5	V500-162-502-00	PIN,SPLIT/2.5X20	*	1					
6	- - - - - -	BLANK	*						- - - - - -
6A	1782-271-210-10	ROD/M10X463 COMP	*	1					
7	V304-260-010-00	NUT	*	4					
8	V411-260-010-00	WASHER/M10	*	1					
9	- - - - - -	BLANK	*						- - - - - -
9A	1782-271-003-00	SPRING/HC047	*	1					
10	V411-260-010-00	WASHER/M10	*	1					
11	V500-162-502-00	PIN,SPLIT/2.5X20	*	1					
12	1782-271-002-00	ARM/NEUTRAL	*	1					
13	V411-260-012-00	WASHER /M12	*	1					
14	V500-162-502-00	PIN,SPLIT/2.5X20	*	1					
15	1480-504-007-00	SPRING,TENSION 32	*	1					
16	3838-203-001-00	ROD/08X057	*	1					
17	V304-260-008-00	NUT	*	2					
18	- - - - - -	BLANK	*						- - - - - -
18A	V600-350-620-10	BEARING/BALL	*	1					
19	- - - - - -	BLANK	*						- - - - - -
19A	V401-160-012-00	WASHER,SP/M12	*	1					
20	- - - - - -	BLANK	*						- - - - - -
20A	V305-260-012-00	NUT/M12	*	1					
21	- - - - - -	BLANK	*						- - - - - -
22	1689-271-006-00	WASHER/38X12X2	*	2					

FIG.204 PEDAL(HST)SYSTEM

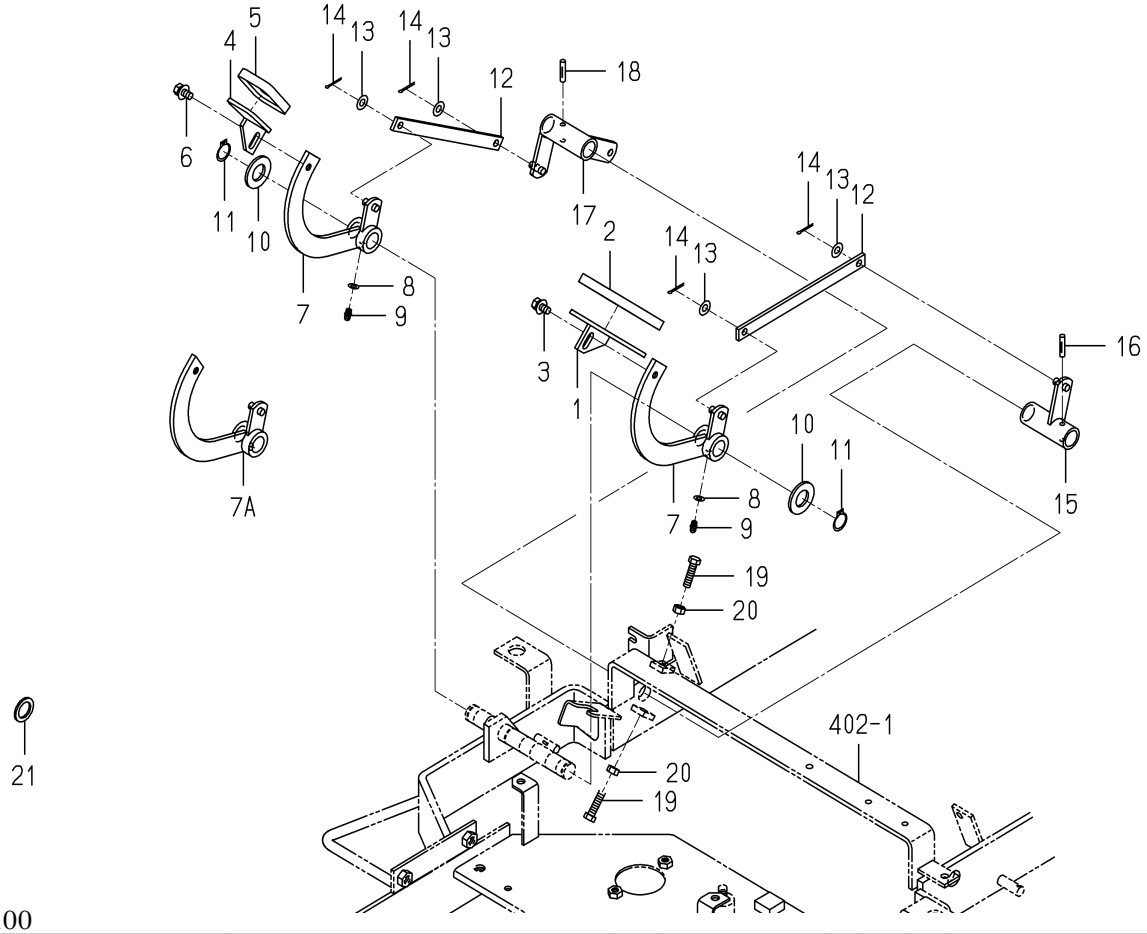

1782-272 -0100

KEY	PART CODE	DESCRIPTION	SPC	TYPE OF MODEL SXG15H		ITC	COL	GRP	REMARKS
1	1689-272-260-00	PEDAL/HST/F COMP	*	1					
2	1740-272-061-00	PAD/HST/OR	*	1					
3	V211-360-801-60	BOLT,SEMS (SP)	*	1					
4	1689-272-240-00	PEDAL/HST/RH COMP	*	1					
5	1740-272-062-00	PAD/OR	*	1					
6	V211-360-801-60	BOLT,SEMS (SP)	*	1					
7	- - - - - -	BLANK	*						- - - - - -
7A	1782-272-240-10	ARM/HST COMP	*	2					
8	V411-260-006-00	WASHER / M6	*	2					
9	V760-150-000-00	NIPPLE,GREASE	*	2					
10	V411-260-020-00	WASHER/M20	*	2					
11	V704-140-020-00	RING,SNAP/20C	*	2					
12	1782-272-001-00	PLATE/I/16X214	*	2					
13	V411-260-008-00	WASHER,PL/M 8	*	4					
14	V500-162-502-00	PIN,SPLIT/2.5X20	*	4					
15	1782-272-210-00	ARM/COUNTER/F COMP	*	1					
16	V530-240-602-80	PIN/GROOVE	*	1					
17	1782-272-220-00	ARM/COUNTER/R COMP	*	1					
18	V530-240-602-80	PIN/GROOVE	*	1					
19	V201-360-803-00	BOLT/M8X30	*	2					
20	V304-260-008-00	NUT	*	2					
21	- - - - - -	BLANK	*						- - - - - -

FIG.301 PEDAL(BRAKE)SYSTEM

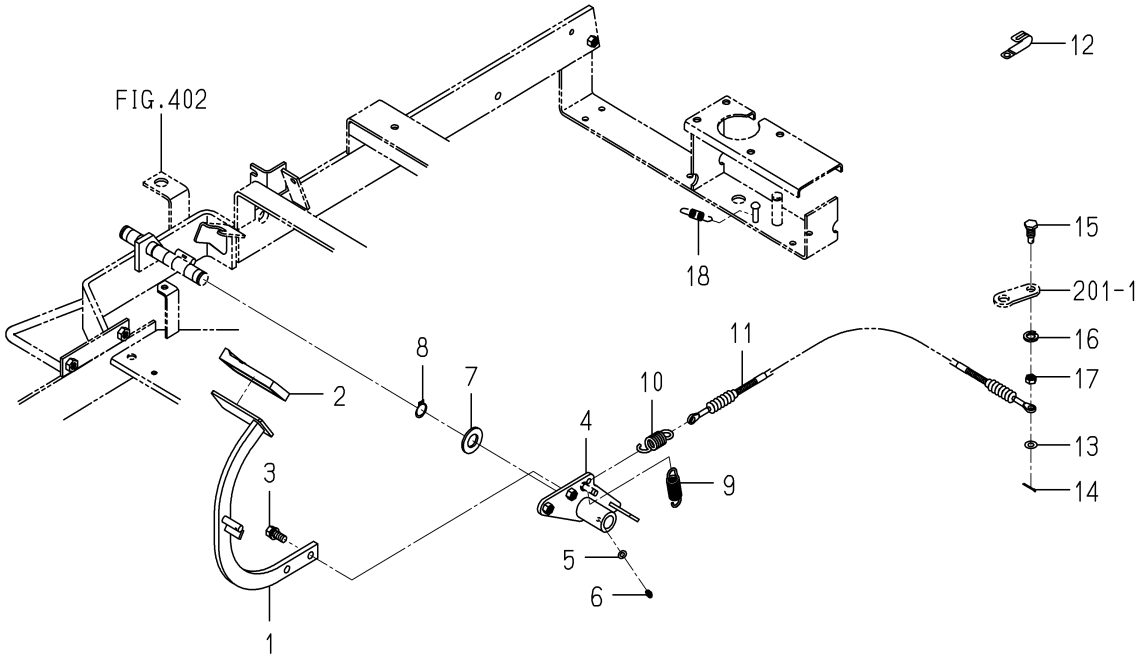

1782-312 -0100

KEY	PART CODE	DESCRIPTION	SPC	TYPE OF MODEL SXG15H		ITC	COL	GRP	REMARKS
1	1782-312-210-00	PEDAL/BRAKE COMP	*	1					
2	1636-313-011-10	PAD/BRAKE	*	1					
3	V211-561-002-50	BOLT/M10X25	*	2					
4	1782-312-230-00	ARM/BRAKE COMP	*	1					
5	V411-260-006-00	WASHER / M6	*	1					
6	V760-150-000-00	NIPPLE,GREASE	*	1					
7	V411-260-020-00	WASHER/M20	*	1					
8	V704-140-020-00	RING,SNAP/20C	*	1					
9	- - - - - -	BLANK	*						- - - - - -
9	- - - - - -	BLANK	*						- - - - - -
9	1560-404-002-30	SPRING	*	1					
10	1337-401-006-00	SPRING	*	1					
11	- - - - - -	BLANK	*						- - - - - -
11	1782-312-260-10	CABLE/BRAKE ASSY	*	1					
12	- - - - - -	BLANK	*						- - - - - -
13	V411-260-008-00	WASHER,PL/M 8	*	1					
14	V500-162-502-00	PIN,SPLIT/2.5X20	*	1					
15	1782-312-001-00	PIN/BRAKE	*	1					
16	V401-160-012-00	WASHER,SP/M12	*	1					
17	V305-260-012-00	NUT/M12	*	1					
18	1480-117-002-00	SPRING,TENSION (52)	*	1					

FIG.302 BRAKE(PARKING)SYSTEM

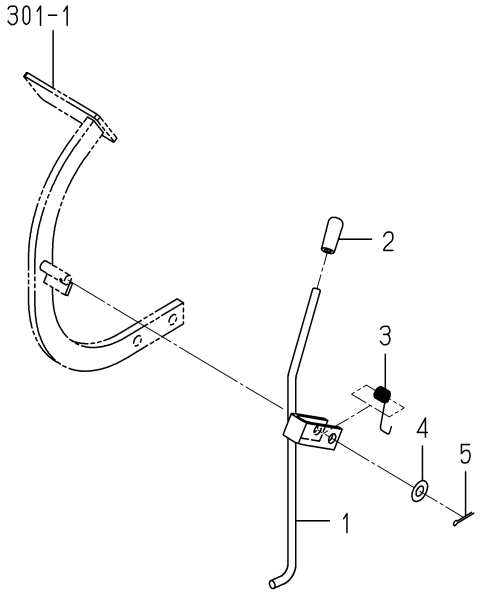

1782-313 -0100

KEY	PART CODE	DESCRIPTION	SPC	TYPE OF MODEL SXG15H		ITC	COL	GRP	REMARKS
1	- - - - - -	BLANK	*						- - - - - -
1	1782-313-210-20	LEVER/PARKING COMP	*	1					
2	1742-313-001-10	GRIP/07X34/OR	*	1					
3	1593-312-056-20	SPRING/HT013	*	1					
4	V411-260-010-00	WASHER/M10	*	1					
5	- - - - - -	BLANK	*						- - - - - -
5	V500-162-502-00	PIN,SPLIT/2.5X20	*	1					

FIG.303 WHEEL(REAR)SYSTEM

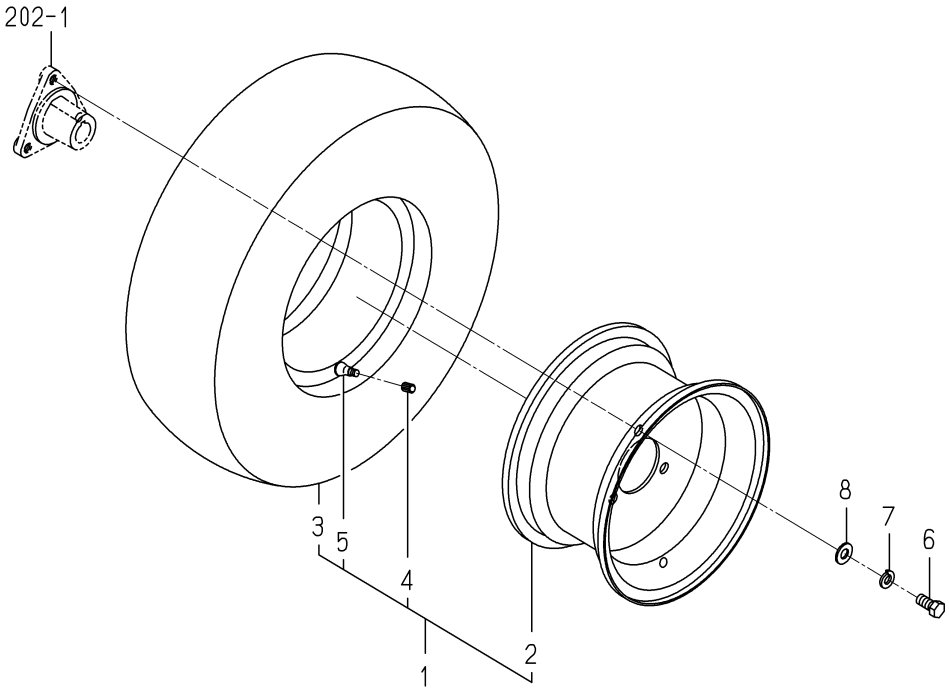

1782-317 -0100

KEY	PART CODE	DESCRIPTION	SPC	TYPE OF MODEL SXG15H		ITC	COL	GRP	REMARKS
1	1782-317-210-00	TIRE/20-8.0-10 ASSY	*	2			6G		
2	1782-317-220-00	RIM/WHEEL COMP	*	2			6G		
3	1782-317-211-00	TYRE/TURF/20-10	*	2					
4	V999-200-003-00	CAP,TIRE VALVE	*	2					
5	1386-241-002-00	VALVE/RIM	*	2					
6	V201-361-202-50	BOLT/M12X25	*	6					
7	V401-160-012-00	WASHER,SP/M12	*	6					
8	V411-260-012-00	WASHER /M12	*	6					

FIG.304 PTO(MOWER)SYSTEM

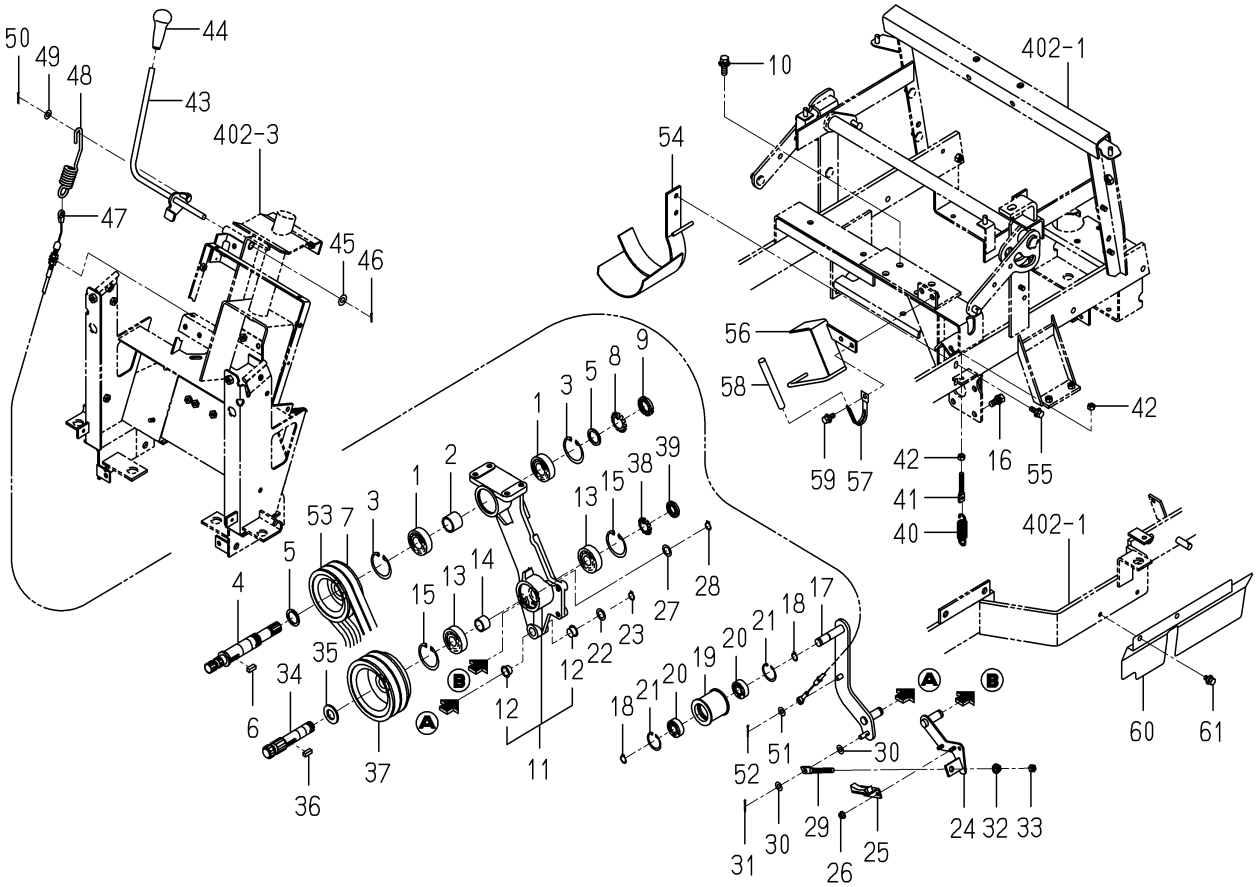

1782-334A-0100

KEY	PART CODE	DESCRIPTION	SPC	TYPE OF MODEL SXG15H		ITC	COL	GRP	REMARKS
1	V600-450-620-50	BEARING/BALL	*	2					
2	1782-334-003-00	COLLAR/26X32X25	*	1					
3	V705-140-052-00	RING,SNAP/52 C	*	2					
4	1782-334-023-00	SHAFT/INPUT	*	1					
5	3670-520-008-00	WASHER/25X34X02	*	2					
6	2512-205-003-00	KEY/07X07X19	*	1					
7	1782-334-021-00	PULLEY/V2B104	*	1					
8	V671-400-005-00	WASHER,ADAPTER/AW05	*	1					
9	V670-200-005-00	NUT,ADAPTER/AN05	*	1					
10	V211-661-003-00	BOLT/SP	*	4					
11	1782-334-310-10	METAL/PTO ASSY	*	1					
12	2502-407-001-10	BUSH/15X17X11	*	4					
13	V600-150-630-40	BEARING,RB/6304SS	*	2					
14	1782-334-006-00	COLLAR/21X25X18	*	1					
15	V705-140-052-00	RING,SNAP/52 C	*	2					
16	V211-561-002-50	BOLT/M10X25	*	3					
17	1782-334-410-00	ARM/TENSION COMP	*	1					
18	V704-140-015-00	RING,SNAP/15 C	*	2					
19	- - - - - -	BLANK	*						- - - - - -
20	V600-350-620-20	BEARING,RB/6202RS	*	2					
21	V705-140-035-00	RING,CIRCLIP	*	2					
22	3517-205-007-00	WASHER	*	1					
23	V704-140-015-00	RING,SNAP/15 C	*	1					
24	1782-334-270-10	ARM/PTO/BRAKE COMP	*	1					
25	1728-334-280-00	LINING/PTOBRAKE COMP	*	1					
26	V360-260-006-00	NUT/M6	*	2					
27	3517-205-007-00	WASHER	*	1					
28	V704-140-015-00	RING,SNAP/15 C	*	1					
29	3814-114-001-00	ROD/M8X92	*	1					
30	V411-260-008-00	WASHER,PL/M 8	*	2					

FIG.304 PTO(MOWER)SYSTEM

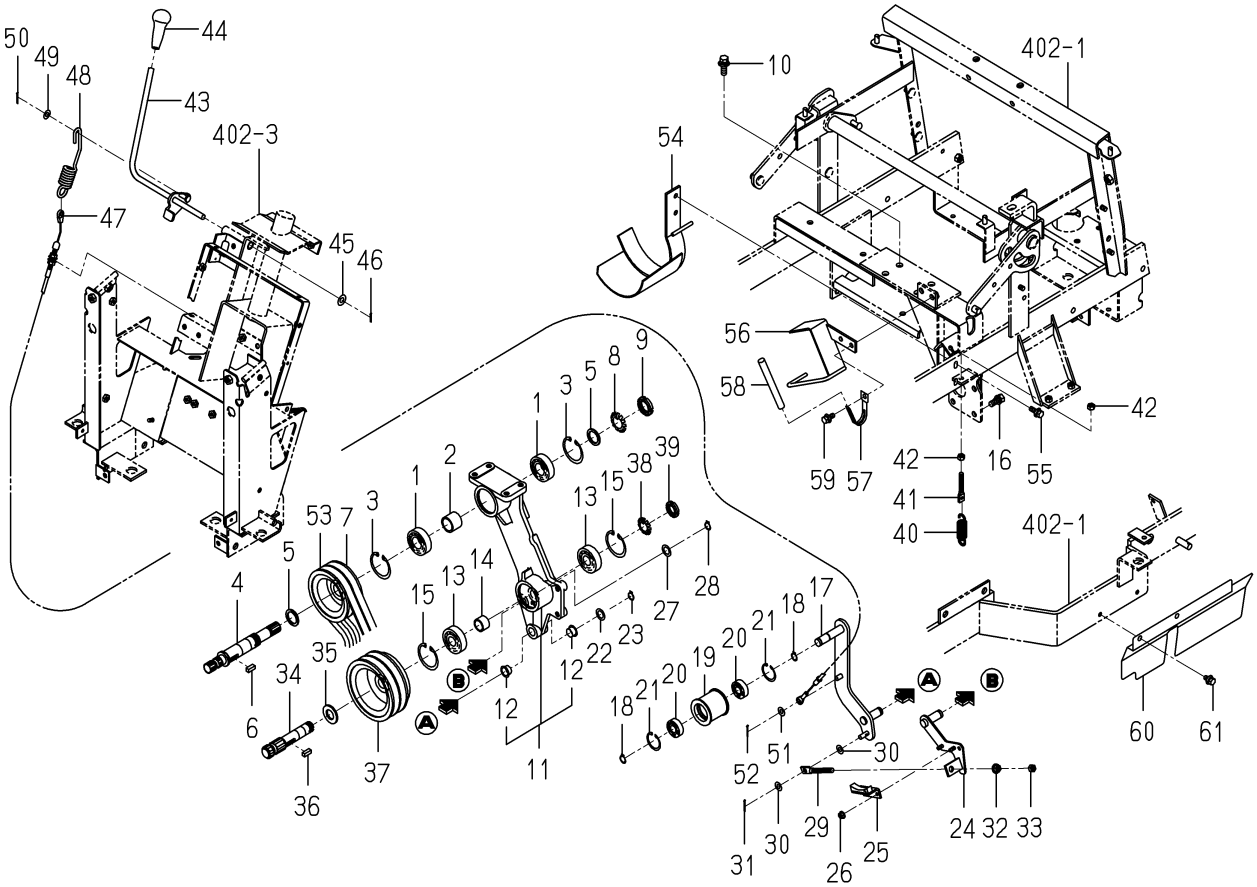

1782-334A-0100

KEY	PART CODE	DESCRIPTION	SPC	TYPE OF MODEL SXG15H		ITC	COL	GRP	REMARKS
31	V500-162-502-00	PIN,SPLIT/2.5X20	*	1					
32	V362-260-008-00	NUT/WASHER	*	1					
33	V304-260-008-00	NUT	*	1					
34	1782-334-024-00	SHAFT/PTO	*	1					
35	7970-505-005-00	WASHER	*	1					
36	2512-205-003-00	KEY/07X07X19	*	1					
37	1782-334-022-00	PULLEY/V2B123	*	1					
38	V671-400-004-00	WASHER,ADAPTER/AW04	*	1					
39	V670-200-004-00	NUT,ADAPTER/AN04	*	1					
40	1105-410-003-00	SPRING/HE067	*	1					
41	3838-203-001-00	ROD/08X057	*	1					
42	V304-260-008-00	NUT	*	2					
43	1782-334-330-00	LEVER/PTO COMP	*	1					
44	1705-333-001-00	GRIP/PTO	*	1					
45	V411-260-010-00	WASHER/M10	*	1					
46	V500-162-501-50	PIN,SPLIT/2.5X15	*	1					
47	1782-334-280-20	CABLE/PTO ASSY	*	1					
48	1705-332-006-00	SPRING/HE138	*	1					
49	V411-260-008-00	WASHER,PL/M 8	*	1					
50	V500-162-502-00	PIN,SPLIT/2.5X20	*	1					
51	V411-260-008-00	WASHER,PL/M 8	*	1					
52	V500-162-502-00	PIN,SPLIT/2.5X20	*	1					
53	1782-334-025-00	BELT/VB031	*	2					
54	1782-334-460-00	GUIDE/BELT/LOWE COMP	*	1					
55	V211-360-802-50	BOLT/SP	*	2					
56	1782-334-440-00	STOPPER/BELT COMP	*	1					
57	1650-650-015-00	CLAMP	*	1					
58	1650-650-017-00	TUBE/120	*	1					
59	V211-360-802-00	BOLT/SP	*	2					
60	1782-334-014-30	COVER/JOINT	*	1					

FIG.304 PTO(MOWER)SYSTEM

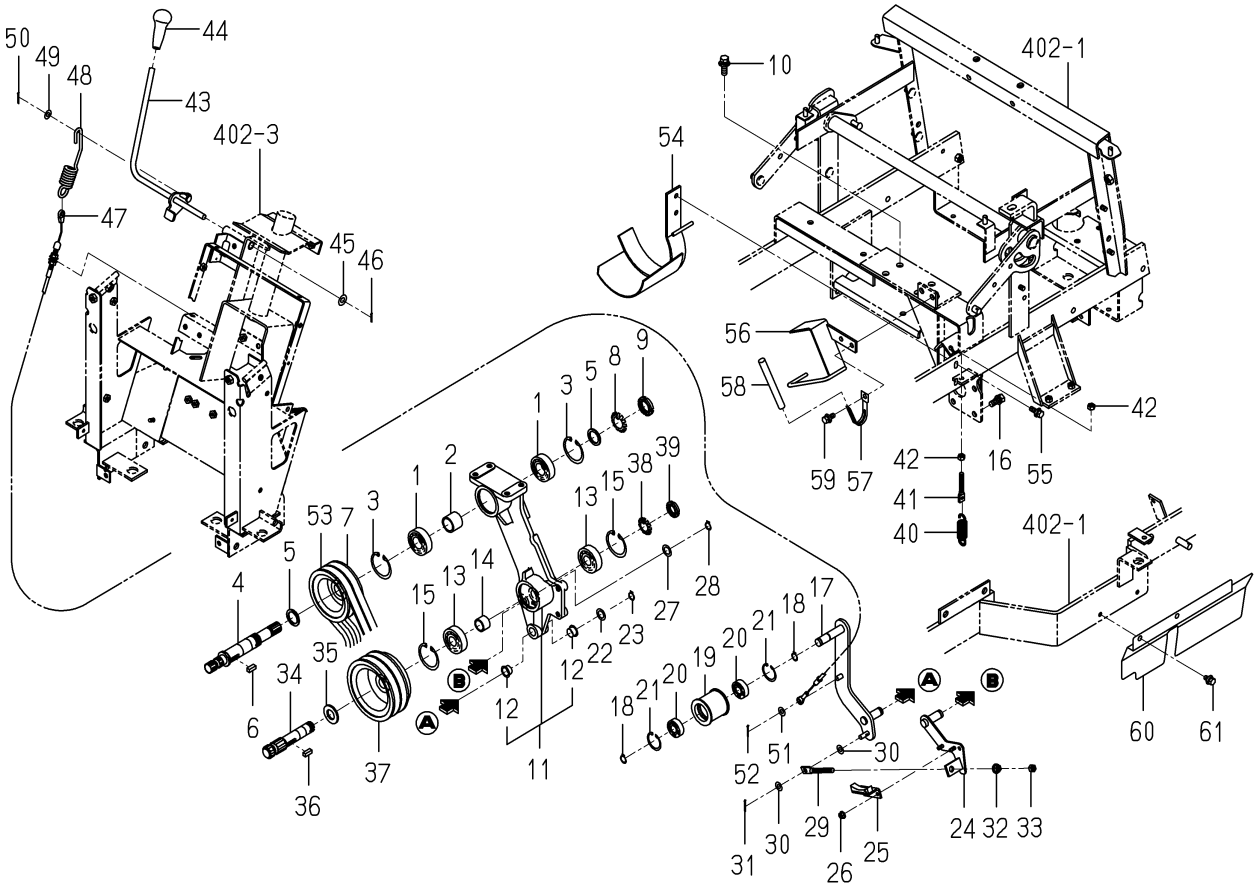

1782-334A-0100

KEY	PART CODE	DESCRIPTION	SPC	TYPE OF MODEL SXG15H		ITC	COL	GRP	REMARKS
61	V211-360-801-60	BOLT,SEMS (SP)	*	2					

FIG.401 SHAFT(STEERING)SYSTEM

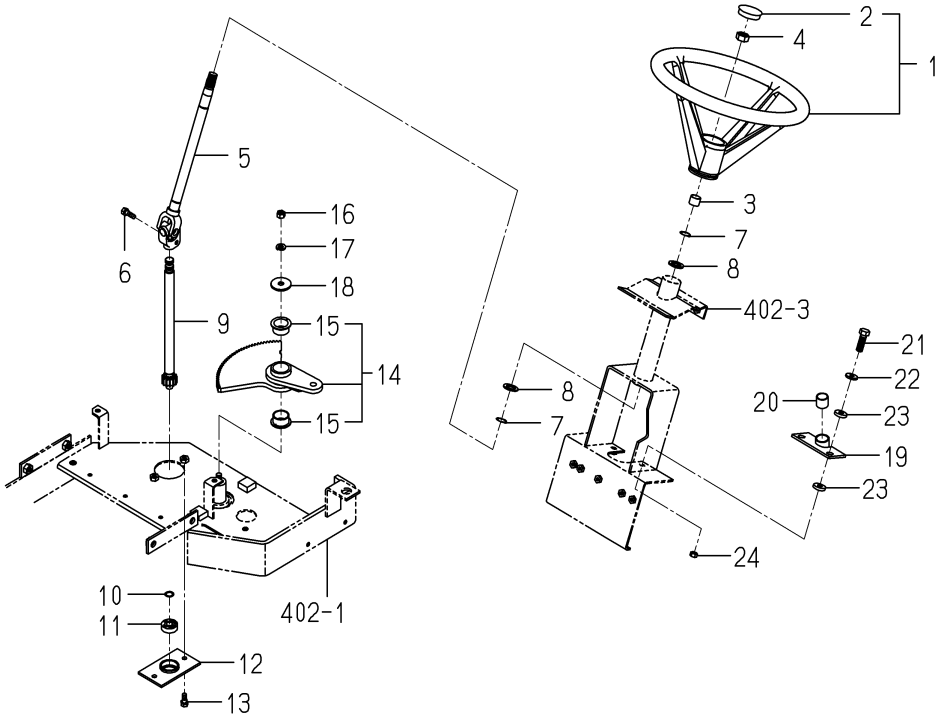

1782-407 -0100

KEY	PART CODE	DESCRIPTION	SPC	TYPE OF MODEL SXG15H		ITC	COL	GRP	REMARKS
1	1739-401-200-00	WHEEL/STEERING ASSY	*	1					
2	1739-401-202-00	CAP/STEERING	*	1					
3	1739-401-001-00	INSULATOR/15	*	1					
4	V335-260-016-00	NUT/M16	*	1					
5	1782-407-210-00	SHAFT/STEERING/ COMP	*	1					
6	V211-560-802-50	BOLT,SEMS/M8X25 7T	*	1					
7	V704-140-019-00	RING,SNAP 19	*	2					
8	- - - - - -	BLANK	*						- - - - - -
8	1782-407-006-00	WASHER/19X30X02	*	2					
9	1782-407-250-20	SHAFT/STEERING/ COMP	*	1					
10	1330-726-013-00	WASHER	*	1					
11	V600-350-620-10	BEARING/BALL	*	1					
12	1782-407-260-10	HUB/STEERING COMP	*	1					
13	V211-560-802-00	BOLT/M8X20	*	2					
14	1782-407-310-00	GEAR/SPUR/37 ASSY	*	1					
15	1782-407-003-20	BUSH/28X32X15	*	2					
16	V304-260-010-00	NUT	*	1					
17	V401-160-010-00	WASHER,SP/M10	*	1					
18	- - - - - -	BLANK	*						- - - - - -
18	1782-407-004-00	WASHER/11X40X3.2	*	1					
19	1782-407-270-10	HUB COMP	*	1					
20	3670-703-008-00	BUSH/20X23X20	*	1					
21	V201-260-803-50	BOLT/M 8X35	*	2					
22	4101-102-038-00	WASHER/24X9X3.2	*	2					
23	1423-616-004-00	CUSHION/RUBBER/10X25	*	4					
24	V304-260-008-00	NUT	*	2					

FIG.402 FRAME SYSTEM

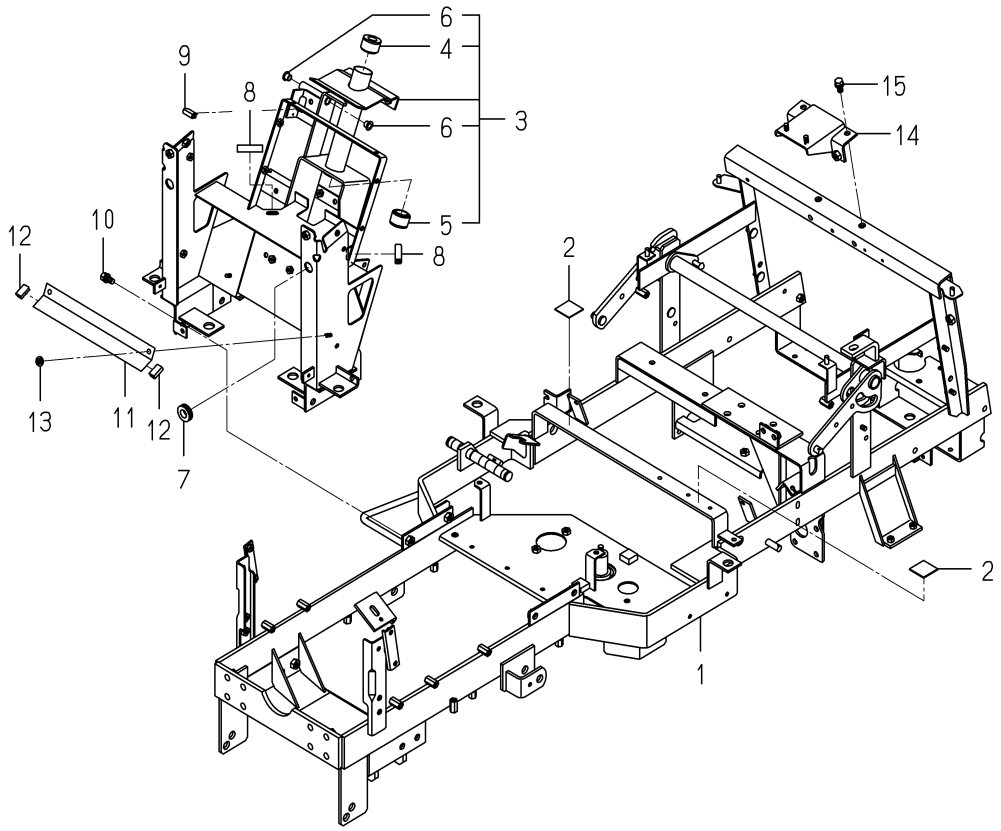

1782-410A-0100

KEY	PART CODE	DESCRIPTION	SPC	TYPE OF MODEL SXG15H		ITC	COL	GRP	REMARKS
1	1782-410-620-10	FRAME/MAIN COMP	*	1					
2	1427-111-229-00	CUSHION,RUBBER	*	2					
3	1782-410-450-00	POST/STEERING ASSY	*	1					
4	1429-406-205-00	BUSH	*	1					
5	1426-406-203-00	BUSH,COLUMN	*	1					
6	1564-512-001-00	BUSH/10X12X10	*	2					
7	1575-616-005-00	GROMMET/17X21X3	*	1					
8	3666-202-005-10	PAD/50	*	2					
9	3805-371-007-00	PAD/25	*	1					
10	V211-561-002-00	BOLT/M10X20	*	4					
11	1782-410-001-10	PLATE	*	1					
12	3805-371-007-00	PAD/25	*	2					
13	V361-260-006-00	NUT	*	2					
14	1782-410-310-00	STAY/SEAT COMP	*	1					
15	V211-561-002-00	BOLT/M10X20	*	4					

FIG.403 COVER(UNDER)SYSTEM

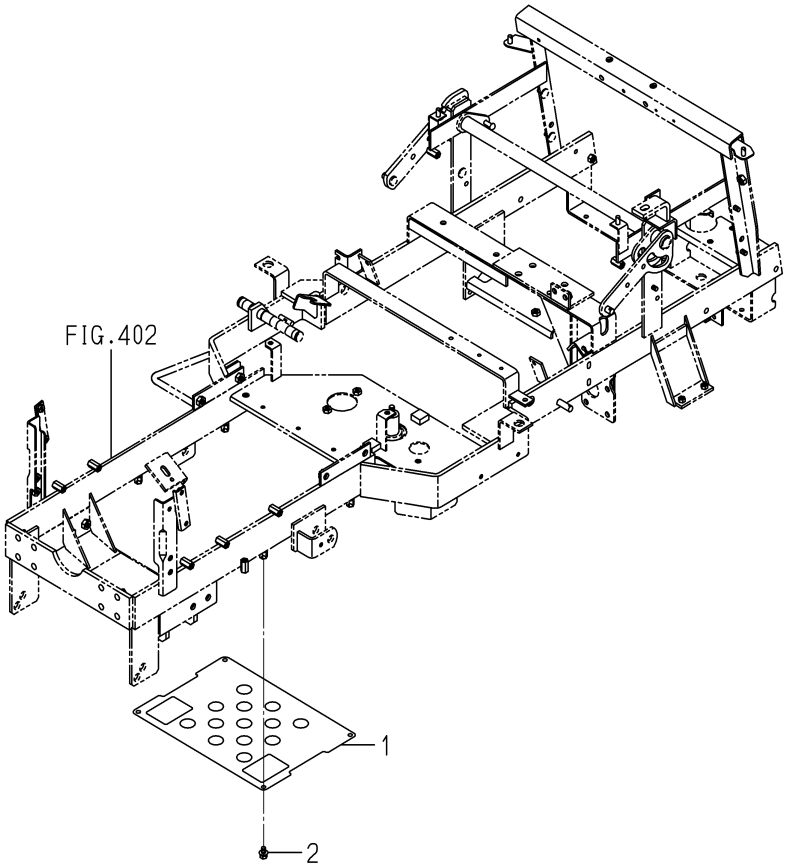

1782-410F-0100

KEY	PART CODE	DESCRIPTION	SPC	TYPE OF MODEL SXG15H		ITC	COL	GRP	REMARKS
1	1782-410-006-00	GUARD/UNDER	*	1					
2	V211-360-801-60	BOLT,SEMS (SP)	*	4					

FIG.404 AXLE(FRONT)SYSTEM

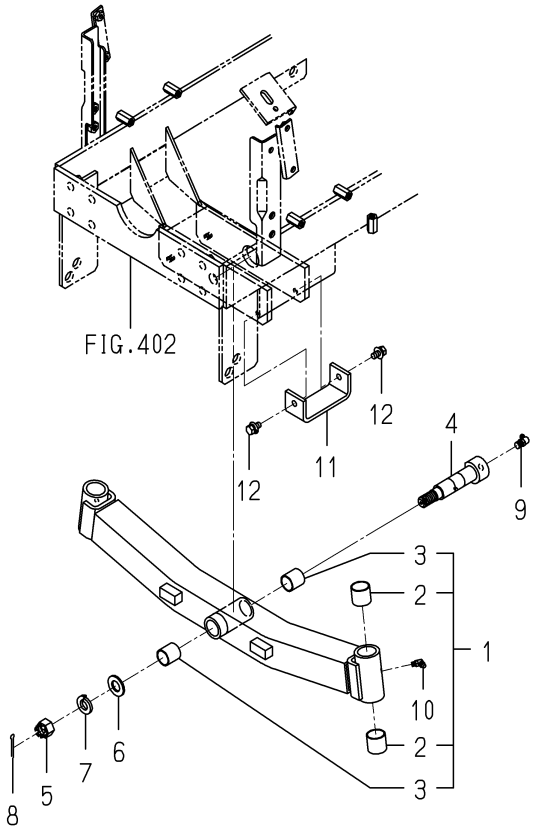

1782-433 -0100

KEY	PART CODE	DESCRIPTION	SPC	TYPE OF MODEL SXG15H		ITC	COL	GRP	REMARKS
1	1782-433-210-10	AXLE/FRONT ASSY	*	1					
2	1593-402-051-10	BUSH/25X28X25	*	4					
3	1725-433-202-00	BUSH/22X25X25	*	2					
4	1782-433-001-10	PIN/PIVOT	*	1					
5	V327-261-216-00	NUT,CASTTLE/M16X1.5	*	1					
6	V411-260-016-00	WASHER / M16	*	1					
7	V401-160-016-00	WASHER,SP/M16	*	1					
8	V500-164-003-00	PIN,SPLIT/4 X30	*	1					
9	V763-150-000-00	NIPPLE,GREASE/PT1/8	*	1					
10	V762-150-000-00	NIPPLE,GREASE/B-M6F	*	2					
11	1782-433-002-10	PLATE/U/38X80	*	2					
12	V211-360-801-60	BOLT,SEMS (SP)	*	4					

FIG.405 SPINDLE(KNUCKLE)SYSTEM

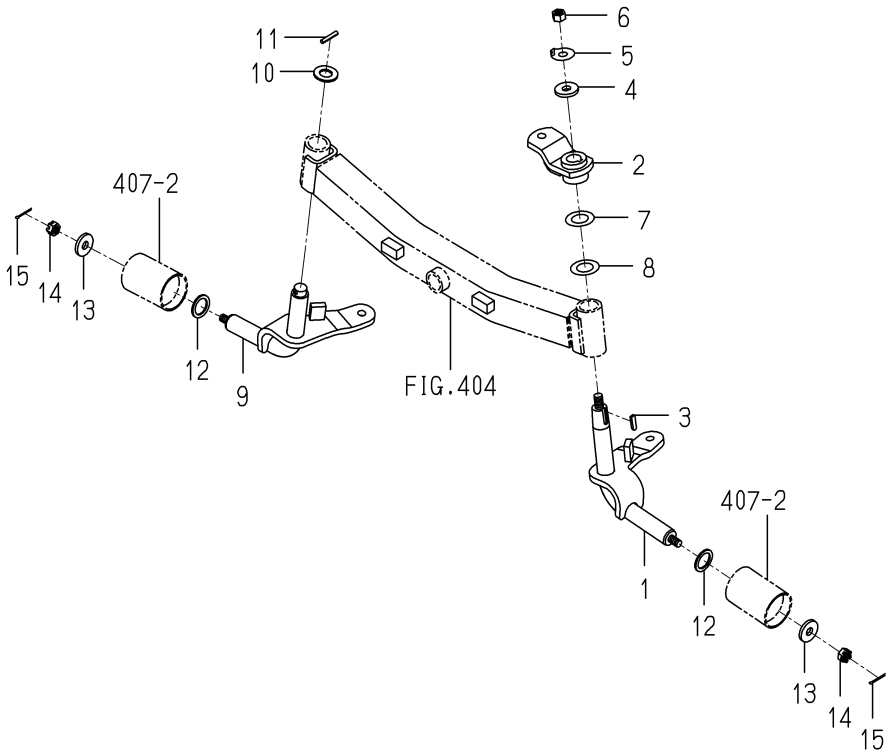

1782-434 -0100

KEY	PART CODE	DESCRIPTION	SPC	TYPE OF MODEL SXG15H		ITC	COL	GRP	REMARKS
1	1782-434-200-00	SPINDLE/KNUCKLE/LH	*	1					
2	1782-434-220-10	ARM/KNUCKLE COMP	*	1					
3	1326-708-005-00	KEY,ROTARY TOP SHAFT	*	1					
4	1421-403-007-00	WASHER,LOCK/M12	*	1					
5	1421-403-008-00	WASHER/13X35X5	*	1					
6	V304-260-012-00	NUT/M12	*	1					
7	1421-951-006-00	SHIM,A/0.5	*	1					
8	1421-951-007-00	SHIM,A/1.0	*	1					
9	1782-434-210-00	SPINDLE/KNUCKLE/RH	*	1					
10	V411-260-018-00	WASHER,PL/M18	*	1					
11	V580-140-503-20	PIN,SPRING/5 X32 W	*	1					
12	1415-216-602-00	WASHER/26X35X2	*	2					
13	3621-702-003-00	WASHER,PULLEY	*	2					
14	V328-262-112-00	NUT/M12X1.25	*	2					
15	V500-163-002-50	PIN,SPLIT/3 X25	*	2					

FIG.406 ROD(TIE)SYSTEM

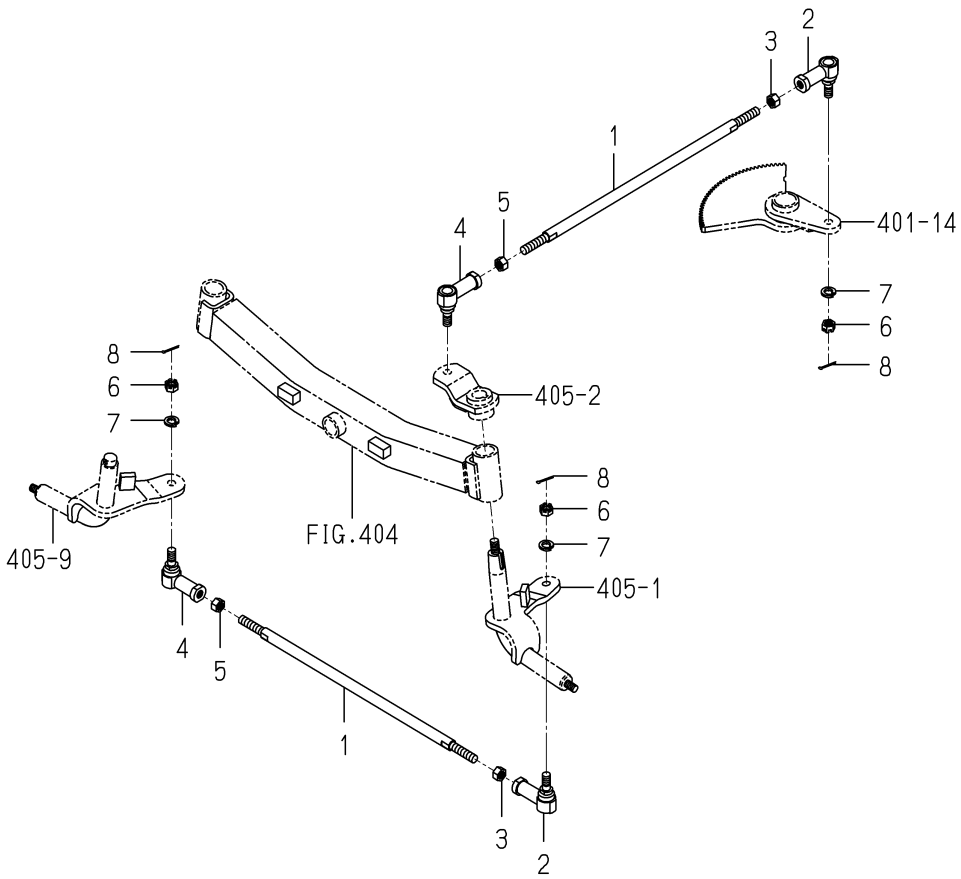

1782-436 -0100

KEY	PART CODE	DESCRIPTION	SPC	TYPE OF MODEL SXG15H		ITC	COL	GRP	REMARKS
1	1782-436-001-10	ROD/M12X495	*	2					
2	1593-403-005-00	JOINT,BALL	*	2					
3	V334-260-012-00	NUT	*	2					
4	1705-436-300-00	JOINT/BALL ASSY	*	2					
5	1703-135-002-00	NUT/SM/LH/M12X1.25	*	2					
6	V328-262-112-00	NUT/M12X1.25	*	4					
7	V401-160-012-00	WASHER,SP/M12	*	4					
8	V500-162-502-00	PIN,SPLIT/2.5X20	*	4					

FIG.407 WHEEL(FRONT)SYSTEM

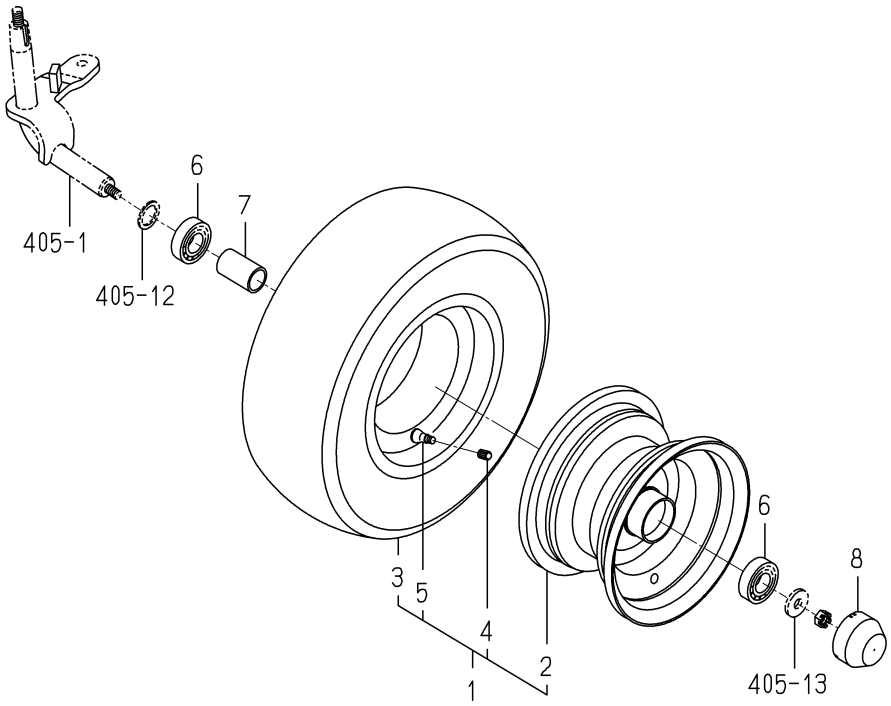

1782-441 -0100

KEY	PART CODE	DESCRIPTION	SPC	TYPE OF MODEL SXG15H		ITC	COL	GRP	REMARKS
1	1782-441-210-00	TIRE/FRONT ASSY	*	2			6G		
2	1689-440-230-00	RIM/WHEEL COMP	*	2			6G		
3	1782-441-211-00	TYRE/TURF/16-8	*	2					
4	V999-200-003-00	CAP,TIRE VALVE	*	2					
5	1386-241-002-00	VALVE/RIM	*	2					
6	V600-450-620-50	BEARING/BALL	*	4					
7	1593-411-001-10	COLLAR/26X32X53	*	2					
8	1593-411-053-20	CAP/WHEEL	*	2					

FIG.501 LINK(MOWER)SYSTEM

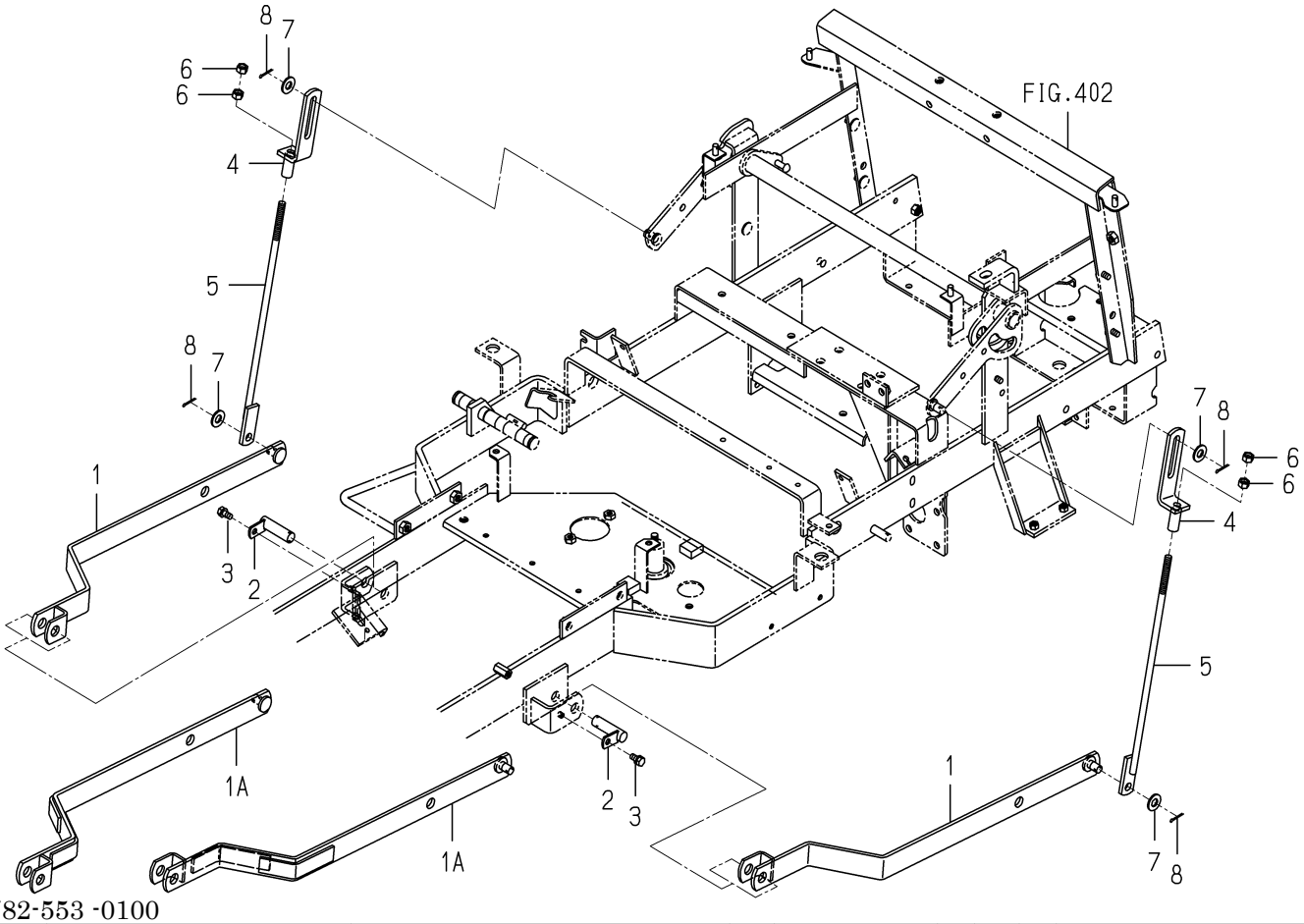

1782-553 -0100

KEY	PART CODE	DESCRIPTION	SPC	TYPE OF MODEL SXG15H		ITC	COL	GRP	REMARKS
1	- - - - - -	BLANK	*						- - - - - -
1A	1782-553-210-10	ARM/MID COMP	*	2					
2	1636-503-270-00	PIN/16X60 COMP	*	2					
3	V211-260-801-60	BOLT,SEMS (S) M8X16	*	2					
4	1782-553-260-00	PLATE/L/32X120 COMP	*	2					
5	1782-553-250-00	ROD/LIFT COMP	*	2					
6	V304-260-010-00	NUT	*	4					
7	V411-260-012-00	WASHER /M12	*	4					
8	V500-163-002-00	PIN,SPLIT/3 X20	*	4					

FIG.502 LEVER(LIFT)SYSTEM

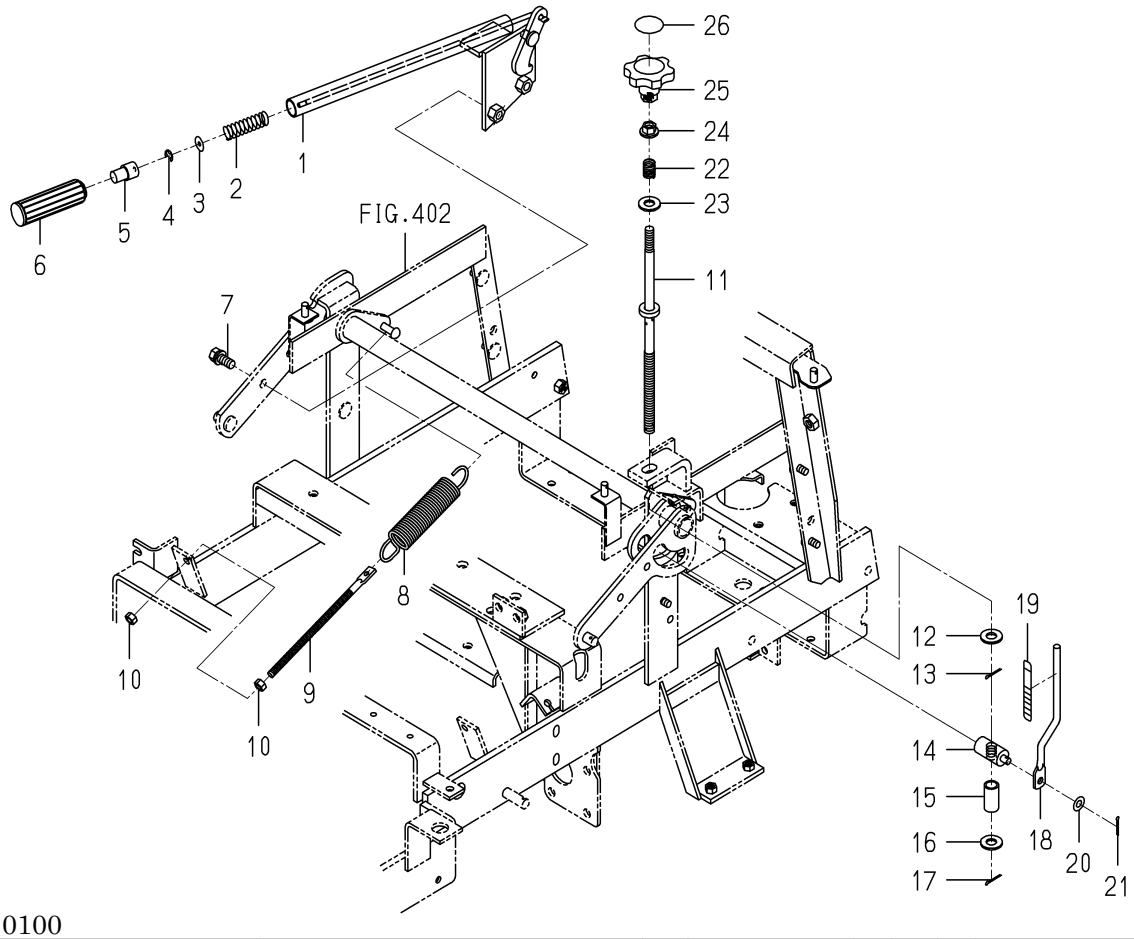

1782-554 -0100

KEY	PART CODE	DESCRIPTION	SPC	TYPE OF MODEL SXG15H		ITC	COL	GRP	REMARKS
1	- - - - - -	BLANK	*						- - - - - -
1	1782-554-210-20	LEVER/LIFT COMP	*	1					
2	2502-554-007-00	SPRING/HC057	*	1					
3	1782-554-009-00	WASHER/05X18X01	*	1					
4	V710-140-004-00	RING,SNAP/ 4 E	*	1					
5	2502-554-003-10	PIN/PUSH	*	1					
6	2502-554-004-10	GRIP/LIFT	*	1					
7	- - - - - -	BLANK	*						- - - - - -
7	V211-561-003-00	BOLT/M10X30	*	2					
8	3829-550-006-10	SPRING/HE149	*	2					
9	3814-354-013-40	ROD/M8X175	*	2					
10	V304-260-008-00	NUT	*	4					
11	1782-554-280-00	SHAFT/ADJUST COMP	*	1					
12	V411-260-012-00	WASHER /M12	*	1					
13	V500-162-502-00	PIN,SPLIT/2.5X20	*	1					
14	1728-553-008-00	NUT/ADJUST	*	1					
15	1642-410-001-00	COLLAR/13X17X33	*	1					
16	V411-260-012-00	WASHER /M12	*	1					
17	V500-162-502-00	PIN,SPLIT/2.5X20	*	1					
18	1782-554-007-00	ROD/08X204	*	1					
19	1728-553-004-00	LABEL/GAUGE	*	1					
20	V411-260-008-00	WASHER,PL/M 8	*	1					
21	- - - - - -	BLANK	*						- - - - - -
21	V560-160-008-00	PIN/SNAP	*	1					
22	4138-106-004-00	SPRING/HC040	*	1					
23	V411-260-012-00	WASHER /M12	*	1					
24	V363-260-010-00	NUT/M10	*	1					
25	1725-553-007-10	KNOB/ADJUST	*	1					
26	8657-901-001-00	LABEL/ADJUST	*	1					

FIG.601 HOOD SYSTEM

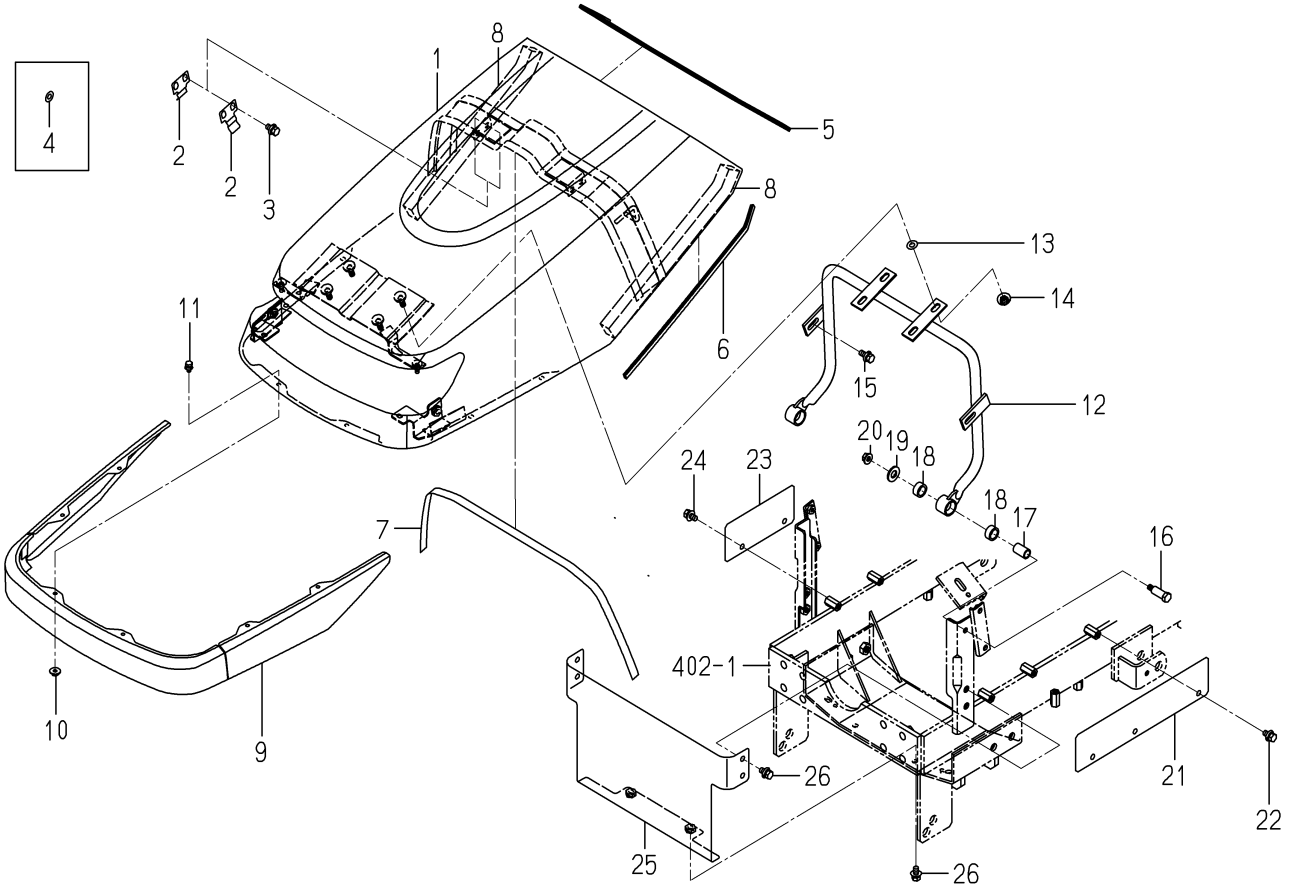

1782-601A-0100

KEY	PART CODE	DESCRIPTION	SPC	TYPE OF MODEL SXG15H		ITC	COL	GRP	REMARKS
1	1782-601-500-00	HOOD COMP	*	1			4L		
2	1703-601-009-10	SPRING	*	4					
3	V211-360-801-60	BOLT,SEMS (SP)	*	4					
4	V411-260-008-00	WASHER,PL/M 8	*	4					
5	1703-601-001-00	INSULATOR	*	1					
6	1593-601-072-00	TRIM/1X6X360	*	2					
7	1631-601-004-10	SEAL/20X20X720	*	1					
8	1725-604-003-00	SEAL/30X20X350	*	2					
9	1703-601-230-22	SPACER	*	1			4L		
10	V360-260-006-00	NUT/M6	*	6					
11	V210-360-601-60	BOLT(SP)/M6X16	*	6					
12	1703-601-210-00	ARM/HOOD COMP	*	1					
13	V411-260-008-00	WASHER,PL/M 8	*	8					
14	V363-260-008-00	NUT/WASHER	*	4					
15	V211-360-802-00	BOLT/SP	*	2					
16	1703-601-005-00	PIN/HOOD	*	2					
17	1703-601-007-00	COLLAR/12X16X25	*	2					
18	1703-601-008-10	INSULATOR	*	4					
19	V411-260-012-00	WASHER /M12	*	2					
20	V362-260-008-00	NUT/WASHER	*	2					
21	1782-601-002-00	COVER/ENGINE/LH	*	1			7F		
22	V211-360-801-60	BOLT,SEMS (SP)	*	3					
23	1782-601-003-00	COVER/ENGINE/RH	*	1			7F		
24	V211-360-801-60	BOLT,SEMS (SP)	*	2					
25	1782-601-230-00	COVER/ENGINE/F COMP	*	1					
26	V211-360-801-60	BOLT,SEMS (SP)	*	6					

FIG.602 GRILLE SYSTEM

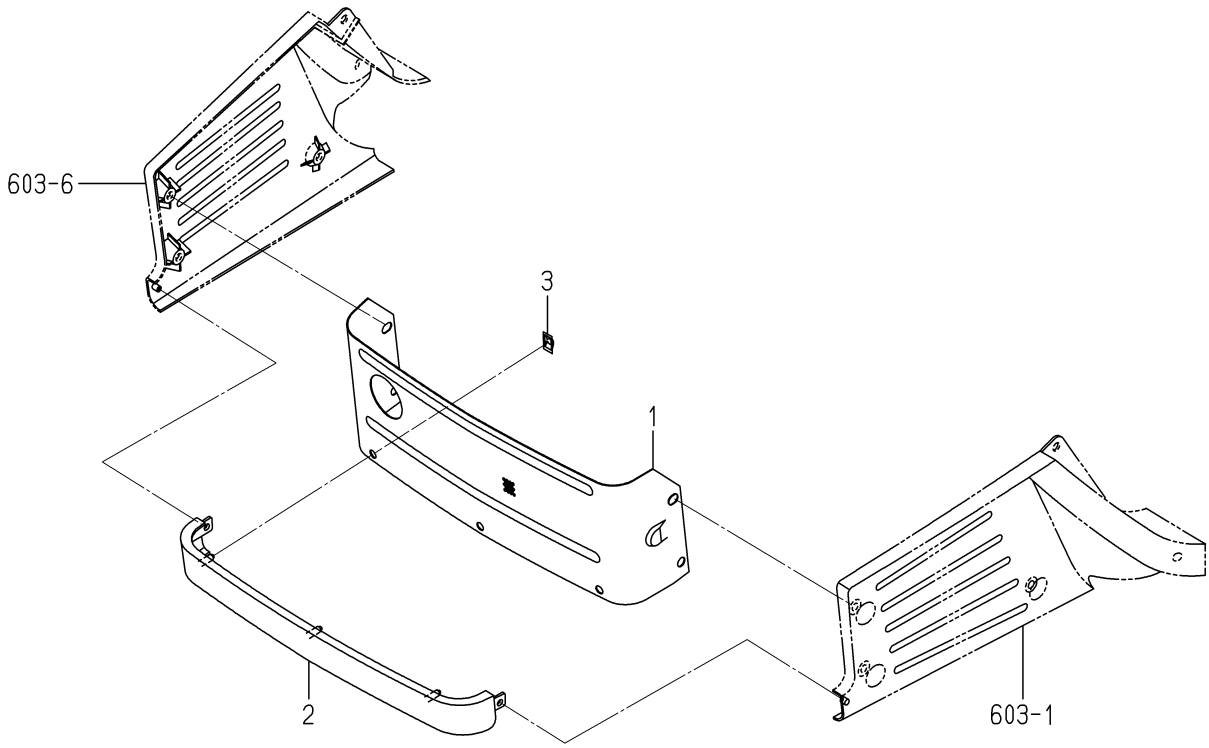

1782-602 -0100

KEY	PART CODE	DESCRIPTION	SPC	TYPE OF MODEL SXG15H		ITC	COL	GRP	REMARKS
1	1703-602-001-01	GRILLE	*	1			7F		
2	1608-601-003-00	COVER/FRONT/C	*	1					
3	V350-160-006-00	NUT,SPEED/P6	*	3					

FIG.603 COVER SYSTEM

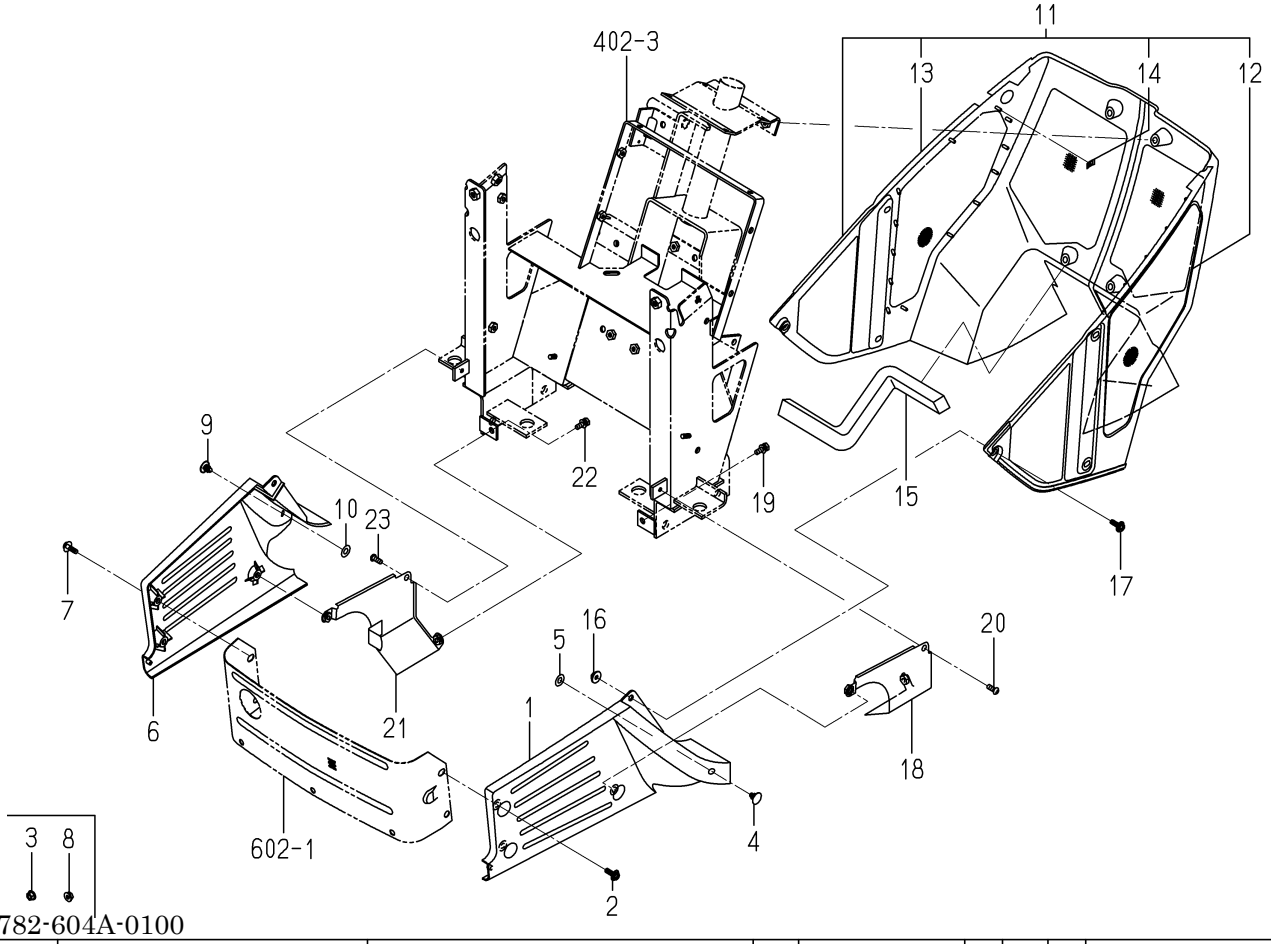

KEY	PART CODE	DESCRIPTION	SPC	TYPE OF MODEL SXG15H		ITC	COL	GRP	REMARKS
1	1608-601-001-10	COVER/FRONT/LH	*	1					
2	1725-604-052-00	SCREW/SP/M06X20	*	3					
3	V361-260-006-00	NUT	*	1					
4	1527-604-002-00	CLIP(B)	*	1					
5	V411-260-008-00	WASHER,PL/M 8	*	1					
6	1608-601-002-10	COVER/FRONT/RH	*	1					
7	1725-604-052-00	SCREW/SP/M06X20	*	3					
8	V361-260-006-00	NUT	*	1					
9	1527-604-002-00	CLIP(B)	*	1					
10	V411-260-008-00	WASHER,PL/M 8	*	1					
11	1703-604-330-00	COVER/LOWER ASSY	*	1					
12	1703-604-331-00	NET/COVER/LOWER/LH	*	1					
13	1724-604-302-00	NET/COVER/LOWER/RH	*	1					
14	V350-160-004-00	NUT,SPEED/P4	*	33					
15	1725-604-003-00	SEAL/30X20X350	*	2					
16	V361-260-006-00	NUT	*	2					
17	1725-604-052-00	SCREW/SP/M06X20	*	10					
18	1703-604-220-20	COVER/SIDE/LH COMP	*	1			7F		
19	V210-360-602-00	BOLT/SP	*	1					
20	V120-376-002-00	SCREW/SP	*	1					
21	1782-604-230-00	COVER/SIDE/RH COMP	*	1			7F		
22	V210-360-602-00	BOLT/SP	*	1					
23	V120-376-002-00	SCREW/SP	*	1					

FIG.604 FENDER SYSTEM

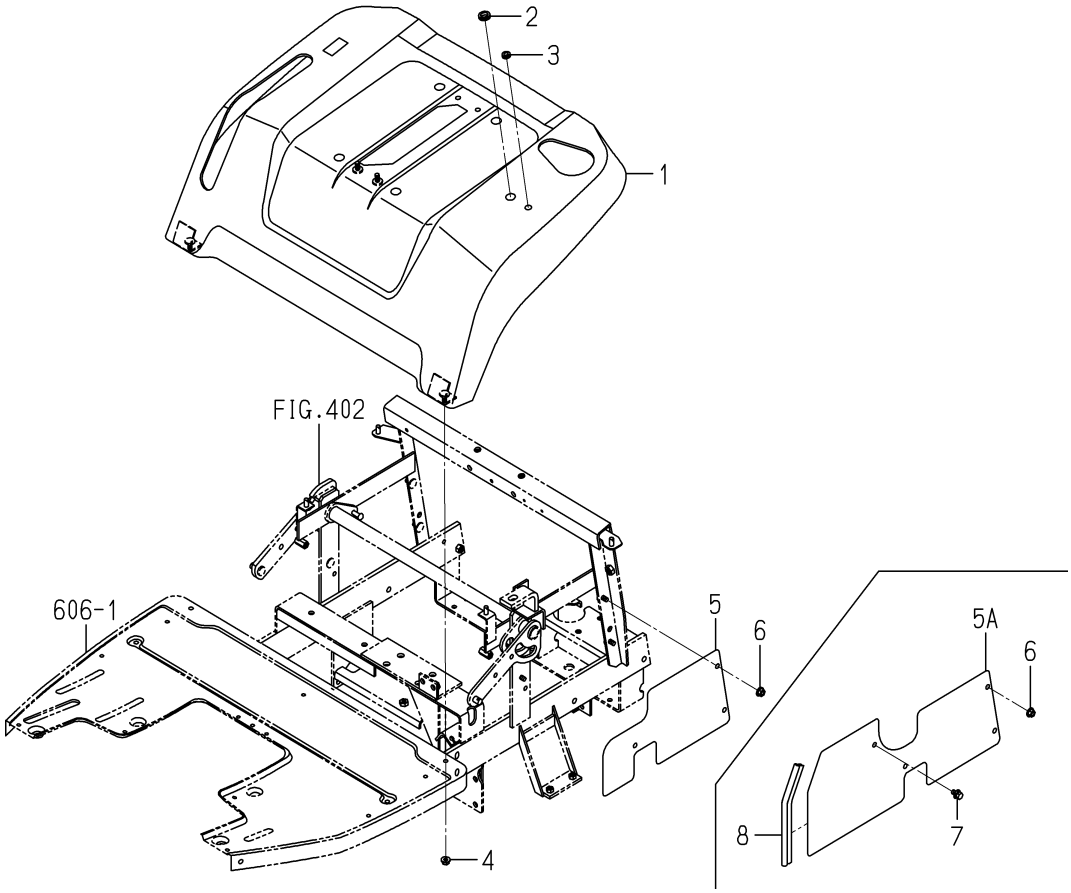

1782-606 -0100

KEY	PART CODE	DESCRIPTION	SPC	TYPE OF MODEL SXG15H		ITC	COL	GRP	REMARKS
1	1782-606-200-10	FENDER COMP	*	1			4L		
2	2142-581-002-00	GROMMET/15	*	1					
3	4335-512-004-00	GROMMET/9	*	1					
4	- - - - - -	BLANK	*						- - - - - -
4	V362-260-008-00	NUT/WASHER	*	4					
5	- - - - - -	BLANK	*						- - - - - -
5A	1782-606-004-20	COVER/SIDE	*	2			7F		
6	V362-260-008-00	NUT/WASHER	*	6					
7	3805-208-016-00	BOLT(SP/M8X16)	*	2					
8	1689-603-012-00	INSULATOR/220	*	2					

FIG.605 SEAT SYSTEM (SE42C TYPE) (EXCEPT SE42C TYPE:OPTION)

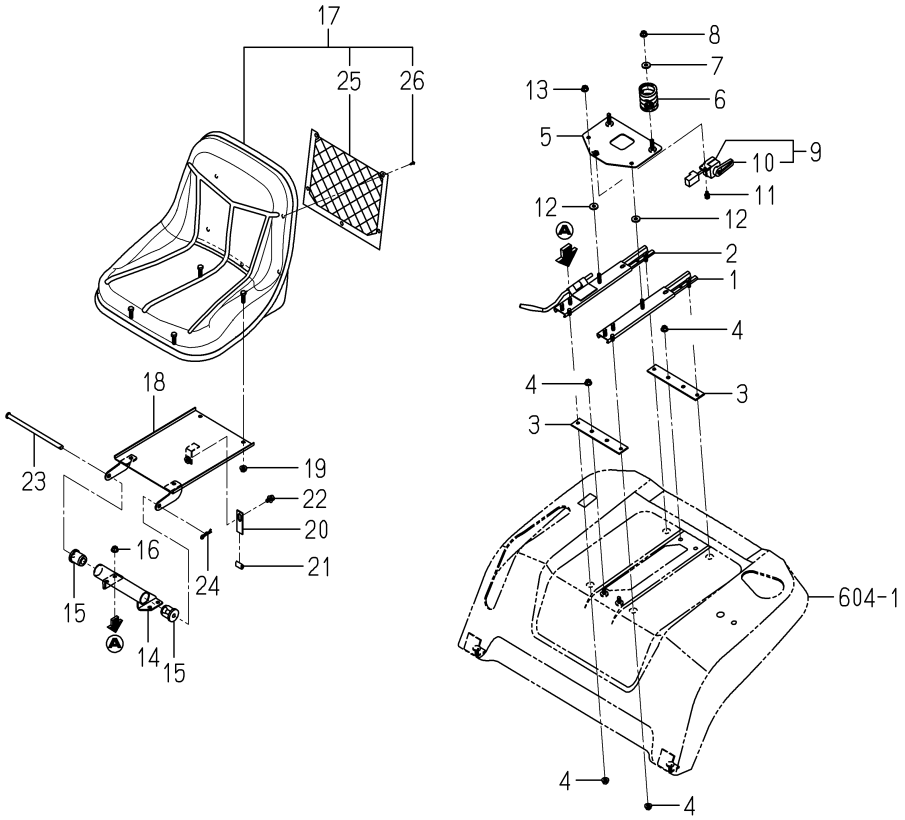

1782-611 -0100

KEY	PART CODE	DESCRIPTION	SPC	TYPE OF MODEL SXG15H		ITC	COL	GRP	REMARKS
1	1488-611-210-00	ADJUSTER,SEAT L ASSY	*	1					
2	1488-611-220-10	ADJUSTER,SEAT/RH	*	1					
3	1782-611-003-00	PLATE/I/32X180	*	2					
4	- - - - - -	BLANK	*						- - - - - -
4	V362-260-008-00	NUT/WASHER	*	6					
5	1782-611-210-00	STAY/SWITCH COMP	*	1					
6	1593-611-014-00	SPRING/D=6	*	2					
7	1373-121-001-00	WASHER/9X22X2	*	2					
8	V362-260-008-00	NUT/WASHER	*	2					
9	1716-680-220-00	SWITCH/LEVER ASSY	*	1					
10	1716-680-222-00	ARM	*	1					
11	V210-360-601-60	BOLT(SP)/M6X16	*	1					
12	1373-121-001-00	WASHER/9X22X2	*	2					
13	V362-260-008-00	NUT/WASHER	*	2					
14	1656-611-220-10	BRACKET/SEAT COMP	*	1					
15	1488-611-001-00	RUBBER,CUSHION (A)	*	2					
16	V362-260-008-00	NUT/WASHER	*	4					
17	2213-517-200-00	SEAT/PZ ASSY	*	1					
18	1782-611-220-10	PLATE/SEAT COMP	*	1					
19	V362-260-008-00	NUT/WASHER	*	4					
20	1782-611-002-00	PLATE/SWITCH	*	1					
21	1650-602-223-00	PAD/20	*	1					
22	V211-360-801-60	BOLT,SEMS (SP)	*	1					
23	1488-611-003-10	PIN,SEAT SET	*	1					
24	- - - - - -	BLANK	*						- - - - - -
24	V560-160-008-00	PIN/SNAP	*	1					
25	2213-517-201-00	NETPOCKET	*	1					
26	V195-164-012-10	SCREW/TAPPING	*	5					

FIG.606 FLOOR SYSTEM

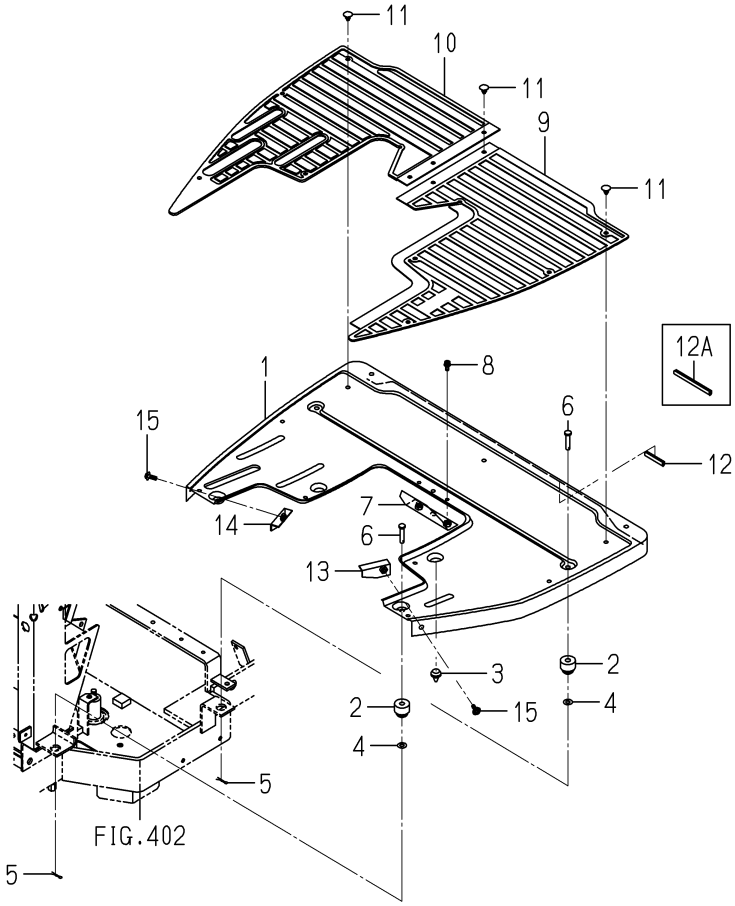

1782-630 -0100

KEY	PART CODE	DESCRIPTION	SPC	TYPE OF MODEL SXG15H		ITC	COL	GRP	REMARKS
1	1782-630-001-10	STEP	*	1			4L		
2	1593-616-004-20	GROMMET/10X30X5	*	4					
3	1432-616-002-00	RUBBER,CUSHION	*	2					
4	V411-260-008-00	WASHER,PL/M 8	*	4					
5	V560-160-008-00	PIN/SNAP	*	4					
6	1593-606-006-10	PIN/8X36	*	4					
7	1705-616-220-20	PLATE/COVER/LOWER	*	1					
8	V120-376-001-60	SCREW/SP	*	2					
9	1782-630-002-00	MAT/LH	*	1					
10	1705-616-003-00	MAT/RH	*	1					
11	1527-604-002-00	CLIP(B)	*	10					
12	- - - - - -	BLANK	*						- - - - - -
12A	2504-165-002-10	INSULATOR	*	1					
13	1782-630-250-00	PLATE/LH COMP	*	1			4L		
14	1782-630-260-00	PLATE/RH COMP	*	1			4L		
15	- - - - - -	BLANK	*						- - - - - -
15	1725-604-052-00	SCREW/SP/M06X20	*	2					

FIG.607 LAMP(HEAD)SYSTEM

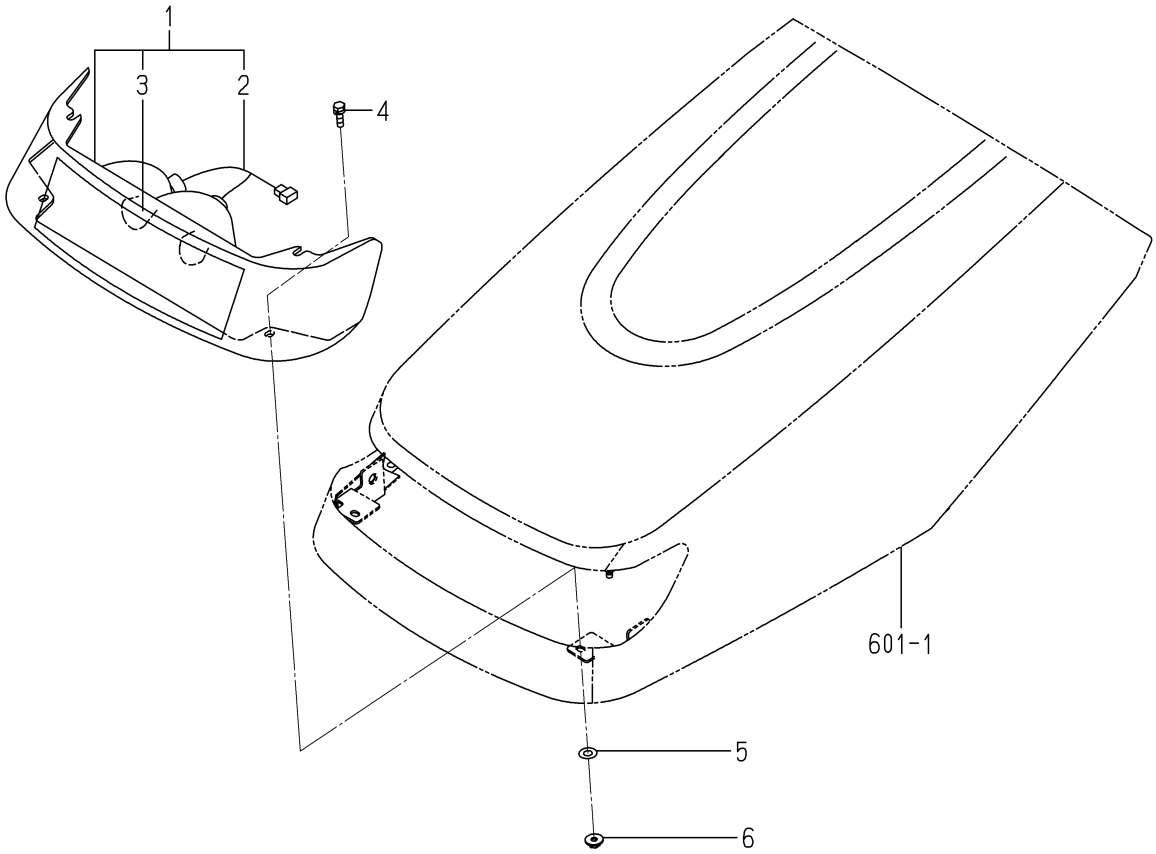

1703-650 -0100

KEY	PART CODE	DESCRIPTION	SPC	TYPE OF MODEL SXG15H		ITC	COL	GRP	REMARKS
1	1703-650-200-10	LAMP/HEAD ASSY	*	1					
2	1703-650-202-00	HARNESS	*	1					
3	1426-621-002-00	BULB/12V23W	*	2					
4	V210-360-602-00	BOLT/SP	*	2					
5	V411-260-008-00	WASHER,PL/M 8	*	4					
6	V361-260-006-00	NUT	*	4					

FIG.608 PANEL SYSTEM

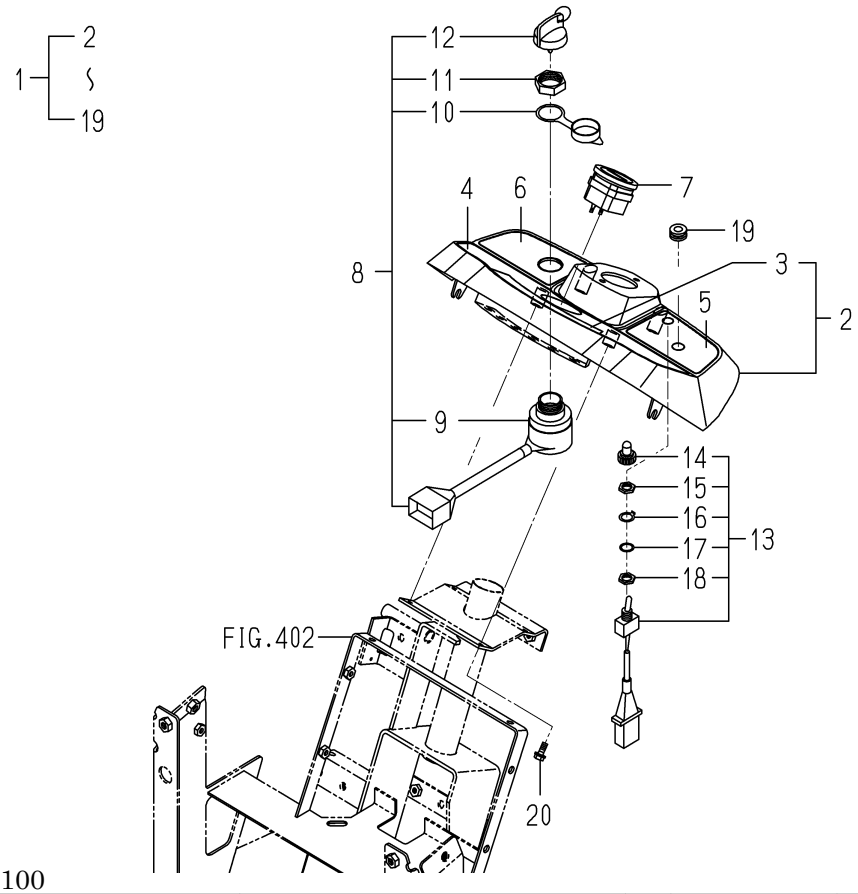

1782-670 -0100

KEY	PART CODE	DESCRIPTION	SPC	TYPE OF MODEL SXG15H		ITC	COL	GRP	REMARKS
1	1782-670-200-00	PANEL/SWITCH ASSY	*	1					
2	1728-670-210-00	PANEL/SWITCH COMP	*	1					
3	1705-621-202-00	PANEL/MONITOR	*	1					
4	1705-901-004-00	LABEL/METER	*	1					
5	1705-622-003-00	LABEL/PANEL/LH/L	*	1					
6	1705-902-004-00	LABEL/PANEL/RH	*	1					
7	1689-613-260-00	METER/HOUR ASSY	*	1					
8	1593-621-250-10	SWITCH(STARTER) ASSY	*	1					
9	1593-621-252-00	COVER	*	1					
10	1444-621-311-00	CAP	*	1					
11	1444-621-312-00	NUT,RING/M28X1.0	*	1					
12	3614-261-002-00	KEY ASSY	*	1					
13	1593-622-270-00	SWITCH,HEAD LAMP	*	1					
14	3631-270-003-00	COVER/SWITCH	*	1					
15	1593-622-272-00	NUT/A/M12	*	1					
16	1593-622-273-00	WASHER/13X18X01	*	1					
17	1593-622-274-00	WASHER	*	1					
18	1593-622-275-00	NUT/B/M12	*	1					
19	1427-621-012-00	GROMMET	*	1					
20	V230-360-601-60	FLANGEBOLT	*	4					

FIG.609 HARNESS(MAIN)SYSTEM(F TYPE)

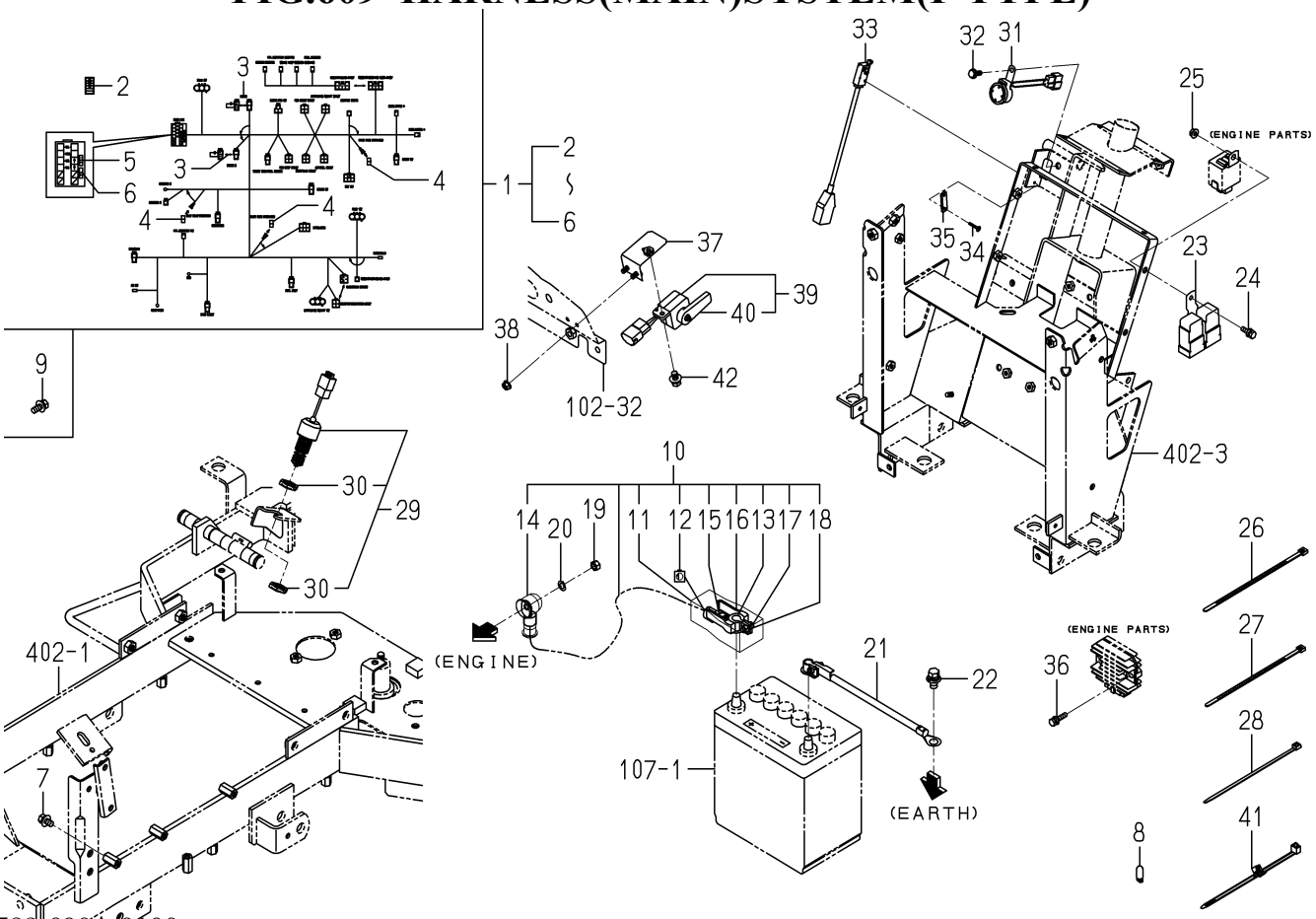

1782-690A-0100

KEY	PART CODE	DESCRIPTION	SPC	TYPE OF MODEL SXG15H		ITC	COL	GRP	REMARKS
1	1782-690-300-00	HARNESS/MAIN ASSY	*	1					
2	1782-690-302-00	LABEL/FUSE	*	1					
3	1773-652-212-00	DIODE/3A	*	2					
4	1650-650-222-00	FUSE/SLOWBLOW	*	3					
5	3821-262-202-00	FUSE/BLADE/32V10A	*	2					
6	3824-247-202-00	FUSE/BLADE/32V05A	*	4					
7	V211-360-801-60	BOLT,SEMS (SP)	*	1					
8	3650-270-214-00	BULB	*	4					
9	V211-360-802-00	BOLT/SP	*	1					
10	1782-690-250-10	CABLE/BATTERY ASSY	*	1					
11	1782-690-252-00	COVER/BATTERY	*	1					
12	1782-690-253-00	HARNESS ASSY	*	1					
13	1782-690-254-00	TERMINAL/BATTERY/+	*	1					
14	1650-650-293-00	COVER/BATTERY/STARTO	*	1					
15	1650-650-295-00	NUT	*	1					
16	1650-650-296-00	INSULATOR	*	1					
17	1560-666-005-00	BOLT	*	1					
18	1560-666-006-00	NUT	*	1					
19	V304-260-008-00	NUT	*	1					
20	V401-160-008-00	WASHER,SP/M 8	*	1					
21	1728-112-230-00	CABLE/EARTH ASSY	*	1					
22	V211-661-002-00	BOLT/M10X20	*	1					
23	1690-658-360-10	RELAY/4P-2 ASSY	*	2					
24	V210-360-602-00	BOLT/SP	*	2					
25	V360-260-006-00	NUT/M6	*	1					
26	1342-402-006-00	BAND/WIRE/250	*	15					
27	1376-402-003-00	BAND,WIRE/140	*	4					
28	1593-623-003-00	BAND	*	1					
29	1772-654-250-00	SWITCH/PUSH ASSY	*	1					
30	1772-654-251-00	NUT	*	2					

FIG.609 HARNESS(MAIN)SYSTEM(F TYPE)

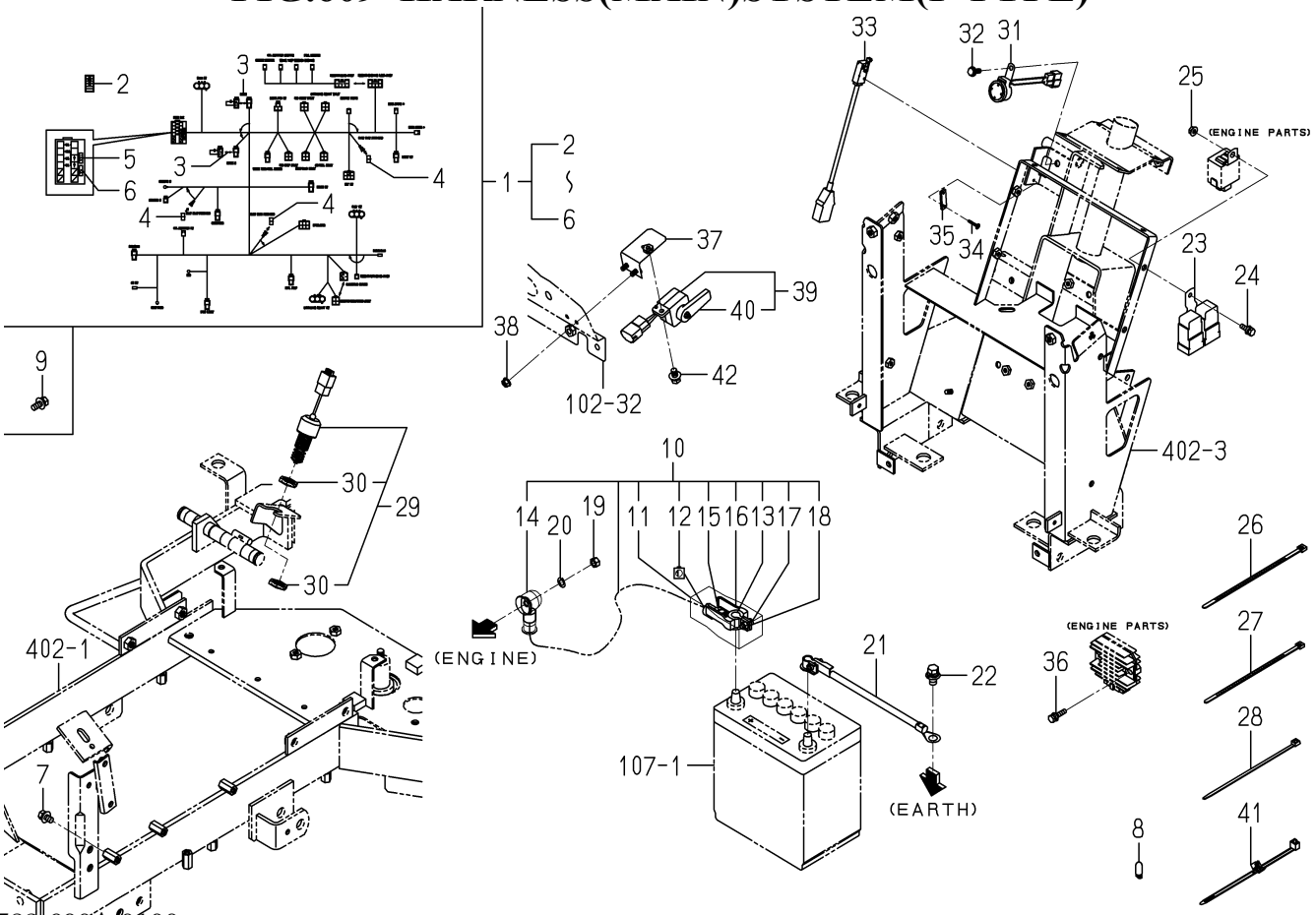

1782-690A-0100

KEY	PART CODE	DESCRIPTION	SPC	TYPE OF MODEL SXG15H		ITC	COL	GRP	REMARKS
31	2515-665-210-00	BUZZER	*	1					
32	V230-360-601-60	FLANGEBOLT	*	1					
33	1593-623-520-00	SWITCH,MERIT	*	1					
34	1614-129-003-00	SCREW/M03X20	*	2					
35	3642-496-007-10	PLATE,SWITCH	*	1					
36	V210-360-602-50	BOLT/SP	*	2					
37	1782-690-230-00	STAY/SWITCH COMP	*	1					
38	V360-260-006-00	NUT/M6	*	2					
39	1716-680-330-00	SWITCH/LEVER ASSY	*	1					
40	1716-680-222-00	ARM	*	1					
41	1560-666-004-00	BAND	*	1					
42	V211-360-801-60	BOLT,SEMS (SP)	*	1					

FIG.610 HARNESS(MAIN)SYSTEM(C TYPE)

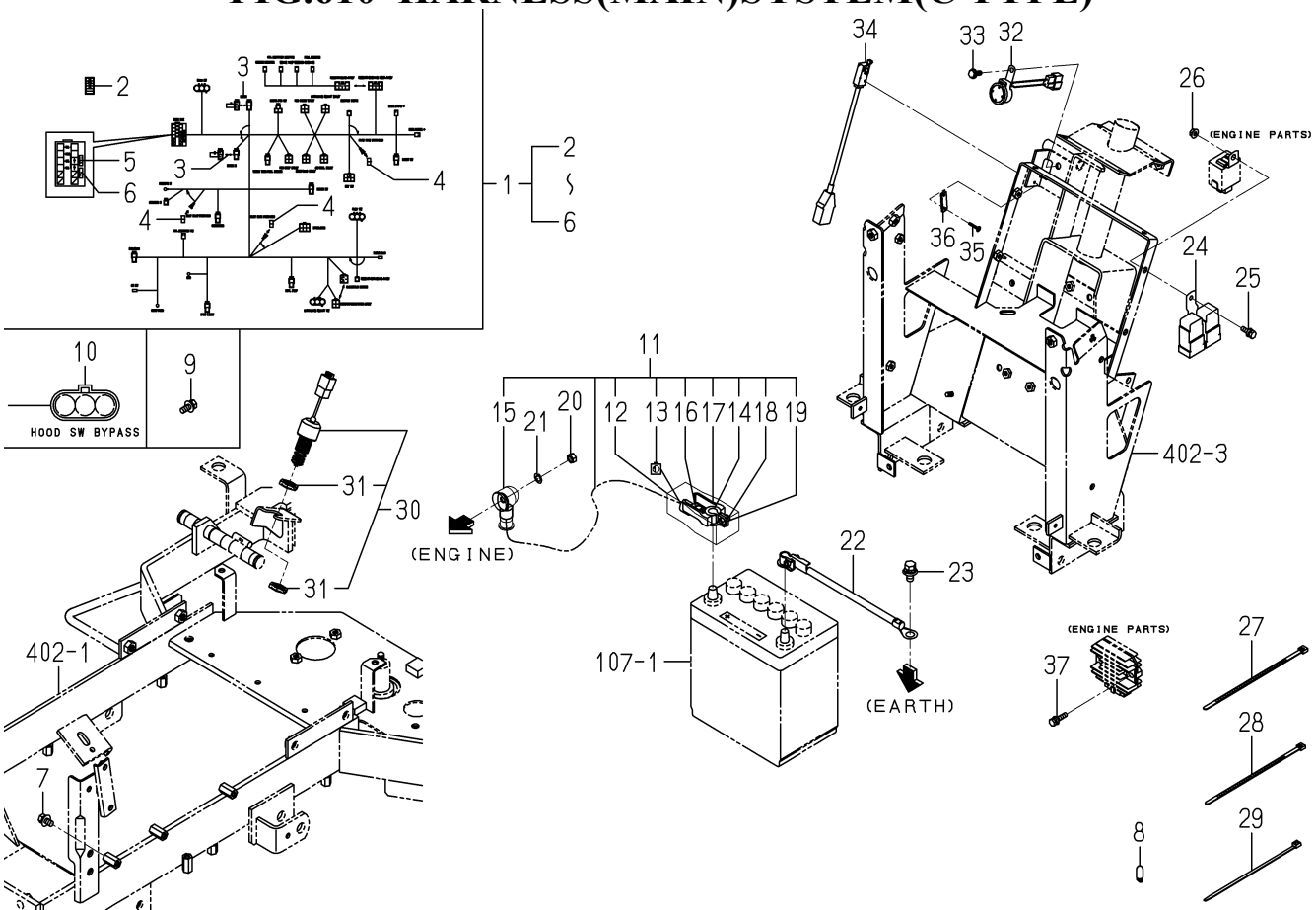

1782-690B-0100

KEY	PART CODE	DESCRIPTION	SPC	TYPE OF MODEL SXG15H		ITC	COL	GRP	REMARKS
1	1782-690-300-00	HARNESS/MAIN ASSY	*	1					
2	1782-690-302-00	LABEL/FUSE	*	1					
3	1773-652-212-00	DIODE/3A	*	2					
4	1650-650-222-00	FUSE/SLOWBLOW	*	3					
5	3821-262-202-00	FUSE/BLADE/32V10A	*	2					
6	3824-247-202-00	FUSE/BLADE/32V05A	*	4					
7	V211-360-801-60	BOLT,SEMS (SP)	*	1					
8	3650-270-214-00	BULB	*	4					
9	V211-360-802-00	BOLT/SP	*	1					
10	1752-690-530-10	CONNECTOR/JOINT ASSY	*	1					
11	1782-690-250-10	CABLE/BATTERY ASSY	*	1					
12	1782-690-252-00	COVER/BATTERY	*	1					
13	1782-690-253-00	HARNESS ASSY	*	1					
14	1782-690-254-00	TERMINAL/BATTERY/+	*	1					
15	1650-650-293-00	COVER/BATTERY/STARTO	*	1					
16	1650-650-295-00	NUT	*	1					
17	1650-650-296-00	INSULATOR	*	1					
18	1560-666-005-00	BOLT	*	1					
19	1560-666-006-00	NUT	*	1					
20	V304-260-008-00	NUT	*	1					
21	V401-160-008-00	WASHER,SP/M 8	*	1					
22	1728-112-230-00	CABLE/EARTH ASSY	*	1					
23	V211-661-002-00	BOLT/M10X20	*	1					
24	1690-658-360-10	RELAY/4P-2 ASSY	*	2					
25	V210-360-602-00	BOLT/SP	*	2					
26	V360-260-006-00	NUT/M6	*	1					
27	1342-402-006-00	BAND/WIRE/250	*	15					
28	1376-402-003-00	BAND,WIRE/140	*	4					
29	1593-623-003-00	BAND	*	1					
30	1772-654-250-00	SWITCH/PUSH ASSY	*	1					

FIG.610 HARNESS(MAIN)SYSTEM(C TYPE)

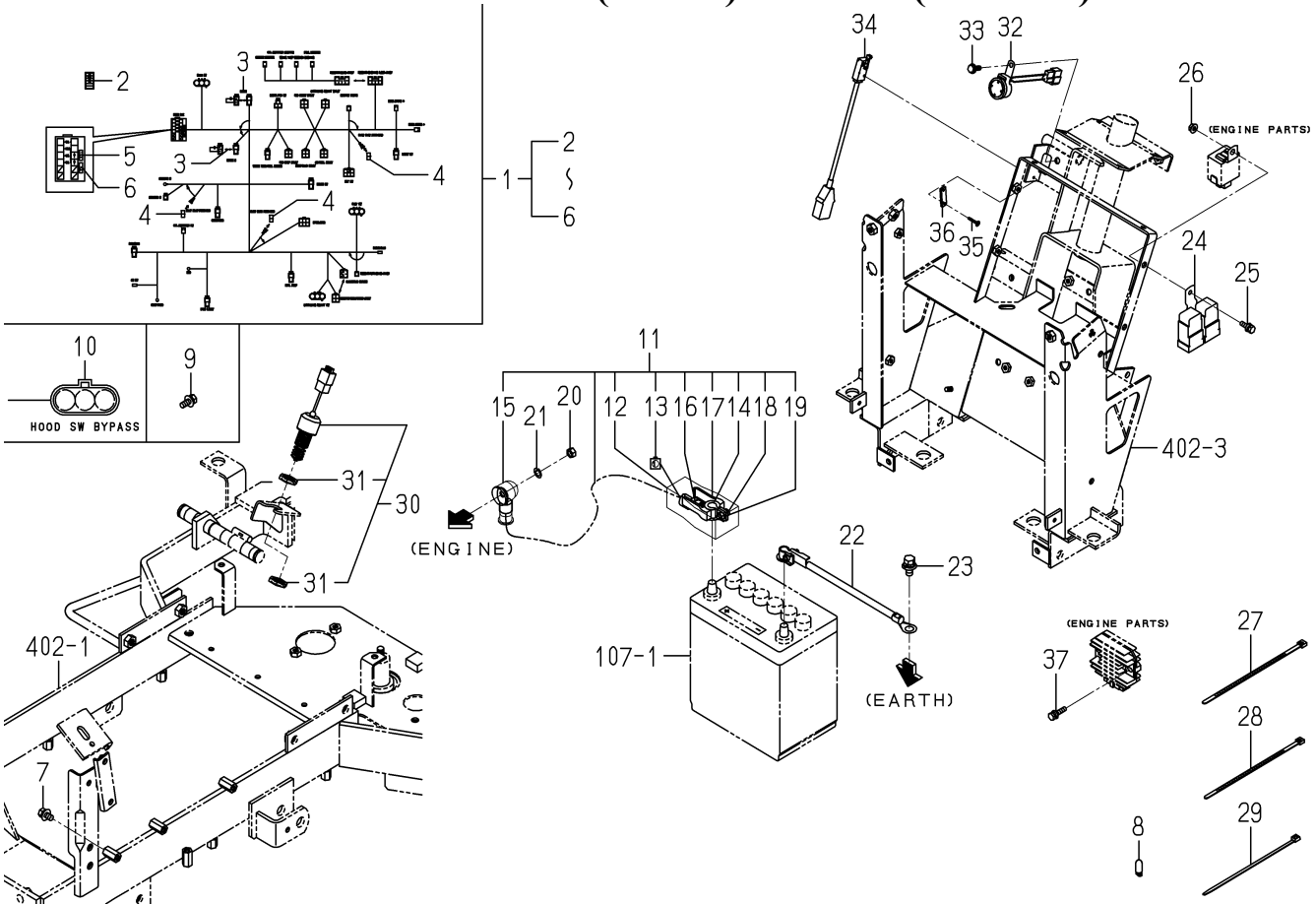

1782-690B-0100

KEY	PART CODE	DESCRIPTION	SPC	TYPE OF MODEL SXG15H		ITC	COL	GRP	REMARKS
31	1772-654-251-00	NUT	*	2					
32	2515-665-210-00	BUZZER	*	1					
33	V230-360-601-60	FLANGEBOLT	*	1					
34	1593-623-520-00	SWITCH,MERIT	*	1					
35	1614-129-003-00	SCREW/M03X20	*	2					
36	3642-496-007-10	PLATE,SWITCH	*	1					
37	V210-360-602-50	BOLT/SP	*	2					

FIG.801 CHUTER SYSTEM

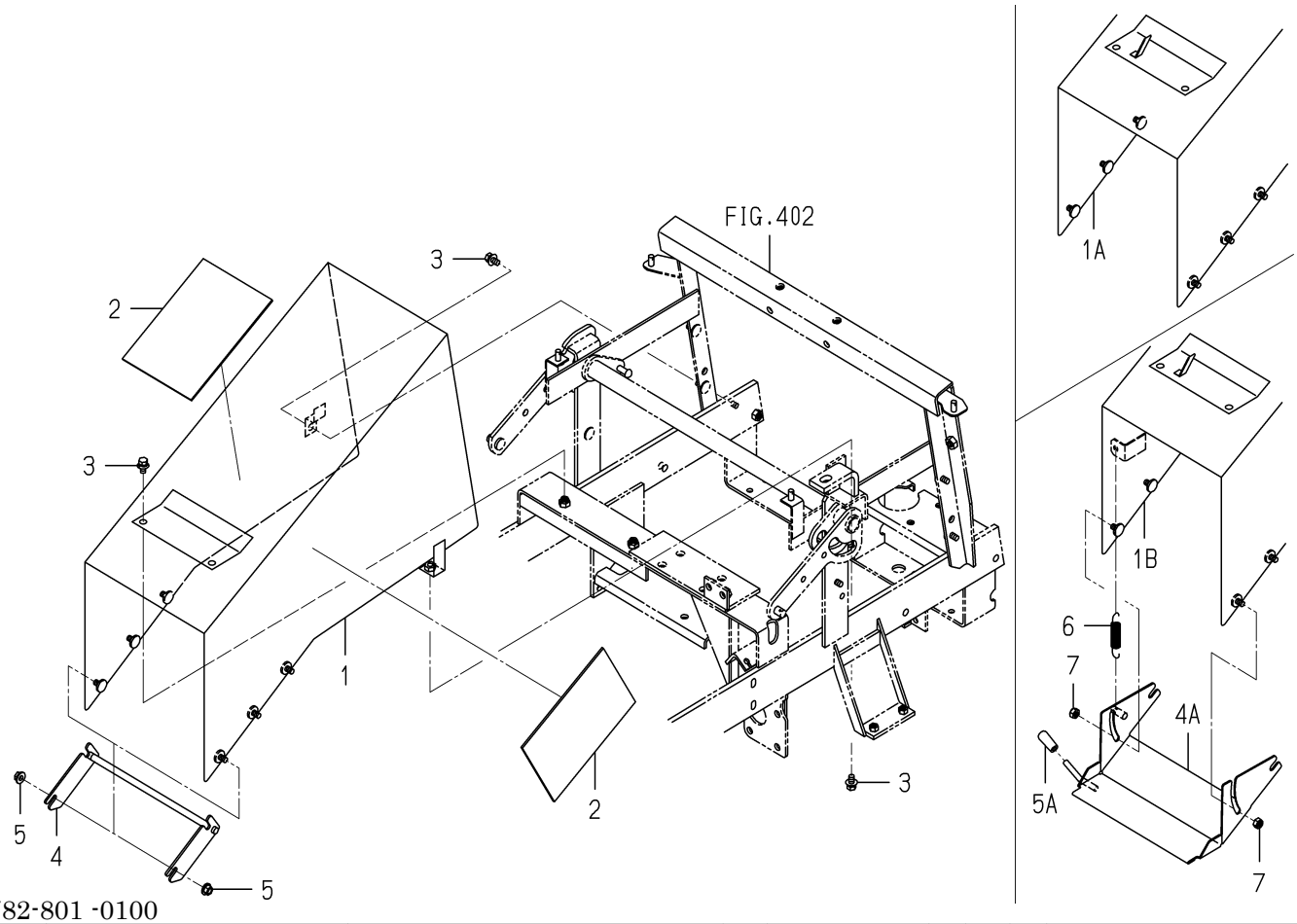

1782-801 -0100

KEY	PART CODE	DESCRIPTION	SPC	TYPE OF MODEL SXG15H		ITC	COL	GRP	REMARKS
1	- - - - - -	BLANK	*						- - - - - -
1A	- - - - - -	BLANK	*						- - - - - -
1B	1782-801-210-20	CHUTER COMP	*	1			7F		
2	8595-407-004-00	INSULATOR/150X200	*	2					
3	V211-360-801-60	BOLT,SEMS (SP)	*	4					
4	- - - - - -	BLANK	*						- - - - - -
4A	1782-801-230-00	PLATE/BOTTOM COMP	*	1					
5	- - - - - -	BLANK	*						- - - - - -
5A	1444-507-003-00	GRIP,LEVER	*	1					
6	4136-405-002-00	SPRING/HE074	*	1					
7	1719-312-001-00	U-NUT	*	4					

FIG.901 ORNAMENT

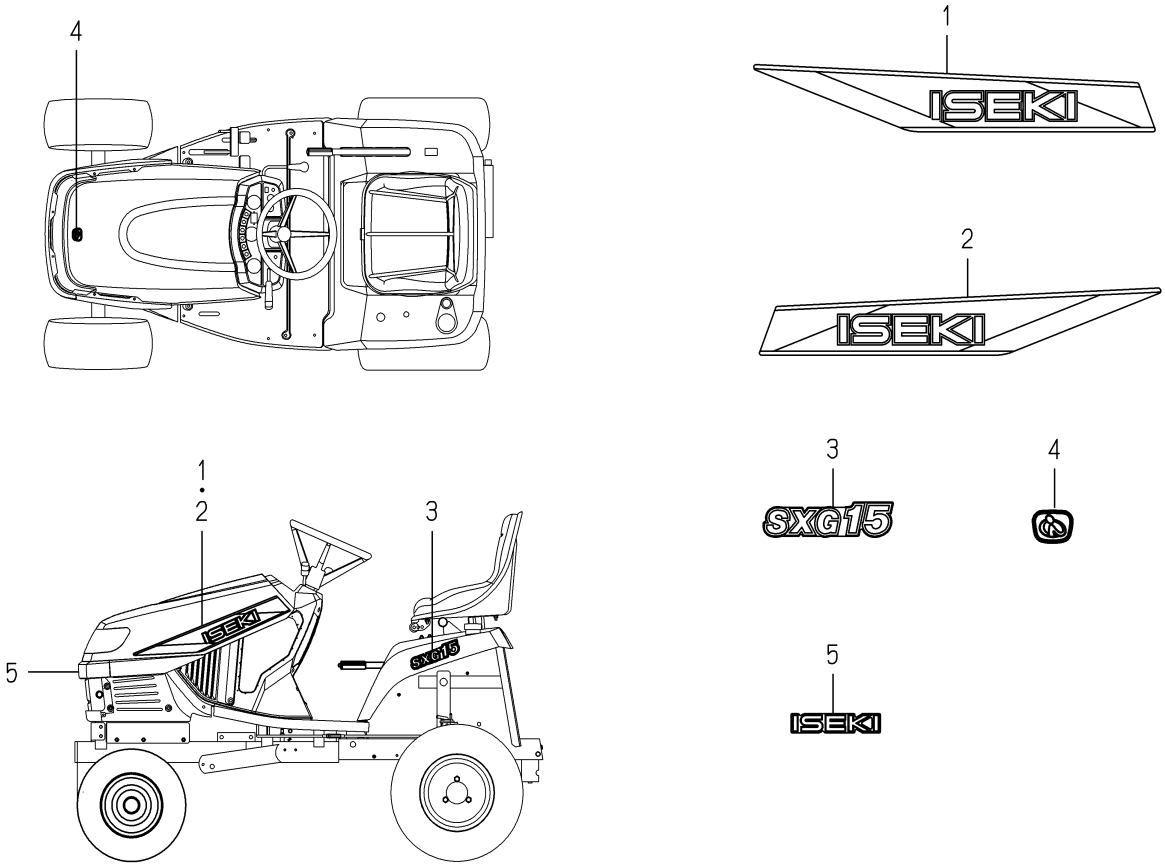

1782-901 -0100

KEY	PART CODE	DESCRIPTION	SPC	TYPE OF MODEL SXG15H		ITC	COL	GRP	REMARKS
1	1782-901-001-00	ORNAMENT/ISEKI/LH	*	1					
2	1782-901-002-00	ORNAMENT/ISEKI/RH	*	1					
3	1782-901-003-00	ORNAMENT/SXG15	*	2					
4	1118-901-002-00	ORNAMENT/I	*	1					
5	1119-901-003-00	ORNAMENT/ISEKI/130	*	1					

FIG.902 LABEL(CONTROL)

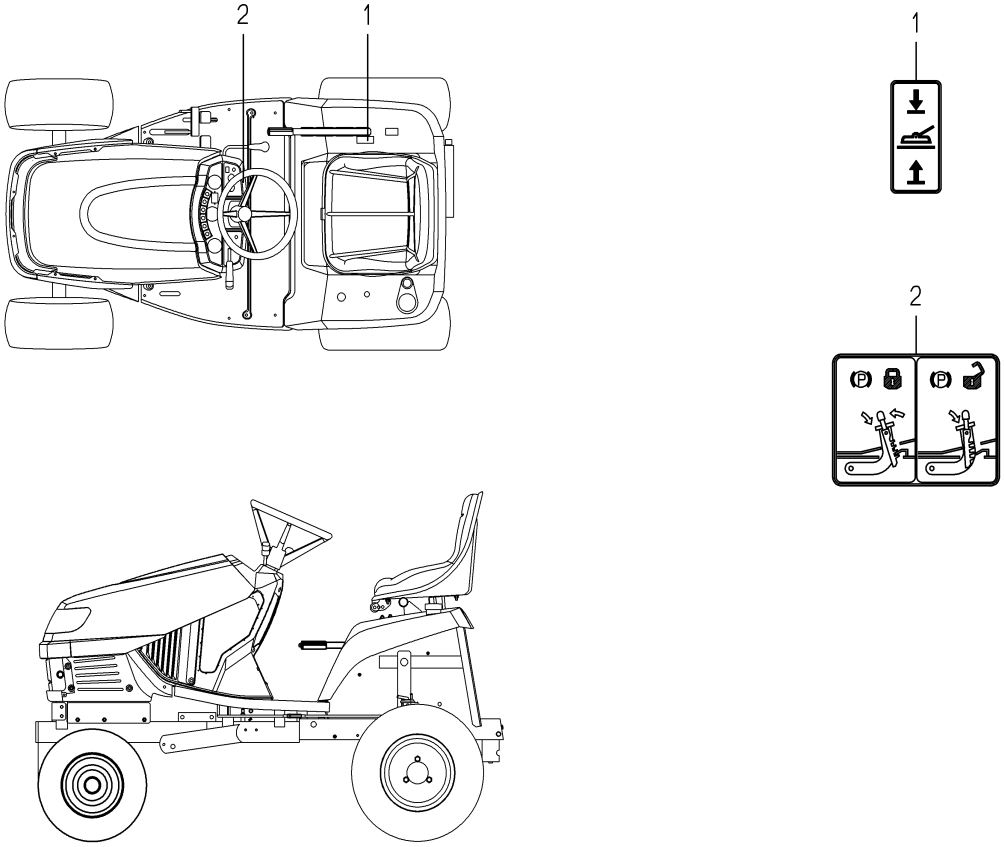

1782-902 -0100

KEY	PART CODE	DESCRIPTION	SPC	TYPE OF MODEL SXG15H		ITC	COL	GRP	REMARKS
1	1782-902-001-00	LABEL/LIFT/MOWER	*	1					
2	1631-901-021-00	LABEL/PARKING	*	1					

FIG.903 LABEL(CAUTION)

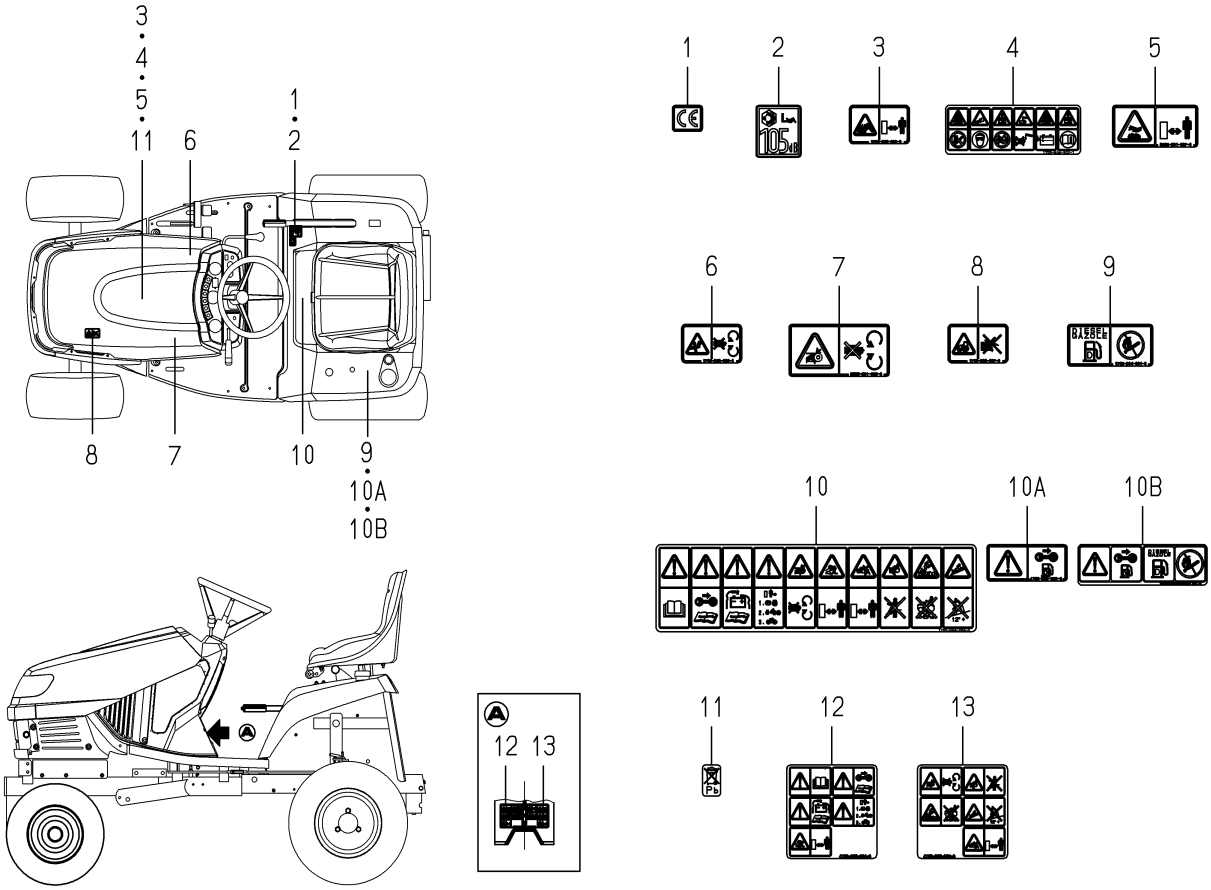

1782-903 -0100

KEY	PART CODE	DESCRIPTION	SPC	TYPE OF MODEL SXG15H		ITC	COL	GRP	REMARKS
1	2500-901-027-00	LABEL/CE	*	1					
2	2500-901-031-00	LABEL/NOISE/LWA/100	*	1					
3	1705-902-008-00	LABEL/W/RADIATOR	*	1					
4	1705-904-002-10	LABEL/BATTERY	*	1					
5	8595-901-007-00	LABEL/WARNING/HOT	*	1					
6	1705-902-006-00	LABEL/W/FAN	*	1					
7	1674-904-008-00	LABEL/WARNING/BELT	*	1					
8	1705-902-007-00	LABEL/W/STARTER	*	1					
9	- - - - - -	BLANK	*						- - - - - -
10	- - - - - -	BLANK	*						- - - - - -
10A	- - - - - -	BLANK	*						- - - - - -
10B	1739-904-004-00	LABEL/FUEL	*	1					
11	1728-903-003-00	LABEL/BATTERY	*	1					
12	1728-903-004-00	LABEL/CAUTION/A	*	1					
13	1728-903-005-00	LABEL/CAUTION/B	*	1					

FIG.P01 SUPPORT(MUFFLER)(REPAIR)

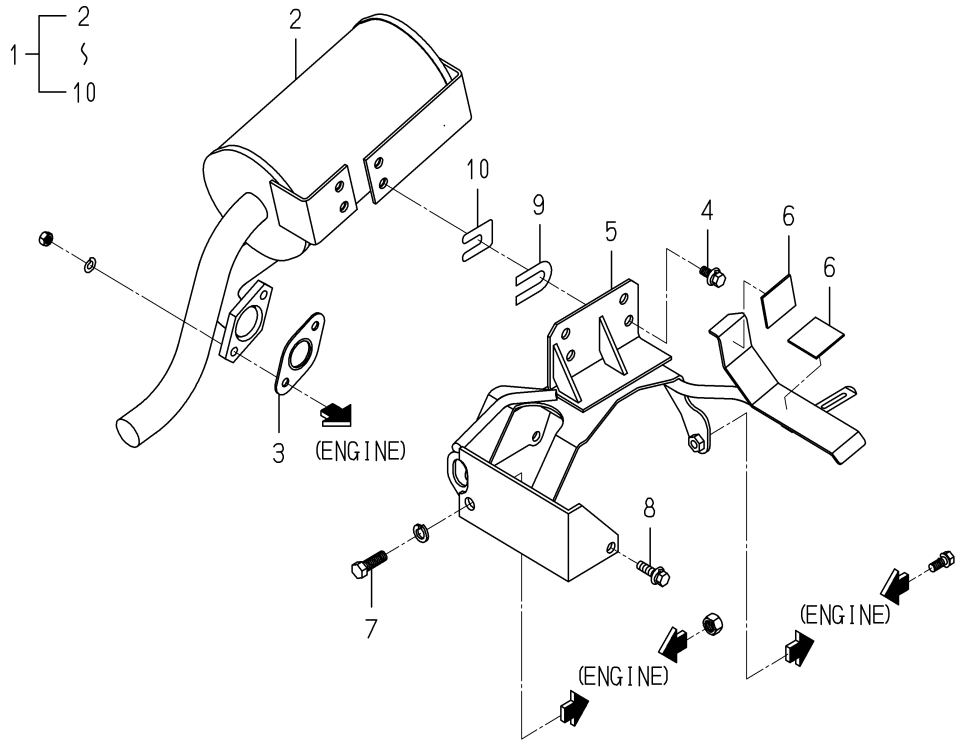

1782-103Z-0100

KEY	PART CODE	DESCRIPTION	SPC	TYPE OF MODEL SXG15H		ITC	COL	GRP	REMARKS
1	1782-103-520-00	SUPPORT/MUFFLER SET	R	1					
2	1782-103-300-10	MUFFLER COMP	R	1					
3	3659-301-001-00	GASKET	R	1					
4	V211-660-802-00	BOLT/8X20	R	2					
5	1782-103-510-10	BRACKET/MUFFLER COMP	R	1					
6	1427-111-229-00	CUSHION,RUBBER	R	2					
7	V203-361-003-50	BOLT	R	1					
8	V211-660-803-00	BOLT/SP	R	1					
9	3814-302-023-00	SHIM, 1.2	R	8					
10	1725-103-002-00	SHIM/0.6/B	R	4					

FIG.P02 TENSION(HST)(REPAIR)

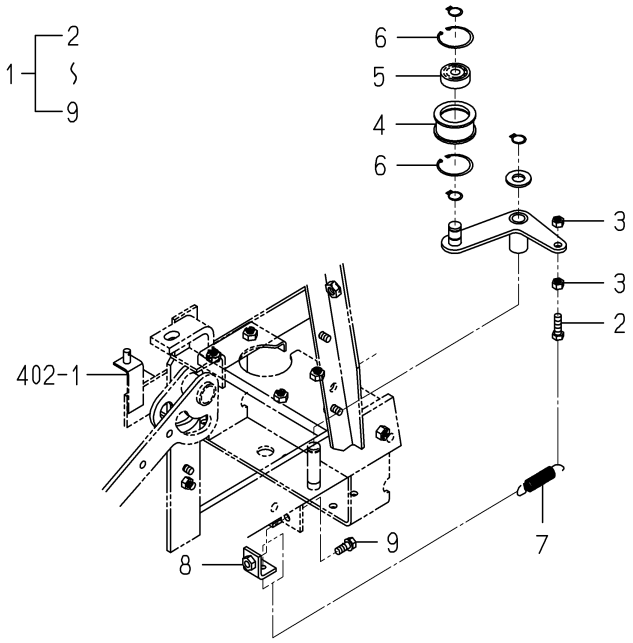

1782-122Z-0100

KEY	PART CODE	DESCRIPTION	SPC	TYPE OF MODEL SXG15H		ITC	COL	GRP	REMARKS
1	1782-122-350-00	TENSION/HST SET	R	1					
2	V201-360-802-50	BOLT/M 8X25	R	1					
3	V304-260-008-00	NUT	R	2					
4	1782-122-014-00	PULLY/FT045X020	R	1					
5	V600-350-620-20	BEARING,RB/6202RS	R	1					
6	V705-140-035-00	RING,CIRCLIP	R	2					
7	1104-410-007-00	SPRING/HE074	R	1					
8	1782-122-310-00	PLATE/L/25X35 COMP	R	1					
9	V211-660-802-00	BOLT/8X20	R	1					

FIG.P03 SUPPORT(HST)(REPAIR)

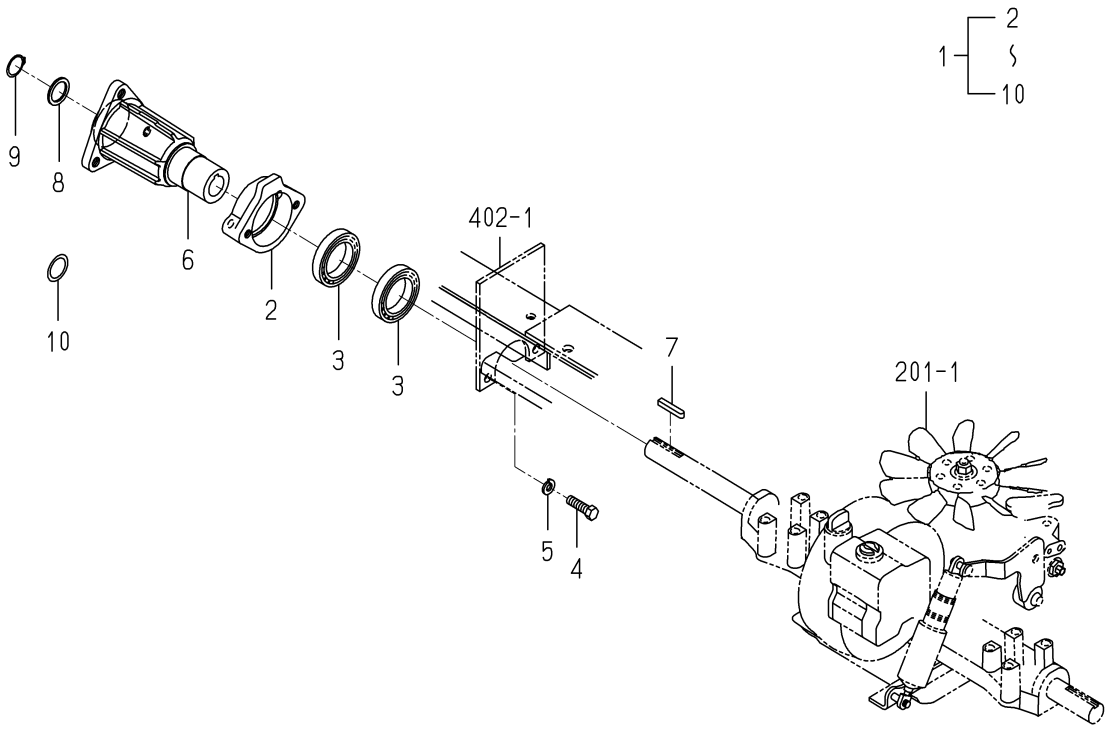

1782-202Z-0100

KEY	PART CODE	DESCRIPTION	SPC	TYPE OF MODEL SXG15H		ITC	COL	GRP	REMARKS
1	1782-202-510-00	SUPPORT/HST SET	R	1					
2	1782-202-052-00	METAL/WHEELSHAFT	R	1					
3	1782-202-056-00	BEARING/BALL	R	2					
4	V201-361-003-5B	BOLT/SEAL	R	2					
5	V401-160-010-00	WASHER,SP/M10	R	2					
6	1782-202-051-10	HUB/WHEEL/RH	R	1					
7	1782-202-054-00	KEY/06X06X40	R	1					
8	3666-222-003-00	WASHER/26X34X2	R	1					
9	1725-218-006-00	RING/SNAP/CS25	R	1					
10	2161-129-002-00	WASHER	R	1					

FIG.S01 COMPONENT PARTS FOR 1782-201-200-00 ON Fig.201

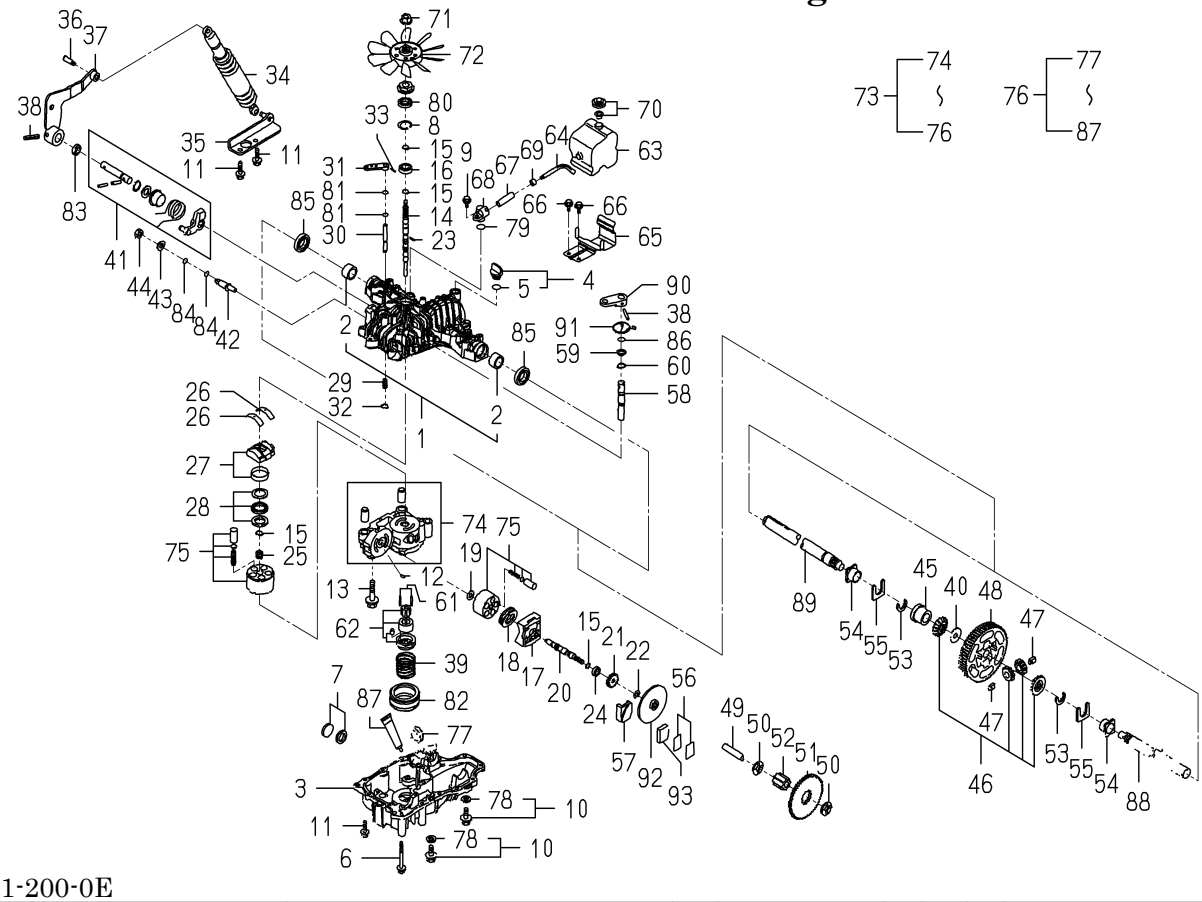

1782-201-200-0E

KEY	PART CODE	DESCRIPTION	SPC	TYPE OF MODEL SXG15H		ITC	COL	GRP	REMARKS
1	1782-201-510-00	UPPERCASEKIT	*	1					
2	1782-201-511-00	BUSHING25.4	*	2					
3	1782-201-203-00	LOWERCASE	*	1					
4	1782-201-520-00	OILCAPM20B ASSY	*	1					
5	1782-201-521-00	O-RINGP18	*	1					
6	1782-201-207-00	CAPSCREW8X75	*	1					
7	1782-201-209-00	MAGNET	*	1					
8	1782-201-212-00	SNAPRINGC35	*	1					
9	1782-201-215-00	BOLT8X20	*	1					
10	1782-201-530-00	DRAINBOLTKIT	*	2					
11	1782-201-217-00	TAPPINGSCREW8X30	*	3					
12	1782-201-221-00	PIN3X9.8	*	1					
13	1782-201-223-00	BOLT10X65	*	1					
14	1782-201-225-00	PUMPSHAFT	*	1					
15	1782-201-226-00	SNAPRINGS15	*	4					
16	1782-201-227-00	BEARING6202C3	*	1					
17	1782-201-228-00	MOTORHOUSING	*	1					
18	1782-201-229-00	THRUSTBEARING	*	1					
19	1782-201-231-00	WASHER12X24X1	*	1					
20	1782-201-232-00	MOTORSHAFT	*	1					
21	1782-201-233-00	MOTORGEAR(17T)	*	1					
22	1782-201-234-00	E-RING(MOTOR)	*	1					
23	1782-201-235-00	PLN3X13.8	*	1					
24	1782-201-236-00	BEARING6302DUC3	*	1					
25	1782-201-237-00	PUMPSPRING	*	1					
26	1782-201-238-00	THRUSTMETAL	*	2					
27	1782-201-550-00	SWASHPLATE ASSY	*	1					
28	1782-201-560-00	THRUSTBEARING ASSY	*	1					
29	1782-201-243-00	SPRING25	*	1					
30	1782-201-244-00	BYPASSSHAFT	*	1					

FIG.S01 COMPONENT PARTS FOR 1782-201-200-00 ON Fig.201

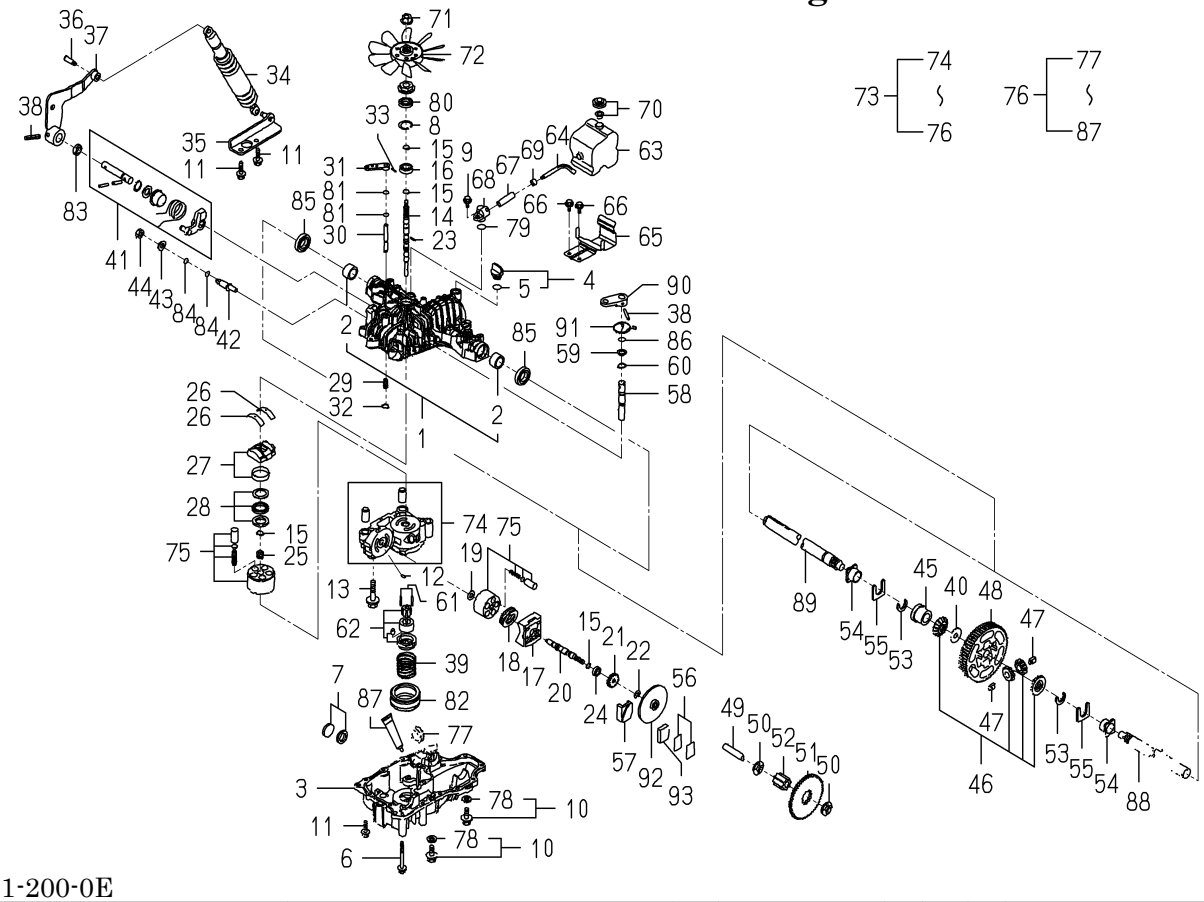

1782-201-200-0E

KEY	PART CODE	DESCRIPTION	SPC	TYPE OF MODEL SXG15H		ITC	COL	GRP	REMARKS
31	1782-201-245-00	BYPASSLEVER	*	1					
32	1782-201-246-00	SNAPRING10	*	1					
33	1782-201-247-00	PIN3.0AX20	*	1					
34	1782-201-248-00	SHOCKABSORBERK65	*	1					
35	1782-201-249-00	SHOCKSTAY	*	1					
36	1782-201-250-00	PINSHOCK	*	1					
37	1782-201-251-00	CONTROLLEVER	*	1					
38	1782-201-254-00	ROLLPIN6X40	*	2					
39	1782-201-256-00	CHARGESPRING	*	1					
40	1782-201-258-00	WASHER17X36X6.4	*	1					
41	1782-201-570-00	CONTROLSHAFTKIT	*	1					
42	1782-201-261-00	FULCRUM	*	1					
43	1782-201-262-00	WASHER12	*	1					
44	1782-201-264-00	NUT12	*	1					
45	1782-201-265-00	COLLAR25.4	*	1					
46	1782-201-580-00	DIFFGEARKIT	*	1					
47	1782-201-267-00	PIN17X24	*	2					
48	1782-201-268-00	FINALGEAR(67T)	*	1					
49	1782-201-269-00	FINALPINIONSHAFT	*	1					
50	1782-201-270-00	WASHER15X35X3.2	*	2					
51	1782-201-271-00	REDUCTIONGEAR(53T)	*	1					
52	1782-201-272-00	FINALPINIONGEAR(11T)	*	1					
53	1782-201-276-00	AXLESHAFTLEFT	*	1					
54	1782-201-277-00	RETAININGRING	*	2					
55	1782-201-278-00	AXLESHAFTRIGHT	*	1					
56	1782-201-279-00	BUSHING	*	2					
57	1782-201-282-00	THRUSTWASHER	*	2					
58	1782-201-285-00	BRAKELEVER	*	1					
59	1782-201-286-00	BRAKERETURNSPRING	*	1					
60	1782-201-287-00	BRAKEDISK	*	1					

FIG.S01 COMPONENT PARTS FOR 1782-201-200-00 ON Fig.201

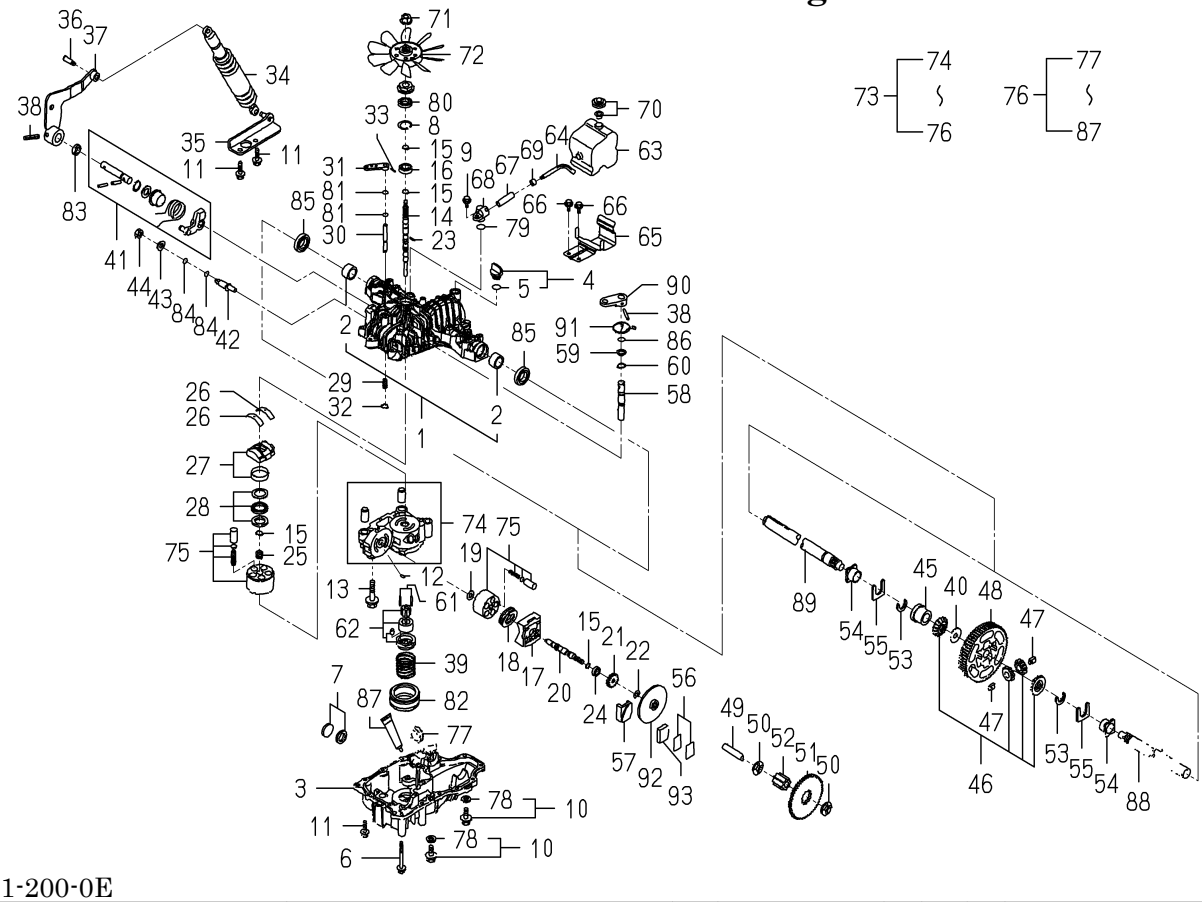

1782-201-200-0E

KEY	PART CODE	DESCRIPTION	SPC	TYPE OF MODEL SXG15H		ITC	COL	GRP	REMARKS
61	1782-201-288-00	BRAKESHOE	*	1					
62	1782-201-590-00	SHIMKIT	*	1					
63	1782-201-290-00	BRAKEACTUATOR	*	1					
64	1782-201-291-00	BRAKESHAFT	*	1					
65	1782-201-292-00	WASHER16X23X1.6	*	1					
66	1782-201-300-00	SNAPRING	*	1					
67	1782-201-331-00	SPRINGPIN4X18	*	2					
68	1782-201-600-00	CHARGEPUMPKIT	*	1					
69	1782-201-338-00	RESERVOLRTANK	*	1					
70	1782-201-339-00	PLPE8	*	1					
71	1782-201-340-00	TANKBRACKET	*	1					
72	1782-201-341-00	TAPPINGSCREW8X20	*	2					
73	1782-201-342-00	TANKSPACER	*	1					
74	1782-201-344-00	FITTING	*	1					
75	1782-201-345-00	SEAL8	*	1					
76	1782-201-610-00	VENTVALVE15 ASSY	*	1					
77	1782-201-351-00	LOCKNUT10	*	1					
78	1782-201-353-00	NOTCHEDFAN8.4DIA	*	1					
79	1782-201-450-00	REPAIRKIT	*	1					
80	1782-201-218-00	CENTERCASEBB	*	1					
81	1782-201-540-00	CYLINDERBLOCKKIT	*	2					
82	1782-201-400-00	SEALKIT	*	1					
83	1782-201-208-00	FILTER	*	1					
84	1782-201-531-00	SEALWASHER10	*	2					
85	1782-201-521-00	O-RINGP18	*	1					
86	1782-201-214-00	SEALTC153507	*	1					
87	1782-201-220-00	O-RING1AP10A	*	2					
88	1782-201-222-00	FILTER	*	1					
89	1782-201-259-00	SEALTC162606	*	1					
90	1782-201-263-00	O-RING1AP14	*	2					

FIG.S01 COMPONENT PARTS FOR 1782-201-200-00 ON Fig.201

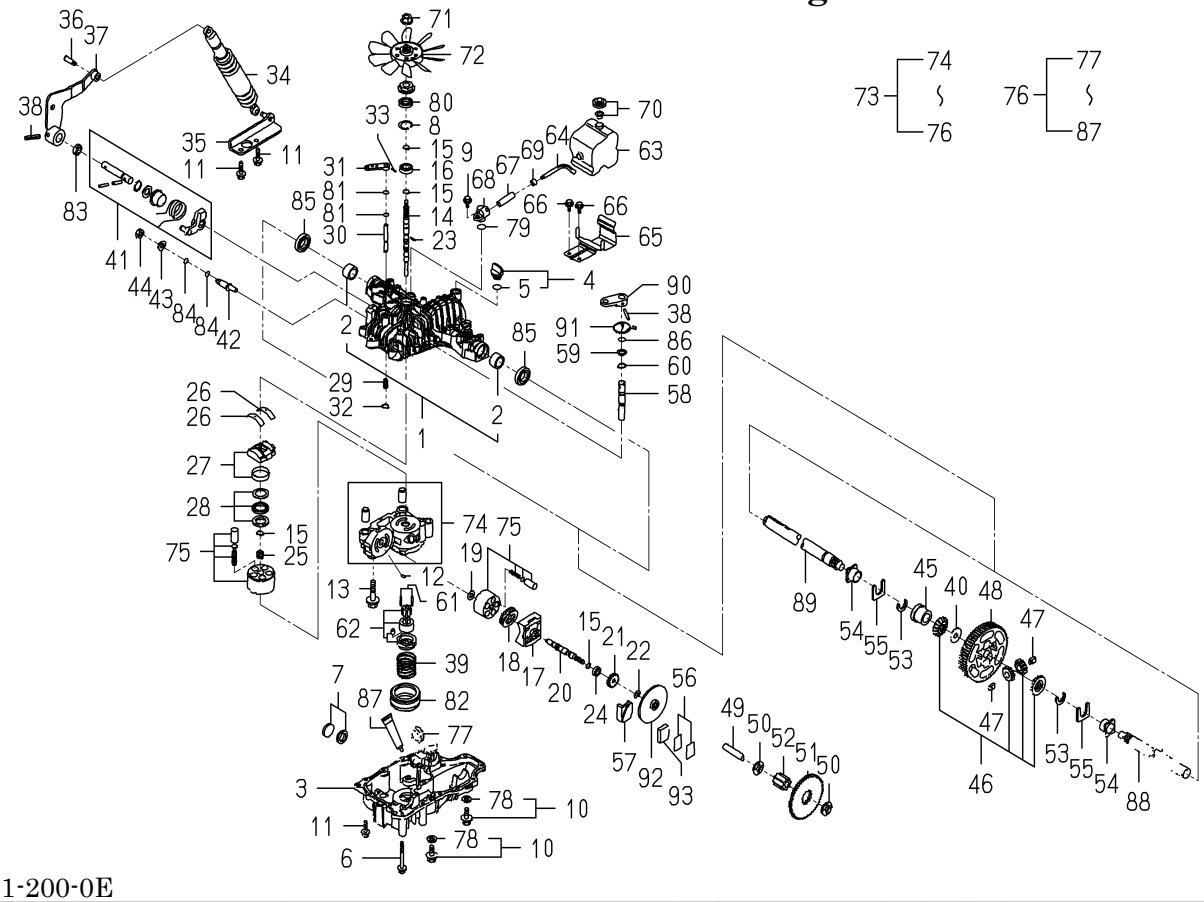

1782-201-200-0E

KEY	PART CODE	DESCRIPTION	SPC	TYPE OF MODEL SXG15H		ITC	COL	GRP	REMARKS
91	1782-201-281-00	SEALS25.4X42X8	*	2					
92	1782-201-293-00	O-RING1AP12	*	1					
93	1782-201-299-00	SEALANT	*	1					

WIRING DIAGRAM(1/2)

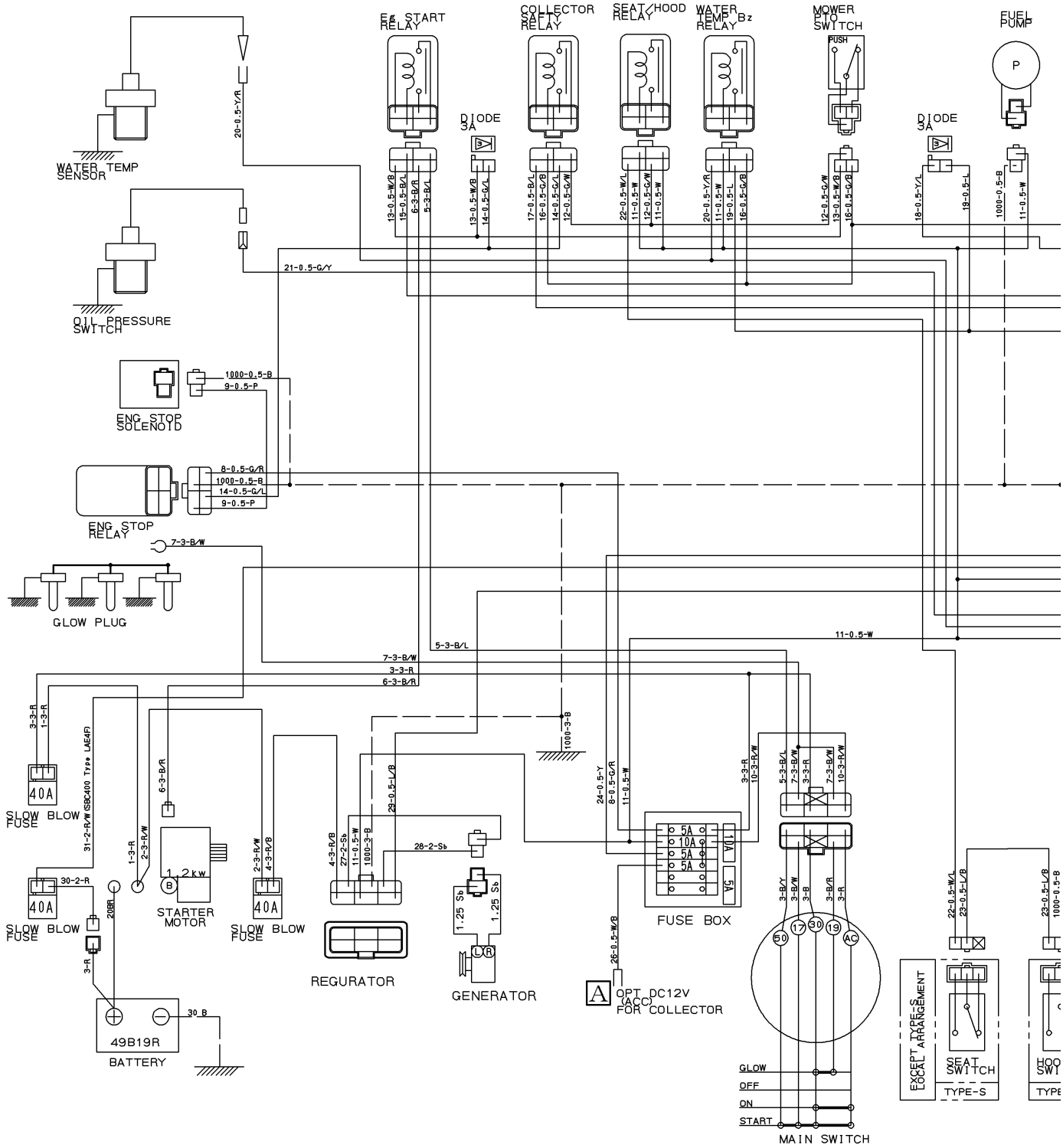

WIRING DIAGRAM(2/2)

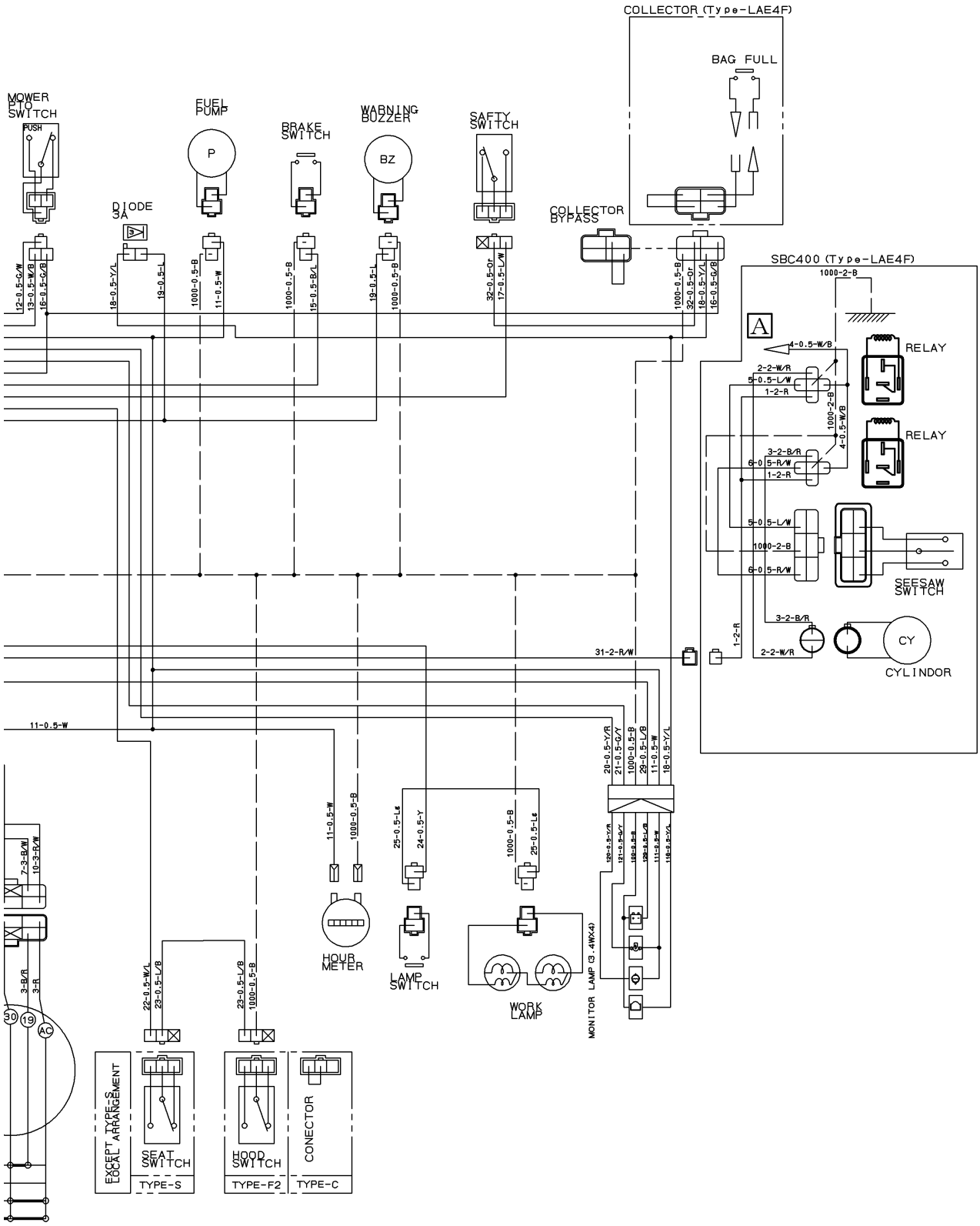

Numerical Index

Part Code	Fig.	Key	Part Code	Fig.	Key	Part Code	Fig.	Key
1373-121-001-00	204	42	6209-610-009-00	201	4	6211-560-002-00	P02	3
	801	5	6209-625-001-00	201	14	6211-599-001-10	201	13
3625-540-004-00	204	22		P04	10		P02	2
3632-360-036-00	504	9	6209-625-002-00	204	5		P02	4
3659-310-004-00	504	5		P04	12	6211-751-001-10	102	2
3805-355-002-20	202	2-A	6209-630-002-10	802	7	6211-760-026-30	201	29
3817-401-001-00	204	12-A		P04	21	6211-766-012-00	201	30
	204	41-A	6209-704-009-00	504	7	6211-777-007-30	205	1
	301	20-A	6209-730-005-00	302	3-A	6212-111-100-00	303	1
	402	14-A		502	9	6212-114-100-00	P03	1
	402	20-A	6209-730-006-00	304	4	6212-116-100-00	P03	3
6003-010-080-00	P01	1	6209-740-001-00	204	27	6212-121-009-20	303	2
6209-000-002-00	301	19	6209-749-001-20	201	15	6212-124-009-10	P03	2
6209-000-004-10	201	2	6209-788-001-00	201	27	6212-126-009-10	P03	4
6209-000-043-00	304	9	6209-920-002-00	204	21	6212-211-001-10	303	3
6209-000-044-00	101	7		401	14	6212-230-003-10	303	5
6209-030-043-00	502	15		P04	13	6212-235-005-00	303	6
6209-030-044-00	403	4	6209-940-004-00	301	15	6212-271-016-00	303	7
6209-044-001-00	502	25	6211-110-094-00	101	1	6212-274-016-00	P02	5-A
6209-046-015-00	304	7	6211-141-016-10	101	6	6212-276-016-00	P02	6-A
6209-050-001-00	204	33		P04	3	6212-310-010-50	304	1
6209-050-002-00	204	34	6211-170-006-10	102	1	6212-330-056-10	304	5
6209-056-001-00	502	6	6211-173-004-00	102	3	6212-333-003-00	304	6
6209-300-002-00	402	18		P04	4	6212-371-022-00	304	8
6209-300-014-00	101	8	6211-210-024-30	201	1	6212-511-004-00	302	1
6209-360-005-00	504	4	6211-258-001-00	201	8	6212-521-008-00	304	3
6209-360-028-20	102	6		P04	8	6212-522-010-00	302	2
6209-409-001-00	204	19	6211-258-002-00	201	9	6212-523-023-00	302	6
6209-409-003-00	301	18		P04	9	6212-524-002-30	502	8
6209-440-005-00	802	4	6211-291-001-10	201	23	6212-531-005-10	201	6
6209-490-002-10	102	4	6211-292-001-20	201	24	6212-535-001-00	302	4
6209-500-003-00	204	17		P04	11	6212-535-002-00	502	12
	204	26	6211-310-006-30	204	1	6212-551-028-00	301	1
	P04	22	6211-311-005-30	204	36-B	6212-552-014-00	301	2
6209-572-003-00	102	5-B	6211-312-001-30	204	28	6212-561-001-10	301	3
	P04	5		P04	14	6212-563-001-00	301	4
6209-580-002-10	502	28	6211-312-002-30	204	37	6212-565-001-00	301	5
6209-587-001-00	303	4		P04	15	6212-569-002-00	101	4
6209-600-004-00	204	25	6211-341-086-00	203	1		P04	2
6209-605-004-10	101	3	6211-342-002-10	203	2	6212-571-006-00	301	6
6209-605-007-00	201	5	6211-361-019-20	202	1-A	6212-575-001-00	301	7
	204	3	6211-510-002-00	201	10	6212-600-003-10	301	8
6209-610-001-10	201	3	6211-511-003-00	201	11	6212-611-004-10	301	9
6209-610-007-00	204	4	6211-511-004-00	201	12	6212-616-002-00	301	17
6209-610-008-00	201	7	6211-540-002-00	P02	1	6212-620-002-20	301	10

Numerical Index

Part Code	Fig.	Key	Part Code	Fig.	Key	Part Code	Fig.	Key
6212-626-002-10	301	12	6213-743-002-10	402	26	6215-549-007-10	502	29
6212-628-004-00	301	13		P04	19	6215-549-008-10	502	33
6212-628-005-00	301	14	6214-111-014-00	103	1	6215-549-021-10	502	24
6213-100-003-30	401	1	6214-115-002-20	103	2	6215-549-029-00	505	2
6213-111-001-30	401	2		P04	6	6215-600-147-00	502	1
6213-119-001-00	401	6	6214-141-012-00	104	1	6215-611-003-00	S02	1
6213-120-003-20	401	3	6214-145-006-10	104	2	6215-612-003-00	S02	34
6213-125-001-00	401	4		P04	7	6215-619-012-00	S02	35
6213-129-003-00	401	5	6215-300-045-10	501	1	6215-619-013-00	S02	37
6213-129-005-00	201	17	6215-311-036-00	S01	16	6215-619-014-00	S02	38
6213-129-006-00	201	16	6215-315-002-00	501	2	6215-619-015-00	S02	39
6213-140-033-00	401	8-A	6215-330-028-00	S01	1	6215-619-016-00	S02	40
6213-149-001-00	401	10	6215-332-014-00	S01	15	6215-621-036-00	502	7
6213-160-002-20	204	29	6215-339-004-00	S01	14	6215-622-002-00	S02	12
6213-161-001-20	204	30	6215-342-013-00	S01	13	6215-629-017-00	S02	13
6213-164-001-00	204	31	6215-343-010-00	S01	12	6215-629-019-00	S02	14
6213-200-009-00	503	2	6215-345-044-00	S01	2	6215-629-020-00	S02	18
6213-240-002-10	401	15	6215-345-045-00	S01	3	6215-629-021-00	S02	19
6213-311-003-10	401	12	6215-345-046-00	S01	4	6215-629-022-00	S02	20
6213-319-001-00	204	2	6215-345-047-00	S01	5	6215-629-023-00	S02	21
6213-610-005-40	402	1	6215-345-048-00	S01	6	6215-629-024-00	S02	22
6213-611-003-20	402	2	6215-345-049-00	S01	7	6215-629-025-00	S02	23
6213-612-004-00	402	9	6215-345-050-00	S01	8	6215-629-026-00	S02	24
6213-613-002-10	402	8	6215-345-051-00	S01	9	6215-629-027-00	S02	25
6213-614-003-10	402	12	6215-345-052-00	S01	10	6215-629-028-00	S02	26
	P04	17	6215-345-053-00	S01	11	6215-629-029-00	S02	27
6213-614-006-20	402	17	6215-359-003-00	S01	17	6215-629-030-00	S02	28
	P04	18	6215-359-004-00	S01	18	6215-629-031-00	S02	29
6213-619-002-00	402	11	6215-411-141-00	504	2	6215-629-032-00	S02	30
6213-619-003-00	402	10	6215-411-149-00	501	3	6215-629-033-00	S02	31
6213-619-005-00	402	16	6215-411-150-10	501	4	6215-629-034-00	S02	32
6213-621-003-00	402	6	6215-412-001-20	504	1	6215-631-017-00	S02	2
6213-622-002-10	402	5	6215-419-001-00	504	6	6215-634-002-00	S02	15
6213-631-002-00	402	3	6215-520-001-00	502	14	6215-635-002-00	S02	8
6213-631-005-00	402	4	6215-526-004-00	502	16	6215-635-008-00	S02	36
6213-641-004-10	403	2	6215-531-001-00	502	22	6215-637-003-00	S02	33
6213-642-002-00	402	7	6215-541-001-10	502	17	6215-639-006-00	S02	16
6213-660-006-00	403	1	6215-541-002-10	505	1	6215-639-007-00	S02	17
6213-669-008-00	403	3	6215-541-003-10	502	23	6215-641-002-00	S02	3
6213-671-012-00	403	5	6215-542-001-10	204	23	6215-643-002-00	S02	4
6213-674-017-10	801	3	6215-542-002-00	502	19	6215-644-003-00	S02	6
6213-711-004-00	402	30	6215-543-003-20	502	18	6215-649-003-00	S02	5
6213-716-001-50	402	24-A	6215-546-001-00	204	18	6215-649-004-10	S02	7
6213-721-001-00	201	22	6215-549-001-10	201	26	6215-649-005-00	S02	9
6213-729-016-00	402	22	6215-549-003-00	502	21	6215-649-006-10	S02	10

Numerical Index

6003-095-261-00

Part Code	Fig.	Key	Part Code	Fig.	Key	Part Code	Fig.	Key
6215-649-007-00	S02	11	6281-971-001-10	802	1	V231-360-808-50	204	6
6219-732-003-00	802	5	6282-450-002-00	802	2	V233-361-002-00	205	2
6219-752-036-00	502	2	6287-810-054-00	P04	1	V233-361-006-00	801	6
6219-752-037-00	502	3	6294-453-002-00	201	20	V301-260-006-00	201	28
6219-752-038-00	502	4	6513-770-022-10	402	29		204	35
6219-752-039-00	502	5	6901-910-612-00	302	5		502	30
6219-755-001-00	503	1		502	13	V302-260-006-00	502	26
6281-100-014-00	801	8	6901-910-625-00	401	7	V334-260-010-00	801	7
6281-111-009-00	S03	1	6901-910-816-00	203	4	V341-120-008-00	204	20
6281-115-017-00	S03	10	6901-911-020-00	203	3	V401-160-006-00	502	32
6281-115-018-00	S03	11	6901-911-025-00	801	9	V411-260-006-00	502	31
6281-117-003-00	S03	4	6902-050-816-00	204	38	V411-260-010-00	801	10
6281-118-007-00	S03	3	6904-110-818-00	201	19	V523-101-001-80	304	2
6281-119-009-00	S03	2	6904-110-822-00	104	4	V600-110-600-40	502	11
6281-121-010-00	S03	5	6904-110-840-00	201	18	V600-110-620-30	502	10
6281-124-011-00	S03	6	6909-110-408-00	S03	32	V682-200-000-60	101	5
6281-127-003-00	S03	19	6909-150-508-00	S03	31	V704-140-016-00	301	16
6281-129-029-00	S03	29	6909-902-299-00	201	21	V705-140-012-00	204	32
6281-129-030-00	S03	28	6909-906-105-10	401	13	V710-140-004-00	204	24
6281-129-043-00	S03	30	6911-129-006-00	101	2		502	20
6281-129-058-00	S03	9	J061-210-015-00	402	23-B		505	3
6281-129-062-00	S03	33	J062-076-082-00	504	3	V720-101-900-80	502	27
6281-129-064-00	S03	7	J062-087-093-00	504	8	V720-102-401-50	401	9
6281-129-065-00	S03	12	V211-560-802-50	104	3		P04	16
6281-129-066-00	S03	13	V230-360-601-00	202	4	V720-102-401-80	202	3-A
6281-129-067-00	S03	14	V230-360-601-20	201	25	V723-102-005-50	402	31
6281-129-068-00	S03	15	V230-360-601-60	802	8		P04	20
6281-129-069-00	S03	16	V231-360-801-60	204	14			
6281-129-070-00	S03	17		401	11			
6281-129-071-00	S03	18	V231-360-802-00	103	3			
6281-129-072-00	S03	21		402	19			
6281-129-073-00	S03	22		402	27			
6281-129-074-00	S03	23		801	4			
6281-129-075-00	S03	24	V231-360-802-50	204	40			
6281-129-076-00	S03	25		402	32			
6281-129-077-00	S03	26	V231-360-803-00	204	16			
6281-129-078-00	S03	27	V231-360-803-50	204	11			
6281-129-079-00	S03	34	V231-360-804-00	204	10			
6281-129-080-00	S03	8		204	39			
6281-151-014-00	S03	20	V231-360-804-50	204	15			
6281-200-007-10	801	1		402	13			
6281-270-006-00	801	2	V231-360-805-00	204	9			
6281-410-023-10	802	3	V231-360-805-50	204	8			
6281-910-015-00	802	6-A	V231-360-807-50	204	7			
6281-920-001-00	802	9		402	28			

Numerical Index

Part Code	Fig.	Key	Part Code	Fig.	Key	Part Code	Fig.	Key
1104-410-007-00	110	37-A	1527-604-002-00	603	9	1631-901-021-00	902	2
	P02	7		606	11	1636-313-011-10	301	2
1105-410-003-00	304	40	1544-104-205-00	104	4	1636-503-270-00	501	2
1118-901-002-00	901	4	1560-104-010-40	102	20	1642-410-001-00	502	15
1119-901-003-00	901	5	1560-404-002-30	301	9	1646-116-051-10	108	5
1326-708-005-00	405	3	1560-666-004-00	609	41	1650-102-202-10	102	2
1330-726-013-00	401	10	1560-666-005-00	609	17	1650-104-201-00	104	5
1337-401-006-00	301	10		610	18	1650-111-034-00	105	4
1342-402-006-00	609	26	1560-666-006-00	609	18	1650-602-223-00	605	21
	610	27		610	19	1650-650-015-00	105	15
1373-121-001-00	605	7	1564-512-001-00	402	6		304	57
	605	12	1575-616-005-00	402	7	1650-650-017-00	105	16
1376-402-003-00	609	27	1593-101-003-20	101	9		304	58
	610	28	1593-117-003-10	108	6	1650-650-222-00	609	4
1386-241-002-00	303	5	1593-312-056-20	302	3		610	4
	407	5	1593-402-051-10	404	2	1650-650-293-00	609	14
1415-216-602-00	405	12	1593-403-005-00	406	2		610	15
1421-403-007-00	405	4	1593-411-001-10	407	7	1650-650-295-00	609	15
1421-403-008-00	405	5	1593-411-053-20	407	8		610	16
1421-603-004-00	102	30	1593-601-072-00	601	6	1650-650-296-00	609	16
1421-951-006-00	405	7	1593-606-006-10	606	6		610	17
1421-951-007-00	405	8	1593-611-014-00	605	6	1656-611-220-10	605	14
1423-616-004-00	102	29	1593-612-005-00	106	3	1672-112-240-10	107	1
	401	23	1593-612-220-10	106	6	1674-904-008-00	903	7
1424-101-203-00	102	21	1593-616-004-20	606	2	1675-104-211-00	104	2
1424-101-204-00	102	22	1593-621-250-10	608	8	1675-104-213-00	104	3
1426-406-203-00	402	5	1593-621-252-00	608	9	1675-112-002-00	107	4
1426-621-002-00	607	3	1593-622-270-00	608	13	1689-271-006-00	203	22
1427-111-229-00	103	7	1593-622-272-00	608	15	1689-272-240-00	204	4
	402	2	1593-622-273-00	608	16	1689-272-260-00	204	1
	P01	6	1593-622-274-00	608	17	1689-440-230-00	407	2
1427-621-012-00	608	19	1593-622-275-00	608	18	1689-603-012-00	604	8
1429-406-205-00	402	4	1593-623-003-00	609	28	1689-613-260-00	608	7
1432-616-002-00	606	3		610	29	1690-658-360-10	609	23
1444-101-016-10	105	14	1593-623-520-00	609	33		610	24
1444-507-003-00	801	5-A		610	34	1703-102-001-00	102	8
1444-621-311-00	608	10	1600-505-007-10	108	9	1703-102-003-00	102	14
1444-621-312-00	608	11	1602-321-004-00	110	20	1703-102-004-00	102	16
1480-117-002-00	301	18	1608-601-001-10	603	1	1703-102-005-00	102	17
1480-504-007-00	203	15	1608-601-002-10	603	6	1703-102-008-00	102	10
1488-611-001-00	605	15	1608-601-003-00	602	2	1703-102-200-20	102	1
1488-611-003-10	605	23	1614-104-001-10	104	6	1703-102-202-00	102	3
1488-611-210-00	605	1	1614-129-003-00	609	34	1703-102-203-00	102	4
1488-611-220-10	605	2		610	35	1703-102-204-00	102	5
1527-604-002-00	603	4	1631-601-004-10	601	7	1703-102-205-00	102	6

Numerical Index

Part Code	Fig.	Key	Part Code	Fig.	Key	Part Code	Fig.	Key
1703-102-206-00	102	7	1725-604-003-00	601	8	1782-103-300-10	103	1-A
1703-104-002-00	104	9		603	15		P01	2
1703-135-002-00	406	5	1725-604-052-00	603	2	1782-103-510-10	103	6-B
1703-601-001-00	601	5		603	7		P01	5
1703-601-005-00	601	16		603	17	1782-103-520-00	P01	1
1703-601-007-00	601	17		606	15	1782-104-001-00	104	7
1703-601-008-10	601	18	1728-102-220-00	102	24	1782-105-001-10	105	7
1703-601-009-10	601	2		102	25	1782-105-210-00	105	10
1703-601-210-00	601	12	1728-104-210-00	104	1	1782-105-230-00	105	5
1703-601-230-22	601	9	1728-105-230-00	105	9	1782-105-240-00	105	11
1703-602-001-01	602	1	1728-112-230-00	609	21	1782-111-001-00	106	1
1703-604-220-20	603	18		610	22	1782-111-210-00	106	2
1703-604-330-00	603	11	1728-120-221-00	109	4	1782-117-210-10	108	2
1703-604-331-00	603	12	1728-334-280-00	304	25	1782-120-220-00	109	1
1703-650-200-10	607	1	1728-553-004-00	502	19	1782-120-232-00	109	3
1703-650-202-00	607	2	1728-553-008-00	502	14	1782-120-235-00	109	6
1705-117-001-00	108	3	1728-670-210-00	608	2	1782-120-241-00	109	8
1705-117-230-10	108	1	1728-903-003-00	903	11	1782-122-001-00	110	1
1705-332-006-00	304	48	1728-903-004-00	903	12	1782-122-002-10	110	2
1705-333-001-00	304	44	1728-903-005-00	903	13	1782-122-003-00	110	23
1705-436-300-00	406	4	1739-401-001-00	401	3	1782-122-012-00	110	36
1705-616-003-00	606	10	1739-401-200-00	401	1	1782-122-013-00	110	24
1705-616-220-20	606	7	1739-401-202-00	401	2	1782-122-014-00	110	31-A
1705-621-202-00	608	3	1739-904-004-00	903	10-B		P02	4
1705-622-003-00	608	5	1740-272-061-00	204	2	1782-122-210-10	110	34
1705-901-004-00	608	4	1740-272-062-00	204	5	1782-122-220-00	110	29
1705-902-004-00	608	6	1742-313-001-10	302	2	1782-122-310-00	110	38-A
1705-902-006-00	903	6	1752-120-201-00	109	2		P02	8
1705-902-007-00	903	8		109	7	1782-122-350-00	P02	1
1705-902-008-00	903	3	1752-120-204-00	109	9	1782-201-200-10	201	1
1705-904-002-10	903	4	1752-120-206-00	109	5	1782-201-203-00	S01	3
1716-680-220-00	605	9	1752-690-530-10	610	10	1782-201-207-00	S01	6
1716-680-222-00	605	10	1770-105-001-00	105	3	1782-201-208-00	S01	83
	609	40	1772-654-250-00	609	29	1782-201-209-00	S01	7
1716-680-330-00	609	39		610	30	1782-201-212-00	S01	8
1719-312-001-00	801	7	1772-654-251-00	609	30	1782-201-214-00	S01	86
1724-102-012-00	102	34		610	31	1782-201-215-00	S01	9
1724-604-302-00	603	13	1773-652-212-00	609	3	1782-201-217-00	S01	11
1725-103-002-00	103	13		610	3	1782-201-218-00	S01	80
	P01	10	1782-101-002-00	101	1	1782-201-220-00	S01	87
1725-218-006-00	202	4	1782-101-003-00	101	2	1782-201-221-00	S01	12
	202	13	1782-102-001-00	102	13	1782-201-222-00	S01	88
	P03	9	1782-102-005-00	102	9	1782-201-223-00	S01	13
1725-433-202-00	404	3	1782-102-006-00	102	12	1782-201-225-00	S01	14
1725-553-007-10	502	25	1782-102-510-00	102	32	1782-201-226-00	S01	15

Numerical Index

Part Code	Fig.	Key	Part Code	Fig.	Key	Part Code	Fig.	Key
1782-201-227-00	S01	16	1782-201-290-00	S01	63	1782-202-510-00	P03	1
1782-201-228-00	S01	17	1782-201-291-00	S01	64	1782-271-002-00	203	12
1782-201-229-00	S01	18	1782-201-292-00	S01	65	1782-271-003-00	203	9-A
1782-201-231-00	S01	19	1782-201-293-00	S01	92	1782-271-210-10	203	6-A
1782-201-232-00	S01	20	1782-201-299-00	S01	93	1782-271-220-10	203	1-A
1782-201-233-00	S01	21	1782-201-300-00	S01	66	1782-271-230-10	203	3
1782-201-234-00	S01	22	1782-201-331-00	S01	67	1782-272-001-00	204	12
1782-201-235-00	S01	23	1782-201-338-00	S01	69	1782-272-210-00	204	15
1782-201-236-00	S01	24	1782-201-339-00	S01	70	1782-272-220-00	204	17
1782-201-237-00	S01	25	1782-201-340-00	S01	71	1782-272-240-10	204	7-A
1782-201-238-00	S01	26	1782-201-341-00	S01	72	1782-312-001-00	301	15
1782-201-243-00	S01	29	1782-201-342-00	S01	73	1782-312-210-00	301	1
1782-201-244-00	S01	30	1782-201-344-00	S01	74	1782-312-230-00	301	4
1782-201-245-00	S01	31	1782-201-345-00	S01	75	1782-312-260-10	301	11
1782-201-246-00	S01	32	1782-201-351-00	S01	77	1782-313-210-20	302	1
1782-201-247-00	S01	33	1782-201-353-00	S01	78	1782-317-210-00	303	1
1782-201-248-00	S01	34	1782-201-400-00	S01	82	1782-317-211-00	303	3
1782-201-249-00	S01	35	1782-201-450-00	S01	79	1782-317-220-00	303	2
1782-201-250-00	S01	36	1782-201-510-00	S01	1	1782-334-003-00	304	2
1782-201-251-00	S01	37	1782-201-511-00	S01	2	1782-334-006-00	304	14
1782-201-254-00	S01	38	1782-201-520-00	S01	4	1782-334-014-30	304	60
1782-201-256-00	S01	39	1782-201-521-00	S01	5	1782-334-021-00	304	7
1782-201-258-00	S01	40		S01	85	1782-334-022-00	304	37
1782-201-259-00	S01	89	1782-201-530-00	S01	10	1782-334-023-00	304	4
1782-201-261-00	S01	42	1782-201-531-00	S01	84	1782-334-024-00	304	34
1782-201-262-00	S01	43	1782-201-540-00	S01	81	1782-334-025-00	304	53
1782-201-263-00	S01	90	1782-201-550-00	S01	27	1782-334-270-10	304	24
1782-201-264-00	S01	44	1782-201-560-00	S01	28	1782-334-280-20	304	47
1782-201-265-00	S01	45	1782-201-570-00	S01	41	1782-334-310-10	304	11
1782-201-267-00	S01	47	1782-201-580-00	S01	46	1782-334-330-00	304	43
1782-201-268-00	S01	48	1782-201-590-00	S01	62	1782-334-410-00	304	17
1782-201-269-00	S01	49	1782-201-600-00	S01	68	1782-334-440-00	304	56
1782-201-270-00	S01	50	1782-201-610-00	S01	76	1782-334-460-00	304	54
1782-201-271-00	S01	51	1782-202-001-30	202	1	1782-407-003-20	401	15
1782-201-272-00	S01	52	1782-202-002-00	202	2	1782-407-004-00	401	18
1782-201-276-00	S01	53	1782-202-009-00	202	14	1782-407-006-00	401	8
1782-201-277-00	S01	54	1782-202-051-10	202	10-A	1782-407-210-00	401	5
1782-201-278-00	S01	55		P03	6	1782-407-250-20	401	9
1782-201-279-00	S01	56	1782-202-052-00	202	5-A	1782-407-260-10	401	12
1782-201-281-00	S01	91		P03	2	1782-407-270-10	401	19
1782-201-282-00	S01	57	1782-202-054-00	202	3	1782-407-310-00	401	14
1782-201-285-00	S01	58		202	11	1782-410-001-10	402	11
1782-201-286-00	S01	59		P03	7	1782-410-006-00	403	1
1782-201-287-00	S01	60	1782-202-056-00	202	6-A	1782-410-310-00	402	14
1782-201-288-00	S01	61		P03	3	1782-410-450-00	402	3

Numerical Index

Part Code	Fig.	Key	Part Code	Fig.	Key	Part Code	Fig.	Key
1782-410-620-10	402	1	1782-690-302-00	610	2	3750-121-011-00	110	25
1782-433-001-10	404	4	1782-801-210-20	801	1-B	3805-208-016-00	604	7
1782-433-002-10	404	11	1782-801-230-00	801	4-A	3805-371-007-00	102	11
1782-433-210-10	404	1	1782-901-001-00	901	1		402	9
1782-434-200-00	405	1	1782-901-002-00	901	2		402	12
1782-434-210-00	405	9	1782-901-003-00	901	3	3814-114-001-00	304	29
1782-434-220-10	405	2	1782-902-001-00	902	1	3814-302-023-00	103	12
1782-436-001-10	406	1	2142-581-002-00	604	2		P01	9
1782-441-210-00	407	1	2161-129-002-00	202	15	3814-354-013-40	502	9
1782-441-211-00	407	3		P03	10	3819-311-013-00	105	8-A
1782-553-210-10	501	1-A	2213-517-200-00	605	17	3821-262-202-00	609	5
1782-553-250-00	501	5	2213-517-201-00	605	25		610	5
1782-553-260-00	501	4	2500-901-027-00	903	1	3822-544-009-00	110	21
1782-554-007-00	502	18	2500-901-031-00	903	2	3824-247-202-00	609	6
1782-554-009-00	502	3	2502-407-001-10	304	12		610	6
1782-554-210-20	502	1	2502-554-003-10	502	5	3829-311-200-00	105	1
1782-554-280-00	502	11	2502-554-004-10	502	6	3829-550-006-10	502	8
1782-601-002-00	601	21	2502-554-007-00	502	2	3838-203-001-00	203	16
1782-601-003-00	601	23	2504-165-002-10	606	12-A		304	41
1782-601-230-00	601	25	2512-205-003-00	304	6	4101-102-038-00	102	28
1782-601-500-00	601	1		304	36		401	22
1782-604-230-00	603	21	2512-650-002-10	107	3	4136-405-002-00	801	6
1782-606-004-20	604	5-A	2515-665-210-00	609	31	4138-106-004-00	502	22
1782-606-200-10	604	1		610	32	4335-512-004-00	604	3
1782-611-002-00	605	20	2706-501-003-00	106	7	7955-201-026-00	110	8
1782-611-003-00	605	3	2706-501-004-00	106	8	7970-505-005-00	304	35
1782-611-210-00	605	5	3517-205-007-00	304	22	8595-407-004-00	801	2
1782-611-220-10	605	18		304	27	8595-901-007-00	903	5
1782-630-001-10	606	1	3614-261-002-00	608	12	8657-901-001-00	502	26
1782-630-002-00	606	9	3621-702-003-00	405	13	8663-202-055-00	110	14
1782-630-250-00	606	13	3623-150-004-10	101	5	8663-202-056-00	110	15
1782-630-260-00	606	14	3623-263-001-00	101	13	8670-201-006-00	110	9
1782-670-200-00	608	1	3631-270-003-00	608	14	8670-201-007-00	110	10
1782-690-230-00	609	37	3642-496-007-10	609	35	8670-201-008-00	110	18
1782-690-250-10	609	10		610	36	8670-201-220-00	110	3
	610	11	3650-270-214-00	609	8	J061-210-015-00	102	26
1782-690-252-00	609	11		610	8	J061-230-038-00	102	18
	610	12	3659-170-003-00	110	26	J061-234-042-00	102	19
1782-690-253-00	609	12	3659-301-001-00	103	2	J061-247-055-00	104	8
	610	13		P01	3		104	10
1782-690-254-00	609	13	3666-202-005-10	402	8	J062-104-111-00	105	12-A
	610	14	3666-222-003-00	202	12-A	J062-119-126-00	105	6
1782-690-300-00	609	1		P03	8	V120-376-001-60	606	8
	610	1	3670-520-008-00	304	5	V120-376-002-00	603	20
1782-690-302-00	609	2	3670-703-008-00	401	20		603	23

Numerical Index

Part Code	Fig.	Key
V195-164-012-10	605	26
V201-260-803-50	102	27
	401	21
V201-261-010-00	102	35
V201-360-802-50	110	40
	P02	2
V201-360-803-00	204	19
V201-360-807-00	201	2-A
V201-361-003-5B	P03	4
V201-361-202-50	303	6
V203-361-002-50	109	10
V203-361-003-50	103	9
	P01	7
V203-461-002-00	101	3
	101	14
V210-360-601-20	102	15
V210-360-601-60	105	2
	108	4
	601	11
	605	11
V210-360-602-00	603	19
	603	22
	607	4
	609	24
	610	25
V210-360-602-50	609	36
	610	37
V211-260-801-60	501	3
V211-260-802-00	110	17
V211-360-801-60	101	17
	102	33
	105	17-A
	204	3
	204	6
	304	61
	403	2
	404	12
	601	3
	601	22
	601	24
	601	26
	605	22
	609	7
	609	42
	610	7

Part Code	Fig.	Key
V211-360-801-60	801	3
V211-360-802-00	102	23
	105	13
	304	59
	601	15
	609	9
	610	9
V211-360-802-50	304	55
V211-560-802-00	401	13
V211-560-802-50	401	6
V211-560-803-00	109	12
V211-561-002-00	402	10
	402	15
V211-561-002-50	301	3
	304	16
V211-561-003-00	502	7
V211-561-003-50	202	9
V211-660-802-00	103	5
	103	8
	110	39-A
	P01	4
	P02	9
V211-660-802-50	110	22
V211-660-803-00	103	14
	P01	8
V211-660-804-50	201	4
V211-661-002-00	609	22
	610	23
V211-661-003-00	304	10
V230-360-601-60	608	20
	609	32
	610	33
V301-260-006-00	107	5
V304-260-008-00	102	31
	110	41
	203	17
	204	20
	304	33
	304	42
	401	24
	502	10
	609	19
	610	20
	P02	3
V304-260-010-00	101	6

Part Code	Fig.	Key
V304-260-010-00	108	7
	110	28
	203	7
	401	16
	501	6
V304-260-012-00	103	11
	405	6
V304-460-008-00	101	10
V304-700-008-00	103	3
V305-260-012-00	203	20-A
	301	17
V327-261-216-00	404	5
V328-262-112-00	405	14
	406	6
V334-260-012-00	406	3
V335-260-016-00	401	4
V350-160-004-00	603	14
V350-160-006-00	602	3
V360-260-006-00	107	6
	304	26
	601	10
	609	25
	609	38
	610	26
V361-260-006-00	402	13
	603	3
	603	8
	603	16
	607	6
V362-260-008-00	304	32
	601	20
	604	4
	604	6
	605	4
	605	8
	605	13
	605	16
	605	19
V363-260-008-00	601	14
V363-260-010-00	102	36
	502	24
V401-160-008-00	101	11
	201	5
	609	20
	610	21

Numerical Index

Part Code	Fig.	Key
V401-160-010-00	101	4
	101	7
	101	15
	103	10
	109	11
	110	27
	401	17
	P03	5
V401-160-012-00	203	19-A
	301	16
	303	7
	406	7
V401-160-016-00	404	7
V401-700-008-00	103	4
V411-260-006-00	108	10
	204	8
	301	5
V411-260-008-00	101	12
	101	18
	106	4
	201	3
	203	4
	204	13
	301	13
	304	30
	304	49
	304	51
	502	20
	601	4
	601	13
	603	5
	603	10
	606	4
	607	5
V411-260-010-00	101	8
	101	16
	108	8
	110	35
	203	8
	203	10
	302	4
	304	45
V411-260-012-00	203	13
	303	8
	501	7

Part Code	Fig.	Key
V411-260-012-00	502	12
	502	16
	502	23
	601	19
V411-260-014-00	110	32
V411-260-016-00	404	6
V411-260-018-00	405	10
V411-260-020-00	204	10
	301	7
V500-162-001-50	108	11
V500-162-501-50	304	46
V500-162-502-00	203	5
	203	11
	203	14
	204	14
	301	14
	302	5
	304	31
	304	50
	304	52
	406	8
	502	13
	502	17
V500-163-002-00	501	8
V500-163-002-50	405	15
V500-164-003-00	404	8
V530-240-602-80	204	16
	204	18
V560-160-008-00	106	5
	502	21
	605	24
	606	5
V580-140-503-20	405	11
V600-110-620-40	110	5
	110	11
V600-110-630-30	110	4
V600-150-630-40	304	13
V600-350-620-10	203	18-A
	401	11
V600-350-620-20	110	42
	304	20
	P02	5
V600-450-620-50	304	1
	407	6
V670-200-004-00	304	39

Part Code	Fig.	Key
V670-200-005-00	304	9
V671-400-004-00	304	38
V671-400-005-00	304	8
V704-140-015-00	110	30
	110	33
	304	18
	304	23
	304	28
V704-140-019-00	401	7
V704-140-020-00	110	19
	204	11
	301	8
V705-140-035-00	110	43
	304	21
	P02	6
V705-140-047-00	110	6
	110	12
V705-140-052-00	304	3
	304	15
V710-140-004-00	502	4
V721-103-106-00	110	16
V744-120-470-70	110	7
	110	13
V760-150-000-00	204	9
	301	6
V762-150-000-00	404	10
V763-150-000-00	404	9
V999-200-003-00	303	4
	407	4

Alpabetical Index

Description	Fig.	Key
ARM,TENSION	505	1
ARM/CONTROL	502	29
ARM/FLOATING COMP	502	17
ARMATURE/STARTE ASSY	S03	5
BALL	101	5
BEARING,RB/6004	502	11
BEARING,RB/6203	502	10
BEARING,THRUST CRANK	201	13
	P02	2
	P02	4
BEARING/CONNECTING R	303	7
	P02	5-A
	P02	6-A
BEARING/CRANK/LOWER	201	12
BEARING/CRANK/UPPER	201	11
BEARING/NEEDLE	S03	8
	S03	9
BEARING/OILLESS	S03	12
	S03	14
	S03	16
BEARING/WATER PUMP	402	3
BEARING/WATERPUMP	402	4
BEARING/WITH SHOCKAB	S03	13
BELT/VHM34.5/FAN	403	5
BODY/OILPUMP	401	2
BODY/WATERPUMP	402	2
BOLT	101	7
	201	2
	204	38
	301	19
	401	7
	801	9
	S02	39
BOLT,ADJUST	201	27
BOLT,EYE	S02	37
BOLT,JOINT	401	13
BOLT,SEMS/M10X20	203	3
BOLT,SEMS/M6X12	302	5
	502	13
BOLT,SEMS/M8X16	203	4
BOLT,SEMS/M8X25 7T	104	3
BOLT/CONNECTINGROD	303	6
BOLT/CRANK	304	9
BOLT/FLANGE	304	7
BOLT/M6	204	33
BOLT/M6	204	34
BOLT/M6X10	502	15
BOLT/M6X18	502	6
	502	25
BOLT/THROUGH	S03	30
BOLT/WS	401	6
	403	4
BRACKET ROCKER SHAFT	301	13
BRACKET,ROCKER SHAFT	301	14
BRUSH/STARTER	S03	2
CAMSHAFT/INJECTION P	502	7
CAP,BLANK/30	204	22
CAP,OIL FILLER	102	2
CAP,SEALING	101	2
CARTRIDGE/OILFILTER	401	15
CLAMP,STRAINER	401	10
CLAMP/WIRE/10-12	504	7
CLAMP/WIRE/10-15	402	23-B
CLIP/HOSE/7.6-8.2	504	3
CLIP/HOSE/8.7-9.3	504	8
CLUTCH/STARTER ASSY	S03	6
CONNECTINGROD ASSY	303	5
CONNECTOR,GLOW PLUG	802	5
CONNECTOR,OIL FILTER	204	2
CONNECTOR/FUEL	504	1
CONTROLSLEEVE	S02	36
COVER	S03	11
COVER,INJ PUMP	201	23
COVER/CYLINDER/HEAD	102	1
CRANKSHAFT ASSY	304	1
CUP/SEALING/12	201	7
CUP/SEALING/16	204	4
CUP/SEALING/28	201	3
CUP/SEALING/36	201	4
CUTTER,VALVE	301	5
CYLINDERBLOCK ASSY	201	1
CYLINDERHEAD ASSY	101	1
DOWEL	201	20
FAN,COOLING	403	1
FILTER/FUEL ASSY	503	2
FLANGEBOLT	103	3
	201	25
	202	4
	204	6
	204	7
FLANGEBOLT	204	8
	204	9
	204	10
	204	11
	204	14
	204	15
	204	16
	204	39
	204	40
	205	2
	401	11
	402	13
	402	19
	402	27
	402	28
	402	32
	801	4
	801	6
	802	8
FLYWEIGHT	502	14
FLYWHEEL ASSY	304	5
FRAME/COMMUTATOR END	S03	10
GASKET	102	5-B
	103	2
	402	8
	802	7
	P04	5
	P04	6
	P04	21
	S01	17
	S02	5
	S02	38
	S02	40
GASKET EXHAUST MANIF	104	2
	P04	7
GASKET(SPACER)	402	17
	P04	18
GASKET,NOZZLE	501	2
GASKET/COVER	201	24
	P04	11
GASKET/CYLINDERHEAD	101	6
	P04	3
GASKET/GEARCASE	204	28
	P04	14
GASKET/HOUSING	402	26

Alpabetical Index

6003-095-261-00

Description	Fig.	Key	Description	Fig.	Key	Description	Fig.	Key
GASKET/HOUSING	P04	19	NUT	301	18	PIN/STRAIGHT	201	16
GASKET/PLATE	204	37		S01	18		201	17
	P04	15		S03	28		401	5
GASKET/WATER PUMP	402	12		S03	29	PIN/TUBE	201	15
	P04	17		S03	34	PIPE,OIL	401	12
GEAR/CAMSHAFT	302	2	NUT,CAP/M 8	204	20	PIPE,WATER DRAIN	201	22
GEAR/CRANK	304	3	NUT/CAP	102	4	PIPE/FUEL	504	2
GEAR/IDLE ASSY	302	6	NUT/FLANGE	802	4	PIPE/INJECTION ASSY	501	3
GEAR/INJECTIONPUMP	502	8	NUT/M 6	502	26		501	4
GEAR/OILPUMP ASSY	401	3	NUT/M08	204	12-A	PIPE/WATER PUMP	402	11
GEAR/STARTER PLANETA	S03	17		204	41-A	PIPE/WATEROUTLET	402	30
GEAR/STARTERINTERNAL	S03	18		301	20-A	PISTON	303	1
GEARCASE ASSY	204	1		402	14-A	PISTON/OV	P03	1
GENERATOR ASSY	801	1		402	20-A		P03	3
GLOWPLUG	802	3	NUT/M10	801	7	PISTON/VALVE/RELIEF	204	30
GUIDE/LEVELGAGE COMP	201	30	NUT/M6	201	28	PLATE	S02	34
HANGER	205	1		204	35		S03	27
HOLDER(FUEL FILTER)	503	1		502	30	PLATE(CONTROLLEVER)	502	24
HOLDER,DELIVERYVALVE	S02	6	NUT/M8	204	19	PLATE,THRUST	302	4
HOLDER/NOZZLEASSY	S01	1		S03	32	PLATE,THRUST INJPUMP	502	12
HOLDER/STARTER ASSY	S03	3	NUT/NOZZLERETAINING	S01	15	PLATE/ADJUST	801	3
HOSE,RUBBER	504	4	NUT/PINIONSTOP	S03	23	PLATE/FRONT	204	36-B
HOSE/07X13X120	504	5	OILPAN COMP	202	1-A	PLATE/REAR	203	1
HOSE/RUBBER	102	6	OILPUMP ASSY	401	1	PLATE/T=1.80	S02	18
	402	22	O-RING	402	31	PLATE/T=1.85	S02	19
HOUSING PUMP	S02	1		P04	20	PLATE/T=1.90	S02	20
HOUSING/STARTER ASSY	S03	7	ORING	S02	7	PLATE/T=1.95	S02	21
HOUSING/THERMOSTAT	402	24-A		S02	10	PLATE/T=2.00	S02	22
INJECTIONNOZZLE ASSY	501	1	O-RING/P 8	502	27	PLATE/T=2.05	S02	23
INJECTIONPUMPASSY	502	1	O-RING/P15	401	9	PLATE/T=2.10	S02	24
JOINTT-TYPE 2	504	9		P04	16	PLATE/T=2.15	S02	25
KEY/07X05X09	302	3-A	O-RING/P18	202	3-A	PLATE/T=2.20	S02	26
	502	9	PACKING	204	21	PLATE/T=2.25	S02	27
KEY/07X05X43	304	4		401	14	PLATE/T=2.30	S02	28
LEVEL/GAGE	201	29		P04	13	PLATE/T=2.35	S02	29
LEVER,CONTROL	502	23	PIN	304	2	PLATE/T=2.40	S02	30
LEVER/PINIONDRIVE	S03	19		S02	9	PLATE/T=2.45	S02	31
LINK/CONTROL	502	18		S02	13	PLATE/T=2.50	S02	32
MANIFOLD ASSY	103	1	PIN,ADAPTER	505	2	PLATE/WATER PUMP	402	9
MANIFOLD EXHAUST	104	1	PIN,CONTROL LINK	502	19	PLUG	301	12
METAL,CRANK	201	10	PIN,GROOVE	204	27	PLUG/M14X1.5	202	2-A
	P02	1	PIN,PISTON	303	3	PLUG/PT1/2	101	3
	P02	3	PIN,STARTING SPRING	201	26	PLUG/PT1/8	201	5
NIPPLE	201	21	PIN/ARM	204	23		204	3
NOZZLE	S01	16	PIN/IDLEGEAR	201	6	PLUG/SCREW	204	25

Alpabetical Index

6003-095-261-00

Description	Fig.	Key
PLUNGER ASSY	S02	2
POINTER	203	2
PULLEY, WATER PUMP	403	2
PULLEY/CRANK	304	8
REGULATOR	801	2
RELAY, SOLENOID	802	9
REPAIR/ENGINESET	P04	1
RING SNAP	S02	14
RING, SNAP	303	4
RING, SNAP/ 4 E	204	24
	502	20
	505	3
RING, SNAP/12 C	204	32
RING, SNAP/16 C	301	16
RING/PISTON SET	303	2
RING/PISTON/OV SET	P03	2
	P03	4
RING/SNAP	S03	21
	S03	22
RINGGEAR	304	6
ROCKERARM	301	9
ROCKERSHAFT ASSY	301	8
ROD CONTROL	S02	33
ROD, PUSH	301	7
ROTOR/OUTER	401	4
ROTOR/WATERPUMP	402	6
SCREW	S02	11
	S02	35
	S03	33
SCREW ADJUST	301	17
SCREW/WATER PUMP	402	10
SEAL SET/WATER PUMP	402	5
SEAL, BEARING CAP	201	8
	P04	8
SEAL, BEARING CAP/7	201	9
	P04	9
SEAL, CYL COVER	102	3
	P04	4
SEAL, OIL	101	4
	201	14
	204	5
	P04	2
	P04	10
	P04	12
SEAL/WATER PUMPPULLE	402	7

Description	Fig.	Key
SEAT, SPRING	S02	16
	S02	17
SEAT, VALVE SPRING	301	4
SHAFT, CAM	302	1
SHAFT/ROCKERARM ASSY	301	10
SHAFT/STARTER PLANET	S03	15
SHIM/0.10	S01	2
SHIM/0.20	S01	3
SHIM/0.30	S01	4
SHIM/0.40	S01	5
SHIM/0.50	S01	6
SHIM/0.52	S01	7
SHIM/0.54	S01	8
SHIM/0.56	S01	9
SHIM/0.58	S01	10
SHIM/0.80	S01	11
SHIM/INJECTIONPUMP	502	2
	502	3
	502	4
	502	5
SHORTBLOCKENGIN ASSY	P01	1
SLEEVE, FRANGE	S02	8
SOLENOID	802	6-A
SPACER	S01	14
SPACER, WATER PUMP	402	16
SPACER/FAN/48	403	3
SPRING	301	15
SPRING DELIVERY VALV	S02	4
SPRING GOVERNOR	502	22
SPRING, PLUNGER	S02	15
SPRING, RETURN	502	28
SPRING, SETTING	502	21
SPRING/RELIEF VALVE	204	31
SPRING/STARTERBRUSH	S03	4
SPRING/STARTING	502	33
SPRING/VALVE	301	3
SPRINGNOZZLE	S01	12
SPRINGSEAT	S01	13
STARTER ASSY	801	8
STOPPER, FULL-LOAD	204	18
STRAINER	401	8-A
STUD	101	8
	104	4
	201	19
	402	18

Description	Fig.	Key
STUD/M8X40	201	18
SWITCH/MAGNETIC ASSY	S03	20
SWITCH/OILPRESSURE	802	1
SWITCH/OVERHEAT	802	2
TAPPET	301	6
	S02	12
THERMOSTAT	402	29
THRUSTPIECE	502	16
TUBE, ORIFICE	504	6
VALVE, DELIVERY	S02	3
VALVE/EXHAUST	301	2
VALVE/INTAKE	301	1
VALVE/RELIEF ASSY	204	29
WASHER	S03	31
WASHER / M6	502	31
WASHER, SP/M 6	502	32
WASHER/08X14X01	204	17
	204	26
	P04	22
WASHER/9X22X2	204	42
	801	5
WASHER/M10	801	10
WASHER/SK	S03	24
	S03	25
	S03	26
WATERPUMP ASSY	402	1
YOKE/STARTER ASSY	S03	1

Alpabetical Index

1782-095-200-00

Description	Fig.	Key
ADJUSTER,SEAT L ASSY	605	1
ADJUSTER,SEAT/RH	605	2
ARM	605	10
	609	40
ARM/BRAKE COMP	301	4
ARM/COUNTER/F COMP	204	15
ARM/COUNTER/R COMP	204	17
ARM/HOOD COMP	601	12
ARM/HST COMP	204	7-A
ARM/KNUCKLE COMP	405	2
ARM/MID COMP	501	1-A
ARM/NEUTRAL	203	12
ARM/PTO/BRAKE COMP	304	24
ARM/TENSION COMP	304	17
ARM/TENSION/HST COMP	110	29
AXLE/FRONT ASSY	404	1
AXLESHAFTLEFT	S01	53
AXLESHAFTRIGHT	S01	55
BAND	609	28
	609	41
	610	29
BAND,WIRE/140	609	27
	610	28
BAND/CLEANER	104	6
BAND/WIRE/250	609	26
	610	27
BATTERY CAP	107	3
BATTERY/44B19R ASSY	107	1
BEARING,RB/6202RS	110	42
	304	20
	P02	5
BEARING,RB/6204	110	5
	110	11
BEARING,RB/6303	110	4
BEARING,RB/6304SS	304	13
BEARING/BALL	202	6-A
	203	18-A
	304	1
	401	11
	407	6
	P03	3
BEARING6202C3	S01	16
BEARING6302DUC3	S01	24
BELT/VB027	110	36
BELT/VB031	304	53

Description	Fig.	Key
BOLT	103	9
	109	10
	201	2-A
	609	17
	610	18
	P01	7
BOLT(SP)/M6X16	105	2
	108	4
	601	11
	605	11
BOLT(SP/M8X16)	604	7
BOLT,SEMS	102	15
BOLT,SEMS (SP)	101	17
	102	33
	105	17-A
	204	3
	204	6
	304	61
	403	2
	404	12
	601	3
	601	22
	601	24
	601	26
	605	22
	609	7
	609	42
	610	7
	801	3
BOLT,SEMS (S) M8X16	501	3
BOLT,SEMS/M8X25 7T	401	6
BOLT/8X20	103	5
	103	8
	110	39-A
	P01	4
	P02	9
BOLT/BATTERY	107	4
BOLT/M 8X25	110	40
	P02	2
BOLT/M 8X35	102	27
	401	21
BOLT/M10X1.25X20	101	3
	101	14
BOLT/M10X100	102	35
BOLT/M10X20	402	10

Description	Fig.	Key
BOLT/M10X20	402	15
	609	22
	610	23
BOLT/M10X25	301	3
	304	16
BOLT/M10X30	502	7
BOLT/M12X25	303	6
BOLT/M8X20	401	13
BOLT/M8X25	110	22
BOLT/M8X30	109	12
	204	19
BOLT/S	110	17
	202	9
BOLT/SEAL	P03	4
BOLT/SP	102	23
	103	14
	105	13
	201	4
	304	10
	304	55
	304	59
	601	15
	603	19
	603	22
	607	4
	609	9
	609	24
	609	36
	610	9
	610	25
	610	37
	P01	8
BOLT10X65	S01	13
BOLT8X20	S01	9
BRACKET/MUFFLER COMP	103	6-B
	P01	5
BRACKET/SEAT COMP	605	14
BRAKEACTUATOR	S01	63
BRAKEDISK	S01	60
BRAKELEVER	S01	58
BRAKERETURNSPRING	S01	59
BRAKESHAFT	S01	64
BRAKESHOE	S01	61
BREATHER,TANK CAP	106	7
BULB	609	8

Alpabetical Index

Description	Fig.	Key
BULB	610	8
BULB/12V23W	607	3
BUSH	402	4
BUSH,COLUMN	402	5
BUSH,LEVER	102	30
BUSH/10X12X10	402	6
BUSH/15X17X11	304	12
BUSH/20X23X20	401	20
BUSH/22X25X25	404	3
BUSH/25X28X25	404	2
BUSH/28X32X15	401	15
BUSHING	S01	56
BUSHING25.4	S01	2
BUZZER	609	31
	610	32
BYPASSLEVER	S01	31
BYPASSSHAFT	S01	30
CABLE/ACCELERATOR	108	1
CABLE/BATTERY ASSY	609	10
	610	11
CABLE/BRAKE ASSY	301	11
CABLE/EARTH ASSY	609	21
	610	22
CABLE/PTO ASSY	304	47
CAP	102	2
	608	10
CAP,TANK	106	6
CAP,TIRE VALVE	303	4
	407	4
CAP/STEERING	401	2
CAP/WHEEL	407	8
CAPSCREW8X75	S01	6
CENTERCASEBB	S01	80
CHARGEPUMPKIT	S01	68
CHARGESPRING	S01	39
CHUTER COMP	801	1-B
CLAMP	105	15
	304	57
CLAMP,RADIATOR HOSE	105	14
CLAMP/WIRE/10-15	102	26
CLAMP/WIRE/30-38	102	18
CLAMP/WIRE/34-42	102	19
CLAMP/WIRE/47-55	104	8
	104	10
CLAMP/YOKE	109	9
CLEANER/AIR ASSY	104	1
CLIP	104	5
CLIP(B)	603	4
	603	9
	606	11
CLIP/HOSE/10.4-11.1	105	12-A
CLIP/HOSE/11.9-12.6	105	6
CLIP/HOSE/11-13	105	4
COLLAR/12X16X25	601	17
COLLAR/13X17X33	502	15
COLLAR/21X25X18	304	14
COLLAR/26X32X25	304	2
COLLAR/26X32X53	407	7
COLLAR25.4	S01	45
CONNECTOR	102	20
CONNECTOR/JOINT ASSY	610	10
CONTROLLEVER	S01	37
CONTROLSHAFTKIT	S01	41
COUPLING/18X30X55	110	20
COVER	608	9
COVER ASSY	104	2
COVER/BATTERY	609	11
	610	12
COVER/BATTERY/STARTO	609	14
	610	15
COVER/ENGINE/F COMP	601	25
COVER/ENGINE/LH	601	21
COVER/ENGINE/RH	601	23
COVER/FRONT/C	602	2
COVER/FRONT/LH	603	1
COVER/FRONT/RH	603	6
COVER/JOINT	304	60
COVER/LOWER ASSY	603	11
COVER/SIDE	604	5-A
COVER/SIDE/LH COMP	603	18
COVER/SIDE/RH COMP	603	21
COVER/SWITCH	608	14
CUSHION,RUBBER	103	7
	402	2
	P01	6
CUSHION/RUBBER/10X25	102	29
	401	23
CYLINDERBLOCKKIT	S01	81
DIFFGEARKIT	S01	46
DIODE/3A	609	3
DIODE/3A	610	3
DRAINBOLTKIT	S01	10
ELEMENT ASSY	104	3
E-RING(MOTOR)	S01	22
FENDER COMP	604	1
FILTER	S01	83
	S01	88
FINALGEAR(67T)	S01	48
FINALPINIONGEAR(11T)	S01	52
FINALPINIONSHAFT	S01	49
FITTING	S01	74
FLANGEBOLT	608	20
	609	32
	610	33
FRAME/MAIN COMP	402	1
FRANGE/YOKE	109	4
FULCRUM	S01	42
FUSE/BLADE/32V05A	609	6
	610	6
FUSE/BLADE/32V10A	609	5
	610	5
FUSE/SLOWBLOW	609	4
	610	4
GASKET	103	2
	106	8
	P01	3
GAUGE/FUEL ASSY	106	2
GEAR/BEVEL/23-1 SET	110	3
GEAR/SPUR/37 ASSY	401	14
GRILLE	602	1
GRIP,LEVER	801	5-A
GRIP/07X34/OR	302	2
GRIP/LIFT	502	6
GRIP/PTO	304	44
GRIP/THROTTLE	108	5
GROMMET	608	19
GROMMET/10X30X5	606	2
GROMMET/15	604	2
GROMMET/17X21X3	402	7
GROMMET/9	604	3
GUARD/UNDER	403	1
GUIDE	102	6
	102	7
GUIDE/BELT/LOWE COMP	304	54
HARNESS	607	2

Alpabetical Index

1782-095-200-00

Description	Fig.	Key
HARNESS ASSY	609	12
	610	13
HARNESS/MAIN ASSY	609	1
	610	1
HOOD COMP	601	1
HOSE/06X10X1650 ASSY	105	9
HOSE/06X10X250 ASSY	105	10
HOSE/06X10X45	105	7
HOSE/06X10X800 ASSY	105	11
HOSE/08X10X500	102	10
HOSE/08X12X1100 ASSY	105	5
HOSE/08X13X370	105	3
HOSE/290 ASSY	102	24
	102	25
HOSE/CLEANER/INLET	104	7
HOSE/CLEANER/OUTLET	104	9
HOSE/RADIATOR/INLET	102	16
HOSE/RADIATOR/OUTLET	102	17
HST/K66AH ASSY	201	1
HUB COMP	401	19
HUB/STEERING COMP	401	12
HUB/WHEEL/LH	202	1
HUB/WHEEL/RH	202	10-A
	P03	6
INSULATOR	101	9
	102	5
	102	8
	102	12
	102	14
	601	5
	601	18
	606	12-A
	609	16
	610	17
INSULATOR/10X30X03	106	3
INSULATOR/15	401	3
INSULATOR/150X200	801	2
INSULATOR/220	604	8
INSULATOR/MOUNT/RH	101	5
JOINT,BALL	406	2
JOINT/BALL ASSY	406	4
JOINT/UNIVERSAL ASSY	109	2
	109	7
JOINT/UNIVERSAL SET	109	1
KEY	110	25
KEY ASSY	608	12
KEY,ROTARY TOP SHAFT	405	3
KEY/06X06X40	202	3
	202	11
	P03	7
KEY/07X07X19	304	6
	304	36
KNOB/ADJUST	502	25
LABEL/ADJUST	502	26
LABEL/BATTERY	903	4
	903	11
LABEL/CAUTION/A	903	12
LABEL/CAUTION/B	903	13
LABEL/CE	903	1
LABEL/FUEL	903	10-B
LABEL/FUSE	609	2
	610	2
LABEL/GAUGE	502	19
LABEL/LIFT/MOWER	902	1
LABEL/METER	608	4
LABEL/NOISE/LWA/100	903	2
LABEL/PANEL/LH/L	608	5
LABEL/PANEL/RH	608	6
LABEL/PARKING	902	2
LABEL/W/FAN	903	6
LABEL/W/RADIATOR	903	3
LABEL/W/STARTER	903	8
LABEL/WARNING/BELT	903	7
LABEL/WARNING/HOT	903	5
LAMP/HEAD ASSY	607	1
LEVER/ACCELERATOR	108	2
LEVER/LIFT COMP	502	1
LEVER/PARKING COMP	302	1
LEVER/PTO COMP	304	43
LINING/13X50X03	108	9
LINING/PTOBRAKE COMP	304	25
LOCKNUT10	S01	77
LOWERCASE	S01	3
MAGNET	S01	7
MAT/LH	606	9
MAT/RH	606	10
METAL/CASE	110	9
METAL/COUNTER	110	1
METAL/PTO ASSY	304	11
METAL/WHEELSHAFT	202	5-A
METAL/WHEELSHAFT	P03	2
METER/HOUR ASSY	608	7
MOTORGEAR(17T)	S01	21
MOTORHOUSING	S01	17
MOTORSHAFT	S01	20
MUFFLER COMP	103	1-A
	P01	2
NET/COVER/LOWER/LH	603	12
NET/COVER/LOWER/RH	603	13
NETPOCKET	605	25
NIPPLE,GREASE	204	9
	301	6
NIPPLE,GREASE/B-M6F	404	10
NIPPLE,GREASE/PT1/8	404	9
NIPPLE/GREASE	109	5
NOTCHEDFAN8.4DIA	S01	78
NUT	101	6
	102	31
	103	3
	108	7
	110	28
	110	41
	203	7
	203	17
	204	20
	304	33
	304	42
	401	16
	401	24
	402	13
	406	3
	501	6
	502	10
	603	3
	603	8
	603	16
	607	6
	609	15
	609	18
	609	19
	609	30
	610	16
	610	19
	610	20
	610	31

Alpabetical Index

Description	Fig.	Key
NUT	P02	3
NUT,ADAPTER/AN04	304	39
NUT,ADAPTER/AN05	304	9
NUT,CASTTLE/M16X1.5	404	5
NUT,RING/M28X1.0	608	11
NUT,SPEED/P4	603	14
NUT,SPEED/P6	602	3
NUT/A/M12	608	15
NUT/ADJUST	502	14
NUT/B/M12	608	18
NUT/M10	102	36
	502	24
NUT/M12	103	11
	203	20-A
	301	17
	405	6
NUT/M12X1.25	405	14
	406	6
NUT/M16	401	4
NUT/M6	107	5
	107	6
	304	26
	601	10
	609	25
	609	38
	610	26
NUT/M8	101	10
NUT/SM/LH/M12X1.25	406	5
NUT/WASHER	304	32
	601	14
	601	20
	604	4
	604	6
	605	4
	605	8
	605	13
	605	16
	605	19
NUT12	S01	44
OILCAPM20B ASSY	S01	4
O-RING/G60	110	16
O-RING1AP10A	S01	87
O-RING1AP12	S01	92
O-RING1AP14	S01	90
O-RINGP18	S01	5

Description	Fig.	Key
O-RINGP18	S01	85
ORNAMENT/I	901	4
ORNAMENT/ISEKI/130	901	5
ORNAMENT/ISEKI/LH	901	1
ORNAMENT/ISEKI/RH	901	2
ORNAMENT/SXG15	901	3
PACKING	102	22
PAD/20	605	21
PAD/25	102	11
	402	9
	402	12
PAD/50	402	8
PAD/BRAKE	301	2
PAD/HST/OR	204	2
PAD/OR	204	5
PANEL/MONITOR	608	3
PANEL/RADIATOR COMP	102	32
PANEL/SWITCH ASSY	608	1
PANEL/SWITCH COMP	608	2
PEDAL/BRAKE COMP	301	1
PEDAL/HST/F COMP	204	1
PEDAL/HST/RH COMP	204	4
PIN,SEAT SET	605	23
PIN,SPLIT/2 X15	108	11
PIN,SPLIT/2.5X15	304	46
PIN,SPLIT/2.5X20	203	5
	203	11
	203	14
	204	14
	301	14
	302	5
	304	31
	304	50
	304	52
	406	8
	502	13
	502	17
PIN,SPLIT/3 X20	501	8
PIN,SPLIT/3 X25	405	15
PIN,SPLIT/4 X30	404	8
PIN,SPRING/5 X32 W	405	11
PIN/16X60 COMP	501	2
PIN/8X36	606	6
PIN/BRAKE	301	15
PIN/GROOVE	204	16

Description	Fig.	Key
PIN/GROOVE	204	18
PIN/HOOD	601	16
PIN/HST COMP	203	1-A
PIN/PIVOT	404	4
PIN/PUSH	502	5
PIN/SNAP	106	5
	502	21
	605	24
	606	5
PIN17X24	S01	47
PIN3.0AX20	S01	33
PIN3X9.8	S01	12
PINSHOCK	S01	36
PLATE	402	11
PLATE,SWITCH	609	35
	610	36
PLATE/ACCELERATOR	108	3
PLATE/BOTTOM COMP	801	4-A
PLATE/COVER/LOWER	606	7
PLATE/I/16X214	204	12
PLATE/I/32X180	605	3
PLATE/L/25X132 COMP	203	3
PLATE/L/25X35 COMP	110	38-A
	P02	8
PLATE/L/32X120 COMP	501	4
PLATE/LH	101	1
PLATE/LH COMP	606	13
PLATE/RH	101	2
PLATE/RH COMP	606	14
PLATE/SEAT COMP	605	18
PLATE/SWITCH	605	20
PLATE/U/38X80	404	11
PLN3X13.8	S01	23
PLPE8	S01	70
PLUG	102	21
PLUG,DRAIN (1/4)	110	8
POST/STEERING ASSY	402	3
PROTECTOR	102	3
PULLEY/V2B104	304	7
PULLEY/V2B123	304	37
PULLEY/VB097	110	23
PULLEY/VB101 COMP	110	34
PULLY/FT045X020	110	31-A
	P02	4
PUMP/FUEL ASSY	105	1

Alpabetical Index

1782-095-200-00

Description	Fig.	Key
PUMPSHAFT	S01	14
PUMPSPRING	S01	25
RADIATOR ASSY	102	1
REDUCTIONGEAR(53T)	S01	51
RELAY/4P-2 ASSY	609	23
	610	24
REPAIRKIT	S01	79
RESERVOLRTANK	S01	69
RETAININGRING	S01	54
RIM/WHEEL COMP	303	2
	407	2
RING,CIRCLIP	110	43
	304	21
	P02	6
RING,SNAP 19	401	7
RING,SNAP/ 4 E	502	4
RING,SNAP/15 C	110	30
	110	33
	304	18
	304	23
	304	28
RING,SNAP/20C	110	19
	204	11
	301	8
RING,SNAP/47 C	110	6
	110	12
RING,SNAP/52 C	304	3
	304	15
RING/SNAP/CS25	202	4
	202	13
	P03	9
ROD/08X057	203	16
	304	41
ROD/08X204	502	18
ROD/LIFT COMP	501	5
ROD/M10X463 COMP	203	6-A
ROD/M12X495	406	1
ROD/M8X175	502	9
ROD/M8X92	304	29
ROLLPIN6X40	S01	38
RUBBER,CUSHION	606	3
RUBBER,CUSHION (A)	605	15
SCREW/M03X20	609	34
	610	35
SCREW/P	102	4
SCREW/SP	603	20
	603	23
	606	8
SCREW/SP/M06X20	603	2
	603	7
	603	17
	606	15
SCREW/TAPPING	605	26
SEAL/15X15X350	102	9
SEAL/20X20X720	601	7
SEAL/30X20X350	601	8
	603	15
SEAL/OIL	110	7
	110	13
SEAL8	S01	75
SEALANT	S01	93
SEALKIT	S01	82
SEALS25.4X42X8	S01	91
SEALTC153507	S01	86
SEALTC162606	S01	89
SEALWASHER10	S01	84
SEAT/PZ ASSY	605	17
SHAFT/ADJUST COMP	502	11
SHAFT/CASE	110	10
SHAFT/INPUT	304	4
SHAFT/JOINT	110	18
SHAFT/OUTPUT	110	2
SHAFT/PTO	304	34
SHAFT/STEERING/ COMP	401	5
	401	9
SHAFTYOKE	109	8
SHIM, 1.2	103	12
	P01	9
SHIM,A/0.5	405	7
SHIM,A/1.0	405	8
SHIM/0.1	110	14
SHIM/0.2	110	15
SHIM/0.6/B	103	13
	P01	10
SHIM/13X25X0.5	110	21
SHIMKIT	S01	62
SHOCKABSORBERK65	S01	34
SHOCKSTAY	S01	35
SHROUD	102	13
SLEEVEYOKE	109	3
SNAPRING	S01	66
SNAPRING10	S01	32
SNAPRINGC35	S01	8
SNAPRINGS15	S01	15
SPACER	601	9
SPINDLE/KNUCKLE/LH	405	1
SPINDLE/KNUCKLE/RH	405	9
SPRING	301	9
	301	10
	601	2
SPRING,DISK	108	6
SPRING,TENSION (52)	301	18
SPRING,TENSION 32	203	15
SPRING/D=6	605	6
SPRING/HC040	502	22
SPRING/HC047	203	9-A
SPRING/HC057	502	2
SPRING/HE067	304	40
SPRING/HE074	110	37-A
	801	6
	P02	7
SPRING/HE138	304	48
SPRING/HE149	502	8
SPRING/HT013	302	3
SPRING25	S01	29
SPRINGPIN4X18	S01	67
STAY/SEAT COMP	402	14
STAY/SWITCH COMP	605	5
	609	37
STEP	606	1
STOPPER/BELT COMP	304	56
SUPPORT/HST SET	P03	1
SUPPORT/MUFFLER SET	P01	1
SWASHPLATE ASSY	S01	27
SWITCH(STARTER) ASSY	608	8
SWITCH,HEAD LAMP	608	13
SWITCH,MERIT	609	33
	610	34
SWITCH/LEVER ASSY	605	9
	609	39
SWITCH/PUSH ASSY	609	29
	610	30
TANK/FUEL	106	1
TANKBRACKET	S01	71
TANKSPACER	S01	73

Alpabetical Index

Description	Fig.	Key
TAPPINGSCREW8X20	S01	72
TAPPINGSCREW8X30	S01	11
TENSION/HST SET	P02	1
TERMINAL/BATTERY/+	609	13
	610	14
THRUSTBEARING	S01	18
THRUSTBEARING ASSY	S01	28
THRUSTMETAL	S01	26
THRUSTWASHER	S01	57
TIRE/20-8.0-10 ASSY	303	1
TIRE/FRONT ASSY	407	1
T-JOINT (6X6X6)	105	8-A
TRIM/188	102	34
TRIM/1X6X360	601	6
TUBE/120	105	16
	304	58
TYRE/TURF/16-8	407	3
TYRE/TURF/20-10	303	3
U-NUT	801	7
UPPERCASEKIT	S01	1
VALVE	104	4
VALVE/RIM	303	5
	407	5
VENTVALVE15 ASSY	S01	76
WASHER	109	6
	202	15
	304	22
	304	27
	304	35
	401	10
	608	17
	P03	10
WASHER / M16	404	6
WASHER / M6	108	10
	204	8
	301	5
WASHER /M12	203	13
	303	8
	501	7
	502	12
	502	16
	502	23
	601	19
WASHER,ADAPTER/AW04	304	38
WASHER,ADAPTER/AW05	304	8
WASHER,LOCK/M12	405	4
WASHER,PL/M 8	101	12
	101	18
	106	4
	201	3
	203	4
	204	13
	301	13
	304	30
	304	49
	304	51
	502	20
	601	4
	601	13
	603	5
	603	10
	606	4
	607	5
WASHER,PL/M14	110	32
WASHER,PL/M18	405	10
WASHER,PULLEY	405	13
WASHER,SP/M 8	101	11
	201	5
	609	20
	610	21
WASHER,SP/M10	101	4
	101	7
	101	15
	103	10
	109	11
	110	27
	401	17
	P03	5
WASHER,SP/M12	203	19-A
	301	16
	303	7
	406	7
WASHER,SP/M16	404	7
WASHER/05X18X01	502	3
WASHER/11X30X3	110	26
WASHER/11X40X3.2	401	18
WASHER/13X18X01	608	16
WASHER/13X35X5	405	5
WASHER/17X30X05	110	24
WASHER/19X30X02	401	8
WASHER/24X9X3.2	102	28
	401	22
WASHER/25X34X02	304	5
WASHER/26X34X2	202	12-A
	P03	8
WASHER/26X35X2	405	12
WASHER/26X45X02	202	2
	202	14
WASHER/38X12X2	203	22
WASHER/9X22X2	605	7
	605	12
WASHER/LOCK	103	4
WASHER/M10	101	8
	101	16
	108	8
	110	35
	203	8
	203	10
	302	4
	304	45
WASHER/M20	204	10
	301	7
WASHER12	S01	43
WASHER12X24X1	S01	19
WASHER15X35X3.2	S01	50
WASHER16X23X1.6	S01	65
WASHER17X36X6.4	S01	40
WHEEL/STEERING ASSY	401	1
WIRE,LEAD	101	13