Directions for use of Parts Catalogue

1. Applicable model of machines

All component and option parts used for SXG19H/SXG22H garden tractors are listed in this parts catalogue.

NOTES:

UE42···· WITH STANDARD SPECIFICATIONS

UEG42·· WITH EXTRA SPECIFICATIONS
FOR LOCAL HOMOLOGATION

2. Explanation for head paragraph

KEY	PART CODE	DESCRIPTION	SPC	TYPE OF MODEL						ITC	COL	GRP	REMARKS
				SSM48M	SSM48F	SSM48G	SRM48M	SRM48F	SRM48G				
1	8595-211-001-20	CASE/UPPER	*	1 -229									
1A	8657-201-081-00	CASE/UPPER	*	1 230-			1						
2	8595-211-002-10	CASE/LOWER	*	1			1						
3	V523-100-801-80	PIN	*	2			2						
4	V211-260-803-00	BOLT, SEMS	*	6			6						
			*	2 -229									
			*	2 230-			2						
				2			2						
				1			1						
										3			

① ② ③ ④ ⑤ ⑥ ⑦ ⑧ ⑨

① KEY shows the location of parts diagramed in the illustration.

② Parts numbers begin with `V´ and `W´ are standard parts of the market.

③ `LH´ and `RH´ on the parts name are described against the moving direction of the machine or are described on the condition how to install parts on the machines.

④ SPC : The following symbol classifies parts to be used for machines.

`*´ means standard parts.

`T´ shows that the parts can be installed as optional parts.

`R´ shows that the parts can be used as applicable parts to replace originally equipped parts.

⑤ Upper column : QTY shows the number of parts to be used for one unit

of machine.

`M´ is indicated for parts supplied by a meter long.

` l ´ is indicated for parts supplied by liter.

`AR´ is indicated for parts need to be adjusted or regulated.

Lower column : serial number

—229 means serial number up to 229.

230— means serial number 230 and after.

⑥ ITC : Interchangeability

`1´…OLD ← NEW

New parts can be used in place of the old parts.

`2´…OLD → NEW

Old parts can be used in place of the new parts.

`3´…OLD →← NEW

Old parts and new parts can not be replaced each other.

⑦ COL : Color code

Color is signified with color code number for colored parts.

Please see the color list shown in the next page.

⑧ GRP : Parts shown in this column can be replaced by SET parts.

Example : Parts marked Ⓐ can be replaced by parts marked Ⓑ, and Ⓓ for Ⓒ, so the rest follow in the same alphabetical order.

⑨ Remarks

＊Other maker's part code number is shown in this column.

＊When Fig. No. is shown in the Remark column of SET parts or ASSY parts, each of their component parts are listed in said Fig. No.

3. Color :

The following colors are used color parts.

COLOR CODE	COLOR	SPRAY TYPE PARTS CODE	PAINTS 4K DRUM PARTS CODE	PAINTS 16K DRUM PARTS CODE
4L	NEO-BLUE	1300-985-001-10	1300-985-003-00	————
6G	SUMMER WHITE	1300-958-001-10	1300-958-003-00	1300-958-004-00
7F	MIRROR BLACK	1300-954-001-10	1300-954-003-00	1300-954-004-00

NOTE : Color code is signified only for the parts assigned by the maker as

color parts.

4. Serial Numbers :

1) For engines serial number is stamped on CYLINDER BLOCK ASSY.
   Please see Fig. No. 5－1.
2) For chassies serial number is shown on the LABEL.
   Please see

5. Parts Order

1) Parts numbers listed in the parts catalogue are all registered in “ISEKI on-line computer”.
2) When you order parts, please make sure of correct numbers.
3) When substitute parts is available, the part number ordered will be automatically turned to a new part number.
4) Please be sure to use “ISEKI GENUINE PARTS”.
   Any other similar parts other than ISEKI parts when used may cause a trouble that makes us unable to repair or guarantee the warrant.

*** Structure Table of Model ***

MODEL / FIG.	SXG19	HUE42	HUG42	SXG22	HUE42	HUG42							
1	*	*		*		*							
2	*	*		*		*							
3	*	*		*		*							
4	*	*		*		*							
5	*	*		*		*							
6	*	*		*		*							
7	*	*		*		*							
8	*	*		*		*							
9	*	*		*		*							
10	*	*		*		*							
11	*	*		*		*							
12	*			*									
13			*			*							
14	*			*									
15			*			*							
16	*	*		*		*							
17	*	*		*		*							
18	*	*		*		*							
19	*	*		*		*							
20			*			*							
21	*			*									
22			*			*							
23	*			*									
24			*			*							
25	*			*									
26			*			*							
27	*			*									
28			*			*							
29	*			*									
30			*			*							
31	*	*											
32				*		*							
33	*	*											
34				*		*							
35	*	*		*		*							
36	*	*		*		*							
37	*	*		*		*							
38	*	*											
39				*		*							
40	*	*											
41				*		*							
42	*	*		*		*							
43	*	*		*		*							
44	*	*		*		*							
45	*	*											

*** Structure Table of Model ***

MODEL / FIG.	SXG19	HUE42	HUG42	SXG22	HUE42	HUGE42							
46					*	*							
47		*	*		*	*							
48		*	*		*	*							
49		*	*										
50					*	*							
51		*	*		*	*							
52		*	*		*	*							
53		*	*		*	*							
54		*			*								
55			*			*							
56		*	*		*	*							
57		*	*		*	*							
58		*			*								
59			*			*							
60		*			*								
61			*			*							
62		*	*										
63					*	*							
64		*	*										
65					*	*							
66		*	*										
67					*	*							
68		*			*								
69			*			*							
70		*	*		*	*							
71		T	T		T	T							
72		T	T		T	T							
73		T	T		T	T							
74			T			T							
75			T			T							
76			T			T							
77		T	T		T	T							
78		*	*		*	*							
79		*	*		*	*							

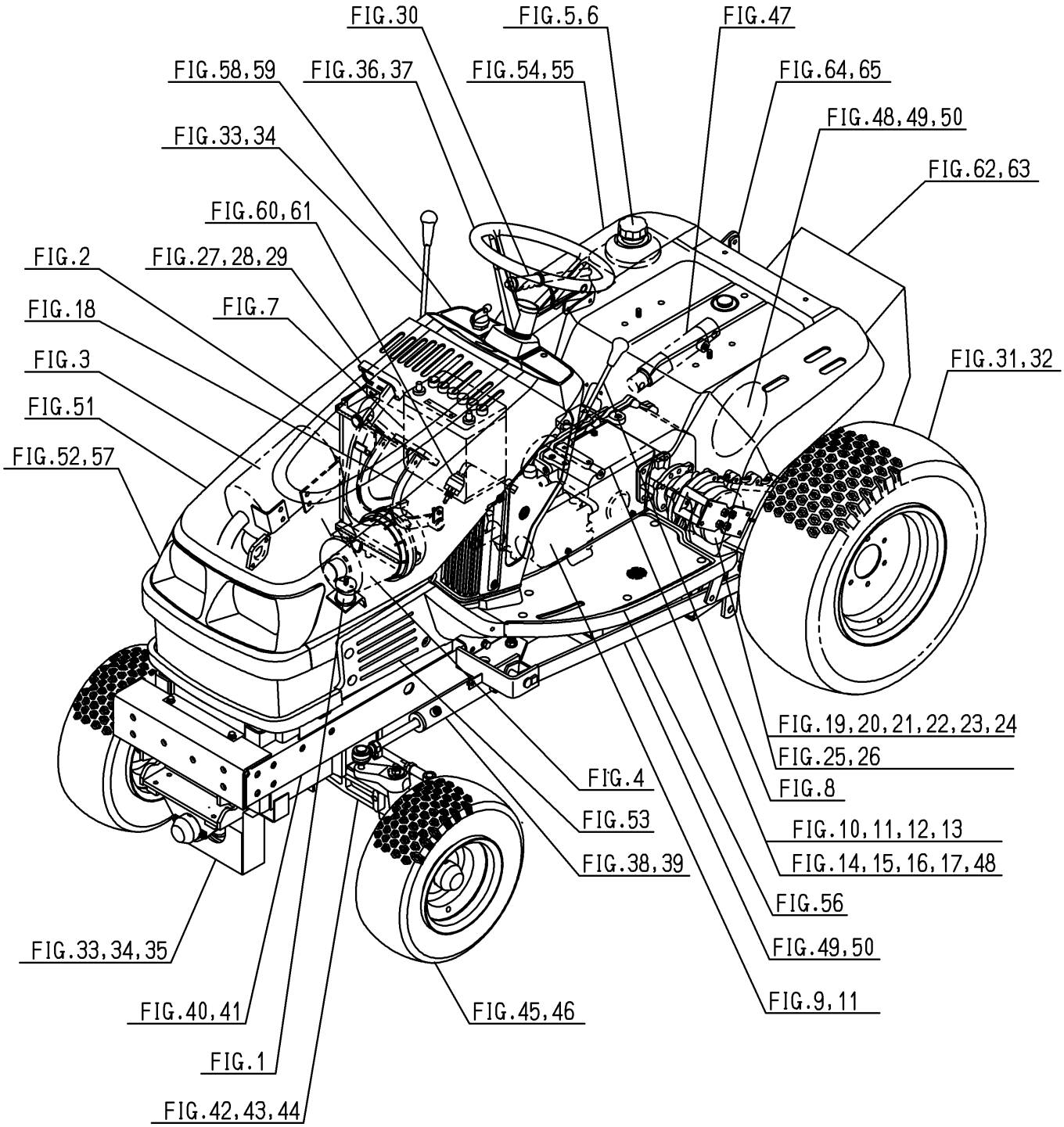
FIG.30
FIG.5,6
FIG.47
FIG.58,59
FIG.36,37
FIG.54,55
FIG.64,65
FIG.48,49,50
FIG.33,34
FIG.62,63
FIG.60,61
FIG.2
FIG.27,28,29
FIG.18
FIG.7
FIG.3
FIG.31,32
FIG.51
FIG.52,57
FIG.19,20,21,22,23,24
FIG.25,26
FIG.4
FIG.8
FIG.53
FIG.10,11,12,13
FIG.38,39
FIG.14,15,16,17,48
FIG.56
FIG.33,34,35
FIG.49,50
FIG.9,11
FIG.40,41
FIG.45,46
FIG.1
FIG.42,43,44

Contents

SXG19

ENGINE(E3100G01)

CYLINDER HEAD····· Fig. 1
CYLINDER HEAD COVER····· Fig. 2
INLET MANIFOLD····· Fig. 3
EXHAUST MANIFOLD····· Fig. 4
CYLINDER BLOCK····· Fig. 5
BEARING/UNDER SIZE····· Fig. 6
OIL PAN····· Fig. 7
REAR OLATE····· Fig. 8
GEAR CASE····· Fig. 9
HANGER····· Fig. 10
VALVE····· Fig. 11
CAM SHAFT····· Fig. 12
PISTON····· Fig. 13
PISTON/OVER SIZE····· Fig. 14
CRANK SHAFT····· Fig. 15
OIL PUMP····· Fig. 16
WATER PUMP····· Fig. 17
COOLING FAN····· Fig. 18
INJECTION NOZZLE····· Fig. 19
INJECTION PUMP····· Fig. 20
FUEL PIPE····· Fig. 21
ADAPTER····· Fig. 22
ELECTRIC(1)····· Fig. 23
ELECTRIC(2)····· Fig. 24

ELECTRIC(2)····· Fig. 25
REPAIR PARTS····· Fig. 26
COMPONENT PARTS
FOR 6215-300-036-00,10 ON Fig.19····· Fig. 27
COMPONENT PARTS
FOR 6215-600-103-10 ON Fig.20····· Fig. 28
COMPONENT PARTS
FOR 6281-100-014-00 ON Fig.23····· Fig. 29
COMPONENT PARTS
FOR 6281-200-005-00 ON Fig.23····· Fig. 30

Contents

SXG22

ENGINE(E3112G03)

CYLINDER HEAD····· Fig. 1
CYLINDER HEAD COVER····· Fig. 2
INLET MANIFOLD····· Fig. 3
EXHAUST MANIFOLD····· Fig. 4
CYLINDER BLOCK····· Fig. 5
BEARING/UNDER SIZE····· Fig. 6
OIL PAN····· Fig. 7
REAR OLATE····· Fig. 8
GEAR CASE····· Fig. 9
HANGER····· Fig. 10
VALVE····· Fig. 11
CAM SHAFT····· Fig. 12
PISTON····· Fig. 13
PISTON/OVER SIZE····· Fig. 14
CRANK SHAFT····· Fig. 15
OIL PUMP····· Fig. 16
WATER PUMP····· Fig. 17
COOLING FAN····· Fig. 18
INJECTION NOZZLE····· Fig. 19
INJECTION PUMP····· Fig. 20
FUEL PIPE····· Fig. 21
ADAPTER····· Fig. 22
ELECTRIC(1)····· Fig. 23
ELECTRIC(2)····· Fig. 24

ELECTRIC(2)····· Fig. 25
REPAIR PARTS····· Fig. 26
COMPONENT PARTS
FOR 6215-300-036-00,10 ON Fig.19····· Fig. 27
COMPONENT PARTS
FOR 6215-600-103-10 ON Fig.20····· Fig. 28
COMPONENT PARTS
FOR 6281-100-014-00 ON Fig.23····· Fig. 29
COMPONENT PARTS
FOR 6281-200-005-00 ON Fig.23····· Fig. 30

Contents

CHASSIS

BRACKET(ENGINE) SYSTEM····· Fig. 1
RADIATOR SYSTEM····· Fig. 2
MUFFLER SYSTEM····· Fig. 3
CLEANER(AIR) SYSTEM····· Fig. 4
PUMP(FUEL) SYSTEM····· Fig. 5
TANK(FUEL) SYSTEM····· Fig. 6
BATTERY SYSTEM····· Fig. 7
LEVER(ACCELERATOR) SYSTEM····· Fig. 8
SHAFT(INPUT) SYSTEM····· Fig. 9
CASE(TRANSMISSION) SYSTEM····· Fig. 10
HST SYSTEM····· Fig. 11
GEAR(INPUT) SYSTEM(EXCEPT G TYPE)····· Fig. 12
GEAR(INPUT) SYSTEM(G TYPE)····· Fig. 13
GEAR(DIFFERENTIAL) SYSTEM
(EXCEPT G TYPE)····· Fig. 14
GEAR(DIFFERENTIAL) SYSTEM(G TYPE)····· Fig. 15
LEVER(UNLOAD/HST) SYSTEM····· Fig. 16
LINK(HST) SYSTEM····· Fig. 17
PEDAL(HST) SYSTEM····· Fig. 18
AXLE(REAR) SYSTEM····· Fig. 19
AXLE(REAR) SYSTEM(G TYPE)····· Fig. 20
SHAFT(WHEEL/REAR) SYSTEM
(EXCEPT G TYPE)····· Fig. 21
SHAFT(WHEEL/REAR) SYSTEM(G TYPE)····· Fig. 22
CASE(CHAIN) SYSTEM(EXCEPT G TYPE)(1/2)(2/2)····· Fig. 23
CASE(CHAIN) SYSTEM(G TYPE)(1/2)(2/2)····· Fig. 24
BRAKE SYSTEM(EXCEPT G TYPE)····· Fig. 25

BRAKE SYSTEM(G TYPE)····· Fig. 26
PEDAL(BRAKE) SYSTEM(EXCEPT G TYPE)····· Fig. 27
PEDAL(BRAKE) SYSTEM(G TYPE)····· Fig. 28
PARKING SYSTEM(EXCEPT G TYPE)····· Fig. 29
PARKING SYSTEM(G TYPE)····· Fig. 30
WHEEL(REAR) SYSTEM(SXG19 TYPE)····· Fig. 31
WHEEL(REAR) SYSTEM(SXG22 TYPE)····· Fig. 32
PTO(FRONT) SYSTEM(SXG19 TYPE)····· Fig. 33
PTO(FRONT) SYSTEM(SXG22 TYPE)····· Fig. 34
COVER(PTO) SYSTEM····· Fig. 35
WHEEL(STEERING) SYSTEM····· Fig. 36
CONTROLLER(STEERING) SYSTEM····· Fig. 37
SYLINDER(STEERING) SYSTEM
(SXG19 TYPE)····· Fig. 38
SYLINDER(STEERING) SYSTEM
(SXG22 TYPE)····· Fig. 39
CHASSIS SYSTEM(SXG19 TYPE)····· Fig. 40
CHASSIS SYSTEM(SXG22 TYPE)····· Fig. 41
AXLE(FRONT) SYSTEM····· Fig. 42
SPINDLE(KNUCKLE) SYSTEM····· Fig. 43
ROD(TIE) SYSTEM····· Fig. 44
WHEEL(FRONT) SYSTEM(SXG19 TYPE)····· Fig. 45
WHEEL(FRONT) SYSTEM(SXG22 TYPE)····· Fig. 46
CYLINDER(LIFT) SYSTEM····· Fig. 47
PIPING(OIL) SYSTEM(1/3)-(3/3)····· Fig. 48
LINK(MOWER) SYSTEM(SXG19 TYPE)(1/2)(2/2)····· Fig. 49
LINK(MOWER) SYSTEM(SXG22 TYPE)(1/2)(2/2)····· Fig. 50
HOOD SYSTEM····· Fig. 51
GRILLE SYSTEM····· Fig. 52
COVER SYSTEM····· Fig. 53
FENDER SYSTEM(EXCEPT G TYPE)····· Fig. 54
FENDER SYSTEM(G TYPE)····· Fig. 55
FLOOR SYSTEM····· Fig. 56

LAMP(HEAD) SYSTEM····· Fig. 57
PANEL SYSTEM(EXCEPT G TYPE)····· Fig. 58
PANEL SYSTEM(G TYPE)····· Fig. 59
HARNESS SYSTEM(EXCEPT G TYPE)····· Fig. 60
HARNESS SYSTEM(G TYPE)····· Fig. 61
CHUTER SYSTEM(SXG19 TYPE)····· Fig. 62
CHUTER SYSTEM(SXG22 TYPE)····· Fig. 63
CLEANER SYSTEM(SXG19 TYPE)····· Fig. 64
CLEANER SYSTEM(SXG22 TYPE)····· Fig. 65
ORNAMENT(SXG19 TYPE)····· Fig. 66
ORNAMENT(SXG22 TYPE)····· Fig. 67
LABEL(CONTROL)(EXCEPT G TYPE)····· Fig. 68
LABEL(CONTROL)(G TYPE)····· Fig. 69
LABEL(CAUTION)····· Fig. 70

OPTIONAL PARTS

SHAFT(PTO/FRONT) SYSTEM(OPTION)····· Fig. 71
BUMPER SET(OPTION)····· Fig. 72
HITCH(FRONT)SET(OPTION)····· Fig. 73
MIRROR SET(G TYPE)(OPTION)····· Fig. 74
LAMP(X-L)SET(G TYPE)(OPTION)····· Fig. 75
LAMP(X-H)SET(G TYPE)(OPTION)(1/2)(2/2)····· Fig. 76
WEIGHT(15)SET····· Fig. 77

COMPONENT PARTS

COMPONENT PARTS
FOR K510-005-000-10 ON Fig.011(1/2)(2/2)····· Fig. 78
COMPONENT PARTS
FOR 1725-105-220-00 ON Fig.005····· Fig. 79

WIRING DIAGRAM

WIRING DIAGRAM(EXCEPT G TYPE)(1)

WIRING DIAGRAM(EXCEPT G TYPE)(2)

WIRING DIAGRAM(EXCEPT G TYPE)(3)

WIRING DIAGRAM(EXCEPT G TYPE)(4)

WIRING DIAGRAM(G TYPE)(1)

WIRING DIAGRAM(G TYPE)(2)

WIRING DIAGRAM(G TYPE)(3)

WIRING DIAGRAM(G TYPE)(4)

E N G I N E

E3100G01···SXG19

6004-097-310-10

FIG. 1 CYLINDER HEAD

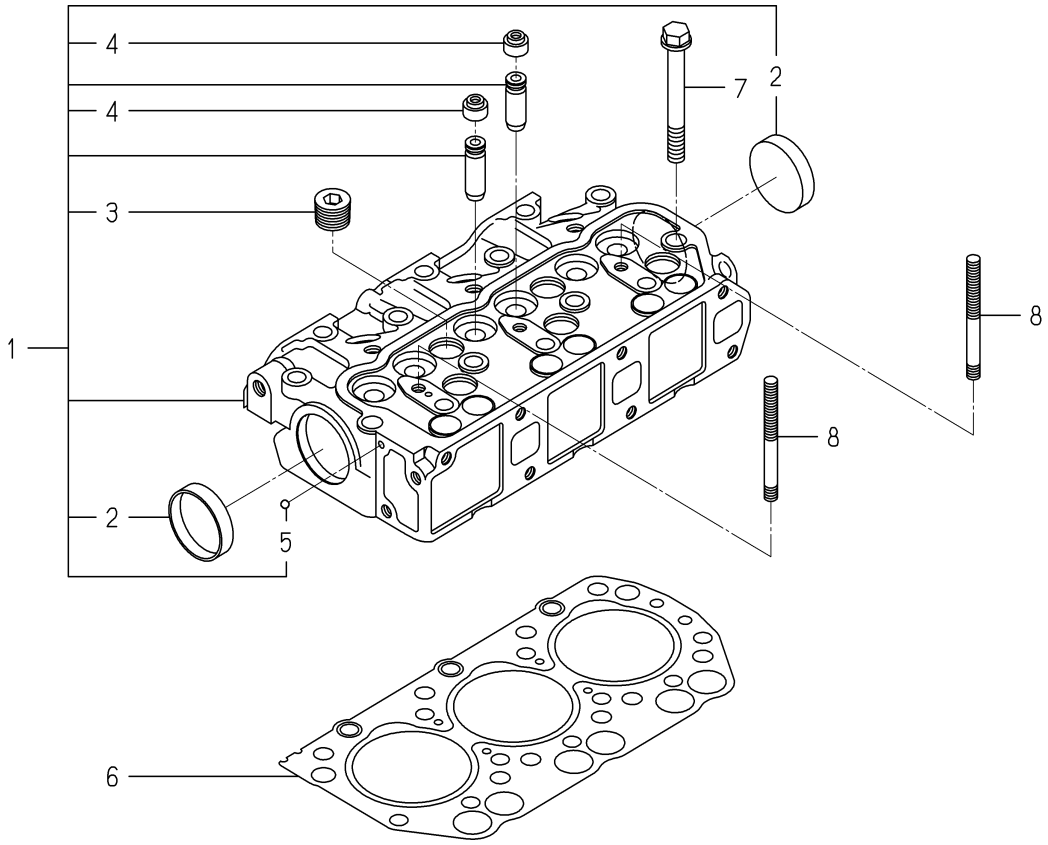

6004-101B-0100,6004-101B-0200

KEY	PART CODE	DESCRIPTION	SPC	TYPE OF MODEL E3100 G01		ITC	COL	GRP	REMARKS
1	6211-110-068-30	CYLINDERHEAD ASSY	*	1					
2	6911-129-006-00	CAP,SEALING	*	2					
3	6209-605-004-10	PLUG/PT1/2	*	5					
4	6212-569-002-00	SEAL,OIL	*	6					
5	V682-200-000-60	BALL	*	1					
6	6211-141-008-30	GASKET/CYLINDERHEAD	*	1					
7	6209-000-003-00	BOLT/M10X1.25X82	*	14					
8	6209-300-014-00	STUD	*	2					

FIG. 2 CYLINDER HEAD COVER

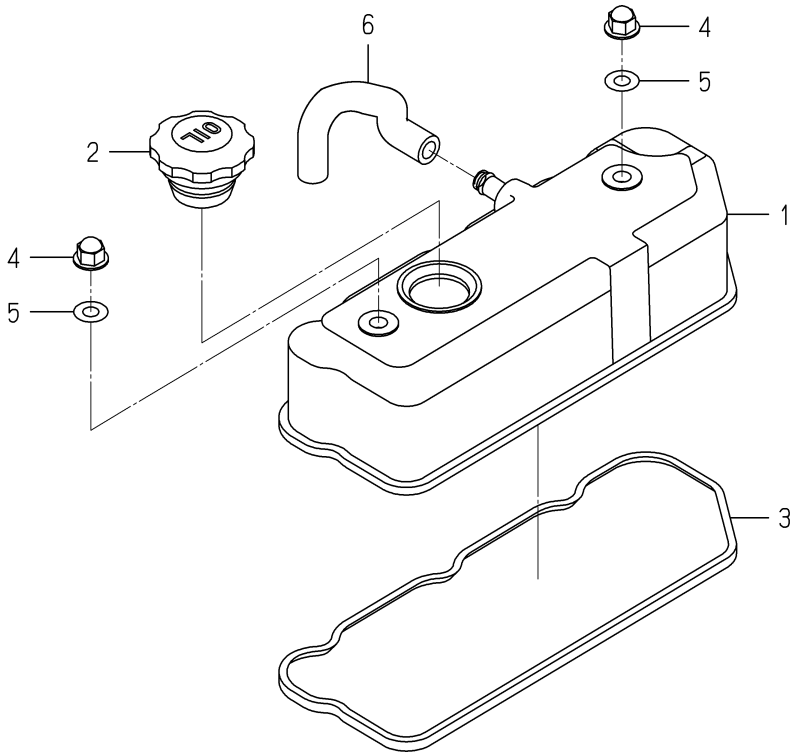

6003-110 -0100

KEY	PART CODE	DESCRIPTION	SPC	TYPE OF MODEL E3100 G01		ITC	COL	GRP	REMARKS
1	6211-170-004-20	COVER/CYLINDER HEAD	*	1					
2	6211-751-001-10	CAP,OIL FILLER	*	1					
3	6211-173-003-00	SEAL,CYL.HEAD COVER	*	1					
4	6209-490-002-10	NUT/CAP	*	2					
5	6209-572-003-00	GASKET	*	2					
6	6209-360-028-10	HOSE/RABBER	*	1					

FIG. 3 INLET MANIFOLD

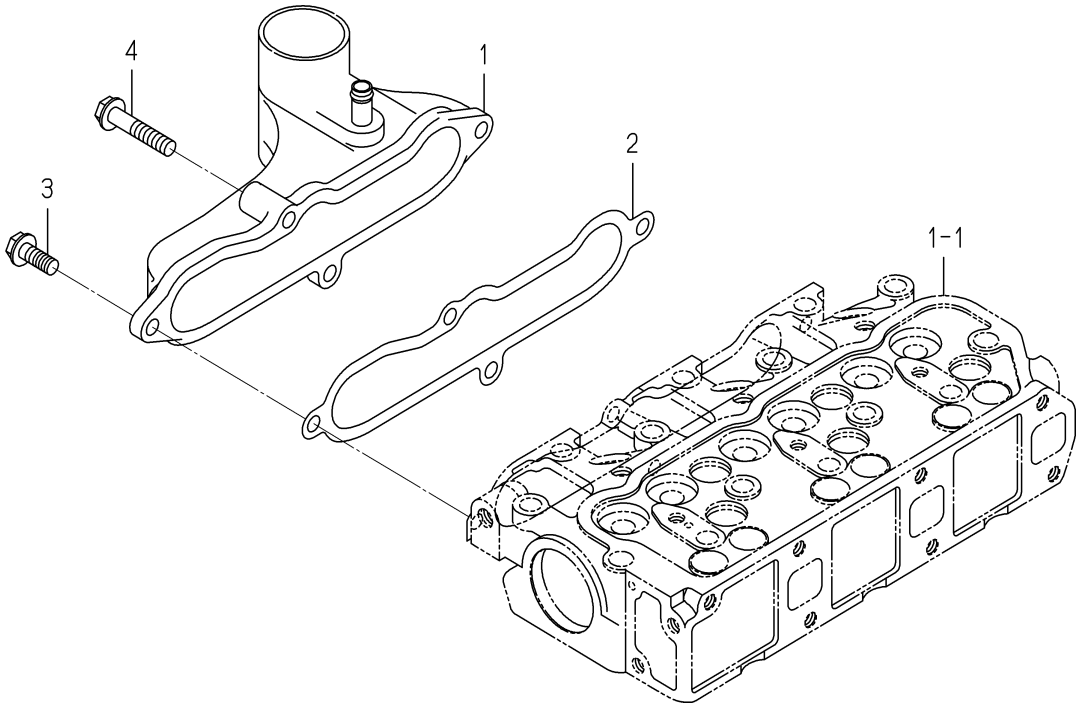

6003-120B-0100

KEY	PART CODE	DESCRIPTION	SPC	TYPE OF MODEL E3100 G01		ITC	COL	GRP	REMARKS
1	6214-111-011-20	MANIFOLD(INLET) ASSY	*	1					
2	6214-115-001-20	GASKET,INLET MANIFOL	*	1					
3	V231-360-802-00	FLANGEBOLT	*	3					
4	V231-360-804-00	FLANGEBOLT	*	1					

FIG. 4 EXHAUST MANIFOLD

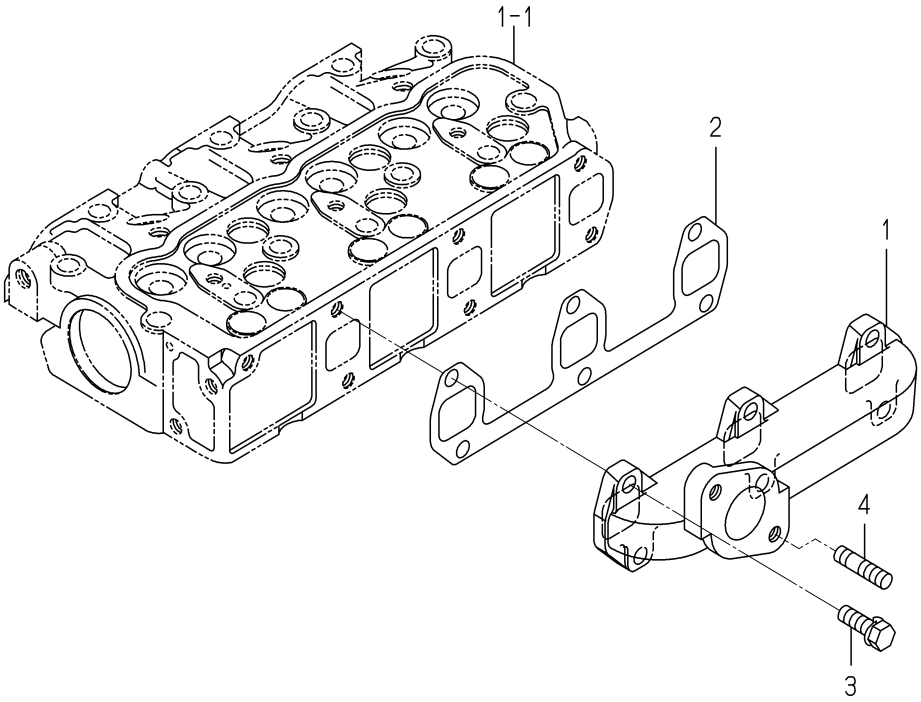

6003-140 -0100

KEY	PART CODE	DESCRIPTION	SPC	TYPE OF MODEL E3100 G01		ITC	COL	GRP	REMARKS
1	6214-141-008-20	MANIFOLD/EXHAUST	*	1					
2	6214-145-001-30	GASKET,EXH.MANIFOLD	*	1					
3	V211-560-802-50	BOLT,SEMS/M8X25 7T	*	6					
4	6904-110-822-00	STUD	*	2					

FIG. 5 CYLINDER BLOCK

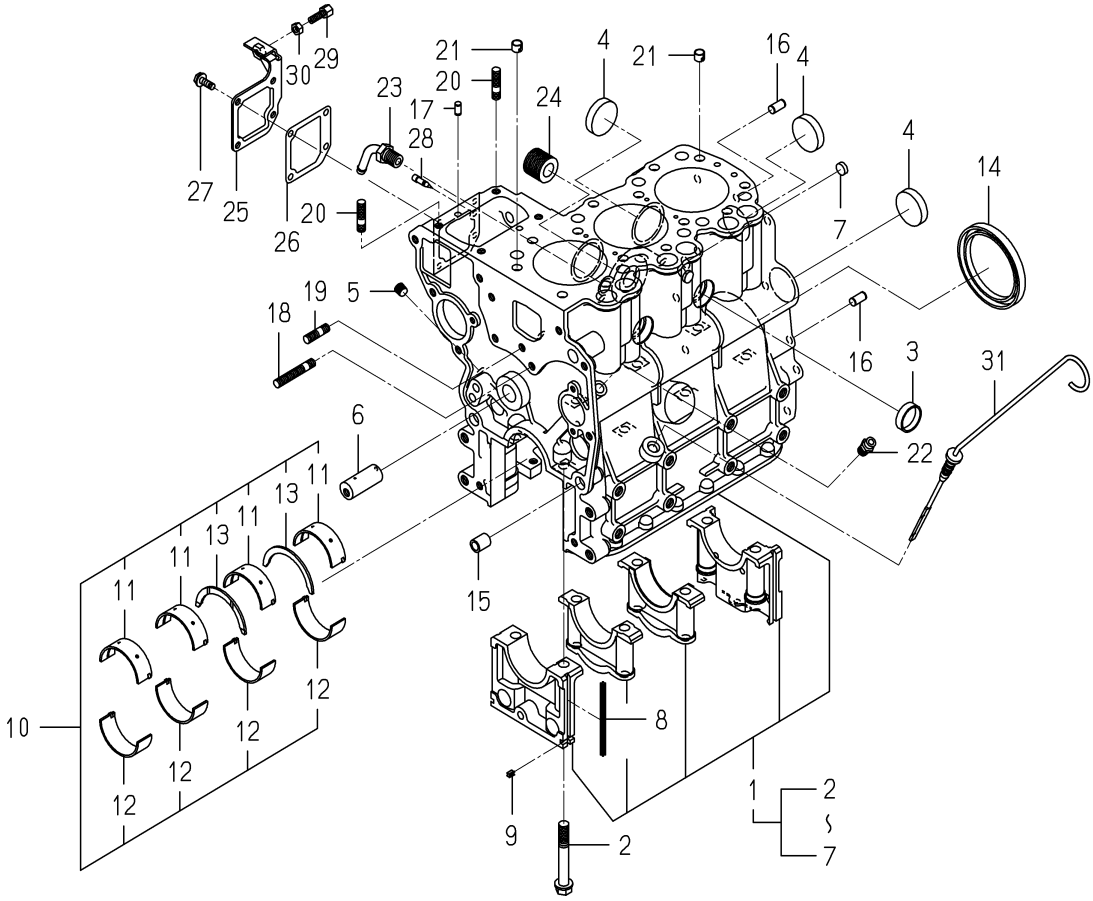

6004-202F-0100

KEY	PART CODE	DESCRIPTION	SPC	TYPE OF MODEL E3100 G01		ITC	COL	GRP	REMARKS
1	6211-210-046-00	CYLINDERBLOCK ASSY	*	1					
2	6209-000-004-10	BOLT	*	8					
3	6209-610-001-10	CUP/SEALING/28	*	2					
4	6209-610-009-00	CUP/SEALING/36	*	4					
5	6509-605-019-10	PLUG	*	3					
6	6212-531-005-10	PIN/IDLEGEAR	*	1					
7	6209-610-008-00	CUP/SEALING/12	*	2					
8	6211-258-001-00	SEAL,BEARING CAP	*	4					
9	6211-258-002-00	SEAL,BEARING CAP/7	*	2					
10	6211-510-001-00	METAL,CRANK SET	*	1					
11	6211-511-003-00	BEARING/CRANK/UPPER	*	4					
12	6211-511-004-00	BEARING/CRANK/LOWER	*	4					
13	6211-599-001-10	BEARING,THRUST CRANK	*	2					
14	6209-625-012-00	OILSEAL	*	1					
15	6209-749-001-20	PIN/TUBE	*	2					
16	6213-129-006-00	PIN/STRAIGHT	*	2					
17	6209-740-005-00	PIN	*	2					
18	6904-110-840-00	STUD/M8X40	*	1					
19	6904-110-818-00	STUD	*	1					
20	6904-110-822-00	STUD	*	2					
21	6294-453-002-00	DOWEL	*	2					
22	6909-902-299-00	NIPPLE	*	1					
23	6213-721-001-00	PIPE,WATER DRAIN	*	1					
24	6213-319-001-00	CONNECTOR,OIL FILTER	*	1					
25	6211-291-001-10	COVER,INJ PUMP	*	1					
26	6211-292-001-20	GASKET/COVER	*	1					
27	V230-360-601-20	FLANGEBOLT	*	4					
28	6215-549-013-00	PIN	*	1					
29	6209-788-001-00	BOLT,ADJUST	*	1					
30	6909-110-406-00	NUT	*	1					

FIG. 5 CYLINDER BLOCK

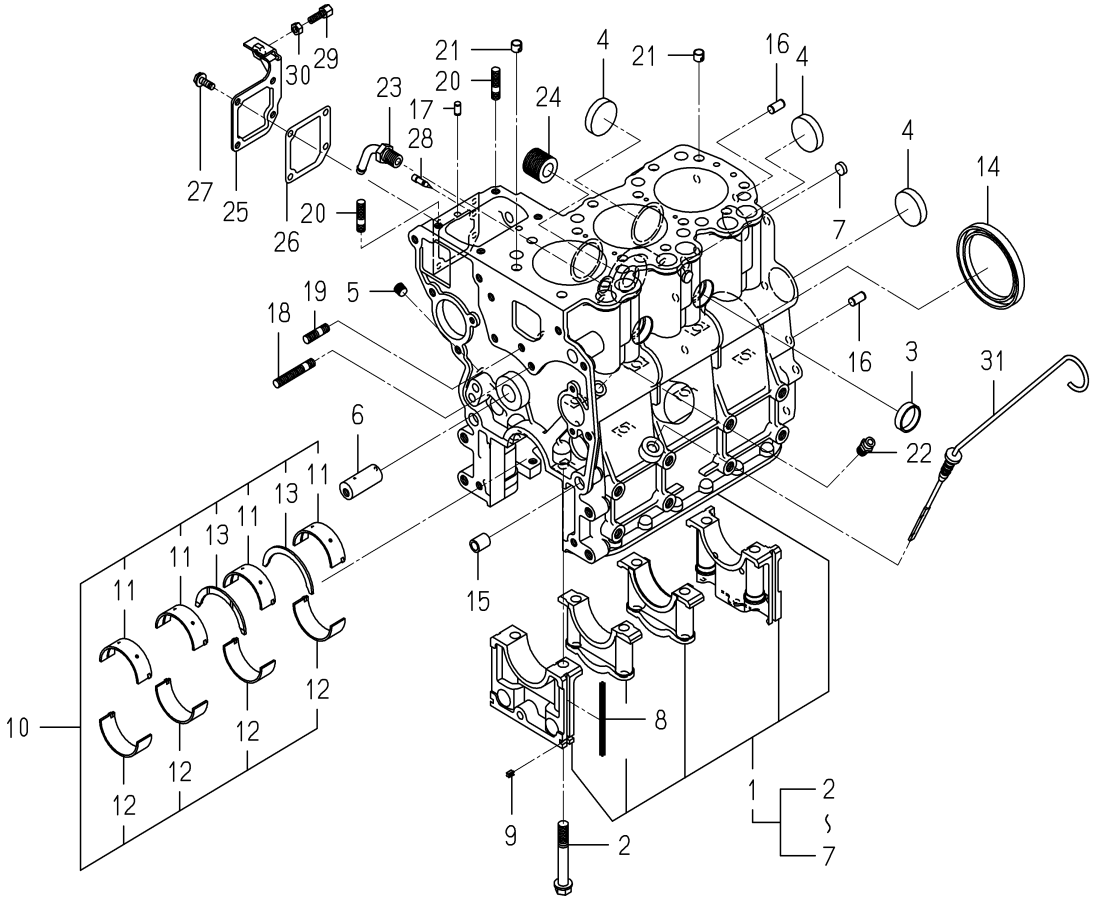

6004-202F-0100

KEY	PART CODE	DESCRIPTION	SPC	TYPE OF MODEL E3100 G01		ITC	COL	GRP	REMARKS
31	6211-760-022-00	LEVELGAGE	*	1					

FIG. 6 BEARING/UNDER SIZE

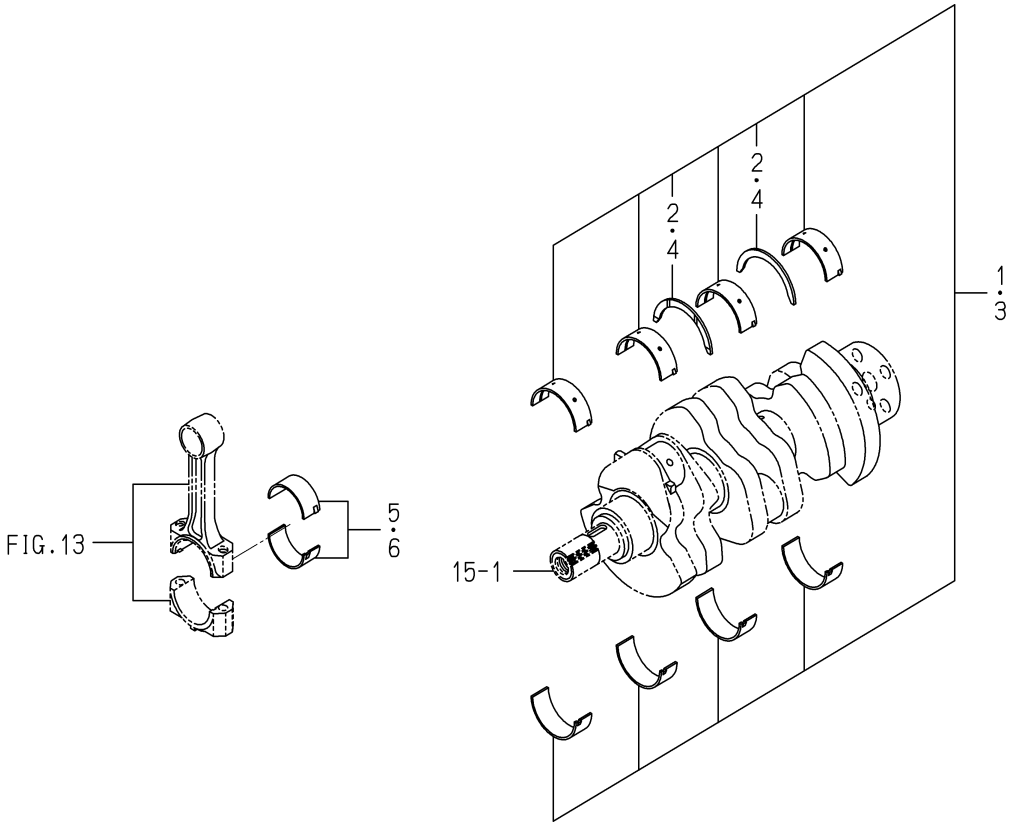

6003-209 -0100

KEY	PART CODE	DESCRIPTION	SPC	TYPE OF MODEL E3100 G01		ITC	COL	GRP	REMARKS
1	6211-540-001-00	METAL,CRANK SET	T	1					
2	6211-599-001-10	BEARING,THRUST CRANK	T	2					
3	6211-560-001-00	METAL,CRANK SET	T	1					
4	6211-599-001-10	BEARING,THRUST CRANK	T	2					
5	6212-274-006-00	BEARING/CONNECTING R	T	3					
6	6212-276-006-00	BEARING/CONNECTING R	T	3					

FIG. 7 OIL PAN

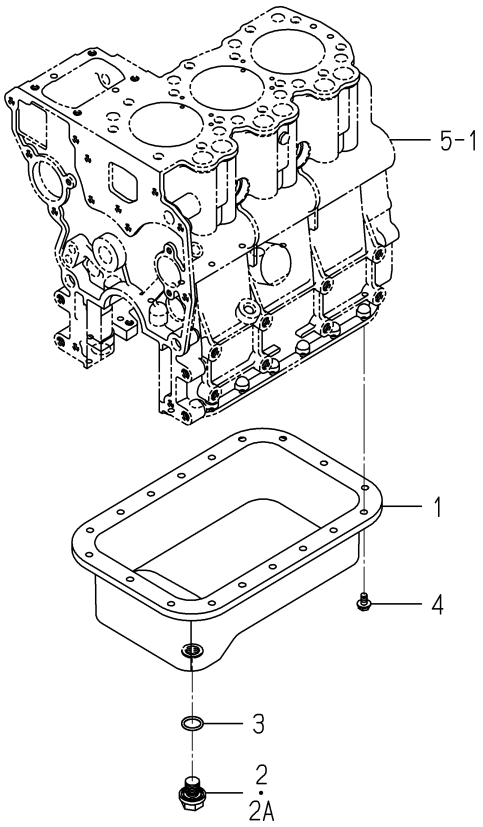

6004-210F-0100

KEY	PART CODE	DESCRIPTION	SPC	TYPE OF MODEL E3100 G01		ITC	COL	GRP	REMARKS
1	6211-361-069-00	OILPAN COMP	*	1					
2	6209-600-006-00	PLUG/M14X1.5	*	1 -234038					
2A	3805-355-002-20	PLUG/M14X1.5	*	1 234039-					
3	V720-102-401-80	O-RING/P18	*	1					
4	V230-360-601-00	FLANGEBOLT	*	18					

FIG. 8 REAR OLATE

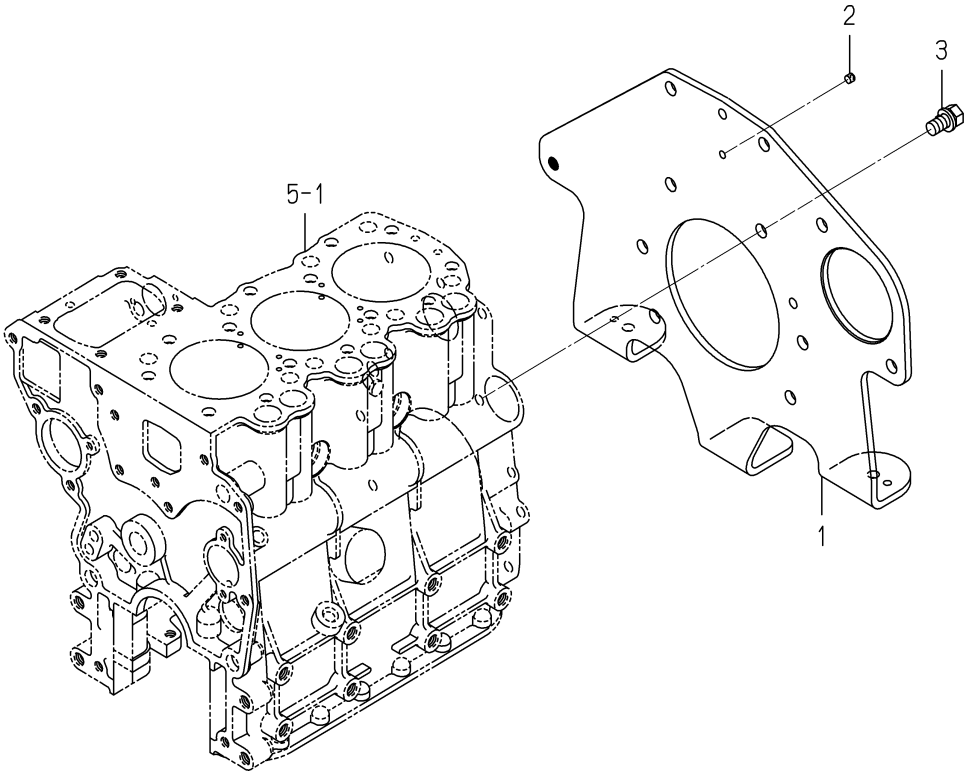

6004-220M-0100

KEY	PART CODE	DESCRIPTION	SPC	TYPE OF MODEL E3100 G01		ITC	COL	GRP	REMARKS
1	6211-341-070-00	PLATE/REAR	*	1					
2	6211-342-001-30	POINTER	*	1					
3	6901-911-020-00	BOLT,SEMS/M10X20	*	8					

FIG. 9 GEAR CASE

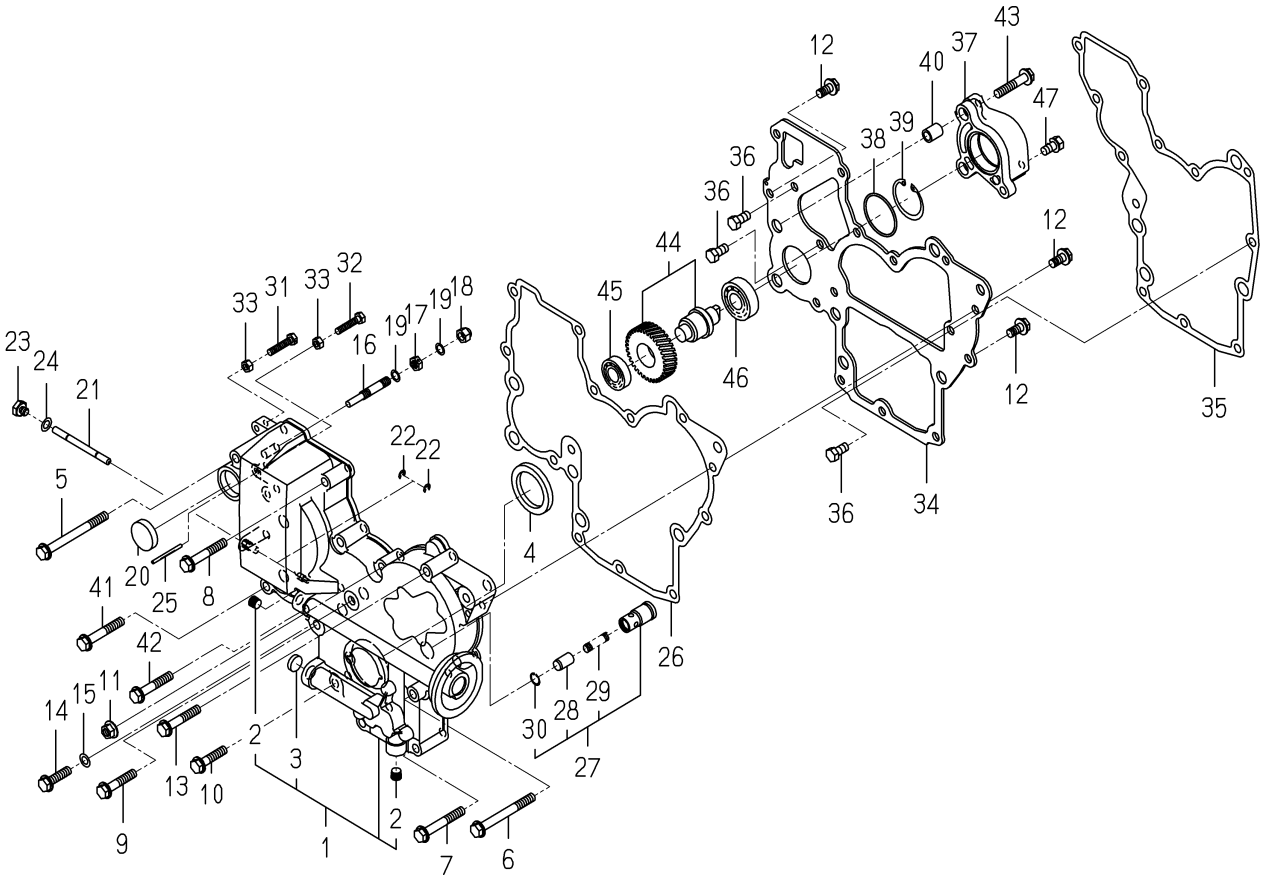

6004-240P-0100,6004-240P-0200

KEY	PART CODE	DESCRIPTION	SPC	TYPE OF MODEL E3100 G01		ITC	COL	GRP	REMARKS
1	6211-310-038-00	GEARCASE ASSY	*	1					
2	6509-605-019-10	PLUG	*	2					
3	6209-610-002-10	CUP/SEALING/16	*	1					
4	6209-625-002-00	SEAL,OIL	*	1					
5	V231-360-808-50	FLANGEBOLT	*	1					
6	V231-360-807-50	FLANGEBOLT	*	1					
7	V231-360-805-50	FLANGEBOLT	*	2					
8	V231-360-805-00	FLANGEBOLT	*	2					
9	V231-360-804-00	FLANGEBOLT	*	1					
10	V231-360-803-50	FLANGEBOLT	*	1					
11	3817-401-001-00	NUT/M08	*	1					
12	V231-360-801-60	FLANGEBOLT	*	3					
13	V231-360-804-50	FLANGEBOLT	*	1					
14	V231-360-803-00	FLANGEBOLT	*	1					
15	6209-500-003-00	WASHER/08X14X01	*	1					
16	6215-546-001-00	STOPPER,FULL-LOAD	*	1					
17	6209-409-001-00	NUT/M8	*	1					
18	V341-120-008-00	NUT,CAP/M 8	*	1					
19	6209-920-002-00	PACKING	*	2					
20	3625-540-004-00	CAP,BLANK/30	*	1					
21	6215-542-001-10	PIN/ARM	*	1					
22	V710-140-004-00	RING,SNAP/ 4 E	*	2					
23	6209-600-004-00	PLUG/SCREW	*	1					
24	6209-500-003-00	WASHER/08X14X01	*	1					
25	6209-740-001-00	PIN,GROOVE	*	1					
26	6211-312-001-30	GASKET/GEARCASE	*	1					
27	6213-160-002-20	VALVE/RELIEF ASSY	*	1					
28	6213-161-001-20	PISTON/VALVE/RELIEF	*	1					
29	6213-164-001-00	SPRING/RELIEF VALVE	*	1					
30	V705-140-012-00	RING,SNAP/12 C	*	1					

FIG. 9 GEAR CASE

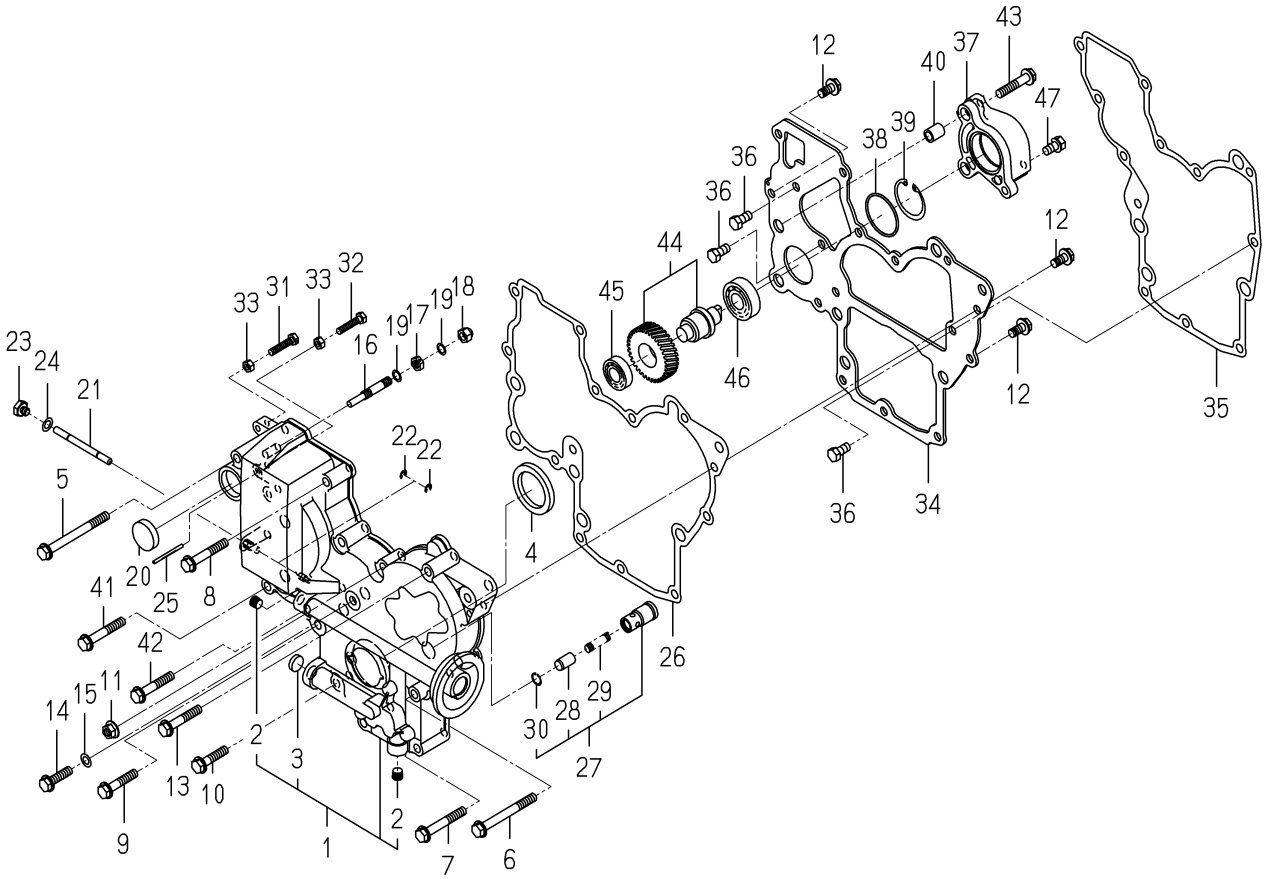

6004-240P-0100,6004-240P-0200

KEY	PART CODE	DESCRIPTION	SPC	TYPE OF MODEL E3100 G01		ITC	COL	GRP	REMARKS
31	6209-050-001-00	BOLT/M6	*	1					
32	6209-050-002-00	BOLT/M6	*	1					
33	6909-110-406-00	NUT	*	2					
34	6211-311-043-20	PLATE/FRONT	*	1					
35	6211-312-004-20	GASKET/PLATE	*	1					
36	6902-050-816-00	BOLT	*	3					
37	6211-319-002-00	SPACER,HYD,REAR	*	1					
38	V723-102-004-20	O-RING	*	1					
39	V705-140-040-00	RING,SNAP/40 C	*	1					
40	6209-749-001-20	PIN/TUBE	*	2					
41	V231-360-805-00	FLANGEBOLT	*	1					
42	V231-360-804-50	FLANGEBOLT	*	1					
43	V231-360-804-00	FLANGEBOLT	*	1					
44	6212-530-004-10	SHAFT/HYDRAULIC ASSY	*	1					
45	V600-110-600-20	BEARING,RB/6002	*	1					
46	V600-110-620-30	BEARING,RB/6203	*	1					
47	V211-260-801-60	BOLT,SEMS (S) M8X16	*	2					

FIG. 10 HANGER

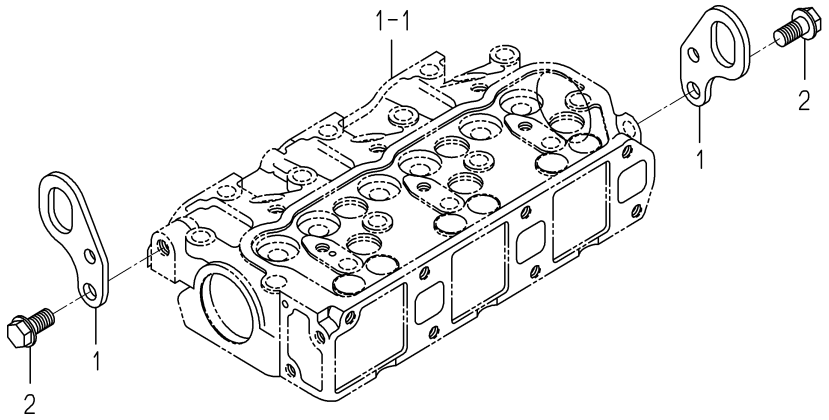

6003-290 -0100

KEY	PART CODE	DESCRIPTION	SPC	TYPE OF MODEL E3100 G01		ITC	COL	GRP	REMARKS
1	6211-777-007-30	HANGER	*	2					
2	V233-361-002-00	FLANGEBOLT	*	2					

FIG. 11 VALVE

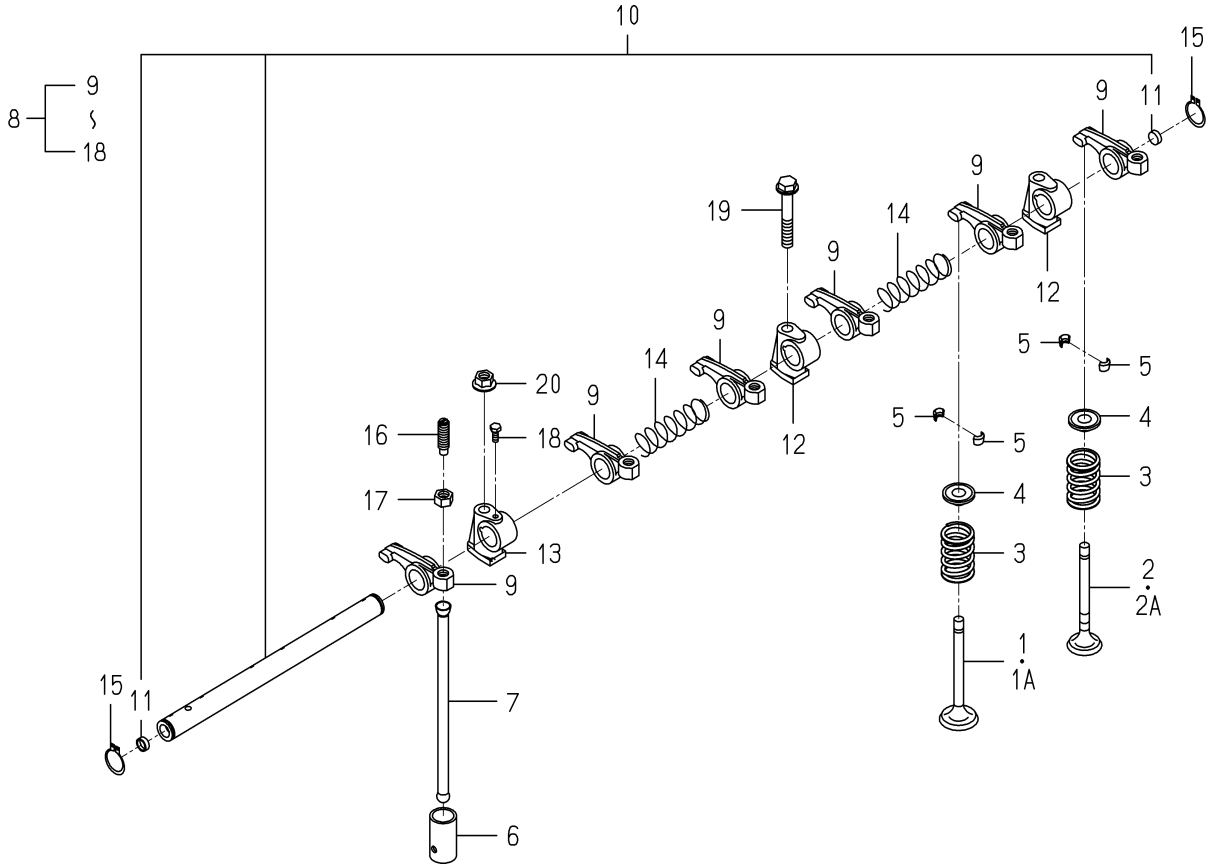

6004-301 -0100

KEY	PART CODE	DESCRIPTION	SPC	TYPE OF MODEL E3100 G01		ITC	COL	GRP	REMARKS
1	6212-551-001-10	VALVE/INTAKE	*	3 -240882					
1A	6212-551-029-00	VALVE/INTAKE	*	3 240883-					
2	6212-552-001-20	VALVE/EXHAUST	*	3 -240882					
2A	6212-552-015-00	VALVE/EXHAUST	*	3 240883-					
3	6212-561-001-10	SPRING/VALVE	*	6					
4	6212-563-001-00	SEAT,VALVE SPRING	*	6					
5	6212-565-001-00	CUTTER,VALVE	*	12					
6	6212-571-006-00	TAPPET	*	6					
7	6212-575-002-00	ROD,PUSH	*	6					
8	6212-600-002-10	ROCKERSHAFT ASSY	*	1					
9	6212-611-004-10	ROCKERARM	*	6					
10	6212-620-001-20	SHAFT/ROCKERARM ASSY	*	1					
11	6212-626-002-10	PLUG	*	2					
12	6212-628-004-00	BRACKET ROCKER SHAFT	*	2					
13	6212-628-005-00	BRACKET,ROCKER SHAFT	*	1					
14	6209-940-004-00	SPRING	*	2					
15	V704-140-016-00	RING,SNAP/16 C	*	2					
16	6212-616-002-00	SCREW ADJUST	*	6					
17	6209-409-003-00	NUT	*	6					
18	6209-000-002-00	BOLT	*	1					
19	V231-360-805-00	FLANGEBOLT	*	1					
20	3817-401-001-00	NUT/M08	*	2					

FIG. 12 CAM SHAFT

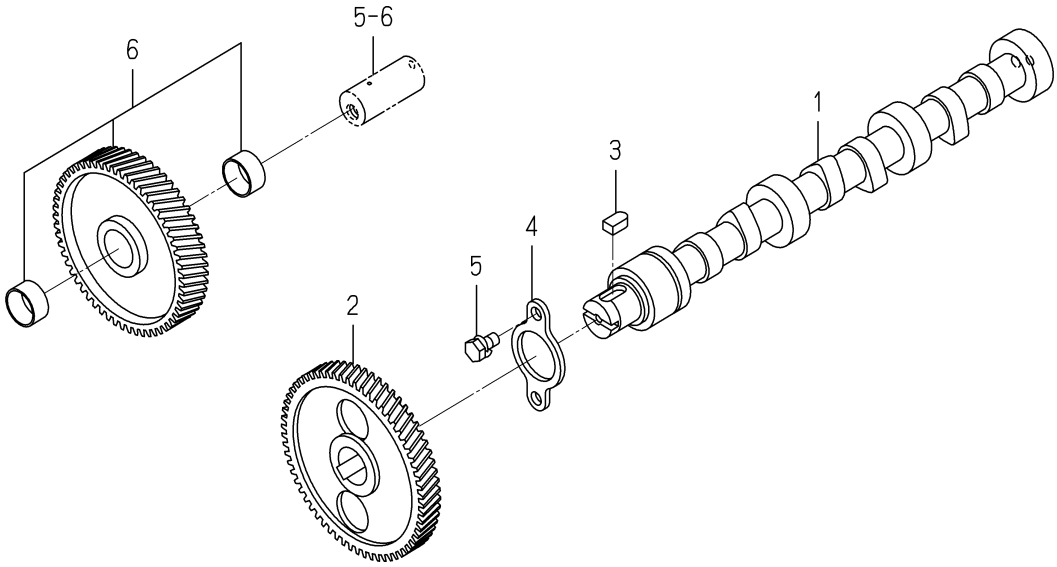

6003-310 -0100

KEY	PART CODE	DESCRIPTION	SPC	TYPE OF MODEL E3100 G01		ITC	COL	GRP	REMARKS
1	6212-511-002-00	SHAFT,CAM	*	1					
2	6212-522-010-00	GEAR/CAMSHAFT	*	1					
3	6209-730-005-00	KEY/07X05X09	*	1					
4	6212-535-001-00	PLATE,THRUST	*	1					
5	6901-910-612-00	BOLT,SEMS/M6X12	*	2					
6	6212-523-023-00	GEAR/IDLE ASSY	*	1					

FIG. 13 PISTON

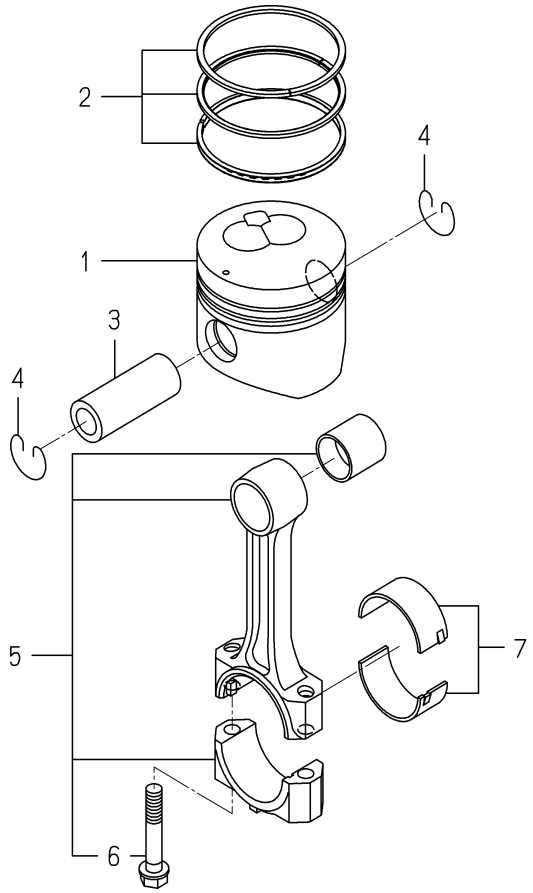

6004-340B-0100

KEY	PART CODE	DESCRIPTION	SPC	TYPE OF MODEL E3100 G01		ITC	COL	GRP	REMARKS
1	6212-111-093-10	PISTON	*	3					
2	6212-121-008-20	RING/PISTON SET	*	3					
3	6212-211-001-10	PIN,PISTON	*	3					
4	6209-587-001-00	RING,SNAP	*	6					
5	6212-230-004-10	CONNECTINGROD ASSY	*	3					
6	6212-235-005-00	BOLT/CONNECTINGROD	*	6					
7	6212-271-006-00	BEARING/CONNECTING R	*	3					

FIG. 14 PISTON/OVER SIZE

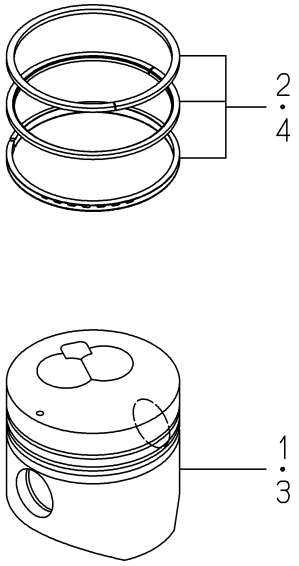

6004-349B-0100

KEY	PART CODE	DESCRIPTION	SPC	TYPE OF MODEL E3100 G01		ITC	COL	GRP	REMARKS
1	6212-114-093-10	PISTON(OV)	T	3					
2	6212-124-008-10	RING/PISTON/OV SET	T	3					
3	6212-116-093-10	PISTON(OV)	T	3					
4	6212-126-008-10	RING/PISTON/OV SET	T	3					

FIG. 15 CRANK SHAFT

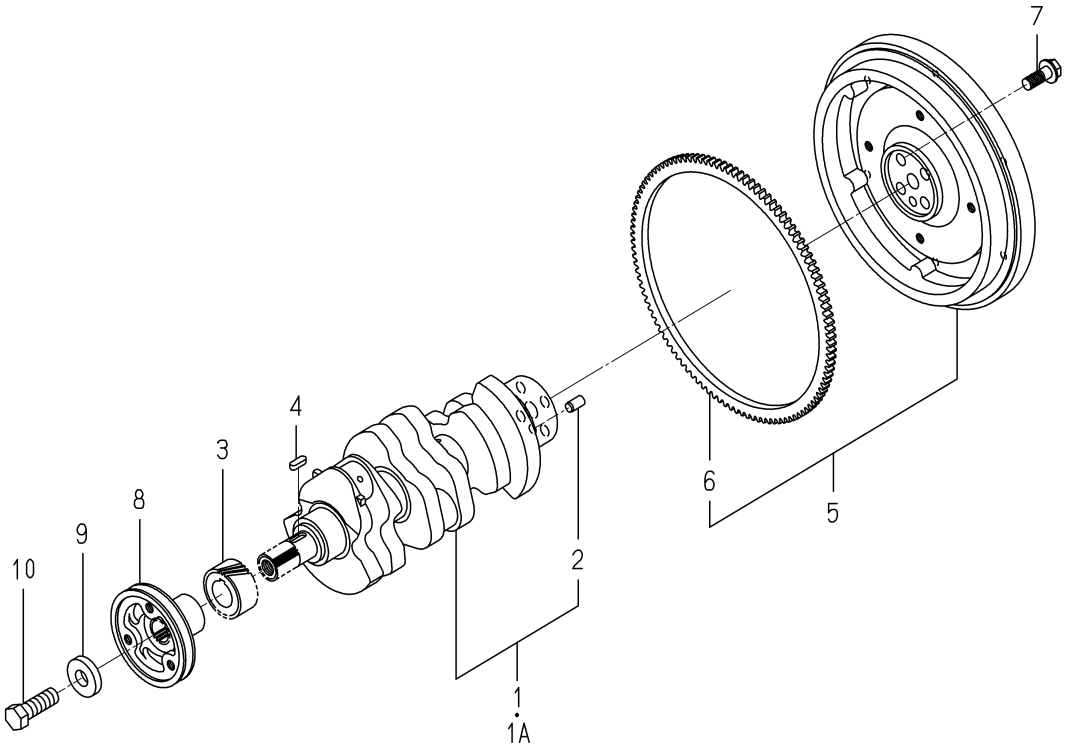

6004-350Q-0100

KEY	PART CODE	DESCRIPTION	SPC	TYPE OF MODEL E3100 G01		ITC	COL	GRP	REMARKS
1	6212-310-019-30	CRANKSHAFT ASSY	*	1 -238361					
1A	6212-310-019-40	CRANKSHAFT ASSY	*	1 238362-		1			
2	V523-101-001-80	PIN	*	1					
3	6212-521-008-00	GEAR/CRANK	*	1					
4	6209-730-002-00	KEY/07X05X20	*	1					
5	6212-330-013-30	FLYWHEEL	*	1					
6	6212-333-003-00	RINGGEAR	*	1					
7	6209-046-015-00	BOLT/FLANGE	*	4					
8	6212-371-027-00	PULLEY/CRANK	*	1					
9	6212-379-001-00	WASHER	*	1					
10	6901-066-645-00	BOLT	*	1					

FIG. 16 OIL PUMP

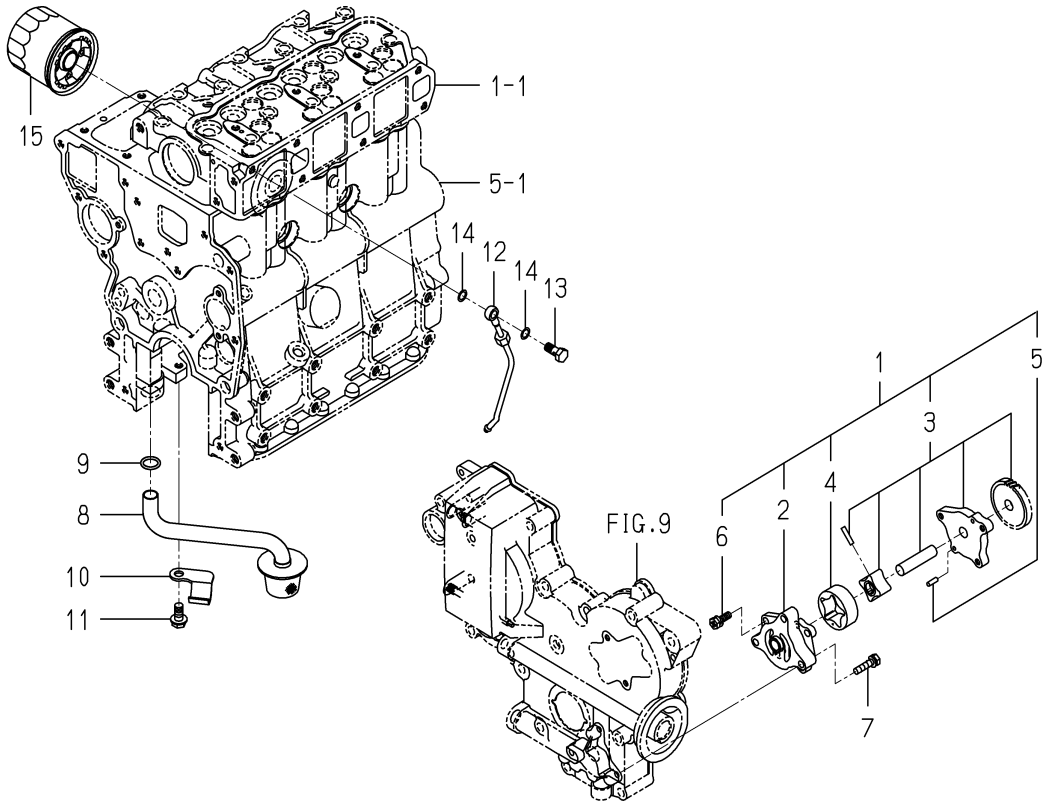

6004-401C-0100

KEY	PART CODE	DESCRIPTION	SPC	TYPE OF MODEL E3100 G01		ITC	COL	GRP	REMARKS
1	6213-100-003-30	OILPUMP ASSY	*	1					
2	6213-111-001-30	BODY/OILPUMP	*	1					
3	6213-120-003-20	GEAR/OILPUMP ASSY	*	1					
4	6213-125-001-00	ROTOR/OUTER	*	1					
5	6213-129-003-00	PIN/STRAIGHT	*	2					
6	6213-119-001-00	BOLT/WS	*	3					
7	6901-910-625-00	BOLT	*	3					
8	6213-140-023-00	STRAINER	*	1					
9	V720-102-401-50	O-RING/P15	*	1					
10	6213-149-002-00	CLAMP,STRAINER	*	1					
11	V231-360-801-60	FLANGEBOLT	*	1					
12	6213-311-006-00	PIPE,OIL	*	1					
13	6909-906-105-10	BOLT,JOINT	*	1					
14	6209-920-002-00	PACKING	*	2					
15	6213-240-002-10	CARTRIDGE/OILFILTER	*	1					

FIG. 17 WATER PUMP

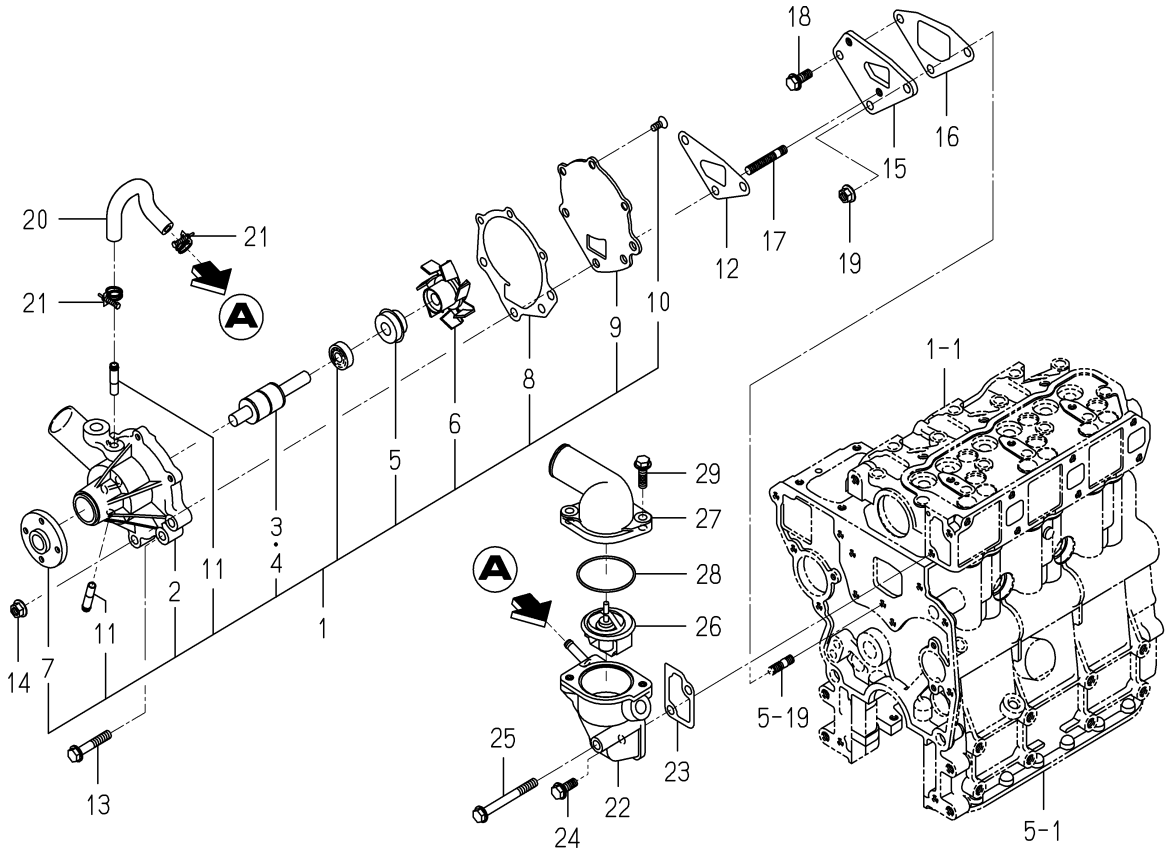

6004-420D-0100

KEY	PART CODE	DESCRIPTION	SPC	TYPE OF MODEL E3100 G01		ITC	COL	GRP	REMARKS
1	6213-610-005-40	WATERPUMP ASSY	*	1					
2	6213-611-003-20	BODY/WATERPUMP	*	1					
3	6213-631-002-00	BEARING/WATER PUMP	*	1					
4	6213-631-005-00	BEARING/WATERPUMP	*	1					
5	6213-622-002-10	SEAL SET/WATER PUMP	*	1					
6	6213-621-003-00	ROTOR/WATERPUMP	*	1					
7	6213-642-002-00	SEAL/WATER PUMPPULLE	*	1					
8	6213-613-002-10	GASKET	*	1					
9	6213-612-004-00	PLATE/WATER PUMP	*	1					
10	6213-619-003-00	SCREW/WATER PUMP	*	3					
11	6213-619-002-00	PIPE/WATER PUMP	*	2					
12	6213-614-003-10	GASKET/WATER PUMP	*	1					
13	V231-360-804-50	FLANGEBOLT	*	1					
14	3817-401-001-00	NUT/M08	*	2					
15	6213-619-001-00	SPACER,PUMP.WATER	*	1					
16	6213-614-004-10	GASKET,SPACER	*	1					
17	6904-110-840-00	STUD/M8X40	*	2					
18	V231-360-802-00	FLANGEBOLT	*	1					
19	3817-401-001-00	NUT/M08	*	1					
20	6213-729-016-00	HOSE/RUBBER	*	1					
21	J061-210-015-00	CLAMP/WIRE/10-15	*	2					
22	6213-716-001-50	HOUSING/THERMOSTAT	*	1					
23	6213-743-002-10	GASKET/HOUSING	*	1					
24	V231-360-802-00	FLANGEBOLT	*	1					
25	V231-360-807-50	FLANGEBOLT	*	1					
26	6513-770-022-10	THERMOSTAT	*	1					
27	6213-711-004-00	PIPE/WATEROUTLET	*	1					
28	V723-102-005-50	O-RING	*	1					
29	V231-360-802-50	FLANGEBOLT	*	2					

FIG. 18 COOLING FAN

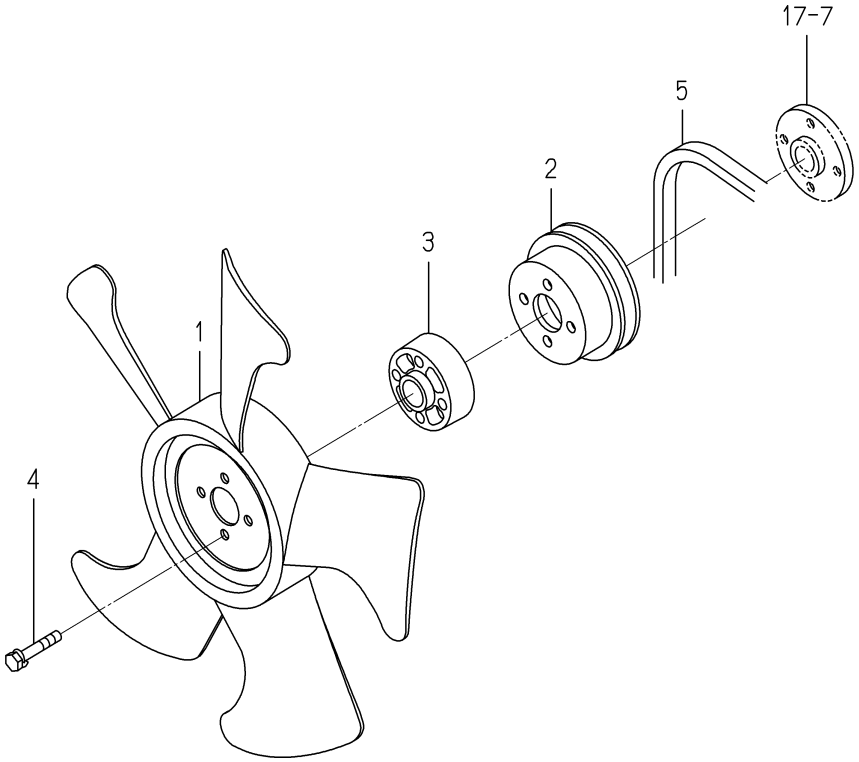

6004-480Q-0100

KEY	PART CODE	DESCRIPTION	SPC	TYPE OF MODEL E3100 G01		ITC	COL	GRP	REMARKS
1	6213-660-023-00	FAN/COOLING	*	1					
2	6213-641-006-00	PULLEY,WATER PUMP	*	1					
3	6213-669-003-00	SPACER/FUN/19	*	1					
4	6901-910-635-00	BOLT	*	4					
5	6213-671-027-00	BELT/VCOGHM34.0	*	1					

FIG. 19 INJECTION NOZZLE

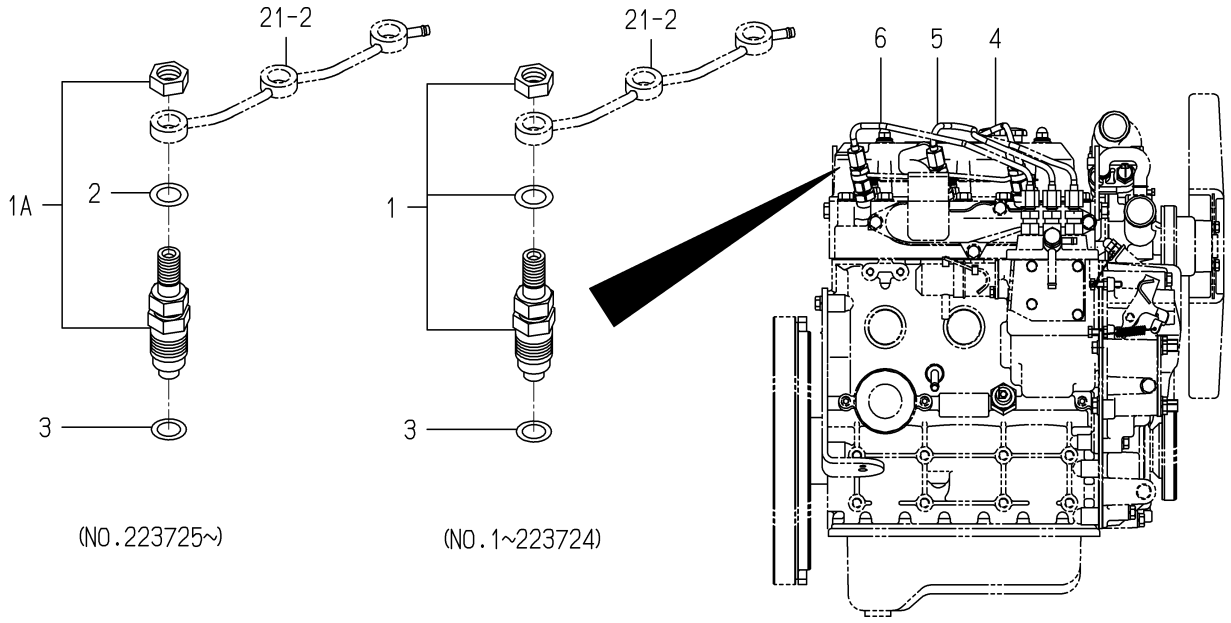

6004-501C-0100

KEY	PART CODE	DESCRIPTION	SPC	TYPE OF MODEL E3100 G01		ITC	COL	GRP	REMARKS
1	6215-300-036-00	INJECTIONNOZZLE ASSY	*	3 -223724					FIG 027
1A	6215-300-036-10	INJECTIONNOZZLE ASSY	*	3 223725-		2			FIG 027
2	6215-359-001-00	WASHER	*	3 223725-					
3	6215-315-002-00	GASKET,NOZZLE	*	3					
4	6215-411-126-10	PIPE/INJECTION ASSY	*	1					
5	6215-411-127-00	PIPE/INJECTION ASSY	*	1					
6	6215-411-128-00	PIPE/INJECTION ASSY	*	1					

FIG. 20 INJECTION PUMP

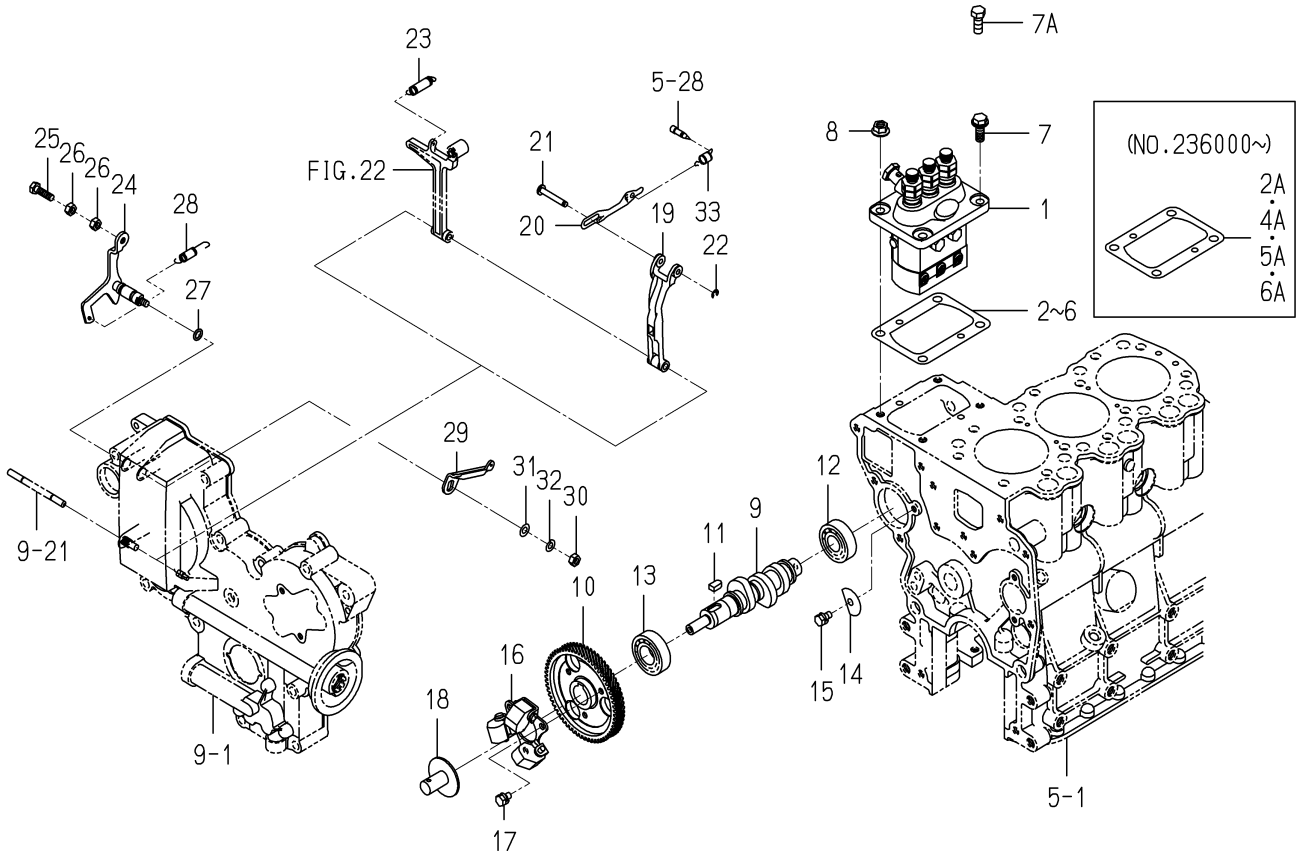

6004-511 -0100

KEY	PART CODE	DESCRIPTION	SPC	TYPE OF MODEL E3100 G01		ITC	COL	GRP	REMARKS
1	6215-600-103-10	INJECTIONPUMP ASSY	*	1					FIG 028
2	6219-752-006-00	SHIM/INJECTION P/0.3	*	1 -235999					
2A	6219-752-045-00	SHIM/INJECTIONPUMP	*	1 236000-					
3	6219-752-007-00	SHIM/INJECTION P/0.1	*	1 -235999					
4	6219-752-008-00	SHIM/INJECTION P/0.2	*	1 -235999					
4A	6219-752-044-00	SHIM/INJECTIONPUMP	*	1 236000-					
5	6219-752-009-00	SHIM/INJECTION P/0.4	*	1 -235999					
5A	6219-752-046-00	SHIM/INJECTIONPUMP	*	1 236000-					
6	6219-752-010-00	SHIM/INJECTION P/0.5	*	1 -229516					
6A	6219-752-047-00	SHIM/INJECTIONPUMP	*	1 236000-					
7	V231-360-802-00	FLANGEBOLT	*	2 -240938					
7A	V201-360-802-00	BOLT/M8X20	*	2 240939-					
8	3817-401-001-00	NUT/M08	*	2					
9	6215-621-016-20	CAMSHAFT/INJECTION P	*	1					
10	6212-524-002-20	GEAR/INJECTIONPUMP	*	1					
11	6209-730-005-00	KEY/07X05X09	*	1					
12	V600-110-620-30	BEARING,RB/6203	*	1					
13	V600-110-600-40	BEARING,RB/6004	*	1					
14	6212-535-002-00	PLATE,THRUST INJPUMP	*	1					
15	6901-910-612-00	BOLT,SEMS/M6X12	*	1					
16	6215-520-001-00	FLYWEIGHT	*	1					
17	6209-030-043-00	BOLT/M6X10	*	3					
18	6215-526-004-00	THRUSTPIECE	*	1					
19	6215-541-001-10	ARM/FLOATING COMP	*	1					
20	6215-543-002-10	RINK/CONTROL	*	1					
21	6215-542-006-00	PIN,CONTROL	*	1					
22	V710-140-004-00	RING,SNAP/ 4 E	*	1					
23	6215-531-001-00	SPRING GOVERNOR	*	1					
24	6215-541-003-10	LEVER,CONTROL	*	1					
25	6209-044-001-00	BOLT/M6X18	*	1					

FIG. 20 INJECTION PUMP

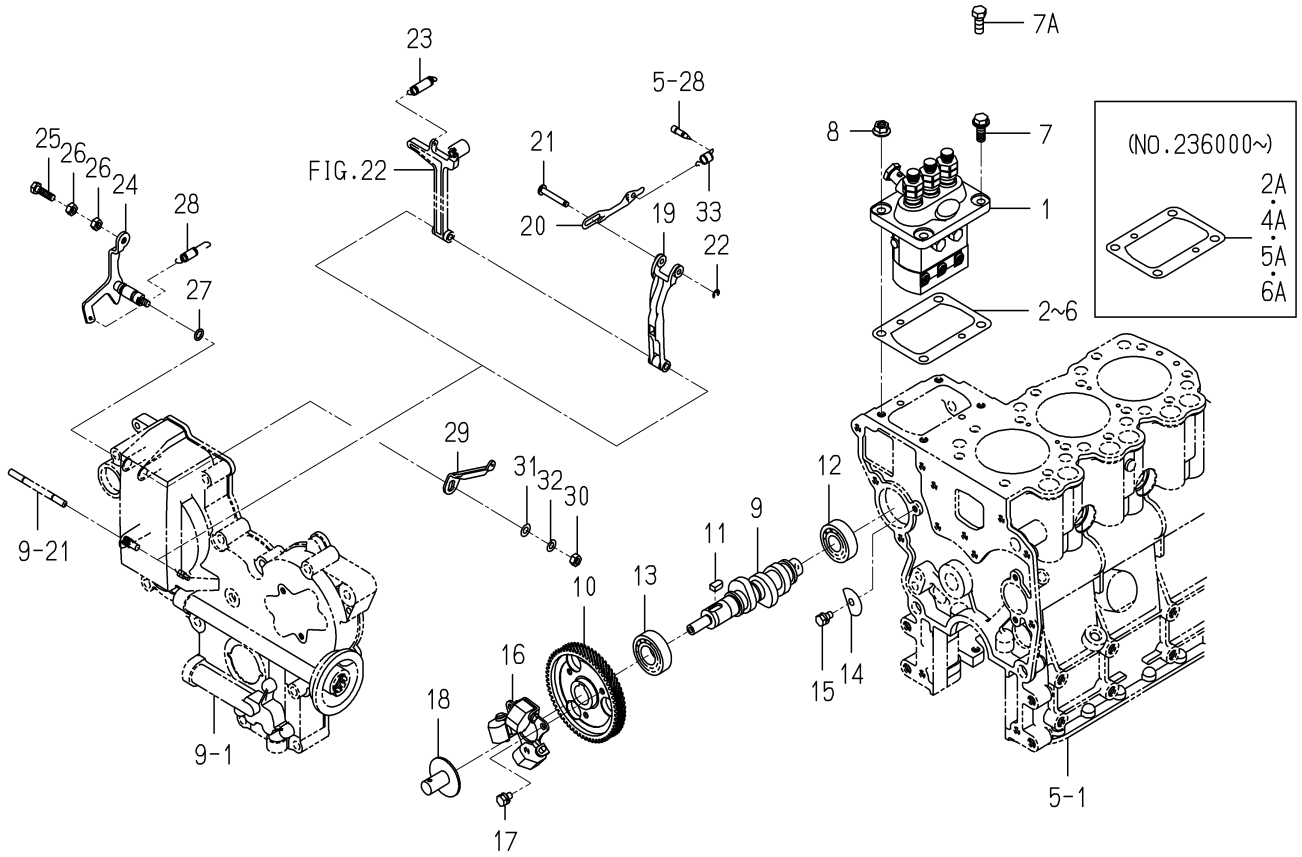

6004-511 -0100

KEY	PART CODE	DESCRIPTION	SPC	TYPE OF MODEL E3100 G01		ITC	COL	GRP	REMARKS
26	6909-111-406-00	NUT	*	2					
27	V720-101-900-80	O-RING/P 8	*	1					
28	6209-580-002-10	SPRING,RETURN	*	1					
29	6215-549-007-10	ARM/CONTROL	*	1					
30	6909-110-406-00	NUT	*	1					
31	V411-260-006-00	WASHER / M6	*	1					
32	V401-160-006-00	WASHER,SP/M 6	*	1					
33	6215-549-012-00	SPRING,STARTING	*	1					

FIG. 21 FUEL PIPE

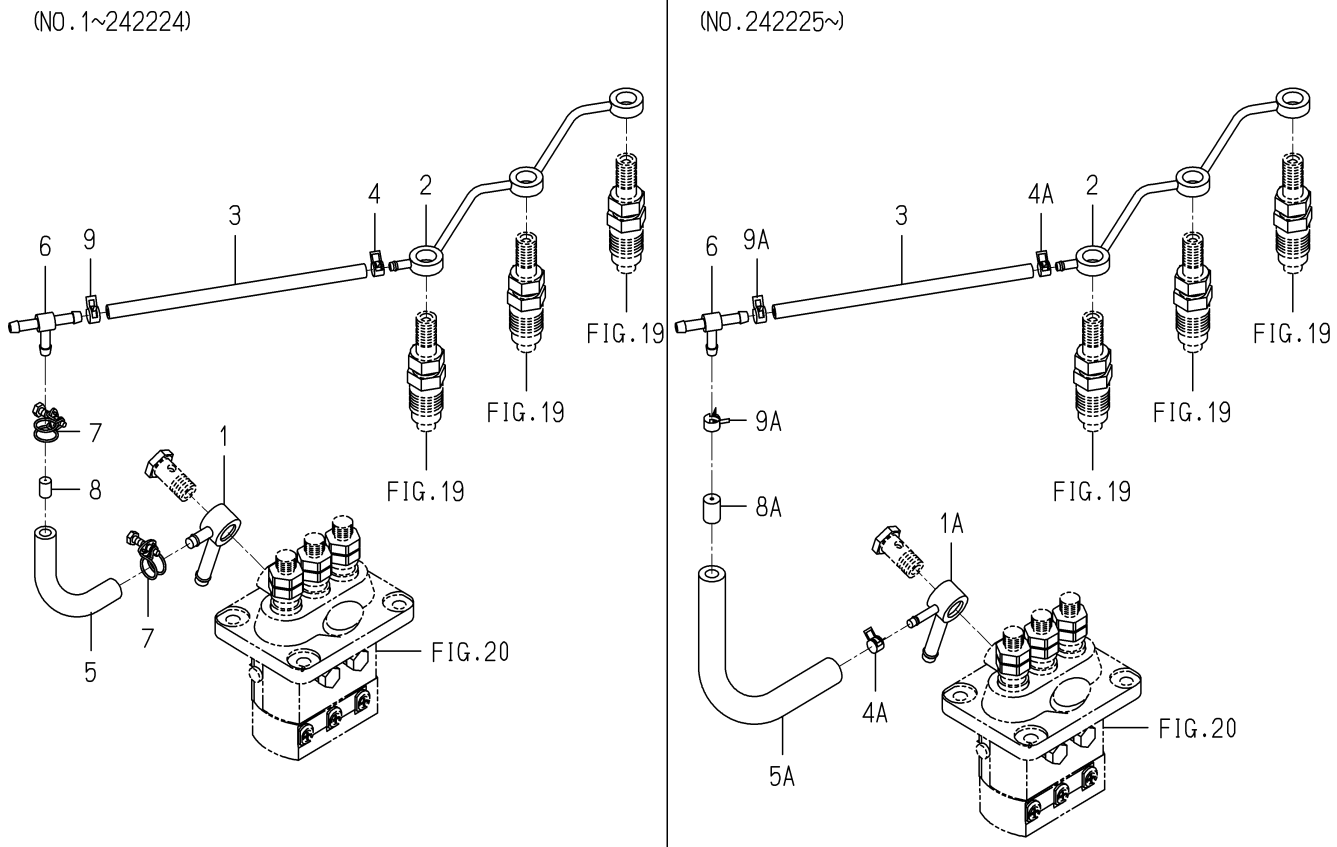

6004-550H-0100

KEY	PART CODE	DESCRIPTION	SPC	TYPE OF MODEL E3100 G01		ITC	COL	GRP	REMARKS
1	6215-412-002-10	CONNECTOR	*	1 -242224					
1A	6215-412-004-00	CONNECTOR/FUEL	*	1 242225-					
2	6215-411-125-00	PIPE/FUEL	*	1					
3	6209-360-018-00	HOSE/RUBBER/160	*	1					
4	J062-076-082-00	CLIP/HOSE/7.6-8.2	*	1 -242224					
4A	J062-076-082-00	CLIP/HOSE/7.6-8.2	*	2 242225-					
5	6209-360-021-00	HOSE/RUBBER	*	1 -242224					
5A	6209-360-120-00	HOSE/RUBBER/70	*	1 242225-					
6	3632-360-036-00	JOINTT-TYPE 2	*	1					
7	6209-704-009-00	CLAMP/WIRE/10-12	*	2 -242224					
8	6215-419-001-00	TUBE,ORIFICE	*	1 -242224					
8A	3640-586-004-00	RESISTANCE/1.0	*	1 242225-					
9	J062-087-093-00	CLIP/HOSE/8.7-9.3	*	1 -242224					
9A	J062-087-093-00	CLIP/HOSE/8.7-9.3	*	2 242225-					

FIG. 22 ADAPTER

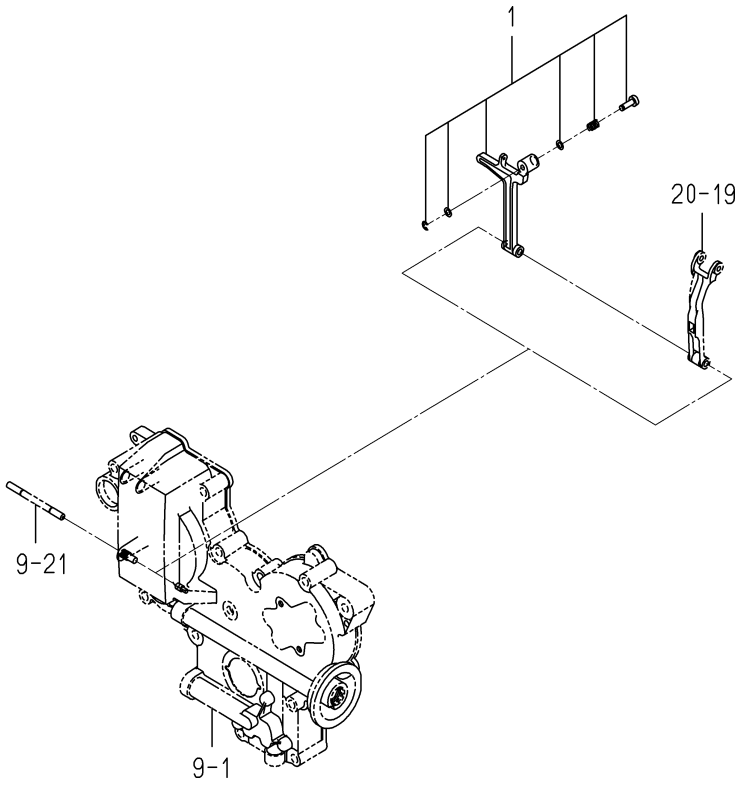

6003-560E-0100

KEY	PART CODE	DESCRIPTION	SPC	TYPE OF MODEL E3100 G01		ITC	COL	GRP	REMARKS
1	6215-548-006-00	ADAPTER/255X040 ASSY	*	1					

FIG. 23 ELECTRIC(1)

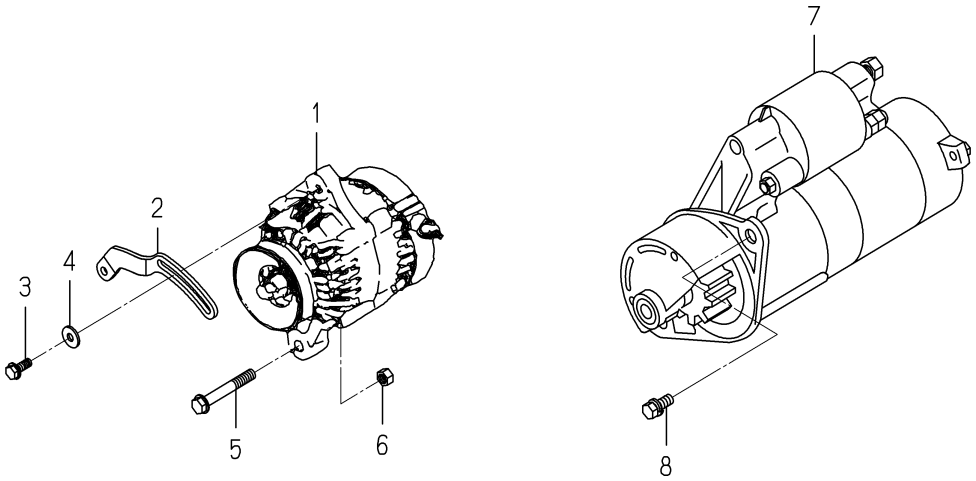

6004-801J-0100,6004-801J-0200

KEY	PART CODE	DESCRIPTION	SPC	TYPE OF MODEL E3100 G01		ITC	COL	GRP	REMARKS
1	6281-200-005-00	GENERATOR ASSY	*	1					FIG 030
2	6213-674-006-20	PLATE/ADJUST	*	1					
3	V231-360-802-00	FLANGEBOLT	*	1					
4	1373-121-001-00	WASHER/9X22X2	*	1					
5	V233-361-007-00	FLANGEBOLT	*	1					
6	6909-110-410-00	NUT/M10	*	1					
7	6281-100-014-00	STARTER ASSY	*	1					FIG 029
8	6901-911-025-00	BOLT	*	2					

FIG. 24 ELECTRIC(2)

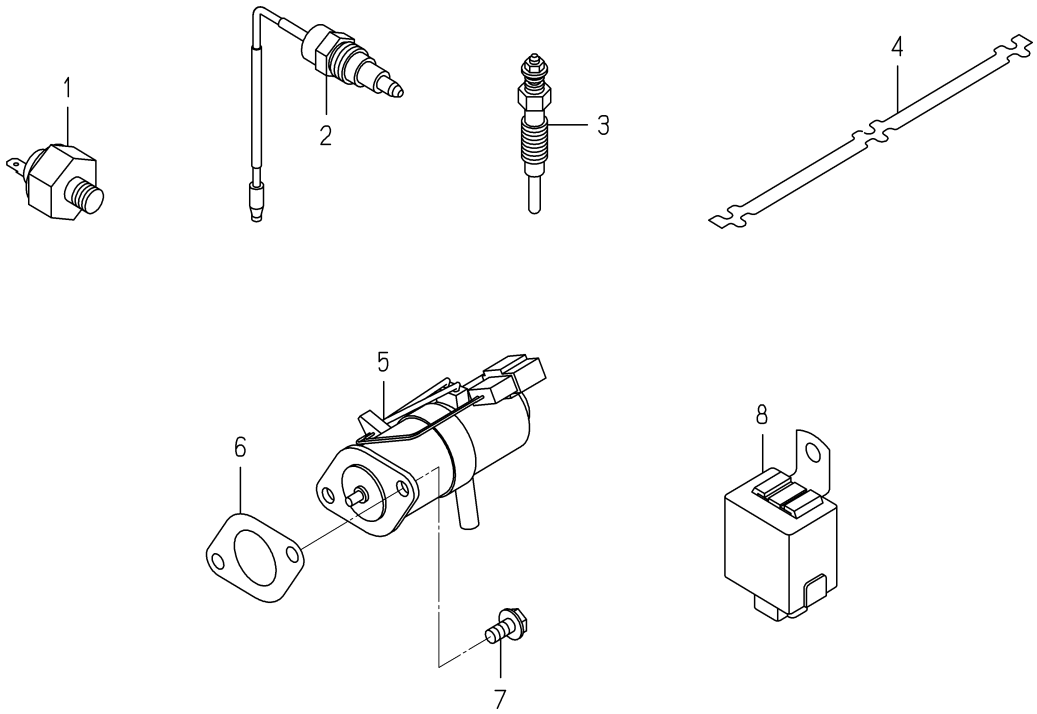

6004-820I-0100,6004-820I-0200

KEY	PART CODE	DESCRIPTION	SPC	TYPE OF MODEL E3100 G01		ITC	COL	GRP	REMARKS
1	6281-971-001-10	SWITCH/OILPRESSURE	*	1 -226284					
2	6282-450-002-00	SWITCH/OVERHEAT	*	1 -226284					
3	6281-410-024-00	GLOWPLUG	*	3 -226284					
4	6219-732-016-00	CONNECTOR/GLOWPLUG	*	1 -226284					
5	6281-910-003-10	SOLENOID	*	1 -226284					
6	6209-630-002-10	GASKET	*	1 -226284					
7	V230-360-601-20	FLANGEBOLT	*	2 -226284					
8	6281-920-001-00	RELAY,SOLENOID	*	1 -226284					

FIG. 25 ELECTRIC(2)

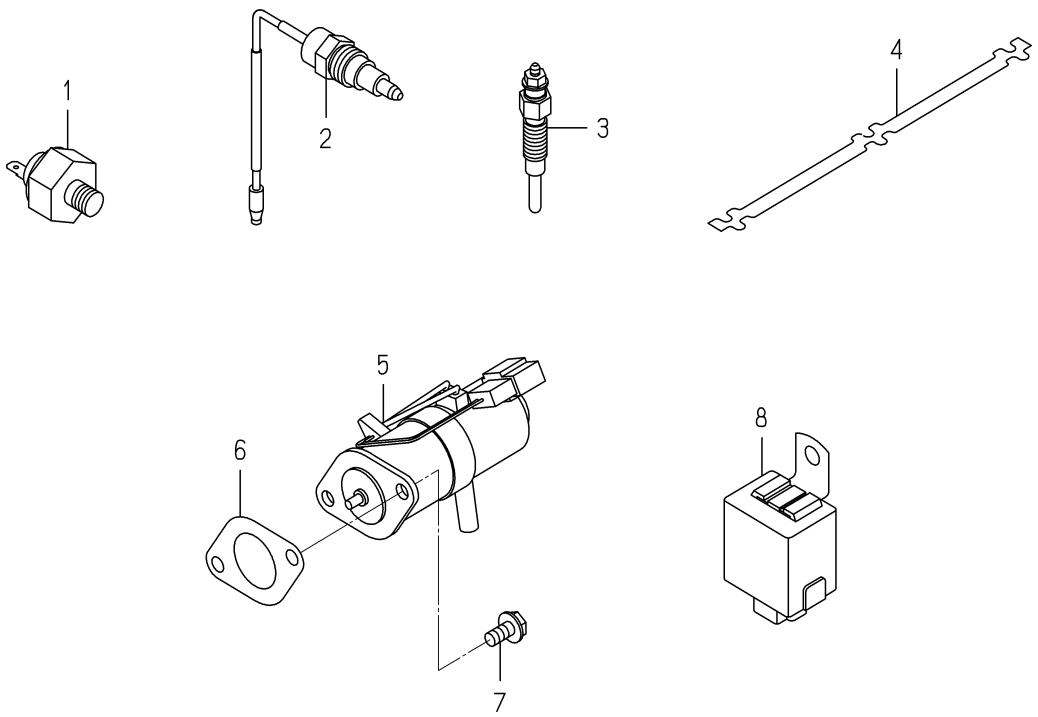

6004-820O-0100,6004-820O-0200

KEY	PART CODE	DESCRIPTION	SPC	TYPE OF MODEL E3100 G01		ITC	COL	GRP	REMARKS
1	6281-971-001-10	SWITCH/OILPRESSURE	*	1 226285-					
2	6282-450-002-00	SWITCH/OVERHEAT	*	1 226285-					
3	6281-410-023-00	GLOWPLUG	*	3 226285-					
4	6219-732-016-00	CONNECTOR/GLOWPLUG	*	1 226285-					
5	6281-910-003-10	SOLENOID	*	1 226285-					
6	6209-630-002-10	GASKET	*	1 226285-					
7	V230-360-601-20	FLANGEBOLT	*	2 226285-					
8	6281-920-001-00	RELAY,SOLENOID	*	1 226285-					

FIG. 26 REPAIR PARTS

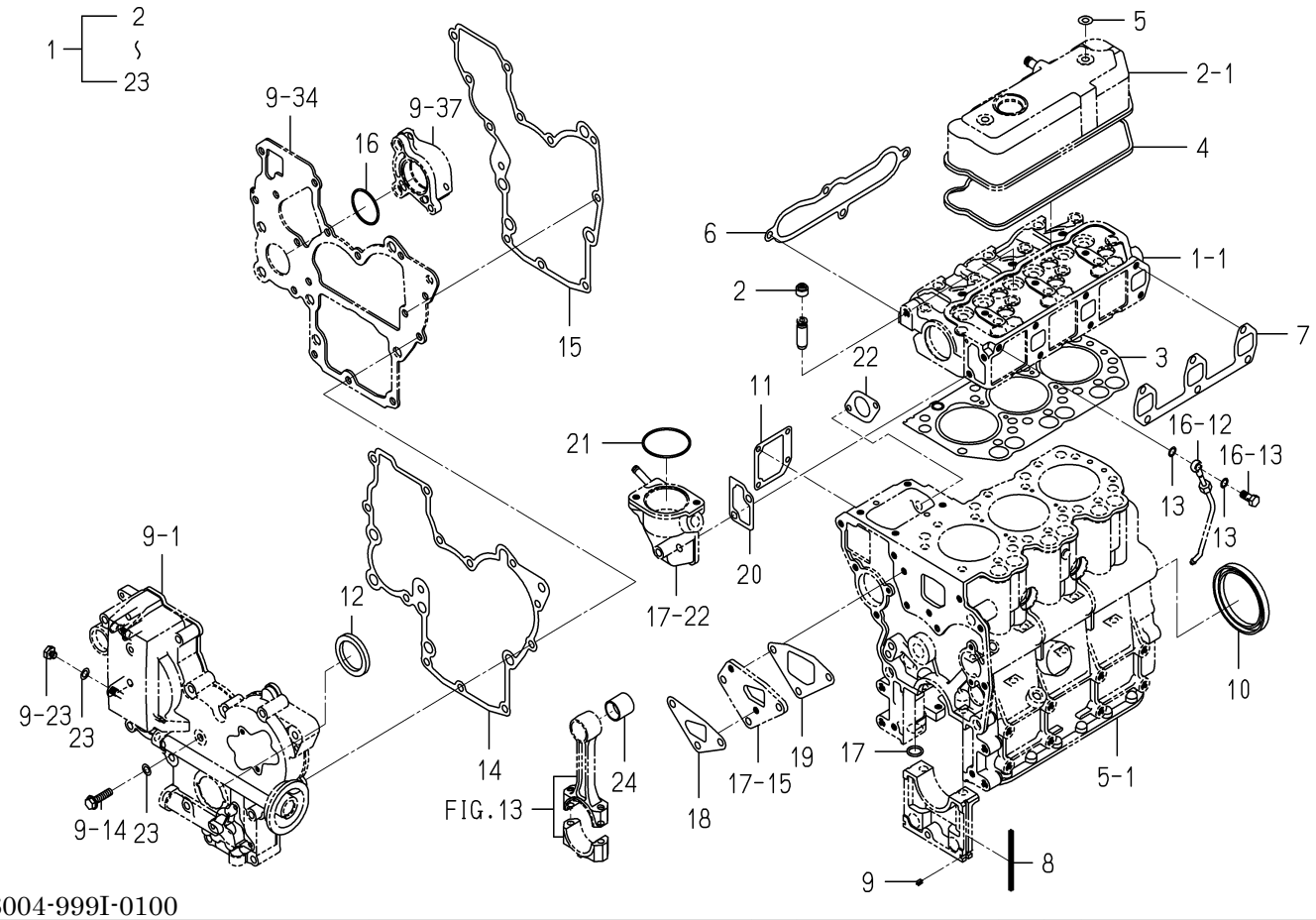

6004-999I-0100

KEY	PART CODE	DESCRIPTION	SPC	TYPE OF MODEL E3100 G01		ITC	COL	GRP	REMARKS
1	6287-810-039-00	REPAIR/ENGINE SET	T	1					
2	6212-569-002-00	SEAL,OIL	T	6					
3	6211-141-008-30	GASKET/CYLINDERHEAD	T	1					
4	6211-173-003-00	SEAL,CYL.HEAD COVER	T	1					
5	6209-572-003-00	GASKET	T	2					
6	6214-115-001-20	GASKET,INLET MANIFOL	T	1					
7	6214-145-001-30	GASKET,EXH.MANIFOLD	T	1					
8	6211-258-001-00	SEAL,BEARING CAP	T	4					
9	6211-258-002-00	SEAL,BEARING CAP/7	T	2					
10	6209-625-012-00	OILSEAL	T	1					
11	6211-292-001-20	GASKET/COVER	T	1					
12	6209-625-002-00	SEAL,OIL	T	1					
13	6209-920-002-00	PACKING	T	2					
14	6211-312-001-30	GASKET/GEARCASE	T	1					
15	6211-312-004-20	GASKET/PLATE	T	1					
16	V723-102-004-20	O-RING	T	1					
17	V720-102-401-50	O-RING/P15	T	1					
18	6213-614-003-10	GASKET/WATER PUMP	T	1					
19	6213-614-004-10	GASKET,SPACER	T	1					
20	6213-743-002-10	GASKET/HOUSING	T	1					
21	V723-102-005-50	O-RING	T	1					
22	6209-630-002-10	GASKET	T	1					
23	6209-500-003-00	WASHER/08X14X01	T	2					

FIG. 27 COMPONENT PARTS FOR 6215-300-036-00,10 ON Fig.19

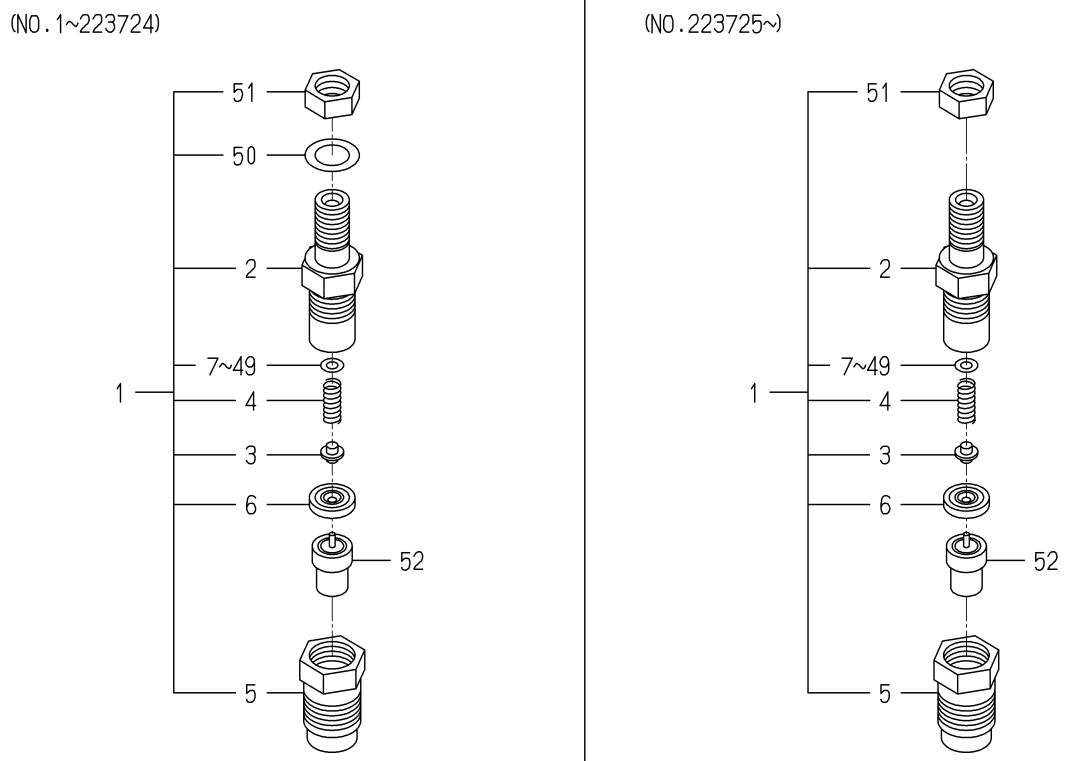

6215-300-036-1B

KEY	PART CODE	DESCRIPTION	SPC	TYPE OF MODEL E3100 G01		ITC	COL	GRP	REMARKS
1	6215-330-024-00	HOLDER/NOZZLE ASSY	*	3 -223724					
1A	6215-330-024-10	HOLDER/NOZZLE ASSY	*	3 223725-		2			
2	6215-331-008-00	BODY/NOZZLE HOLDER	*	3					
3	6215-342-001-00	PIN,NOZZLE HOLDER	*	3					
4	6215-343-001-00	WASHER	*	3					
5	6215-332-013-00	NUT/NOZZLERETAINING	*	3					
6	6215-339-001-00	PIECE,DISTANCE	*	3					
7	6215-345-001-00	WASHER/0.9	*	3					
8	6215-345-002-00	WASHER/0.925	*	3					
9	6215-345-003-00	WASHER/0.95	*	3					
10	6215-345-004-00	WASHER/0.975	*	3					
11	6215-345-005-00	WASHER/1.0	*	3					
12	6215-345-006-00	WASHER/1.025	*	3					
13	6215-345-007-00	WASHER/1.05	*	3					
14	6215-345-008-00	WASHER/1.075	*	3					
15	6215-345-009-00	WASHER/1.1	*	3					
16	6215-345-010-00	WASHER/1.125	*	3					
17	6215-345-011-00	WASHER/1.15	*	3					
18	6215-345-012-00	WASHER/1.175	*	3					
19	6215-345-013-00	WASHER/1.2	*	3					
20	6215-345-014-00	WASHER/1.225	*	3					
21	6215-345-015-00	WASHER/1.25	*	3					
22	6215-345-016-00	WASHER/1.275	*	3					
23	6215-345-017-00	WASHER/1.3	*	3					
24	6215-345-018-00	WASHER/1.325	*	3					
25	6215-345-019-00	WASHER/1.35	*	3					
26	6215-345-020-00	WASHER/1.375	*	3					
27	6215-345-021-00	WASHER/1.4	*	3					
28	6215-345-022-00	WASHER/1.425	*	3					
29	6215-345-023-00	WASHER/1.45	*	3					

FIG. 27 COMPONENT PARTS FOR 6215-300-036-00,10 ON Fig.19

(NO.1~223724)

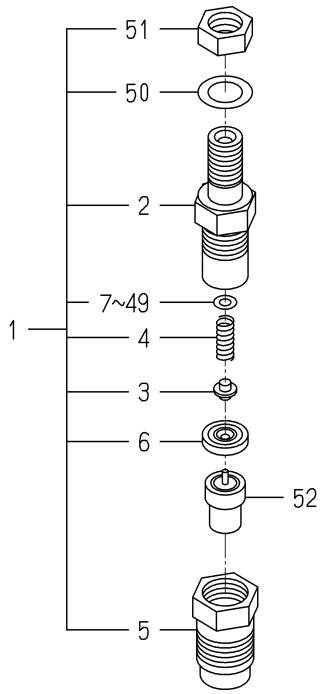

(NO.223725~)

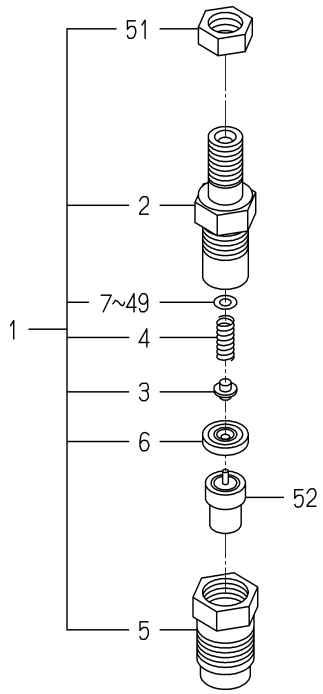

6215-300-036-1B

KEY	PART CODE	DESCRIPTION	SPC	TYPE OF MODEL E3100 G01		ITC	COL	GRP	REMARKS
30	6215-345-024-00	WASHER/1.475	*	3					
31	6215-345-025-00	WASHER/1.5	*	3					
32	6215-345-026-00	WASHER/1.525	*	3					
33	6215-345-027-00	WASHER/1.55	*	3					
34	6215-345-028-00	WASHER/1.575	*	3					
35	6215-345-029-00	WASHER/1.6	*	3					
36	6215-345-030-00	WASHER/1.625	*	3					
37	6215-345-031-00	WASHER/1.65	*	3					
38	6215-345-032-00	WASHER/1.675	*	3					
39	6215-345-033-00	WASHER/1.7	*	3					
40	6215-345-034-00	WASHER/1.725	*	3					
41	6215-345-035-00	WASHER/1.75	*	3					
42	6215-345-036-00	WASHER/1.775	*	3					
43	6215-345-037-00	WASHER/1.8	*	3					
44	6215-345-038-00	WASHER/1.825	*	3					
45	6215-345-039-00	WASHER/1.85	*	3					
46	6215-345-040-00	WASHER/1.875	*	3					
47	6215-345-041-00	WASHER/1.9	*	3					
48	6215-345-042-00	WASHER/1.925	*	3					
49	6215-345-043-00	WASHER/1.95	*	3					
50	6215-359-001-00	WASHER	*	3 -223724					
51	6215-359-002-00	NUT	*	3					
52	6215-311-027-00	NOZZLE ASSY	*	3					

FIG. 28 COMPONENT PARTS FOR 6215-600-103-10 ON Fig.20

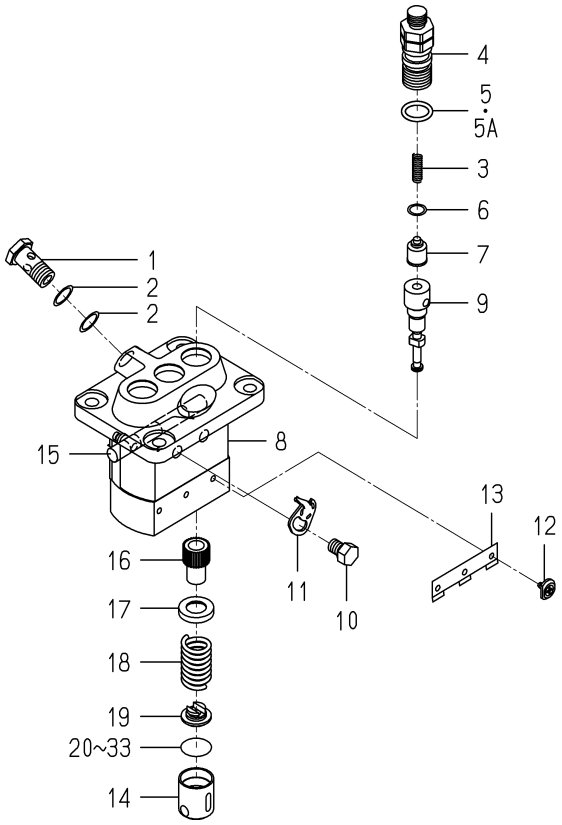

6215-600-103-1D

KEY	PART CODE	DESCRIPTION	SPC	TYPE OF MODEL E3100 G01		ITC	COL	GRP	REMARKS
1	6215-619-009-00	SCREW/HOLLOW	*	1					
2	6215-619-010-00	WASHER/AIR BLEEDER	*	2					
3	6215-643-006-00	SPRING/DELIVERYVALVE	*	3					
4	6215-644-007-00	HOLDER/DELIVERYVALVE	*	3					
5	6215-649-001-00	ORING	*	3 -231476					
5A	6215-649-019-00	ORING	*	3 231477-					
6	6215-649-002-00	GASKET/DELIVERYVALVE	*	3					
7	6215-641-006-00	VALVE ASSY	*	3					
8	6215-611-001-00	HOUSING ASSY	*	1					
9	6215-631-019-00	ELEMENT ASSY	*	3					
10	6215-619-022-00	BOLT/WASHERHEAD	*	2					
11	6215-612-001-00	PLATE/ADJUSTING	*	2					
12	6215-629-001-00	PIN/INJECTIONPUMP	*	3					
13	6215-629-002-00	PLATE	*	1					
14	6215-622-001-00	TAPPET/INJECTIO ASSY	*	3					
15	6215-637-001-00	RACK/CONTROL ASSY	*	1					
16	6215-635-001-00	SLEEVE/PLUNGER	*	3					
17	6215-639-004-00	SEAT/SPRING/UPPER	*	3					
18	6215-634-001-00	SPRING/PUMPPLUNGER	*	3					
19	6215-639-005-00	SEAT/SPRING/LOWER	*	3					
20	6215-629-003-00	PLATE/TAPPET/AD 0.6	*	1					
21	6215-629-004-00	PLATE/TAPPET/AD 0.7	*	1					
22	6215-629-005-00	PLATE/TAPPET/AD 0.8	*	1					
23	6215-629-006-00	PLATE/TAPPET/AD 0.9	*	1					
24	6215-629-007-00	PLATE/TAPPET/AD 1.0	*	1					
25	6215-629-008-00	PLATE/TAPPET/AD 0.2	*	1					
26	6215-629-009-00	PLATE/TAPPET/AD 0.3	*	1					
27	6215-629-010-00	PLATE/TAPPET/AD 0.4	*	1					
28	6215-629-011-00	PLATE/TAPPET/AD 0.5	*	3					
29	6215-629-012-00	PLATE/TAPPET/AD 0.25	*	1					

FIG. 28 COMPONENT PARTS FOR 6215-600-103-10 ON Fig.20

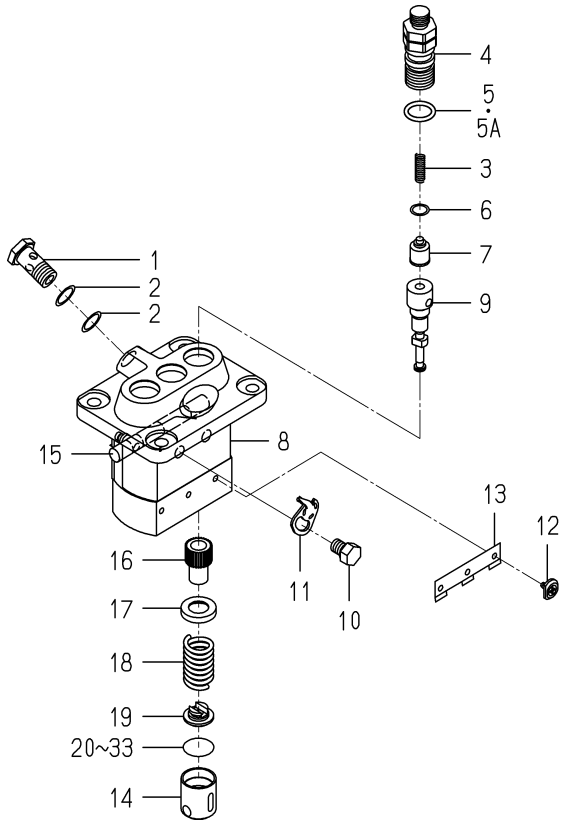

6215-600-103-1D

KEY	PART CODE	DESCRIPTION	SPC	TYPE OF MODEL E3100 G01		ITC	COL	GRP	REMARKS
30	6215-629-013-00	PLATE/TAPPET/AD 0.35	*	1					
31	6215-629-014-00	PLATE/TAPPET/AD 0.45	*	1					
32	6215-629-015-00	PLATE/TAPPET/AD 0.55	*	1					
33	6215-629-016-00	PLATE/TAPPET/AD 0.65	*	1					

FIG. 29 COMPONENT PARTS FOR 6281-100-014-00 ON Fig.23

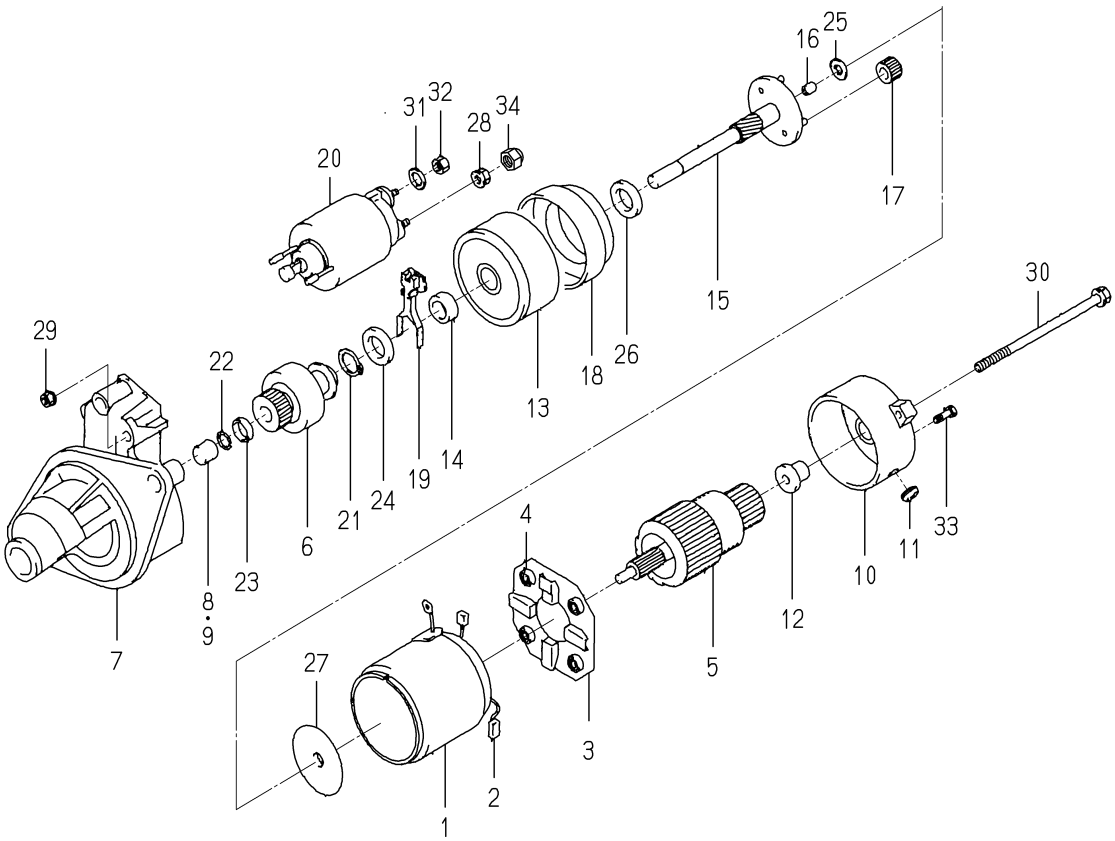

6281-100-014-0A

KEY	PART CODE	DESCRIPTION	SPC	TYPE OF MODEL E3100 G01		ITC	COL	GRP	REMARKS
1	6281-111-009-00	YOKE/STARTER ASSY	*	1					
2	6281-119-009-00	BRUSH/STARTER	*	2					
3	6281-118-007-00	HOLDER/STARTER ASSY	*	1					
4	6281-117-003-00	SPRING/STARTERBRUSH	*	4					
5	6281-121-010-00	ARMATURE/STARTE ASSY	*	1					
6	6281-124-011-00	CLUTCH/STARTER ASSY	*	1					
7	6281-129-064-00	HOUSING/STARTER ASSY	*	1					
8	6281-129-080-00	BEARING/NEEDLE	*	1					
9	6281-129-058-00	BEARING/NEEDLE	*	1					
10	6281-115-017-00	FRAME/COMMUTATOR END	*	1					
11	6281-115-018-00	COVER	*	1					
12	6281-129-065-00	BEARING/OILLESS	*	1					
13	6281-129-066-00	BEARING/WITH SHOCKAB	*	1					
14	6281-129-067-00	BEARING/OILLESS	*	1					
15	6281-129-068-00	SHAFT/STARTER PLANET	*	1					
16	6281-129-069-00	BEARING/OILLESS	*	1					
17	6281-129-070-00	GEAR/STARTER PLANETA	*	3					
18	6281-129-071-00	GEAR/STARTERINTERNAL	*	1					
19	6281-127-003-00	LEVER/PINIONDRIVE	*	1					
20	6281-151-014-00	SWITCH/MAGNETIC ASSY	*	1					
21	6281-129-072-00	RING/SNAP	*	1					
22	6281-129-073-00	RING/SNAP	*	1					
23	6281-129-074-00	NUT/PINIONSTOP	*	1					
24	6281-129-075-00	WASHER/SK	*	1					
25	6281-129-076-00	WASHER/SK	*	1					
26	6281-129-077-00	WASHER/SK	*	1					
27	6281-129-078-00	PLATE	*	1					
28	6281-129-030-00	NUT	*	1					
29	6281-129-029-00	NUT	*	2					
30	6281-129-043-00	BOLT/THROUGH	*	2					

FIG. 29 COMPONENT PARTS FOR 6281-100-014-00 ON Fig.23

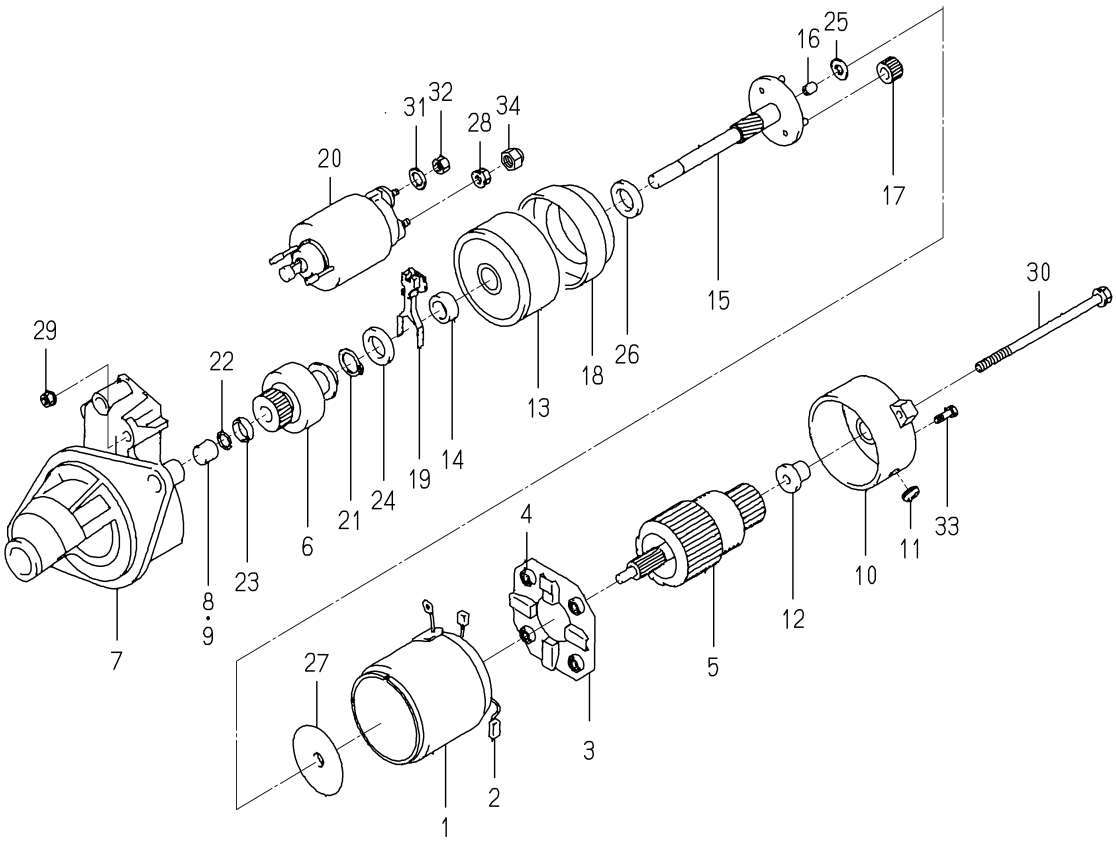

6281-100-014-0A

KEY	PART CODE	DESCRIPTION	SPC	TYPE OF MODEL E3100 G01		ITC	COL	GRP	REMARKS
31	6909-150-508-00	WASHER	*	1					
32	6909-110-408-00	NUT/M8	*	1					
33	6281-129-062-00	SCREW	*	2					
34	6281-129-079-00	NUT	*	1					

FIG. 30 COMPONENT PARTS FOR 6281-200-005-00 ON Fig.23

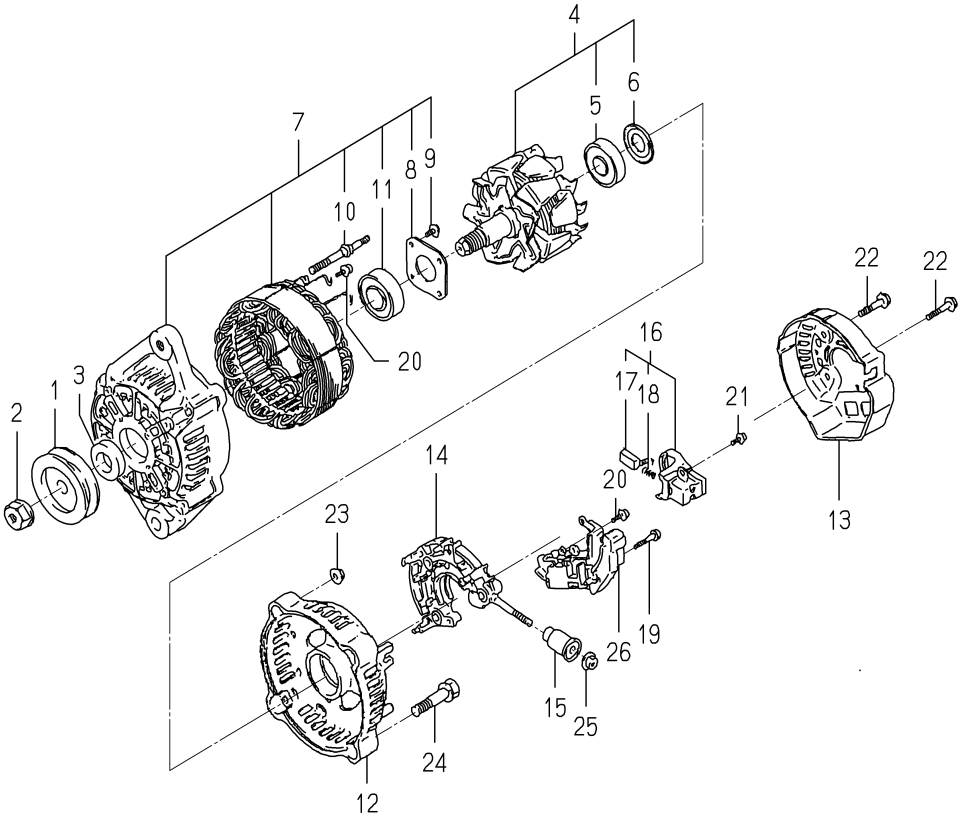

6281-200-005-0B

KEY	PART CODE	DESCRIPTION	SPC	TYPE OF MODEL E3100 G01		ITC	COL	GRP	REMARKS
1	6281-222-004-00	PULLEY	*	1					
2	6281-229-002-00	NUT	*	1					
3	6281-229-003-00	COLLOR	*	1					
4	6281-221-007-00	ROTOR ASSY	*	1					
5	6281-229-004-00	COVER,BEARING	*	1					
6	6281-229-032-00	BEARING/BALL	*	1					
7	6281-213-018-00	FRAME/DRIVEEND ASSY	*	1					
8	6281-229-006-00	PLATE	*	1					
9	6281-229-007-00	BOLT	*	4					
10	6281-229-008-00	BOLT	*	2					
11	6281-229-033-00	BEARING/BALL	*	1					
12	6281-214-003-00	FRAME	*	1					
13	6281-214-004-00	COVER	*	1					
14	6281-229-029-00	HOLDER ASSY	*	1					
15	6281-229-011-00	BUSH	*	1					
16	6281-217-002-00	HOLDER/BRUSH ASSY	*	1					
17	6281-215-001-00	BRUSH	*	2					
18	6281-216-001-00	SPRING	*	2					
19	6281-229-012-00	BOLT	*	2					
20	6281-229-013-00	BOLT	*	6					
21	6281-229-014-00	BOLT	*	1					
22	6281-229-015-00	BOLT	*	3					
23	6281-229-016-00	NUT	*	2					
24	6281-229-017-00	BOLT	*	2					
25	6281-229-018-00	NUT	*	1					
26	6281-271-002-00	REGULATOR ASSY	*	1					

E N G I N E

E3112G03···SXG22

6004-097-320-10

FIG. 1 CYLINDER HEAD

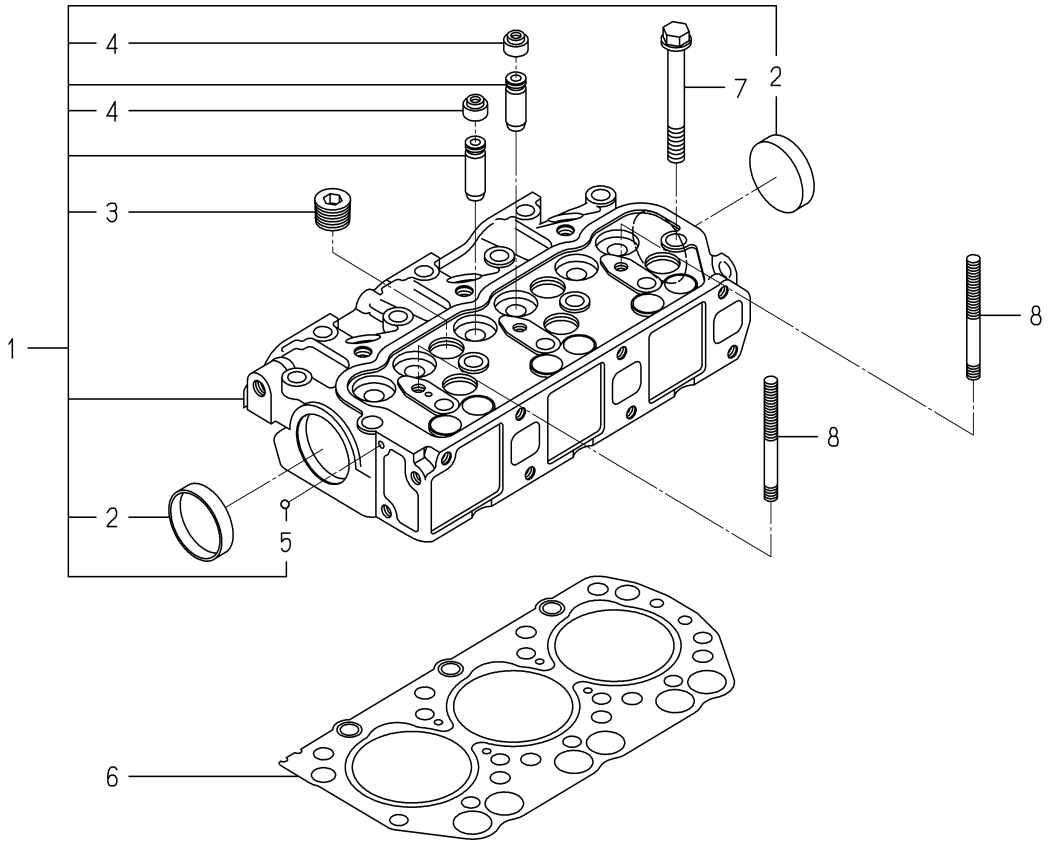

6004-101I-0100,6004-101I-0200

KEY	PART CODE	DESCRIPTION	SPC	TYPE OF MODEL E3112 G03		ITC	COL	GRP	REMARKS
1	6211-110-057-30	CYLINDERHEAD ASSY	*	1					
2	6911-129-006-00	CAP,SEALING	*	2					
3	6209-605-004-10	PLUG/PT1/2	*	5					
4	6212-569-002-00	SEAL,OIL	*	6					
5	V682-200-000-60	BALL	*	1					
6	6211-141-029-20	GASKET/CYLINDERHEAD	*	1					
7	6209-000-003-00	BOLT/M10X1.25X82	*	14					
8	6209-300-014-00	STUD	*	2					

FIG. 2 CYLINDER HEAD COVER

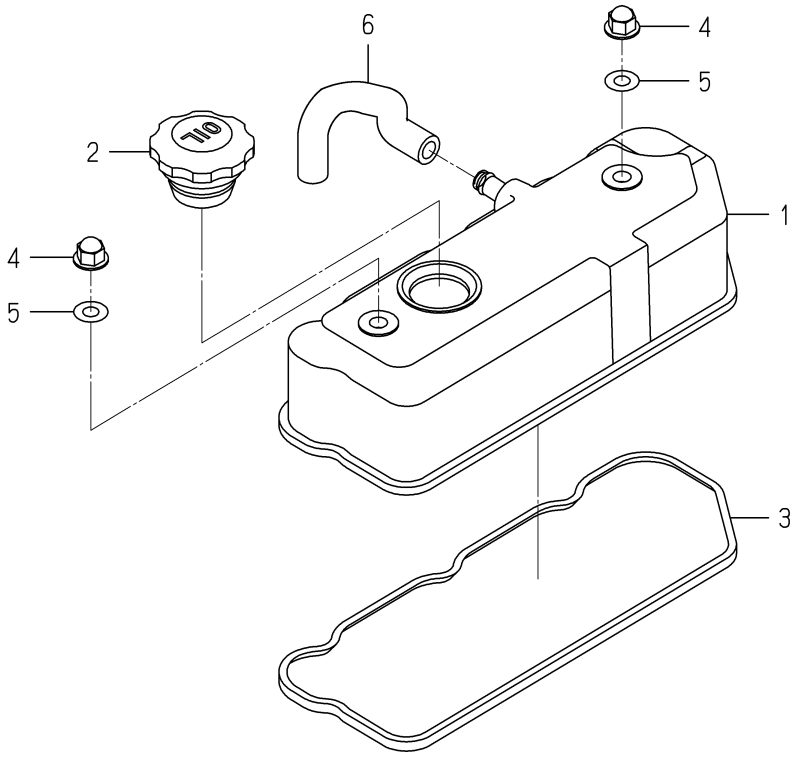

6003-110 -0100

KEY	PART CODE	DESCRIPTION	SPC	TYPE OF MODEL E3112 G03		ITC	COL	GRP	REMARKS
1	6211-170-004-20	COVER/CYLINDER HEAD	*	1					
2	6211-751-001-10	CAP,OIL FILLER	*	1					
3	6211-173-003-00	SEAL,CYL.HEAD COVER	*	1					
4	6209-490-002-10	NUT/CAP	*	2					
5	6209-572-003-00	GASKET	*	2					
6	6209-360-028-10	HOSE/RABBER	*	1					

FIG. 3 INLET MANIFOLD

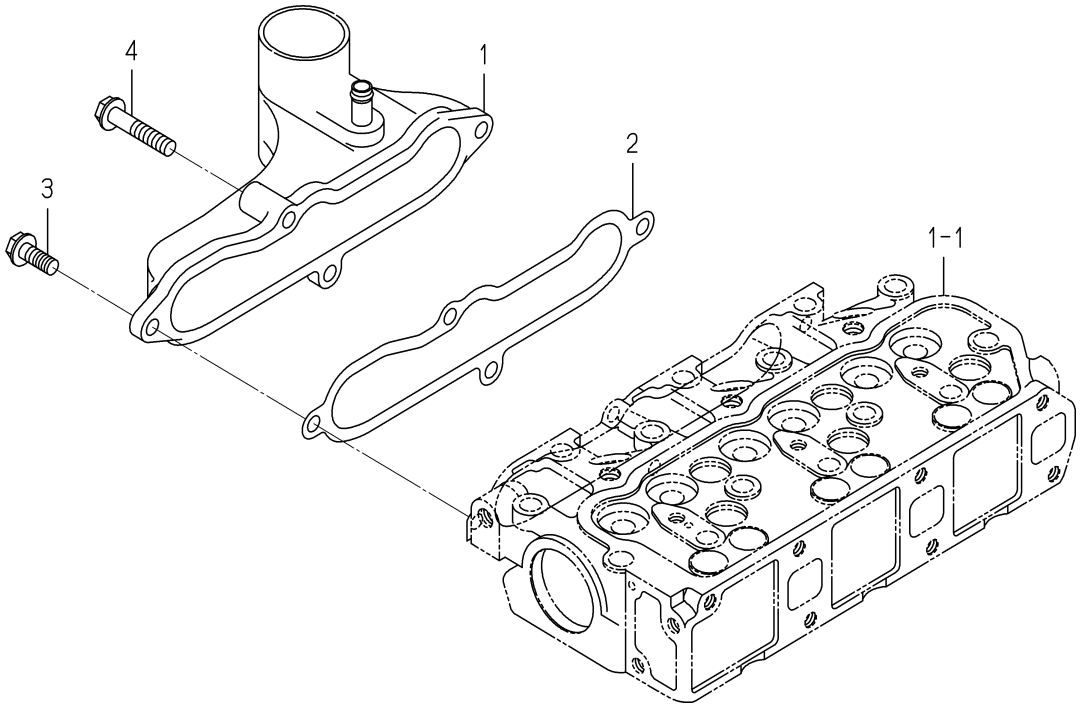

6003-120B-0100

KEY	PART CODE	DESCRIPTION	SPC	TYPE OF MODEL E3112 G03		ITC	COL	GRP	REMARKS
1	6214-111-011-20	MANIFOLD(INLET) ASSY	*	1					
2	6214-115-001-20	GASKET,INLET MANIFOL	*	1					
3	V231-360-802-00	FLANGEBOLT	*	3					
4	V231-360-804-00	FLANGEBOLT	*	1					

FIG. 4 EXHAUST MANIFOLD

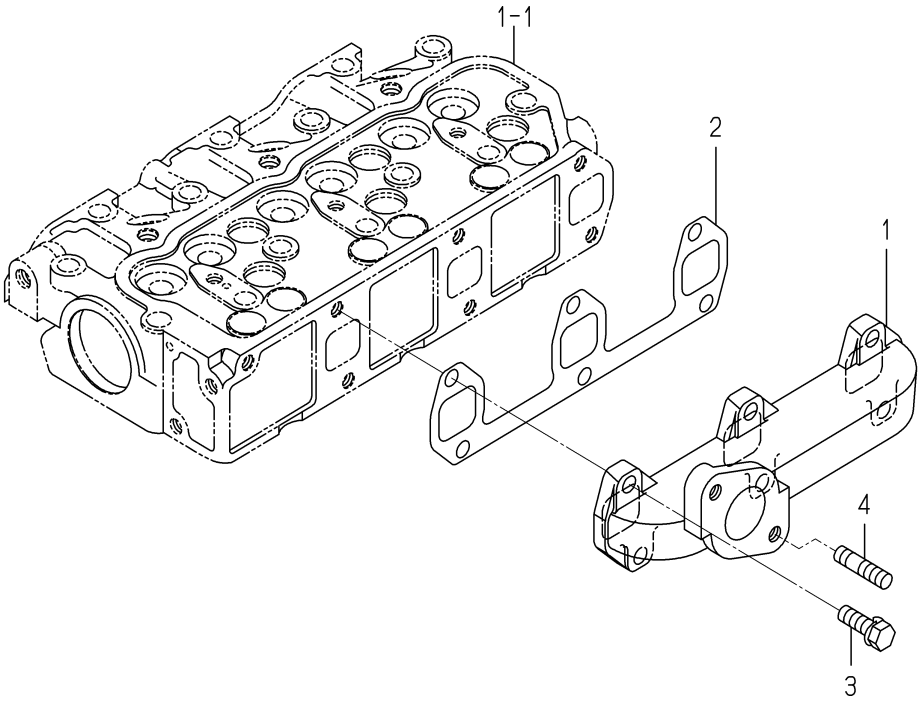

6003-140 -0100

KEY	PART CODE	DESCRIPTION	SPC	TYPE OF MODEL E3112 G03		ITC	COL	GRP	REMARKS
1	6214-141-008-20	MANIFOLD/EXHAUST	*	1					
2	6214-145-001-30	GASKET,EXH.MANIFOLD	*	1					
3	V211-560-802-50	BOLT,SEMS/M8X25 7T	*	6					
4	6904-110-822-00	STUD	*	2					

FIG. 5 CYLINDER BLOCK

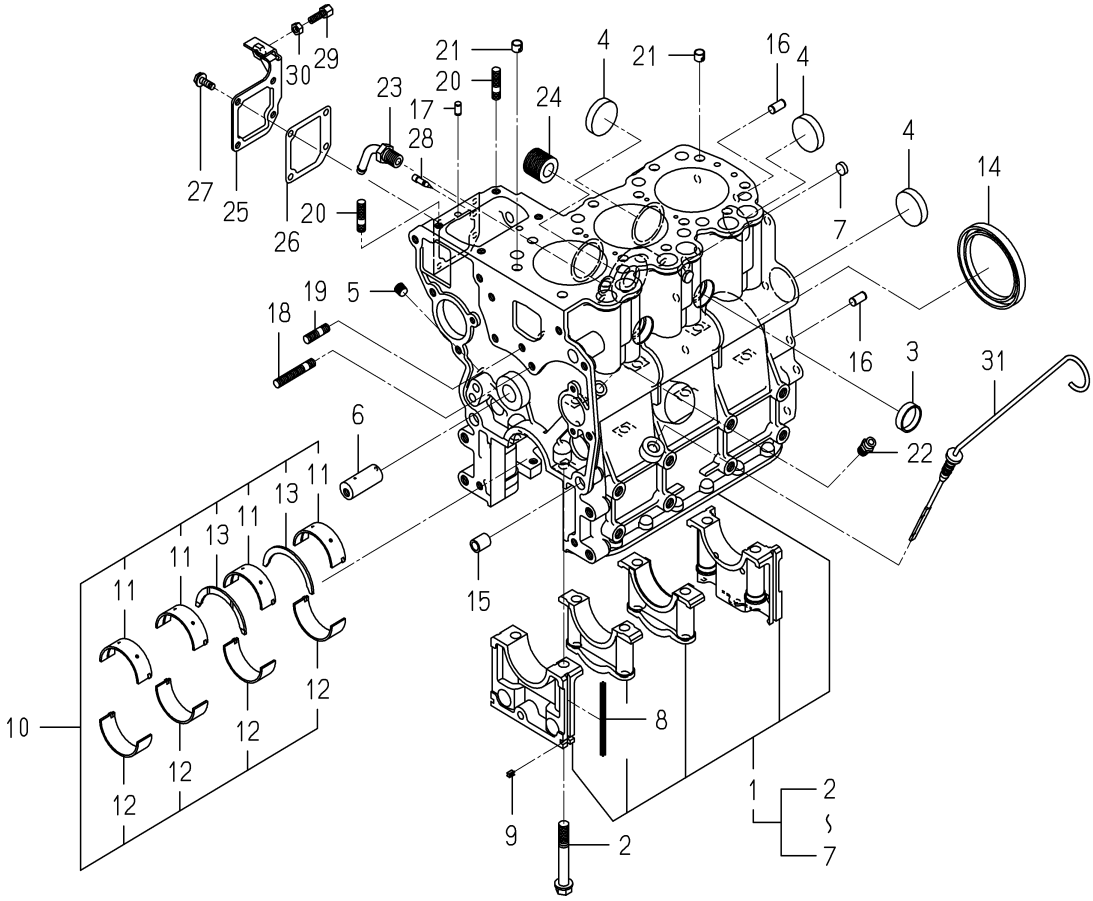

6004-202E-0100

KEY	PART CODE	DESCRIPTION	SPC	TYPE OF MODEL E3112 G03		ITC	COL	GRP	REMARKS
1	6211-210-037-20	CYLINDERBLOCK ASSY	*	1					
2	6209-000-004-10	BOLT	*	8					
3	6209-610-001-10	CUP/SEALING/28	*	2					
4	6209-610-009-00	CUP/SEALING/36	*	4					
5	6509-605-019-10	PLUG	*	3					
6	6212-531-005-10	PIN/IDLEGEAR	*	1					
7	6209-610-008-00	CUP/SEALING/12	*	2					
8	6211-258-001-00	SEAL,BEARING CAP	*	4					
9	6211-258-002-00	SEAL,BEARING CAP/7	*	2					
10	6211-510-001-00	METAL,CRANK SET	*	1					
11	6211-511-003-00	BEARING/CRANK/UPPER	*	4					
12	6211-511-004-00	BEARING/CRANK/LOWER	*	4					
13	6211-599-001-10	BEARING,THRUST CRANK	*	2					
14	6209-625-012-00	OILSEAL	*	1					
15	6209-749-001-20	PIN/TUBE	*	2					
16	6213-129-006-00	PIN/STRAIGHT	*	2					
17	6209-740-005-00	PIN	*	2					
18	6904-110-840-00	STUD/M8X40	*	1					
19	6904-110-818-00	STUD	*	1					
20	6904-110-822-00	STUD	*	2					
21	6294-453-002-00	DOWEL	*	2					
22	6909-902-299-00	NIPPLE	*	1					
23	6213-721-001-00	PIPE,WATER DRAIN	*	1					
24	6213-319-001-00	CONNECTOR,OIL FILTER	*	1					
25	6211-291-001-10	COVER,INJ PUMP	*	1					
26	6211-292-001-20	GASKET/COVER	*	1					
27	V230-360-601-20	FLANGEBOLT	*	4					
28	6215-549-013-00	PIN	*	1					
29	6209-788-001-00	BOLT,ADJUST	*	1					
30	6909-110-406-00	NUT	*	1					

FIG. 5 CYLINDER BLOCK

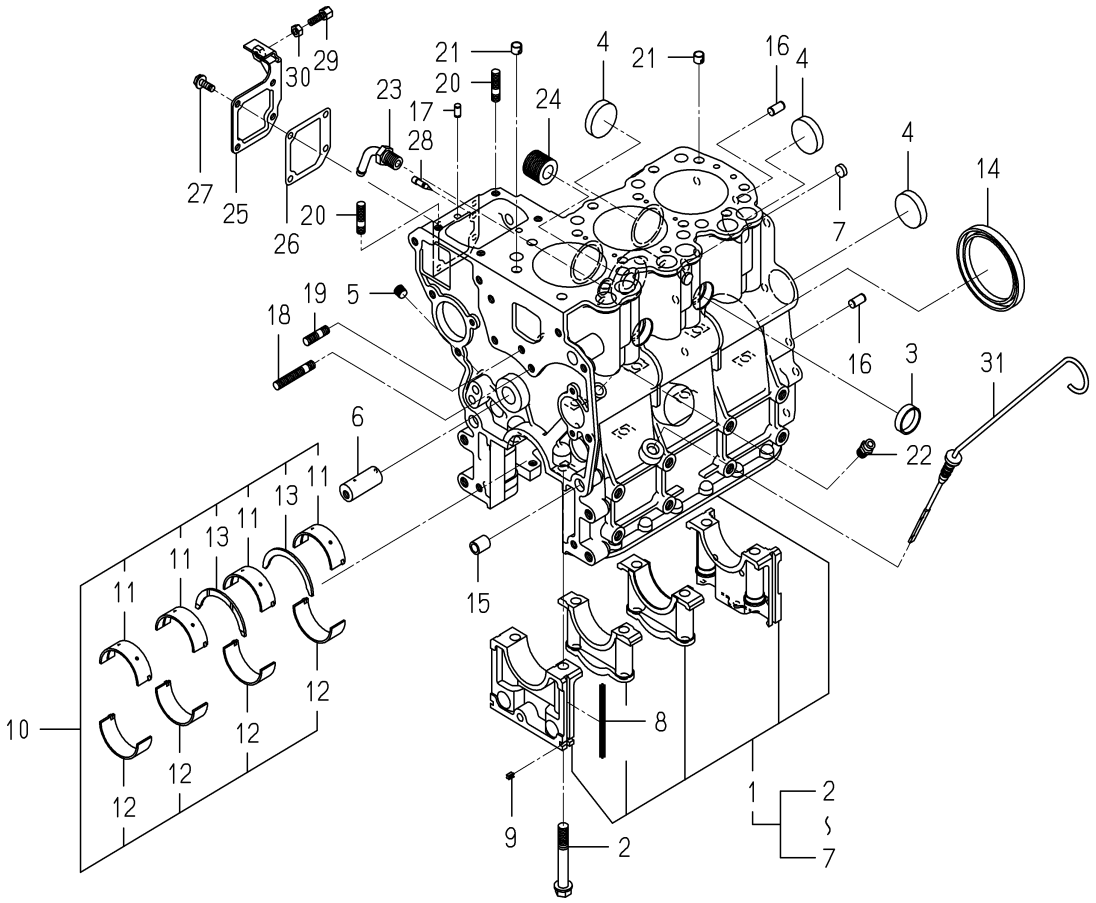

6004-202E-0100

KEY	PART CODE	DESCRIPTION	SPC	TYPE OF MODEL E3112 G03		ITC	COL	GRP	REMARKS
31	6211-760-022-00	LEVELGAGE	*	1					

FIG. 6 BEARING/UNDER SIZE

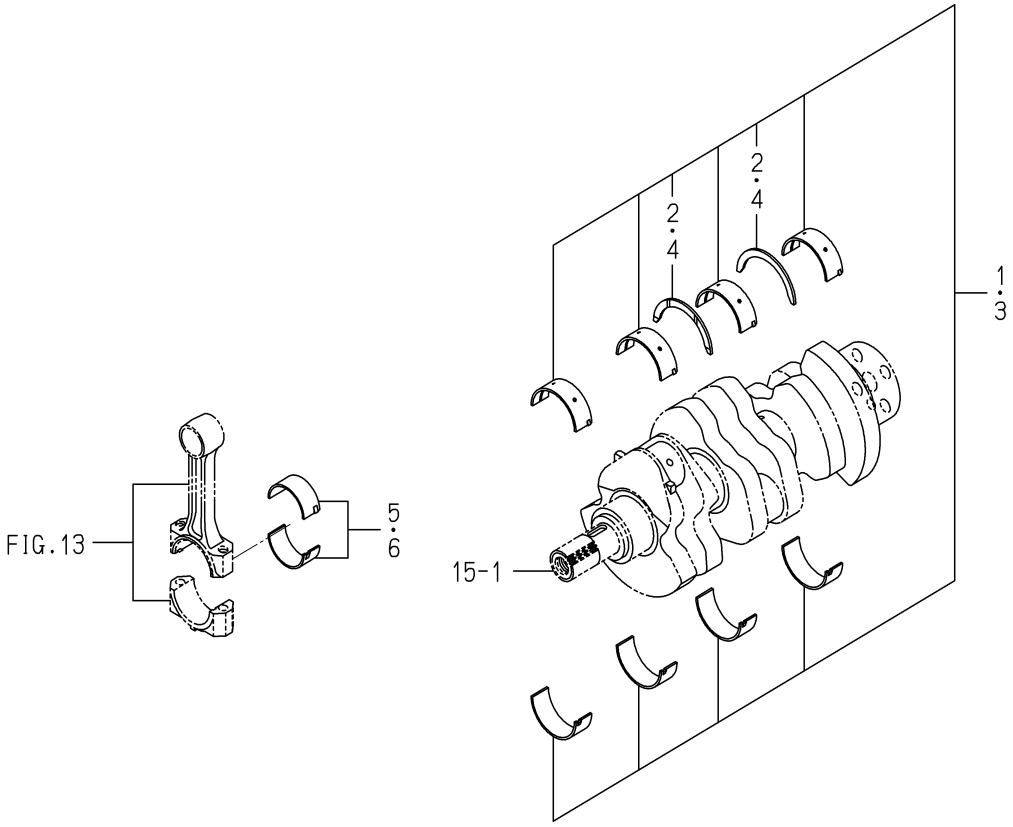

6003-209 -0100

KEY	PART CODE	DESCRIPTION	SPC	TYPE OF MODEL E3112 G03		ITC	COL	GRP	REMARKS
1	6211-540-001-00	METAL,CRANK SET	T	1					
2	6211-599-001-10	BEARING,THRUST CRANK	T	2					
3	6211-560-001-00	METAL,CRANK SET	T	1					
4	6211-599-001-10	BEARING,THRUST CRANK	T	2					
5	6212-274-006-00	BEARING/CONNECTING R	T	3					
6	6212-276-006-00	BEARING/CONNECTING R	T	3					

FIG. 7 OIL PAN

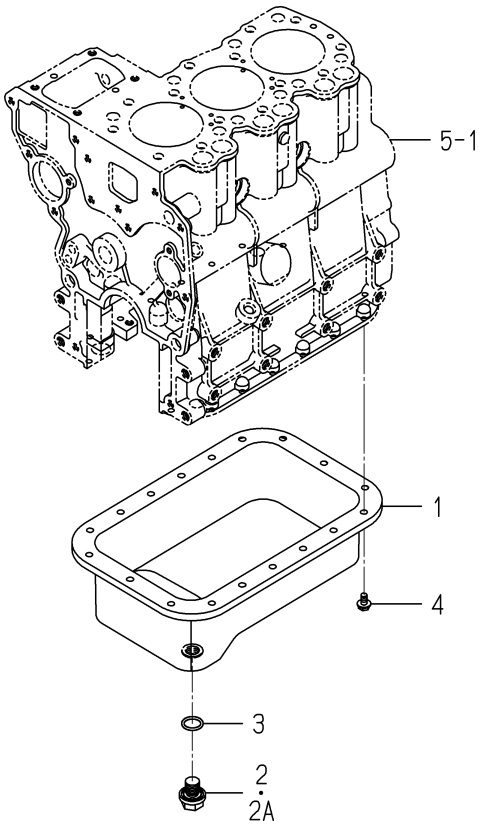

6004-210F-0100

KEY	PART CODE	DESCRIPTION	SPC	TYPE OF MODEL E3112 G03		ITC	COL	GRP	REMARKS
1	6211-361-069-00	OILPAN COMP	*	1					
2	6209-600-006-00	PLUG/M14X1.5	*	1 -234038					
2A	3805-355-002-20	PLUG/M14X1.5	*	1 234039-					
3	V720-102-401-80	O-RING/P18	*	1					
4	V230-360-601-00	FLANGEBOLT	*	18					

FIG. 8 REAR OLATE

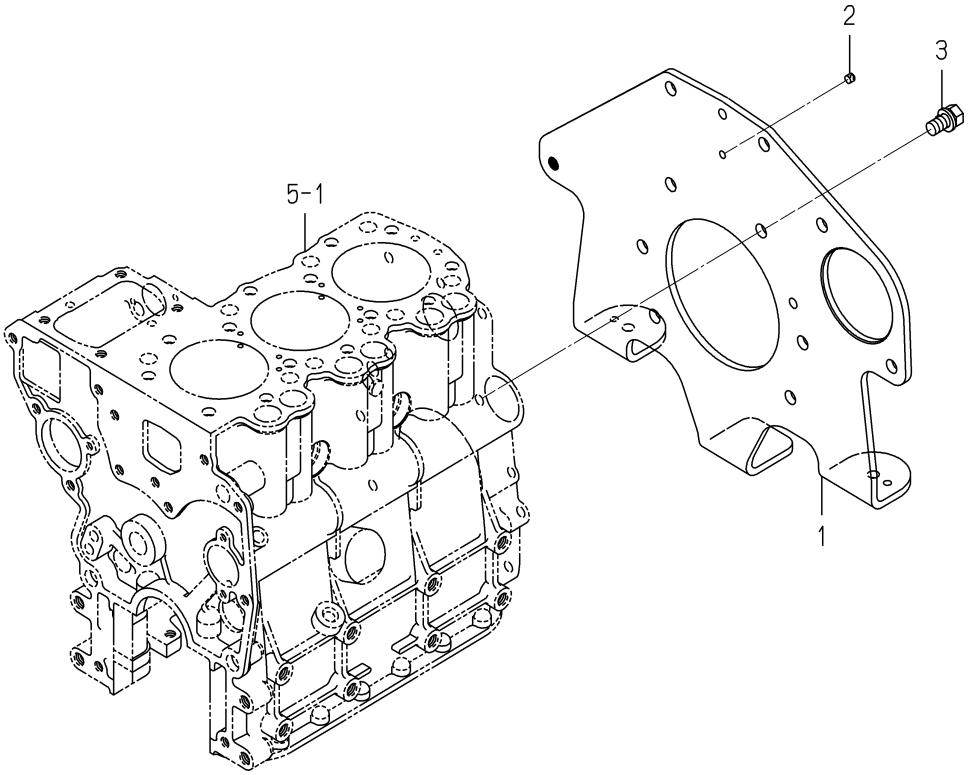

6004-220M-0100

KEY	PART CODE	DESCRIPTION	SPC	TYPE OF MODEL E3112 G03		ITC	COL	GRP	REMARKS
1	6211-341-070-00	PLATE/REAR	*	1					
2	6211-342-001-30	POINTER	*	1					
3	6901-911-020-00	BOLT,SEMS/M10X20	*	8					

FIG. 9 GEAR CASE

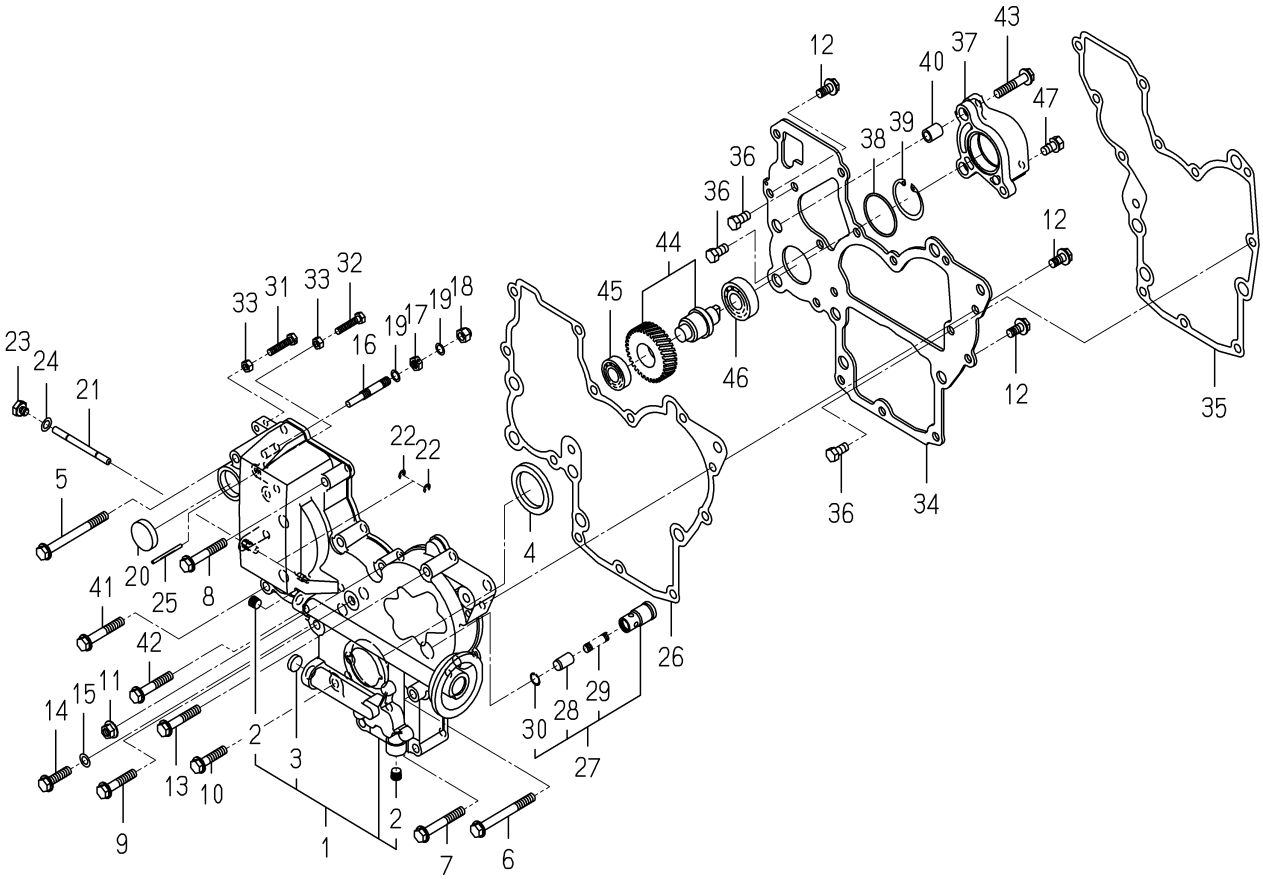

6004-240P-0100,6004-240P-0200

KEY	PART CODE	DESCRIPTION	SPC	TYPE OF MODEL E3112 G03		ITC	COL	GRP	REMARKS
1	6211-310-038-00	GEARCASE ASSY	*	1					
2	6509-605-019-10	PLUG	*	2					
3	6209-610-002-10	CUP/SEALING/16	*	1					
4	6209-625-002-00	SEAL,OIL	*	1					
5	V231-360-808-50	FLANGEBOLT	*	1					
6	V231-360-807-50	FLANGEBOLT	*	1					
7	V231-360-805-50	FLANGEBOLT	*	2					
8	V231-360-805-00	FLANGEBOLT	*	2					
9	V231-360-804-00	FLANGEBOLT	*	1					
10	V231-360-803-50	FLANGEBOLT	*	1					
11	3817-401-001-00	NUT/M08	*	1					
12	V231-360-801-60	FLANGEBOLT	*	3					
13	V231-360-804-50	FLANGEBOLT	*	1					
14	V231-360-803-00	FLANGEBOLT	*	1					
15	6209-500-003-00	WASHER/08X14X01	*	1					
16	6215-546-001-00	STOPPER,FULL-LOAD	*	1					
17	6209-409-001-00	NUT/M8	*	1					
18	V341-120-008-00	NUT,CAP/M 8	*	1					
19	6209-920-002-00	PACKING	*	2					
20	3625-540-004-00	CAP,BLANK/30	*	1					
21	6215-542-001-10	PIN/ARM	*	1					
22	V710-140-004-00	RING,SNAP/ 4 E	*	2					
23	6209-600-004-00	PLUG/SCREW	*	1					
24	6209-500-003-00	WASHER/08X14X01	*	1					
25	6209-740-001-00	PIN,GROOVE	*	1					
26	6211-312-001-30	GASKET/GEARCASE	*	1					
27	6213-160-002-20	VALVE/RELIEF ASSY	*	1					
28	6213-161-001-20	PISTON/VALVE/RELIEF	*	1					
29	6213-164-001-00	SPRING/RELIEF VALVE	*	1					
30	V705-140-012-00	RING,SNAP/12 C	*	1					

FIG. 9 GEAR CASE

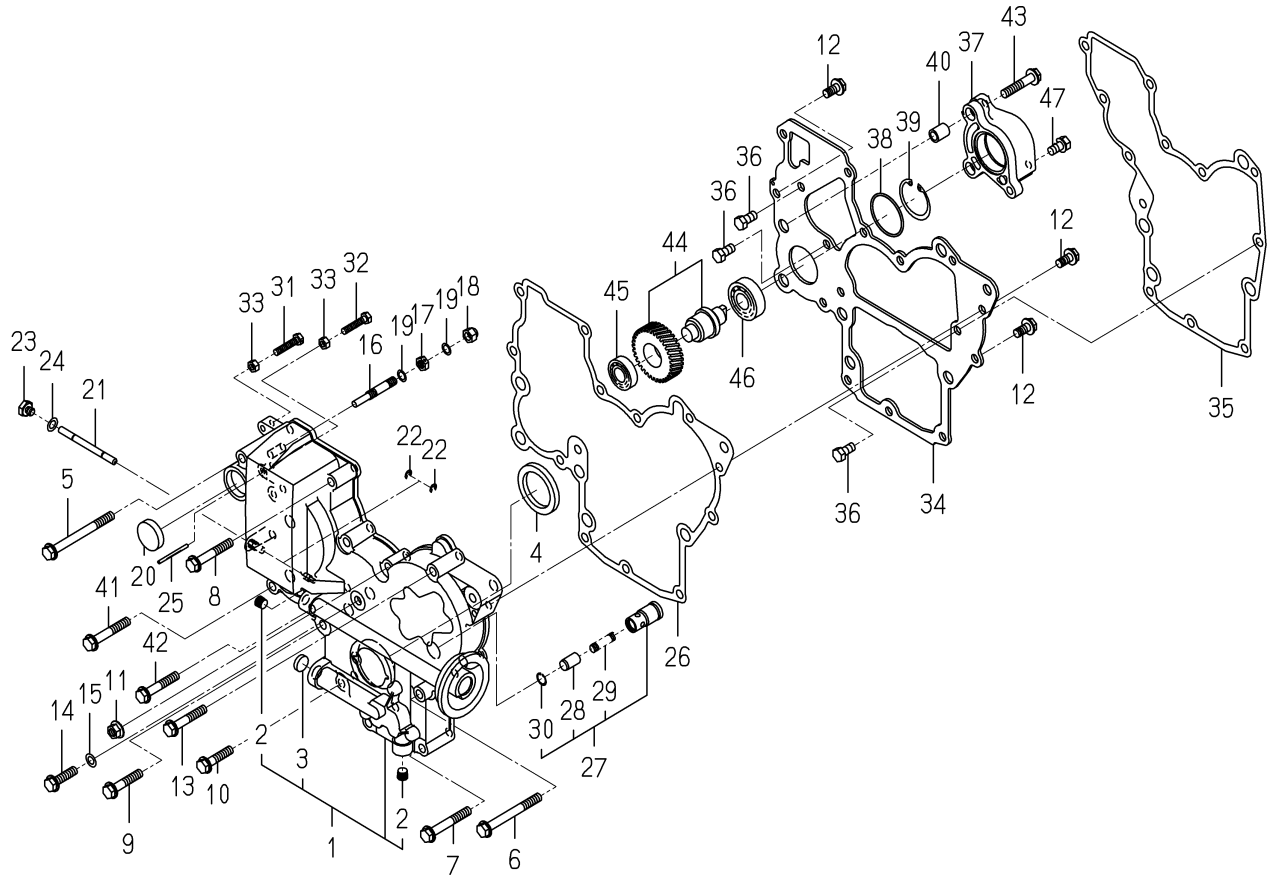

6004-240P-0100,6004-240P-0200

KEY	PART CODE	DESCRIPTION	SPC	TYPE OF MODEL E3112 G03		ITC	COL	GRP	REMARKS
31	6209-050-001-00	BOLT/M6	*	1					
32	6209-050-002-00	BOLT/M6	*	1					
33	6909-110-406-00	NUT	*	2					
34	6211-311-043-20	PLATE/FRONT	*	1					
35	6211-312-004-20	GASKET/PLATE	*	1					
36	6902-050-816-00	BOLT	*	3					
37	6211-319-002-00	SPACER,HYD,REAR	*	1					
38	V723-102-004-20	O-RING	*	1					
39	V705-140-040-00	RING,SNAP/40 C	*	1					
40	6209-749-001-20	PIN/TUBE	*	2					
41	V231-360-805-00	FLANGEBOLT	*	1					
42	V231-360-804-50	FLANGEBOLT	*	1					
43	V231-360-804-00	FLANGEBOLT	*	1					
44	6212-530-004-10	SHAFT/HYDRAULIC ASSY	*	1					
45	V600-110-600-20	BEARING,RB/6002	*	1					
46	V600-110-620-30	BEARING,RB/6203	*	1					
47	V211-260-801-60	BOLT,SEMS (S) M8X16	*	2					

FIG. 10 HANGER

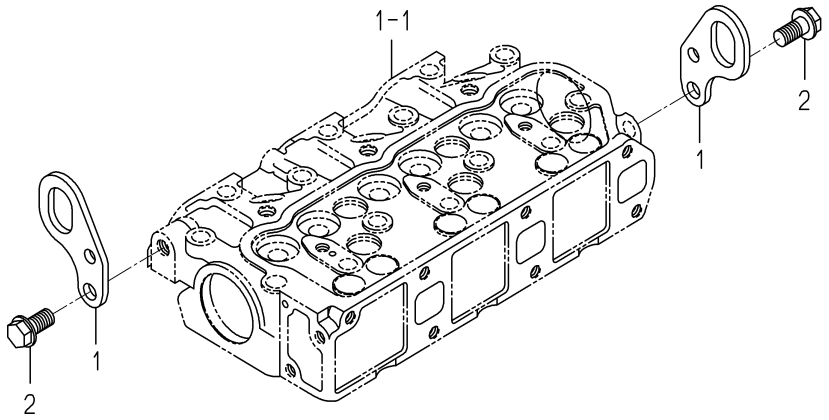

6003-290 -0100

KEY	PART CODE	DESCRIPTION	SPC	TYPE OF MODEL E3112 G03		ITC	COL	GRP	REMARKS
1	6211-777-007-30	HANGER	*	2					
2	V233-361-002-00	FLANGEBOLT	*	2					

FIG. 11 VALVE

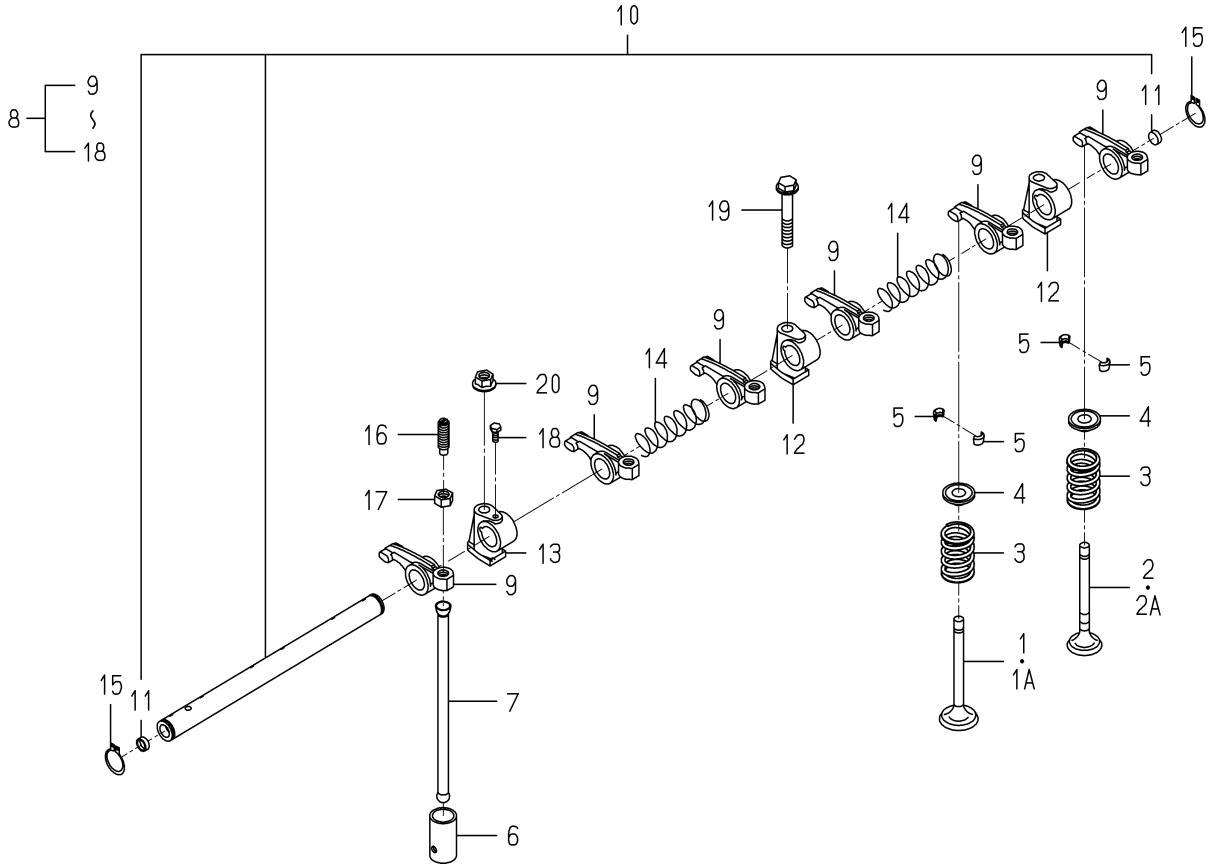

6004-301 -0100

KEY	PART CODE	DESCRIPTION	SPC	TYPE OF MODEL E3112 G03		ITC	COL	GRP	REMARKS
1	6212-551-001-10	VALVE/INTAKE	*	3 -240882					
1A	6212-551-029-00	VALVE/INTAKE	*	3 240883-					
2	6212-552-001-20	VALVE/EXHAUST	*	3 -240882					
2A	6212-552-015-00	VALVE/EXHAUST	*	3 240883-					
3	6212-561-001-10	SPRING/VALVE	*	6					
4	6212-563-001-00	SEAT,VALVE SPRING	*	6					
5	6212-565-001-00	CUTTER,VALVE	*	12					
6	6212-571-006-00	TAPPET	*	6					
7	6212-575-002-00	ROD,PUSH	*	6					
8	6212-600-002-10	ROCKERSHAFT ASSY	*	1					
9	6212-611-004-10	ROCKERARM	*	6					
10	6212-620-001-20	SHAFT/ROCKERARM ASSY	*	1					
11	6212-626-002-10	PLUG	*	2					
12	6212-628-004-00	BRACKET ROCKER SHAFT	*	2					
13	6212-628-005-00	BRACKET,ROCKER SHAFT	*	1					
14	6209-940-004-00	SPRING	*	2					
15	V704-140-016-00	RING,SNAP/16 C	*	2					
16	6212-616-002-00	SCREW ADJUST	*	6					
17	6209-409-003-00	NUT	*	6					
18	6209-000-002-00	BOLT	*	1					
19	V231-360-805-00	FLANGEBOLT	*	1					
20	3817-401-001-00	NUT/M08	*	2					

FIG. 12 CAM SHAFT

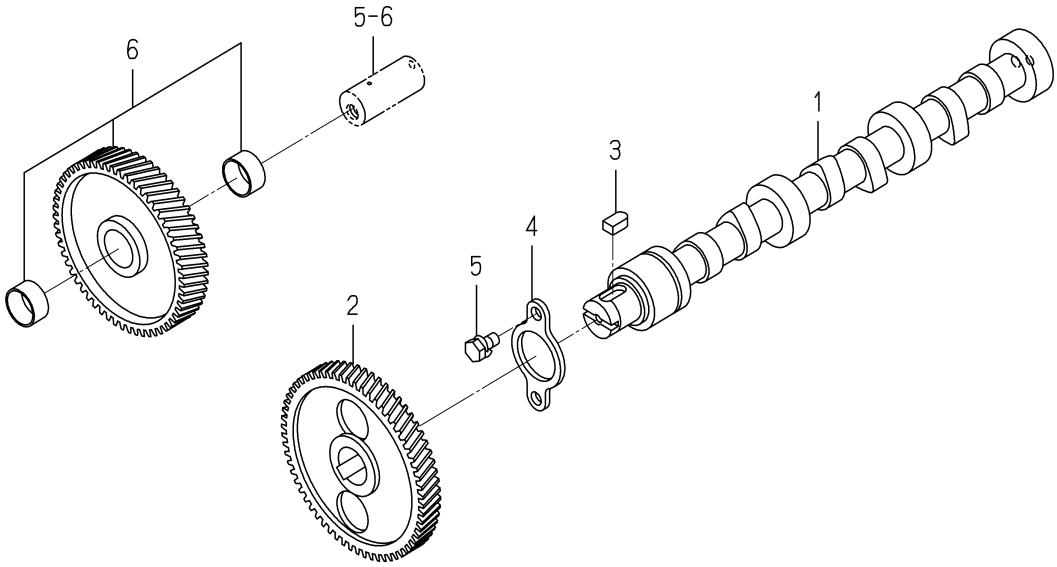

6003-310 -0100

KEY	PART CODE	DESCRIPTION	SPC	TYPE OF MODEL E3112 G03		ITC	COL	GRP	REMARKS
1	6212-511-002-00	SHAFT,CAM	*	1					
2	6212-522-010-00	GEAR/CAMSHAFT	*	1					
3	6209-730-005-00	KEY/07X05X09	*	1					
4	6212-535-001-00	PLATE,THRUST	*	1					
5	6901-910-612-00	BOLT,SEMS/M6X12	*	2					
6	6212-523-023-00	GEAR/IDLE ASSY	*	1					

FIG. 13 PISTON

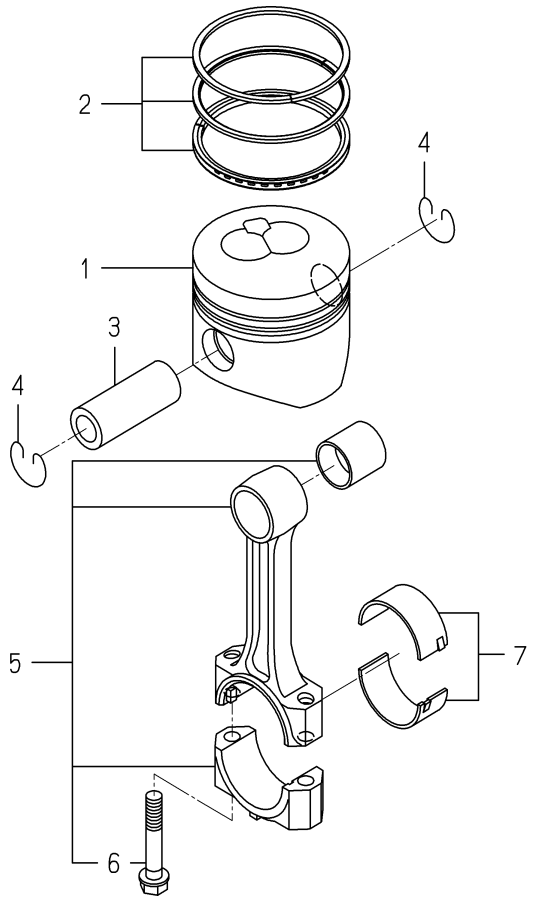

6004-340I-0100

KEY	PART CODE	DESCRIPTION	SPC	TYPE OF MODEL E3112 G03		ITC	COL	GRP	REMARKS
1	6212-111-094-10	PISTON	*	3					
2	6212-121-014-20	RING/PISTON SET	*	3					
3	6212-211-001-10	PIN,PISTON	*	3					
4	6209-587-001-00	RING,SNAP	*	6					
5	6212-230-004-10	CONNECTINGROD ASSY	*	3					
6	6212-235-005-00	BOLT/CONNECTINGROD	*	6					
7	6212-271-006-00	BEARING/CONNECTING R	*	3					

FIG. 14 PISTON/OVER SIZE

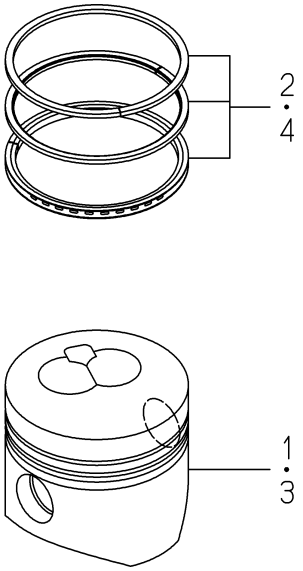

6004-349I-0100

KEY	PART CODE	DESCRIPTION	SPC	TYPE OF MODEL E3112 G03		ITC	COL	GRP	REMARKS
1	6212-114-094-10	PISTON(OV)	T	3					
2	6212-124-014-10	RING/PISTON/OV SET	T	3					
3	6212-116-094-10	PISTON(OV)	T	3					
4	6212-126-014-10	RING/PISTON/OV SET	T	3					

FIG. 15 CRANK SHAFT

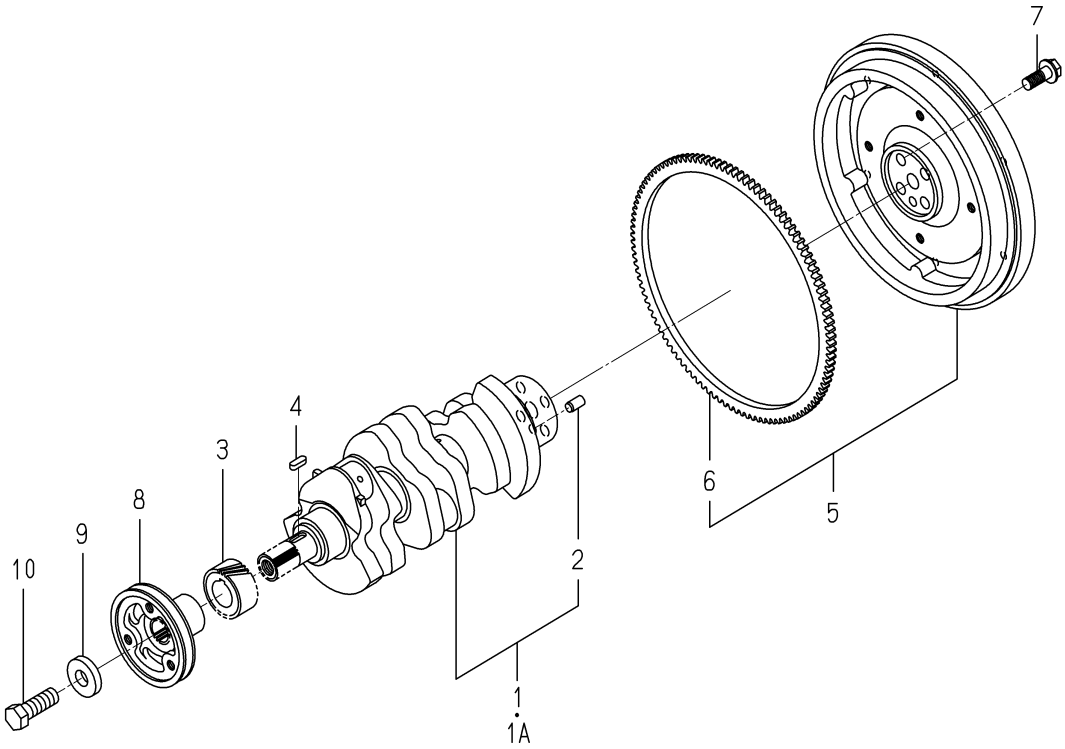

6004-350Q-0100

KEY	PART CODE	DESCRIPTION	SPC	TYPE OF MODEL E3112 G03		ITC	COL	GRP	REMARKS
1	6212-310-019-30	CRANKSHAFT ASSY	*	1 -238361					
1A	6212-310-019-40	CRANKSHAFT ASSY	*	1 238362-		1			
2	V523-101-001-80	PIN	*	1					
3	6212-521-008-00	GEAR/CRANK	*	1					
4	6209-730-002-00	KEY/07X05X20	*	1					
5	6212-330-013-30	FLYWHEEL	*	1					
6	6212-333-003-00	RINGGEAR	*	1					
7	6209-046-015-00	BOLT/FLANGE	*	4					
8	6212-371-027-00	PULLEY/CRANK	*	1					
9	6212-379-001-00	WASHER	*	1					
10	6901-066-645-00	BOLT	*	1					

FIG. 16 OIL PUMP

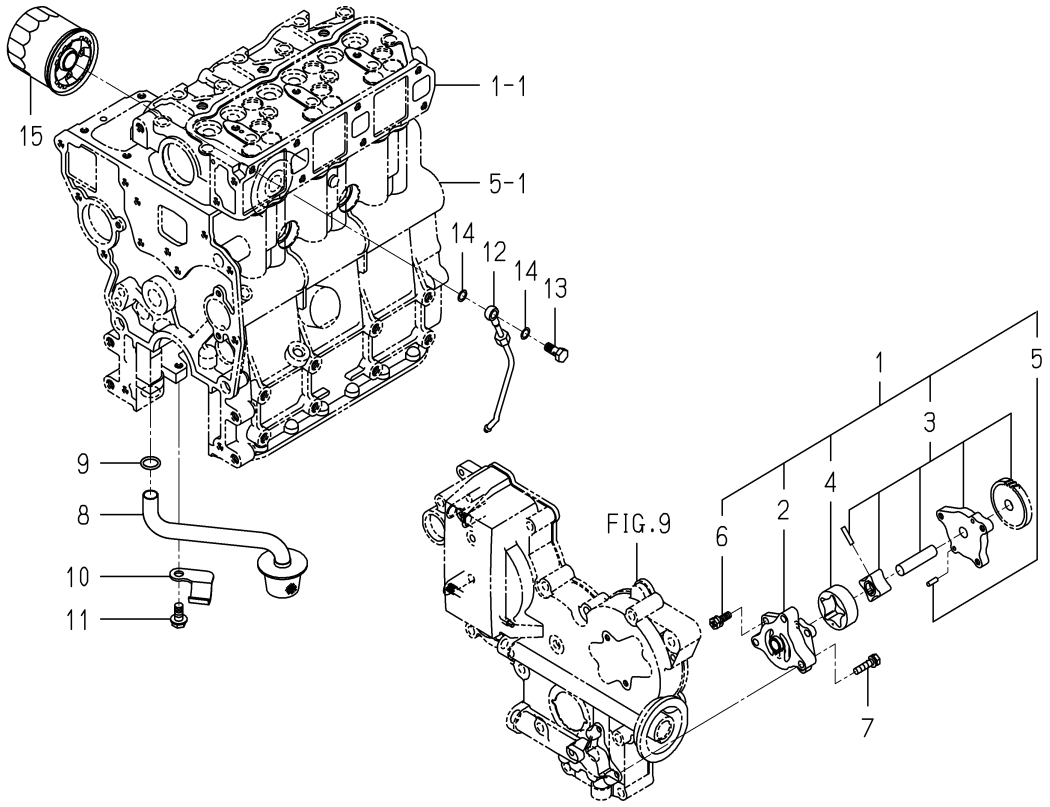

6004-401C-0100

KEY	PART CODE	DESCRIPTION	SPC	TYPE OF MODEL E3112 G03		ITC	COL	GRP	REMARKS
1	6213-100-003-30	OILPUMP ASSY	*	1					
2	6213-111-001-30	BODY/OILPUMP	*	1					
3	6213-120-003-20	GEAR/OILPUMP ASSY	*	1					
4	6213-125-001-00	ROTOR/OUTER	*	1					
5	6213-129-003-00	PIN/STRAIGHT	*	2					
6	6213-119-001-00	BOLT/WS	*	3					
7	6901-910-625-00	BOLT	*	3					
8	6213-140-023-00	STRAINER	*	1					
9	V720-102-401-50	O-RING/P15	*	1					
10	6213-149-002-00	CLAMP,STRAINER	*	1					
11	V231-360-801-60	FLANGEBOLT	*	1					
12	6213-311-006-00	PIPE,OIL	*	1					
13	6909-906-105-10	BOLT,JOINT	*	1					
14	6209-920-002-00	PACKING	*	2					
15	6213-240-002-10	CARTRIDGE/OILFILTER	*	1					

FIG. 17 WATER PUMP

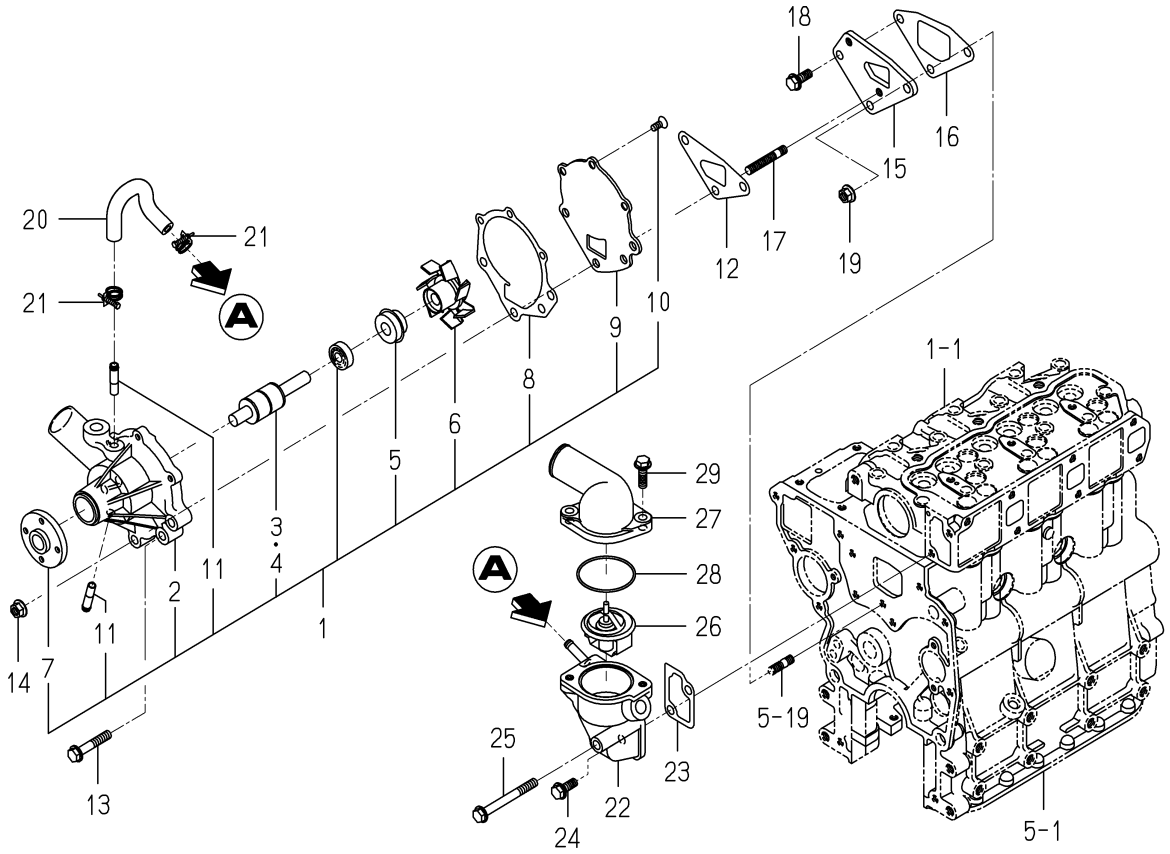

6004-420D-0100

KEY	PART CODE	DESCRIPTION	SPC	TYPE OF MODEL E3112 G03		ITC	COL	GRP	REMARKS
1	6213-610-005-40	WATERPUMP ASSY	*	1					
2	6213-611-003-20	BODY/WATERPUMP	*	1					
3	6213-631-002-00	BEARING/WATER PUMP	*	1					
4	6213-631-005-00	BEARING/WATERPUMP	*	1					
5	6213-622-002-10	SEAL SET/WATER PUMP	*	1					
6	6213-621-003-00	ROTOR/WATERPUMP	*	1					
7	6213-642-002-00	SEAL/WATER PUMPPULLE	*	1					
8	6213-613-002-10	GASKET	*	1					
9	6213-612-004-00	PLATE/WATER PUMP	*	1					
10	6213-619-003-00	SCREW/WATER PUMP	*	3					
11	6213-619-002-00	PIPE/WATER PUMP	*	2					
12	6213-614-003-10	GASKET/WATER PUMP	*	1					
13	V231-360-804-50	FLANGEBOLT	*	1					
14	3817-401-001-00	NUT/M08	*	2					
15	6213-619-001-00	SPACER,PUMP.WATER	*	1					
16	6213-614-004-10	GASKET,SPACER	*	1					
17	6904-110-840-00	STUD/M8X40	*	2					
18	V231-360-802-00	FLANGEBOLT	*	1					
19	3817-401-001-00	NUT/M08	*	1					
20	6213-729-016-00	HOSE/RUBBER	*	1					
21	J061-210-015-00	CLAMP/WIRE/10-15	*	2					
22	6213-716-001-50	HOUSING/THERMOSTAT	*	1					
23	6213-743-002-10	GASKET/HOUSING	*	1					
24	V231-360-802-00	FLANGEBOLT	*	1					
25	V231-360-807-50	FLANGEBOLT	*	1					
26	6513-770-022-10	THERMOSTAT	*	1					
27	6213-711-004-00	PIPE/WATEROUTLET	*	1					
28	V723-102-005-50	O-RING	*	1					
29	V231-360-802-50	FLANGEBOLT	*	2					

FIG. 18 COOLING FAN

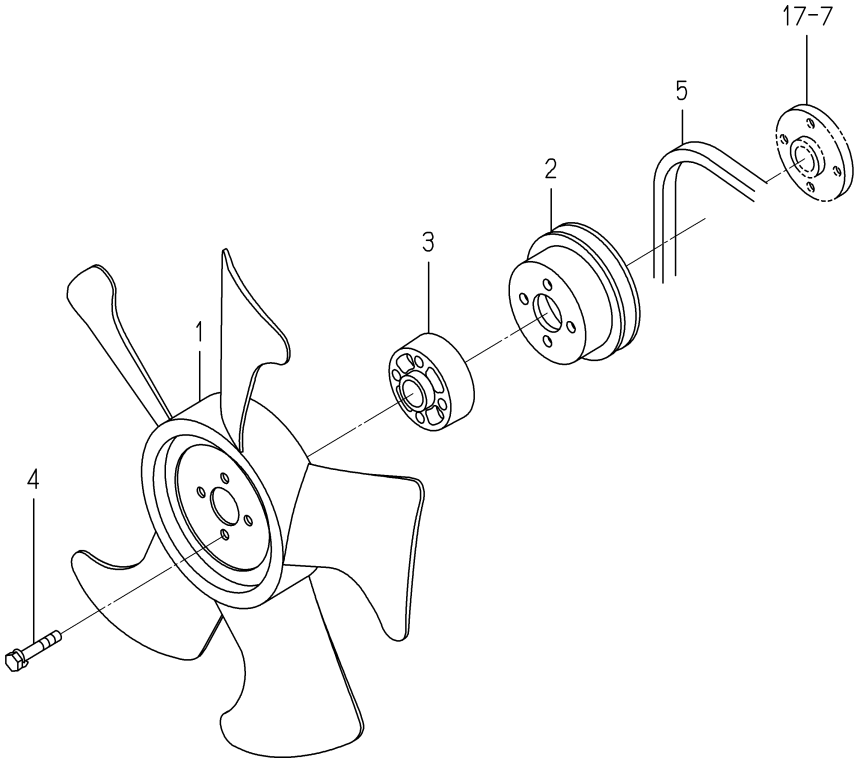

6004-480Q-0100

KEY	PART CODE	DESCRIPTION	SPC	TYPE OF MODEL E3112 G03		ITC	COL	GRP	REMARKS
1	6213-660-023-00	FAN/COOLING	*	1					
2	6213-641-006-00	PULLEY,WATER PUMP	*	1					
3	6213-669-003-00	SPACER/FUN/19	*	1					
4	6901-910-635-00	BOLT	*	4					
5	6213-671-027-00	BELT/VCOGHM34.0	*	1					

FIG. 19 INJECTION NOZZLE

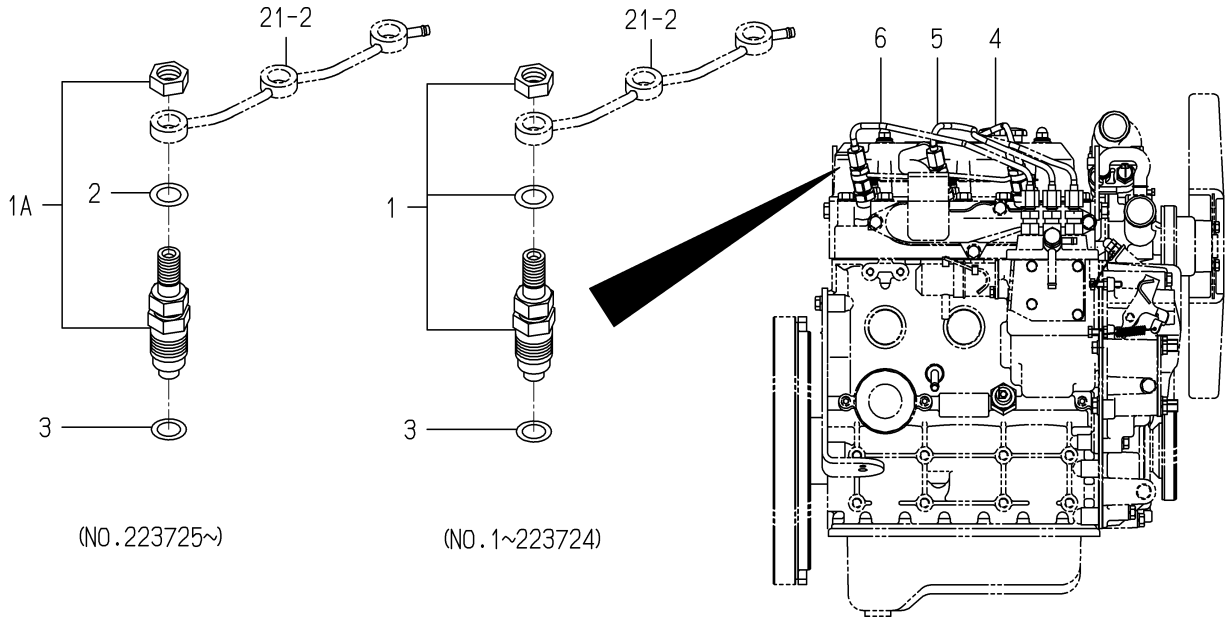

6004-501C-0100

KEY	PART CODE	DESCRIPTION	SPC	TYPE OF MODEL E3112 G03		ITC	COL	GRP	REMARKS
1	6215-300-036-00	INJECTIONNOZZLE ASSY	*	3 -223724					FIG 027
1A	6215-300-036-10	INJECTIONNOZZLE ASSY	*	3 223725-		2			FIG 027
2	6215-359-001-00	WASHER	*	3 223725-					
3	6215-315-002-00	GASKET,NOZZLE	*	3					
4	6215-411-126-10	PIPE/INJECTION ASSY	*	1					
5	6215-411-127-00	PIPE/INJECTION ASSY	*	1					
6	6215-411-128-00	PIPE/INJECTION ASSY	*	1					

FIG. 20 INJECTION PUMP

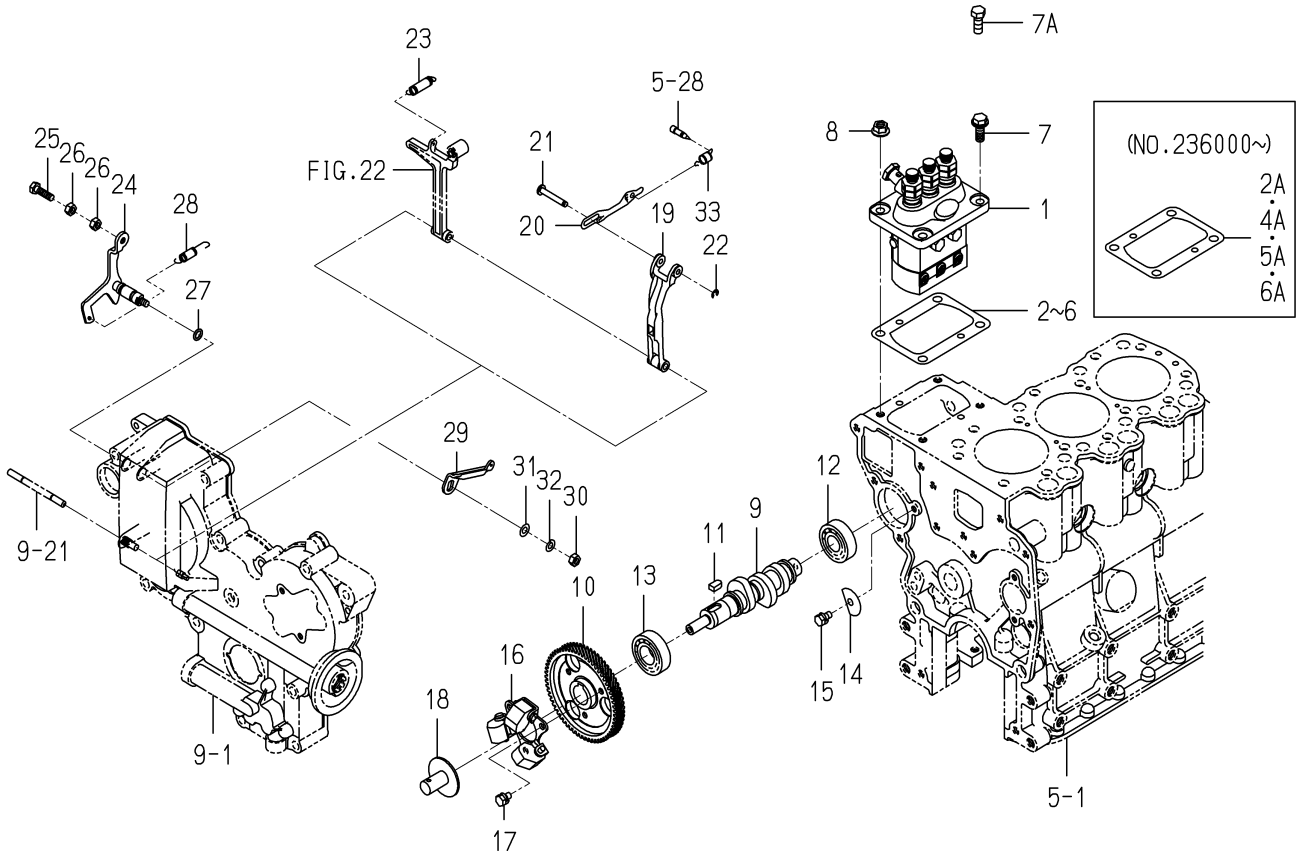

6004-511 -0100

KEY	PART CODE	DESCRIPTION	SPC	TYPE OF MODEL E3112 G03		ITC	COL	GRP	REMARKS
1	6215-600-103-10	INJECTIONPUMP ASSY	*	1					FIG 028
2	6219-752-006-00	SHIM/INJECTION P/0.3	*	1 -235999					
2A	6219-752-045-00	SHIM/INJECTIONPUMP	*	1 236000-					
3	6219-752-007-00	SHIM/INJECTION P/0.1	*	1 -235999					
4	6219-752-008-00	SHIM/INJECTION P/0.2	*	1 -235999					
4A	6219-752-044-00	SHIM/INJECTIONPUMP	*	1 236000-					
5	6219-752-009-00	SHIM/INJECTION P/0.4	*	1 -235999					
5A	6219-752-046-00	SHIM/INJECTIONPUMP	*	1 236000-					
6	6219-752-010-00	SHIM/INJECTION P/0.5	*	1 -229516					
6A	6219-752-047-00	SHIM/INJECTIONPUMP	*	1 236000-					
7	V231-360-802-00	FLANGEBOLT	*	2 -240938					
7A	V201-360-802-00	BOLT/M8X20	*	2 240939-					
8	3817-401-001-00	NUT/M08	*	2					
9	6215-621-016-20	CAMSHAFT/INJECTION P	*	1					
10	6212-524-002-20	GEAR/INJECTIONPUMP	*	1					
11	6209-730-005-00	KEY/07X05X09	*	1					
12	V600-110-620-30	BEARING,RB/6203	*	1					
13	V600-110-600-40	BEARING,RB/6004	*	1					
14	6212-535-002-00	PLATE,THRUST INJPUMP	*	1					
15	6901-910-612-00	BOLT,SEMS/M6X12	*	1					
16	6215-520-001-00	FLYWEIGHT	*	1					
17	6209-030-043-00	BOLT/M6X10	*	3					
18	6215-526-004-00	THRUSTPIECE	*	1					
19	6215-541-001-10	ARM/FLOATING COMP	*	1					
20	6215-543-002-10	RINK/CONTROL	*	1					
21	6215-542-006-00	PIN,CONTROL	*	1					
22	V710-140-004-00	RING,SNAP/ 4 E	*	1					
23	6215-531-001-00	SPRING GOVERNOR	*	1					
24	6215-541-003-10	LEVER,CONTROL	*	1					
25	6209-044-001-00	BOLT/M6X18	*	1					

FIG. 20 INJECTION PUMP

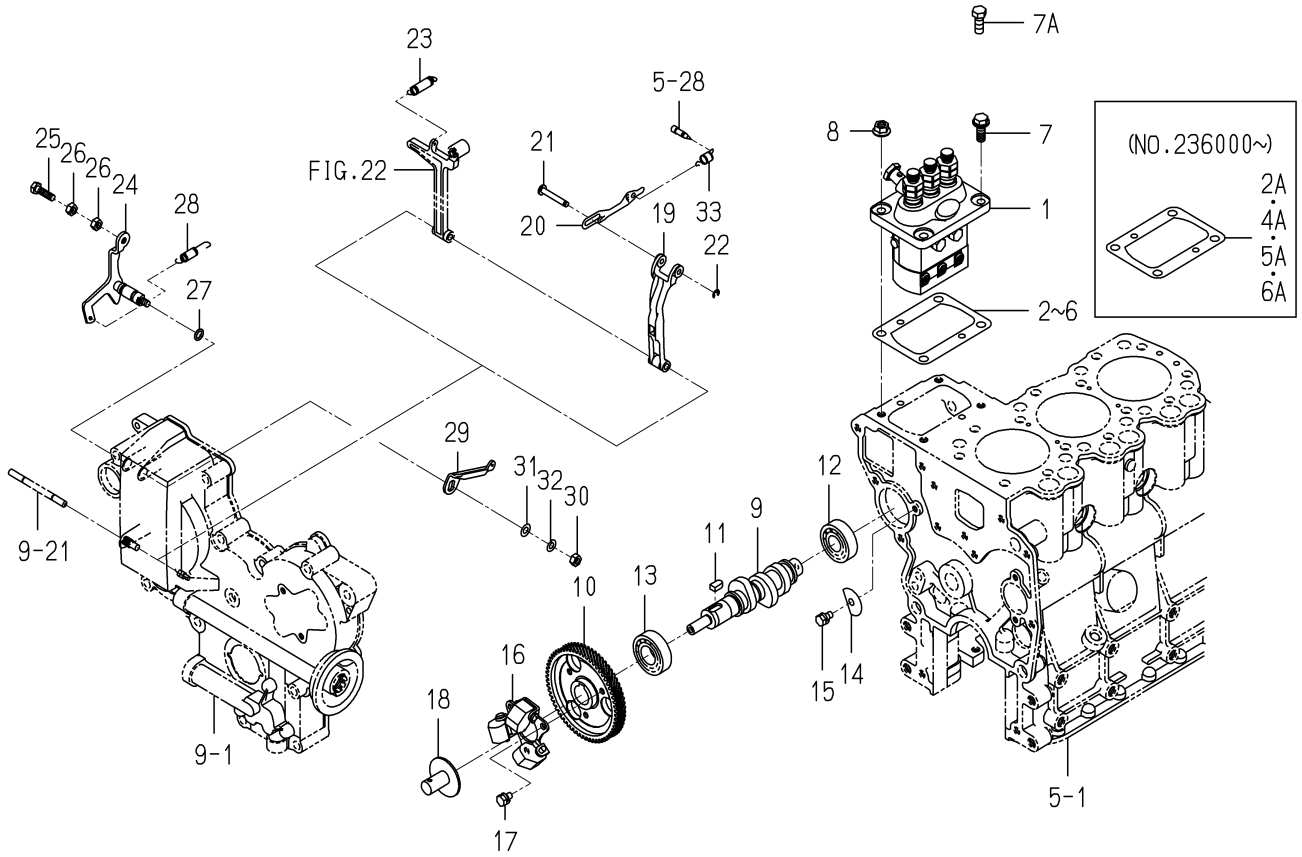

6004-511 -0100

KEY	PART CODE	DESCRIPTION	SPC	TYPE OF MODEL E3112 G03		ITC	COL	GRP	REMARKS
26	6909-111-406-00	NUT	*	2					
27	V720-101-900-80	O-RING/P 8	*	1					
28	6209-580-002-10	SPRING,RETURN	*	1					
29	6215-549-007-10	ARM/CONTROL	*	1					
30	6909-110-406-00	NUT	*	1					
31	V411-260-006-00	WASHER / M6	*	1					
32	V401-160-006-00	WASHER,SP/M 6	*	1					
33	6215-549-012-00	SPRING,STARTING	*	1					

FIG. 21 FUEL PIPE

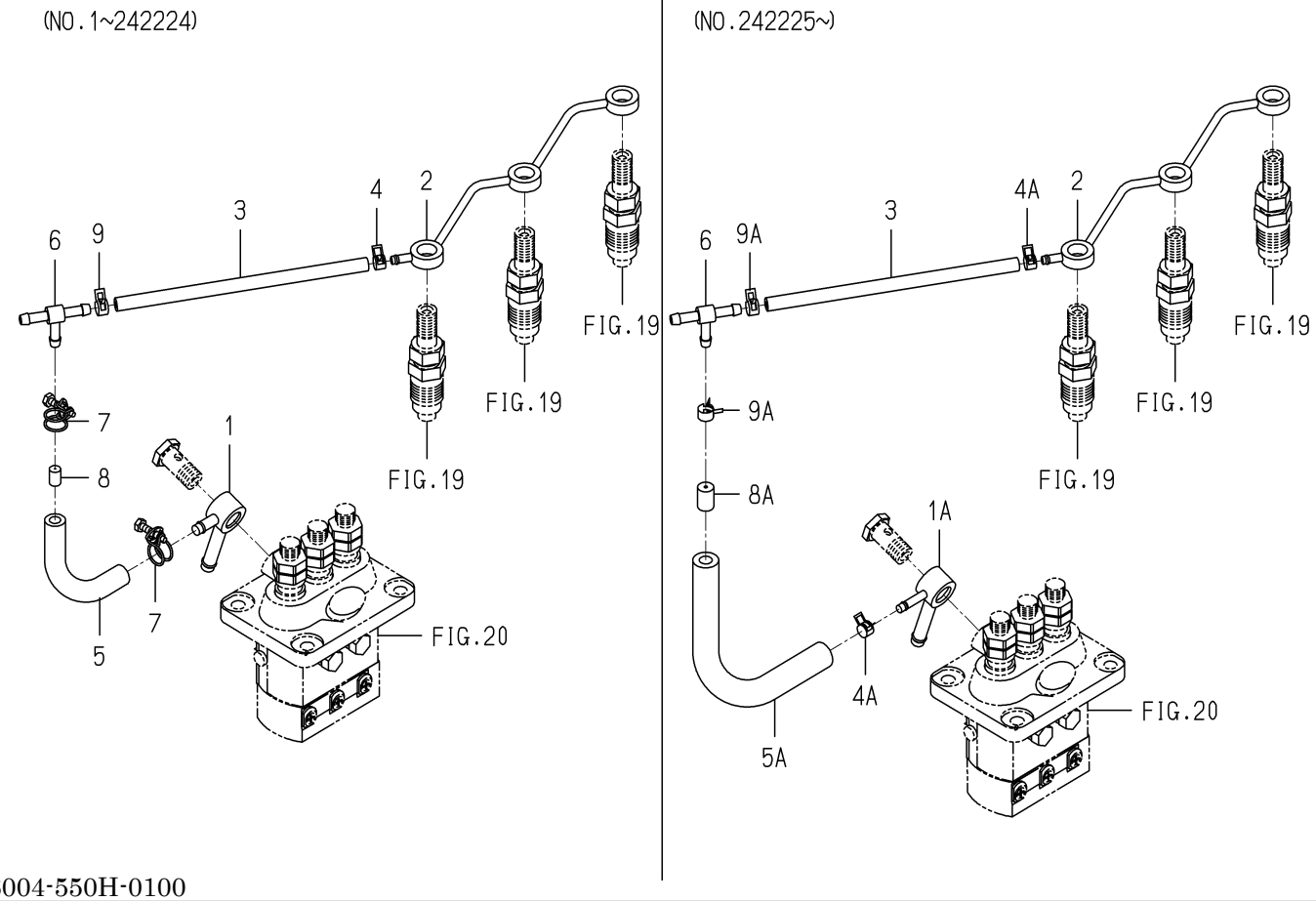

6004-550H-0100

KEY	PART CODE	DESCRIPTION	SPC	TYPE OF MODEL E3112 G03		ITC	COL	GRP	REMARKS
1	6215-412-002-10	CONNECTOR	*	1 -242224					
1A	6215-412-004-00	CONNECTOR/FUEL	*	1 242225-					
2	6215-411-125-00	PIPE/FUEL	*	1					
3	6209-360-018-00	HOSE/RUBBER/160	*	1					
4	J062-076-082-00	CLIP/HOSE/7.6-8.2	*	1 -242224					
4A	J062-076-082-00	CLIP/HOSE/7.6-8.2	*	2 242225-					
5	6209-360-021-00	HOSE/RUBBER	*	1 -242224					
5A	6209-360-120-00	HOSE/RUBBER/70	*	1 242225-					
6	3632-360-036-00	JOINTT-TYPE 2	*	1					
7	6209-704-009-00	CLAMP/WIRE/10-12	*	2 -242224					
8	6215-419-001-00	TUBE,ORIFICE	*	1 -242224					
8A	3640-586-004-00	RESISTANCE/1.0	*	1 242225-					
9	J062-087-093-00	CLIP/HOSE/8.7-9.3	*	1 -242224					
9A	J062-087-093-00	CLIP/HOSE/8.7-9.3	*	2 242225-					

FIG. 22 ADAPTER

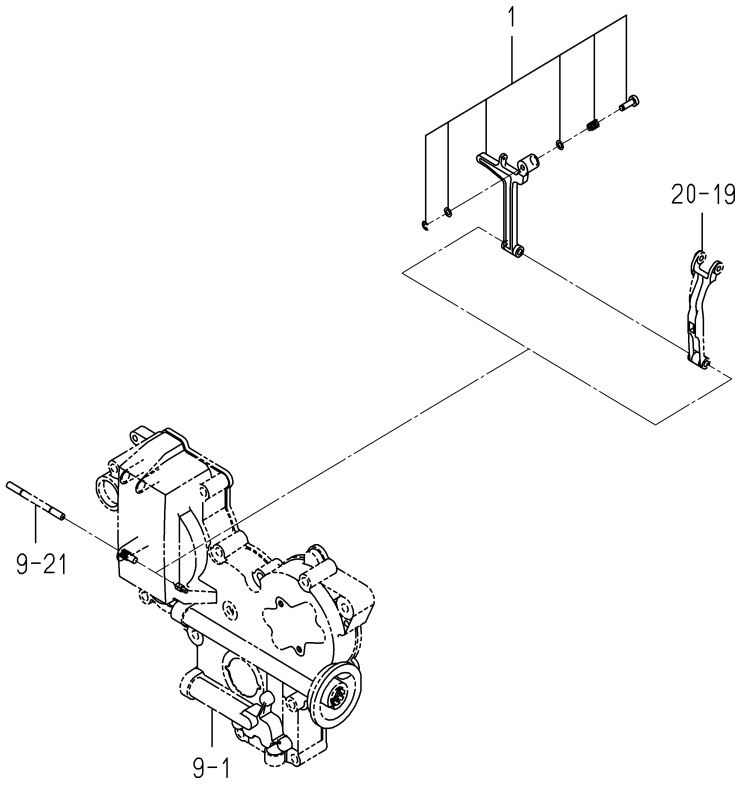

6003-560E-0100

KEY	PART CODE	DESCRIPTION	SPC	TYPE OF MODEL E3112 G03		ITC	COL	GRP	REMARKS
1	6215-548-006-00	ADAPTER/255X040 ASSY	*	1					

FIG. 23 ELECTRIC(1)

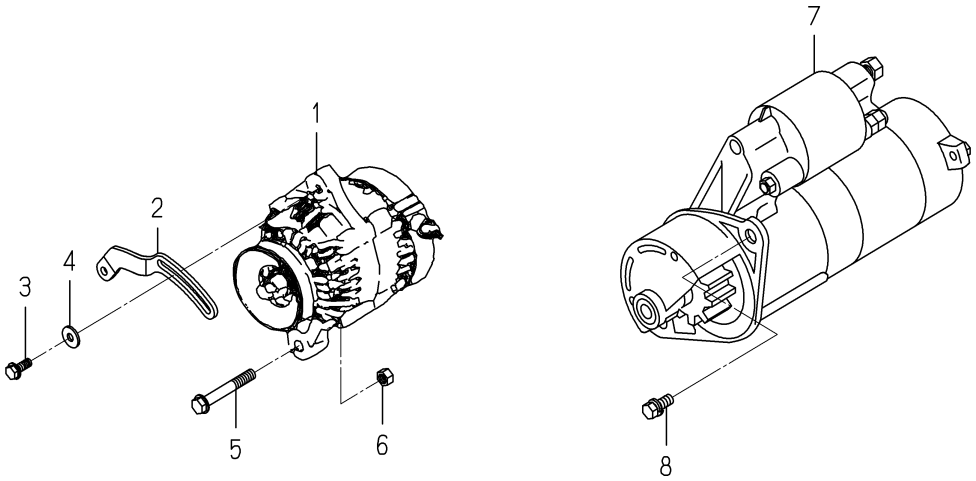

6004-801J-0100,6004-801J-0200

KEY	PART CODE	DESCRIPTION	SPC	TYPE OF MODEL E3112 G03		ITC	COL	GRP	REMARKS
1	6281-200-005-00	GENERATOR ASSY	*	1					FIG 030
2	6213-674-006-20	PLATE/ADJUST	*	1					
3	V231-360-802-00	FLANGEBOLT	*	1					
4	1373-121-001-00	WASHER/9X22X2	*	1					
5	V233-361-007-00	FLANGEBOLT	*	1					
6	6909-110-410-00	NUT/M10	*	1					
7	6281-100-014-00	STARTER ASSY	*	1					FIG 029
8	6901-911-025-00	BOLT	*	2					

FIG. 24 ELECTRIC(2)

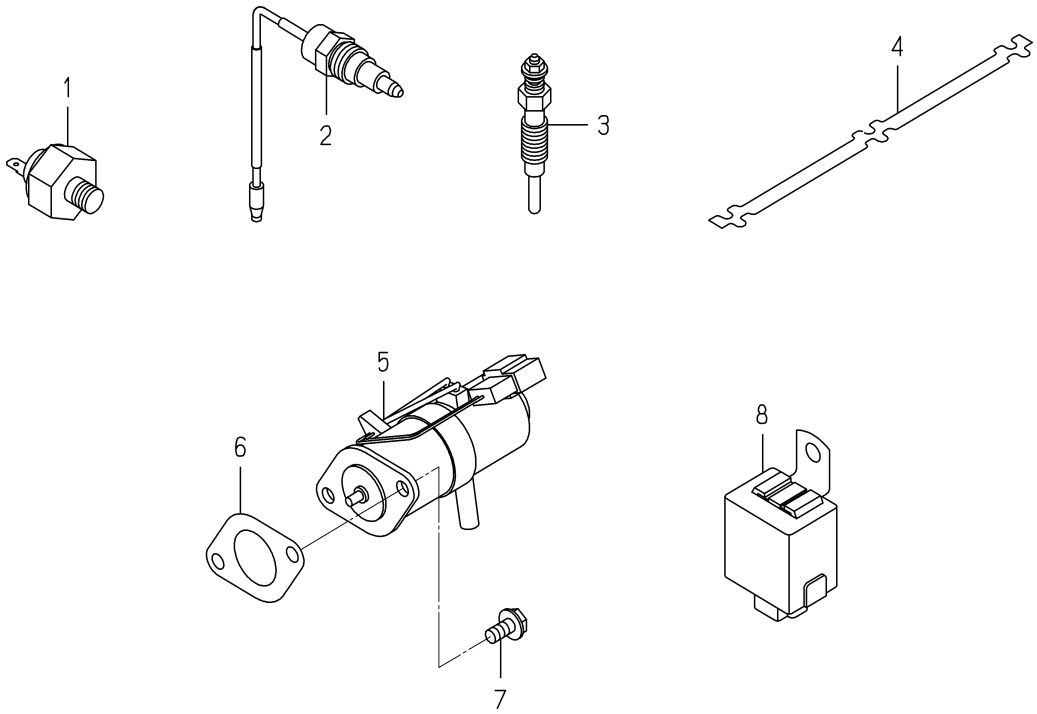

6004-820I-0100,6004-820I-0200

KEY	PART CODE	DESCRIPTION	SPC	TYPE OF MODEL E3112 G03		ITC	COL	GRP	REMARKS
1	6281-971-001-10	SWITCH/OILPRESSURE	*	1 -226313					
2	6282-450-002-00	SWITCH/OVERHEAT	*	1 -226313					
3	6281-410-024-00	GLOWPLUG	*	3 -226313					
4	6219-732-016-00	CONNECTOR/GLOWPLUG	*	1 -226313					
5	6281-910-003-10	SOLENOID	*	1 -226313					
6	6209-630-002-10	GASKET	*	1 -226313					
7	V230-360-601-20	FLANGEBOLT	*	2 -226313					
8	6281-920-001-00	RELAY,SOLENOID	*	1 -226313					

FIG. 25 ELECTRIC(2)

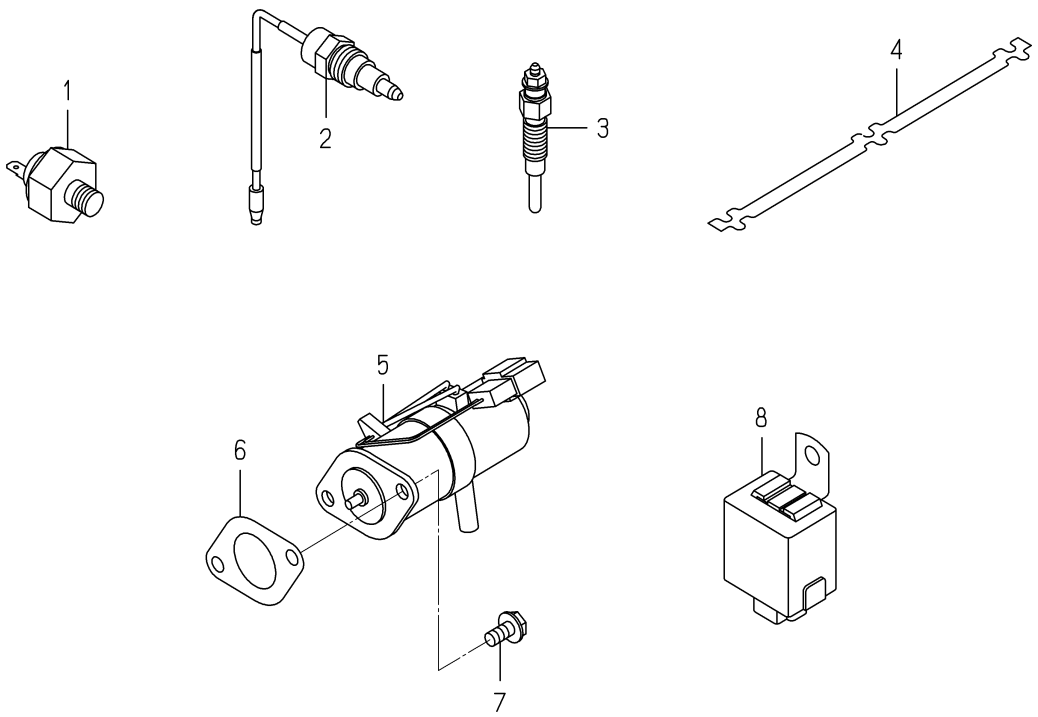

6004-820O-0100,6004-820O-0200

KEY	PART CODE	DESCRIPTION	SPC	TYPE OF MODEL E3112 G03		ITC	COL	GRP	REMARKS
1	6281-971-001-10	SWITCH/OILPRESSURE	*	1 226314-					
2	6282-450-002-00	SWITCH/OVERHEAT	*	1 226314-					
3	6281-410-023-00	GLOWPLUG	*	3 226314-					
4	6219-732-016-00	CONNECTOR/GLOWPLUG	*	1 226314-					
5	6281-910-003-10	SOLENOID	*	1 226314-					
6	6209-630-002-10	GASKET	*	1 226314-					
7	V230-360-601-20	FLANGEBOLT	*	2 226314-					
8	6281-920-001-00	RELAY,SOLENOID	*	1 226314-					

FIG. 26 REPAIR PARTS

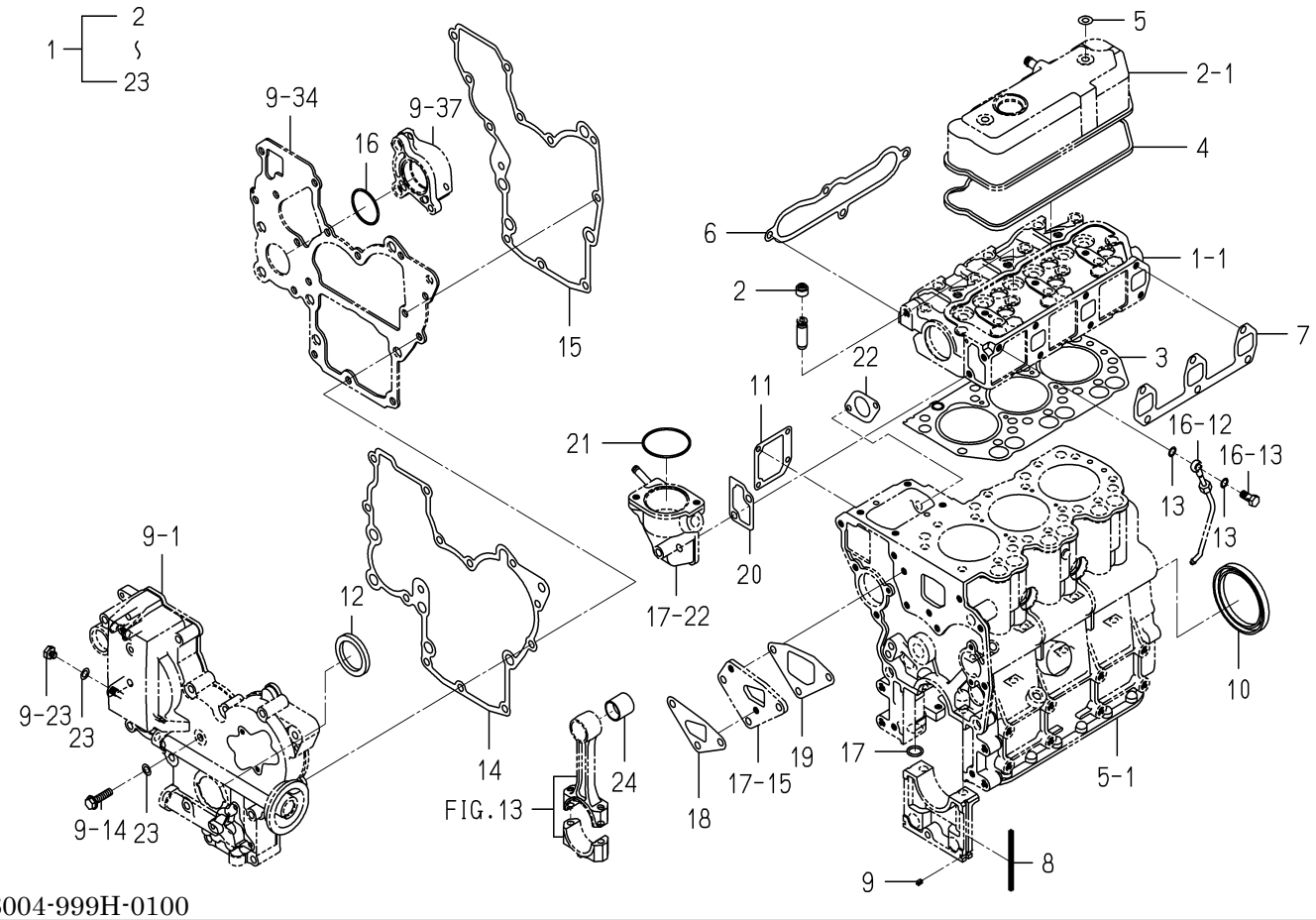

6004-999H-0100

KEY	PART CODE	DESCRIPTION	SPC	TYPE OF MODEL E3112 G03		ITC	COL	GRP	REMARKS
1	6287-810-036-00	REPAIR/ENGINESET	T	1					
2	6212-569-002-00	SEAL,OIL	T	6					
3	6211-141-029-20	GASKET/CYLINDERHEAD	T	1					
4	6211-173-003-00	SEAL,CYL.HEAD COVER	T	1					
5	6209-572-003-00	GASKET	T	2					
6	6214-115-001-20	GASKET,INLET MANIFOL	T	1					
7	6214-145-001-30	GASKET,EXH.MANIFOLD	T	1					
8	6211-258-001-00	SEAL,BEARING CAP	T	4					
9	6211-258-002-00	SEAL,BEARING CAP/7	T	2					
10	6209-625-012-00	OILSEAL	T	1					
11	6211-292-001-20	GASKET/COVER	T	1					
12	6209-625-002-00	SEAL,OIL	T	1					
13	6209-920-002-00	PACKING	T	2					
14	6211-312-001-30	GASKET/GEARCASE	T	1					
15	6211-312-004-20	GASKET/PLATE	T	1					
16	V723-102-004-20	O-RING	T	1					
17	V720-102-401-50	O-RING/P15	T	1					
18	6213-614-003-10	GASKET/WATER PUMP	T	1					
19	6213-614-004-10	GASKET,SPACER	T	1					
20	6213-743-002-10	GASKET/HOUSING	T	1					
21	V723-102-005-50	O-RING	T	1					
22	6209-630-002-10	GASKET	T	1					
23	6209-500-003-00	WASHER/08X14X01	T	2					

FIG. 27 COMPONENT PARTS FOR 6215-300-036-00,10 ON Fig.19

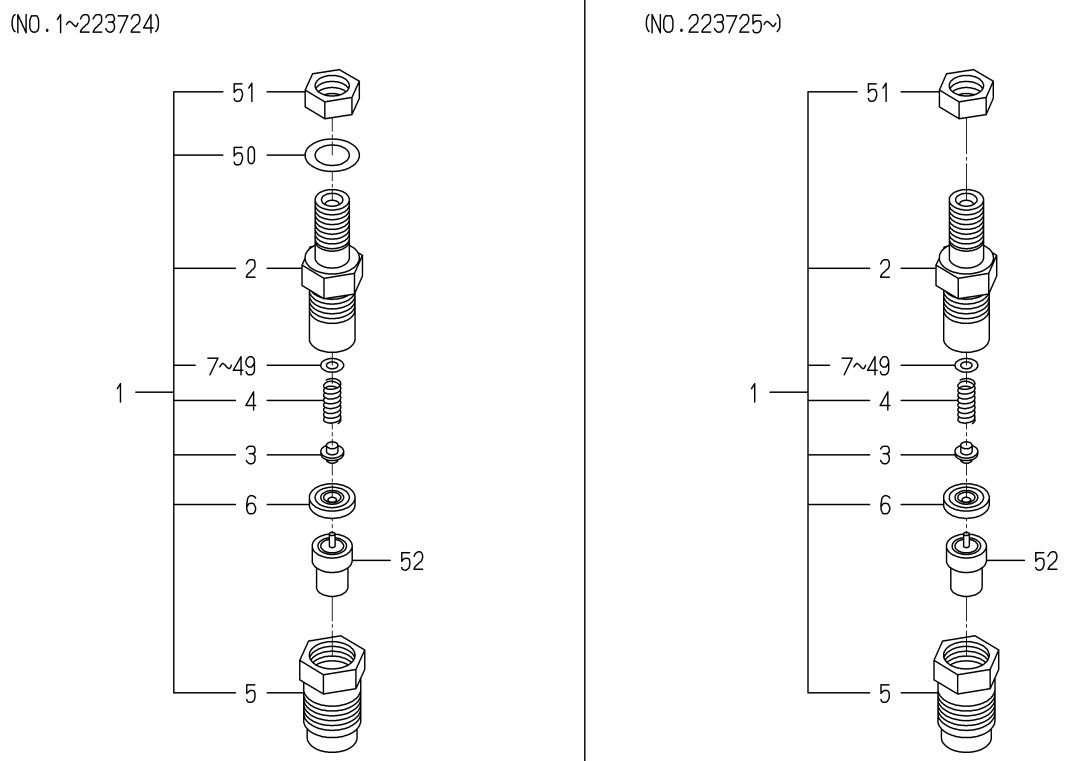

6215-300-036-1B

KEY	PART CODE	DESCRIPTION	SPC	TYPE OF MODEL E3112 G03		ITC	COL	GRP	REMARKS
1	6215-330-024-00	HOLDER/NOZZLE ASSY	*	3 -223724					
1A	6215-330-024-10	HOLDER/NOZZLE ASSY	*	3 223725-		2			
2	6215-331-008-00	BODY/NOZZLE HOLDER	*	3					
3	6215-342-001-00	PIN,NOZZLE HOLDER	*	3					
4	6215-343-001-00	WASHER	*	3					
5	6215-332-013-00	NUT/NOZZLERETAINING	*	3					
6	6215-339-001-00	PIECE,DISTANCE	*	3					
7	6215-345-001-00	WASHER/0.9	*	3					
8	6215-345-002-00	WASHER/0.925	*	3					
9	6215-345-003-00	WASHER/0.95	*	3					
10	6215-345-004-00	WASHER/0.975	*	3					
11	6215-345-005-00	WASHER/1.0	*	3					
12	6215-345-006-00	WASHER/1.025	*	3					
13	6215-345-007-00	WASHER/1.05	*	3					
14	6215-345-008-00	WASHER/1.075	*	3					
15	6215-345-009-00	WASHER/1.1	*	3					
16	6215-345-010-00	WASHER/1.125	*	3					
17	6215-345-011-00	WASHER/1.15	*	3					
18	6215-345-012-00	WASHER/1.175	*	3					
19	6215-345-013-00	WASHER/1.2	*	3					
20	6215-345-014-00	WASHER/1.225	*	3					
21	6215-345-015-00	WASHER/1.25	*	3					
22	6215-345-016-00	WASHER/1.275	*	3					
23	6215-345-017-00	WASHER/1.3	*	3					
24	6215-345-018-00	WASHER/1.325	*	3					
25	6215-345-019-00	WASHER/1.35	*	3					
26	6215-345-020-00	WASHER/1.375	*	3					
27	6215-345-021-00	WASHER/1.4	*	3					
28	6215-345-022-00	WASHER/1.425	*	3					
29	6215-345-023-00	WASHER/1.45	*	3					

FIG. 27 COMPONENT PARTS FOR 6215-300-036-00,10 ON Fig.19

(NO.1~223724)

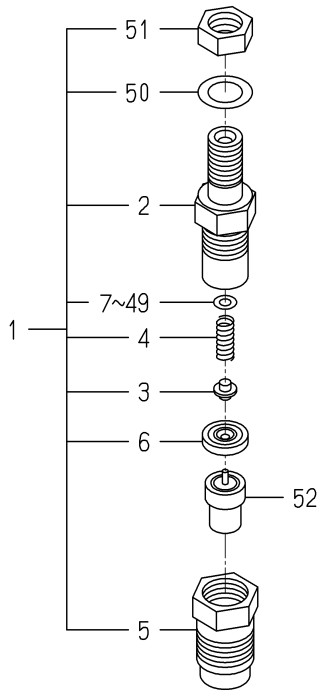

(NO.223725~)

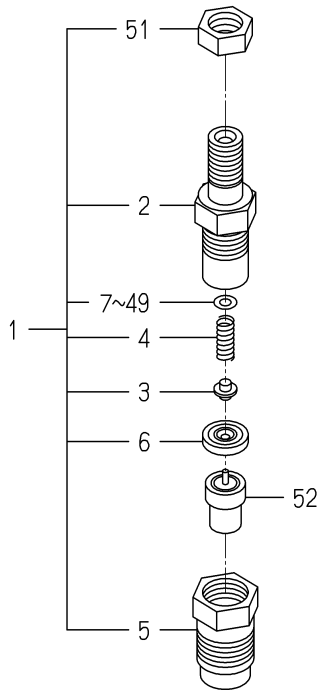

6215-300-036-1B

KEY	PART CODE	DESCRIPTION	SPC	TYPE OF MODEL E3112 G03		ITC	COL	GRP	REMARKS
30	6215-345-024-00	WASHER/1.475	*	3					
31	6215-345-025-00	WASHER/1.5	*	3					
32	6215-345-026-00	WASHER/1.525	*	3					
33	6215-345-027-00	WASHER/1.55	*	3					
34	6215-345-028-00	WASHER/1.575	*	3					
35	6215-345-029-00	WASHER/1.6	*	3					
36	6215-345-030-00	WASHER/1.625	*	3					
37	6215-345-031-00	WASHER/1.65	*	3					
38	6215-345-032-00	WASHER/1.675	*	3					
39	6215-345-033-00	WASHER/1.7	*	3					
40	6215-345-034-00	WASHER/1.725	*	3					
41	6215-345-035-00	WASHER/1.75	*	3					
42	6215-345-036-00	WASHER/1.775	*	3					
43	6215-345-037-00	WASHER/1.8	*	3					
44	6215-345-038-00	WASHER/1.825	*	3					
45	6215-345-039-00	WASHER/1.85	*	3					
46	6215-345-040-00	WASHER/1.875	*	3					
47	6215-345-041-00	WASHER/1.9	*	3					
48	6215-345-042-00	WASHER/1.925	*	3					
49	6215-345-043-00	WASHER/1.95	*	3					
50	6215-359-001-00	WASHER	*	3 -223724					
51	6215-359-002-00	NUT	*	3					
52	6215-311-027-00	NOZZLE ASSY	*	3					

FIG. 28 COMPONENT PARTS FOR 6215-600-103-10 ON Fig.20

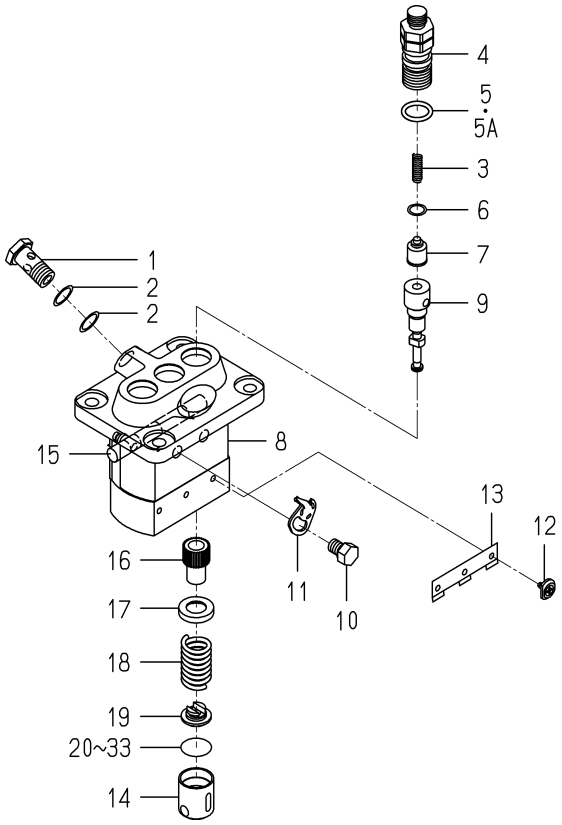

6215-600-103-1D

KEY	PART CODE	DESCRIPTION	SPC	TYPE OF MODEL E3112 G03		ITC	COL	GRP	REMARKS
1	6215-619-009-00	SCREW/HOLLOW	*	1					
2	6215-619-010-00	WASHER/AIR BLEEDER	*	2					
3	6215-643-006-00	SPRING/DELIVERYVALVE	*	3					
4	6215-644-007-00	HOLDER/DELIVERYVALVE	*	3					
5	6215-649-001-00	ORING	*	3 -231476					
5A	6215-649-019-00	ORING	*	3 231477-					
6	6215-649-002-00	GASKET/DELIVERYVALVE	*	3					
7	6215-641-006-00	VALVE ASSY	*	3					
8	6215-611-001-00	HOUSING ASSY	*	1					
9	6215-631-019-00	ELEMENT ASSY	*	3					
10	6215-619-022-00	BOLT/WASHERHEAD	*	2					
11	6215-612-001-00	PLATE/ADJUSTING	*	2					
12	6215-629-001-00	PIN/INJECTIONPUMP	*	3					
13	6215-629-002-00	PLATE	*	1					
14	6215-622-001-00	TAPPET/INJECTIO ASSY	*	3					
15	6215-637-001-00	RACK/CONTROL ASSY	*	1					
16	6215-635-001-00	SLEEVE/PLUNGER	*	3					
17	6215-639-004-00	SEAT/SPRING/UPPER	*	3					
18	6215-634-001-00	SPRING/PUMPPLUNGER	*	3					
19	6215-639-005-00	SEAT/SPRING/LOWER	*	3					
20	6215-629-003-00	PLATE/TAPPET/AD 0.6	*	1					
21	6215-629-004-00	PLATE/TAPPET/AD 0.7	*	1					
22	6215-629-005-00	PLATE/TAPPET/AD 0.8	*	1					
23	6215-629-006-00	PLATE/TAPPET/AD 0.9	*	1					
24	6215-629-007-00	PLATE/TAPPET/AD 1.0	*	1					
25	6215-629-008-00	PLATE/TAPPET/AD 0.2	*	1					
26	6215-629-009-00	PLATE/TAPPET/AD 0.3	*	1					
27	6215-629-010-00	PLATE/TAPPET/AD 0.4	*	1					
28	6215-629-011-00	PLATE/TAPPET/AD 0.5	*	3					
29	6215-629-012-00	PLATE/TAPPET/AD 0.25	*	1					

FIG. 28 COMPONENT PARTS FOR 6215-600-103-10 ON Fig.20

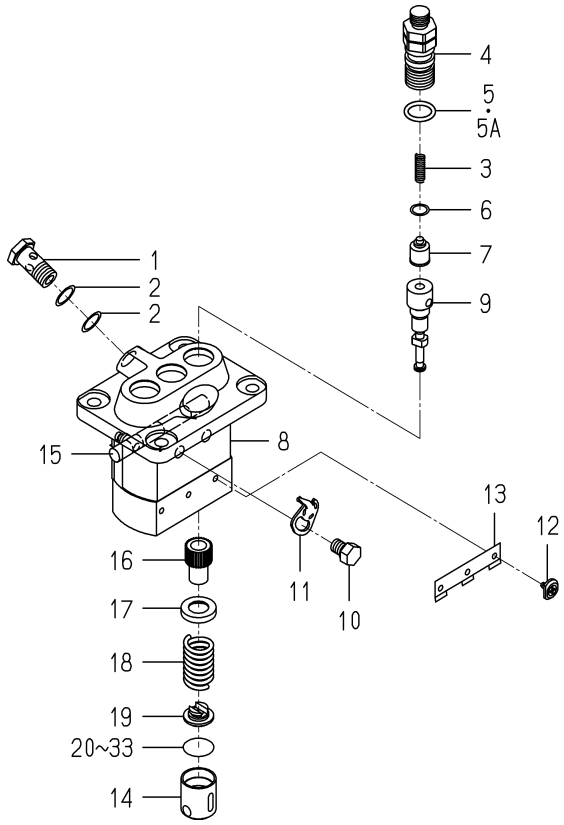

6215-600-103-1D

KEY	PART CODE	DESCRIPTION	SPC	TYPE OF MODEL E3112 G03		ITC	COL	GRP	REMARKS
30	6215-629-013-00	PLATE/TAPPET/AD 0.35	*	1					
31	6215-629-014-00	PLATE/TAPPET/AD 0.45	*	1					
32	6215-629-015-00	PLATE/TAPPET/AD 0.55	*	1					
33	6215-629-016-00	PLATE/TAPPET/AD 0.65	*	1					

FIG. 29 COMPONENT PARTS FOR 6281-100-014-00 ON Fig.23

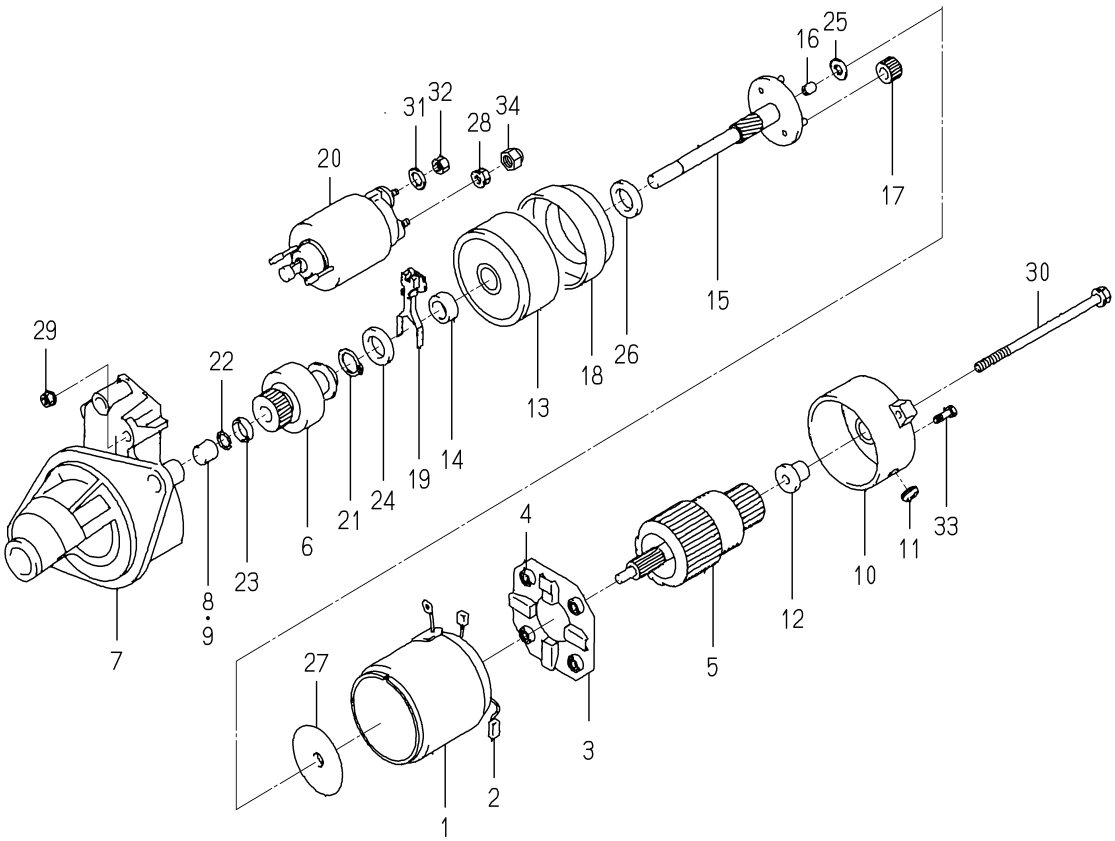

6281-100-014-0A

KEY	PART CODE	DESCRIPTION	SPC	TYPE OF MODEL E3112 G03		ITC	COL	GRP	REMARKS
1	6281-111-009-00	YOKE/STARTER ASSY	*	1					
2	6281-119-009-00	BRUSH/STARTER	*	2					
3	6281-118-007-00	HOLDER/STARTER ASSY	*	1					
4	6281-117-003-00	SPRING/STARTERBRUSH	*	4					
5	6281-121-010-00	ARMATURE/STARTE ASSY	*	1					
6	6281-124-011-00	CLUTCH/STARTER ASSY	*	1					
7	6281-129-064-00	HOUSING/STARTER ASSY	*	1					
8	6281-129-080-00	BEARING/NEEDLE	*	1					
9	6281-129-058-00	BEARING/NEEDLE	*	1					
10	6281-115-017-00	FRAME/COMMUTATOR END	*	1					
11	6281-115-018-00	COVER	*	1					
12	6281-129-065-00	BEARING/OILLESS	*	1					
13	6281-129-066-00	BEARING/WITH SHOCKAB	*	1					
14	6281-129-067-00	BEARING/OILLESS	*	1					
15	6281-129-068-00	SHAFT/STARTER PLANET	*	1					
16	6281-129-069-00	BEARING/OILLESS	*	1					
17	6281-129-070-00	GEAR/STARTER PLANETA	*	3					
18	6281-129-071-00	GEAR/STARTERINTERNAL	*	1					
19	6281-127-003-00	LEVER/PINIONDRIVE	*	1					
20	6281-151-014-00	SWITCH/MAGNETIC ASSY	*	1					
21	6281-129-072-00	RING/SNAP	*	1					
22	6281-129-073-00	RING/SNAP	*	1					
23	6281-129-074-00	NUT/PINIONSTOP	*	1					
24	6281-129-075-00	WASHER/SK	*	1					
25	6281-129-076-00	WASHER/SK	*	1					
26	6281-129-077-00	WASHER/SK	*	1					
27	6281-129-078-00	PLATE	*	1					
28	6281-129-030-00	NUT	*	1					
29	6281-129-029-00	NUT	*	2					
30	6281-129-043-00	BOLT/THROUGH	*	2					

FIG. 29 COMPONENT PARTS FOR 6281-100-014-00 ON Fig.23

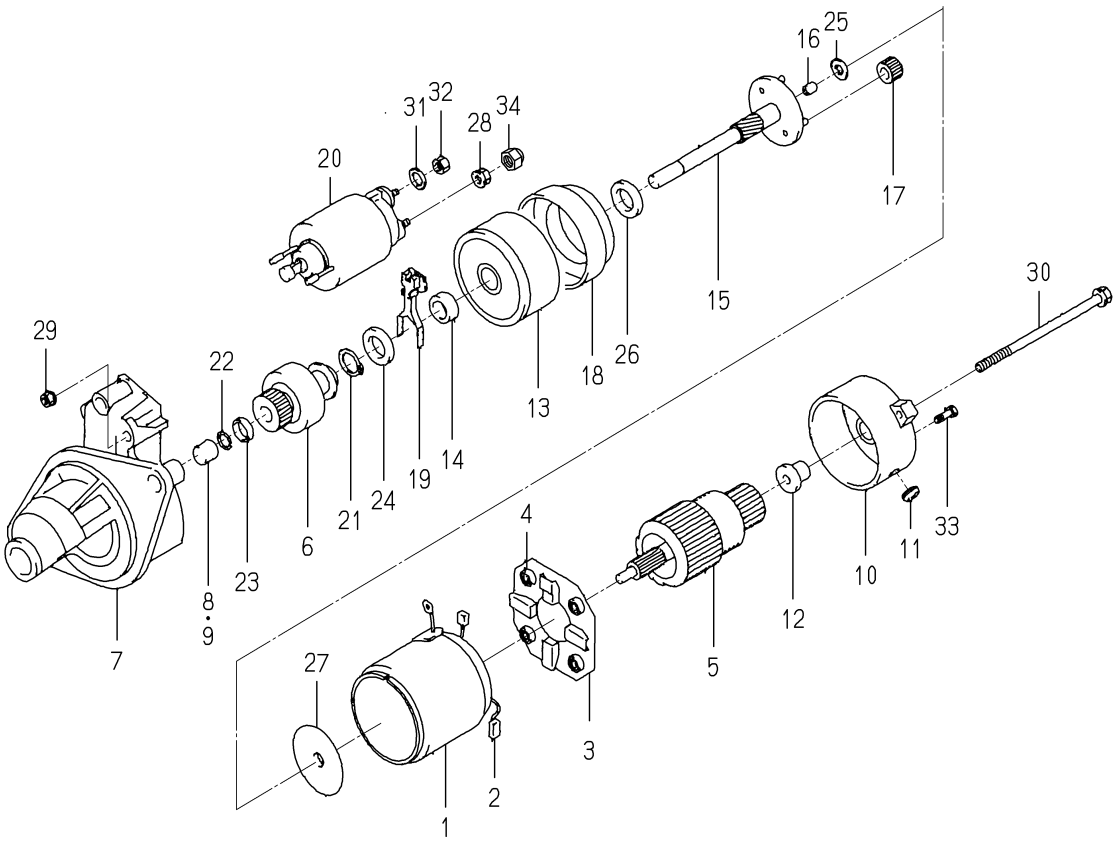

6281-100-014-0A

KEY	PART CODE	DESCRIPTION	SPC	TYPE OF MODEL E3112 G03		ITC	COL	GRP	REMARKS
31	6909-150-508-00	WASHER	*	1					
32	6909-110-408-00	NUT/M8	*	1					
33	6281-129-062-00	SCREW	*	2					
34	6281-129-079-00	NUT	*	1					

FIG. 30 COMPONENT PARTS FOR 6281-200-005-00 ON Fig.23

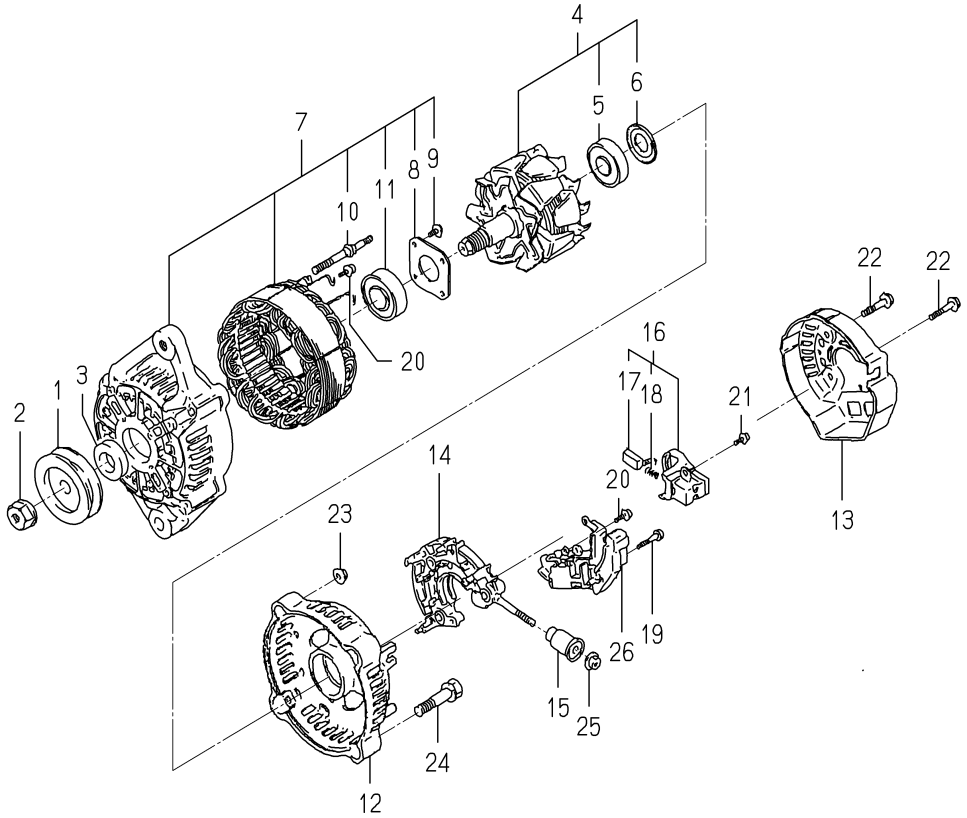

6281-200-005-0B

KEY	PART CODE	DESCRIPTION	SPC	TYPE OF MODEL E3112 G03		ITC	COL	GRP	REMARKS
1	6281-222-004-00	PULLEY	*	1					
2	6281-229-002-00	NUT	*	1					
3	6281-229-003-00	COLLOR	*	1					
4	6281-221-007-00	ROTOR ASSY	*	1					
5	6281-229-004-00	COVER,BEARING	*	1					
6	6281-229-032-00	BEARING/BALL	*	1					
7	6281-213-018-00	FRAME/DRIVEEND ASSY	*	1					
8	6281-229-006-00	PLATE	*	1					
9	6281-229-007-00	BOLT	*	4					
10	6281-229-008-00	BOLT	*	2					
11	6281-229-033-00	BEARING/BALL	*	1					
12	6281-214-003-00	FRAME	*	1					
13	6281-214-004-00	COVER	*	1					
14	6281-229-029-00	HOLDER ASSY	*	1					
15	6281-229-011-00	BUSH	*	1					
16	6281-217-002-00	HOLDER/BRUSH ASSY	*	1					
17	6281-215-001-00	BRUSH	*	2					
18	6281-216-001-00	SPRING	*	2					
19	6281-229-012-00	BOLT	*	2					
20	6281-229-013-00	BOLT	*	6					
21	6281-229-014-00	BOLT	*	1					
22	6281-229-015-00	BOLT	*	3					
23	6281-229-016-00	NUT	*	2					
24	6281-229-017-00	BOLT	*	2					
25	6281-229-018-00	NUT	*	1					
26	6281-271-002-00	REGULATOR ASSY	*	1					

C H A S S I S

FIG. 1 BRACKET(ENGINE) SYSTEM

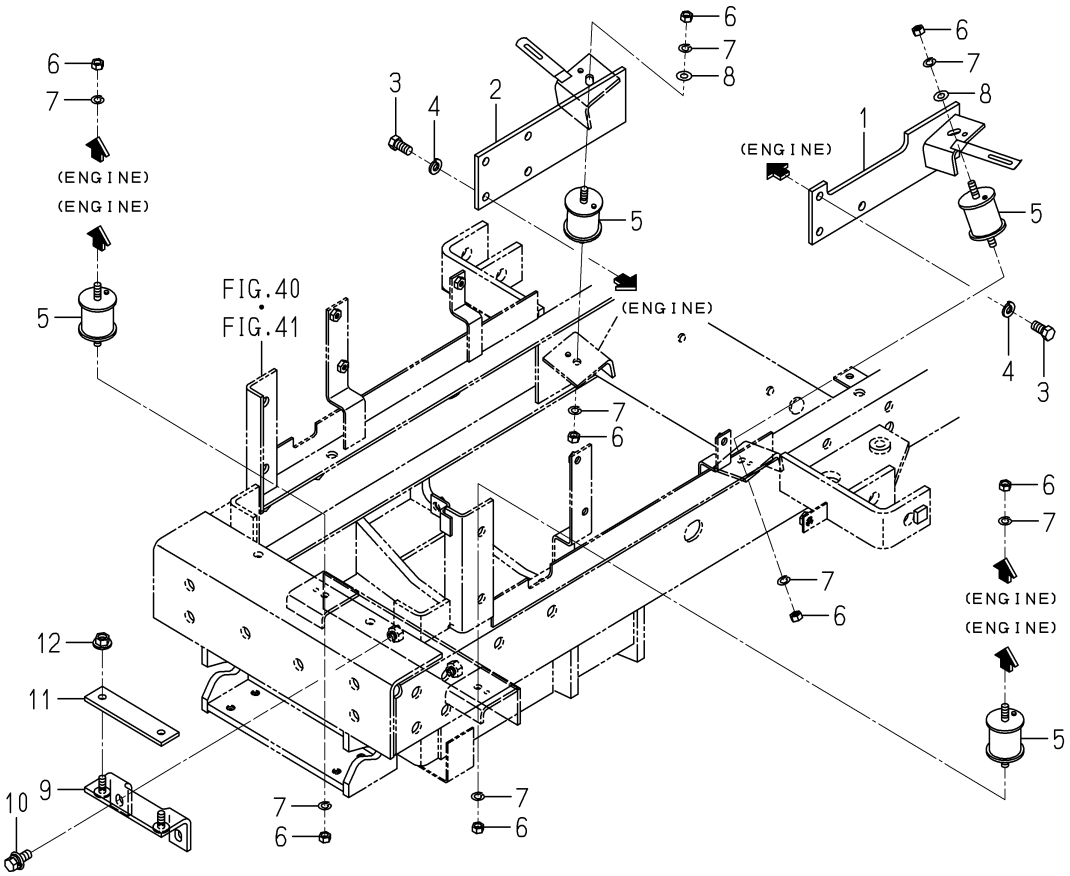

1728-101 -0100

KEY	PART CODE	DESCRIPTION	SPC	TYPE OF MODEL SXG19	TYPE OF MODEL SXG22	ITC	COL	GRP	REMARKS
1	1728-101-200-00	BRACKET/MOUNT/L COMP	*	1	1				
2	1725-101-210-00	BRACKET/MOUNT/R COMP	*	1	1				
3	V203-461-002-00	BOLT/M10X1.25X20	*	7	7				
4	V401-160-010-00	WASHER,SP/M10	*	7	7				
5	1593-101-003-20	INSULATOR	*	4	4				
6	V304-460-008-00	NUT/M8	*	8	8				
7	V401-160-008-00	WASHER,SP/M 8	*	8	8				
8	V411-260-008-00	WASHER,PL/M 8	*	2	2				
9	1728-101-210-00	STOPPER COMP	*	1	1				
10	V211-661-002-50	BOLT 7T(SP)	*	2	2				
11	1728-101-001-00	INSULATOR	*	1	1				
12	V363-260-008-00	NUT/WASHER	*	2	2				

FIG. 2 RADIATOR SYSTEM

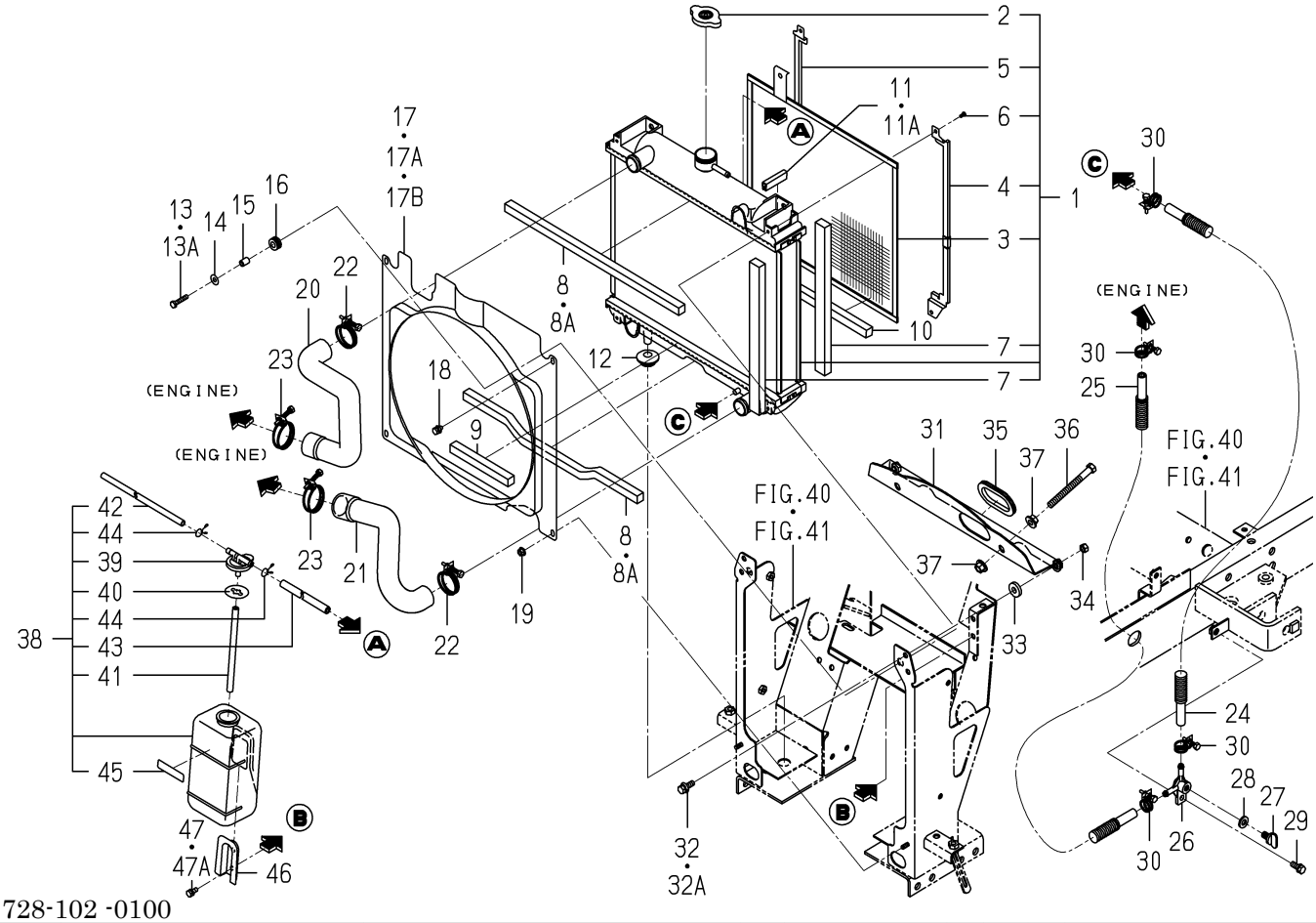

1728-102 -0100

KEY	PART CODE	DESCRIPTION	SPC	TYPE OF MODEL SXG19	TYPE OF MODEL SXG22	ITC	COL	GRP	REMARKS
1	1705-102-500-00	RADIATOR ASSY	*	1	1				
2	1650-102-202-10	CAP	*	1	1				
3	1705-102-203-00	PROTECTOR	*	1	1				
4	1703-102-205-00	GUIDE	*	1	1				
5	1703-102-206-00	GUIDE	*	1	1				
6	1703-102-203-00	SCREW/P	*	4	4				
7	1705-102-202-00	PACKING	*	4	4				
8	1650-102-006-00	INSULATOR	*	2 -3812	2 -1236				
8A	1650-102-006-10	INSULATOR	*	2 3813-	2 1237-	1			
9	1752-102-006-00	INSULATOR/15X15X140	*	1 5999-	1 2008-				
10	1705-102-009-00	SEAL/15X15X380	*	1	1				
11	3666-202-005-00	PROTECTOR	*	1 -3608	1 -1175				
11A	3666-202-005-10	PAD/50	*	1 3609-	1 1176-	1			
12	1421-603-004-00	BUSH,LEVER	*	2	2				
13	V200-260-603-00	BOLT/M 6X30	*	2 -9113	2 -3049				
13A	V230-360-603-00	FLANGEBOLT	*	2 9114-	2 3050-				
14	3740-162-005-00	WASHER	*	4	4				
15	2150-661-002-00	COLLAR	*	2	2				
16	1427-621-012-00	GROMMET	*	2	2				
17	1728-102-210-00	SHROUD COMP	*	1 -3541	1 -1128				
17A	1728-102-210-10	SHROUD COMP	*	1 -5998	1 -2007	1			
17B	1728-102-211-10	SHROUD	*	1 5999-	1 2008-				
18	V210-360-601-20	BOLT,SEMS	*	2	2				
19	V360-260-006-00	NUT/M6	*	2	2				
20	1725-102-001-00	HOSE/RADIATOR/UPPER	*	1	1				
21	1705-102-016-00	HOSE/RADIATOR/LOWER	*	1	1				
22	J061-230-038-00	CLAMP/WIRE/30-38	*	2	2				
23	J061-236-044-00	CLAMP/WIRE/36-44	*	2	2				
24	1728-102-220-00	HOSE/290 ASSY	*	1	1				
25	1728-102-230-00	HOSE/450 ASSY	*	1	1				

FIG. 2 RADIATOR SYSTEM

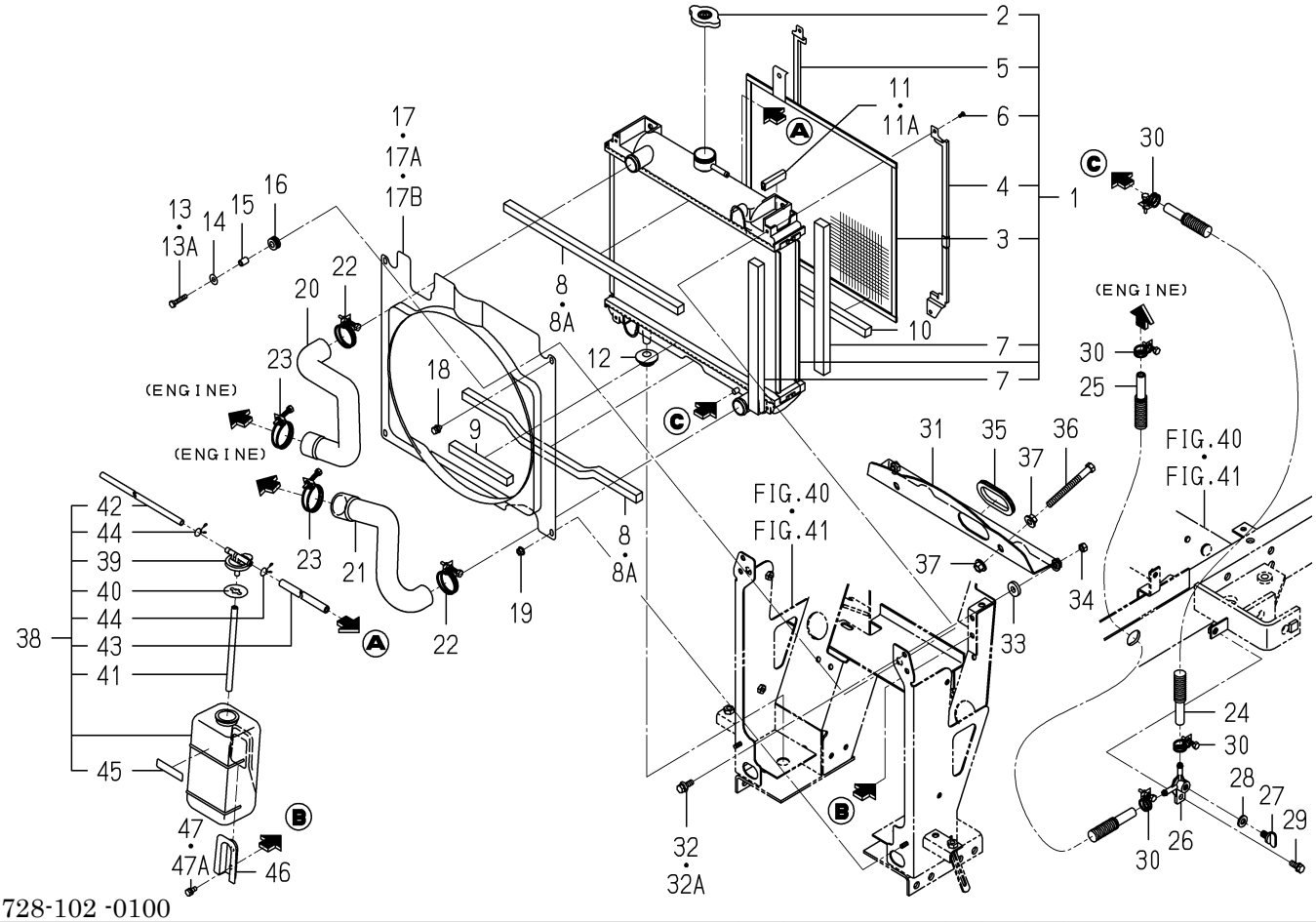

1728-102 -0100

KEY	PART CODE	DESCRIPTION	SPC	TYPE OF MODEL SXG19	TYPE OF MODEL SXG22	ITC	COL	GRP	REMARKS
26	1560-104-010-40	CONNECTOR	*	1	1				
27	1424-101-203-00	PLUG	*	1	1				
28	1424-101-204-00	PACKING	*	1	1				
29	V211-360-802-00	BOLT/SP	*	1	1				
30	J061-210-015-00	CLAMP/WIRE/10-15	*	4	4				
31	1728-102-200-00	PANEL/RADIATOR COMP	*	1	1				
32	V201-260-802-50	BOLT/M 8X25	*	2 -9113	2 -3049				
32A	V231-360-802-50	FLANGEBOLT	*	2 9114-	2 3050-				
33	1423-616-004-00	CUSHION/RUBBER/10X25	*	2	2				
34	V304-260-008-00	NUT	*	2	2				
35	1724-102-012-00	TRIM/188	*	1	1				
36	V201-261-010-00	BOLT/M10X100	*	2	2				
37	V363-260-010-00	NUT/M10	*	4	4				
38	1705-102-240-20	RESERVETANK ASSY	*	1	1				
39	6221-408-008-00	CAP	*	1	1				
40	6221-408-009-00	PACKING	*	1	1				
41	6221-408-010-00	HOSE/RUBBER	*	1	1				
42	1705-102-251-10	PIPE	*	1	1				
43	1705-102-252-20	HOSE/RUBBER	*	1	1				
44	6221-408-013-00	CLAMP	*	2	2				
45	6221-408-007-00	PLATE/CAUTION	*	1	1				
46	6221-408-003-00	BRACKET/RESERVETANK	*	1	1				
47	V210-260-601-60	BOLT/S	*	2 -9113	2 -3049				
47A	V230-360-601-20	FLANGEBOLT	*	2 9114-	2 3050-				

FIG. 3 MUFFLER SYSTEM

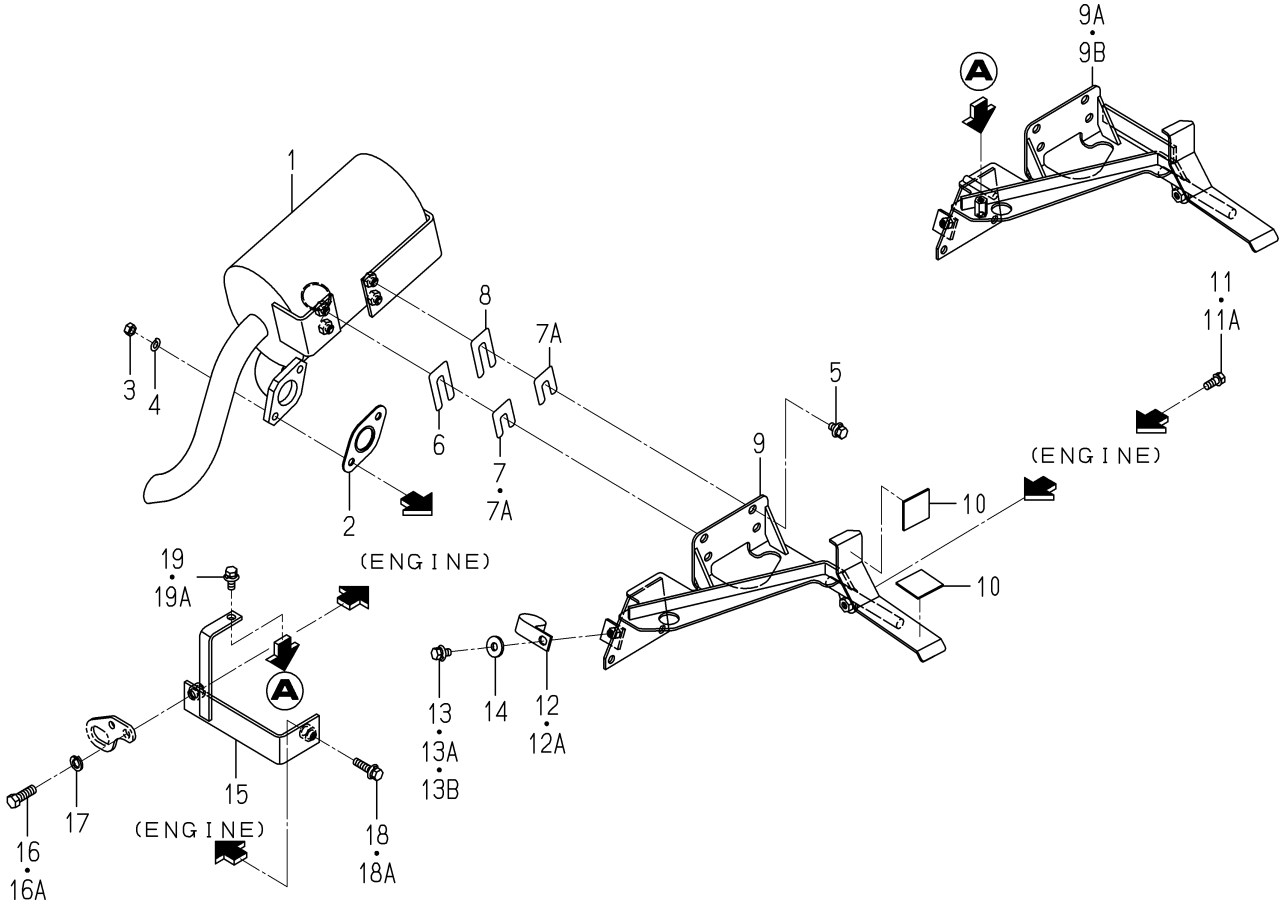

1739-103 -0100

KEY	PART CODE	DESCRIPTION	SPC	TYPE OF MODEL SXG19	TYPE OF MODEL SXG22	ITC	COL	GRP	REMARKS
1	1739-103-200-00	MUFFLER COMP	*	1	1				
2	3659-301-001-00	GASKET	*	1	1				
3	V304-700-008-00	NUT	*	2	2				
4	V401-700-008-00	WASHER/LOCK	*	2	2				
5	V211-360-801-60	BOLT,SEMS (SP)	*	4	4				
6	1725-103-001-00	SHIM/0.6/A	*	1 -5651	1 -1947				
7	1725-103-002-00	SHIM/0.6/B	*	1 -5485	1 -1869				
7A	1725-103-002-00	SHIM/0.6/B	*	2 5486-	2 1870-				
8	1725-103-003-00	SHIM/1.2	*	1 -5651	1 -1947				
9	1739-103-210-00	BRACKET/MUFFLER/CLEA	*	1 -5396	1 -1820				
9A	1739-103-210-10	BRACKET/MUFFLER/CLEA	*	1 -10567	1 -3461	1			
9B	1739-103-210-20	BRACKET/MUFFLER/CLEA	*	1 10568-	1 3462-	1			
10	1427-111-229-00	CUSHION,RUBBER	*	2	2				
11	V211-260-802-00	BOLT/S	*	1 -9113	1 -3049				
11A	V231-360-801-60	FLANGEBOLT	*	1 9114-	1 3050-				
12	1672-103-001-00	CLAMP/32	*	1 -5396	1 -1820				
12A	2515-103-002-10	CLAMP/32	*	1 5397-	1 1821-				
13	V211-360-801-60	BOLT,SEMS (SP)	*	1 -9113	1 -3049				
13A	V211-360-802-00	BOLT/SP	*	1 -10567	1 -3461				
13B	3650-831-004-00	BOLT	*	1 10568-	1 3462-				
14	4101-102-038-00	WASHER/24X9X3.2	*	1 -10567	1 -3461				
15	1739-103-220-00	BRACKET/FRONT COMP	*	1 5397-	1 1821-				
16	V203-361-003-00	BOLT	*	1 -5485	1 -1869				
16A	V203-361-003-50	BOLT	*	1 5486-	1 1870-				
17	V401-160-010-00	WASHER,SP/M10	*	1	1				
18	V211-660-803-50	BOLT/SP	*	1 -5485	1 -1869				
18A	V211-560-803-50	BOLT/S	*	1 5486-	1 1870-				
19	V211-360-802-00	BOLT/SP	*	1 -9113	1 -3049				
19A	V231-360-801-60	FLANGEBOLT	*	1 9114-	1 3050-				

FIG. 4 CLEANER(AIR) SYSTEM

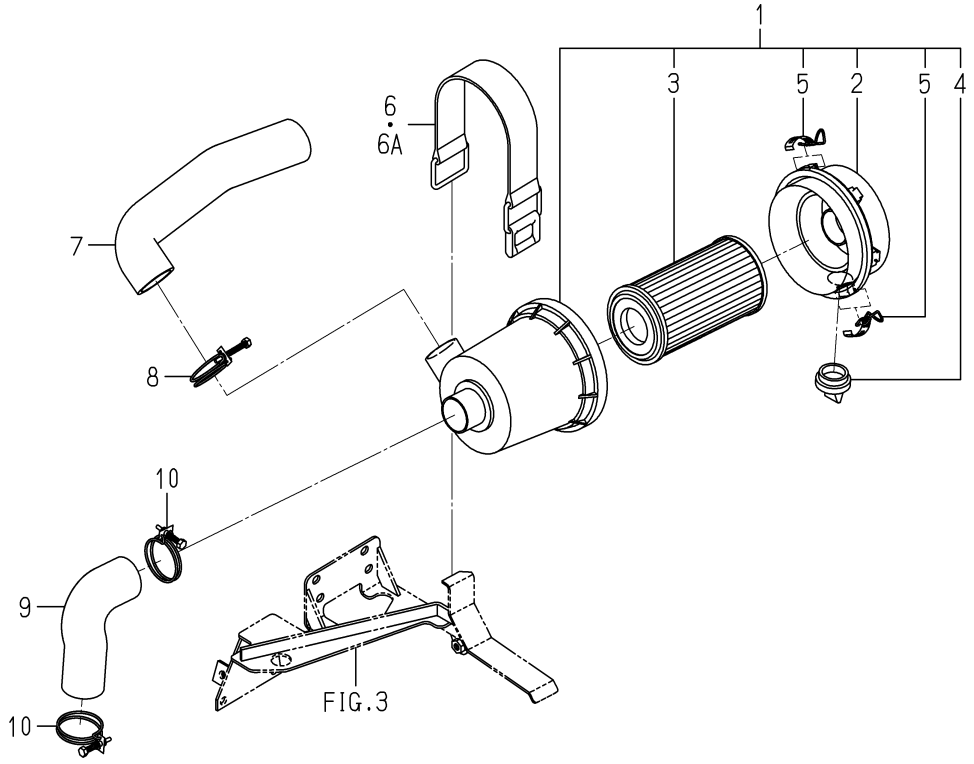

1728-104 -0100

KEY	PART CODE	DESCRIPTION	SPC	TYPE OF MODEL SXG19	TYPE OF MODEL SXG22	ITC	COL	GRP	REMARKS
1	1728-104-210-00	CLEANER/AIR ASSY	*	1	1				
2	1675-104-211-00	COVER ASSY	*	1	1				
3	1675-104-213-00	ELEMENT ASSY	*	1	1				
4	1544-104-205-00	VALVE	*	1	1				
5	1650-104-201-00	CLIP	*	2	2				
6	1614-104-001-00	BAND/CLEANER	*	1 -6291	1 -2088				
6A	1614-104-001-10	BAND/CLEANER	*	1 6292-	1 2089-	1			
7	1724-104-001-00	HOSE/CLEANER/INLET	*	1	1				
8	J061-247-055-00	CLAMP/WIRE/47-55	*	1	1				
9	1705-104-002-00	HOSE/CLEANER/OUTLET	*	1	1				
10	J061-247-055-00	CLAMP/WIRE/47-55	*	2	2				

FIG. 5 PUMP(FUEL) SYSTEM

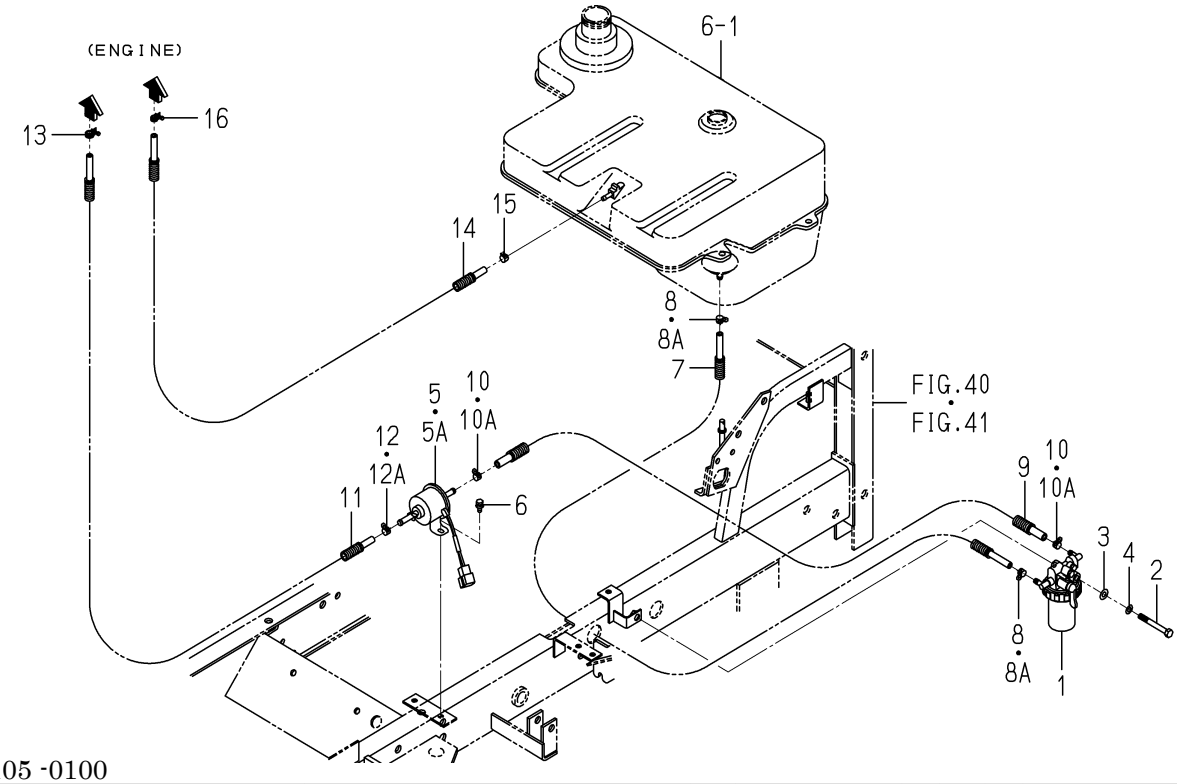

1728-105 -0100

KEY	PART CODE	DESCRIPTION	SPC	TYPE OF MODEL SXG19	TYPE OF MODEL SXG22	ITC	COL	GRP	REMARKS
1	1725-105-220-00	FILTER/FUEL ASSY	*	1	1				FIG 079
2	V201-260-806-50	BOLT/M 8X65	*	1	1				
3	V401-160-008-00	WASHER,SP/M 8	*	1	1				
4	V411-260-008-00	WASHER,PL/M 8	*	1	1				
5	3805-311-210-10	PUMP/FUEL ASSY	*	1 -1751	1 -624				
5A	3829-311-200-00	PUMP/FUEL ASSY	*	1 1752-	1 625-				
6	V210-360-601-60	BOLT(SP)/M6X16	*	2	2				
7	1728-105-240-00	HOSE/07X12X700 ASSY	*	1	1				
8	1650-111-034-00	CLIP/HOSE/11-13	*	2 -9925	2 -3248				
8A	J062-119-126-00	CLIP/HOSE/11.9-12.6	*	2 9926-	2 3249-				
9	1705-105-420-00	HOSE/07X12X450 ASSY	*	1	1				
10	1650-111-034-00	CLIP/HOSE/11-13	*	2 -9925	2 -3248				
10A	J062-119-126-00	CLIP/HOSE/11.9-12.6	*	2 9926-	2 3249-				
11	1728-105-240-00	HOSE/07X12X700 ASSY	*	1	1				
12	1650-111-034-00	CLIP/HOSE/11-13	*	1 -9925	1 -3248				
12A	J062-119-126-00	CLIP/HOSE/11.9-12.6	*	1 9926-	1 3249-				
13	J061-211-013-00	CLAMP/WIRE/11-13	*	1	1				
14	1728-105-230-00	HOSE/06X10X1650 ASSY	*	1	1				
15	J062-104-111-00	CLIP/HOSE/10.4-11.1	*	1	1				
16	J061-209-011-00	CLAMP/WIRE/09-11	*	1	1				

FIG. 6 TANK(FUEL) SYSTEM

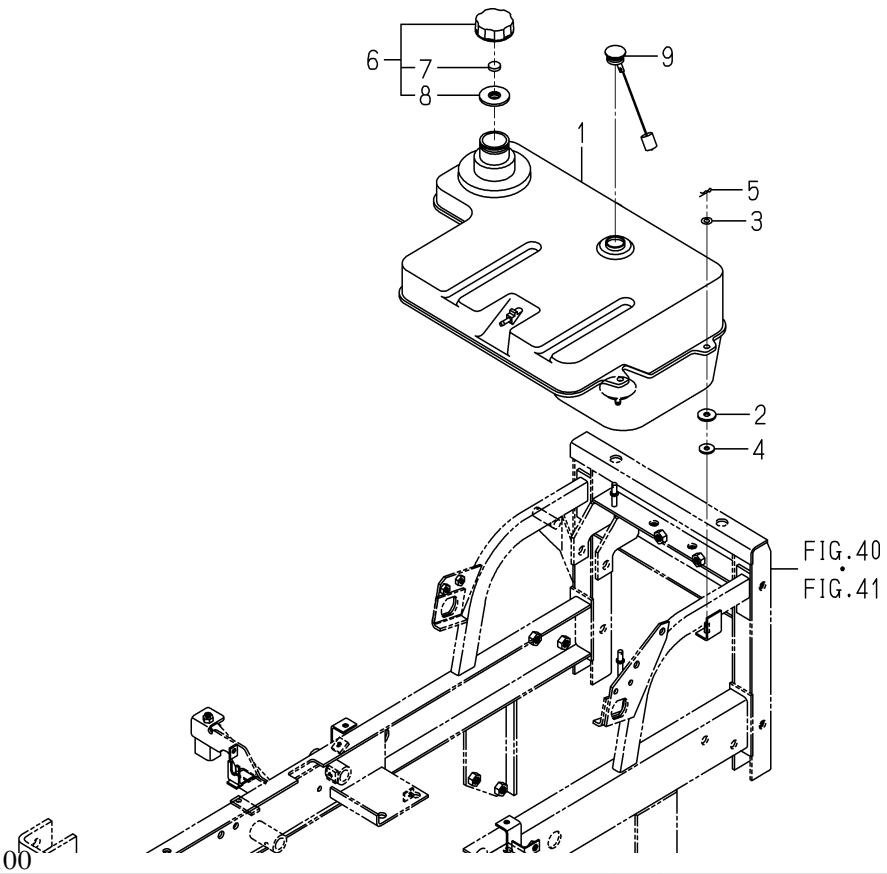

1728-111 -0100

KEY	PART CODE	DESCRIPTION	SPC	TYPE OF MODEL SXG19	TYPE OF MODEL SXG22	ITC	COL	GRP	REMARKS
1	1728-111-001-00	TANK/FUEL	*	1	1				
2	1593-612-005-00	INSULATOR/10X30X03	*	3	3				
3	V411-260-008-00	WASHER,PL/M 8	*	3	3				
4	3560-201-015-00	WASHER,BINDING SHAFT	*	2	2				
5	V560-160-008-00	PIN/SNAP	*	3	3				
6	1593-612-220-10	CAP,TANK	*	1	1				
7	2706-501-003-00	BREATHER,TANK CAP	*	1	1				
8	2706-501-004-00	GASKET	*	1	1				
9	1593-612-230-00	GAUGE,FUEL	*	1	1				

FIG. 7 BATTERY SYSTEM

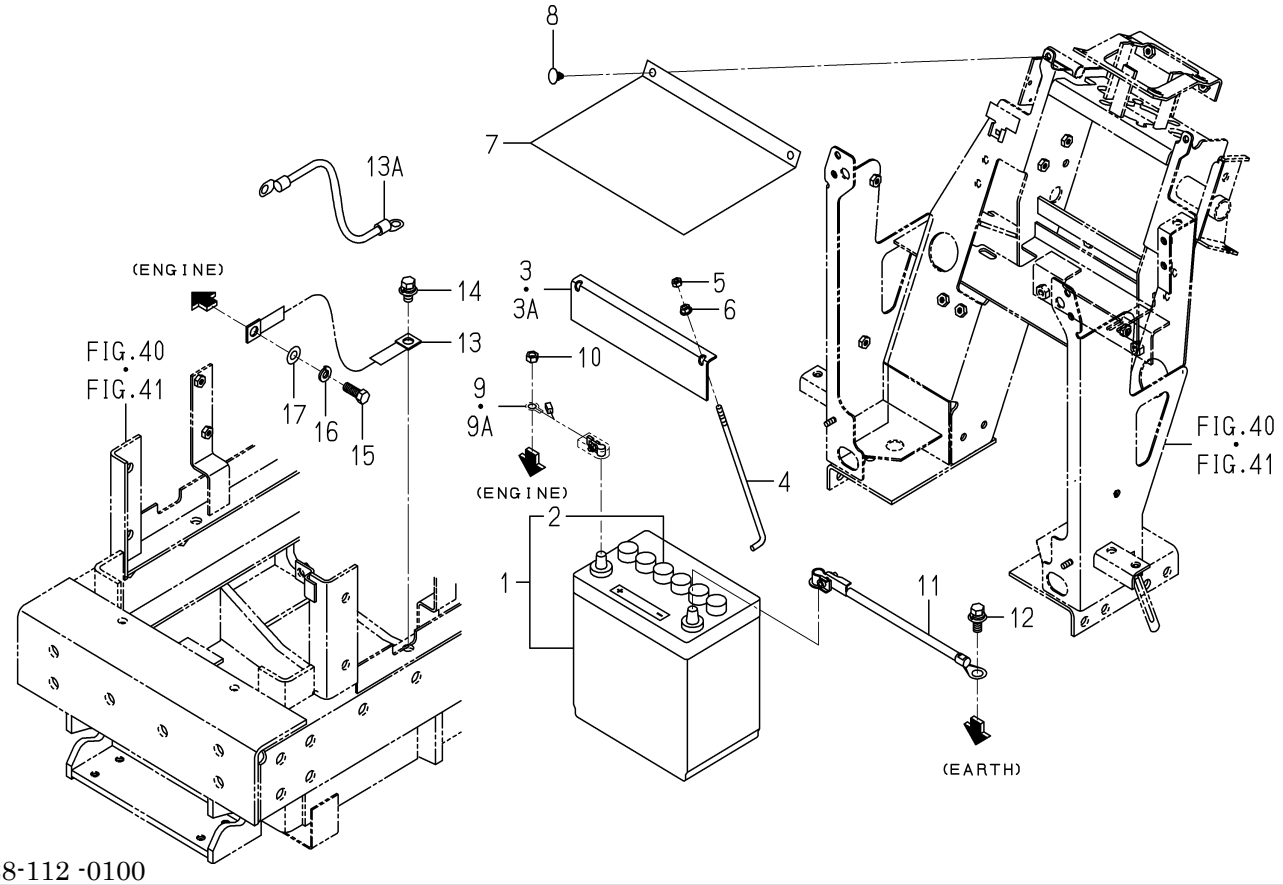

1728-112 -0100

KEY	PART CODE	DESCRIPTION	SPC	TYPE OF MODEL SXG19	TYPE OF MODEL SXG22	ITC	COL	GRP	REMARKS
1	1672-112-240-00	BATTERY/38B20R ASSY	*	1	1				
2	1427-621-002-10	CAP,BATTERY	*	6	6				
3	2512-650-002-00	BATTERY CAP	*	1 -2700	1 -846				
3A	2512-650-002-10	BATTERY CAP	*	1 2701-	1 847-	1			
4	1675-112-002-00	BOLT/BATTERY	*	2	2				
5	V301-260-006-00	NUT/M 6	*	2	2				
6	V360-260-006-00	NUT/M6	*	2	2				
7	1728-112-002-00	COVER/BATTERY	*	1	1				
8	1527-604-002-00	CLIP(B)	*	2	2				
9	1728-112-200-00	HARNESS/BATTERY ASSY	*	1 -1336	1 -579				
9A	1728-112-200-10	HARNESS/BATTERY ASSY	*	1 1337-	1 580-	1			
10	V304-260-008-00	NUT	*	1	1				
11	1728-112-230-00	CABLE/EARTH ASSY	*	1	1				
12	V211-361-002-50	BOLT/SP	*	1	1				
13	3626-276-003-00	CABLE,WIRE	*	1 -3302	1 -1072				
13A	3623-263-001-00	WIRE,LEAD	*	1 3303-	1 1073-				
14	V211-361-002-00	BOLT,SEMS	*	1	1				
15	V203-461-002-00	BOLT/M10X1.25X20	*	1	1				
16	V401-160-010-00	WASHER,SP/M10	*	1	1				
17	V411-260-010-00	WASHER/M10	*	1	1				

FIG. 8 LEVER(ACCELERATOR) SYSTEM

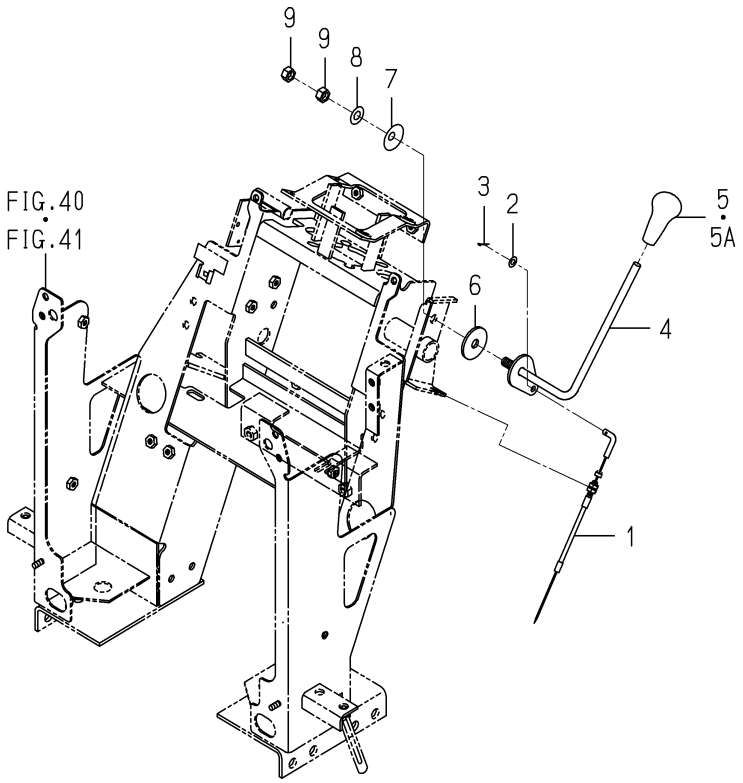

1728-117 -0100

KEY	PART CODE	DESCRIPTION	SPC	TYPE OF MODEL SXG19	TYPE OF MODEL SXG22	ITC	COL	GRP	REMARKS
1	1728-117-210-00	CABLE/ACCELERATOR	*	1	1				
2	V411-260-006-00	WASHER / M6	*	1	1				
3	V500-162-001-00	PIN,SPLIT/2 X10	*	1	1				
4	1728-117-200-00	LEVER/ACCELERATOR	*	1	1				
5	1725-117-001-00	GRIP/09X65/OR	*	1 -1406	1 -579				
5A	1728-117-001-00	GRIP/07X65/OR	*	1 1407-	1 580-				
6	1600-117-002-00	LINING/11X40X03	*	1	1				
7	1593-117-003-10	SPRING,DISK	*	1	1				
8	V411-260-010-00	WASHER/M10	*	1	1				
9	V304-260-010-00	NUT	*	2	2				

FIG. 9 SHAFT(INPUT) SYSTEM

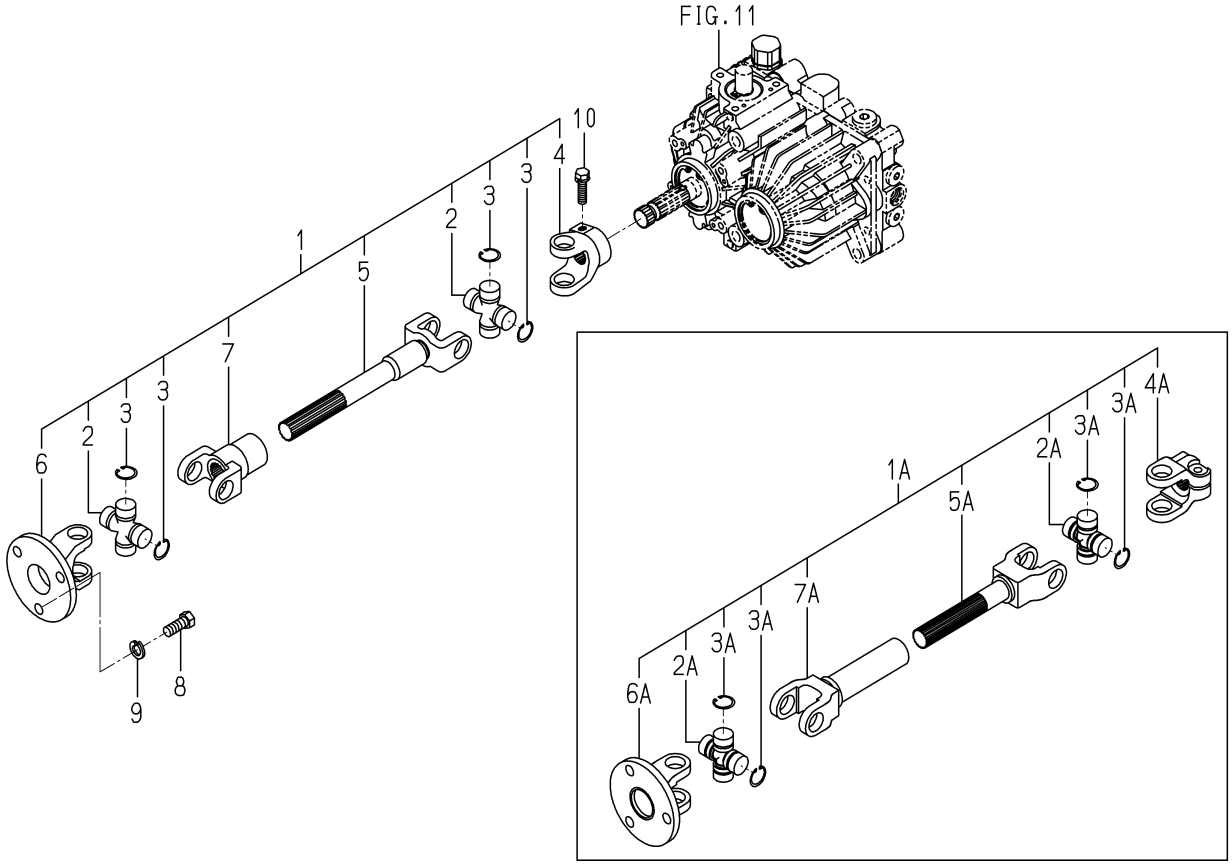

1728-120 -0100

KEY	PART CODE	DESCRIPTION	SPC	TYPE OF MODEL SXG19	TYPE OF MODEL SXG22	ITC	COL	GRP	REMARKS
1	1728-120-200-00	JOINT/UMIVERSAL SET	*	1 -3574	1 -1151				
1A	1728-120-220-00	JOINT/UNIVERSAL SET	*	1 3575-	1 1152-				
2	1725-120-211-00	KIT/JOINT	*	2 -3574	2 -1151				
2A	1752-120-201-00	JOINT/UNIVERSAL ASSY	*	2 3575-	2 1152-				
3	1725-120-212-00	RING/SNAP	*	8 -3574	8 -1151				
3A	1728-120-221-00	FRANGE/YOKE	*	1 3575-	1 1152-				
4	1725-120-213-00	YOKE/CLAMP	*	1 -3574	1 -1151				
4A	1728-120-222-00	SLEEVE/YOKE	*	1 3575-	1 1152-				
5	1728-120-201-00	YOKE/SHAFT	*	1 -3574	1 -1151				
5A	1728-120-223-00	SHAFT/YOKE	*	1 3575-	1 1152-				
6	1725-120-215-00	YOKE/FLANGE	*	1 -3574	1 -1151				
6A	1752-120-205-00	FLANGE/YOKE	*	1 3575-	1 1152-				
7	1728-120-202-00	YOKE/SLEEVE	*	1 -3574	1 -1151				
7A	1725-120-216-00	YOKE/SLEEVE	*	1 -3574	1 -1151				
8	V203-361-002-50	BOLT	*	3	3				
9	V401-160-010-00	WASHER,SP/M10	*	3	3				
10	V211-560-803-00	BOLT/M8X30	*	1	1				

FIG. 10 CASE(TRANSMISSION) SYSTEM

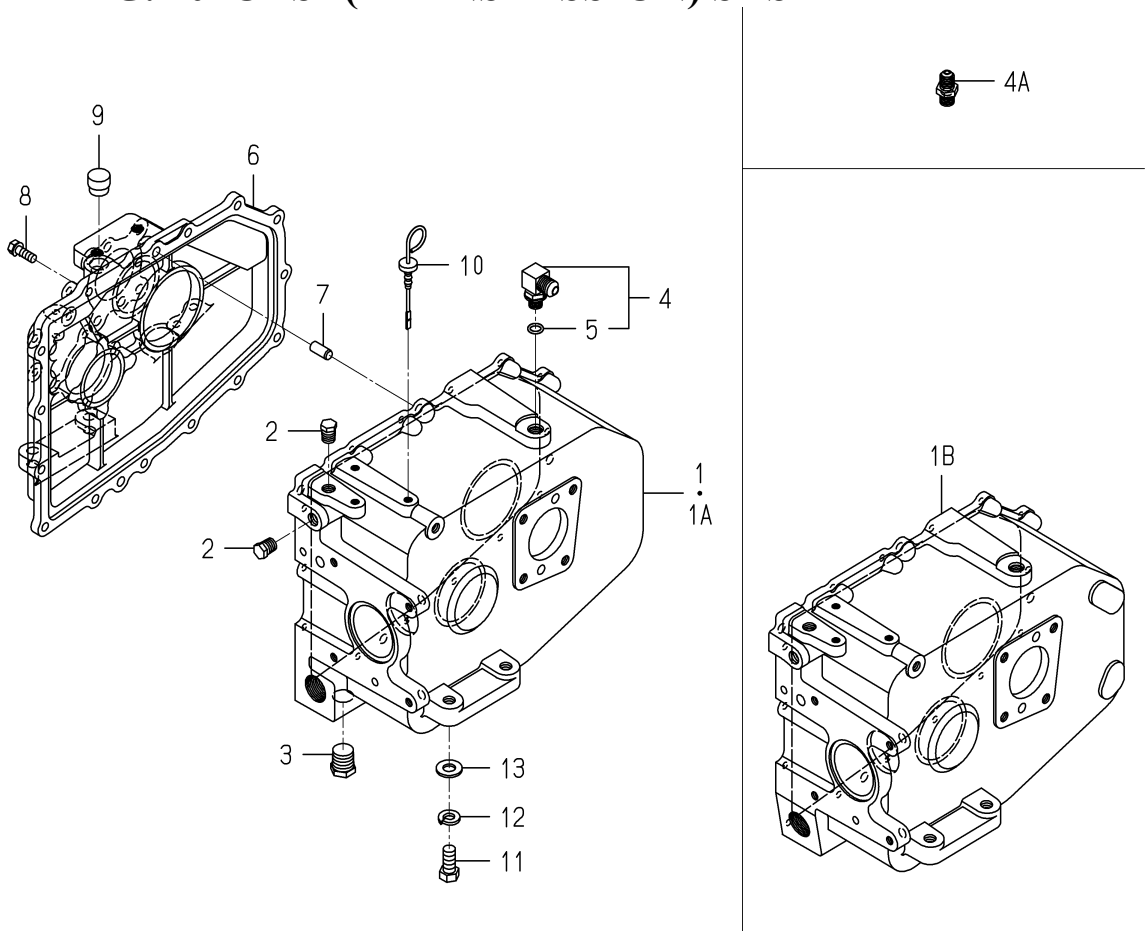

1728-201 -0100

KEY	PART CODE	DESCRIPTION	SPC	TYPE OF MODEL SXG19	TYPE OF MODEL SXG22	ITC	COL	GRP	REMARKS
1	1728-201-001-30	CASE/TRANSMISSION/LH	*	1 -426	1 -88				
1A	1728-201-001-40	CASE/TRANSMISSION/LH	*	1 -6356	1 -2121	1			
1B	1728-201-001-50	CASE/TRANSMISSION/LH	*	1 6357-	1 2122-	3			
2	V782-160-000-4T	PLUG/SCREW/SEAL	*	2	2				
3	V782-160-000-8T	PLUG/SCREW/SEAL	*	1	1				
4	1656-509-310-10	ADAPTER/L/PF1/4 ASSY	*	1 -4766	1 -1600				
4A	3817-374-330-00	ADAPTOR/G1/4BM14ASSY	*	1 4767-	1 1601-				
5	V720-112-401-10	RING/O	*	1 -4766	1 -1600				
6	1728-201-002-00	CASE/TRANSMISSION/RH	*	1	1				
7	V523-101-002-20	PIN	*	2	2				
8	V211-560-802-50	BOLT,SEMS/M8X25 7T	*	15	15				
9	2111-101-011-00	PLUG,OIL	*	1	1				
10	1728-201-003-00	GAUGE/OILLEVEL	*	1	1				
11	V201-361-202-50	BOLT/M12X25	*	4	4				
12	V401-160-012-00	WASHER,SP/M12	*	4	4				
13	V411-260-012-00	WASHER /M12	*	4	4				

FIG. 11 HST SYSTEM

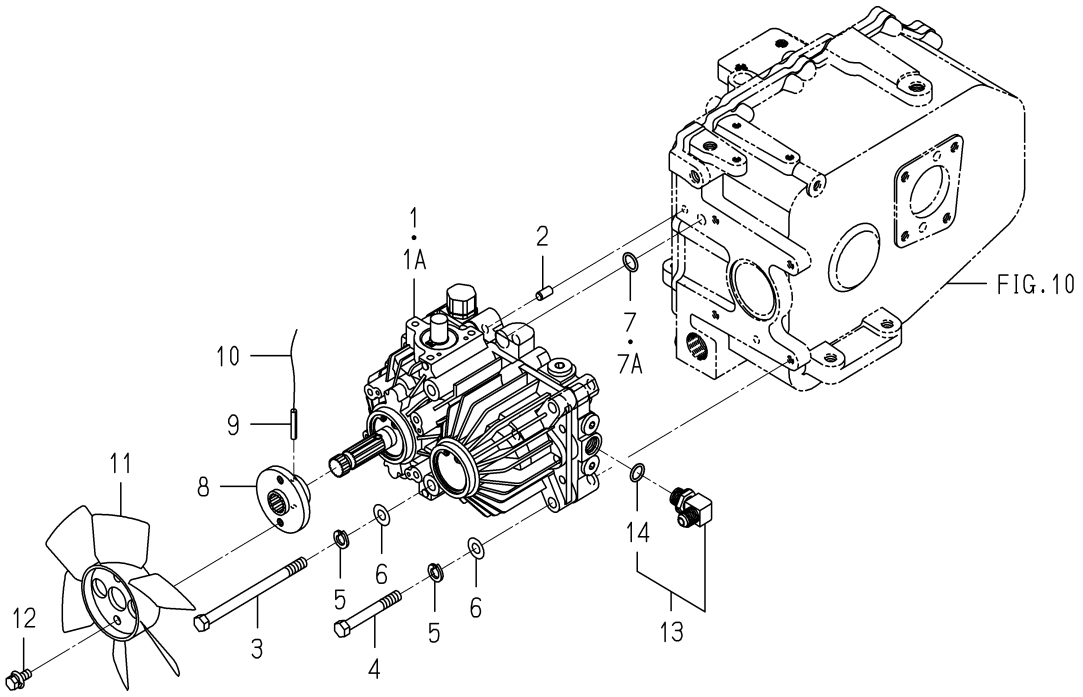

1728-202 -0100

KEY	PART CODE	DESCRIPTION	SPC	TYPE OF MODEL SXG19	TYPE OF MODEL SXG22	ITC	COL	GRP	REMARKS
1	K510-005-000-00	HST(SXG/21) ASSY	*	1 -1653	1 -602				FIG 078
1A	K510-005-000-10	HST(SXG/21) ASSY	*	1 1654-	1 603-	1			FIG 078
2	V523-100-801-60	PIN	*	2	2				
3	V201-361-014-00	BOLT	*	2	2				
4	V201-361-007-50	BOLT	*	2	2				
5	V401-160-010-00	WASHER,SP/M10	*	4	4				
6	V411-260-010-00	WASHER/M10	*	4	4				
7	V720-102-401-50	O-RING/P15	*	1 -4902	1 -1642				
7A	V720-112-401-50	RING/O	*	1 4903-	1 1643-				
8	1725-210-001-00	HUB	*	1	1				
9	V580-140-503-20	PIN,SPRING/5 X32 W	*	1	1				
10		WIRE	*	1	1				
11	1725-210-002-00	FAN/HST	*	1	1				
12	V211-360-802-00	BOLT/SP	*	2	2				
13	3805-354-280-00	ADAPTOR/G3/8XM16ASSY	*	1	1				
14	V720-112-401-40	O-RING/P14	*	1	1				

FIG. 12 GEAR(INPUT) SYSTEM(EXCEPT G TYPE)

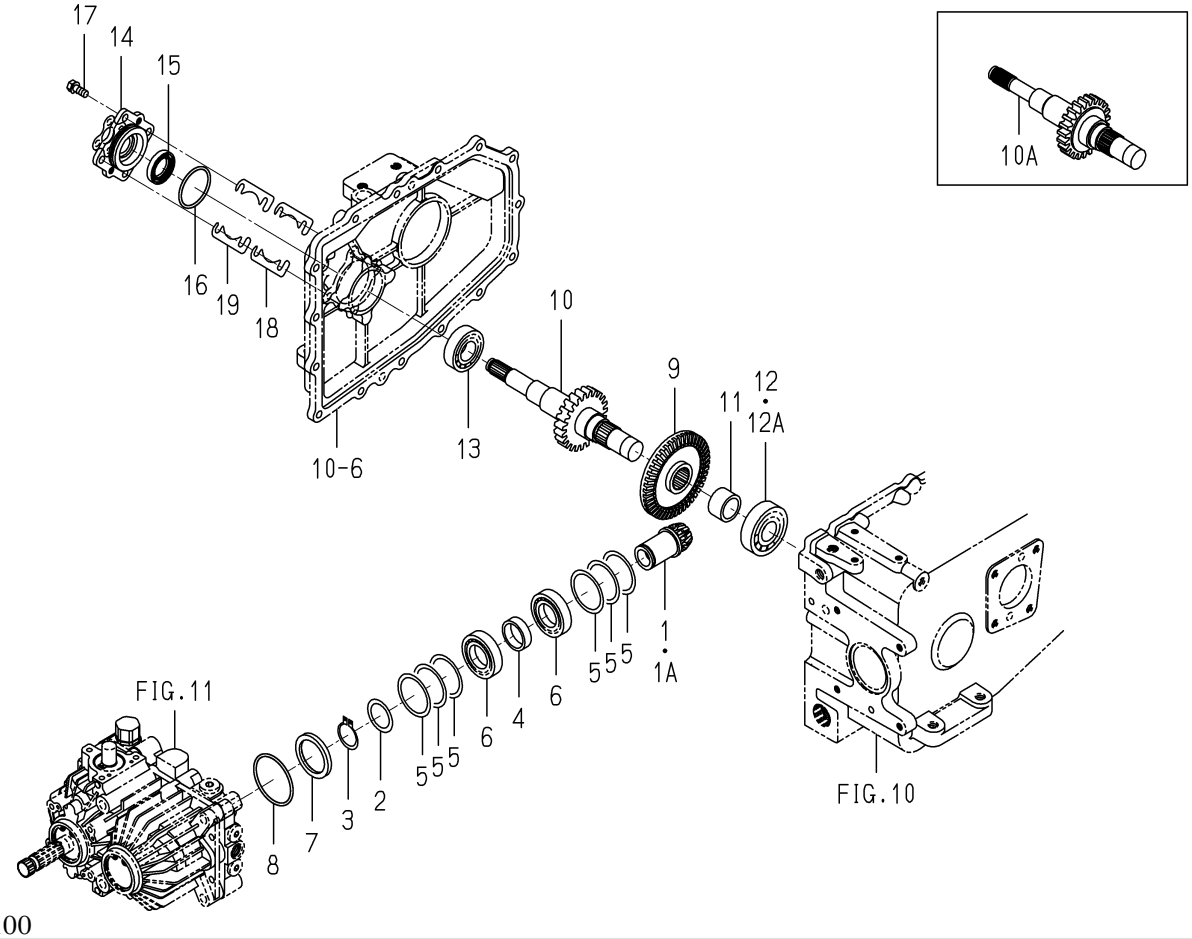

1728-203 -0100

KEY	PART CODE	DESCRIPTION	SPC	TYPE OF MODEL SXG19	TYPE OF MODEL SXG22	ITC	COL	GRP	REMARKS
1	1728-203-210-00	GEAR/INPUT/12 COMP	*	1 -1235	1 -574				
1A	1728-203-210-10	GEAR/INPUT/12 COMP	*	1 1236-	1 575-	1			
2	1480-207-011-00	WASHER/31X42X1	*	1	1				
3	V704-140-030-00	RING,SNAP/30 C	*	1	1				
4	1689-201-003-10	COLLAR/31X38X11	*	1	1				
5	8595-201-017-00	SHIM/0.2	*	6	6				
6	V600-110-600-60	BEARING,RB 6006	*	2	2				
7	1728-203-001-00	HUB/HST	*	1	1				
8	V721-103-106-00	O-RING/G60	*	1	1				
9	1728-203-003-00	GEAR/BEVEL/45	*	1	1				
10	1728-203-200-00	GEAR/SPUR/23 COMP	*	1 -7302	1 -2346				
10A	1728-203-006-00	GEAR/SPUR/23	*	1 7303-	1 2347-				
11	1728-203-002-00	COLLAR/34X26X21	*	1	1				
12	V600-110-630-50	BEARING,RB/6305	*	1 -7980	1 -2682				
12A	1729-214-049-00	BEARING/BALL	*	1 7981-	1 2683-				
13	V600-110-620-50	BEARING,RB/6205	*	1	1				
14	1689-202-002-00	METAL/BRAKE	*	1	1				
15	V744-125-400-70	SEAL,OIL/TC25407	*	1	1				
16	V721-103-105-00	O-RING/G50	*	1	1				
17	V211-260-802-00	BOLT/S	*	4	4				
18	1728-203-004-00	SHIM/0.2	*	2	2				
19	1728-203-005-00	SHIM/0.6	*	2	2				

FIG. 13 GEAR(INPUT) SYSTEM(G TYPE)

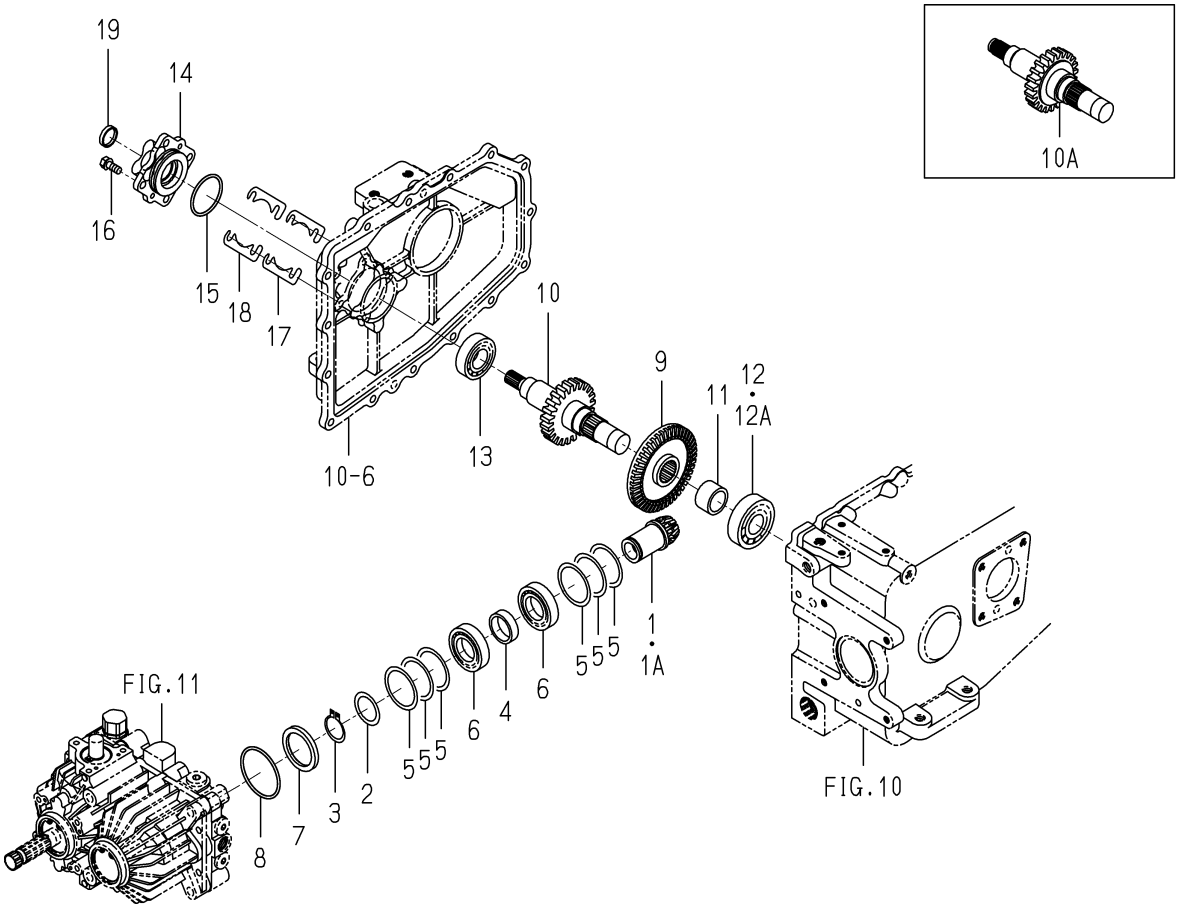

1728-203A-0100

KEY	PART CODE	DESCRIPTION	SPC	TYPE OF MODEL SXG19	TYPE OF MODEL SXG22	ITC	COL	GRP	REMARKS
1	1728-203-210-00	GEAR/INPUT/12 COMP	*	1 -1235	1 -574				
1A	1728-203-210-10	GEAR/INPUT/12 COMP	*	1 1236-	1 575-	1			
2	1480-207-011-00	WASHER/31X42X1	*	1	1				
3	V704-140-030-00	RING,SNAP/30 C	*	1	1				
4	1689-201-003-10	COLLAR/31X38X11	*	1	1				
5	8595-201-017-00	SHIM/0.2	*	6	6				
6	V600-110-600-60	BEARING,RB 6006	*	2	2				
7	1728-203-001-00	HUB/HST	*	1	1				
8	V721-103-106-00	O-RING/G60	*	1	1				
9	1728-203-003-00	GEAR/BEVEL/45	*	1	1				
10	1728-203-500-00	GEAR/SPUR/23/G COMP	*	1 -7517	1 -2398				
10A	1728-203-052-00	GEAR/SPUR/23	*	1 7518-	1 2399-				
11	1728-203-002-00	COLLAR/34X26X21	*	1	1				
12	V600-110-630-50	BEARING,RB/6305	*	1 -7879	1 -2683				
12A	1729-214-049-00	BEARING/BALL	*	1 7880-	1 2684-				
13	V600-110-620-50	BEARING,RB/6205	*	1	1				
14	1728-203-051-00	METAL/G	*	1	1				
15	V721-103-105-00	O-RING/G50	*	1	1				
16	V211-260-802-00	BOLT/S	*	4	4				
17	1728-203-004-00	SHIM/0.2	*	2	2				
18	1728-203-005-00	SHIM/0.6	*	2	2				
19	1614-241-004-00	PLUG/SEAL/25	*	1	1				

FIG. 14 GEAR(DIFFERENTIAL) SYSTEM (EXCEPT G TYPE)

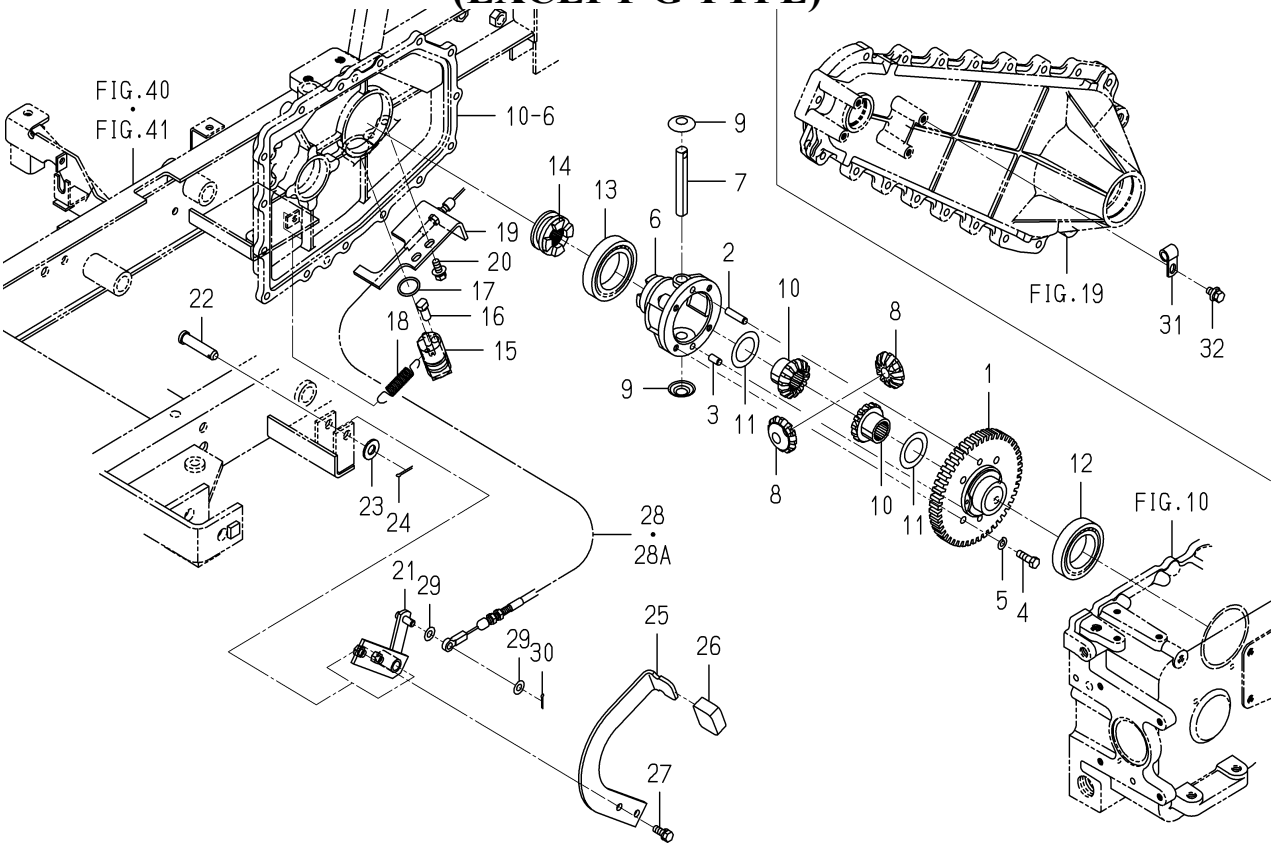

1728-204 -0100

KEY	PART CODE	DESCRIPTION	SPC	TYPE OF MODEL SXG19	TYPE OF MODEL SXG22	ITC	COL	GRP	REMARKS
1	1728-204-001-00	GEAR/SPUR/48	*	1	1				
2	1672-301-002-00	PIN	*	1	1				
3	V523-100-801-60	PIN	*	1	1				
4	1544-304-006-10	BOLT/M8X25	*	4	4				
5	V401-160-008-00	WASHER,SP/M 8	*	4	4				
6	1427-301-002-20	CASE,DIFF	*	1	1				
7	1444-411-006-00	SHAFT,DIFF. PINION	*	1	1				
8	1672-301-003-00	PINION/BEVEL/12	*	2	2				
9	1427-301-005-00	COLLAR,PINION THRUST	*	2	2				
10	1672-301-004-00	GEAR/BEVEL/14	*	2	2				
11	1427-301-007-00	COLLAR,THRUST	*	2	2				
12	V600-110-600-90	BEARING,RB/6009	*	1	1				
13	V600-110-601-00	BEARING,RB/6010	*	1	1				
14	1728-204-002-00	CLUTCH/DIFFLOCK	*	1	1				
15	1728-204-200-00	ARM/DIFF COMP	*	1	1				
16	1689-205-005-10	PIN/10X21	*	1	1				
17	V720-103-502-40	O-RING/P24	*	1	1				
18	1104-410-007-00	SPRING/HE074	*	1	1				
19	1728-204-003-00	STAY/DIFFCABLE	*	1	1				
20	V211-360-802-00	BOLT/SP	*	2	2				
21	1705-204-220-00	PEDAL/DIFF COMP	*	1	1				
22	7963-611-003-00	PIN/12X48	*	1	1				
23	V411-260-012-00	WASHER /M12	*	1	1				
24	V500-163-002-00	PIN,SPLIT/3 X20	*	1	1				
25	1705-204-003-00	PEDAL/DIFF	*	1	1				
26	1593-101-012-00	STOPPER	*	1	1				
27	V211-260-802-00	BOLT/S	*	2	2				
28	1728-204-210-00	CABLE/DIFF ASSY	*	1 -7423	1 -2376				
28A	1728-204-210-10	CABLE/DIFF ASSY	*	1 7424-4	1 2377-4	1			
29	V411-260-008-00	WASHER,PL/M 8	*						

FIG. 14 GEAR(DIFFERENTIAL) SYSTEM (EXCEPT G TYPE)

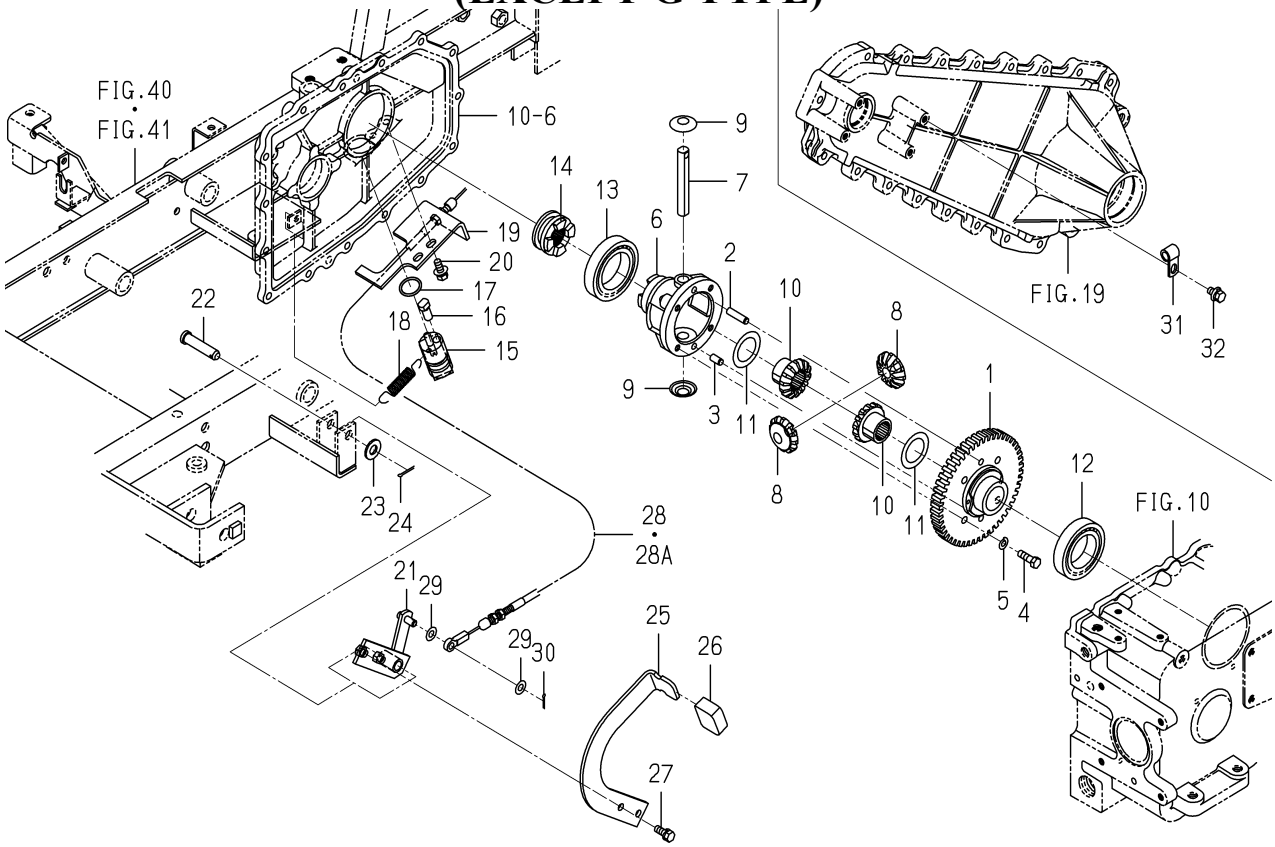

1728-204 -0100

KEY	PART CODE	DESCRIPTION	SPC	TYPE OF MODEL SXG19	TYPE OF MODEL SXG22	ITC	COL	GRP	REMARKS
30	V500-162-501-50	PIN,SPLIT/2.5X15	*	2	2				
31	1650-509-003-10	HOLDER/10	*	1	1				
32	V211-360-801-60	BOLT,SEMS (SP)	*	1	1				

FIG. 15 GEAR(DIFFERENTIAL) SYSTEM(G TYPE)

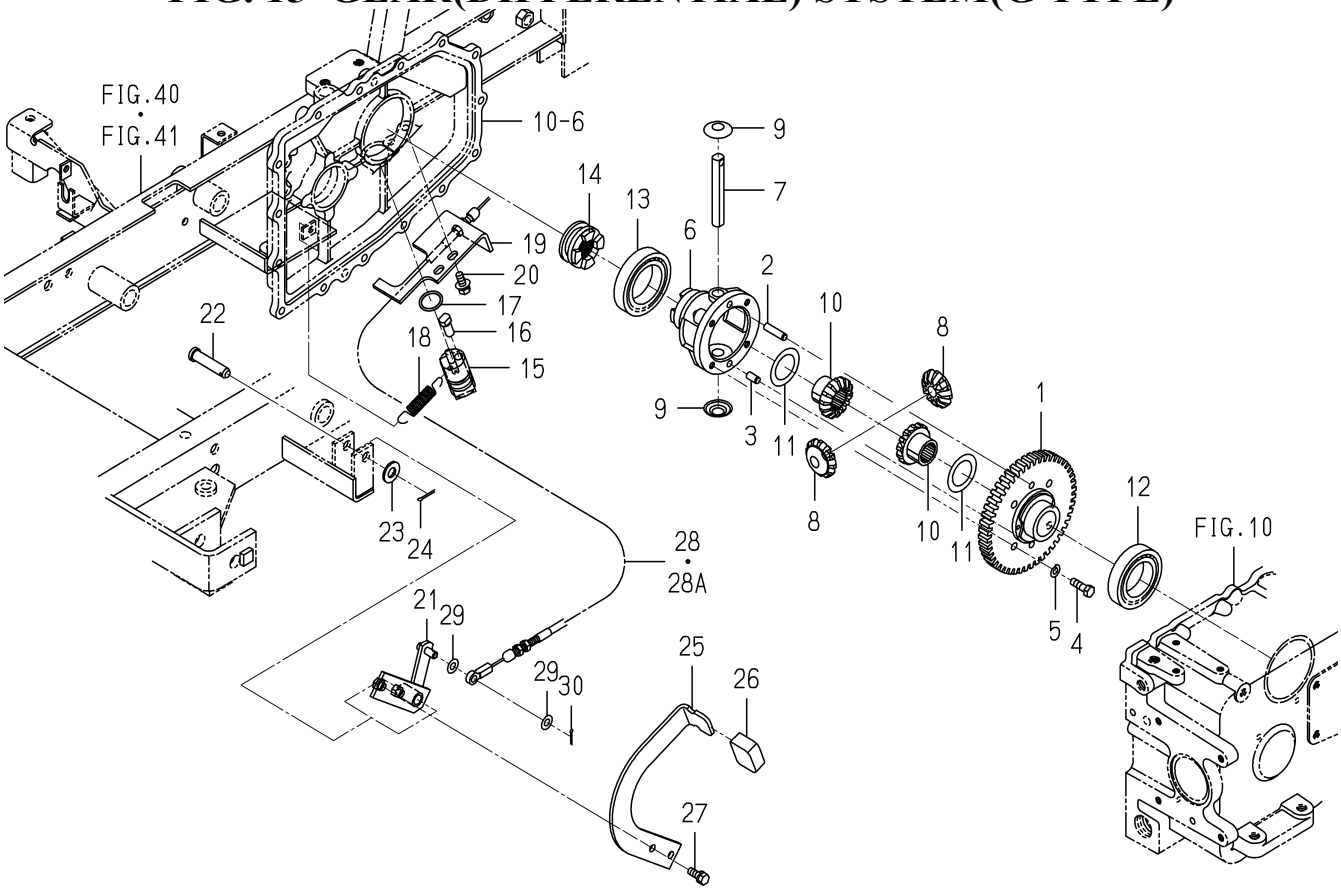

1728-204A-0100

KEY	PART CODE	DESCRIPTION	SPC	TYPE OF MODEL SXG19	TYPE OF MODEL SXG22	ITC	COL	GRP	REMARKS
1	1728-204-001-00	GEAR/SPUR/48	*	1	1				
2	1672-301-002-00	PIN	*	1	1				
3	V523-100-801-60	PIN	*	1	1				
4	1544-304-006-10	BOLT/M8X25	*	4	4				
5	V401-160-008-00	WASHER,SP/M 8	*	4	4				
6	1427-301-002-20	CASE,DIFF	*	1	1				
7	1444-411-006-00	SHAFT,DIFF. PINION	*	1	1				
8	1672-301-003-00	PINION/BEVEL/12	*	2	2				
9	1427-301-005-00	COLLAR,PINION THRUST	*	2	2				
10	1672-301-004-00	GEAR/BEVEL/14	*	2	2				
11	1427-301-007-00	COLLAR,THRUST	*	2	2				
12	V600-110-600-90	BEARING,RB/6009	*	1	1				
13	V600-110-601-00	BEARING,RB/6010	*	1	1				
14	1728-204-002-00	CLUTCH/DIFFLOCK	*	1	1				
15	1728-204-200-00	ARM/DIFF COMP	*	1	1				
16	1689-205-005-10	PIN/10X21	*	1	1				
17	V720-103-502-40	O-RING/P24	*	1	1				
18	1104-410-007-00	SPRING/HE074	*	1	1				
19	1728-204-003-00	STAY/DIFFCABLE	*	1	1				
20	V211-360-802-00	BOLT/SP	*	2	2				
21	1705-204-220-00	PEDAL/DIFF COMP	*	1	1				
22	7963-611-003-00	PIN/12X48	*	1	1				
23	V411-260-012-00	WASHER /M12	*	1	1				
24	V500-163-002-00	PIN,SPLIT/3 X20	*	1	1				
25	1705-204-003-00	PEDAL/DIFF	*	1	1				
26	1593-101-012-00	STOPPER	*	1	1				
27	V211-260-802-00	BOLT/S	*	2	2				
28	1728-204-210-00	CABLE/DIFF ASSY	*	1 -7423	1 -2376				
28A	1728-204-210-10	CABLE/DIFF ASSY	*	1 7424-4	1 2377-4	1			
29	V411-260-008-00	WASHER,PL/M 8	*						

FIG. 15 GEAR(DIFFERENTIAL) SYSTEM(G TYPE)

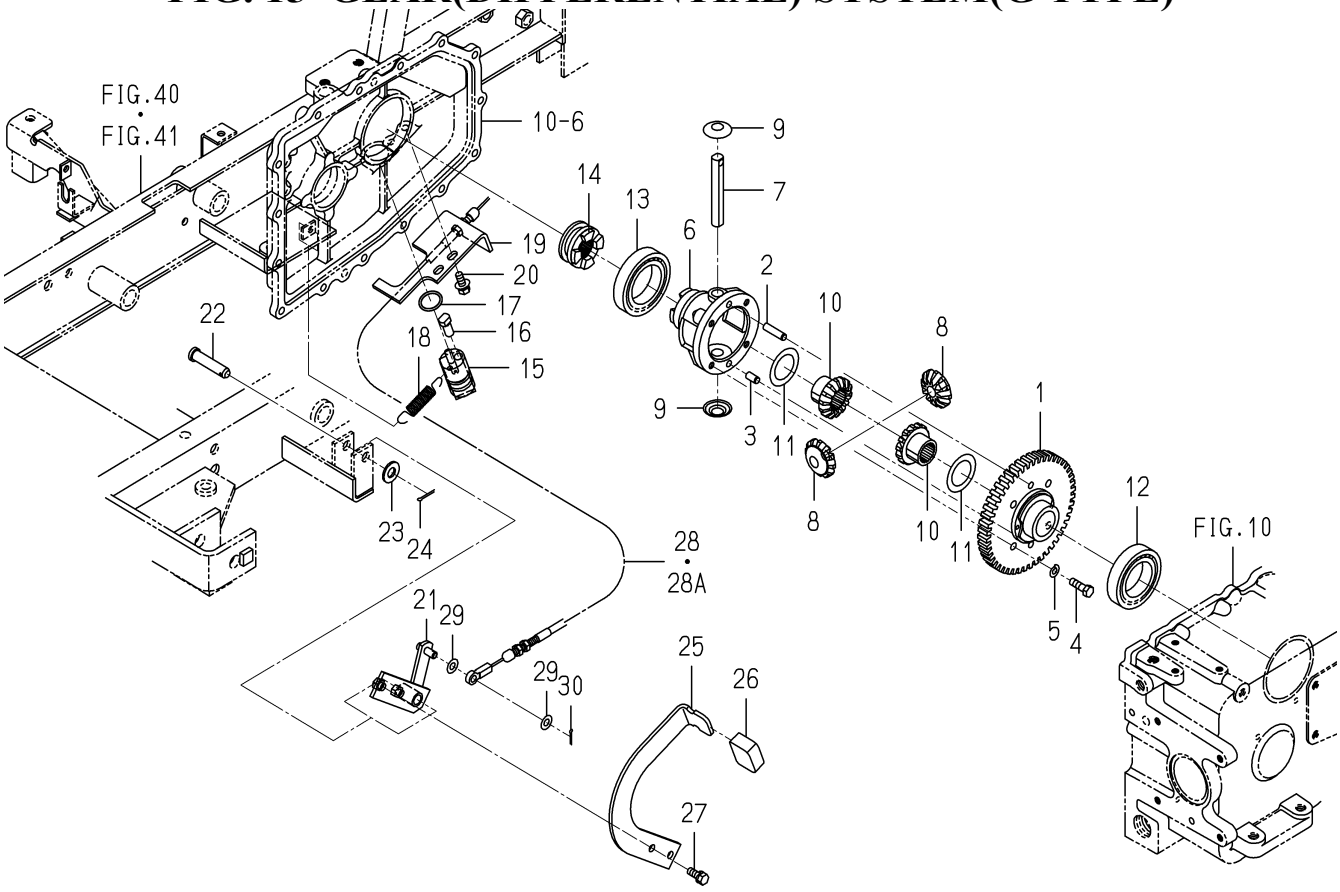

1728-204A-0100

KEY	PART CODE	DESCRIPTION	SPC	TYPE OF MODEL SXG19	TYPE OF MODEL SXG22	ITC	COL	GRP	REMARKS
30	V500-162-501-50	PIN,SPLIT/2.5X15	*	2	2				

FIG. 16 LEVER(UNLOAD/HST) SYSTEM

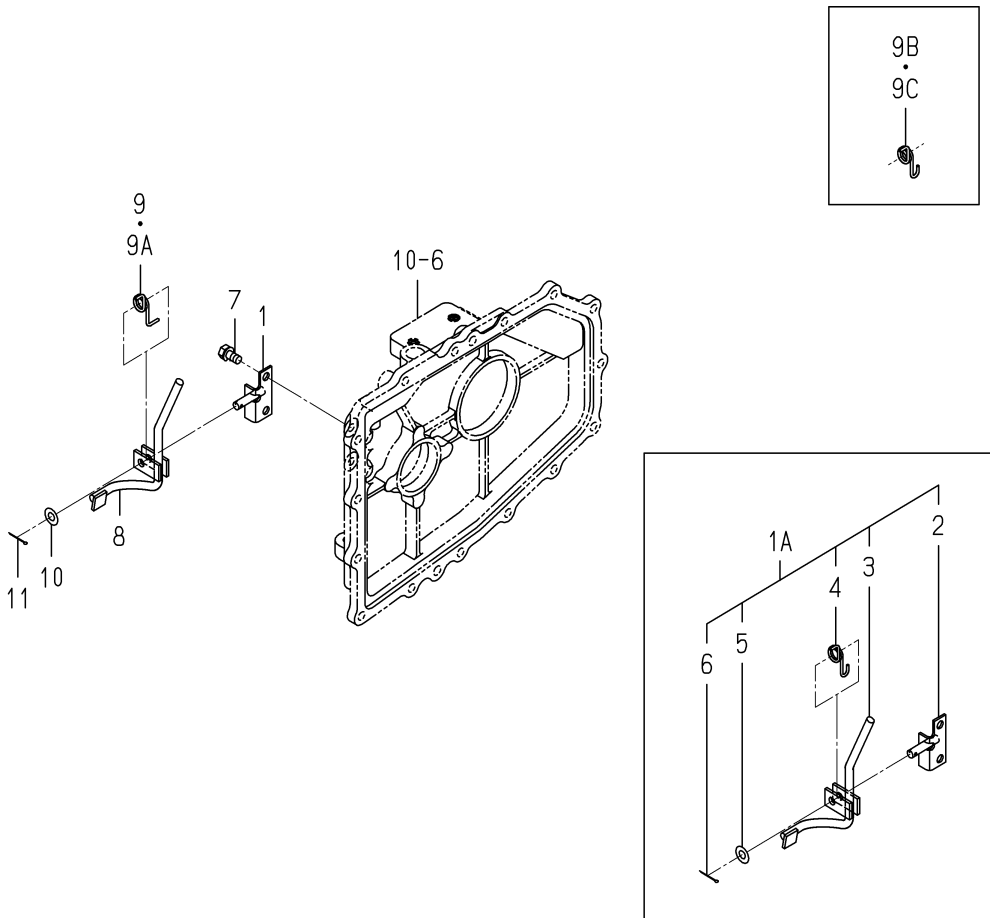

1728-208 -0100

KEY	PART CODE	DESCRIPTION	SPC	TYPE OF MODEL SXG19	TYPE OF MODEL SXG22	ITC	COL	GRP	REMARKS
1	1728-208-200-00	PIN/LEVER COMP	*	1 -9441	1 -3148				
1A	1728-208-220-00	LEVER/UNLOAD ASSY	*	1 9442-	1 3149-				
2	1728-208-230-00	PIN/LEVER COMP	*	1 9442-	1 3149-				
3	1728-208-240-00	LEVER/UNLOAD COMP	*	1 9442-	1 3149-				
4	1728-208-021-00	SPRING/HT014	*	1 9442-	1 3149-				
5	V411-260-008-00	WASHER,PL/M 8	*	1 9442-	1 3149-				
6	V500-162-502-00	PIN,SPLIT/2.5X20	*	1 9442-	1 3149-				
7	V211-260-801-60	BOLT,SEMS (S) M8X16	*	2	2				
8	1728-208-210-00	LEVER/UNLOAD COMP	*	1 -9441	1 -3148				
9	1728-208-001-00	SPRING/HT014	*	1 -220	1 -60				
9A	1728-208-001-10	SPRING/HT014	*	1 -521	1 -104	1			
9B	1728-208-001-20	SPRING/HT014	*	1 -4272	1 -1444	1			
9C	1728-208-001-30	SPRING/HT014	*	1 -9441	1 -3148	1			
10	V411-260-008-00	WASHER,PL/M 8	*	1 -9441	1 -3148				
11	V500-162-002-00	PIN,SPLIT/2 X20	*	1 -9441	1 -3148				

FIG. 17 LINK(HST) SYSTEM

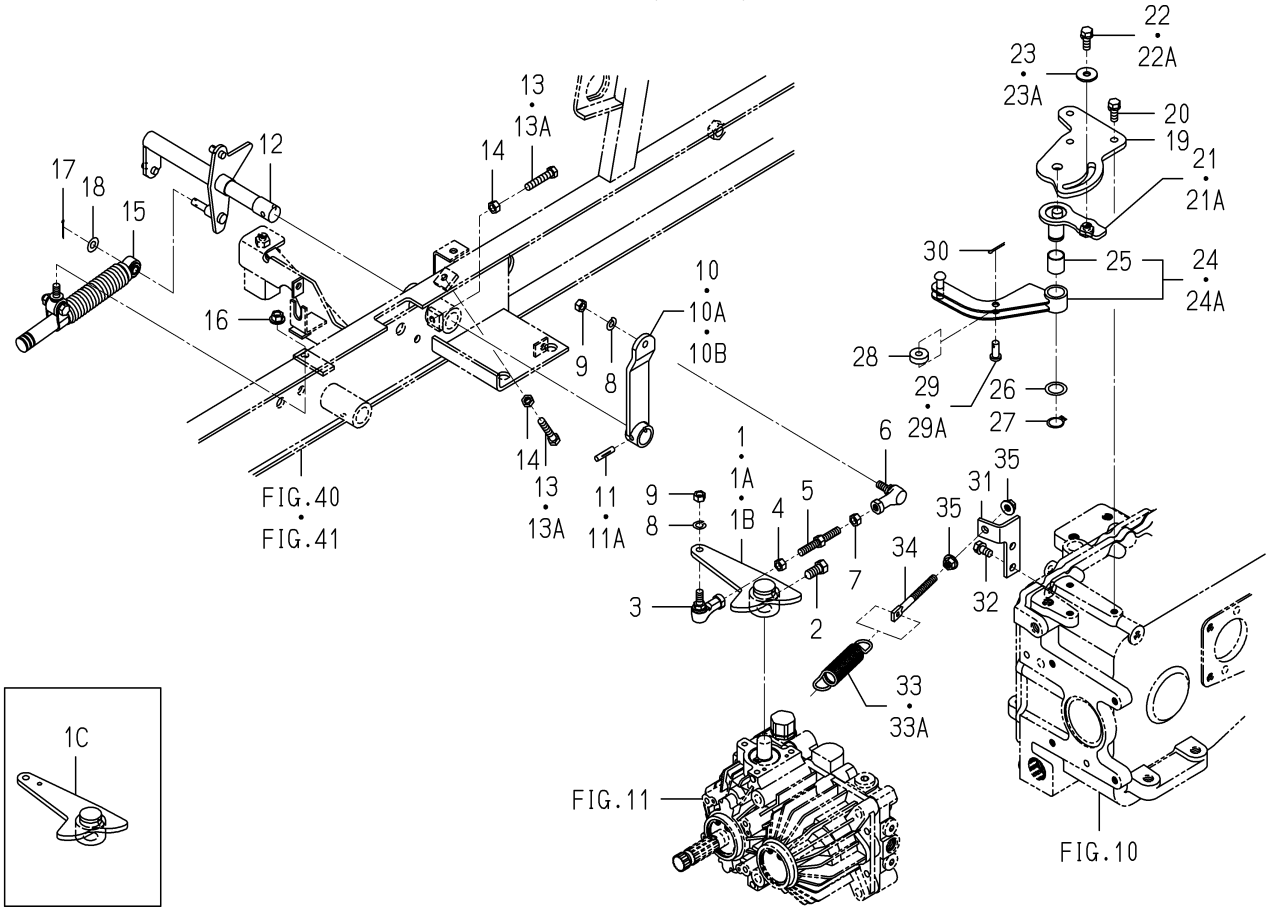

1728-271 -0100

KEY	PART CODE	DESCRIPTION	SPC	TYPE OF MODEL SXG19	TYPE OF MODEL SXG22	ITC	COL	GRP	REMARKS
1	1728-271-200-00	ARM/TRUNNION COMP	*	1 -1190	1 -489				
1A	1728-271-200-10	ARM/TRUNNION COMP	*	1 -4724	1 -1594	1			
1B	1728-271-200-20	ARM/TRUNNION COMP	*	1 -6291	1 -2088	1			
1C	1728-271-200-30	ARM/TRUNNION COMP	*	1 6292-	1 2089-	1			
2	1646-226-053-00	BOLT/SM/M10X23	*	1	1				
3	1560-695-021-00	JOINT BALL M08RH	*	1	1				
4	V304-260-008-00	NUT	*	1	1				
5	1646-640-002-00	ROD/M08X64	*	1	1				
6	1560-695-022-00	JOINT BALL M08LH	*	1	1				
7	1560-132-007-30	NUT/M8	*	1	1				
8	V401-160-008-00	WASHER,SP/M 8	*	2	2				
9	V304-260-008-00	NUT	*	2	2				
10	1728-271-210-00	ARM/HST COMP	*	1 -621	1 -115				
10A	1728-271-210-10	ARM/HST COMP	*	1 -3266	1 -994	1			
10B	1728-271-210-20	ARM/HST COMP	*	1 3267-	1 995-	1			
11	1480-304-002-00	PIN 6X28	*	1 -10124	1 -3324				
11A	V530-240-602-80	PIN/GROOVE	*	1 10125-	1 3325-				
12	1728-271-220-00	SHAFT/HST COMP	*	1	1				
13	V201-260-804-00	BOLT/M 8X40	*	2 -3266	2 -1072				
13A	V201-260-803-50	BOLT/M 8X35	*	2 3267-	2 1073-				
14	V304-260-008-00	NUT	*	2	2				
15	1646-640-580-00	DAMPER/OIL ASSY	*	1	1				
16	V362-260-008-00	NUT/WASHER	*	1	1				
17	V500-162-002-00	PIN,SPLIT/2 X20	*	1	1				
18	V411-260-008-00	WASHER,PL/M 8	*	1	1				
19	1728-271-003-00	BRACKET/NEUTRAL	*	1	1				
20	V211-560-802-00	BOLT/M8X20	*	3	3				
21	1728-271-230-00	LEVER/ADJUST COMP	*	1 -521	1 -104				
21A	1728-271-230-10	LEVER/ADJUST COMP	*	1 522-	1 105-	1			
22	V211-560-802-00	BOLT/M8X20	*	1 -4724	1 -1590				

FIG. 17 LINK(HST) SYSTEM

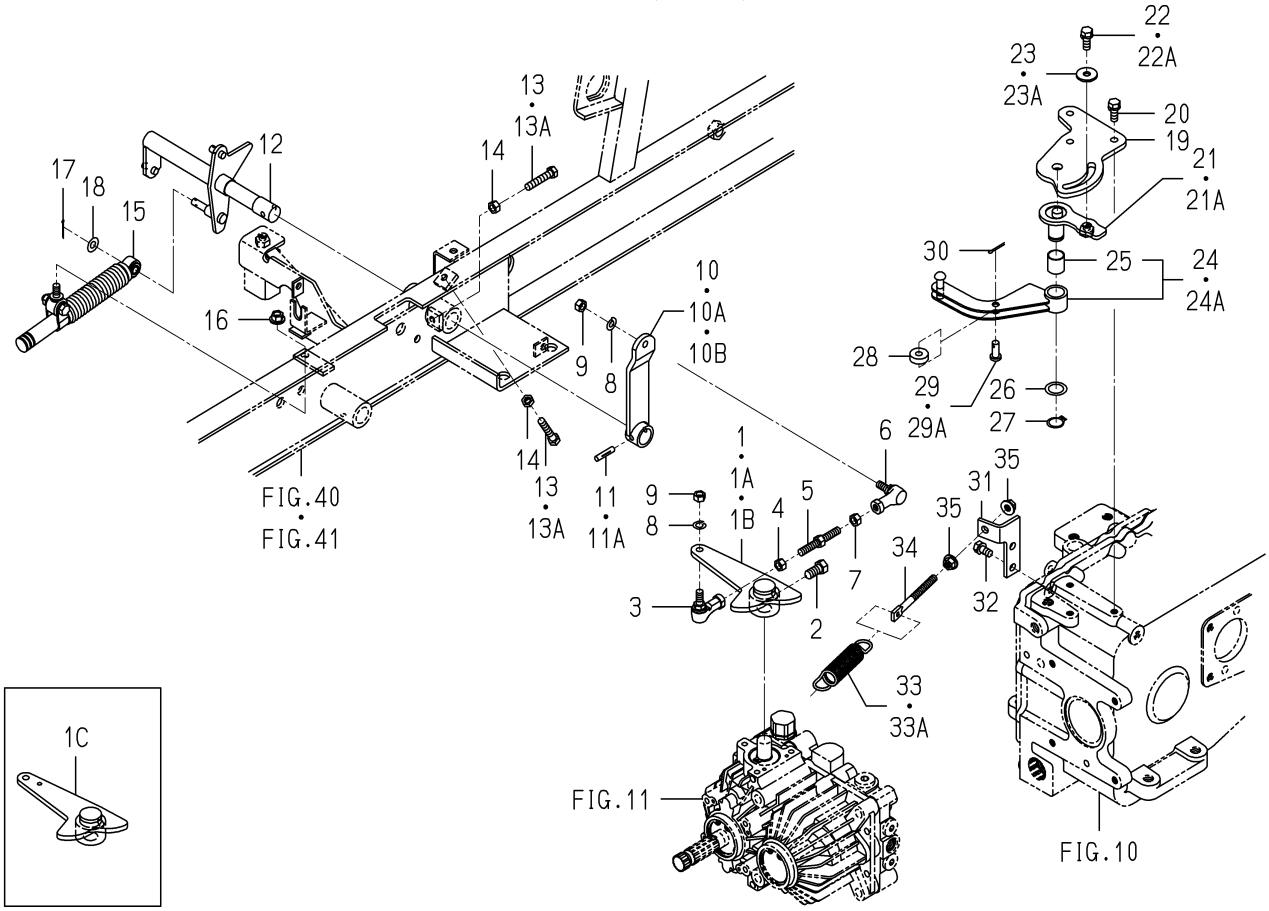

1728-271 -0100

KEY	PART CODE	DESCRIPTION	SPC	TYPE OF MODEL SXG19	TYPE OF MODEL SXG22	ITC	COL	GRP	REMARKS
22A	V211-260-802-50	BOLT/S	*	1 4725-	1 1591-				
23	3560-201-015-00	WASHER,BINDING SHAFT	*	1 -4724	1 -1590				
23A	4101-102-038-00	WASHER/24X9X3.2	*	1 4725-	1 1591-				
24	1728-271-240-00	ARM/NEUTRAL ASSY	*	1 -1190	1 -489				
24A	1728-271-240-10	ARM/NEUTRAL ASSY	*	1 1191-	1 490-	1			
25	2504-135-008-00	BUSH(18X20X20)	*	1	1				
26	2144-419-022-00	WASHER/18X26X02	*	1	1				
27	V704-140-018-00	RING,SNAP/18 C	*	1	1				
28	1725-272-003-00	BEARING/BALL	*	1	1				
29	1725-272-004-00	PIN/08X19	*	1 -1241	1 -574				
29A	2504-135-006-00	PIN/08X19	*	1 1242-	1 575-				
30	V500-162-502-00	PIN,SPLIT/2.5X20	*	1	1				
31	1728-271-004-00	STAY/ROD	*	1	1				
32	V211-260-801-60	BOLT,SEMS (S) M8X16	*	2	2				
33	2500-210-016-00	SPRING/HE108	*		1 -35				
33A	3801-461-002-00	SPRING/HE110	*	1	1 36-				
34	1725-272-005-00	ROD/M08X85	*	1	1				
35	V362-260-008-00	NUT/WASHER	*	2	2				

FIG. 18 PEDAL(HST) SYSTEM

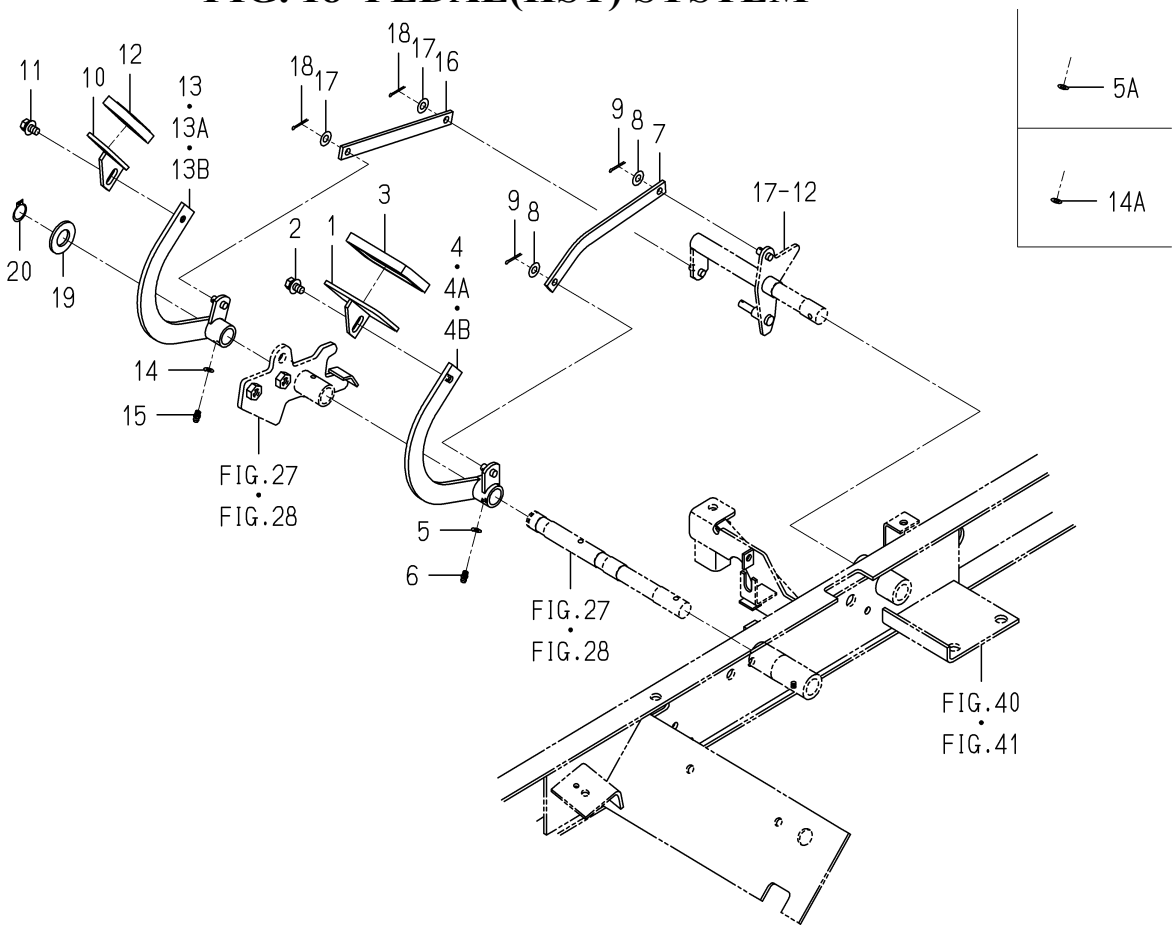

1728-272 -0100

KEY	PART CODE	DESCRIPTION	SPC	TYPE OF MODEL SXG19	TYPE OF MODEL SXG22	ITC	COL	GRP	REMARKS
1	1728-272-230-00	PEDAL/HST/F COMP	*	1	1				
2	V211-360-801-60	BOLT,SEMS (SP)	*	1	1				
3	1740-272-061-00	PAD/HST/OR	*	1	1				
4	1728-272-200-00	ARM/HST/F COMP	*	1 -621	1 -115				
4A	1728-272-200-10	ARM/HST/F COMP	*	1 -7185	1 -2320	1			
4B	1728-272-200-20	ARM/HST/F COMP	*	1 7186-	1 2321-	1			
5	V401-160-006-00	WASHER,SP/M 6	*	1 -7185	1 -2320				
5A	V411-260-006-00	WASHER / M6	*	1 7186-	1 2321-				
6	V760-150-000-00	NIPPLE,GREASE	*	1	1				
7	1728-272-001-00	ROD/HST/F	*	1	1				
8	V411-260-008-00	WASHER,PL/M 8	*	2	2				
9	V500-162-502-00	PIN,SPLIT/2.5X20	*	2	2				
10	1689-272-240-00	PEDAL/HST/RH COMP	*	1	1				
11	V211-360-801-60	BOLT,SEMS (SP)	*	1	1				
12	1740-272-062-00	PAD/OR	*	1	1				
13	1728-272-210-00	ARM/HST/R COMP	*	1 -621	1 -115				
13A	1728-272-210-10	ARM/HST/R COMP	*	1 -7144	1 -2311	1			
13B	1728-272-210-20	ARM/HST/R COMP	*	1 7145-	1 2312-	1			
14	V401-160-006-00	WASHER,SP/M 6	*	1 -7185	1 -2320				
14A	V411-260-006-00	WASHER / M6	*	1 7186-	1 2321-				
15	V760-150-000-00	NIPPLE,GREASE	*	1	1				
16	1728-272-002-00	PLATE/I/16X192	*	1	1				
17	V411-260-008-00	WASHER,PL/M 8	*	2	2				
18	V500-162-502-50	PIN,SPLIT/2.5X25	*	2	2				
19	V411-260-020-00	WASHER/M20	*	1	1				
20	V704-140-020-00	RING,SNAP/20C	*	1	1				

FIG. 19 AXLE(REAR) SYSTEM

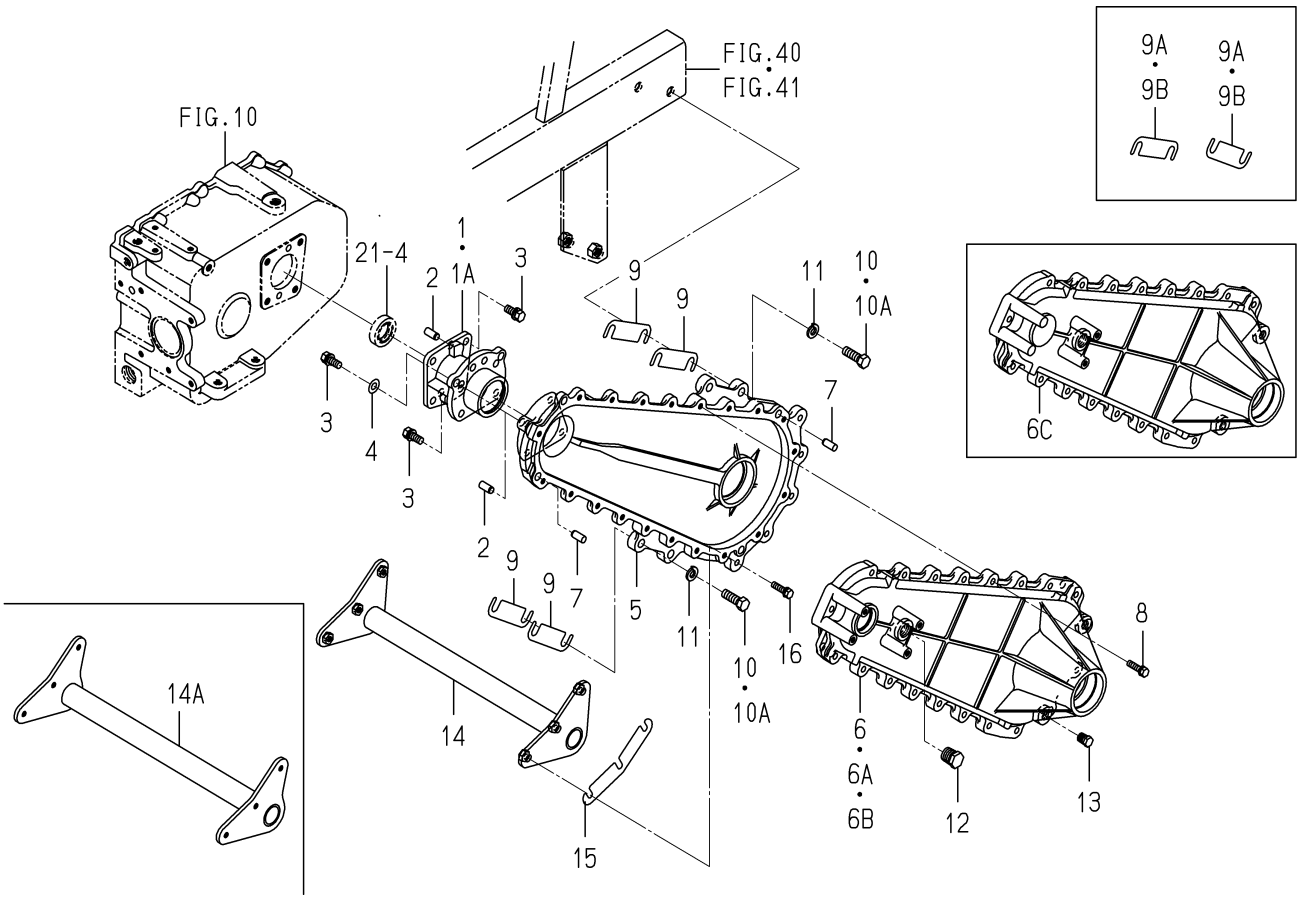

1728-306 -0100

KEY	PART CODE	DESCRIPTION	SPC	TYPE OF MODEL SXG19	TYPE OF MODEL SXG22	ITC	COL	GRP	REMARKS
1	1728-306-001-00	CASE/SPACER	*	2 -1190	2 -550				
1A	1728-306-001-10	CASE/SPACER	*	2 -6253	2 -2066	1			
2	V523-101-002-20	PIN	*	6 -6253	6 -2066				
3	V211-561-002-50	BOLT/M10X25	*	16 -6253	16 -2066				
4	V411-260-010-00	WASHER/M10	*	1 -6253	1 -2066				
5	1728-306-002-10	CASE/CHAIN/A	*	2 -6253	2 -2066				
6	1728-306-003-00	CASE/CHAIN/B	*	2 -1190	2 -550				
6A	1728-306-003-10	CASE/CHAIN/B	*	2 -1200		1			
6B	1728-306-003-20	CASE/CHAIN/B	*	2 -3804	2 -1236	1			
6C	1728-306-003-30	CASE/CHAIN/B	*	2 -6253	2 -2066	3			
7	V523-101-002-20	PIN	*	4 -6253	4 -2066				
8	V211-560-803-00	BOLT/M8X30	*	40 -6253	40 -2066				
9	1728-306-005-00	SHIM/0.6	*		8 -35				
9A	1728-306-005-00	SHIM/0.6	*	16 -1646	16 -602				
9B	1728-306-005-00	SHIM/0.6	*	10 -6253	10 -2066				
10	V201-361-203-50	BOLT/M12X35	*		8 -35				
10A	V201-361-204-00	BOLT/M12X40	*	8 -6253	8 -2066				
11	V401-160-012-00	WASHER,SP/M12	*	8 -6253	8 -2066				
12	V782-160-000-8B	PLUG/SCREW/SEAL	*	2 -6253	2 -2066				
13	V782-160-000-4B	PLUG/SCREW/SEAL	*	4 -6253	4 -2066				
14	1728-306-210-10	STAY/CASE COMP	*	1 -507	1 -100				
14A	1728-306-210-20	STAY/CASE COMP	*	1 -6253	1 -2066	1			
15	1728-306-007-00	SHIM/0.6	*	2 -6253	2 -2066				
16	V211-560-803-00	BOLT/M8X30	*	6 -3936	6 -1292				

FIG. 20 AXLE(REAR) SYSTEM(G TYPE)

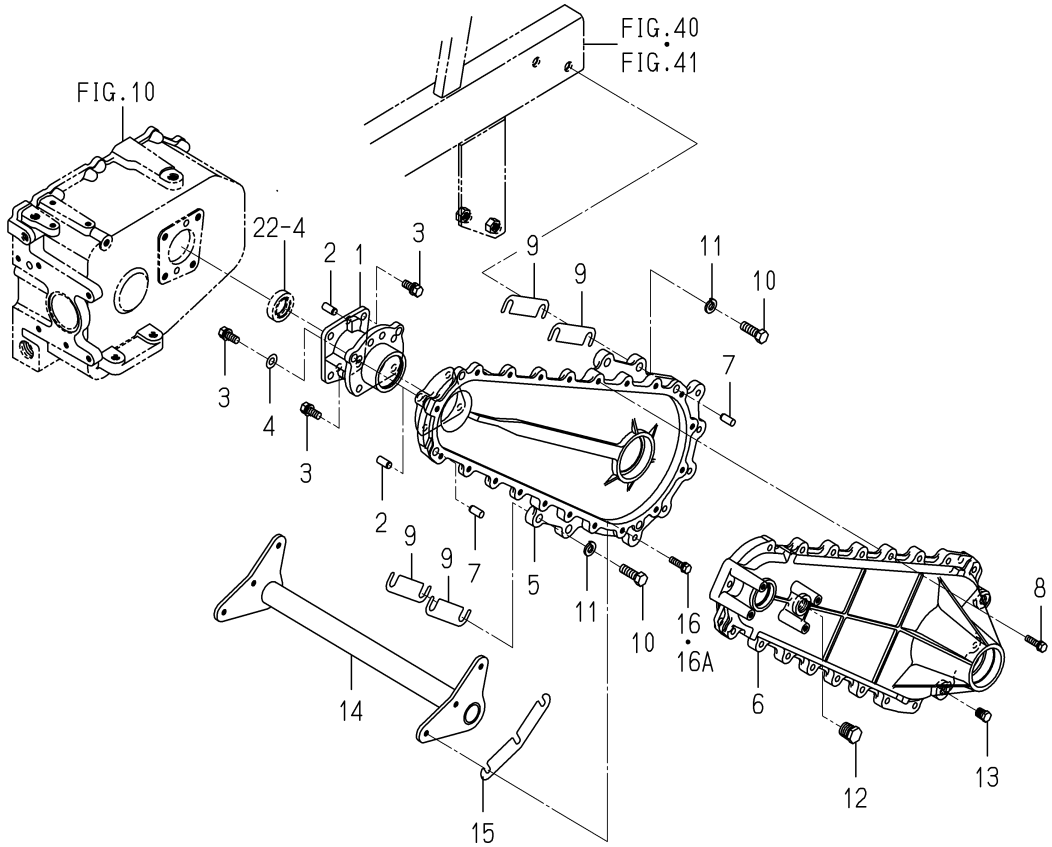

1728-306A-0100

KEY	PART CODE	DESCRIPTION	SPC	TYPE OF MODEL SXG19	TYPE OF MODEL SXG22	ITC	COL	GRP	REMARKS
1	1728-306-001-10	CASE/SPACER	*	2 -6253	2 -2066				
2	V523-101-002-20	PIN	*	6 -6253	6 -2066				
3	V211-561-002-50	BOLT/M10X25	*	16 -6253	16 -2066				
4	V411-260-010-00	WASHER/M10	*	1 -6253	1 -2066				
5	1728-306-002-10	CASE/CHAIN/A	*	2 -6253	2 -2066				
6	1728-306-051-00	CASE/CHAIN/B/G	*	2 -6253	2 -2066				
7	V523-101-002-20	PIN	*	4 -6253	4 -2066				
8	V211-560-803-00	BOLT/M8X30	*	40 -6253	40 -2066				
9	1728-306-005-00	SHIM/0.6	*	10 -6253	10 -2066				
10	V201-361-204-00	BOLT/M12X40	*	8 -6253	8 -2066				
11	V401-160-012-00	WASHER,SP/M12	*	8 -6253	8 -2066				
12	V782-160-000-8B	PLUG/SCREW/SEAL	*	2 -6253	2 -2066				
13	V782-160-000-4B	PLUG/SCREW/SEAL	*	4 -6253	4 -2066				
14	1728-306-210-20	STAY/CASE COMP	*	1 -6253	1 -2066				
15	1728-306-007-00	SHIM/0.6	*	2 -6253	2 -2066				
16	V211-560-803-00	BOLT/M8X30	*	6 -4125	6 -1288				
16A	V211-560-802-50	BOLT,SEMS/M8X25 7T	*	6 -6253	6 -2066				

FIG. 21 SHAFT(WHEEL/REAR) SYSTEM (EXCEPT G TYPE)

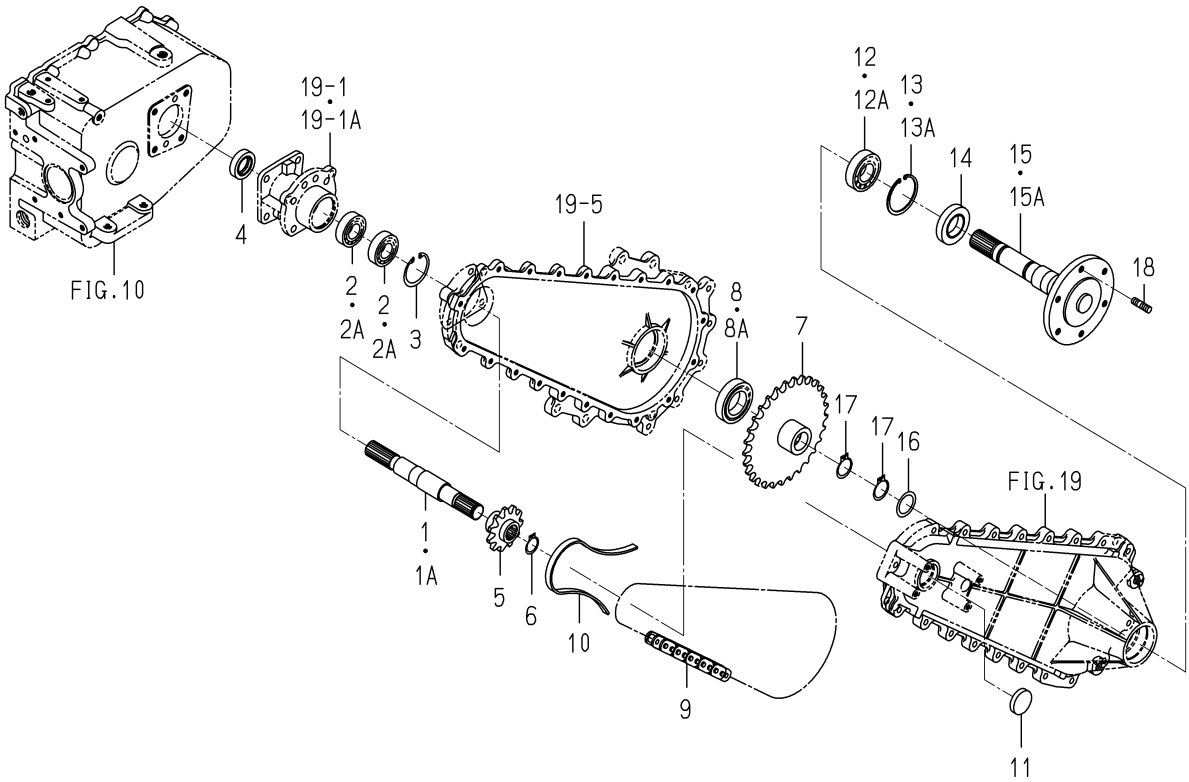

1728-307 -0100

KEY	PART CODE	DESCRIPTION	SPC	TYPE OF MODEL SXG19	TYPE OF MODEL SXG22	ITC	COL	GRP	REMARKS
1	1728-307-002-00	SHAFT/DIFF	*	2 -1185	2 -537				
1A	1728-307-002-10	SHAFT/DIFF	*	2 -6253	2 -2066	1			
2	V600-110-620-50	BEARING,RB/6205	*	4 -4973	4 -1691				
2A	V600-410-620-50	BEARING/BALL	*	4 -6253	4 -2066				
3	V705-140-052-00	RING,SNAP/52 C	*	2 -6253	2 -2066				
4	V744-128-451-10	SEAL,OIL/TC284511	*	2 -6253	2 -2066				
5	1728-307-004-00	SPROCKET/11	*	2 -6253	2 -2066				
6	V704-140-025-00	RING,SNAP/25 C	*	2 -6253	2 -2066				
7	1728-307-005-00	SPROCKET/29	*	2 -6253	2 -2066				
8	V600-110-600-80	BEARING,RB/6008	*	2 -4973	2 -1691				
8A	V600-410-600-80	BEARING/BALL	*	2 -6253	2 -2066				
9	1728-307-006-00	ROLLERCHAIN	*	2 -6253	2 -2066				
10	1728-307-007-10	GUIDE/CHAIN	*	2 -6253	2 -2066				
11	2194-201-005-00	PLUG/40X8	*	2 -3266	2 -994				
12	V600-110-620-60	BEARING,RB/6206	*	2 -4973	2 -1691				
12A	V600-410-620-60	BEARING/BALL	*	2 -6253	2 -2066				
13	1725-308-001-00	RING/SNAP/CH62	*	2 -5801	2 -2007				
13A	1710-241-053-00	RING/SNAP/R62	*	2 -6253	2 -2066				
14	7827-205-010-00	SEAL/OIL	*	2 -6253	2 -2066				
15	1728-307-220-00	SHAFT/WHEEL COMP	*	2 -1190	2 -550				
15A	1728-307-220-10	SHAFT/WHEEL COMP	*	2 -6253	2 -2066	1			
16	1480-207-011-00	WASHER/31X42X1	*	2 -6253	2 -2066				
17	V704-140-030-00	RING,SNAP/30 C	*	4 -6253	4 -2066				
18	V251-341-002-00	BOLT/M10X20	*	4 -6253	4 -2066				

FIG. 22 SHAFT(WHEEL/REAR) SYSTEM(G TYPE)

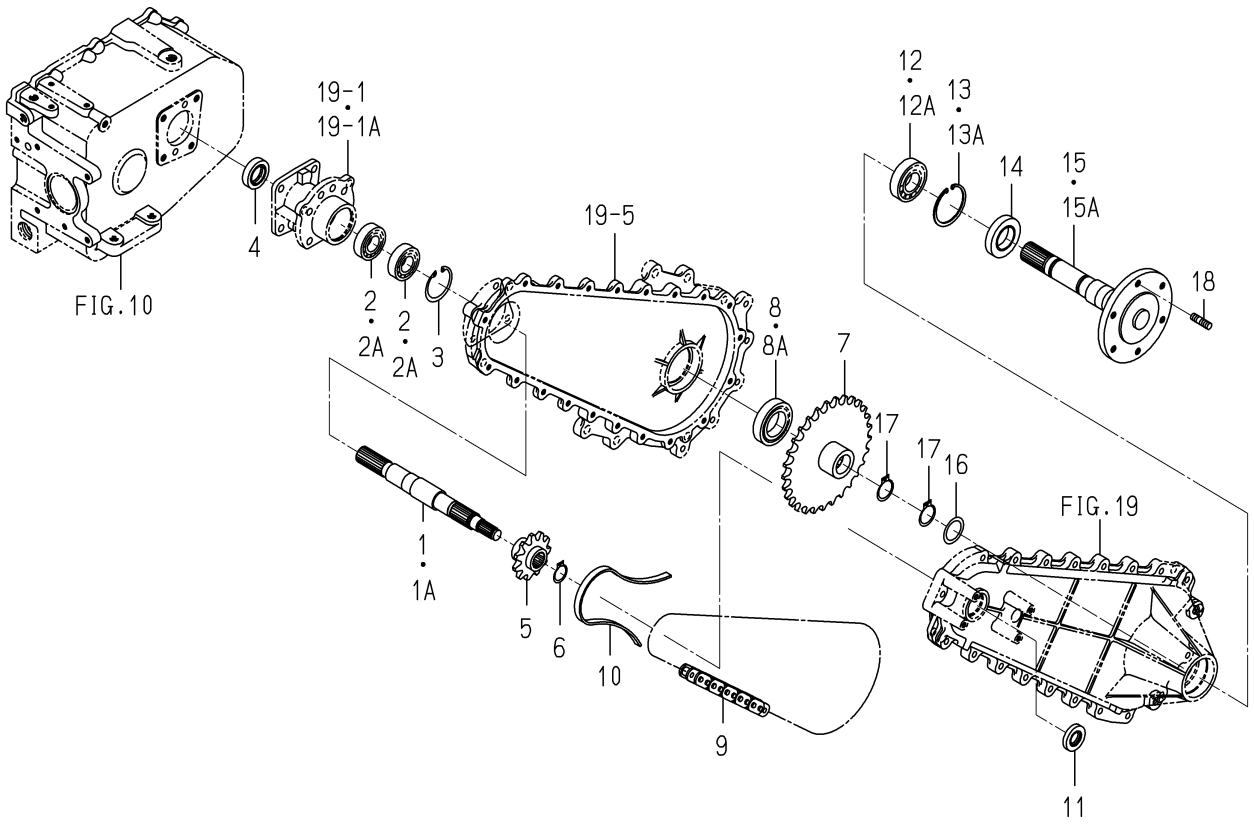

1728-307A-0100

KEY	PART CODE	DESCRIPTION	SPC	TYPE OF MODEL SXG19	TYPE OF MODEL SXG22	ITC	COL	GRP	REMARKS
1	1728-307-051-00	SHAFT/DIFF	*	2 -1190	2 -550				
1A	1728-307-051-10	SHAFT/DIFF/G	*	2 -6253	2 -2066	1			
2	V600-110-620-50	BEARING,RB/6205	*	4 -4724	4 -1588				
2A	V600-410-620-50	BEARING/BALL	*	4 -6253	4 -2066				
3	V705-140-052-00	RING,SNAP/52 C	*	2 -6253	2 -2066				
4	V744-128-451-10	SEAL,OIL/TC284511	*	2 -6253	2 -2066				
5	1728-307-004-00	SPROCKET/11	*	2 -6253	2 -2066				
6	V704-140-025-00	RING,SNAP/25 C	*	2 -6253	2 -2066				
7	1728-307-005-00	SPROCKET/29	*	2 -6253	2 -2066				
8	V600-110-600-80	BEARING,RB/6008	*	2 -4724	2 -1588				
8A	V600-410-600-80	BEARING/BALL	*	2 -6253	2 -2066				
9	1728-307-006-00	ROLLERCHAIN	*	2 -6253	2 -2066				
10	1728-307-007-10	GUIDE/CHAIN	*	2 -6253	2 -2066				
11	V744-120-400-80	SEAL,OIL/TC20408	*	2 -6253	2 -2066				
12	V600-110-620-60	BEARING,RB/6206	*	2 -4724	2 -1588				
12A	V600-410-620-60	BEARING/BALL	*	2 -6253	2 -2066				
13	1725-308-001-00	RING/SNAP/CH62	*	2 -6096	2 -2013				
13A	1710-241-053-00	RING/SNAP/R62	*	2 -6253	2 -2066				
14	7827-205-010-00	SEAL/OIL	*	2 -6253	2 -2066				
15	1728-307-220-00	SHAFT/WHEEL COMP	*	2 -1190	2 -550				
15A	1728-307-220-10	SHAFT/WHEEL COMP	*	2 -6253	2 -2066	1			
16	1480-207-011-00	WASHER/31X42X1	*	2 -6253	2 -2066				
17	V704-140-030-00	RING,SNAP/30 C	*	4 -6253	4 -2066				
18	V251-341-002-00	BOLT/M10X20	*	4 -6253	4 -2066				

FIG. 23 CASE(CHAIN) SYSTEM(EXCEPT G TYPE)(1/2)

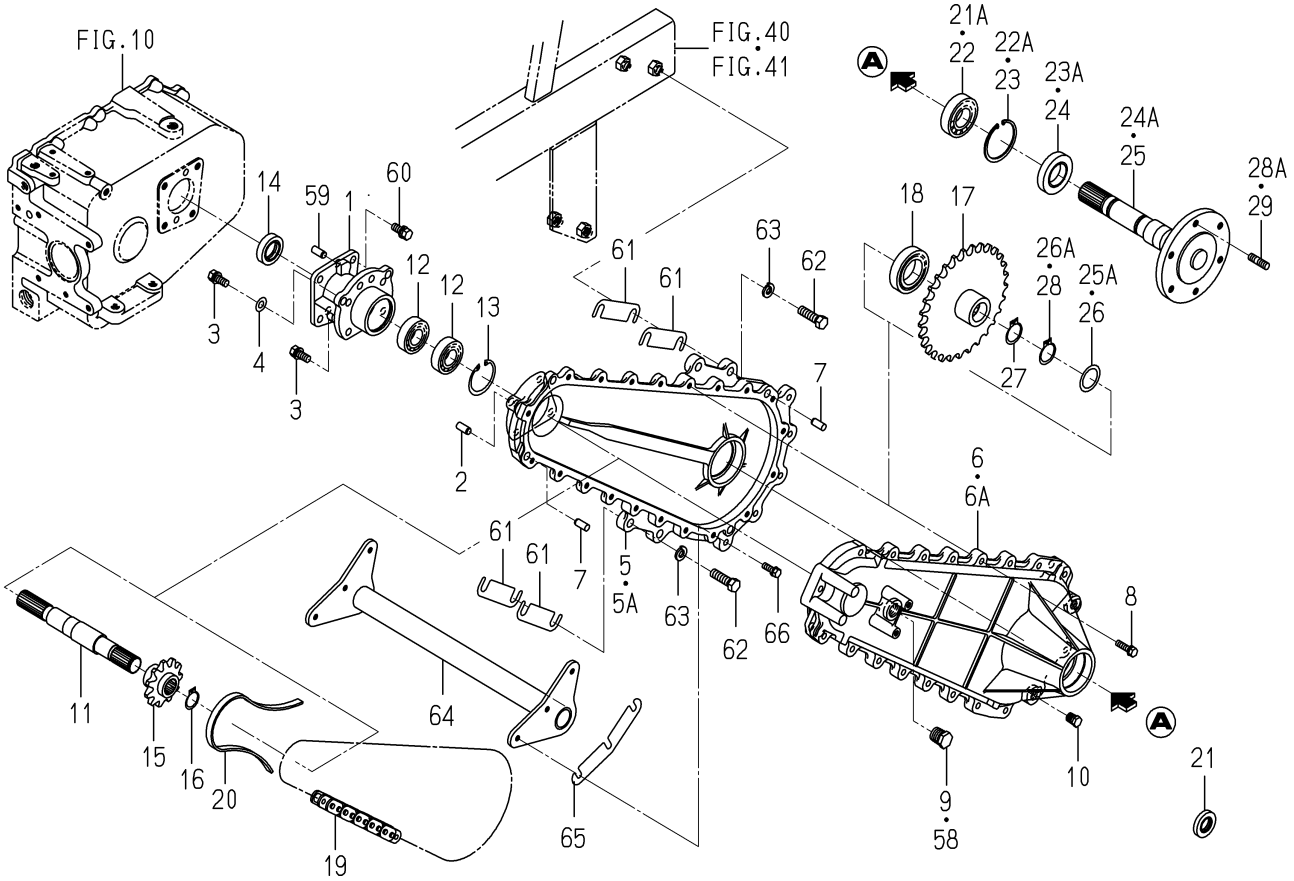

1728-308 -0100

KEY	PART CODE	DESCRIPTION	SPC	TYPE OF MODEL SXG19	TYPE OF MODEL SXG22	ITC	COL	GRP	REMARKS
1	1728-306-021-00	CASE/SPACER	*	1 6253-	1 2067-				
2	V523-101-002-20	PIN	*	1 6253-	1 2067-				
3	V211-561-002-50	BOLT/M10X25	*	4 6253-	4 2067-				
4	V411-260-010-00	WASHER/M10	*	1 6253-	1 2067-				
5	1728-306-002-10	CASE/CHAIN/A	*	1 -6773	1 -2212				
5A	1728-306-022-00	CASE/CHAIN/A	*	1 6774-	1 2213-				
6	1728-306-003-30	CASE/CHAIN/B	*	1 -6773	1 -2212				
6A	1728-306-023-00	CASE/CHAIN/B	*	1 6774-	1 2213-				
7	V523-101-002-20	PIN	*	2 6253-	2 2067-				
8	V211-560-803-00	BOLT/M8X30	*	20 6253-	20 2067-				
9	V782-160-000-8B	PLUG/SCREW/SEAL	*	1 6253-	1 2067-				
10	V782-160-000-4B	PLUG/SCREW/SEAL	*	2 6253-	2 2067-				
11	1728-307-022-00	SHAFT/DIFF	*	1 6253-	1 2067-				
12	1725-434-063-00	BEARING/BALL	*	2 6253-	2 2067-				
13	V705-140-052-00	RING,SNAP/52 C	*	1 6253-	1 2067-				
14	V744-128-451-10	SEAL,OIL/TC284511	*	1 6253-	1 2067-				
15	1728-307-024-00	SPROCKET/11	*	1 6253-	1 2067-				
16	V704-140-025-00	RING,SNAP/25 C	*	1 6253-	1 2067-				
17	1728-307-025-00	SPROCKET/29	*	1 6253-	1 2067-				
18	1728-307-028-00	BEARING/BALL	*	1 6253-	1 2067-				
19	1728-307-006-00	ROLLERCHAIN	*	1 6253-	1 2067-				
20	1728-307-026-00	GUIDE/CHAIN	*	1 6253-	1 2067-				
21	V744-120-400-80	SEAL,OIL/TC20408	*	1 -6773	1 -2212				
21A	1725-434-062-00	BEARING/BALL	*	1 6774-	1 2213-				
22	1725-434-062-00	BEARING/BALL	*	1 -6773	1 -2212				
22A	1710-241-053-00	RING/SNAP/R62	*	1 6774-	1 2213-				
23	1710-241-053-00	RING/SNAP/R62	*	1 -6773	1 -2212				
23A	7827-205-010-00	SEAL/OIL	*	1 6774-	1 2213-				
24	7827-205-010-00	SEAL/OIL	*	1 -6773	1 -2212				
24A	1728-307-420-00	SHAFT/WHEEL COMP	*	1 6774-	1 2213-				

FIG. 23 CASE(CHAIN) SYSTEM(EXCEPT G TYPE)(2/2)

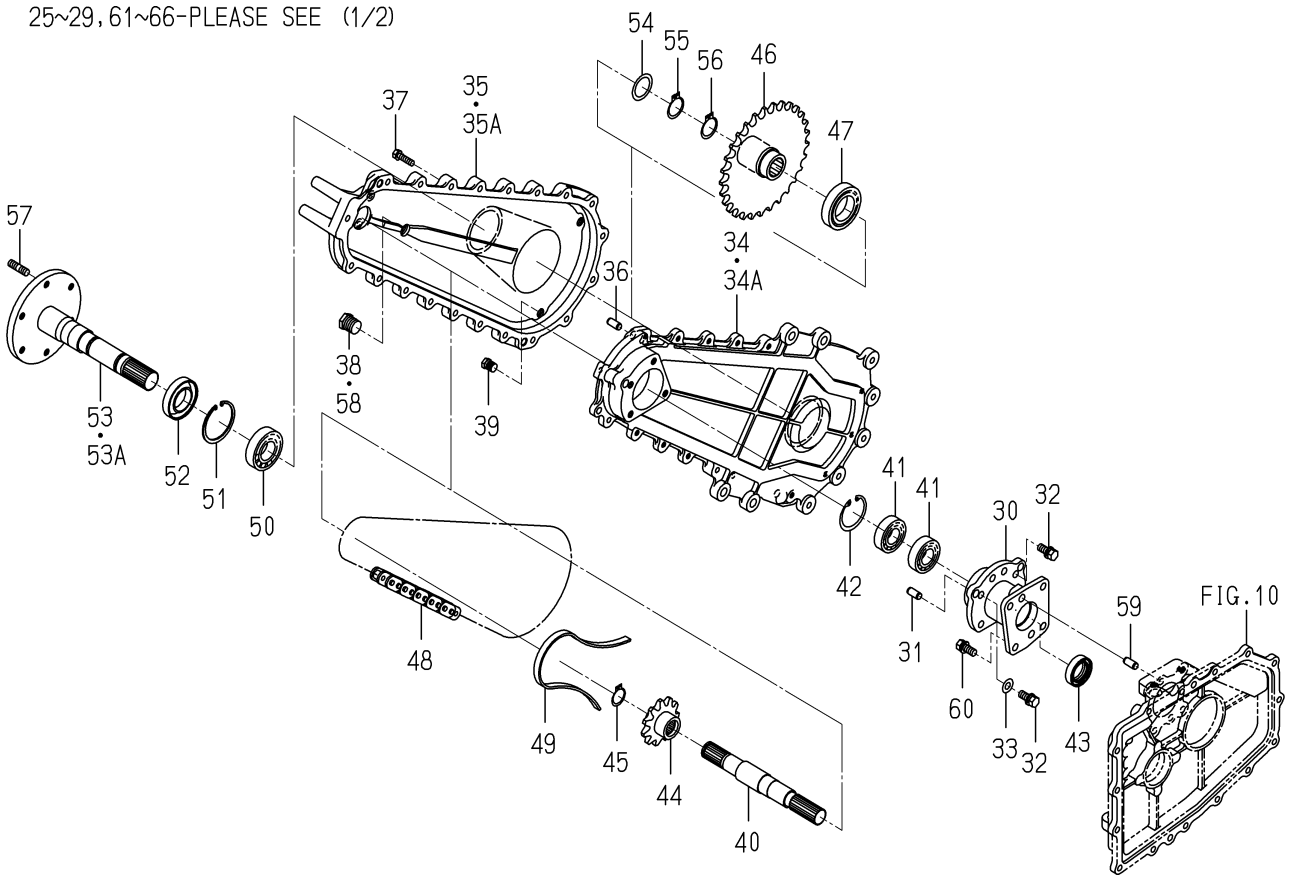

1728-308 -0100

KEY	PART CODE	DESCRIPTION	SPC	TYPE OF MODEL SXG19	TYPE OF MODEL SXG22	ITC	COL	GRP	REMARKS
25	1728-307-220-10	SHAFT/WHEEL COMP	*	1 -6773	1 -2212				
25A	1728-307-027-00	WASHER/31X42X01	*	1 6774-	1 2213-				
26	1728-307-027-00	WASHER/31X42X01	*	1 -6773	1 -2212				
26A	V704-140-030-00	RING,SNAP/30 C	*	1 6774-	1 2213-				
27	V704-140-030-00	RING,SNAP/30 C	*	1 6253-	1 2067-				
28	V704-140-030-00	RING,SNAP/30 C	*	1 -6773	1 -2212				
28A	V251-341-002-00	BOLT/M10X20	*	2 6774-	2 2213-				
29	V251-341-002-00	BOLT/M10X20	*	2 -6773	2 -2212				
30	1728-306-021-00	CASE/SPACER	*	1 6253-	1 2067-				
31	V523-101-002-20	PIN	*	1 6253-	1 2067-				
32	V211-561-002-50	BOLT/M10X25	*	4 6253-	4 2067-				
33	V411-260-010-00	WASHER/M10	*	1 6253-	1 2067-				
34	1728-306-002-10	CASE/CHAIN/A	*	1 -6773	1 -2212				
34A	1728-306-022-00	CASE/CHAIN/A	*	1 6774-	1 2213-				
35	1728-306-003-30	CASE/CHAIN/B	*	1 -6773	1 -2212				
35A	1728-306-023-00	CASE/CHAIN/B	*	1 6774-	1 2213-				
36	V523-101-002-20	PIN	*	2 6253-	2 2067-				
37	V211-560-803-00	BOLT/M8X30	*	20 6253-	20 2067-				
38	V782-160-000-8B	PLUG/SCREW/SEAL	*	1 6253-	1 2067-				
39	V782-160-000-4B	PLUG/SCREW/SEAL	*	2 6253-	2 2067-				
40	1728-307-022-00	SHAFT/DIFF	*	1 6253-	1 2067-				
41	1725-434-063-00	BEARING/BALL	*	2 6253-	2 2067-				
42	V705-140-052-00	RING,SNAP/52 C	*	1 6253-	1 2067-				
43	V744-128-451-10	SEAL,OIL/TC284511	*	1 6253-	1 2067-				
44	1728-307-024-00	SPROCKET/11	*	1 6253-	1 2067-				
45	V704-140-025-00	RING,SNAP/25 C	*	1 6253-	1 2067-				
46	1728-307-025-00	SPROCKET/29	*	1 6253-	1 2067-				
47	1728-307-028-00	BEARING/BALL	*	1 6253-	1 2067-				
48	1728-307-006-00	ROLLERCHAIN	*	1 6253-	1 2067-				
49	1728-307-026-00	GUIDE/CHAIN	*	1 6253-	1 2067-				

FIG. 23 CASE(CHAIN) SYSTEM(EXCEPT G TYPE)(2/2)

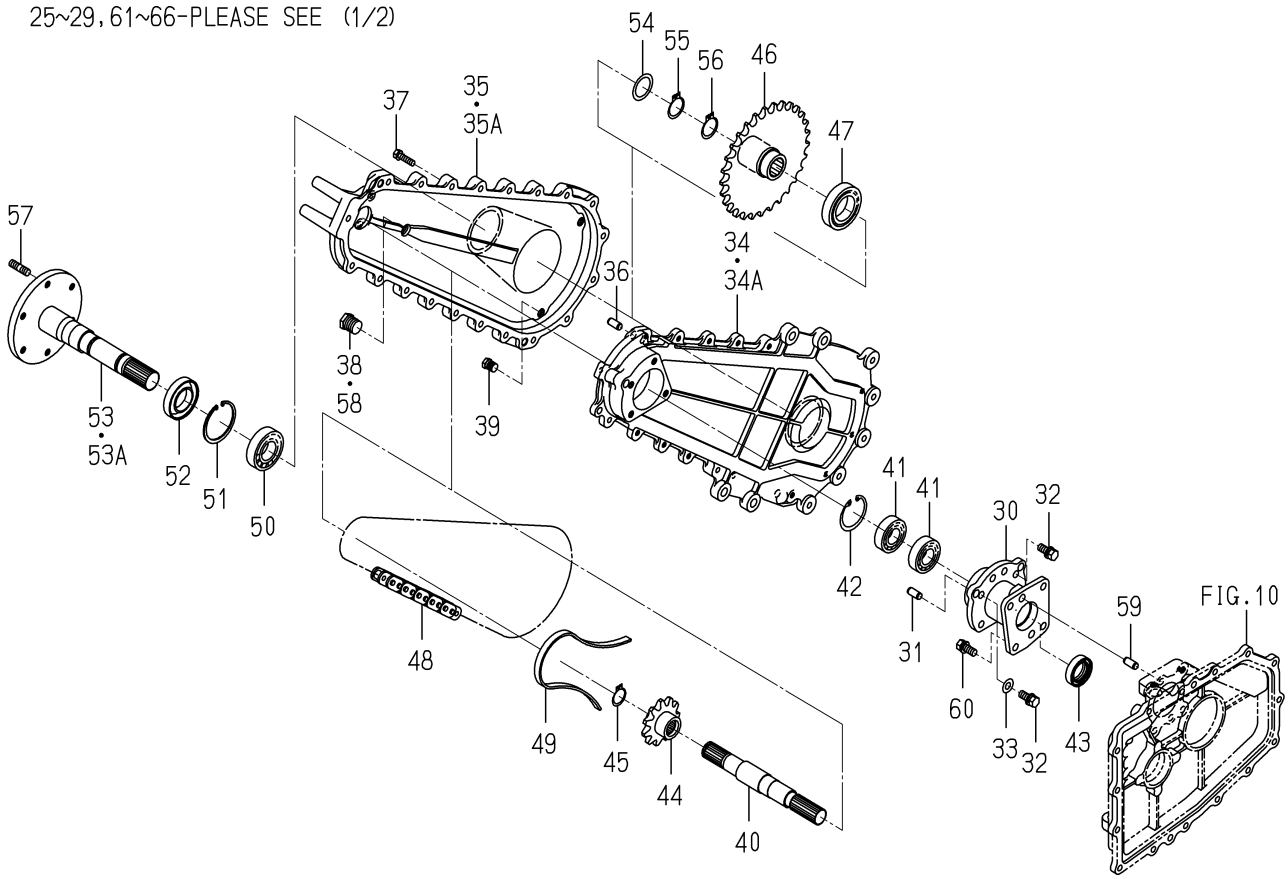

1728-308 -0100

KEY	PART CODE	DESCRIPTION	SPC	TYPE OF MODEL SXG19	TYPE OF MODEL SXG22	ITC	COL	GRP	REMARKS
50	1725-434-062-00	BEARING/BALL	*	1 6253-	1 2067-				
51	1710-241-053-00	RING/SNAP/R62	*	1 6253-	1 2067-				
52	7827-205-010-00	SEAL/OIL	*	1 6253-	1 2067-				
53	1728-307-220-10	SHAFT/WHEEL COMP	*	1 -6773	1 -2212				
53A	1728-307-420-00	SHAFT/WHEEL COMP	*	1 6774-	1 2213-				
54	1728-307-027-00	WASHER/31X42X01	*	1 6253-	1 2067-				
55	V704-140-030-00	RING,SNAP/30 C	*	1 6253-	1 2067-				
56	V704-140-030-00	RING,SNAP/30 C	*	1 6253-	1 2067-				
57	V251-341-002-00	BOLT/M10X20	*	2 6253-	2 2067-				
58	V782-160-000-8B	PLUG/SCREW/SEAL	*	2 6253-	2 2067-				
59	V523-101-002-20	PIN	*	4 6253-	4 2067-				
60	V211-561-002-50	BOLT/M10X25	*	8 6253-	8 2067-				
61	1728-306-005-00	SHIM/0.6	*	10 6253-	10 2067-				
62	V201-361-204-00	BOLT/M12X40	*	8 6253-	8 2067-				
63	V401-160-012-00	WASHER,SP/M12	*	8 6253-	8 2067-				
64	1728-306-210-20	STAY/CASE COMP	*	1 6253-	1 2067-				
65	1728-306-007-00	SHIM/0.6	*	2 6253-	2 2067-				
66	V211-560-802-50	BOLT,SEMS/M8X25 7T	*	6 6253-	6 2067-				

FIG. 24 CASE(CHAIN) SYSTEM(G TYPE)(1/2)

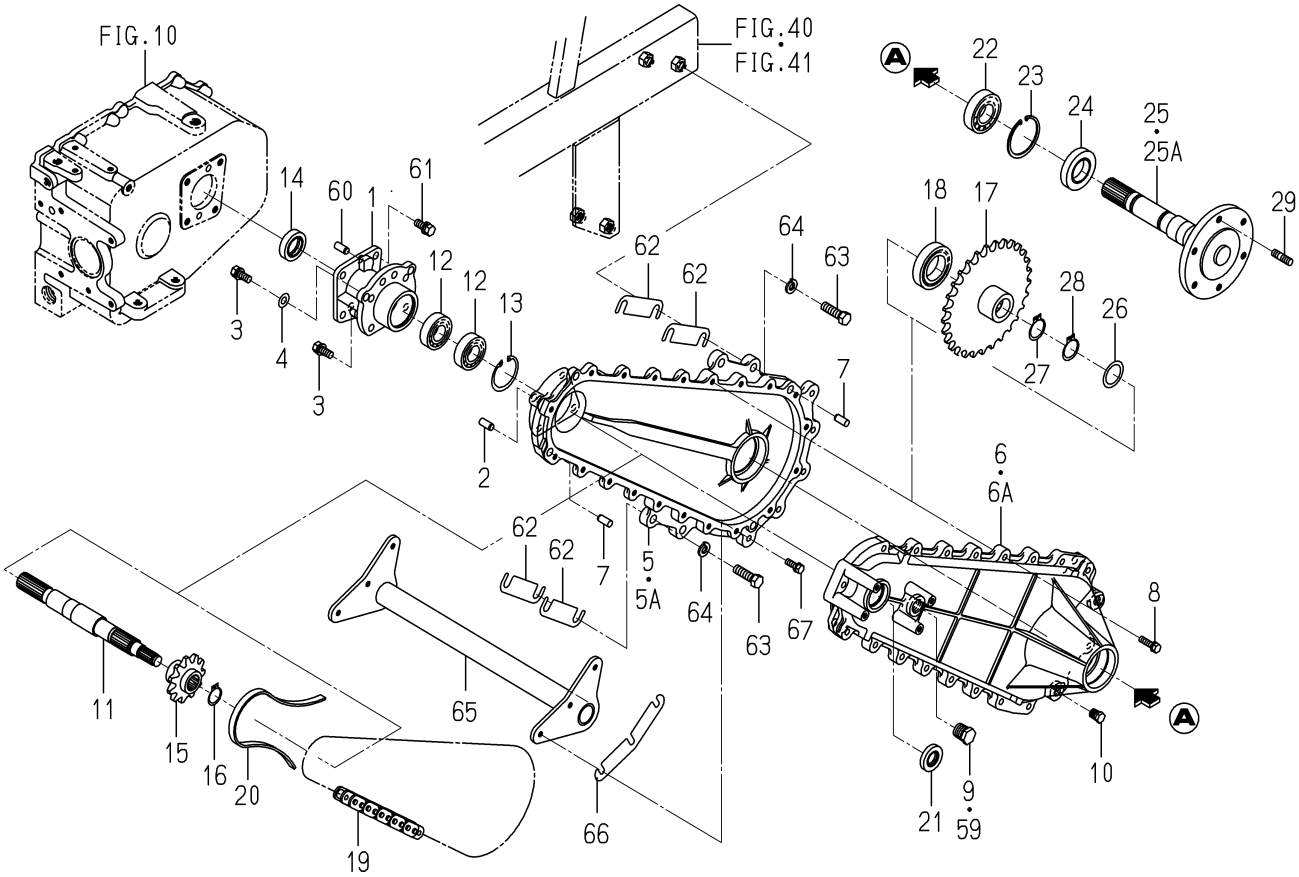

1728-308A-0100

KEY	PART CODE	DESCRIPTION	SPC	TYPE OF MODEL SXG19	TYPE OF MODEL SXG22	ITC	COL	GRP	REMARKS
1	1728-306-021-00	CASE/SPACER	*	1 6253-	1 2066-				
2	V523-101-002-20	PIN	*	1 6253-	1 2066-				
3	V211-561-002-50	BOLT/M10X25	*	4 6253-	4 2066-				
4	V411-260-010-00	WASHER/M10	*	1 6253-	1 2066-				
5	1728-306-002-10	CASE/CHAIN/A	*	1 -6770	1 -2225				
5A	1728-306-022-00	CASE/CHAIN/A	*	1 6771-	1 2226-				
6	1728-306-051-00	CASE/CHAIN/B/G	*	1 -6770	1 -2225				
6A	1728-306-071-00	CASE/CHAIN/B/G	*	1 6771-	1 2226-				
7	V523-101-002-20	PIN	*	2 6253-	2 2066-				
8	V211-560-803-00	BOLT/M8X30	*	20 6253-	20 2066-				
9	V782-160-000-8B	PLUG/SCREW/SEAL	*	1 6253-	1 2066-				
10	V782-160-000-4B	PLUG/SCREW/SEAL	*	2 6253-	2 2066-				
11	1728-307-071-00	SHAFT/DIFF/G	*	1 6253-	1 2066-				
12	1725-434-063-00	BEARING/BALL	*	2 6253-	2 2066-				
13	V705-140-052-00	RING,SNAP/52 C	*	1 6253-	1 2066-				
14	V744-128-451-10	SEAL,OIL/TC284511	*	1 6253-	1 2066-				
15	1728-307-024-00	SPROCKET/11	*	1 6253-	1 2066-				
16	V704-140-025-00	RING,SNAP/25 C	*	1 6253-	1 2066-				
17	1728-307-025-00	SPROCKET/29	*	1 6253-	1 2066-				
18	1728-307-028-00	BEARING/BALL	*	1 6253-	1 2066-				
19	1728-307-006-00	ROLLERCHAIN	*	1 6253-	1 2066-				
20	1728-307-026-00	GUIDE/CHAIN	*	1 6253-	1 2066-				
21	V744-120-400-80	SEAL,OIL/TC20408	*	1 6253-	1 2066-				
22	1725-434-062-00	BEARING/BALL	*	1 6253-	1 2066-				
23	1710-241-053-00	RING/SNAP/R62	*	1 6253-	1 2066-				
24	7827-205-010-00	SEAL/OIL	*	1 6253-	1 2066-				
25	1728-307-220-10	SHAFT/WHEEL COMP	*	1 -6770	1 -2225				
25A	1728-307-420-00	SHAFT/WHEEL COMP	*	1 6771-	1 2226-				
26	1728-307-027-00	WASHER/31X42X01	*	1 6253-	1 2066-				
27	V704-140-030-00	RING,SNAP/30 C	*	1 6253-	1 2066-				

FIG. 24 CASE(CHAIN) SYSTEM(G TYPE)(2/2)

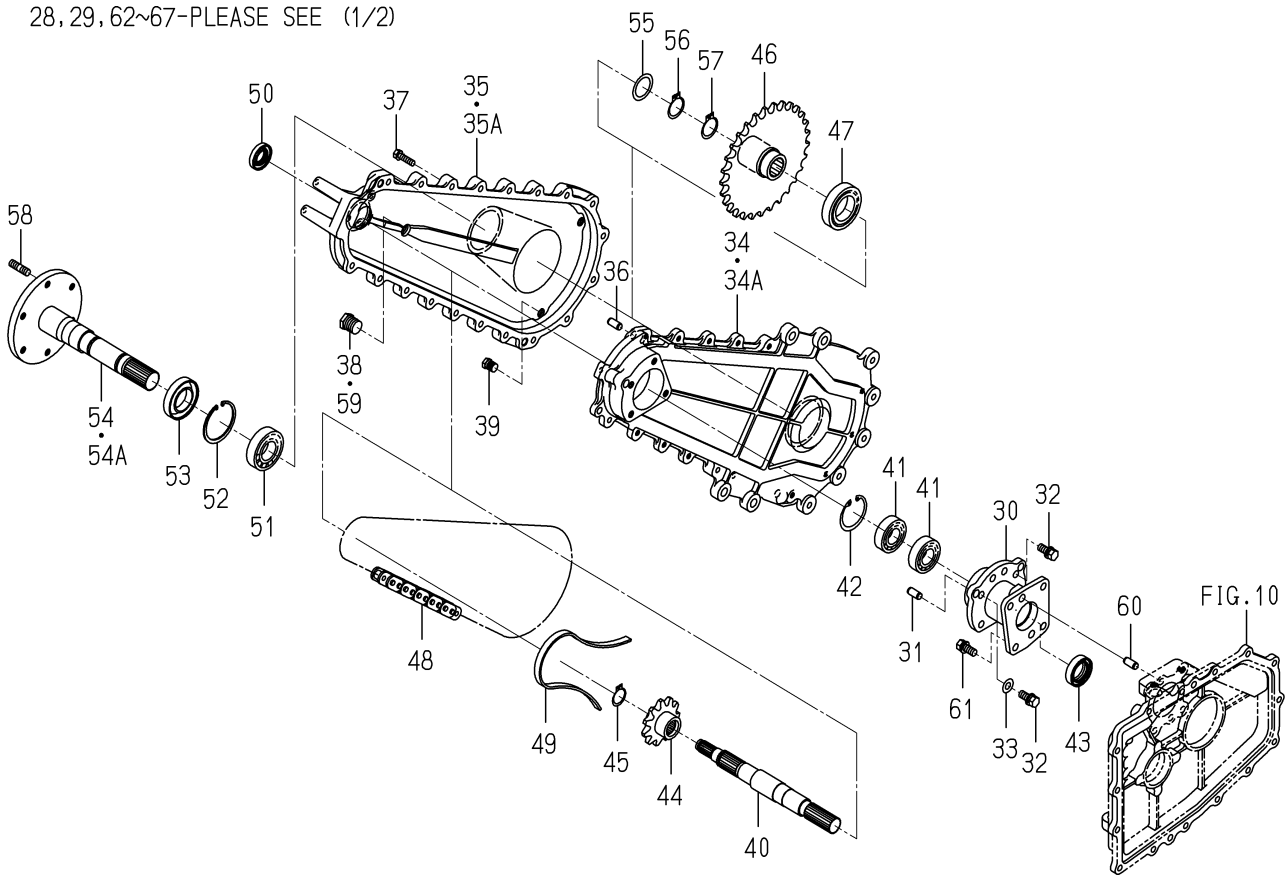

1728-308A-0100

KEY	PART CODE	DESCRIPTION	SPC	TYPE OF MODEL SXG19	TYPE OF MODEL SXG22	ITC	COL	GRP	REMARKS
28	V704-140-030-00	RING,SNAP/30 C	*	1 6253-	1 2066-				
29	V251-341-002-00	BOLT/M10X20	*	2 6253-	2 2066-				
30	1728-306-021-00	CASE/SPACER	*	1 6253-	1 2066-				
31	V523-101-002-20	PIN	*	1 6253-	1 2066-				
32	V211-561-002-50	BOLT/M10X25	*	4 6253-	4 2066-				
33	V411-260-010-00	WASHER/M10	*	1 6253-	1 2066-				
34	1728-306-002-10	CASE/CHAIN/A	*	1 -6770	1 -2225				
34A	1728-306-022-00	CASE/CHAIN/A	*	1 6771-	1 2226-				
35	1728-306-051-00	CASE/CHAIN/B/G	*	1 -6770	1 -2225				
35A	1728-306-071-00	CASE/CHAIN/B/G	*	1 6771-	1 2226-				
36	V523-101-002-20	PIN	*	2 6253-	2 2066-				
37	V211-560-803-00	BOLT/M8X30	*	20 6253-	20 2066-				
38	V782-160-000-8B	PLUG/SCREW/SEAL	*	1 6253-	1 2066-				
39	V782-160-000-4B	PLUG/SCREW/SEAL	*	2 6253-	2 2066-				
40	1728-307-071-00	SHAFT/DIFF/G	*	1 6253-	1 2066-				
41	1725-434-063-00	BEARING/BALL	*	2 6253-	2 2066-				
42	V705-140-052-00	RING,SNAP/52 C	*	1 6253-	1 2066-				
43	V744-128-451-10	SEAL,OIL/TC284511	*	1 6253-	1 2066-				
44	1728-307-024-00	SPROCKET/11	*	1 6253-	1 2066-				
45	V704-140-025-00	RING,SNAP/25 C	*	1 6253-	1 2066-				
46	1728-307-025-00	SPROCKET/29	*	1 6253-	1 2066-				
47	1728-307-028-00	BEARING/BALL	*	1 6253-	1 2066-				
48	1728-307-006-00	ROLLERCHAIN	*	1 6253-	1 2066-				
49	1728-307-026-00	GUIDE/CHAIN	*	1 6253-	1 2066-				
50	V744-120-400-80	SEAL,OIL/TC20408	*	1 6253-	1 2066-				
51	1725-434-062-00	BEARING/BALL	*	1 6253-	1 2066-				
52	1710-241-053-00	RING/SNAP/R62	*	1 6253-	1 2066-				
53	7827-205-010-00	SEAL/OIL	*	1 6253-	1 2066-				
54	1728-307-220-10	SHAFT/WHEEL COMP	*	1 -6770	1 -2225				
54A	1728-307-420-00	SHAFT/WHEEL COMP	*	1 6771-	1 2226-				

FIG. 24 CASE(CHAIN) SYSTEM(G TYPE)(2/2)

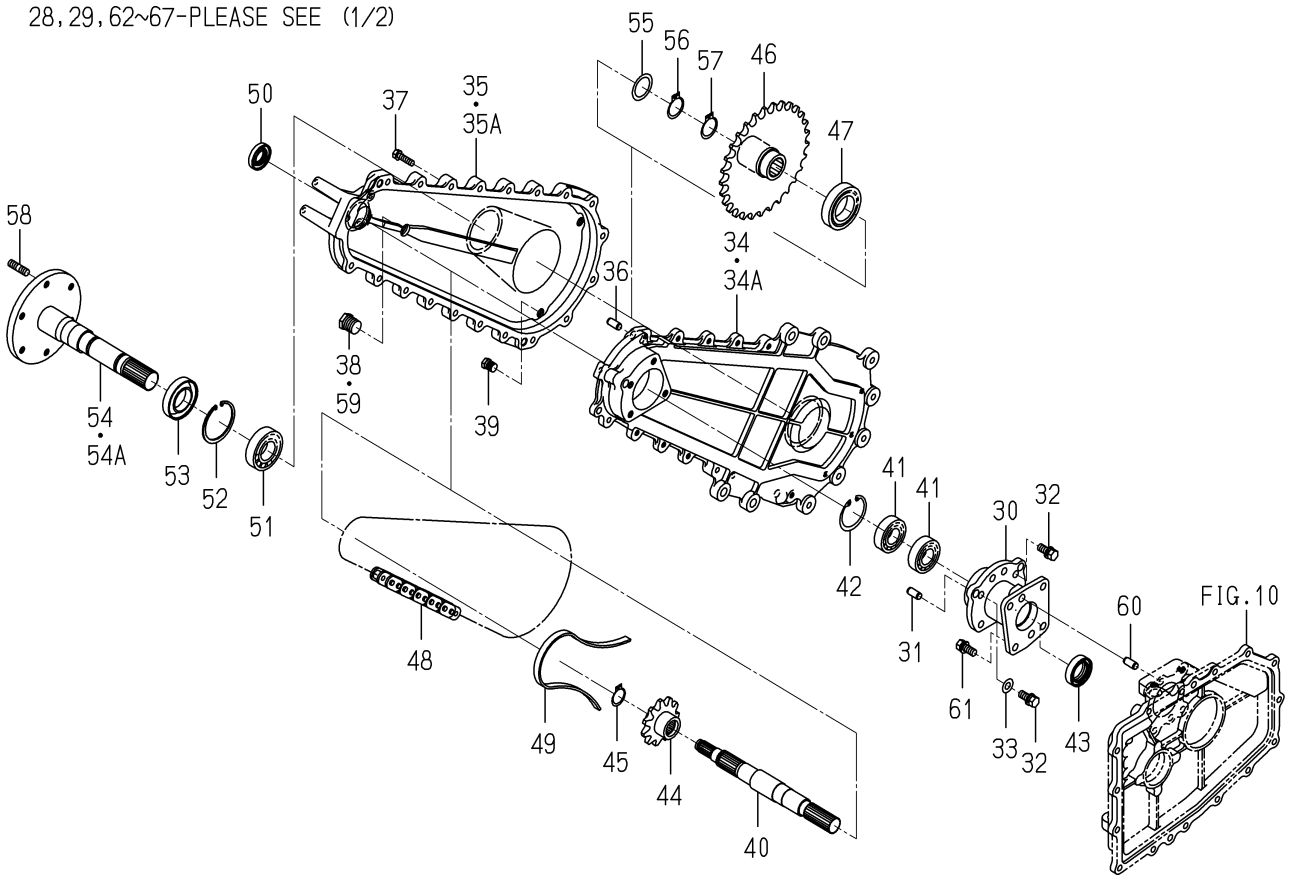

1728-308A-0100

KEY	PART CODE	DESCRIPTION	SPC	TYPE OF MODEL SXG19	TYPE OF MODEL SXG22	ITC	COL	GRP	REMARKS
55	1728-307-027-00	WASHER/31X42X01	*	1 6253-	1 2066-				
56	V704-140-030-00	RING,SNAP/30 C	*	1 6253-	1 2066-				
57	V704-140-030-00	RING,SNAP/30 C	*	1 6253-	1 2066-				
58	V251-341-002-00	BOLT/M10X20	*	2 6253-	2 2066-				
59	V782-160-000-8B	PLUG/SCREW/SEAL	*	2 6253-	2 2066-				
60	V523-101-002-20	PIN	*	4 6253-	4 2066-				
61	V211-561-002-50	BOLT/M10X25	*	8 6253-	8 2066-				
62	1728-306-005-00	SHIM/0.6	*	10 6253-	10 2066-				
63	V201-361-204-00	BOLT/M12X40	*	8 6253-	8 2066-				
64	V401-160-012-00	WASHER,SP/M12	*	8 6253-	8 2066-				
65	1728-306-210-20	STAY/CASE COMP	*	1 6253-	1 2066-				
66	1728-306-007-00	SHIM/0.6	*	2 6253-	2 2066-				
67	V211-560-802-50	BOLT,SEMS/M8X25 7T	*	6 6253-	6 2066-				

FIG. 25 BRAKE SYSTEM(EXCEPT G TYPE)

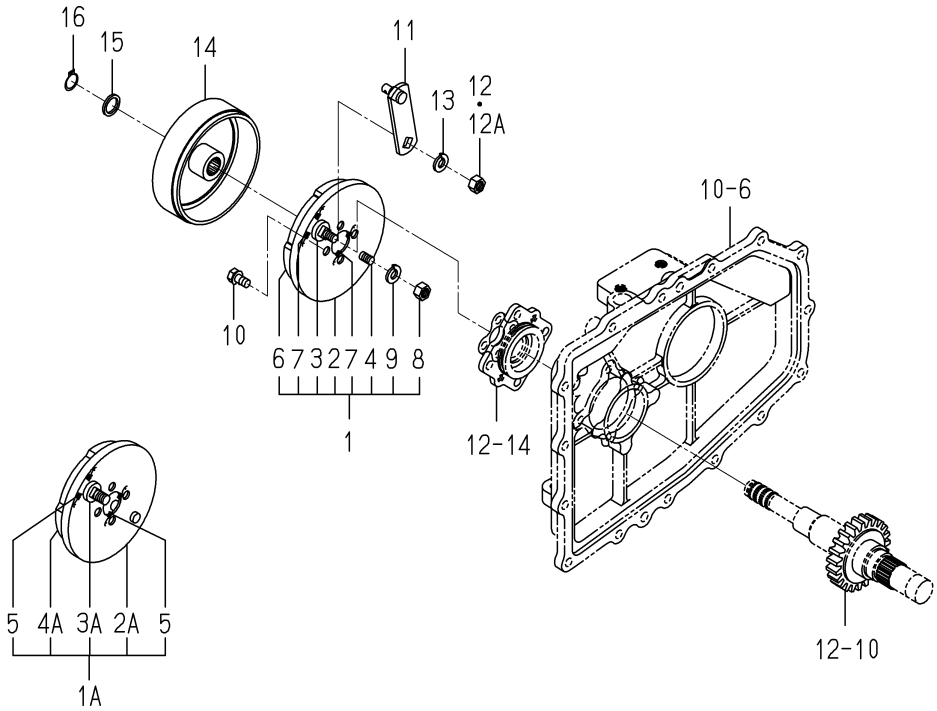

1728-310 -0100

KEY	PART CODE	DESCRIPTION	SPC	TYPE OF MODEL SXG19	TYPE OF MODEL SXG22	ITC	COL	GRP	REMARKS
1	1689-202-200-00	BRAKE/110 ASSY	*	1 -6378	1 -2131				
1A	1728-310-210-00	BRAKE/110 ASSY	*	1 6379-	1 2132-				
2	1689-202-201-00	PLATE/BACKING	*	1 -6378	1 -2131				
2A	1728-310-211-00	BACKPLATE	*	1 6379-	1 2132-				
3	1689-202-202-00	SHAFT/CAM	*	1 -6378	1 -2131				
3A	1728-310-212-00	SHAFT/CAM	*	1 6379-	1 2132-				
4	1689-202-203-00	PIN/ANCHOR	*	1 -6378	1 -2131				
4A	1728-310-213-00	LINING	*	2 6379-	2 2132-				
5	1728-310-214-00	SPRING/HE036	*	2 6379-	2 2132-				
6	1689-202-211-00	LINING	*	2 -6378	2 -2131				
7	1689-202-212-00	SPRING	*	2 -6378	2 -2131				
8	V304-260-010-00	NUT	*	1 -6378	1 -2131				
9	V401-160-010-00	WASHER,SP/M10	*	1 -6378	1 -2131				
10	V211-260-801-60	BOLT,SEMS (S) M8X16	*	4	4				
11	1728-310-200-00	ARM/BRAKE COMP	*	1	1				
12	V334-260-010-00	NUT/M10	*	1 -6378	1 -2131				
12A	V304-260-010-00	NUT	*	1 6379-	1 2132-				
13	V401-160-010-00	WASHER,SP/M10	*	1	1				
14	1689-202-004-00	DRUM/BRAKE	*	1	1				
15	V411-260-016-00	WASHER / M16	*	1	1				
16	V704-140-016-00	RING,SNAP/16 C	*	1	1				

FIG. 26 BRAKE SYSTEM(G TYPE)

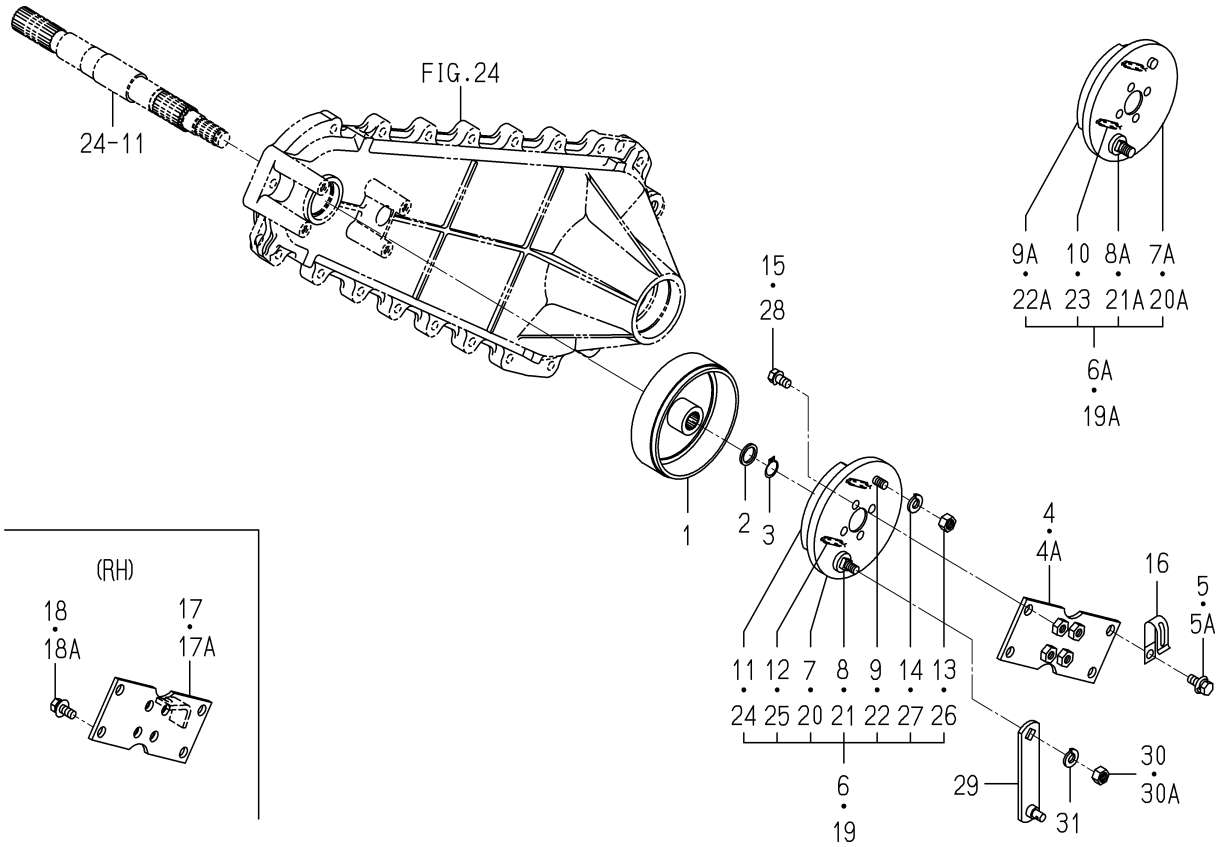

1728-310A-0100

KEY	PART CODE	DESCRIPTION	SPC	TYPE OF MODEL SXG19	TYPE OF MODEL SXG22	ITC	COL	GRP	REMARKS
1	1689-202-004-00	DRUM/BRAKE	*	2	2				
2	1728-310-052-00	WASHER/17X22X03	*	2	2				
3	V704-140-016-00	RING,SNAP/16 C	*	2	2				
4	1728-310-510-00	STAY/BRAKE/LH COMP	*	1 -7316	1 -2351				
4A	1728-310-510-10	STAY/BRAKE/LH COMP	*	1 7317-	1 2352-	1			
5	V211-260-802-00	BOLT/S	*	4 -7316	4 -2351				
5A	V211-360-802-00	BOLT/SP	*	4 7317-	4 2352-				
6	1689-202-200-00	BRAKE/110 ASSY	*	1 -6391	1 -2141				
6A	1728-310-210-00	BRAKE/110 ASSY	*	1 6392-	1 2142-				
7	1689-202-201-00	PLATE/BACKING	*	1 -6378	1 -2131				
7A	1728-310-211-00	BACKPLATE	*	1 6379-	1 2132-				
8	1689-202-202-00	SHAFT/CAM	*	1 -6378	1 -2131				
8A	1728-310-212-00	SHAFT/CAM	*	1 6379-	1 2132-				
9	1689-202-203-00	PIN/ANCHOR	*	1 -6378	1 -2131				
9A	1728-310-213-00	LINING	*	2 6379-	2 2132-				
10	1728-310-214-00	SPRING/HE036	*	2 6379-	2 2132-				
11	1689-202-211-00	LINING	*	2 -6378	2 -2131				
12	1689-202-212-00	SPRING	*	2 -6378	2 -2131				
13	V304-260-010-00	NUT	*	1 -6378	1 -2131				
14	V401-160-010-00	WASHER,SP/M10	*	1 -6378	1 -2131				
15	V211-260-801-60	BOLT,SEMS (S) M8X16	*	4	4				
16	1425-621-004-00	HOLDER/JE/9-9	*	1	1				
17	1728-310-520-00	STAY/BRAKE/RH COMP	*	1 -7316	1 -2351				
17A	1728-310-520-10	STAY/BRAKE/RH COMP	*	1 7317-	1 2352-	1			
18	V211-260-802-00	BOLT/S	*	4 -7316	4 -2351				
18A	V211-360-802-00	BOLT/SP	*	4 7317-	4 2352-				
19	1689-202-200-00	BRAKE/110 ASSY	*	1 -6391	1 -2141				
19A	1728-310-210-00	BRAKE/110 ASSY	*	1 6392-	1 2142-				
20	1689-202-201-00	PLATE/BACKING	*	1 -6378	1 -2131				
20A	1728-310-211-00	BACKPLATE	*	1 6379-	1 2132-				

FIG. 26 BRAKE SYSTEM(G TYPE)

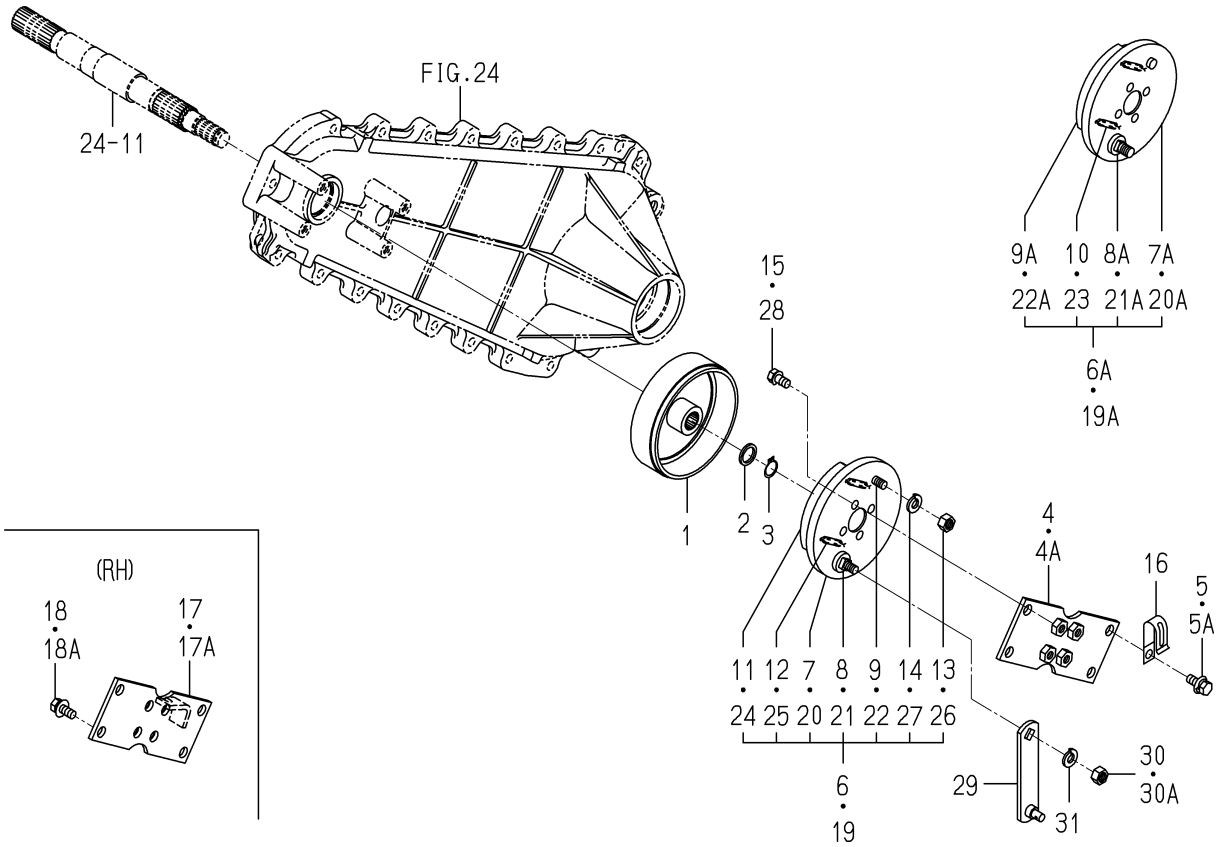

1728-310A-0100

KEY	PART CODE	DESCRIPTION	SPC	TYPE OF MODEL SXG19	TYPE OF MODEL SXG22	ITC	COL	GRP	REMARKS
21	1689-202-202-00	SHAFT/CAM	*	1-6378	1-2131				
21A	1728-310-212-00	SHAFT/CAM	*	1 6379-	1 2132-				
22	1689-202-203-00	PIN/ANCHOR	*	1-6378	1-2131				
22A	1728-310-213-00	LINING	*	2 6379-	2 2132-				
23	1728-310-214-00	SPRING/HE036	*	2 6379-	2 2132-				
24	1689-202-211-00	LINING	*	2-6378	2-2131				
25	1689-202-212-00	SPRING	*	2-6378	2-2131				
26	V304-260-010-00	NUT	*	1-6378	1-2131				
27	V401-160-010-00	WASHER,SP/M10	*	1-6378	1-2131				
28	V211-260-801-60	BOLT,SEMS (S) M8X16	*	4	4				
29	1728-310-530-00	ARM/BRAKE COMP	*	2	2				
30	V334-260-010-00	NUT/M10	*	2-6391	2-2141				
30A	V304-260-010-00	NUT	*	2 6392-	2 2142-				
31	V401-160-010-00	WASHER,SP/M10	*	2	2				

FIG. 27 PEDAL(BRAKE) SYSTEM(EXCEPT G TYPE)

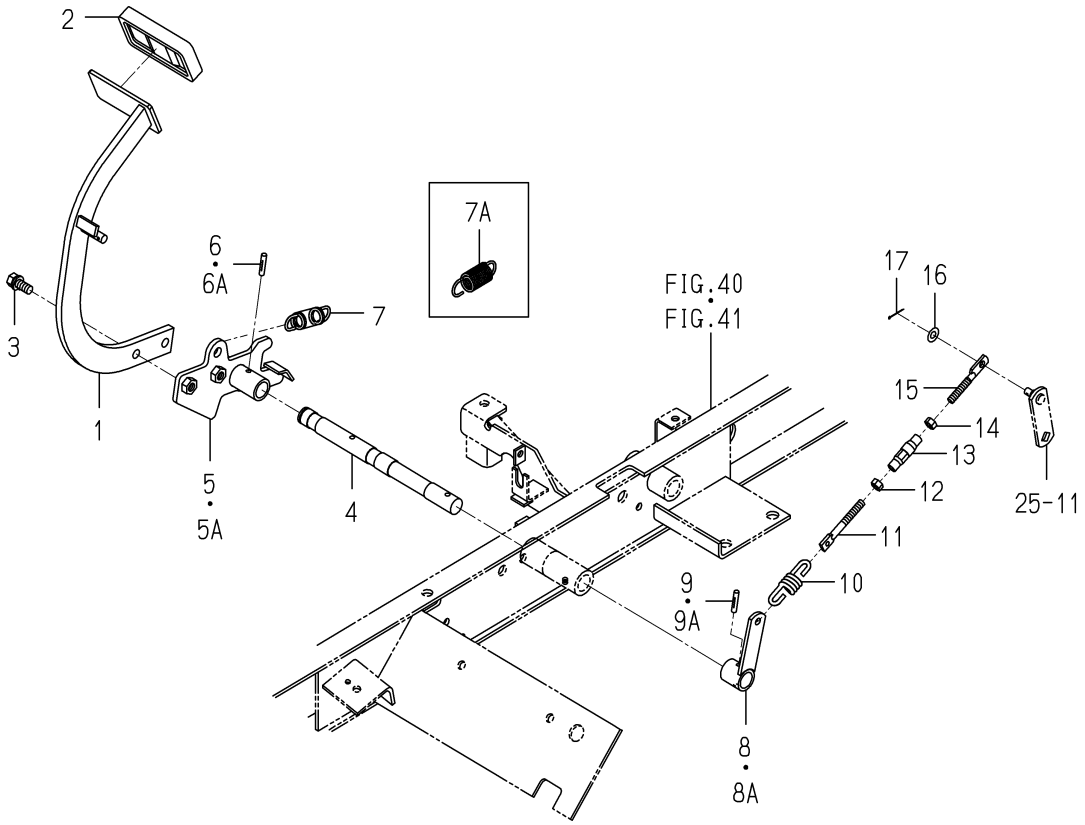

1728-312 -0100

KEY	PART CODE	DESCRIPTION	SPC	TYPE OF MODEL SXG19	TYPE OF MODEL SXG22	ITC	COL	GRP	REMARKS
1	1728-312-200-00	PEDAL/BRAKE	*	1	1				
2	1636-313-011-10	PAD/BRAKE	*	1	1				
3	V211-261-002-50	BOLT(S) M10X25	*	2	2				
4	1728-312-001-00	SHAFT/BRAKE	*	1	1				
5	1728-312-210-00	ARM/BRAKE/PEDAL COMP	*	1 -621	1 -115				
5A	1728-312-210-10	ARM/BRAKE/PEDAL COMP	*	1 622-	1 116-	1			
6	1480-304-002-00	PIN 6X28	*	1 -10124	1 -3327				
6A	V530-240-602-80	PIN/GROOVE	*	1 10125-	1 3328-				
7	1560-404-002-30	SPRING	*	1 -1520	1 -581				
7A	2149-312-015-60	SPRING/HE068	*	1 1521-	1 582-				
8	1728-312-220-00	ARM/BRAKE COMP	*	1 -621	1 -115				
8A	1728-312-220-10	ARM/BRAKE COMP	*	1 622-	1 116-	1			
9	1480-304-002-00	PIN 6X28	*	1 -10124	1 -3327				
9A	V530-240-602-80	PIN/GROOVE	*	1 10125-	1 3328-				
10	2144-519-009-10	SPRING/HE060	*	1	1				
11	3104-210-213-00	ROD/M08X67	*	1	1				
12	V304-260-008-00	NUT	*	1	1				
13	1444-122-002-00	TURNBUCKLE/M8	*	1	1				
14	1560-132-007-30	NUT/M8	*	1	1				
15	1728-312-002-00	ROD/M08/LHX60	*	1	1				
16	V411-260-008-00	WASHER,PL/M 8	*	1	1				
17	V500-162-002-00	PIN,SPLIT/2 X20	*	1	1				

FIG. 28 PEDAL(BRAKE) SYSTEM(G TYPE)

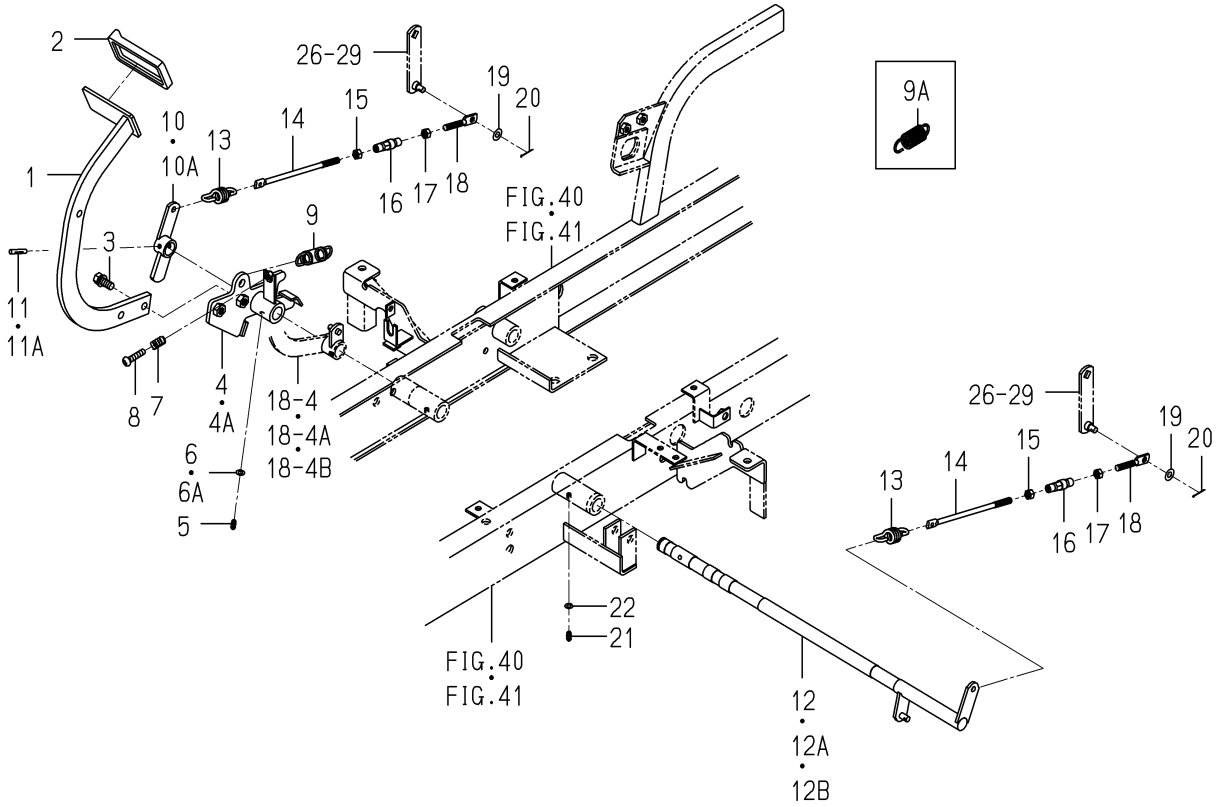

1728-312A-0100

KEY	PART CODE	DESCRIPTION	SPC	TYPE OF MODEL SXG19	TYPE OF MODEL SXG22	ITC	COL	GRP	REMARKS
1	1705-312-230-00	PEDAL/BRAKE COMP	*	1	1				
2	1636-313-011-10	PAD/BRAKE	*	1	1				
3	V211-261-002-50	BOLT(S) M10X25	*	2	2				
4	1728-312-510-00	ARM/BRAKE/PEDAL COMP	*	1 -8564	1 -2850				
4A	1728-312-510-10	ARM/BRAKE/PEDAL COMP	*	1 8565-	1 2851-	1			
5	V760-150-000-00	NIPPLE,GREASE	*	1	1				
6	V401-160-006-00	WASHER,SP/M 6	*	1 -8564	1 -2850				
6A	V411-260-006-00	WASHER / M6	*	1 8565-	1 2851-				
7	7947-603-012-00	SPRING/HC022	*	1	1				
8	V111-168-003-00	SCREW/M8X30	*	1	1				
9	1560-404-002-30	SPRING	*	1 -1470	1 -581				
9A	2149-312-015-60	SPRING/HE068	*	1 1471-	1 582-				
10	1728-312-520-00	ARN/BRAKE/G COMP	*	1 -926	1 -366				
10A	1728-312-520-10	ARN/BRAKE/G COMP	*	1 927-	1 367-	1			
11	1480-304-002-00	PIN 6X28	*	1 -10146	1 -3324				
11A	V530-240-602-80	PIN/GROOVE	*	1 10147-	1 3325-				
12	1728-312-530-10	SHAFT/BRAKE/G COMP	*	1 -926	1 -366				
12A	1728-312-530-20	SHAFT/BRAKE/G COMP	*	1 -3008	1 -925	1			
12B	1728-312-530-30	SHAFT/BRAKE/G COMP	*	1 3009-	1 926-	1			
13	2144-519-009-10	SPRING/HE060	*	2	2				
14	1728-312-051-00	ROD/M08X172	*	2	2				
15	V304-260-008-00	NUT	*	2	2				
16	1444-122-002-00	TURNBUCKLE/M8	*	2	2				
17	1560-132-007-30	NUT/M8	*	2	2				
18	1728-312-002-00	ROD/M08/LHX60	*	2	2				
19	V411-260-008-00	WASHER,PL/M 8	*	2	2				
20	V500-162-002-00	PIN,SPLIT/2 X20	*	2	2				
21	V760-150-000-00	NIPPLE,GREASE	*	1	1				
22	V401-160-006-00	WASHER,SP/M 6	*	1	1				

FIG. 29 PARKING SYSTEM(EXCEPT G TYPE)

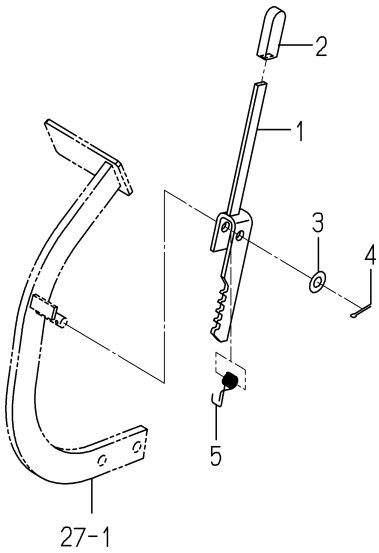

1608-313 -0100

KEY	PART CODE	DESCRIPTION	SPC	TYPE OF MODEL SXG19	TYPE OF MODEL SXG22	ITC	COL	GRP	REMARKS
1	1608-313-200-10	PLATE(PARKING) COMP	*	1	1				
2	2171-213-002-00	GRIP/04X12X50	*	1	1				
3	V411-260-010-00	WASHER/M10	*	1	1				
4	V500-163-002-00	PIN,SPLIT/3 X20	*	1	1				
5	1593-312-056-20	SPRING/HT013	*	1	1				

FIG. 30 PARKING SYSTEM(G TYPE)

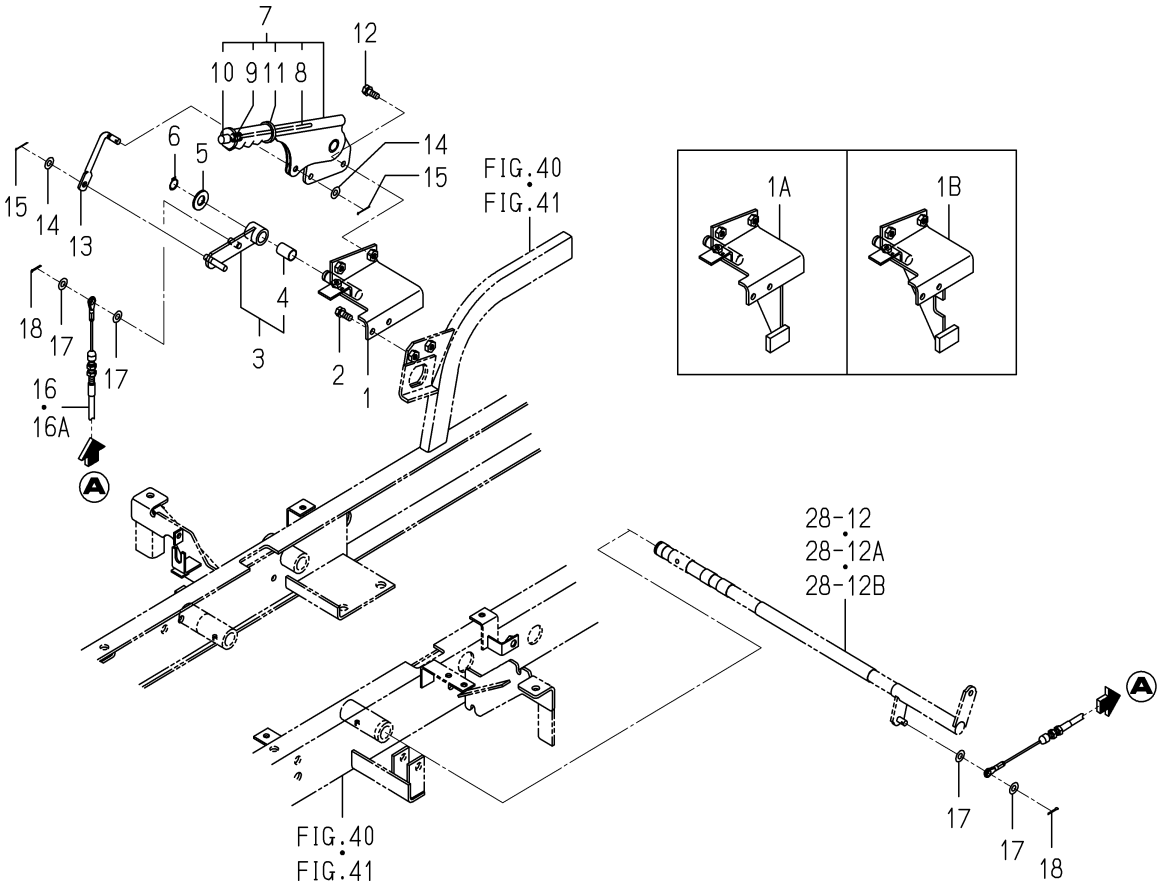

1728-313A-0100

KEY	PART CODE	DESCRIPTION	SPC	TYPE OF MODEL SXG19	TYPE OF MODEL SXG22	ITC	COL	GRP	REMARKS
1	1728-313-510-10	BRACKET/LEVER COMP	*	1 -56	1 -35				
1A	1728-313-510-20	BRACKET/LEVER COMP	*	1 -8939	1 -3007	1			
1B	1728-313-510-30	BRACKET/LEVER COMP	*	1 8940-	1 3008-	1			
2	V211-260-802-00	BOLT/S	*	2	2				
3	1728-313-530-00	ARM/PARKING ASSY	*	1	1				
4	1588-515-008-00	BUSH/15X17X25	*	1	1				
5	V411-260-014-00	WASHER,PL/M14	*	1	1				
6	V704-140-015-00	RING,SNAP/15 C	*	1	1				
7	1740-313-300-00	LEVER/PARKING ASSY	*	1	1				
8	1442-313-202-00	ROD	*	1	1				
9	1444-328-273-00	SPRING	*	1	1				
10	1444-328-272-00	BUTTON	*	1	1				
11	1740-313-301-00	GRIP/ORANGE	*	1	1				
12	V211-260-802-00	BOLT/S	*	2	2				
13	1728-313-051-00	ROD/08X80	*	1	1				
14	V411-260-008-00	WASHER,PL/M 8	*	2	2				
15	V500-162-002-00	PIN,SPLIT/2 X20	*	2	2				
16	1728-313-520-00	CABLE/PARKING ASSY	*	1 -7449	1 -2382				
16A	1728-313-520-10	CABLE/PARKING ASSY	*	1 7450-	1 2383-	1			
17	V411-260-008-00	WASHER,PL/M 8	*	4	4				
18	V500-162-501-50	PIN,SPLIT/2.5X15	*	2	2				

FIG. 31 WHEEL(REAR) SYSTEM(SXG19 TYPE)

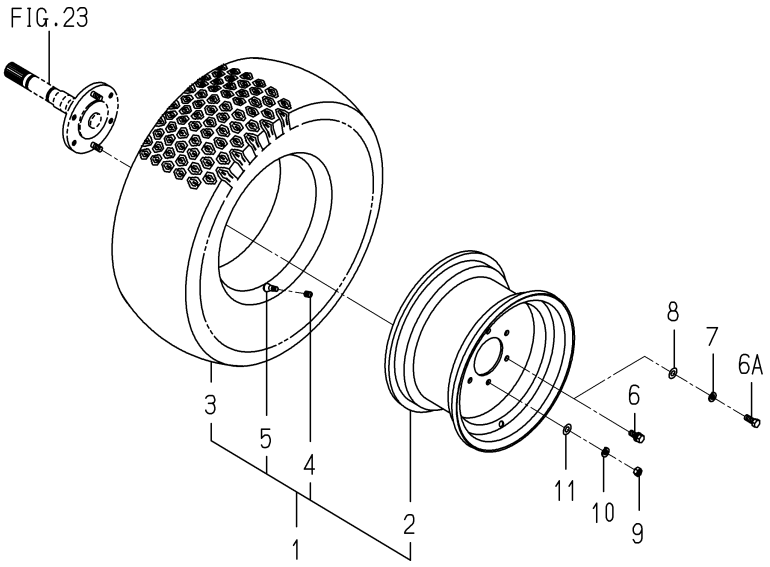

1728-317 -0100

KEY	PART CODE	DESCRIPTION	SPC	TYPE OF MODEL SXG19	TYPE OF MODEL SXG22	ITC	COL	GRP	REMARKS
1	1593-317-220-10	TIRE/REAR	*	2			6G		
2	1593-317-210-00	RIM,WHEEL	*	2			6G		
3	1593-317-201-00	TIRE,TURF/23-12	*	2					
4	V999-200-003-00	CAP,TIRE VALVE	*	2					
5	1386-241-002-00	VALVE/RIM	*	2					
6	V211-561-002-50	BOLT/M10X25	*	8 -441					
6A	V201-361-002-50	BOLT/M10X25	*	8 442-					
7	V401-160-010-00	WASHER,SP/M10	*	8 401-					
8	V411-260-010-00	WASHER/M10	*	8 401-					
9	V304-460-010-00	NUT/M10	*	4					
10	V401-160-010-00	WASHER,SP/M10	*	4					
11	V411-260-010-00	WASHER/M10	*	4 442-					

FIG. 32 WHEEL(REAR) SYSTEM(SXG22 TYPE)

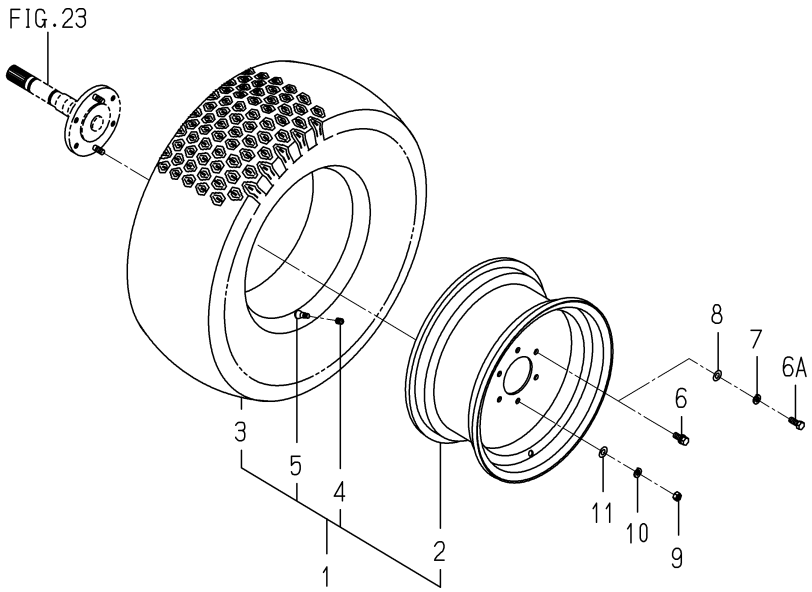

1728-317A-0100

KEY	PART CODE	DESCRIPTION	SPC	TYPE OF MODEL SXG19	TYPE OF MODEL SXG22	ITC	COL	GRP	REMARKS
1	1728-317-500-00	TIRE/250/60D-14 ASSY	*		2		6G		
2	1705-317-201-00	TIRE/250/60D-14	*		2				
3	1728-317-510-00	WHEEL/14X7JA COMP	*		2		6G		
4	V999-200-003-00	CAP,TIRE VALVE	*		2				
5	1386-241-002-00	VALVE/RIM	*		2				
6	V211-561-002-50	BOLT/M10X25	*		8 -88				
6A	V201-361-002-50	BOLT/M10X25	*		8 89-				
7	V401-160-010-00	WASHER,SP/M10	*		8 89-				
8	V411-260-010-00	WASHER/M10	*		8 89-				
9	V304-460-010-00	NUT/M10	*		4				
10	V401-160-010-00	WASHER,SP/M10	*		4				
11	V411-260-010-00	WASHER/M10	*		4 89-				

FIG. 33 PTO(FRONT) SYSTEM(SXG19 TYPE)

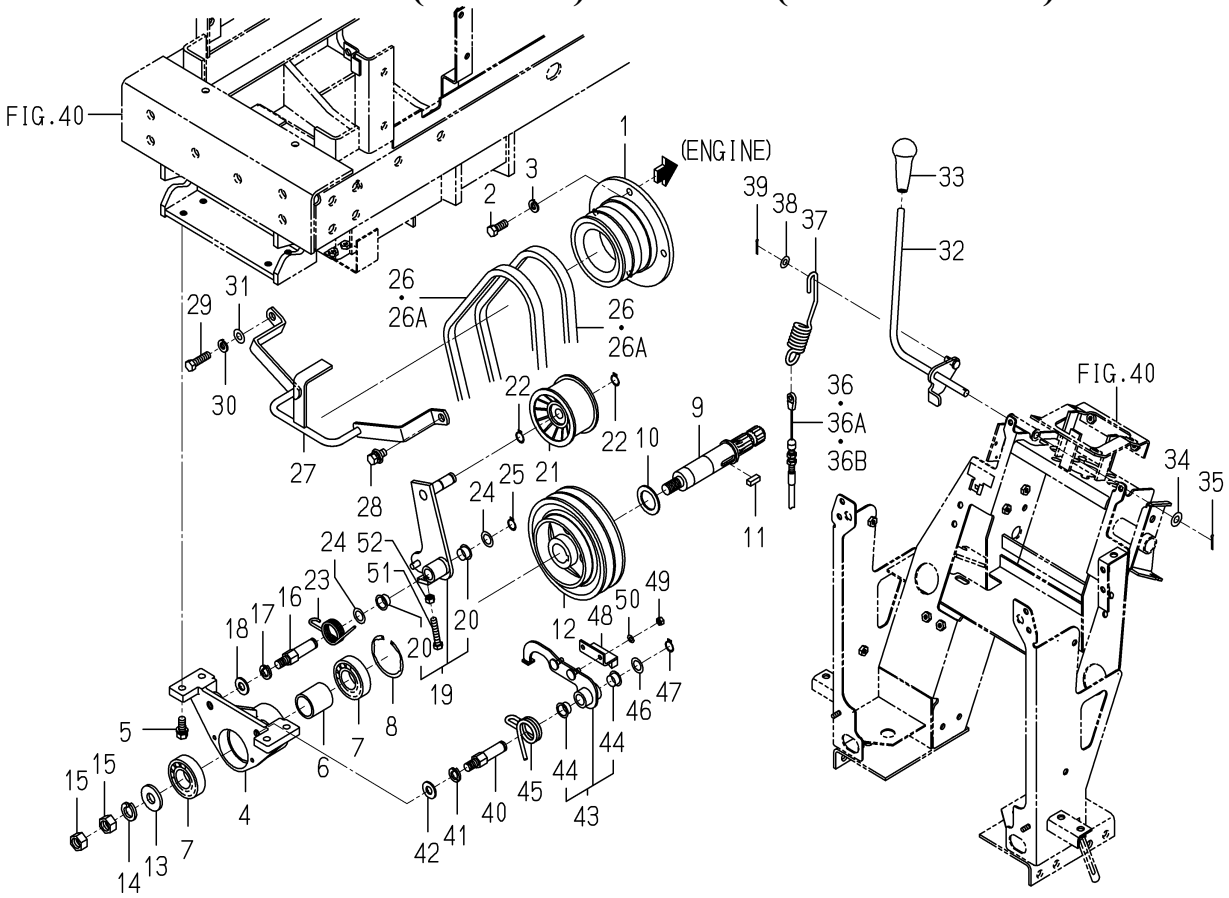

1728-334 -0100

KEY	PART CODE	DESCRIPTION	SPC	TYPE OF MODEL SXG19	TYPE OF MODEL SXG22	ITC	COL	GRP	REMARKS
1	1728-334-001-00	PULLEY/V2B104	*	1					
2	V203-461-002-50	BOLT/M10X25	*	4					
3	V401-160-010-00	WASHER,SP/M10	*	4					
4	1728-334-002-00	METAL/PTO/FRONT	*	1					
5	V211-561-002-50	BOLT/M10X25	*	4					
6	1728-334-004-00	COLLAR/31X38X41	*	1					
7	V600-150-620-60	BEARING,RB/6206SS	*	2					
8	V707-140-062-00	RING/SNAP	*	1					
9	1728-334-003-00	SHAFT/PTO/MID	*	1					
10	1689-501-001-00	WASHER/30X45X2	*	1					
11	3670-520-001-00	KEY/08X07X20	*	1					
12	1728-334-007-00	PULLEY/V2B155	*	1					
13	3746-111-011-00	WASHER	*	1					
14	V401-160-016-00	WASHER,SP/M16	*	1					
15	V305-260-016-00	NUT/M16	*	2					
16	1728-334-005-00	PIN/TENSION	*	1					
17	V401-160-012-00	WASHER,SP/M12	*	1					
18	V411-260-012-00	WASHER /M12	*	1					
19	1728-334-250-00	ARM/TENSION/19 ASSY	*	1					
20	2502-407-001-10	BUSH/15X17X11	*	2					
21	3648-703-001-00	PULLEY/FT80X47	*	1					
22	V704-140-015-00	RING,SNAP/15 C	*	2					
23	1728-334-006-00	SPRING/HT032	*	1					
24	3517-205-007-00	WASHER	*	2					
25	V704-140-015-00	RING,SNAP/15 C	*	1					
26	1728-334-008-00	BELT/VB039	*	2 -8372					
26A	1728-334-013-00	BELT/VB039	*	2 8373-					
27	1728-334-210-00	BAR/PTO COMP	*	1					
28	V211-361-002-00	BOLT,SEMS	*	1					
29	V203-361-003-50	BOLT	*	1					

FIG. 33 PTO(FRONT) SYSTEM(SXG19 TYPE)

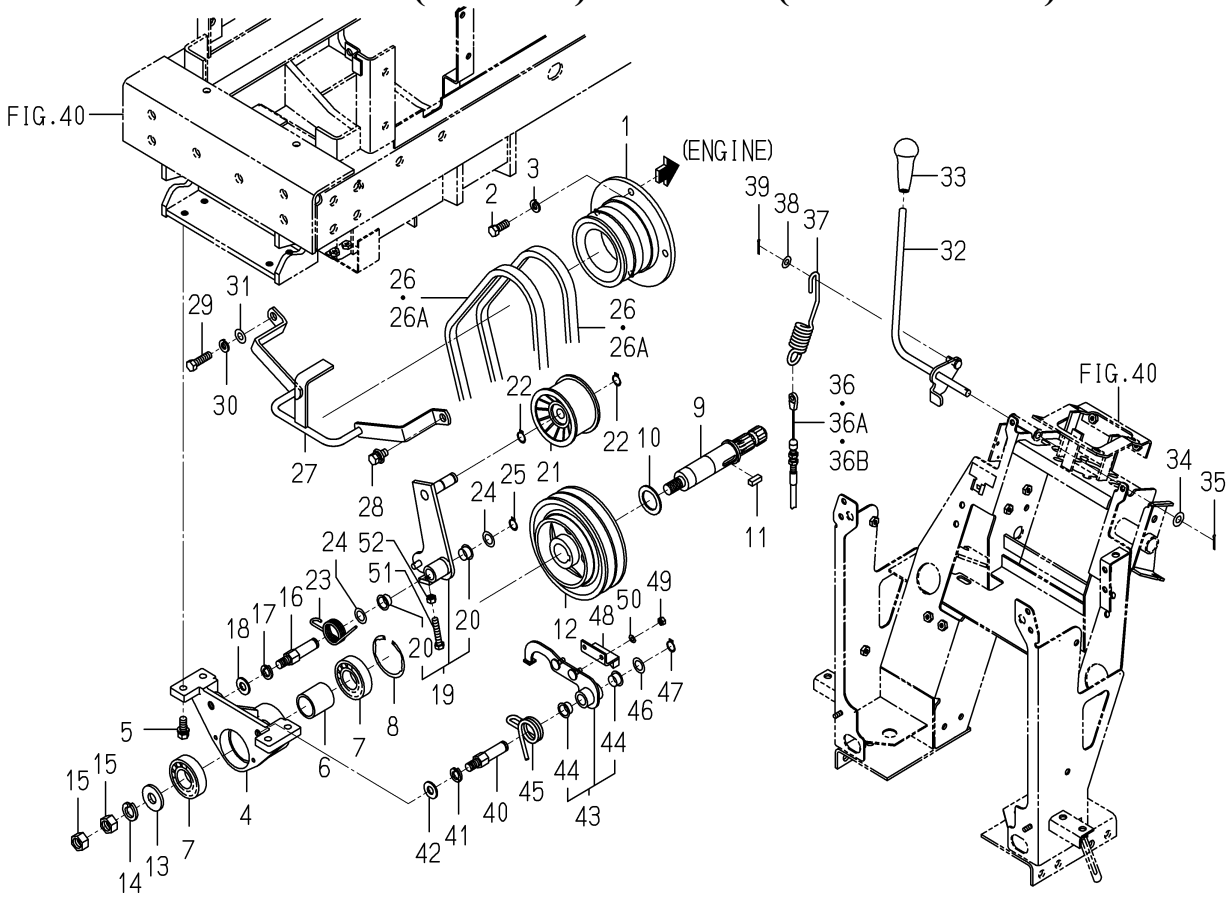

1728-334 -0100

KEY	PART CODE	DESCRIPTION	SPC	TYPE OF MODEL SXG19	TYPE OF MODEL SXG22	ITC	COL	GRP	REMARKS
30	V401-160-010-00	WASHER,SP/M10	*	1					
31	V411-260-010-00	WASHER/M10	*	1					
32	1728-334-230-00	LEVER/PTO COMP	*	1					
33	1705-333-001-00	GRIP/PTO	*	1					
34	V411-260-010-00	WASHER/M10	*	1					
35	V500-162-502-00	PIN,SPLIT/2.5X20	*	1					
36	1728-334-240-00	CABLE/PTO/19 ASSY	*	1 -7435					
36A	1728-334-240-10	CABLE/PTO/19 ASSY	*	1 -10681		1			
36B	1728-334-240-20	CABLE/PTO/19 ASSY	*	1 10682-		1			
37	1705-332-006-00	SPRING/HE138	*	1					
38	V411-260-008-00	WASHER,PL/M 8	*	1					
39	V500-162-502-00	PIN,SPLIT/2.5X20	*	1					
40	1728-334-005-00	PIN/TENSION	*	1					
41	V401-160-012-00	WASHER,SP/M12	*	1					
42	V411-260-012-00	WASHER /M12	*	1					
43	1728-334-260-00	ARM/PTOBRAKE ASSY	*	1					
44	2502-407-001-10	BUSH/15X17X11	*	2					
45	1728-334-011-00	SPRING/HT033	*	1					
46	3517-205-007-00	WASHER	*	2					
47	V704-140-015-00	RING,SNAP/15 C	*	1					
48	1728-334-280-00	LINING/PTOBRAKE COMP	*	1					
49	V301-260-006-00	NUT/M 6	*	2					
50	V401-160-006-00	WASHER,SP/M 6	*	2					
51	V201-360-804-50	BOLT/M8X45/7T	*	1					
52	V304-260-008-00	NUT	*	1					

FIG. 34 PTO(FRONT) SYSTEM(SXG22 TYPE)

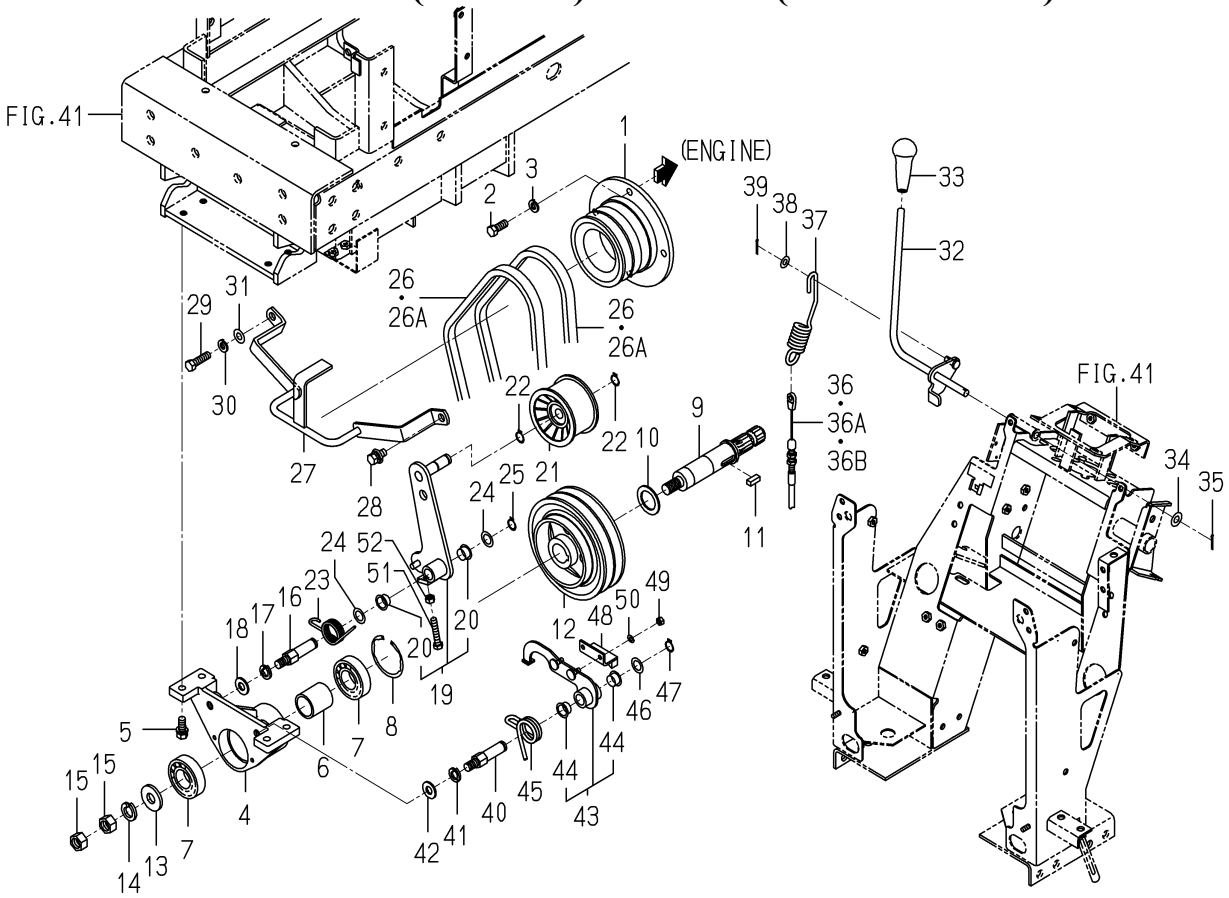

1728-334A-0100

KEY	PART CODE	DESCRIPTION	SPC	TYPE OF MODEL SXG19	TYPE OF MODEL SXG22	ITC	COL	GRP	REMARKS
1	1728-334-001-00	PULLEY/V2B104	*		1				
2	V203-461-002-50	BOLT/M10X25	*		4				
3	V401-160-010-00	WASHER,SP/M10	*		4				
4	1728-334-002-00	METAL/PTO/FRONT	*		1				
5	V211-561-002-50	BOLT/M10X25	*		4				
6	1728-334-004-00	COLLAR/31X38X41	*		1				
7	V600-150-620-60	BEARING,RB/6206SS	*		2				
8	V707-140-062-00	RING/SNAP	*		1				
9	1728-334-003-00	SHAFT/PTO/MID	*		1				
10	1689-501-001-00	WASHER/30X45X2	*		1				
11	3670-520-001-00	KEY/08X07X20	*		1				
12	1728-334-007-00	PULLEY/V2B155	*		1				
13	3746-111-011-00	WASHER	*		1				
14	V401-160-016-00	WASHER,SP/M16	*		1				
15	V305-260-016-00	NUT/M16	*		2				
16	1728-334-005-00	PIN/TENSION	*		1				
17	V401-160-012-00	WASHER,SP/M12	*		1				
18	V411-260-012-00	WASHER /M12	*		1				
19	1728-334-520-00	ARM/TENSION ASSY	*		1				
20	2502-407-001-10	BUSH/15X17X11	*		2				
21	3648-703-001-00	PULLEY/FT80X47	*		1				
22	V704-140-015-00	RING,SNAP/15 C	*		2				
23	1728-334-006-00	SPRING/HT032	*		1				
24	3517-205-007-00	WASHER	*		2				
25	V704-140-015-00	RING,SNAP/15 C	*		1				
26	1728-334-051-00	BELT/VB041	*		2 -2723				
26A	3695-303-003-00	BELT/VB041	*		2 2724-				
27	1728-334-210-00	BAR/PTO COMP	*		1				
28	V211-361-002-00	BOLT,SEMS	*		1				
29	V203-361-003-50	BOLT	*		1				

FIG. 34 PTO(FRONT) SYSTEM(SXG22 TYPE)

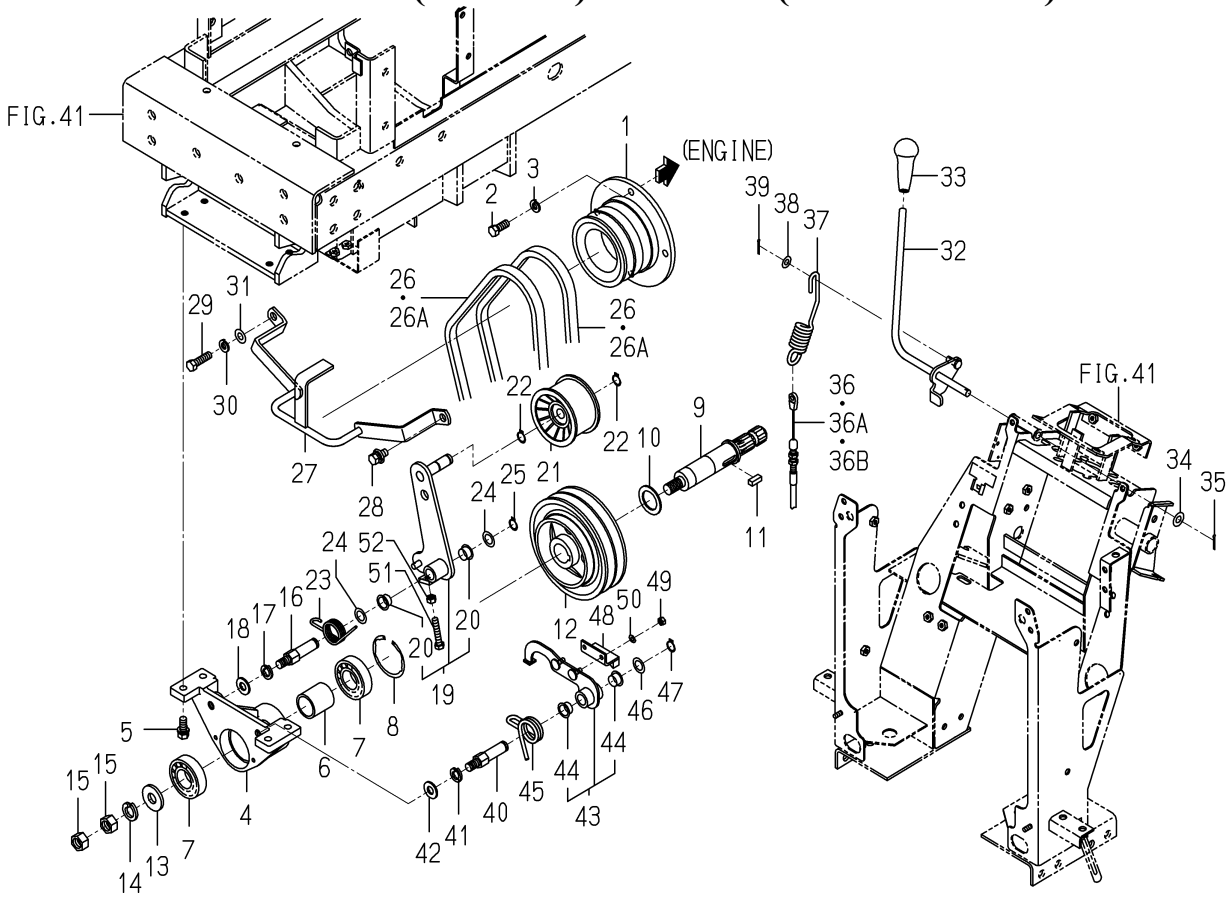

1728-334A-0100

KEY	PART CODE	DESCRIPTION	SPC	TYPE OF MODEL SXG19	TYPE OF MODEL SXG22	ITC	COL	GRP	REMARKS
30	V401-160-010-00	WASHER,SP/M10	*		1				
31	V411-260-010-00	WASHER/M10	*		1				
32	1728-334-230-00	LEVER/PTO COMP	*		1				
33	1705-333-001-00	GRIP/PTO	*		1				
34	V411-260-010-00	WASHER/M10	*		1				
35	V500-162-502-00	PIN,SPLIT/2.5X20	*		1				
36	1728-334-510-00	CABLE/PTO/22 ASSY	*		1 -2373				
36A	1728-334-510-10	CABLE/PTO/22 ASSY	*		1 -3519	1			
36B	1728-334-510-20	CABLE/PTO/22 ASSY	*		1 3520-	1			
37	1705-332-006-00	SPRING/HE138	*		1				
38	V411-260-008-00	WASHER,PL/M 8	*		1				
39	V500-162-502-00	PIN,SPLIT/2.5X20	*		1				
40	1728-334-005-00	PIN/TENSION	*		1				
41	V401-160-012-00	WASHER,SP/M12	*		1				
42	V411-260-012-00	WASHER /M12	*		1				
43	1728-334-260-00	ARM/PTOBRAKE ASSY	*		1				
44	2502-407-001-10	BUSH/15X17X11	*		2				
45	1728-334-011-00	SPRING/HT033	*		1				
46	3517-205-007-00	WASHER	*		2				
47	V704-140-015-00	RING,SNAP/15 C	*		1				
48	1728-334-280-00	LINING/PTOBRAKE COMP	*		1				
49	V301-260-006-00	NUT/M 6	*		2				
50	V401-160-006-00	WASHER,SP/M 6	*		2				
51	V201-360-804-50	BOLT/M8X45/7T	*		1				
52	V304-260-008-00	NUT	*		1				

FIG. 35 COVER(PTO) SYSTEM

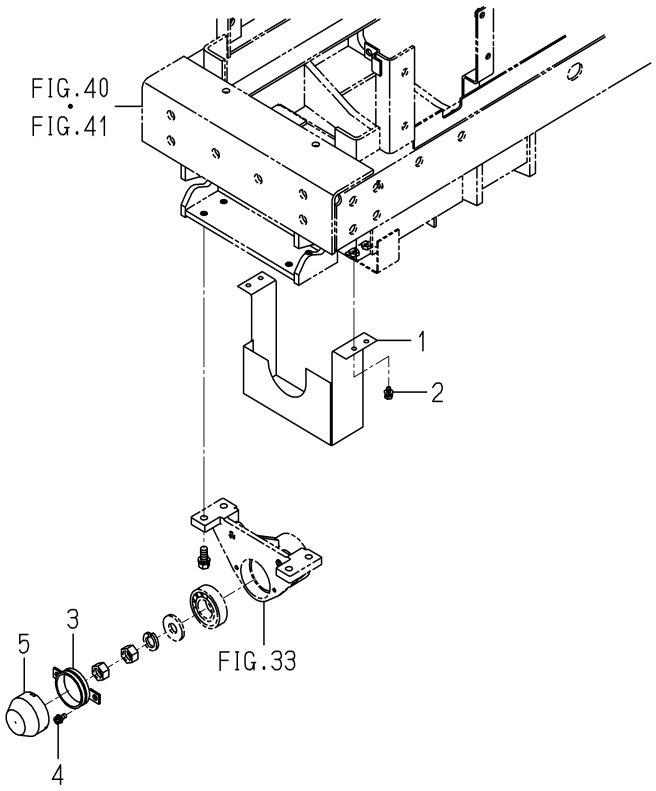

1728-335 -0100

KEY	PART CODE	DESCRIPTION	SPC	TYPE OF MODEL SXG19	TYPE OF MODEL SXG22	ITC	COL	GRP	REMARKS
1	1728-335-210-00	COVER/PTO COMP	*	1	1				
2	V210-660-602-00	BOLT/SP	*	4	4				
3	1728-335-220-00	HUB/CAP COMP	*	1	1				
4	V120-376-001-60	SCREW/SP	*	2	2				
5	1593-411-053-20	CAP/WHEEL	*	1	1				

FIG. 36 WHEEL(STEERING) SYSTEM

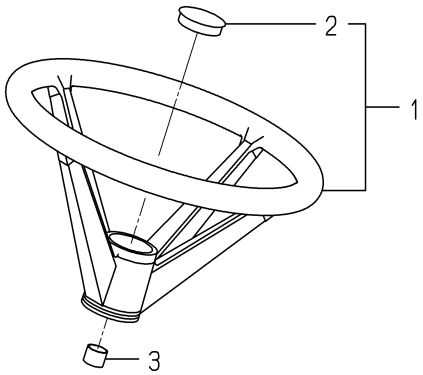

1739-401 -0100

KEY	PART CODE	DESCRIPTION	SPC	TYPE OF MODEL		ITC	COL	GRP	REMARKS
				SXG19	SXG22				
1	1739-401-200-00	WHEEL/STEERING ASSY	*	1	1				
2	1739-401-202-00	CAP/STEERING	*	1	1				
3	1739-401-001-00	INSULATOR/15	*	1	1				

FIG. 37 CONTROLLER(STEERING) SYSTEM

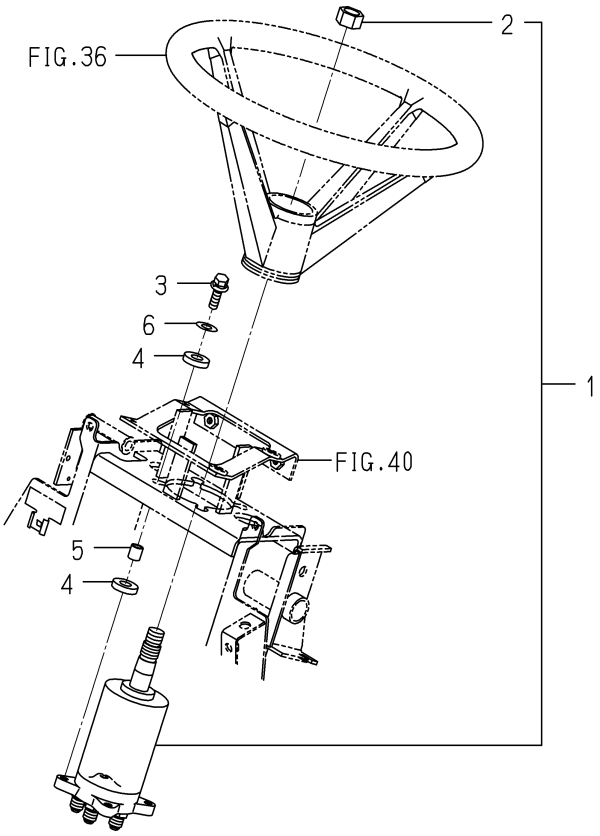

1728-407 -0100

KEY	PART CODE	DESCRIPTION	SPC	TYPE OF MODEL SXG19	TYPE OF MODEL SXG22	ITC	COL	GRP	REMARKS
1	1728-407-200-00	CONTROLLER/STEERING	*	1	1				
2	1725-407-201-00	NUT/5/8-18UNF	*	1	1				
3	V211-660-803-00	BOLT/SP	*	4	4				
4	1646-640-059-00	WASHER/12X26X06	*	8	8				
5	1725-407-001-00	COLLAR/08X12X13	*	4	4				
6	V411-260-010-00	WASHER/M10	*	4	4				

FIG. 38 SYLINDER(STEERING) SYSTEM (SXG19 TYPE)

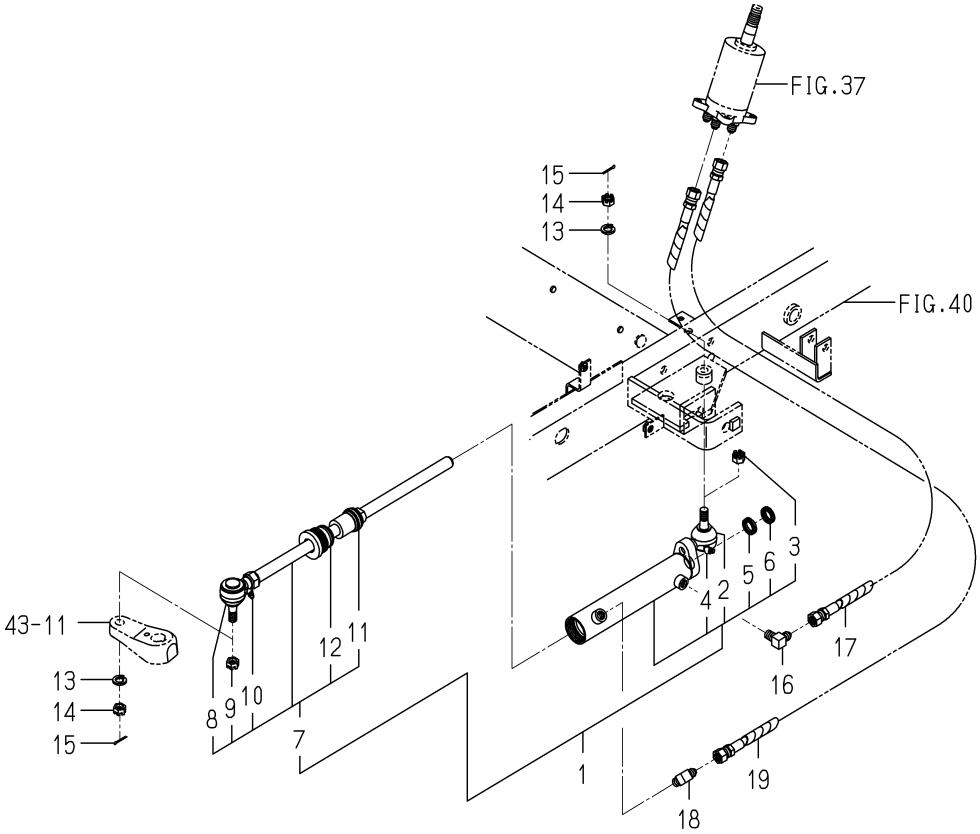

1728-408 -0100

KEY	PART CODE	DESCRIPTION	SPC	TYPE OF MODEL SXG19	TYPE OF MODEL SXG22	ITC	COL	GRP	REMARKS
1	1728-408-260-00	CYLINDER ASSY	*	1					
2	1404-402-001-00	COVER,DUST	*	1					
3	1404-402-002-00	NUT,SLOTTED	*	1					
4	1427-433-241-00	NIPPLE,GREASE/PT1/4	*	1					
5	K185-031-302-00	SEAL/ROD	*	1					
6	K185-031-303-00	SEAL/DUST	*	1					
7	1689-408-530-00	ROD/PISTON ASSY	*	1					
8	1404-402-001-00	COVER,DUST	*	1					
9	1404-402-002-00	NUT,SLOTTED	*	1					
10	1427-433-241-00	NIPPLE,GREASE/PT1/4	*	1					
11	1672-403-003-00	PACKING/PISTON	*	1					
12	V720-113-502-90	RING/O	*	1					
13	V401-160-012-00	WASHER,SP/M12	*	2					
14	V328-262-112-00	NUT/M12X1.25	*	2 -8564					
15	V500-163-002-00	PIN,SPLIT/3 X20	*	2					
16	1728-408-001-00	ADAPTER/L/G1/4XR1/4	*	1					
17	1728-408-250-00	HOSE/HYDRO/900 ASSY	*	1					
18	1728-408-001-00	ADAPTER/L/G1/4XR1/4	*	1					
19	1739-530-240-00	HOSE/VALVE/800 ASSY	*	1					

FIG. 39 SYLINDER(STEERING) SYSTEM (SXG22 TYPE)

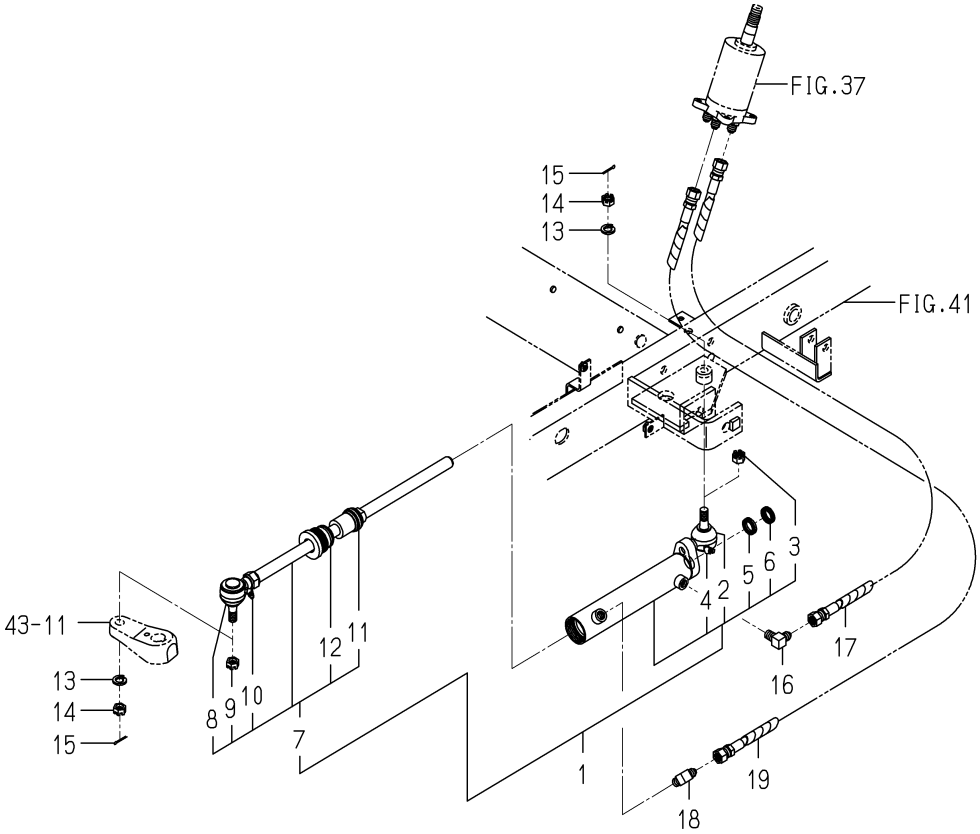

1728-408A-0100

KEY	PART CODE	DESCRIPTION	SPC	TYPE OF MODEL SXG19	TYPE OF MODEL SXG22	ITC	COL	GRP	REMARKS
1	1728-408-260-00	CYLINDER ASSY	*		1				
2	1404-402-001-00	COVER,DUST	*		1				
3	1404-402-002-00	NUT,SLOTTED	*		1				
4	1427-433-241-00	NIPPLE,GREASE/PT1/4	*		1				
5	K185-031-302-00	SEAL/ROD	*		1				
6	K185-031-303-00	SEAL/DUST	*		1				
7	1689-408-530-00	ROD/PISTON ASSY	*		1				
8	1404-402-001-00	COVER,DUST	*		1				
9	1404-402-002-00	NUT,SLOTTED	*		1				
10	1427-433-241-00	NIPPLE,GREASE/PT1/4	*		1				
11	1672-403-003-00	PACKING/PISTON	*		1				
12	V720-113-502-90	RING/O	*		1				
13	V401-160-012-00	WASHER,SP/M12	*		2				
14	V328-262-112-00	NUT/M12X1.25	*		2 -2850				
15	V500-163-002-00	PIN,SPLIT/3 X20	*		2				
16	1728-408-001-00	ADAPTER/L/G1/4XR1/4	*		1				
17	1728-408-210-00	HOSE/HYDRO/1050 ASSY	*		1				
18	1728-408-001-00	ADAPTER/L/G1/4XR1/4	*		1				
19	1728-408-250-00	HOSE/HYDRO/900 ASSY	*		1				

FIG. 40 CHASSIS SYSTEM(SXG19 TYPE)

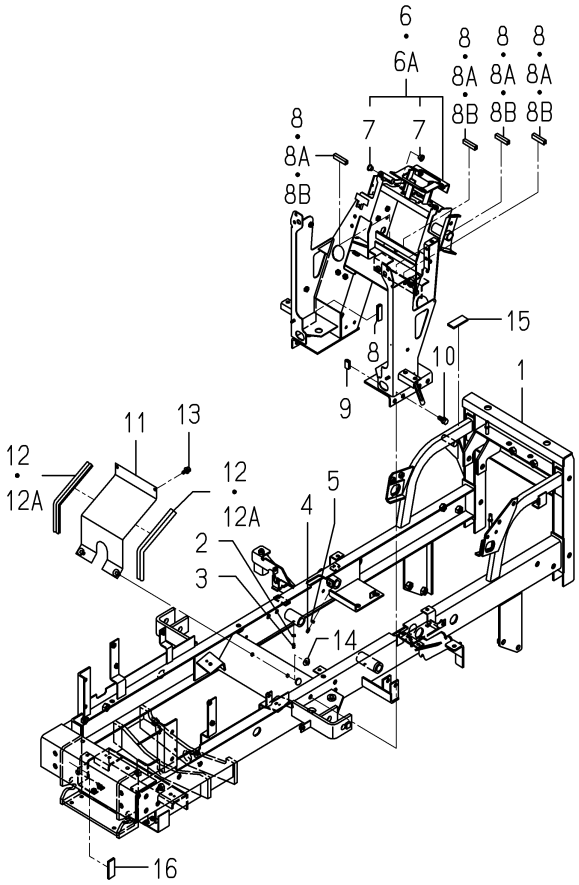

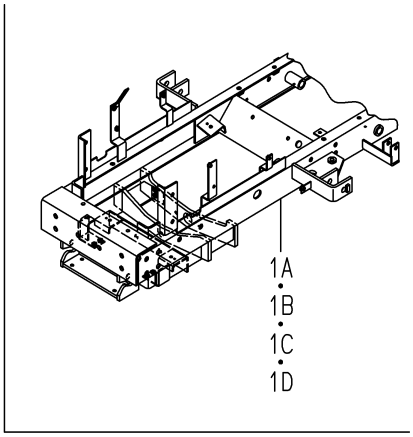

1728-410 -0100

KEY	PART CODE	DESCRIPTION	SPC	TYPE OF MODEL SXG19	TYPE OF MODEL SXG22	ITC	COL	GRP	REMARKS
1	1728-410-200-20	FRAME/MAIN/19 COMP	*	1-1200		1			
1A	1728-410-200-40	FRAME/MAIN/19 COMP	*	1-4724		3			
1B	1728-410-200-50	FRAME/MAIN/19 COMP	*	1-7656		1			
1C	1728-410-200-60	FRAME/MAIN/19 COMP	*	1-9836		1			
1D	1728-410-200-70	FRAME/MAIN/19 COMP	*	19837-		1			
2	V760-150-000-00	NIPPLE,GREASE	*	1					
3	V401-160-006-00	WASHER,SP/M 6	*	1					
4	V760-150-000-00	NIPPLE,GREASE	*	1					
5	V401-160-006-00	WASHER,SP/M 6	*	1					
6	1728-410-300-10	POST/STEERING ASSY	*	1-2254					
6A	1728-410-300-20	POST/STEERING ASSY	*	12255-		1			
7	1564-512-001-00	BUSH/10X12X10	*	2					
8	3666-202-005-00	PROTECTOR	*	5-1793					
8A	3666-202-005-00	PROTECTOR	*	4-3608					
8B	3666-202-005-10	PAD/50	*	43609-		1			
9	3805-371-007-00	PAD/25	*	11794-					
10	V211-561-002-00	BOLT/M10X20	*	6					
11	1728-410-350-00	PLATE/SEAL COMP	*	1					
12	1728-630-005-10	INSULATOR/275	*	2-748					
12A	1728-630-005-20	INSULATOR/270	*	2749-		1			
13	V211-360-802-00	BOLT/SP	*	2					
14	V362-260-008-00	NUT/WASHER	*	2					
15	1725-111-003-00	INSULATOR/25X60	*	1					
16	1725-111-003-00	INSULATOR/25X60	*	1					

FIG. 41 CHASSIS SYSTEM(SXG22 TYPE)

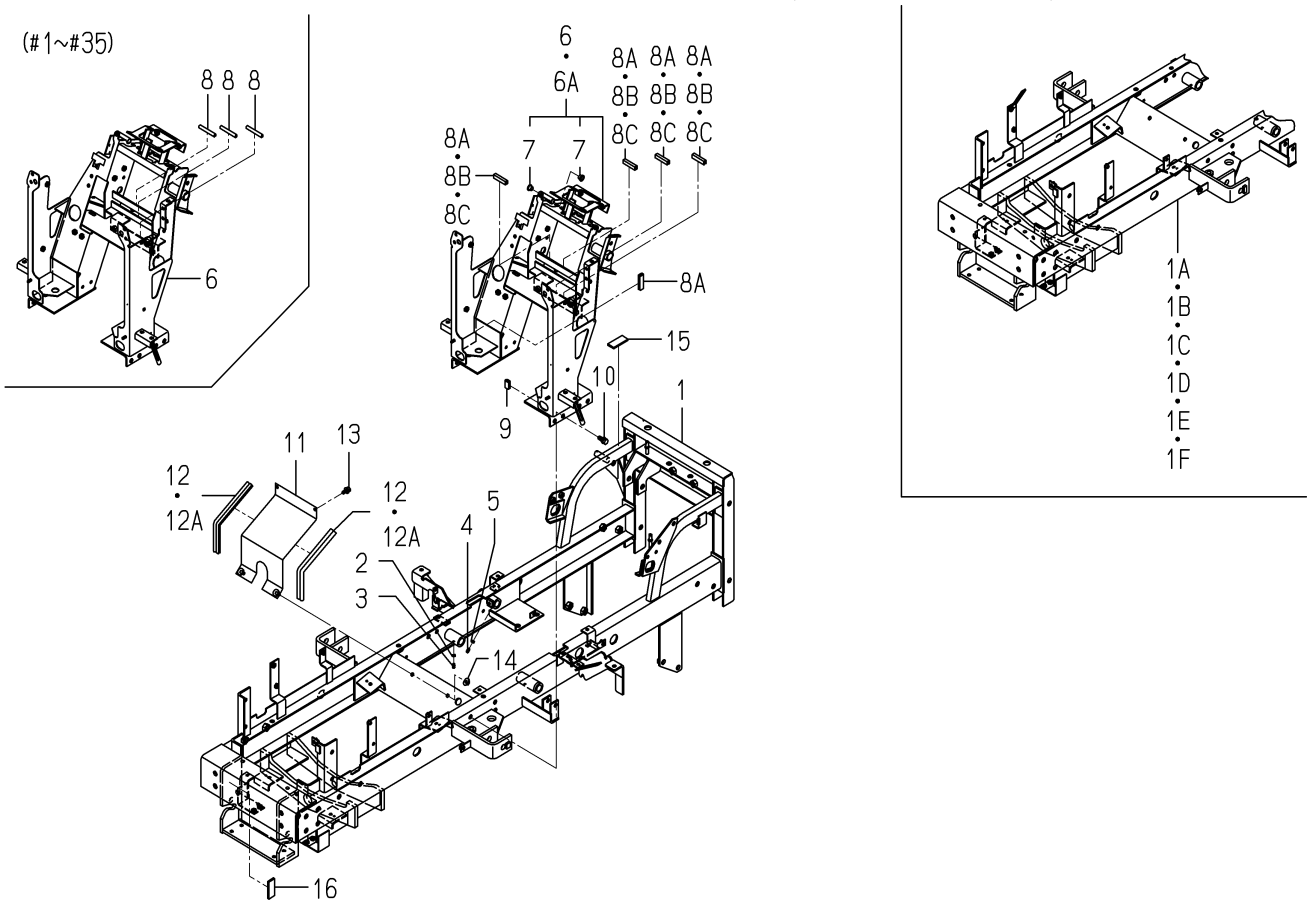

1728-410A-0100

KEY	PART CODE	DESCRIPTION	SPC	TYPE OF MODEL SXG19	TYPE OF MODEL SXG22	ITC	COL	GRP	REMARKS
1	1728-410-500-10	FRAME/MAIN/22 COMP	*		1-35				
1A	1728-410-500-20	FRAME/MAIN/22 COMP	*		1-539	1			
1B	1728-410-500-30	FRAME/MAIN/22 COMP	*		1-541	1			
1C	1728-410-500-40	FRAME/MAIN/22 COMP	*		1-1594	3			
1D	1728-410-500-50	FRAME/MAIN/22 COMP	*		1-2468	1			
1E	1728-410-500-60	FRAME/MAIN/22 COMP	*		1-3226	1			
1F	1728-410-500-70	FRAME/MAIN/22 COMP	*		1 3227-	1			
2	V760-150-000-00	NIPPLE,GREASE	*		1				
3	V401-160-006-00	WASHER,SP/M 6	*		1				
4	V760-150-000-00	NIPPLE,GREASE	*		1				
5	V401-160-006-00	WASHER,SP/M 6	*		1				
6	1728-410-300-10	POST/STEERING ASSY	*		1-814				
6A	1728-410-300-20	POST/STEERING ASSY	*		1 815-	1			
7	1564-512-001-00	BUSH/10X12X10	*		2				
8	1596-669-107-00	TRIM/75	*		3-35				
8A	3666-202-005-00	PROTECTOR	*		5-640				
8B	3666-202-005-00	PROTECTOR	*		4-1175				
8C	3666-202-005-10	PAD/50	*		4 1176-	1			
9	3805-371-007-00	PAD/25	*		1 641-				
10	V211-561-002-00	BOLT/M10X20	*		6				
11	1728-410-350-00	PLATE/SEAL COMP	*		1				
12	1728-630-005-10	INSULATOR/275	*		2-166				
12A	1728-630-005-20	INSULATOR/270	*		2 167-	1			
13	V211-360-802-00	BOLT/SP	*		2				
14	V362-260-008-00	NUT/WASHER	*		2				
15	1725-111-003-00	INSULATOR/25X60	*		1				
16	1725-111-003-00	INSULATOR/25X60	*		1				

FIG. 42 AXLE(FRONT) SYSTEM

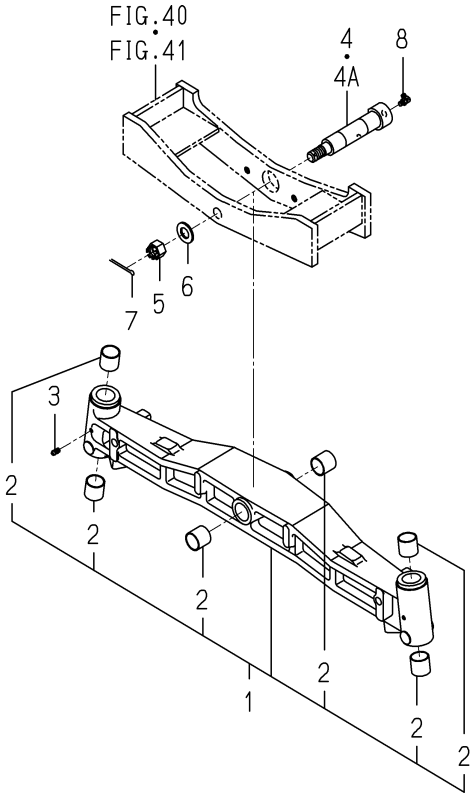

1728-433 -0100

KEY	PART CODE	DESCRIPTION	SPC	TYPE OF MODEL SXG19	TYPE OF MODEL SXG22	ITC	COL	GRP	REMARKS
1	1728-433-200-00	AXLE/FRONT ASSY	*	1	1				
2	1593-402-051-10	BUSH/25X28X25	*	6	6				
3	V760-150-000-00	NIPPLE,GREASE	*	2	2				
4	1728-433-001-00	PIN/PIVOT	*	1 -3830	1 -1242				
4A	1728-433-001-10	PIN/PIVOT	*	1 3831-	1 1243-	1			
5	V327-261-216-00	NUT,CASTTLE/M16X1.5	*	1	1				
6	V411-260-016-00	WASHER / M16	*	1	1				
7	V500-164-003-00	PIN,SPLIT/4 X30	*	1	1				
8	V763-150-000-00	NIPPLE,GREASE/PT1/8	*	1	1				

FIG. 43 SPINDLE(KNUCKLE) SYSTEM

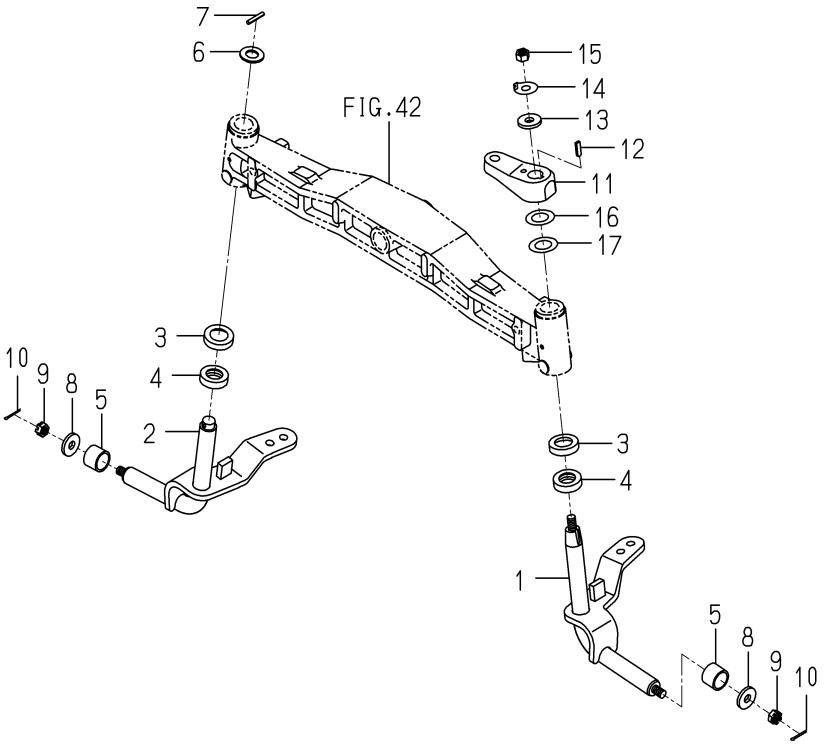

1728-434 -0100

KEY	PART CODE	DESCRIPTION	SPC	TYPE OF MODEL SXG19	TYPE OF MODEL SXG22	ITC	COL	GRP	REMARKS
1	1728-434-200-00	SPINDLE/KNUCKLE/LH	*	1	1				
2	1728-434-210-00	SPINDLE/KNUCKLE/RH	*	1	1				
3	1593-403-004-10	COVER/44X10	*	2	2				
4	1593-403-009-00	THRUST	*	2	2				
5	1705-441-001-00	COLLAR/26X32X24	*	2	2				
6	V411-260-018-00	WASHER,PL/M18	*	1	1				
7	V580-140-503-20	PIN,SPRING/5 X32 W	*	1	1				
8	3621-702-003-00	WASHER,PULLEY	*	2	2				
9	V328-262-112-00	NUT/M12X1.25	*	2	2				
10	V500-163-002-50	PIN,SPLIT/3 X25	*	2	2				
11	1728-434-001-00	ARM/KNUCKLE	*	1	1				
12	1326-708-005-00	KEY,ROTARY TOP SHAFT	*	1	1				
13	1421-403-007-00	WASHER,LOCK/M12	*	1	1				
14	1421-403-008-00	WASHER/13X35X5	*	1	1				
15	V304-260-012-00	NUT/M12	*	1	1				
16	1421-951-006-00	SHIM,A/0.5	*	1	1				
17	1421-951-007-00	SHIM,A/1.0	*	1	1				

FIG. 44 ROD(TIE) SYSTEM

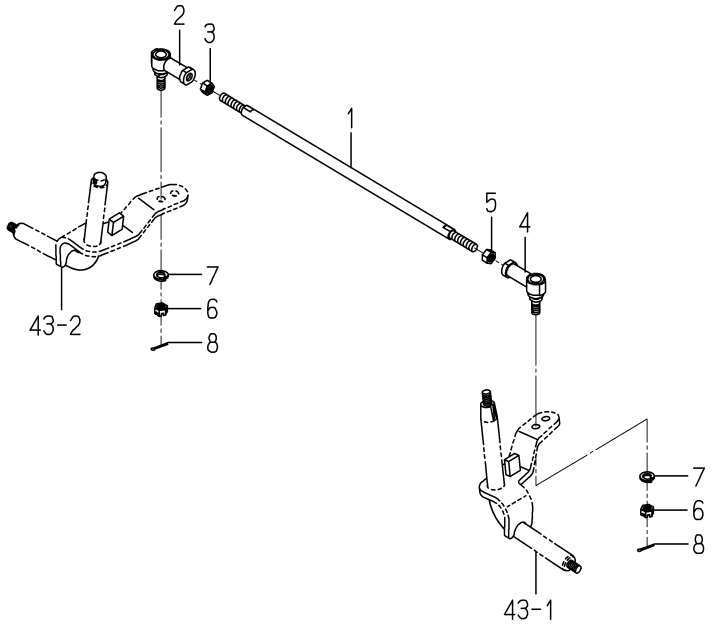

1728-436 -0100

KEY	PART CODE	DESCRIPTION	SPC	TYPE OF MODEL SXG19	TYPE OF MODEL SXG22	ITC	COL	GRP	REMARKS
1	1728-436-001-00	ROD/TIE/M12X535	*	1	1				
2	1593-403-005-00	JOINT,BALL	*	1	1				
3	V334-260-012-00	NUT	*	1	1				
4	1705-436-300-00	JOINT/BALL ASSY	*	1	1				
5	1703-135-002-00	NUT/SM/LH/M12X1.25	*	1	1				
6	V328-262-112-00	NUT/M12X1.25	*	2	2				
7	V401-160-012-00	WASHER,SP/M12	*	2	2				
8	V500-162-502-00	PIN,SPLIT/2.5X20	*	2	2				

FIG. 45 WHEEL(FRONT) SYSTEM(SXG19 TYPE)

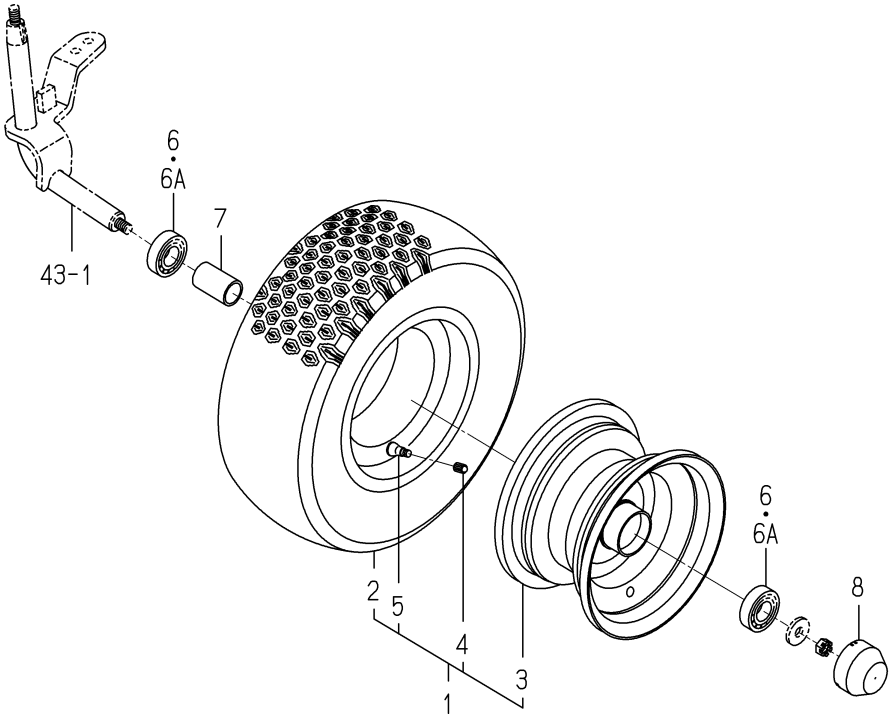

1728-441 -0100

KEY	PART CODE	DESCRIPTION	SPC	TYPE OF MODEL SXG19	TYPE OF MODEL SXG22	ITC	COL	GRP	REMARKS
1	1593-411-500-00	TIRE,FRONT ASSY	*	2			6G		
2	1593-411-201-00	TIRE,TURF/16-8	*	2					
3	1689-440-230-00	RIM/WHEEL COMP	*	2			6G		
4	V999-200-003-00	CAP,TIRE VALVE	*	2					
5	1386-241-002-00	VALVE/RIM	*	2					
6	V600-150-620-50	BEARING,RB/6205SS	*	4 -4724					
6A	V600-450-620-50	BEARING/BALL	*	4 4725-					
7	1593-411-001-10	COLLAR/26X32X53	*	2					
8	1593-411-053-20	CAP/WHEEL	*	2					

FIG. 46 WHEEL(FRONT) SYSTEM(SXG22 TYPE)

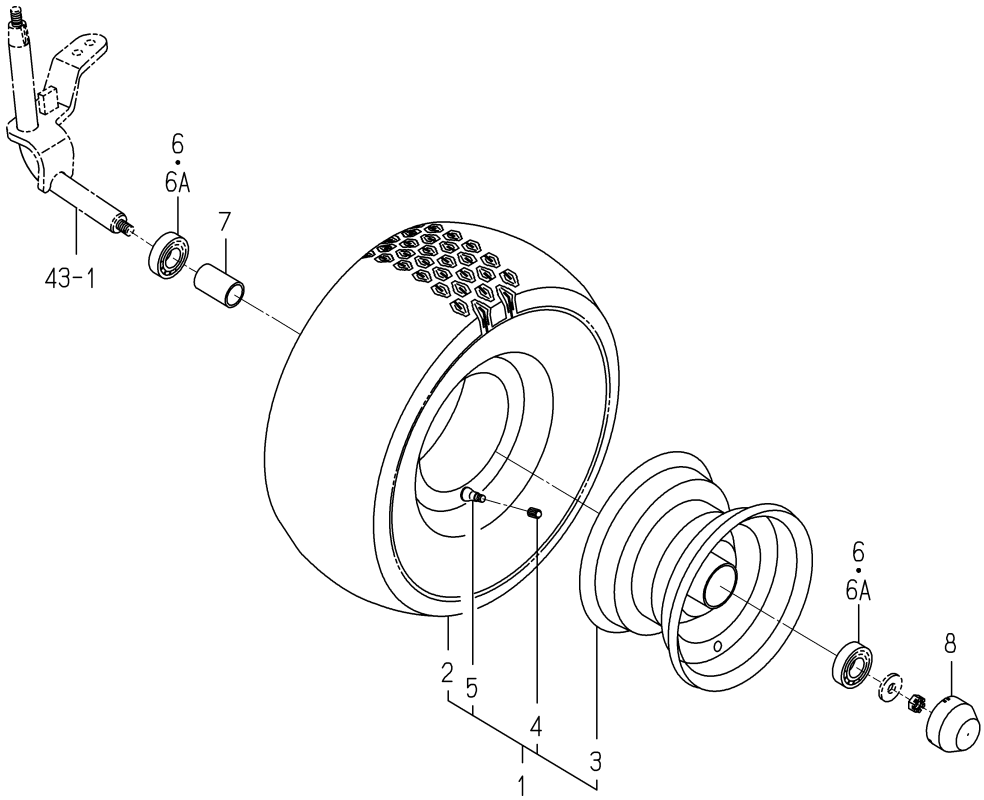

1728-441A-0100

KEY	PART CODE	DESCRIPTION	SPC	TYPE OF MODEL SXG19	TYPE OF MODEL SXG22	ITC	COL	GRP	REMARKS
1	1705-441-200-00	TIRE/210/60D-8 ASSY	*		2		6G		
2	1705-441-201-00	TIRE/210/60D-8	*		2				
3	1705-441-210-00	RIM/WHEEL/FRONT COMP	*		2		6G		
4	V999-200-003-00	CAP,TIRE VALVE	*		2				
5	1386-241-002-00	VALVE/RIM	*		2				
6	V600-150-620-50	BEARING,RB/6205SS	*		4 -1588				
6A	V600-450-620-50	BEARING/BALL	*		4 1589-				
7	1593-411-001-10	COLLAR/26X32X53	*		2				
8	1593-411-053-20	CAP/WHEEL	*		2				

FIG. 47 CYLINDER(LIFT) SYSTEM

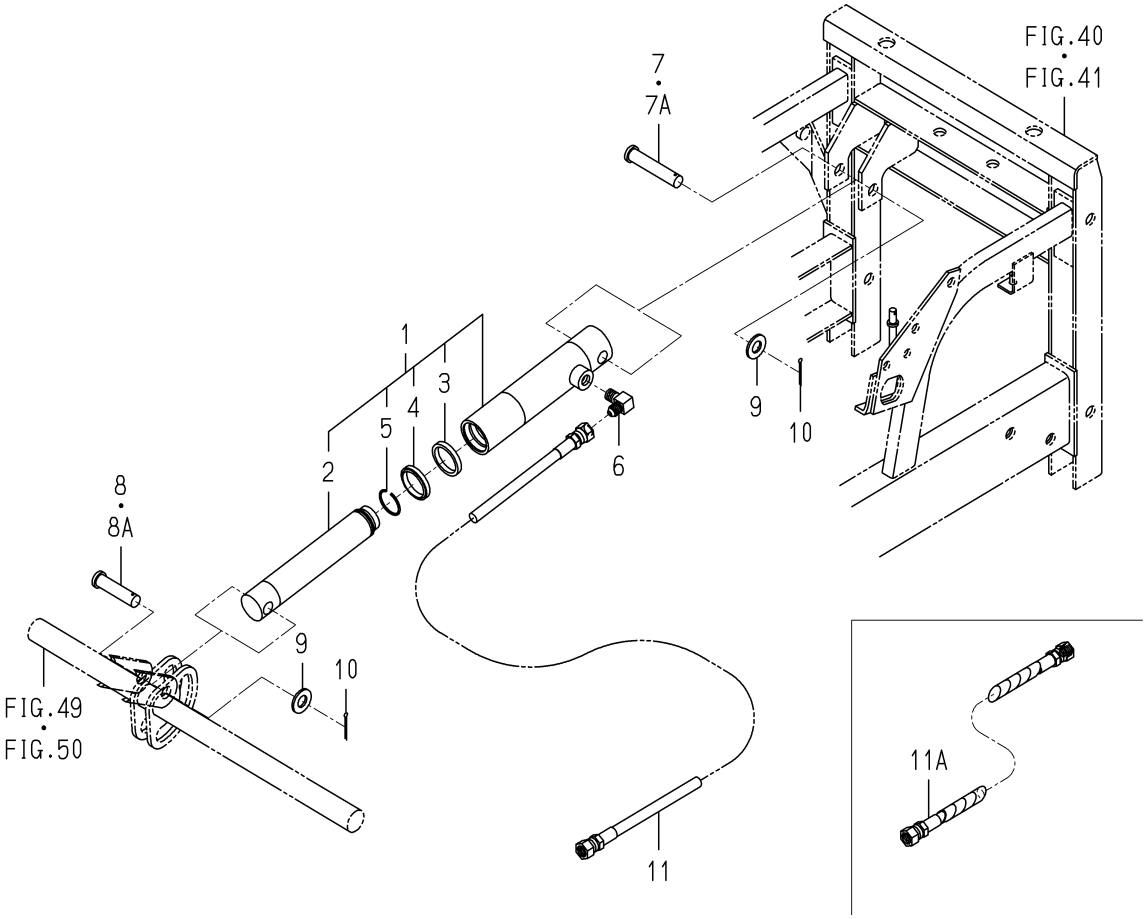

1728-504 -0100

KEY	PART CODE	DESCRIPTION	SPC	TYPE OF MODEL SXG19	TYPE OF MODEL SXG22	ITC	COL	GRP	REMARKS
1	K182-032-000-00	CYLINDER ASSY	*	1	1				
2	K182-032-001-00	PISTON	*	1	1				
3	K182-002-002-00	STOPPER,PISTON	*	1	1				
4	K182-032-002-00	ROD PACKING	*	1	1				
5	K182-032-003-00	DUST/SEAL	*	1	1				
6	1728-408-001-00	ADAPTER/L/G1/4XR1/4	*	1	1				
7	1705-508-003-00	PIN/15X77	*	1 -1190	1 -524				
7A	1728-504-002-00	PIN/15X74	*	1 1191-	1 525-				
8	1705-508-002-00	PIN/15X60	*	1 -1190	1 -524				
8A	1728-504-003-00	PIN/15X58	*	1 1191-	1 525-				
9	V411-260-014-00	WASHER,PL/M14	*	2	2				
10	V500-163-003-00	PIN,SPLIT/3X30	*	2	2				
11	1739-530-240-00	HOSE/VALVE/800 ASSY	*	1 -4270	1 -1444				
11A	1728-408-250-00	HOSE/HYDRO/900 ASSY	*	1 4271-	1 1445-				

FIG. 48 PIPING(OIL) SYSTEM(1/3)

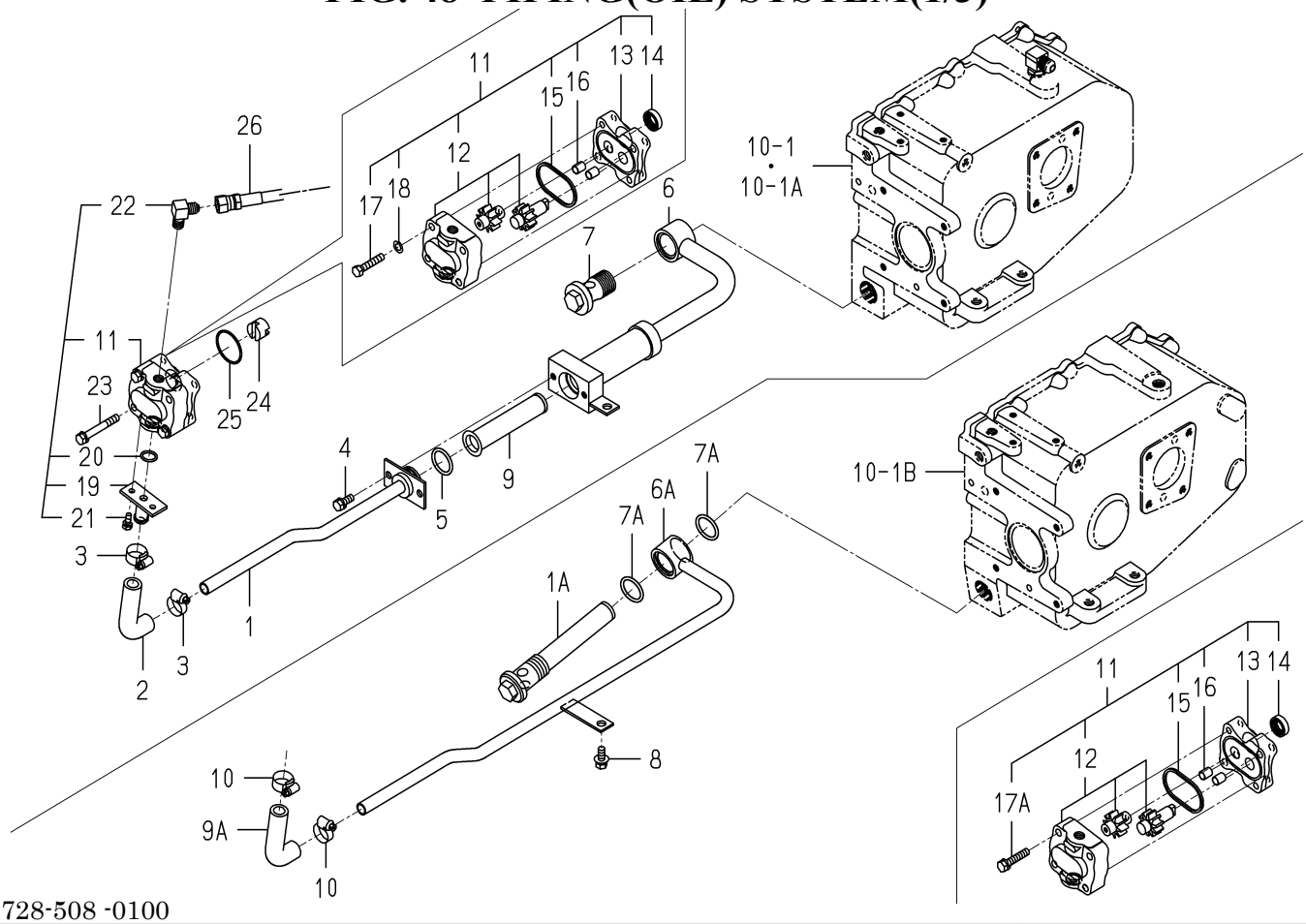

1728-508 -0100

KEY	PART CODE	DESCRIPTION	SPC	TYPE OF MODEL SXG19	TYPE OF MODEL SXG22	ITC	COL	GRP	REMARKS
1	1728-508-220-00	PIPE/SUCTION/F COMP	*	1 -6356	1 -2121				
1A	1738-508-210-00	FILTER/SUCTION COMP	*	1 6357-	1 2122-				
2	1703-509-001-00	HOSE/14X22X82	*	1 -6356	1 -2121				
3	J061-114-024-00	CLAMP/WORM/14-24	*	2 -6356	2 -2121				
4	V211-260-802-00	BOLT/S	*	2 -6356	2 -2121				
5	V720-103-502-80	O-RING/P28	*	1 -6356	1 -2121				
6	1728-508-230-10	PIPE/SUCTION/R COMP	*	1 -6290	1 -2088				
6A	1728-508-470-00	PIPE/SUCTION COMP	*	1 6357-	1 2122-				
7	1717-508-001-00	PLUG	*	1 -6356	1 -2121				
7A	V720-103-502-80	O-RING/P28	*	2	2				
8	V211-360-802-00	BOLT/SP	*	1	1				
9	1682-508-300-00	FILTER COMP	*	1 -6356	1 -2121				
9A	1703-509-001-00	HOSE/14X22X82	*	1 6357-	1 2122-				
10	J061-114-024-00	CLAMP/WORM/14-24	*	2 6357-	2 2122-				
11	K130-018-000-00	PUMP/GEAR ASSY	*	1	1				
12	K130-010-100-00	PUMP/GEAR SET	*	1	1				
13	K130-003-003-00	COVER/GPF1	*	1	1				
14	V744-115-250-70	SEAL,OIL/TC15257	*	1	1				
15	V723-102-005-60	O-RING	*	1	1				
16	K130-003-004-00	KNOK	*	2	2				
17	V201-260-804-00	BOLT/M 8X40	*	2 -3266	2 -1072				
17A	V211-260-804-00	BOLT,SEMS	*	2 3267-	2 1073-				
18	V401-160-008-00	WASHER,SP/M 8	*	2 -3266	2 -1072				
19	2144-409-210-10	SUCTION/OUT COMP	*	1	1				
20	V720-102-401-60	O-RING/P16	*	1	1				
21	V210-260-601-60	BOLT/S	*	2	2				
22	1728-408-001-00	ADAPTER/L/G1/4XR1/4	*	1	1				
23	V211-260-806-00	BOLT,SEMS (S)	*	2	2				
24	3640-350-006-10	CONNECTOR	*	1	1				
25	V723-102-004-00	O-RING	*	1	1				

FIG. 48 PIPING(OIL) SYSTEM(2/3)

KEY26-PLEASE SEE 1/3 PAGE
KEY27~31,39~47-PLEASE SEE 3/3 PAGE

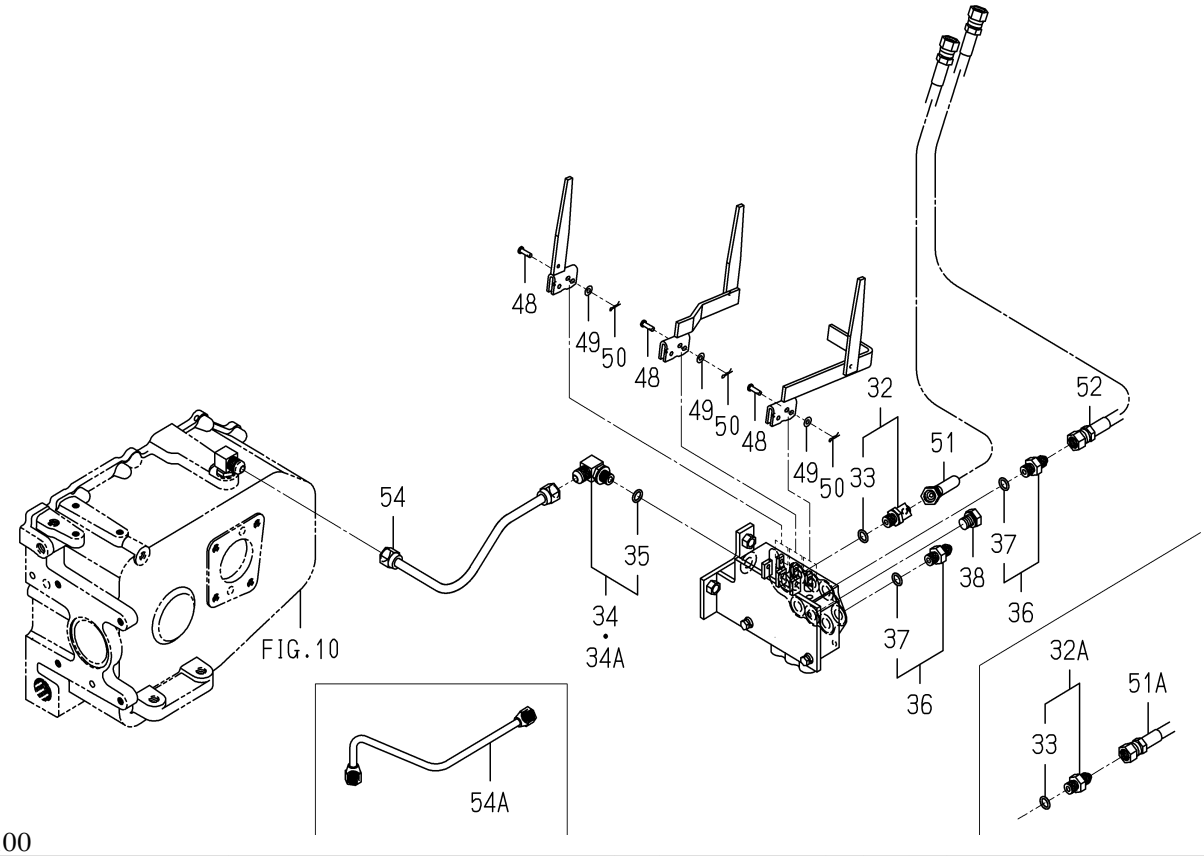

1728-508 -0100

KEY	PART CODE	DESCRIPTION	SPC	TYPE OF MODEL SXG19	TYPE OF MODEL SXG22	ITC	COL	GRP	REMARKS
26	1728-508-310-00	HOSE/HYDRO/950 ASSY	*	1	1				
27	1728-508-270-00	VALVE/1S-2D ASSY	*	1	1				
28	1728-508-210-00	BRACKET/VALVE COMP	*	1	1				
29	V210-360-603-50	BOLT/SP	*	2	2				
30	V210-360-602-00	BOLT/SP	*	1	1				
31	V301-260-006-00	NUT/M 6	*	1	1				
32	1739-530-290-00	ADAPTER/45ß/G1/ ASSY	*	1 -4284	1 -1444				
32A	1725-509-260-00	ADAPTER/G1/4 ASSY	*	1 4285-	1 1445-				
33	V720-112-401-10	RING/O	*	1	1				
34	1656-509-310-10	ADAPTER/L/PF1/4 ASSY	*	1 -4766	1 -1600				
34A	3817-374-340-00	ADAPTER ASSY	*	1 4767-	1 1601-				
35	V720-112-401-10	RING/O	*	1 -4766	1 -1600				
36	1725-509-260-00	ADAPTER/G1/4 ASSY	*	2	2				
37	V720-112-401-10	RING/O	*	2	2				
38	P118-702-033-00	PLUG	*	4	4				
39	V211-261-002-50	BOLT(S) M10X25	*	2	2				
40	1636-505-220-00	LEVER/125 COMP	*	1	1				
41	1728-508-240-00	LEVER/VALVE/MID COMP	*	1	1				
42	1728-508-260-00	LEVER/VALVE/SID COMP	*	1 -3445	1 -1136				
42A	1728-508-260-10	LEVER/VALVE/SID COMP	*	1 3446-	1 1137-	2			
43	1614-262-003-00	GRIP/SUB	*	3	3				
44	1739-530-002-10	COLLAR/06X14X13	*	2 -388	2 -85				
44A	1728-508-002-00	TUBE/15	*	2 389-	2 86-				
45	1728-508-001-00	PIN/05X63	*	1 -3418	1 -1136				
45A	1728-508-001-10	PIN/05X63	*	1 3419-	1 1137-	1			
46	V411-260-005-00	WASHER	*	1	1				
47	V560-160-005-00	PIN/SNAP	*	1	1				
48	1739-530-004-00	PIN/05X17	*	3	3				
49	V411-260-005-00	WASHER	*	3	3				
50	V560-160-005-00	PIN/SNAP	*	3	3				

FIG. 48 PIPING(OIL) SYSTEM(3/3)

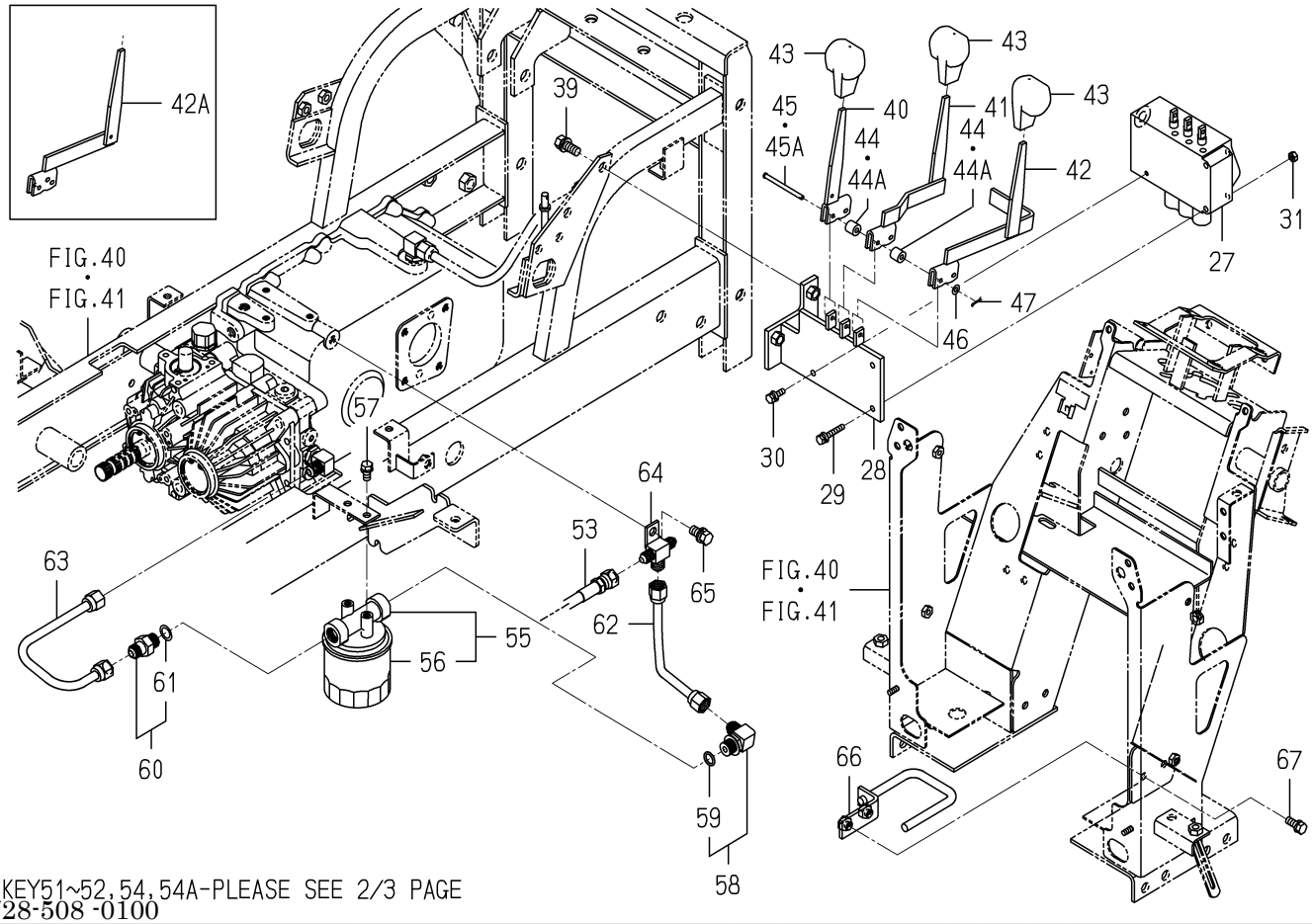

KEY51~52,54,54A-PLEASE SEE 2/3 PAGE

1728-508 -0100

KEY	PART CODE	DESCRIPTION	SPC	TYPE OF MODEL SXG19	TYPE OF MODEL SXG22	ITC	COL	GRP	REMARKS
51	1728-508-320-00	HOSE/HYDRO/1450 ASSY	*	1 -8616	1 -2871				
51A	1728-508-320-10	HOSE/HYDRO/1450 ASSY	*	1 8617-	1 2872-	1			
52	1728-508-310-00	HOSE/HYDRO/950 ASSY	*	1	1				
53	1728-508-350-00	HOSE/HYDRO/750 ASSY	*	1	1				
54	1728-508-430-10	PIPE/RETURN COMP	*	1 -4766	1 -1604				
54A	1728-508-430-20	PIPE/RETURN COMP	*	1 4767-	1 1605-	3			
55	P103-521-300-00	FILTER/RETURN ASSY	*	1	1				
56	P103-521-302-00	CARTRIDGE	*	1	1				
57	V211-260-801-60	BOLT,SEMS (S) M8X16	*	2	2				
58	3805-354-280-00	ADAPTOR/G3/8XM16ASSY	*	1	1				
59	V720-112-401-40	O-RING/P14	*	1	1				
60	1701-509-290-00	ADAPTER/G3/8 ASSY	*	1	1				
61	V720-112-401-40	O-RING/P14	*	1	1				
62	1728-508-410-00	PIPE/FILTER COMP	*	1	1				
63	1728-508-420-00	PIPE/CHARGE COMP	*	1	1				
64	1728-508-440-00	ADAPTER/M16XG1/ COMP	*	1	1				
65	V211-261-002-00	BOLT,SEMS	*	1	1				
66	1728-508-450-00	GUIDE/HOSE	*	1	1				
67	V211-260-802-00	BOLT/S	*	2	2				

FIG. 49 LINK(MOWER) SYSTEM(SXG19 TYPE)(1/2)

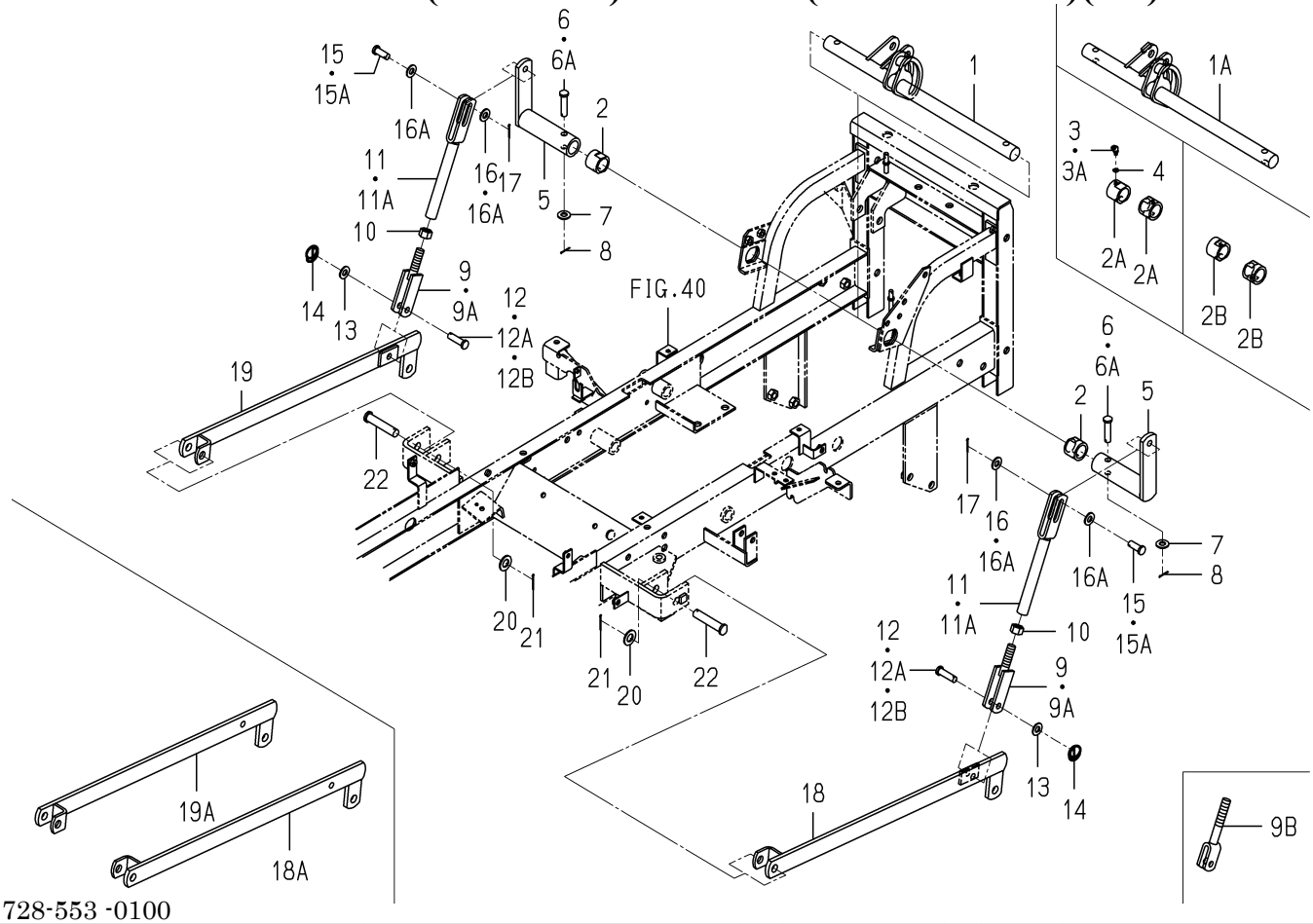

1728-553 -0100

KEY	PART CODE	DESCRIPTION	SPC	TYPE OF MODEL SXG19	TYPE OF MODEL SXG22	ITC	COL	GRP	REMARKS
1	1728-553-210-00	SHAFT/LIFT COMP	*	1 -1190					
1A	1728-553-210-10	SHAFT/LIFT COMP	*	1 1191-		3			
2	1725-553-002-00	HUB/28X38X30	*	2 -6190					
2A	1728-553-012-00	HUB/28X38X30	*	2 -8938					
2B	1728-553-012-10	HUB/28X38X30	*	2 8939-		1			
3	V762-150-000-00	NIPPLE,GREASE/B-M6F	*	2 -8938					
3A	V760-150-000-00	NIPPLE,GREASE	*	2 8939-					
4	V401-160-006-00	WASHER,SP/M 6	*	2 6191-					
5	1728-553-240-00	ARM/LIFT COMP	*	2					
6	1725-553-003-00	PIN/12X50	*	2 -1426					
6A	7963-611-003-00	PIN/12X48	*	2 1427-					
7	V411-260-012-00	WASHER /M12	*	2					
8	V500-163-002-00	PIN,SPLIT/3 X20	*	2					
9	1728-553-250-00	LINK/LOWER COMP	*	2 -1326					
9A	1728-553-250-10	LINK/LOWER COMP	*	2 -5651		3			
9B	1728-553-250-20	LINK/LOWER COMP	*	2 5652-		3			
10	V334-260-016-00	NUT	*	2					
11	1728-553-260-00	LINK/UPPER/19 COMP	*	2 -1324					
11A	1728-553-260-10	LINK/UPPER/19 COMP	*	2 1325-		3			
12	8657-608-053-10	PIN/12X42	*	2 -5651					
12A	1728-553-007-00	PIN/12X32	*	2 -7812					
12B	1728-553-007-10	PIN/12X33	*	2 7813-		1			
13	V411-260-012-00	WASHER /M12	*	2 -5651					
14	1427-317-003-00	CLIP,PIN	*	2					
15	1728-553-007-00	PIN/12X32	*	2 -7812					
15A	1728-553-007-10	PIN/12X33	*	2 7813-		1			
16	V411-260-012-00	WASHER /M12	*	2 -5801					
16A	V411-260-012-00	WASHER /M12	*	4 5802-					
17	V500-163-002-00	PIN,SPLIT/3 X20	*	2					
18	1728-553-280-10	ARM/MID/LH/19 COMP	*	1 -5651					

FIG. 49 LINK(MOWER) SYSTEM(SXG19 TYPE)(2/2)

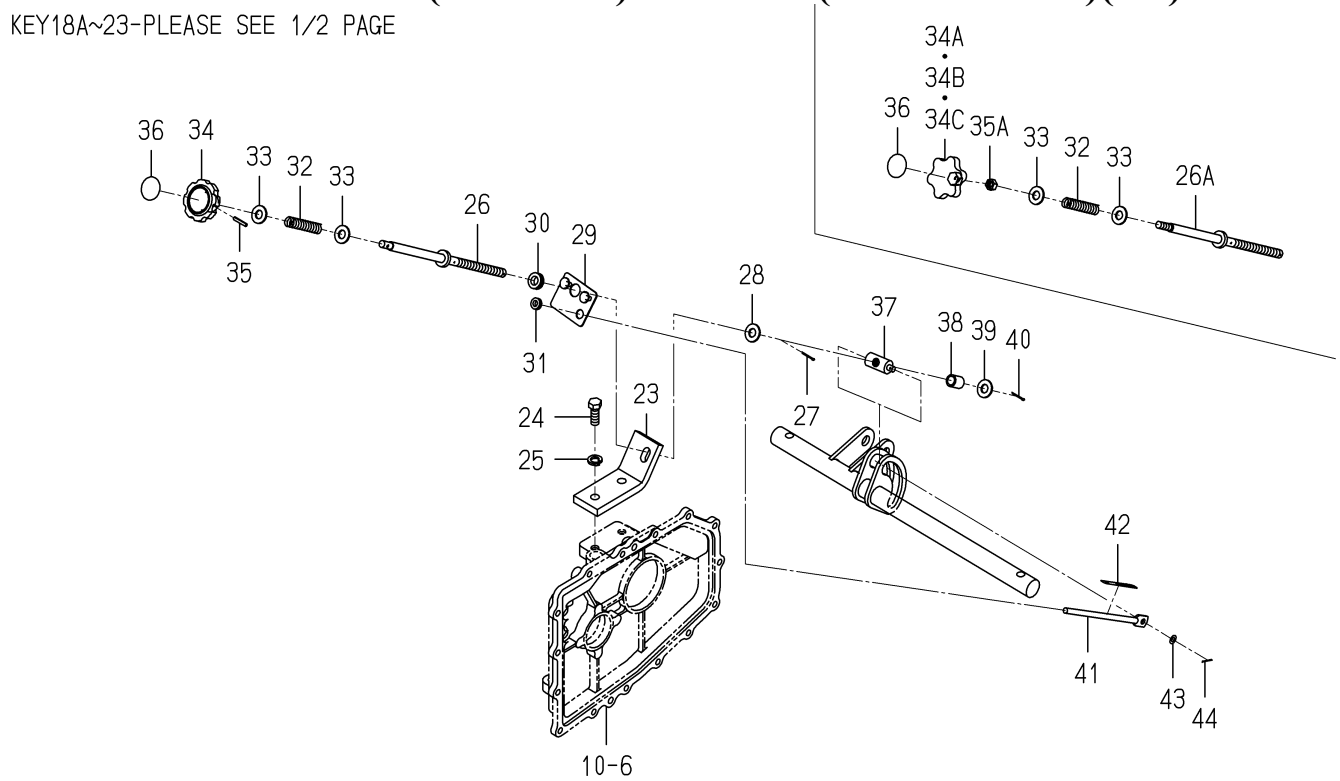

1728-553 -0100

KEY	PART CODE	DESCRIPTION	SPC	TYPE OF MODEL SXG19	TYPE OF MODEL SXG22	ITC	COL	GRP	REMARKS
18A	1728-553-280-20	ARM/MID/LH/19 COMP	*	1 5652-		3			
19	1728-553-290-10	ARM/MID/RH/19 COMP	*	1 -5651					
19A	1728-553-290-20	ARM/MID/RH/19 COMP	*	1 5652-		3			
20	V411-260-016-00	WASHER / M16	*	2					
21	V500-163-003-00	PIN,SPLIT/3X30	*	2					
22	1728-553-011-00	PIN/16X78	*	2					
23	1728-553-001-00	STAY/ADJUST	*	1					
24	V201-361-203-00	BOLT/M12X30	*	2					
25	V401-160-012-00	WASHER,SP/M12	*	2					
26	1728-553-230-00	SHAFT/ADJUST COMP	*	1 -3623					
26A	1728-553-230-10	SHAFT/ADJUST COMP	*	1 3624-		3			
27	V500-162-502-50	PIN,SPLIT/2.5X25	*	1					
28	V411-260-012-00	WASHER /M12	*	1					
29	1728-553-270-00	PLATE/I/53X70 COMP	*	1					
30	2139-505-002-00	GROMMET	*	1					
31	4335-512-004-00	GROMMET/9	*	1					
32	3656-480-002-00	SPRING/HC084	*	1					
33	V411-260-012-00	WASHER /M12	*	2					
34	8657-611-004-00	KNOB/10X33	*	1 -3623					
34A	1120-311-003-00	KNOB/HANDLE	*	1 -4270					
34B	1725-553-007-00	KNOB/ADJUST	*	1 -6738					
34C	1725-553-007-10	KNOB/ADJUST	*	1 6739-		1			
35	V580-140-402-50	PIN,SPRING/4 X25	*	1 -3623					
35A	V304-260-010-00	NUT	*	1 3624-					
36	8657-901-001-00	LABEL/ADJUST	*	1					
37	1728-553-008-00	NUT/ADJUST	*	1					
38	3659-352-007-00	COLLAR/13X17X22	*	1					
39	V411-260-012-00	WASHER /M12	*	1					
40	V500-162-502-50	PIN,SPLIT/2.5X25	*	1					
41	1728-553-009-00	ROD/08X195	*	1					

FIG. 49 LINK(MOWER) SYSTEM(SXG19 TYPE)(2/2)

KEY18A~23-PLEASE SEE 1/2 PAGE

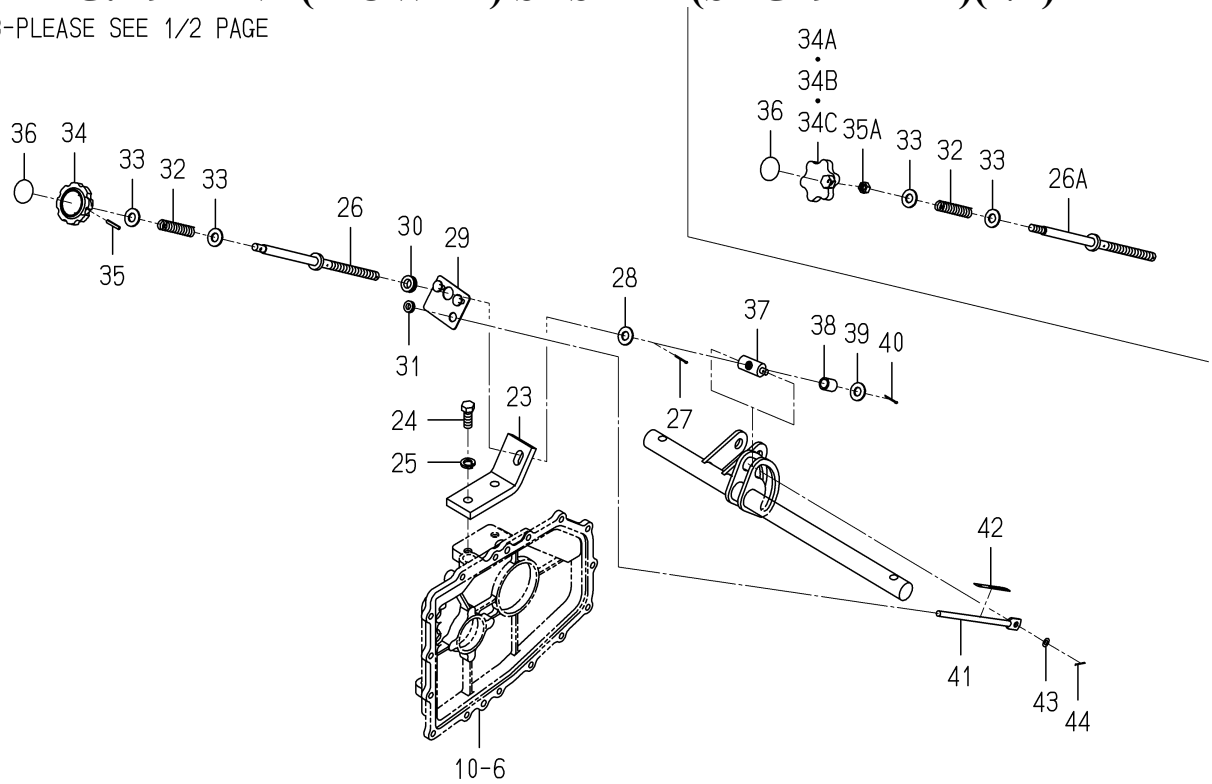

1728-553 -0100

KEY	PART CODE	DESCRIPTION	SPC	TYPE OF MODEL SXG19	TYPE OF MODEL SXG22	ITC	COL	GRP	REMARKS
42	1728-553-004-00	LABEL/GAUGE	*	1					
43	V411-260-008-00	WASHER,PL/M 8	*	1					
44	V500-162-002-00	PIN,SPLIT/2 X20	*	1					

FIG. 50 LINK(MOWER) SYSTEM(SXG22 TYPE)(1/2)

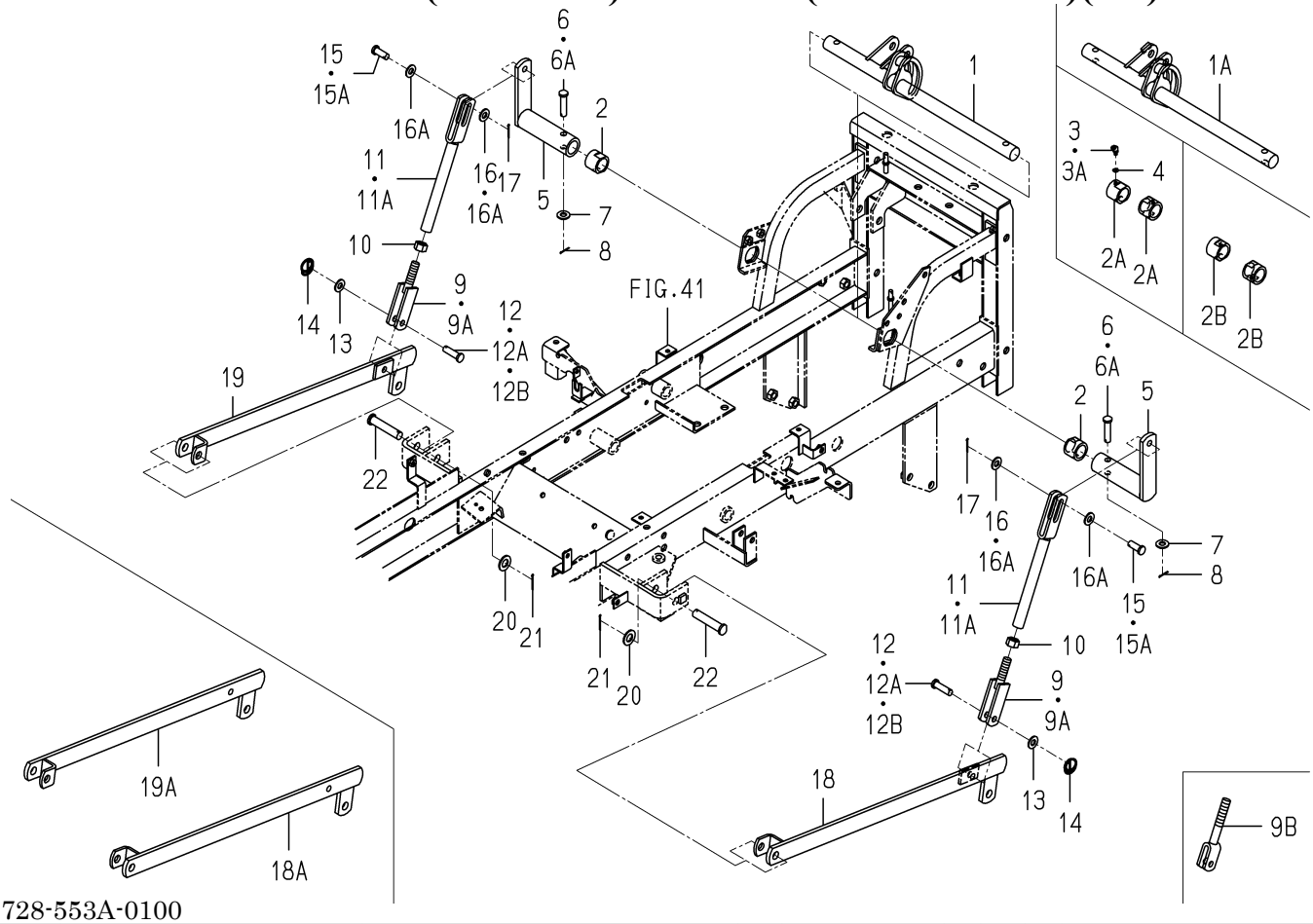

1728-553A-0100

KEY	PART CODE	DESCRIPTION	SPC	TYPE OF MODEL SXG19	TYPE OF MODEL SXG22	ITC	COL	GRP	REMARKS
1	1728-553-210-00	SHAFT/LIFT COMP	*		1-534				
1A	1728-553-210-10	SHAFT/LIFT COMP	*		1535-	3			
2	1725-553-002-00	HUB/28X38X30	*		2-2026				
2A	1728-553-012-00	HUB/28X38X30	*		2-3007				
2B	1728-553-012-10	HUB/28X38X30	*		23008-	1			
3	V762-150-000-00	NIPPLE,GREASE/B-M6F	*		2-3007				
3A	V760-150-000-00	NIPPLE,GREASE	*		23008-				
4	V401-160-006-00	WASHER,SP/M 6	*		22027-				
5	1728-553-240-00	ARM/LIFT COMP	*		2				
6	1725-553-003-00	PIN/12X50	*		2-579				
6A	7963-611-003-00	PIN/12X48	*		2580-				
7	V411-260-012-00	WASHER /M12	*		2				
8	V500-163-002-00	PIN,SPLIT/3 X20	*		2				
9	1728-553-250-00	LINK/LOWER COMP	*		2-579				
9A	1728-553-250-10	LINK/LOWER COMP	*		2-1947	3			
9B	1728-553-250-20	LINK/LOWER COMP	*		21948-	3			
10	V334-260-016-00	NUT	*		2				
11	1728-553-510-00	LINK/UPPER/22 COMP	*		2-579				
11A	1728-553-510-10	LINK/UPPER/22 COMP	*		2580-	3			
12	8657-608-053-10	PIN/12X42	*		2-1947				
12A	1728-553-007-00	PIN/12X32	*		2-2499				
12B	1728-553-007-10	PIN/12X33	*		22500-	1			
13	V411-260-012-00	WASHER /M12	*		2-1947				
14	1427-317-003-00	CLIP,PIN	*		2				
15	1728-553-007-00	PIN/12X32	*		2-2499				
15A	1728-553-007-10	PIN/12X33	*		22500-	1			
16	V411-260-012-00	WASHER /M12	*		2-2007				
16A	V411-260-012-00	WASHER /M12	*		42008-				
17	V500-163-002-00	PIN,SPLIT/3 X20	*		2				
18	1728-553-520-10	ARM/MID/LH/22 COMP	*		1-1947				

FIG. 50 LINK(MOWER) SYSTEM(SXG22 TYPE)(2/2)

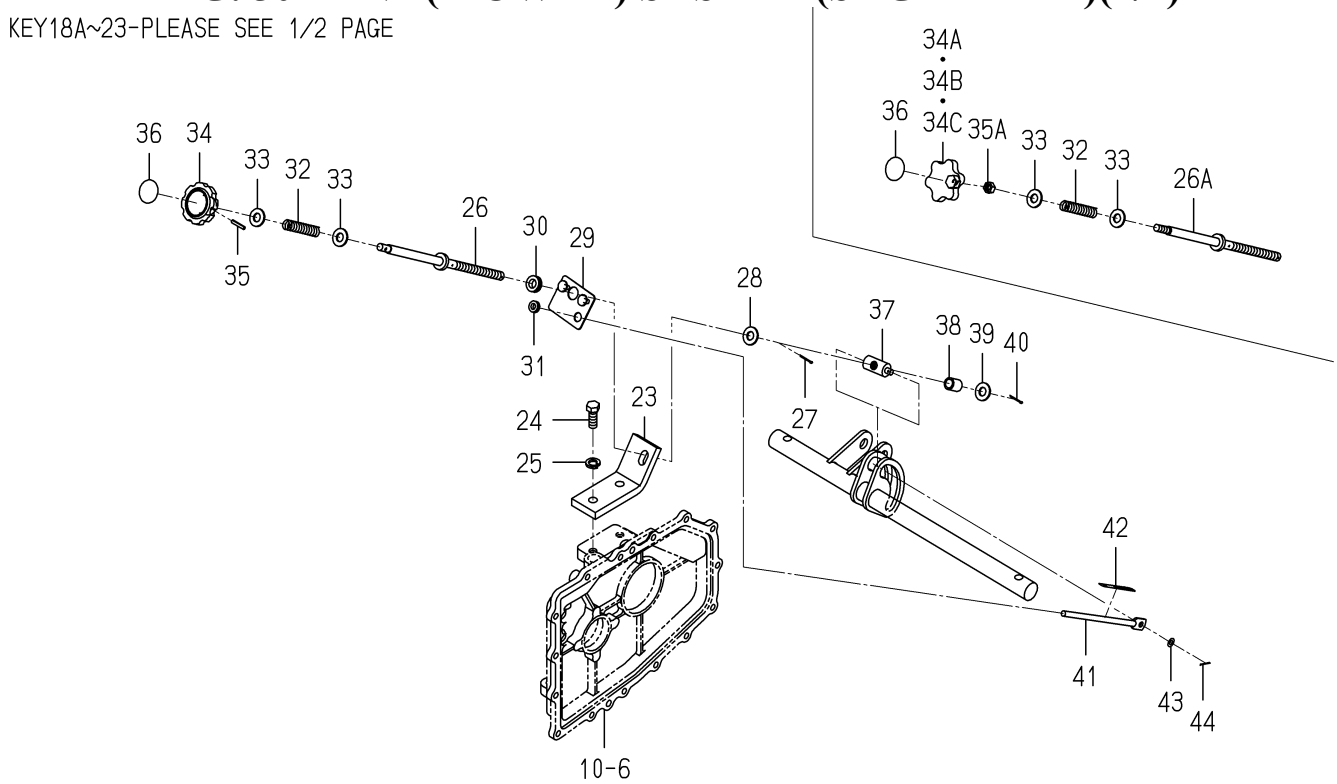

1728-553A-0100

KEY	PART CODE	DESCRIPTION	SPC	TYPE OF MODEL SXG19	TYPE OF MODEL SXG22	ITC	COL	GRP	REMARKS
18A	1728-553-520-20	ARM/MID/LH/22 COMP	*		1 1948-	3			
19	1728-553-530-10	ARM/MID/RH/22 COMP	*		1 -1947				
19A	1728-553-530-20	ARM/MID/RH/22 COMP	*		1 1948-	3			
20	V411-260-016-00	WASHER / M16	*		2				
21	V500-163-003-00	PIN,SPLIT/3X30	*		2				
22	1728-553-011-00	PIN/16X78	*		2				
23	1728-553-001-00	STAY/ADJUST	*		1				
24	V201-361-203-00	BOLT/M12X30	*		2				
25	V401-160-012-00	WASHER,SP/M12	*		2				
26	1728-553-230-00	SHAFT/ADJUST COMP	*		1 -1178				
26A	1728-553-230-10	SHAFT/ADJUST COMP	*		1 1179-	3			
27	V500-162-502-50	PIN,SPLIT/2.5X25	*		1				
28	V411-260-012-00	WASHER /M12	*		1				
29	1728-553-270-00	PLATE/I/53X70 COMP	*		1				
30	2139-505-002-00	GROMMET	*		1				
31	4335-512-004-00	GROMMET/9	*		1				
32	3656-480-002-00	SPRING/HC084	*		1				
33	V411-260-012-00	WASHER /M12	*		2				
34	8657-611-004-00	KNOB/10X33	*		1 -1178				
34A	1120-311-003-00	KNOB/HANDLE	*		1 -1444				
34B	1725-553-007-00	KNOB/ADJUST	*		1 -2194				
34C	1725-553-007-10	KNOB/ADJUST	*		1 2195-	1			
35	V580-140-402-50	PIN,SPRING/4 X25	*		1 -1178				
35A	V304-260-010-00	NUT	*		1 1179-				
36	8657-901-001-00	LABEL/ADJUST	*		1				
37	1728-553-008-00	NUT/ADJUST	*		1				
38	3659-352-007-00	COLLAR/13X17X22	*		1				
39	V411-260-012-00	WASHER /M12	*		1				
40	V500-162-502-50	PIN,SPLIT/2.5X25	*		1				
41	1728-553-009-00	ROD/08X195	*		1				

FIG. 50 LINK(MOWER) SYSTEM(SXG22 TYPE)(2/2)

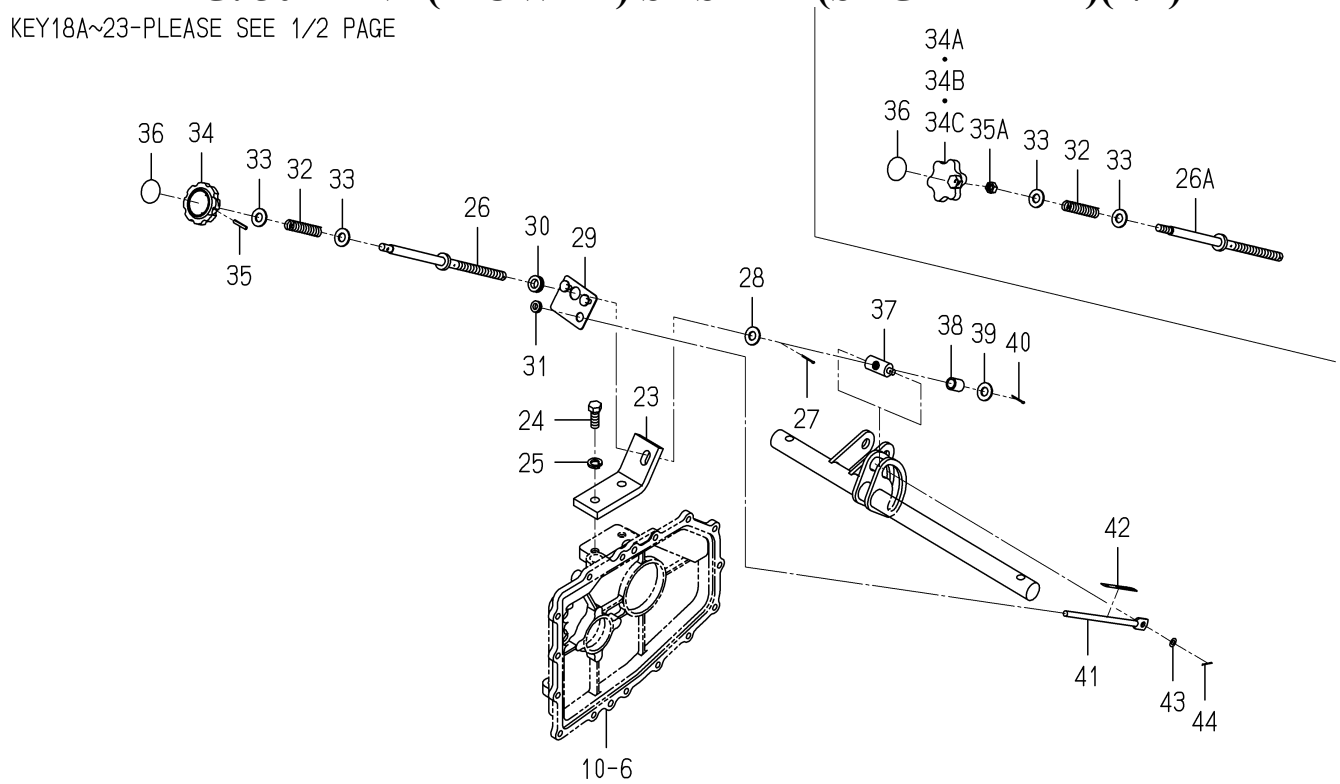

1728-553A-0100

KEY	PART CODE	DESCRIPTION	SPC	TYPE OF MODEL SXG19	TYPE OF MODEL SXG22	ITC	COL	GRP	REMARKS
42	1728-553-004-00	LABEL/GAUGE	*		1				
43	V411-260-008-00	WASHER,PL/M 8	*		1				
44	V500-162-002-00	PIN,SPLIT/2 X20	*		1				

FIG. 51 HOOD SYSTEM

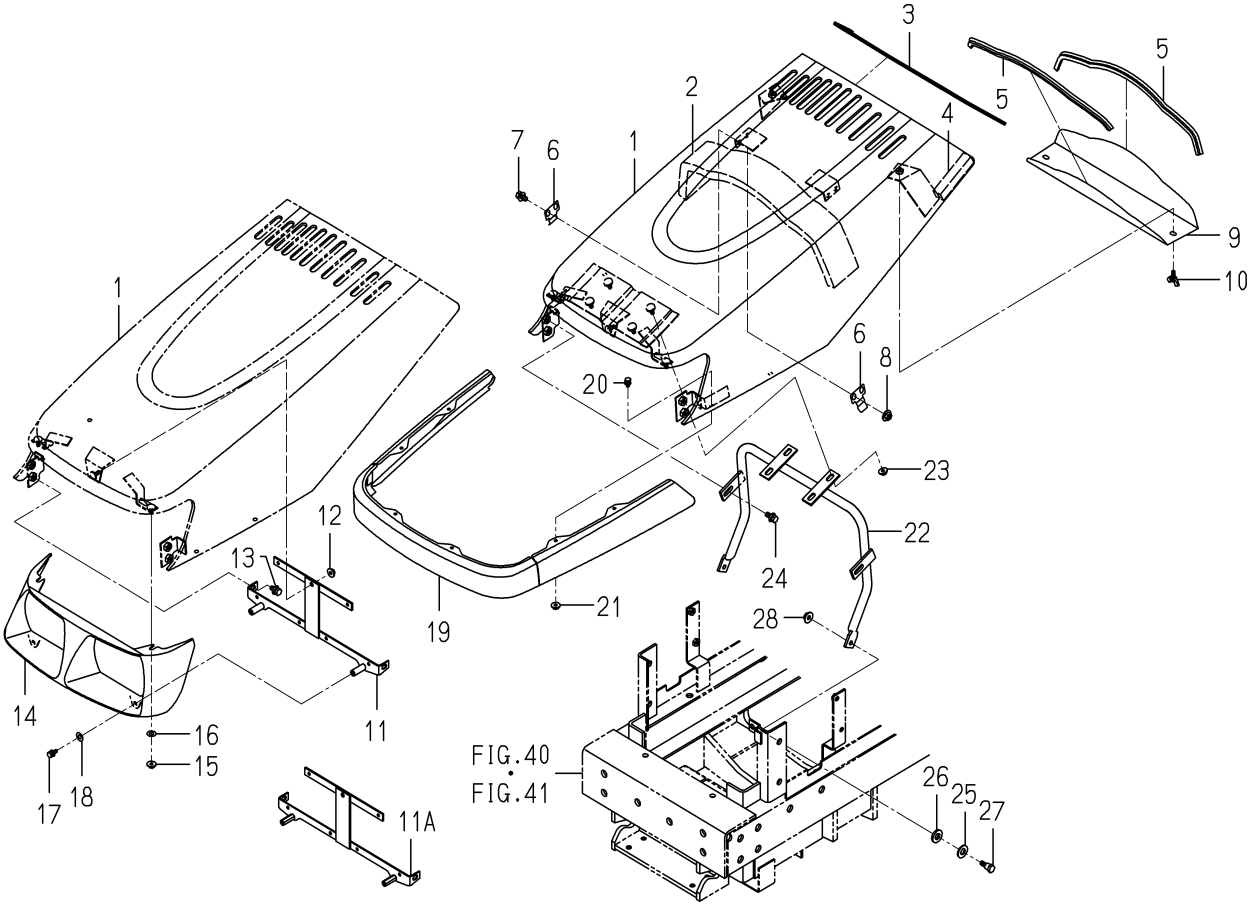

1728-601A-0100

KEY	PART CODE	DESCRIPTION	SPC	TYPE OF MODEL SXG19	TYPE OF MODEL SXG22	ITC	COL	GRP	REMARKS
1	1739-601-220-00	HOOD COMP	*	1	1		4L		
2	1725-601-003-00	SEAL/70X20X680	*	1	1				
3	1705-601-018-00	INSULATOR	*	1	1				
4	1705-601-021-00	SEAL/20X20X100	*	2	2				
5	1593-601-072-00	TRIM/1X6X360	*	2	2				
6	1703-601-009-10	SPRING	*	4	4				
7	V211-360-801-60	BOLT,SEMS (SP)	*	4	4				
8	V362-260-008-00	NUT/WASHER	*	4	4				
9	1705-601-007-00	NET/HOOD	*	1	1				
10	V273-360-601-50	BOLT/M6X15	*	2	2				
11	1739-602-210-00	BRACKET/LAMP COMP	*	1 -7224	1 -2328				
11A	1739-602-210-10	BRACKET/LAMP COMP	*	1 7225-	1 2329-	1			
12	V361-260-006-00	NUT	*	1	1				
13	V211-360-801-60	BOLT,SEMS (SP)	*	2	2				
14	1739-602-004-00	HOOD/LAMP	*	1	1				
15	V361-260-006-00	NUT	*	2	2				
16	V411-260-008-00	WASHER,PL/M 8	*	2	2				
17	V210-360-601-60	BOLT(SP)/M6X16	*	2	2				
18	V411-260-008-00	WASHER,PL/M 8	*	2	2				
19	1705-601-230-01	SPACER COMP	*	1	1		4L		
20	V210-360-601-20	BOLT,SEMS	*	6	6				
21	V360-260-006-00	NUT/M6	*	6	6				
22	1725-601-210-00	ARM/HOOD COMP	*	1	1				
23	V363-260-008-00	NUT/WASHER	*	4	4				
24	V211-360-802-00	BOLT/SP	*	2	2				
25	V411-260-012-00	WASHER /M12	*	2	2				
26	1689-621-007-00	WASHER/12X26X04	*	2	2				
27	1689-621-008-00	BOLT	*	2	2				
28	V363-260-008-00	NUT/WASHER	*	2	2				

FIG. 52 GRILLE SYSTEM

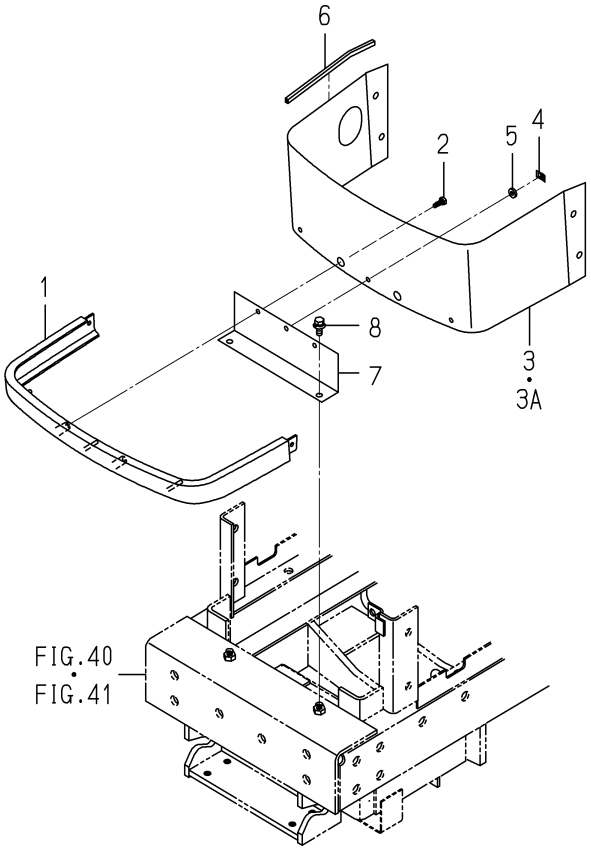

1728-602 -0100

KEY	PART CODE	DESCRIPTION	SPC	TYPE OF MODEL SXG19	TYPE OF MODEL SXG22	ITC	COL	GRP	REMARKS
1	1705-601-026-00	COVER/FRONT	*	1	1				
2	2161-506-005-00	SCREW/TAPPING/6X16	*	2	2				
3	1728-602-001-00	COVER/FRONT/MESH	*	1 -3804	1 -1238		7F		
3A	1728-602-001-10	COVER/FRONT/MESH	*	1 3805-	1 1239-	1	7F		
4	V350-160-005-00	NUT,SPEED	*	3	3				
5	1444-601-015-00	WASHER/6X14X3	*	3	3				
6	1705-601-022-00	TRIM/200	*	2	2				
7	1728-602-002-00	COVER/FRONT/UNDER	*	1	1				
8	V211-360-802-00	BOLT/SP	*	2	2				

FIG. 53 COVER SYSTEM

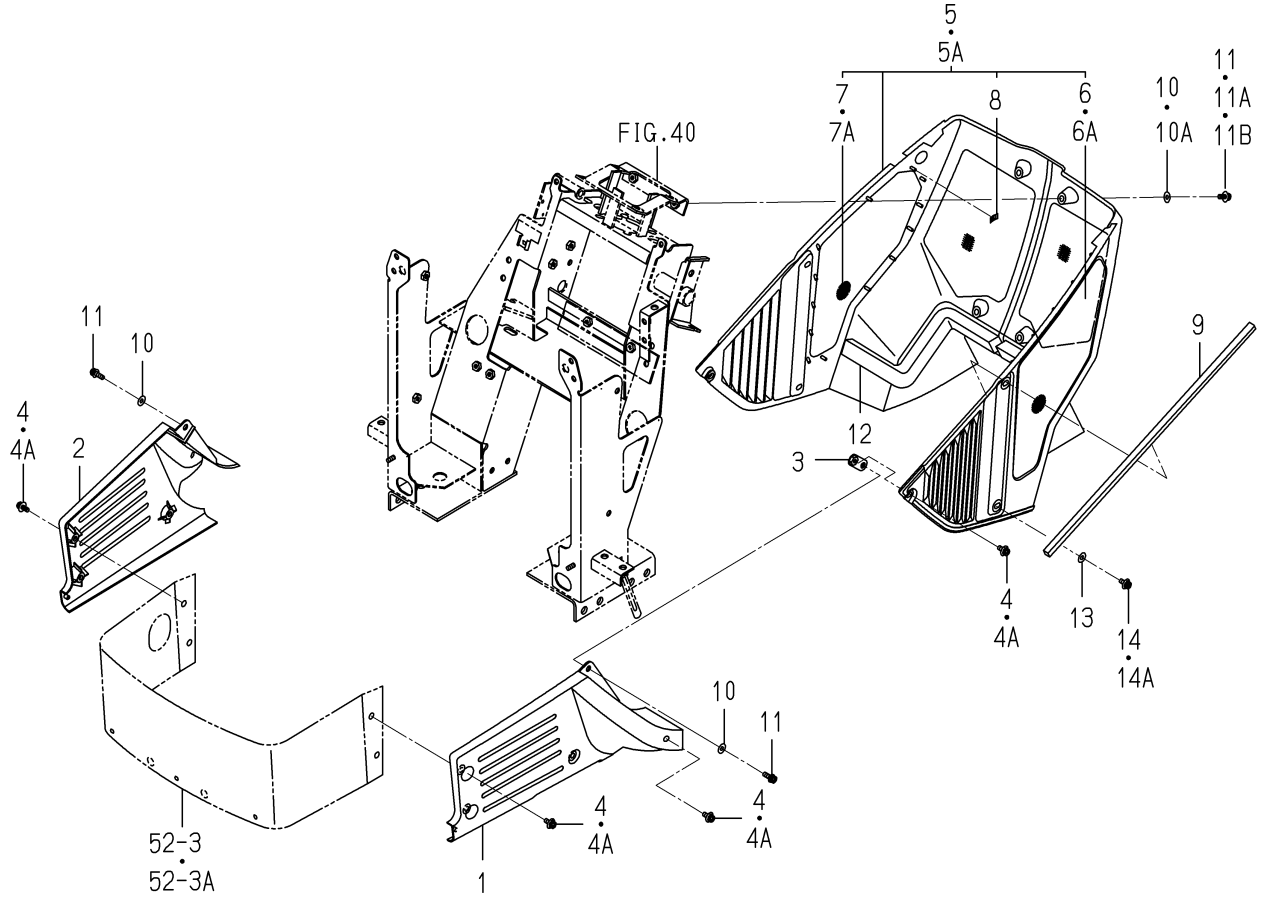

1728-604 -0100

KEY	PART CODE	DESCRIPTION	SPC	TYPE OF MODEL SXG19	TYPE OF MODEL SXG22	ITC	COL	GRP	REMARKS
1	1739-604-001-00	COVER/FRONT/LH	*	1	1				
2	1739-604-002-00	COVER/FRONT/RH	*	1	1				
3	1705-601-280-00	PLATE/IR/18X50 COMP	*	2	2				
4	V120-376-001-60	SCREW/SP	*	8 -4724	8 -1590				
4A	1725-604-051-00	SCREW/SP/M06X16	*	8 4725-	8 1591-				
5	1728-604-200-00	COVER/LOWER ASSY	*	1 -8457	1 -2800				
5A	1728-604-200-10	COVER/LOWER ASSY	*	1 8458-	1 2801-	1			
6	1728-604-201-00	NET/SIDE/LH	*	1 -8457	1 -2800				
6A	1728-604-201-10	NET/SIDE/LH	*	1 8458-	1 2801-	1			
7	1725-604-202-00	NET/SIDE/RH	*	1 -8457	1 -2800				
7A	1724-604-302-00	NET/COVER/LOWER/RH	*	1 8458-	1 2801-				
8	V350-160-004-00	NUT,SPEED/P4	*	33	33				
9	1705-601-019-00	SEAL/10X10X500	*	2	2				
10	1593-601-073-00	WASHER/06X16X01	*		10 -35				
10A	1593-601-073-00	WASHER/06X16X01	*	4 -4414	4 -1492				
11	V120-376-002-00	SCREW/SP	*		10 -35				
11A	V120-376-002-00	SCREW/SP	*	4 -4414	4 -1492				
11B	1725-604-052-00	SCREW/SP/M06X20	*	4 4415-	4 1493-				
12	1725-604-003-00	SEAL/30X20X350	*	2	2				
13	1593-601-073-00	WASHER/06X16X01	*	6 -4414	6 -1492				
14	V120-376-001-60	SCREW/SP	*	6 -4416	6 -1492				
14A	1725-604-051-00	SCREW/SP/M06X16	*	6 4417-	6 1493-				

FIG. 54 FENDER SYSTEM(EXCEPT G TYPE)

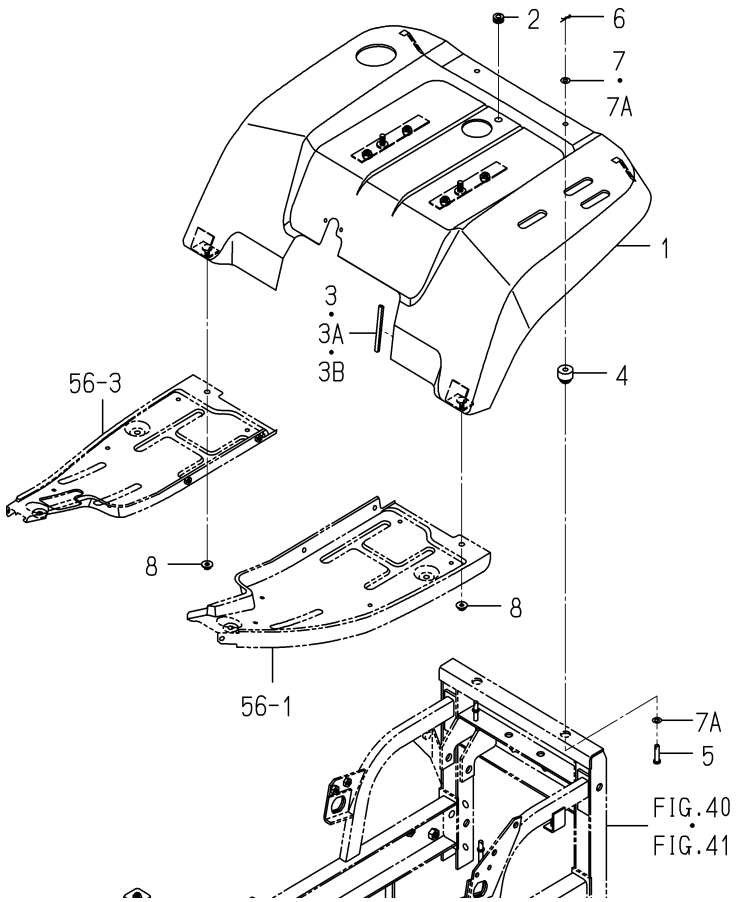

1728-606 -0100

KEY	PART CODE	DESCRIPTION	SPC	TYPE OF MODEL SXG19	TYPE OF MODEL SXG22	ITC	COL	GRP	REMARKS
1	1728-606-200-10	FENDER COMP	*	1	1		4L		
2	1427-621-012-00	GROMMET	*	1	1				
3	3805-210-021-00	PAD/100	*	1 -3812	1 -1292				
3A	3805-210-021-10	INSULATOR	*	1 -4728	1 -1590	1			
3B	2504-165-002-10	INSULATOR	*	1 4729-	1 1591-				
4	1593-616-004-20	GROMMET/10X30X5	*	2	2				
5	1593-606-006-10	PIN/8X36	*	2	2				
6	V560-160-008-00	PIN/SNAP	*	2	2				
7	V411-260-008-00	WASHER,PL/M 8	*	2 -1187	2 -537				
7A	V411-260-008-00	WASHER,PL/M 8	*	4 1188-	4 538-				
8	V363-260-008-00	NUT/WASHER	*	2	2				

FIG. 55 FENDER SYSTEM(G TYPE)

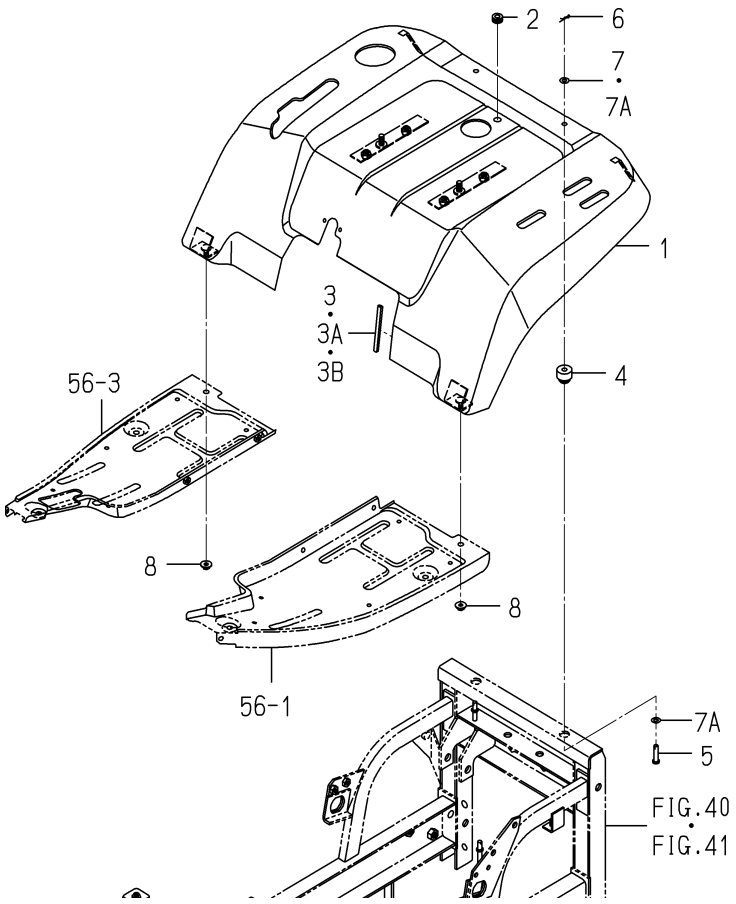

1728-606A-0100

KEY	PART CODE	DESCRIPTION	SPC	TYPE OF MODEL SXG19	TYPE OF MODEL SXG22	ITC	COL	GRP	REMARKS
1	1728-606-500-20	FENDER/G COMP	*	1	1		4L		
2	1427-621-012-00	GROMMET	*	1	1				
3	3805-210-021-00	PAD/100	*	1 -3812	1 -1292				
3A	3805-210-021-10	INSULATOR	*	1 -4724	1 -1588	1			
3B	2504-165-002-10	INSULATOR	*	1 4725-	1 1589-				
4	1593-616-004-20	GROMMET/10X30X5	*	2	2				
5	1593-606-006-10	PIN/8X36	*	2	2				
6	V560-160-008-00	PIN/SNAP	*	2	2				
7	V411-260-008-00	WASHER,PL/M 8	*	2 -1190	2 -550				
7A	V411-260-008-00	WASHER,PL/M 8	*	4 1191-	4 551-				
8	V363-260-008-00	NUT/WASHER	*	2	2				

FIG. 56 FLOOR SYSTEM

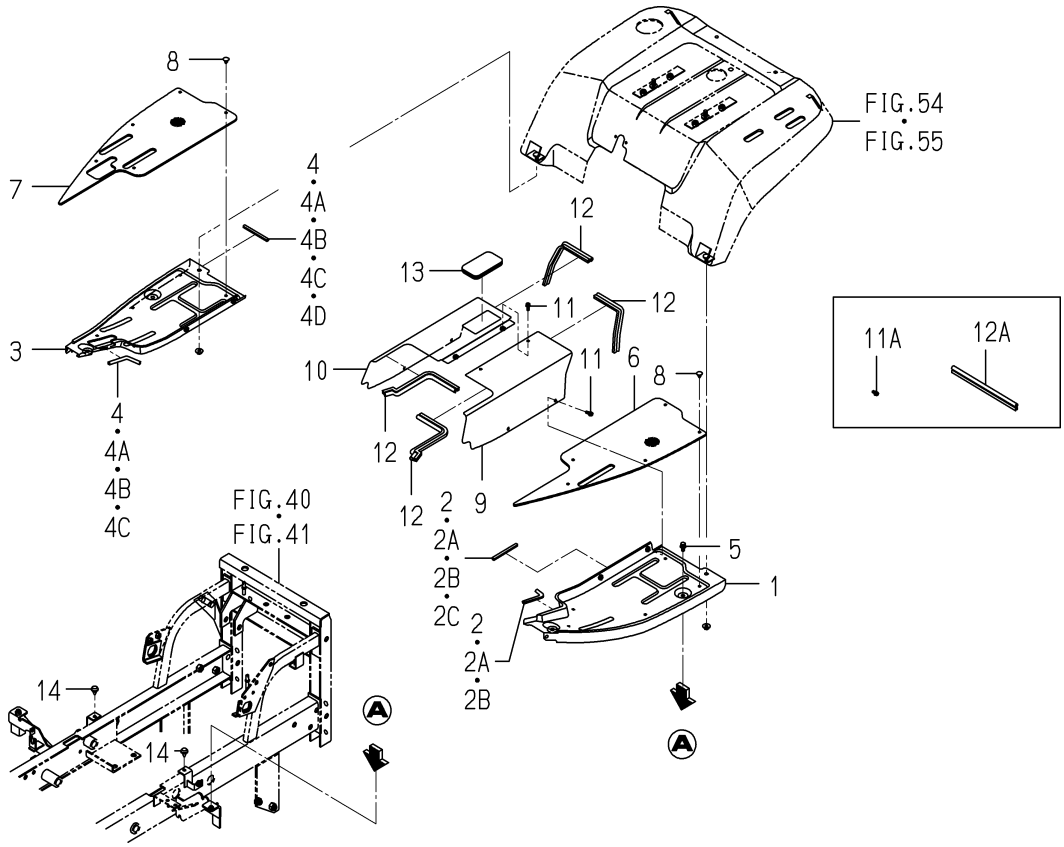

1728-630 -0100

KEY	PART CODE	DESCRIPTION	SPC	TYPE OF MODEL SXG19	TYPE OF MODEL SXG22	ITC	COL	GRP	REMARKS
1	1728-630-200-00	STEP/LH COMP	*	1	1		4L		
2	3805-210-021-00	PAD/100	*	2 -3812	2 -1292				
2A	3805-210-021-10	INSULATOR	*	2 -4726	2 -1590	1			
2B	2504-165-002-10	INSULATOR	*	2 -4744					
2C	2504-165-002-10	INSULATOR	*	1 4745-	1 1591-				
3	1728-630-210-00	STEP/RH COMP	*	1	1		4L		
4	3805-210-021-00	PAD/100	*	1 -188	1 -55				
4A	3805-210-021-00	PAD/100	*	2 -3812	2 -1292				
4B	3805-210-021-10	INSULATOR	*	2 -4724	2 -1590	1			
4C	2504-165-002-10	INSULATOR	*	2 -4744					
4D	2504-165-002-10	INSULATOR	*	1 4745-	1 1591-				
5	V211-360-802-00	BOLT/SP	*	4	4				
6	1728-630-003-00	MAT/LH	*	1	1				
7	1728-630-004-00	MAT/RH	*	1	1				
8	1527-604-002-00	CLIP(B)	*	10	10				
9	1728-630-001-10	COVER/CENTER/LH	*	1	1		7F		
10	1728-630-220-10	COVER/CENTER/RH COMP	*	1	1		7F		
11	V120-376-002-00	SCREW/SP	*		6 -35				
11A	V120-376-001-60	SCREW/SP	*	6	6 36-				
12	1728-630-005-10	INSULATOR/275	*	4 -748	4 -166				
12A	1728-630-005-20	INSULATOR/270	*	4 749-	4 167-	1			
13	1646-630-053-00	CAP	*	1	1				
14	1432-616-002-00	RUBBER,CUSHION	*	2	2				

FIG. 57 LAMP(HEAD) SYSTEM

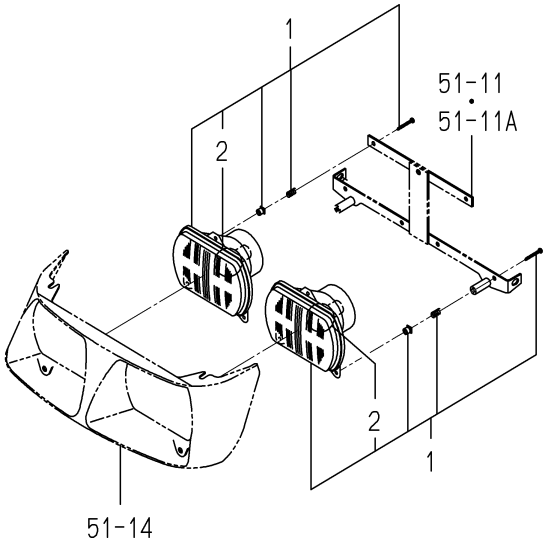

1682-650 -0100

KEY	PART CODE	DESCRIPTION	SPC	TYPE OF MODEL SXG19	TYPE OF MODEL SXG22	ITC	COL	GRP	REMARKS
1	1674-652-200-00	LAMP/HEAD ASSY	*	2	2				**********
2	1674-652-202-00	BULB/12V/45/40W	*	2	2				

FIG. 58 PANEL SYSTEM(EXCEPT G TYPE)

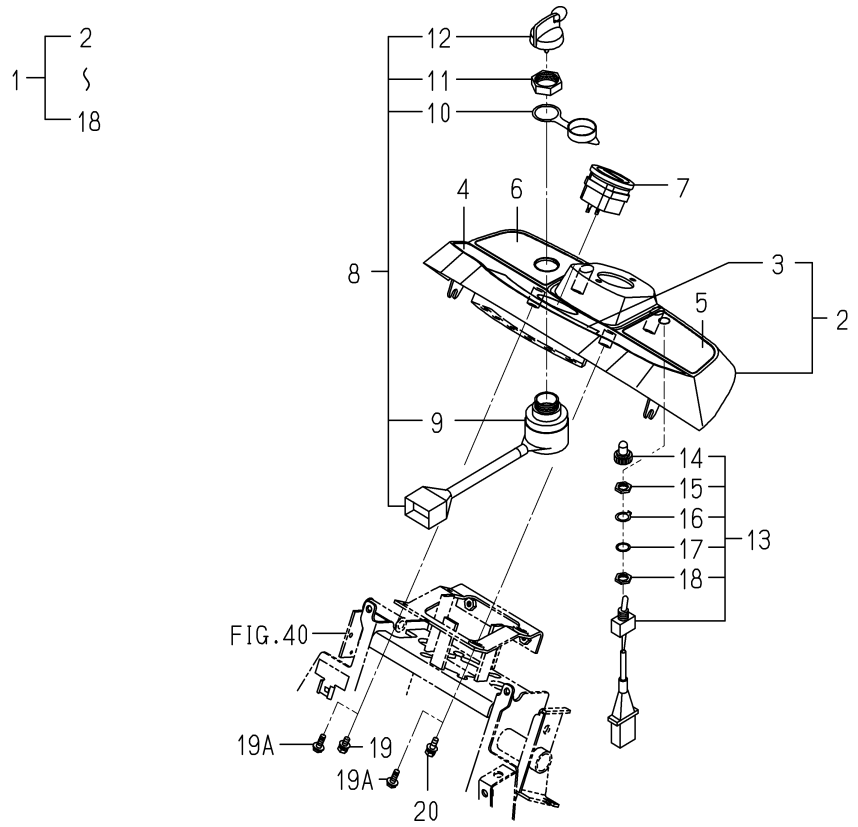

1728-670 -0100

KEY	PART CODE	DESCRIPTION	SPC	TYPE OF MODEL SXG19	TYPE OF MODEL SXG22	ITC	COL	GRP	REMARKS
1	1728-670-200-10	PANEL/SWITCH ASSY	*	1	1				
2	1728-670-210-00	PANEL/SWITCH COMP	*	1	1				
3	1705-621-202-00	PANEL/MONITOR	*	1	1				
4	1705-901-004-00	LABEL/METER	*	1	1				
5	1728-670-201-00	LABEL/PANEL/LH	*	1	1				
6	1705-902-004-00	LABEL/PANEL/RH	*	1	1				
7	1689-613-260-00	METER/HOUR ASSY	*	1	1				
8	1593-621-250-10	SWITCH(STARTER) ASSY	*	1	1				
9	1593-621-252-00	COVER	*	1	1				
10	1444-621-311-00	CAP	*	1	1				
11	1444-621-312-00	NUT,RING/M28X1.0	*	1	1				
12	3614-261-002-00	KEY ASSY	*	1	1				
13	1593-622-270-00	SWITCH,HEAD LAMP	*	1	1				
14	3631-270-003-00	COVER/SWITCH	*	1	1				
15	1593-622-272-00	NUT/A/M12	*	1	1				
16	1593-622-273-00	WASHER/13X18X01	*	1	1				
17	1593-622-274-00	WASHER	*	1	1				
18	1593-622-275-00	NUT/B/M12	*	1	1				
19	V210-360-601-60	BOLT(SP)/M6X16	*	2 -9113	2 -3050				
19A	V230-360-601-60	FLANGEBOLT	*	4 9114-	4 3051-				
20	V210-360-602-00	BOLT/SP	*	2 -9113	2 -3050				

FIG. 59 PANEL SYSTEM(G TYPE)

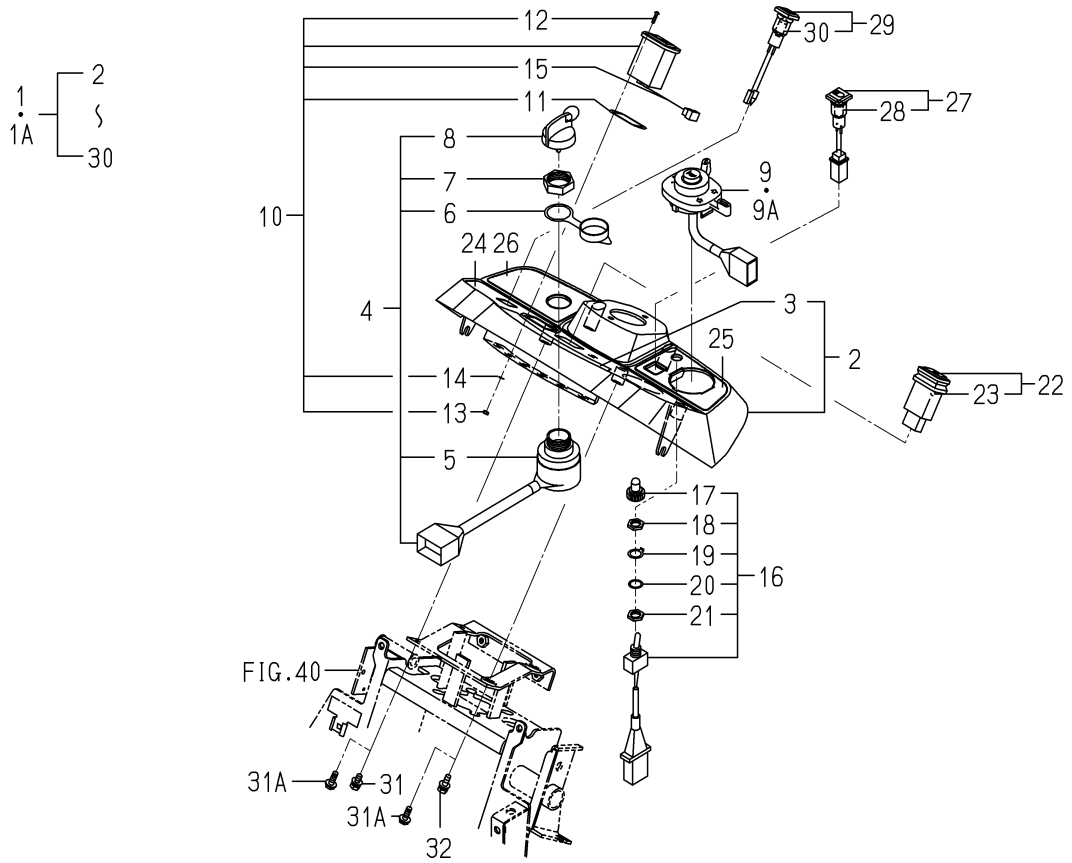

1728-670A-0100

KEY	PART CODE	DESCRIPTION	SPC	TYPE OF MODEL SXG19	TYPE OF MODEL SXG22	ITC	COL	GRP	REMARKS
1	1728-670-500-10	PANEL/SWITCH/HM ASSY	*	1 -8023	1 -2691				
1A	1728-670-500-20	PANEL/SWITCH/HM ASSY	*	1 8024-	1 2692-	1			
2	1728-670-510-00	PANEL/SWITCH/HM COMP	*	1	1				
3	1728-670-512-00	PANEL/MONITOR	*	1	1				
4	1593-621-250-10	SWITCH(STARTER) ASSY	*	1	1				
5	1593-621-252-00	COVER	*	1	1				
6	1444-621-311-00	CAP	*	1	1				
7	1444-621-312-00	NUT,RING/M28X1.0	*	1	1				
8	3614-261-002-00	KEY ASSY	*	1	1				
9	1739-670-220-00	SWITCH/COMBINATION/E	*	1 -8023	1 -2691				
9A	1739-670-220-10	SWITCH/COMBINATION/E	*	1 8024-	1 2692-	1			
10	1703-670-230-00	METER/HOUR ASSY	*	1	1				
11	P117-303-522-00	PACKING	*	1	1				
12	P117-303-523-00	SCREW	*	2	2				
13	P117-303-524-00	NUT	*	2	2				
14	P117-303-525-00	WASHER	*	2	2				
15	P117-303-526-00	HARNESS	*	1	1				
16	1593-622-270-00	SWITCH,HEAD LAMP	*	1	1				
17	3631-270-003-00	COVER/SWITCH	*	1	1				
18	1593-622-272-00	NUT/A/M12	*	1	1				
19	1593-622-273-00	WASHER/13X18X01	*	1	1				
20	1593-622-274-00	WASHER	*	1	1				
21	1593-622-275-00	NUT/B/M12	*	1	1				
22	1740-680-550-00	SWITCH/HAZARD ASSY	*	1	1				
23	1740-680-551-00	BULB/LAMP/14V60MA	*	1 7863-	1 2527-				
24	1728-670-501-00	LABEL/METER/HM	*	1	1				
25	1739-670-202-00	LABEL/LH	*	1	1				
26	1705-902-004-00	LABEL/PANEL/RH	*	1	1				
27	1682-670-220-00	LAMP/LIGHT ASSY	*	1	1				
28	1403-621-031-00	BULB/12V 3W	*	1	1				

FIG. 59 PANEL SYSTEM(G TYPE)

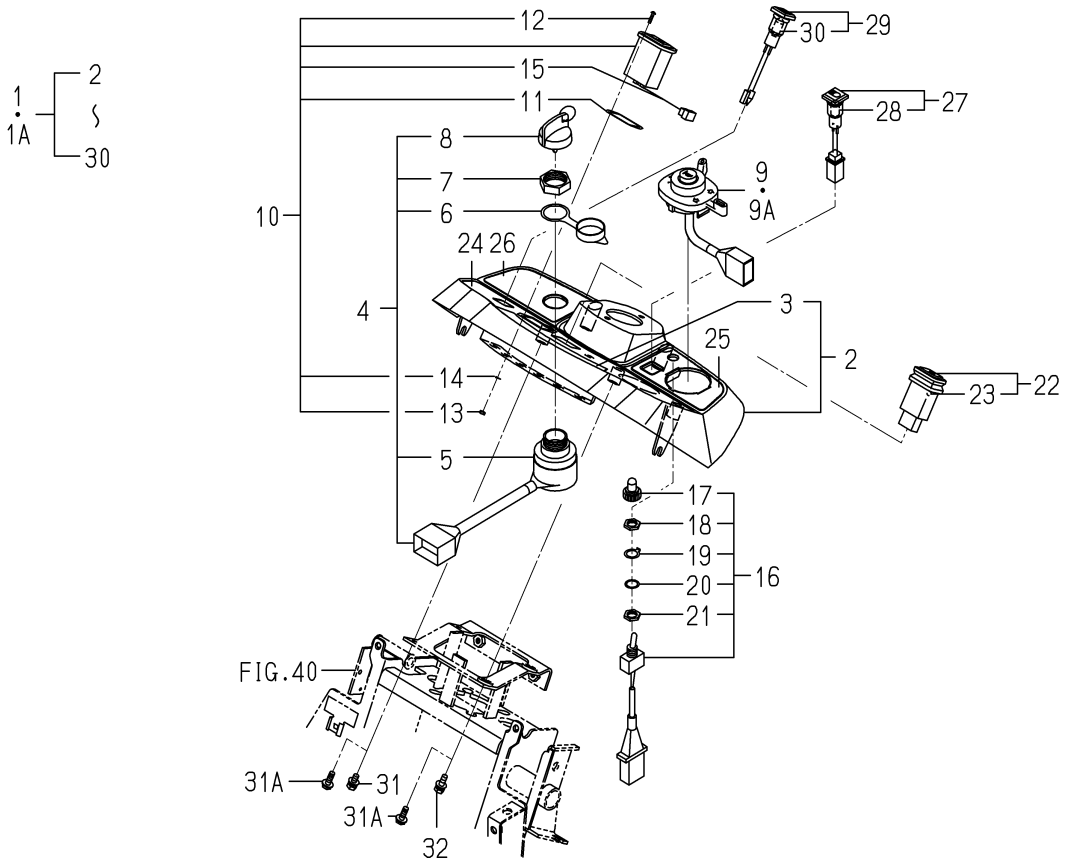

1728-670A-0100

KEY	PART CODE	DESCRIPTION	SPC	TYPE OF MODEL SXG19	TYPE OF MODEL SXG22	ITC	COL	GRP	REMARKS
29	1728-670-520-00	LAMP/PARKING ASSY	*	1	1				
30	1403-621-031-00	BULB/12V 3W	*	1	1				
31	V210-360-601-60	BOLT(SP)/M6X16	*	2 -9117	2 -3049				
31A	V230-360-601-60	FLANGEBOLT	*	4 9118-	4 3050-				
32	V210-360-602-00	BOLT/SP	*	2 -9117	2 -3049				

FIG. 60 HARNESS SYSTEM(EXCEPT G TYPE)

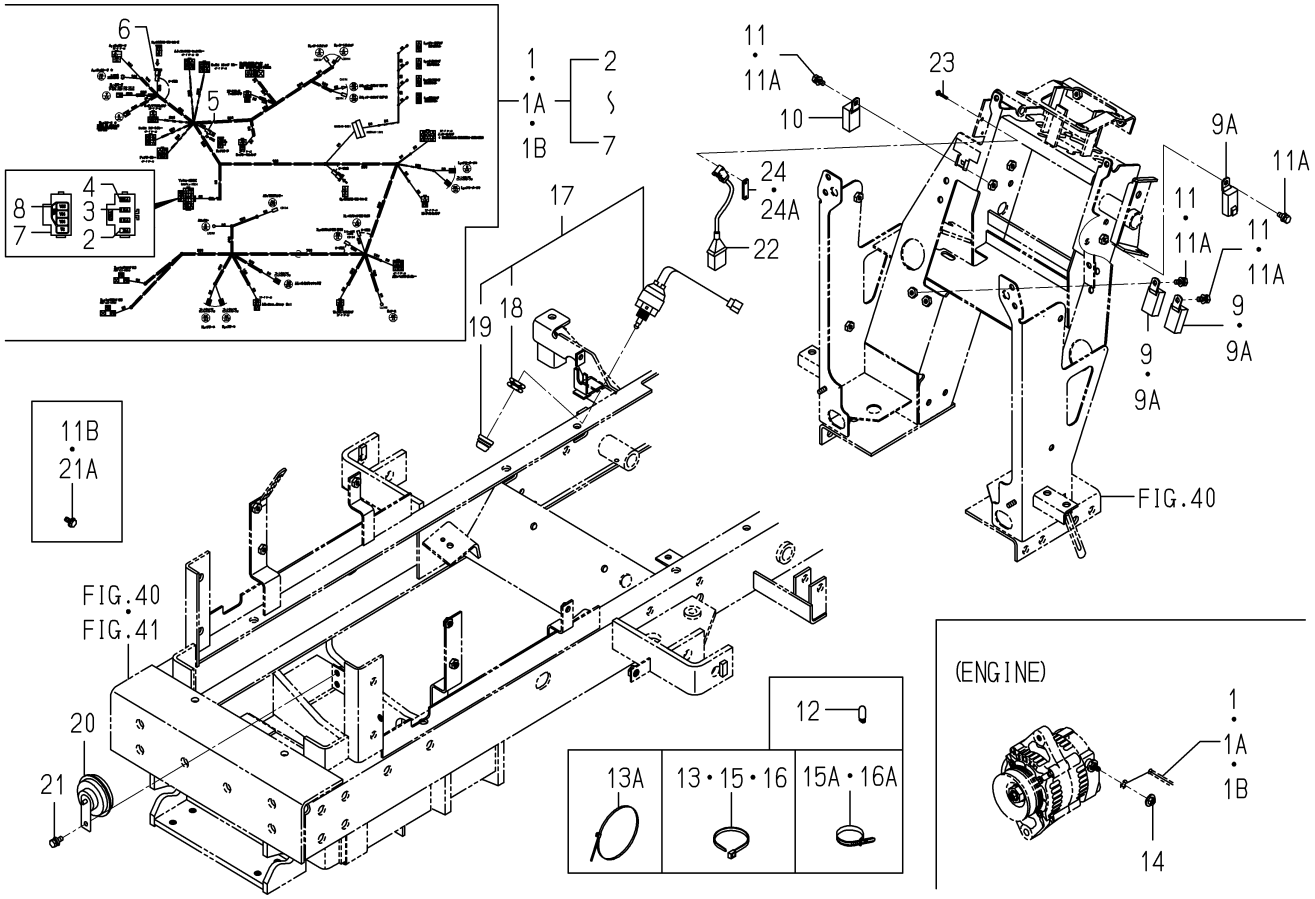

1728-690 -0100

KEY	PART CODE	DESCRIPTION	SPC	TYPE OF MODEL SXG19	TYPE OF MODEL SXG22	ITC	COL	GRP	REMARKS
1	1728-690-200-00	HARNESS/MAIN ASSY	*		1 -36				
1A	1728-690-200-10	HARNESS/MAIN ASSY	*	1 -1406	1 -579	1			
1B	1728-690-200-20	HARNESS/MAIN ASSY	*	1 1407-	1 580-	3			
2	1575-623-009-00	FUSE/32V03A	*	1	1				
3	1575-623-010-00	FUSE/32V10A	*	2	2				
4	1593-623-203-00	FUSE/32V20A	*	2	2				
5	3650-262-202-00	DIODE/3.0A	*	1	1				
6	1614-690-202-00	FUSE/SLOWBLOW	*	2	2				
7	1672-690-212-00	CAP/FUSEBOX/5P	*	1	1				
8	1728-690-001-00	LABEL/FUSE	*	1	1				
9	1650-658-270-00	RELAY/4P ASSY	*	2 -1406	2 -579				
9A	1650-658-270-00	RELAY/4P ASSY	*	3 1407-	3 580-				
10	1690-652-210-00	RELAY ASSY	*	1	1				
11	V210-360-601-60	BOLT(SP)/M6X16	*	3 -1406	3 -579				
11A	V210-360-601-60	BOLT(SP)/M6X16	*	4 -9113	4 -3050				
11B	V230-360-601-20	FLANGEBOLT	*	4 9114-	4 3051-				
12	3650-270-214-00	BULB	*	5	5				
13	1593-623-003-00	BAND	*	2 -3816	2 -1292				
13A	1560-695-015-00	CLAMP	*	2 3817-	2 1293-				
14	V360-260-006-00	NUT/M6	*	1	1				
15	3737-172-010-00	BAND/202	*	15 -188	15 -55				
15A	1342-402-006-00	BAND/WIRE/250	*	15 189-	15 56-				
16	3746-185-014-00	BAND,HOSE	*	2 -188	2 -55				
16A	1376-402-003-00	BAND,WIRE/140	*	5 189-	5 56-				
17	1560-664-250-00	SWITCH/PUSH SET	*	1	1				
18	1560-664-252-00	NUT	*	1	1				
19	1560-664-253-00	BOOT	*	1	1				
20	1690-650-320-00	HORN ASSY	*	1	1				
21	V210-360-601-60	BOLT(SP)/M6X16	*	1 -9113	1 -3050				
21A	V230-360-601-20	FLANGEBOLT	*	1 9114-	1 3051-				

FIG. 60 HARNESS SYSTEM(EXCEPT G TYPE)

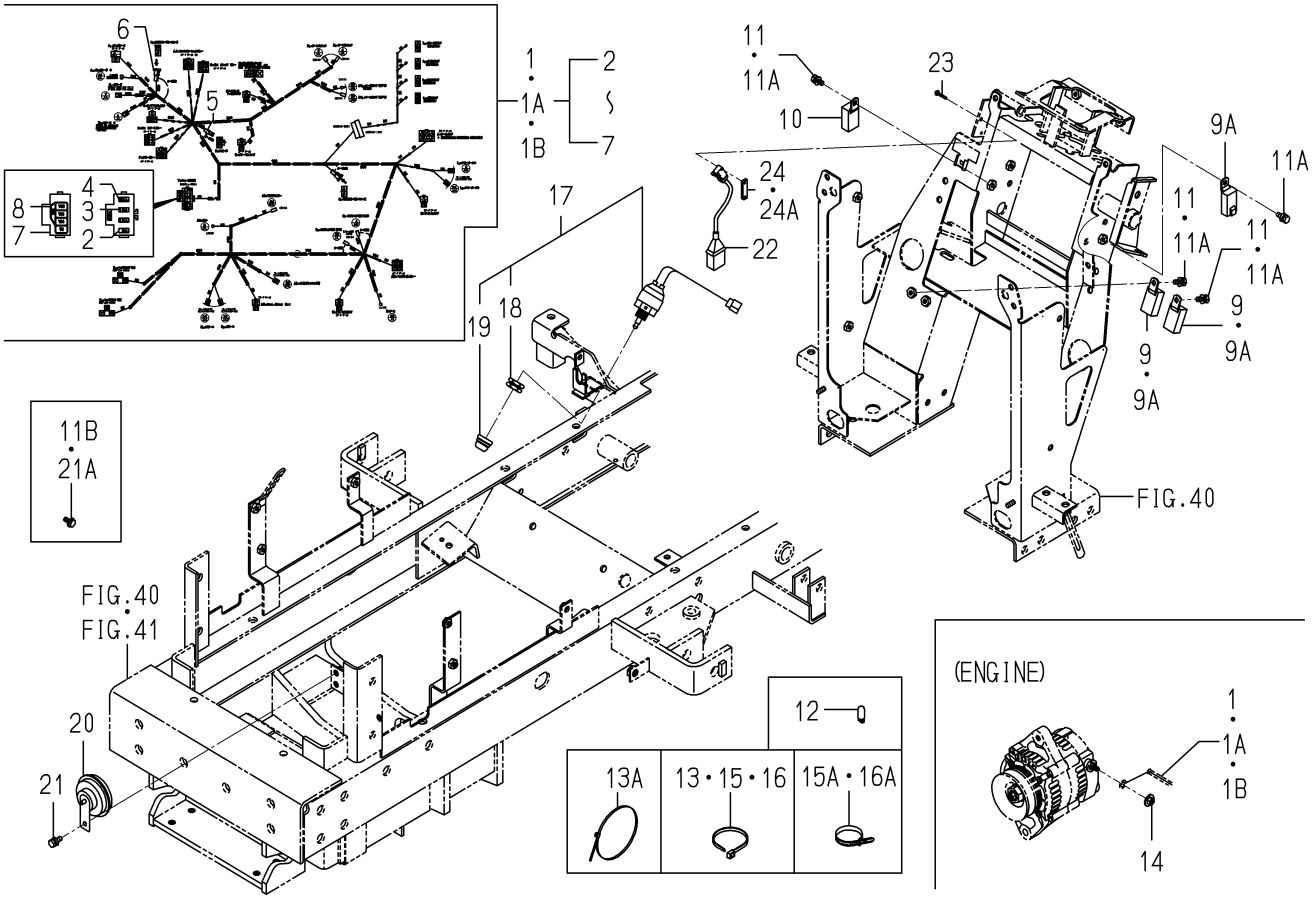

1728-690 -0100

KEY	PART CODE	DESCRIPTION	SPC	TYPE OF MODEL SXG19	TYPE OF MODEL SXG22	ITC	COL	GRP	REMARKS
22	1593-623-520-00	SWITCH,MERIT	*	1	1				
23	1614-129-003-00	SCREW/M03X20	*	2	2				
24	3664-276-001-00	PLATE/IRX13X35	*	1 -6294	1 -2091				
24A	3642-496-007-10	PLATE,SWITCH	*	1 6295-	1 2092-				

FIG. 61 HARNESS SYSTEM(G TYPE)

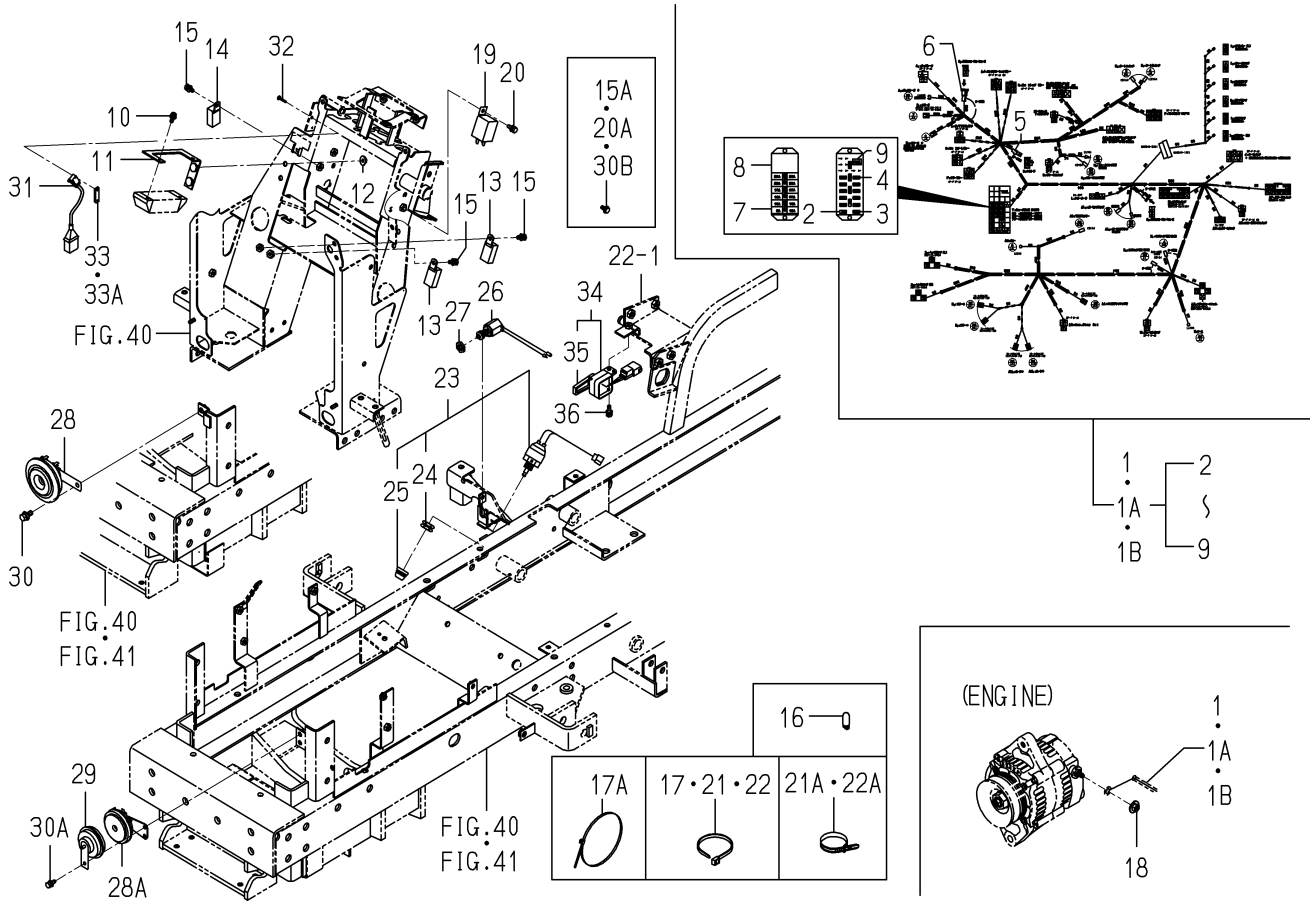

1728-690A-0100

KEY	PART CODE	DESCRIPTION	SPC	TYPE OF MODEL SXG19	TYPE OF MODEL SXG22	ITC	COL	GRP	REMARKS
1	1728-690-500-00	HARNESS/MAIN/HM ASSY	*	1 -56	1 -35				
1A	1728-690-500-10	HARNESS/MAIN/HM ASSY	*	1 -1551	1 -589	1			
1B	1728-690-500-20	HARNESS/MAIN/G ASSY	*	1 1552-	1 590-	3			
2	3827-270-003-00	FUSE/BLADE/32V03A	*	2	2				
3	3821-262-202-00	FUSE/BLADE/32V10A	*	6	6				
4	3821-262-204-00	FUSE/BLADE/32V20A	*	8	8				
5	3650-262-202-00	DIODE/3.0A	*	1	1				
6	1614-690-202-00	FUSE/SLOWBLOW	*	2	2				
7	1728-690-502-00	LABEL/FUSE	*	1	1				
8	3827-270-001-00	COVER/FUSE	*	1	1				
9	3827-270-002-00	TOOL/FUSE	*	1	1				
10	V120-366-001-60	SCREW	*	2	2				
11	1728-690-510-10	STAY/FUSEBOX COMP	*	1	1				
12	V360-260-006-00	NUT/M6	*	2	2				
13	1650-658-270-00	RELAY/4P ASSY	*	2	2				
14	1690-652-210-00	RELAY ASSY	*	1	1				
15	V210-360-601-60	BOLT(SP)/M6X16	*	3 -9117	3 -3049				
15A	V230-360-601-20	FLANGEBOLT	*	3 9118-	3 3050-				
16	3650-270-214-00	BULB	*	6	6				
17	1593-623-003-00	BAND	*	2 -4125	2 -1288				
17A	1560-695-015-00	CLAMP	*	2 4126-	2 1289-				
18	V360-260-006-00	NUT/M6	*	1	1				
19	1600-623-002-00	FLASHER ASSY	*	1	1				4DM0-033-600-01
20	V210-360-601-60	BOLT(SP)/M6X16	*	1 -9117	1 -3049				
20A	V230-360-601-20	FLANGEBOLT	*	1 9118-	1 3050-				
21	3737-172-010-00	BAND/202	*	15 -514	15 -101				
21A	1342-402-006-00	BAND/WIRE/250	*	15 515-	15 102-				
22	3746-185-014-00	BAND,HOSE	*	2 -514	2 -101				
22A	1376-402-003-00	BAND,WIRE/140	*	5 515-	5 102-				
23	1560-664-250-00	SWITCH/PUSH SET	*	1	1				

FIG. 61 HARNESS SYSTEM(G TYPE)

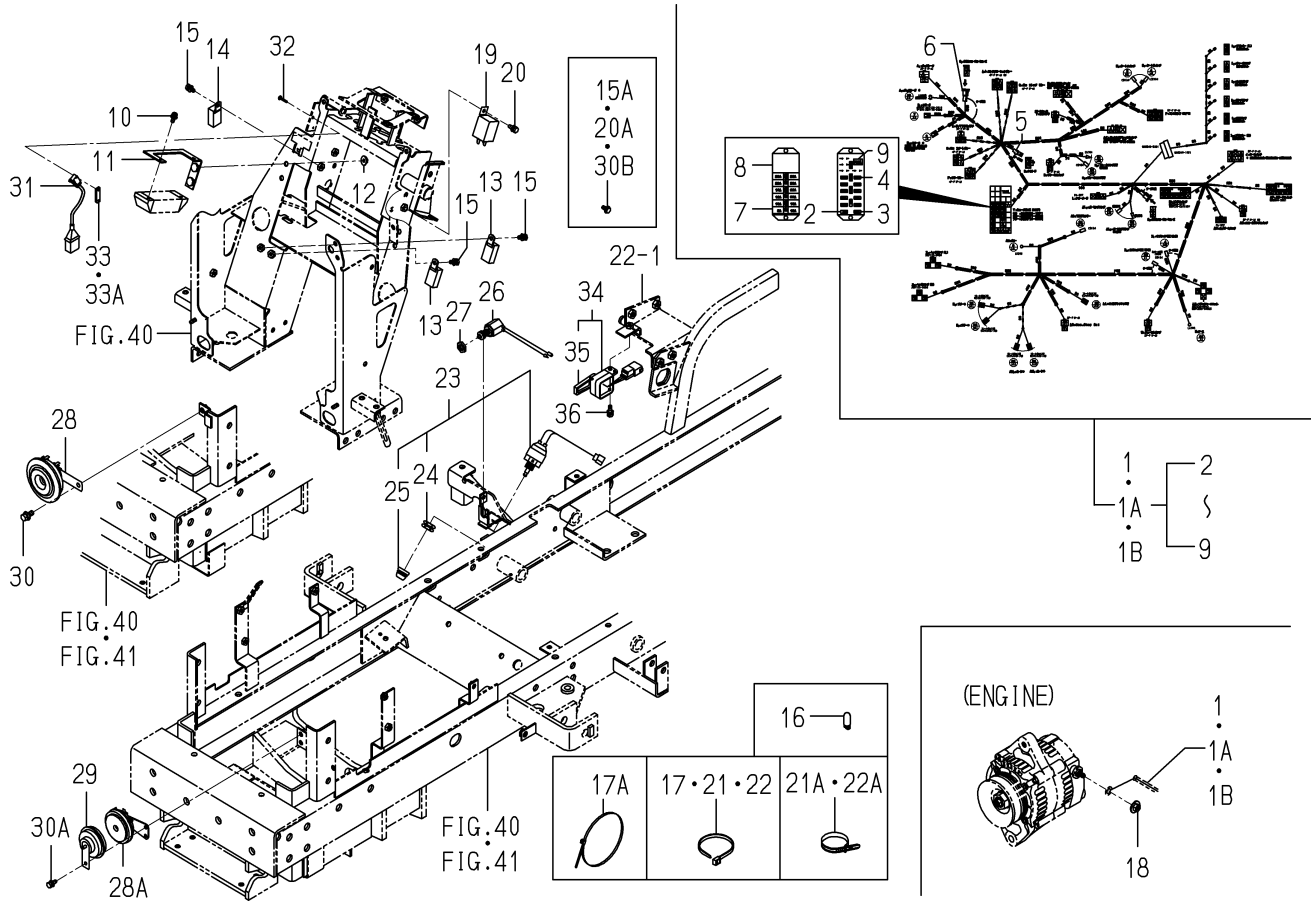

1728-690A-0100

KEY	PART CODE	DESCRIPTION	SPC	TYPE OF MODEL SXG19	TYPE OF MODEL SXG22	ITC	COL	GRP	REMARKS
24	1560-664-252-00	NUT	*	1	1				
25	1560-664-253-00	BOOT	*	1	1				
26	1518-621-320-00	SWITCH,STOP	*	1	1				
27	1432-621-006-10	NUT,LOCK	*	1	1				
28	1674-664-200-00	HORN ASSY	*	1 -1190	1 -551				**********
28A	1740-680-530-00	HORN ASSY	*	1 1191-	1 552-				
29	1690-650-320-00	HORN ASSY	*	1 1552-	1 590-				
30	V211-360-802-00	BOLT/SP	*	1 -1190	1 -551				
30A	V210-360-601-60	BOLT(SP)/M6X16	*	2 -9117	2 -3049				
30B	V230-360-601-20	FLANGEBOLT	*	2 9118-	2 3050-				
31	1593-623-520-00	SWITCH,MERIT	*	1	1				
32	1614-129-003-00	SCREW/M03X20	*	2	2				
33	3664-276-001-00	PLATE/IRX13X35	*	1 -6295	1 -2099				
33A	3642-496-007-10	PLATE,SWITCH	*	1 6296-	1 2100-				
34	1716-680-330-00	SWITCH/LEVER ASSY	*	1	1				
35	1716-680-222-00	ARM	*	1	1				
36	V210-360-602-00	BOLT/SP	*	1	1				

FIG. 62 CHUTER SYSTEM(SXG19 TYPE)

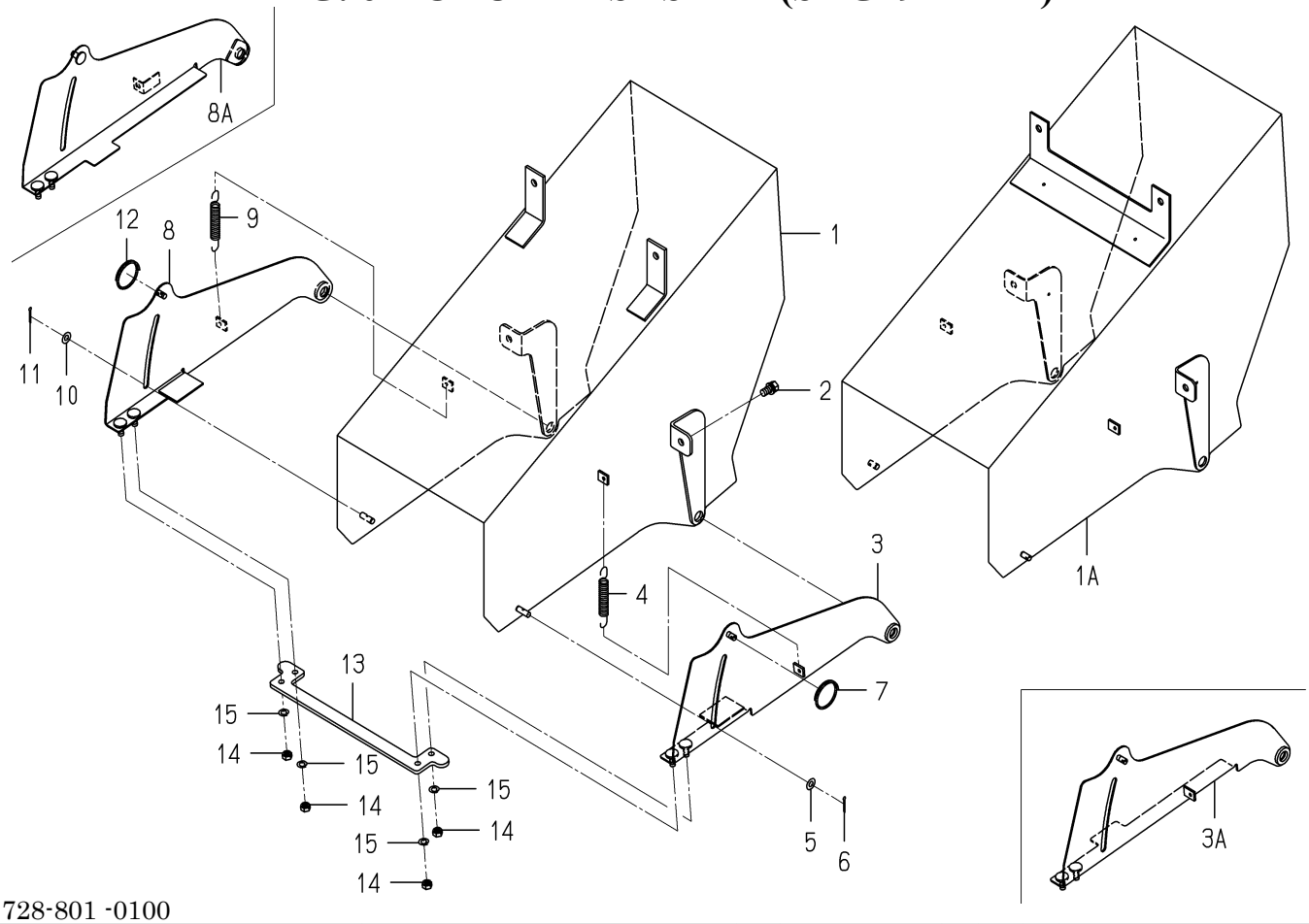

1728-801 -0100

KEY	PART CODE	DESCRIPTION	SPC	TYPE OF MODEL SXG19	TYPE OF MODEL SXG22	ITC	COL	GRP	REMARKS
1	1728-801-210-00	CHUTER/UPPER/19 COMP	*	1 -636			7F		
1A	1728-801-210-10	CHUTER/UPPER/19 COMP	*	1 637-		1	7F		
2	V211-261-002-00	BOLT,SEMS	*	4					
3	1728-801-220-10	CHUTER/LOWER/LH COMP	*	1 -7515					
3A	1728-801-220-20	CHUTER/LOWER/LH COMP	*	1 7516-		3			
4	2157-128-001-00	SPRING/HE107	*	1					
5	V411-260-008-00	WASHER,PL/M 8	*	1					
6	V500-163-002-00	PIN,SPLIT/3 X20	*	1 -636					
7	8654-501-006-10	SPRING/CLIP	*	1					
8	1728-801-230-10	CHUTER/LOWER/RH COMP	*	1 -6276					
8A	1728-801-230-20	CHUTER/LOWER/RH COMP	*	1 6277-		3			
9	2157-128-001-00	SPRING/HE107	*	1					
10	V411-260-008-00	WASHER,PL/M 8	*	1					
11	V500-163-002-00	PIN,SPLIT/3 X20	*	1 -636					
12	8654-501-006-10	SPRING/CLIP	*	1					
13	1728-801-001-10	PLATE/BAR	*	1					
14	3801-236-051-00	NUT,U/M8	*	4					
15	V401-160-008-00	WASHER,SP/M 8	*	4					

FIG. 63 CHUTER SYSTEM(SXG22 TYPE)

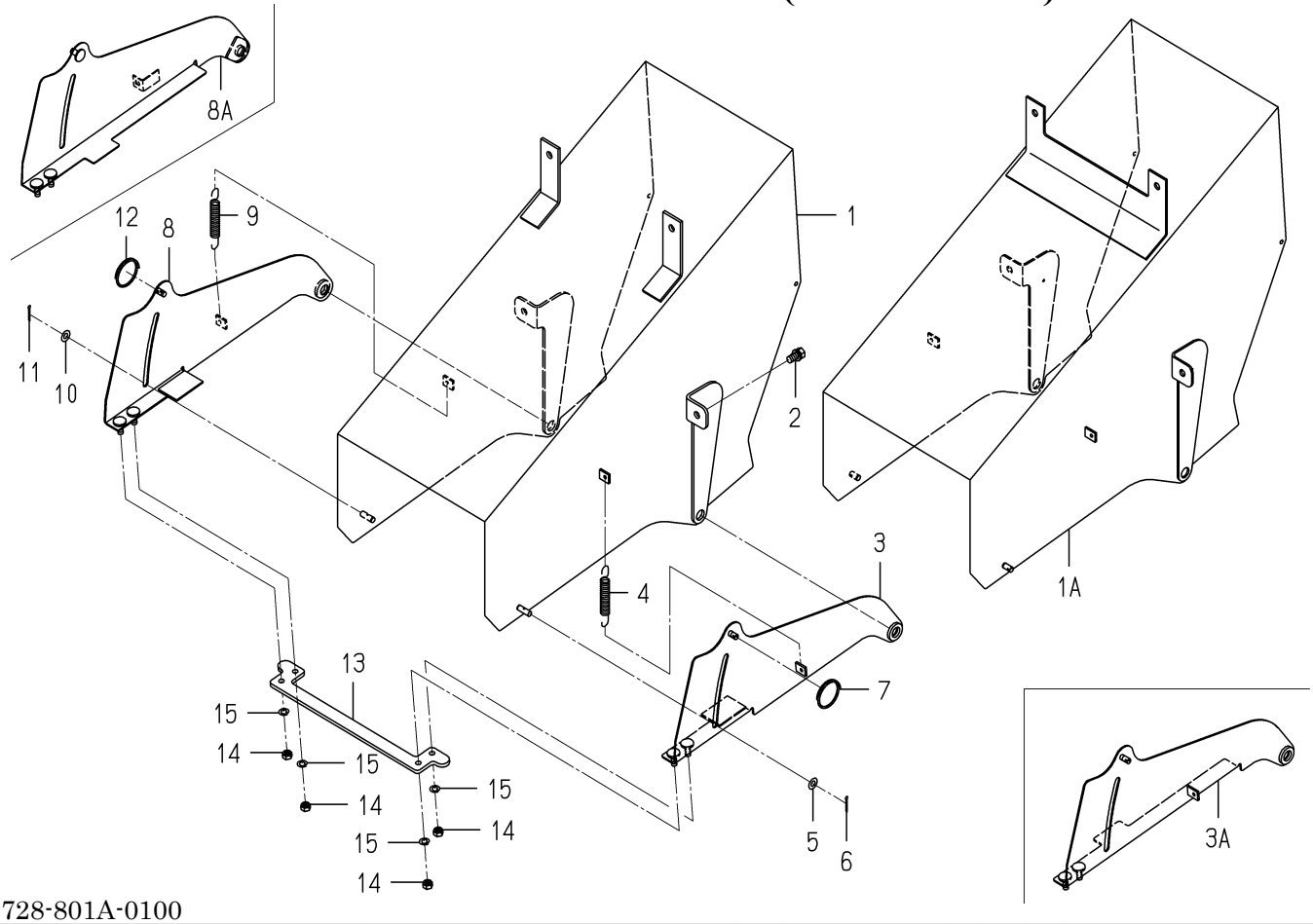

1728-801A-0100

KEY	PART CODE	DESCRIPTION	SPC	TYPE OF MODEL SXG19	TYPE OF MODEL SXG22	ITC	COL	GRP	REMARKS
1	1728-801-510-00	CHUTER/UPPER/22 COMP	*		1 -116		7F		
1A	1728-801-510-10	CHUTER/UPPER/22 COMP	*		1 117-	1	7F		
2	V211-261-002-00	BOLT,SEMS	*		4				
3	1728-801-220-10	CHUTER/LOWER/LH COMP	*		1 -2398				
3A	1728-801-220-20	CHUTER/LOWER/LH COMP	*		1 2399-	3			
4	2157-128-001-00	SPRING/HE107	*		1				
5	V411-260-008-00	WASHER,PL/M 8	*		1				
6	V500-163-002-00	PIN,SPLIT/3 X20	*		1 -116				
7	8654-501-006-10	SPRING/CLIP	*		1				
8	1728-801-230-10	CHUTER/LOWER/RH COMP	*		1 -2080				
8A	1728-801-230-20	CHUTER/LOWER/RH COMP	*		1 2081-	3			
9	2157-128-001-00	SPRING/HE107	*		1				
10	V411-260-008-00	WASHER,PL/M 8	*		1				
11	V500-163-002-00	PIN,SPLIT/3 X20	*		1 -116				
12	8654-501-006-10	SPRING/CLIP	*		1				
13	1728-801-001-10	PLATE/BAR	*		1				
14	3801-236-051-00	NUT,U/M8	*		4				
15	V401-160-008-00	WASHER,SP/M 8	*		4				

FIG. 64 CLEANER SYSTEM(SXG19 TYPE)

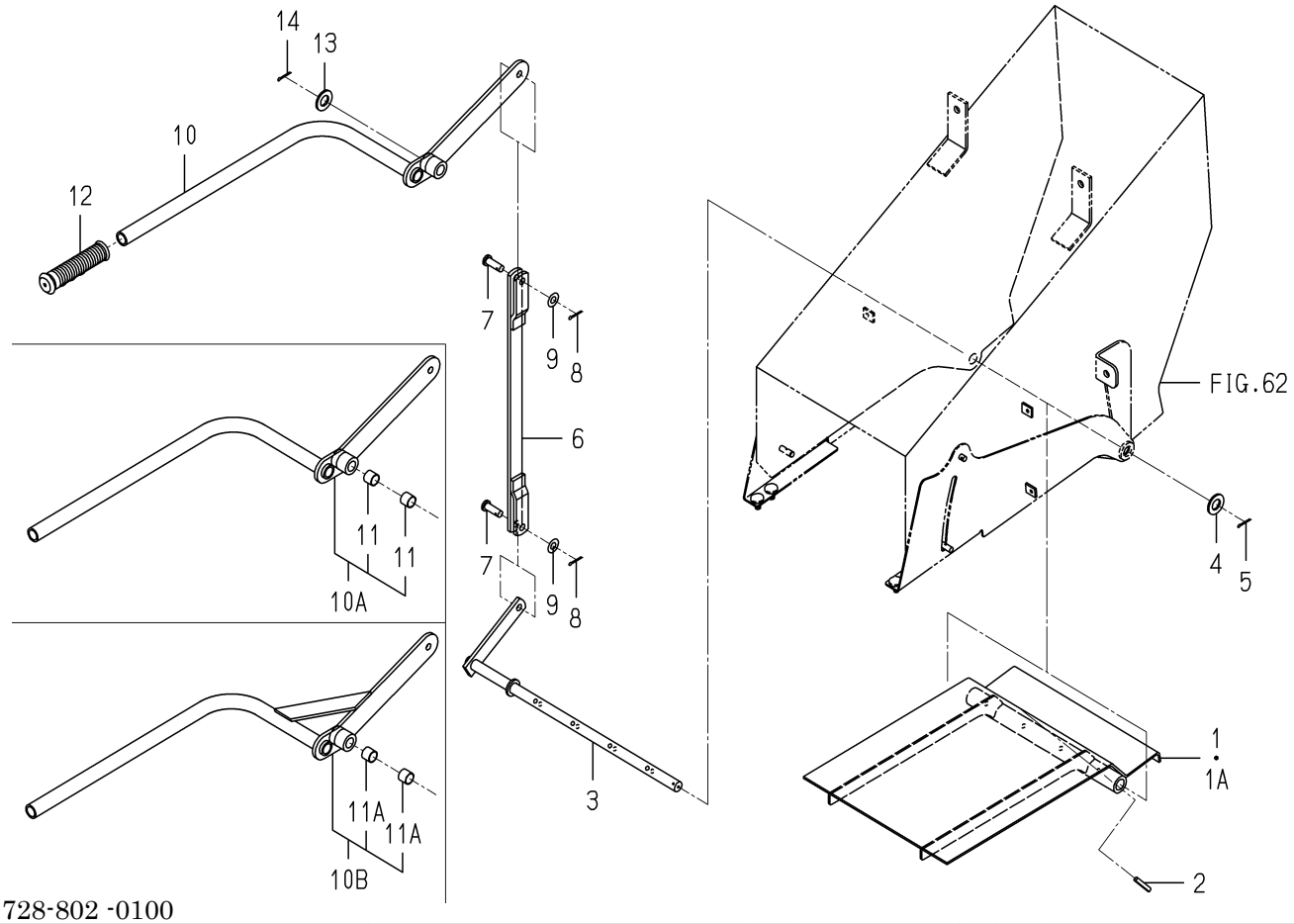

1728-802 -0100

KEY	PART CODE	DESCRIPTION	SPC	TYPE OF MODEL SXG19	TYPE OF MODEL SXG22	ITC	COL	GRP	REMARKS
1	1728-802-210-00	PLATE/CLEANER/1 COMP	*	1 -191					
1A	1728-802-210-10	PLATE/CLEANER/1 COMP	*	1 192-		1			
2	V580-140-603-20	PIN,SPRING/6 X32 W	*	4					
3	1728-802-220-10	ARM/CLEANER COMP	*	1					
4	V411-260-016-00	WASHER / M16	*	1					
5	V500-163-003-00	PIN,SPLIT/3X30	*	1					
6	1728-802-230-10	ROD/CLEANER/19 COMP	*	1					
7	2195-524-002-00	PIN/10X29	*	2					
8	V500-163-002-00	PIN,SPLIT/3 X20	*	2					
9	V411-260-010-00	WASHER/M10	*	2					
10	1728-802-250-10	LEVER/CLEANER COMP	*	1 -296					
10A	1728-802-270-00	LEVER/CLEANER ASSY	*	1 -392					
10B	1728-802-270-10	LEVER/CLEANER ASSY	*	1 393-		1			
11	1636-271-351-00	BUSH/16X18X15	*	2 -3812					
11A	3640-111-001-10	BUSH/16X18X15	*	2 3813-					
12	1379-311-002-00	GRIP,HANDLE	*	1					
13	V411-260-016-00	WASHER / M16	*	1					
14	V500-163-003-00	PIN,SPLIT/3X30	*	1					

FIG. 65 CLEANER SYSTEM(SXG22 TYPE)

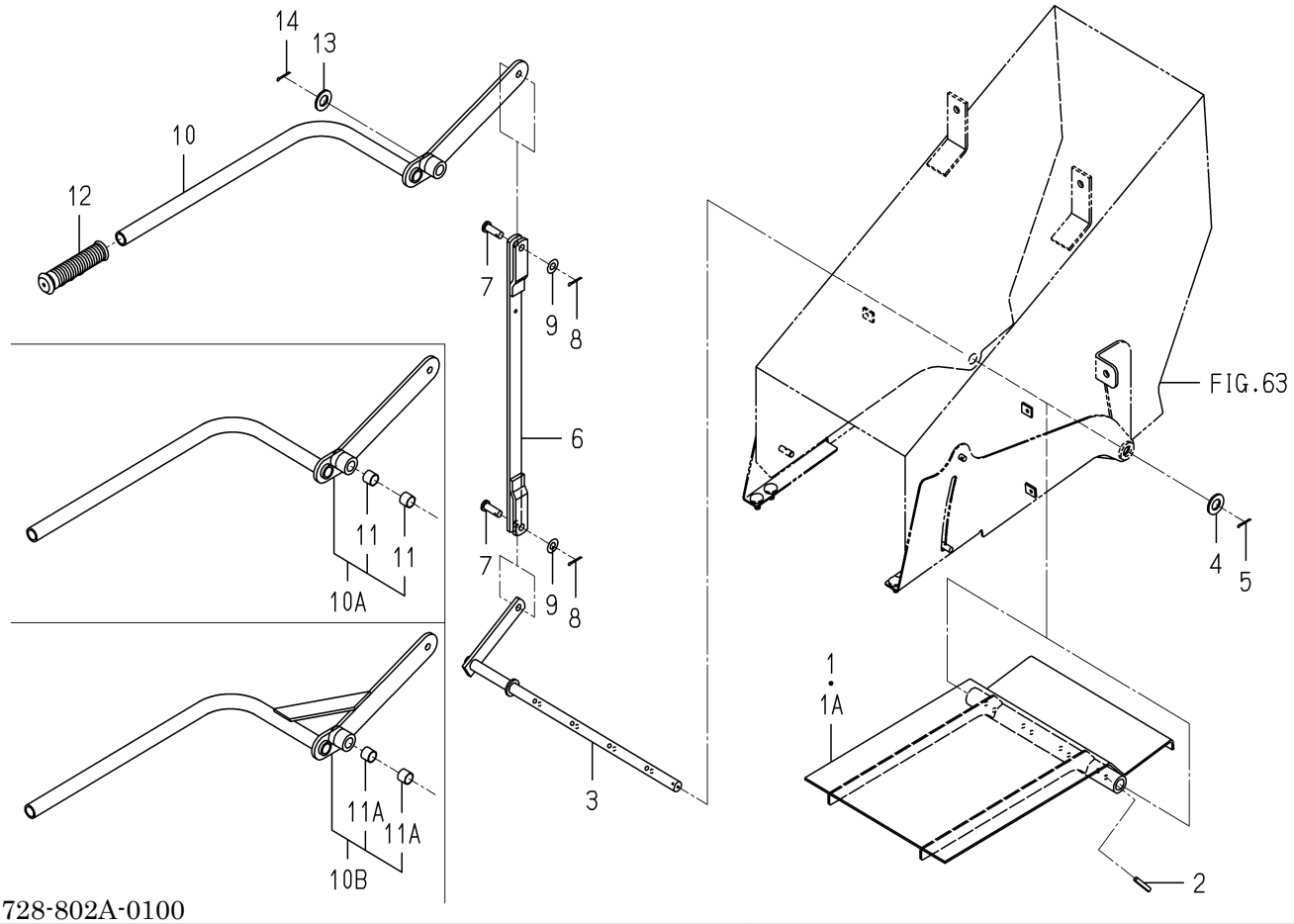

1728-802A-0100

KEY	PART CODE	DESCRIPTION	SPC	TYPE OF MODEL SXG19	TYPE OF MODEL SXG22	ITC	COL	GRP	REMARKS
1	1728-802-510-00	PLATE/CLEANER/2 COMP	*		1 -55				
1A	1728-802-510-10	PLATE/CLEANER/2 COMP	*		1 56-	1			
2	V580-140-603-20	PIN,SPRING/6 X32 W	*		4				
3	1728-802-220-10	ARM/CLEANER COMP	*		1				
4	V411-260-016-00	WASHER / M16	*		1				
5	V500-163-003-00	PIN,SPLIT/3X30	*		1				
6	1728-802-520-10	ROD/CLEANER/22 COMP	*		1				
7	2195-524-002-00	PIN/10X29	*		2				
8	V500-163-002-00	PIN,SPLIT/3 X20	*		2				
9	V411-260-010-00	WASHER/M10	*		2				
10	1728-802-250-10	LEVER/CLEANER COMP	*		1 -69				
10A	1728-802-270-00	LEVER/CLEANER ASSY	*		1 -87				
10B	1728-802-270-10	LEVER/CLEANER ASSY	*		1 88-	1			
11	1636-271-351-00	BUSH/16X18X15	*		2 -1292				
11A	3640-111-001-10	BUSH/16X18X15	*		2 1293-				
12	1379-311-002-00	GRIP,HANDLE	*		1				
13	V411-260-016-00	WASHER / M16	*		1				
14	V500-163-003-00	PIN,SPLIT/3X30	*		1				

FIG. 66 ORNAMENT(SXG19 TYPE)

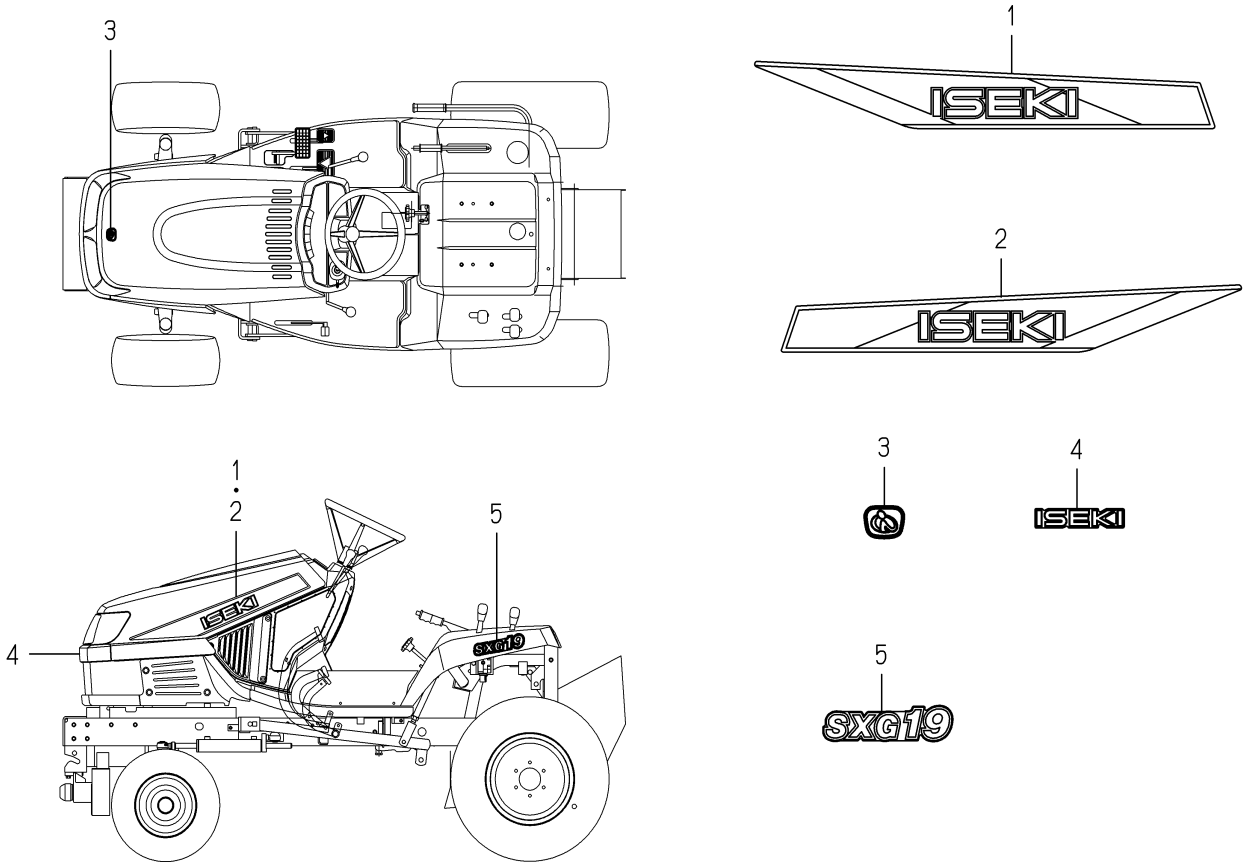

1728-901 -0100

KEY	PART CODE	DESCRIPTION	SPC	TYPE OF MODEL SXG19	TYPE OF MODEL SXG22	ITC	COL	GRP	REMARKS
1	1739-901-001-00	ORNAMENT/ISEKI/LH	*	1					
2	1739-901-002-00	ORNAMENT/ISEKI/RH	*	1					
3	1118-901-002-00	ORNAMENT/I	*	1					
4	1119-901-003-00	ORNAMENT/ISEKI/130	*	1					
5	1728-901-001-00	ORNAMENT/SXG19	*	2					

FIG. 67 ORNAMENT(SXG22 TYPE)

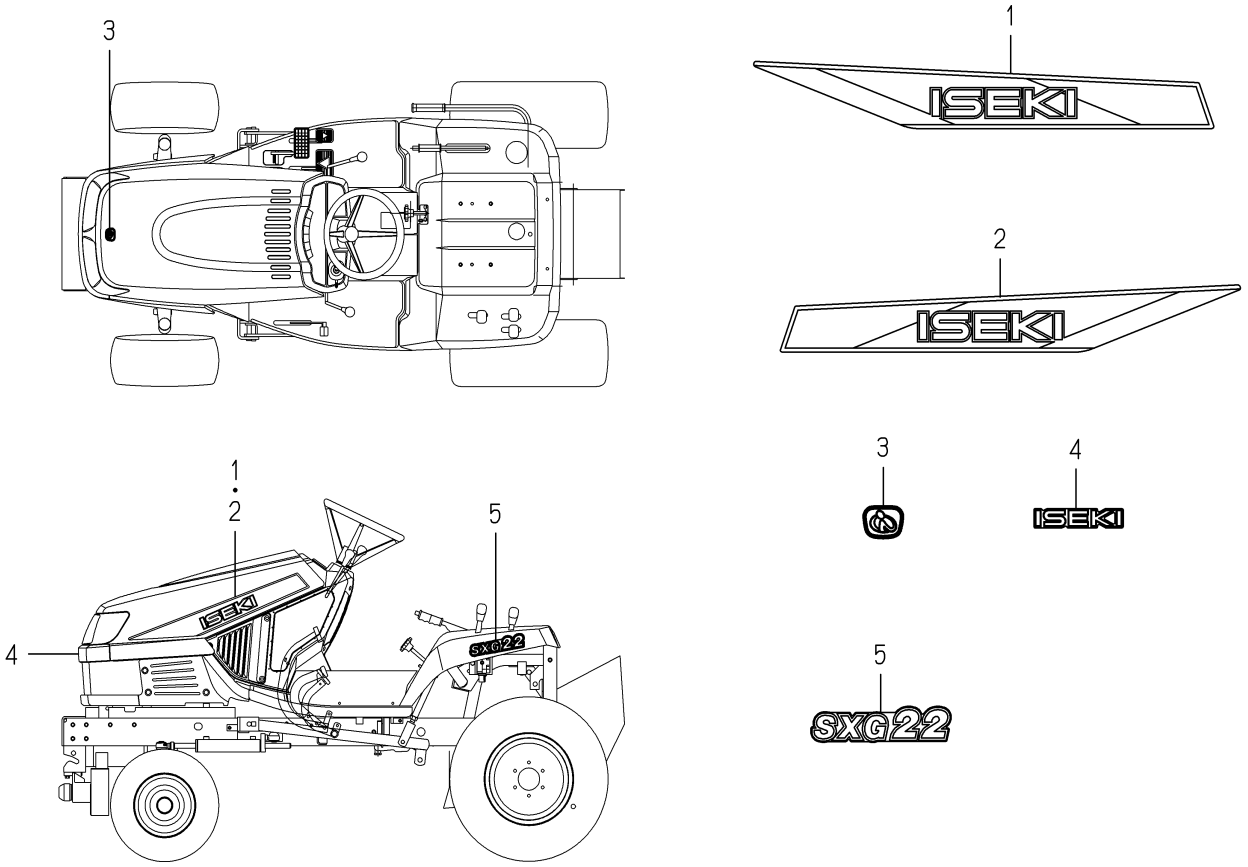

1728-901A-0100

KEY	PART CODE	DESCRIPTION	SPC	TYPE OF MODEL SXG19	TYPE OF MODEL SXG22	ITC	COL	GRP	REMARKS
1	1739-901-001-00	ORNAMENT/ISEKI/LH	*		1				
2	1739-901-002-00	ORNAMENT/ISEKI/RH	*		1				
3	1118-901-002-00	ORNAMENT/I	*		1				
4	1119-901-003-00	ORNAMENT/ISEKI/130	*		1				
5	1728-901-051-00	ORNAMENT/SXG22	*		2				

FIG. 68 LABEL(CONTROL)(EXCEPT G TYPE)

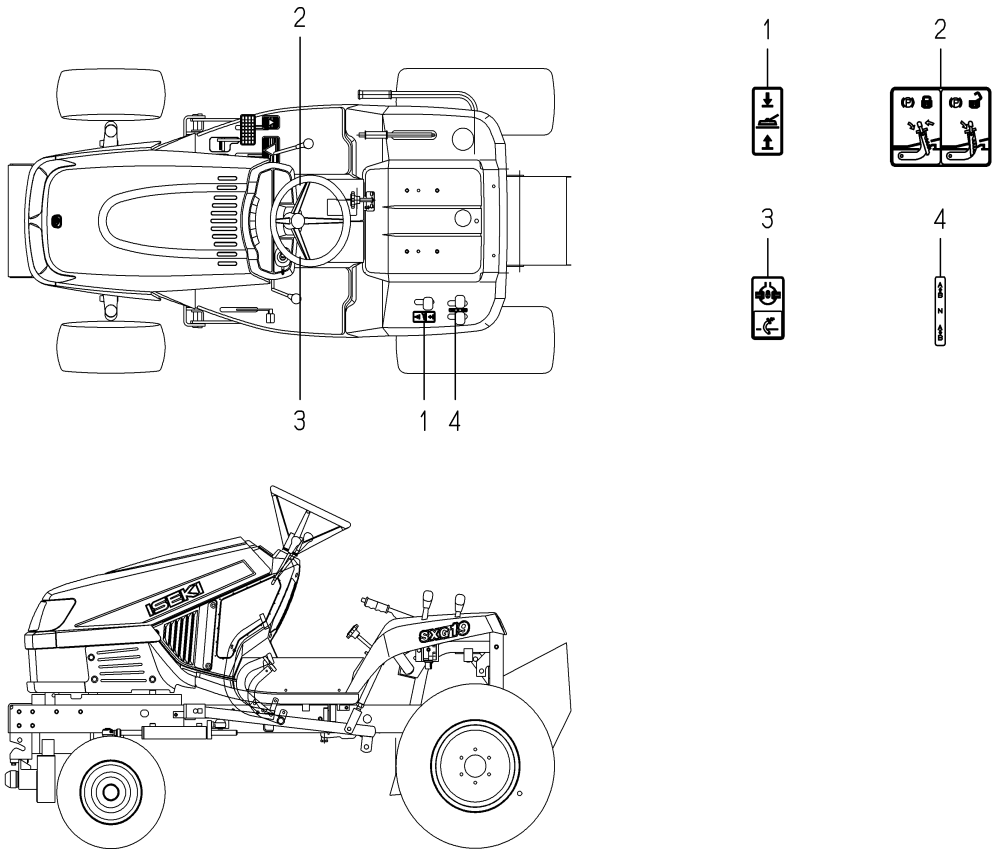

1728-902 -0100

KEY	PART CODE	DESCRIPTION	SPC	TYPE OF MODEL SXG19	TYPE OF MODEL SXG22	ITC	COL	GRP	REMARKS
1	1705-902-001-00	LABEL/LIFT/MOWER	*	1	1				
2	1631-901-021-00	LABEL/PARKING	*	1	1				
3	1689-903-004-00	LABEL/DIFF	*	1	1				
4	1739-530-008-00	LABEL/CONTROL/SUBCON	*	1	1				

FIG. 69 LABEL(CONTROL)(G TYPE)

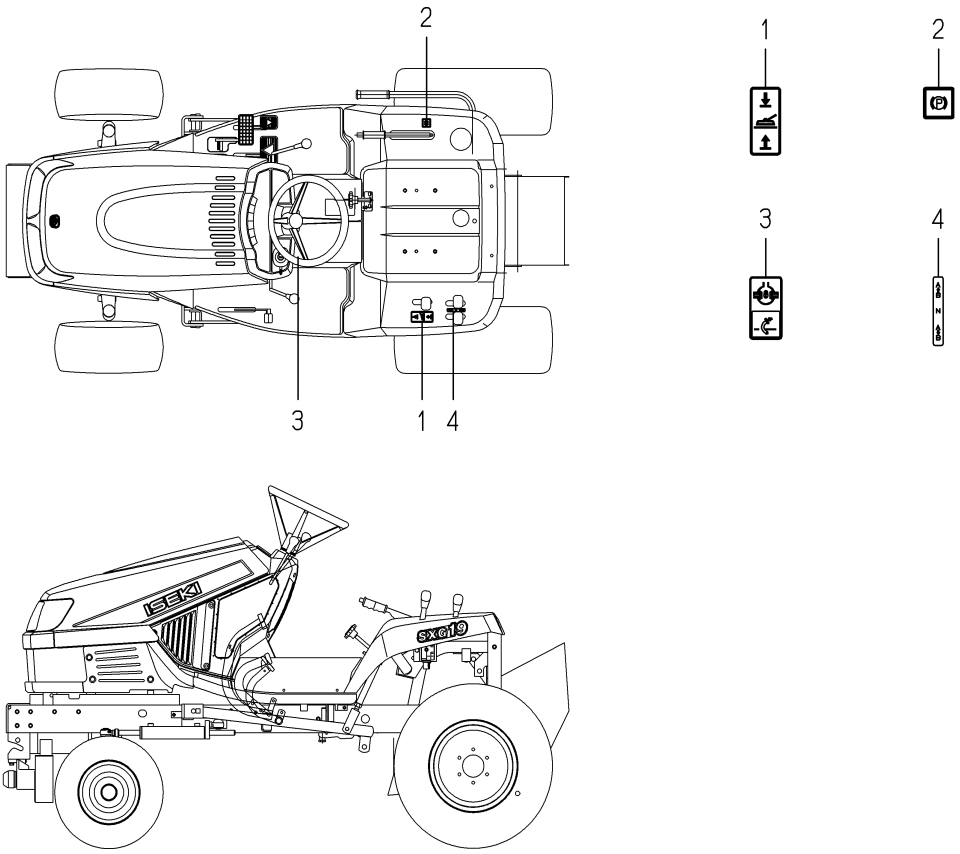

1728-902A-0100

KEY	PART CODE	DESCRIPTION	SPC	TYPE OF MODEL		ITC	COL	GRP	REMARKS
				SXG19	SXG22				
1	1705-902-001-00	LABEL/LIFT/MOWER	*	1	1				
2	1682-902-014-00	LABEL/CONTROL/PARKIN	*	1	1				
3	1689-903-004-00	LABEL/DIFF	*	1	1				
4	1739-530-008-00	LABEL/CONTROL/SUBCON	*	1	1				

FIG. 70 LABEL(CAUTION)

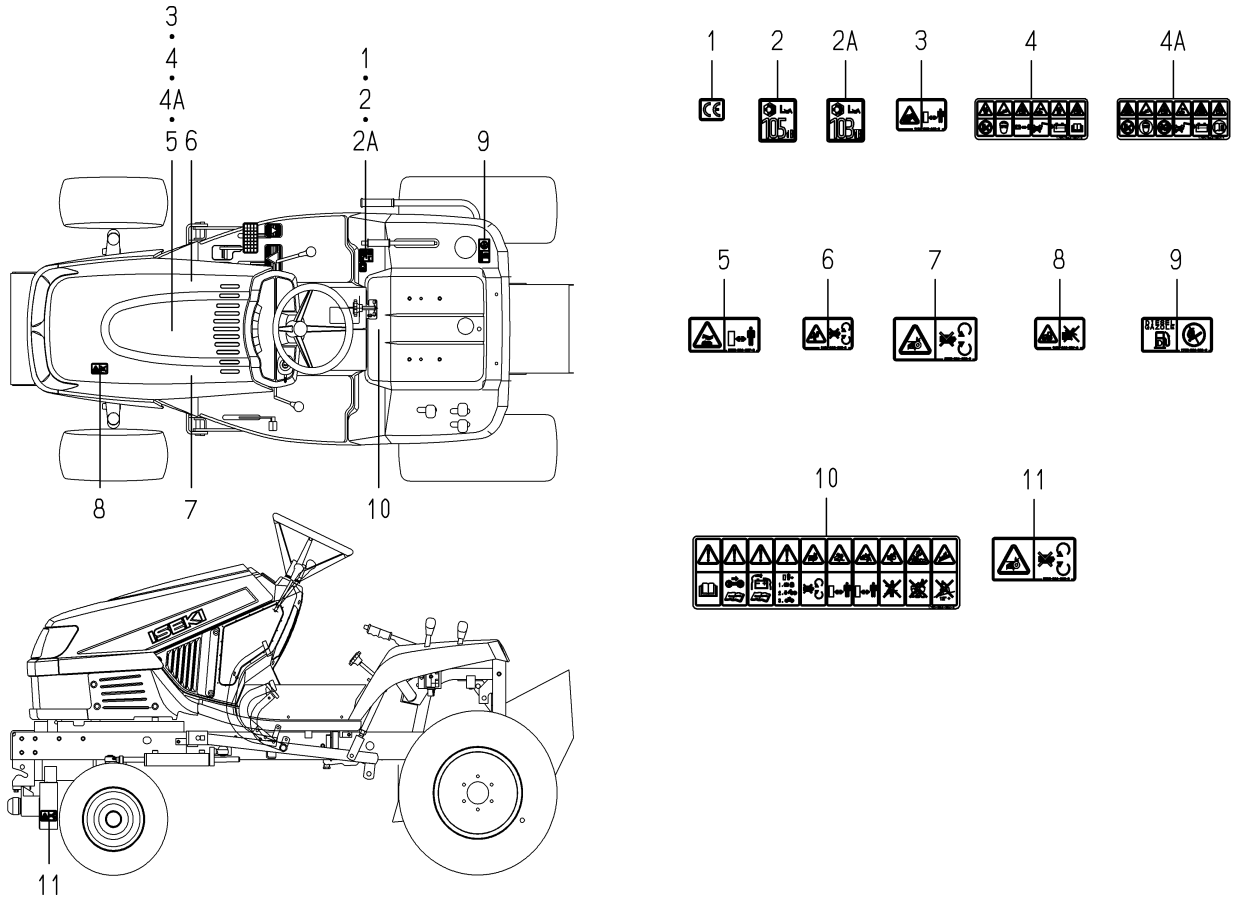

1728-903 -0100

KEY	PART CODE	DESCRIPTION	SPC	TYPE OF MODEL SXG19	TYPE OF MODEL SXG22	ITC	COL	GRP	REMARKS
1	2500-901-027-00	LABEL/CE	*	1	1				
2	1705-904-011-00	LABEL/NOISE/LWA/105	*	1 -4272	1 -1444				
2A	1728-903-001-00	LABEL/NOISE/LWA/103	*	1 4273-	1 1445-				
3	1705-902-008-00	LABEL/W/RADIATOR	*	1	1				
4	1705-904-002-00	LABEL/BATTERY	*	1 -1406	1 -579				
4A	1705-904-002-10	LABEL/BATTERY	*	1 1407-	1 580-	1			
5	8595-901-007-00	LABEL/WARNING/HOT	*	1	1				
6	1705-902-006-00	LABEL/W/FAN	*	1	1				
7	1674-904-008-00	LABEL/WARNING/BELT	*	1	1				
8	1705-902-007-00	LABEL/W/STARTER	*	1	1				
9	1705-904-001-00	LABEL/FUEL	*	1	1				
10	1705-904-004-00	LABEL/CAUTION	*	1	1				
11	1674-904-008-00	LABEL/WARNING/BELT	*	2	2				

FIG. 71 SHAFT(PTO/FRONT) SYSTEM(OPTION)

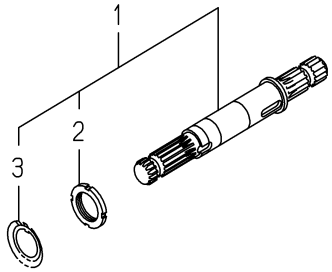

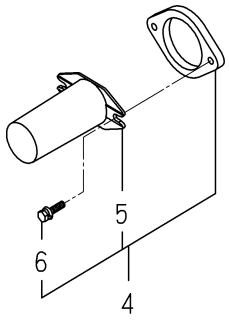

1728-334B-0100

KEY	PART CODE	DESCRIPTION	SPC	TYPE OF MODEL		ITC	COL	GRP	REMARKS
				SXG19	SXG22				
1	1728-334-310-00	SHAFT/PTO/FRONT SET	T	1	1				
2	V670-200-006-00	NUT,ADAPTER/AN06	T	1	1				
3	V671-400-006-00	WASHER,ADAPTER/AW06	T	1	1				
4	1728-334-320-00	COVER/SHAFT SET	T	1	1				
5	1444-314-009-10	CAP,PTO SHAFT	T	1	1				
6	V210-360-602-50	BOLT/SP	T	2	2				

FIG. 72 BUMPER SET(OPTION)

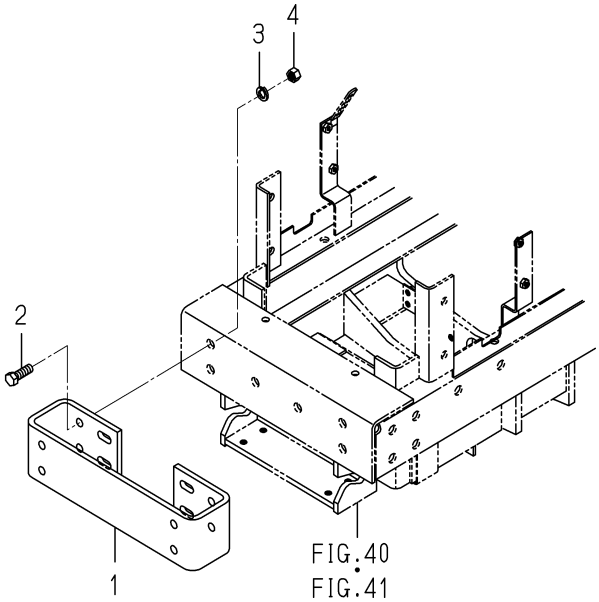

1728-410B-0100

KEY	PART CODE	DESCRIPTION	SPC	TYPE OF MODEL SXG19	TYPE OF MODEL SXG22	ITC	COL	GRP	REMARKS
1	1620-410-001-10	PLATE/BUMPER	T	1	1				
2	V201-361-203-50	BOLT/M12X35	T	4	4				
3	V401-160-012-00	WASHER,SP/M12	T	4	4				
4	V411-260-012-00	WASHER /M12	T	4	4				

FIG. 73 HITCH(FRONT)SET(OPTION)

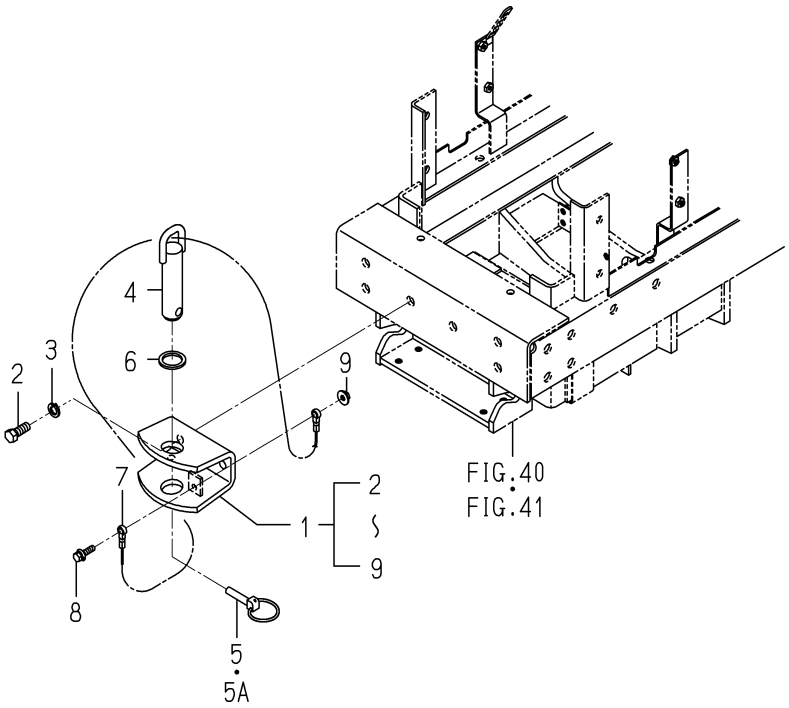

1738-411A-0100

KEY	PART CODE	DESCRIPTION	SPC	TYPE OF MODEL SXG19	TYPE OF MODEL SXG22	ITC	COL	GRP	REMARKS
1	1738-411-300-10	HITCH/FRONT SET	T	1	1				
2	V201-361-203-00	BOLT/M12X30	T	2	2				
3	V401-160-012-00	WASHER,SP/M12	T	2	2				
4	1674-410-320-00	PIN/30X120 COMP	T	1	1				
5	1673-525-002-20	LINKPIN	T	1 -9571	1 -3162				
5A	1673-525-002-30	LINKPIN	T	1 9572-	1 3163-	1			
6	1674-520-004-00	INSULATOR	T	1	1				
7	1674-410-301-00	CABLE	T	1	1				
8	V211-360-803-00	BOLT/SP	T	1	1				
9	V363-260-008-00	NUT/WASHER	T	1	1				

FIG. 74 MIRROR SET(G TYPE)(OPTION)

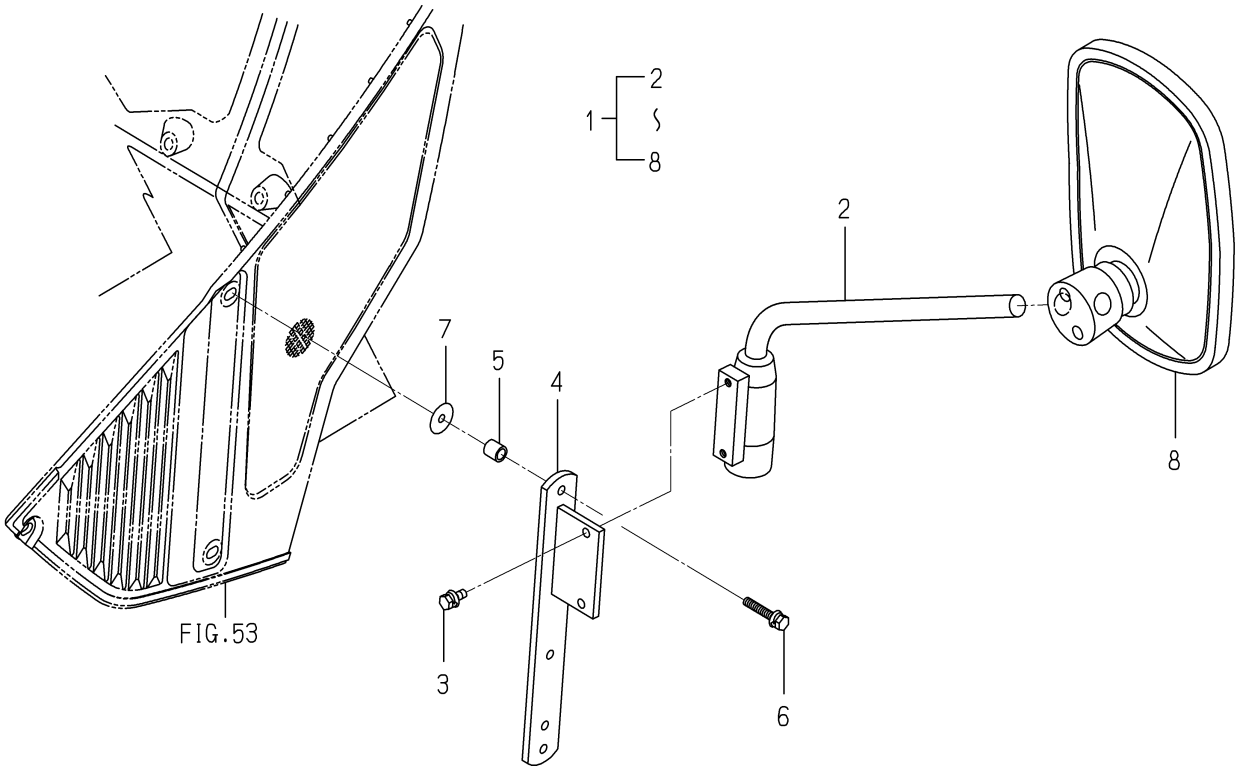

1728-619 -0100

KEY	PART CODE	DESCRIPTION	SPC	TYPE OF MODEL SXG19	TYPE OF MODEL SXG22	ITC	COL	GRP	REMARKS
1	1728-619-200-00	MIRROR SET	T	1	1				
2	1674-619-310-00	ARM/MIRROR ASSY	T	1	1				
3	V210-360-601-60	BOLT(SP)/M6X16	T	2	2				
4	1739-619-210-00	STAY/MIRROR COMP	T	1	1				
5	1725-407-001-00	COLLAR/08X12X13	T	2	2				
6	V210-360-603-50	BOLT/SP	T	2	2				
7	1421-507-014-00	WASHER/6X24X2	T	2	2				
8	1674-619-300-10	MIRROR ASSY	T	1	1				

FIG. 75 LAMP(X-L)SET(G TYPE)(OPTION)

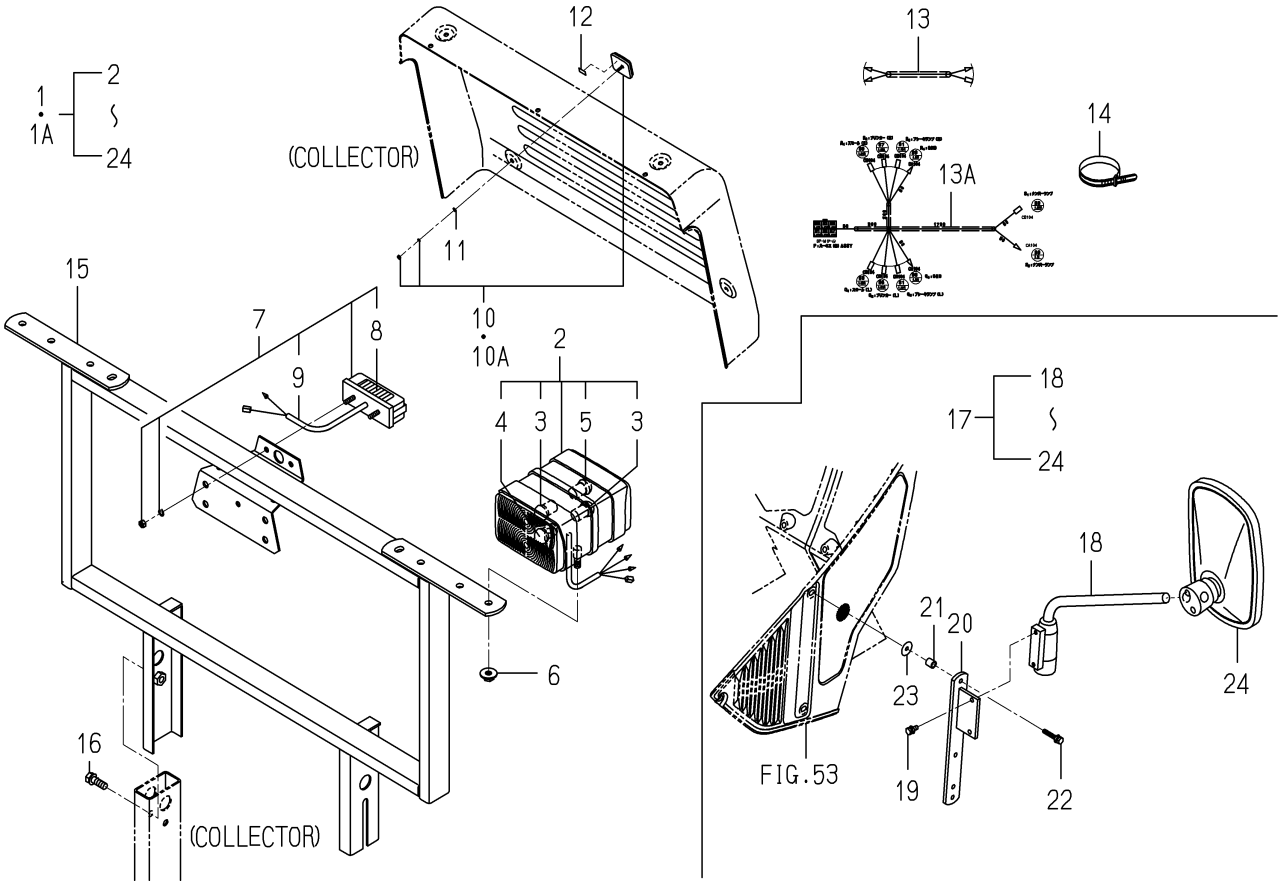

1728-660 -0100

KEY	PART CODE	DESCRIPTION	SPC	TYPE OF MODEL SXG19	TYPE OF MODEL SXG22	ITC	COL	GRP	REMARKS
1	1728-660-240-00	LAMP/X-L SET	T	1 -56	1 -35				
1A	1728-660-240-10	LAMP/X-L SET	T	1 57-	1 36-	3			
2	1739-660-200-20	LAMP/COMBINATIO SET	T	2	2				
3	1674-654-211-00	BULB/12V21W	T	4	4				
4	1674-654-212-00	BULB/12V5W	T	2	2				
5	1739-660-212-00	BLUB/12V-21/5W	T	2	2				
6	V362-260-008-00	NUT/WASHER	T	4	4				
7	1674-654-270-00	LAMP/NUMBERPLAT SET	T	1	1				
8	1674-654-271-00	BULB/12V/5W	T	1	1				
9	1674-654-272-00	HARNESS/LAMP	T	1	1				
10	1674-654-400-00	REFLECTOR ASSY	T	2 -7921	2 -2549				
10A	1674-654-400-10	REFLECTOR ASSY	T	2 7922-	2 2550-	1			
11	V411-260-004-00	WASHER,PL/M 4	T	2	2				
12	1674-654-004-00	TAPE/10X20	T	2	2				
13	1728-660-230-00	HARNESS/LAMP/NO ASSY	T	1 -56	1 -35				
13A	1728-660-300-00	HARNESS/LAMP/G ASSY	T	1 57-	1 36-				
14	1342-402-006-00	BAND/WIRE/250	T	10	10				
15	1728-660-220-00	FRAME/LAMP COMP	T	1	1				
16	V211-260-802-50	BOLT/S	T	1	1				
17	1728-619-200-00	MIRROR SET	T	1	1				
18	1674-619-310-00	ARM/MIRROR ASSY	T	1	1				
19	V210-360-601-60	BOLT(SP)/M6X16	T	2	2				
20	1739-619-210-00	STAY/MIRROR COMP	T	1	1				
21	1725-407-001-00	COLLAR/08X12X13	T	2	2				
22	V210-360-603-50	BOLT/SP	T	2	2				
23	1421-507-014-00	WASHER/6X24X2	T	2	2				
24	1674-619-300-10	MIRROR ASSY	T	1	1				

FIG. 76 LAMP(X-H)SET(G TYPE)(OPTION)(1/2)

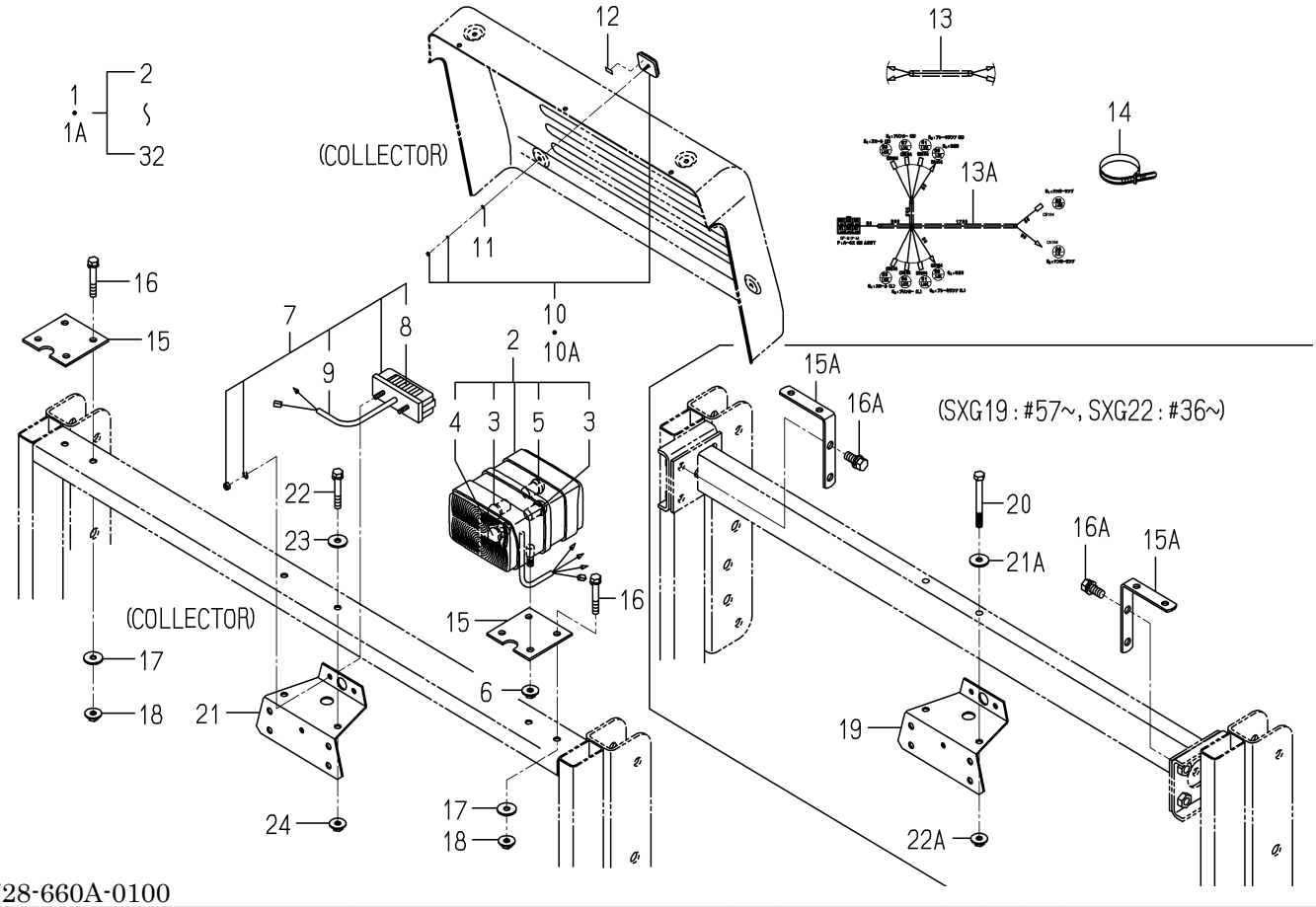

1728-660A-0100

KEY	PART CODE	DESCRIPTION	SPC	TYPE OF MODEL SXG19	TYPE OF MODEL SXG22	ITC	COL	GRP	REMARKS
1	1728-660-500-00	LAMP/X-H SET	T	1 -56	1 -35				
1A	1728-660-500-10	LAMP/X-H SET	T	1 57-	1 36-	3			
2	1739-660-200-20	LAMP/COMBINATIO SET	T	2	2				
3	1674-654-211-00	BULB/12V21W	T	4	4				
4	1674-654-212-00	BULB/12V5W	T	2	2				
5	1739-660-212-00	BLUB/12V-21/5W	T	2	2				
6	V362-260-008-00	NUT/WASHER	T	4	4				
7	1674-654-270-00	LAMP/NUMBERPLAT SET	T	1	1				
8	1674-654-271-00	BULB/12V/5W	T	1	1				
9	1674-654-272-00	HARNESS/LAMP	T	1	1				
10	1674-654-400-00	REFLECTOR ASSY	T	2 -7921	2 -2549				
10A	1674-654-400-10	REFLECTOR ASSY	T	2 7922-	2 2550-	1			
11	V411-260-004-00	WASHER,PL/M 4	T	2	2				
12	1674-654-004-00	TAPE/10X20	T	2	2				
13	1728-660-230-00	HARNESS/LAMP/NO ASSY	T	1 -56	1 -35				
13A	1728-660-300-00	HARNESS/LAMP/G ASSY	T	1 57-	1 36-				
14	1342-402-006-00	BAND/WIRE/250	T	10	10				
15	1728-660-051-00	PLATE/I/80X80	T	2 -56	2 -35				
15A	1728-660-052-00	PLATE/L/110X19	T	2 57-	2 36-				
16	V211-260-805-00	BOLT/M8X50	T	4 -56	4 -35				
16A	V211-261-002-50	BOLT(S) M10X25	T	4 57-	4 36-				
17	3560-201-015-00	WASHER,BINDING SHAFT	T	4 -56	4 -35				
18	V362-260-008-00	NUT/WASHER	T	4 -56	4 -35				
19	1674-654-003-00	BRACKET/LAMP/NUMBER	T	1 57-	1 36-				
20	V201-260-807-50	BOLT/M8X75	T	2 57-	2 36-				
21	1674-654-003-00	BRACKET/LAMP/NUMBER	T	1 -56	1 -35				
21A	3560-201-015-00	WASHER,BINDING SHAFT	T	2 57-	2 36-				
22	V211-260-805-00	BOLT/M8X50	T	2 -56	2 -35				
22A	V362-260-008-00	NUT/WASHER	T	2 57-	2 36-				
23	3560-201-015-00	WASHER,BINDING SHAFT	T	2 -56	2 -35				

FIG. 76 LAMP(X-H)SET(G TYPE)(OPTION)(2/2)

24-PLEASE SEE (1/2)

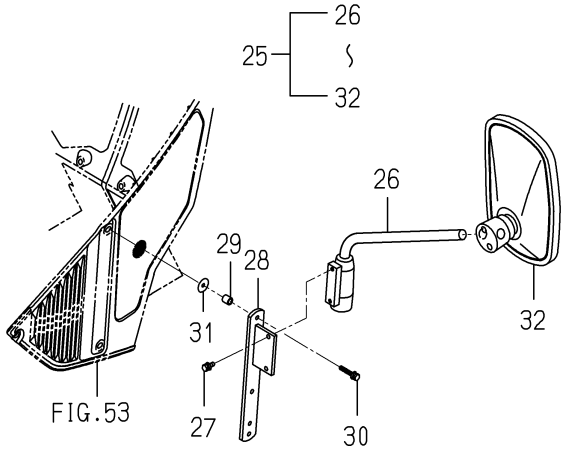

1728-660A-0100

KEY	PART CODE	DESCRIPTION	SPC	TYPE OF MODEL SXG19	TYPE OF MODEL SXG22	ITC	COL	GRP	REMARKS
24	V362-260-008-00	NUT/WASHER	T	2 -56	2 -35				
25	1728-619-200-00	MIRROR SET	T	1	1				
26	1674-619-310-00	ARM/MIRROR ASSY	T	1	1				
27	V210-360-601-60	BOLT(SP)/M6X16	T	2	2				
28	1739-619-210-00	STAY/MIRROR COMP	T	1	1				
29	1725-407-001-00	COLLAR/08X12X13	T	2	2				
30	V210-360-603-50	BOLT/SP	T	2	2				
31	1421-507-014-00	WASHER/6X24X2	T	2	2				
32	1674-619-300-10	MIRROR ASSY	T	1	1				

FIG. 77 WEIGHT(15)SET

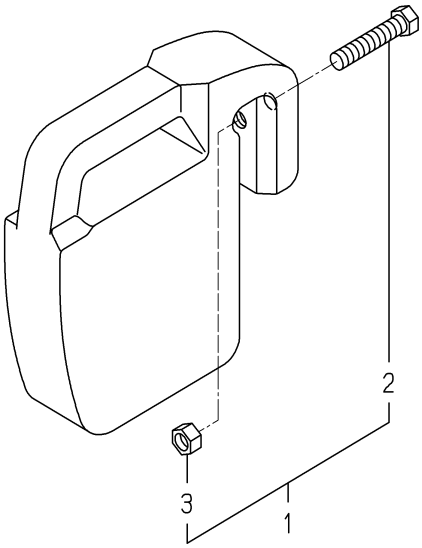

1705-922Z-0100

KEY	PART CODE	DESCRIPTION	SPC	TYPE OF MODEL SXG19	TYPE OF MODEL SXG22	ITC	COL	GRP	REMARKS
1	1614-922-200-20	WEIGHT/15 SET	T	3	3				
2	W201-261-206-00	BOLT/M12X60	T	3	3				
3	V305-260-012-00	NUT/M12	T	3	3				

FIG. 78 COMPONENT PARTS(1/2)
FOR K510-005-000-10 ON Fig.011

KEY14,25,26,27-PLEASE SEE 2/2 PAGE

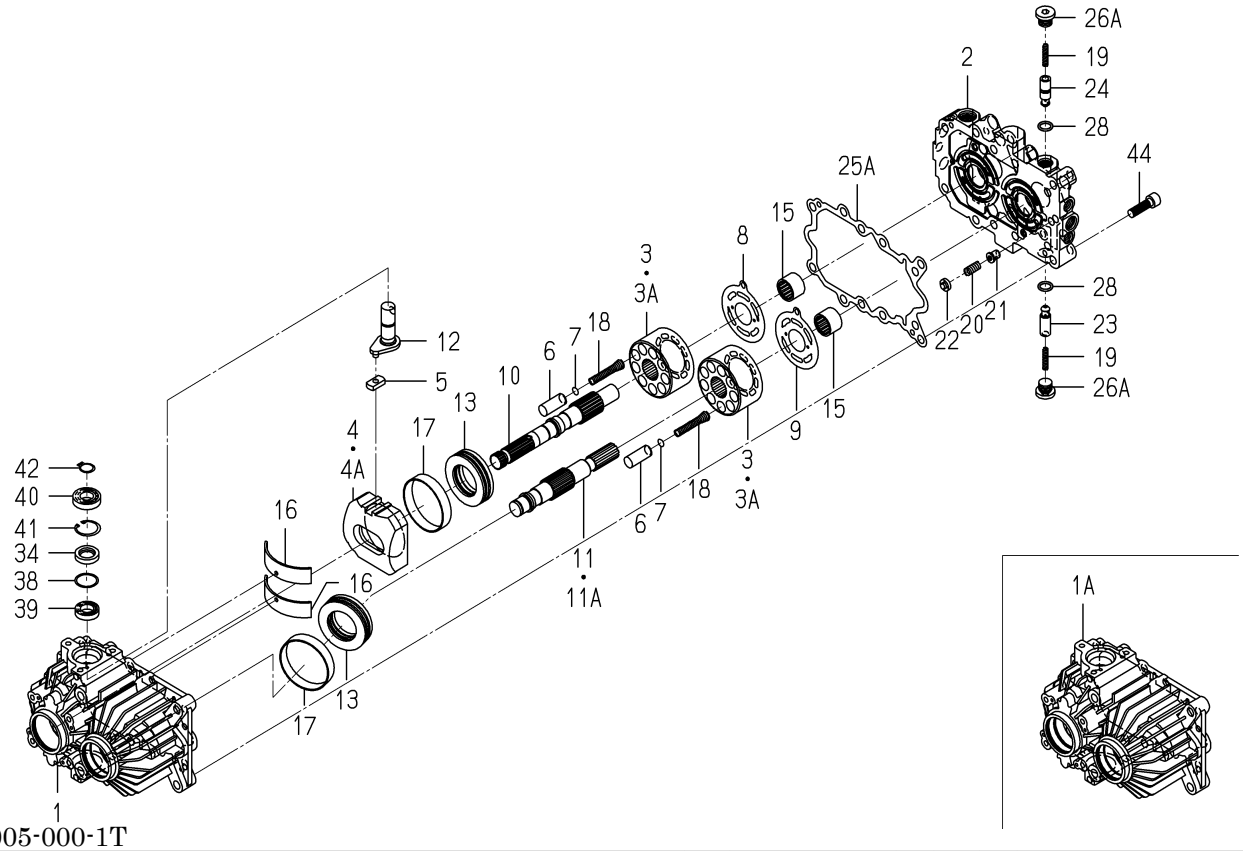

K510-005-000-1T

KEY	PART CODE	DESCRIPTION	SPC	TYPE OF MODEL SXG19	TYPE OF MODEL SXG22	ITC	COL	GRP	REMARKS
1	K510-004-001-00	CASE	*	1 -3623	1 -1178				
1A	K510-004-001-10	CASE	*	1 3624-	1 1179-	1			
2	K510-005-004-00	BLOCK/PORT	*	1	1				
3	K510-001-005-00	BLOCK/CYLINDER	*	2 -7515	2 -2398				
3A	K510-002-005-00	BLOCK/CYLINDER	*	2 7516-	2 2399-				
4	K510-001-006-00	PLATE/SWASH	*	1 -8186	1 -2721				
4A	K510-001-006-10	PLATE/SWASH	*	1 8187-	1 2722-	1			
5	K510-001-007-00	METAL/SLIDE	*	1	1				
6	K510-001-008-00	PISTON	*	18	18				
7	K510-001-009-00	SHIM/0.9	*	18	18				
8	K510-001-010-00	PLATE/VALVE/PUMP	*	1	1				
9	K510-001-011-00	PLATE/VALVE/MOTOR	*	1	1				
10	K510-005-012-00	SHAFT/PUMP	*	1	1				
11	K510-003-013-00	SHAFT/MOTOR	*	1 -1651	1 -602				
11A	K510-008-013-00	SHAFT/MOTOR	*	1 1652-	1 603-				
12	K510-005-014-00	ARM/TRUNNION	*	1	1				
13	K510-001-015-00	BEARING/THRUST	*	2	2				
14	V600-110-620-40	BEARING,RB/6204	*	2	2				
15	K510-001-016-00	NEEDLE	*	2	2				
16	K510-001-017-00	BUSH/95X100X22	*	2	2				
17	K510-001-018-00	BUSH/68X71X14	*	2	2				
18	K510-001-019-00	SPRING/HC053	*	18	18				
19	K510-001-020-00	SPRING/HC030	*	2	2				
20	K510-003-021-00	SPRING/HC021	*	1	1				
21	K510-003-022-00	POPPET/RELIEF	*	1	1				
22	K510-003-037-00	PLATE/SPRING	*	1	1				
23	K510-005-023-00	POPPET/CHECK/0.5	*	1	1				
24	K510-005-024-00	POPPET/CHECK/1.3	*	1	1				
25	K510-001-025-00	COLLAR/23X47X12	*	1 -3623	1 -1178				
25A	K510-001-026-00	GASKET	*	1	1				

FIG. 78 COMPONENT PARTS(2/2)
FOR K510-005-000-10 ON Fig.011

KEY34,38~42,44-PLEASE SEE 1/2 PAGE

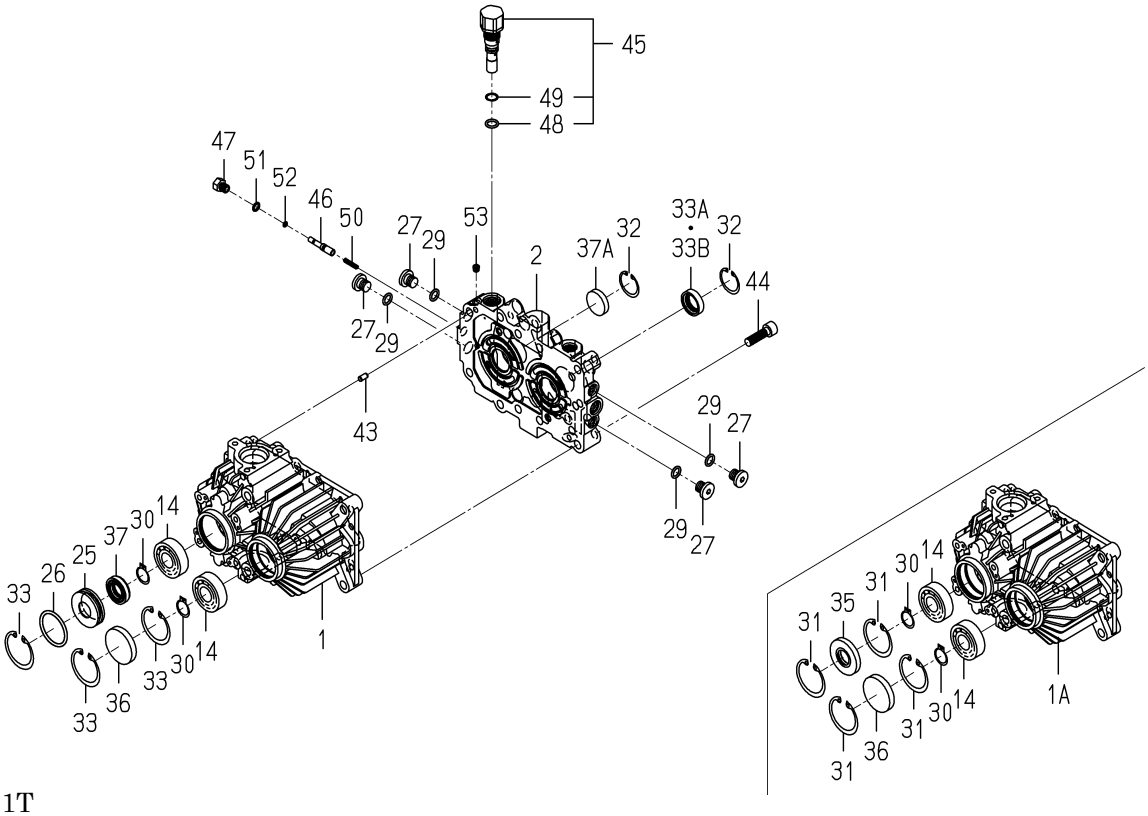

K510-005-000-1T

KEY	PART CODE	DESCRIPTION	SPC	TYPE OF MODEL SXG19	TYPE OF MODEL SXG22	ITC	COL	GRP	REMARKS
26	V720-103-504-10	O-RING /P41	*	1 -3623	1 -1178				
26A	K510-001-029-00	PLUG(G3/8)	*	2	2				
27	K275-001-003-00	PLUG(PF1/4)	*	4	4				
28	V720-112-401-40	O-RING/P14	*	2	2				
29	V720-112-401-10	RING/O	*	4	4				
30	V704-140-020-00	RING,SNAP/20C	*	2	2				
31	V705-140-047-00	RING,SNAP/47 C	*	4 3624-	4 1179-				
32	V705-140-032-00	RING,SNAP/32 C	*	2	2				
33	V705-140-047-00	RING,SNAP/47 C	*	3 -3623	3 -1178				
33A	K510-001-030-00	SEAL/OIL	*	1 -6291	1 -2088				
33B	K510-001-039-00	OILSEAL	*	1 6292-	1 2089-				
34	K510-001-031-00	SEAL/OIL	*	1	1				
35	V744-120-470-70	SEAL/OIL	*	1 3624-	1 1179-				
36	1421-201-002-00	SEAL/47	*	1	1				
37	K510-001-032-00	SEAL/OIL	*	1 -3623	1 -1178				
37A	K510-002-033-00	CAP/32X7	*	1	1				
38	K510-001-034-00	WASHER/25X30X1	*	1	1				
39	V600-110-690-30	BEARING	*	1	1				
40	V600-150-600-30	BEARING,RB/6003SS	*	1	1				
41	V705-140-030-00	RING,SNAP/30 C	*	1	1				
42	V704-140-017-00	RING,SNAP/17 C	*	1	1				
43	K510-001-036-00	PIN,ST	*	4	4				
44	V220-541-003-50	SCREW/SOCKET	*	8	8				
45	K510-003-100-00	VALVE/RELIEF SET	*	1	1				
46	K510-003-301-00	SPOOL	*	1	1				
47	K510-003-302-00	PLUG/M10X1	*	1	1				
48	V720-112-401-20	O-RING/P12	*	1 -1651	1 -602				
49	V730-101-601-20	RING/BACKUP	*	1 -1651	1 -602				
50	K510-003-303-00	SPRING/HC023	*	1	1				
51	K510-003-304-00	O-RING	*	1	1				

FIG. 78 COMPONENT PARTS(2/2)
FOR K510-005-000-10 ON Fig.011

KEY34,38~42,44-PLEASE SEE 1/2 PAGE

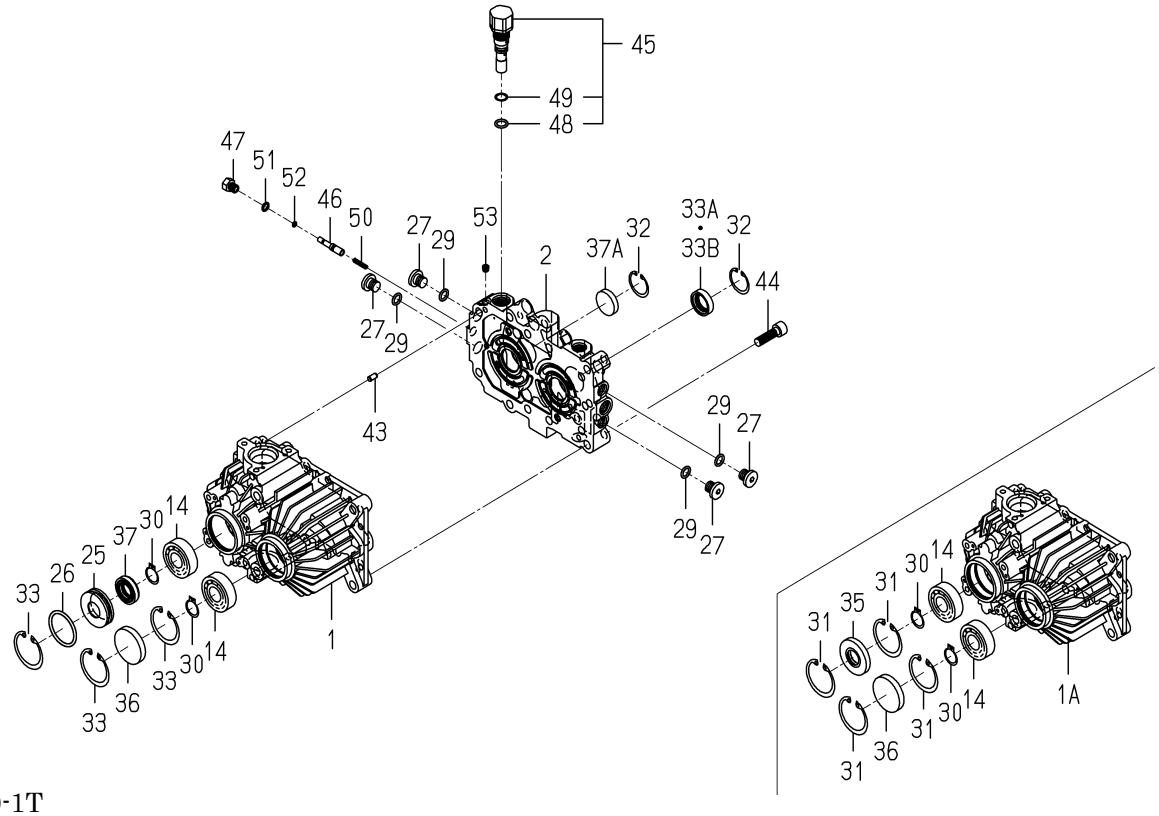

K510-005-000-1T

KEY	PART CODE	DESCRIPTION	SPC	TYPE OF MODEL SXG19	TYPE OF MODEL SXG22	ITC	COL	GRP	REMARKS
52	V720-101-900-80	O-RING/P 8	*	1	1				
53	V780-140-000-1T	PLUG/SCREW/SEAL	*	1	1				

FIG. 79 COMPONENT PARTS FOR 1725-105-220-00 ON Fig.005

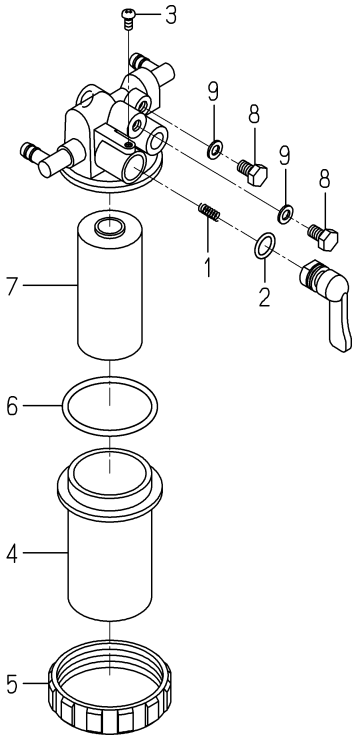

1725-105-220-0

KEY	PART CODE	DESCRIPTION	SPC	TYPE OF MODEL		ITC	COL	GRP	REMARKS
				SXG19	SXG22				
1	1415-102-007-00	SPRING,VALVE	*	1	1				
2	V720-102-401-00	O-RING/P10A	*	1	1				
3	1415-102-008-00	VIS	*	1	1				
4	1440-103-201-00	CAP	*	1	1				
5	1444-102-204-00	NUT,RING	*	1	1				
6	V720-103-504-40	O-RING/P44	*	1	1				
7	1672-105-211-00	ELEMENT	*	1	1				
8	1572-102-003-00	BOLT/M06X08/APSET	*	2	2				
9	1415-102-013-00	PACKING	*	2	2				

WIRING DIAGRAM(EXCEPT G TYPE)(1)

(EXCEPT G TYPE)
SXG19-NO.1~579
SXG22-NO.1~1352

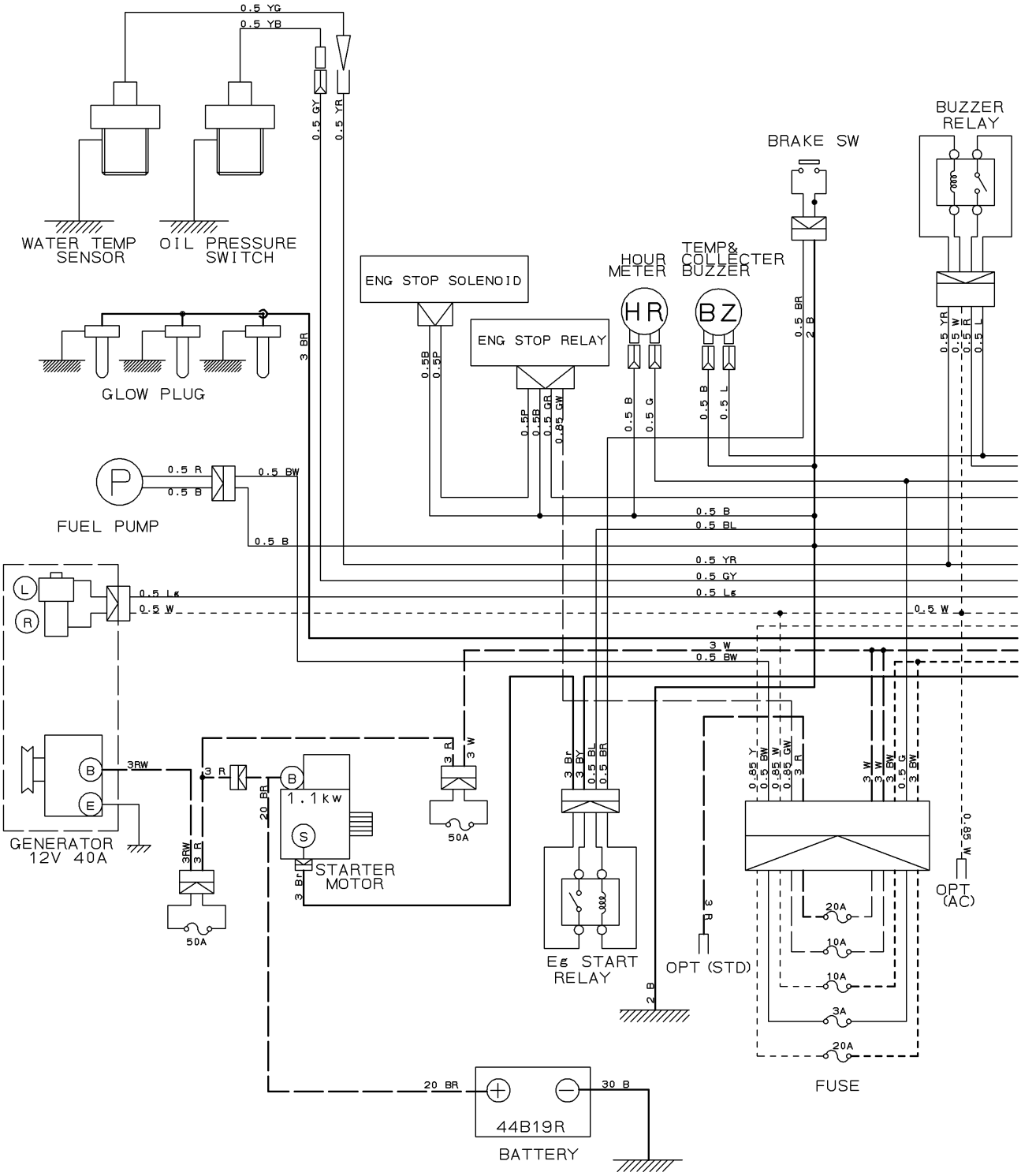

WIRING DIAGRAM(EXCEPT G TYPE)(2)

(EXCEPT G TYPE)
SXG19-NO.1~579
SXG22-NO.1~1352

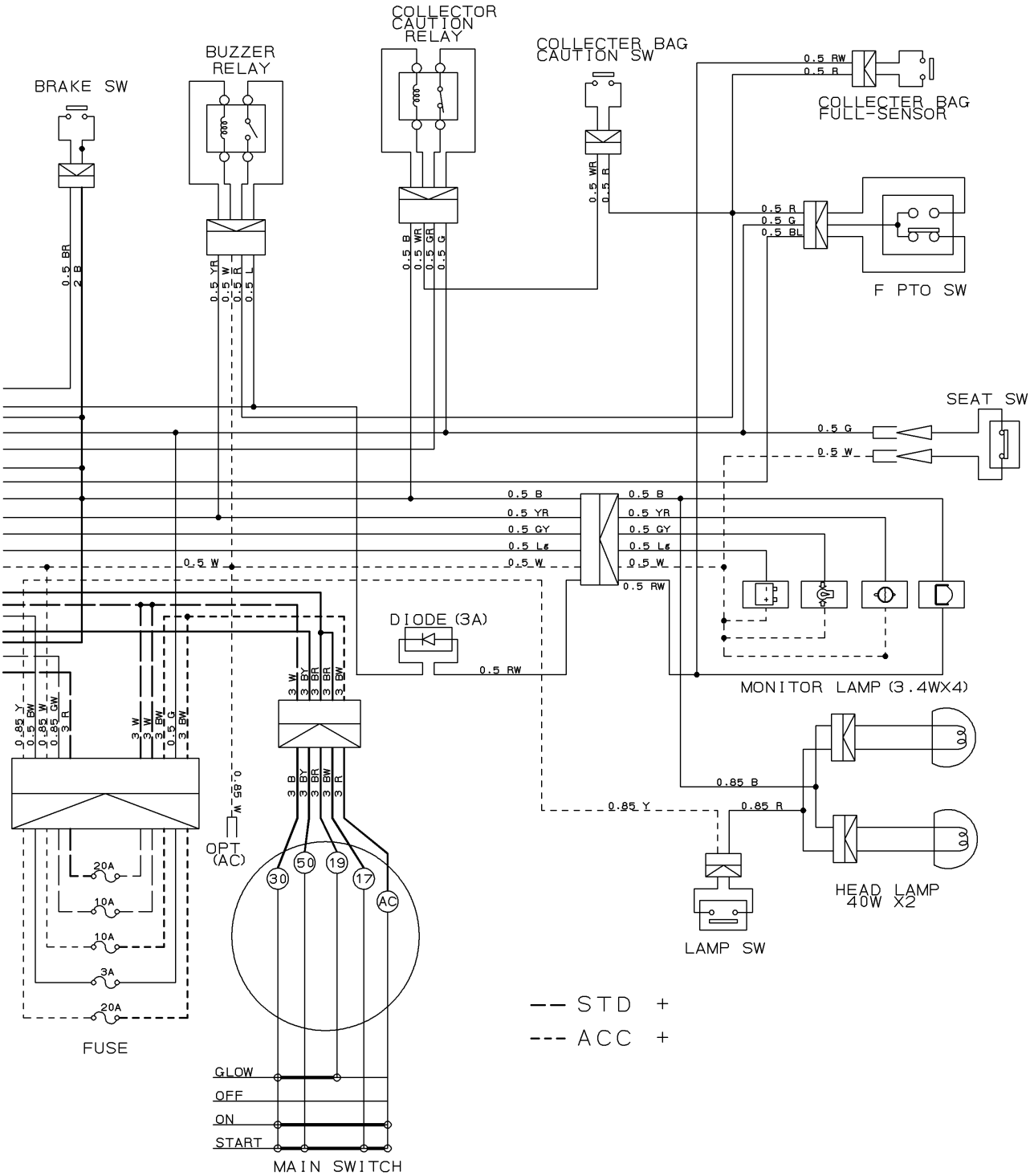

WIRING DIAGRAM(EXCEPT G TYPE)(3)

(EXCEPT G TYPE)
SXG19-NO.580~
SXG22-NO.1353~

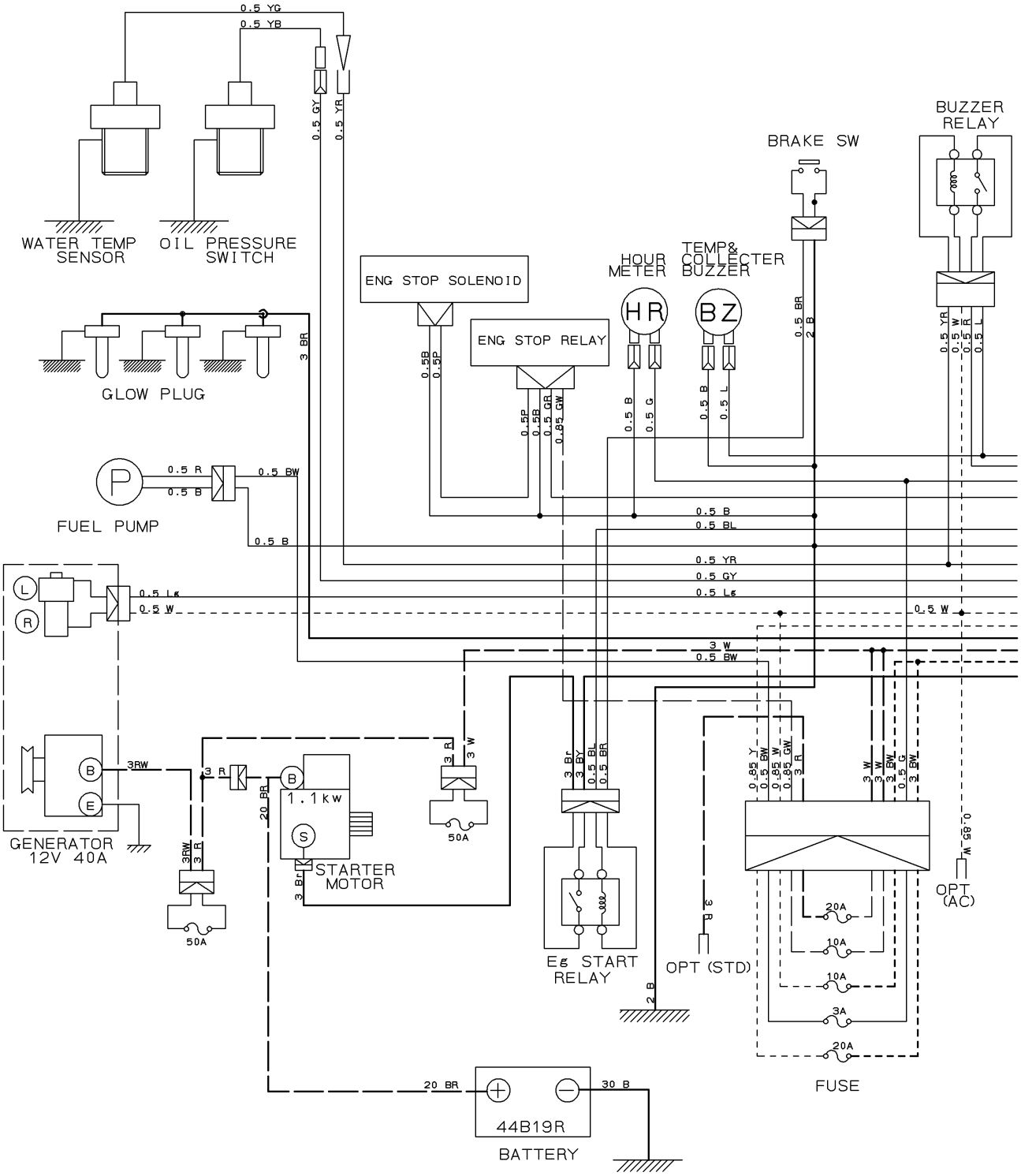

WIRING DIAGRAM(EXCEPT G TYPE)(4)

(EXCEPT G TYPE)
SXG19-NO.580~
SXG22-NO.1353~

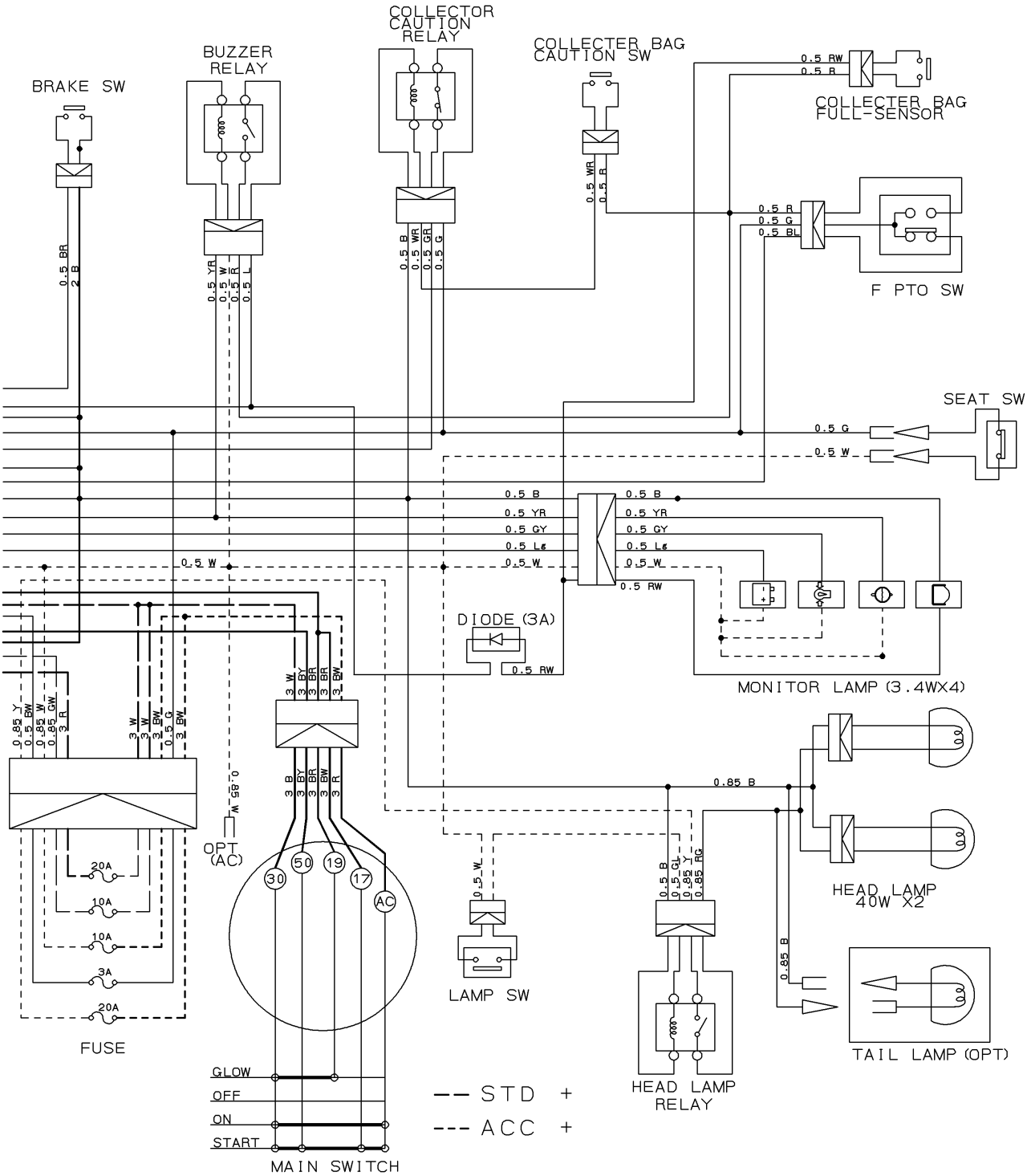

WIRING DIAGRAM(G TYPE)(1)

(G TYPE)
SXG19-NO.1~597
SXG22-NO.1~1646

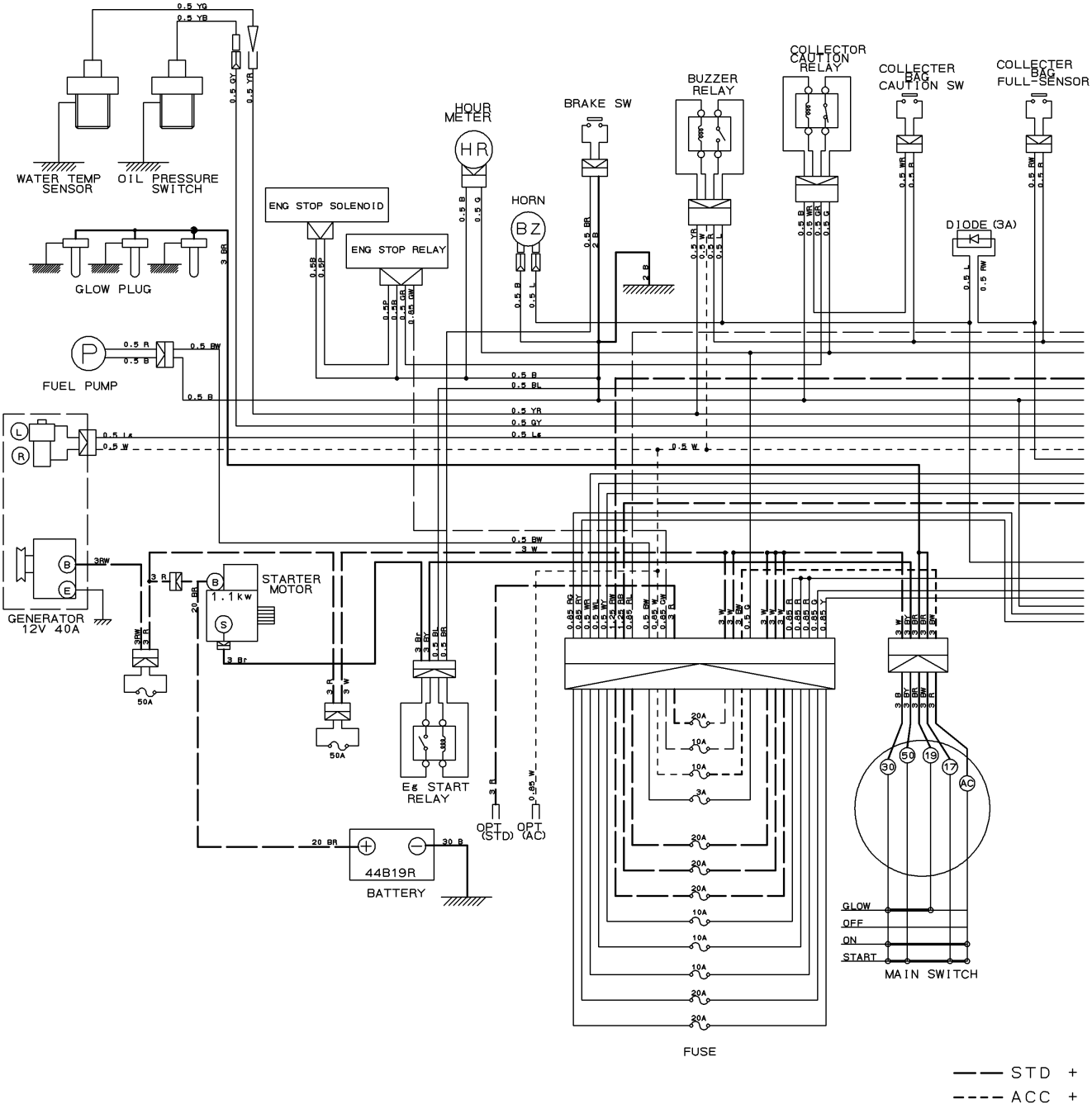

WIRING DIAGRAM(G TYPE)(2)

(G TYPE)
SXG19-NO.1~597
SXG22-NO.1~1646

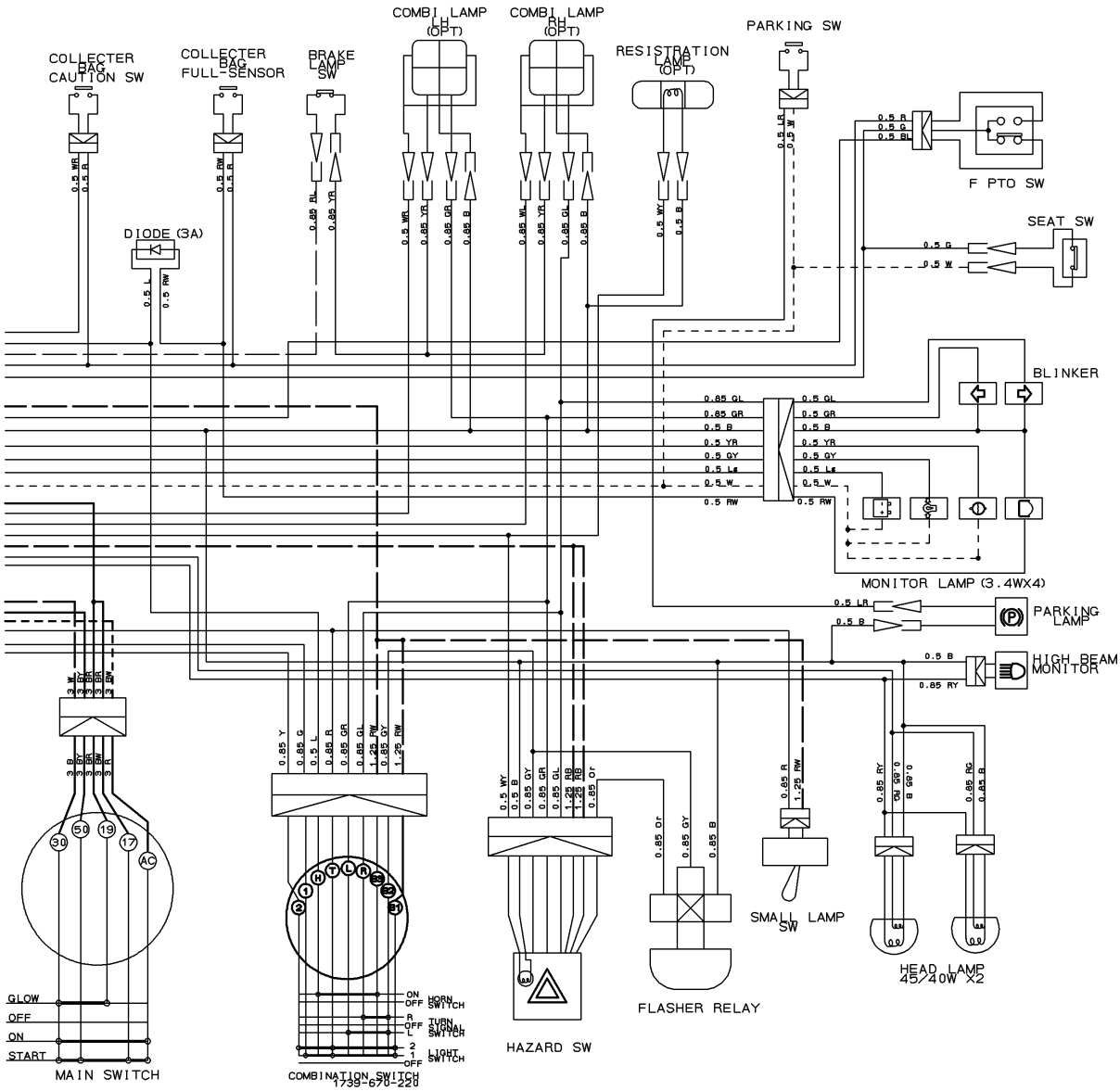

—— STD +
---- ACC +

WIRING DIAGRAM(G TYPE)(3)

(G TYPE)
SXG19-NO.598~
SXG22-NO.1647~

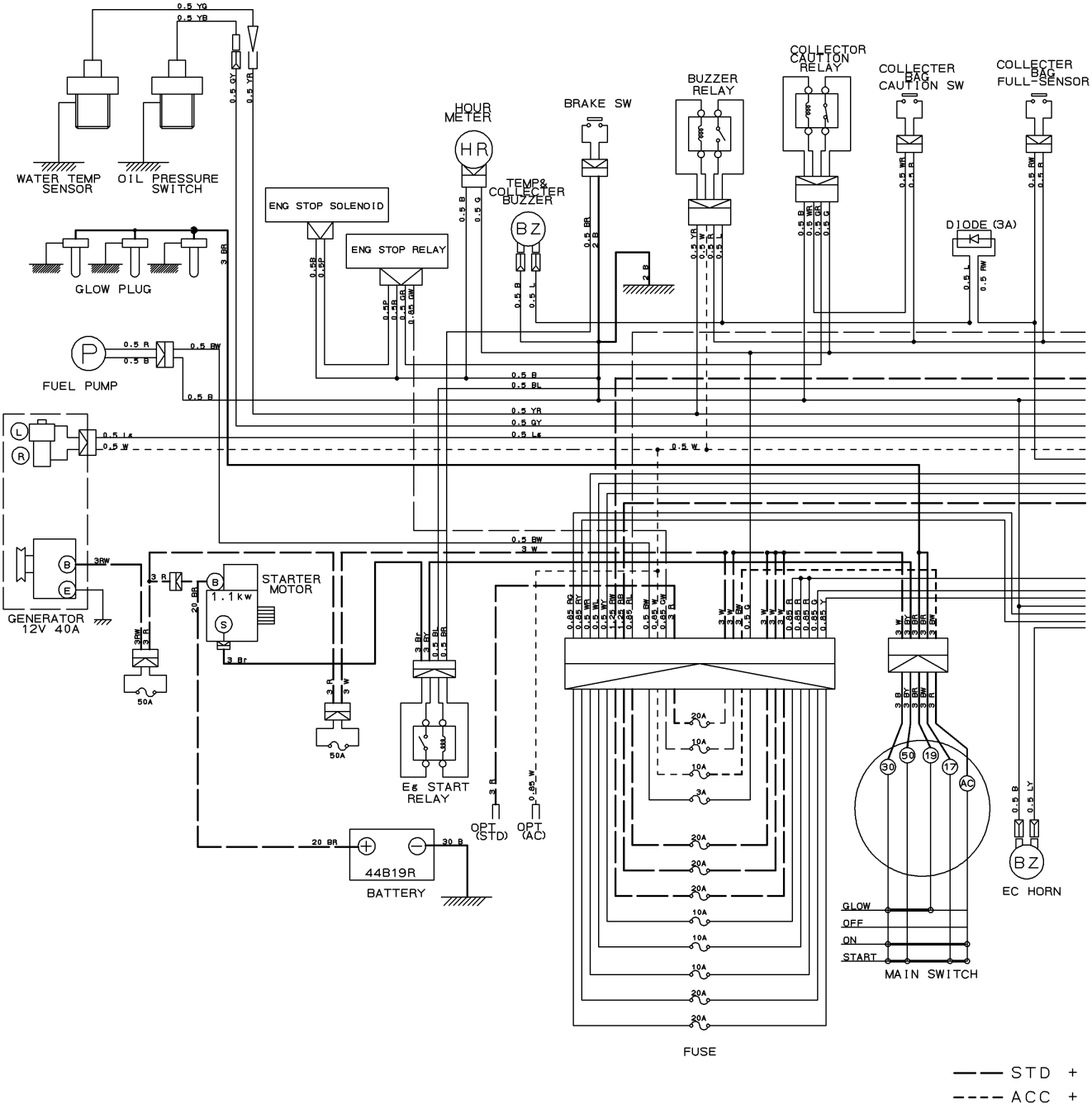

WIRING DIAGRAM(G TYPE)(4)

(G TYPE)
SXG19-NO.598~
SXG22-NO.1647~

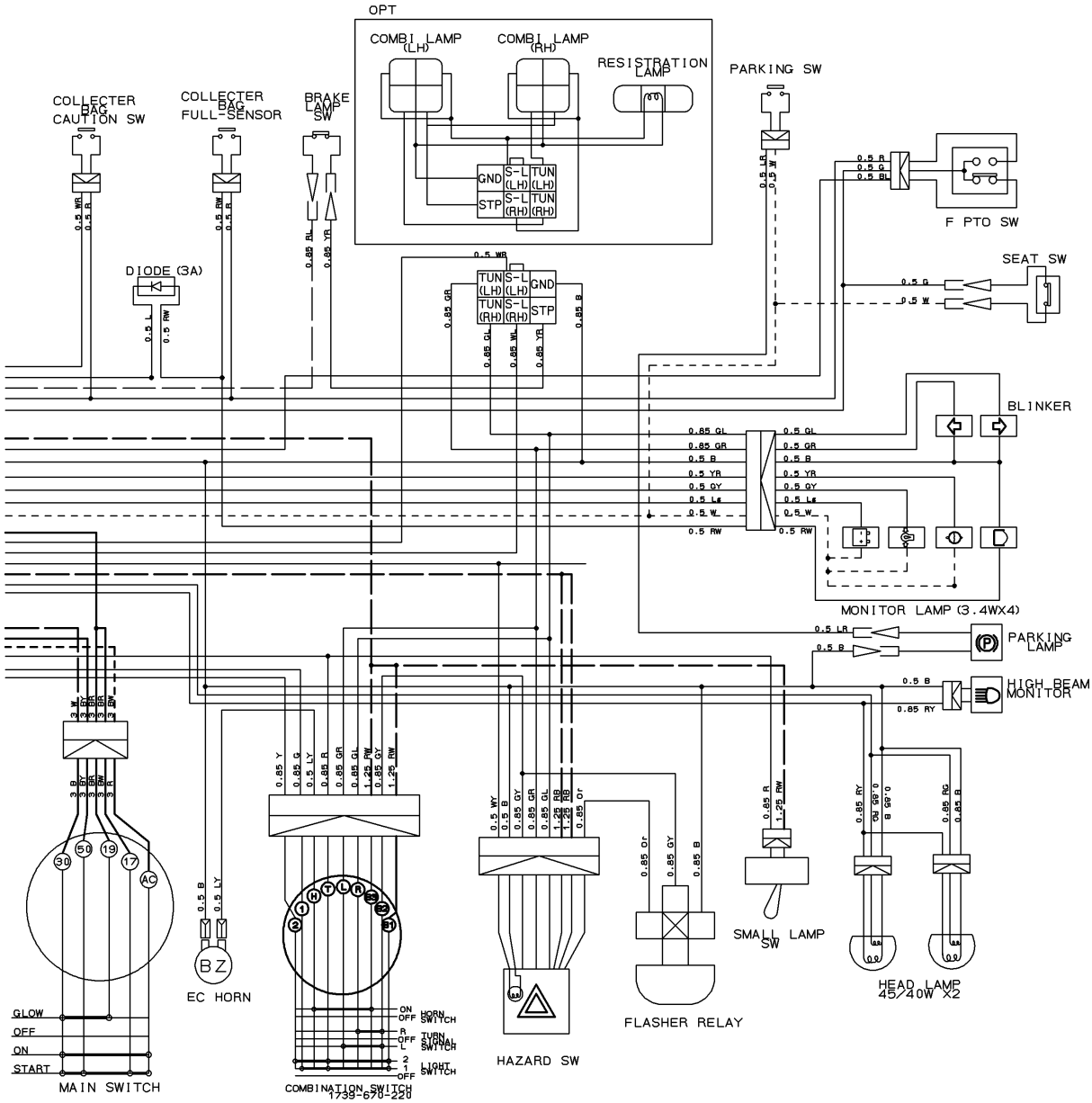

—— STD +
---- ACC +

Numerical Index

Part Code	Fig.	Key	Part Code	Fig.	Key	Part Code	Fig.	Key
1373-121-001-00	23	4	6209-630-002-10	25	6	6211-599-001-10	6	2
3625-540-004-00	9	20		26	22		6	4
3632-360-036-00	21	6	6209-704-009-00	21	7	6211-751-001-10	2	2
3640-586-004-00	21	8-A	6209-730-002-00	15	4	6211-760-022-00	5	31
3805-355-002-20	7	2-A	6209-730-005-00	12	3	6211-777-007-30	10	1
3817-401-001-00	9	11		20	11	6212-111-093-10	13	1
	11	20	6209-740-001-00	9	25	6212-114-093-10	14	1
	17	14	6209-740-005-00	5	17	6212-116-093-10	14	3
	17	19	6209-749-001-20	5	15	6212-121-008-20	13	2
	20	8		9	40	6212-124-008-10	14	2
6209-000-002-00	11	18	6209-788-001-00	5	29	6212-126-008-10	14	4
6209-000-003-00	1	7	6209-920-002-00	9	19	6212-211-001-10	13	3
6209-000-004-10	5	2		16	14	6212-230-004-10	13	5
6209-030-043-00	20	17		26	13	6212-235-005-00	13	6
6209-044-001-00	20	25	6209-940-004-00	11	14	6212-271-006-00	13	7
6209-046-015-00	15	7	6211-110-068-30	1	1	6212-274-006-00	6	5
6209-050-001-00	9	31	6211-141-008-30	1	6	6212-276-006-00	6	6
6209-050-002-00	9	32		26	3	6212-310-019-30	15	1
6209-300-014-00	1	8	6211-170-004-20	2	1	6212-310-019-40	15	1-A
6209-360-018-00	21	3	6211-173-003-00	2	3	6212-330-013-30	15	5
6209-360-021-00	21	5		26	4	6212-333-003-00	15	6
6209-360-028-10	2	6	6211-210-046-00	5	1	6212-371-027-00	15	8
6209-360-120-00	21	5-A	6211-258-001-00	5	8	6212-379-001-00	15	9
6209-409-001-00	9	17		26	8	6212-511-002-00	12	1
6209-409-003-00	11	17	6211-258-002-00	5	9	6212-521-008-00	15	3
6209-490-002-10	2	4		26	9	6212-522-010-00	12	2
6209-500-003-00	9	15	6211-291-001-10	5	25	6212-523-023-00	12	6
	9	24	6211-292-001-20	5	26	6212-524-002-20	20	10
	26	23		26	11	6212-530-004-10	9	44
6209-572-003-00	2	5	6211-310-038-00	9	1	6212-531-005-10	5	6
	26	5	6211-311-043-20	9	34	6212-535-001-00	12	4
6209-580-002-10	20	28	6211-312-001-30	9	26	6212-535-002-00	20	14
6209-587-001-00	13	4		26	14	6212-551-001-10	11	1
6209-600-004-00	9	23	6211-312-004-20	9	35	6212-551-029-00	11	1-A
6209-600-006-00	7	2		26	15	6212-552-001-20	11	2
6209-605-004-10	1	3	6211-319-002-00	9	37	6212-552-015-00	11	2-A
6209-610-001-10	5	3	6211-341-070-00	8	1	6212-561-001-10	11	3
6209-610-002-10	9	3	6211-342-001-30	8	2	6212-563-001-00	11	4
6209-610-008-00	5	7	6211-361-069-00	7	1	6212-565-001-00	11	5
6209-610-009-00	5	4	6211-510-001-00	5	10	6212-569-002-00	1	4
6209-625-002-00	9	4	6211-511-003-00	5	11		26	2
	26	12	6211-511-004-00	5	12	6212-571-006-00	11	6
6209-625-012-00	5	14	6211-540-001-00	6	1	6212-575-002-00	11	7
	26	10	6211-560-001-00	6	3	6212-600-002-10	11	8
6209-630-002-10	24	6	6211-599-001-10	5	13	6212-611-004-10	11	9

Part Code	Fig.	Key	Part Code	Fig.	Key	Part Code	Fig.	Key
6212-616-002-00	11	16	6213-743-002-10	17	23	6215-345-027-00	27	33
6212-620-001-20	11	10		26	20	6215-345-028-00	27	34
6212-626-002-10	11	11	6214-111-011-20	3	1	6215-345-029-00	27	35
6212-628-004-00	11	12	6214-115-001-20	3	2	6215-345-030-00	27	36
6212-628-005-00	11	13		26	6	6215-345-031-00	27	37
6213-100-003-30	16	1	6214-141-008-20	4	1	6215-345-032-00	27	38
6213-111-001-30	16	2	6214-145-001-30	4	2	6215-345-033-00	27	39
6213-119-001-00	16	6		26	7	6215-345-034-00	27	40
6213-120-003-20	16	3	6215-300-036-00	19	1	6215-345-035-00	27	41
6213-125-001-00	16	4	6215-300-036-10	19	1-A	6215-345-036-00	27	42
6213-129-003-00	16	5	6215-311-027-00	27	52	6215-345-037-00	27	43
6213-129-006-00	5	16	6215-315-002-00	19	3	6215-345-038-00	27	44
6213-140-023-00	16	8	6215-330-024-00	27	1	6215-345-039-00	27	45
6213-149-002-00	16	10	6215-330-024-10	27	1-A	6215-345-040-00	27	46
6213-160-002-20	9	27	6215-331-008-00	27	2	6215-345-041-00	27	47
6213-161-001-20	9	28	6215-332-013-00	27	5	6215-345-042-00	27	48
6213-164-001-00	9	29	6215-339-001-00	27	6	6215-345-043-00	27	49
6213-240-002-10	16	15	6215-342-001-00	27	3	6215-359-001-00	19	2
6213-311-006-00	16	12	6215-343-001-00	27	4		27	50
6213-319-001-00	5	24	6215-345-001-00	27	7	6215-359-002-00	27	51
6213-610-005-40	17	1	6215-345-002-00	27	8	6215-411-125-00	21	2
6213-611-003-20	17	2	6215-345-003-00	27	9	6215-411-126-10	19	4
6213-612-004-00	17	9	6215-345-004-00	27	10	6215-411-127-00	19	5
6213-613-002-10	17	8	6215-345-005-00	27	11	6215-411-128-00	19	6
6213-614-003-10	17	12	6215-345-006-00	27	12	6215-412-002-10	21	1
	26	18	6215-345-007-00	27	13	6215-412-004-00	21	1-A
6213-614-004-10	17	16	6215-345-008-00	27	14	6215-419-001-00	21	8
	26	19	6215-345-009-00	27	15	6215-520-001-00	20	16
6213-619-001-00	17	15	6215-345-010-00	27	16	6215-526-004-00	20	18
6213-619-002-00	17	11	6215-345-011-00	27	17	6215-531-001-00	20	23
6213-619-003-00	17	10	6215-345-012-00	27	18	6215-541-001-10	20	19
6213-621-003-00	17	6	6215-345-013-00	27	19	6215-541-003-10	20	24
6213-622-002-10	17	5	6215-345-014-00	27	20	6215-542-001-10	9	21
6213-631-002-00	17	3	6215-345-015-00	27	21	6215-542-006-00	20	21
6213-631-005-00	17	4	6215-345-016-00	27	22	6215-543-002-10	20	20
6213-641-006-00	18	2	6215-345-017-00	27	23	6215-546-001-00	9	16
6213-642-002-00	17	7	6215-345-018-00	27	24	6215-548-006-00	22	1
6213-660-023-00	18	1	6215-345-019-00	27	25	6215-549-007-10	20	29
6213-669-003-00	18	3	6215-345-020-00	27	26	6215-549-012-00	20	33
6213-671-027-00	18	5	6215-345-021-00	27	27	6215-549-013-00	5	28
6213-674-006-20	23	2	6215-345-022-00	27	28	6215-600-103-10	20	1
6213-711-004-00	17	27	6215-345-023-00	27	29	6215-611-001-00	28	8
6213-716-001-50	17	22	6215-345-024-00	27	30	6215-612-001-00	28	11
6213-721-001-00	5	23	6215-345-025-00	27	31	6215-619-009-00	28	1
6213-729-016-00	17	20	6215-345-026-00	27	32	6215-619-010-00	28	2

Numerical Index

Part Code	Fig.	Key	Part Code	Fig.	Key	Part Code	Fig.	Key
6215-619-022-00	28	10	6281-115-018-00	29	11	6281-229-011-00	30	15
6215-621-016-20	20	9	6281-117-003-00	29	4	6281-229-012-00	30	19
6215-622-001-00	28	14	6281-118-007-00	29	3	6281-229-013-00	30	20
6215-629-001-00	28	12	6281-119-009-00	29	2	6281-229-014-00	30	21
6215-629-002-00	28	13	6281-121-010-00	29	5	6281-229-015-00	30	22
6215-629-003-00	28	20	6281-124-011-00	29	6	6281-229-016-00	30	23
6215-629-004-00	28	21	6281-127-003-00	29	19	6281-229-017-00	30	24
6215-629-005-00	28	22	6281-129-029-00	29	29	6281-229-018-00	30	25
6215-629-006-00	28	23	6281-129-030-00	29	28	6281-229-029-00	30	14
6215-629-007-00	28	24	6281-129-043-00	29	30	6281-229-032-00	30	6
6215-629-008-00	28	25	6281-129-058-00	29	9	6281-229-033-00	30	11
6215-629-009-00	28	26	6281-129-062-00	29	33	6281-271-002-00	30	26
6215-629-010-00	28	27	6281-129-064-00	29	7	6281-410-023-00	25	3
6215-629-011-00	28	28	6281-129-065-00	29	12	6281-410-024-00	24	3
6215-629-012-00	28	29	6281-129-066-00	29	13	6281-910-003-10	24	5
6215-629-013-00	28	30	6281-129-067-00	29	14		25	5
6215-629-014-00	28	31	6281-129-068-00	29	15	6281-920-001-00	24	8
6215-629-015-00	28	32	6281-129-069-00	29	16		25	8
6215-629-016-00	28	33	6281-129-070-00	29	17	6281-971-001-10	24	1
6215-631-019-00	28	9	6281-129-071-00	29	18		25	1
6215-634-001-00	28	18	6281-129-072-00	29	21	6282-450-002-00	24	2
6215-635-001-00	28	16	6281-129-073-00	29	22		25	2
6215-637-001-00	28	15	6281-129-074-00	29	23	6287-810-039-00	26	1
6215-639-004-00	28	17	6281-129-075-00	29	24	6294-453-002-00	5	21
6215-639-005-00	28	19	6281-129-076-00	29	25	6509-605-019-10	5	5
6215-641-006-00	28	7	6281-129-077-00	29	26		9	2
6215-643-006-00	28	3	6281-129-078-00	29	27	6513-770-022-10	17	26
6215-644-007-00	28	4	6281-129-079-00	29	34	6901-066-645-00	15	10
6215-649-001-00	28	5	6281-129-080-00	29	8	6901-910-612-00	12	5
6215-649-002-00	28	6	6281-151-014-00	29	20		20	15
6215-649-019-00	28	5-A	6281-200-005-00	23	1	6901-910-625-00	16	7
6219-732-016-00	24	4	6281-213-018-00	30	7	6901-910-635-00	18	4
	25	4	6281-214-003-00	30	12	6901-911-020-00	8	3
6219-752-006-00	20	2	6281-214-004-00	30	13	6901-911-025-00	23	8
6219-752-007-00	20	3	6281-215-001-00	30	17	6902-050-816-00	9	36
6219-752-008-00	20	4	6281-216-001-00	30	18	6904-110-818-00	5	19
6219-752-009-00	20	5	6281-217-002-00	30	16	6904-110-822-00	4	4
6219-752-010-00	20	6	6281-221-007-00	30	4		5	20
6219-752-044-00	20	4-A	6281-222-004-00	30	1	6904-110-840-00	5	18
6219-752-045-00	20	2-A	6281-229-002-00	30	2		17	17
6219-752-046-00	20	5-A	6281-229-003-00	30	3	6909-110-406-00	5	30
6219-752-047-00	20	6-A	6281-229-004-00	30	5		9	33
6281-100-014-00	23	7	6281-229-006-00	30	8		20	30
6281-111-009-00	29	1	6281-229-007-00	30	9	6909-110-408-00	29	32
6281-115-017-00	29	10	6281-229-008-00	30	10	6909-110-410-00	23	6

Numerical Index

Part Code	Fig.	Key	Part Code	Fig.	Key	Part Code	Fig.	Key
6909-111-406-00	20	26	V523-101-001-80	15	2			
6909-150-508-00	29	31	V600-110-600-20	9	45			
6909-902-299-00	5	22	V600-110-600-40	20	13			
6909-906-105-10	16	13	V600-110-620-30	9	46			
6911-129-006-00	1	2		20	12			
J061-210-015-00	17	21	V682-200-000-60	1	5			
J062-076-082-00	21	4	V704-140-016-00	11	15			
	21	4-A	V705-140-012-00	9	30			
J062-087-093-00	21	9	V705-140-040-00	9	39			
	21	9-A	V710-140-004-00	9	22			
V201-360-802-00	20	7-A		20	22			
V211-260-801-60	9	47	V720-101-900-80	20	27			
V211-560-802-50	4	3	V720-102-401-50	16	9			
V230-360-601-00	7	4		26	17			
V230-360-601-20	5	27	V720-102-401-80	7	3			
	24	7	V723-102-004-20	9	38			
	25	7		26	16			
V231-360-801-60	9	12	V723-102-005-50	17	28			
	16	11		26	21			
V231-360-802-00	3	3						
	17	18						
	17	24						
	20	7						
	23	3						
V231-360-802-50	17	29						
V231-360-803-00	9	14						
V231-360-803-50	9	10						
V231-360-804-00	3	4						
	9	9						
	9	43						
V231-360-804-50	9	13						
	9	42						
	17	13						
V231-360-805-00	9	8						
	9	41						
	11	19						
V231-360-805-50	9	7						
V231-360-807-50	9	6						
	17	25						
V231-360-808-50	9	5						
V233-361-002-00	10	2						
V233-361-007-00	23	5						
V341-120-008-00	9	18						
V401-160-006-00	20	32						
V411-260-006-00	20	31						

Numerical Index

Part Code	Fig.	Key	Part Code	Fig.	Key	Part Code	Fig.	Key
1373-121-001-00	23	4	6209-630-002-10	25	6	6211-599-001-10	6	2
3625-540-004-00	9	20		26	22		6	4
3632-360-036-00	21	6	6209-704-009-00	21	7	6211-751-001-10	2	2
3640-586-004-00	21	8-A	6209-730-002-00	15	4	6211-760-022-00	5	31
3805-355-002-20	7	2-A	6209-730-005-00	12	3	6211-777-007-30	10	1
3817-401-001-00	9	11		20	11	6212-111-094-10	13	1
	11	20	6209-740-001-00	9	25	6212-114-094-10	14	1
	17	14	6209-740-005-00	5	17	6212-116-094-10	14	3
	17	19	6209-749-001-20	5	15	6212-121-014-20	13	2
	20	8		9	40	6212-124-014-10	14	2
6209-000-002-00	11	18	6209-788-001-00	5	29	6212-126-014-10	14	4
6209-000-003-00	1	7	6209-920-002-00	9	19	6212-211-001-10	13	3
6209-000-004-10	5	2		16	14	6212-230-004-10	13	5
6209-030-043-00	20	17		26	13	6212-235-005-00	13	6
6209-044-001-00	20	25	6209-940-004-00	11	14	6212-271-006-00	13	7
6209-046-015-00	15	7	6211-110-057-30	1	1	6212-274-006-00	6	5
6209-050-001-00	9	31	6211-141-029-20	1	6	6212-276-006-00	6	6
6209-050-002-00	9	32		26	3	6212-310-019-30	15	1
6209-300-014-00	1	8	6211-170-004-20	2	1	6212-310-019-40	15	1-A
6209-360-018-00	21	3	6211-173-003-00	2	3	6212-330-013-30	15	5
6209-360-021-00	21	5		26	4	6212-333-003-00	15	6
6209-360-028-10	2	6	6211-210-037-20	5	1	6212-371-027-00	15	8
6209-360-120-00	21	5-A	6211-258-001-00	5	8	6212-379-001-00	15	9
6209-409-001-00	9	17		26	8	6212-511-002-00	12	1
6209-409-003-00	11	17	6211-258-002-00	5	9	6212-521-008-00	15	3
6209-490-002-10	2	4		26	9	6212-522-010-00	12	2
6209-500-003-00	9	15	6211-291-001-10	5	25	6212-523-023-00	12	6
	9	24	6211-292-001-20	5	26	6212-524-002-20	20	10
	26	23		26	11	6212-530-004-10	9	44
6209-572-003-00	2	5	6211-310-038-00	9	1	6212-531-005-10	5	6
	26	5	6211-311-043-20	9	34	6212-535-001-00	12	4
6209-580-002-10	20	28	6211-312-001-30	9	26	6212-535-002-00	20	14
6209-587-001-00	13	4		26	14	6212-551-001-10	11	1
6209-600-004-00	9	23	6211-312-004-20	9	35	6212-551-029-00	11	1-A
6209-600-006-00	7	2		26	15	6212-552-001-20	11	2
6209-605-004-10	1	3	6211-319-002-00	9	37	6212-552-015-00	11	2-A
6209-610-001-10	5	3	6211-341-070-00	8	1	6212-561-001-10	11	3
6209-610-002-10	9	3	6211-342-001-30	8	2	6212-563-001-00	11	4
6209-610-008-00	5	7	6211-361-069-00	7	1	6212-565-001-00	11	5
6209-610-009-00	5	4	6211-510-001-00	5	10	6212-569-002-00	1	4
6209-625-002-00	9	4	6211-511-003-00	5	11		26	2
	26	12	6211-511-004-00	5	12	6212-571-006-00	11	6
6209-625-012-00	5	14	6211-540-001-00	6	1	6212-575-002-00	11	7
	26	10	6211-560-001-00	6	3	6212-600-002-10	11	8
6209-630-002-10	24	6	6211-599-001-10	5	13	6212-611-004-10	11	9

Part Code	Fig.	Key	Part Code	Fig.	Key	Part Code	Fig.	Key
6212-616-002-00	11	16	6213-743-002-10	17	23	6215-345-027-00	27	33
6212-620-001-20	11	10		26	20	6215-345-028-00	27	34
6212-626-002-10	11	11	6214-111-011-20	3	1	6215-345-029-00	27	35
6212-628-004-00	11	12	6214-115-001-20	3	2	6215-345-030-00	27	36
6212-628-005-00	11	13		26	6	6215-345-031-00	27	37
6213-100-003-30	16	1	6214-141-008-20	4	1	6215-345-032-00	27	38
6213-111-001-30	16	2	6214-145-001-30	4	2	6215-345-033-00	27	39
6213-119-001-00	16	6		26	7	6215-345-034-00	27	40
6213-120-003-20	16	3	6215-300-036-00	19	1	6215-345-035-00	27	41
6213-125-001-00	16	4	6215-300-036-10	19	1-A	6215-345-036-00	27	42
6213-129-003-00	16	5	6215-311-027-00	27	52	6215-345-037-00	27	43
6213-129-006-00	5	16	6215-315-002-00	19	3	6215-345-038-00	27	44
6213-140-023-00	16	8	6215-330-024-00	27	1	6215-345-039-00	27	45
6213-149-002-00	16	10	6215-330-024-10	27	1-A	6215-345-040-00	27	46
6213-160-002-20	9	27	6215-331-008-00	27	2	6215-345-041-00	27	47
6213-161-001-20	9	28	6215-332-013-00	27	5	6215-345-042-00	27	48
6213-164-001-00	9	29	6215-339-001-00	27	6	6215-345-043-00	27	49
6213-240-002-10	16	15	6215-342-001-00	27	3	6215-359-001-00	19	2
6213-311-006-00	16	12	6215-343-001-00	27	4		27	50
6213-319-001-00	5	24	6215-345-001-00	27	7	6215-359-002-00	27	51
6213-610-005-40	17	1	6215-345-002-00	27	8	6215-411-125-00	21	2
6213-611-003-20	17	2	6215-345-003-00	27	9	6215-411-126-10	19	4
6213-612-004-00	17	9	6215-345-004-00	27	10	6215-411-127-00	19	5
6213-613-002-10	17	8	6215-345-005-00	27	11	6215-411-128-00	19	6
6213-614-003-10	17	12	6215-345-006-00	27	12	6215-412-002-10	21	1
	26	18	6215-345-007-00	27	13	6215-412-004-00	21	1-A
6213-614-004-10	17	16	6215-345-008-00	27	14	6215-419-001-00	21	8
	26	19	6215-345-009-00	27	15	6215-520-001-00	20	16
6213-619-001-00	17	15	6215-345-010-00	27	16	6215-526-004-00	20	18
6213-619-002-00	17	11	6215-345-011-00	27	17	6215-531-001-00	20	23
6213-619-003-00	17	10	6215-345-012-00	27	18	6215-541-001-10	20	19
6213-621-003-00	17	6	6215-345-013-00	27	19	6215-541-003-10	20	24
6213-622-002-10	17	5	6215-345-014-00	27	20	6215-542-001-10	9	21
6213-631-002-00	17	3	6215-345-015-00	27	21	6215-542-006-00	20	21
6213-631-005-00	17	4	6215-345-016-00	27	22	6215-543-002-10	20	20
6213-641-006-00	18	2	6215-345-017-00	27	23	6215-546-001-00	9	16
6213-642-002-00	17	7	6215-345-018-00	27	24	6215-548-006-00	22	1
6213-660-023-00	18	1	6215-345-019-00	27	25	6215-549-007-10	20	29
6213-669-003-00	18	3	6215-345-020-00	27	26	6215-549-012-00	20	33
6213-671-027-00	18	5	6215-345-021-00	27	27	6215-549-013-00	5	28
6213-674-006-20	23	2	6215-345-022-00	27	28	6215-600-103-10	20	1
6213-711-004-00	17	27	6215-345-023-00	27	29	6215-611-001-00	28	8
6213-716-001-50	17	22	6215-345-024-00	27	30	6215-612-001-00	28	11
6213-721-001-00	5	23	6215-345-025-00	27	31	6215-619-009-00	28	1
6213-729-016-00	17	20	6215-345-026-00	27	32	6215-619-010-00	28	2

Numerical Index

Part Code	Fig.	Key	Part Code	Fig.	Key	Part Code	Fig.	Key
6215-619-022-00	28	10	6281-115-018-00	29	11	6281-229-011-00	30	15
6215-621-016-20	20	9	6281-117-003-00	29	4	6281-229-012-00	30	19
6215-622-001-00	28	14	6281-118-007-00	29	3	6281-229-013-00	30	20
6215-629-001-00	28	12	6281-119-009-00	29	2	6281-229-014-00	30	21
6215-629-002-00	28	13	6281-121-010-00	29	5	6281-229-015-00	30	22
6215-629-003-00	28	20	6281-124-011-00	29	6	6281-229-016-00	30	23
6215-629-004-00	28	21	6281-127-003-00	29	19	6281-229-017-00	30	24
6215-629-005-00	28	22	6281-129-029-00	29	29	6281-229-018-00	30	25
6215-629-006-00	28	23	6281-129-030-00	29	28	6281-229-029-00	30	14
6215-629-007-00	28	24	6281-129-043-00	29	30	6281-229-032-00	30	6
6215-629-008-00	28	25	6281-129-058-00	29	9	6281-229-033-00	30	11
6215-629-009-00	28	26	6281-129-062-00	29	33	6281-271-002-00	30	26
6215-629-010-00	28	27	6281-129-064-00	29	7	6281-410-023-00	25	3
6215-629-011-00	28	28	6281-129-065-00	29	12	6281-410-024-00	24	3
6215-629-012-00	28	29	6281-129-066-00	29	13	6281-910-003-10	24	5
6215-629-013-00	28	30	6281-129-067-00	29	14		25	5
6215-629-014-00	28	31	6281-129-068-00	29	15	6281-920-001-00	24	8
6215-629-015-00	28	32	6281-129-069-00	29	16		25	8
6215-629-016-00	28	33	6281-129-070-00	29	17	6281-971-001-10	24	1
6215-631-019-00	28	9	6281-129-071-00	29	18		25	1
6215-634-001-00	28	18	6281-129-072-00	29	21	6282-450-002-00	24	2
6215-635-001-00	28	16	6281-129-073-00	29	22		25	2
6215-637-001-00	28	15	6281-129-074-00	29	23	6287-810-036-00	26	1
6215-639-004-00	28	17	6281-129-075-00	29	24	6294-453-002-00	5	21
6215-639-005-00	28	19	6281-129-076-00	29	25	6509-605-019-10	5	5
6215-641-006-00	28	7	6281-129-077-00	29	26		9	2
6215-643-006-00	28	3	6281-129-078-00	29	27	6513-770-022-10	17	26
6215-644-007-00	28	4	6281-129-079-00	29	34	6901-066-645-00	15	10
6215-649-001-00	28	5	6281-129-080-00	29	8	6901-910-612-00	12	5
6215-649-002-00	28	6	6281-151-014-00	29	20		20	15
6215-649-019-00	28	5-A	6281-200-005-00	23	1	6901-910-625-00	16	7
6219-732-016-00	24	4	6281-213-018-00	30	7	6901-910-635-00	18	4
	25	4	6281-214-003-00	30	12	6901-911-020-00	8	3
6219-752-006-00	20	2	6281-214-004-00	30	13	6901-911-025-00	23	8
6219-752-007-00	20	3	6281-215-001-00	30	17	6902-050-816-00	9	36
6219-752-008-00	20	4	6281-216-001-00	30	18	6904-110-818-00	5	19
6219-752-009-00	20	5	6281-217-002-00	30	16	6904-110-822-00	4	4
6219-752-010-00	20	6	6281-221-007-00	30	4		5	20
6219-752-044-00	20	4-A	6281-222-004-00	30	1	6904-110-840-00	5	18
6219-752-045-00	20	2-A	6281-229-002-00	30	2		17	17
6219-752-046-00	20	5-A	6281-229-003-00	30	3	6909-110-406-00	5	30
6219-752-047-00	20	6-A	6281-229-004-00	30	5		9	33
6281-100-014-00	23	7	6281-229-006-00	30	8		20	30
6281-111-009-00	29	1	6281-229-007-00	30	9	6909-110-408-00	29	32
6281-115-017-00	29	10	6281-229-008-00	30	10	6909-110-410-00	23	6

Numerical Index

Part Code	Fig.	Key	Part Code	Fig.	Key	Part Code	Fig.	Key
6909-111-406-00	20	26	V523-101-001-80	15	2			
6909-150-508-00	29	31	V600-110-600-20	9	45			
6909-902-299-00	5	22	V600-110-600-40	20	13			
6909-906-105-10	16	13	V600-110-620-30	9	46			
6911-129-006-00	1	2		20	12			
J061-210-015-00	17	21	V682-200-000-60	1	5			
J062-076-082-00	21	4	V704-140-016-00	11	15			
	21	4-A	V705-140-012-00	9	30			
J062-087-093-00	21	9	V705-140-040-00	9	39			
	21	9-A	V710-140-004-00	9	22			
V201-360-802-00	20	7-A		20	22			
V211-260-801-60	9	47	V720-101-900-80	20	27			
V211-560-802-50	4	3	V720-102-401-50	16	9			
V230-360-601-00	7	4		26	17			
V230-360-601-20	5	27	V720-102-401-80	7	3			
	24	7	V723-102-004-20	9	38			
	25	7		26	16			
V231-360-801-60	9	12	V723-102-005-50	17	28			
	16	11		26	21			
V231-360-802-00	3	3						
	17	18						
	17	24						
	20	7						
	23	3						
V231-360-802-50	17	29						
V231-360-803-00	9	14						
V231-360-803-50	9	10						
V231-360-804-00	3	4						
	9	9						
	9	43						
V231-360-804-50	9	13						
	9	42						
	17	13						
V231-360-805-00	9	8						
	9	41						
	11	19						
V231-360-805-50	9	7						
V231-360-807-50	9	6						
	17	25						
V231-360-808-50	9	5						
V233-361-002-00	10	2						
V233-361-007-00	23	5						
V341-120-008-00	9	18						
V401-160-006-00	20	32						
V411-260-006-00	20	31						

Numerical Index

Part Code	Fig.	Key	Part Code	Fig.	Key	Part Code	Fig.	Key
1104-410-007-00	14	18	1424-101-204-00	2	28	1527-604-002-00	7	8
	15	18	1425-621-004-00	26	16		56	8
1118-901-002-00	66	3	1427-111-229-00	3	10	1544-104-205-00	4	4
	67	3	1427-301-002-20	14	6	1544-304-006-10	14	4
1119-901-003-00	66	4		15	6		15	4
	67	4	1427-301-005-00	14	9	1560-104-010-40	2	26
1120-311-003-00	49	34-A		15	9	1560-132-007-30	17	7
	50	34-A	1427-301-007-00	14	11		27	14
1326-708-005-00	43	12		15	11		28	17
1342-402-006-00	60	15-A	1427-317-003-00	49	14	1560-404-002-30	27	7
	61	21-A		50	14		28	9
	75	14	1427-433-241-00	38	4	1560-664-250-00	60	17
	76	14		38	10		61	23
1376-402-003-00	60	16-A		39	4	1560-664-252-00	60	18
	61	22-A		39	10		61	24
1379-311-002-00	64	12	1427-621-002-10	7	2	1560-664-253-00	60	19
	65	12	1427-621-012-00	2	16		61	25
1386-241-002-00	31	5		54	2	1560-695-015-00	60	13-A
	32	5		55	2		61	17-A
	45	5	1432-616-002-00	56	14	1560-695-021-00	17	3
	46	5	1432-621-006-10	61	27	1560-695-022-00	17	6
1403-621-031-00	59	28	1440-103-201-00	79	4	1564-512-001-00	40	7
	59	30	1442-313-202-00	30	8		41	7
1404-402-001-00	38	2	1444-102-204-00	79	5	1572-102-003-00	79	8
	38	8	1444-122-002-00	27	13	1575-623-009-00	60	2
	39	2		28	16	1575-623-010-00	60	3
	39	8	1444-314-009-10	71	5	1588-515-008-00	30	4
1404-402-002-00	38	3	1444-328-272-00	30	10	1593-101-003-20	1	5
	38	9	1444-328-273-00	30	9	1593-101-012-00	14	26
	39	3	1444-411-006-00	14	7		15	26
	39	9		15	7	1593-117-003-10	8	7
1415-102-007-00	79	1	1444-601-015-00	52	5	1593-312-056-20	29	5
1415-102-008-00	79	3	1444-621-311-00	58	10	1593-317-201-00	31	3
1415-102-013-00	79	9		59	6	1593-317-210-00	31	2
1421-201-002-00	78	36	1444-621-312-00	58	11	1593-317-220-10	31	1
1421-403-007-00	43	13		59	7	1593-402-051-10	42	2
1421-403-008-00	43	14	1480-207-011-00	12	2	1593-403-004-10	43	3
1421-507-014-00	74	7		13	2	1593-403-005-00	44	2
	75	23		21	16	1593-403-009-00	43	4
	76	31		22	16	1593-411-001-10	45	7
1421-603-004-00	2	12	1480-304-002-00	17	11		46	7
1421-951-006-00	43	16		27	6	1593-411-053-20	35	5
1421-951-007-00	43	17		27	9		45	8
1423-616-004-00	2	33		28	11		46	8
1424-101-203-00	2	27	1518-621-320-00	61	26	1593-411-201-00	45	2

Part Code	Fig.	Key	Part Code	Fig.	Key	Part Code	Fig.	Key
1593-411-500-00	45	1	1631-901-021-00	68	2	1674-619-310-00	75	18
1593-601-072-00	51	5	1636-271-351-00	64	11		76	26
1593-601-073-00	53	10		65	11	1674-652-200-00	57	1
	53	10-A	1636-313-011-10	27	2	1674-652-202-00	57	2
	53	13		28	2	1674-654-003-00	76	19
1593-606-006-10	54	5	1636-505-220-00	48	40		76	21
	55	5	1646-226-053-00	17	2	1674-654-004-00	75	12
1593-612-005-00	6	2	1646-630-053-00	56	13		76	12
1593-612-220-10	6	6	1646-640-002-00	17	5	1674-654-211-00	75	3
1593-612-230-00	6	9	1646-640-059-00	37	4		76	3
1593-616-004-20	54	4	1646-640-580-00	17	15	1674-654-212-00	75	4
	55	4	1650-102-006-00	2	8		76	4
1593-621-250-10	58	8	1650-102-006-10	2	8-A	1674-654-270-00	75	7
	59	4	1650-102-202-10	2	2		76	7
1593-621-252-00	58	9	1650-104-201-00	4	5	1674-654-271-00	75	8
	59	5	1650-111-034-00	5	8		76	8
1593-622-270-00	58	13		5	10	1674-654-272-00	75	9
	59	16		5	12		76	9
1593-622-272-00	58	15	1650-509-003-10	14	31	1674-654-400-00	75	10
	59	18	1650-658-270-00	60	9		76	10
1593-622-273-00	58	16		60	9-A	1674-654-400-10	75	10-A
	59	19		61	13		76	10-A
1593-622-274-00	58	17	1656-509-310-10	10	4	1674-664-200-00	61	28
	59	20		48	34	1674-904-008-00	70	7
1593-622-275-00	58	18	1672-103-001-00	3	12		70	11
	59	21	1672-105-211-00	79	7	1675-104-211-00	4	2
1593-623-003-00	60	13	1672-112-240-00	7	1	1675-104-213-00	4	3
	61	17	1672-301-002-00	14	2	1675-112-002-00	7	4
1593-623-203-00	60	4		15	2	1682-508-300-00	48	9
1593-623-520-00	60	22	1672-301-003-00	14	8	1682-670-220-00	59	27
	61	31		15	8	1682-902-014-00	69	2
1596-669-107-00	41	8	1672-301-004-00	14	10	1689-201-003-10	12	4
1600-117-002-00	8	6		15	10		13	4
1600-623-002-00	61	19	1672-403-003-00	38	11	1689-202-002-00	12	14
1608-313-200-10	29	1		39	11	1689-202-004-00	25	14
1614-104-001-00	4	6	1672-690-212-00	60	7		26	1
1614-104-001-10	4	6-A	1673-525-002-20	73	5	1689-202-200-00	25	1
1614-129-003-00	60	23	1673-525-002-30	73	5-A		26	6
	61	32	1674-410-301-00	73	7		26	19
1614-241-004-00	13	19	1674-410-320-00	73	4	1689-202-201-00	25	2
1614-262-003-00	48	43	1674-520-004-00	73	6		26	7
1614-690-202-00	60	6	1674-619-300-10	74	8		26	20
	61	6		75	24	1689-202-202-00	25	3
1614-922-200-20	77	1		76	32		26	8
1620-410-001-10	72	1	1674-619-310-00	74	2		26	21

Numerical Index

Part Code	Fig.	Key	Part Code	Fig.	Key	Part Code	Fig.	Key
1689-202-203-00	25	4	1705-204-003-00	14	25	1710-241-053-00	24	52
	26	9		15	25	1716-680-222-00	61	35
	26	22	1705-204-220-00	14	21	1716-680-330-00	61	34
1689-202-211-00	25	6		15	21	1717-508-001-00	48	7
	26	11	1705-312-230-00	28	1	1724-102-012-00	2	35
	26	24	1705-317-201-00	32	2	1724-104-001-00	4	7
1689-202-212-00	25	7	1705-332-006-00	33	37	1724-604-302-00	53	7-A
	26	12		34	37	1725-101-210-00	1	2
	26	25	1705-333-001-00	33	33	1725-102-001-00	2	20
1689-205-005-10	14	16		34	33	1725-103-001-00	3	6
	15	16	1705-436-300-00	44	4	1725-103-002-00	3	7
1689-272-240-00	18	10	1705-441-001-00	43	5		3	7-A
1689-408-530-00	38	7	1705-441-200-00	46	1	1725-103-003-00	3	8
	39	7	1705-441-201-00	46	2	1725-105-220-00	5	1
1689-440-230-00	45	3	1705-441-210-00	46	3	1725-111-003-00	40	15
1689-501-001-00	33	10	1705-508-002-00	47	8		40	16
	34	10	1705-508-003-00	47	7		41	15
1689-613-260-00	58	7	1705-601-007-00	51	9		41	16
1689-621-007-00	51	26	1705-601-018-00	51	3	1725-117-001-00	8	5
1689-621-008-00	51	27	1705-601-019-00	53	9	1725-120-211-00	9	2
1689-903-004-00	68	3	1705-601-021-00	51	4	1725-120-212-00	9	3
	69	3	1705-601-022-00	52	6	1725-120-213-00	9	4
1690-650-320-00	60	20	1705-601-026-00	52	1	1725-120-215-00	9	6
	61	29	1705-601-230-01	51	19	1725-120-216-00	9	7-A
1690-652-210-00	60	10	1705-601-280-00	53	3	1725-210-001-00	11	8
	61	14	1705-621-202-00	58	3	1725-210-002-00	11	11
1701-509-290-00	48	60	1705-901-004-00	58	4	1725-272-003-00	17	28
1703-102-203-00	2	6	1705-902-001-00	68	1	1725-272-004-00	17	29
1703-102-205-00	2	4		69	1	1725-272-005-00	17	34
1703-102-206-00	2	5	1705-902-004-00	58	6	1725-308-001-00	21	13
1703-135-002-00	44	5		59	26		22	13
1703-509-001-00	48	2	1705-902-006-00	70	6	1725-407-001-00	37	5
	48	9-A	1705-902-007-00	70	8		74	5
1703-601-009-10	51	6	1705-902-008-00	70	3		75	21
1703-670-230-00	59	10	1705-904-001-00	70	9		76	29
1705-102-009-00	2	10	1705-904-002-00	70	4	1725-407-201-00	37	2
1705-102-016-00	2	21	1705-904-002-10	70	4-A	1725-434-062-00	23	21-A
1705-102-202-00	2	7	1705-904-004-00	70	10		23	22
1705-102-203-00	2	3	1705-904-011-00	70	2		23	50
1705-102-240-20	2	38	1710-241-053-00	21	13-A		24	22
1705-102-251-10	2	42		22	13-A		24	51
1705-102-252-20	2	43		23	22-A	1725-434-063-00	23	12
1705-102-500-00	2	1		23	23		23	41
1705-104-002-00	4	9		23	51		24	12
1705-105-420-00	5	9		24	23		24	41

Numerical Index

Part Code	Fig.	Key	Part Code	Fig.	Key	Part Code	Fig.	Key
1725-509-260-00	48	32-A	1728-201-001-30	10	1	1728-208-240-00	16	3
	48	36	1728-201-001-40	10	1-A	1728-271-003-00	17	19
1725-553-002-00	49	2	1728-201-001-50	10	1-B	1728-271-004-00	17	31
	50	2	1728-201-002-00	10	6	1728-271-200-00	17	1
1725-553-003-00	49	6	1728-201-003-00	10	10	1728-271-200-10	17	1-A
	50	6	1728-203-001-00	12	7	1728-271-200-20	17	1-B
1725-553-007-00	49	34-B		13	7	1728-271-200-30	17	1-C
	50	34-B	1728-203-002-00	12	11	1728-271-210-00	17	10
1725-553-007-10	49	34-C		13	11	1728-271-210-10	17	10-A
	50	34-C	1728-203-003-00	12	9	1728-271-210-20	17	10-B
1725-601-003-00	51	2		13	9	1728-271-220-00	17	12
1725-601-210-00	51	22	1728-203-004-00	12	18	1728-271-230-00	17	21
1725-604-003-00	53	12		13	17	1728-271-230-10	17	21-A
1725-604-051-00	53	4-A	1728-203-005-00	12	19	1728-271-240-00	17	24
	53	14-A		13	18	1728-271-240-10	17	24-A
1725-604-052-00	53	11-B	1728-203-006-00	12	10-A	1728-272-001-00	18	7
1725-604-202-00	53	7	1728-203-051-00	13	14	1728-272-002-00	18	16
1728-101-001-00	1	11	1728-203-052-00	13	10-A	1728-272-200-00	18	4
1728-101-200-00	1	1	1728-203-200-00	12	10	1728-272-200-10	18	4-A
1728-101-210-00	1	9	1728-203-210-00	12	1	1728-272-200-20	18	4-B
1728-102-200-00	2	31		13	1	1728-272-210-00	18	13
1728-102-210-00	2	17	1728-203-210-10	12	1-A	1728-272-210-10	18	13-A
1728-102-210-10	2	17-A		13	1-A	1728-272-210-20	18	13-B
1728-102-211-10	2	17-B	1728-203-500-00	13	10	1728-272-230-00	18	1
1728-102-220-00	2	24	1728-204-001-00	14	1	1728-306-001-00	19	1
1728-102-230-00	2	25		15	1	1728-306-001-10	19	1-A
1728-104-210-00	4	1	1728-204-002-00	14	14		20	1
1728-105-230-00	5	14		15	14	1728-306-002-10	19	5
1728-105-240-00	5	7	1728-204-003-00	14	19		20	5
	5	11		15	19		23	5
1728-111-001-00	6	1	1728-204-200-00	14	15		23	34
1728-112-002-00	7	7		15	15		24	5
1728-112-200-00	7	9	1728-204-210-00	14	28		24	34
1728-112-200-10	7	9-A		15	28	1728-306-003-00	19	6
1728-112-230-00	7	11	1728-204-210-10	14	28-A	1728-306-003-10	19	6-A
1728-117-001-00	8	5-A		15	28-A	1728-306-003-20	19	6-B
1728-117-200-00	8	4	1728-208-001-00	16	9	1728-306-003-30	19	6-C
1728-117-210-00	8	1	1728-208-001-10	16	9-A		23	6
1728-120-200-00	9	1	1728-208-001-20	16	9-B		23	35
1728-120-201-00	9	5	1728-208-001-30	16	9-C	1728-306-005-00	19	9
1728-120-202-00	9	7	1728-208-021-00	16	4		19	9-A
1728-120-220-00	9	1-A	1728-208-200-00	16	1		19	9-B
1728-120-221-00	9	3-A	1728-208-210-00	16	8		20	9
1728-120-222-00	9	4-A	1728-208-220-00	16	1-A		23	61
1728-120-223-00	9	5-A	1728-208-230-00	16	2		24	62

Numerical Index

Part Code	Fig.	Key
1728-306-007-00	19	15
	20	15
	23	65
	24	66
1728-306-021-00	23	1
	23	30
	24	1
	24	30
1728-306-022-00	23	5-A
	23	34-A
	24	5-A
	24	34-A
1728-306-023-00	23	6-A
	23	35-A
1728-306-051-00	20	6
	24	6
	24	35
1728-306-071-00	24	6-A
	24	35-A
1728-306-210-10	19	14
1728-306-210-20	19	14-A
	20	14
	23	64
	24	65
1728-307-002-00	21	1
1728-307-002-10	21	1-A
1728-307-004-00	21	5
	22	5
1728-307-005-00	21	7
	22	7
1728-307-006-00	21	9
	22	9
	23	19
	23	48
	24	19
	24	48
1728-307-007-10	21	10
	22	10
1728-307-022-00	23	11
	23	40
1728-307-024-00	23	15
	23	44
	24	15
	24	44
1728-307-025-00	23	17

Part Code	Fig.	Key
1728-307-025-00	23	46
	24	17
	24	46
1728-307-026-00	23	20
	23	49
	24	20
	24	49
1728-307-027-00	23	25-A
	23	26
	23	54
	24	26
	24	55
1728-307-028-00	23	18
	23	47
	24	18
	24	47
1728-307-051-00	22	1
1728-307-051-10	22	1-A
1728-307-071-00	24	11
	24	40
1728-307-220-00	21	15
	22	15
1728-307-220-10	21	15-A
	22	15-A
	23	25
	23	53
	24	25
	24	54
1728-307-420-00	23	24-A
	23	53-A
	24	25-A
	24	54-A
1728-310-052-00	26	2
1728-310-200-00	25	11
1728-310-210-00	25	1-A
	26	6-A
	26	19-A
1728-310-211-00	25	2-A
	26	7-A
	26	20-A
1728-310-212-00	25	3-A
	26	8-A
	26	21-A
1728-310-213-00	25	4-A
	26	9-A

Part Code	Fig.	Key
1728-310-213-00	26	22-A
1728-310-214-00	25	5
	26	10
	26	23
1728-310-510-00	26	4
1728-310-510-10	26	4-A
1728-310-520-00	26	17
1728-310-520-10	26	17-A
1728-310-530-00	26	29
1728-312-001-00	27	4
1728-312-002-00	27	15
	28	18
1728-312-051-00	28	14
1728-312-200-00	27	1
1728-312-210-00	27	5
1728-312-210-10	27	5-A
1728-312-220-00	27	8
1728-312-220-10	27	8-A
1728-312-510-00	28	4
1728-312-510-10	28	4-A
1728-312-520-00	28	10
1728-312-520-10	28	10-A
1728-312-530-10	28	12
1728-312-530-20	28	12-A
1728-312-530-30	28	12-B
1728-313-051-00	30	13
1728-313-510-10	30	1
1728-313-510-20	30	1-A
1728-313-510-30	30	1-B
1728-313-520-00	30	16
1728-313-520-10	30	16-A
1728-313-530-00	30	3
1728-317-500-00	32	1
1728-317-510-00	32	3
1728-334-001-00	33	1
	34	1
1728-334-002-00	33	4
	34	4
1728-334-003-00	33	9
	34	9
1728-334-004-00	33	6
	34	6
1728-334-005-00	33	16
	33	40
	34	16

Part Code	Fig.	Key	Part Code	Fig.	Key	Part Code	Fig.	Key
1728-334-005-00	34	40	1728-410-200-50	40	1-B	1728-508-450-00	48	66
1728-334-006-00	33	23	1728-410-200-60	40	1-C	1728-508-470-00	48	6-A
	34	23	1728-410-200-70	40	1-D	1728-553-001-00	49	23
1728-334-007-00	33	12	1728-410-300-10	40	6		50	23
	34	12		41	6	1728-553-004-00	49	42
1728-334-008-00	33	26	1728-410-300-20	40	6-A		50	42
1728-334-011-00	33	45		41	6-A	1728-553-007-00	49	12-A
	34	45	1728-410-350-00	40	11		49	15
1728-334-013-00	33	26-A		41	11		50	12-A
1728-334-051-00	34	26	1728-410-500-10	41	1		50	15
1728-334-210-00	33	27	1728-410-500-20	41	1-A	1728-553-007-10	49	12-B
	34	27	1728-410-500-30	41	1-B		49	15-A
1728-334-230-00	33	32	1728-410-500-40	41	1-C		50	12-B
	34	32	1728-410-500-50	41	1-D		50	15-A
1728-334-240-00	33	36	1728-410-500-60	41	1-E	1728-553-008-00	49	37
1728-334-240-10	33	36-A	1728-410-500-70	41	1-F		50	37
1728-334-240-20	33	36-B	1728-433-001-00	42	4	1728-553-009-00	49	41
1728-334-250-00	33	19	1728-433-001-10	42	4-A		50	41
1728-334-260-00	33	43	1728-433-200-00	42	1	1728-553-011-00	49	22
	34	43	1728-434-001-00	43	11		50	22
1728-334-280-00	33	48	1728-434-200-00	43	1	1728-553-012-00	49	2-A
	34	48	1728-434-210-00	43	2		50	2-A
1728-334-310-00	71	1	1728-436-001-00	44	1	1728-553-012-10	49	2-B
1728-334-320-00	71	4	1728-504-002-00	47	7-A		50	2-B
1728-334-510-00	34	36	1728-504-003-00	47	8-A	1728-553-210-00	49	1
1728-334-510-10	34	36-A	1728-508-001-00	48	45		50	1
1728-334-510-20	34	36-B	1728-508-001-10	48	45-A	1728-553-210-10	49	1-A
1728-334-520-00	34	19	1728-508-002-00	48	44-A		50	1-A
1728-335-210-00	35	1	1728-508-210-00	48	28	1728-553-230-00	49	26
1728-335-220-00	35	3	1728-508-220-00	48	1		50	26
1728-407-200-00	37	1	1728-508-230-10	48	6	1728-553-230-10	49	26-A
1728-408-001-00	38	16	1728-508-240-00	48	41		50	26-A
	38	18	1728-508-260-00	48	42	1728-553-240-00	49	5
	39	16	1728-508-260-10	48	42-A		50	5
	39	18	1728-508-270-00	48	27	1728-553-250-00	49	9
	47	6	1728-508-310-00	48	26		50	9
	48	22		48	52	1728-553-250-10	49	9-A
1728-408-210-00	39	17	1728-508-320-00	48	51		50	9-A
1728-408-250-00	38	17	1728-508-320-10	48	51-A	1728-553-250-20	49	9-B
	39	19	1728-508-350-00	48	53		50	9-B
	47	11-A	1728-508-410-00	48	62	1728-553-260-00	49	11
1728-408-260-00	38	1	1728-508-420-00	48	63	1728-553-260-10	49	11-A
	39	1	1728-508-430-10	48	54	1728-553-270-00	49	29
1728-410-200-20	40	1	1728-508-430-20	48	54-A		50	29
1728-410-200-40	40	1-A	1728-508-440-00	48	64	1728-553-280-10	49	18

Numerical Index

Part Code	Fig.	Key	Part Code	Fig.	Key	Part Code	Fig.	Key
1728-553-280-20	49	18-A	1728-670-201-00	58	5	1728-901-001-00	66	5
1728-553-290-10	49	19	1728-670-210-00	58	2	1728-901-051-00	67	5
1728-553-290-20	49	19-A	1728-670-500-10	59	1	1728-903-001-00	70	2-A
1728-553-510-00	50	11	1728-670-500-20	59	1-A	1729-214-049-00	12	12-A
1728-553-510-10	50	11-A	1728-670-501-00	59	24		13	12-A
1728-553-520-10	50	18	1728-670-510-00	59	2	1738-411-300-10	73	1
1728-553-520-20	50	18-A	1728-670-512-00	59	3	1738-508-210-00	48	1-A
1728-553-530-10	50	19	1728-670-520-00	59	29	1739-103-200-00	3	1
1728-553-530-20	50	19-A	1728-690-001-00	60	8	1739-103-210-00	3	9
1728-602-001-00	52	3	1728-690-200-00	60	1	1739-103-210-10	3	9-A
1728-602-001-10	52	3-A	1728-690-200-10	60	1-A	1739-103-210-20	3	9-B
1728-602-002-00	52	7	1728-690-200-20	60	1-B	1739-103-220-00	3	15
1728-604-200-00	53	5	1728-690-500-00	61	1	1739-401-001-00	36	3
1728-604-200-10	53	5-A	1728-690-500-10	61	1-A	1739-401-200-00	36	1
1728-604-201-00	53	6	1728-690-500-20	61	1-B	1739-401-202-00	36	2
1728-604-201-10	53	6-A	1728-690-502-00	61	7	1739-530-002-10	48	44
1728-606-200-10	54	1	1728-690-510-10	61	11	1739-530-004-00	48	48
1728-606-500-20	55	1	1728-801-001-10	62	13	1739-530-008-00	68	4
1728-619-200-00	74	1		63	13		69	4
	75	17	1728-801-210-00	62	1	1739-530-240-00	38	19
	76	25	1728-801-210-10	62	1-A		47	11
1728-630-001-10	56	9	1728-801-220-10	62	3	1739-530-290-00	48	32
1728-630-003-00	56	6		63	3	1739-601-220-00	51	1
1728-630-004-00	56	7	1728-801-220-20	62	3-A	1739-602-004-00	51	14
1728-630-005-10	40	12		63	3-A	1739-602-210-00	51	11
	41	12	1728-801-230-10	62	8	1739-602-210-10	51	11-A
	56	12		63	8	1739-604-001-00	53	1
1728-630-005-20	40	12-A	1728-801-230-20	62	8-A	1739-604-002-00	53	2
	41	12-A		63	8-A	1739-619-210-00	74	4
	56	12-A	1728-801-510-00	63	1		75	20
1728-630-200-00	56	1	1728-801-510-10	63	1-A		76	28
1728-630-210-00	56	3	1728-802-210-00	64	1	1739-660-200-20	75	2
1728-630-220-10	56	10	1728-802-210-10	64	1-A		76	2
1728-660-051-00	76	15	1728-802-220-10	64	3	1739-660-212-00	75	5
1728-660-052-00	76	15-A		65	3		76	5
1728-660-220-00	75	15	1728-802-230-10	64	6	1739-670-202-00	59	25
1728-660-230-00	75	13	1728-802-250-10	64	10	1739-670-220-00	59	9
	76	13		65	10	1739-670-220-10	59	9-A
1728-660-240-00	75	1	1728-802-270-00	64	10-A	1739-901-001-00	66	1
1728-660-240-10	75	1-A		65	10-A		67	1
1728-660-300-00	75	13-A	1728-802-270-10	64	10-B	1739-901-002-00	66	2
	76	13-A		65	10-B		67	2
1728-660-500-00	76	1	1728-802-510-00	65	1	1740-272-061-00	18	3
1728-660-500-10	76	1-A	1728-802-510-10	65	1-A	1740-272-062-00	18	12
1728-670-200-10	58	1	1728-802-520-10	65	6	1740-313-300-00	30	7

Numerical Index

Part Code	Fig.	Key	Part Code	Fig.	Key	Part Code	Fig.	Key
1740-313-301-00	30	11	3104-210-213-00	27	11	3670-520-001-00	34	11
1740-680-530-00	61	28-A	3517-205-007-00	33	24	3695-303-003-00	34	26-A
1740-680-550-00	59	22		33	46	3737-172-010-00	60	15
1740-680-551-00	59	23		34	24		61	21
1752-102-006-00	2	9		34	46	3740-162-005-00	2	14
1752-120-201-00	9	2-A	3560-201-015-00	6	4	3746-111-011-00	33	13
1752-120-205-00	9	6-A		17	23		34	13
2111-101-011-00	10	9		76	17	3746-185-014-00	60	16
2139-505-002-00	49	30		76	21-A		61	22
	50	30		76	23	3801-236-051-00	62	14
2144-409-210-10	48	19	3614-261-002-00	58	12		63	14
2144-419-022-00	17	26		59	8	3801-461-002-00	17	33-A
2144-519-009-10	27	10	3621-702-003-00	43	8	3805-210-021-00	54	3
	28	13	3623-263-001-00	7	13-A		55	3
2149-312-015-60	27	7-A	3626-276-003-00	7	13		56	2
	28	9-A	3631-270-003-00	58	14		56	4
2150-661-002-00	2	15		59	17		56	4-A
2157-128-001-00	62	4	3640-111-001-10	64	11-A	3805-210-021-10	54	3-A
	62	9		65	11-A		55	3-A
	63	4	3640-350-006-10	48	24		56	2-A
	63	9	3642-496-007-10	60	24-A		56	4-B
2161-506-005-00	52	2		61	33-A	3805-311-210-10	5	5
2171-213-002-00	29	2	3648-703-001-00	33	21	3805-354-280-00	11	13
2194-201-005-00	21	11		34	21		48	58
2195-524-002-00	64	7	3650-262-202-00	60	5	3805-371-007-00	40	9
	65	7		61	5		41	9
2500-210-016-00	17	33	3650-270-214-00	60	12	3817-374-330-00	10	4-A
2500-901-027-00	70	1		61	16	3817-374-340-00	48	34-A
2502-407-001-10	33	20	3650-831-004-00	3	13-B	3821-262-202-00	61	3
	33	44	3656-480-002-00	49	32	3821-262-204-00	61	4
	34	20		50	32	3827-270-001-00	61	8
	34	44	3659-301-001-00	3	2	3827-270-002-00	61	9
2504-135-006-00	17	29-A	3659-352-007-00	49	38	3827-270-003-00	61	2
2504-135-008-00	17	25		50	38	3829-311-200-00	5	5-A
2504-165-002-10	54	3-B	3664-276-001-00	60	24	4101-102-038-00	3	14
	55	3-B		61	33		17	23-A
	56	2-B	3666-202-005-00	2	11	4335-512-004-00	49	31
	56	2-C		40	8		50	31
	56	4-C		40	8-A	6221-408-003-00	2	46
	56	4-D		41	8-A	6221-408-007-00	2	45
2512-650-002-00	7	3		41	8-B	6221-408-008-00	2	39
2512-650-002-10	7	3-A	3666-202-005-10	2	11-A	6221-408-009-00	2	40
2515-103-002-10	3	12-A		40	8-B	6221-408-010-00	2	41
2706-501-003-00	6	7		41	8-C	6221-408-013-00	2	44
2706-501-004-00	6	8	3670-520-001-00	33	11	7827-205-010-00	21	14

Numerical Index

Part Code	Fig.	Key	Part Code	Fig.	Key	Part Code	Fig.	Key
7827-205-010-00	22	14	K182-032-003-00	47	5	K510-005-012-00	78	10
	23	23-A	K185-031-302-00	38	5	K510-005-014-00	78	12
	23	24		39	5	K510-005-023-00	78	23
	23	52	K185-031-303-00	38	6	K510-005-024-00	78	24
	24	24		39	6	K510-008-013-00	78	11-A
	24	53	K275-001-003-00	78	27	P103-521-300-00	48	55
7947-603-012-00	28	7	K510-001-005-00	78	3	P103-521-302-00	48	56
7963-611-003-00	14	22	K510-001-006-00	78	4	P117-303-522-00	59	11
	15	22	K510-001-006-10	78	4-A	P117-303-523-00	59	12
	49	6-A	K510-001-007-00	78	5	P117-303-524-00	59	13
	50	6-A	K510-001-008-00	78	6	P117-303-525-00	59	14
8595-201-017-00	12	5	K510-001-009-00	78	7	P117-303-526-00	59	15
	13	5	K510-001-010-00	78	8	P118-702-033-00	48	38
8595-901-007-00	70	5	K510-001-011-00	78	9	V111-168-003-00	28	8
8654-501-006-10	62	7	K510-001-015-00	78	13	V120-366-001-60	61	10
	62	12	K510-001-016-00	78	15	V120-376-001-60	35	4
	63	7	K510-001-017-00	78	16		53	4
	63	12	K510-001-018-00	78	17		53	14
8657-608-053-10	49	12	K510-001-019-00	78	18		56	11-A
	50	12	K510-001-020-00	78	19	V120-376-002-00	53	11
8657-611-004-00	49	34	K510-001-025-00	78	25		53	11-A
	50	34	K510-001-026-00	78	25-A		56	11
8657-901-001-00	49	36	K510-001-029-00	78	26-A	V200-260-603-00	2	13
	50	36	K510-001-030-00	78	33-A	V201-260-802-50	2	32
J061-114-024-00	48	3	K510-001-031-00	78	34	V201-260-803-50	17	13-A
	48	10	K510-001-032-00	78	37	V201-260-804-00	17	13
J061-209-011-00	5	16	K510-001-034-00	78	38		48	17
J061-210-015-00	2	30	K510-001-036-00	78	43	V201-260-806-50	5	2
J061-211-013-00	5	13	K510-001-039-00	78	33-B	V201-260-807-50	76	20
J061-230-038-00	2	22	K510-002-005-00	78	3-A	V201-261-010-00	2	36
J061-236-044-00	2	23	K510-002-033-00	78	37-A	V201-360-804-50	33	51
J061-247-055-00	4	8	K510-003-013-00	78	11		34	51
	4	10	K510-003-021-00	78	20	V201-361-002-50	31	6-A
J062-104-111-00	5	15	K510-003-022-00	78	21		32	6-A
J062-119-126-00	5	8-A	K510-003-037-00	78	22	V201-361-007-50	11	4
	5	10-A	K510-003-100-00	78	45	V201-361-014-00	11	3
	5	12-A	K510-003-301-00	78	46	V201-361-202-50	10	11
K130-003-003-00	48	13	K510-003-302-00	78	47	V201-361-203-00	49	24
K130-003-004-00	48	16	K510-003-303-00	78	50		50	24
K130-010-100-00	48	12	K510-003-304-00	78	51		73	2
K130-018-000-00	48	11	K510-004-001-00	78	1	V201-361-203-50	19	10
K182-002-002-00	47	3	K510-004-001-10	78	1-A		72	2
K182-032-000-00	47	1	K510-005-000-00	11	1	V201-361-204-00	19	10-A
K182-032-001-00	47	2	K510-005-000-10	11	1-A		20	10
K182-032-002-00	47	4	K510-005-004-00	78	2		23	62

Numerical Index

Part Code	Fig.	Key	Part Code	Fig.	Key	Part Code	Fig.	Key
V201-361-204-00	24	63	V211-260-802-00	13	16	V211-361-002-00	7	14
V203-361-002-50	9	8		14	27		33	28
V203-361-003-00	3	16		15	27		34	28
V203-361-003-50	3	16-A		26	5	V211-361-002-50	7	12
	33	29		26	18	V211-560-802-00	17	20
	34	29		30	2		17	22
V203-461-002-00	1	3		30	12	V211-560-802-50	10	8
	7	15		48	4		20	16-A
V203-461-002-50	33	2		48	67		23	66
	34	2	V211-260-802-50	17	22-A		24	67
V210-260-601-60	2	47		75	16	V211-560-803-00	9	10
	48	21	V211-260-804-00	48	17-A		19	8
V210-360-601-20	2	18	V211-260-805-00	76	16		19	16
	51	20		76	22		20	8
V210-360-601-60	5	6	V211-260-806-00	48	23		20	16
	51	17	V211-261-002-00	48	65		23	8
	58	19		62	2		23	37
	59	31		63	2		24	8
	60	11	V211-261-002-50	27	3		24	37
	60	11-A		28	3	V211-560-803-50	3	18-A
	60	21		48	39	V211-561-002-00	40	10
	61	15		76	16-A		41	10
	61	20	V211-360-801-60	3	5	V211-561-002-50	19	3
	61	30-A		3	13		20	3
	74	3		14	32		23	3
	75	19		18	2		23	32
	76	27		18	11		23	60
V210-360-602-00	48	30		51	7		24	3
	58	20		51	13		24	32
	59	32	V211-360-802-00	2	29		24	61
	61	36		3	13-A		31	6
V210-360-602-50	71	6		3	19		32	6
V210-360-603-50	48	29		11	12		33	5
	74	6		14	20		34	5
	75	22		15	20	V211-660-803-00	37	3
	76	30		26	5-A	V211-660-803-50	3	18
V210-660-602-00	35	2		26	18-A	V211-661-002-50	1	10
V211-260-801-60	16	7		40	13	V220-541-003-50	78	44
	17	32		41	13	V230-360-601-20	2	47-A
	25	10		48	8		60	11-B
	26	15		51	24		60	21-A
	26	28		52	8		61	15-A
	48	57		56	5		61	20-A
V211-260-802-00	3	11		61	30		61	30-B
	12	17	V211-360-803-00	73	8	V230-360-601-60	58	19-A

Numerical Index

Part Code	Fig.	Key	Part Code	Fig.	Key	Part Code	Fig.	Key
V230-360-601-60	59	31-A	V328-262-112-00	43	9	V401-160-006-00	50	4
V230-360-603-00	2	13-A		44	6	V401-160-008-00	1	7
V231-360-801-60	3	11-A	V334-260-010-00	25	12		5	3
	3	19-A		26	30		14	5
V231-360-802-50	2	32-A	V334-260-012-00	44	3		15	5
V251-341-002-00	21	18	V334-260-016-00	49	10		17	8
	22	18		50	10		48	18
	23	28-A	V350-160-004-00	53	8		62	15
	23	29	V350-160-005-00	52	4		63	15
	23	57	V360-260-006-00	2	19	V401-160-010-00	1	4
	24	29		7	6		3	17
	24	58		51	21		7	16
V273-360-601-50	51	10		60	14		9	9
V301-260-006-00	7	5		61	12		11	5
	33	49		61	18		25	9
	34	49	V361-260-006-00	51	12		25	13
	48	31		51	15		26	14
V304-260-008-00	2	34	V362-260-008-00	17	16		26	27
	7	10		17	35		26	31
	17	4		40	14		31	7
	17	9		41	14		31	10
	17	14		51	8		32	7
	27	12		75	6		32	10
	28	15		76	6		33	3
	33	52		76	18		33	30
	34	52		76	22-A		34	3
V304-260-010-00	8	9		76	24		34	30
	25	8	V363-260-008-00	1	12	V401-160-012-00	10	12
	25	12-A		51	23		19	11
	26	13		51	28		20	11
	26	26		54	8		23	63
	26	30-A		55	8		24	64
	49	35-A		73	9		33	17
	50	35-A	V363-260-010-00	2	37		33	41
V304-260-012-00	43	15	V401-160-006-00	18	5		34	17
V304-460-008-00	1	6		18	14		34	41
V304-460-010-00	31	9		28	6		38	13
	32	9		28	22		39	13
V304-700-008-00	3	3		33	50		44	7
V305-260-012-00	77	3		34	50		49	25
V305-260-016-00	33	15		40	3		50	25
	34	15		40	5		72	3
V327-261-216-00	42	5		41	3		73	3
V328-262-112-00	38	14		41	5	V401-160-016-00	33	14
	39	14		49	4		34	14

Part Code	Fig.	Key	Part Code	Fig.	Key	Part Code	Fig.	Key
V401-700-008-00	3	4	V411-260-010-00	24	33	V411-260-016-00	65	13
V411-260-004-00	75	11		29	3	V411-260-018-00	43	6
	76	11		31	8	V411-260-020-00	18	19
V411-260-005-00	48	46		31	11	V500-162-001-00	8	3
	48	49		32	8	V500-162-002-00	16	11
V411-260-006-00	8	2		32	11		17	17
	18	5-A		33	31		27	17
	18	14-A		33	34		28	20
	28	6-A		34	31		30	15
V411-260-008-00	1	8		34	34		49	44
	5	4		37	6		50	44
	6	3		64	9	V500-162-501-50	14	30
	14	29		65	9		15	30
	15	29	V411-260-012-00	10	13		30	18
	16	5		14	23	V500-162-502-00	16	6
	16	10		15	23		17	30
	17	18		33	18		18	9
	18	8		33	42		33	35
	18	17		34	18		33	39
	27	16		34	42		34	35
	28	19		49	7		34	39
	30	14		49	13		44	8
	30	17		49	16	V500-162-502-50	18	18
	33	38		49	16-A		49	27
	34	38		49	28		49	40
	49	43		49	33		50	27
	50	43		49	39		50	40
	51	16		50	7	V500-163-002-00	14	24
	51	18		50	13		15	24
	54	7		50	16		29	4
	54	7-A		50	16-A		38	15
	55	7		50	28		39	15
	55	7-A		50	33		49	8
	62	5		50	39		49	17
	62	10		51	25		50	8
	63	5		72	4		50	17
	63	10	V411-260-014-00	30	5		62	6
V411-260-010-00	7	17		47	9		62	11
	8	8	V411-260-016-00	25	15		63	6
	11	6		42	6		63	11
	19	4		49	20		64	8
	20	4		50	20		65	8
	23	4		64	4	V500-163-002-50	43	10
	23	33		64	13	V500-163-003-00	47	10
	24	4		65	4		49	21

Numerical Index

Part Code	Fig.	Key	Part Code	Fig.	Key	Part Code	Fig.	Key
V500-163-003-00	50	21	V600-110-601-00	14	13	V704-140-025-00	24	45
	64	5		15	13	V704-140-030-00	12	3
	64	14	V600-110-620-40	78	14		13	3
	65	5	V600-110-620-50	12	13		21	17
	65	14		13	13		22	17
V500-164-003-00	42	7		21	2		23	26-A
V523-100-801-60	11	2		22	2		23	27
	14	3	V600-110-620-60	21	12		23	28
	15	3		22	12		23	55
V523-101-002-20	10	7	V600-110-630-50	12	12		23	56
	19	2		13	12		24	27
	19	7	V600-110-690-30	78	39		24	28
	20	2	V600-150-600-30	78	40		24	56
	20	7	V600-150-620-50	45	6		24	57
	23	2		46	6	V705-140-030-00	78	41
	23	7	V600-150-620-60	33	7	V705-140-032-00	78	32
	23	31		34	7	V705-140-047-00	78	31
	23	36	V600-410-600-80	21	8-A		78	33
	23	59		22	8-A	V705-140-052-00	21	3
	24	2	V600-410-620-50	21	2-A		22	3
	24	7		22	2-A		23	13
	24	31	V600-410-620-60	21	12-A		23	42
	24	36		22	12-A		24	13
	24	60	V600-450-620-50	45	6-A		24	42
V530-240-602-80	17	11-A		46	6-A	V707-140-062-00	33	8
	27	6-A	V670-200-006-00	71	2		34	8
	27	9-A	V671-400-006-00	71	3	V720-101-900-80	78	52
	28	11-A	V704-140-015-00	30	6	V720-102-401-00	79	2
V560-160-005-00	48	47		33	22	V720-102-401-50	11	7
	48	50		33	25	V720-102-401-60	48	20
V560-160-008-00	6	5		33	47	V720-103-502-40	14	17
	54	6		34	22		15	17
	55	6		34	25	V720-103-502-80	48	5
V580-140-402-50	49	35		34	47		48	7-A
	50	35	V704-140-016-00	25	16	V720-103-504-10	78	26
V580-140-503-20	11	9		26	3	V720-103-504-40	79	6
	43	7	V704-140-017-00	78	42	V720-112-401-10	10	5
V580-140-603-20	64	2	V704-140-018-00	17	27		48	33
	65	2	V704-140-020-00	18	20		48	35
V600-110-600-60	12	6		78	30		48	37
	13	6	V704-140-025-00	21	6		78	29
V600-110-600-80	21	8		22	6	V720-112-401-20	78	48
	22	8		23	16	V720-112-401-40	11	14
V600-110-600-90	14	12		23	45		48	59
	15	12		24	16		48	61

Numerical Index

Part Code	Fig.	Key	Part Code	Fig.	Key	Part Code	Fig.	Key
V720-112-401-40	78	28	V782-160-000-4T	10	2			
V720-112-401-50	11	7-A	V782-160-000-8B	19	12			
V720-113-502-90	38	12		20	12			
	39	12		23	9			
V721-103-105-00	12	16		23	38			
	13	15		23	58			
V721-103-106-00	12	8		24	9			
	13	8		24	38			
V723-102-004-00	48	25		24	59			
V723-102-005-60	48	15	V782-160-000-8T	10	3			
V730-101-601-20	78	49	V999-200-003-00	31	4			
V744-115-250-70	48	14		32	4			
V744-120-400-80	22	11		45	4			
	23	21		46	4			
	24	21	W201-261-206-00	77	2			
	24	50						
V744-120-470-70	78	35						
V744-125-400-70	12	15						
V744-128-451-10	21	4						
	22	4						
	23	14						
	23	43						
	24	14						
	24	43						
V760-150-000-00	18	6						
	18	15						
	28	5						
	28	21						
	40	2						
	40	4						
	41	2						
	41	4						
	42	3						
	49	3-A						
	50	3-A						
V762-150-000-00	49	3						
	50	3						
V763-150-000-00	42	8						
V780-140-000-1T	78	53						
V782-160-000-4B	19	13						
	20	13						
	23	10						
	23	39						
	24	10						
	24	39						

Alpabetical Index

6004-097-310-10

Description	Fig.	Key
ADAPTER/255X040 ASSY	22	1
ARM/CONTROL	20	29
ARM/FLOATING COMP	20	19
ARMATURE/STARTE ASSY	29	5
BALL	1	5
BEARING,RB/6002	9	45
BEARING,RB/6004	20	13
BEARING,RB/6203	9	46
	20	12
BEARING,THRUST CRANK	5	13
	6	2
	6	4
BEARING/BALL	30	6
	30	11
BEARING/CONNECTING R	6	5
	6	6
	13	7
BEARING/CRANK/LOWER	5	12
BEARING/CRANK/UPPER	5	11
BEARING/NEEDLE	29	8
	29	9
BEARING/OILLESS	29	12
	29	14
	29	16
BEARING/WATER PUMP	17	3
BEARING/WATERPUMP	17	4
BEARING/WITH SHOCKAB	29	13
BELT/VCOGHM34.0	18	5
BODY/NOZZLE HOLDER	27	2
BODY/OILPUMP	16	2
BODY/WATERPUMP	17	2
BOLT	5	2
	9	36
	11	18
	15	10
	16	7
	18	4
	23	8
	30	9
	30	10
	30	19
	30	20
	30	21
	30	22
	30	24
BOLT,ADJUST	5	29
BOLT,JOINT	16	13
BOLT,SEMS (S) M8X16	9	47
BOLT,SEMS/M10X20	8	3
BOLT,SEMS/M6X12	12	5
	20	15
BOLT,SEMS/M8X25 7T	4	3
BOLT/CONNECTINGROD	13	6
BOLT/FLANGE	15	7
BOLT/M10X1.25X82	1	7
BOLT/M6	9	31
	9	32
BOLT/M6X10	20	17
BOLT/M6X18	20	25
BOLT/M8X20	20	7-A
BOLT/THROUGH	29	30
BOLT/WASHERHEAD	28	10
BOLT/WS	16	6
BRACKET ROCKER SHAFT	11	12
BRACKET,ROCKER SHAFT	11	13
BRUSH	30	17
BRUSH/STARTER	29	2
BUSH	30	15
CAMSHAFT/INJECTION P	20	9
CAP,BLANK/30	9	20
CAP,OIL FILLER	2	2
CAP,SEALING	1	2
CARTRIDGE/OILFILTER	16	15
CLAMP,STRAINER	16	10
CLAMP/WIRE/10-12	21	7
CLAMP/WIRE/10-15	17	21
CLIP/HOSE/7.6-8.2	21	4
	21	4-A
CLIP/HOSE/8.7-9.3	21	9
	21	9-A
CLUTCH/STARTER ASSY	29	6
COLLOR	30	3
CONNECTINGROD ASSY	13	5
CONNECTOR	21	1
CONNECTOR,OIL FILTER	5	24
CONNECTOR/FUEL	21	1-A
CONNECTOR/GLOWPLUG	24	4
	25	4
COVER	29	11
	30	13
COVER,BEARING	30	5
COVER,INJ PUMP	5	25
COVER/CYLINDER HEAD	2	1
CRANKSHAFT ASSY	15	1
	15	1-A
CUP/SEALING/12	5	7
CUP/SEALING/16	9	3
CUP/SEALING/28	5	3
CUP/SEALING/36	5	4
CUTTER,VALVE	11	5
CYLINDERBLOCK ASSY	5	1
CYLINDERHEAD ASSY	1	1
DOWEL	5	21
ELEMENT ASSY	28	9
FAN/COOLING	18	1
FLANGEBOLT	3	3
	3	4
	5	27
	7	4
	9	5
	9	6
	9	7
	9	8
	9	9
	9	10
	9	12
	9	13
	9	14
	9	41
	9	42
	9	43
	10	2
	11	19
	16	11
	17	13
	17	18
	17	24
	17	25
	17	29
	20	7
	23	3
	23	5
	24	7
	25	7
FLYWEIGHT	20	16

Alpabetical Index

Description	Fig.	Key
FLYWHEEL	15	5
FRAME	30	12
FRAME/COMMUTATOR END	29	10
FRAME/DRIVEEND ASSY	30	7
GASKET	2	5
	17	8
	24	6
	25	6
	26	5
	26	22
GASKET, EXH. MANIFOLD	4	2
	26	7
GASKET, INLET MANIFOL	3	2
	26	6
GASKET, NOZZLE	19	3
GASKET, SPACER	17	16
	26	19
GASKET/COVER	5	26
	26	11
GASKET/CYLINDERHEAD	1	6
	26	3
GASKET/DELIVERYVALVE	28	6
GASKET/GEARCASE	9	26
	26	14
GASKET/HOUSING	17	23
	26	20
GASKET/PLATE	9	35
	26	15
GASKET/WATER PUMP	17	12
	26	18
GEAR/CAMSHAFT	12	2
GEAR/CRANK	15	3
GEAR/IDLE ASSY	12	6
GEAR/INJECTIONPUMP	20	10
GEAR/OILPUMP ASSY	16	3
GEAR/STARTER PLANETA	29	17
GEAR/STARTERINTERNAL	29	18
GEARCASE ASSY	9	1
GENERATOR ASSY	23	1
GLOWPLUG	24	3
	25	3
HANGER	10	1
HOLDER ASSY	30	14
HOLDER/BRUSH ASSY	30	16
HOLDER/DELIVERYVALVE	28	4
HOLDER/NOZZLE ASSY	27	1
	27	1-A
HOLDER/STARTER ASSY	29	3
HOSE/RABBER	2	6
HOSE/RUBBER	17	20
	21	5
HOSE/RUBBER/160	21	3
HOSE/RUBBER/70	21	5-A
HOUSING ASSY	28	8
HOUSING/STARTER ASSY	29	7
HOUSING/THERMOSTAT	17	22
INJECTIONNOZZLE ASSY	19	1
	19	1-A
INJECTIONPUMP ASSY	20	1
JOINTT-TYPE 2	21	6
KEY/07X05X09	12	3
	20	11
KEY/07X05X20	15	4
LEVELGAGE	5	31
LEVER, CONTROL	20	24
LEVER/PINIONDRIVE	29	19
MANIFOLD(INLET) ASSY	3	1
MANIFOLD/EXHAUST	4	1
METAL, CRANK SET	5	10
	6	1
	6	3
NIPPLE	5	22
NOZZLE ASSY	27	52
NUT	5	30
	9	33
	11	17
	20	26
	20	30
	27	51
	29	28
	29	29
	29	34
	30	2
	30	23
	30	25
NUT, CAP/M 8	9	18
NUT/CAP	2	4
NUT/M08	9	11
	11	20
	17	14
NUT/M08	17	19
	20	8
NUT/M10	23	6
NUT/M8	9	17
	29	32
NUT/NOZZLERETAINING	27	5
NUT/PINIONSTOP	29	23
OILPAN COMP	7	1
OILPUMP ASSY	16	1
OILSEAL	5	14
	26	10
O-RING	9	38
	17	28
	26	16
	26	21
ORING	28	5
	28	5-A
O-RING/P 8	20	27
O-RING/P15	16	9
	26	17
O-RING/P18	7	3
PACKING	9	19
	16	14
	26	13
PIECE, DISTANCE	27	6
PIN	5	17
	5	28
	15	2
PIN, CONTROL	20	21
PIN, GROOVE	9	25
PIN, NOZZLE HOLDER	27	3
PIN, PISTON	13	3
PIN/ARM	9	21
PIN/IDLEGEAR	5	6
PIN/INJECTIONPUMP	28	12
PIN/STRAIGHT	5	16
	16	5
PIN/TUBE	5	15
	9	40
PIPE, OIL	16	12
PIPE, WATER DRAIN	5	23
PIPE/FUEL	21	2
PIPE/INJECTION ASSY	19	4
	19	5
	19	6

Alpabetical Index

6004-097-310-10

Description	Fig.	Key
PIPE/WATER PUMP	17	11
PIPE/WATEROUTLET	17	27
PISTON	13	1
PISTON(OV)	14	1
	14	3
PISTON/VALVE/RELIEF	9	28
PLATE	28	13
	29	27
	30	8
PLATE, THRUST	12	4
PLATE, THRUST INJPUMP	20	14
PLATE/ADJUST	23	2
PLATE/ADJUSTING	28	11
PLATE/FRONT	9	34
PLATE/REAR	8	1
PLATE/TAPPET/AD 0.2	28	25
PLATE/TAPPET/AD 0.25	28	29
PLATE/TAPPET/AD 0.3	28	26
PLATE/TAPPET/AD 0.35	28	30
PLATE/TAPPET/AD 0.4	28	27
PLATE/TAPPET/AD 0.45	28	31
PLATE/TAPPET/AD 0.5	28	28
PLATE/TAPPET/AD 0.55	28	32
PLATE/TAPPET/AD 0.6	28	20
PLATE/TAPPET/AD 0.65	28	33
PLATE/TAPPET/AD 0.7	28	21
PLATE/TAPPET/AD 0.8	28	22
PLATE/TAPPET/AD 0.9	28	23
PLATE/TAPPET/AD 1.0	28	24
PLATE/WATER PUMP	17	9
PLUG	5	5
	9	2
	11	11
PLUG/M14X1.5	7	2
	7	2-A
PLUG/PT1/2	1	3
PLUG/SCREW	9	23
POINTER	8	2
PULLEY	30	1
PULLEY, WATER PUMP	18	2
PULLEY/CRANK	15	8
RACK/CONTROL ASSY	28	15
REGULATOR ASSY	30	26
RELAY, SOLENOID	24	8
	25	8
REPAIR/ENGINE SET	26	1
RESISTANCE/1.0	21	8-A
RING, SNAP	13	4
RING, SNAP/ 4 E	9	22
	20	22
RING, SNAP/12 C	9	30
RING, SNAP/16 C	11	15
RING, SNAP/40 C	9	39
RING/PISTON SET	13	2
RING/PISTON/OV SET	14	2
	14	4
RING/SNAP	29	21
	29	22
RINGGEAR	15	6
RINK/CONTROL	20	20
ROCKERARM	11	9
ROCKERSHAFT ASSY	11	8
ROD, PUSH	11	7
ROTOR ASSY	30	4
ROTOR/OUTER	16	4
ROTOR/WATERPUMP	17	6
SCREW	29	33
SCREW ADJUST	11	16
SCREW/HOLLOW	28	1
SCREW/WATER PUMP	17	10
SEAL SET/WATER PUMP	17	5
SEAL, BEARING CAP	5	8
	26	8
SEAL, BEARING CAP/7	5	9
	26	9
SEAL, CYL.HEAD COVER	2	3
	26	4
SEAL, OIL	1	4
	9	4
	26	2
	26	12
SEAL/WATER PUMPPULLE	17	7
SEAT, VALVE SPRING	11	4
SEAT/SPRING/LOWER	28	19
SEAT/SPRING/UPPER	28	17
SHAFT, CAM	12	1
SHAFT/HYDRAULIC ASSY	9	44
SHAFT/ROCKERARM ASSY	11	10
SHAFT/STARTER PLANET	29	15
SHIM/INJECTION P/0.1	20	3
SHIM/INJECTION P/0.2	20	4
SHIM/INJECTION P/0.3	20	2
SHIM/INJECTION P/0.4	20	5
SHIM/INJECTION P/0.5	20	6
SHIM/INJECTIONPUMP	20	2-A
	20	4-A
	20	5-A
	20	6-A
SLEEVE/PLUNGER	28	16
SOLENOID	24	5
	25	5
SPACER, HYD, REAR	9	37
SPACER, PUMP.WATER	17	15
SPACER/FUN/19	18	3
SPRING	11	14
	30	18
SPRING GOVERNOR	20	23
SPRING, RETURN	20	28
SPRING, STARTING	20	33
SPRING/DELIVERYVALVE	28	3
SPRING/PUMPPLUNGER	28	18
SPRING/RELIEF VALVE	9	29
SPRING/STARTERBRUSH	29	4
SPRING/VALVE	11	3
STARTER ASSY	23	7
STOPPER, FULL-LOAD	9	16
STRAINER	16	8
STUD	1	8
	4	4
	5	19
	5	20
STUD/M8X40	5	18
	17	17
SWITCH/MAGNETIC ASSY	29	20
SWITCH/OILPRESSURE	24	1
	25	1
SWITCH/OVERHEAT	24	2
	25	2
TAPPET	11	6
TAPPET/INJECTIO ASSY	28	14
THERMOSTAT	17	26
THRUSTPIECE	20	18
TUBE, ORIFICE	21	8
VALVE ASSY	28	7
VALVE/EXHAUST	11	2

Description	Fig.	Key	Description	Fig.	Key	Description	Fig.	Key
VALVE/EXHAUST	11	2-A	WASHER/1.675	27	38			
VALVE/INTAKE	11	1	WASHER/1.7	27	39			
	11	1-A	WASHER/1.725	27	40			
VALVE/RELIEF ASSY	9	27	WASHER/1.75	27	41			
WASHER	15	9	WASHER/1.775	27	42			
	19	2	WASHER/1.8	27	43			
	27	4	WASHER/1.825	27	44			
	27	50	WASHER/1.85	27	45			
	29	31	WASHER/1.875	27	46			
WASHER / M6	20	31	WASHER/1.9	27	47			
WASHER,SP/M 6	20	32	WASHER/1.925	27	48			
WASHER/0.9	27	7	WASHER/1.95	27	49			
WASHER/0.925	27	8	WASHER/9X22X2	23	4			
WASHER/0.95	27	9	WASHER/AIR BLEEDER	28	2			
WASHER/0.975	27	10	WASHER/SK	29	24			
WASHER/08X14X01	9	15		29	25			
	9	24		29	26			
	26	23	WATERPUMP ASSY	17	1			
WASHER/1.0	27	11	YOKE/STARTER ASSY	29	1			
WASHER/1.025	27	12						
WASHER/1.05	27	13						
WASHER/1.075	27	14						
WASHER/1.1	27	15						
WASHER/1.125	27	16						
WASHER/1.15	27	17						
WASHER/1.175	27	18						
WASHER/1.2	27	19						
WASHER/1.225	27	20						
WASHER/1.25	27	21						
WASHER/1.275	27	22						
WASHER/1.3	27	23						
WASHER/1.325	27	24						
WASHER/1.35	27	25						
WASHER/1.375	27	26						
WASHER/1.4	27	27						
WASHER/1.425	27	28						
WASHER/1.45	27	29						
WASHER/1.475	27	30						
WASHER/1.5	27	31						
WASHER/1.525	27	32						
WASHER/1.55	27	33						
WASHER/1.575	27	34						
WASHER/1.6	27	35						
WASHER/1.625	27	36						
WASHER/1.65	27	37						

Alpabetical Index

6004-097-320-10

Description	Fig.	Key
ADAPTER/255X040 ASSY	22	1
ARM/CONTROL	20	29
ARM/FLOATING COMP	20	19
ARMATURE/STARTE ASSY	29	5
BALL	1	5
BEARING,RB/6002	9	45
BEARING,RB/6004	20	13
BEARING,RB/6203	9	46
	20	12
BEARING,THRUST CRANK	5	13
	6	2
	6	4
BEARING/BALL	30	6
	30	11
BEARING/CONNECTING R	6	5
	6	6
	13	7
BEARING/CRANK/LOWER	5	12
BEARING/CRANK/UPPER	5	11
BEARING/NEEDLE	29	8
	29	9
BEARING/OILLESS	29	12
	29	14
	29	16
BEARING/WATER PUMP	17	3
BEARING/WATERPUMP	17	4
BEARING/WITH SHOCKAB	29	13
BELT/VCOGHM34.0	18	5
BODY/NOZZLE HOLDER	27	2
BODY/OILPUMP	16	2
BODY/WATERPUMP	17	2
BOLT	5	2
	9	36
	11	18
	15	10
	16	7
	18	4
	23	8
	30	9
	30	10
	30	19
	30	20
	30	21
	30	22
	30	24
BOLT,ADJUST	5	29
BOLT,JOINT	16	13
BOLT,SEMS (S) M8X16	9	47
BOLT,SEMS/M10X20	8	3
BOLT,SEMS/M6X12	12	5
	20	15
BOLT,SEMS/M8X25 7T	4	3
BOLT/CONNECTINGROD	13	6
BOLT/FLANGE	15	7
BOLT/M10X1.25X82	1	7
BOLT/M6	9	31
	9	32
BOLT/M6X10	20	17
BOLT/M6X18	20	25
BOLT/M8X20	20	7-A
BOLT/THROUGH	29	30
BOLT/WASHERHEAD	28	10
BOLT/WS	16	6
BRACKET ROCKER SHAFT	11	12
BRACKET,ROCKER SHAFT	11	13
BRUSH	30	17
BRUSH/STARTER	29	2
BUSH	30	15
CAMSHAFT/INJECTION P	20	9
CAP,BLANK/30	9	20
CAP,OIL FILLER	2	2
CAP,SEALING	1	2
CARTRIDGE/OILFILTER	16	15
CLAMP,STRAINER	16	10
CLAMP/WIRE/10-12	21	7
CLAMP/WIRE/10-15	17	21
CLIP/HOSE/7.6-8.2	21	4
	21	4-A
CLIP/HOSE/8.7-9.3	21	9
	21	9-A
CLUTCH/STARTER ASSY	29	6
COLLOR	30	3
CONNECTINGROD ASSY	13	5
CONNECTOR	21	1
CONNECTOR,OIL FILTER	5	24
CONNECTOR/FUEL	21	1-A
CONNECTOR/GLOWPLUG	24	4
	25	4
COVER	29	11
	30	13
COVER,BEARING	30	5
COVER,INJ PUMP	5	25
COVER/CYLINDER HEAD	2	1
CRANKSHAFT ASSY	15	1
	15	1-A
CUP/SEALING/12	5	7
CUP/SEALING/16	9	3
CUP/SEALING/28	5	3
CUP/SEALING/36	5	4
CUTTER,VALVE	11	5
CYLINDERBLOCK ASSY	5	1
CYLINDERHEAD ASSY	1	1
DOWEL	5	21
ELEMENT ASSY	28	9
FAN/COOLING	18	1
FLANGEBOLT	3	3
	3	4
	5	27
	7	4
	9	5
	9	6
	9	7
	9	8
	9	9
	9	10
	9	12
	9	13
	9	14
	9	41
	9	42
	9	43
	10	2
	11	19
	16	11
	17	13
	17	18
	17	24
	17	25
	17	29
	20	7
	23	3
	23	5
	24	7
	25	7
FLYWEIGHT	20	16

Alpabetical Index

Description	Fig.	Key
FLYWHEEL	15	5
FRAME	30	12
FRAME/COMMUTATOR END	29	10
FRAME/DRIVEEND ASSY	30	7
GASKET	2	5
	17	8
	24	6
	25	6
	26	5
	26	22
GASKET, EXH. MANIFOLD	4	2
	26	7
GASKET, INLET MANIFOL	3	2
	26	6
GASKET, NOZZLE	19	3
GASKET, SPACER	17	16
	26	19
GASKET/COVER	5	26
	26	11
GASKET/CYLINDERHEAD	1	6
	26	3
GASKET/DELIVERYVALVE	28	6
GASKET/GEARCASE	9	26
	26	14
GASKET/HOUSING	17	23
	26	20
GASKET/PLATE	9	35
	26	15
GASKET/WATER PUMP	17	12
	26	18
GEAR/CAMSHAFT	12	2
GEAR/CRANK	15	3
GEAR/IDLE ASSY	12	6
GEAR/INJECTIONPUMP	20	10
GEAR/OILPUMP ASSY	16	3
GEAR/STARTER PLANETA	29	17
GEAR/STARTERINTERNAL	29	18
GEARCASE ASSY	9	1
GENERATOR ASSY	23	1
GLOWPLUG	24	3
	25	3
HANGER	10	1
HOLDER ASSY	30	14
HOLDER/BRUSH ASSY	30	16
HOLDER/DELIVERYVALVE	28	4
HOLDER/NOZZLE ASSY	27	1
	27	1-A
HOLDER/STARTER ASSY	29	3
HOSE/RABBER	2	6
HOSE/RUBBER	17	20
	21	5
HOSE/RUBBER/160	21	3
HOSE/RUBBER/70	21	5-A
HOUSING ASSY	28	8
HOUSING/STARTER ASSY	29	7
HOUSING/THERMOSTAT	17	22
INJECTIONNOZZLE ASSY	19	1
	19	1-A
INJECTIONPUMP ASSY	20	1
JOINTT-TYPE 2	21	6
KEY/07X05X09	12	3
	20	11
KEY/07X05X20	15	4
LEVELGAGE	5	31
LEVER, CONTROL	20	24
LEVER/PINIONDRIVE	29	19
MANIFOLD(INLET) ASSY	3	1
MANIFOLD/EXHAUST	4	1
METAL, CRANK SET	5	10
	6	1
	6	3
NIPPLE	5	22
NOZZLE ASSY	27	52
NUT	5	30
	9	33
	11	17
	20	26
	20	30
	27	51
	29	28
	29	29
	29	34
	30	2
	30	23
	30	25
NUT, CAP/M 8	9	18
NUT/CAP	2	4
NUT/M08	9	11
	11	20
	17	14
NUT/M08	17	19
	20	8
NUT/M10	23	6
NUT/M8	9	17
	29	32
NUT/NOZZLERETAINING	27	5
NUT/PINIONSTOP	29	23
OILPAN COMP	7	1
OILPUMP ASSY	16	1
OILSEAL	5	14
	26	10
O-RING	9	38
	17	28
	26	16
	26	21
ORING	28	5
	28	5-A
O-RING/P 8	20	27
O-RING/P15	16	9
	26	17
O-RING/P18	7	3
PACKING	9	19
	16	14
	26	13
PIECE, DISTANCE	27	6
PIN	5	17
	5	28
	15	2
PIN, CONTROL	20	21
PIN, GROOVE	9	25
PIN, NOZZLE HOLDER	27	3
PIN, PISTON	13	3
PIN/ARM	9	21
PIN/IDLEGEAR	5	6
PIN/INJECTIONPUMP	28	12
PIN/STRAIGHT	5	16
	16	5
PIN/TUBE	5	15
	9	40
PIPE, OIL	16	12
PIPE, WATER DRAIN	5	23
PIPE/FUEL	21	2
PIPE/INJECTION ASSY	19	4
	19	5
	19	6

Alpabetical Index

6004-097-320-10

Description	Fig.	Key
PIPE/WATER PUMP	17	11
PIPE/WATEROUTLET	17	27
PISTON	13	1
PISTON(OV)	14	1
	14	3
PISTON/VALVE/RELIEF	9	28
PLATE	28	13
	29	27
	30	8
PLATE, THRUST	12	4
PLATE, THRUST INJPUMP	20	14
PLATE/ADJUST	23	2
PLATE/ADJUSTING	28	11
PLATE/FRONT	9	34
PLATE/REAR	8	1
PLATE/TAPPET/AD 0.2	28	25
PLATE/TAPPET/AD 0.25	28	29
PLATE/TAPPET/AD 0.3	28	26
PLATE/TAPPET/AD 0.35	28	30
PLATE/TAPPET/AD 0.4	28	27
PLATE/TAPPET/AD 0.45	28	31
PLATE/TAPPET/AD 0.5	28	28
PLATE/TAPPET/AD 0.55	28	32
PLATE/TAPPET/AD 0.6	28	20
PLATE/TAPPET/AD 0.65	28	33
PLATE/TAPPET/AD 0.7	28	21
PLATE/TAPPET/AD 0.8	28	22
PLATE/TAPPET/AD 0.9	28	23
PLATE/TAPPET/AD 1.0	28	24
PLATE/WATER PUMP	17	9
PLUG	5	5
	9	2
	11	11
PLUG/M14X1.5	7	2
	7	2-A
PLUG/PT1/2	1	3
PLUG/SCREW	9	23
POINTER	8	2
PULLEY	30	1
PULLEY, WATER PUMP	18	2
PULLEY/CRANK	15	8
RACK/CONTROL ASSY	28	15
REGULATOR ASSY	30	26
RELAY, SOLENOID	24	8
	25	8
REPAIR/ENGINESET	26	1
RESISTANCE/1.0	21	8-A
RING, SNAP	13	4
RING, SNAP/ 4 E	9	22
	20	22
RING, SNAP/12 C	9	30
RING, SNAP/16 C	11	15
RING, SNAP/40 C	9	39
RING/PISTON SET	13	2
RING/PISTON/OV SET	14	2
	14	4
RING/SNAP	29	21
	29	22
RINGGEAR	15	6
RINK/CONTROL	20	20
ROCKERARM	11	9
ROCKERSHAFT ASSY	11	8
ROD, PUSH	11	7
ROTOR ASSY	30	4
ROTOR/OUTER	16	4
ROTOR/WATERPUMP	17	6
SCREW	29	33
SCREW ADJUST	11	16
SCREW/HOLLOW	28	1
SCREW/WATER PUMP	17	10
SEAL SET/WATER PUMP	17	5
SEAL, BEARING CAP	5	8
	26	8
SEAL, BEARING CAP/7	5	9
	26	9
SEAL, CYL.HEAD COVER	2	3
	26	4
SEAL, OIL	1	4
	9	4
	26	2
	26	12
SEAL/WATER PUMPPULLE	17	7
SEAT, VALVE SPRING	11	4
SEAT/SPRING/LOWER	28	19
SEAT/SPRING/UPPER	28	17
SHAFT, CAM	12	1
SHAFT/HYDRAULIC ASSY	9	44
SHAFT/ROCKERARM ASSY	11	10
SHAFT/STARTER PLANET	29	15
SHIM/INJECTION P/0.1	20	3
SHIM/INJECTION P/0.2	20	4
SHIM/INJECTION P/0.3	20	2
SHIM/INJECTION P/0.4	20	5
SHIM/INJECTION P/0.5	20	6
SHIM/INJECTIONPUMP	20	2-A
	20	4-A
	20	5-A
	20	6-A
SLEEVE/PLUNGER	28	16
SOLENOID	24	5
	25	5
SPACER, HYD, REAR	9	37
SPACER, PUMP.WATER	17	15
SPACER/FUN/19	18	3
SPRING	11	14
	30	18
SPRING GOVERNOR	20	23
SPRING, RETURN	20	28
SPRING, STARTING	20	33
SPRING/DELIVERYVALVE	28	3
SPRING/PUMPPLUNGER	28	18
SPRING/RELIEF VALVE	9	29
SPRING/STARTERBRUSH	29	4
SPRING/VALVE	11	3
STARTER ASSY	23	7
STOPPER, FULL-LOAD	9	16
STRAINER	16	8
STUD	1	8
	4	4
	5	19
	5	20
STUD/M8X40	5	18
	17	17
SWITCH/MAGNETIC ASSY	29	20
SWITCH/OILPRESSURE	24	1
	25	1
SWITCH/OVERHEAT	24	2
	25	2
TAPPET	11	6
TAPPET/INJECTIO ASSY	28	14
THERMOSTAT	17	26
THRUSTPIECE	20	18
TUBE, ORIFICE	21	8
VALVE ASSY	28	7
VALVE/EXHAUST	11	2

Description	Fig.	Key	Description	Fig.	Key	Description	Fig.	Key
VALVE/EXHAUST	11	2-A	WASHER/1.675	27	38			
VALVE/INTAKE	11	1	WASHER/1.7	27	39			
	11	1-A	WASHER/1.725	27	40			
VALVE/RELIEF ASSY	9	27	WASHER/1.75	27	41			
WASHER	15	9	WASHER/1.775	27	42			
	19	2	WASHER/1.8	27	43			
	27	4	WASHER/1.825	27	44			
	27	50	WASHER/1.85	27	45			
	29	31	WASHER/1.875	27	46			
WASHER / M6	20	31	WASHER/1.9	27	47			
WASHER,SP/M 6	20	32	WASHER/1.925	27	48			
WASHER/0.9	27	7	WASHER/1.95	27	49			
WASHER/0.925	27	8	WASHER/9X22X2	23	4			
WASHER/0.95	27	9	WASHER/AIR BLEEDER	28	2			
WASHER/0.975	27	10	WASHER/SK	29	24			
WASHER/08X14X01	9	15		29	25			
	9	24		29	26			
	26	23	WATERPUMP ASSY	17	1			
WASHER/1.0	27	11	YOKE/STARTER ASSY	29	1			
WASHER/1.025	27	12						
WASHER/1.05	27	13						
WASHER/1.075	27	14						
WASHER/1.1	27	15						
WASHER/1.125	27	16						
WASHER/1.15	27	17						
WASHER/1.175	27	18						
WASHER/1.2	27	19						
WASHER/1.225	27	20						
WASHER/1.25	27	21						
WASHER/1.275	27	22						
WASHER/1.3	27	23						
WASHER/1.325	27	24						
WASHER/1.35	27	25						
WASHER/1.375	27	26						
WASHER/1.4	27	27						
WASHER/1.425	27	28						
WASHER/1.45	27	29						
WASHER/1.475	27	30						
WASHER/1.5	27	31						
WASHER/1.525	27	32						
WASHER/1.55	27	33						
WASHER/1.575	27	34						
WASHER/1.6	27	35						
WASHER/1.625	27	36						
WASHER/1.65	27	37						

Alpabetical Index

1728-097-100-20

Description	Fig.	Key
ADAPTER ASSY	48	34-A
ADAPTER/45°/G1/ ASSY	48	32
ADAPTER/G1/4 ASSY	48	32-A
	48	36
ADAPTER/G3/8 ASSY	48	60
ADAPTER/L/G1/4XR1/4	38	16
	38	18
	39	16
	39	18
	47	6
	48	22
ADAPTER/L/PF1/4 ASSY	10	4
	48	34
ADAPTER/M16XG1/ COMP	48	64
ADAPTOR/G1/4BM14ASSY	10	4-A
ADAPTOR/G3/8XM16ASSY	11	13
	48	58
ARM	61	35
ARM/BRAKE COMP	25	11
	26	29
	27	8
	27	8-A
ARM/BRAKE/PEDAL COMP	27	5
	27	5-A
	28	4
	28	4-A
ARM/CLEANER COMP	64	3
	65	3
ARM/DIFF COMP	14	15
	15	15
ARM/HOOD COMP	51	22
ARM/HST COMP	17	10
	17	10-A
	17	10-B
ARM/HST/F COMP	18	4
	18	4-A
	18	4-B
ARM/HST/R COMP	18	13
	18	13-A
	18	13-B
ARM/KNUCKLE	43	11
ARM/LIFT COMP	49	5
	50	5
ARM/MID/LH/19 COMP	49	18
	49	18-A
ARM/MID/LH/22 COMP	50	18
	50	18-A
ARM/MID/RH/19 COMP	49	19
	49	19-A
ARM/MID/RH/22 COMP	50	19
	50	19-A
ARM/MIRROR ASSY	74	2
	75	18
	76	26
ARM/NEUTRAL ASSY	17	24
	17	24-A
ARM/PARKING ASSY	30	3
ARM/PTOBRAKE ASSY	33	43
	34	43
ARM/TENSION ASSY	34	19
ARM/TENSION/19 ASSY	33	19
ARM/TRUNNION	78	12
ARM/TRUNNION COMP	17	1
	17	1-A
	17	1-B
	17	1-C
ARN/BRAKE/G COMP	28	10
	28	10-A
AXLE/FRONT ASSY	42	1
BACKPLATE	25	2-A
	26	7-A
	26	20-A
BAND	60	13
	61	17
BAND,HOSE	60	16
	61	22
BAND,WIRE/140	60	16-A
	61	22-A
BAND/202	60	15
	61	21
BAND/CLEANER	4	6
	4	6-A
BAND/WIRE/250	60	15-A
	61	21-A
	75	14
	76	14
BAR/PTO COMP	33	27
	34	27
BATTERY CAP	7	3
	7	3-A
BATTERY/38B20R ASSY	7	1
BEARING	78	39
BEARING,RB 6006	12	6
	13	6
BEARING,RB/6003SS	78	40
BEARING,RB/6008	21	8
	22	8
BEARING,RB/6009	14	12
	15	12
BEARING,RB/6010	14	13
	15	13
BEARING,RB/6204	78	14
BEARING,RB/6205	12	13
	13	13
	21	2
	22	2
BEARING,RB/6205SS	45	6
	46	6
BEARING,RB/6206	21	12
	22	12
BEARING,RB/6206SS	33	7
	34	7
BEARING,RB/6305	12	12
	13	12
BEARING/BALL	12	12-A
	13	12-A
	17	28
	21	2-A
	21	8-A
	21	12-A
	22	2-A
	22	8-A
	22	12-A
	23	12
	23	18
	23	21-A
	23	22
	23	41
	23	47
	23	50
	24	12
	24	18
	24	22
	24	41
	24	47

Alpabetical Index

Description	Fig.	Key
BEARING/BALL	24	51
	45	6-A
	46	6-A
BEARING/THRUST	78	13
BELT/VB039	33	26
	33	26-A
BELT/VB041	34	26
	34	26-A
BLOCK/CYLINDER	78	3
	78	3-A
BLOCK/PORT	78	2
BLUB/12V-21/5W	75	5
	76	5
BOLT	3	13-B
	3	16
	3	16-A
	9	8
	11	3
	11	4
	33	29
	34	29
	51	27
BOLT 7T(SP)	1	10
BOLT(S) M10X25	27	3
	28	3
	48	39
	76	16-A
BOLT(SP)/M6X16	5	6
	51	17
	58	19
	59	31
	60	11
	60	11-A
	60	21
	61	15
	61	20
	61	30-A
	74	3
	75	19
	76	27
BOLT,SEMS	2	18
	7	14
	33	28
	34	28
	48	17-A

Description	Fig.	Key
BOLT,SEMS	48	65
	51	20
	62	2
	63	2
BOLT,SEMS (SP)	3	5
	3	13
	14	32
	18	2
	18	11
	51	7
	51	13
BOLT,SEMS (S)	48	23
BOLT,SEMS (S) M8X16	16	7
	17	32
	25	10
	26	15
	26	28
	48	57
BOLT,SEMS/M8X25 7T	10	8
	20	16-A
	23	66
	24	67
BOLT/BATTERY	7	4
BOLT/M 6X30	2	13
BOLT/M 8X25	2	32
BOLT/M 8X35	17	13-A
BOLT/M 8X40	17	13
	48	17
BOLT/M 8X65	5	2
BOLT/M06X08/APSET	79	8
BOLT/M10X1.25X20	1	3
	7	15
BOLT/M10X100	2	36
BOLT/M10X20	21	18
	22	18
	23	28-A
	23	29
	23	57
	24	29
	24	58
	40	10
	41	10
BOLT/M10X25	19	3
	20	3
	23	3

Description	Fig.	Key
BOLT/M10X25	23	32
	23	60
	24	3
	24	32
	24	61
	31	6
	31	6-A
	32	6
	32	6-A
	33	2
	33	5
	34	2
	34	5
BOLT/M12X25	10	11
BOLT/M12X30	49	24
	50	24
	73	2
BOLT/M12X35	19	10
	72	2
BOLT/M12X40	19	10-A
	20	10
	23	62
	24	63
BOLT/M12X60	77	2
BOLT/M6X15	51	10
BOLT/M8X20	17	20
	17	22
BOLT/M8X25	14	4
	15	4
BOLT/M8X30	9	10
	19	8
	19	16
	20	8
	20	16
	23	8
	23	37
	24	8
	24	37
BOLT/M8X45/7T	33	51
	34	51
BOLT/M8X50	76	16
	76	22
BOLT/M8X75	76	20
BOLT/S	2	47
	3	11

Alpabetical Index

1728-097-100-20

Description	Fig.	Key	Description	Fig.	Key	Description	Fig.	Key
BOLT/S	3	18-A	BOOT	61	25	BUSH/16X18X15	64	11
	12	17	BRACKET/FRONT COMP	3	15		64	11-A
	13	16	BRACKET/LAMP COMP	51	11		65	11
	14	27		51	11-A		65	11-A
	15	27	BRACKET/LAMP/NUMBER	76	19	BUSH/25X28X25	42	2
	17	22-A		76	21	BUSH/68X71X14	78	17
	26	5	BRACKET/LEVER COMP	30	1	BUSH/95X100X22	78	16
	26	18		30	1-A	BUTTON	30	10
	30	2		30	1-B	CABLE	73	7
	30	12	BRACKET/MOUNT/L COMP	1	1	CABLE, WIRE	7	13
	48	4	BRACKET/MOUNT/R COMP	1	2	CABLE/ACCELERATOR	8	1
	48	21	BRACKET/MUFFLER/CLEA	3	9	CABLE/DIFF ASSY	14	28
	48	67		3	9-A		14	28-A
	75	16		3	9-B		15	28
BOLT/SM/M10X23	17	2	BRACKET/NEUTRAL	17	19		15	28-A
BOLT/SP	2	29	BRACKET/RESERVETANK	2	46	CABLE/EARTH ASSY	7	11
	3	13-A	BRACKET/VALVE COMP	48	28	CABLE/PARKING ASSY	30	16
	3	18	BRAKE/110 ASSY	25	1		30	16-A
	3	19		25	1-A	CABLE/PTO/19 ASSY	33	36
	7	12		26	6		33	36-A
	11	12		26	6-A		33	36-B
	14	20		26	19	CABLE/PTO/22 ASSY	34	36
	15	20		26	19-A		34	36-A
	26	5-A	BREATHER, TANK CAP	6	7		34	36-B
	26	18-A	BULB	60	12	CAP	2	2
	35	2		61	16		2	39
	37	3	BULB/12V 3W	59	28		56	13
	40	13		59	30		58	10
	41	13	BULB/12V/45/40W	57	2		59	6
	48	8	BULB/12V/5W	75	8		79	4
	48	29		76	8	CAP, BATTERY	7	2
	48	30	BULB/12V21W	75	3	CAP, PTO SHAFT	71	5
	51	24		76	3	CAP, TANK	6	6
	52	8	BULB/12V5W	75	4	CAP, TIRE VALVE	31	4
	56	5		76	4		32	4
	58	20	BULB/LAMP/14V60MA	59	23		45	4
	59	32	BUSH(18X20X20)	17	25		46	4
	61	30	BUSH, LEVER	2	12	CAP/32X7	78	37-A
	61	36	BUSH/10X12X10	40	7	CAP/FUSEBOX/5P	60	7
	71	6		41	7	CAP/STEERING	36	2
	73	8	BUSH/15X17X11	33	20	CAP/WHEEL	35	5
	74	6		33	44		45	8
	75	22		34	20		46	8
	76	30		34	44	CARTRIDGE	48	56
BOOT	60	19	BUSH/15X17X25	30	4	CASE	78	1

Alpabetical Index

Description	Fig.	Key
CASE	78	1-A
CASE, DIFF	14	6
	15	6
CASE/CHAIN/A	19	5
	20	5
	23	5
	23	5-A
	23	34
	23	34-A
	24	5
	24	5-A
	24	34
	24	34-A
CASE/CHAIN/B	19	6
	19	6-A
	19	6-B
	19	6-C
	23	6
	23	6-A
	23	35
	23	35-A
CASE/CHAIN/B/G	20	6
	24	6
	24	6-A
	24	35
	24	35-A
CASE/SPACER	19	1
	19	1-A
	20	1
	23	1
	23	30
	24	1
	24	30
CASE/TRANSMISSION/LH	10	1
	10	1-A
	10	1-B
CASE/TRANSMISSION/RH	10	6
CHUTER/LOWER/LH COMP	62	3
	62	3-A
	63	3
	63	3-A
CHUTER/LOWER/RH COMP	62	8
	62	8-A
	63	8
	63	8-A

Description	Fig.	Key
CHUTER/UPPER/19 COMP	62	1
	62	1-A
CHUTER/UPPER/22 COMP	63	1
	63	1-A
CLAMP	2	44
	60	13-A
	61	17-A
CLAMP/32	3	12
	3	12-A
CLAMP/WIRE/09-11	5	16
CLAMP/WIRE/10-15	2	30
CLAMP/WIRE/11-13	5	13
CLAMP/WIRE/30-38	2	22
CLAMP/WIRE/36-44	2	23
CLAMP/WIRE/47-55	4	8
	4	10
CLAMP/WORM/14-24	48	3
	48	10
CLEANER/AIR ASSY	4	1
CLIP	4	5
CLIP(B)	7	8
	56	8
CLIP, PIN	49	14
	50	14
CLIP/HOSE/10.4-11.1	5	15
CLIP/HOSE/11.9-12.6	5	8-A
	5	10-A
	5	12-A
CLIP/HOSE/11-13	5	8
	5	10
	5	12
CLUTCH/DIFFLOCK	14	14
	15	14
COLLAR	2	15
COLLAR, PINION THRUST	14	9
	15	9
COLLAR, THRUST	14	11
	15	11
COLLAR/06X14X13	48	44
COLLAR/08X12X13	37	5
	74	5
	75	21
	76	29
COLLAR/13X17X22	49	38
	50	38

Description	Fig.	Key
COLLAR/23X47X12	78	25
COLLAR/26X32X24	43	5
COLLAR/26X32X53	45	7
	46	7
COLLAR/31X38X11	12	4
	13	4
COLLAR/31X38X41	33	6
	34	6
COLLAR/34X26X21	12	11
	13	11
CONNECTOR	2	26
	48	24
CONTROLLER/STEERING	37	1
COVER	58	9
	59	5
COVER ASSY	4	2
COVER, DUST	38	2
	38	8
	39	2
	39	8
COVER/44X10	43	3
COVER/BATTERY	7	7
COVER/CENTER/LH	56	9
COVER/CENTER/RH COMP	56	10
COVER/FRONT	52	1
COVER/FRONT/LH	53	1
COVER/FRONT/MESH	52	3
	52	3-A
COVER/FRONT/RH	53	2
COVER/FRONT/UNDER	52	7
COVER/FUSE	61	8
COVER/GPF1	48	13
COVER/LOWER ASSY	53	5
	53	5-A
COVER/PTO COMP	35	1
COVER/SHAFT SET	71	4
COVER/SWITCH	58	14
	59	17
CUSHION, RUBBER	3	10
CUSHION/RUBBER/10X25	2	33
CYLINDER ASSY	38	1
	39	1
CYLINDER ASSY	47	1
DAMPER/OIL ASSY	17	15
DIODE/3.0A	60	5

Alpabetical Index

1728-097-100-20

Description	Fig.	Key
DIODE/3.0A	61	5
DRUM/BRAKE	25	14
	26	1
DUST/SEAL	47	5
ELEMENT	79	7
ELEMENT ASSY	4	3
FAN/HST	11	11
FENDER COMP	54	1
FENDER/G COMP	55	1
FILTER COMP	48	9
FILTER/FUEL ASSY	5	1
FILTER/RETURN ASSY	48	55
FILTER/SUCTION COMP	48	1-A
FLANGE/YOKE	9	6-A
FLANGEBOLT	2	13-A
	2	32-A
	2	47-A
	3	11-A
	3	19-A
	58	19-A
	59	31-A
	60	11-B
	60	21-A
	61	15-A
	61	20-A
	61	30-B
FLASHER ASSY	61	19
FRAME/LAMP COMP	75	15
FRAME/MAIN/19 COMP	40	1
	40	1-A
	40	1-B
	40	1-C
	40	1-D
FRAME/MAIN/22 COMP	41	1
	41	1-A
	41	1-B
	41	1-C
	41	1-D
	41	1-E
	41	1-F
FRANGE/YOKE	9	3-A
FUSE/32V03A	60	2
FUSE/32V10A	60	3
FUSE/32V20A	60	4
FUSE/BLADE/32V03A	61	2
FUSE/BLADE/32V10A	61	3
FUSE/BLADE/32V20A	61	4
FUSE/SLOWBLOW	60	6
	61	6
GASKET	3	2
	6	8
	78	25-A
GAUGE,FUEL	6	9
GAUGE/OILLEVEL	10	10
GEAR/BEVEL/14	14	10
	15	10
GEAR/BEVEL/45	12	9
	13	9
GEAR/INPUT/12 COMP	12	1
	12	1-A
	13	1
	13	1-A
GEAR/SPUR/23	12	10-A
	13	10-A
GEAR/SPUR/23 COMP	12	10
GEAR/SPUR/23/G COMP	13	10
GEAR/SPUR/48	14	1
	15	1
GRIP,HANDLE	64	12
	65	12
GRIP/04X12X50	29	2
GRIP/07X65/OR	8	5-A
GRIP/09X65/OR	8	5
GRIP/ORANGE	30	11
GRIP/PTO	33	33
	34	33
GRIP/SUB	48	43
GROMMET	2	16
	49	30
	50	30
	54	2
	55	2
GROMMET/10X30X5	54	4
	55	4
GROMMET/9	49	31
	50	31
GUIDE	2	4
	2	5
GUIDE/CHAIN	21	10
	22	10
GUIDE/CHAIN	23	20
	23	49
	24	20
	24	49
GUIDE/HOSE	48	66
HARNESS	59	15
HARNESS/BATTERY ASSY	7	9
	7	9-A
HARNESS/LAMP	75	9
	76	9
HARNESS/LAMP/G ASSY	75	13-A
	76	13-A
HARNESS/LAMP/NO ASSY	75	13
	76	13
HARNESS/MAIN ASSY	60	1
	60	1-A
	60	1-B
HARNESS/MAIN/G ASSY	61	1-B
HARNESS/MAIN/HM ASSY	61	1
	61	1-A
HITCH/FRONT SET	73	1
HOLDER/10	14	31
HOLDER/JE/9-9	26	16
HOOD COMP	51	1
HOOD/LAMP	51	14
HORN ASSY	60	20
	61	28
	61	28-A
	61	29
HOSE/06X10X1650 ASSY	5	14
HOSE/07X12X450 ASSY	5	9
HOSE/07X12X700 ASSY	5	7
	5	11
HOSE/14X22X82	48	2
	48	9-A
HOSE/290 ASSY	2	24
HOSE/450 ASSY	2	25
HOSE/CLEANER/INLET	4	7
HOSE/CLEANER/OUTLET	4	9
HOSE/HYDRO/1050 ASSY	39	17
HOSE/HYDRO/1450 ASSY	48	51
	48	51-A
HOSE/HYDRO/750 ASSY	48	53
HOSE/HYDRO/900 ASSY	38	17
	39	19

Alpabetical Index

Description	Fig.	Key
HOSE/HYDRO/900 ASSY	47	11-A
HOSE/HYDRO/950 ASSY	48	26
	48	52
HOSE/RADIATOR/LOWER	2	21
HOSE/RADIATOR/UPPER	2	20
HOSE/RUBBER	2	41
	2	43
HOSE/VALVE/800 ASSY	38	19
	47	11
HST(SXG/21) ASSY	11	1
	11	1-A
HUB	11	8
HUB/28X38X30	49	2
	49	2-A
	49	2-B
	50	2
	50	2-A
	50	2-B
HUB/CAP COMP	35	3
HUB/HST	12	7
	13	7
INSULATOR	1	5
	1	11
	2	8
	2	8-A
	51	3
	54	3-A
	54	3-B
	55	3-A
	55	3-B
	56	2-A
	56	2-B
	56	2-C
	56	4-B
	56	4-C
	56	4-D
	73	6
INSULATOR/10X30X03	6	2
INSULATOR/15	36	3
INSULATOR/15X15X140	2	9
INSULATOR/25X60	40	15
	40	16
	41	15
	41	16
INSULATOR/270	40	12-A

Description	Fig.	Key
INSULATOR/270	41	12-A
	56	12-A
INSULATOR/275	40	12
	41	12
	56	12
JOINT BALL M08LH	17	6
JOINT BALL M08RH	17	3
JOINT,BALL	44	2
JOINT/BALL ASSY	44	4
JOINT/UMIVERSAL SET	9	1
JOINT/UNIVERSAL ASSY	9	2-A
JOINT/UNIVERSAL SET	9	1-A
KEY ASSY	58	12
	59	8
KEY,ROTARY TOP SHAFT	43	12
KEY/08X07X20	33	11
	34	11
KIT/JOINT	9	2
KNOB/10X33	49	34
	50	34
KNOB/ADJUST	49	34-B
	49	34-C
	50	34-B
	50	34-C
KNOB/HANDLE	49	34-A
	50	34-A
KNOK	48	16
LABEL/ADJUST	49	36
	50	36
LABEL/BATTERY	70	4
	70	4-A
LABEL/CAUTION	70	10
LABEL/CE	70	1
LABEL/CONTROL/PARKIN	69	2
LABEL/CONTROL/SUBCON	68	4
	69	4
LABEL/DIFF	68	3
	69	3
LABEL/FUEL	70	9
LABEL/FUSE	60	8
	61	7
LABEL/GAUGE	49	42
	50	42
LABEL/LH	59	25
LABEL/LIFT/MOWER	68	1

Description	Fig.	Key
LABEL/LIFT/MOWER	69	1
LABEL/METER	58	4
LABEL/METER/HM	59	24
LABEL/NOISE/LWA/103	70	2-A
LABEL/NOISE/LWA/105	70	2
LABEL/PANEL/LH	58	5
LABEL/PANEL/RH	58	6
	59	26
LABEL/PARKING	68	2
LABEL/W/FAN	70	6
LABEL/W/RADIATOR	70	3
LABEL/W/STARTER	70	8
LABEL/WARNING/BELT	70	7
	70	11
LABEL/WARNING/HOT	70	5
LAMP/COMBINATIO SET	75	2
	76	2
LAMP/HEAD ASSY	57	1
LAMP/LIGHT ASSY	59	27
LAMP/NUMBERPLAT SET	75	7
	76	7
LAMP/PARKING ASSY	59	29
LAMP/X-H SET	76	1
	76	1-A
LAMP/X-L SET	75	1
	75	1-A
LEVER/125 COMP	48	40
LEVER/ACCELERATOR	8	4
LEVER/ADJUST COMP	17	21
	17	21-A
LEVER/CLEANER ASSY	64	10-A
	64	10-B
	65	10-A
	65	10-B
LEVER/CLEANER COMP	64	10
	65	10
LEVER/PARKING ASSY	30	7
LEVER/PTO COMP	33	32
	34	32
LEVER/UNLOAD ASSY	16	1-A
LEVER/UNLOAD COMP	16	3
	16	8
LEVER/VALVE/MID COMP	48	41
LEVER/VALVE/SID COMP	48	42
	48	42-A

Alpabetical Index

1728-097-100-20

Description	Fig.	Key
LINING	25	4-A
	25	6
	26	9-A
	26	11
	26	22-A
	26	24
LINING/11X40X03	8	6
LINING/PTOBRAKE COMP	33	48
	34	48
LINK/LOWER COMP	49	9
	49	9-A
	49	9-B
	50	9
	50	9-A
	50	9-B
LINK/UPPER/19 COMP	49	11
	49	11-A
LINK/UPPER/22 COMP	50	11
	50	11-A
LINKPIN	73	5
	73	5-A
MAT/LH	56	6
MAT/RH	56	7
METAL/BRAKE	12	14
METAL/G	13	14
METAL/PTO/FRONT	33	4
	34	4
METAL/SLIDE	78	5
METER/HOUR ASSY	58	7
	59	10
MIRROR ASSY	74	8
	75	24
	76	32
MIRROR SET	74	1
	75	17
	76	25
MUFFLER COMP	3	1
NEEDLE	78	15
NET/COVER/LOWER/RH	53	7-A
NET/HOOD	51	9
NET/SIDE/LH	53	6
	53	6-A
NET/SIDE/RH	53	7
NIPPLE, GREASE	18	6
	18	15
NIPPLE, GREASE	28	5
	28	21
	40	2
	40	4
	41	2
	41	4
	42	3
	49	3-A
	50	3-A
NIPPLE, GREASE/B-M6F	49	3
	50	3
NIPPLE, GREASE/PT1/4	38	4
	38	10
	39	4
	39	10
NIPPLE, GREASE/PT1/8	42	8
NUT	2	34
	3	3
	7	10
	8	9
	17	4
	17	9
	17	14
	25	8
	25	12-A
	26	13
	26	26
	26	30-A
	27	12
	28	15
	33	52
	34	52
	44	3
	49	10
	49	35-A
	50	10
	50	35-A
	51	12
	51	15
	59	13
	60	18
	61	24
NUT, ADAPTER/AN06	71	2
NUT, CASTTLE/M16X1.5	42	5
NUT, LOCK	61	27
NUT, RING	79	5
NUT, RING/M28X1.0	58	11
	59	7
NUT, SLOTTED	38	3
	38	9
	39	3
	39	9
NUT, SPEED	52	4
NUT, SPEED/P4	53	8
NUT, U/M8	62	14
	63	14
NUT/5/8-18UNF	37	2
NUT/A/M12	58	15
	59	18
NUT/ADJUST	49	37
	50	37
NUT/B/M12	58	18
	59	21
NUT/M 6	7	5
	33	49
	34	49
	48	31
NUT/M10	2	37
	25	12
	26	30
	31	9
	32	9
NUT/M12	43	15
	77	3
NUT/M12X1.25	38	14
	39	14
	43	9
	44	6
NUT/M16	33	15
	34	15
NUT/M6	2	19
	7	6
	51	21
	60	14
	61	12
	61	18
NUT/M8	1	6
	17	7
	27	14
	28	17

Alpabetical Index

Description	Fig.	Key
NUT/SM/LH/M12X1.25	44	5
NUT/WASHER	1	12
	17	16
	17	35
	40	14
	41	14
	51	8
	51	23
	51	28
	54	8
	55	8
	73	9
	75	6
	76	6
	76	18
	76	22-A
	76	24
OILSEAL	78	33-B
O-RING	48	15
	48	25
	78	51
O-RING /P41	78	26
O-RING/G50	12	16
	13	15
O-RING/G60	12	8
	13	8
O-RING/P 8	78	52
O-RING/P10A	79	2
O-RING/P12	78	48
O-RING/P14	11	14
	48	59
	48	61
	78	28
O-RING/P15	11	7
O-RING/P16	48	20
O-RING/P24	14	17
	15	17
O-RING/P28	48	5
	48	7-A
O-RING/P44	79	6
ORNAMENT/I	66	3
	67	3
ORNAMENT/ISEKI/130	66	4
	67	4
ORNAMENT/ISEKI/LH	66	1
ORNAMENT/ISEKI/LH	67	1
ORNAMENT/ISEKI/RH	66	2
	67	2
ORNAMENT/SXG19	66	5
ORNAMENT/SXG22	67	5
PACKING	2	7
	2	28
	2	40
	59	11
	79	9
PACKING/PISTON	38	11
	39	11
PAD/100	54	3
	55	3
	56	2
	56	4
	56	4-A
PAD/25	40	9
	41	9
PAD/50	2	11-A
	40	8-B
	41	8-C
PAD/BRAKE	27	2
	28	2
PAD/HST/OR	18	3
PAD/OR	18	12
PANEL/MONITOR	58	3
	59	3
PANEL/RADIATOR COMP	2	31
PANEL/SWITCH ASSY	58	1
PANEL/SWITCH COMP	58	2
PANEL/SWITCH/HM ASSY	59	1
	59	1-A
PANEL/SWITCH/HM COMP	59	2
PEDAL/BRAKE	27	1
PEDAL/BRAKE COMP	28	1
PEDAL/DIFF	14	25
	15	25
PEDAL/DIFF COMP	14	21
	15	21
PEDAL/HST/F COMP	18	1
PEDAL/HST/RH COMP	18	10
PIN	10	7
	11	2
	14	2
PIN	14	3
	15	2
	15	3
	19	2
	19	7
	20	2
	20	7
	23	2
	23	7
	23	31
	23	36
	23	59
	24	2
	24	7
	24	31
	24	36
	24	60
PIN 6X28	17	11
	27	6
	27	9
	28	11
PIN,SPLIT/2 X10	8	3
PIN,SPLIT/2 X20	16	11
	17	17
	27	17
	28	20
	30	15
	49	44
	50	44
PIN,SPLIT/2.5X15	14	30
	15	30
	30	18
PIN,SPLIT/2.5X20	16	6
	17	30
	18	9
	33	35
	33	39
	34	35
	34	39
	44	8
PIN,SPLIT/2.5X25	18	18
	49	27
	49	40
	50	27
	50	40

Alpabetical Index

1728-097-100-20

Description	Fig.	Key
PIN, SPLIT/3 X20	14	24
	15	24
	29	4
	38	15
	39	15
	49	8
	49	17
	50	8
	50	17
	62	6
	62	11
	63	6
	63	11
	64	8
	65	8
PIN, SPLIT/3 X25	43	10
PIN, SPLIT/3X30	47	10
	49	21
	50	21
	64	5
	64	14
	65	5
	65	14
PIN, SPLIT/4 X30	42	7
PIN, SPRING/4 X25	49	35
	50	35
PIN, SPRING/5 X32 W	11	9
	43	7
PIN, SPRING/6 X32 W	64	2
	65	2
PIN, ST	78	43
PIN/05X17	48	48
PIN/05X63	48	45
	48	45-A
PIN/08X19	17	29
	17	29-A
PIN/10X21	14	16
	15	16
PIN/10X29	64	7
	65	7
PIN/12X32	49	12-A
	49	15
	50	12-A
	50	15
PIN/12X33	49	12-B
PIN/12X33	49	15-A
	50	12-B
	50	15-A
PIN/12X42	49	12
	50	12
PIN/12X48	14	22
	15	22
	49	6-A
	50	6-A
PIN/12X50	49	6
	50	6
PIN/15X58	47	8-A
PIN/15X60	47	8
PIN/15X74	47	7-A
PIN/15X77	47	7
PIN/16X78	49	22
	50	22
PIN/30X120 COMP	73	4
PIN/8X36	54	5
	55	5
PIN/ANCHOR	25	4
	26	9
	26	22
PIN/GROOVE	17	11-A
	27	6-A
	27	9-A
	28	11-A
PIN/LEVER COMP	16	1
	16	2
PIN/PIVOT	42	4
	42	4-A
PIN/SNAP	6	5
	48	47
	48	50
	54	6
	55	6
PIN/TENSION	33	16
	33	40
	34	16
	34	40
PINION/BEVEL/12	14	8
	15	8
PIPE	2	42
PIPE/CHARGE COMP	48	63
PIPE/FILTER COMP	48	62
PIPE/RETURN COMP	48	54
	48	54-A
PIPE/SUCTION COMP	48	6-A
PIPE/SUCTION/F COMP	48	1
PIPE/SUCTION/R COMP	48	6
PISTON	47	2
	78	6
PLATE(PARKING) COMP	29	1
PLATE, SWITCH	60	24-A
	61	33-A
PLATE/BACKING	25	2
	26	7
	26	20
PLATE/BAR	62	13
	63	13
PLATE/BUMPER	72	1
PLATE/CAUTION	2	45
PLATE/CLEANER/1 COMP	64	1
	64	1-A
PLATE/CLEANER/2 COMP	65	1
	65	1-A
PLATE/I/16X192	18	16
PLATE/I/53X70 COMP	49	29
	50	29
PLATE/I/80X80	76	15
PLATE/IR/18X50 COMP	53	3
PLATE/IRX13X35	60	24
	61	33
PLATE/L/110X19	76	15-A
PLATE/SEAL COMP	40	11
	41	11
PLATE/SPRING	78	22
PLATE/SWASH	78	4
	78	4-A
PLATE/VALVE/MOTOR	78	9
PLATE/VALVE/PUMP	78	8
PLUG	2	27
	48	7
	48	38
PLUG(G3/8)	78	26-A
PLUG(PF1/4)	78	27
PLUG, OIL	10	9
PLUG/40X8	21	11
PLUG/M10X1	78	47
PLUG/SCREW/SEAL	10	2

Alpabetical Index

Description	Fig.	Key
PLUG/SCREW/SEAL	10	3
	19	12
	19	13
	20	12
	20	13
	23	9
	23	10
	23	38
	23	39
	23	58
	24	9
	24	10
	24	38
	24	39
	24	59
	78	53
PLUG/SEAL/25	13	19
POPPET/CHECK/0.5	78	23
POPPET/CHECK/1.3	78	24
POPPET/RELIEF	78	21
POST/STEERING ASSY	40	6
	40	6-A
	41	6
	41	6-A
PROTECTOR	2	3
	2	11
	40	8
	40	8-A
	41	8-A
	41	8-B
PULLEY/FT80X47	33	21
	34	21
PULLEY/V2B104	33	1
	34	1
PULLEY/V2B155	33	12
	34	12
PUMP/FUEL ASSY	5	5
	5	5-A
PUMP/GEAR ASSY	48	11
PUMP/GEAR SET	48	12
RADIATOR ASSY	2	1
REFLECTOR ASSY	75	10
	75	10-A
	76	10
	76	10-A
RELAY ASSY	60	10
	61	14
RELAY/4P ASSY	60	9
	60	9-A
	61	13
RESERVETANK ASSY	2	38
RIM,WHEEL	31	2
RIM/WHEEL COMP	45	3
RIM/WHEEL/FRONT COMP	46	3
RING,SNAP/15 C	30	6
	33	22
	33	25
	33	47
	34	22
	34	25
	34	47
RING,SNAP/16 C	25	16
	26	3
RING,SNAP/17 C	78	42
RING,SNAP/18 C	17	27
RING,SNAP/20C	18	20
	78	30
RING,SNAP/25 C	21	6
	22	6
	23	16
	23	45
	24	16
	24	45
RING,SNAP/30 C	12	3
	13	3
	21	17
	22	17
	23	26-A
	23	27
	23	28
	23	55
	23	56
	24	27
	24	28
	24	56
	24	57
	78	41
RING,SNAP/32 C	78	32
RING,SNAP/47 C	78	31
	78	33
RING,SNAP/52 C	21	3
	22	3
	23	13
	23	42
	24	13
	24	42
RING/BACKUP	78	49
RING/O	10	5
	11	7-A
	38	12
	39	12
	48	33
	48	35
	48	37
	78	29
RING/SNAP	9	3
	33	8
	34	8
RING/SNAP/CH62	21	13
	22	13
RING/SNAP/R62	21	13-A
	22	13-A
	23	22-A
	23	23
	23	51
	24	23
	24	52
ROD	30	8
ROD PACKING	47	4
ROD/08X195	49	41
	50	41
ROD/08X80	30	13
ROD/CLEANER/19 COMP	64	6
ROD/CLEANER/22 COMP	65	6
ROD/HST/F	18	7
ROD/M08/LHX60	27	15
	28	18
ROD/M08X172	28	14
ROD/M08X64	17	5
ROD/M08X67	27	11
ROD/M08X85	17	34
ROD/PISTON ASSY	38	7
	39	7
ROD/TIE/M12X535	44	1
ROLLERCHAIN	21	9

Alpabetical Index

Description	Fig.	Key	Description	Fig.	Key	Description	Fig.	Key
ROLLERCHAIN	22	9	SEAL/OIL	22	14	SHAFT/PTO/MID	34	9
	23	19		23	23-A	SHAFT/PUMP	78	10
	23	48		23	24	SHAFT/WHEEL COMP	21	15
	24	19		23	52		21	15-A
	24	48		24	24		22	15
RUBBER,CUSHION	56	14		24	53		22	15-A
SCREW	59	12		78	33-A		23	24-A
	61	10		78	34		23	25
SCREW/M03X20	60	23		78	35		23	53
	61	32		78	37		23	53-A
SCREW/M8X30	28	8	SEAL/ROD	38	5		24	25
SCREW/P	2	6		39	5		24	25-A
SCREW/SOCKET	78	44	SHAFT,DIFF. PINION	14	7		24	54
SCREW/SP	35	4		15	7		24	54-A
	53	4	SHAFT/ADJUST COMP	49	26	SHAFT/YOKE	9	5-A
	53	11		49	26-A	SHIM,A/0.5	43	16
	53	11-A		50	26	SHIM,A/1.0	43	17
	53	14		50	26-A	SHIM/0.2	12	5
	56	11	SHAFT/BRAKE	27	4		12	18
	56	11-A	SHAFT/BRAKE/G COMP	28	12		13	5
SCREW/SP/M06X16	53	4-A		28	12-A		13	17
	53	14-A		28	12-B	SHIM/0.6	12	19
SCREW/SP/M06X20	53	11-B	SHAFT/CAM	25	3		13	18
SCREW/TAPPING/6X16	52	2		25	3-A		19	9
SEAL,OIL/TC15257	48	14		26	8		19	9-A
SEAL,OIL/TC20408	22	11		26	8-A		19	9-B
	23	21		26	21		19	15
	24	21		26	21-A		20	9
	24	50	SHAFT/DIFF	21	1		20	15
SEAL,OIL/TC25407	12	15		21	1-A		23	61
SEAL,OIL/TC284511	21	4		22	1		23	65
	22	4		23	11		24	62
	23	14		23	40		24	66
	23	43	SHAFT/DIFF/G	22	1-A	SHIM/0.6/A	3	6
	24	14		24	11	SHIM/0.6/B	3	7
	24	43		24	40		3	7-A
SEAL/10X10X500	53	9	SHAFT/HST COMP	17	12	SHIM/0.9	78	7
SEAL/15X15X380	2	10	SHAFT/LIFT COMP	49	1	SHIM/1.2	3	8
SEAL/20X20X100	51	4		49	1-A	SHROUD	2	17-B
SEAL/30X20X350	53	12		50	1	SHROUD COMP	2	17
SEAL/47	78	36		50	1-A		2	17-A
SEAL/70X20X680	51	2	SHAFT/MOTOR	78	11	SLEEVE/YOKE	9	4-A
SEAL/DUST	38	6		78	11-A	SPACER COMP	51	19
	39	6	SHAFT/PTO/FRONT SET	71	1	SPINDLE/KNUCKLE/LH	43	1
SEAL/OIL	21	14	SHAFT/PTO/MID	33	9	SPINDLE/KNUCKLE/RH	43	2

Alpabetical Index

Description	Fig.	Key
SPOOL	78	46
SPRING	25	7
	26	12
	26	25
	27	7
	28	9
	30	9
	51	6
SPRING, DISK	8	7
SPRING, VALVE	79	1
SPRING/CLIP	62	7
	62	12
	63	7
	63	12
SPRING/HC021	78	20
SPRING/HC022	28	7
SPRING/HC023	78	50
SPRING/HC030	78	19
SPRING/HC053	78	18
SPRING/HC084	49	32
	50	32
SPRING/HE036	25	5
	26	10
	26	23
SPRING/HE060	27	10
	28	13
SPRING/HE068	27	7-A
	28	9-A
SPRING/HE074	14	18
	15	18
SPRING/HE107	62	4
	62	9
	63	4
	63	9
SPRING/HE108	17	33
SPRING/HE110	17	33-A
SPRING/HE138	33	37
	34	37
SPRING/HT013	29	5
SPRING/HT014	16	4
	16	9
	16	9-A
	16	9-B
	16	9-C
SPRING/HT032	33	23
SPRING/HT032	34	23
SPRING/HT033	33	45
	34	45
SPROCKET/11	21	5
	22	5
	23	15
	23	44
	24	15
	24	44
SPROCKET/29	21	7
	22	7
	23	17
	23	46
	24	17
	24	46
STAY/ADJUST	49	23
	50	23
STAY/BRAKE/LH COMP	26	4
	26	4-A
STAY/BRAKE/RH COMP	26	17
	26	17-A
STAY/CASE COMP	19	14
	19	14-A
	20	14
	23	64
	24	65
STAY/DIFFCABLE	14	19
	15	19
STAY/FUSEBOX COMP	61	11
STAY/MIRROR COMP	74	4
	75	20
	76	28
STAY/ROD	17	31
STEP/LH COMP	56	1
STEP/RH COMP	56	3
STOPPER	14	26
	15	26
STOPPER COMP	1	9
STOPPER, PISTON	47	3
SUCTION/OUT COMP	48	19
SWITCH(STARTER) ASSY	58	8
	59	4
SWITCH, HEAD LAMP	58	13
	59	16
SWITCH, MERIT	60	22
SWITCH, MERIT	61	31
SWITCH, STOP	61	26
SWITCH/COMBINATION/E	59	9
	59	9-A
SWITCH/HAZARD ASSY	59	22
SWITCH/LEVER ASSY	61	34
SWITCH/PUSH SET	60	17
	61	23
TANK/FUEL	6	1
TAPE/10X20	75	12
	76	12
THRUST	43	4
TIRE, FRONT ASSY	45	1
TIRE, TURF/16-8	45	2
TIRE, TURF/23-12	31	3
TIRE/210/60D-8	46	2
TIRE/210/60D-8 ASSY	46	1
TIRE/250/60D-14	32	2
TIRE/250/60D-14 ASSY	32	1
TIRE/REAR	31	1
TOOL/FUSE	61	9
TRIM/188	2	35
TRIM/1X6X360	51	5
TRIM/200	52	6
TRIM/75	41	8
TUBE/15	48	44-A
TURNBUCKLE/M8	27	13
	28	16
VALVE	4	4
VALVE/1S-2D ASSY	48	27
VALVE/RELIEF SET	78	45
VALVE/RIM	31	5
	32	5
	45	5
	46	5
VIS	79	3
WASHER	2	14
	33	13
	33	24
	33	46
	34	13
	34	24
	34	46
	48	46
	48	49

Alpabetical Index

Description	Fig.	Key
WASHER	58	17
	59	14
	59	20
WASHER / M16	25	15
	42	6
	49	20
	50	20
	64	4
	64	13
	65	4
	65	13
WASHER / M6	8	2
	18	5-A
	18	14-A
	28	6-A
WASHER /M12	10	13
	14	23
	15	23
	33	18
	33	42
	34	18
	34	42
	49	7
	49	13
	49	16
	49	16-A
	49	28
	49	33
	49	39
	50	7
	50	13
	50	16
	50	16-A
	50	28
	50	33
	50	39
	51	25
	72	4
WASHER, ADAPTER/AW06	71	3
WASHER, BINDING SHAFT	6	4
	17	23
	76	17
	76	21-A
	76	23
WASHER, LOCK/M12	43	13

Description	Fig.	Key
WASHER, PL/M 4	75	11
	76	11
WASHER, PL/M 8	1	8
	5	4
	6	3
	14	29
	15	29
	16	5
	16	10
	17	18
	18	8
	18	17
	27	16
	28	19
	30	14
	30	17
	33	38
	34	38
	49	43
	50	43
	51	16
	51	18
	54	7
	54	7-A
	55	7
	55	7-A
	62	5
	62	10
	63	5
	63	10
WASHER, PL/M14	30	5
	47	9
WASHER, PL/M18	43	6
WASHER, PULLEY	43	8
WASHER, SP/M 6	18	5
	18	14
	28	6
	28	22
	33	50
	34	50
	40	3
	40	5
	41	3
	41	5
	49	4

Description	Fig.	Key
WASHER, SP/M 6	50	4
WASHER, SP/M 8	1	7
	5	3
	14	5
	15	5
	17	8
	48	18
	62	15
	63	15
WASHER, SP/M10	1	4
	3	17
	7	16
	9	9
	11	5
	25	9
	25	13
	26	14
	26	27
	26	31
	31	7
	31	10
	32	7
	32	10
	33	3
	33	30
	34	3
	34	30
WASHER, SP/M12	10	12
	19	11
	20	11
	23	63
	24	64
	33	17
	33	41
	34	17
	34	41
	38	13
	39	13
	44	7
	49	25
	50	25
	72	3
	73	3
WASHER, SP/M16	33	14
	34	14

Description	Fig.	Key	Description	Fig.	Key	Description	Fig.	Key
WASHER/06X16X01	53	10	WASHER/M10	34	31			
	53	10-A		34	34			
	53	13		37	6			
WASHER/12X26X04	51	26		64	9			
WASHER/12X26X06	37	4		65	9			
WASHER/13X18X01	58	16	WASHER/M20	18	19			
	59	19	WEIGHT/15 SET	77	1			
WASHER/13X35X5	43	14	WHEEL/14X7JA COMP	32	3			
WASHER/17X22X03	26	2	WHEEL/STEERING ASSY	36	1			
WASHER/18X26X02	17	26	WIRE,LEAD	7	13-A			
WASHER/24X9X3.2	3	14	YOKE/CLAMP	9	4			
	17	23-A	YOKE/FLANGE	9	6			
WASHER/25X30X1	78	38	YOKE/SHAFT	9	5			
WASHER/30X45X2	33	10	YOKE/SLEEVE	9	7			
	34	10		9	7-A			
WASHER/31X42X01	23	25-A						
	23	26						
	23	54						
	24	26						
	24	55						
WASHER/31X42X1	12	2						
	13	2						
	21	16						
	22	16						
WASHER/6X14X3	52	5						
WASHER/6X24X2	74	7						
	75	23						
	76	31						
WASHER/LOCK	3	4						
WASHER/M10	7	17						
	8	8						
	11	6						
	19	4						
	20	4						
	23	4						
	23	33						
	24	4						
	24	33						
	29	3						
	31	8						
	31	11						
	32	8						
	32	11						
	33	31						
	33	34						