Directions for use of Parts Catalogue

1. Applicable model of machines

All component and option parts used for SCM48,54 garden tractor s are listed in this parts catalogue.

NOTES: SCMA48M-SXG22E4M····· FOR SXG22

SCMA54M-SXG22E4M····· FOR SXG22

SBC550XM-HE4M····· FOR SXG19,22

SBC550XM-HE4M····· FOR SXG19,22

2. Explanation for head paragraph

KEY	PART CODE	DESCRIPTION	SPC	TYPE OF MODEL						ITC	COL	GRP	REMARKS
				SSM48M	SSM48F	SSM48G	SRM48M	SRM48F	SRM48G				
1	8595-211-001-20	CASE/UPPER	*	1 -229									
1A	8657-201-081-00	CASE/UPPER	*	1 230-			1						
2	8595-211-002-10	CASE/LOWER	*	1			1						
3	V523-100-801-80	PIN	*	2			2						
4	V211-260-803-00	BOLT, SEMS	*	6			6						
			*	2 -229									
			*	2 230-			2						
				2			2						
				1			1						
										3			

① ② ③ ④ ⑤ ⑥ ⑦ ⑧ ⑨

① KEY shows the location of parts diagramed in the illustration.

② Parts numbers begin with `V´ and `W´ are standard parts of the market.

③ `LH´ and `RH´ on the parts name are described against the moving direction of the machine or are described on the condition how to install parts on the machines.

④ SPC : The following symbol classifies parts to be used for machines.

`＊´ means standard parts.

`T´ shows that the parts can be installed as optional parts.

`R´ shows that the parts can be used as applicable parts to replace originally equipped parts.

⑤ Upper column : QTY shows the number of parts to be used for one unit of machine.

`M´ is indicated for parts supplied by a meter long.

`l´ is indicated for parts supplied by liter.

`AR´ is indicated for parts need to be adjusted or regulated.

Lower column : serial number

－229 means serial number up to 229.

230－ means serial number 230 and after.

⑥ ITC : Interchangeability

`1´…OLD ← NEW

New parts can be used in place of the old parts.

`2´…OLD → NEW

Old parts can be used in place of the new parts.

`3´…OLD →← NEW

Old parts and new parts can not be replaced each other.

⑦ COL : Color code

Color is signified with color code number for colored parts.

Please see the color list shown in the next page.

⑧ GRP : Parts shown in this column can be replaced by SET parts.

Example : Parts marked Ⓐ can be replaced by parts marked Ⓑ, and Ⓓ for Ⓒ, so the rest follow in the same alphabetical order.

⑨ Remarks

＊Other maker's part code number is shown in this column.

＊When Fig. No. is shown in the Remark column of SET parts or ASSY parts, each of their component parts are listed in said Fig. No.

3. Color :

The following colors are used color parts.

COLOR CODE	COLOR	SPRAY TYPE PARTS CODE	PAINTS 4K DRUM PARTS CODE	PAINTS 16K DRUM PARTS CODE
7 F	MIRROR BLACK	1300-954-001-10	1300-954-003-00	1300-954-004-00

NOTE : Color code is signified only for the parts assigned by the maker as color parts.

4. Serial Numbers :

1) For engines serial number is stamped on CYLINDER BLOCK ASSY.
   Please see Fig. No. 5－1.
2) For chassies serial number is shown on the LABEL.
   Please see

5. Parts Order

1) Parts numbers listed in the parts catalogue are all registered in “ISEKI on-line computer”.
2) When you order parts, please make sure of correct numbers.
3) When substitute parts is available, the part number ordered will be automatically turned to a new part number.
4) Please be sure to use “ISEKI GENUINE PARTS”.
   Any other similar parts other than ISEKI parts when used may cause a trouble that makes us unable to repair or guarantee the warrant.

*** Structure Table of Model ***

MODEL / FIG.	SCMA48M	SXG22E4M	SCMA54M	SXG22E4M								
1				*								
2		*										
3		*										
4				*								
5		*										
6				*								
7		*										
8				*								
9		*		*								
10		*										
11				*								
12		*										
13				*								
14		*										
15				*								
16		*										
17				*								
18		*		*								
19		*		*								
20		*		*								
21		T										
22				T								
23				*								
24		*										
25		T										

*** Structure Table of Model ***

MODEL / FIG.	SBC550XM	HE4M	LE4M								
1			*								
2		*									
3			*								
4		*									
5		*									
6			*								
7		*									
8			*								
9		*									
10			*								
11		*									
12			T								
13		T									
14			*								

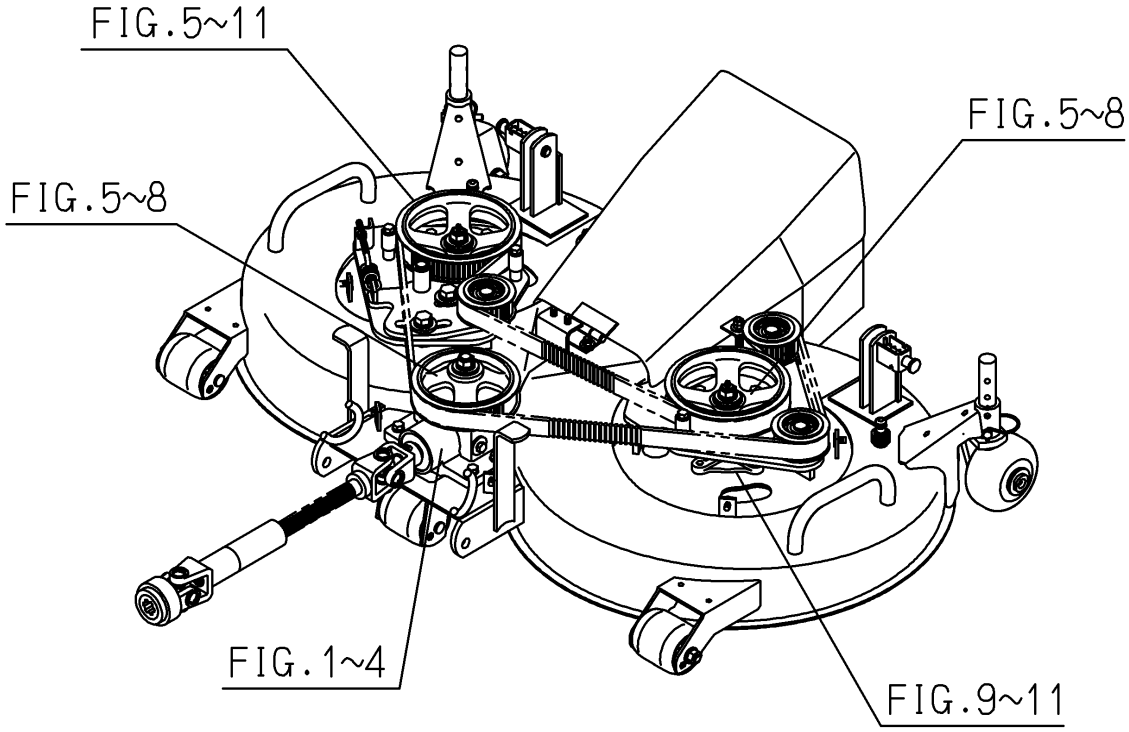
FIG.5~11
FIG.5~8
FIG.5~8
FIG.1~4
FIG.9~11

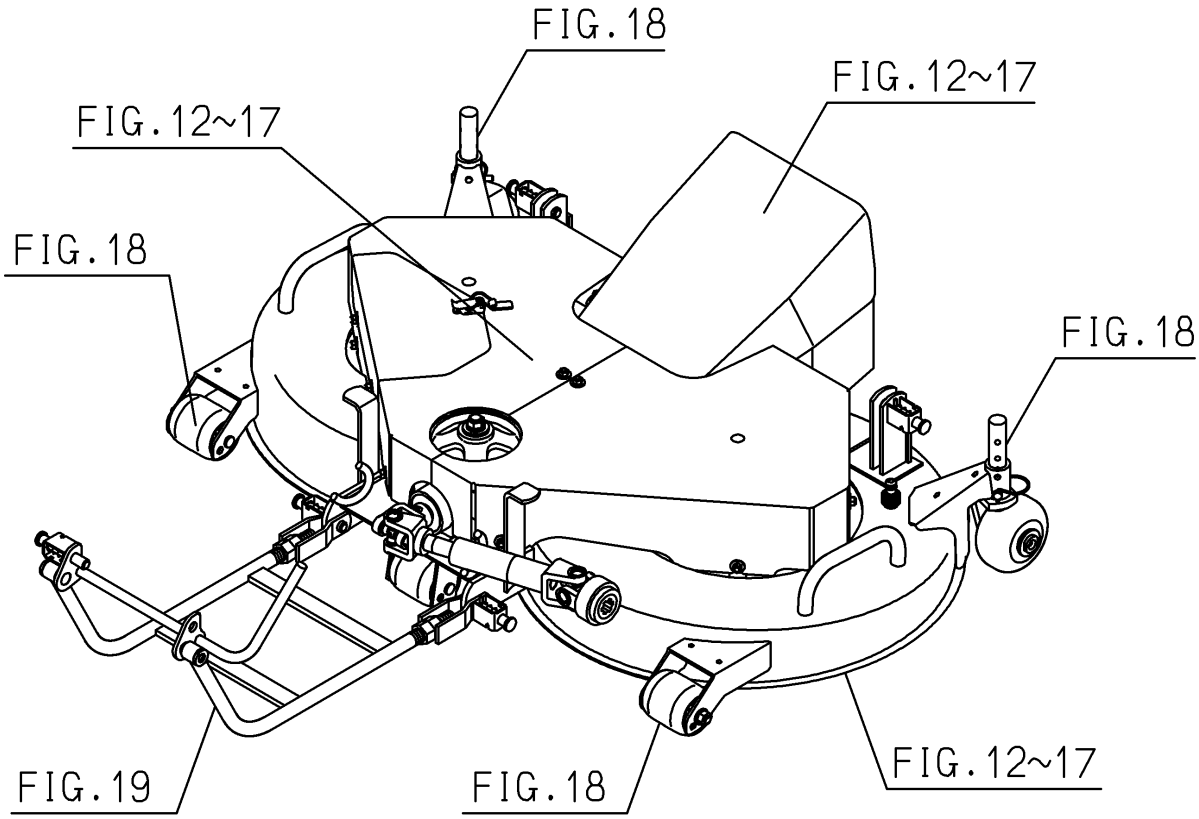
FIG.18
FIG.12~17
FIG.12~17
FIG.18
FIG.18
FIG.19
FIG.18
FIG.12~17

(L TYPE)

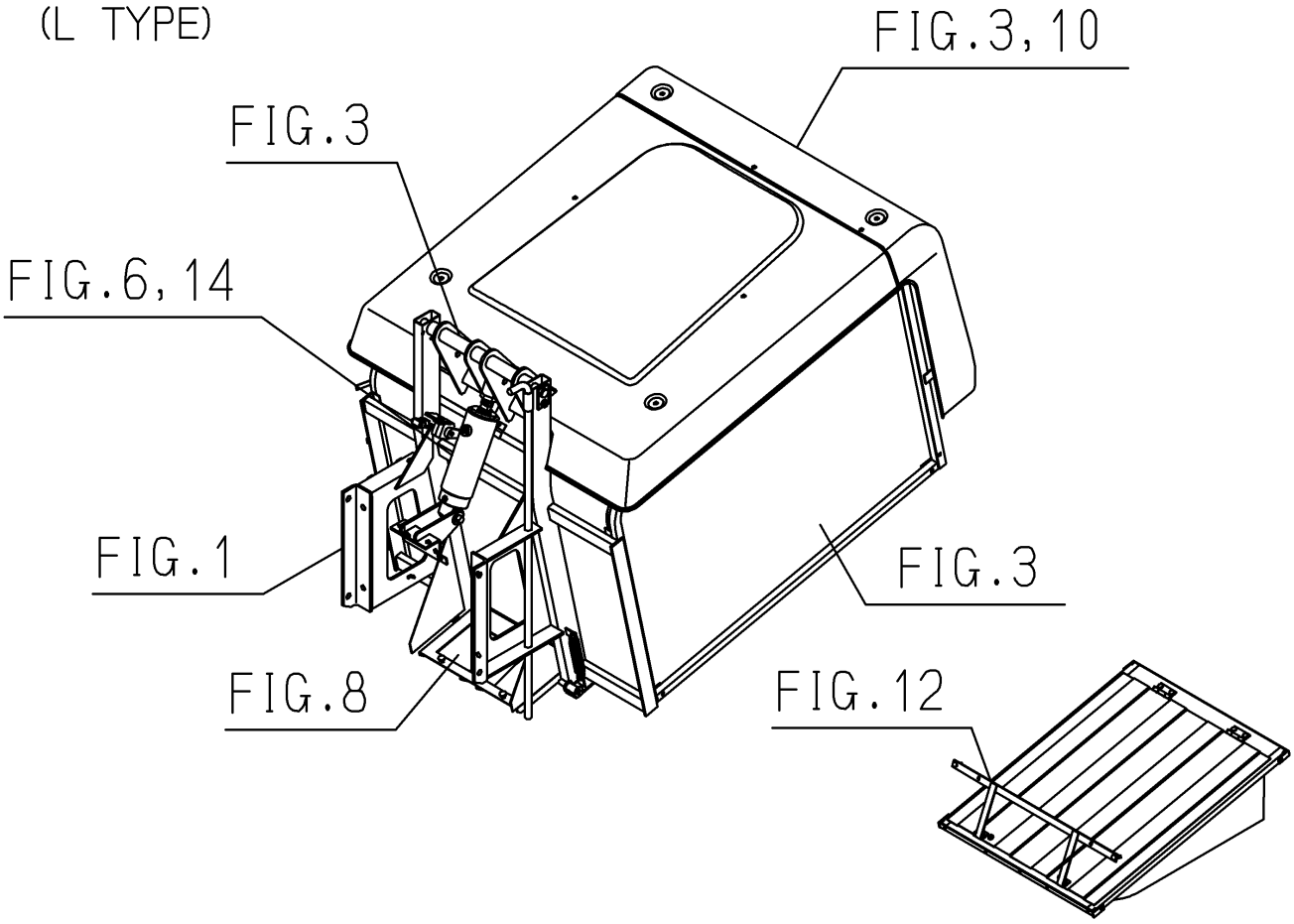
FIG.3,10
FIG.3
FIG.6,14
FIG.1
FIG.3
FIG.8
FIG.12

(H TYPE)

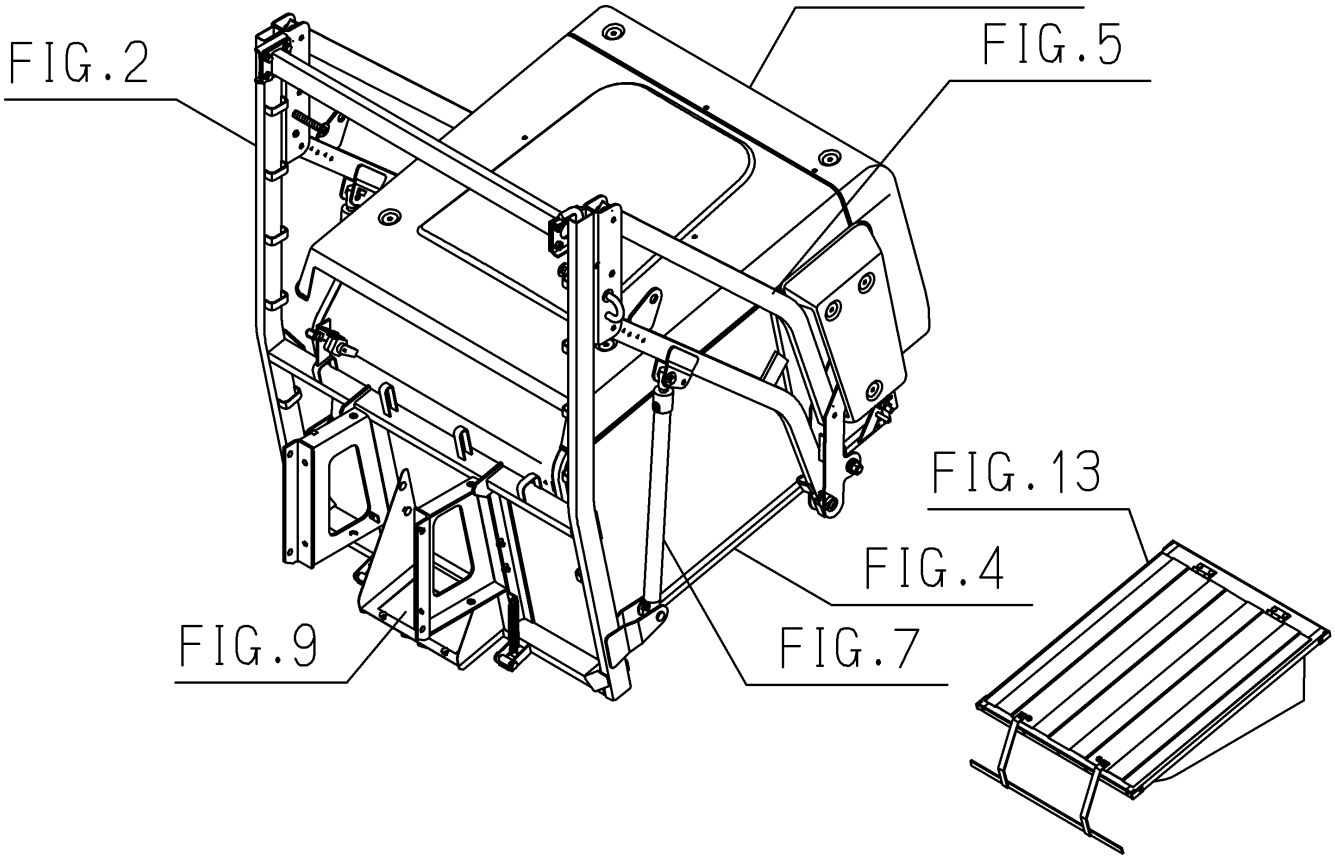
FIG.4,11
FIG.5
FIG.2
FIG.13
FIG.4
FIG.9
FIG.7

Contents

SCMA48,54M

JOINT(UNIVERSAL)SYSTEM(SCMA54M)····· Fig. 1
JOINT(UNIVERSAL)SYSTEM(SCMA48M)····· Fig. 2
CASE(BEVEL)SYSTEM(SCMA48M)····· Fig. 3
CASE(BEVEL)SYSTEM(SCMA54M)····· Fig. 4
PULLEY SYSTEM(SCMA48M)····· Fig. 5
PULLEY SYSTEM(SCMA54M)····· Fig. 6
BELT SYSTEM····· Fig. 7
BELT SYSTEM····· Fig. 8
METAL SYSTEM····· Fig. 9
BRADE SYSTEM(SCMA48M)····· Fig. 10
BRADE SYSTEM(SCMA54M)····· Fig. 11
DECK(MOWER)SYSTEM(SCMA48A)····· Fig. 12
DECK(MOWER)SYSTEM(SCMA54M)····· Fig. 13
COVER(DISCHARGE)SYSTEM(SCMA48M)····· Fig. 14
COVER(DISCHARGE)SYSTEM(SCMA54M)····· Fig. 15
COVER(BELT)SYSTEM(SCMA48M)····· Fig. 16
COVER(BELT)SYSTEM(SCMA54M)····· Fig. 17
WHEEL(GAUGE)SYSTEM····· Fig. 18
LINK SYSTEM····· Fig. 19
LABEL····· Fig. 20

OPTIONAL PARTS

JOINT(UNIVERSAL)(SCM48M)(OPTION)····· Fig. 21
JOINT(UNIVERSAL)(SCM54M)(OPTION)····· Fig. 22

COMPONENT PARTS

COMPONENT PARTS
FOR 8659-101-210-00 ON Fig.1 ····· Fig. 23
COMPONENT PARTS
FOR 8662-101-210-00 ON Fig.2 ····· Fig. 24
COMPONENT PARTS
FOR 8663-101-210-00 ON Fig.21 ····· Fig. 25

Contents

SBC550XM

FRAME SYSTEM(L TYPE)····· Fig. 1
FRAME SYSTEM(H TYPE)····· Fig. 2
CONTAINER SYSTEM(L TYPE)····· Fig. 3
CONTAINER SYSTEM(H TYPE)····· Fig. 4
LINK SYSTEM(H TYPE)····· Fig. 5
CYLINDER SYSTEM(L TYPE)····· Fig. 6
CYLINDER SYSTEM(H TYPE)····· Fig. 7
SENSOR SYSTEM(L TYPE)····· Fig. 8
SENSOR SYSTEM(H TYPE)····· Fig. 9
LABEL(L TYPE)····· Fig. 10
LABEL(H TYPE)····· Fig. 11

OPTIONAL PARTS

DISCHARGE(L TYPE)SET(OPTION)····· Fig. 12
DISCHARGE(H TYPE)SET(OPTION)····· Fig. 13

COMPONENT PARTS

COMPONENT PARTS
FOR K185-021-000-00 ON Fig.6····· Fig. 14

MOWER

SCMA48M

SCMA54M

8663-097-110-10

FIG. 1 JOINT(UNIVERSAL)SYSTEM(SCMA54M)

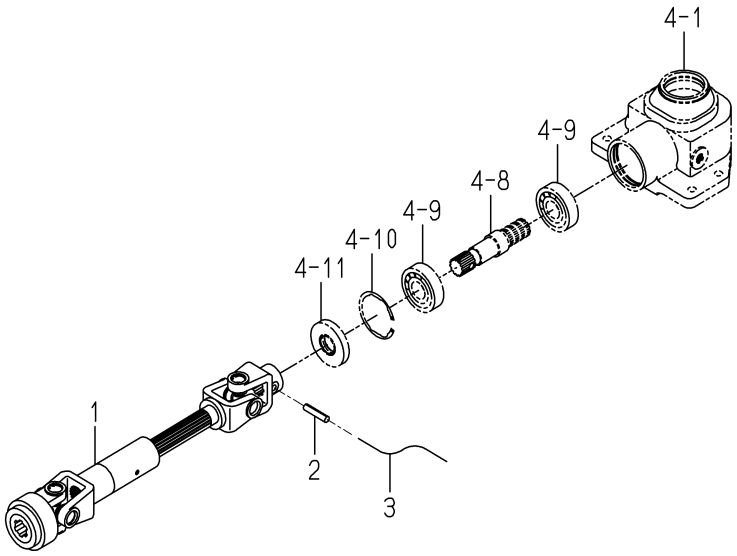

8659-101 -0100

KEY	PART CODE	DESCRIPTION	SPC	TYPE OF MODEL		ITC	COL	GRP	REMARKS
				SCMA48M	SCMA54M				
1	8659-101-210-00	JOINT/UNIVERSAL SET	*		1				FIG 023
2	V580-140-804-00	PIN,SPRING/8 X40 W	*		1				
3		WIRE	*		1				

FIG. 2 JOINT(UNIVERSAL)SYSTEM(SCMA48M)

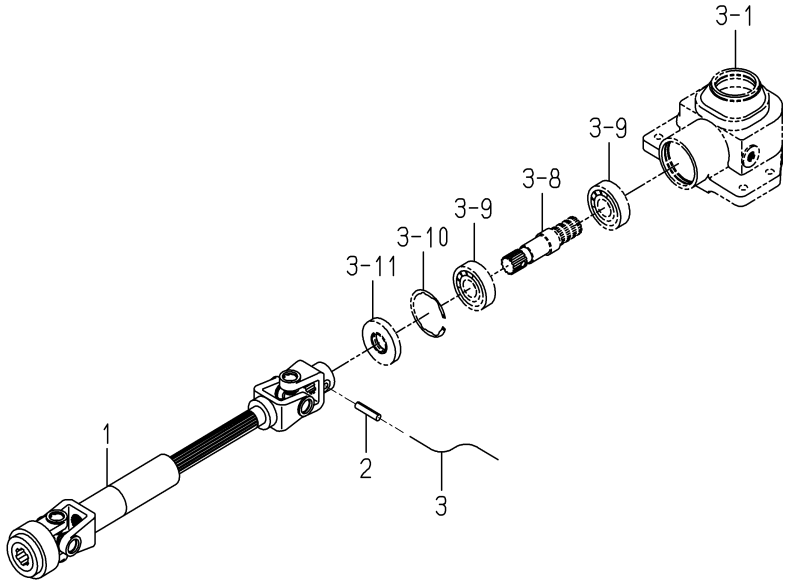

8662-101 -0100

KEY	PART CODE	DESCRIPTION	SPC	TYPE OF MODEL SCMA48M	SCMA54M	ITC	COL	GRP	REMARKS
1	8662-101-210-00	JOINT/UNIVERSAL SET	*	1					FIG 024
2	V580-140-804-00	PIN,SPRING/8 X40 W	*	1					
3		WIRE	*	1					

FIG. 3 CASE(BEVEL)SYSTEM(SCMA48M)

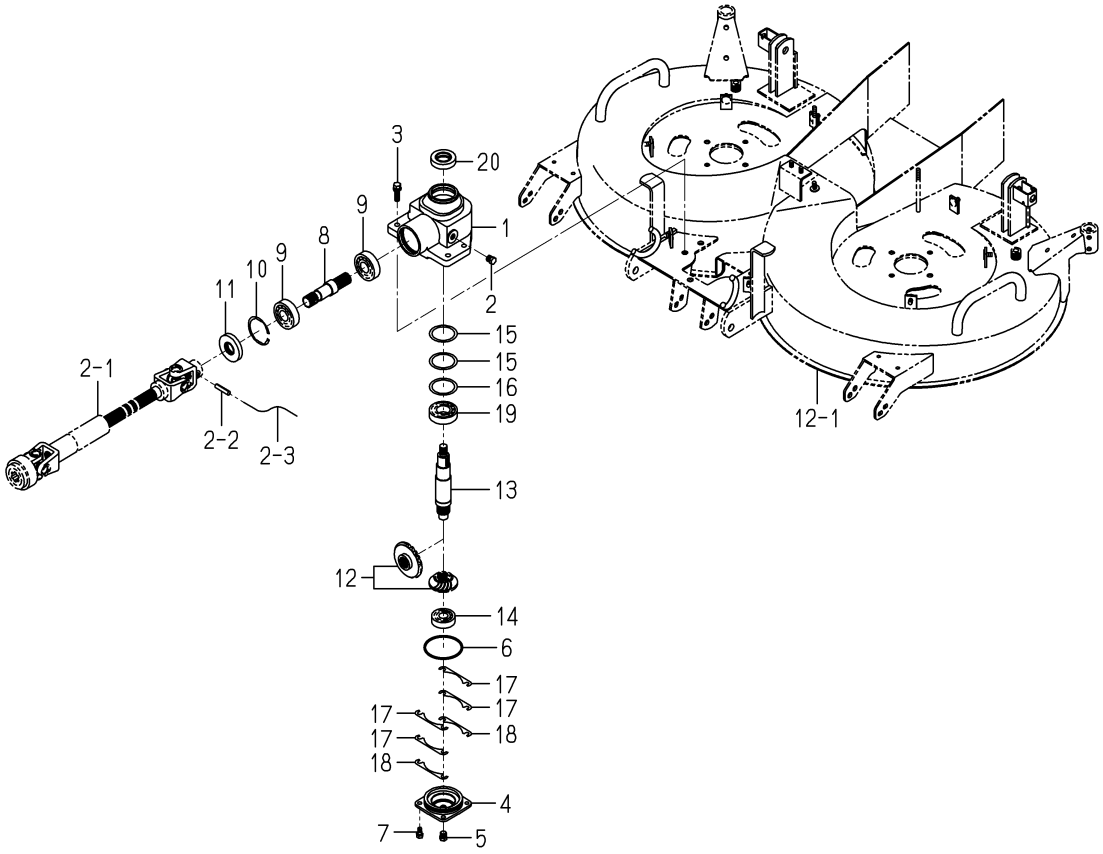

8663-201 -0100

KEY	PART CODE	DESCRIPTION	SPC	TYPE OF MODEL SCMA48M	TYPE OF MODEL SCMA54M	ITC	COL	GRP	REMARKS
1	8663-201-001-10	CASE/BEVEL	*	1					
2	7955-201-026-00	PLUG,DRAIN (1/4)	*	1					
3	V211-561-003-50	BOLT/S	*	4					
4	8663-201-002-00	COVER/CASE	*	1					
5	7955-201-026-00	PLUG,DRAIN (1/4)	*	1					
6	V721-103-108-00	O-RING/G80	*	1					
7	V211-260-801-60	BOLT,SEMS (S) M8X16	*	4					
8	8595-201-013-00	SHAFT/INPUT	*	1					
9	1594-218-001-00	BEARING/BALL 6305SH2	*	2					
10	V707-140-062-00	RING/SNAP	*	1					
11	8595-201-025-00	SEAL/OIL	*	1					
12	8657-201-210-10	GEAR/BEVEL/25-1 SET	*	1					
13	8663-201-003-00	SHAFT/OUTPUT	*	1					
14	V600-110-630-40	BEARING,RB/6304	*	1					
15	8663-201-004-00	SHIM/0.1	*	2					
16	8663-201-005-00	SHIM/0.2	*	1					
17	8595-201-021-00	SHIM/0.1	*	4					
18	8595-201-022-00	SHIM/0.2	*	2					
19	V600-110-620-60	BEARING,RB/6206	*	1					
20	V744-130-551-20	SEAL,OIL/TC305512	*	1					

FIG. 4 CASE(BEVEL)SYSTEM(SCMA54M)

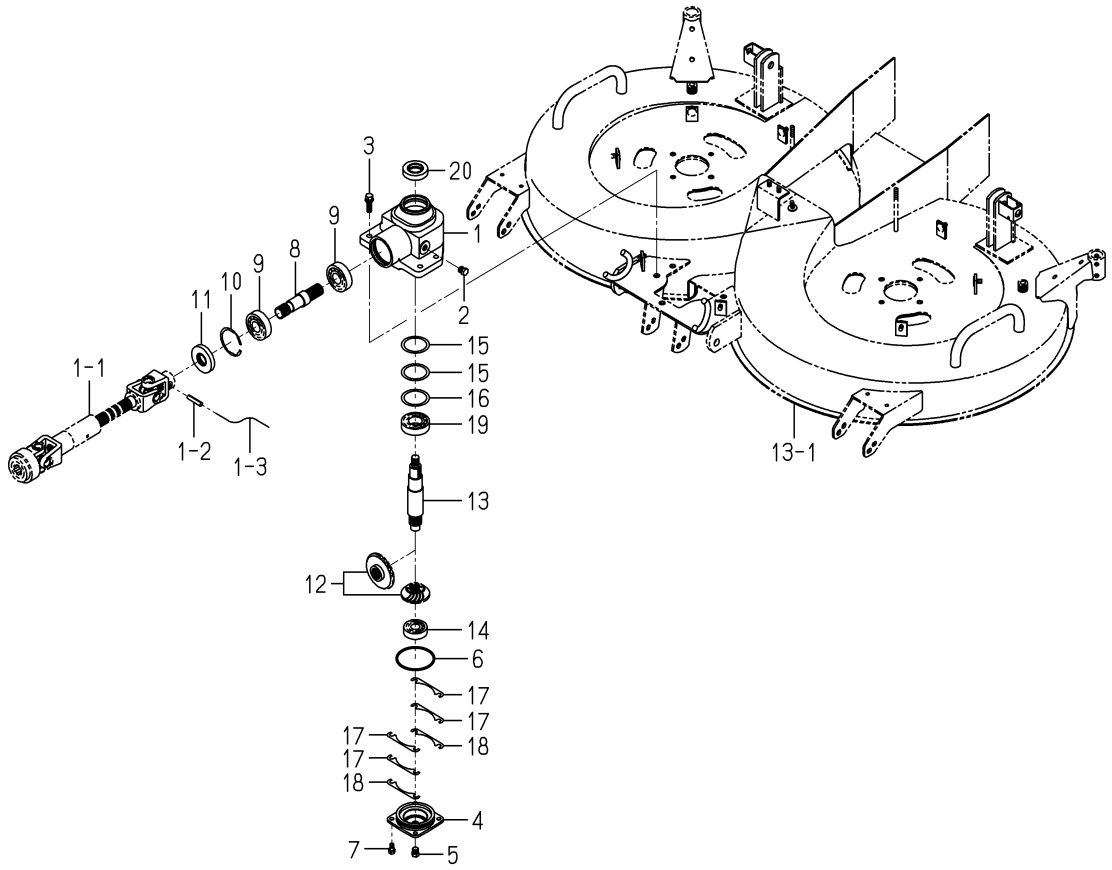

8665-201 -0100

KEY	PART CODE	DESCRIPTION	SPC	TYPE OF MODEL SCMA48M	TYPE OF MODEL SCMA54M	ITC	COL	GRP	REMARKS
1	8663-201-001-10	CASE/BEVEL	*		1				
2	7955-201-026-00	PLUG,DRAIN (1/4)	*		1				
3	V211-561-003-50	BOLT/S	*		4				
4	8663-201-002-00	COVER/CASE	*		1				
5	7955-201-026-00	PLUG,DRAIN (1/4)	*		1				
6	V721-103-108-00	O-RING/G80	*		1				
7	V211-260-801-60	BOLT,SEMS (S) M8X16	*		4				
8	8595-201-013-00	SHAFT/INPUT	*		1				
9	1594-218-001-00	BEARING/BALL 6305SH2	*		2				
10	V707-140-062-00	RING/SNAP	*		1				
11	8595-201-025-00	SEAL/OIL	*		1				
12	8654-201-410-10	GEAR/BEVEL/25-2 SET	*		1				
13	8665-201-001-00	SHAFT/OUTPUT	*		1				
14	V600-110-630-40	BEARING,RB/6304	*		1				
15	8663-201-004-00	SHIM/0.1	*		2				
16	8663-201-005-00	SHIM/0.2	*		1				
17	8595-201-021-00	SHIM/0.1	*		4				
18	8595-201-022-00	SHIM/0.2	*		2				
19	V600-110-620-60	BEARING,RB/6206	*		1				
20	V744-130-551-20	SEAL,OIL/TC305512	*		1				

FIG. 5 PULLEY SYSTEM(SCMA48M)

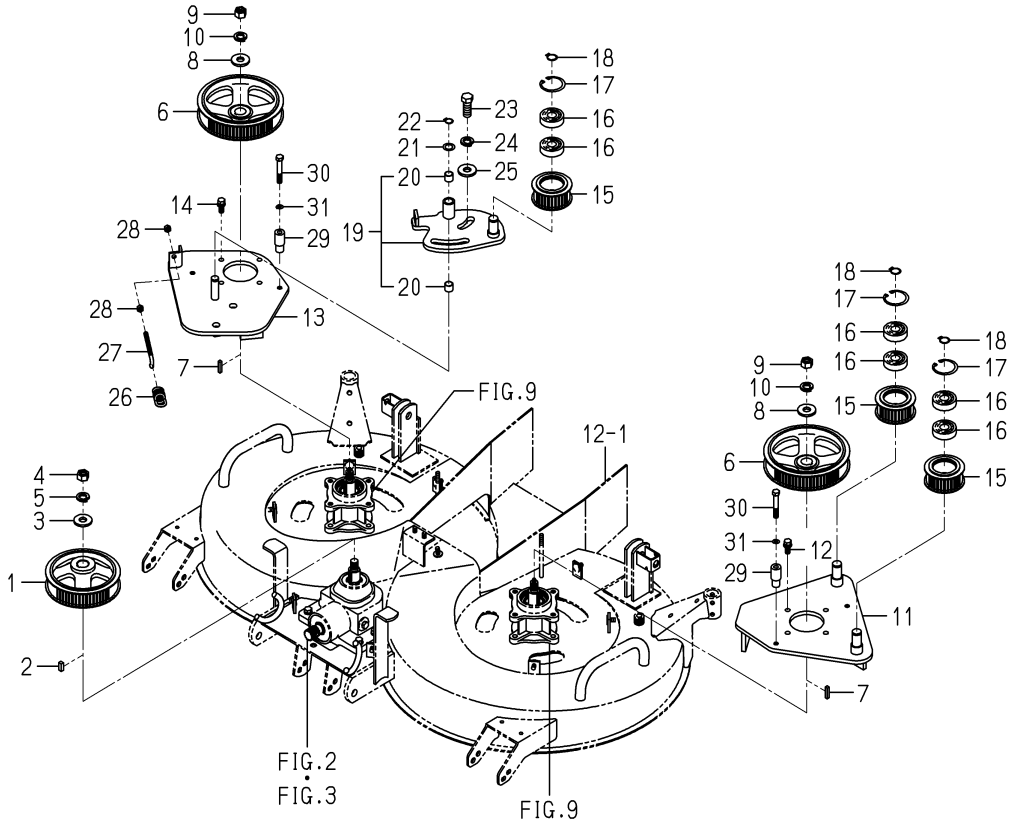

8663-202 -0100

KEY	PART CODE	DESCRIPTION	SPC	TYPE OF MODEL SCMA48M	SCMA54M	ITC	COL	GRP	REMARKS
1	8663-202-210-10	PULLY/STS/62 COMP	*	1					
2	3670-520-001-00	KEY/08X07X20	*	1					
3	3746-111-011-00	WASHER	*	1					
4	V304-460-016-00	NUT/M16	*	1					
5	V401-160-016-00	WASHER,SP/M16	*	1					
6	8663-202-220-10	PULLY/STS/72 COMP	*	2					
7	8654-202-016-00	KEY/06X06X28	*	2					
8	3746-111-011-00	WASHER	*	2					
9	V304-460-016-00	NUT/M16	*	2					
10	V401-160-016-00	WASHER,SP/M16	*	2					
11	8663-202-250-10	BASE/LH COMP	*	1					
12	V211-561-002-50	BOLT/M10X25	*	4					
13	8663-202-260-20	BASE/RH COMP	*	1					
14	V211-561-002-50	BOLT/M10X25	*	4					
15	8663-202-230-00	PULLY/STS/32 COMP	*	3					
16	V600-150-630-40	BEARING,RB/6304SS	*	6					
17	V705-140-052-00	RING,SNAP/52 C	*	3					
18	V704-140-020-00	RING,SNAP/20C	*	3					
19	8663-202-290-00	PLATE/TENSION ASSY	*	1					
20	8597-202-501-00	BUSH/16X18X15	*	2					
21	3621-211-003-00	WASHER	*	1					
22	V704-140-016-00	RING,SNAP/16 C	*	1					
23	V201-261-604-00	BOLT/M16X40	*	2					
24	V401-160-016-00	WASHER,SP/M16	*	2					
25	3746-111-011-00	WASHER	*	2					
26	3100-107-004-10	SPRING/SIDE CLUTCH	*	1					
27	3737-341-007-00	ROD,CHAIN TENSION	*	1					
28	V304-260-008-00	NUT	*	2					
29	8663-202-004-00	COLLAR/10X22X48	*	4					
30	V201-261-006-00	BOLT/M10X60	*	4					

FIG. 5 PULLEY SYSTEM(SCMA48M)

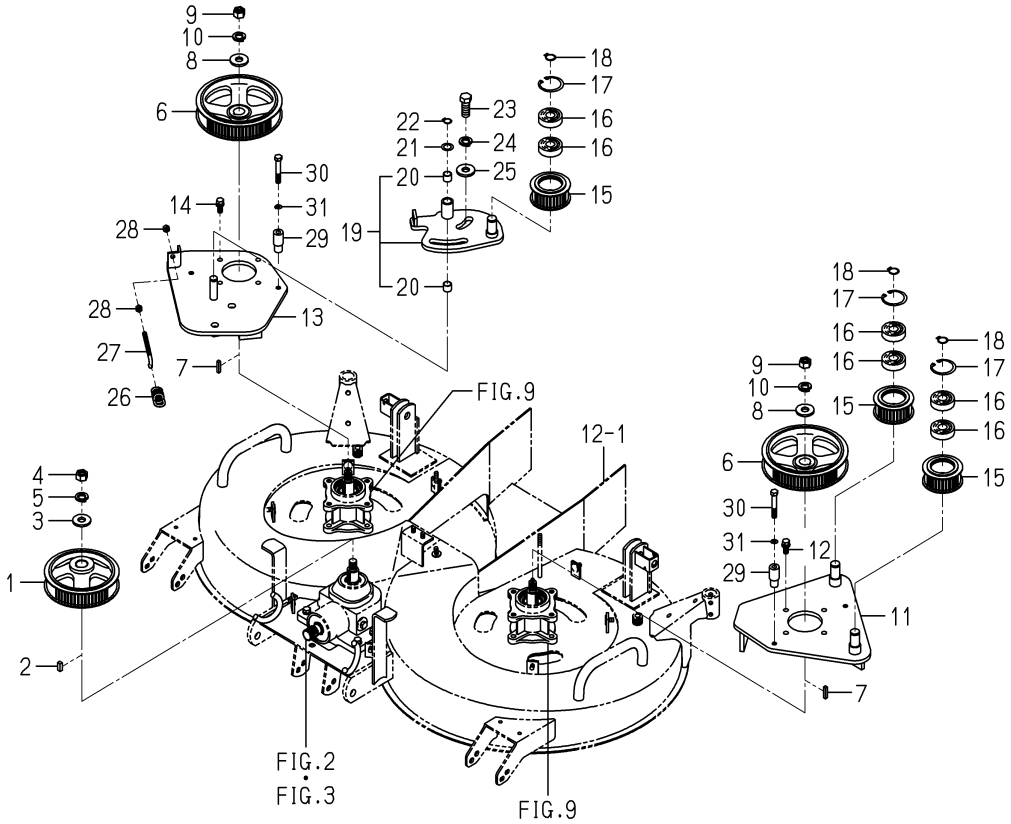

8663-202 -0100

KEY	PART CODE	DESCRIPTION	SPC	TYPE OF MODEL		ITC	COL	GRP	REMARKS
				SCMA48M	SCMA54M				
31	V401-160-010-00	WASHER,SP/M10	*	4					

FIG. 6 PULLEY SYSTEM(SCMA54M)

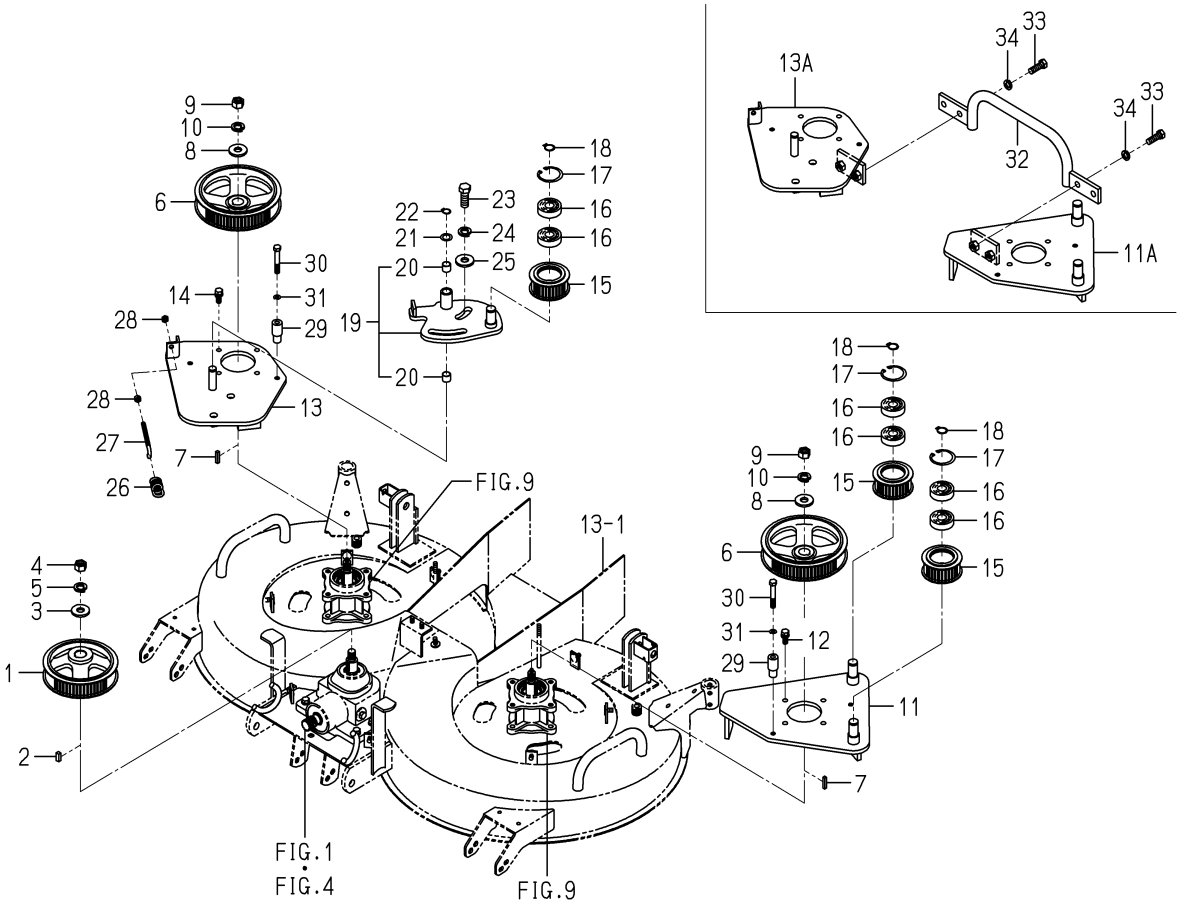

8665-202 -0100

KEY	PART CODE	DESCRIPTION	SPC	TYPE OF MODEL SCMA48M	TYPE OF MODEL SCMA54M	ITC	COL	GRP	REMARKS
1	8663-202-210-10	PULLY/STS/62 COMP	*		1				
2	3670-520-001-00	KEY/08X07X20	*		1				
3	3746-111-011-00	WASHER	*		1				
4	V304-460-016-00	NUT/M16	*		1				
5	V401-160-016-00	WASHER,SP/M16	*		1				
6	8663-202-220-10	PULLY/STS/72 COMP	*		2				
7	8654-202-016-00	KEY/06X06X28	*		2				
8	3746-111-011-00	WASHER	*		2				
9	V304-460-016-00	NUT/M16	*		2				
10	V401-160-016-00	WASHER,SP/M16	*		2				
11	8665-202-210-10	BASE/LH COMP	*		1 -100137				
11A	8665-202-210-20	BASE/LH COMP	*		1 100138-	1			
12	V211-561-002-50	BOLT/M10X25	*		4				
13	8663-202-260-20	BASE/RH COMP	*		1 -100137				
13A	8665-202-220-00	BASE/RH COMP	*		1 100138-				
14	V211-561-002-50	BOLT/M10X25	*		4				
15	8663-202-230-00	PULLY/STS/32 COMP	*		3				
16	V600-150-630-40	BEARING,RB/6304SS	*		6				
17	V705-140-052-00	RING,SNAP/52 C	*		3				
18	V704-140-020-00	RING,SNAP/20C	*		3				
19	8663-202-290-00	PLATE/TENSION ASSY	*		1				
20	8597-202-501-00	BUSH/16X18X15	*		2				
21	3621-211-003-00	WASHER	*		1				
22	V704-140-016-00	RING,SNAP/16 C	*		1				
23	V201-261-604-00	BOLT/M16X40	*		2				
24	V401-160-016-00	WASHER,SP/M16	*		2				
25	3746-111-011-00	WASHER	*		2				
26	3100-107-004-10	SPRING/SIDE CLUTCH	*		1				
27	3737-341-007-00	ROD,CHAIN TENSION	*		1				
28	V304-260-008-00	NUT	*		2				

FIG. 6 PULLEY SYSTEM(SCMA54M)

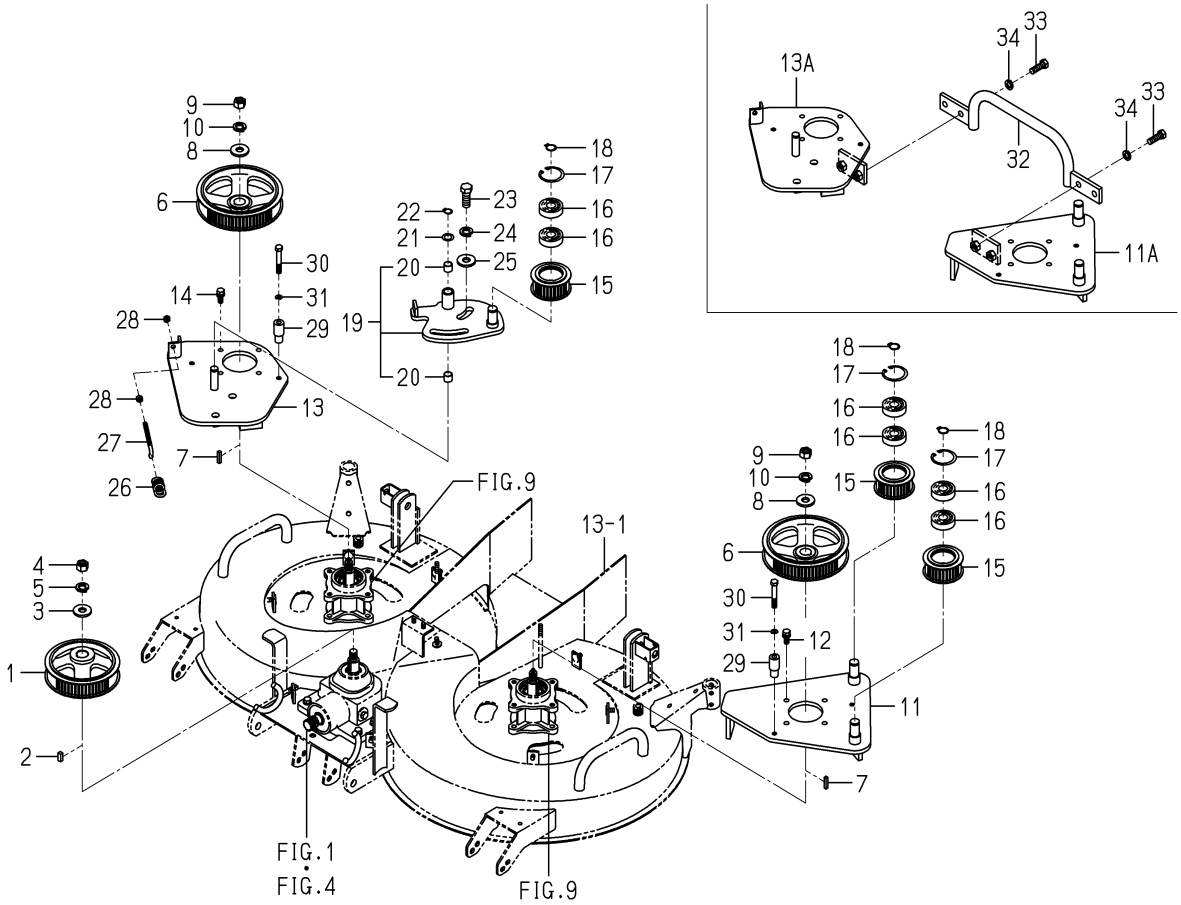

8665-202 -0100

KEY	PART CODE	DESCRIPTION	SPC	TYPE OF MODEL SCMA48M	SCMA54M	ITC	COL	GRP	REMARKS
29	8663-202-004-00	COLLAR/10X22X48	*		4				
30	V201-261-006-00	BOLT/M10X60	*		4				
31	V401-160-010-00	WASHER,SP/M10	*		4				
32	8665-202-230-00	BAR/SUPPORT COMP	*		1				
33	V201-361-203-50	BOLT/M12X35	*		4				
34	V401-160-012-00	WASHER,SP/M12	*		4				

FIG. 7 BELT SYSTEM

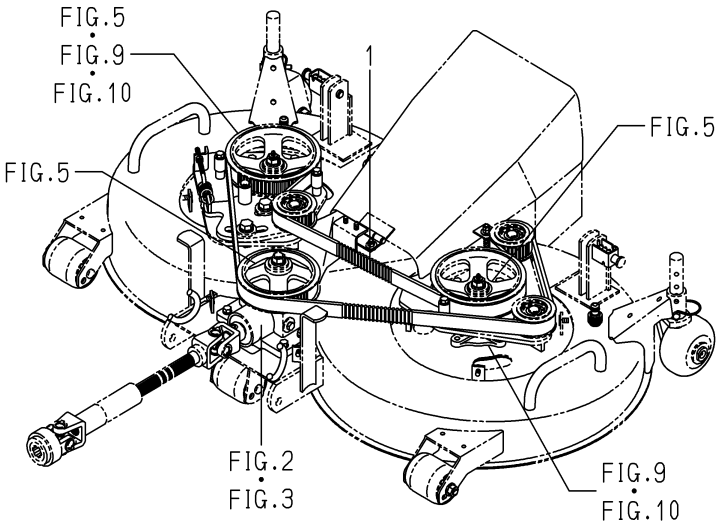

8663-203 -0100

KEY	PART CODE	DESCRIPTION	SPC	TYPE OF MODEL		ITC	COL	GRP	REMARKS
				SCMA48M	SCMA54M				
1	8663-203-001-00	BELT/D/STS/2800	*	1					

FIG. 8 BELT SYSTEM

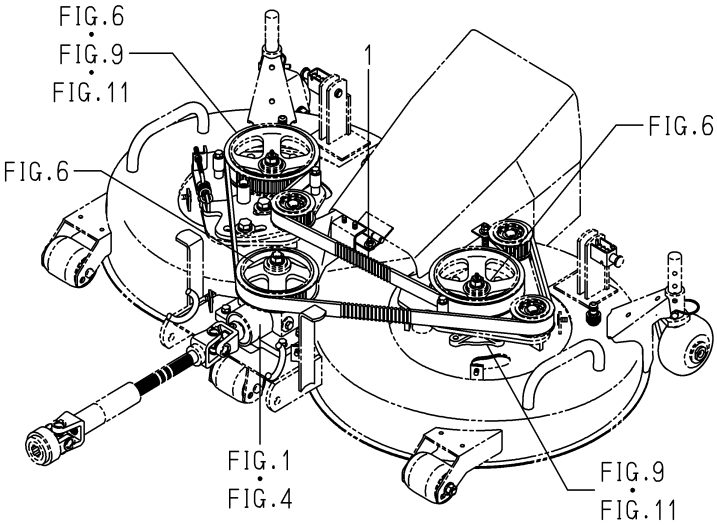

8665-203 -0100

KEY	PART CODE	DESCRIPTION	SPC	TYPE OF MODEL		ITC	COL	GRP	REMARKS
				SCMA48M	SCMA54M				
1	8665-203-001-00	BELT/D/STS/2880	*		1				

FIG. 9 METAL SYSTEM

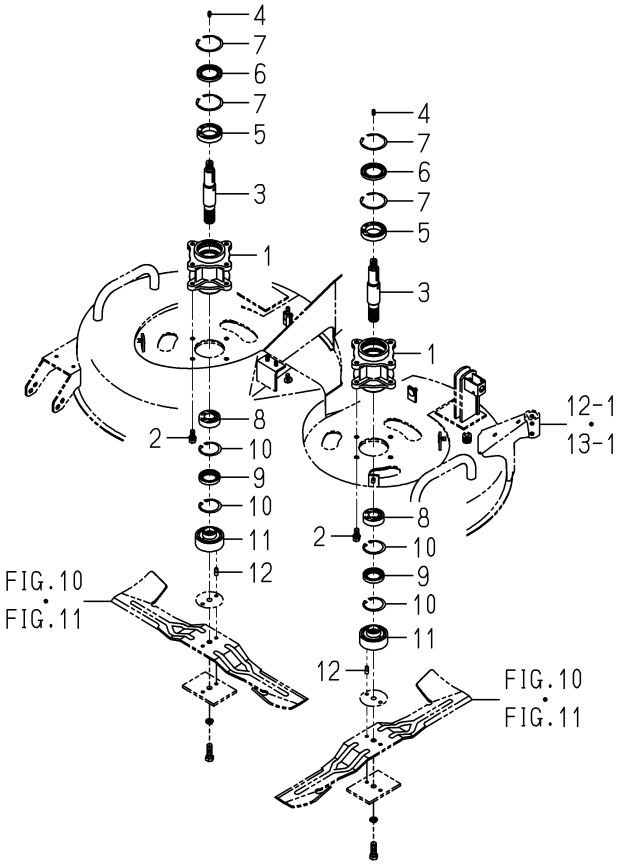

8663-301 -0100

KEY	PART CODE	DESCRIPTION	SPC	TYPE OF MODEL SCMA48M	TYPE OF MODEL SCMA54M	ITC	COL	GRP	REMARKS
1	8663-301-003-00	METAL/BLADE	*	2	2				
2	V211-561-002-50	BOLT/M10X25	*	8	8				
3	8663-301-001-00	SHAFT/BLADE	*	2	2				
4	V760-150-000-00	NIPPLE,GREASE	*	2	2				
5	V600-110-690-80	BEARING	*	2	2				
6	8654-301-004-00	SEAL/OIL	*	2	2				
7	V707-140-062-00	RING/SNAP	*	4	4				
8	1594-221-001-00	BEARING/BALL 6205SH2	*	2	2				
9	V744-135-520-80	SEAL,OIL/TC35528	*	2	2				
10	V705-140-052-00	RING,SNAP/52 C	*	4	4				
11	8663-301-002-10	COLLAR/BLADE	*	2	2				
12	8663-301-004-00	PIN/08X18	*	4	4				

FIG. 10 BRADE SYSTEM(SCMA48M)

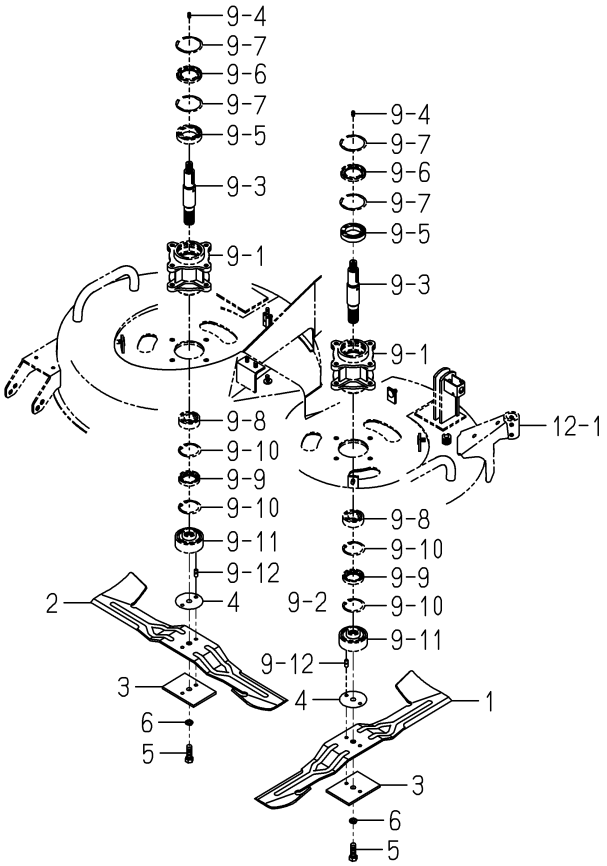

8663-306 -0100

KEY	PART CODE	DESCRIPTION	SPC	TYPE OF MODEL SCMA48M	SCMA54M	ITC	COL	GRP	REMARKS
1	8663-306-001-10	BLADE/60X640/C	*	1					
2	8663-306-002-10	BLADE/60X640/D	*	1					
3	8663-306-210-10	PLATE/I/80X110 COMP	*	2					
4	8663-306-004-00	SHIM/1.2	*	2					
5	V203-361-203-50	BOLT	*	2					
6	V401-160-012-00	WASHER,SP/M12	*	2					

FIG. 11 BRADE SYSTEM(SCMA54M)

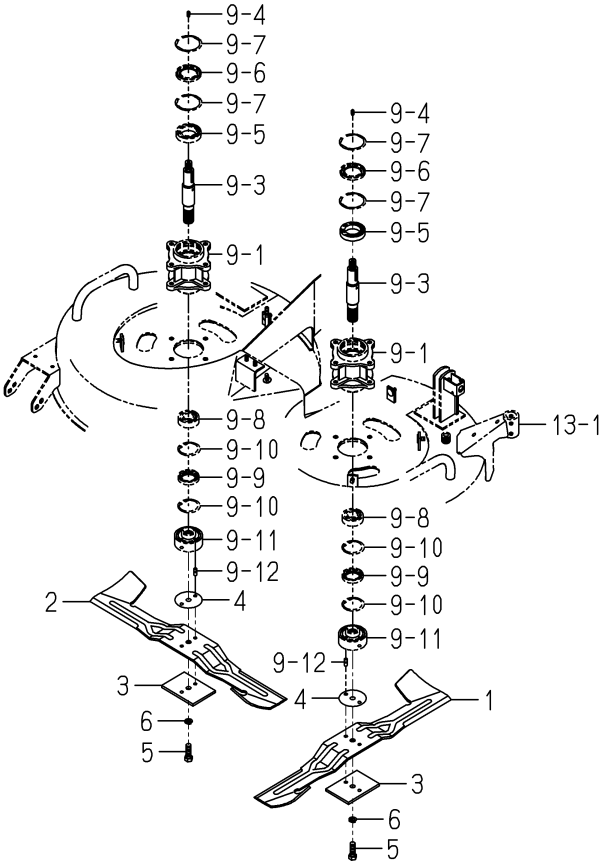

8665-306 -0100

KEY	PART CODE	DESCRIPTION	SPC	TYPE OF MODEL SCMA48M	TYPE OF MODEL SCMA54M	ITC	COL	GRP	REMARKS
1	8665-306-001-10	BLADE/60X716/C	*		1				
2	8665-306-002-10	BLADE/60X716/D	*		1				
3	8663-306-210-10	PLATE/I/80X110 COMP	*		2				
4	8663-306-004-00	SHIM/1.2	*		2				
5	V203-361-203-50	BOLT	*		2				
6	V401-160-012-00	WASHER,SP/M12	*		2				

FIG. 12 DECK(MOWER)SYSTEM(SCMA48A)

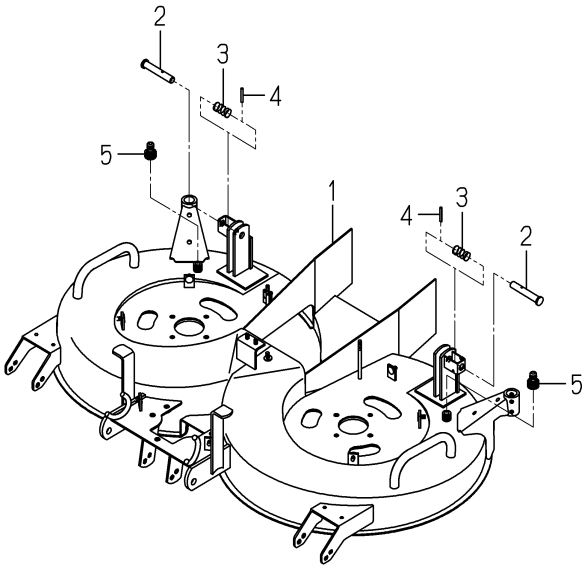

8663-402 -0100

KEY	PART CODE	DESCRIPTION	SPC	TYPE OF MODEL		ITC	COL	GRP	REMARKS
				SCMA48M	SCMA54M				
1	8663-402-210-50	DECK/MOWER/48 COMP	*	1		1	7F		
2	8595-608-082-10	PIN/16X96	*	2		1			
3	1560-601-028-00	SPRING/HC042	*	2					
4	V580-140-504-00	PIN,SPRING/5 X40 W	*	2					
5	8663-402-002-00	PLUG/HOSE/A	*	2					

FIG. 13 DECK(MOWER)SYSTEM(SCMA54M)

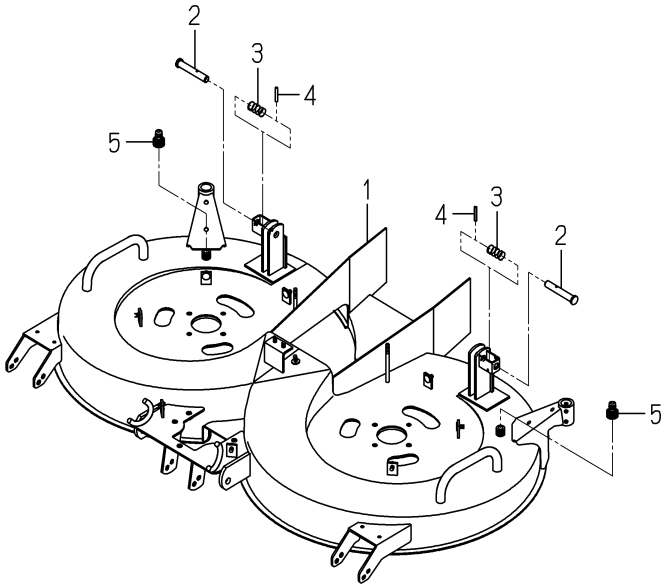

8665-402 -0100

KEY	PART CODE	DESCRIPTION	SPC	TYPE OF MODEL		ITC	COL	GRP	REMARKS
				SCMA48M	SCMA54M				
1	8665-402-210-40	DECK/MOWER/54 COMP	*		1	1	7F		
2	8595-608-082-10	PIN/16X96	*		2	1			
3	1560-601-028-00	SPRING/HC042	*		2				
4	V580-140-504-00	PIN,SPRING/5 X40 W	*		2				
5	8663-402-002-00	PLUG/HOSE/A	*		2				

FIG. 14 COVER(DISCHARGE)SYSTEM(SCMA48M)

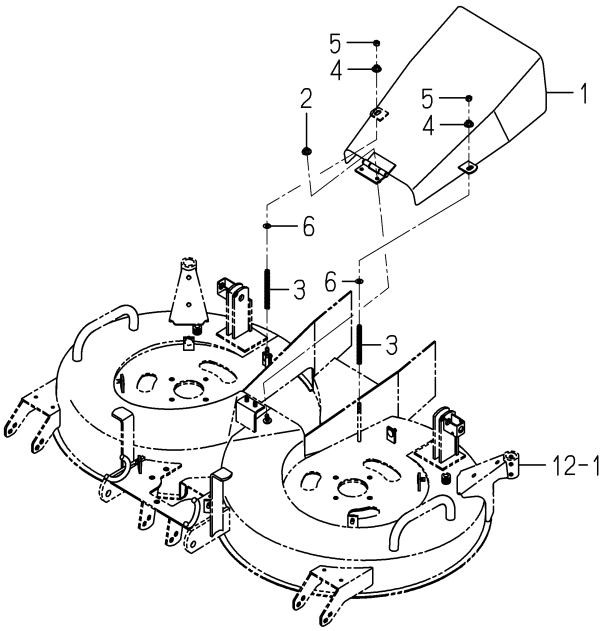

8663-406 -0100

KEY	PART CODE	DESCRIPTION	SPC	TYPE OF MODEL SCMA48M	TYPE OF MODEL SCMA54M	ITC	COL	GRP	REMARKS
1	8663-406-210-00	COVER/DISCHARGE COMP	*	1			7F		
2	V363-260-008-00	NUT/WASHER	*	2					
3	8663-406-001-00	SPRING/HC110	*	2					
4	V363-260-008-00	NUT/WASHER	*	2					
5	V304-260-008-00	NUT	*	2					
6	V411-260-008-00	WASHER,PL/M 8	*	2					

FIG. 15 COVER(DISCHARGE)SYSTEM(SCMA54M)

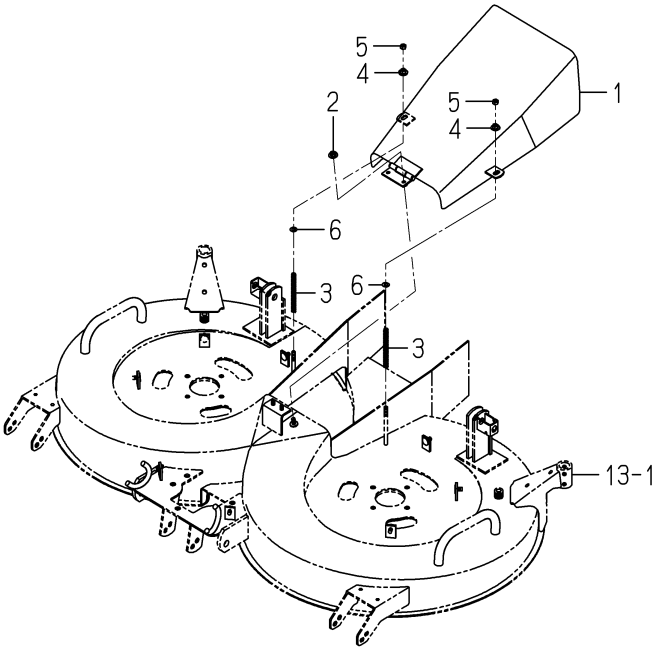

8665-406 -0100

KEY	PART CODE	DESCRIPTION	SPC	TYPE OF MODEL		ITC	COL	GRP	REMARKS
				SCMA48M	SCMA54M				
1	8665-406-210-00	COVER/DISCHARGE COMP	*		1		7F		
2	V363-260-008-00	NUT/WASHER	*		2				
3	8663-406-001-00	SPRING/HC110	*		2				
4	V363-260-008-00	NUT/WASHER	*		2				
5	V304-260-008-00	NUT	*		2				
6	V411-260-008-00	WASHER,PL/M 8	*		2				

FIG. 16 COVER(BELT)SYSTEM(SCMA48M)

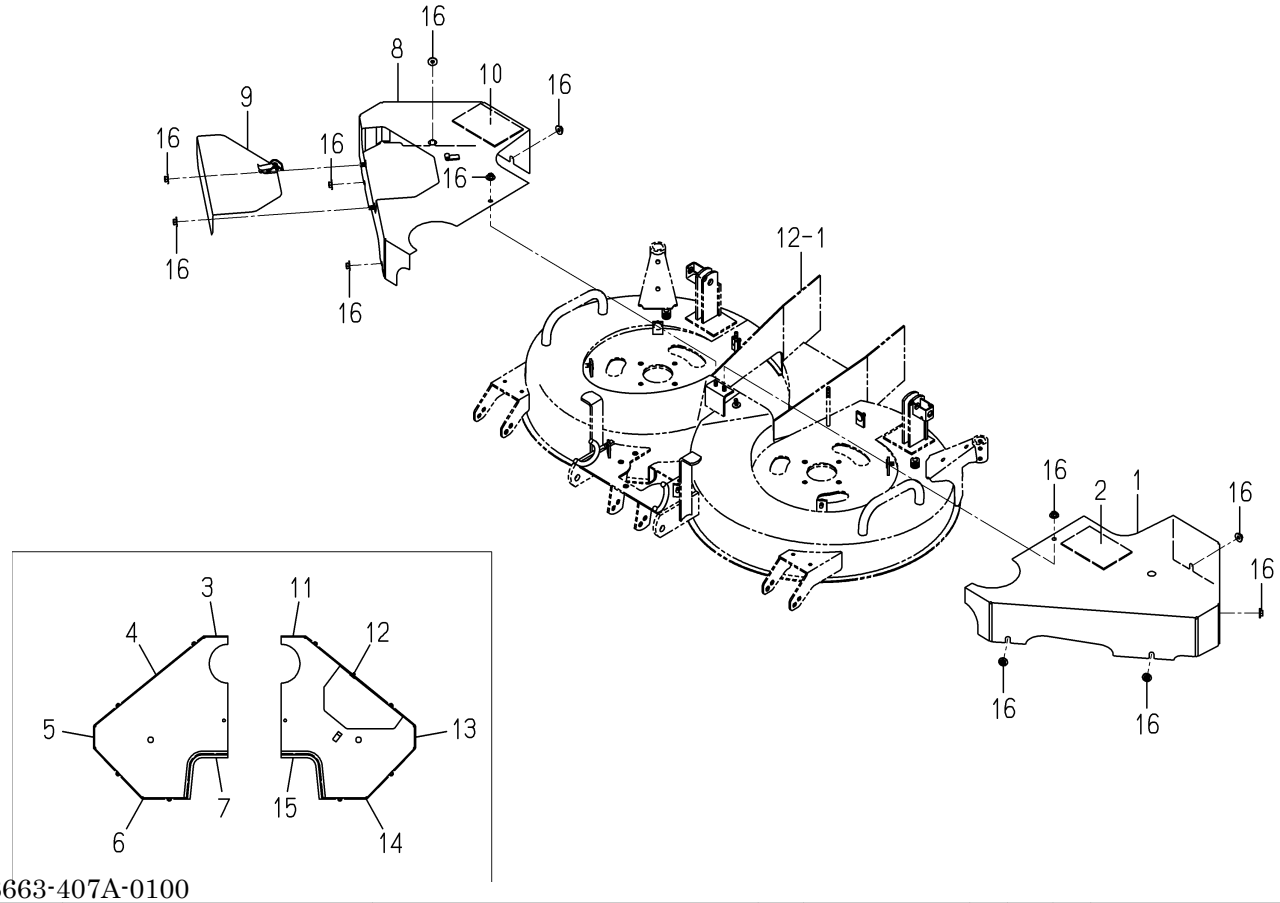

8663-407A-0100

KEY	PART CODE	DESCRIPTION	SPC	TYPE OF MODEL SCMA48M	TYPE OF MODEL SCMA54M	ITC	COL	GRP	REMARKS
1	8663-407-310-00	COVER/BELT/LH COMP	*	1			7F		
2	8663-407-031-00	INSULATOR/150X100	*	1					
3	1636-631-013-00	TRIM/160	*	1					
4	1636-631-014-00	TRIM/320	*	1					
5	1728-630-005-20	INSULATOR/270	*	1					
6	8663-407-032-00	INSULATOR/175	*	1					
7	1728-630-005-20	INSULATOR/270	*	1					
8	8663-407-320-20	COVER/BELT/RH COMP	*	1		3	7F		
9	8663-407-230-20	PLATE/COVER COMP	*	1		3	7F		
10	8663-407-031-00	INSULATOR/150X100	*	1					
11	1636-631-013-00	TRIM/160	*	1					
12	1636-631-014-00	TRIM/320	*	1					
13	1728-630-005-20	INSULATOR/270	*	1					
14	8663-407-032-00	INSULATOR/175	*	1					
15	1728-630-005-20	INSULATOR/270	*	1					
16	V363-260-008-00	NUT/WASHER	*	12					

FIG. 17 COVER(BELT)SYSTEM(SCMA54M)

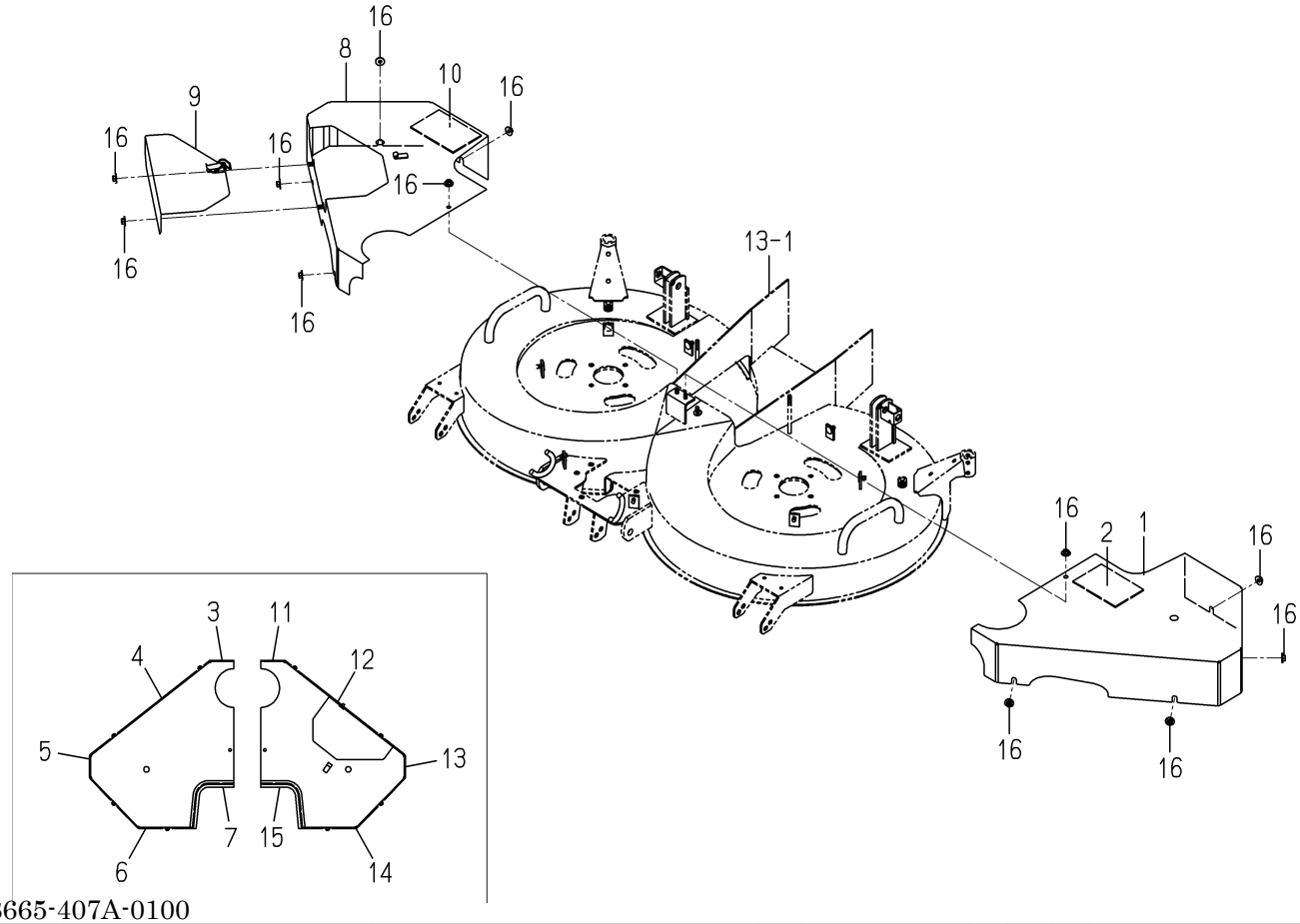

8665-407A-0100

KEY	PART CODE	DESCRIPTION	SPC	TYPE OF MODEL SCMA48M	TYPE OF MODEL SCMA54M	ITC	COL	GRP	REMARKS
1	8665-407-310-00	COVER/BELT/LH COMP	*		1		7F		
2	8663-407-031-00	INSULATOR/150X100	*		1				
3	1636-631-013-00	TRIM/160	*		1				
4	8665-407-031-00	INSULATOR/390	*		1				
5	1728-630-005-20	INSULATOR/270	*		1				
6	8665-407-032-00	INSULATOR/190	*		1				
7	1728-630-005-20	INSULATOR/270	*		1				
8	8665-407-320-20	COVER/BELT/RH COMP	*		1	3	7F		
9	8663-407-230-20	PLATE/COVER COMP	*		1	3	7F		
10	8663-407-031-00	INSULATOR/150X100	*		1				
11	1636-631-013-00	TRIM/160	*		1				
12	8665-407-031-00	INSULATOR/390	*		1				
13	1728-630-005-20	INSULATOR/270	*		1				
14	8665-407-032-00	INSULATOR/190	*		1				
15	1728-630-005-20	INSULATOR/270	*		1				
16	V363-260-008-00	NUT/WASHER	*		12				

FIG. 18 WHEEL(GAUGE)SYSTEM

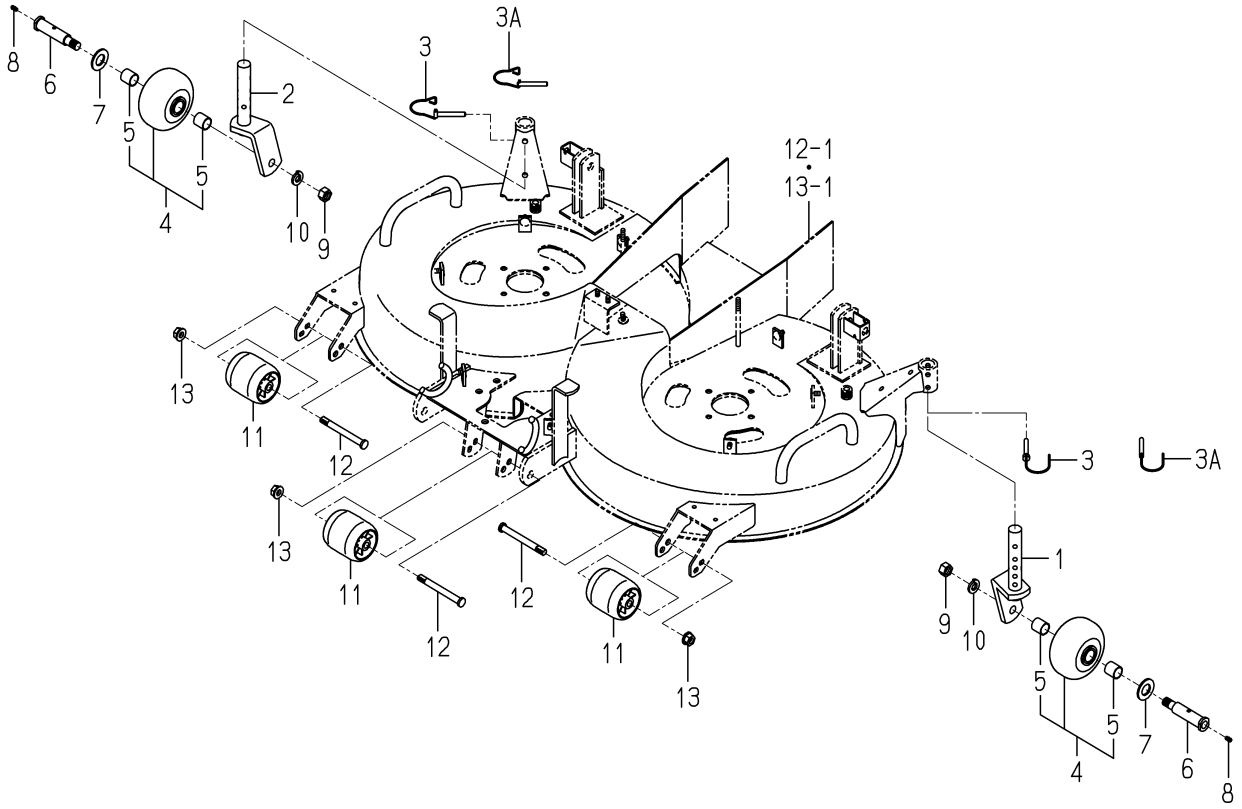

8663-501 -0100

KEY	PART CODE	DESCRIPTION	SPC	TYPE OF MODEL SCMA48M	SCMA54M	ITC	COL	GRP	REMARKS
1	8663-501-210-00	FORK/WHEEL/LH COMP	*	1	1				
2	8663-501-220-00	FORK/WHEEL/RH COMP	*	1	1				
3	8663-501-230-00	PIN/08X56 COMP	*	2 -103033	2 -100549				
3A	8663-501-240-00	PIN/08X60 COMP	*	2 103034-	2 100550-				
4	8657-501-530-00	WHEEL/GAUGE ASSY	*	2	2				
5	8654-501-283-00	BUSH/22X25X25	*	4	4				
6	8663-501-001-10	PIN/22X106	*	2	2				
7	V411-260-022-00	WASHER,PL/M22	*	2	2				
8	V760-150-000-00	NIPPLE,GREASE	*	2	2				
9	V304-460-016-00	NUT/M16	*	2	2				
10	V401-160-016-00	WASHER,SP/M16	*	2	2				
11	8595-501-001-20	WHEEL/GAUGE/FRONT	*	3	3	1			
12	8595-505-051-30	PIN/12X117	*	3	3				
13	V360-260-012-00	NUT/WASHER	*	3	3				

FIG. 19 LINK SYSTEM

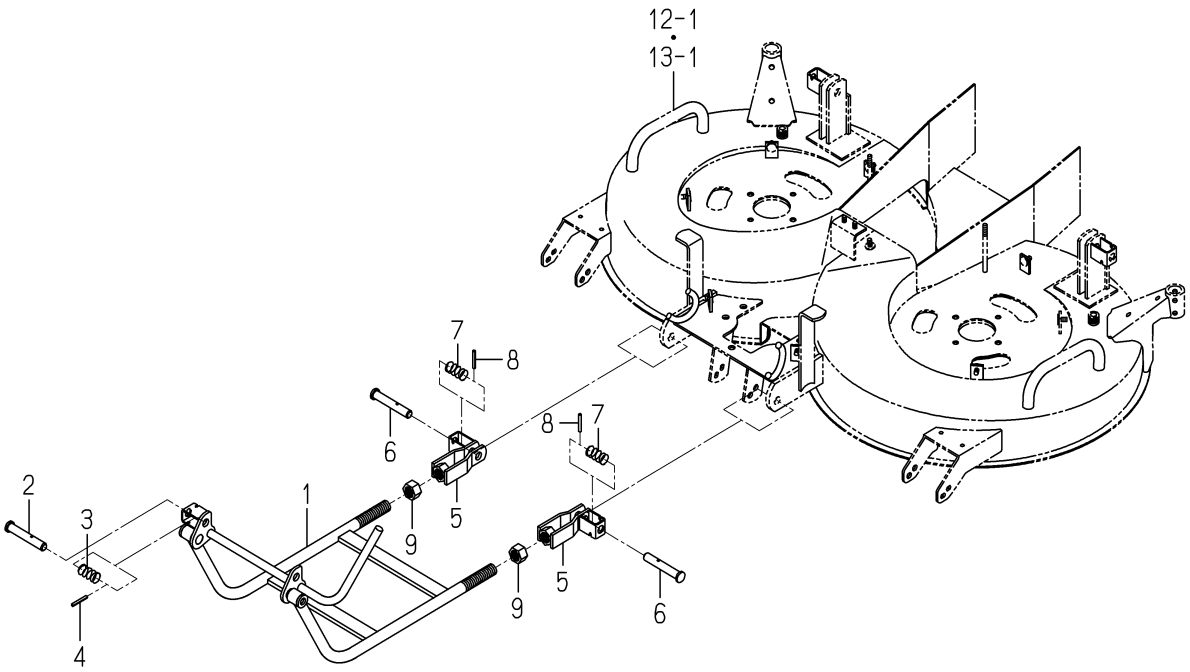

8663-608 -0100

KEY	PART CODE	DESCRIPTION	SPC	TYPE OF MODEL SCMA48M	TYPE OF MODEL SCMA54M	ITC	COL	GRP	REMARKS
1	8663-608-210-00	ARM/FRONT COMP	*	1	1		7F		
2	8595-608-082-10	PIN/16X96	*	1	1	1			
3	1560-601-028-00	SPRING/HC042	*	1	1				
4	V580-140-504-00	PIN,SPRING/5 X40 W	*	1	1				
5	8657-608-720-00	FORK/M22 COMP	*	2	2				
6	8595-608-082-10	PIN/16X96	*	2	2	1			
7	1560-601-028-00	SPRING/HC042	*	2	2				
8	V580-140-504-00	PIN,SPRING/5 X40 W	*	2	2				
9	V334-460-022-00	NUT	*	2	2				

FIG. 20 LABEL

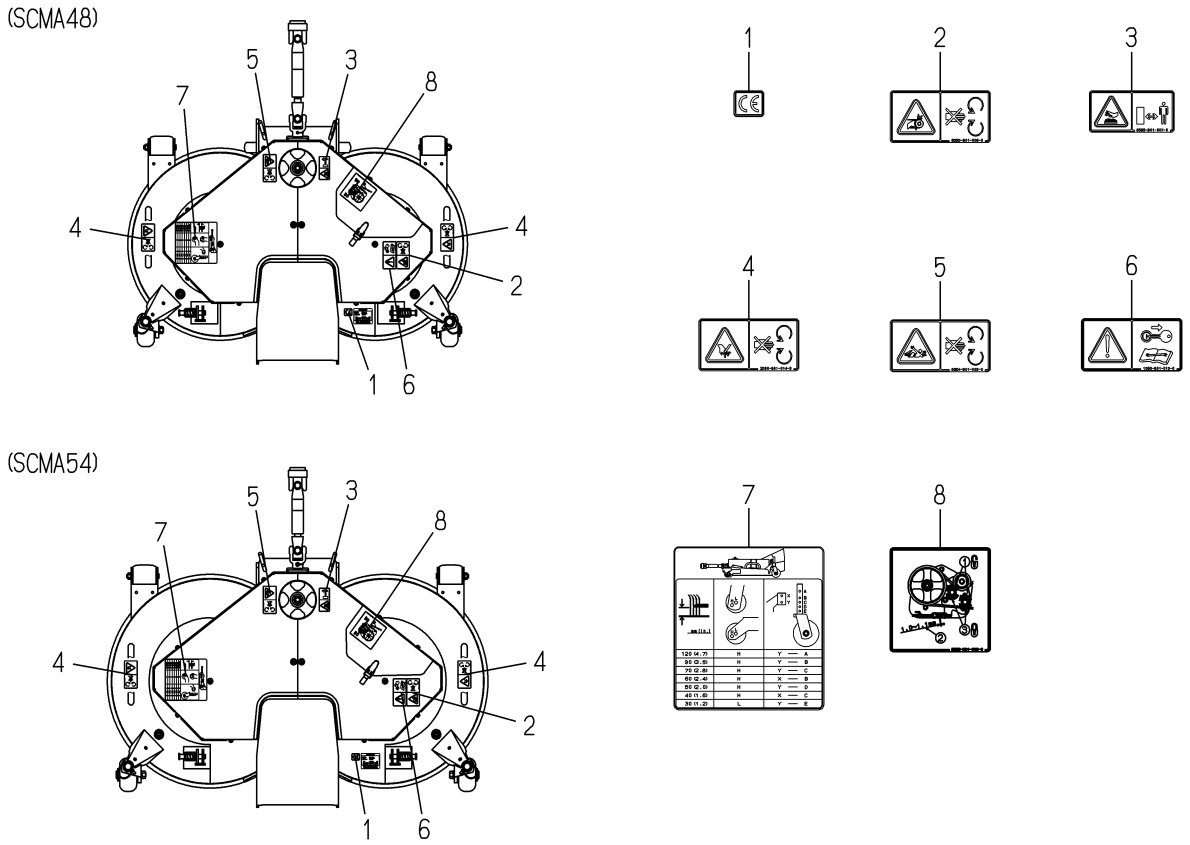

8663-901 -0100

KEY	PART CODE	DESCRIPTION	SPC	TYPE OF MODEL SCMA48M	TYPE OF MODEL SCMA54M	ITC	COL	GRP	REMARKS
1	2500-901-027-00	LABEL/CE	*	1	1				
2	8595-901-006-00	LABEL/WARNING/BELT	*	1	1				
3	8595-901-007-00	LABEL/WARNING/HOT	*	1	1				
4	2500-901-014-30	LABEL/DANGER	*	2	2				
5	8654-901-002-00	LABEL/PTO	*	1	1				
6	1593-901-015-00	LABEL/MAINTENANCE	*	1	1				
7	8663-901-001-00	LABEL/GAUGEWHEEL	*	1	1				
8	8663-901-002-00	LABEL/TENSION	*	1	1				

FIG. 21 JOINT(UNIVERSAL)(SCM48M)(OPTION)

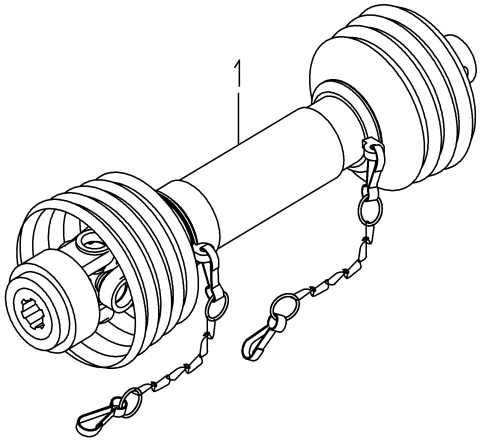

8663-101Z-0100

KEY	PART CODE	DESCRIPTION	SPC	TYPE OF MODEL		ITC	COL	GRP	REMARKS
				SCMA48M	SCMA54M				
1	8663-101-210-00	JOINT/UNIVERSAL SET	T	1					FIG 025

FIG. 22 JOINT(UNIVERSAL)(SCM54M)(OPTION)

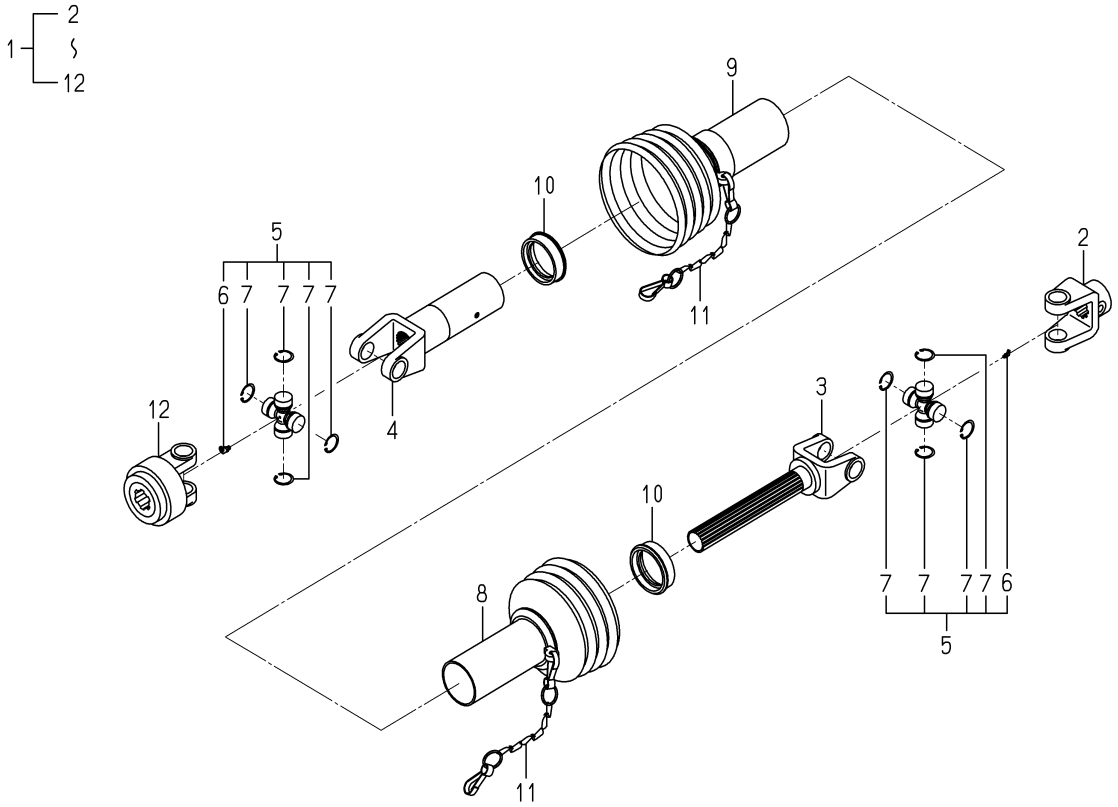

8665-101Z-0100

KEY	PART CODE	DESCRIPTION	SPC	TYPE OF MODEL SCMA48M	TYPE OF MODEL SCMA54M	ITC	COL	GRP	REMARKS
1	8665-101-210-00	JOINT/UNIVERSAL SET	T		1				
2	8654-101-221-00	FITTINGYOKE	T		1				
3	8665-101-211-00	SHAFTYOKE	T		1				
4	8665-101-212-00	SLEEVEYOKE	T		1				
5	8654-101-230-00	JOURNALCROSSE ASSY	T		2				
6	8654-101-232-00	GREASENIPPLE	T		2				
7	8654-101-233-00	SURCLIP/HOLE	T		8				
8	8665-101-213-00	SAFETYGUARD/IN	T		1				
9	8665-101-214-00	SAFETYGUARD/OUT	T		1				
10	7821-102-008-00	RING/SLIDE	T		2				
11	7821-102-220-00	CHAIN ASSY	T		2				
12	8657-101-501-00	AS YOKE ASSY	T		1				

FIG. 23 COMPONENT PARTS FOR 8659-101-210-00 ON Fig.1

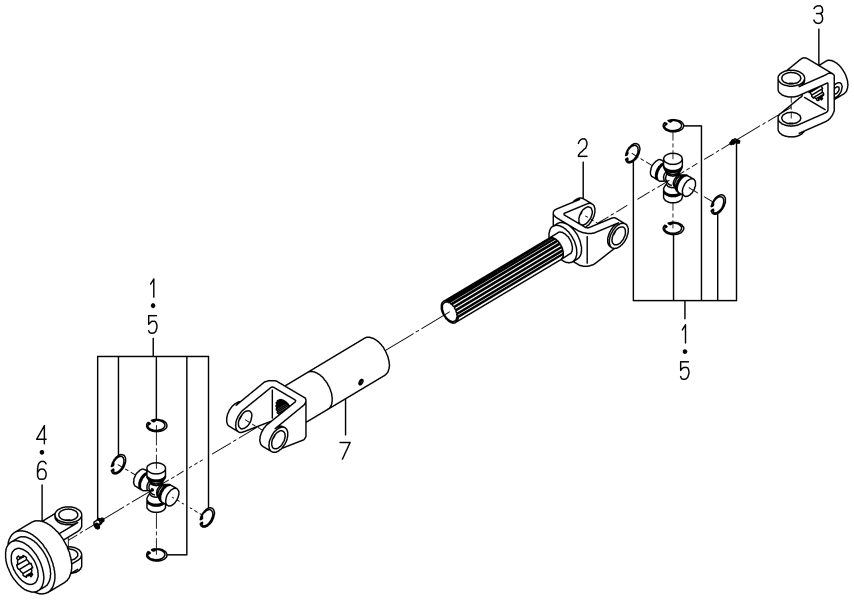

8659-101-210-0E

KEY	PART CODE	DESCRIPTION	SPC	TYPE OF MODEL SCMA48M	TYPE OF MODEL SCMA54M	ITC	COL	GRP	REMARKS
1	8659-101-211-00	UJ ASSY	*		1				
2	8659-101-214-00	YOKE/SHAFT	*		1				
3	8659-101-215-00	FITTINGYOKE	*		1				
4	8659-101-212-00	ASYOKE ASSY	*		1				
5	8659-101-211-00	UJ ASSY	*		1				
6	8659-101-212-00	ASYOKE ASSY	*		1				
7	8659-101-213-00	SLEEVEYOKE	*		1				

FIG. 24 COMPONENT PARTS FOR 8662-101-210-00 ON Fig.2

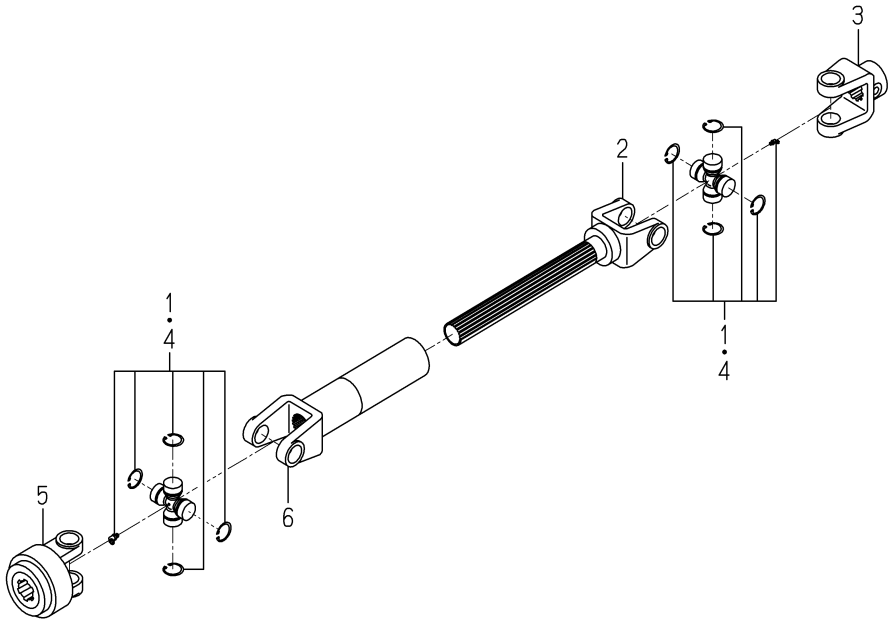

8662-101-210-0D

KEY	PART CODE	DESCRIPTION	SPC	TYPE OF MODEL SCMA48M	TYPE OF MODEL SCMA54M	ITC	COL	GRP	REMARKS
1	8659-101-211-00	UJ ASSY	*	1					
2	8662-101-214-00	SHAFTYOKE	*	1					
3	8659-101-215-00	FITTINGYOKE	*	1					
4	8659-101-211-00	UJ ASSY	*	1					
5	8659-101-212-00	ASYOKE ASSY	*	1					
6	8662-101-213-00	SLEEVEYOKE	*	1					

FIG. 25 COMPONENT PARTS FOR 8663-101-210-00 ON Fig.21

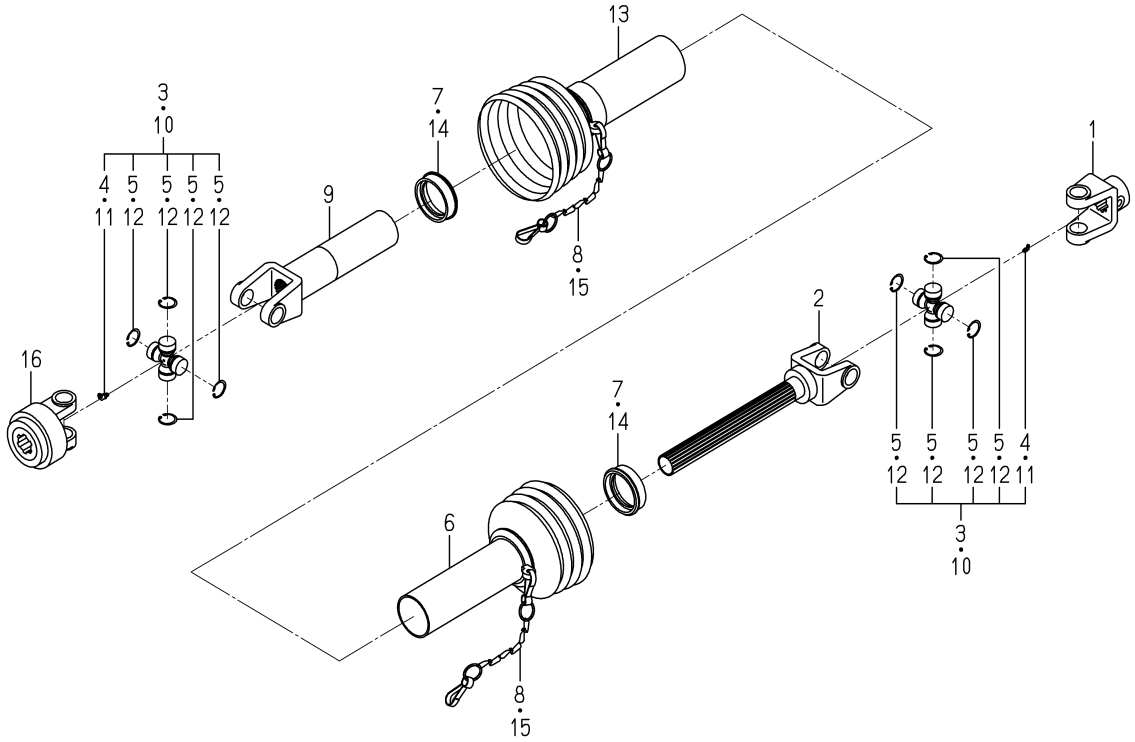

8663-101-210-0B

KEY	PART CODE	DESCRIPTION	SPC	TYPE OF MODEL SCMA48M	SCMA54M	ITC	COL	GRP	REMARKS
1	8654-101-221-00	FITTINGYOKE	T	1					
2	8663-101-211-00	SHAFTYOKE	T	1					
3	8654-101-230-00	JOURNALCROSSE ASSY	T	1					
4	8654-101-232-00	GREASENIPPLE	T	1					
5	8654-101-233-00	SURCLIP/HOLE	T	4					
6	8663-101-213-00	SAFETYGUARD/IN	T	1					
7	7821-102-008-00	RING/SLIDE	T	1					
8	7821-102-220-00	CHAIN ASSY	T	1					
9	8663-101-212-00	SLEEVEYOKE	T	1					
10	8654-101-230-00	JOURNALCROSSE ASSY	T	1					
11	8654-101-232-00	GREASENIPPLE	T	1					
12	8654-101-233-00	SURCLIP/HOLE	T	4					
13	8663-101-214-00	SAFETYGUARD/OUT	T	1					
14	7821-102-008-00	RING/SLIDE	T	1					
15	7821-102-220-00	CHAIN ASSY	T	1					
16	8657-101-501-00	AS YOKE ASSY	T	1					

COLLECTOR

SBC550XM

FIG. 1 FRAME SYSTEM(L TYPE)

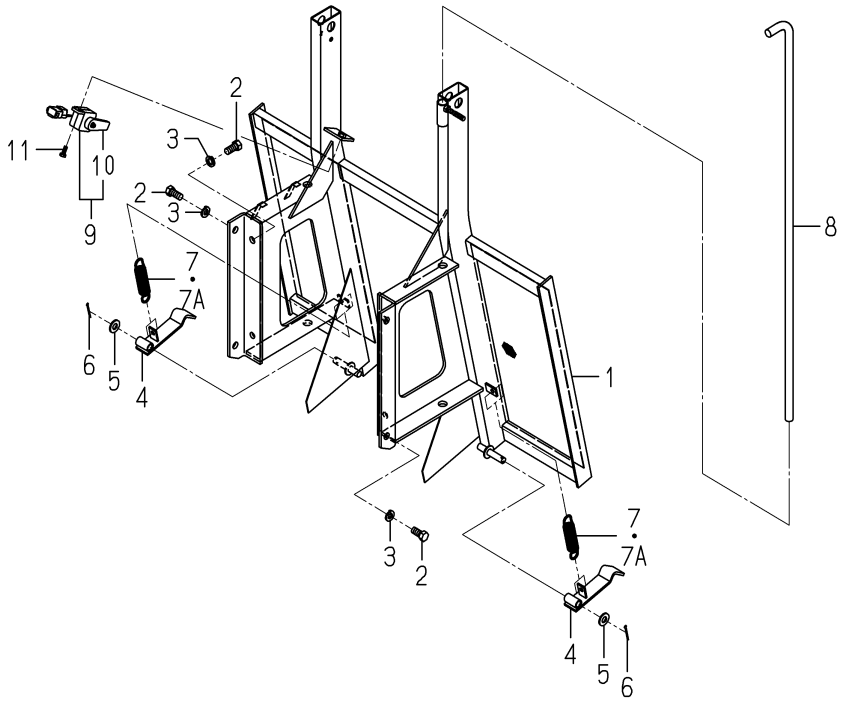

8664-105A-0100

KEY	PART CODE	DESCRIPTION	SPC	TYPE OF MODEL SBC550	XM	ITC	COL	GRP	REMARKS
1	8664-105-310-00	FRAME/COLLECTOR COMP	*	1			7F		
2	V201-361-202-50	BOLT/M12X25	*	8					
3	V401-160-012-00	WASHER,SP/M12	*	8					
4	8664-105-230-00	HOOK COMP	*	2					
5	V411-260-012-00	WASHER /M12	*	2					
6	V500-163-002-50	PIN,SPLIT/3 X25	*	2					
7	2500-210-016-00	SPRING/HE108	*	2 -100668					
7A	3746-235-002-00	SPRING,ROD F.	*	2 100669-					
8	8664-105-001-00	BAR	*	1					
9	1716-680-330-00	SWITCH/LEVER ASSY	*	1					
10	1716-680-222-00	ARM	*	1					
11	V210-360-602-00	BOLT/SP	*	1					

FIG. 2 FRAME SYSTEM(H TYPE)

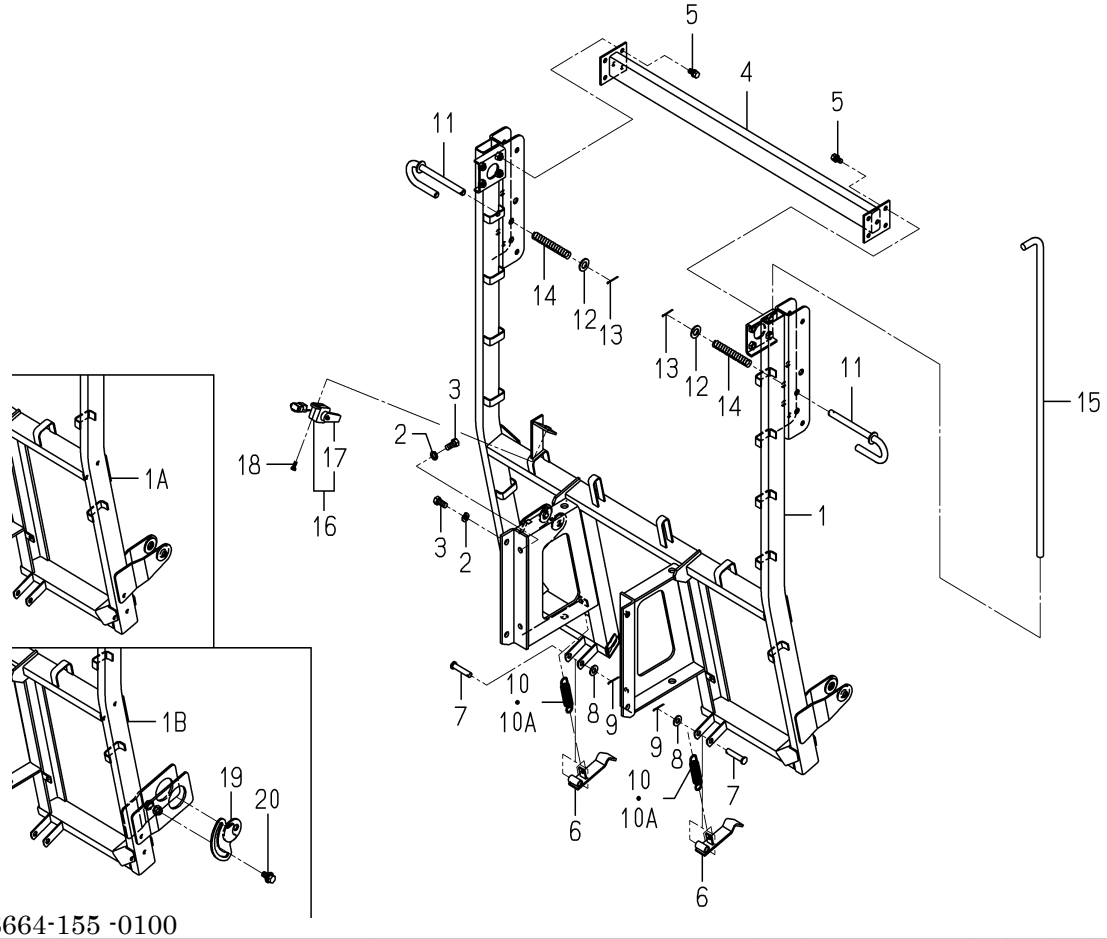

8664-155 -0100

KEY	PART CODE	DESCRIPTION	SPC	TYPE OF MODEL SBC550 XM		ITC	COL	GRP	REMARKS
1	8664-155-210-90	FRAME/COLLECTOR COMP	*	1 -100846			7F		
1A	8664-155-310-00	FRAME/COLLECTOR COMP	*	1 -103760					
1B	8664-155-310-10	FRAME/COLLECTOR COMP	*	1 103761-		1			
2	V201-361-202-50	BOLT/M12X25	*	8					
3	V401-160-012-00	WASHER,SP/M12	*	8					
4	8664-155-250-00	TUBE/927 COMP	*	1					
5	V211-261-002-00	BOLT,SEMS	*	8					
6	8664-155-230-00	HOOK COMP	*	2					
7	8664-155-001-00	PIN/12X56	*	2					
8	V411-260-012-00	WASHER /M12	*	2					
9	V500-163-002-50	PIN,SPLIT/3 X25	*	2					
10	2500-210-016-00	SPRING/HE108	*	2 -100668					
10A	3746-235-002-00	SPRING,ROD F.	*	2 100669-					
11	8664-155-240-00	PIN COMP	*	2					
12	V411-260-016-00	WASHER / M16	*	2					
13	V500-163-003-00	PIN,SPLIT/3X30	*	2					
14	8664-155-002-00	SPRING/HC120	*	2					
15	8664-105-001-00	BAR	*	1					
16	1716-680-330-00	SWITCH/LEVER ASSY	*	1					
17	1716-680-222-00	ARM	*	1					
18	V210-360-602-00	BOLT/SP	*	1					
19	8664-155-260-00	CAM COMP	*	4 103761-					
20	V211-361-202-50	BOLT/SP	*	4 103761-					

FIG. 3 CONTAINER SYSTEM(L TYPE)

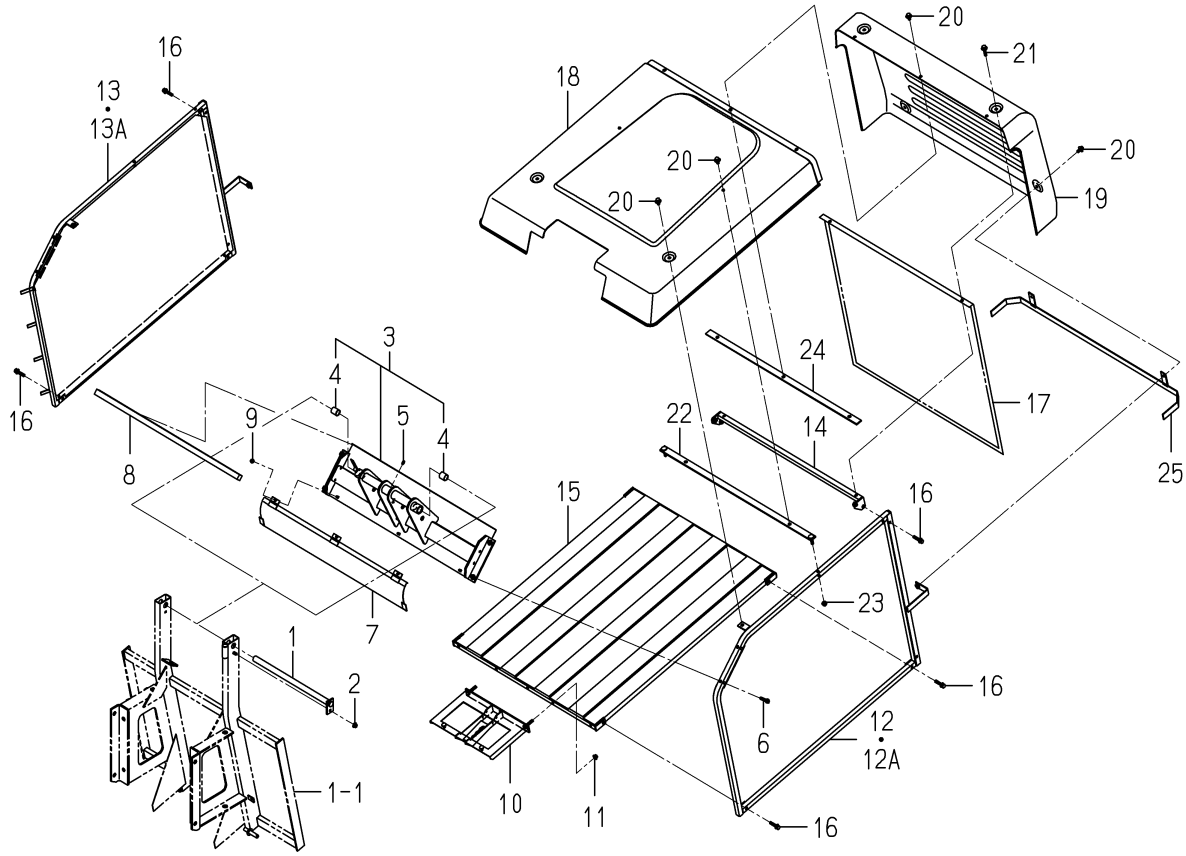

8664-305A-0100

KEY	PART CODE	DESCRIPTION	SPC	TYPE OF MODEL SBC550	XM	ITC	COL	GRP	REMARKS
1	8664-305-210-00	PIN/20X405 COMP	*	1					
2	V362-260-008-00	NUT/WASHER	*	1					
3	8664-305-200-10	FRAME/UPPER ASSY	*	1			7F		
4	8664-305-201-00	BUSH/20X23X25	*	2					
5	V760-150-000-00	NIPPLE,GREASE	*	1					
6	V211-560-804-50	BOLT,SEMS/M8X45 7T	*	4					
7	8664-305-310-00	COVER/UPPER/SUB COMP	*	1			7F		
8	8664-305-031-00	INSULATOR/756	*	1					
9	V360-260-006-00	NUT/M6	*	3					
10	8664-305-280-20	PLATE/LOWER/FRONT	*	1					
11	V362-260-008-00	NUT/WASHER	*	2					
12	8664-305-240-10	FRAME/SIDE/LH COMP	*	1 -102230			7F		
12A	8664-305-240-20	FRAME/SIDE/LH COMP	*	1 102231-		1	7F		
13	8664-305-250-10	FRAME/SIDE/RH COMP	*	1 -102230			7F		
13A	8664-305-250-20	FRAME/SIDE/RH COMP	*	1 102231-		1	7F		
14	8664-305-230-00	FRAME/REAR COMP	*	1					
15	8664-305-260-10	FRAME/LOWER COMP	*	1			7F		
16	V211-660-804-00	BOLT/SP	*	8					
17	8664-305-001-10	NET/REAR	*	1			7F		
18	8664-305-002-00	COVER/CONTAINER/FRON	*	1					
19	8664-305-003-00	COVER/CONTAINER/REAR	*	1					
20	8664-305-004-00	BOLT/SP/M08X20	*	9					
21	8664-305-005-00	BOLT/SP/M08X40	*	2					
22	8664-305-320-00	PLATE/COVER/FRONT	*	1					
23	V362-260-008-00	NUT/WASHER	*	2					
24	8664-305-330-00	PLATE/COVER/REA COMP	*	1					
25	8664-305-340-00	GUIDE/REAR COMP	*	1					

FIG. 4 CONTAINER SYSTEM(H TYPE)

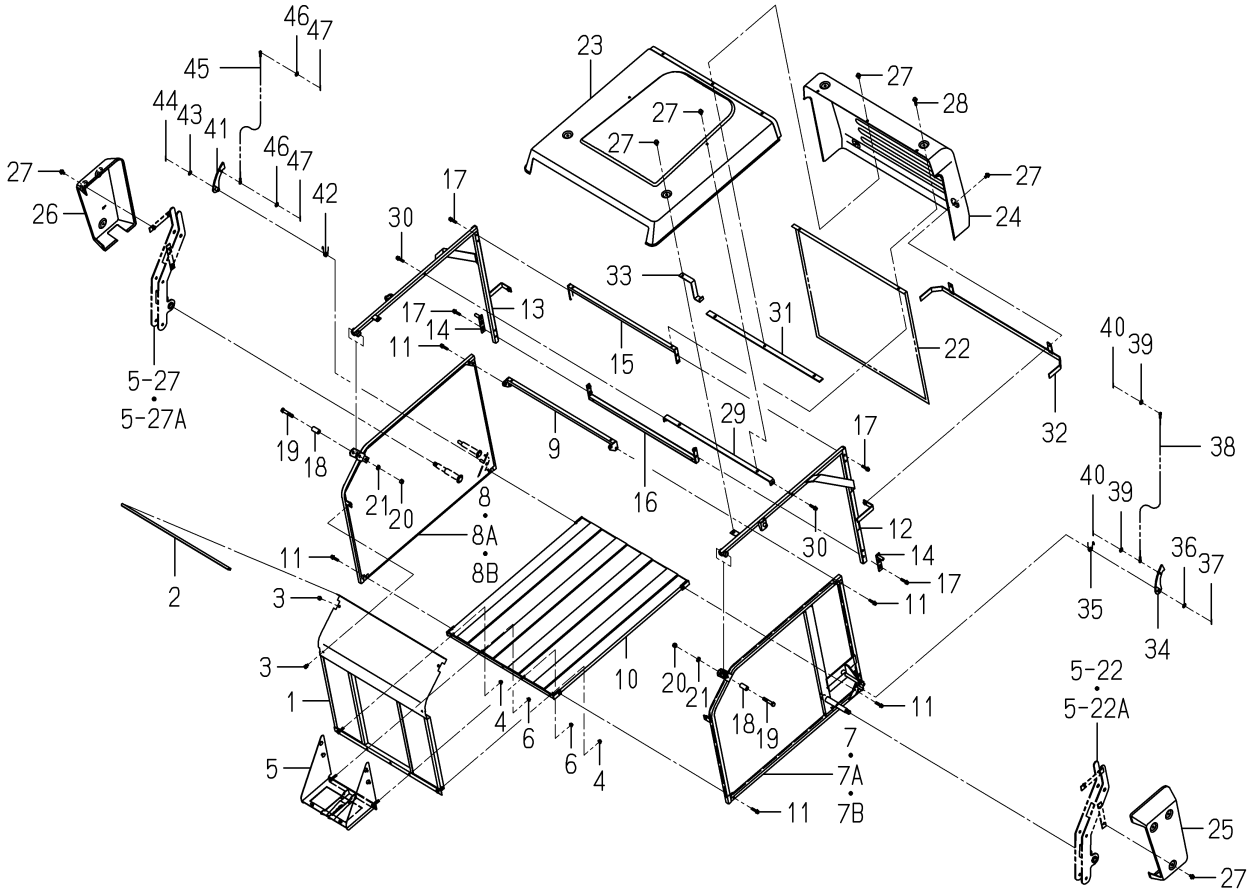

8664-355A-0100

KEY	PART CODE	DESCRIPTION	SPC	TYPE OF MODEL SBC550	XM	ITC	COL	GRP	REMARKS
1	8664-355-410-00	CONTAINER/FRONT COMP	*	1			7F		
2	8664-355-031-00	INSULATOR/756	*	1					
3	V211-360-801-60	BOLT,SEMS (SP)	*	4					
4	V362-260-008-00	NUT/WASHER	*	2					
5	8664-355-310-40	PLATE/LOWER/FRONT	*	1					
6	V362-260-008-00	NUT/WASHER	*	6					
7	8664-355-220-20	FRAME/SIDE/LH COMP	*	1 -101833			7F		
7A	8664-355-220-30	FRAME/SIDE/LH COMP	*	1 -103760		1	7F		
7B	8664-355-220-40	FRAME/SIDE/LH COMP	*	1 103761-		1	7F		
8	8664-355-230-20	FRAME/SIDE/RH COMP	*	1 -101833			7F		
8A	8664-355-230-30	FRAME/SIDE/RH COMP	*	1 -103760		1	7F		
8B	8664-355-230-40	FRAME/SIDE/RH COMP	*	1 103761-		1	7F		
9	8664-305-230-00	FRAME/REAR COMP	*	1					
10	8664-355-240-10	FRAME/LOWER COMP	*	1			7F		
11	V211-660-804-50	BOLT/SP	*	8					
12	8664-355-250-10	FRAME/COVER/LH COMP	*	1					
13	8664-355-260-10	FRAME/COVER/RH COMP	*	1					
14	8664-355-330-00	PIN COMP	*	2					
15	8664-355-270-00	FRAME/REAR/UPPE COMP	*	1					
16	8664-355-280-00	FRAME/REAR/LOWE COMP	*	1					
17	V211-660-804-50	BOLT/SP	*	8					
18	8664-455-001-00	COLLAR/12X20X41	*	2					
19	V201-361-206-50	BOLT	*	2					
20	V304-260-012-00	NUT/M12	*	2					
21	V401-160-012-00	WASHER,SP/M12	*	2					
22	8664-305-001-10	NET/REAR	*	1			7F		
23	8664-355-002-00	COVER/CONTAINER/FRON	*	1					
24	8664-305-003-00	COVER/CONTAINER/REAR	*	1					
25	8664-355-003-00	COVER/CONTAINER/SIDE	*	1					
26	8664-355-004-00	COVER/CONTAINER/SIDE	*	1					

FIG. 4 CONTAINER SYSTEM(H TYPE)

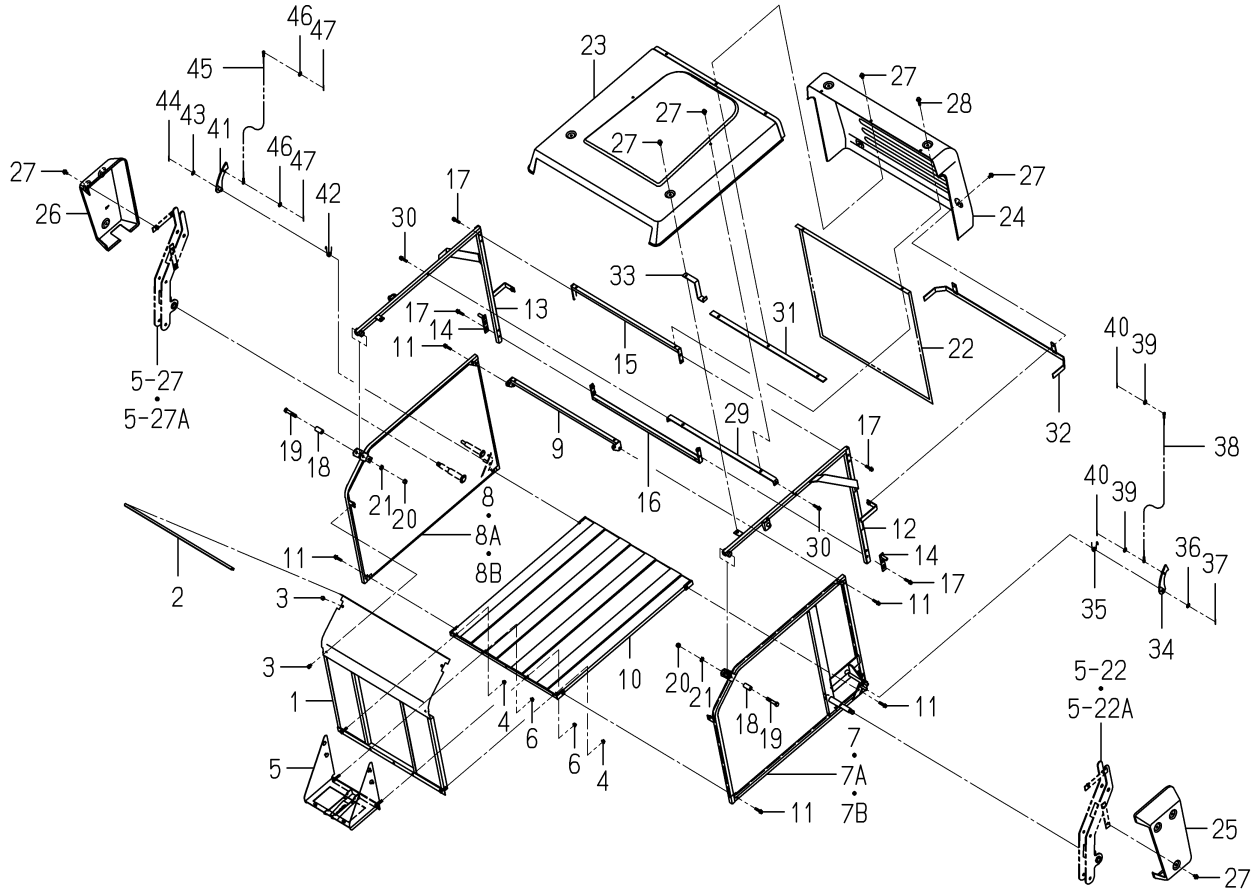

8664-355A-0100

KEY	PART CODE	DESCRIPTION	SPC	TYPE OF MODEL SBC550	XM	ITC	COL	GRP	REMARKS
27	8664-305-004-00	BOLT/SP/M08X20	*	15					
28	8664-305-005-00	BOLT/SP/M08X40	*	2					
29	8664-355-320-00	PLATE/U/749X25 COMP	*	1					
30	V211-660-804-50	BOLT/SP	*	2					
31	8664-305-330-00	PLATE/COVER/REA COMP	*	1					
32	8664-305-340-00	GUIDE/REAR COMP	*	1					
33	8664-355-009-00	GUIDE/SIDE	*	2					
34	8664-355-340-00	PLATE/LOCK/LH COMP	*	1					
35	8664-355-007-00	SPRING/HT020	*	1					
36	V411-260-010-00	WASHER/M10	*	1					
37	V500-163-002-50	PIN,SPLIT/3 X25	*	1					
38	8664-355-360-00	CABLE/LOCK COMP	*	1					
39	V411-260-006-00	WASHER / M6	*	2					
40	V500-162-502-00	PIN,SPLIT/2.5X20	*	2					
41	8664-355-350-00	PLATE/LOCK/RH COMP	*	1					
42	8664-355-008-00	SPRING/HT020	*	1					
43	V411-260-010-00	WASHER/M10	*	1					
44	V500-163-002-50	PIN,SPLIT/3 X25	*	1					
45	8664-355-360-00	CABLE/LOCK COMP	*	1					
46	V411-260-006-00	WASHER / M6	*	2					
47	V500-162-502-00	PIN,SPLIT/2.5X20	*	2					

FIG. 5 LINK SYSTEM(H TYPE)

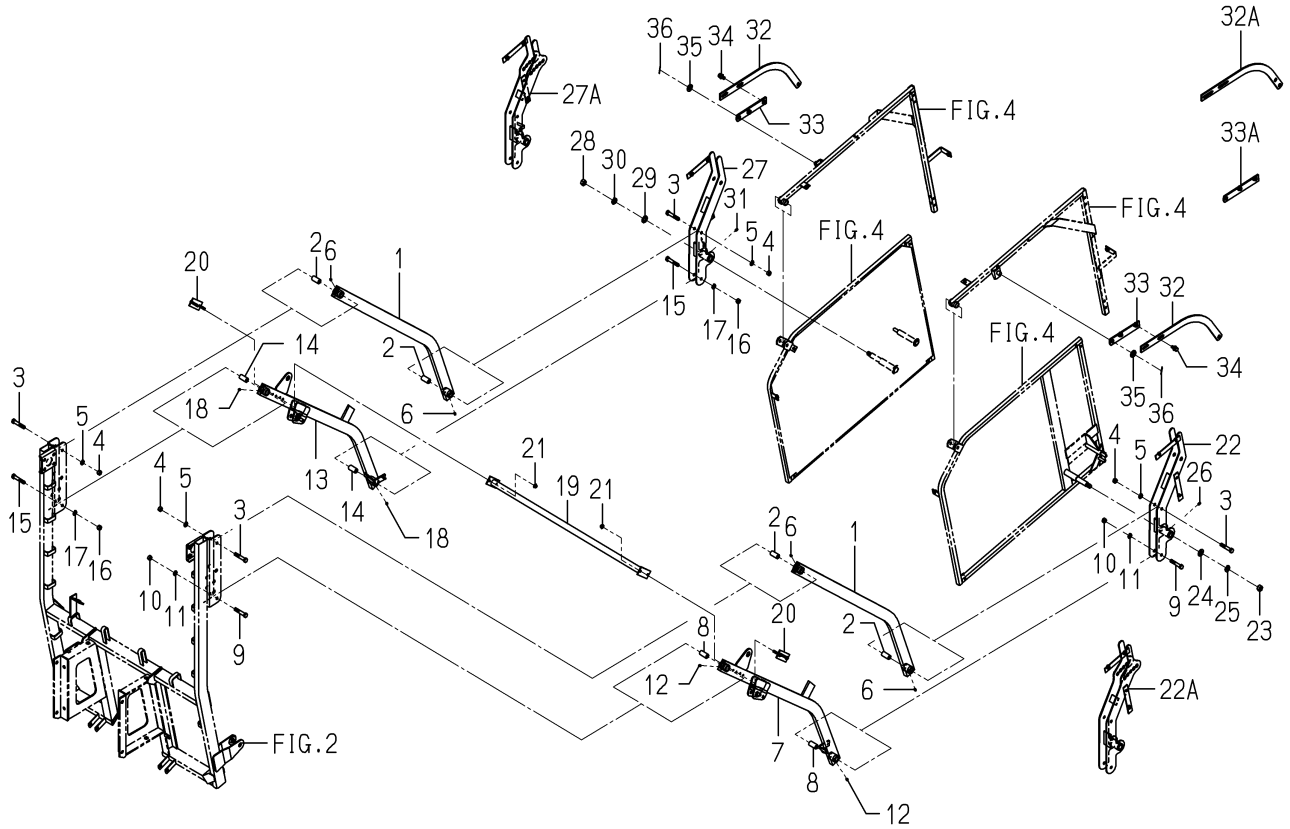

8664-455 -0100

KEY	PART CODE	DESCRIPTION	SPC	TYPE OF MODEL SBC550 XM		ITC	COL	GRP	REMARKS
1	8664-455-210-10	LINK/A COMP	*	2					
2	8664-455-001-00	COLLAR/12X20X41	*	4					
3	V201-361-206-50	BOLT	*	4					
4	V304-260-012-00	NUT/M12	*	4					
5	V401-160-012-00	WASHER,SP/M12	*	4					
6	V760-150-000-00	NIPPLE,GREASE	*	4					
7	8664-455-220-20	LINK/B/LH COMP	*	1					
8	8664-455-001-00	COLLAR/12X20X41	*	2					
9	V201-361-206-50	BOLT	*	2					
10	V304-260-012-00	NUT/M12	*	2					
11	V401-160-012-00	WASHER,SP/M12	*	2					
12	V760-150-000-00	NIPPLE,GREASE	*	2					
13	8664-455-280-00	LINK/B/RH COMP	*	1					
14	8664-455-001-00	COLLAR/12X20X41	*	2					
15	V201-361-206-50	BOLT	*	2					
16	V304-260-012-00	NUT/M12	*	2					
17	V401-160-012-00	WASHER,SP/M12	*	2					
18	V760-150-000-00	NIPPLE,GREASE	*	2					
19	8664-455-230-00	BAR COMP	*	1					
20	8664-455-240-00	PLATE/I/38X80 COMP	*	2					
21	V362-260-008-00	NUT/WASHER	*	4					
22	8664-455-250-10	BRACKET/LINK/LH COMP	*	1 -103760					
22A	8664-455-250-20	BRACKET/LINK/LH COMP	*	1 103761-		1			
23	V304-260-016-00	NUT/M16	*	1					
24	V411-260-016-00	WASHER / M16	*	1					
25	V401-160-016-00	WASHER,SP/M16	*	1					
26	V760-150-000-00	NIPPLE,GREASE	*	1					
27	8664-455-260-10	BRACKET/LINK/RH COMP	*	1 -103760					
27A	8664-455-260-20	BRACKET/LINK/RH COMP	*	1 103761-		1			
28	V304-260-016-00	NUT/M16	*	1					

FIG. 5 LINK SYSTEM(H TYPE)

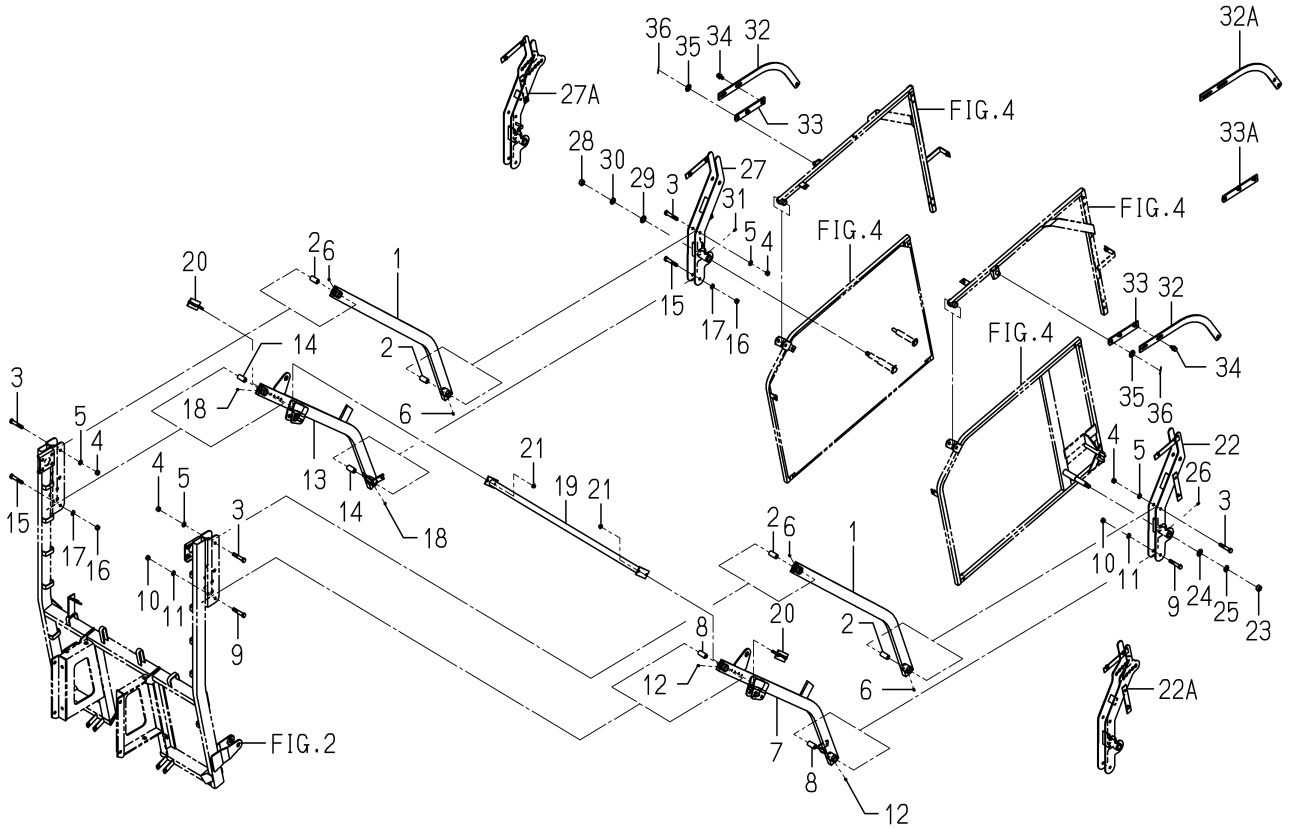

8664-455 -0100

KEY	PART CODE	DESCRIPTION	SPC	TYPE OF MODEL SBC550	XM	ITC	COL	GRP	REMARKS
29	V411-260-016-00	WASHER / M16	*	1					
30	V401-160-016-00	WASHER,SP/M16	*	1					
31	V760-150-000-00	NIPPLE,GREASE	*	1					
32	8664-455-002-10	LINK/C	*	2 -103760					
32A	8664-455-002-20	LINK/C	*	2 103761-		1			
33	8664-455-270-00	PLATE/IR/32X192 COMP	*	2 -103760					
33A	8664-455-270-10	PLATE/IR/32X227 COMP	*	2 103761-		1			
34	V211-361-002-50	BOLT/SP	*	4					
35	V411-260-016-00	WASHER / M16	*	2					
36	V500-163-003-00	PIN,SPLIT/3X30	*	2					

FIG. 6 CYLINDER SYSTEM(L TYPE)

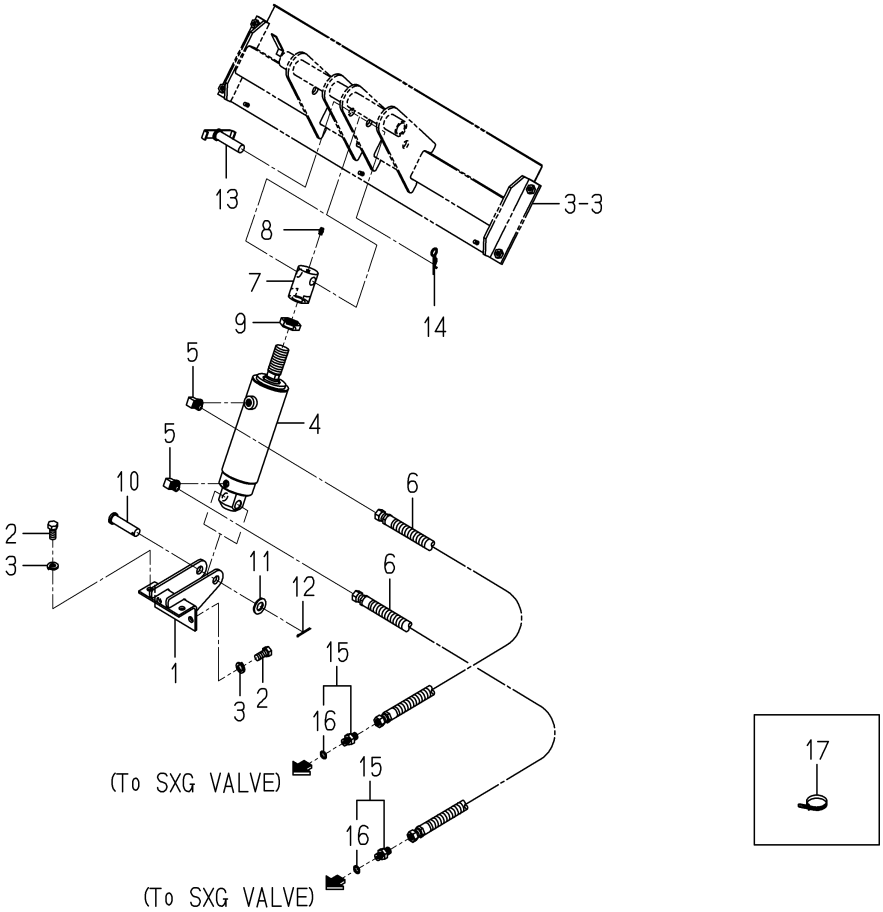

8664-505 -0100

KEY	PART CODE	DESCRIPTION	SPC	TYPE OF MODEL SBC550 XM		ITC	COL	GRP	REMARKS
1	8664-505-210-00	STAY/CYLINDER COMP	*	1					
2	V201-361-202-50	BOLT/M12X25	*	4					
3	V401-160-012-00	WASHER,SP/M12	*	4					
4	K185-021-000-00	CYLINDER ASSY	*	1					FIG 014
5	3768-185-022-10	ADAPTER(90ß/PUMP)	*	2					
6	8664-505-230-00	HOSE/HYDRO/650 ASSY	*	2					
7	8664-505-001-20	NUT/CYLINDER	*	1					
8	V760-150-000-00	NIPPLE,GREASE	*	1					
9	8664-505-002-00	NUT/M27X2	*	1					
10	8664-505-003-00	PIN/16X65	*	1					
11	V411-260-016-00	WASHER / M16	*	1					
12	V500-163-003-00	PIN,SPLIT/3X30	*	1					
13	8664-505-220-00	PIN/16X65 COMP	*	1					
14	1305-931-003-00	PIN,HAIR	*	1					
15	8664-555-250-00	ADAPTER/G1/4 ASSY	*	2					
16	V720-112-401-10	RING/O	*	2					
17	1342-402-006-00	BAND/WIRE/250	*	5					

FIG. 7 CYLINDER SYSTEM(H TYPE)

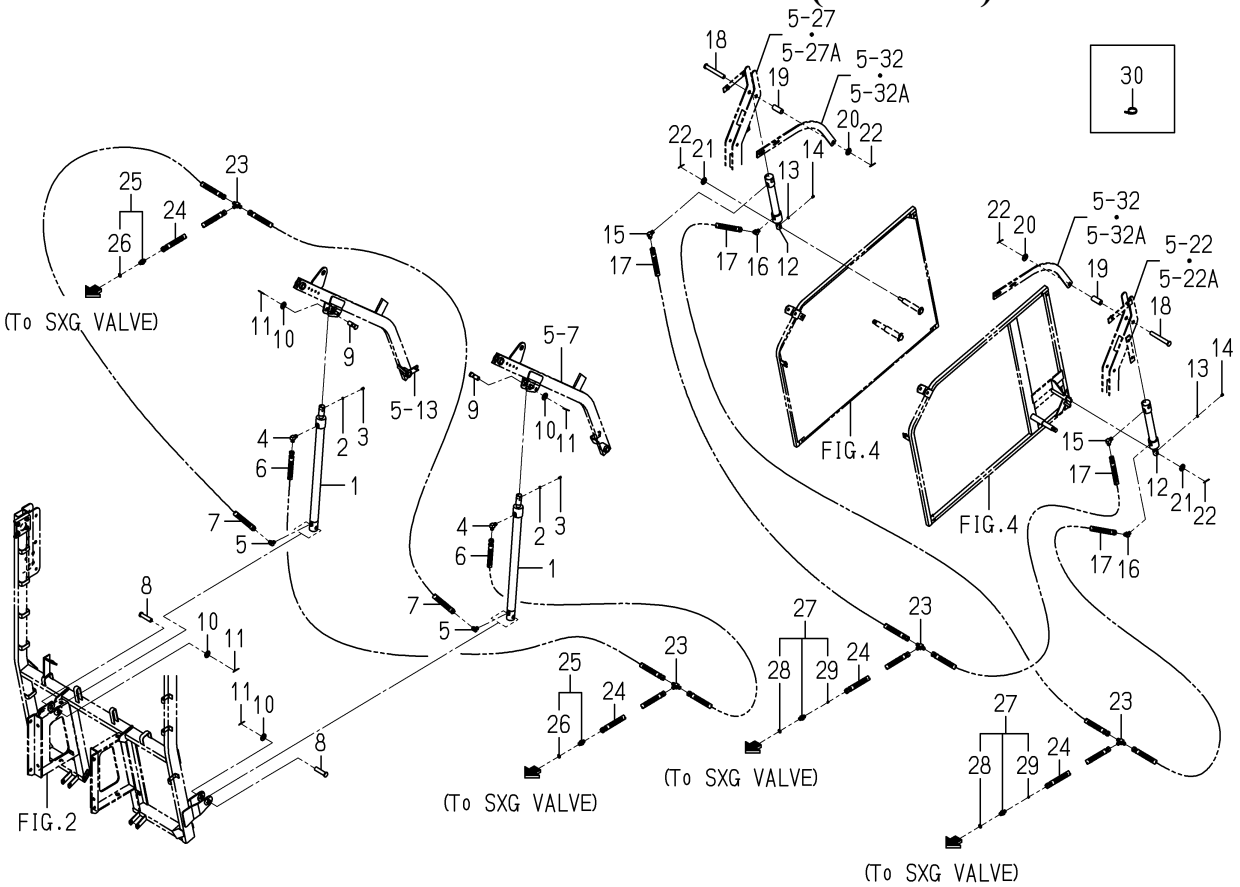

8664-555 -0100

KEY	PART CODE	DESCRIPTION	SPC	TYPE OF MODEL SBC550	TYPE OF MODEL XM	ITC	COL	GRP	REMARKS
1	K185-077-000-10	CYLINDER ASSY	*	2					
2	V401-160-006-00	WASHER,SP/M 6	*	2					
3	V760-150-000-00	NIPPLE,GREASE	*	2					
4	3768-185-022-10	ADAPTER(90ß/PUMP)	*	2					
5	3631-350-201-10	ADAPTER/45ß	*	2					
6	8664-555-320-00	HOSE/HYDRO/1100 ASSY	*	2					
7	8664-555-350-00	HOSE/HYDRO/850 ASSY	*	2					
8	8664-555-001-00	PIN/16X66	*	2					
9	8664-555-009-00	PIN/16X46	*	2					
10	V411-260-016-00	WASHER / M16	*	4					
11	V500-163-003-00	PIN,SPLIT/3X30	*	4					
12	K185-078-000-10	CYLINDER ASSY	*	2					
13	V401-160-006-00	WASHER,SP/M 6	*	2					
14	V760-150-000-00	NIPPLE,GREASE	*	2					
15	3768-185-022-10	ADAPTER(90ß/PUMP)	*	2					
16	3631-350-201-10	ADAPTER/45ß	*	2					
17	8664-555-340-00	HOSE/HYDRO/2700 ASSY	*	4					
18	8664-555-005-00	PIN/16X120	*	2					
19	8664-555-002-00	COLLAR/17X22X53	*	2					
20	V411-260-016-00	WASHER / M16	*	2					
21	V411-260-012-00	WASHER /M12	*	2					
22	V500-163-003-00	PIN,SPLIT/3X30	*	4					
23	8664-555-003-00	ADAPTER/T	*	4					
24	8664-505-230-00	HOSE/HYDRO/650 ASSY	*	4					
25	8664-555-250-00	ADAPTER/G1/4 ASSY	*	2					
26	V720-112-401-10	RING/O	*	2					
27	8664-555-270-00	ADAPTER/ORIFICE ASSY	*	2					
28	V720-112-401-10	RING/O	*	2					
29	K211-004-014-00	SCREW,ORIFICE	*	2					
30	1342-402-006-00	BAND/WIRE/250	*	25					

FIG. 8 SENSOR SYSTEM(L TYPE)

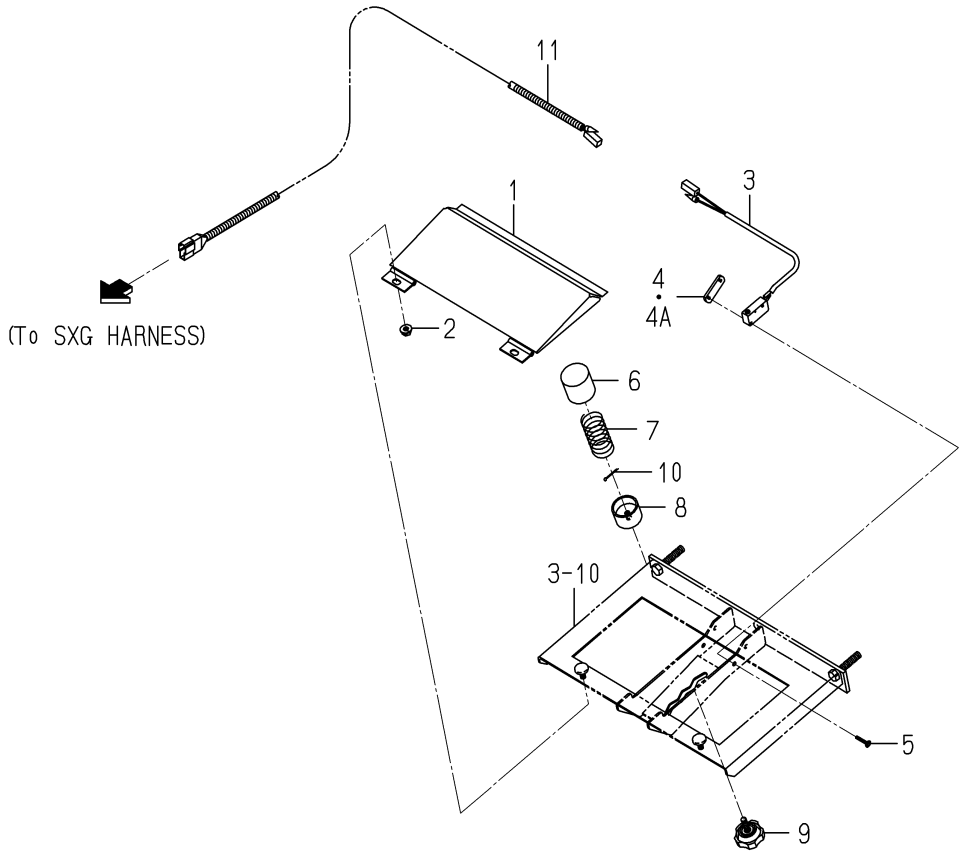

8664-605 -0100

KEY	PART CODE	DESCRIPTION	SPC	TYPE OF MODEL SBC550 XM		ITC	COL	GRP	REMARKS
1	8664-605-210-20	PLATE/SENSOR COMP	*	1			7F		
2	V360-260-006-00	NUT/M6	*	2					
3	8664-605-230-00	SWITCH ASSY	*	1					
4	3664-276-001-00	PLATE/IRX13X35	*	1 -101917					
4A	3642-496-007-10	PLATE,SWITCH	*	1 101918-					
5	1614-129-003-00	SCREW/M03X20	*	2					
6	8664-605-002-10	CUP/SPRING	*	1					
7	8664-605-003-00	SPRING/HC058	*	1					
8	8664-605-004-00	NUT/ADJUST	*	1					
9	8664-605-005-00	BOLT/KNOB/M06X20	*	1					
10	V500-161-601-00	PIN,SPLIT/1.6X10	*	1					
11	8664-605-220-10	HARNESS/COLLECTOR/L	*	1					

FIG. 9 SENSOR SYSTEM(H TYPE)

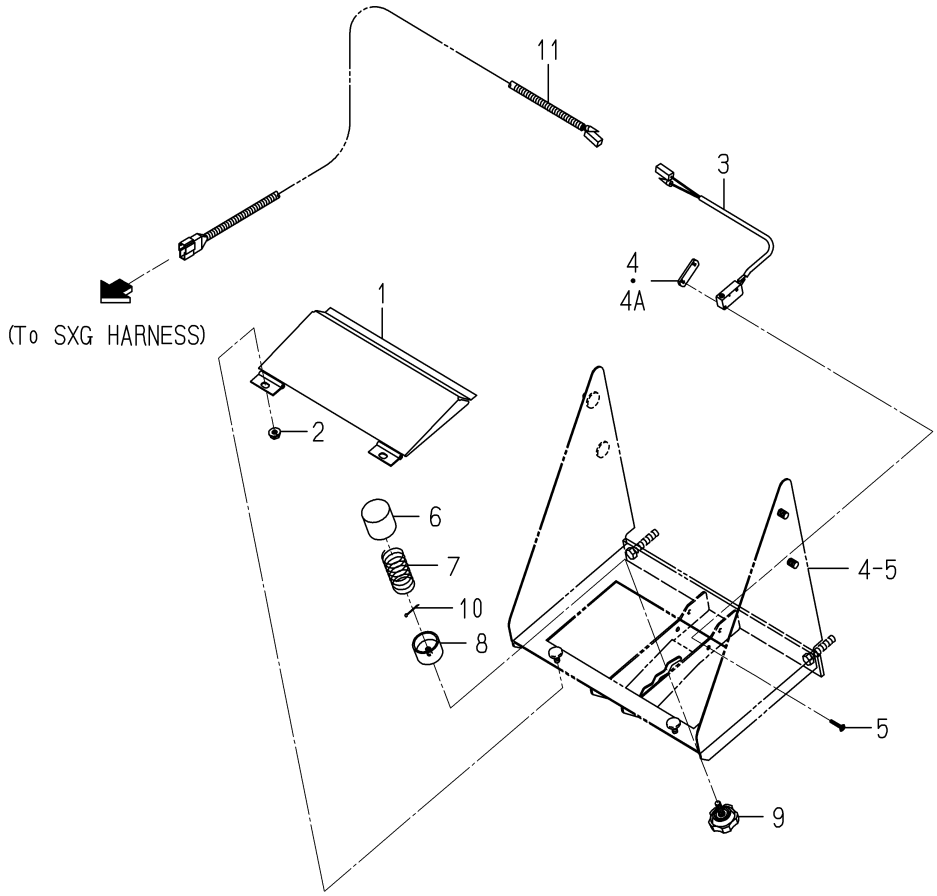

8664-655 -0100

KEY	PART CODE	DESCRIPTION	SPC	TYPE OF MODEL SBC550	XM	ITC	COL	GRP	REMARKS
1	8664-605-210-20	PLATE/SENSOR COMP	*	1			7F		
2	V360-260-006-00	NUT/M6	*	2					
3	8664-605-230-00	SWITCH ASSY	*	1					
4	3664-276-001-00	PLATE/IRX13X35	*	1 -101917					
4A	3642-496-007-10	PLATE,SWITCH	*	1 101918-					
5	1614-129-003-00	SCREW/M03X20	*	2					
6	8664-605-002-10	CUP/SPRING	*	1					
7	8664-605-003-00	SPRING/HC058	*	1					
8	8664-605-004-00	NUT/ADJUST	*	1					
9	8664-605-005-00	BOLT/KNOB/M06X20	*	1					
10	V500-161-601-00	PIN,SPLIT/1.6X10	*	1					
11	8664-655-210-10	HARNESS/COLLECTOR/H	*	1					

FIG. 10 LABEL(L TYPE)

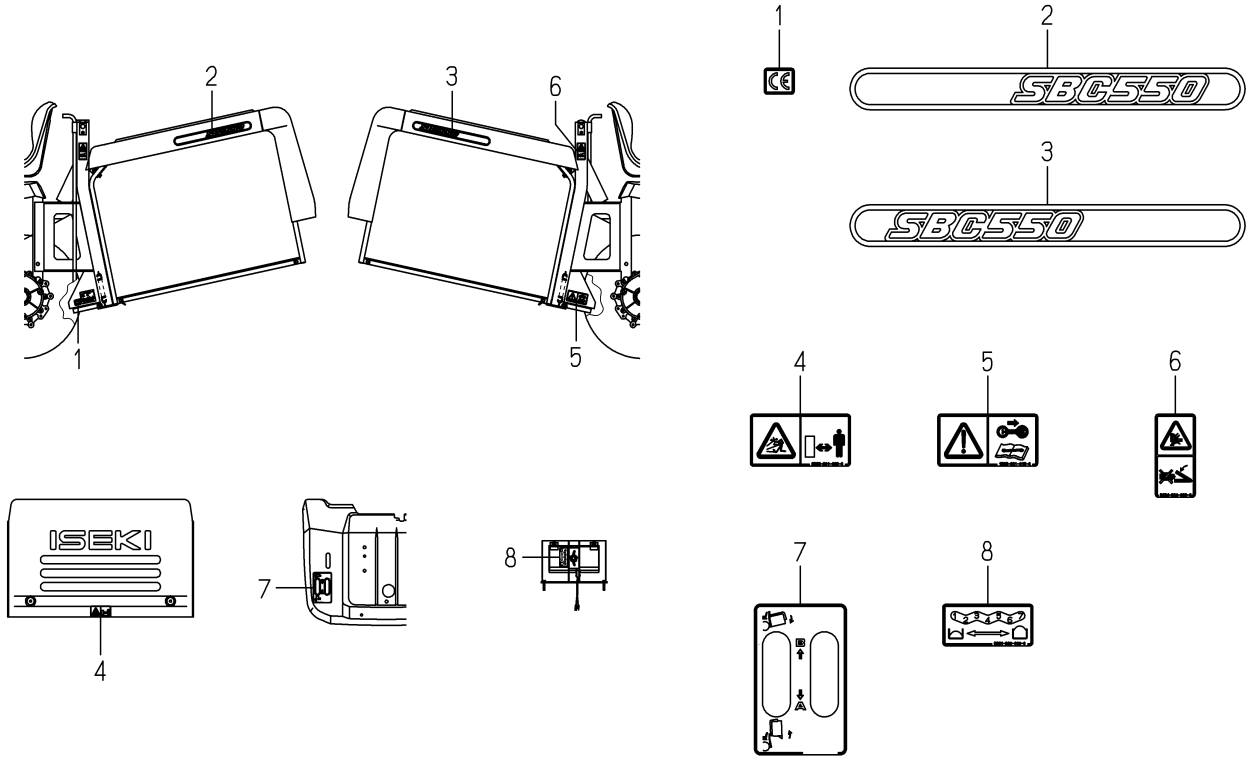

8664-905 -0100

KEY	PART CODE	DESCRIPTION	SPC	TYPE OF MODEL SBC550 XM		ITC	COL	GRP	REMARKS
1	2500-901-027-00	LABEL/CE	*	1					
2	8664-905-001-00	ORNAMENT/SBC550/LH	*	1					
3	8664-905-002-00	ORNAMENT/SBC550/RH	*	1					
4	8595-901-005-00	LABEL/DANGER/DISCHAR	*	1					
5	1593-901-015-00	LABEL/MAINTENANCE	*	1					
6	8664-905-003-00	LABEL/CAUTION	*	2					
7	8664-905-004-00	LABEL/LIFT/L	*	1					
8	8664-905-005-00	LABEL/SENSOR	*	1					

FIG. 11 LABEL(H TYPE)

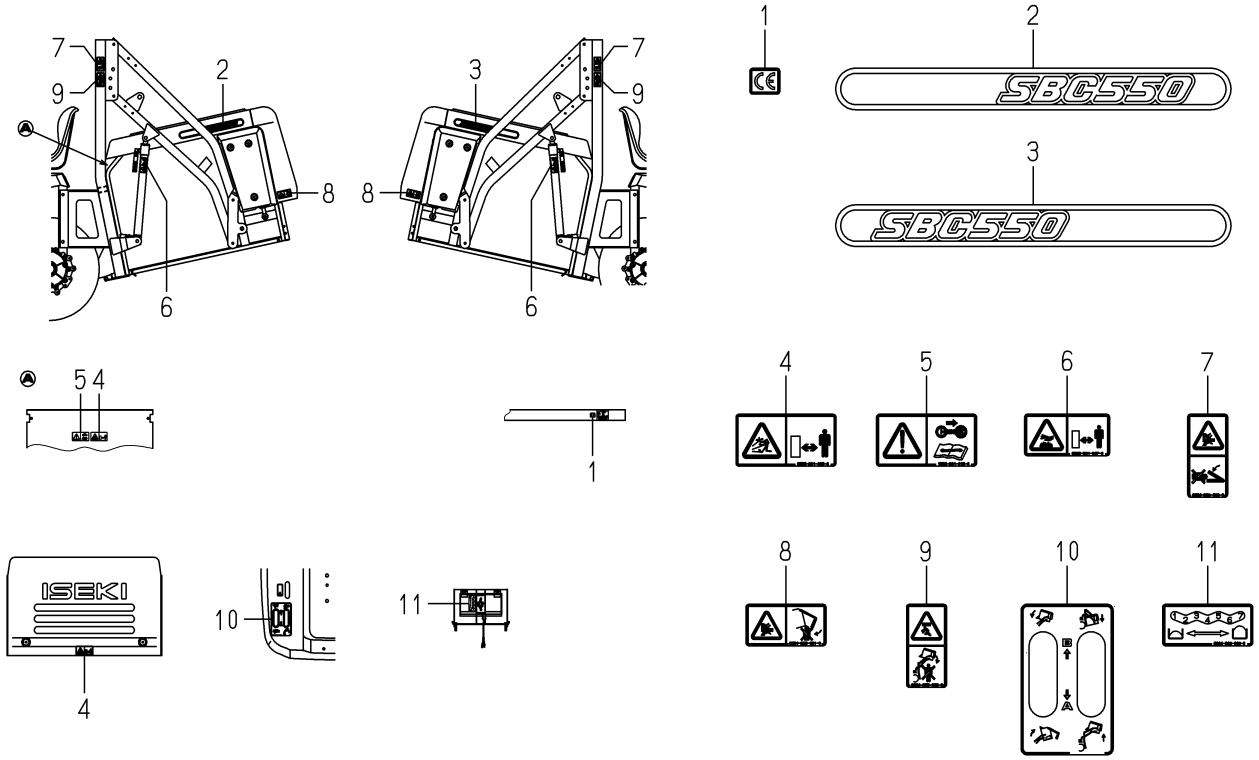

8664-955 -0100

KEY	PART CODE	DESCRIPTION	SPC	TYPE OF MODEL SBC550	TYPE OF MODEL XM	ITC	COL	GRP	REMARKS
1	2500-901-027-00	LABEL/CE	*	1					
2	8664-905-001-00	ORNAMENT/SBC550/LH	*	1					
3	8664-905-002-00	ORNAMENT/SBC550/RH	*	1					
4	8595-901-005-00	LABEL/DANGER/DISCHAR	*	2					
5	1593-901-015-00	LABEL/MAINTENANCE	*	1					
6	8595-901-007-00	LABEL/WARNING/HOT	*	2					
7	8664-905-003-00	LABEL/CAUTION	*	2					
8	8664-955-001-00	LABEL/CAUTION/D	*	2					
9	8664-955-002-00	LABEL/CAUTION/L	*	2					
10	8664-955-003-00	LABEL/LIFT/H	*	1					
11	8664-905-005-00	LABEL/SENSOR	*	1					

FIG. 12 DISCHARGE(L TYPE)SET(OPTION)

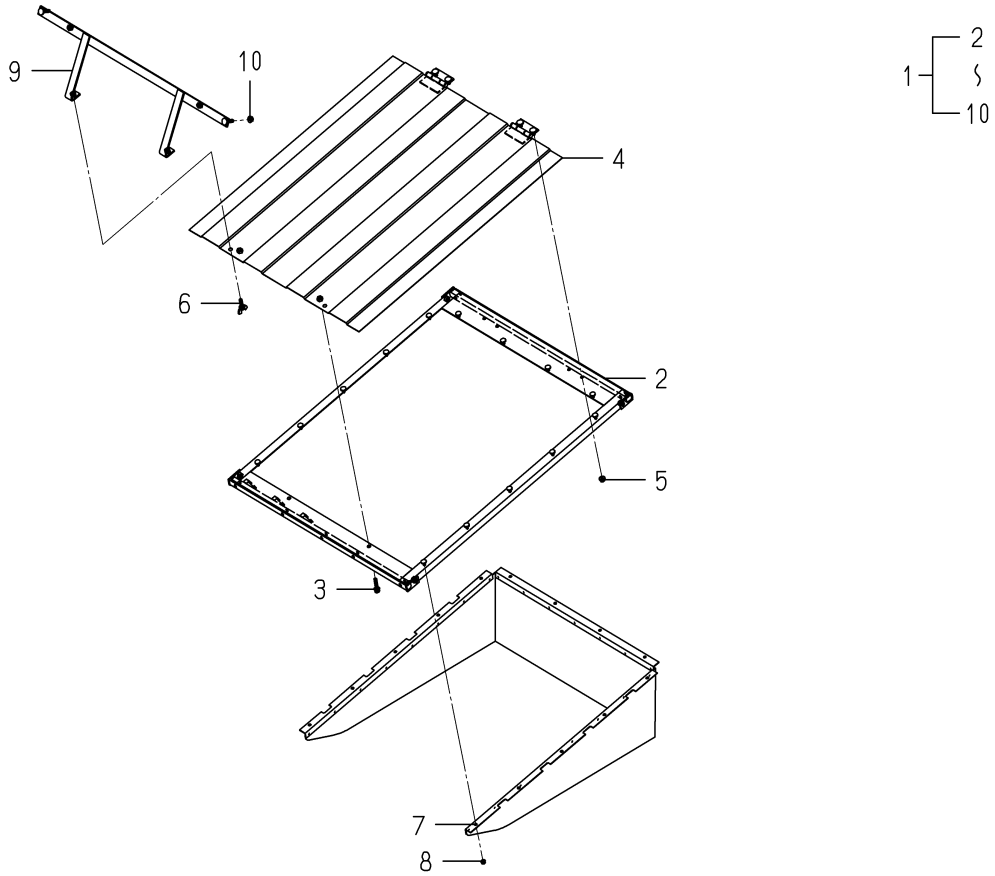

8664-705Z-0100

KEY	PART CODE	DESCRIPTION	SPC	TYPE OF MODEL SBC550 XM		ITC	COL	GRP	REMARKS
1	8664-705-200-00	DISCHARGE/L SET	T	1					
2	8664-705-210-10	FRAME/BOTTOM/L COMP	T	1					
3	V211-660-804-00	BOLT/SP	T	4					
4	8664-705-220-00	PLATE/BOTTOM COMP	T	1					
5	V362-260-008-00	NUT/WASHER	T	4					
6	V273-360-802-00	BOLT,SEMS/M8X20	T	2					
7	8664-705-230-00	COVER/PROTECTOR COMP	T	1					
8	V360-260-006-00	NUT/M6	T	14					
9	8664-705-240-00	PLATE/STAY/L COMP	T	1					
10	V362-260-008-00	NUT/WASHER	T	2					

FIG. 13 DISCHARGE(H TYPE)SET(OPTION)

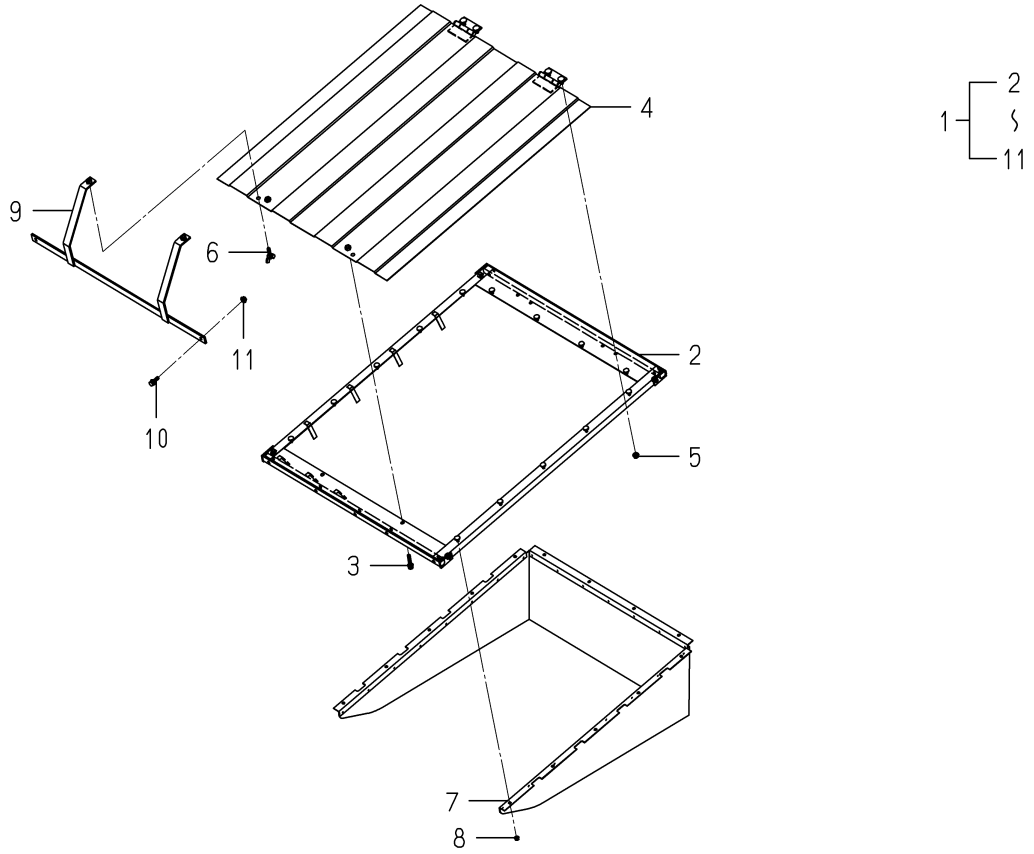

8664-755Z-0100

KEY	PART CODE	DESCRIPTION	SPC	TYPE OF MODEL SBC550 XM		ITC	COL	GRP	REMARKS
1	8664-755-200-00	DISCHARGE/H SET	T	1					
2	8664-755-210-10	FRAME/BOTTOM/H COMP	T	1					
3	V211-660-804-00	BOLT/SP	T	4					
4	8664-705-220-00	PLATE/BOTTOM COMP	T	1					
5	V362-260-008-00	NUT/WASHER	T	6					
6	V273-360-802-00	BOLT,SEMS/M8X20	T	2					
7	8664-705-230-00	COVER/PROTECTOR COMP	T	1					
8	V360-260-006-00	NUT/M6	T	14					
9	8664-755-220-00	PLATE/STAY/H COMP	T	1					
10	V211-360-803-00	BOLT/SP	T	2					
11	V362-260-008-00	NUT/WASHER	T	2					

FIG. 14 COMPONENT PARTS FOR K185-021-000-00 ON Fig.6

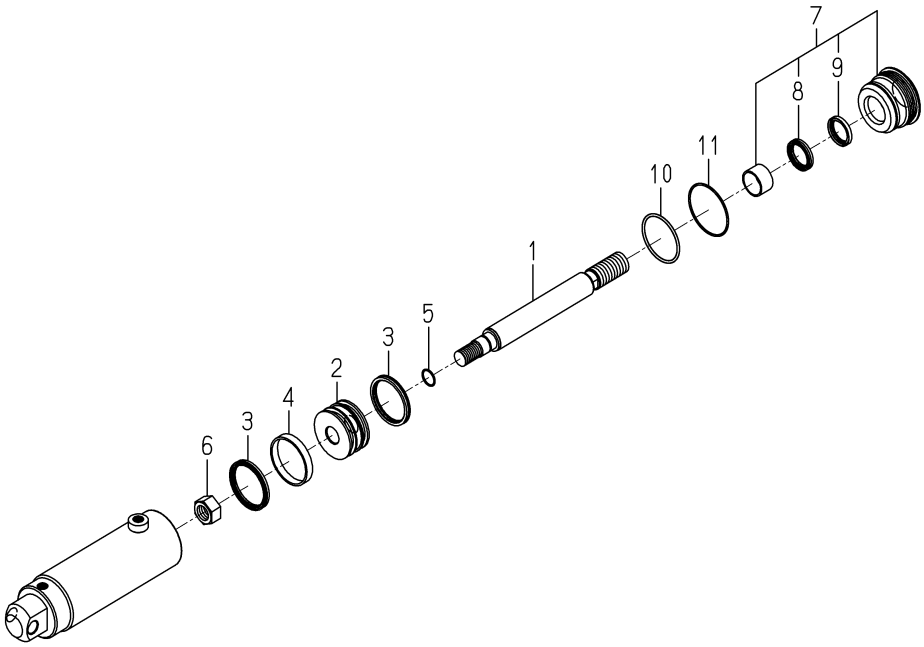

K185-021-000-0F

KEY	PART CODE	DESCRIPTION	SPC	TYPE OF MODEL SBC550 XM		ITC	COL	GRP	REMARKS
1	K185-021-001-00	ROD/PISTON	*	1					
2	K185-021-002-00	PISTON	*	1					
3	K185-021-003-00	PACKING/PISTON	*	2					
4	K185-021-004-00	RING/WEAR	*	1					
5	V723-111-502-00	RING/O	*	1					
6	1518-519-001-00	NUT,U	*	1					
7	K185-021-200-00	COVER/ROD SET	*	1					
8	K185-021-202-00	PACKING/ROD	*	1					
9	K185-021-203-00	SEAL/DUST	*	1					
10	V721-113-106-00	O-RING G60	*	1					
11	V723-102-006-70	RING/O	*	1					

Numerical Index

Part Code	Fig.	Key	Part Code	Fig.	Key	Part Code	Fig.	Key
1560-601-028-00	12	3	7955-201-026-00	3	5	8659-101-211-00	23	5
	13	3		4	2		24	1
	19	3		4	5		24	4
	19	7	8595-201-013-00	3	8	8659-101-212-00	23	4
1593-901-015-00	20	6		4	8		23	6
1594-218-001-00	3	9	8595-201-021-00	3	17		24	5
	4	9		4	17	8659-101-213-00	23	7
1594-221-001-00	9	8	8595-201-022-00	3	18	8659-101-214-00	23	2
1636-631-013-00	16	3		4	18	8659-101-215-00	23	3
	16	11	8595-201-025-00	3	11		24	3
	17	3		4	11	8662-101-210-00	2	1
	17	11	8595-501-001-20	18	11	8662-101-213-00	24	6
1636-631-014-00	16	4	8595-505-051-30	18	12	8662-101-214-00	24	2
	16	12	8595-608-082-10	12	2	8663-101-210-00	21	1
1728-630-005-20	16	5		13	2	8663-101-211-00	25	2
	16	7		19	2	8663-101-212-00	25	9
	16	13		19	6	8663-101-213-00	25	6
	16	15	8595-901-006-00	20	2	8663-101-214-00	25	13
	17	5	8595-901-007-00	20	3	8663-201-001-10	3	1
	17	7	8597-202-501-00	5	20		4	1
	17	13		6	20	8663-201-002-00	3	4
	17	15	8654-101-221-00	22	2		4	4
2500-901-014-30	20	4		25	1	8663-201-003-00	3	13
2500-901-027-00	20	1	8654-101-230-00	22	5	8663-201-004-00	3	15
3100-107-004-10	5	26		25	3		4	15
	6	26		25	10	8663-201-005-00	3	16
3621-211-003-00	5	21	8654-101-232-00	22	6		4	16
	6	21		25	4	8663-202-004-00	5	29
3670-520-001-00	5	2		25	11		6	29
	6	2	8654-101-233-00	22	7	8663-202-210-10	5	1
3737-341-007-00	5	27		25	5		6	1
	6	27		25	12	8663-202-220-10	5	6
3746-111-011-00	5	3	8654-201-410-10	4	12		6	6
	5	8	8654-202-016-00	5	7	8663-202-230-00	5	15
	5	25		6	7		6	15
	6	3	8654-301-004-00	9	6	8663-202-250-10	5	11
	6	8	8654-501-283-00	18	5	8663-202-260-20	5	13
	6	25	8654-901-002-00	20	5		6	13
7821-102-008-00	22	10	8657-101-501-00	22	12	8663-202-290-00	5	19
	25	7		25	16		6	19
	25	14	8657-201-210-10	3	12	8663-203-001-00	7	1
7821-102-220-00	22	11	8657-501-530-00	18	4	8663-301-001-00	9	3
	25	8	8657-608-720-00	19	5	8663-301-002-10	9	11
	25	15	8659-101-210-00	1	1	8663-301-003-00	9	1
7955-201-026-00	3	2	8659-101-211-00	23	1	8663-301-004-00	9	12

Numerical Index

Part Code	Fig.	Key
8663-306-001-10	10	1
8663-306-002-10	10	2
8663-306-004-00	10	4
	11	4
8663-306-210-10	10	3
	11	3
8663-402-002-00	12	5
	13	5
8663-402-210-50	12	1
8663-406-001-00	14	3
	15	3
8663-406-210-00	14	1
8663-407-031-00	16	2
	16	10
	17	2
	17	10
8663-407-032-00	16	6
	16	14
8663-407-230-20	16	9
	17	9
8663-407-310-00	16	1
8663-407-320-20	16	8
8663-501-001-10	18	6
8663-501-210-00	18	1
8663-501-220-00	18	2
8663-501-230-00	18	3
8663-501-240-00	18	3-A
8663-608-210-00	19	1
8663-901-001-00	20	7
8663-901-002-00	20	8
8665-101-210-00	22	1
8665-101-211-00	22	3
8665-101-212-00	22	4
8665-101-213-00	22	8
8665-101-214-00	22	9
8665-201-001-00	4	13
8665-202-210-10	6	11
8665-202-210-20	6	11-A
8665-202-220-00	6	13-A
8665-202-230-00	6	32
8665-203-001-00	8	1
8665-306-001-10	11	1
8665-306-002-10	11	2
8665-402-210-40	13	1
8665-406-210-00	15	1

Part Code	Fig.	Key
8665-407-031-00	17	4
	17	12
8665-407-032-00	17	6
	17	14
8665-407-310-00	17	1
8665-407-320-20	17	8
V201-261-006-00	5	30
	6	30
V201-261-604-00	5	23
	6	23
V201-361-203-50	6	33
V203-361-203-50	10	5
	11	5
V211-260-801-60	3	7
	4	7
V211-561-002-50	5	12
	5	14
	6	12
	6	14
	9	2
V211-561-003-50	3	3
	4	3
V304-260-008-00	5	28
	6	28
	14	5
	15	5
V304-460-016-00	5	4
	5	9
	6	4
	6	9
	18	9
V334-460-022-00	19	9
V360-260-012-00	18	13
V363-260-008-00	14	2
	14	4
	15	2
	15	4
	16	16
	17	16
V401-160-010-00	5	31
	6	31
V401-160-012-00	6	34
	10	6
	11	6
V401-160-016-00	5	5

Part Code	Fig.	Key
V401-160-016-00	5	10
	5	24
	6	5
	6	10
	6	24
	18	10
V411-260-008-00	14	6
	15	6
V411-260-022-00	18	7
V580-140-504-00	12	4
	13	4
	19	4
	19	8
V580-140-804-00	1	2
	2	2
V600-110-620-60	3	19
	4	19
V600-110-630-40	3	14
	4	14
V600-110-690-80	9	5
V600-150-630-40	5	16
	6	16
V704-140-016-00	5	22
	6	22
V704-140-020-00	5	18
	6	18
V705-140-052-00	5	17
	6	17
	9	10
V707-140-062-00	3	10
	4	10
	9	7
V721-103-108-00	3	6
	4	6
V744-130-551-20	3	20
	4	20
V744-135-520-80	9	9
V760-150-000-00	9	4
	18	8

Numerical Index

Part Code	Fig.	Key	Part Code	Fig.	Key	Part Code	Fig.	Key
1305-931-003-00	6	14	8664-305-002-00	3	18	8664-355-330-00	4	14
1342-402-006-00	6	17	8664-305-003-00	3	19	8664-355-340-00	4	34
	7	30		4	24	8664-355-350-00	4	41
1518-519-001-00	14	6	8664-305-004-00	3	20	8664-355-360-00	4	38
1593-901-015-00	10	5		4	27		4	45
	11	5	8664-305-005-00	3	21	8664-355-410-00	4	1
1614-129-003-00	8	5		4	28	8664-455-001-00	4	18
	9	5	8664-305-031-00	3	8		5	2
1716-680-222-00	1	10	8664-305-200-10	3	3		5	8
	2	17	8664-305-201-00	3	4		5	14
1716-680-330-00	1	9	8664-305-210-00	3	1	8664-455-002-10	5	32
	2	16	8664-305-230-00	3	14	8664-455-002-20	5	32-A
2500-210-016-00	1	7		4	9	8664-455-210-10	5	1
	2	10	8664-305-240-10	3	12	8664-455-220-20	5	7
2500-901-027-00	10	1	8664-305-240-20	3	12-A	8664-455-230-00	5	19
	11	1	8664-305-250-10	3	13	8664-455-240-00	5	20
3631-350-201-10	7	5	8664-305-250-20	3	13-A	8664-455-250-10	5	22
	7	16	8664-305-260-10	3	15	8664-455-250-20	5	22-A
3642-496-007-10	8	4-A	8664-305-280-20	3	10	8664-455-260-10	5	27
	9	4-A	8664-305-310-00	3	7	8664-455-260-20	5	27-A
3664-276-001-00	8	4	8664-305-320-00	3	22	8664-455-270-00	5	33
	9	4	8664-305-330-00	3	24	8664-455-270-10	5	33-A
3746-235-002-00	1	7-A		4	31	8664-455-280-00	5	13
	2	10-A	8664-305-340-00	3	25	8664-505-001-20	6	7
3768-185-022-10	6	5		4	32	8664-505-002-00	6	9
	7	4	8664-355-002-00	4	23	8664-505-003-00	6	10
	7	15	8664-355-003-00	4	25	8664-505-210-00	6	1
8595-901-005-00	10	4	8664-355-004-00	4	26	8664-505-220-00	6	13
	11	4	8664-355-007-00	4	35	8664-505-230-00	6	6
8595-901-007-00	11	6	8664-355-008-00	4	42		7	24
8664-105-001-00	1	8	8664-355-009-00	4	33	8664-555-001-00	7	8
	2	15	8664-355-031-00	4	2	8664-555-002-00	7	19
8664-105-230-00	1	4	8664-355-220-20	4	7	8664-555-003-00	7	23
8664-105-310-00	1	1	8664-355-220-30	4	7-A	8664-555-005-00	7	18
8664-155-001-00	2	7	8664-355-220-40	4	7-B	8664-555-009-00	7	9
8664-155-002-00	2	14	8664-355-230-20	4	8	8664-555-250-00	6	15
8664-155-210-90	2	1	8664-355-230-30	4	8-A		7	25
8664-155-230-00	2	6	8664-355-230-40	4	8-B	8664-555-270-00	7	27
8664-155-240-00	2	11	8664-355-240-10	4	10	8664-555-320-00	7	6
8664-155-250-00	2	4	8664-355-250-10	4	12	8664-555-340-00	7	17
8664-155-260-00	2	19	8664-355-260-10	4	13	8664-555-350-00	7	7
8664-155-310-00	2	1-A	8664-355-270-00	4	15	8664-605-002-10	8	6
8664-155-310-10	2	1-B	8664-355-280-00	4	16		9	6
8664-305-001-10	3	17	8664-355-310-40	4	5	8664-605-003-00	8	7
	4	22	8664-355-320-00	4	29		9	7

Numerical Index

Part Code	Fig.	Key
8664-605-004-00	8	8
	9	8
8664-605-005-00	8	9
	9	9
8664-605-210-20	8	1
	9	1
8664-605-220-10	8	11
8664-605-230-00	8	3
	9	3
8664-655-210-10	9	11
8664-705-200-00	12	1
8664-705-210-10	12	2
8664-705-220-00	12	4
	13	4
8664-705-230-00	12	7
	13	7
8664-705-240-00	12	9
8664-755-200-00	13	1
8664-755-210-10	13	2
8664-755-220-00	13	9
8664-905-001-00	10	2
	11	2
8664-905-002-00	10	3
	11	3
8664-905-003-00	10	6
	11	7
8664-905-004-00	10	7
8664-905-005-00	10	8
	11	11
8664-955-001-00	11	8
8664-955-002-00	11	9
8664-955-003-00	11	10
K185-021-000-00	6	4
K185-021-001-00	14	1
K185-021-002-00	14	2
K185-021-003-00	14	3
K185-021-004-00	14	4
K185-021-200-00	14	7
K185-021-202-00	14	8
K185-021-203-00	14	9
K185-077-000-10	7	1
K185-078-000-10	7	12
K211-004-014-00	7	29
V201-361-202-50	1	2
	2	2

Part Code	Fig.	Key
V201-361-202-50	6	2
V201-361-206-50	4	19
	5	3
	5	9
	5	15
V210-360-602-00	1	11
	2	18
V211-261-002-00	2	5
V211-360-801-60	4	3
V211-360-803-00	13	10
V211-361-002-50	5	34
V211-361-202-50	2	20
V211-560-804-50	3	6
V211-660-804-00	3	16
	12	3
	13	3
V211-660-804-50	4	11
	4	17
	4	30
V273-360-802-00	12	6
	13	6
V304-260-012-00	4	20
	5	4
	5	10
	5	16
V304-260-016-00	5	23
	5	28
V360-260-006-00	3	9
	8	2
	9	2
	12	8
	13	8
V362-260-008-00	3	2
	3	11
	3	23
	4	4
	4	6
	5	21
	12	5
	12	10
	13	5
	13	11
V401-160-006-00	7	2
	7	13
V401-160-012-00	1	3

Part Code	Fig.	Key
V401-160-012-00	2	3
	4	21
	5	5
	5	11
	5	17
	6	3
V401-160-016-00	5	25
	5	30
V411-260-006-00	4	39
	4	46
V411-260-010-00	4	36
	4	43
V411-260-012-00	1	5
	2	8
	7	21
V411-260-016-00	2	12
	5	24
	5	29
	5	35
	6	11
	7	10
	7	20
V500-161-601-00	8	10
	9	10
V500-162-502-00	4	40
	4	47
V500-163-002-50	1	6
	2	9
	4	37
	4	44
V500-163-003-00	2	13
	5	36
	6	12
	7	11
	7	22
V720-112-401-10	6	16
	7	26
	7	28
V721-113-106-00	14	10
V723-102-006-70	14	11
V723-111-502-00	14	5
V760-150-000-00	3	5
	5	6
	5	12
	5	18

Numerical Index

8664-097-110-10

Part Code	Fig.	Key	Part Code	Fig.	Key	Part Code	Fig.	Key
V760-150-000-00	5	26						
	5	31						
	6	8						
	7	3						
	7	14						

Alpabetical Index

Description	Fig.	Key
ARM/FRONT COMP	19	1
AS YOKE ASSY	22	12
	25	16
ASYOKE ASSY	23	4
	23	6
	24	5
BAR/SUPPORT COMP	6	32
BASE/LH COMP	5	11
	6	11
	6	11-A
BASE/RH COMP	5	13
	6	13
	6	13-A
BEARING	9	5
BEARING,RB/6206	3	19
	4	19
BEARING,RB/6304	3	14
	4	14
BEARING,RB/6304SS	5	16
	6	16
BEARING/BALL 6205SH2	9	8
BEARING/BALL 6305SH2	3	9
	4	9
BELT/D/STS/2800	7	1
BELT/D/STS/2880	8	1
BLADE/60X640/C	10	1
BLADE/60X640/D	10	2
BLADE/60X716/C	11	1
BLADE/60X716/D	11	2
BOLT	10	5
	11	5
BOLT,SEMS (S) M8X16	3	7
	4	7
BOLT/M10X25	5	12
	5	14
	6	12
	6	14
	9	2
BOLT/M10X60	5	30
	6	30
BOLT/M12X35	6	33
BOLT/M16X40	5	23
	6	23
BOLT/S	3	3
	4	3
BUSH/16X18X15	5	20
	6	20
BUSH/22X25X25	18	5
CASE/BEVEL	3	1
	4	1
CHAIN ASSY	22	11
	25	8
	25	15
COLLAR/10X22X48	5	29
	6	29
COLLAR/BLADE	9	11
COVER/BELT/LH COMP	16	1
	17	1
COVER/BELT/RH COMP	16	8
	17	8
COVER/CASE	3	4
	4	4
COVER/DISCHARGE COMP	14	1
	15	1
DECK/MOWER/48 COMP	12	1
DECK/MOWER/54 COMP	13	1
FITTINGYOKE	22	2
	23	3
	24	3
	25	1
FORK/M22 COMP	19	5
FORK/WHEEL/LH COMP	18	1
FORK/WHEEL/RH COMP	18	2
GEAR/BEVEL/25-1 SET	3	12
GEAR/BEVEL/25-2 SET	4	12
GREASENIPPLE	22	6
	25	4
	25	11
INSULATOR/150X100	16	2
	16	10
	17	2
	17	10
INSULATOR/175	16	6
	16	14
INSULATOR/190	17	6
	17	14
INSULATOR/270	16	5
	16	7
	16	13
	16	15
INSULATOR/270	17	5
	17	7
	17	13
	17	15
INSULATOR/390	17	4
	17	12
JOINT/UNIVERSAL SET	1	1
	2	1
	21	1
	22	1
JOURNALCROSSE ASSY	22	5
	25	3
	25	10
KEY/06X06X28	5	7
	6	7
KEY/08X07X20	5	2
	6	2
LABEL/CE	20	1
LABEL/DANGER	20	4
LABEL/GAUGEWHEEL	20	7
LABEL/MAINTENANCE	20	6
LABEL/PTO	20	5
LABEL/TENSION	20	8
LABEL/WARNING/BELT	20	2
LABEL/WARNING/HOT	20	3
METAL/BLADE	9	1
NIPPLE,GREASE	9	4
	18	8
NUT	5	28
	6	28
	14	5
	15	5
	19	9
NUT/M16	5	4
	5	9
	6	4
	6	9
	18	9
NUT/WASHER	14	2
	14	4
	15	2
	15	4
	16	16
	17	16
	18	13

Alpabetical Index

8663-097-110-10

Description	Fig.	Key
O-RING/G80	3	6
	4	6
PIN,SPRING/5 X40 W	12	4
	13	4
	19	4
	19	8
PIN,SPRING/8 X40 W	1	2
	2	2
PIN/08X18	9	12
PIN/08X56 COMP	18	3
PIN/08X60 COMP	18	3-A
PIN/12X117	18	12
PIN/16X96	12	2
	13	2
	19	2
	19	6
PIN/22X106	18	6
PLATE/COVER COMP	16	9
	17	9
PLATE/I/80X110 COMP	10	3
	11	3
PLATE/TENSION ASSY	5	19
	6	19
PLUG,DRAIN (1/4)	3	2
	3	5
	4	2
	4	5
PLUG/HOSE/A	12	5
	13	5
PULLY/STS/32 COMP	5	15
	6	15
PULLY/STS/62 COMP	5	1
	6	1
PULLY/STS/72 COMP	5	6
	6	6
RING,SNAP/16 C	5	22
	6	22
RING,SNAP/20C	5	18
	6	18
RING,SNAP/52 C	5	17
	6	17
	9	10
RING/SLIDE	22	10
	25	7
	25	14
RING/SNAP	3	10
	4	10
	9	7
ROD,CHAIN TENSION	5	27
	6	27
SAFETYGUARD/IN	22	8
	25	6
SAFETYGUARD/OUT	22	9
	25	13
SEAL,OIL/TC305512	3	20
	4	20
SEAL,OIL/TC35528	9	9
SEAL/OIL	3	11
	4	11
	9	6
SHAFT/BLADE	9	3
SHAFT/INPUT	3	8
	4	8
SHAFT/OUTPUT	3	13
	4	13
SHAFTYOKE	22	3
	24	2
	25	2
SHIM/0.1	3	15
	3	17
	4	15
	4	17
SHIM/0.2	3	16
	3	18
	4	16
	4	18
SHIM/1.2	10	4
	11	4
SLEEVEYOKE	22	4
	23	7
	24	6
	25	9
SPRING/HC042	12	3
	13	3
	19	3
	19	7
SPRING/HC110	14	3
	15	3
SPRING/SIDE CLUTCH	5	26
	6	26
SURCLIP/HOLE	22	7
	25	5
	25	12
TRIM/160	16	3
	16	11
	17	3
	17	11
TRIM/320	16	4
	16	12
UJ ASSY	23	1
	23	5
	24	1
	24	4
WASHER	5	3
	5	8
	5	21
	5	25
	6	3
	6	8
	6	21
	6	25
WASHER,PL/M 8	14	6
	15	6
WASHER,PL/M22	18	7
WASHER,SP/M10	5	31
	6	31
WASHER,SP/M12	6	34
	10	6
	11	6
WASHER,SP/M16	5	5
	5	10
	5	24
	6	5
	6	10
	6	24
	18	10
WHEEL/GAUGE ASSY	18	4
WHEEL/GAUGE/FRONT	18	11
YOKE/SHAFT	23	2

Alpabetical Index

Description	Fig.	Key
ADAPTER(90ß/PUMP)	6	5
	7	4
	7	15
ADAPTER/45ß	7	5
	7	16
ADAPTER/G1/4 ASSY	6	15
	7	25
ADAPTER/ORIFICE ASSY	7	27
ADAPTER/T	7	23
ARM	1	10
	2	17
BAND/WIRE/250	6	17
	7	30
BAR	1	8
	2	15
BAR COMP	5	19
BOLT	4	19
	5	3
	5	9
	5	15
BOLT,SEMS	2	5
BOLT,SEMS (SP)	4	3
BOLT,SEMS/M8X20	12	6
	13	6
BOLT,SEMS/M8X45 7T	3	6
BOLT/KNOB/M06X20	8	9
	9	9
BOLT/M12X25	1	2
	2	2
	6	2
BOLT/SP	1	11
	2	18
	2	20
	3	16
	4	11
	4	17
	4	30
	5	34
	12	3
	13	3
	13	10
BOLT/SP/M08X20	3	20
	4	27
BOLT/SP/M08X40	3	21
	4	28
BRACKET/LINK/LH COMP	5	22
	5	22-A
BRACKET/LINK/RH COMP	5	27
	5	27-A
BUSH/20X23X25	3	4
CABLE/LOCK COMP	4	38
	4	45
CAM COMP	2	19
COLLAR/12X20X41	4	18
	5	2
	5	8
	5	14
COLLAR/17X22X53	7	19
CONTAINER/FRONT COMP	4	1
COVER/CONTAINER/FRON	3	18
	4	23
COVER/CONTAINER/REAR	3	19
	4	24
COVER/CONTAINER/SIDE	4	25
	4	26
COVER/PROTECTOR COMP	12	7
	13	7
COVER/ROD SET	14	7
COVER/UPPER/SUB COMP	3	7
CUP/SPRING	8	6
	9	6
CYLINDER ASSY	6	4
	7	1
	7	12
DISCHARGE/H SET	13	1
DISCHARGE/L SET	12	1
FRAME/BOTTOM/H COMP	13	2
FRAME/BOTTOM/L COMP	12	2
FRAME/COLLECTOR COMP	1	1
	2	1
	2	1-A
	2	1-B
FRAME/COVER/LH COMP	4	12
FRAME/COVER/RH COMP	4	13
FRAME/LOWER COMP	3	15
	4	10
FRAME/REAR COMP	3	14
	4	9
FRAME/REAR/LOWE COMP	4	16
FRAME/REAR/UPPE COMP	4	15
FRAME/SIDE/LH COMP	3	12
	3	12-A
	4	7
	4	7-A
	4	7-B
FRAME/SIDE/RH COMP	3	13
	3	13-A
	4	8
	4	8-A
	4	8-B
FRAME/UPPER ASSY	3	3
GUIDE/REAR COMP	3	25
	4	32
GUIDE/SIDE	4	33
HARNESS/COLLECTOR/H	9	11
HARNESS/COLLECTOR/L	8	11
HOOK COMP	1	4
	2	6
HOSE/HYDRO/1100 ASSY	7	6
HOSE/HYDRO/2700 ASSY	7	17
HOSE/HYDRO/650 ASSY	6	6
	7	24
HOSE/HYDRO/850 ASSY	7	7
INSULATOR/756	3	8
	4	2
LABEL/CAUTION	10	6
	11	7
LABEL/CAUTION/D	11	8
LABEL/CAUTION/L	11	9
LABEL/CE	10	1
	11	1
LABEL/DANGER/DISCHAR	10	4
	11	4
LABEL/LIFT/H	11	10
LABEL/LIFT/L	10	7
LABEL/MAINTENANCE	10	5
	11	5
LABEL/SENSOR	10	8
	11	11
LABEL/WARNING/HOT	11	6
LINK/A COMP	5	1
LINK/B/LH COMP	5	7
LINK/B/RH COMP	5	13
LINK/C	5	32
	5	32-A

Alpabetical Index

8664-097-110-10

Description	Fig.	Key
NET/REAR	3	17
	4	22
NIPPLE,GREASE	3	5
	5	6
	5	12
	5	18
	5	26
	5	31
	6	8
	7	3
	7	14
NUT,U	14	6
NUT/ADJUST	8	8
	9	8
NUT/CYLINDER	6	7
NUT/M12	4	20
	5	4
	5	10
	5	16
NUT/M16	5	23
	5	28
NUT/M27X2	6	9
NUT/M6	3	9
	8	2
	9	2
	12	8
	13	8
NUT/WASHER	3	2
	3	11
	3	23
	4	4
	4	6
	5	21
	12	5
	12	10
	13	5
	13	11
O-RING G60	14	10
ORNAMENT/SBC550/LH	10	2
	11	2
ORNAMENT/SBC550/RH	10	3
	11	3
PACKING/PISTON	14	3
PACKING/ROD	14	8
PIN COMP	2	11

Description	Fig.	Key
PIN COMP	4	14
PIN,HAIR	6	14
PIN,SPLIT/1.6X10	8	10
	9	10
PIN,SPLIT/2.5X20	4	40
	4	47
PIN,SPLIT/3 X25	1	6
	2	9
	4	37
	4	44
PIN,SPLIT/3X30	2	13
	5	36
	6	12
	7	11
	7	22
PIN/12X56	2	7
PIN/16X120	7	18
PIN/16X46	7	9
PIN/16X65	6	10
PIN/16X65 COMP	6	13
PIN/16X66	7	8
PIN/20X405 COMP	3	1
PISTON	14	2
PLATE,SWITCH	8	4-A
	9	4-A
PLATE/BOTTOM COMP	12	4
	13	4
PLATE/COVER/FRONT	3	22
PLATE/COVER/REA COMP	3	24
	4	31
PLATE/I/38X80 COMP	5	20
PLATE/IR/32X192 COMP	5	33
PLATE/IR/32X227 COMP	5	33-A
PLATE/IRX13X35	8	4
	9	4
PLATE/LOCK/LH COMP	4	34
PLATE/LOCK/RH COMP	4	41
PLATE/LOWER/FRONT	3	10
	4	5
PLATE/SENSOR COMP	8	1
	9	1
PLATE/STAY/H COMP	13	9
PLATE/STAY/L COMP	12	9
PLATE/U/749X25 COMP	4	29
RING/O	6	16

Description	Fig.	Key
RING/O	7	26
	7	28
	14	5
	14	11
RING/WEAR	14	4
ROD/PISTON	14	1
SCREW,ORIFICE	7	29
SCREW/M03X20	8	5
	9	5
SEAL/DUST	14	9
SPRING,ROD F.	1	7-A
	2	10-A
SPRING/HC058	8	7
	9	7
SPRING/HC120	2	14
SPRING/HE108	1	7
	2	10
SPRING/HT020	4	35
	4	42
STAY/CYLINDER COMP	6	1
SWITCH ASSY	8	3
	9	3
SWITCH/LEVER ASSY	1	9
	2	16
TUBE/927 COMP	2	4
WASHER / M16	2	12
	5	24
	5	29
	5	35
	6	11
	7	10
	7	20
WASHER / M6	4	39
	4	46
WASHER /M12	1	5
	2	8
	7	21
WASHER,SP/M 6	7	2
	7	13
WASHER,SP/M12	1	3
	2	3
	4	21
	5	5
	5	11
	5	17

Alpabetical Index

Description	Fig.	Key	Description	Fig. Key	Description	Fig. Key
WASHER, SP/M12	6	3				
WASHER, SP/M16	5	25				
	5	30				
WASHER/M10	4	36				
	4	43				