Directions for use of Parts Catalogue

1. Applicable model of machines

All component and option parts used for SCMA48, SCMA54 Mower and SBC550X Collector are listed in this parts catalogue.

NOTES:	SCMA48-SXG22E4M···	FOR SXG19, 22
	SCMA54-SXG22E4M···	FOR SXG22
	SBC550X-HE4M·····	FOR SXG19, 22
	SBC550X-LE4M·····	FOR SXG19, 22

2. Explanation for head paragraph

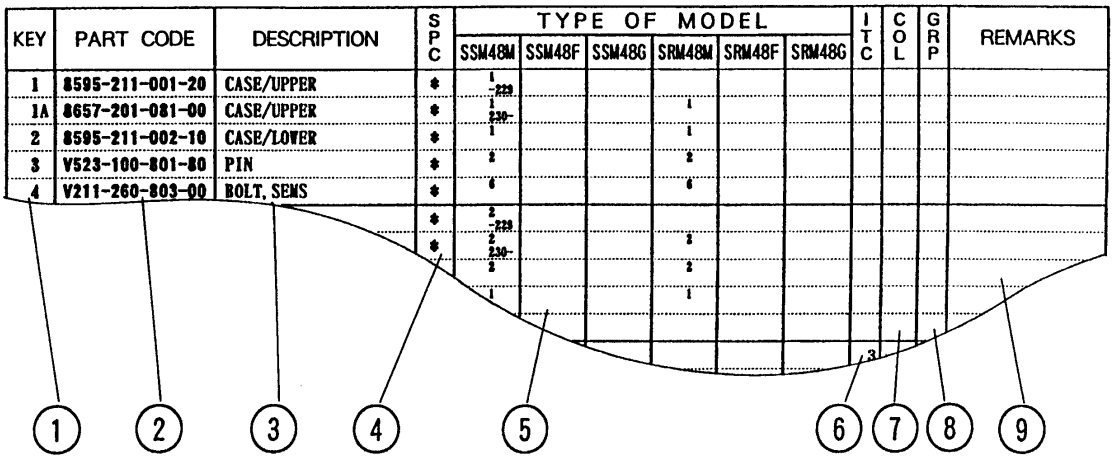

KEY	PART CODE	DESCRIPTION	SPC	TYPE OF MODEL						ITC	COL	GRP	REMARKS
				SSM48M	SSM48F	SSM48G	SRM48M	SRM48F	SRM48G				
1	8595-211-001-20	CASE/UPPER	*	1 -223									
1A	8657-201-081-00	CASE/UPPER	*	1 230-			1						
2	8595-211-002-10	CASE/LOWER	*	1			1						
3	V523-100-801-80	PIN	*	2			2						
4	V211-260-803-00	BOLT, SEMS	*	6			6						
			*	2 -223									
			*	2 230-			2						
				2			2						
				1			1						
										3			

① ② ③ ④ ⑤ ⑥ ⑦ ⑧ ⑨

① KEY shows the location of parts diagramed in the illustration.

② Parts numbers begin with `V´ and `W´ are standard parts of the market.

③ `LH´ and `RH´ on the parts name are described against the moving direction of the machine or are described on the condition how to install parts on the machines.

④ SPC : The following symbol classifies parts to be used for machines.

`*´ means standard parts.

`T´ shows that the parts can be installed as optional parts.

`R´ shows that the parts can be used as applicable parts to replace

originally equipped parts.

⑤ Upper column : QTY shows the number of parts to be used for one unit of machine.

`M´ is indicated for parts supplied by a meter long.

`l´ is indicated for parts supplied by liter.

`AR´ is indicated for parts need to be adjusted or regulated.

Lower column : serial number

—229 means serial number up to 229.

230— means serial number 230 and after.

⑥ ITC : Interchangeability

`1´…OLD ← NEW

New parts can be used in place of the old parts.

`2´…OLD → NEW

Old parts can be used in place of the new parts.

`3´…OLD →← NEW

Old parts and new parts can not be replaced each other.

⑦ COL : Color code

Color is signified with color code number for colored parts.

Please see the color list shown in the next page.

⑧ GRP : Parts shown in this column can be replaced by SET parts.

Example : Parts marked Ⓐ can be replaced by parts marked Ⓑ, and Ⓓ for Ⓒ, so the rest follow in the same alphabetical order.

⑨ Remarks

＊Other maker's part code number is shown in this column.

＊When Fig. No. is shown in the Remark column of SET parts or ASSY parts, each of their component parts are listed in said Fig. No.

3. Color :

The following colors are used color parts.

COLOR CODE	COLOR	SPRAY TYPE CODE NUMBER	PAINTS 4K DRUM	PAINTS 16K DRUM
7 F	MIRROR BLACK	1300-954-001-10	1300-954-003-00	1300-954-004-00

NOTE : Color code is signified only for the parts assigned by the maker as color parts.

4. Serial Numbers :

For chassies serial number is shown on the LABEL.

Please see

5. Parts Order

1) Parts numbers listed in the parts catalogue are all registered in "ISEKI on-line computer".
2) When you order parts, please make sure of correct numbers.
3) When substitute parts is available, the part number ordered will be automatically turned to a new part number.
4) Please be sure to use "ISEKI GENUINE PARTS".
   Any other similar parts other than ISEKI parts when used may cause a trouble that makes us unable to repair or guarantee the warrant.

*** Structure Table of Model ***

MODEL / FIG.	SCMA48M	SXG22E4M	SCMA54M	SXG22E4M								
1				*								
2		*										
3		*		*								
4		*		*								
5		*										
6				*								
7		*		*								
8		*		*								
9		*		*								
10		T										
11				T								
12				*								
13		*										

*** Structure Table of Model ***

MODEL / FIG.	SBC550XM	HE4M	LE4M								
1			*								
2		*									
3			*								
4		*									
5		*									
6			*								
7		*									
8			*								
9		*									
10			*								
11		*									
12			T								
13		T									
14			*								

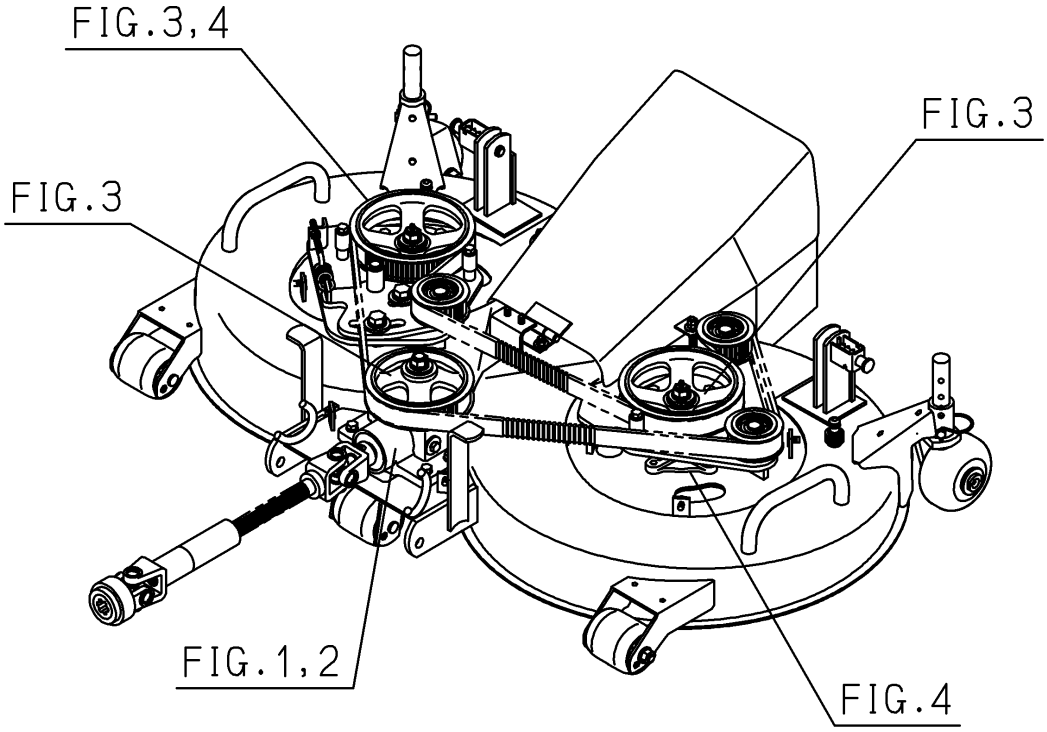
FIG.3,4
FIG.3
FIG.3
FIG.1,2
FIG.4

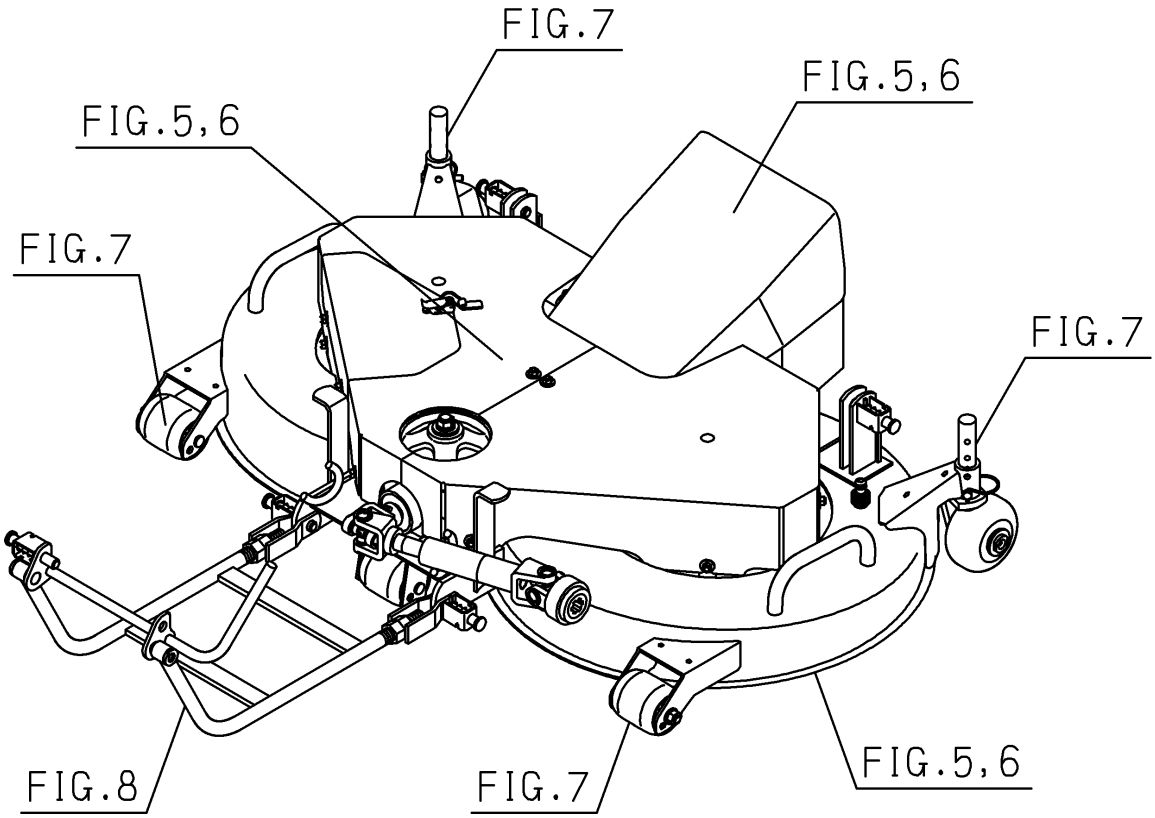
FIG.7
FIG.5,6
FIG.5,6
FIG.7
FIG.7
FIG.8
FIG.7
FIG.5,6

(L TYPE)

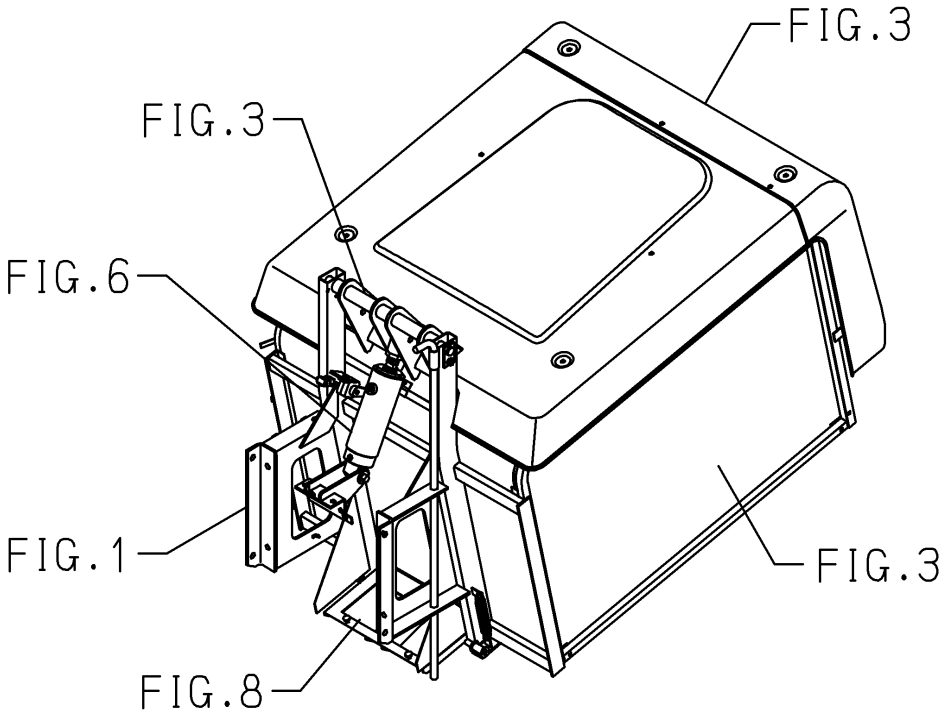

(H TYPE)

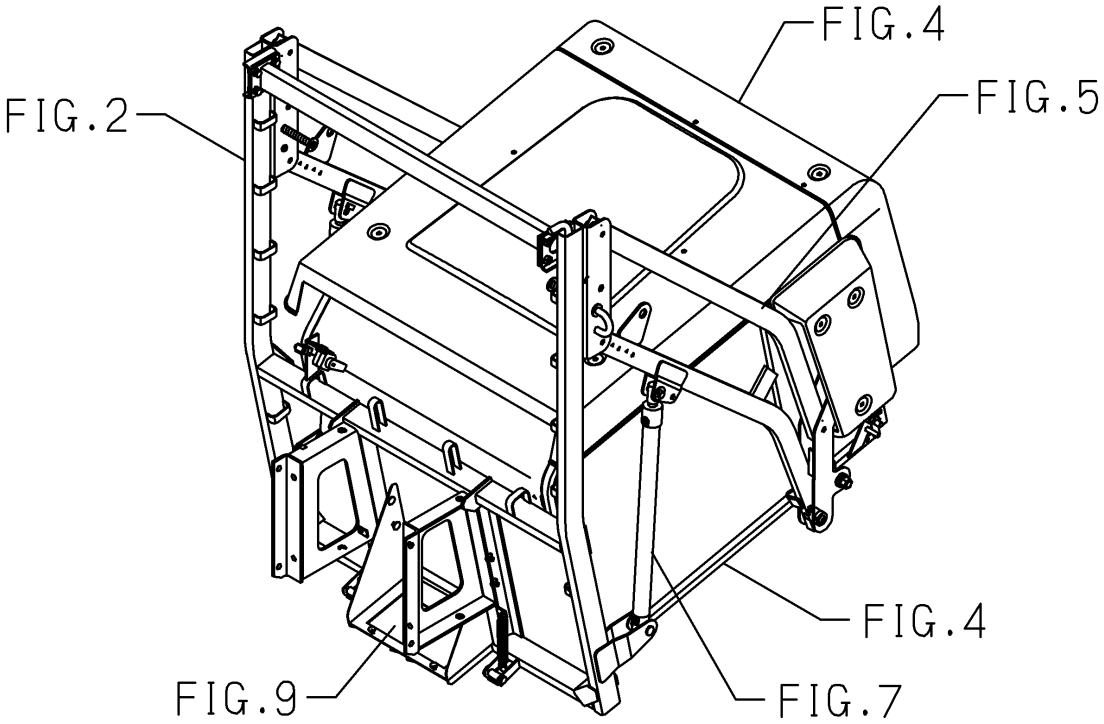

Contents

SCMA48,54

UNIVERSAL JOINT,
BEVEL CASE SYSTEM (SCMA54)····· Fig. 1
UNIVERSAL JOINT,
BEVEL CASE SYSTEM (SCMA48)····· Fig. 2
PULLEY,BELT SYSTEM····· Fig. 3
METAL,BLADE SYSTEM····· Fig. 4
MOWER DECK,COVER SYSTEM (SCMA48)····· Fig. 5
MOWER DECK,COVER SYSTEM (SCMA54)····· Fig. 6
GAUGE WHEEL SYSTEM····· Fig. 7
LINK SYSTEM····· Fig. 8
LABEL····· Fig. 9

OPTIONAL PARTS

UNIVERSAL JOINT SET (SCMA48-OPTION)····· Fig. 10
UNIVERSAL JOINT SET (SCMA54-OPTION)····· Fig. 11

COMPONENT PARTS

COMPONENT PARTS
FOR 8659-101-210-00 ON Fig.1····· Fig. 12
COMPONENT PARTS
FOR 8662-101-210-00 ON Fig.2····· Fig. 13

Contents

SBC550X

FRAME SYSTEM (L TYPE)····· Fig. 1
FRAME SYSTEM (H TYPE)····· Fig. 2
CONTAINER SYSTEM (L TYPE)····· Fig. 3
CONTAINER SYSTEM (H TYPE)····· Fig. 4
LINK SYSTEM (H TYPE)····· Fig. 5
CYLINDER SYSTEM (L TYPE)····· Fig. 6
CYLINDER SYSTEM (H TYPE)····· Fig. 7
SENSOR SYSTEM (L TYPE)····· Fig. 8
SENSOR SYSTEM (H TYPE)····· Fig. 9
LABEL (L TYPE)····· Fig. 10
LABEL (H TYPE)····· Fig. 11

OPTIONAL PARTS

DISCHARGE SET (L TYPE-OPTION)····· Fig. 12
DISCHARGE SET (H TYPE-OPTION)····· Fig. 13

COMPONENT PARTS

COMPONENT PARTS
FOR K185-021-000-00 ON Fig.6····· Fig. 14

M
O
W
E
R

MOWER

SCMA48M

SCMA54M

8663-097-110-00

FIG. 1 UNIVERSAL JOINT,

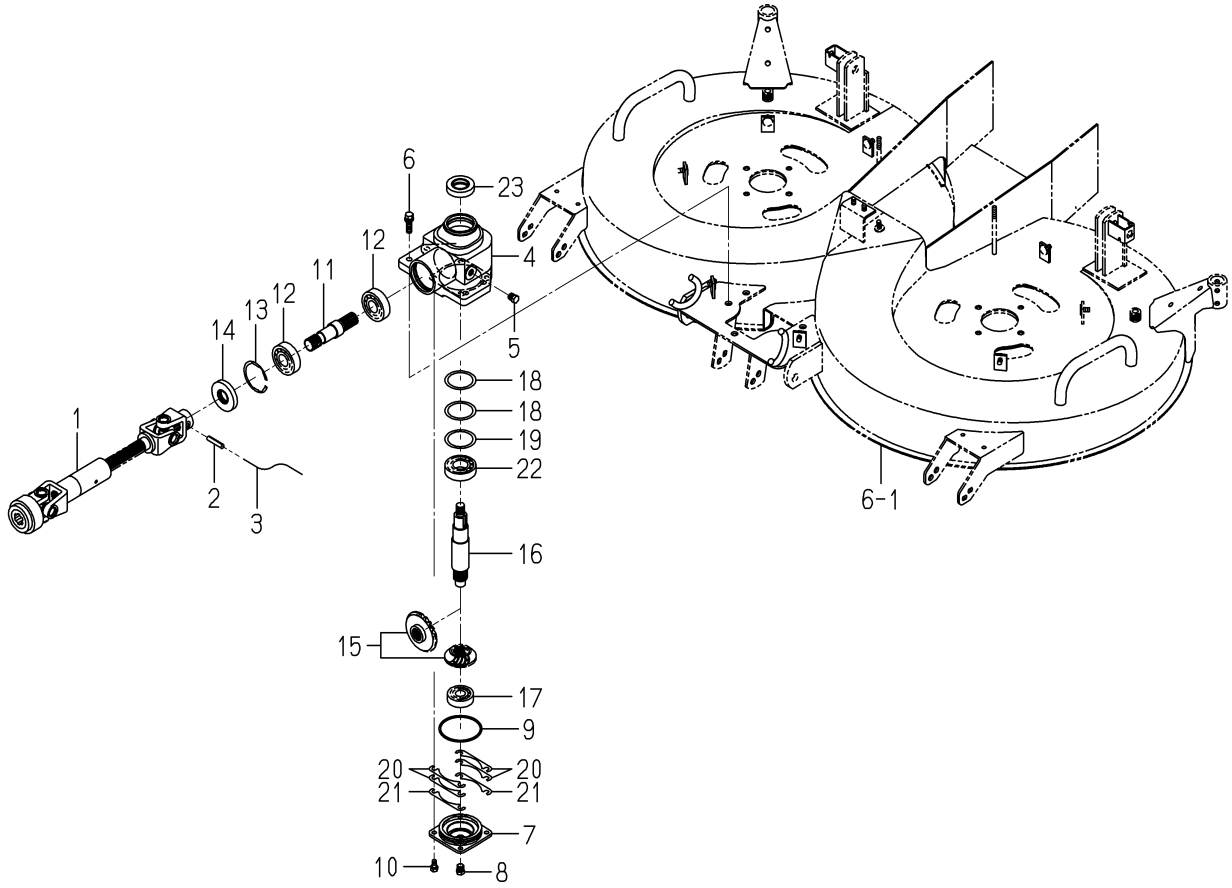

8659-101 -0100,8665-201 -0100

KEY	PART CODE	DESCRIPTION	SPC	TYPE OF MODEL SCMA48M	TYPE OF MODEL SCMA54M	ITC	COL	GRP	REMARKS
1	8659-101-210-00	JOINT/UNIVERSAL SET	*		1				FIG 012
2	V580-140-804-00	PIN,SPRING/8 X40 W	*		1				
3		WIRE	*		1				
4	8663-201-001-10	CASE/BEVEL	*		1				
5	7955-201-026-00	PLUG,DRAIN (1/4)	*		1				
6	V211-561-003-50	BOLT/S	*		4				
7	8663-201-002-00	COVER/CASE	*		1				
8	7955-201-026-00	PLUG,DRAIN (1/4)	*		1				
9	V721-103-108-00	O-RING/G80	*		1				
10	V211-260-801-60	BOLT,SEMS (S) M8X16	*		4				
11	8595-201-013-00	SHAFT/INPUT	*		1				
12	1594-218-001-00	BEARING/BALL 6305SH2	*		2				
13	V707-140-062-00	RING/SNAP	*		1				
14	8595-201-025-00	SEAL/OIL	*		1				
15	8654-201-410-10	GEAR/BEVEL/25-2 SET	*		1				
16	8665-201-001-00	SHAFT/OUTPUT	*		1				
17	V600-110-630-40	BEARING,RB/6304	*		1				
18	8663-201-004-00	SHIM/0.1	*		2				
19	8663-201-005-00	SHIM/0.2	*		1				
20	8595-201-021-00	SHIM/0.1	*		4				
21	8595-201-022-00	SHIM/0.2	*		2				
22	V600-110-620-60	BEARING,RB/6206	*		1				
23	V744-130-551-20	SEAL,OIL/TC305512	*		1				

FIG. 2 UNIVERSAL JOINT, BEVEL CASE SYSTEM (SCMA48)

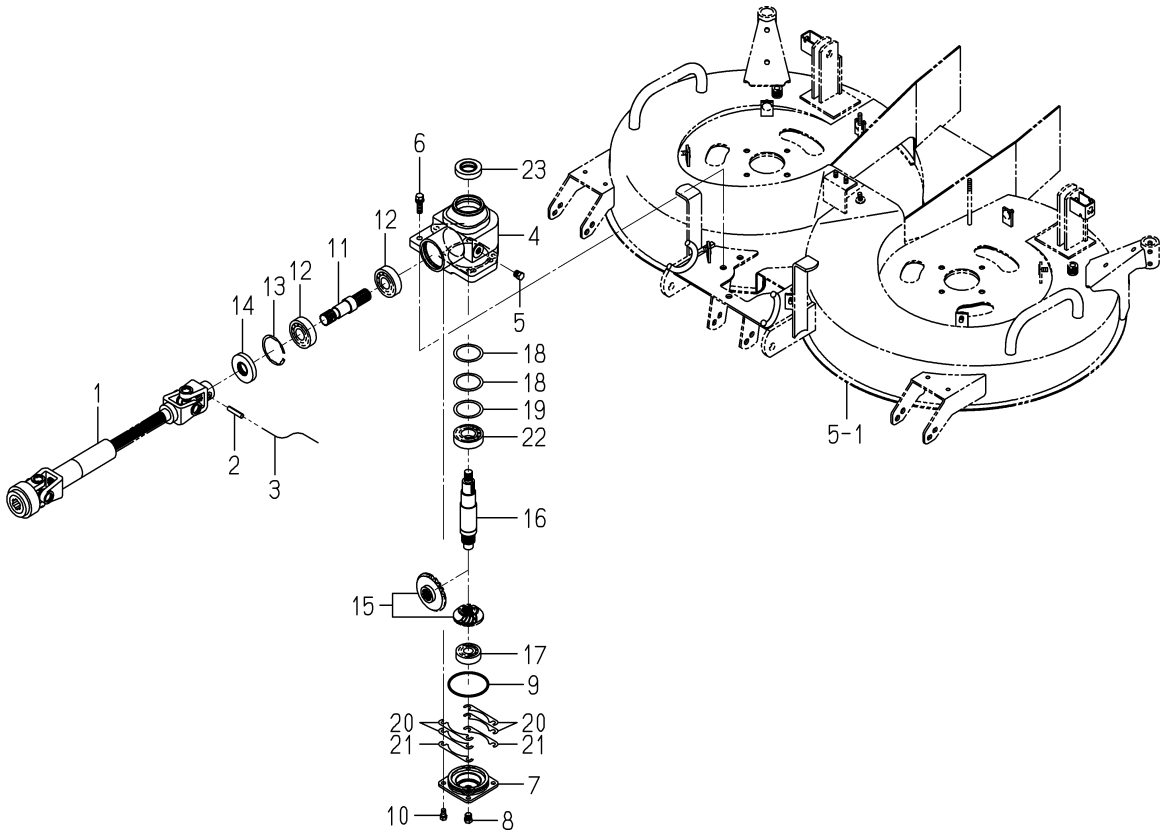

8662-101 -0100,8663-201 -0100

KEY	PART CODE	DESCRIPTION	SPC	TYPE OF MODEL SCMA48M	SCMA54M	ITC	COL	GRP	REMARKS
1	8662-101-210-00	JOINT/UNIVERSAL SET	*	1					FIG 013
2	V580-140-804-00	PIN,SPRING/8 X40 W	*	1					
3		WIRE	*	1					
4	8663-201-001-10	CASE/BEVEL	*	1					
5	7955-201-026-00	PLUG,DRAIN (1/4)	*	1					
6	V211-561-003-50	BOLT/S	*	4					
7	8663-201-002-00	COVER/CASE	*	1					
8	7955-201-026-00	PLUG,DRAIN (1/4)	*	1					
9	V721-103-108-00	O-RING/G80	*	1					
10	V211-260-801-60	BOLT,SEMS (S) M8X16	*	4					
11	8595-201-013-00	SHAFT/INPUT	*	1					
12	1594-218-001-00	BEARING/BALL 6305SH2	*	2					
13	V707-140-062-00	RING/SNAP	*	1					
14	8595-201-025-00	SEAL/OIL	*	1					
15	8657-201-210-10	GEAR/BEVEL/25-1 SET	*	1					
16	8663-201-003-00	SHAFT/OUTPUT	*	1					
17	V600-110-630-40	BEARING,RB/6304	*	1					
18	8663-201-004-00	SHIM/0.1	*	2					
19	8663-201-005-00	SHIM/0.2	*	1					
20	8595-201-021-00	SHIM/0.1	*	4					
21	8595-201-022-00	SHIM/0.2	*	2					
22	V600-110-620-60	BEARING,RB/6206	*	1					
23	V744-130-551-20	SEAL,OIL/TC305512	*	1					

FIG. 3 PULLEY,BELT SYSTEM

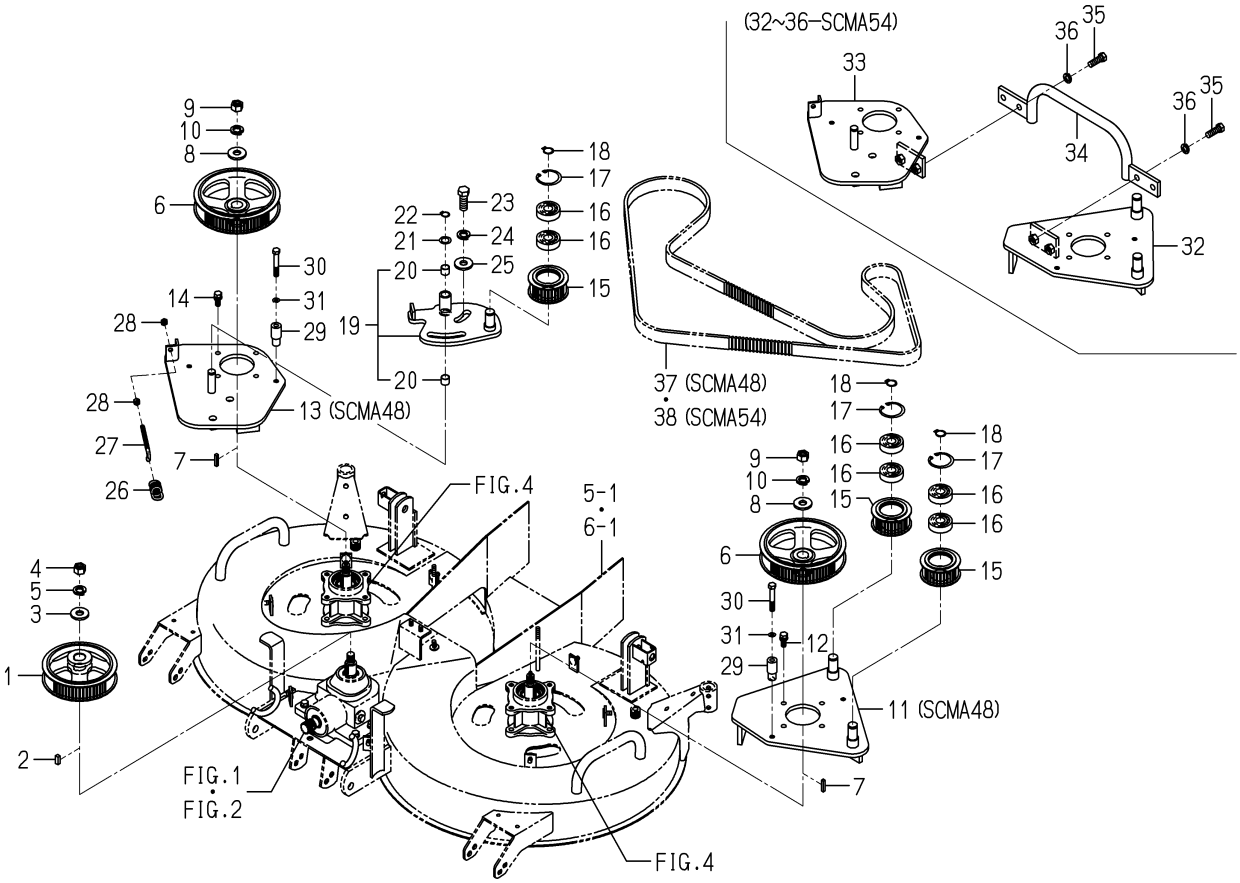

8663-202 -0100,8665-202 -0100,8663-203 -0100,8665-203 -0100

KEY	PART CODE	DESCRIPTION	SPC	TYPE OF MODEL		ITC	COL	GRP	REMARKS
				SCMA48M	SCMA54M				
1	8663-202-210-10	PULLY/STS/62 COMP	*	1	1				
2	3670-520-001-00	KEY/08X07X20	*	1	1				
3	3746-111-011-00	WASHER	*	1	1				
4	V304-460-016-00	NUT/M16	*	1	1				
5	V401-160-016-00	WASHER,SP/M16	*	1	1				
6	8663-202-220-10	PULLY/STS/72 COMP	*	2	2				
7	8654-202-016-00	KEY/06X06X28	*	2	2				
8	3746-111-011-00	WASHER	*	2	2				
9	V304-460-016-00	NUT/M16	*	2	2				
10	V401-160-016-00	WASHER,SP/M16	*	2	2				
11	8663-202-250-10	BASE/LH COMP	*	1					
12	V211-561-002-50	BOLT/M10X25	*	4	4				
13	8663-202-260-20	BASE/RH COMP	*	1					
14	V211-561-002-50	BOLT/M10X25	*	4	4				
15	8663-202-230-00	PULLY/STS/32 COMP	*	3	3				
16	V600-150-630-40	BEARING,RB/6304SS	*	6	6				
17	V705-140-052-00	RING,SNAP/52 C	*	3	3				
18	V704-140-020-00	RING,SNAP/20C	*	3	3				
19	8663-202-290-00	PLATE/TENSION ASSY	*	1	1				
20	8597-202-501-00	BUSH/16X18X15	*	2	2				
21	3621-211-003-00	WASHER	*	1	1				
22	V704-140-016-00	RING,SNAP/16 C	*	1	1				
23	V201-261-604-00	BOLT/M16X40	*	2	2				
24	V401-160-016-00	WASHER,SP/M16	*	2	2				
25	3746-111-011-00	WASHER	*	2	2				
26	3100-107-004-10	SPRING/SIDE CLUTCH	*	1	1				
27	3737-341-007-00	ROD,CHAIN TENSION	*	1	1				
28	V304-260-008-00	NUT	*	2	2				
29	8663-202-004-00	COLLAR/10X22X48	*	4	4				
30	V201-261-006-00	BOLT/M10X60	*	4	4				

FIG. 3 PULLEY,BELT SYSTEM

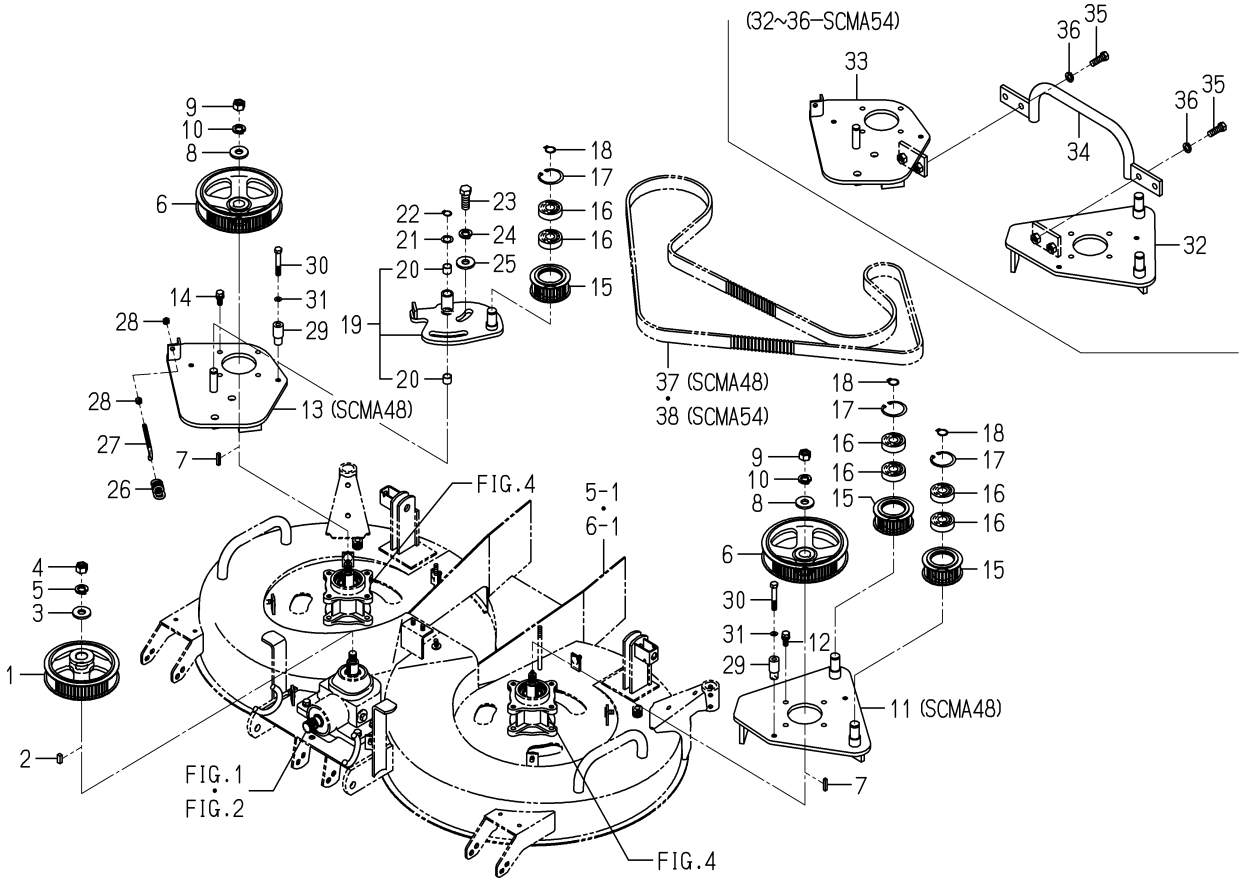

8663-202 -0100,8665-202 -0100,8663-203 -0100,8665-203 -0100

KEY	PART CODE	DESCRIPTION	SPC	TYPE OF MODEL		ITC	COL	GRP	REMARKS
				SCMA48M	SCMA54M				
31	V401-160-010-00	WASHER,SP/M10	*	4	4				
32	8665-202-210-20	BASE/LH COMP	*		1				
33	8665-202-220-00	BASE/RH COMP	*		1				
34	8665-202-230-00	BAR/SUPPORT COMP	*		1				
35	V201-361-203-50	BOLT/M12X35	*		2				
36	V401-160-012-00	WASHER,SP/M12	*		2				
33	8663-203-001-00	BELT/D/STS/2800	*	1					
34	8665-203-001-00	BELT/D/STS/2880	*		1				

FIG. 4 METAL,BLADE SYSTEM

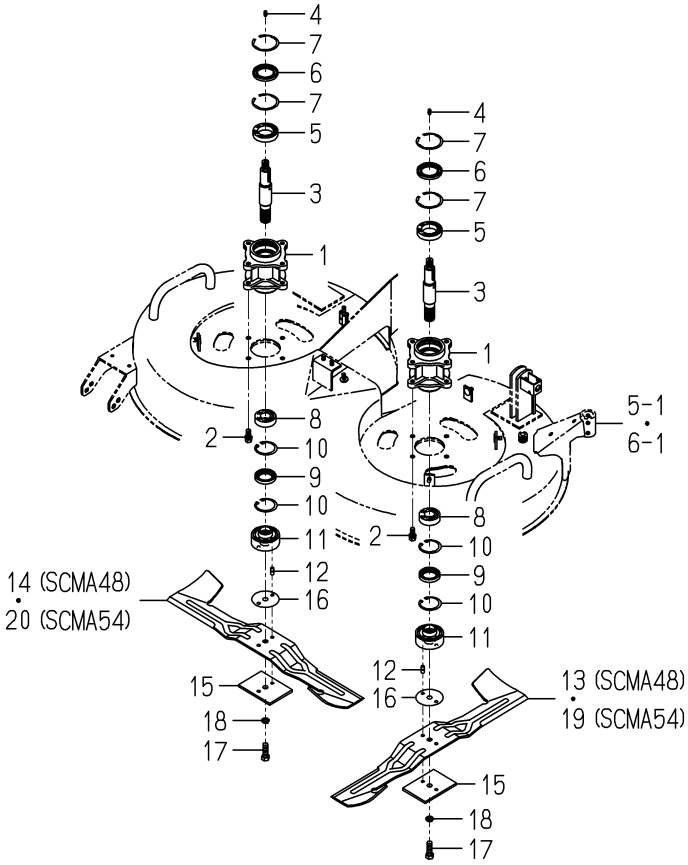

8663-301 -0100,8663-306 -0100,8665-306 -0100

KEY	PART CODE	DESCRIPTION	SPC	TYPE OF MODEL SCMA48M	TYPE OF MODEL SCMA54M	ITC	COL	GRP	REMARKS
1	8663-301-003-00	METAL/BLADE	*	2	2				
2	V211-561-002-50	BOLT/M10X25	*	8	8				
3	8663-301-001-00	SHAFT/BLADE	*	2	2				
4	V760-150-000-00	NIPPLE,GREASE	*	2	2				
5	V600-110-690-80	BEARING	*	2	2				
6	8654-301-004-00	SEAL/OIL	*	2	2				
7	V707-140-062-00	RING/SNAP	*	4	4				
8	1594-221-001-00	BEARING/BALL 6205SH2	*	2	2				
9	V744-135-520-80	SEAL,OIL/TC35528	*	2	2				
10	V705-140-052-00	RING,SNAP/52 C	*	4	4				
11	8663-301-002-10	COLLAR/BLADE	*	2	2				
12	8663-301-004-00	PIN/08X18	*	4	4				
13	8663-306-001-10	BLADE/60X640/C	*	1					
14	8663-306-002-10	BLADE/60X640/D	*	1					
15	8663-306-210-10	PLATE/I/80X110 COMP	*	2	2				
16	8663-306-004-00	SHIM/1.2	*	2	2				
17	V203-361-203-50	BOLT	*	2	2				
18	V401-160-012-00	WASHER,SP/M12	*	2	2				
19	8665-306-001-10	BLADE/60X716/C	*		1				
20	8665-306-002-10	BLADE/60X716/D	*		1				

FIG. 5 MOWER DECK,COVER SYSTEM (SCMA48)

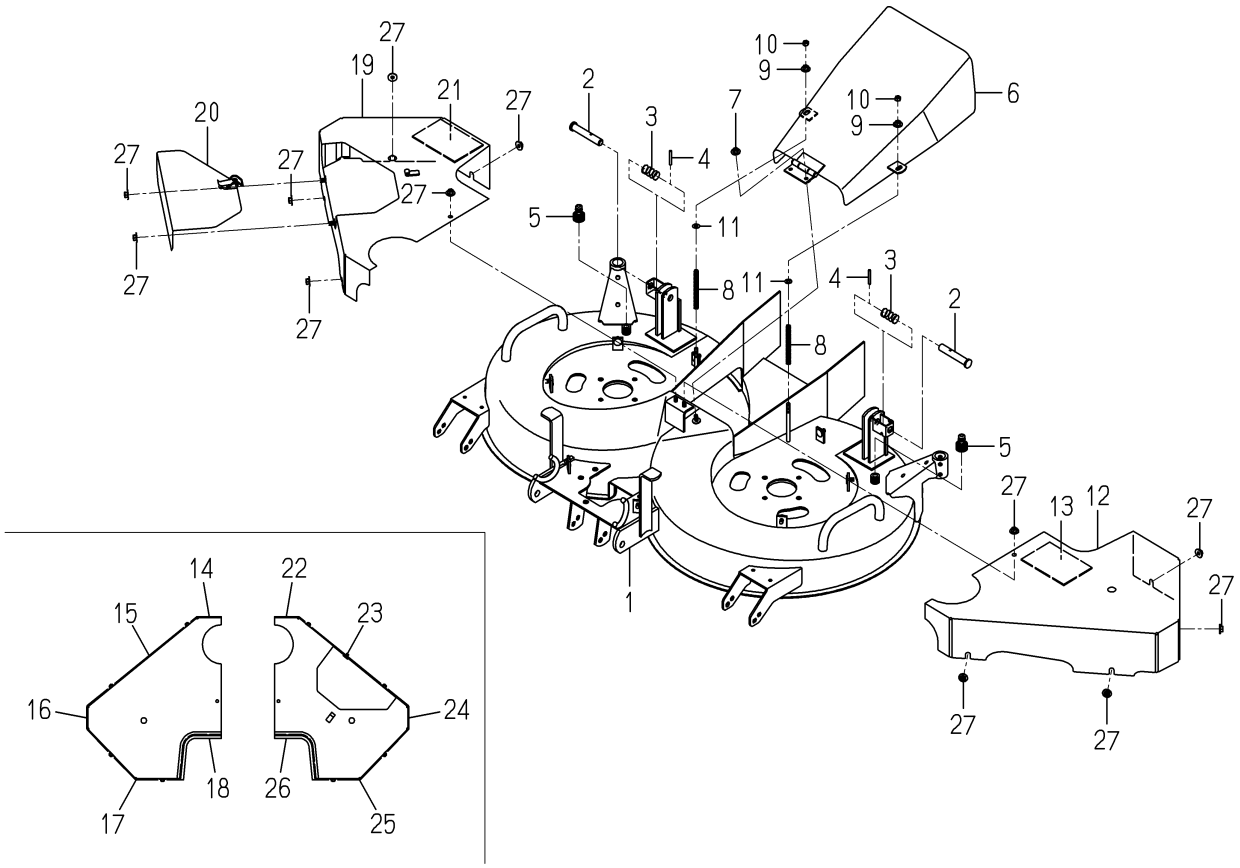

8663-402 -0100,8663-406 -0100,8663-407A-0100

KEY	PART CODE	DESCRIPTION	SPC	TYPE OF MODEL SCMA48M	SCMA54M	ITC	COL	GRP	REMARKS
1	8663-402-210-40	DECK/MOWER/48 COMP	*	1			7F		
2	8595-608-082-00	PIN/16X96	*	2					
3	1560-601-028-00	SPRING/HC042	*	2					
4	V580-140-504-00	PIN,SPRING/5 X40 W	*	2					
5	8663-402-002-00	PLUG/HOSE/A	*	2					
6	8663-406-210-00	COVER/DISCHARGE COMP	*	1			7F		
7	V363-260-008-00	NUT/WASHER	*	2					
8	8663-406-001-00	SPRING/HC110	*	2					
9	V363-260-008-00	NUT/WASHER	*	2					
10	V304-260-008-00	NUT	*	2					
11	V411-260-008-00	WASHER,PL/M 8	*	2					
12	8663-407-310-00	COVER/BELT/LH COMP	*	1			7F		
13	8663-407-031-00	INSULATOR/150X100	*	1					
14	1636-631-013-00	TRIM/160	*	1					
15	1636-631-014-00	TRIM/320	*	1					
16	1728-630-005-20	INSULATOR/270	*	1					
17	8663-407-032-00	INSULATOR/175	*	1					
18	1728-630-005-20	INSULATOR/270	*	1					
19	8663-407-320-10	COVER/BELT/RH COMP	*	1			7F		
20	8663-407-230-10	PLATE/COVER COMP	*	1			7F		
21	8663-407-031-00	INSULATOR/150X100	*	1					
22	1636-631-013-00	TRIM/160	*	1					
23	1636-631-014-00	TRIM/320	*	1					
24	1728-630-005-20	INSULATOR/270	*	1					
25	8663-407-032-00	INSULATOR/175	*	1					
26	1728-630-005-20	INSULATOR/270	*	1					
27	V363-260-008-00	NUT/WASHER	*	12					

FIG. 6 MOWER DECK,COVER SYSTEM (SCMA54)

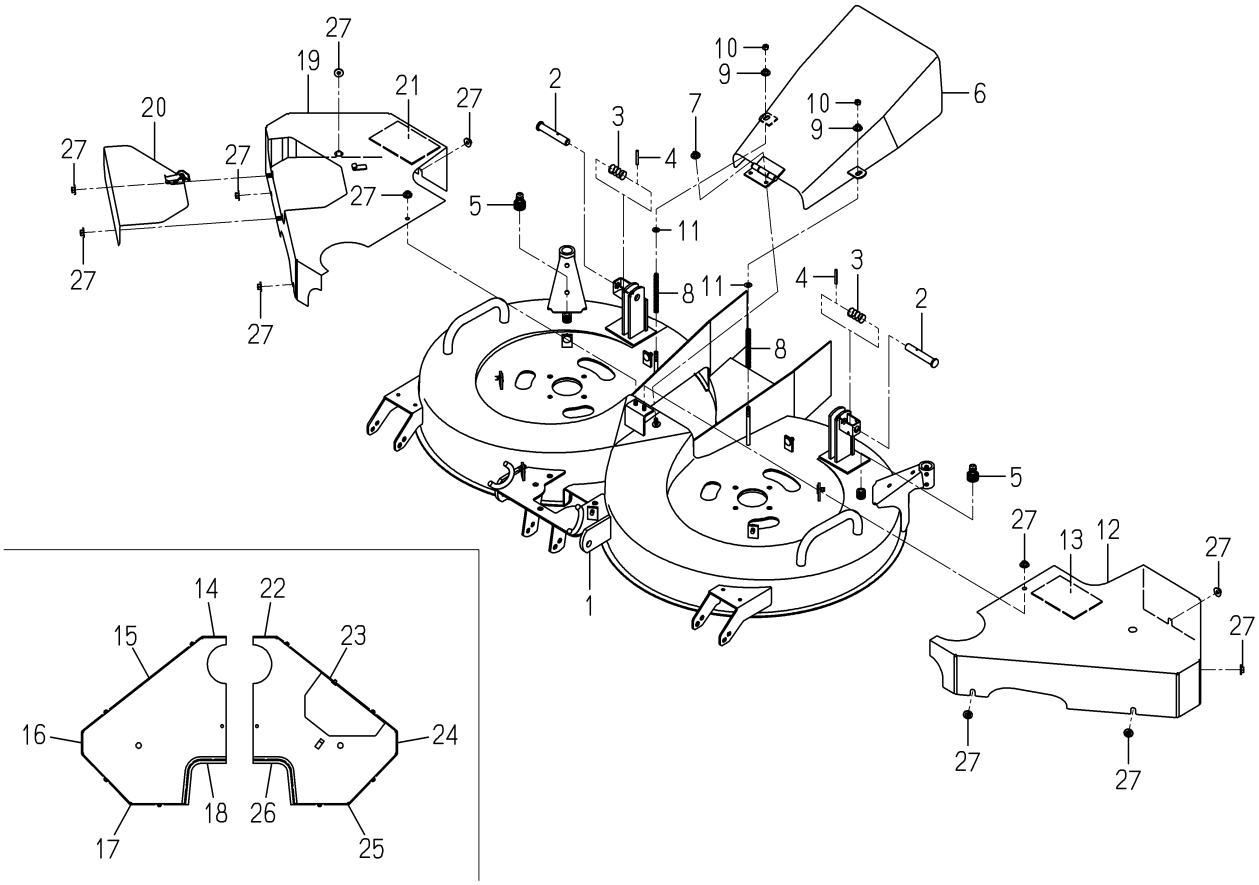

8665-402 -0100,8665-406 -0100,8665-407A-0100

KEY	PART CODE	DESCRIPTION	SPC	TYPE OF MODEL SCMA48M	TYPE OF MODEL SCMA54M	ITC	COL	GRP	REMARKS
1	8665-402-210-30	DECK/MOWER/54 COMP	*		1		7F		
2	8595-608-082-00	PIN/16X96	*		2				
3	1560-601-028-00	SPRING/HC042	*		2				
4	V580-140-504-00	PIN,SPRING/5 X40 W	*		2				
5	8663-402-002-00	PLUG/HOSE/A	*		2				
6	8665-406-210-00	COVER/DISCHARGE COMP	*		1		7F		
7	V363-260-008-00	NUT/WASHER	*		2				
8	8663-406-001-00	SPRING/HC110	*		2				
9	V363-260-008-00	NUT/WASHER	*		2				
10	V304-260-008-00	NUT	*		2				
11	V411-260-008-00	WASHER,PL/M 8	*		2				
12	8665-407-310-00	COVER/BELT/LH COMP	*		1		7F		
13	8663-407-031-00	INSULATOR/150X100	*		1				
14	1636-631-013-00	TRIM/160	*		1				
15	8665-407-031-00	INSULATOR/390	*		1				
16	1728-630-005-20	INSULATOR/270	*		1				
17	8665-407-032-00	INSULATOR/190	*		1				
18	1728-630-005-20	INSULATOR/270	*		1				
19	8665-407-320-10	COVER/BELT/RH COMP	*		1		7F		
20	8663-407-230-10	PLATE/COVER COMP	*		1		7F		
21	8663-407-031-00	INSULATOR/150X100	*		1				
22	1636-631-013-00	TRIM/160	*		1				
23	8665-407-031-00	INSULATOR/390	*		1				
24	1728-630-005-20	INSULATOR/270	*		1				
25	8665-407-032-00	INSULATOR/190	*		1				
26	1728-630-005-20	INSULATOR/270	*		1				
27	V363-260-008-00	NUT/WASHER	*		12				

FIG. 7 GAUGE WHEEL SYSTEM

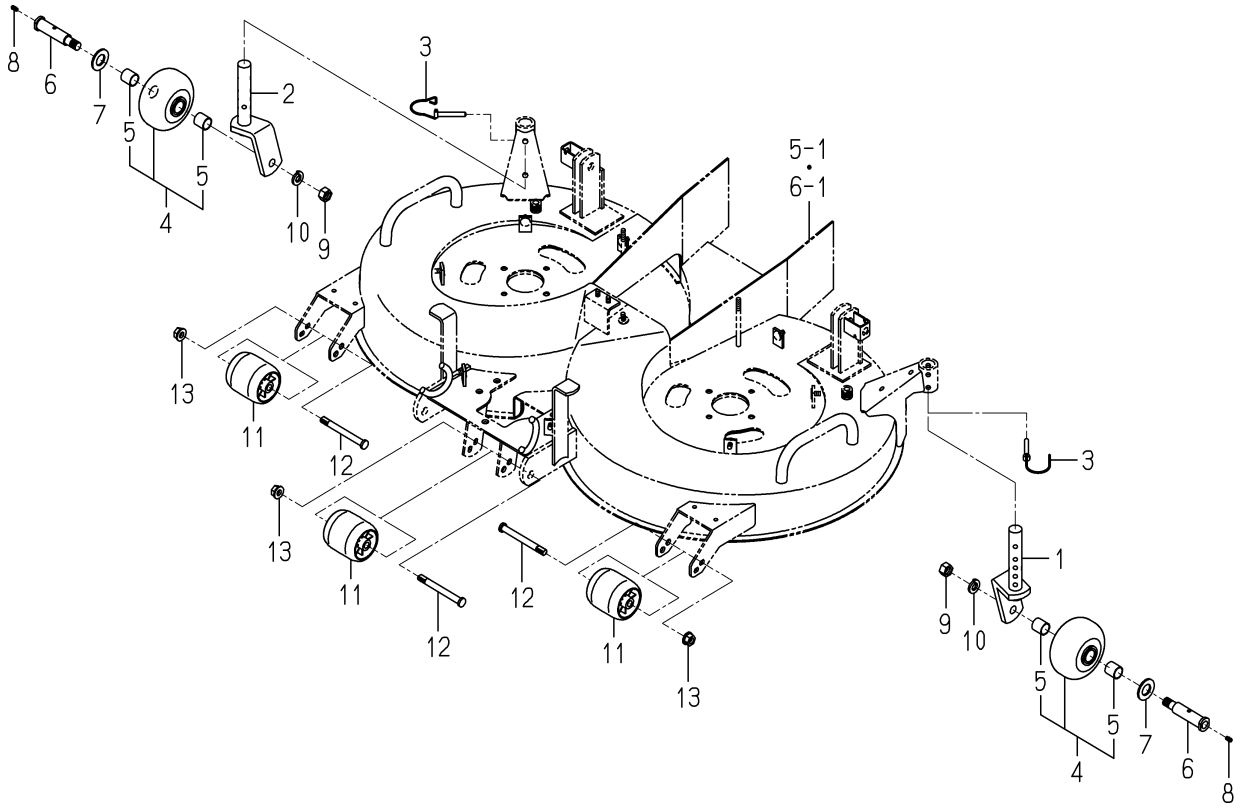

8663-501 -0100

KEY	PART CODE	DESCRIPTION	SPC	TYPE OF MODEL SCMA48M	SCMA54M	ITC	COL	GRP	REMARKS
1	8663-501-210-00	FORK/WHEEL/LH COMP	*	1	1		7F		
2	8663-501-220-00	FORK/WHEEL/RH COMP	*	1	1		7F		
3	8663-501-230-00	PIN/08X56 COMP	*	2	2				
4	8657-501-530-00	WHEEL/GAUGE ASSY	*	2	2				
5	8654-501-283-00	BUSH/22X25X25	*	4	4				
6	8663-501-001-10	PIN/22X106	*	2	2				
7	V411-260-022-00	WASHER,PL/M22	*	2	2				
8	V760-150-000-00	NIPPLE,GREASE	*	2	2				
9	V304-460-016-00	NUT/M16	*	2	2				
10	V401-160-016-00	WASHER,SP/M16	*	2	2				
11	8595-501-001-10	WHEEL/GAUGE/FRONT	*	3	3				
12	8595-505-051-30	PIN/12X117	*	3	3				
13	V360-260-012-00	NUT/WASHER	*	3	3				

FIG. 8 LINK SYSTEM

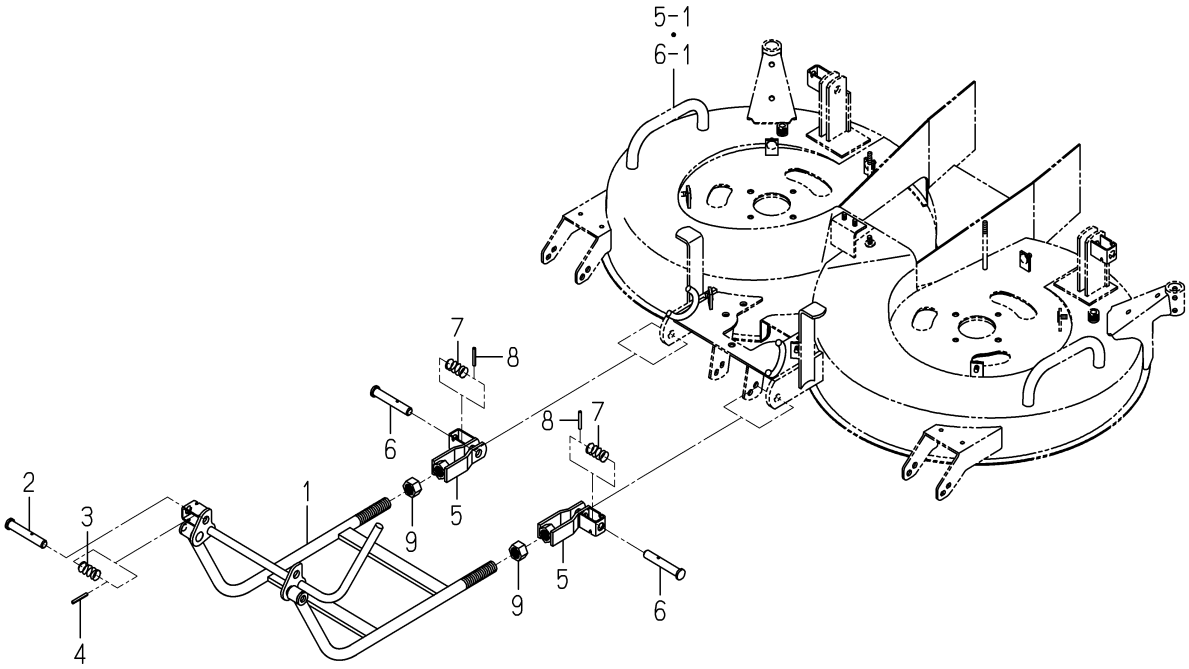

8663-608 -0100

KEY	PART CODE	DESCRIPTION	SPC	TYPE OF MODEL SCMA48M	TYPE OF MODEL SCMA54M	ITC	COL	GRP	REMARKS
1	8663-608-210-00	ARM/FRONT COMP	*	1	1		7F		
2	8595-608-082-00	PIN/16X96	*	1	1				
3	1560-601-028-00	SPRING/HC042	*	1	1				
4	V580-140-504-00	PIN,SPRING/5 X40 W	*	1	1				
5	8657-608-720-00	FORK/M22 COMP	*	2	2				
6	8595-608-082-00	PIN/16X96	*	2	2				
7	1560-601-028-00	SPRING/HC042	*	2	2				
8	V580-140-504-00	PIN,SPRING/5 X40 W	*	2	2				
9	V334-460-022-00	NUT	*	2	2				

FIG. 9 LABEL

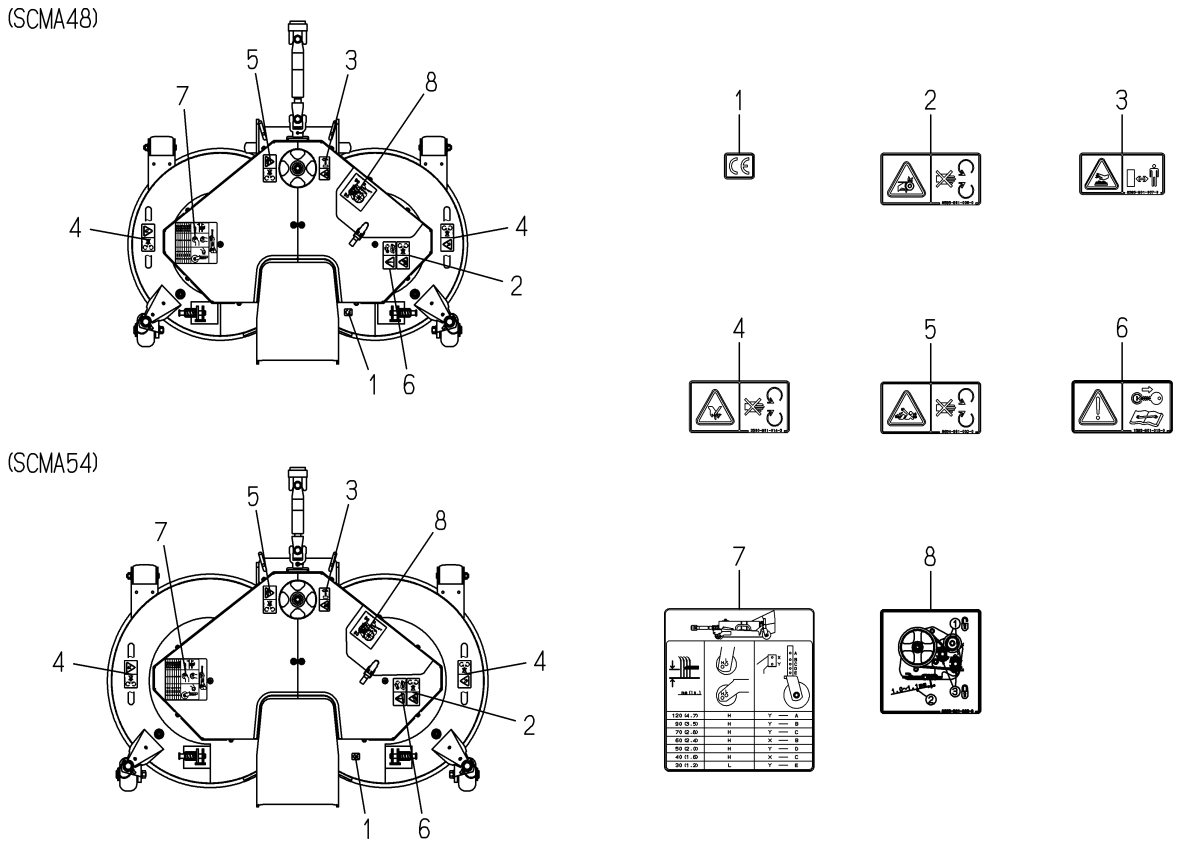

8663-901 -0100

KEY	PART CODE	DESCRIPTION	SPC	TYPE OF MODEL SCMA48M	TYPE OF MODEL SCMA54M	ITC	COL	GRP	REMARKS
1	2500-901-027-00	LABEL/CE	*	1	1				
2	8595-901-006-00	LABEL/WARNING/BELT	*	1	1				
3	8595-901-007-00	LABEL/WARNING/HOT	*	1	1				
4	2500-901-014-30	LABEL/DANGER	*	2	2				
5	8654-901-002-00	LABEL/PTO	*	1	1				
6	1593-901-015-00	LABEL/MAINTENANCE	*	1	1				
7	8663-901-001-00	LABEL/GAUGEWHEEL	*	1	1				
8	8663-901-002-00	LABEL/TENSION	*	1	1				

FIG. 10 UNIVERSAL JOINT SET (SCMA48-OPTION)

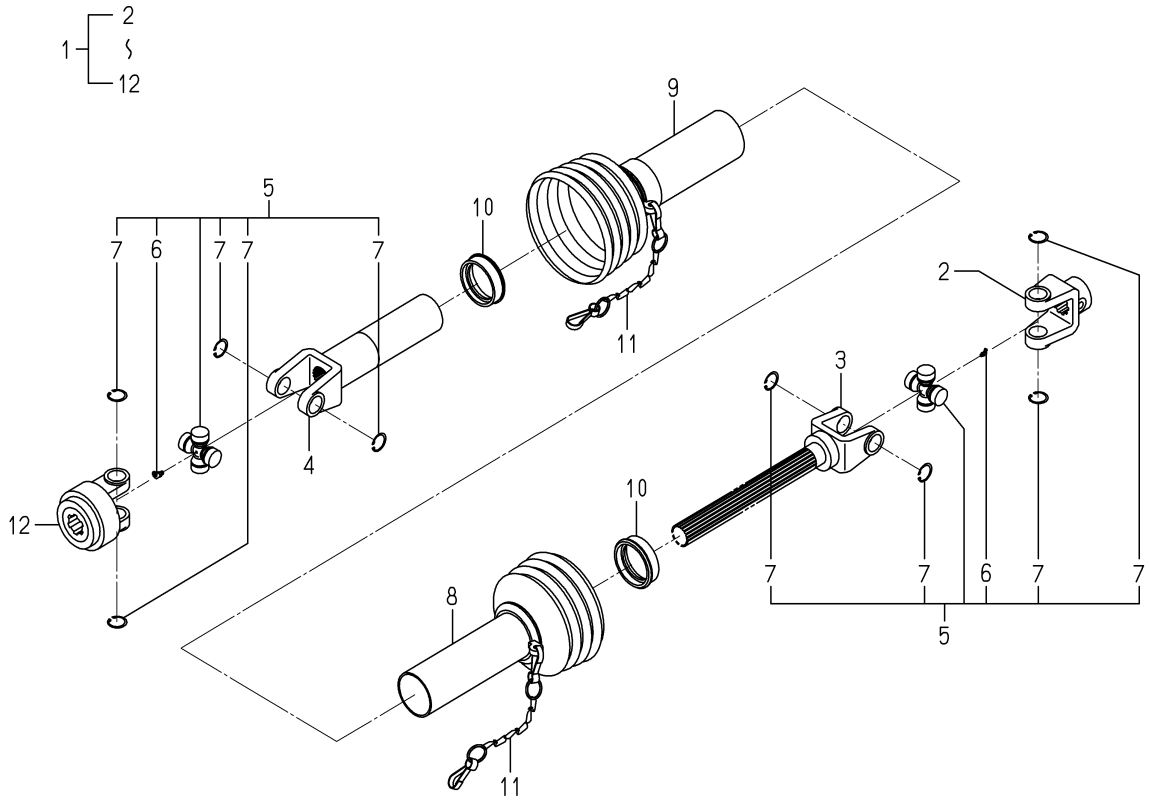

8663-101Z-0100

KEY	PART CODE	DESCRIPTION	SPC	TYPE OF MODEL SCMA48M	TYPE OF MODEL SCMA54M	ITC	COL	GRP	REMARKS
1	8663-101-210-00	JOINT/UNIVERSAL SET	T	1					
2	8654-101-221-00	FITTINGYOKE	T	1					
3	8663-101-211-00	SHAFTYOKE	T	1					
4	8663-101-212-00	SLEEVEYOKE	T	1					
5	8654-101-230-00	JOURNALCROSSE ASSY	T	2					
6	8654-101-232-00	GREASENIPPLE	T	2					
7	8654-101-233-00	SURCLIP/HOLE	T	8					
8	8663-101-213-00	SAFETYGUARD/IN	T	1					
9	8663-101-214-00	SAFETYGUARD/OUT	T	1					
10	7821-102-008-00	RING/SLIDE	T	2					
11	7821-102-220-00	CHAIN ASSY	T	2					
12	8657-101-501-00	AS YOKE ASSY	T	1					

FIG. 11 UNIVERSAL JOINT SET (SCMA54-OPTION)

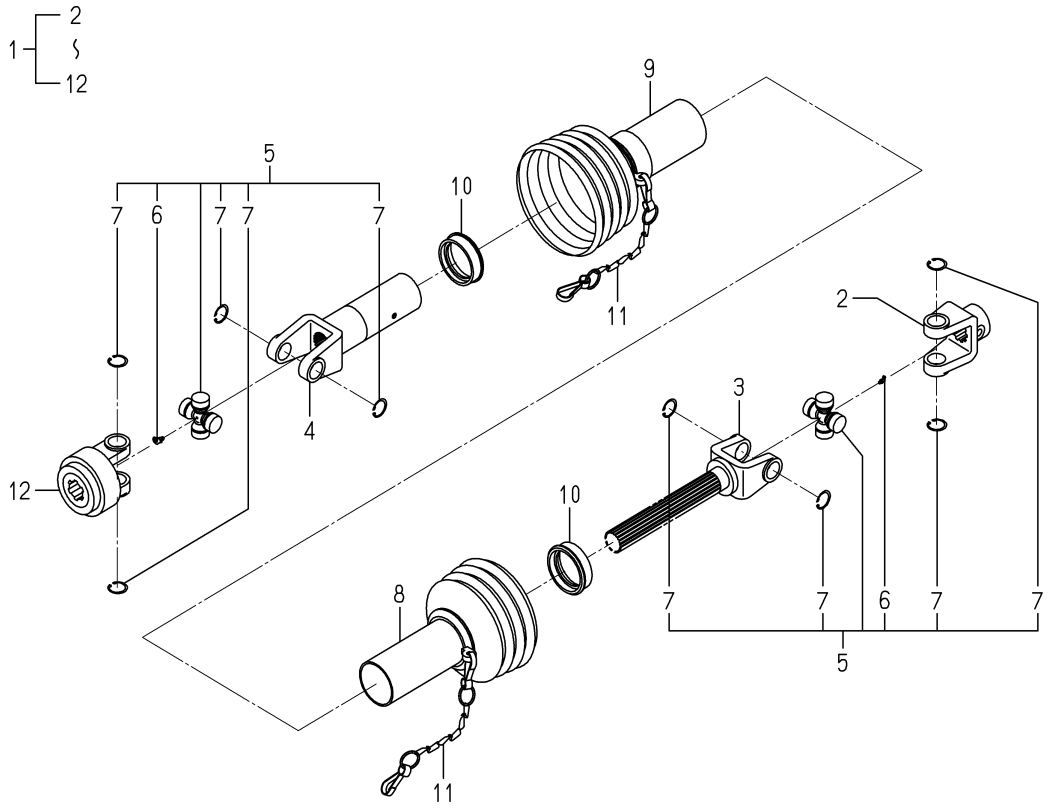

8665-101Z-0100

KEY	PART CODE	DESCRIPTION	SPC	TYPE OF MODEL SCMA48M	TYPE OF MODEL SCMA54M	ITC	COL	GRP	REMARKS
1	8665-101-210-00	JOINT/UNIVERSAL SET	T		1				
2	8654-101-221-00	FITTINGYOKE	T		1				
3	8665-101-211-00	SHAFTYOKE	T		1				
4	8665-101-212-00	SLEEVEYOKE	T		1				
5	8654-101-230-00	JOURNALCROSSE ASSY	T		2				
6	8654-101-232-00	GREASENIPPLE	T		2				
7	8654-101-233-00	SURCLIP/HOLE	T		8				
8	8665-101-213-00	SAFETYGUARD/IN	T		1				
9	8665-101-214-00	SAFETYGUARD/OUT	T		1				
10	7821-102-008-00	RING/SLIDE	T		2				
11	7821-102-220-00	CHAIN ASSY	T		2				
12	8657-101-501-00	AS YOKE ASSY	T		1				

FIG. 12 COMPONENT PARTS FOR 8659-101-210-00 ON Fig.1

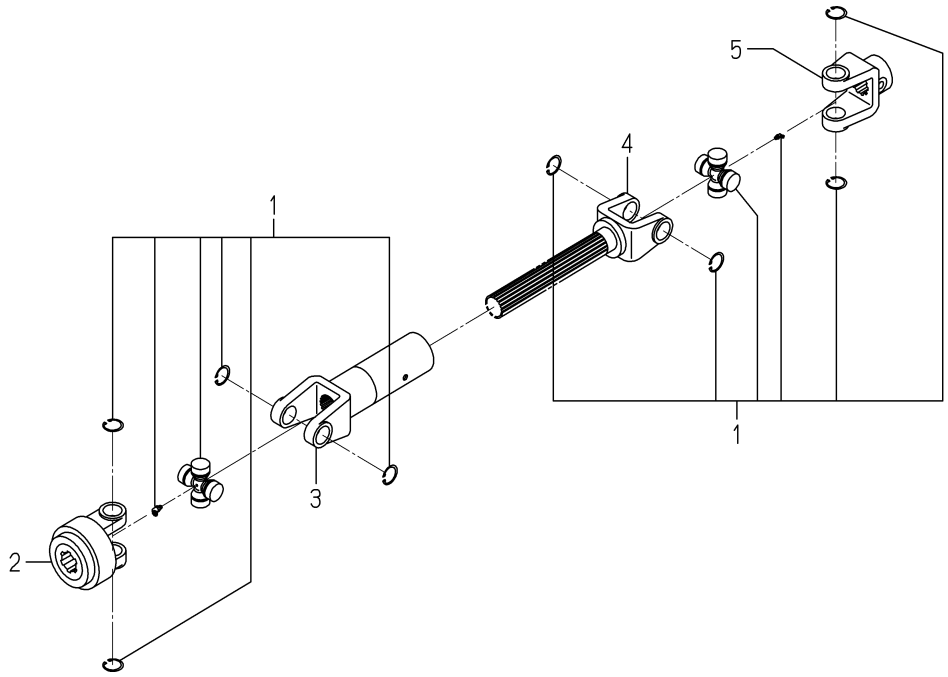

8659-101-210-0D

KEY	PART CODE	DESCRIPTION	SPC	TYPE OF MODEL SCMA48M	TYPE OF MODEL SCMA54M	ITC	COL	GRP	REMARKS
1	8659-101-211-00	UJ ASSY	*		2				
2	8659-101-212-00	ASYOKE ASSY	*		1				
3	8659-101-213-00	SLEEVEYOKE	*		1				
4	8659-101-214-00	YOKE/SHAFT	*		1				
5	8659-101-215-00	FITTINGYOKE	*		1				

FIG. 13 COMPONENT PARTS FOR 8662-101-210-00 ON Fig.2

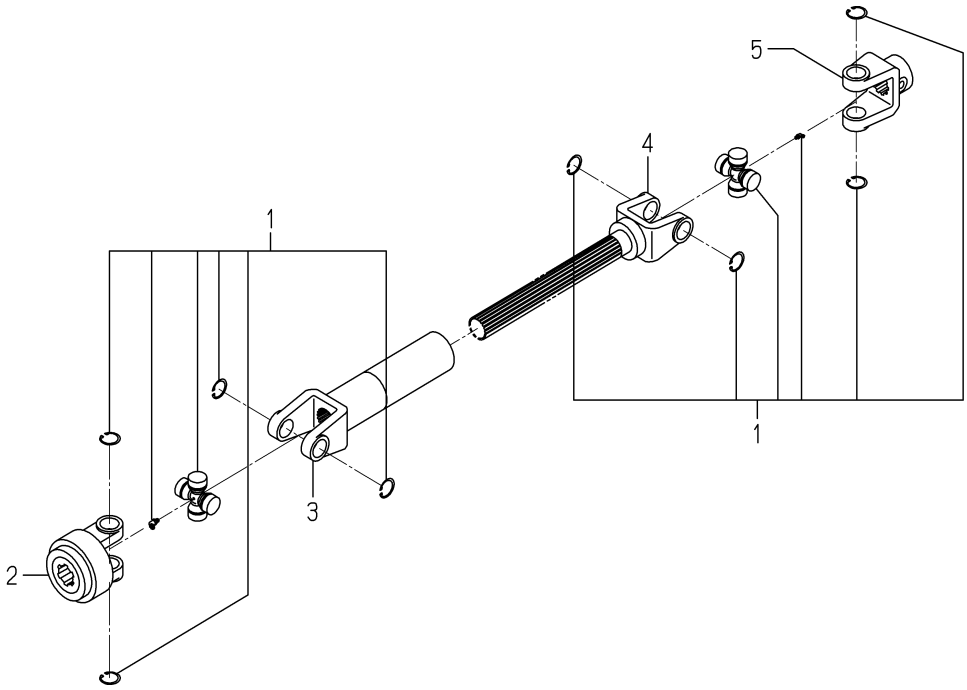

8662-101-210-0C

KEY	PART CODE	DESCRIPTION	SPC	TYPE OF MODEL SCMA48M	TYPE OF MODEL SCMA54M	ITC	COL	GRP	REMARKS
1	8659-101-211-00	UJ ASSY	*	2					
2	8659-101-212-00	ASYOKE ASSY	*	1					
3	8662-101-213-00	SLEEVEYOKE	*	1					
4	8662-101-214-00	SHAFTYOKE	*	1					
5	8659-101-215-00	FITTINGYOKE	*	1					

COLLECTOR

SBC550XM

8664-097-110-00

FIG. 1 FRAME SYSTEM (L TYPE)

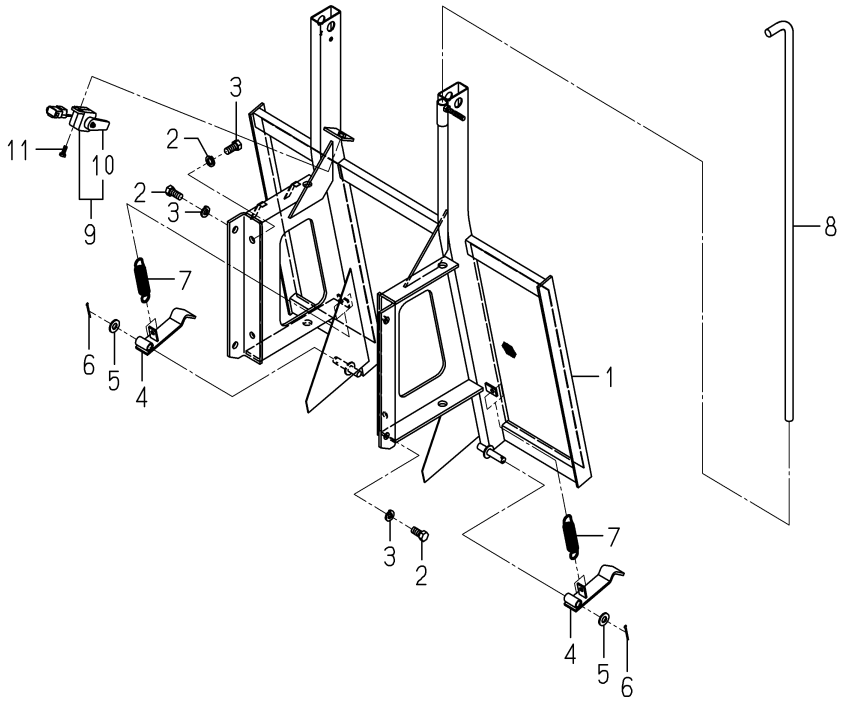

8664-105A-0100

KEY	PART CODE	DESCRIPTION	SPC	TYPE OF MODEL SBC550X M		ITC	COL	GRP	REMARKS
1	8664-105-310-00	FRAME/COLLECTOR COMP	*	1			7F		
2	V201-361-202-50	BOLT/M12X25	*	8					
3	V401-160-012-00	WASHER,SP/M12	*	8					
4	8664-105-230-00	HOOK COMP	*	2					
5	V411-260-012-00	WASHER /M12	*	2					
6	V500-163-002-50	PIN,SPLIT/3 X25	*	2					
7	2500-210-016-00	SPRING/HE108	*	2					
8	8664-105-001-00	BAR	*	1					
9	1716-680-330-00	SWITCH/LEVER ASSY	*	1					
10	1716-680-222-00	ARM	*	1					
11	V210-360-602-00	BOLT/SP	*	1					

FIG. 2 FRAME SYSTEM (H TYPE)

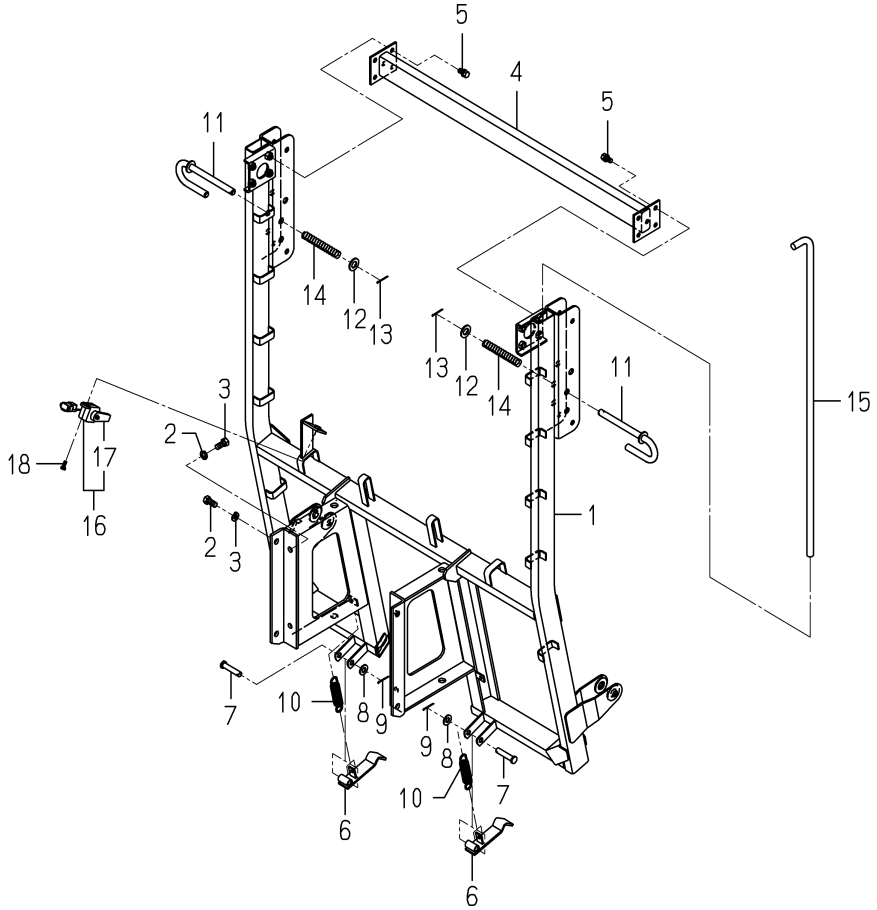

8664-155 -0100

KEY	PART CODE	DESCRIPTION	SPC	TYPE OF MODEL SBC550XM		ITC	COL	GRP	REMARKS
1	8664-155-210-90	FRAME/COLLECTOR COMP	*	1			7F		
2	V201-361-202-50	BOLT/M12X25	*	8					
3	V401-160-012-00	WASHER,SP/M12	*	8					
4	8664-155-250-00	TUBE/927 COMP	*	1					
5	V211-261-002-00	BOLT,SEMS	*	8					
6	8664-155-230-00	HOOK COMP	*	2					
7	8664-155-001-00	PIN/12X56	*	2					
8	V411-260-012-00	WASHER /M12	*	2					
9	V500-163-002-50	PIN,SPLIT/3 X25	*	2					
10	2500-210-016-00	SPRING/HE108	*	2					
11	8664-155-240-00	PIN COMP	*	2					
12	V411-260-016-00	WASHER / M16	*	2					
13	V500-163-003-00	PIN,SPLIT/3X30	*	2					
14	8664-155-002-00	SPRING/HC120	*	2					
15	8664-105-001-00	BAR	*	1					
16	1716-680-330-00	SWITCH/LEVER ASSY	*	1					
17	1716-680-222-00	ARM	*	1					
18	V210-360-602-00	BOLT/SP	*	1					

FIG. 3 CONTAINER SYSTEM (L TYPE)

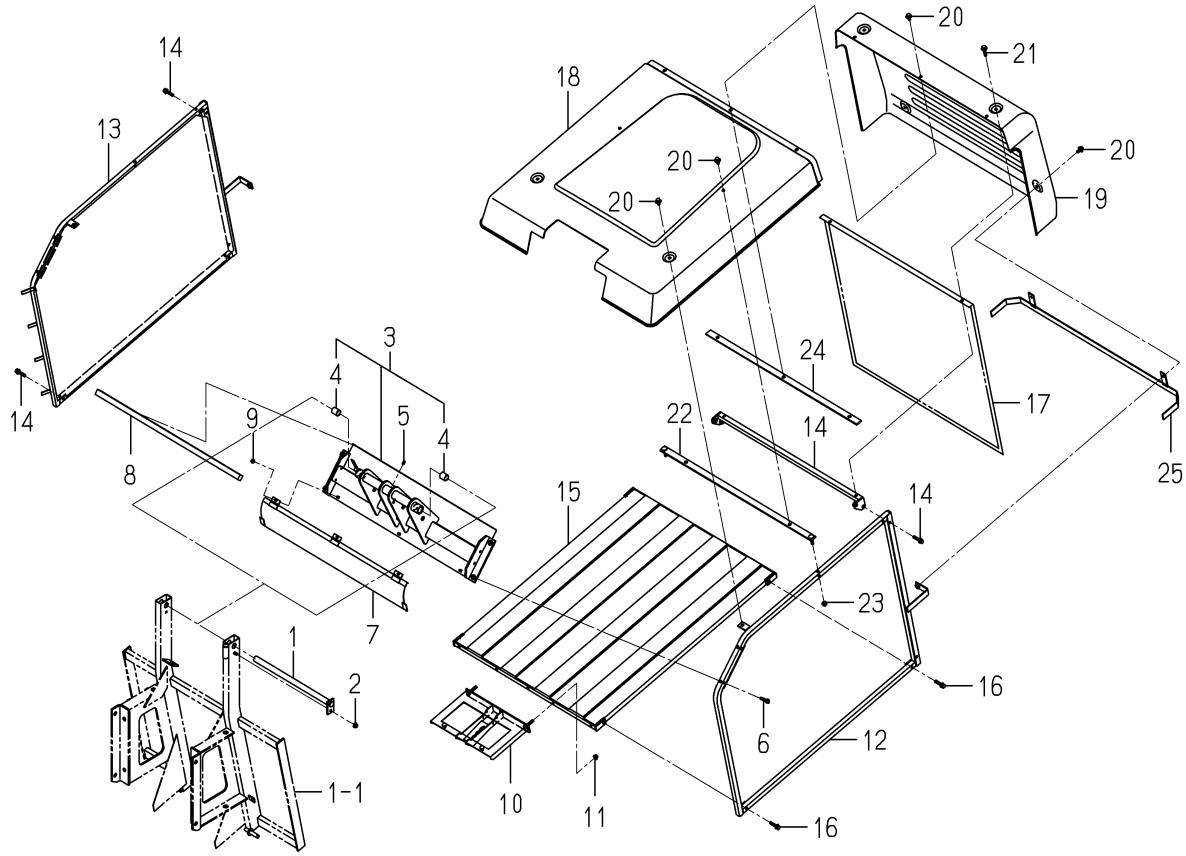

8664-305A-0100

KEY	PART CODE	DESCRIPTION	SPC	TYPE OF MODEL SBC550X M		ITC	COL	GRP	REMARKS
1	8664-305-210-00	PIN/20X405 COMP	*	1					
2	V362-260-008-00	NUT/WASHER	*	1					
3	8664-305-200-10	FRAME/UPPER ASSY	*	1			7F		
4	8664-305-201-00	BUSH/20X23X25	*	2					
5	V760-150-000-00	NIPPLE,GREASE	*	1					
6	V211-560-804-50	BOLT,SEMS/M8X45 7T	*	4					
7	8664-305-310-00	COVER/UPPER/SUB COMP	*	1			7F		
8	8664-305-031-00	INSULATOR/756	*	1					
9	V360-260-006-00	NUT/M6	*	3					
10	8664-305-280-20	PLATE/LOWER/FRONT	*	1					
11	V362-260-008-00	NUT/WASHER	*	2					
12	8664-305-240-10	FRAME/SIDE/LH COMP	*	1			7F		
13	8664-305-250-10	FRAME/SIDE/RH COMP	*	1			7F		
14	8664-305-230-00	FRAME/REAR COMP	*	1					
15	8664-305-260-10	FRAME/LOWER COMP	*	1			7F		
16	V211-660-804-00	BOLT/SP	*	8					
17	8664-305-001-10	NET/REAR	*	1			7F		
18	8664-305-002-00	COVER/CONTAINER/FRON	*	1					
19	8664-305-003-00	COVER/CONTAINER/REAR	*	1					
20	8664-305-004-00	BOLT/SP/M08X20	*	9					
21	8664-305-005-00	BOLT/SP/M08X40	*	2					
22	8664-305-320-00	PLATE/COVER/FRONT	*	1					
23	V362-260-008-00	NUT/WASHER	*	2					
24	8664-305-330-00	PLATE/COVER/REA COMP	*	1					
25	8664-305-340-00	GUIDE/REAR COMP	*	1					

FIG. 4 CONTAINER SYSTEM (H TYPE)

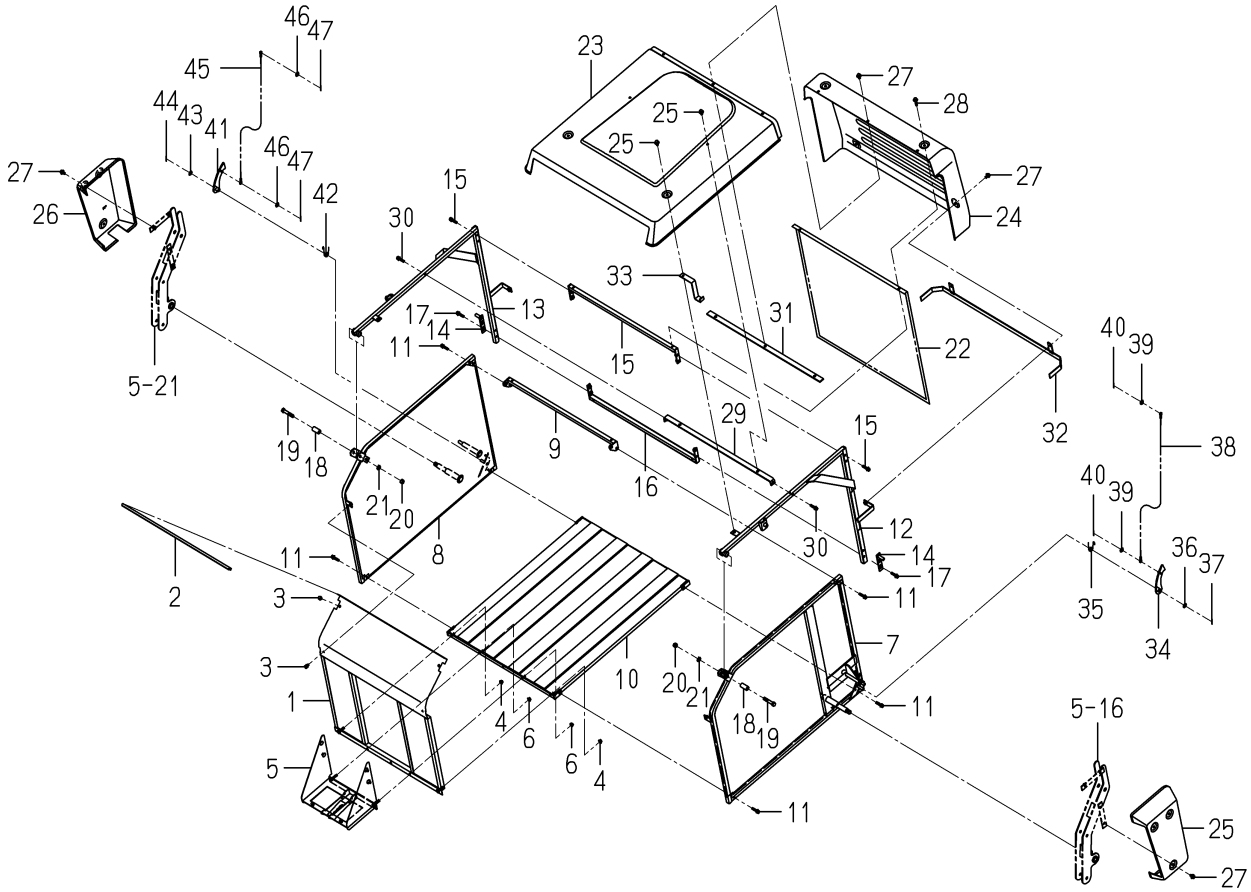

8664-355A-0100

KEY	PART CODE	DESCRIPTION	SPC	TYPE OF MODEL SBC550X M		ITC	COL	GRP	REMARKS
1	8664-355-410-00	CONTAINER/FRONT COMP	*	1			7F		
2	8664-355-031-00	INSULATOR/756	*	1					
3	V211-360-801-60	BOLT,SEMS (SP)	*	4					
4	V362-260-008-00	NUT/WASHER	*	2					
5	8664-355-310-40	PLATE/LOWER/FRONT	*	1					
6	V362-260-008-00	NUT/WASHER	*	6					
7	8664-355-220-20	FRAME/SIDE/LH COMP	*	1			7F		
8	8664-355-230-20	FRAME/SIDE/RH COMP	*	1			7F		
9	8664-305-230-00	FRAME/REAR COMP	*	1					
10	8664-355-240-10	FRAME/LOWER COMP	*	1			7F		
11	V211-660-804-50	BOLT/SP	*	8					
12	8664-355-250-10	FRAME/COVER/LH COMP	*	1					
13	8664-355-260-10	FRAME/COVER/RH COMP	*	1					
14	8664-355-330-00	PIN COMP	*	2					
15	8664-355-270-00	FRAME/REAR/UPPE COMP	*	1					
16	8664-355-280-00	FRAME/REAR/LOWE COMP	*	1					
17	V211-660-804-50	BOLT/SP	*	8					
18	8664-455-001-00	COLLAR/12X20X41	*	2					
19	V201-361-206-50	BOLT	*	2					
20	V304-260-012-00	NUT/M12	*	2					
21	V401-160-012-00	WASHER,SP/M12	*	2					
22	8664-305-001-10	NET/REAR	*	1			7F		
23	8664-355-002-00	COVER/CONTAINER/FRON	*	1					
24	8664-305-003-00	COVER/CONTAINER/REAR	*	1					
25	8664-355-003-00	COVER/CONTAINER/SIDE	*	1					
26	8664-355-004-00	COVER/CONTAINER/SIDE	*	1					
27	8664-305-004-00	BOLT/SP/M08X20	*	15					
28	8664-305-005-00	BOLT/SP/M08X40	*	2					
29	8664-355-320-00	PLATE/U/749X25 COMP	*	1					
30	V211-660-804-50	BOLT/SP	*	2					

FIG. 4 CONTAINER SYSTEM (H TYPE)

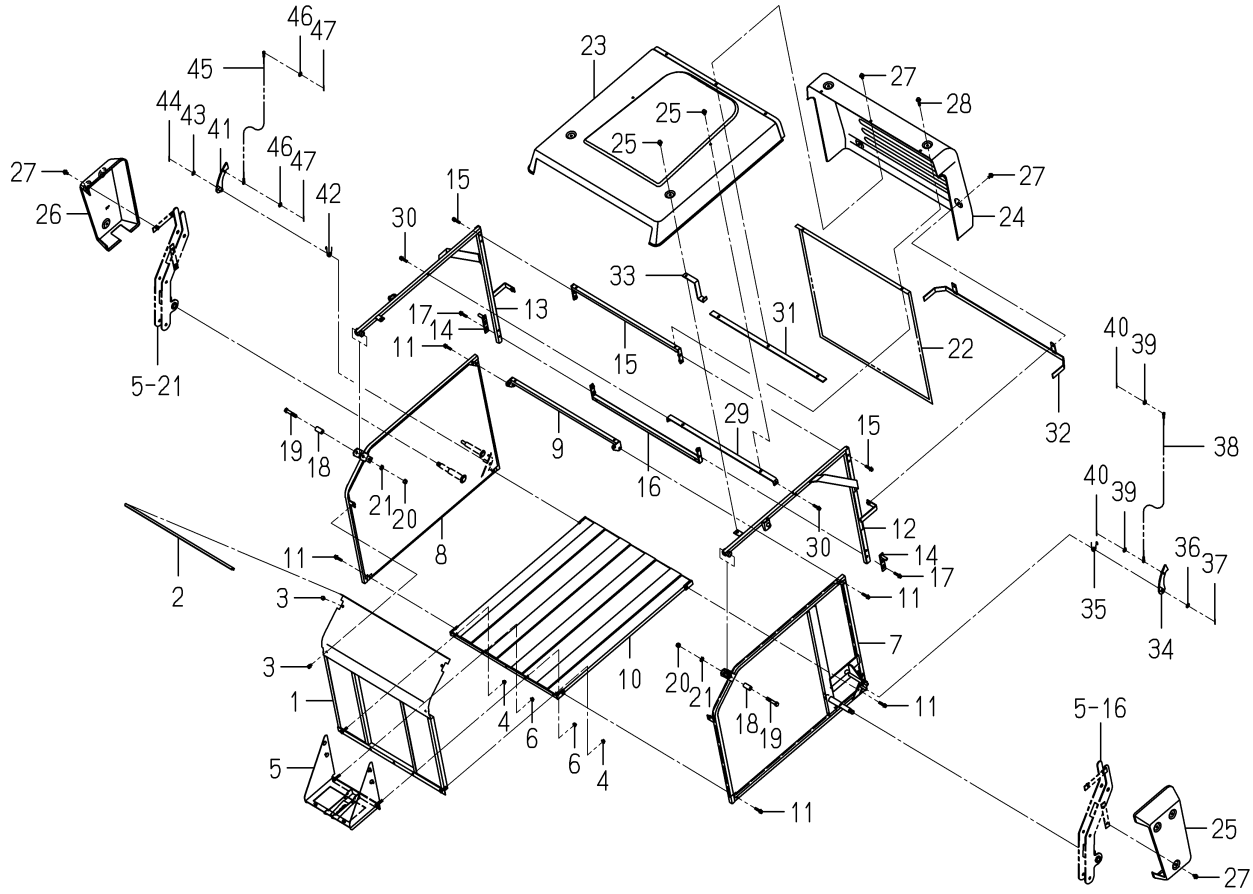

8664-355A-0100

KEY	PART CODE	DESCRIPTION	SPC	TYPE OF MODEL SBC550X M		ITC	COL	GRP	REMARKS
31	8664-305-330-00	PLATE/COVER/REA COMP	*	1					
32	8664-305-340-00	GUIDE/REAR COMP	*	1					
33	8664-355-009-00	GUIDE/SIDE	*	2					
34	8664-355-340-00	PLATE/LOCK/LH COMP	*	1					
35	8664-355-007-00	SPRING/HT020	*	1					
36	V411-260-010-00	WASHER/M10	*	1					
37	V500-163-002-50	PIN,SPLIT/3 X25	*	1					
38	8664-355-360-00	CABLE/LOCK COMP	*	1					
39	V411-260-006-00	WASHER / M6	*	2					
40	V500-162-502-00	PIN,SPLIT/2.5X20	*	2					
41	8664-355-350-00	PLATE/LOCK/RH COMP	*	1					
42	8664-355-008-00	SPRING/HT020	*	1					
43	V411-260-010-00	WASHER/M10	*	1					
44	V500-163-002-50	PIN,SPLIT/3 X25	*	1					
45	8664-355-360-00	CABLE/LOCK COMP	*	1					
46	V411-260-006-00	WASHER / M6	*	2					
47	V500-162-502-00	PIN,SPLIT/2.5X20	*	2					

FIG. 5 LINK SYSTEM (H TYPE)

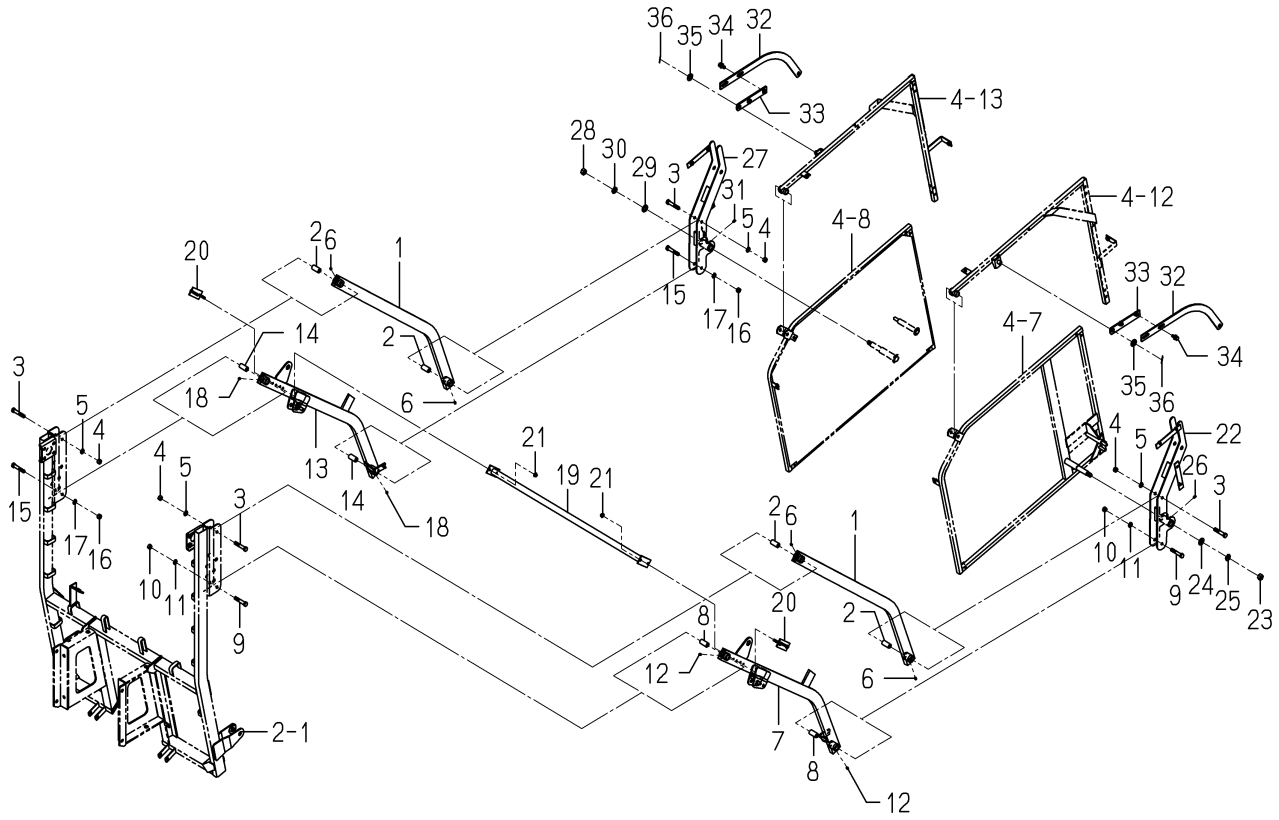

8664-455 -0100

KEY	PART CODE	DESCRIPTION	SPC	TYPE OF MODEL SBC550X M		ITC	COL	GRP	REMARKS
1	8664-455-210-10	LINK/A COMP	*	2					
2	8664-455-001-00	COLLAR/12X20X41	*	4					
3	V201-361-206-50	BOLT	*	4					
4	V304-260-012-00	NUT/M12	*	4					
5	V401-160-012-00	WASHER,SP/M12	*	4					
6	V760-150-000-00	NIPPLE,GREASE	*	4					
7	8664-455-220-20	LINK/B/LH COMP	*	1					
8	8664-455-001-00	COLLAR/12X20X41	*	2					
9	V201-361-206-50	BOLT	*	2					
10	V304-260-012-00	NUT/M12	*	2					
11	V401-160-012-00	WASHER,SP/M12	*	2					
12	V760-150-000-00	NIPPLE,GREASE	*	2					
13	8664-455-280-00	LINK/B/RH COMP	*	1					
14	8664-455-001-00	COLLAR/12X20X41	*	2					
15	V201-361-206-50	BOLT	*	2					
16	V304-260-012-00	NUT/M12	*	2					
17	V401-160-012-00	WASHER,SP/M12	*	2					
18	V760-150-000-00	NIPPLE,GREASE	*	2					
19	8664-455-230-00	BAR COMP	*	1					
20	8664-455-240-00	PLATE/I/38X80 COMP	*	2					
21	V362-260-008-00	NUT/WASHER	*	4					
22	8664-455-250-10	BRACKET/LINK/LH COMP	*	1					
23	V304-260-016-00	NUT/M16	*	1					
24	V411-260-016-00	WASHER / M16	*	1					
25	V401-160-016-00	WASHER,SP/M16	*	1					
26	V760-150-000-00	NIPPLE,GREASE	*	1					
27	8664-455-260-10	BRACKET/LINK/RH COMP	*	1					
28	V304-260-016-00	NUT/M16	*	1					
29	V411-260-016-00	WASHER / M16	*	1					
30	V401-160-016-00	WASHER,SP/M16	*	1					

FIG. 5 LINK SYSTEM (H TYPE)

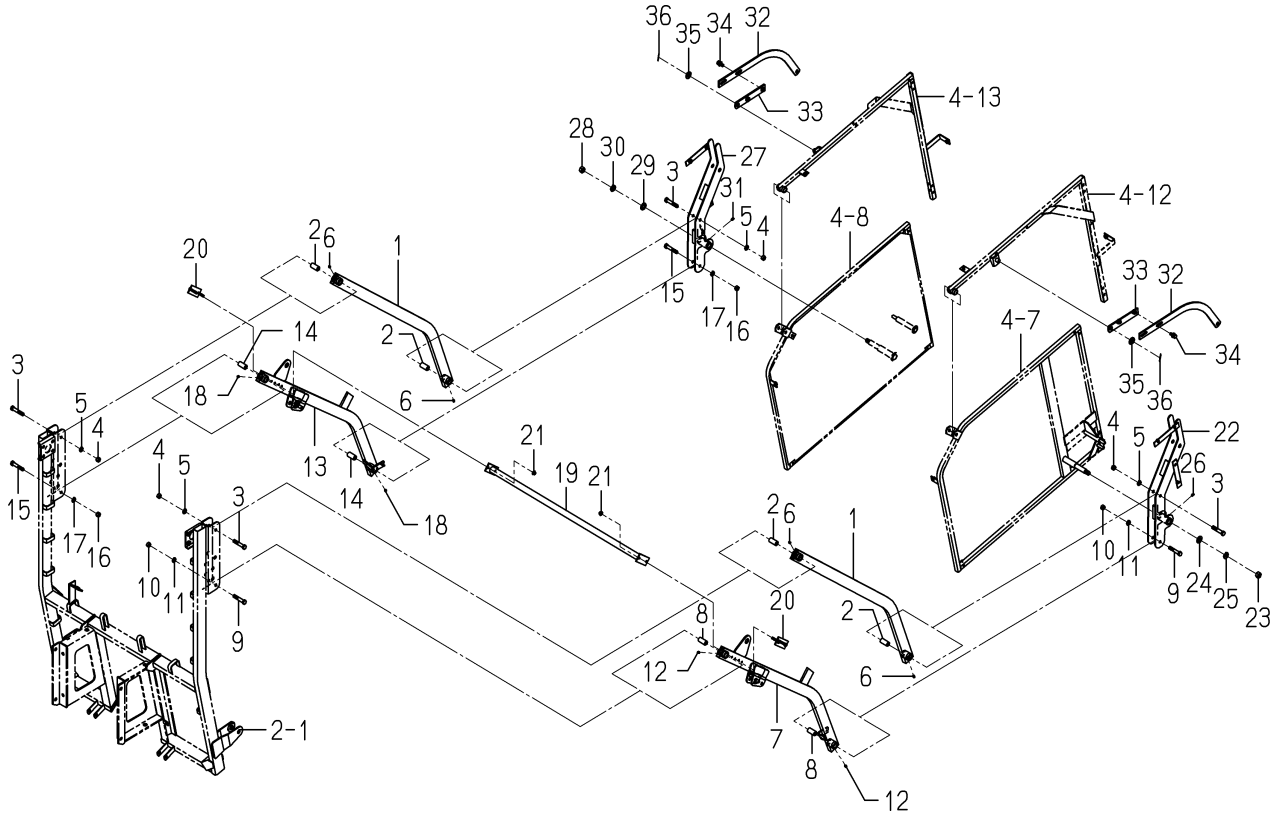

8664-455 -0100

KEY	PART CODE	DESCRIPTION	SPC	TYPE OF MODEL SBC550X M		ITC	COL	GRP	REMARKS
31	V760-150-000-00	NIPPLE,GREASE	*	1					
32	8664-455-002-10	LINK/C	*	2					
33	8664-455-270-00	PLATE/IR/32X192 COMP	*	2					
34	V211-361-002-50	BOLT/SP	*	4					
35	V411-260-016-00	WASHER / M16	*	2					
36	V500-163-003-00	PIN,SPLIT/3X30	*	2					

FIG. 6 CYLINDER SYSTEM (L TYPE)

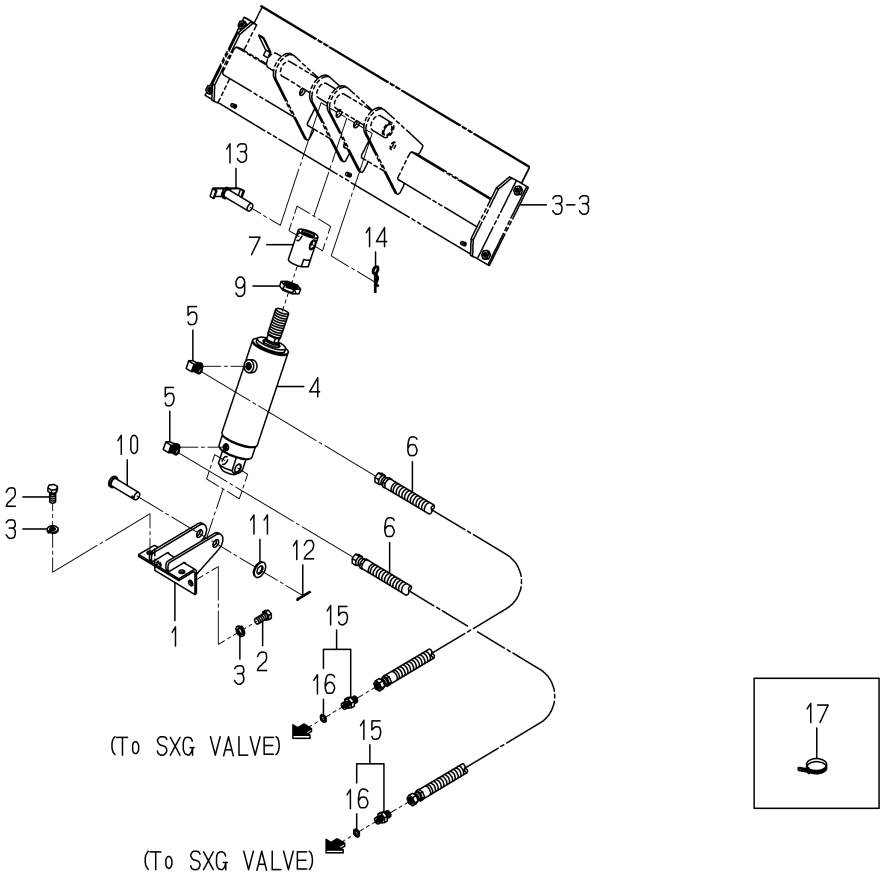

8664-505 -0100

KEY	PART CODE	DESCRIPTION	SPC	TYPE OF MODEL SBC550X M		ITC	COL	GRP	REMARKS
1	8664-505-210-00	STAY/CYLINDER COMP	*	1					
2	V201-361-202-50	BOLT/M12X25	*	4					
3	V401-160-012-00	WASHER,SP/M12	*	4					
4	K185-021-000-00	CYLINDER ASSY	*	1					FIG 014
5	3768-185-022-10	ADAPTER(90ß/PUMP)	*	2					
6	8664-505-230-00	HOSE/HYDRO/650 ASSY	*	2					
7	8664-505-001-20	NUT/CYLINDER	*	1					
8	V760-150-000-00	NIPPLE,GREASE	*	1					
9	8664-505-002-00	NUT/M27X2	*	1					
10	8664-505-003-00	PIN/16X65	*	1					
11	V411-260-016-00	WASHER / M16	*	1					
12	V500-163-003-00	PIN,SPLIT/3X30	*	1					
13	8664-505-220-00	PIN/16X65 COMP	*	1					
14	1305-931-003-00	PIN,HAIR	*	1					
15	8664-555-250-00	ADAPTER/G1/4 ASSY	*	2					
16	V720-112-401-10	RING/O	*	2					
17	1342-402-006-00	BAND,WIRE/250	*	5					

FIG. 7 CYLINDER SYSTEM (H TYPE)

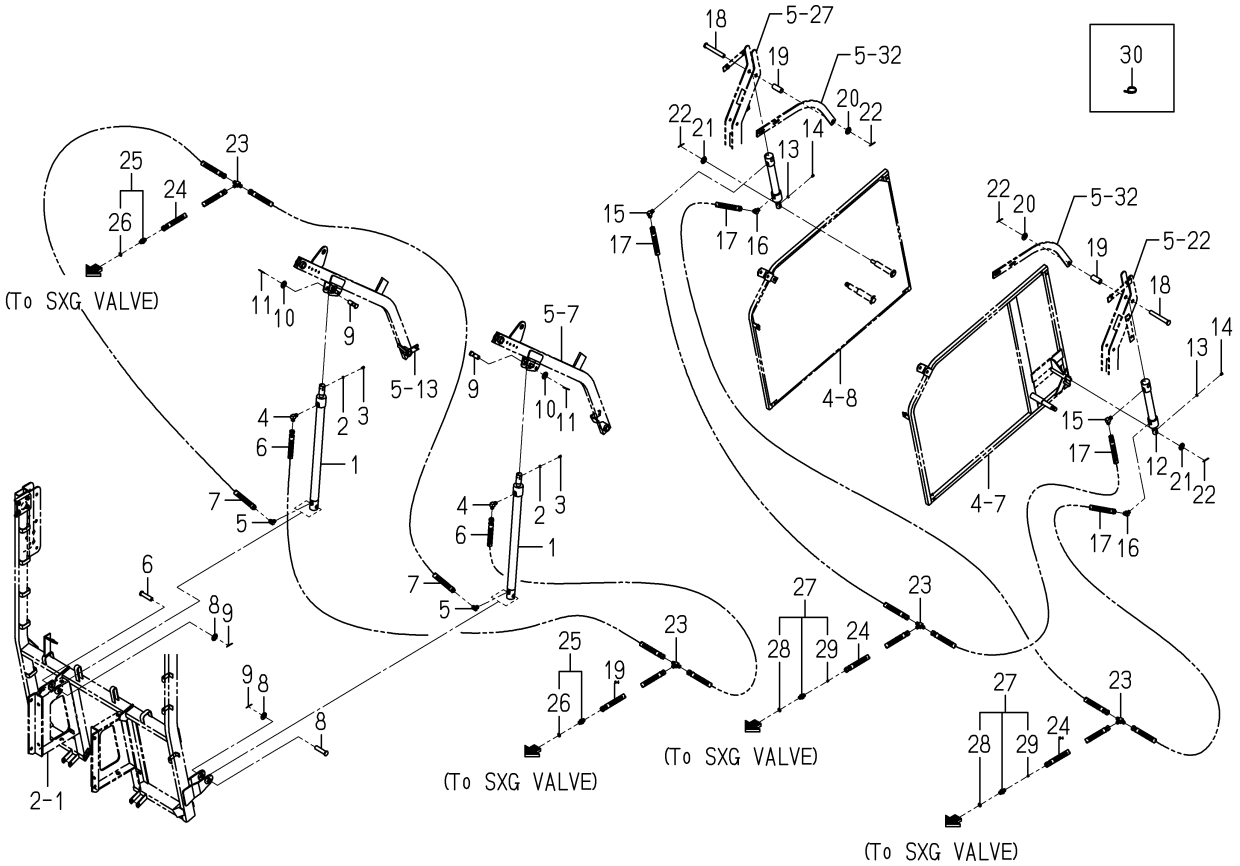

8664-555 -0100

KEY	PART CODE	DESCRIPTION	SPC	TYPE OF MODEL SBC550X M		ITC	COL	GRP	REMARKS
1	K185-077-000-10	CYLINDER ASSY	*	2					
2	V401-160-006-00	WASHER,SP/M 6	*	2					
3	V760-150-000-00	NIPPLE,GREASE	*	2					
4	3768-185-022-10	ADAPTER(90ß/PUMP)	*	2					
5	3631-350-201-10	ADAPTER/45ß	*	2					
6	8664-555-320-00	HOSE/HYDRO/1100 ASSY	*	2					
7	8664-555-350-00	HOSE/HYDRO/850 ASSY	*	2					
8	8664-555-001-00	PIN/16X66	*	2					
9	8664-555-009-00	PIN/16X46	*	2					
10	V411-260-016-00	WASHER / M16	*	4					
11	V500-163-003-00	PIN,SPLIT/3X30	*	4					
12	K185-078-000-10	CYLINDER ASSY	*	2					
13	V401-160-006-00	WASHER,SP/M 6	*	2					
14	V760-150-000-00	NIPPLE,GREASE	*	2					
15	3768-185-022-10	ADAPTER(90ß/PUMP)	*	2					
16	3631-350-201-10	ADAPTER/45ß	*	2					
17	8664-555-340-00	HOSE/HYDRO/2700 ASSY	*	4					
18	8664-555-005-00	PIN/16X120	*	2					
19	8664-555-002-00	COLLAR/17X22X53	*	2					
20	V411-260-016-00	WASHER / M16	*	2					
21	V411-260-012-00	WASHER /M12	*	2					
22	V500-163-003-00	PIN,SPLIT/3X30	*	4					
23	8664-555-003-00	ADAPTER/T	*	4					
24	8664-505-230-00	HOSE/HYDRO/650 ASSY	*	4					
25	8664-555-250-00	ADAPTER/G1/4 ASSY	*	2					
26	V720-112-401-10	RING/O	*	2					
27	8664-555-270-00	ADAPTER/ORIFICE ASSY	*	2					
28	V720-112-401-10	RING/O	*	2					
29	K211-004-014-00	SCREW,ORIFICE	*	2					
30	1342-402-006-00	BAND,WIRE/250	*	25					

FIG. 8 SENSOR SYSTEM (L TYPE)

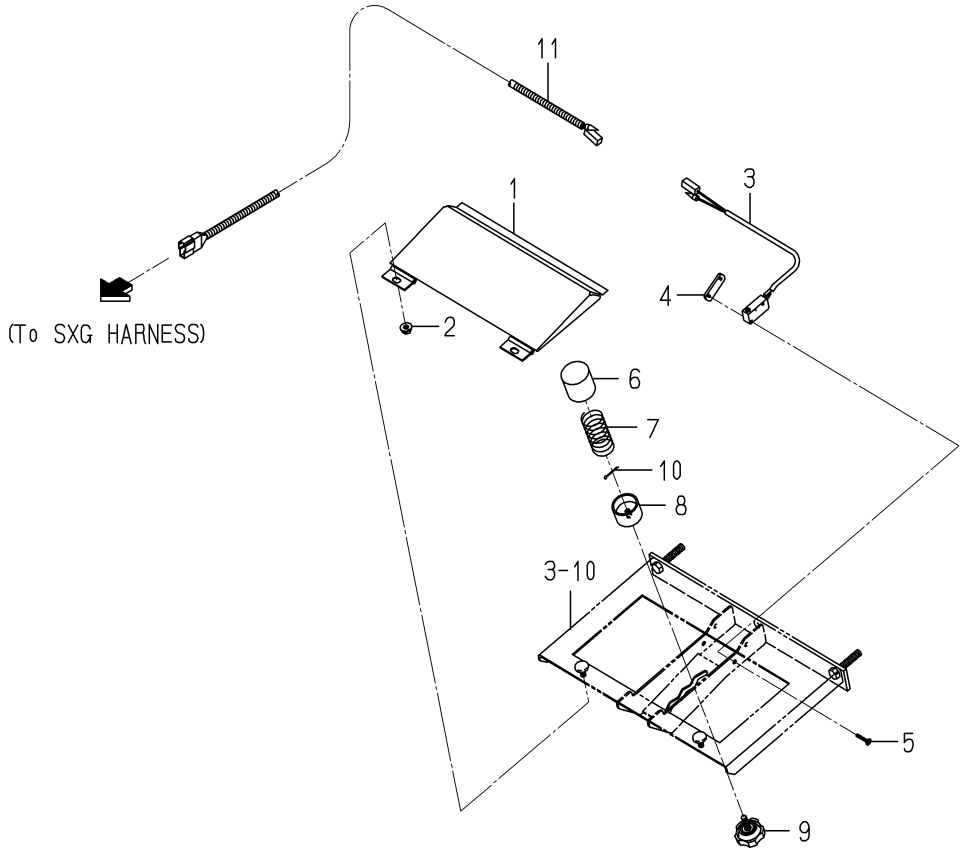

8664-605 -0100

KEY	PART CODE	DESCRIPTION	SPC	TYPE OF MODEL SBC550X M		ITC	COL	GRP	REMARKS
1	8664-605-210-20	PLATE/SENSOR COMP	*	1			7F		
2	V360-260-006-00	NUT/M6	*	2					
3	8664-605-230-00	SWITCH ASSY	*	1					
4	3664-276-001-00	PLATE/IRX13X35	*	1					
5	1614-129-003-00	SCREW/M03X20	*	2					
6	8664-605-002-10	CUP/SPRING	*	1					
7	8664-605-003-00	SPRING/HC058	*	1					
8	8664-605-004-00	NUT/ADJUST	*	1					
9	8664-605-005-00	BOLT/KNOB/M06X20	*	1					
10	V500-161-601-00	PIN,SPLIT/1.6X10	*	1					
11	8664-605-220-10	HARNESS/COLLECTOR/L	*	1					

FIG. 9 SENSOR SYSTEM (H TYPE)

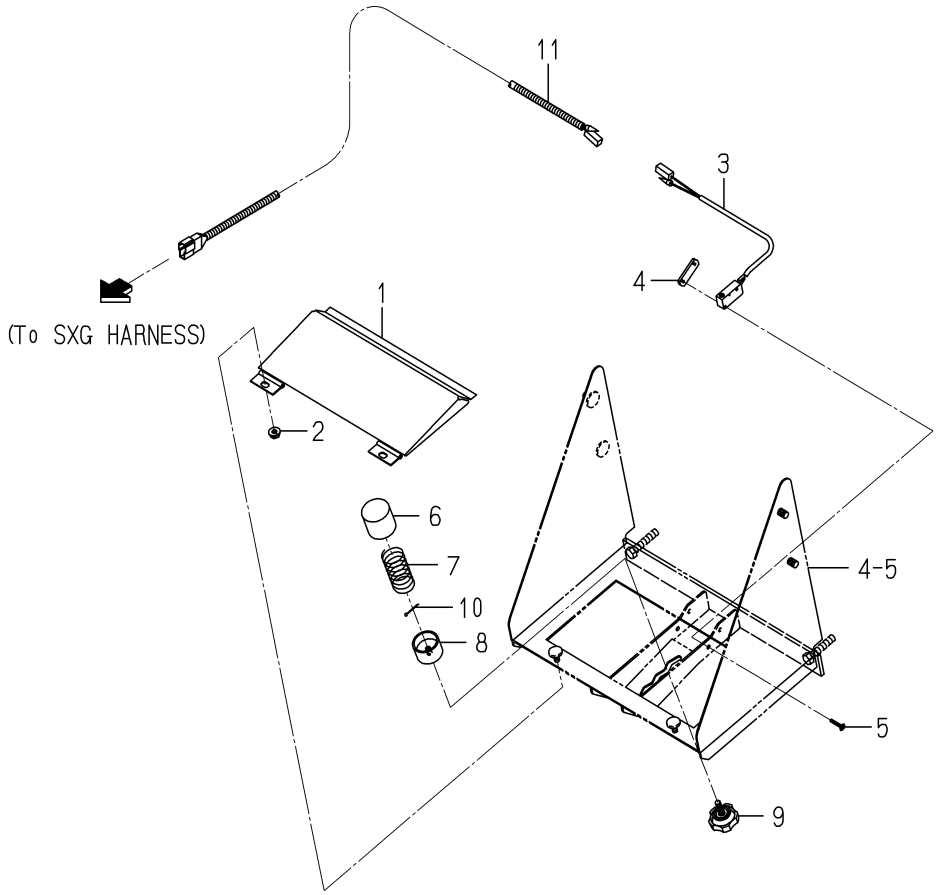

8664-655 -0100

KEY	PART CODE	DESCRIPTION	SPC	TYPE OF MODEL SBC550X M		ITC	COL	GRP	REMARKS
1	8664-605-210-20	PLATE/SENSOR COMP	*	1			7F		
2	V360-260-006-00	NUT/M6	*	2					
3	8664-605-230-00	SWITCH ASSY	*	1					
4	3664-276-001-00	PLATE/IRX13X35	*	1					
5	1614-129-003-00	SCREW/M03X20	*	2					
6	8664-605-002-10	CUP/SPRING	*	1					
7	8664-605-003-00	SPRING/HC058	*	1					
8	8664-605-004-00	NUT/ADJUST	*	1					
9	8664-605-005-00	BOLT/KNOB/M06X20	*	1					
10	V500-161-601-00	PIN,SPLIT/1.6X10	*	1					
11	8664-655-210-10	HARNESS/COLLECTOR/H	*	1					

FIG. 10 LABEL (L TYPE)

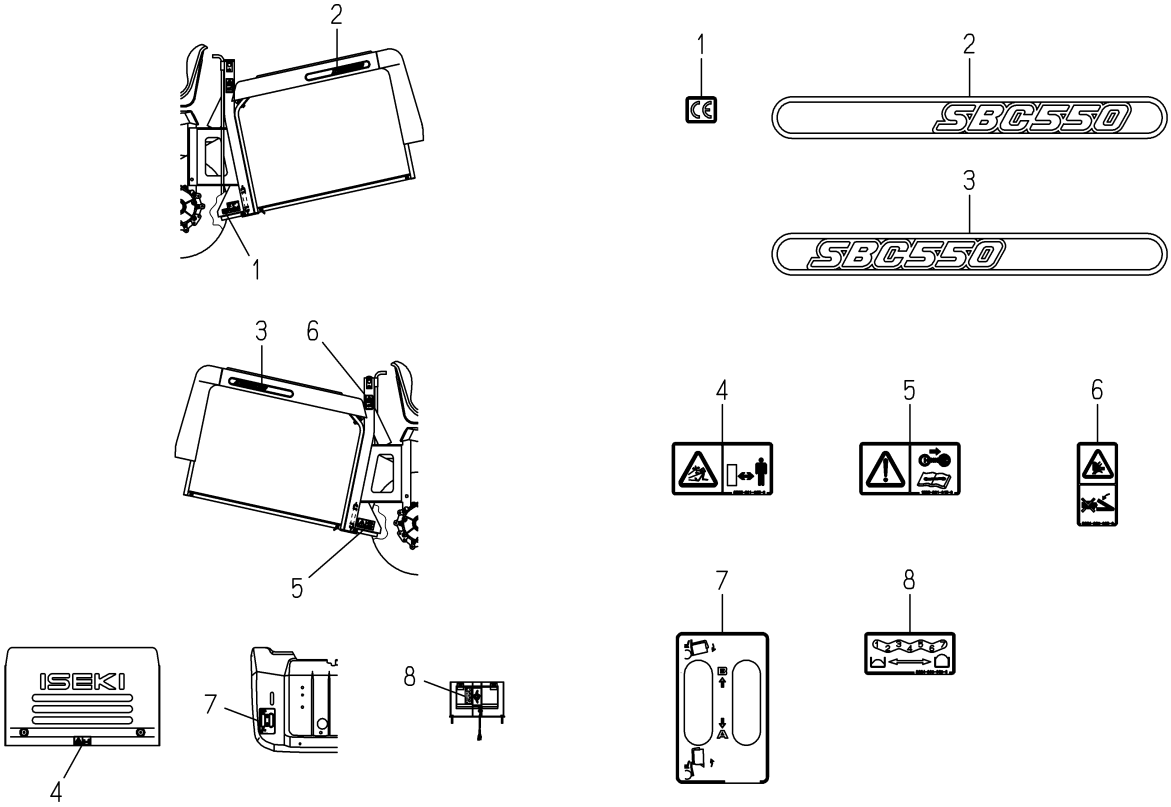

8664-905 -0100

KEY	PART CODE	DESCRIPTION	SPC	TYPE OF MODEL SBC550X M		ITC	COL	GRP	REMARKS
1	2500-901-027-00	LABEL/CE	*	1					
2	8664-905-001-00	ORNAMENT/SBC550/LH	*	1					
3	8664-905-002-00	ORNAMENT/SBC550/RH	*	1					
4	8595-901-005-00	LABEL/DANGER/DISCHAR	*	1					
5	1593-901-015-00	LABEL/MAINTENANCE	*	1					
6	8664-905-003-00	LABEL/CAUTION	*	2					
7	8664-905-004-00	LABEL/LIFT/L	*	1					
8	8664-905-005-00	LABEL/SENSOR	*	1					

FIG. 11 LABEL (H TYPE)

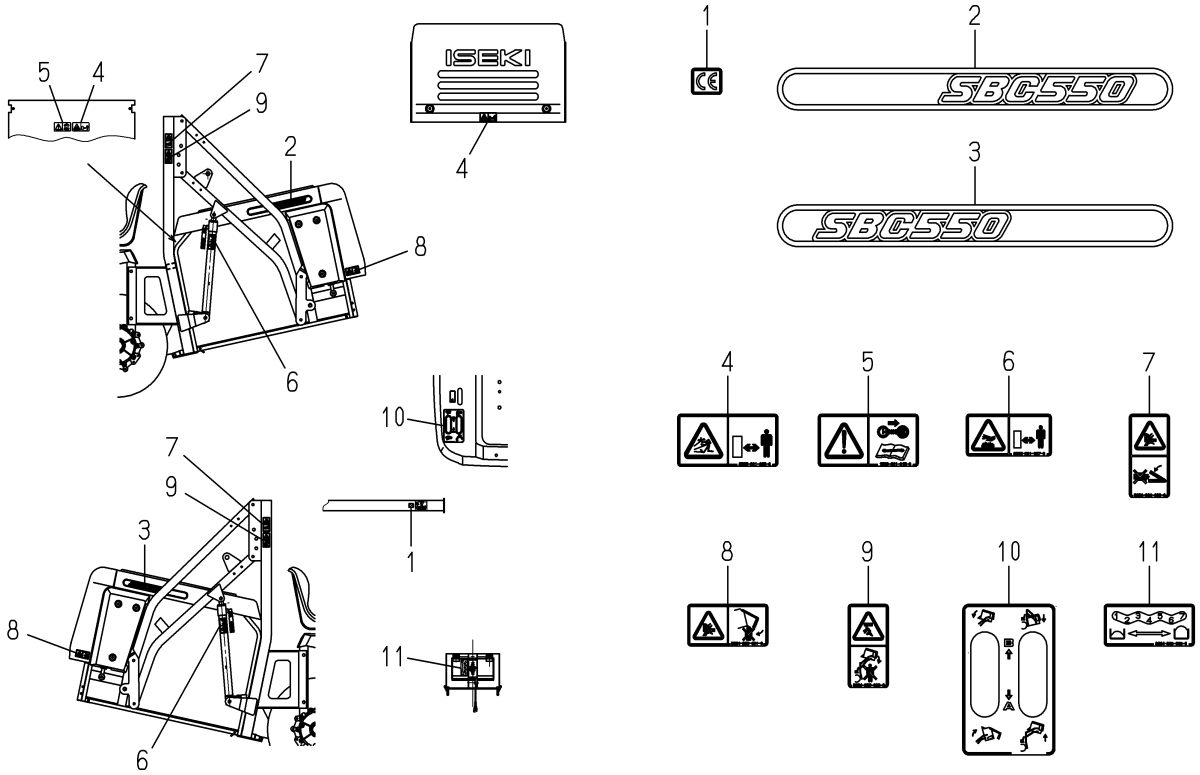

8664-955 -0100

KEY	PART CODE	DESCRIPTION	SPC	TYPE OF MODEL SBC550X M		ITC	COL	GRP	REMARKS
1	2500-901-027-00	LABEL/CE	*	1					
2	8664-905-001-00	ORNAMENT/SBC550/LH	*	1					
3	8664-905-002-00	ORNAMENT/SBC550/RH	*	1					
4	8595-901-005-00	LABEL/DANGER/DISCHAR	*	2					
5	1593-901-015-00	LABEL/MAINTENANCE	*	1					
6	8595-901-007-00	LABEL/WARNING/HOT	*	2					
7	8664-905-003-00	LABEL/CAUTION	*	2					
8	8664-955-001-00	LABEL/CAUTION/D	*	2					
9	8664-955-002-00	LABEL/CAUTION/L	*	2					
10	8664-955-003-00	LABEL/LIFT/H	*	1					
11	8664-905-005-00	LABEL/SENSOR	*	1					

FIG. 12 DISCHARGE SET (L TYPE-OPTION)

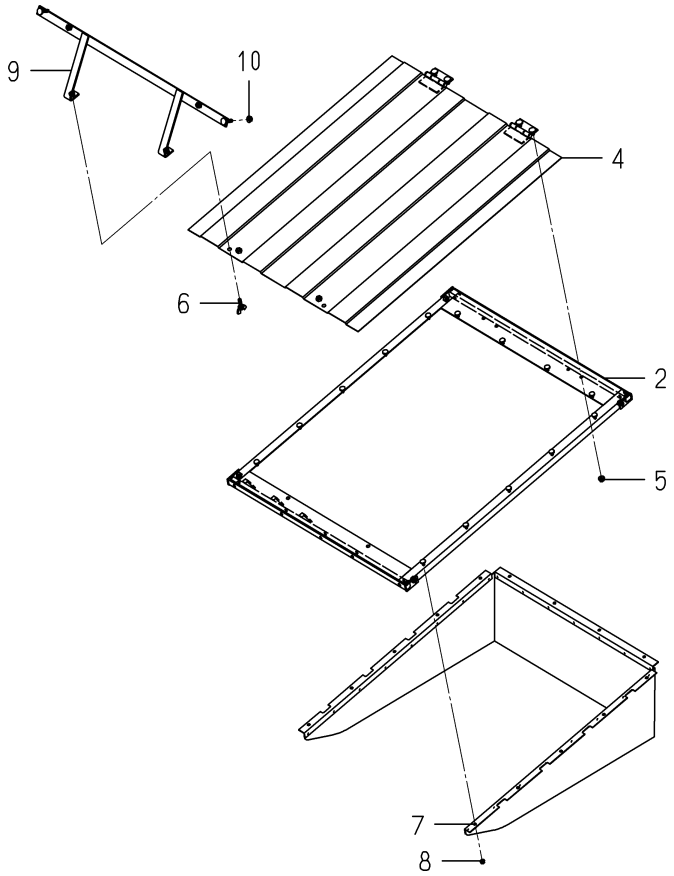

8664-705Z-0100

KEY	PART CODE	DESCRIPTION	SPC	TYPE OF MODEL SBC550X M		ITC	COL	GRP	REMARKS
1	8664-705-200-00	DISCHARGE/L SET	T	1					
2	8664-705-210-10	FRAME/BOTTOM/L COMP	T	1					
3	V211-660-804-00	BOLT/SP	T	4					
4	8664-705-220-00	PLATE/BOTTOM COMP	T	1					
5	V362-260-008-00	NUT/WASHER	T	4					
6	V273-360-802-00	BOLT,SEMS/M8X20	T	2					
7	8664-705-230-00	COVER/PROTECTOR COMP	T	1					
8	V360-260-006-00	NUT/M6	T	14					
9	8664-705-240-00	PLATE/STAY/L COMP	T	1					
10	V362-260-008-00	NUT/WASHER	T	2					

FIG. 13 DISCHARGE SET (H TYPE-OPTION)

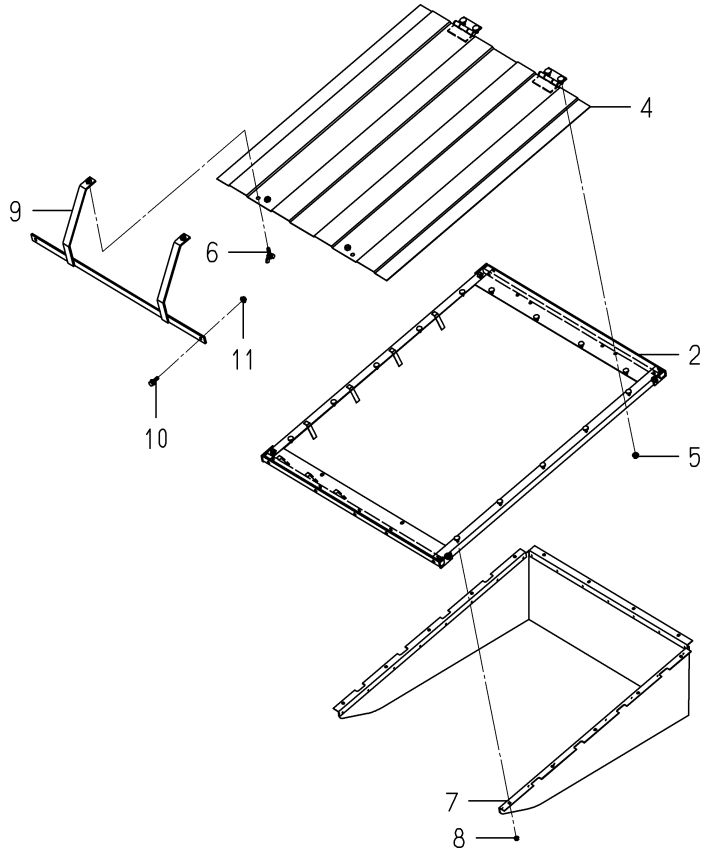

8664-755Z-0100

KEY	PART CODE	DESCRIPTION	SPC	TYPE OF MODEL SBC550X M		ITC	COL	GRP	REMARKS
1	8664-755-200-00	DISCHARGE/H SET	T	1					
2	8664-755-210-10	FRAME/BOTTOM/H COMP	T	1					
3	V211-660-804-00	BOLT/SP	T	4					
4	8664-705-220-00	PLATE/BOTTOM COMP	T	1					
5	V362-260-008-00	NUT/WASHER	T	6					
6	V273-360-802-00	BOLT,SEMS/M8X20	T	2					
7	8664-705-230-00	COVER/PROTECTOR COMP	T	1					
8	V360-260-006-00	NUT/M6	T	14					
9	8664-755-220-00	PLATE/STAY/H COMP	T	1					
10	V211-360-803-00	BOLT/SP	T	2					
11	V362-260-008-00	NUT/WASHER	T	2					

FIG. 14 COMPONENT PARTS FOR K185-021-000-00 ON Fig.6

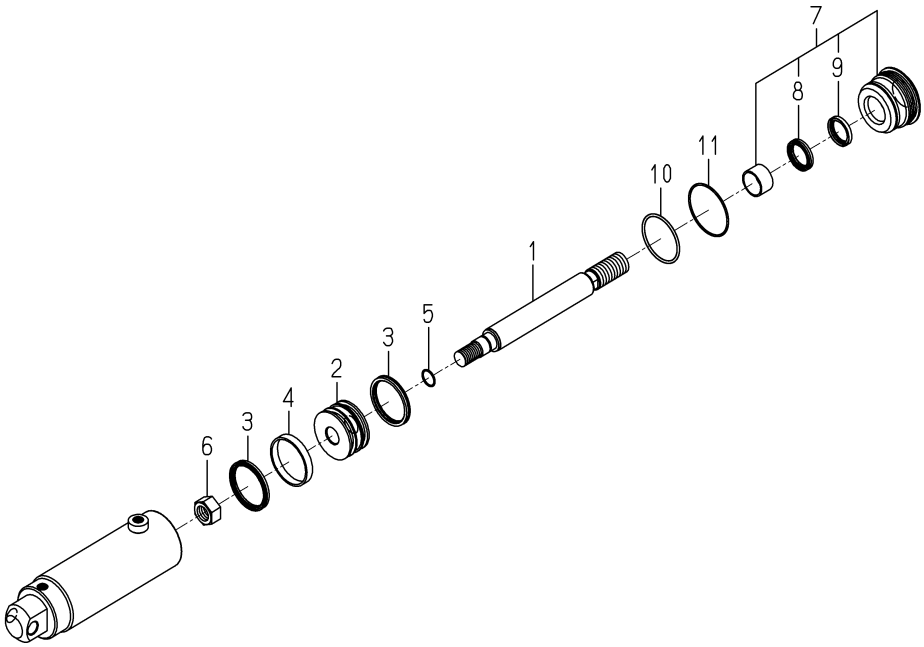

K185-021-000-0E

KEY	PART CODE	DESCRIPTION	SPC	TYPE OF MODEL SBC550X M		ITC	COL	GRP	REMARKS
1	K185-021-001-00	ROD/PISTON	*	1					
2	K185-021-002-00	PISTON	*	1					
3	K185-021-003-00	PACKING/PISTON	*	2					
4	K185-021-004-00	RING/WEAR	*	1					
5	V723-111-502-00	RING/O	*	1					
6	1518-519-001-00	NUT,U	*	1					
7	K185-021-200-00	COVER/ROD SET	*	1					
8	K185-021-202-00	PACKING/ROD	*	1					
9	K185-021-203-00	SEAL/DUST	*	1					
10	V721-113-106-00	O-RING G60	*	1					
11	V723-102-006-70	RING/O	*	1					

Numerical Index

Part Code	Fig.	Key	Part Code	Fig.	Key	Part Code	Fig.	Key
1560-601-028-00	5	3	8595-201-025-00	1	14	8663-101-214-00	10	9
	6	3		2	14	8663-201-001-10	1	4
	8	3	8595-501-001-10	7	11		2	4
	8	7	8595-505-051-30	7	12	8663-201-002-00	1	7
1593-901-015-00	9	6	8595-608-082-00	5	2		2	7
1594-218-001-00	1	12		6	2	8663-201-003-00	2	16
	2	12		8	2	8663-201-004-00	1	18
1594-221-001-00	4	8		8	6		2	18
1636-631-013-00	5	14	8595-901-006-00	9	2	8663-201-005-00	1	19
	5	22	8595-901-007-00	9	3		2	19
	6	14	8597-202-501-00	3	20	8663-202-004-00	3	29
	6	22	8654-101-221-00	10	2	8663-202-210-10	3	1
1636-631-014-00	5	15		11	2	8663-202-220-10	3	6
	5	23	8654-101-230-00	10	5	8663-202-230-00	3	15
1728-630-005-20	5	16		11	5	8663-202-250-10	3	11
	5	18	8654-101-232-00	10	6	8663-202-260-20	3	13
	5	24		11	6	8663-202-290-00	3	19
	5	26	8654-101-233-00	10	7	8663-203-001-00	3	33
	6	16		11	7	8663-301-001-00	4	3
	6	18	8654-201-410-10	1	15	8663-301-002-10	4	11
	6	24	8654-202-016-00	3	7	8663-301-003-00	4	1
	6	26	8654-301-004-00	4	6	8663-301-004-00	4	12
2500-901-014-30	9	4	8654-501-283-00	7	5	8663-306-001-10	4	13
2500-901-027-00	9	1	8654-901-002-00	9	5	8663-306-002-10	4	14
3100-107-004-10	3	26	8657-101-501-00	10	12	8663-306-004-00	4	16
3621-211-003-00	3	21		11	12	8663-306-210-10	4	15
3670-520-001-00	3	2	8657-201-210-10	2	15	8663-402-002-00	5	5
3737-341-007-00	3	27	8657-501-530-00	7	4		6	5
3746-111-011-00	3	3	8657-608-720-00	8	5	8663-402-210-40	5	1
	3	8	8659-101-210-00	1	1	8663-406-001-00	5	8
	3	25	8659-101-211-00	12	1		6	8
7821-102-008-00	10	10		13	1	8663-406-210-00	5	6
	11	10	8659-101-212-00	12	2	8663-407-031-00	5	13
7821-102-220-00	10	11		13	2		5	21
	11	11	8659-101-213-00	12	3		6	13
7955-201-026-00	1	5	8659-101-214-00	12	4		6	21
	1	8	8659-101-215-00	12	5	8663-407-032-00	5	17
	2	5		13	5		5	25
	2	8	8662-101-210-00	2	1	8663-407-230-10	5	20
8595-201-013-00	1	11	8662-101-213-00	13	3		6	20
	2	11	8662-101-214-00	13	4	8663-407-310-00	5	12
8595-201-021-00	1	20	8663-101-210-00	10	1	8663-407-320-10	5	19
	2	20	8663-101-211-00	10	3	8663-501-001-10	7	6
8595-201-022-00	1	21	8663-101-212-00	10	4	8663-501-210-00	7	1
	2	21	8663-101-213-00	10	8	8663-501-220-00	7	2

Numerical Index

Part Code	Fig.	Key	Part Code	Fig.	Key	Part Code	Fig.	Key
8663-501-230-00	7	3	V363-260-008-00	5	27			
8663-608-210-00	8	1		6	7			
8663-901-001-00	9	7		6	9			
8663-901-002-00	9	8		6	27			
8665-101-210-00	11	1	V401-160-010-00	3	31			
8665-101-211-00	11	3	V401-160-012-00	3	36			
8665-101-212-00	11	4		4	18			
8665-101-213-00	11	8	V401-160-016-00	3	5			
8665-101-214-00	11	9		3	10			
8665-201-001-00	1	16		3	24			
8665-202-210-20	3	32		7	10			
8665-202-220-00	3	33	V411-260-008-00	5	11			
8665-202-230-00	3	34		6	11			
8665-203-001-00	3	34	V411-260-022-00	7	7			
8665-306-001-10	4	19	V580-140-504-00	5	4			
8665-306-002-10	4	20		6	4			
8665-402-210-30	6	1		8	4			
8665-406-210-00	6	6		8	8			
8665-407-031-00	6	15	V580-140-804-00	1	2			
	6	23		2	2			
8665-407-032-00	6	17	V600-110-620-60	1	22			
	6	25		2	22			
8665-407-310-00	6	12	V600-110-630-40	1	17			
8665-407-320-10	6	19		2	17			
V201-261-006-00	3	30	V600-110-690-80	4	5			
V201-261-604-00	3	23	V600-150-630-40	3	16			
V201-361-203-50	3	35	V704-140-016-00	3	22			
V203-361-203-50	4	17	V704-140-020-00	3	18			
V211-260-801-60	1	10	V705-140-052-00	3	17			
	2	10		4	10			
V211-561-002-50	3	12	V707-140-062-00	1	13			
	3	14		2	13			
	4	2		4	7			
V211-561-003-50	1	6	V721-103-108-00	1	9			
	2	6		2	9			
V304-260-008-00	3	28	V744-130-551-20	1	23			
	5	10		2	23			
	6	10	V744-135-520-80	4	9			
V304-460-016-00	3	4	V760-150-000-00	4	4			
	3	9		7	8			
	7	9						
V334-460-022-00	8	9						
V360-260-012-00	7	13						
V363-260-008-00	5	7						
	5	9						

Numerical Index

Part Code	Fig.	Key	Part Code	Fig.	Key	Part Code	Fig.	Key
1305-931-003-00	6	14	8664-305-031-00	3	8	8664-455-230-00	5	19
1342-402-006-00	6	17	8664-305-200-10	3	3	8664-455-240-00	5	20
	7	30	8664-305-201-00	3	4	8664-455-250-10	5	22
1518-519-001-00	14	6	8664-305-210-00	3	1	8664-455-260-10	5	27
1593-901-015-00	10	5	8664-305-230-00	3	14	8664-455-270-00	5	33
	11	5		4	9	8664-455-280-00	5	13
1614-129-003-00	8	5	8664-305-240-10	3	12	8664-505-001-20	6	7
	9	5	8664-305-250-10	3	13	8664-505-002-00	6	9
1716-680-222-00	1	10	8664-305-260-10	3	15	8664-505-003-00	6	10
	2	17	8664-305-280-20	3	10	8664-505-210-00	6	1
1716-680-330-00	1	9	8664-305-310-00	3	7	8664-505-220-00	6	13
	2	16	8664-305-320-00	3	22	8664-505-230-00	6	6
2500-210-016-00	1	7	8664-305-330-00	3	24		7	24
	2	10		4	31	8664-555-001-00	7	8
2500-901-027-00	10	1	8664-305-340-00	3	25	8664-555-002-00	7	19
	11	1		4	32	8664-555-003-00	7	23
3631-350-201-10	7	5	8664-355-002-00	4	23	8664-555-005-00	7	18
	7	16	8664-355-003-00	4	25	8664-555-009-00	7	9
3664-276-001-00	8	4	8664-355-004-00	4	26	8664-555-250-00	6	15
	9	4	8664-355-007-00	4	35		7	25
3768-185-022-10	6	5	8664-355-008-00	4	42	8664-555-270-00	7	27
	7	4	8664-355-009-00	4	33	8664-555-320-00	7	6
	7	15	8664-355-031-00	4	2	8664-555-340-00	7	17
8595-901-005-00	10	4	8664-355-220-20	4	7	8664-555-350-00	7	7
	11	4	8664-355-230-20	4	8	8664-605-002-10	8	6
8595-901-007-00	11	6	8664-355-240-10	4	10		9	6
8664-105-001-00	1	8	8664-355-250-10	4	12	8664-605-003-00	8	7
	2	15	8664-355-260-10	4	13		9	7
8664-105-230-00	1	4	8664-355-270-00	4	15	8664-605-004-00	8	8
8664-105-310-00	1	1	8664-355-280-00	4	16		9	8
8664-155-001-00	2	7	8664-355-310-40	4	5	8664-605-005-00	8	9
8664-155-002-00	2	14	8664-355-320-00	4	29		9	9
8664-155-210-90	2	1	8664-355-330-00	4	14	8664-605-210-20	8	1
8664-155-230-00	2	6	8664-355-340-00	4	34		9	1
8664-155-240-00	2	11	8664-355-350-00	4	41	8664-605-220-10	8	11
8664-155-250-00	2	4	8664-355-360-00	4	38	8664-605-230-00	8	3
8664-305-001-10	3	17		4	45		9	3
	4	22	8664-355-410-00	4	1	8664-655-210-10	9	11
8664-305-002-00	3	18	8664-455-001-00	4	18	8664-705-200-00	12	1
8664-305-003-00	3	19		5	2	8664-705-210-10	12	2
	4	24		5	8	8664-705-220-00	12	4
8664-305-004-00	3	20		5	14		13	4
	4	27	8664-455-002-10	5	32	8664-705-230-00	12	7
8664-305-005-00	3	21	8664-455-210-10	5	1		13	7
	4	28	8664-455-220-20	5	7	8664-705-240-00	12	9

Numerical Index

Part Code	Fig.	Key
8664-755-200-00	13	1
8664-755-210-10	13	2
8664-755-220-00	13	9
8664-905-001-00	10	2
	11	2
8664-905-002-00	10	3
	11	3
8664-905-003-00	10	6
	11	7
8664-905-004-00	10	7
8664-905-005-00	10	8
	11	11
8664-955-001-00	11	8
8664-955-002-00	11	9
8664-955-003-00	11	10
K185-021-000-00	6	4
K185-021-001-00	14	1
K185-021-002-00	14	2
K185-021-003-00	14	3
K185-021-004-00	14	4
K185-021-200-00	14	7
K185-021-202-00	14	8
K185-021-203-00	14	9
K185-077-000-10	7	1
K185-078-000-10	7	12
K211-004-014-00	7	29
V201-361-202-50	1	2
	2	2
	6	2
V201-361-206-50	4	19
	5	3
	5	9
	5	15
V210-360-602-00	1	11
	2	18
V211-261-002-00	2	5
V211-360-801-60	4	3
V211-360-803-00	13	10
V211-361-002-50	5	34
V211-560-804-50	3	6
V211-660-804-00	3	16
	12	3
	13	3
V211-660-804-50	4	11
	4	17

Part Code	Fig.	Key
V211-660-804-50	4	30
V273-360-802-00	12	6
	13	6
V304-260-012-00	4	20
	5	4
	5	10
	5	16
V304-260-016-00	5	23
	5	28
V360-260-006-00	3	9
	8	2
	9	2
	12	8
	13	8
V362-260-008-00	3	2
	3	11
	3	23
	4	4
	4	6
	5	21
	12	5
	12	10
	13	5
	13	11
V401-160-006-00	7	2
	7	13
V401-160-012-00	1	3
	2	3
	4	21
	5	5
	5	11
	5	17
	6	3
V401-160-016-00	5	25
	5	30
V411-260-006-00	4	39
	4	46
V411-260-010-00	4	36
	4	43
V411-260-012-00	1	5
	2	8
	7	21
V411-260-016-00	2	12
	5	24
	5	29

Part Code	Fig.	Key
V411-260-016-00	5	35
	6	11
	7	10
	7	20
V500-161-601-00	8	10
	9	10
V500-162-502-00	4	40
	4	47
V500-163-002-50	1	6
	2	9
	4	37
	4	44
V500-163-003-00	2	13
	5	36
	6	12
	7	11
	7	22
V720-112-401-10	6	16
	7	26
	7	28
V721-113-106-00	14	10
V723-102-006-70	14	11
V723-111-502-00	14	5
V760-150-000-00	3	5
	5	6
	5	12
	5	18
	5	26
	5	31
	6	8
	7	3
	7	14

Alpabetical Index

8663-097-110-00

Description	Fig.	Key
ARM/FRONT COMP	8	1
AS YOKE ASSY	10	12
	11	12
ASYOKE ASSY	12	2
	13	2
BAR/SUPPORT COMP	3	34
BASE/LH COMP	3	11
	3	32
BASE/RH COMP	3	13
	3	33
BEARING	4	5
BEARING,RB/6206	1	22
	2	22
BEARING,RB/6304	1	17
	2	17
BEARING,RB/6304SS	3	16
BEARING/BALL 6205SH2	4	8
BEARING/BALL 6305SH2	1	12
	2	12
BELT/D/STS/2800	3	33
BELT/D/STS/2880	3	34
BLADE/60X640/C	4	13
BLADE/60X640/D	4	14
BLADE/60X716/C	4	19
BLADE/60X716/D	4	20
BOLT	4	17
BOLT,SEMS (S) M8X16	1	10
	2	10
BOLT/M10X25	3	12
	3	14
	4	2
BOLT/M10X60	3	30
BOLT/M12X35	3	35
BOLT/M16X40	3	23
BOLT/S	1	6
	2	6
BUSH/16X18X15	3	20
BUSH/22X25X25	7	5
CASE/BEVEL	1	4
	2	4
CHAIN ASSY	10	11
	11	11
COLLAR/10X22X48	3	29
COLLAR/BLADE	4	11
COVER/BELT/LH COMP	5	12
COVER/BELT/LH COMP	6	12
COVER/BELT/RH COMP	5	19
	6	19
COVER/CASE	1	7
	2	7
COVER/DISCHARGE COMP	5	6
	6	6
DECK/MOWER/48 COMP	5	1
DECK/MOWER/54 COMP	6	1
FITTINGYOKE	10	2
	11	2
	12	5
	13	5
FORK/M22 COMP	8	5
FORK/WHEEL/LH COMP	7	1
FORK/WHEEL/RH COMP	7	2
GEAR/BEVEL/25-1 SET	2	15
GEAR/BEVEL/25-2 SET	1	15
GREASENIPPLE	10	6
	11	6
INSULATOR/150X100	5	13
	5	21
	6	13
	6	21
INSULATOR/175	5	17
	5	25
INSULATOR/190	6	17
	6	25
INSULATOR/270	5	16
	5	18
	5	24
	5	26
	6	16
	6	18
	6	24
	6	26
INSULATOR/390	6	15
	6	23
JOINT/UNIVERSAL SET	1	1
	2	1
	10	1
	11	1
JOURNALCROSSE ASSY	10	5
	11	5
KEY/06X06X28	3	7
KEY/08X07X20	3	2
LABEL/CE	9	1
LABEL/DANGER	9	4
LABEL/GAUGEWHEEL	9	7
LABEL/MAINTENANCE	9	6
LABEL/PTO	9	5
LABEL/TENSION	9	8
LABEL/WARNING/BELT	9	2
LABEL/WARNING/HOT	9	3
METAL/BLADE	4	1
NIPPLE,GREASE	4	4
	7	8
NUT	3	28
	5	10
	6	10
	8	9
NUT/M16	3	4
	3	9
	7	9
NUT/WASHER	5	7
	5	9
	5	27
	6	7
	6	9
	6	27
	7	13
O-RING/G80	1	9
	2	9
PIN,SPRING/5 X40 W	5	4
	6	4
	8	4
	8	8
PIN,SPRING/8 X40 W	1	2
	2	2
PIN/08X18	4	12
PIN/08X56 COMP	7	3
PIN/12X117	7	12
PIN/16X96	5	2
	6	2
	8	2
	8	6
PIN/22X106	7	6
PLATE/COVER COMP	5	20
	6	20
PLATE/I/80X110 COMP	4	15

Alpabetical Index

8663-097-110-00

Description	Fig.	Key
PLATE/TENSION ASSY	3	19
PLUG,DRAIN (1/4)	1	5
	1	8
	2	5
	2	8
PLUG/HOSE/A	5	5
	6	5
PULLY/STS/32 COMP	3	15
PULLY/STS/62 COMP	3	1
PULLY/STS/72 COMP	3	6
RING,SNAP/16 C	3	22
RING,SNAP/20C	3	18
RING,SNAP/52 C	3	17
	4	10
RING/SLIDE	10	10
	11	10
RING/SNAP	1	13
	2	13
	4	7
ROD,CHAIN TENSION	3	27
SAFETYGUARD/IN	10	8
	11	8
SAFETYGUARD/OUT	10	9
	11	9
SEAL,OIL/TC305512	1	23
	2	23
SEAL,OIL/TC35528	4	9
SEAL/OIL	1	14
	2	14
	4	6
SHAFT/BLADE	4	3
SHAFT/INPUT	1	11
	2	11
SHAFT/OUTPUT	1	16
	2	16
SHAFTYOKE	10	3
	11	3
	13	4
SHIM/0.1	1	18
	1	20
	2	18
	2	20
SHIM/0.2	1	19
	1	21
	2	19
SHIM/0.2	2	21
SHIM/1.2	4	16
SLEEVEYOKE	10	4
	11	4
	12	3
	13	3
SPRING/HC042	5	3
	6	3
	8	3
	8	7
SPRING/HC110	5	8
	6	8
SPRING/SIDE CLUTCH	3	26
SURCLIP/HOLE	10	7
	11	7
TRIM/160	5	14
	5	22
	6	14
	6	22
TRIM/320	5	15
	5	23
UJ ASSY	12	1
	13	1
WASHER	3	3
	3	8
	3	21
	3	25
WASHER,PL/M 8	5	11
	6	11
WASHER,PL/M22	7	7
WASHER,SP/M10	3	31
WASHER,SP/M12	3	36
	4	18
WASHER,SP/M16	3	5
	3	10
	3	24
	7	10
WHEEL/GAUGE ASSY	7	4
WHEEL/GAUGE/FRONT	7	11
YOKE/SHAFT	12	4

Alpabetical Index

8664-097-110-00

Description	Fig.	Key	Description	Fig.	Key	Description	Fig.	Key
ADAPTER(90°/PUMP)	6	5	BRACKET/LINK/RH COMP	5	27	GUIDE/REAR COMP	4	32
	7	4	BUSH/20X23X25	3	4	GUIDE/SIDE	4	33
	7	15	CABLE/LOCK COMP	4	38	HARNESS/COLLECTOR/H	9	11
ADAPTER/45°	7	5		4	45	HARNESS/COLLECTOR/L	8	11
	7	16	COLLAR/12X20X41	4	18	HOOK COMP	1	4
ADAPTER/G1/4 ASSY	6	15		5	2		2	6
	7	25		5	8	HOSE/HYDRO/1100 ASSY	7	6
ADAPTER/ORIFICE ASSY	7	27		5	14	HOSE/HYDRO/2700 ASSY	7	17
ADAPTER/T	7	23	COLLAR/17X22X53	7	19	HOSE/HYDRO/650 ASSY	6	6
ARM	1	10	CONTAINER/FRONT COMP	4	1		7	24
	2	17	COVER/CONTAINER/FRON	3	18	HOSE/HYDRO/850 ASSY	7	7
BAND,WIRE/250	6	17		4	23	INSULATOR/756	3	8
	7	30	COVER/CONTAINER/REAR	3	19		4	2
BAR	1	8		4	24	LABEL/CAUTION	10	6
	2	15	COVER/CONTAINER/SIDE	4	25		11	7
BAR COMP	5	19		4	26	LABEL/CAUTION/D	11	8
BOLT	4	19	COVER/PROTECTOR COMP	12	7	LABEL/CAUTION/L	11	9
	5	3		13	7	LABEL/CE	10	1
	5	9	COVER/ROD SET	14	7		11	1
	5	15	COVER/UPPER/SUB COMP	3	7	LABEL/DANGER/DISCHAR	10	4
BOLT,SEMS	2	5	CUP/SPRING	8	6		11	4
BOLT,SEMS (SP)	4	3		9	6	LABEL/LIFT/H	11	10
BOLT,SEMS/M8X20	12	6	CYLINDER ASSY	6	4	LABEL/LIFT/L	10	7
	13	6		7	1	LABEL/MAINTENANCE	10	5
BOLT,SEMS/M8X45 7T	3	6		7	12		11	5
BOLT/KNOB/M06X20	8	9	DISCHARGE/H SET	13	1	LABEL/SENSOR	10	8
	9	9	DISCHARGE/L SET	12	1		11	11
BOLT/M12X25	1	2	FRAME/BOTTOM/H COMP	13	2	LABEL/WARNING/HOT	11	6
	2	2	FRAME/BOTTOM/L COMP	12	2	LINK/A COMP	5	1
	6	2	FRAME/COLLECTOR COMP	1	1	LINK/B/LH COMP	5	7
BOLT/SP	1	11		2	1	LINK/B/RH COMP	5	13
	2	18	FRAME/COVER/LH COMP	4	12	LINK/C	5	32
	3	16	FRAME/COVER/RH COMP	4	13	NET/REAR	3	17
	4	11	FRAME/LOWER COMP	3	15		4	22
	4	17		4	10	NIPPLE,GREASE	3	5
	4	30	FRAME/REAR COMP	3	14		5	6
	5	34		4	9		5	12
	12	3	FRAME/REAR/LOWE COMP	4	16		5	18
	13	3	FRAME/REAR/UPPE COMP	4	15		5	26
	13	10	FRAME/SIDE/LH COMP	3	12		5	31
BOLT/SP/M08X20	3	20		4	7		6	8
	4	27	FRAME/SIDE/RH COMP	3	13		7	3
BOLT/SP/M08X40	3	21		4	8		7	14
	4	28	FRAME/UPPER ASSY	3	3	NUT,U	14	6
BRACKET/LINK/LH COMP	5	22	GUIDE/REAR COMP	3	25	NUT/ADJUST	8	8

Alpabetical Index

8664-097-110-00

Description	Fig.	Key
NUT/ADJUST	9	8
NUT/CYLINDER	6	7
NUT/M12	4	20
	5	4
	5	10
	5	16
NUT/M16	5	23
	5	28
NUT/M27X2	6	9
NUT/M6	3	9
	8	2
	9	2
	12	8
	13	8
NUT/WASHER	3	2
	3	11
	3	23
	4	4
	4	6
	5	21
	12	5
	12	10
	13	5
	13	11
O-RING G60	14	10
ORNAMENT/SBC550/LH	10	2
	11	2
ORNAMENT/SBC550/RH	10	3
	11	3
PACKING/PISTON	14	3
PACKING/ROD	14	8
PIN COMP	2	11
	4	14
PIN,HAIR	6	14
PIN,SPLIT/1.6X10	8	10
	9	10
PIN,SPLIT/2.5X20	4	40
	4	47
PIN,SPLIT/3 X25	1	6
	2	9
	4	37
	4	44
PIN,SPLIT/3X30	2	13
	5	36
	6	12

Description	Fig.	Key
PIN,SPLIT/3X30	7	11
	7	22
PIN/12X56	2	7
PIN/16X120	7	18
PIN/16X46	7	9
PIN/16X65	6	10
PIN/16X65 COMP	6	13
PIN/16X66	7	8
PIN/20X405 COMP	3	1
PISTON	14	2
PLATE/BOTTOM COMP	12	4
	13	4
PLATE/COVER/FRONT	3	22
PLATE/COVER/REA COMP	3	24
	4	31
PLATE/I/38X80 COMP	5	20
PLATE/IR/32X192 COMP	5	33
PLATE/IRX13X35	8	4
	9	4
PLATE/LOCK/LH COMP	4	34
PLATE/LOCK/RH COMP	4	41
PLATE/LOWER/FRONT	3	10
	4	5
PLATE/SENSOR COMP	8	1
	9	1
PLATE/STAY/H COMP	13	9
PLATE/STAY/L COMP	12	9
PLATE/U/749X25 COMP	4	29
RING/O	6	16
	7	26
	7	28
	14	5
	14	11
RING/WEAR	14	4
ROD/PISTON	14	1
SCREW,ORIFICE	7	29
SCREW/M03X20	8	5
	9	5
SEAL/DUST	14	9
SPRING/HC058	8	7
	9	7
SPRING/HC120	2	14
SPRING/HE108	1	7
	2	10
SPRING/HT020	4	35

Description	Fig.	Key
SPRING/HT020	4	42
STAY/CYLINDER COMP	6	1
SWITCH ASSY	8	3
	9	3
SWITCH/LEVER ASSY	1	9
	2	16
TUBE/927 COMP	2	4
WASHER / M16	2	12
	5	24
	5	29
	5	35
	6	11
	7	10
	7	20
WASHER / M6	4	39
	4	46
WASHER /M12	1	5
	2	8
	7	21
WASHER,SP/M 6	7	2
	7	13
WASHER,SP/M12	1	3
	2	3
	4	21
	5	5
	5	11
	5	17
	6	3
WASHER,SP/M16	5	25
	5	30
WASHER/M10	4	36
	4	43