GARSS-CUTTING-PRO	Date : 01. Dec, 2011	Revision : 00	Page : 1/1
Brand : ISEKI	Model : SW8210BAE4HD	Product Code : 620473	

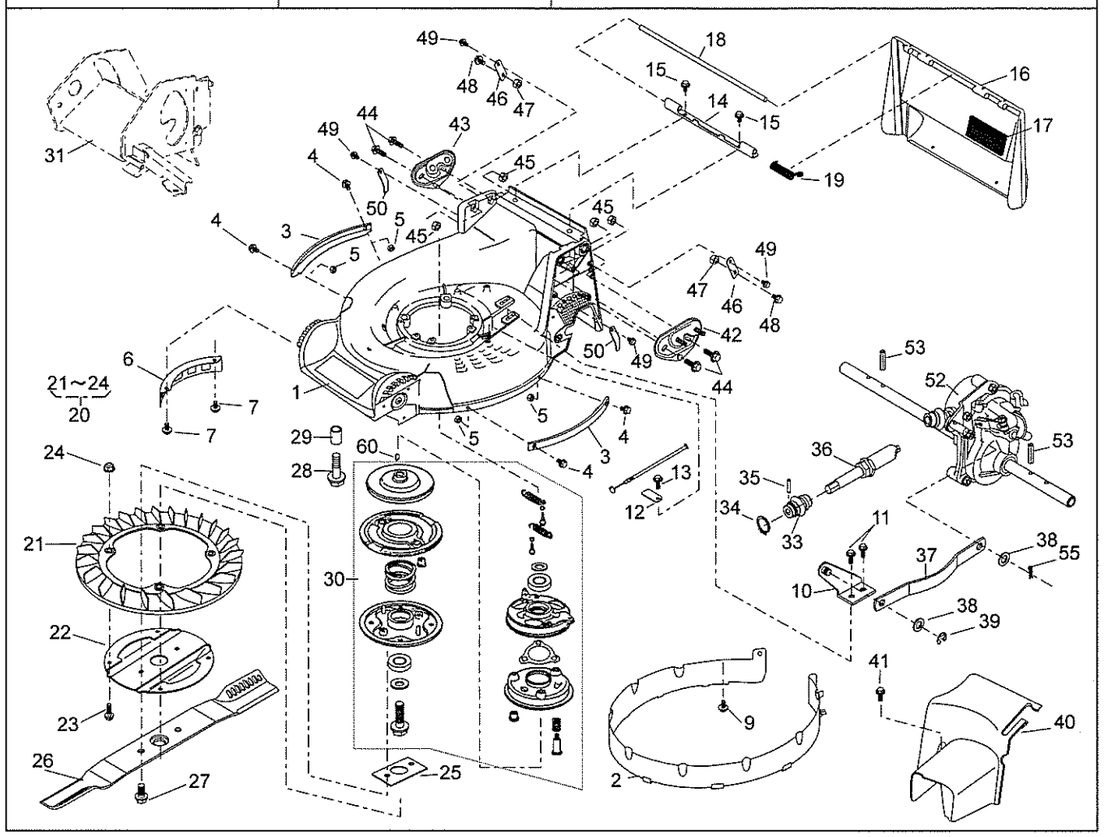

GRASS-CUTTING-PRO

Brand: ISEKI
P.cd: 620473

Date: 1-Dec-2011
Revision: 00

(A): SW8210BAE4HD
(B):
(C):

Ref.No	Parts.No	Parts.Name	Q'ty (A)	Q'ty (B)	Q'ty (C)	Remarks	Recomm(%) Lot.100
1	51043-151-42	HOUSING	1				3
2	36068-204	GUARD	1				10
3	51090-117-09	PROTECTOR	2				5
4	335L0616	FLANGE BOLT	4				3
5	512L0600	HEXAGON NUT	4				3
6	36065-180	COVER	1				3
7	342L0612	FLANGE TAPPING BOLT	2				3
9	342L0612	FLANGE TAPPING BOLT	1				3
10	11006-155	STAY C.P.	1				5
11	342L0612	FLANGE TAPPING BOLT	2				3
12	11113-407	STAY	1				3
13	342L0612	FLANGE TAPPING BOLT	1				3
14	11113-292	STAY	1				3
15	342L0612	FLANGE TAPPING BOLT	2				3
16	36068-196-42	GUARD	1				3
17	36080-149	RUBBER SHEET	1				3
18	64014-324	SHAFT	1				3
19	68013-336	SPRING	1				3
20	71082-111	FAN ASS'Y	1				-
21	51125-103	FAN	1				5
22	11102-151	HOLDER	1				5
23	31062-169	PRE-COAT LOCK BOLT	4				5
24	579L0600	FLANGE NUT	4				5
25	61024-208	SPACER	1				3
26	91014-188	BLADE	1				15
27	31057-197	HEXAGON BOLT	2				15
28	31057-243	HEXAGON BOLT	4				3
29	61024-142	SPACER	3				3
30	71067-106	BRAKE A'Y	1				-
33	91097-101	UNIVERSAL JOINT	1				3
34	812V2000	C-SNAP RING	1				1
35	717B0418	PARALLEL PIN	1				5
36	71235-102	TORQUE LIMITER ASS'Y	1				3
37	91049-129	CONNECTOR	1				5
38	68036-280	WASHER (10.5x18x1.6)	2				3
39	816V0800	E-SNAP RING	1				5
40	36065-438	COVER	1				3
41	342L0616	FLANGE TAPPING BOLT	1				3
42	51116-149	HANDLE BRACKET	1				3
43	51116-150	HANDLE BRACKET	1				3
44	31057-255	HEXAGON BOLT (M8x25)	4				3
45	512L0800	HEXAGON NUT	4				3
46	11113-408	STAY	2				3
47	512L0800	HEXAGON NUT	2				3
48	31057-181	HEXAGON BOLT	2				3
49	342L0612	FLANGE TAPPING BOLT	4				3
50	11113-415	STAY	2				3
52	71008-431	GEAR CASE ASS'Y	1				-
53	711V0522	SPRING PIN	2				3
55	733L1000	SNAP PIN	1				5
60	94401-16150	WOODRUFF KEY (16x15)	1				-

HANDLE-PRO	Date : 01. Dec, 2011	Revision : 00	Page : 1/1
Brand : ISEKI	Model : SW8210BAE4HD	Product Code : 620473	

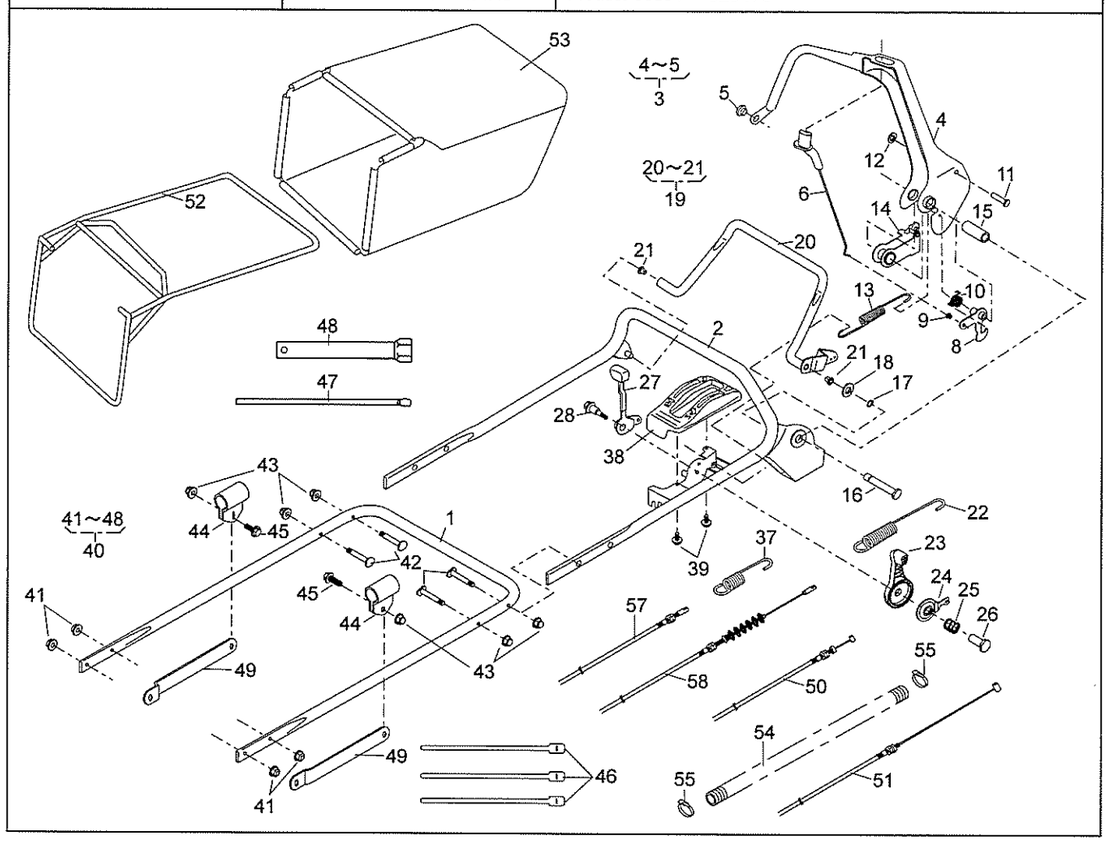

HANDLE-PRO
Brand: ISEKI
P.cd: 620473
Date: 1-Dec-2011
Revision: 00
(A): SW8210BAE4HD
(B):
(C):

Ref.No	Parts.No	Parts.Name	Q'ty (A)	Q'ty (B)	Q'ty (C)	Remarks	Recomm(%) Lot.100
1	51027-268-114	HANDLE	1				3
2	51027-290-114	HANDLE	1				3
3	71161-125	LEVER ASS'Y	1				3
4							
5	76007-191	BUSH	1				3
6	36110-106	BUTTON	1				3
7							
8	71203-135	ARM C.P.	1				3
9	76007-183	BUSH	1				3
10	68013-371	SPRING	1				3
11	31056-127	GIB-HEADED PIN	1				3
12	576V0600	PUSH NUT	1				3
13	68013-392	SPRING	1				3
14	11109-111	LINK	1				3
15	61023-190	SLEEVE	1				3
16	64014-337	SHAFT	1				3
17	812V0800	C-SNAP RING	1				3
18	613L0800	PLAIN WASHER	1				3
19	71161-126-09	LEVER ASS'Y	1				5
21	76007-131	BUSH	2				5
22	68013-391	SPRING	1				5
23	91010-169	THROTTLE LEVER	1				3
24	61003-113	THRUST PLATE	1				3
25	68013-356	SPRING	1				3
26	31058-168	HEXAGON NUT	1				3
27	11095-117	LEVER	1				3
28	31062-109	PRE-COAT LOCK BOLT	1				3
37	68013-161	SPRING	1				5
38	71900-796	COVER ASS'Y	1				3
39	470L0514	(+)TAPPING SCREW	2				3
40	71906-557	BOLT SET	1				3
41	569L0800	FLANGE NYLON NUT	4				3
42	31057-256	HEXAGON BOLT	4				3
43	583L0800	FLANGE CAP NUT	6				3
44	11012-132	HANGER BAND	2				5
45	31057-181	HEXAGON BOLT	2				3
46	68028-118	WIRE BAND (GT280)	3				5
47	66008-103	PLUG BOX BAR (8x200)	1				1
48	66006-125	BOX SPANNER	1				1
49	71900-846	BAR SET	1				3
50	91001-329	THROTTLE WIRE	1				5
51	91003-169	CONTROL CABLE	1				5
52	11062-178	FRAME C.P.	1				5
53	36098-160	GRASS BAG C.P.	1				10
54	41003-201	TUBE (15.6x800L)	1				5
55	68028-119	WIRE BAND (SHT18R-W)	2				5
57	91003-125	CONTROL CABLE	1				5
58	91003-180	CONTROL CABLE	1				5

9.6"AI-WHEEL	Date : 01. Dec, 2011	Revision : 00	Page : 1/1
Brand : ISEKI	Model : SW8210BAE4HD	Product Code : 620473	

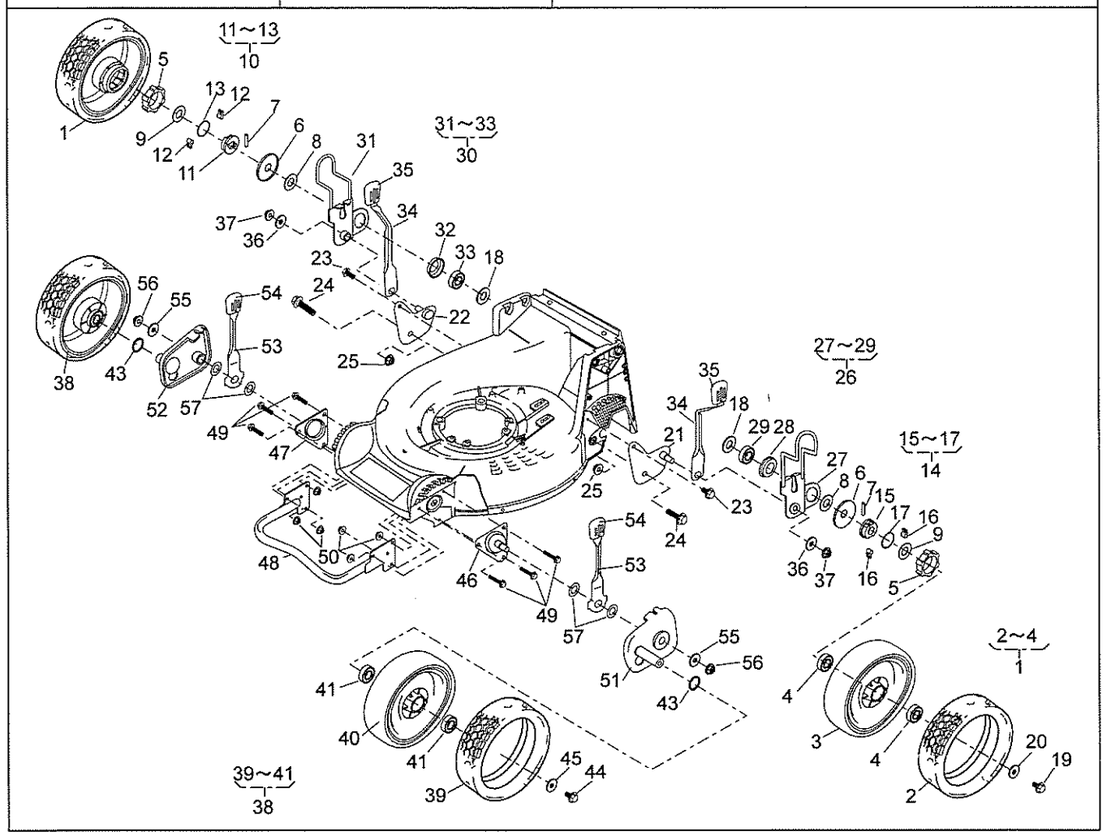

9.6″AI-WHEEL

Brand: ISEKI
P.cd: 620473

Date: 1-Dec-2011
Revision: 00

(A): SW8210BAE4HD
(B):
(C):

Ref.No	Parts.No	Parts.Name	Q'ty (A)	Q'ty (B)	Q'ty (C)	Remarks	Recomm(%) Lot.100
1	71041-144	WHEEL ASS'Y	2				3
2	91086-116	TIRE	2				5
4	916B6002	BEARING (6002DDC3)	4				3
5	11086-119	STOPPER	2				3
6	61003-112	THRUST PLATE	2				10
7	31034-137	PIN	2				10
8	68036-270	WASHER (15.2x26x1.6)	2				5
9	68036-146	WASHER (16x31.5x1.0)	2				5
10	71158-104	RATCHET ASS'Y	1				–
11	11102-235	HOLDER	1				10
12	31034-170	PIN	2				10
13	68013-266	SPRING	1				10
14	71158-103	RATCHET ASS'Y	1				–
15	11102-235	HOLDER	1				10
16	31034-170	PIN	2				10
17	68013-266	SPRING	1				10
18	68036-275	WASHER (15.2x26x3.2)	2				5
19	31057-181	HEXAGON BOLT	2				3
20	68036-101	WASHER (9x25x2.3)	2				3
21	11006-151	STAY C.P.	1				3
22	11006-152	STAY C.P.	1				3
23	342L0612	FLANGE TAPPING BOLT	2				3
24	31057-255	HEXAGON BOLT (M8x25)	2				3
25	584L0800	U-FLANGE NUT	2				3
26	71122-110	ADJUSTER ASS'Y	1				–
27	11142-125	ADJUSTER	1				5
28	11102-228	HOLDER	1				5
29	916B6202	BEARING (6202DDC3)	1				5
30	71122-111	ADJUSTER ASS'Y	1				–
31	11142-126	ADJUSTER	1				5
32	11102-228	HOLDER	1				5
33	916B6202	BEARING (6202DDC3)	1				5
34	11150-105-09	ADJUST LEVER	2				5
35	36061-121	KNOB	2				5
36	613L0800	PLAIN WASHER	2				5
37	569L0800	FLANGE NYLON NUT	2				5
38	71041-145	WHEEL ASS'Y	2				3
39	91086-116	TIRE	2				5
41	916B6002	BEARING (6002DDC3)	4				3
43	51113-119	RING	2				3
44	31057-181	HEXAGON BOLT	2				3
45	68036-101	WASHER (9x25x2.3)	2				3
46	11006-153	STAY C.P.	1				5
47	11006-154	STAY C.P.	1				5
48	11153-117-114	BUMPER	1				5
49	335L0625	FLANGE BOLT	6				5
50	569L0600	FLANGE NYLON NUT	6				5
51	11142-127	ADJUSTER	1				5
52	11142-128	ADJUSTER	1				5
53	11150-109-09	ADJUST LEVER	2				5
54	36061-121	KNOB	2				5
55	68036-101	WASHER (9x25x2.3)	2				5
56	31058-176	NUT	2				5
57	68013-393	SPRING	4				3