FIG.006 COVER UNIT

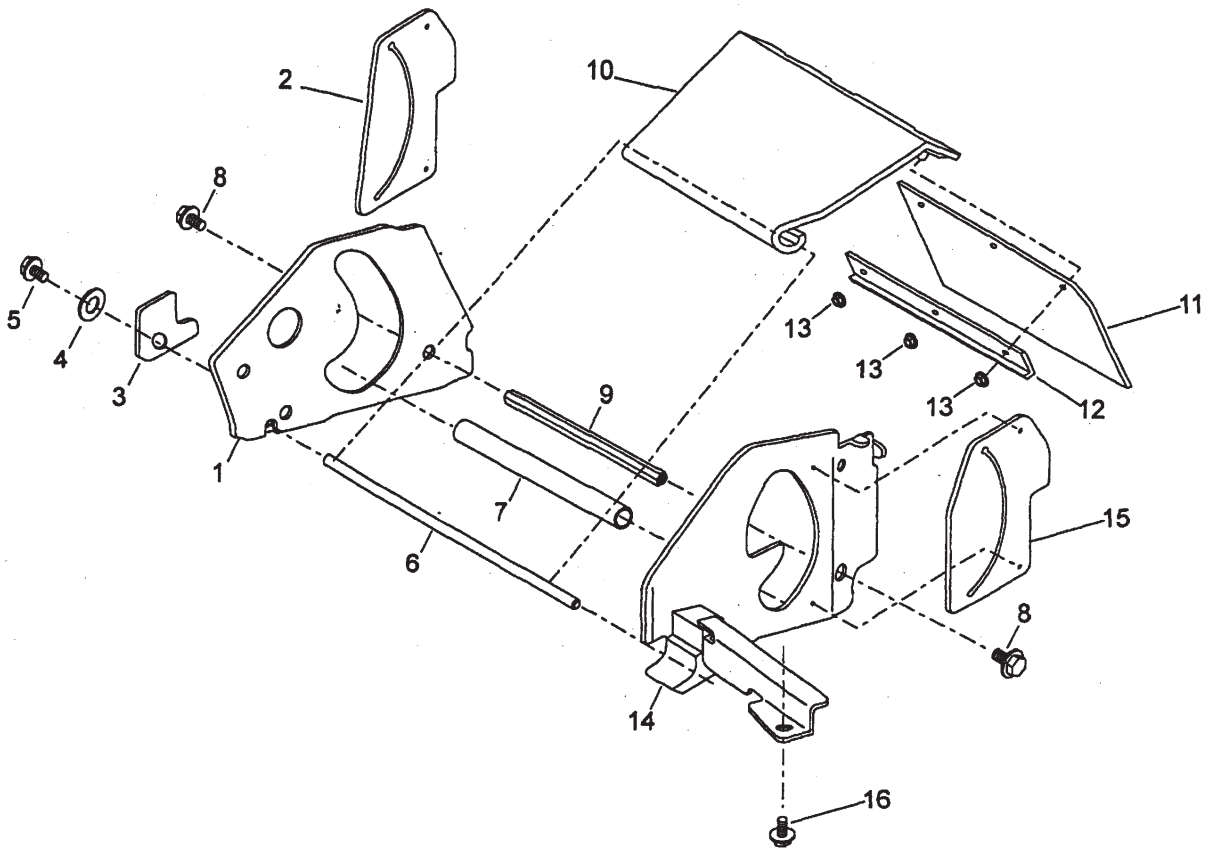

KA02-006 -0100

KEY	PART CODE	DESCRIPTION	SPC	TYPE OF MODEL SW8210 BAE4		ITC	COL	GRP	REMARKS
1	7066-110-061-66	STAY COMP	*	1					11006-166
2	7066-360-801-54	RUBBER SHEET	*	1					36080-154
3	7066-111-134-20	STAY	*	1					11113-420
4	7066-613-L08-00	PLAIN WASHER	*	1					613L0800
5	7066-423-U08-12	SOCKET SCREW FLANGE	*	1					423U0812
6	7066-640-143-73	SHAFT	*	1					64014-373
7	7066-110-833-87	COLLAR	*	1					11083-387
8	7066-310-571-81	HEXAGON BOLT	*	2					31057-181
9	7066-640-143-74	SHAFT	*	1					64014-374
10	7066-510-791-24	COVER COMP	*	1					51079-124
11	7066-360-801-53	RUBBER SHEET	*	1					36080-153
12	7066-110-501-82	FIXING PLATE	*	1					11050-182
13	7066-569-L04-00	FLANGE NYLON NUT	*	3					569L0400
14	7066-110-061-67	STAY COMP	*	1					11006-167
15	7066-360-801-55	RUBBER SHEET	*	1					36080-155
16	7066-342-L06-12	FLANGE TAPPING BOLT	*	1					342L0612