GRASS-CUTTING	Date : 01. Dec. 2011	Revision : 00	Page : 1/1
Brand : ISEKI	Model : SW7190BE4	Product Code : 618129	

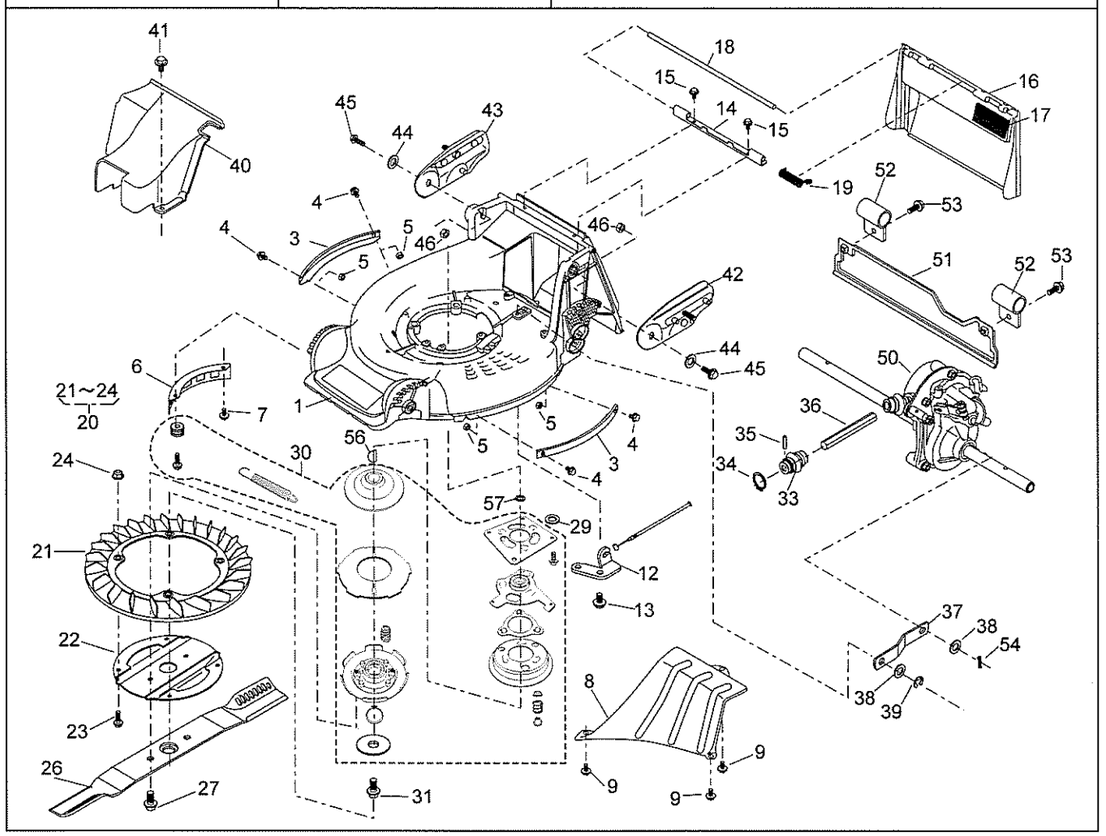

GRASS-CUTTING
ISEKI
618129

1-Dec-2011
00

(A): SW7190BE4
(B):
(C):

Ref.No	Parts.No	Parts.Name	Q'ty (A)	Q'ty (B)	Q'ty (C)	Remarks	Recomm(%) Lot.100
1	51043-149-42	HOUSING	1				3
3	51090-128-09	PROTECTOR	2				5
4	335L0616	FLANGE BOLT	4				3
5	512L0600	HEXAGON NUT	4				3
6	36065-180	COVER	1				3
7	342L0612	FLANGE TAPPING BOLT	1				3
8	36065-400	COVER	1				10
9	342L0612	FLANGE TAPPING BOLT	3				3
12	51002-118	WIRE HOLDER	1				3
13	342L0612	FLANGE TAPPING BOLT	2				3
14	11113-292	STAY	1				3
15	342L0612	FLANGE TAPPING BOLT	2				3
16	36068-188-42	GUARD	1				3
17	36080-149	RUBBER SHEET	1				3
18	64014-324	SHAFT	1				3
19	68013-336	SPRING	1				3
20	71082-111	FAN ASS'Y	1				-
21	51125-103	FAN	1				5
22	11102-151	HOLDER	1				5
23	31062-169	PRE-COAT LOCK BOLT	4				5
24	579L0600	FLANGE NUT	4				5
26	91014-190	BLADE	1				15
27	335M1020	FLANGE BOLT	2				15
29	68036-292	WASHER (19x8.5x3.2)	4				3
30	71067-116	BRAKE ASS'Y	1				-
31	31057-272	HEXAGON BOLT	1				3
33	91097-101	UNIVERSAL JOINT	1				3
34	812V2000	C-SNAP RING	1				1
35	717B0418	PARALLEL PIN	1				5
36	64014-372	SHAFT	1				3
37	91049-136	CONNECTOR	1				5
38	68036-280	WASHER (10.5x18x1.6)	2				3
39	816V0800	E-SNAP RING	1				5
40	36065-455	COVER	1				3
41	335L0616	FLANGE BOLT	1				3
42	51116-145	HANDLE BRACKET	1				3
43	51116-146	HANDLE BRACKET	1				3
44	68036-101	WASHER (9x25x2.3)	2				3
45	312M0830	HEX. BOLT(W/SW)	2				3
46	512L0800	HEXAGON NUT	2				3
50	71008-326	GEAR CASE ASS'Y	1				-
51	36046-122	SAFETY GUARD	1				3
52	11012-126	HANGER BAND	2				3
53	335L0616	FLANGE BOLT	2				3
54	733L1000	SNAP PIN	1				5
56	92038-2099	KEY	1				-
57	61003-125	THRUST PLATE	1				3

HANDLE	Date : 01. Dec. 2011	Revision : 00	Page : 1/1
Brand : ISEKI	Model : SW7190BE4	Product Code : 618129	

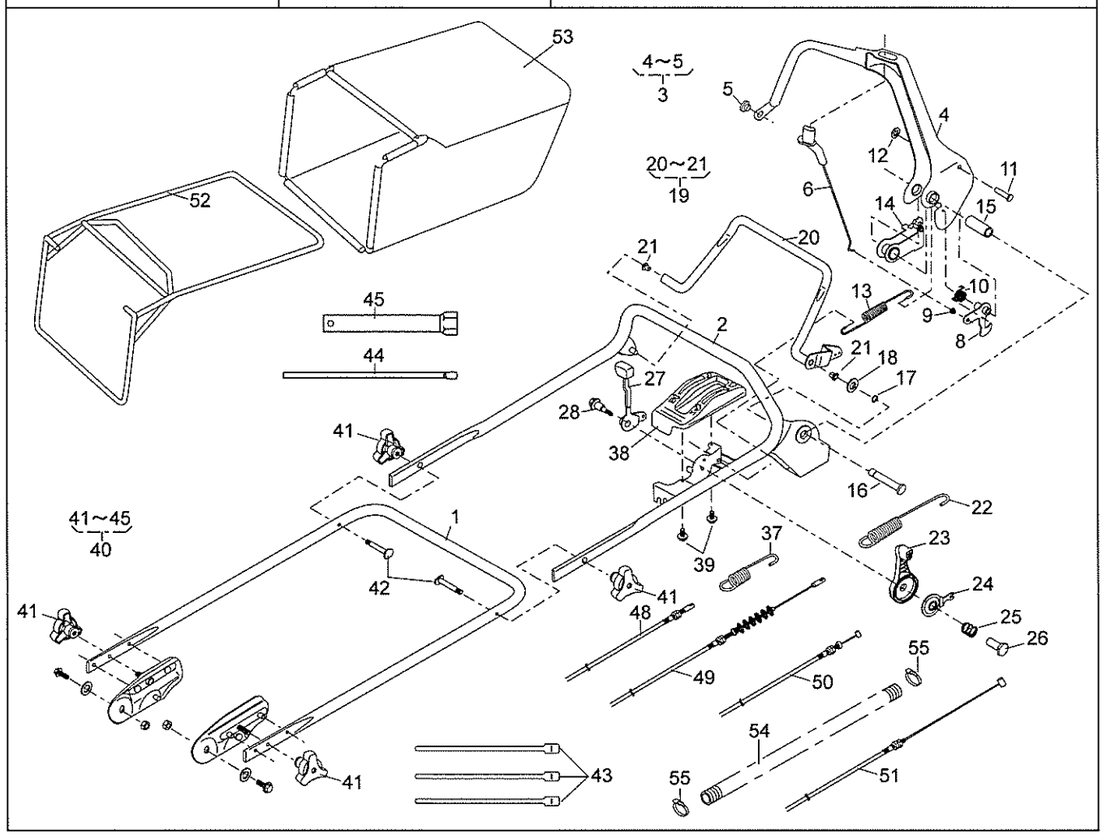

HANDLE

ISEKI 1-Dec-2011 (A): SW7190BE4

618129 00 (B):

(C):

Ref.No	Parts.No	Parts.Name	Q'ty (A)	Q'ty (B)	Q'ty (C)	Remarks	Recomm(%) Lot.100
1	51027-271-114	HANDLE	1				3
2	51027-288-114	HANDLE	1				3
3	71161-125	LEVER ASS'Y	1				3
4							
5	76007-191	BUSH	1				3
6	36110-106	BUTTON	1				3
7							
8	71203-135	ARM C.P.	1				3
9	76007-183	BUSH	1				3
10	68013-371	SPRING	1				3
11	31056-127	GIB-HEADED PIN	1				3
12	576V0600	PUSH NUT	1				3
13	68013-392	SPRING	1				3
14	11109-111	LINK	1				3
15	61023-190	SLEEVE	1				3
16	64014-337	SHAFT	1				3
17	812V0800	C-SNAP RING	1				3
18	613L0800	PLAIN WASHER	1				3
19	71161-126-09	LEVER ASS'Y	1				5
21	76007-131	BUSH	2				5
22	68013-391	SPRING	1				3
23	91010-147	THROTTLE LEVER	1				3
24	61003-113	THRUST PLATE	1				3
25	68013-356	SPRING	1				3
26	31058-168	HEXAGON NUT	1				3
27	11095-117	LEVER	1				3
28	31062-109	PRE-COAT LOCK BOLT	1				3
37	68013-161	SPRING	1				5
38	71900-794	COVER ASS'Y	1				3
39	470L0514	(+)TAPPING SCREW	2				3
40	71906-140	BOLT SET	1				3
41	36061-118	KNOB	4				3
42	31057-134	HEXAGON BOLT	2				3
43	68028-118	WIRE BAND (GT280)	3				5
44	66008-103	PLUG BOX BAR (8x200)	1				1
45	66006-125	BOX SPANNER	1				1
48	91003-125	CONTROL CABLE	1				5
49	91003-180	CONTROL CABLE	1				5
50	91001-369	THROTTLE WIRE	1				5
51	91003-177	CONTROL CABLE	1				5
52	11062-174	FRAME C.P.	1				5
53	36098-161	GRASS BAG C.P.	1				10
54	41003-201	TUBE (15.6x800L)	1				5
55	68028-119	WIRE BAND (SHT18R-W)	2				5

WHEEL	Date : 01. Dec. 2011	Revision : 00	Page : 1/1
Brand : ISEKI	Model : SW7190BE4	Product Code : 618129	

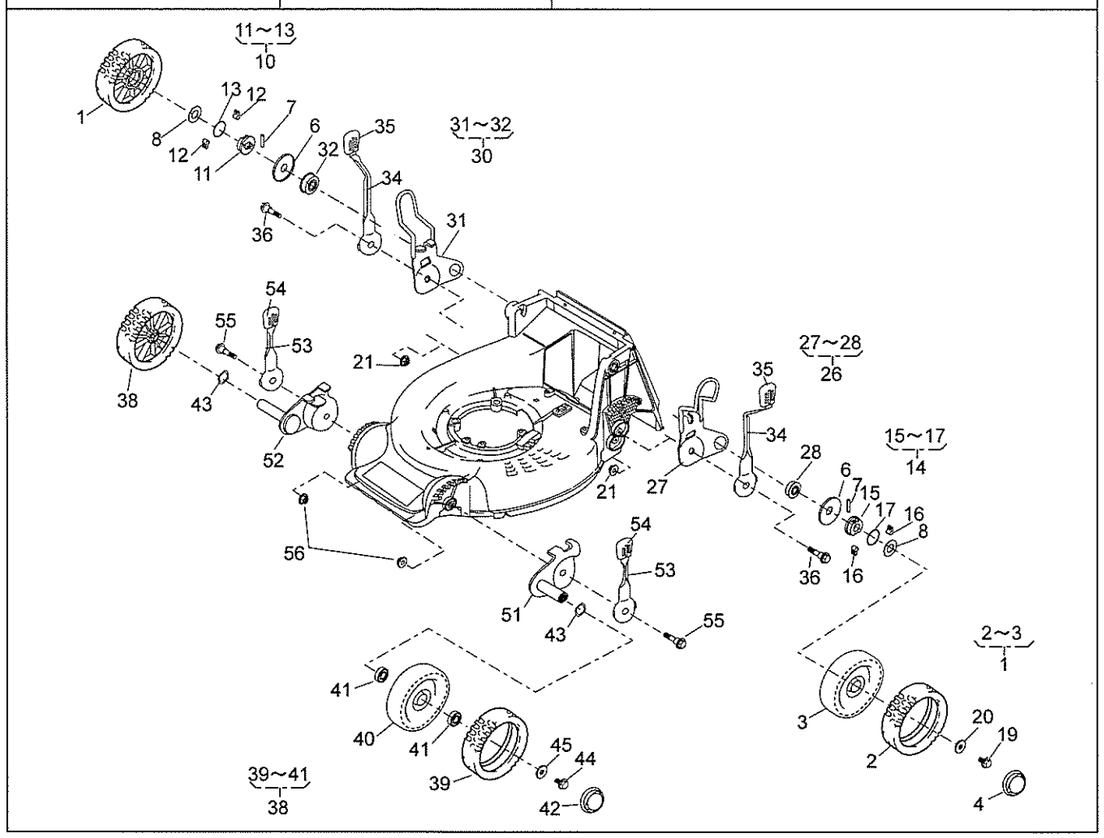

WHEEL

ISEKI 1-Dec-2011 (A): SW7190BE4
618129 00 (B):
(C):

Ref.No	Parts.No	Parts.Name	Q'ty (A)	Q'ty (B)	Q'ty (C)	Remarks	Recomm(%) Lot.100
1	71041-112	WHEEL ASS'Y	2				5
2	91086-106	TIRE	2				5
3	36107-101	WHEEL	2				5
4	36070-110	CAP	2				3
6	61003-112	THRUST PLATE	2				10
7	31034-137	PIN	2				10
8	68036-146	WASHER (16x31.5x1.0)	2				5
10	71158-104	RATCHET ASS'Y	1				-
11	11102-235	HOLDER	1				10
12	31034-170	PIN	2				10
13	68013-266	SPRING	1				10
14	71158-103	RATCHET ASS'Y	1				-
15	11102-235	HOLDER	1				10
16	31034-170	PIN	2				10
17	68013-266	SPRING	1				10
19	31057-181	HEXAGON BOLT	2				3
20	68036-101	WASHER (9x25x2.3)	2				3
21	569L0800	FLANGE NYLON NUT	2				10
26	71122-101	ADJUSTER ASS'Y	1				-
27	11142-104	ADJUSTER	1				10
28	945L0349	BEARING (F-PC0349L)	1				10
30	71122-102	ADJUSTER ASS'Y	1				-
31	11142-105	ADJUSTER	1				10
32	945L0349	BEARING (F-PC0349L)	1				10
34	11150-102-09	ADJUST LEVER	2				5
35	36061-121	KNOB	2				5
36	31057-260	HEXAGON BOLT	2				10
38	71041-103	WHEEL ASS'Y	2				5
39	91086-102	TIRE	2				5
40	36107-102	WHEEL	2				5
41	932L0696	BEARING (PCB-0696)	4				5
42	36070-110	CAP	2				3
43	664V0626	WAVE SPRING WASHER	2				3
44	31057-181	HEXAGON BOLT	2				3
45	68036-101	WASHER (9x25x2.3)	2				3
51	11142-112	ADJUSTER	1				10
52	11142-113	ADJUSTER	1				10
53	11150-101-09	ADJUST LEVER	2				5
54	36061-121	KNOB	2				5
55	31057-260	HEXAGON BOLT	2				10
56	569L0800	FLANGE NYLON NUT	2				10