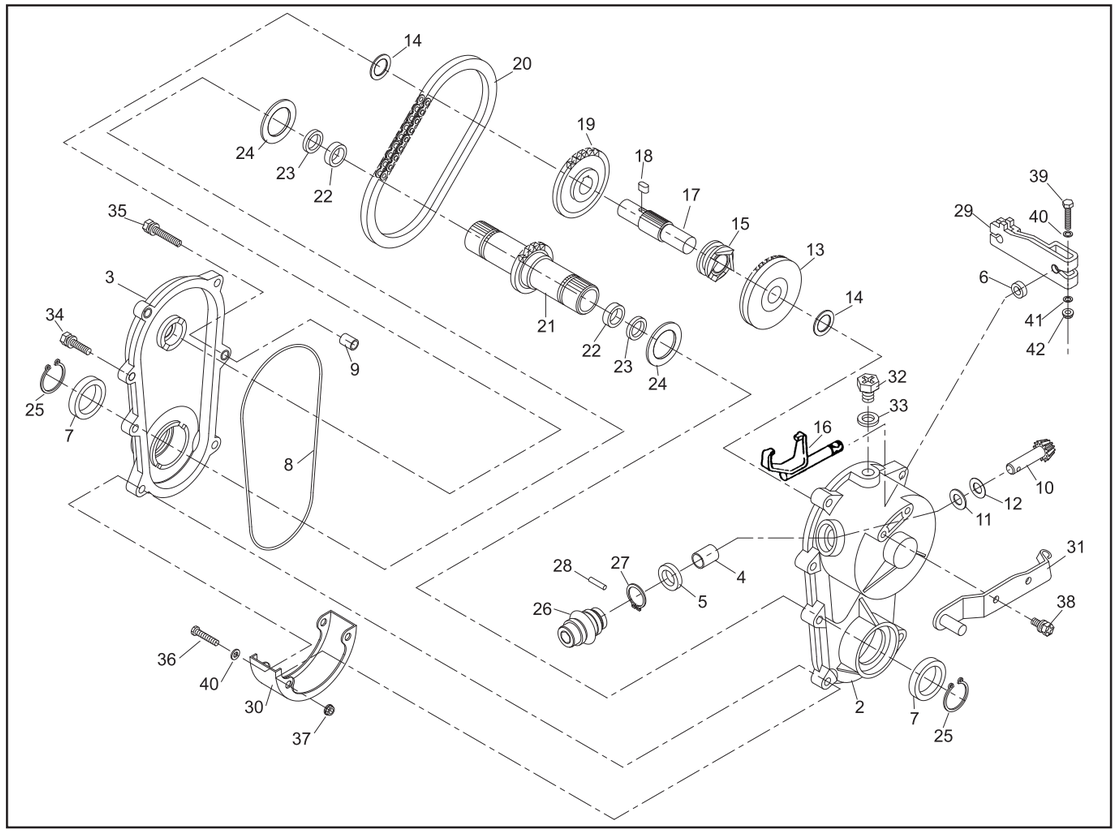

PARTS LIST

MODEL : SW5210-BRE4 (ISEKI)

46014-217

REF. No.	PARTS No.	PARTS NAME	GEAR CASE Q'TY	INCLUDING			PRICE( )	1/2 RECOMM.(%) Lot.100		May.29,2004 REMARKS
1	71008 369	GEAR CASE ASSY	1					-		
2	51001 279	GEAR CASE(L)		1				3		
3	51001 280	GEAR CASE(R)		1				3		
4	76007 167	BUSH		1				3		
5	61002 161	OIL SEAL		1				5		SD 10 20 5
6	61002 162	OIL SEAL		1				5		SD 8 14 4
7	61002 188	OIL SEAL		2				5		SD 28 38 6
8	214B 1350	O-RING		1				5		
9	11083 201	COLLAR		2				3		
10	78003 130	PINION		1				5		
11	61003 109	THRUST PLATE		1				3		
12	68007 132	SIM	0～2					5		
13	78001 162	BEVEL GEAR		1				3		
14	61024 118	SPACER		2				3		φ16.2×φ24×t1
15	11129 107	CLUTCH		1				3		
16	11097 106	SHIFTER FORK		1				5		
17	64014 242	SHAFT		1				3		
18	91020 147	KEY		1				3		
19	36112 115	SPROCKET		1				3		
20	91074 107	CHAIN		1				3		
21	64014 243	SHAFT		1				3		
22	927B 1512	NEEDLE BEARING		2				3		FJ1512
23	61002 189	OIL SEAL		2				5		SO 15 21 3
24	61024 171	SPACER		2				3		φ28.2×φ36×t1
25	812V 2800	C-SNAP RING FOR SHAFT		2				3		φ28

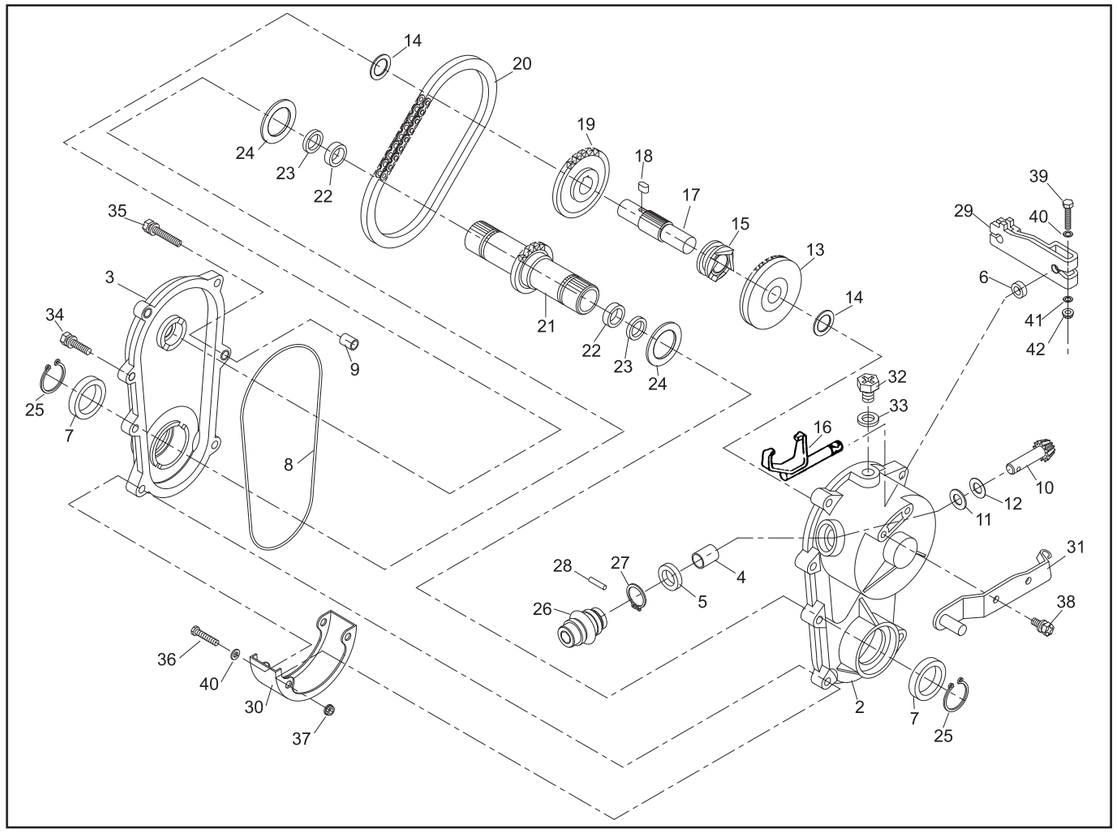

PARTS LIST

MODEL : SW5210-BRE4 (ISEKI)

46014-217

REF. No.	PARTS No.	PARTS NAME	GEAR CASE Q'TY	INCLUDING			PRICE( )	2/2 RECOMM.(%) Lot.100		May.29,2004 REMARKS
26	91097 101	UNIVERSAL JOINT		1				3		
27	812V 2000	C-SNAP RING FOR SHAFT			1			3		φ20
28	717B 0418	PARALLEL PIN			1			3		φ4×18
29	11104 169	ARM		1				3		
30	36065 311	COVER		1				3		
31	11006 148	STAY C.P.		1				5		
32	31057 126	HEXAGON BOLT		1				3		
33	68001 110	FIBER WASHER		1				3		
34	315L 0625	(+)HEXAGON BOLT(SW,PW)		3				3		M6×25
35	315L 0630	(+)HEXAGON BOLT(SW,PW)		2				3		M6×30
36	322L 0635	(+)HEXAGON BOLT		2				3		M6×35
37	580L 0600	FLANGE LOCK NUT		2				3		M6
38	315L 0616	(+)HEXAGON BOLT(SW,PW)		2				3		M6×16
39	311M 0630	(+)HEXAGON BOLT		1				3		M6×30 8T
40	611L 0600	PLAIN WASHER		3				3		M6
41	613L 0600	PLAIN WASHER		1				3		M6
42	571L 0600	FLANGE NUT		1				3		M6

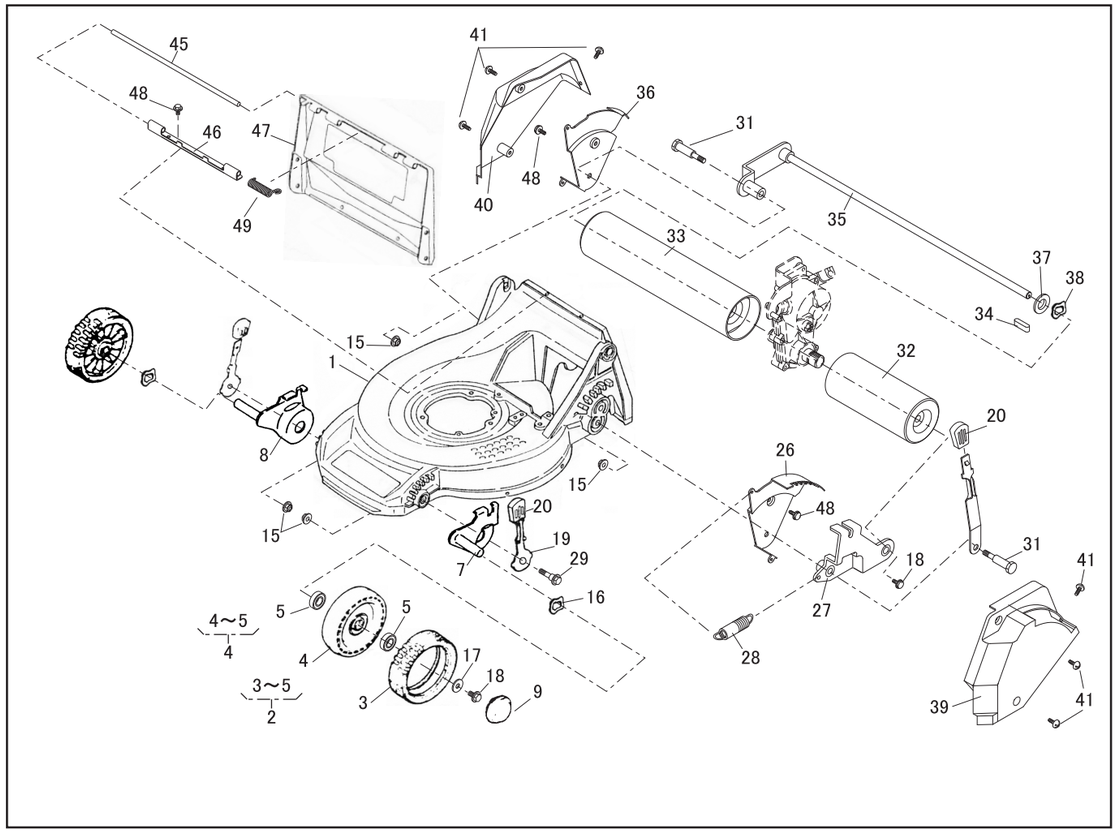

PARTS LIST

MODEL : SW5210-BRE4 (ISEKI)

46014-217

				WHEEL / ROLLER					1/2		Mar.21,2003
REF. No.	PARTS No.	PARTS NAME	Q'TY	INCLUDING			PRICE( )	RECOMM.(%) Lot.100		REMARKS
1	51043 136 42	HOUSING	1					3		
2	71041 103	WHEEL ASSY	2					3		
3	91086 102	TIRE		2				15		
4	36107 102	WHEEL		2				3		
5	932L 0696	BEARING			4			5		
6										
7	11142 123	ADJUSTER(L)	2					5		
8	11142 124	ADJUSTER(R)	2					5		
9	36070 110	CAP	2					3		
10										
11										
12										
13										
14										
15	569L 0800	FLANGE NYLON NUT	4					10		M8
16	664V 0626	WAVE SPRING WASHER	2					5		
17	68036 101	WASHER	2					3		
18	31057 181	HEXAGON BOLT	3					3		
19	11150 101 09	ADJUST LEVER	2					5		
20	36061 121	KNOB	3					3		
21										
22										
23										
24										
25										
26	11113 294	STAY(L)	1					3		
27	11142 110	ADJUSTER(L)	1					3		

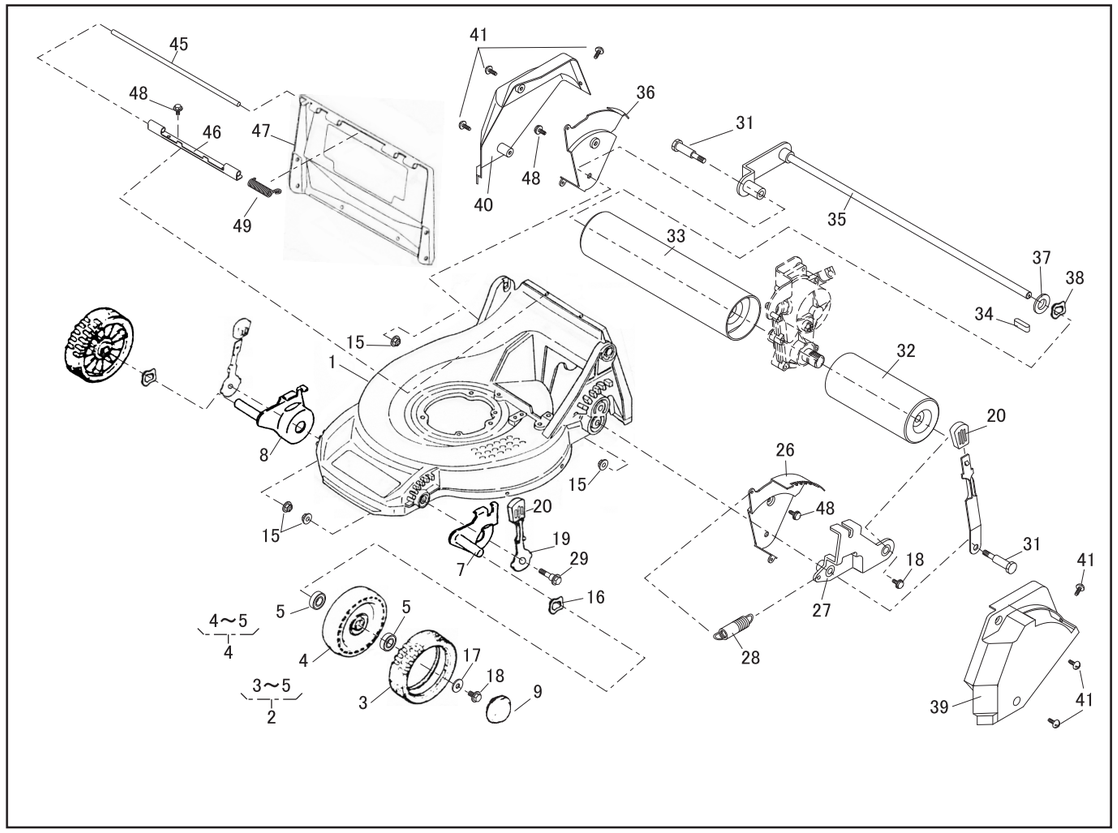

PARTS LIST

MODEL : SW5210-BRE4 (ISEKI)

46014-217

				WHEEL / ROLLER					2/2		Mar.21,2003
REF. No.	PARTS No.	PARTS NAME	Q'TY	INCLUDING			PRICE( )	RECOMM.(%) Lot.100		REMARKS
28	68013 265	SPRING	1					3		
29	31057 132	HEXAGON BOLT	2					5		
30	11150 104 09	ADJUST LEVER	1					5		
31	31057 200	BOLT	2					5		
32	36099 102	ROLLER(L)	1					5		
33	36099 103	ROLLER(R)	1					5		
34	91020 131	KEY	1					5		
35	11142 111	ADJUSTER(R)	1					5		
36	11113 295	STAY(R)	1					3		
37	61024 118	SPACER	0～2					3		
38	664V 0016	WAVE SPRING WASHER	0～2					3		
39	36065 404	COVER(L)	1					3		
40	36065 405	COVER(R)	1					3		
41	475L 0516	(+)TAPPING SCREW	6					3		
42										
43										
44										
45	64014 234	SHAFT	1					3		
46	11113 292	STAY	1					3		
47	36068 171 46	GUARD	1					3		
48	342J 0612	FLANGE BOLT TAPPING	4					3		M6×12
49	68013 336	SPRING	1					3		
50										
51										
52										
53										
54										

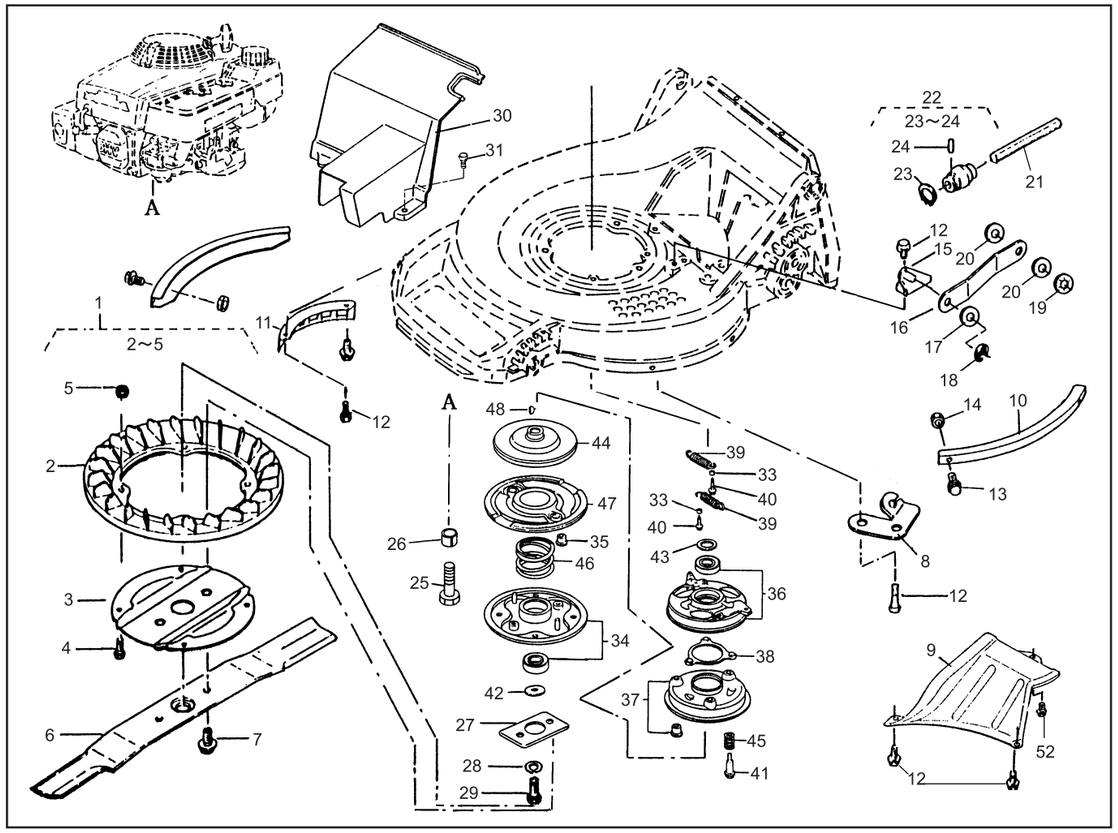

PARTS LIST

MODEL : SW5210-BRE4 (ISEKI)

46014-217

REF. No.	PARTS No.	PARTS NAME	GRASS-CUTTING Q'TY	INCLUDING			PRICE( )	1/2 RECOMM.(%) Lot.100		Mar.21,2003 REMARKS
1	71082 110	FAN ASSY	1					-		
2	51125 103	FAN		1				5		
3	11102 151	HOLDER		1				5		
4	335L 0620	FLANGE BOLT		4				5		M6×20
5	569L 0600	FLANGE NYLON NUT		4				5		M6
6	91014 159	BLADE	1					15		
7	31057 197	HEXAGON BOLT	2					15		
8	51002 118	WIRE HOLDER	1					3		
9	36065 300	COVER	1					10		
10	51090 117 09	PROTECTOR	2					5		
11	36065 180	COVER	1					3		
12	342J 0612	FLANGE BOLT TAPPING	8					3		M6×12
13	335L 0610	FLANGE BOLT	4					5		M6×10
14	512L 0600	HEXAGON NUT	4					3		M6
15	11006 113	STAY C.P.	1					5		
16	91049 117	CONNECTOR	1					5		
17	611L 1000	WASHER	1					3		M10
18	816V 0800	E-SNAP RING	1					5		ϕ8
19	576V 1000	PUSH NUT	1					5		ϕ10
20	68001 110	FIBER WASHER	2					5		
21	64014 261	SHAFT	1					3		
22	91097 101	UNIVERSAL JOINT	1					3		
23	812V 2000	C-SNAP RING FOR SHAFT		1				1		ϕ20
24	717B 0418	PARALLEL PIN		1				5		ϕ4×18
25	31057 243	HEXAGON BOLT	4					3		
26	61024 142	SPACER	3					3		
27	61024 169	SPACER	1					3		

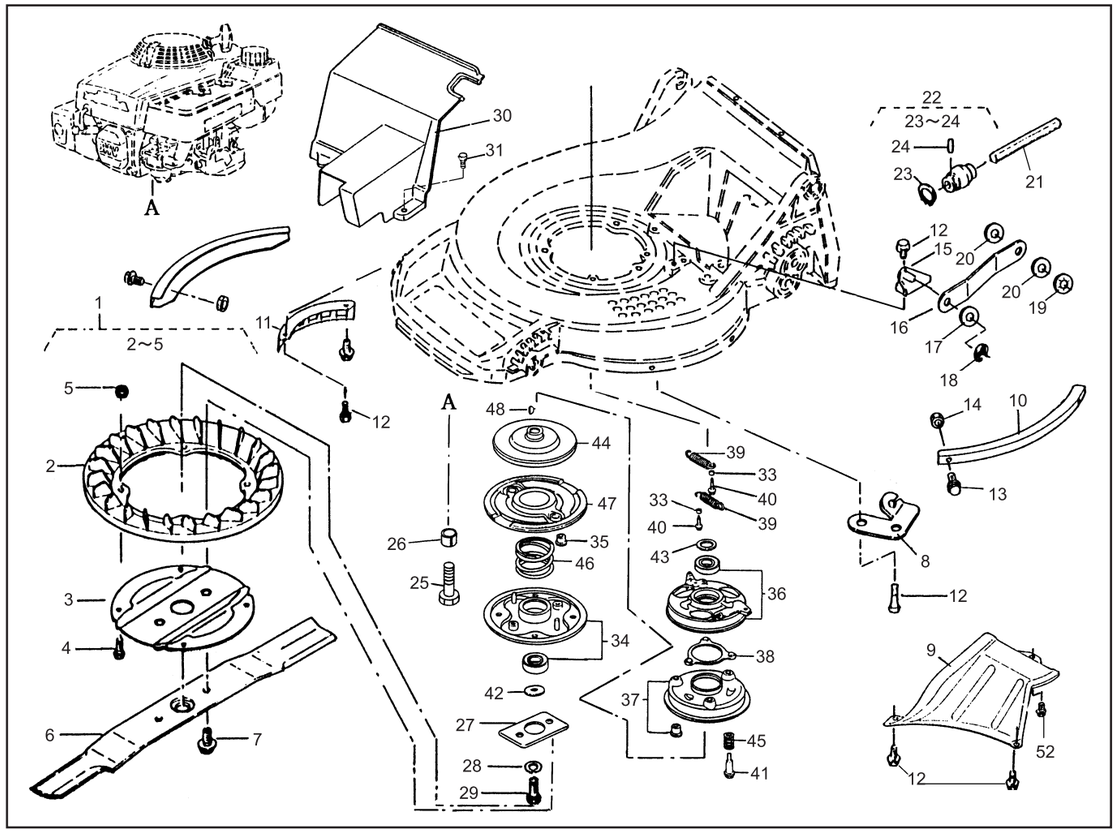

PARTS LIST

MODEL : SW5210-BRE4 (ISEKI)

46014-217

REF. No.	PARTS No.	PARTS NAME	GRASS-CUTTING Q'TY	INCLUDING			PRICE( )	2/2 RECOMM.(%) Lot.100		Mar.21,2003 REMARKS
28	671V 1000	CONICAL SPRING WASHER	1					3		
29	31057 196	HEXAGON BOLT	1					3		
30	36065 397	COVER	1					3		
31	342L 0616	FLANGE BOLT TAPPING	1					3		M6×16
32	71067 106	BRAKE ASSY	1					-		
33	19512 883 000	FAN COLLAR		2				-		
34	72600 VA4 010	BLADE HOLDER ASSY		1				3		
35	72613 VA4 000	BLADE HOLDER BUSH		2				5		
36	75090 VA4 030	BALL CONTROL PLATE		1				10		
37	75100 VA4 010	BRAKE C.P.		1				3		
38	75110 VA4 000	BALL RETAINER C.P.		1				10		
39	75182 VA3 J00	CLUTCH RETURN SPRING		2				5		
40	90014 952 000	FLANGE BOLT		4				3		
41	90021 VA4 000	SPECIAL BOLT		3				3		
42	90409 952 000	WASHER		1				3		
43	90501 952 010	THRUST WASHER		1				3		
44	75130 VA4 000	DRIVE DISK		1				3		
45	75132 VA4 000	BRAKE HOLDER SPRING		3				5		
46	75183 VA3 J00	CLUTCH SPRING		1				3		
47	75150 VA3 J01	DRIVEN DISK C.P.		1				3		
48	94401 16150	WOOD RUFF KEY		1				15		
49										
50										
51										
52	342J 0610	FLANGE BOLT TAPPING		1				3		M6×10

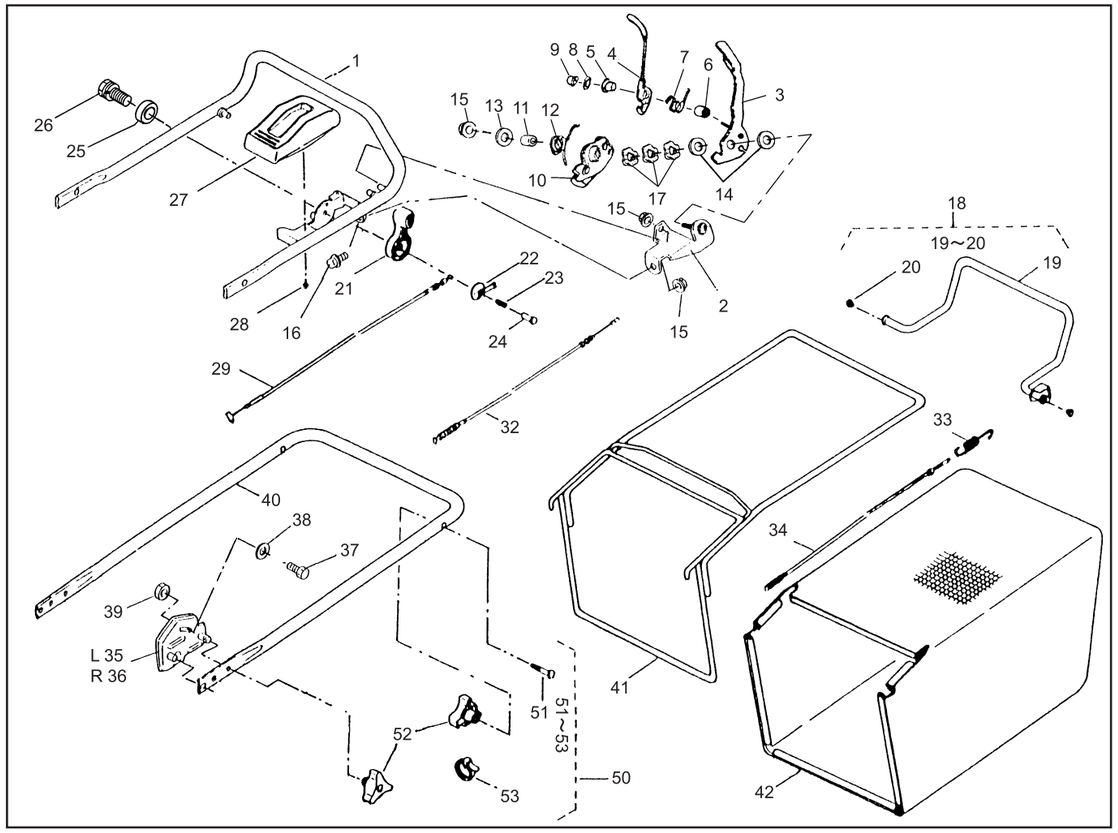

PARTS LIST

MODEL : SW5210-BRE4(ISEKI)

46014-217

REF. No.	PARTS No.	PARTS NAME	HANDLE Q'TY	INCLUDING			PRICE( )	1/2 RECOMM.(%) Lot.100		May.29,2004 REMARKS
1	51027 242	HANDLE	1					3		
2	11113 396 09	STAY	1					5		
3	11095 160 09	LEVER	1					10		
4	11095 161 09	LEVER	1					10		
5	76007 131	BUSH	1					10		
6	61024 206	SPACER	1					5		
7	68013 334	SPRING	1					5		
8	68036 198	WASHER	1					3		
9	563L 0600	U-HEXAGON CAP NUT	1					5		M6
10	11109 108	LINK	1					5		
11	61024 207	SPACER	1					10		
12	68013 335	SPRING	1					10		
13	68036 262	WASHER	1					5		
14	68036 200	WASHER	2					5		
15	569L 0800	FLANGE NYLON NUT	3					5		M8
16	335L 0820	FLANGE BOLT	1					3		M8×20
17	664J 1600	WAVE SPRING WASHER	3					3		M16
18	71161 111 09	LEVER ASSY	1					-		
19		LEVER		1				-		
20	76007 131	BUSH		2				15		
21	91010 169	THROTTLE LEVER	1					10		
22	61003 113	THRUST PLATE	1					5		
23	68013 356	SPRING	1					3		
24	31058 168	HEXAGON NUT	1					3		
25	68036 125	WASHER	1					3		
26	318L 0612	(+)HEXAGON BOLT(SW)	1					3		M6×12
27	71900 797	COVER ASSY	1					3		

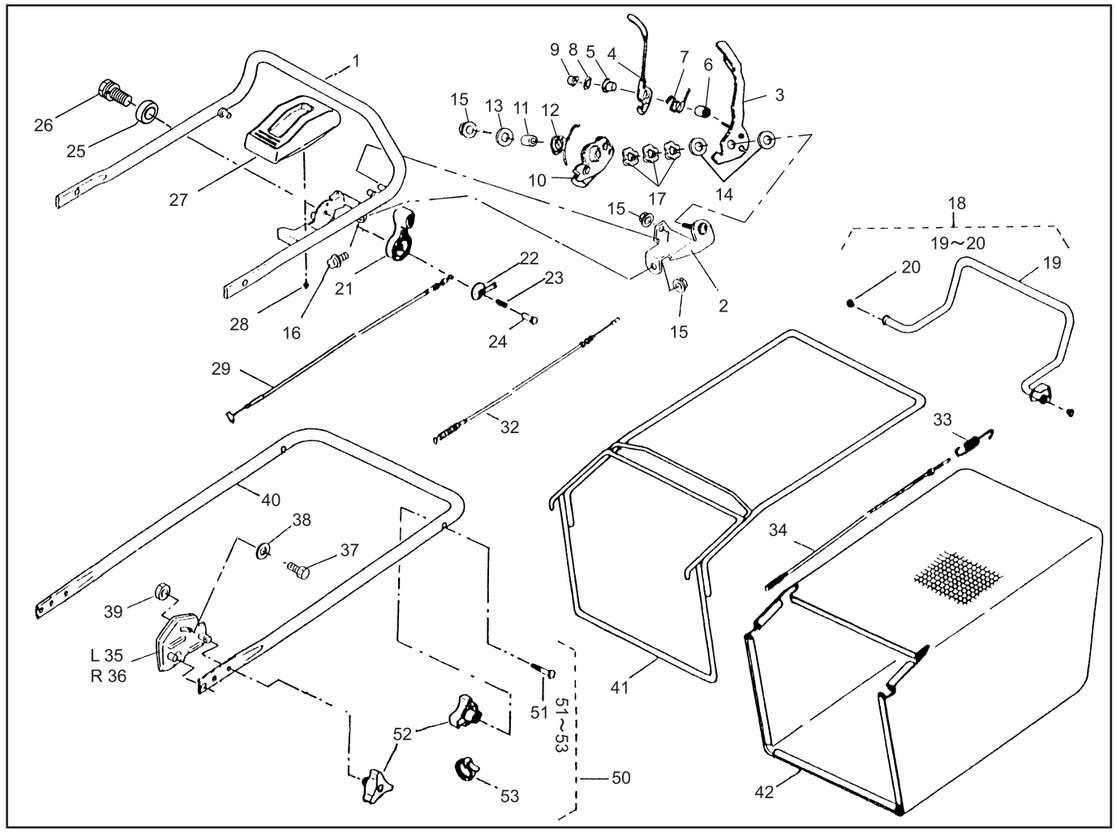

PARTS LIST

MODEL : SW5210-BRE4(ISEKI)

46014-217

REF. No.	PARTS No.	PARTS NAME	HANDLE Q'TY	INCLUDING			PRICE( )	2/2 RECOMM.(%) Lot.100		May.29,2004 REMARKS
28	470L 0514	(+)TAPPING SCREW	2					3		M5×14
29	91001 233	THROTTLE WIRE (GXV120/GXV160)	1					10		
30										
31										
32	91003 144	CONTROL CABLE (BBC)	1					15		
33	68013 183	SPRING	1					15		
34	91003 165	CONTROL CABLE	1					10		
35	51116 132	HANDLE BRACKET (L)	1					3		
36	51116 133	HANDLE BRACKET (R)	1					3		
37	312M 0830	HEXAGON BOLT(SW)	2					3		M8×30
38	68036 101	WASHER	2					3		
39	512L 0800	HEXAGON NUT	2					3		M8
40	51027 150	HANDLE	1					3		
41	11062 143	FRAME C.P.	1					10		
42	36098 145	GRASS BAG C.P. (ISEKI)	1					15		
43										
44										
45										
46										
47										
48										
49										
50	71052 119	BOLT SET	1					-		
51	31057 134	BOLT		2				3		
52	36061 118	KNOB		4				3		
53	68028 103	WIRE BAND		2				3		
54										