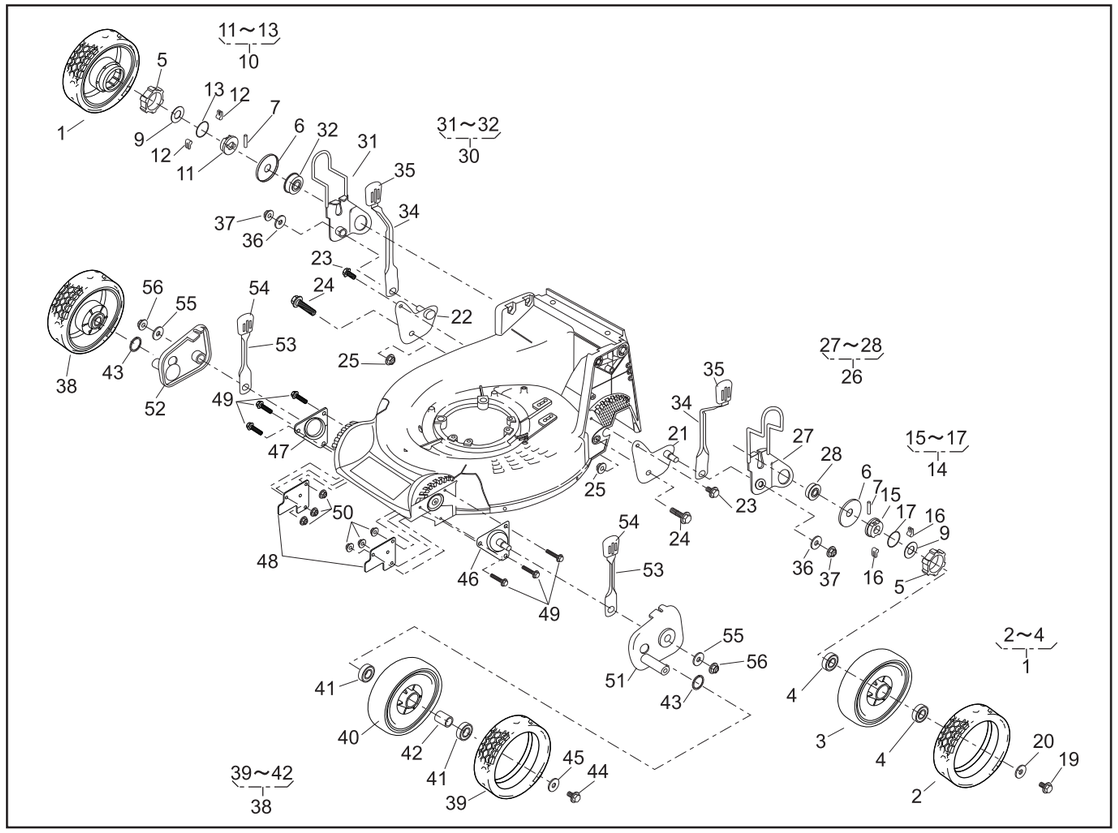

PARTS LIST

MODEL : SW5210-BHAE4

46014-***

				8"Al-WHEEL				1/2		Dec.24,2004
REF. No.	PARTS No.		PARTS NAME	Q'TY	INCLUDING		PRICE( )	RECOMM.(%) Lot.100		REMARKS
1	71041	136	WHEEL ASSY(A.W.)	2						
2	91086	113	TIRE		2					
3			WHEEL		2					
4	916B	6002	BEARING		4					
5	11086	119	STOPPER	2						
6	61003	112	THRUST PLATE	2						
7	31034	137	PIN	2						
8										
9	68036	146	WASHER	2						
10	71158	101	RATCHET ASSY(R)	1						
11	11102	138	HOLDER		1					
12	31034	170	PIN		2					
13	68013	266	SPRING		1					
14	71158	102	RATCHET ASSY(L)	1						
15	11102	138	HOLDER		1					
16	31034	170	PIN		2					
17	68013	266	SPRING		1					
18										
19	31057	181	HEXAGON BOLT	2						
20	68036	101	WASHER	2						
21	11006	151	STAY C.P.(RL)	1						
22	11006	152	STAY C.P.(RR)	1						
23	342L	0612	FLANGE BOLT TAPPING	2						
24	31057	255	HEXAGON BOLT	2						
25	569L	0800	FLANGE NYLON NUT	2						
26	71122	112	ADJUSTER ASSY(L)	1						
27	11142	131	ADJUSTER(RL)		1					
28	945L	0349	BEARING		1					

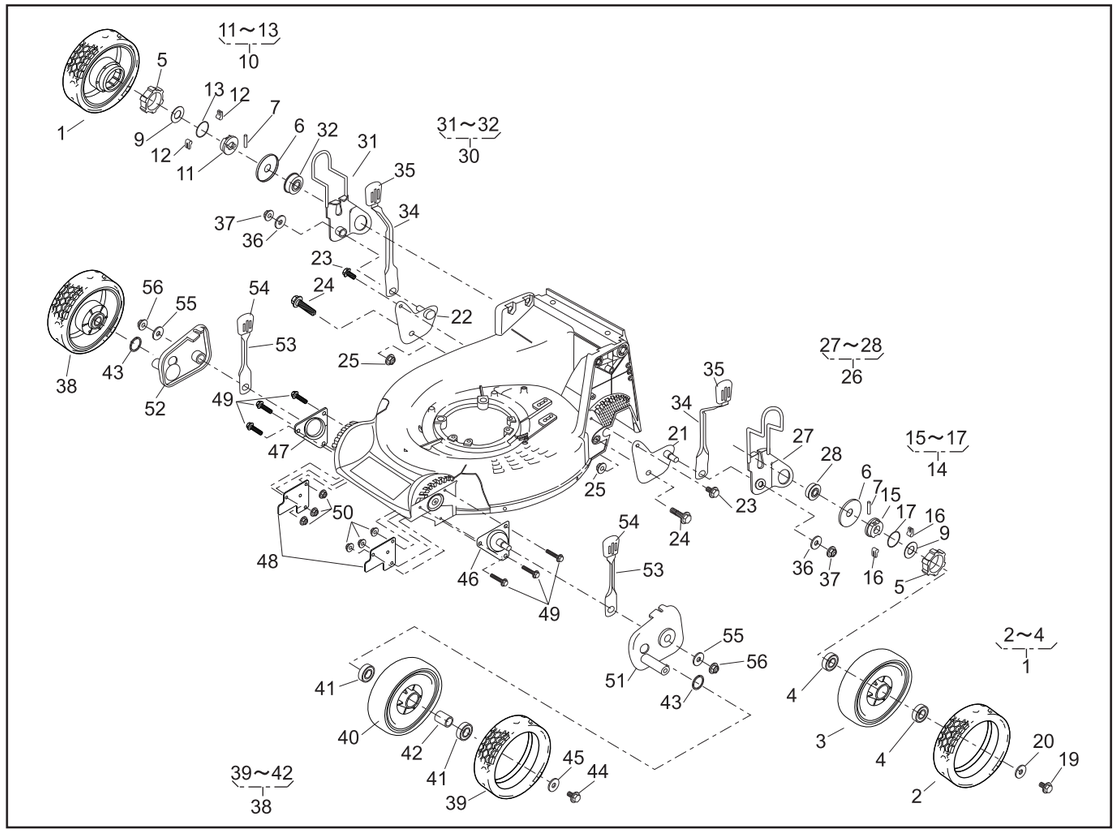

PARTS LIST

MODEL : SW5210-BHAE4

46014-***

				8"Al-WHEEL				2/2		Dec.24,2004
REF. No.	PARTS No.		PARTS NAME	Q'TY	INCLUDING		PRICE( )	RECOMM.(%) Lot.100		REMARKS
29										
30	71122	113	ADJUSTER ASSY(R)	1						
31	11142	132	ADJUSTER(RR)		1					
32	945L	0349	BEARING		1					
33										
34	11150	105	09 ADJUST LEVER	2						
35	36061	121	KNOB	2						
36	613L	0800	WASHER	2						
37	569L	0800	FLANGE NYLON NUT	2						
38	71041	135	WHEEL ASSY(A.W.)	2						
39	91086	113	TIRE		2					
40			WHEEL		2					
41	916B	6002	BEARING		4					
42	11083	332	COLLAR		2					
43	51113	119	RING	2						
44	31057	181	HEXAGON BOLT	2						
45	68036	101	WASHER	2						
46	11006	153	STAY C.P.(FL)	1						
47	11006	154	STAY C.P.(FR)	1						
48	11113	409	STAY	2						
49	335L	0625	FLANGE BOLT	6						
50	569L	0600	FLANGE NYLON NUT	6						
51	11142	129	ADJUSTER(FL)	1						
52	11142	130	ADJUSTER(FR)	1						
53	11150	106	09 ADJUST LEVER	2						
54	36061	121	KNOB	2						
55	613L	0800	WASHER	2						
56	569L	0800	FLANGE NYLON NUT	2						

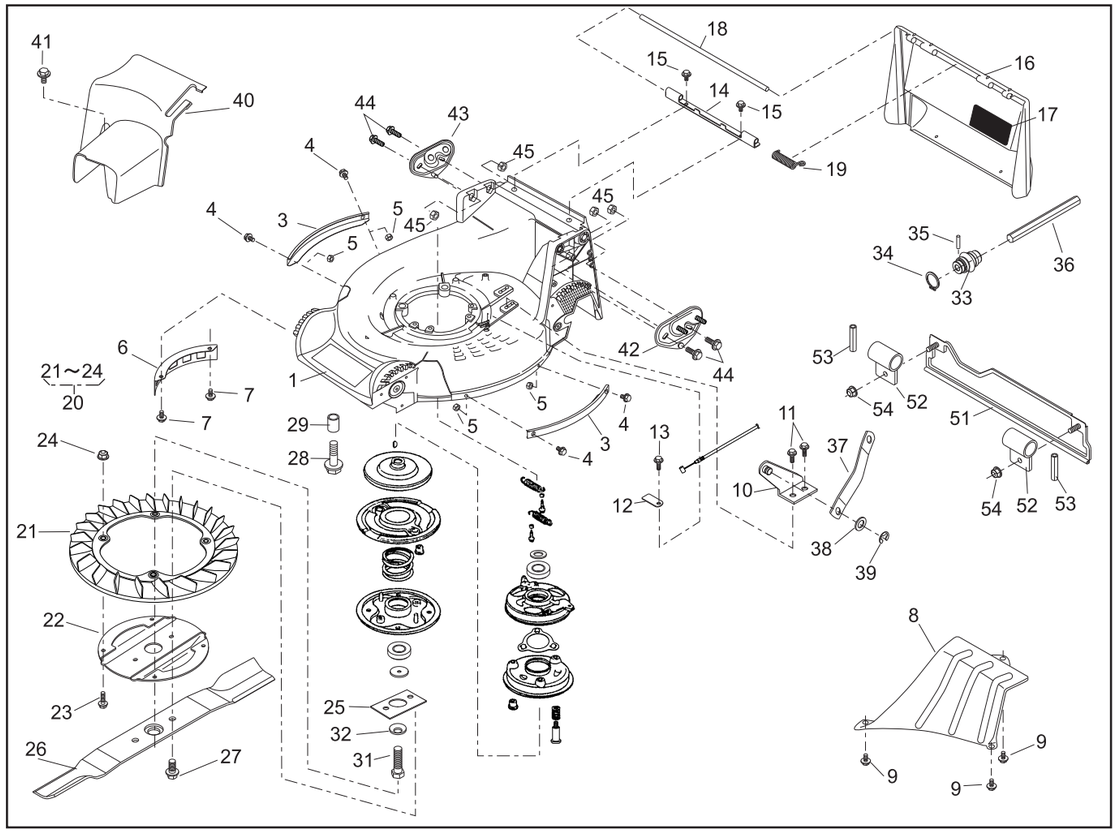

PARTS LIST

MODEL : SW5210-BHAE4 (Production 2004)

46014-***

REF. No.	PARTS No.	PARTS NAME	HST Q'TY	INCLUDING			PRICE( )	1/2 RECOMM.(%) Lot.100		Dec.24,2004 REMARKS
1	51043 147 42	HOUSING	1							
2										
3	51090 117 09	PROTECTOR	2							
4	335L 0616	FLANGE BOLT	4							
5	512L 0600	HEXAGON NUT	4							
6	36065 180	COVER	1							
7	342L 0612	FLANGE BOLT TAPPING	2							
8	36065 436	COVER	1							
9	342L 0612	FLANGE BOLT TAPPING	3							
10	11006 155	STAY C.P.	1							
11	342L 0612	FLANGE BOLT TAPPING	2							
12	11113 407	STAY	1							
13	342L 0612	FLANGE BOLT TAPPING	1							
14	11113 292	STAY	1							
15	342L 0612	FLANGE BOLT TAPPING	2							
16	36068 196 46	GUARD	1							
17	36080 149	RUBBER SHEET	1							
18	64014 324	SHAFT	1							
19	68013 336	SPRING	1							
20	71082 111	FAN ASSY	1							
21	51125 103	FAN		1						
22	11102 151	HOLDER		1						
23	31062 169	PRE-COAT LOCK BOLT		4						
24	579L 0600	FLANGE NUT		4						
25	61024 208	SPACER	1							
26	91014 159 59	BLADE	1							
27	31057 197	HEXAGON BOLT	2							
28	31057 243	HEXAGON BOLT	4							

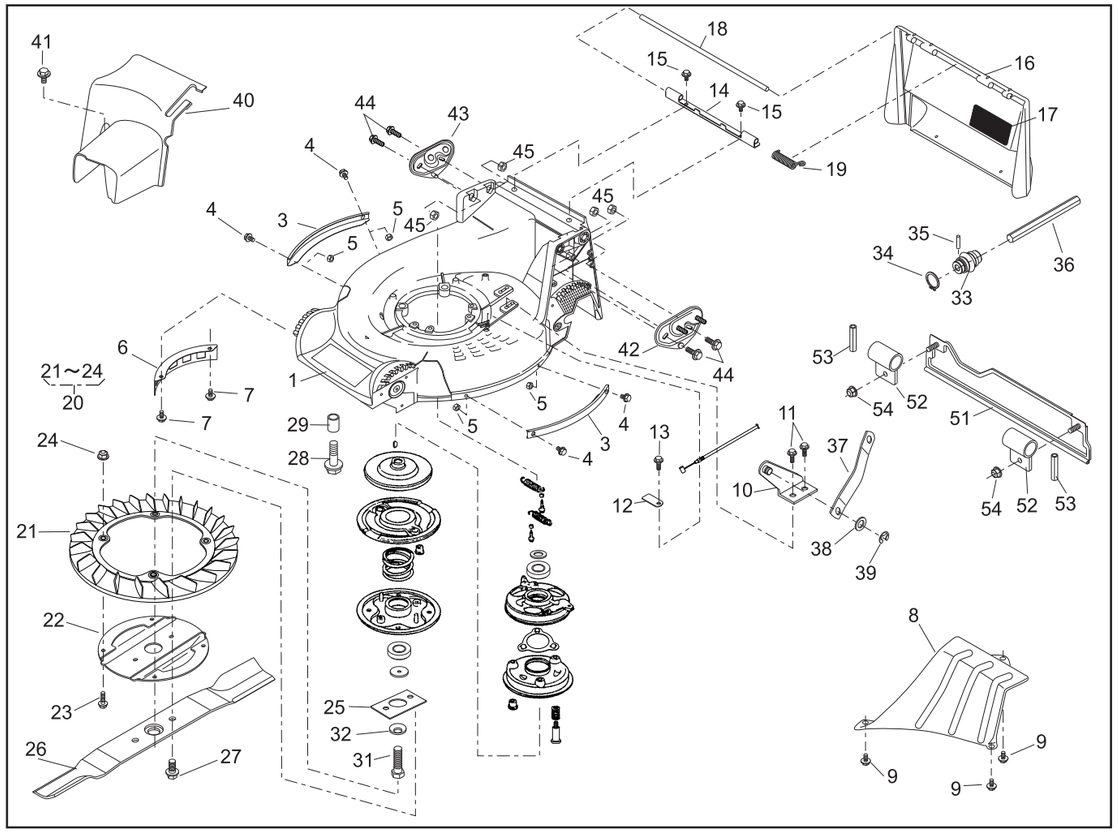

PARTS LIST

MODEL : SW5210-BHAE4 (Production 2004)

46014-***

REF. No.	PARTS No.	PARTS NAME	HST Q'TY	INCLUDING			PRICE( )	2/2 RECOMM.(%) Lot.100		Dec.24,2004 REMARKS
29	61024 142	SPACER	3							
30	71067 106	BRAKE ASSY	1							
31	31057 196	HEXAGON BOLT	1							
32	671V 1000	CONICAL SPRING WASHER	1							
33	91097 101	UNIVERSAL JOINT	1							
34	812V 2000	C-SNAP RING FOR SHAFT		1						
35	717B 0418	PARALLEL PIN		1						
36	64014 341	SHAFT	1							
37	91049 126	CONNECTOR	1							
38	68036 280	WASHER	1							
39	816V 0800	E-SNAP RING	1							
40	36065 438	COVER	1							
41	342L 0616	FLANGE BOLT TAPPING	1							
42	51116 149	HANDLE BRACKET(L)	1							
43	51116 150	HANDLE BRACKET(R)	1							
44	31057 255	HEXAGON BOLT	4							
45	512L 0800	HEXAGON NUT	4							
46										
47										
48										
49										
50	71008 378	GEAR CASE ASSY (HST:Ver.2004)	1							
51	36046 150	SAFETY GUARD	1							
52	11012 126	HANGER BAND	2							
53	711V 0522	SPRING PIN	2							
54	569L 0600	FLANGE NYLON NUT	2							
55										
56	8854	ENGINE:HONDA GXV160	1							

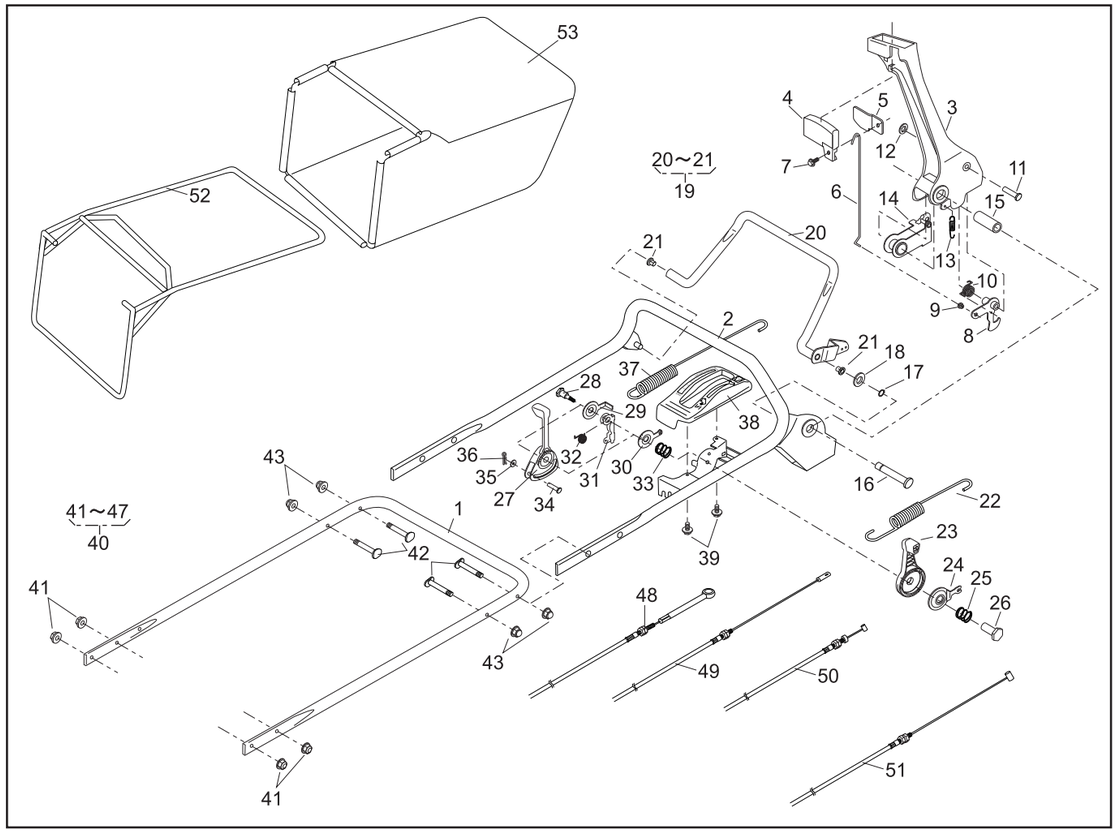

PARTS LIST

MODEL : SW5210-BHAE4

46014-***

REF. No.	PARTS No.	PARTS NAME	HST Q'TY	INCLUDING			PRICE( )	1/2 RECOMM.(%) Lot.100		Dec.24,2004 REMARKS
1	51027 249	HANDLE	1							
2	51027 250	HANDLE	1							
3	11095 172	LEVER(BBC)	1							
4	36110 102	BUTTON	1							
5	11049 109	SLIDE PLATE	1							
6	64014 336	SHAFT	1							
7	335N 0612	FLANGE BOLT	1							
8	71203 135	ARM C.P.	1							
9	76007 183	BUSH	1							
10	68013 371	SPRING	1							
11	31056 127	GIB-HEADED PIN	1							
12	576V 0600	PUSH NUT	1							
13	68013 372	SPRING	1							
14	11109 111	LINK	1							
15	61023 190	SLEEVE	1							
16	64014 337	SHAFT	1							
17	812V 0800	C-SNAP RING FOR SHAFT	1							
18	613L 0800	WASHER	1							
19	71161 114 09	LEVER ASSY	1							
20		LEVER		1						
21	76007 131	BUSH		2						
22	68013 376	SPRING	1							
23	91010 169	THROTTLE LEVER(GXV120/GXV160)	1							
24	61003 113	THRUST PLATE	1							
25	68013 356	SPRING	1							
26	31058 168	NUT	1							
27	11095 162	LEVER(HST)	1							
28	31057 249	HEXAGON BOLT	1							

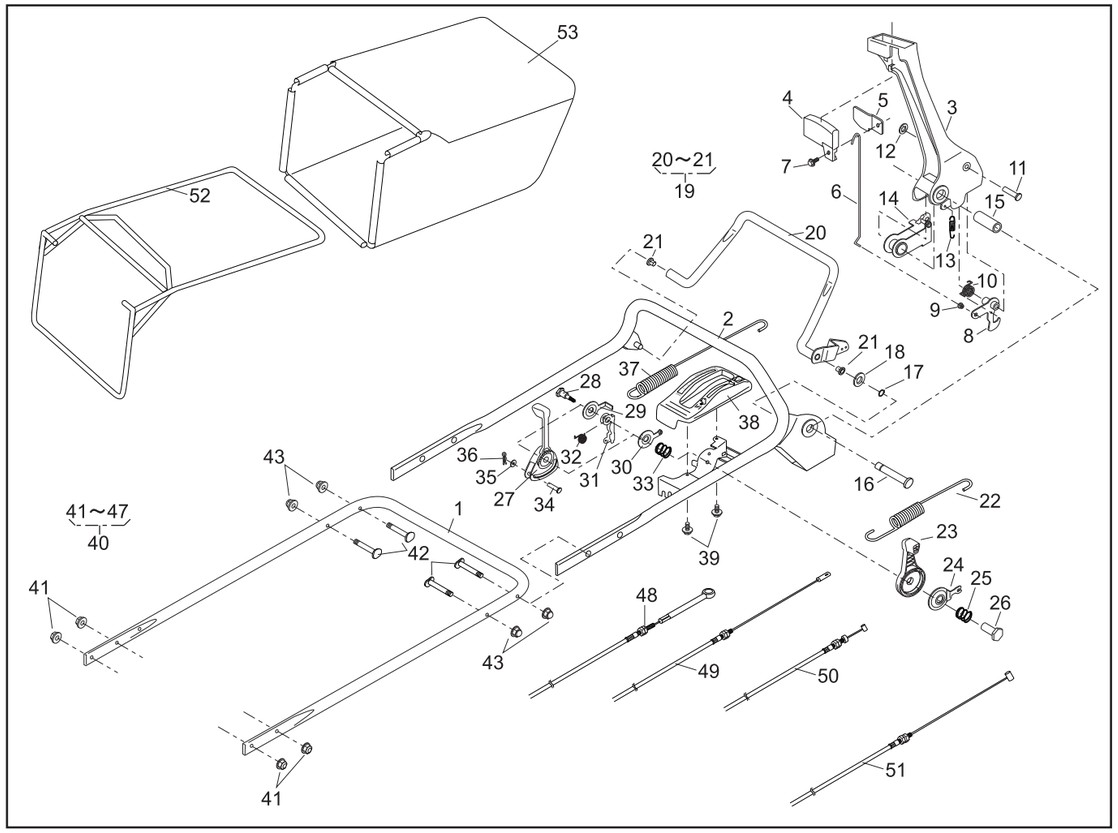

PARTS LIST

MODEL : SW5210-BHAE4

46014-***

REF. No.	PARTS No.	PARTS NAME	HST Q'TY	INCLUDING			PRICE( )	2/2 RECOMM.(%) Lot.100		Dec.24,2004 REMARKS
29	61003 118	THRUST PLATE	1							
30	11049 108	SLIDE PLATE	1							
31	11109 110	LINK	1							
32	68013 369	SPRING	1							
33	68013 356	SPRING	1							
34	31056 126	GIB-HEADED PIN	1							
35	613L 0600	WASHER	1							
36	733L 0600	SNAP PIN	1							
37	68013 375	SPRING	1							
38	71900 811	COVER ASSY	1							
39	470L 0514	(+)TAPPING SCREW	2							
40	71900 847	BOLT SET	1							
41	569L 0800	FLANGE NYLON NUT		4						
42	31057 256	BOLT		4						
43	583L 0800	FLANGE CAP NUT		4						
44										
45										
46										
47	68028 103	WIRE BAND		2						
48	91003 171	CONTROL CABLE(HST-THROTTLE)	1							
49	91003 172	CONTROL CABLE(HST-NEUTRAL)	1							
50	91001 329	THROTTLE WIRE(GXV120/GXV160)	1							
51	91003 169	CONTROL CABLE(BBC)	1							
52	11062 178	FRAME C.P.	1							
53	36098 145	GRASS BAG C.P.(ISEKI)	1							
54										
55										
56										

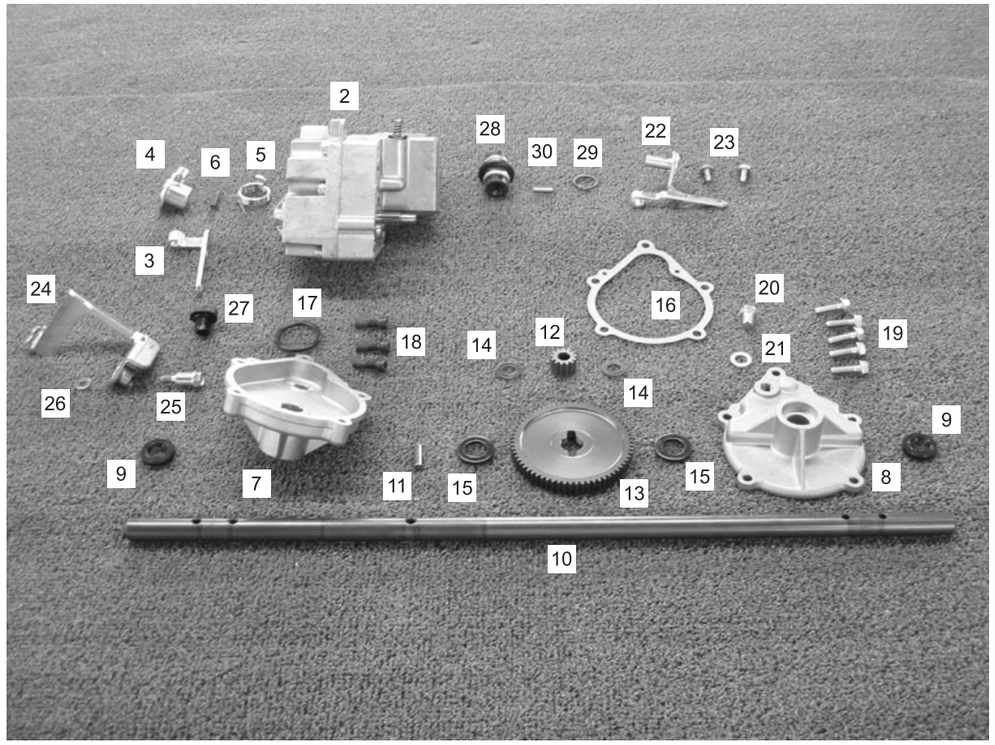

PARTS LIST

MODEL : SW5210-BHAE4 (Production 2004)

46014-***

REF. No.	PARTS No.	PARTS NAME	GEAR CASE (HST) Q'TY	INCLUDING			PRICE( )	1/2 RECOMM.(%) Lot.100		Mar.31,2004 REMARKS
1	71008 378	GEAR CASE ASSY	1							
2	71900 874	HST ASSY		1						
3	51002 120	WIRE HOLDER			1					
4	71203 136	ARM C.P.			1					
5	68013 377	SPRING			1					
6	711V 0534	SPRING PIN			1					
7	51001 288	GEAR CASE		1						
8	51001 289	GEAR CASE		1						
9	61002 163	OIL SEAL		2						
10	64014 344	SHAFT		1						
11	31034 150	PIN		1						
12	78004 297	GEAR		1						
13	78004 298	GEAR		1						
14	61003 109	THRUST PLATE		2						
15	68036 278	WASHER		2						
16	61019 226	PACKING		1						
17	211B 29.50	O-RING		1						
18	31062 176	PRE-COAT LOCK BOLT		3						
19	342L 0620	FLANGE BOLT TAPPING		5						
20	31057 126	HEXAGON BOLT		1						
21	68001 110	FIBER WASHER		1						
22	11006 156	STAY C.P.		1						
23	342L 0612	FLANGE BOLT TAPPING		2						
24	71203 138	ARM C.P.		1						
25	31062 109	PRE-COAT LOCK BOLT		1						
26	613L 0600	WASHER		1						
27	91043 113	OIL CAP		1						

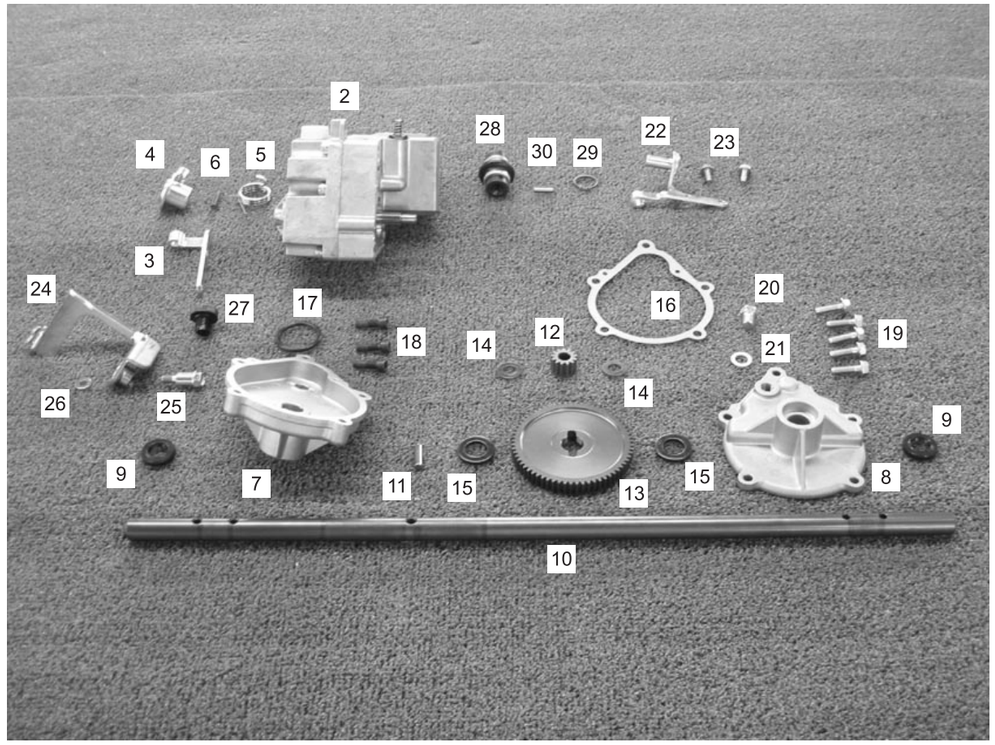

PARTS LIST

MODEL : SW5210-BHAE4 (Production 2004)

46014-***

REF. No.	PARTS No.	PARTS NAME	GEAR CASE (HST) Q'TY	INCLUDING			PRICE( )	2/2 RECOMM.(%) Lot.100		Mar.31,2004 REMARKS
28	91097 101	UNIVERSAL JOINT		1						
29	812V 2000	C-SNAP RING FOR SHAFT			1					
30	717B 0418	PARALLEL PIN			1					
31										
32										
33										
34										
35										
36										
37										
38										
39										
40										
41										
42										
43										
44										
45										
46										