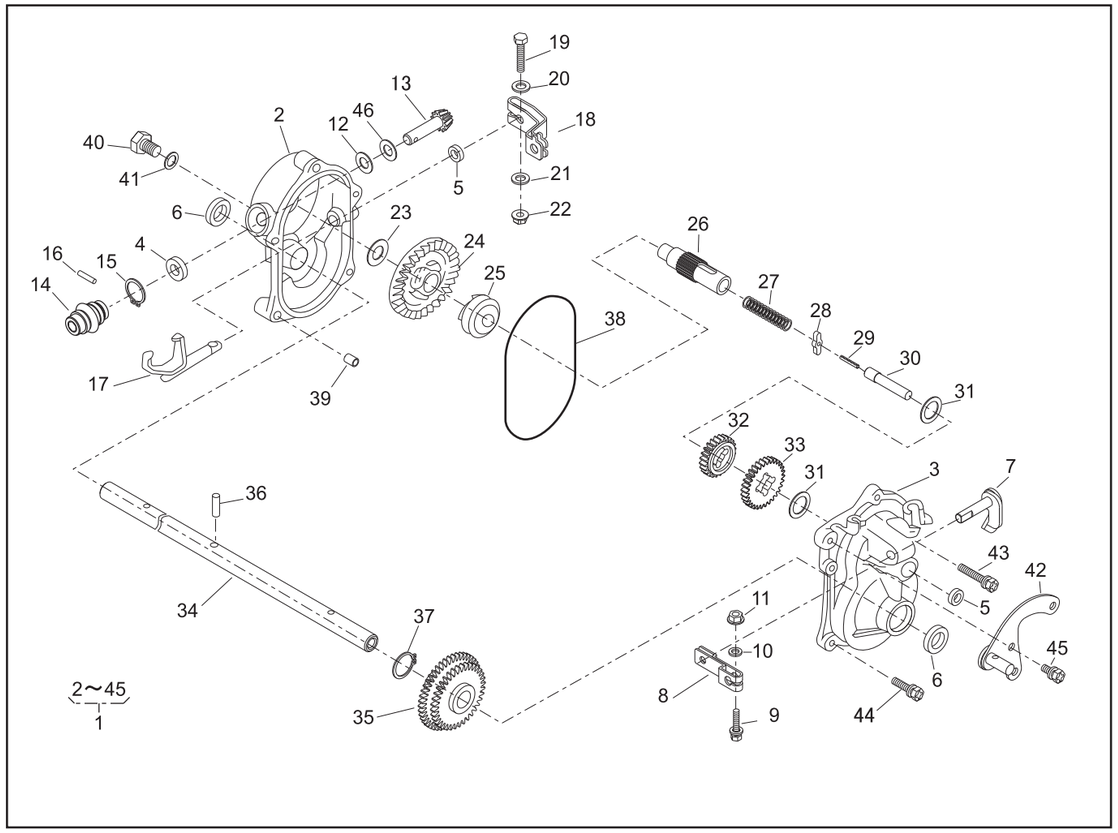


# PARTS LIST

## GEAR CASE ASSY (71008-275)

P/L No. 46014-262-04

| REF. No. | PARTS No. | PARTS NAME | GEAR CASE Q'TY | INCLUDING | | | PRICE( ) | 1/2 RECOMM.(%) Lot.100 | | Dec. 25, 2006 REMARKS |
|---|---|---|---|---|---|---|---|---|---|---|
| 1 | 71008 275 | GEAR CASE ASS'Y | 1 | | | | | - | | |
| 2 | 51001 195 | GEAR CASE | | 1 | | | | 3 | | |
| 3 | 51001 196 | GEAR CASE | | 1 | | | | 3 | | |
| 4 | 61002 161 | OIL SEAL | | 1 | | | | 5 | | SD 10 20 5 |
| 5 | 61002 162 | OIL SEAL | | 2 | | | | 5 | | SD 08 14 4 |
| 6 | 61002 163 | OIL SEAL | | 2 | | | | 5 | | SD 15 24 5 |
| 7 | 64024 104 | SHIFTER SHAFT | | 1 | | | | 3 | | |
| 8 | 11104 119 | ARM | | 1 | | | | 3 | | |
| 9 | 320L 0525 | (+)HEXAGON BOLT (W/PW) | | 1 | | | | 3 | | M5×25 |
| 10 | 611L 0500 | PLAIN WASHER | | 1 | | | | 3 | | M5 |
| 11 | 571L 0500 | FLANGE NUT | | 1 | | | | 3 | | M5 |
| 12 | 61003 109 | THRUST PLATE | | 1 | | | | 5 | | |
| 13 | 78003 130 | PINION | | 1 | | | | 3 | | |
| 14 | 91097 101 | UNIVERSAL JOINT | | 1 | | | | 3 | | |
| 15 | 812V 2000 | C-SNAP RING | | | 1 | | | 1 | | $\phi$20 |
| 16 | 717B 0418 | PARALLEL PIN | | | 1 | | | 3 | | $\phi$4×18 |
| 17 | 11097 106 | SHIFTER FORK | | 1 | | | | 3 | | |
| 18 | 11104 137 | ARM | | 1 | | | | 3 | | |
| 19 | 311M 0630 | HEXAGON BOLT | | 1 | | | | 3 | | M6×30 |
| 20 | 611L 0600 | PLAIN WASHER | | 1 | | | | 3 | | M6 |
| 21 | 613L 0600 | PLAIN WASHER | | 1 | | | | 3 | | M6 |
| 22 | 571L 0600 | FLANGE NUT | | 1 | | | | 3 | | M6 |
| 23 | 61024 117 | SPACER | | 1 | | | | 5 | | |
| 24 | 78001 162 | BEVEL GEAR | | 1 | | | | 3 | | |
| 25 | 11129 107 | CLUTCH | | 1 | | | | 3 | | |
| 26 | 64014 236 | SHAFT | | 1 | | | | 3 | | |
| 27 | 68013 262 | SPRING | | 1 | | | | 3 | | |

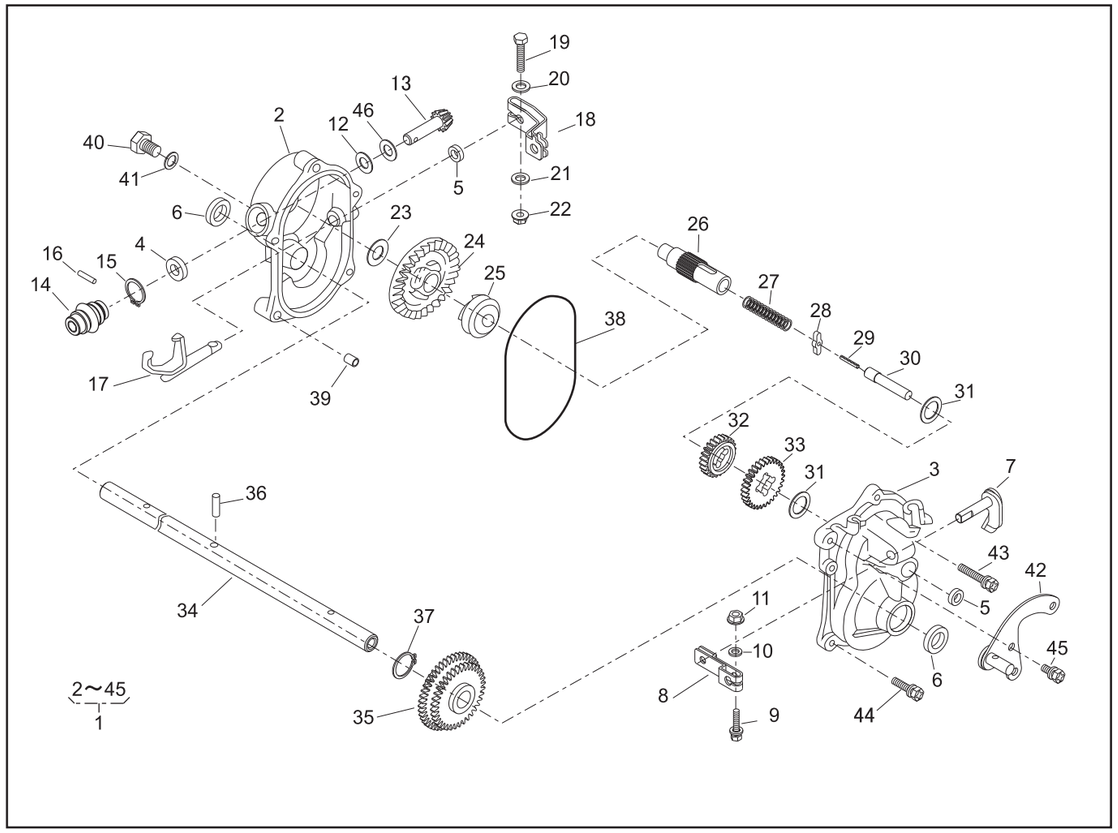


# PARTS LIST

## GEAR CASE ASSY (71008-275)

P/L No. 46014-262-04

| REF. No. | PARTS No. | PARTS NAME | GEAR CASE Q'TY | INCLUDING | | | PRICE( ) | 2/2 RECOMM.(%) Lot.100 | | Dec. 26, 2006 REMARKS |
|---|---|---|---|---|---|---|---|---|---|---|
| 28 | 31034 171 | PIN | | 1 | | | | 3 | | |
| 29 | 736U 0320 | SPRING PIN | | 1 | | | | 3 | | |
| 30 | 64014 235 | SHAFT | | 1 | | | | 3 | | |
| 31 | 61024 118 | SPACER | | 2 | | | | 3 | | |
| 32 | 78004 156 | GEAR | | 1 | | | | 3 | | |
| 33 | 78004 155 | GEAR | | 1 | | | | 3 | | |
| 34 | 64014 163 | SHAFT | | 1 | | | | 3 | | |
| 35 | 78012 107 | GEAR C.P. | | 1 | | | | 3 | | |
| 36 | 31034 150 | PIN | | 1 | | | | 3 | | |
| 37 | 812V 2200 | C-SNAP RING | | 1 | | | | 1 | | $\phi$22 |
| 38 | 214B 11000 | O-RING | | 1 | | | | 5 | | S110 |
| 39 | 11083 201 | COLLAR | | 2 | | | | 5 | | |
| 40 | 31057 262 | HEXAGON BOLT | | 1 | | | | 3 | | M10×1.25 |
| 41 | 68001 110 | FIBER WASHER | | 1 | | | | 3 | | |
| 42 | 11006 165 | STAY C.P. | | 1 | | | | 5 | | |
| 43 | 315L 0625 | (+)HEXAGON BOLT (W/SW,PW) | | 3 | | | | 3 | | M6×25 |
| 44 | 315L 0635 | (+)HEXAGON BOLT (W/SW,PW) | | 2 | | | | 3 | | M6×35 |
| 45 | 318L 0612 | (+)HEXAGON BOLT (W/SW) | | 1 | | | | 3 | | M6×12 |
| 46 | 68007 132 | SHIM | 0~2 | | | | | 3 | | |

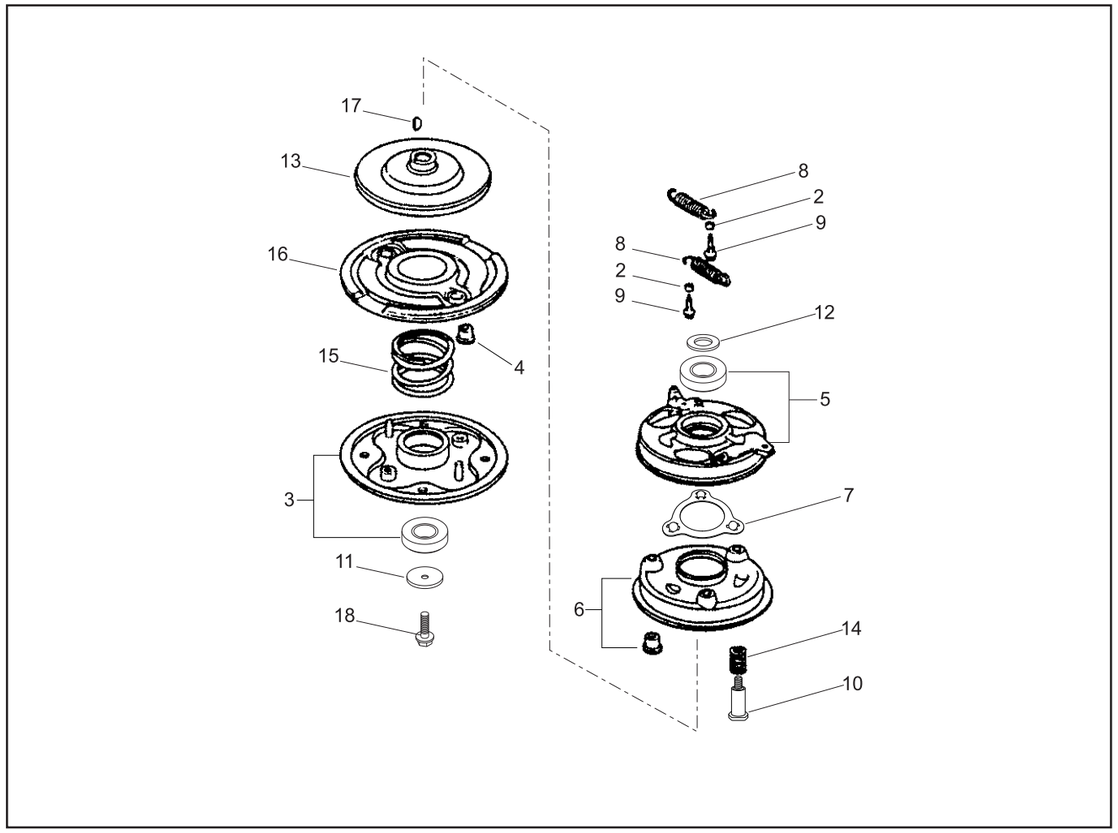


# PARTS LIST

## BRAKE ASSY (71067-106)

P/L No. 46014-266-02

| | | | | BBC | | | | | 1/1 | | Feb.09,2005 |
|---|---|---|---|---|---|---|---|---|---|---|---|
| REF. No. | PARTS No. | | | PARTS NAME | Q'TY | INCLUDING | | | PRICE( ) | RECOMM.(%) Lot.100 | | REMARKS |
| 1 | 71067 | 106 | | BRAKE ASS'Y | 1 | | | | | | | |
| 2 | 19512 | 883 | 000 | FAN COLLAR | | 2 | | | | | | |
| 3 | 72600 | VA4 | 010 | HOLDER ASS'Y | | 1 | | | | | | |
| 4 | 72613 | VA4 | 000 | BUSH, BLADE HOLDER | | 2 | | | | | | |
| 5 | 75090 | VA4 | 030 | CONTROL ASS'Y | | 1 | | | | | | |
| 6 | 75100 | VA4 | 010 | BRAKE C.P. | | 1 | | | | | | |
| 7 | 75110 | VA4 | 000 | BALL RETAINER C.P. | | 1 | | | | | | |
| 8 | 75182 | VA3 | J00 | SPRING, CLUTCH RETURN | | 2 | | | | | | |
| 9 | 90014 | 952 | 000 | FLANGE BOLT | | 2 | | | | | | 6 x 14 |
| 10 | 90021 | VA4 | 000 | BOLT, SPECIAL | | 3 | | | | | | 6 mm |
| 11 | 90409 | 952 | 000 | WASHER | | 1 | | | | | | 10 mm |
| 12 | 90501 | 952 | 010 | THRUST WASHER | | 1 | | | | | | |
| 13 | 75130 | VA4 | 000 | BRAKE DISK | | 1 | | | | | | |
| 14 | 75132 | VA4 | 000 | SPRING, BRAKE HOLDER | | 3 | | | | | | |
| 15 | 75183 | VA3 | J00 | SPRING, CLUTCH | | 1 | | | | | | |
| 16 | 75150 | VA3 | J01 | DRIVEN DISK C.P. | | 1 | | | | | | |
| 17 | 94401 | 16150 | | WOODRUFF KEY | | 1 | | | | | | |
| 18 | 90105 | 960 | 003 | BOLT (10x25) | | 1 | | | | | | |
| 19 | | | | | | | | | | | | |
| 20 | | | | | | | | | | | | |
| 21 | | | | | | | | | | | | |
| 22 | | | | | | | | | | | | |
| 23 | | | | | | | | | | | | |
| 24 | | | | | | | | | | | | |
| 25 | | | | | | | | | | | | |
| 26 | | | | | | | | | | | | |
| 27 | | | | | | | | | | | | |
| 28 | | | | | | | | | | | | |

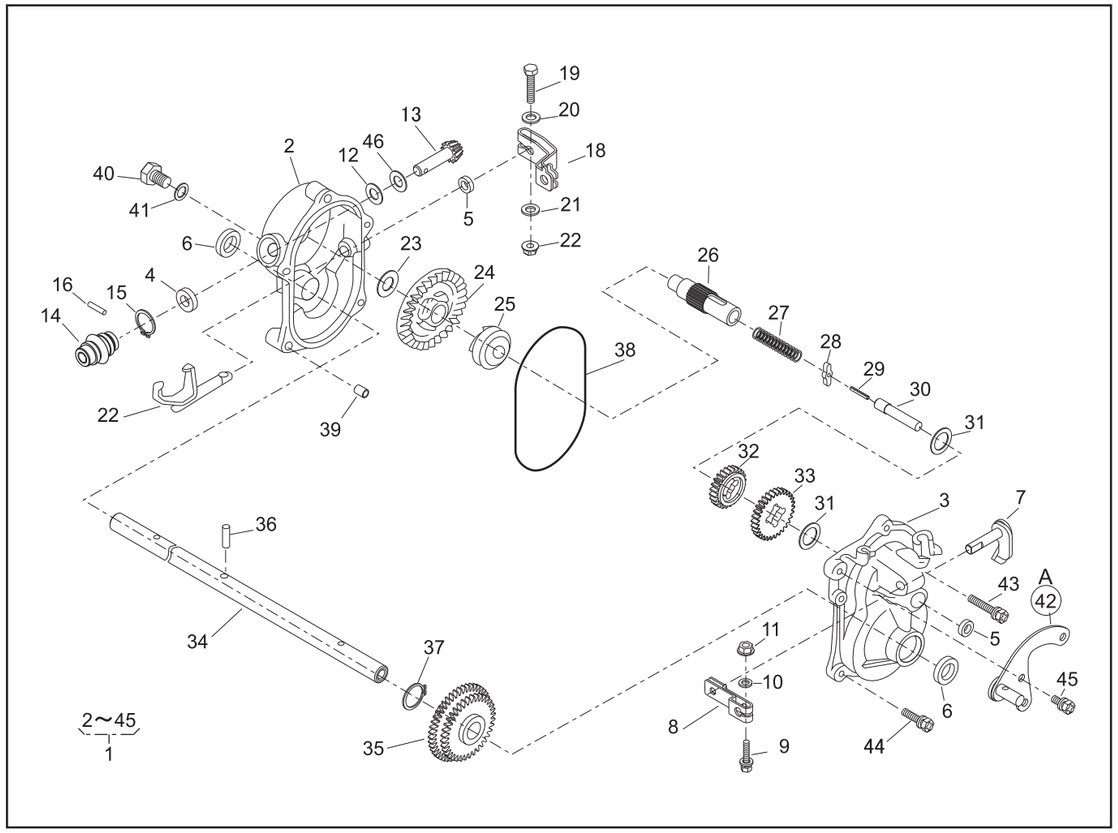


# PARTS LIST

## GEAR CASE ASSY (71008-326)

46014-307-01

| NOTE | REF. No. | PARTS No. | PARTS NAME | GEAR CASE Q'TY | INCLUDING | | | PRICE( ) | 1/2 RECOMM.(%) Lot.100 | | Dec. 26. 2006 REMARKS |
|---|---|---|---|---|---|---|---|---|---|---|---|
| | 1 | 71008 326 | GEAR CASE ASSY | 1 | | | | | - | | |
| | 2 | 51001 195 | GEAR CASE | | 1 | | | | 3 | | |
| | 3 | 51001 196 | GEAR CASE | | 1 | | | | 3 | | |
| | 4 | 61002 161 | OIL SEAL | | 1 | | | | 5 | | SD 10 20 5 |
| | 5 | 61002 162 | OIL SEAL | | 2 | | | | 5 | | SD 8 14 4 |
| | 6 | 61002 163 | OIL SEAL | | 2 | | | | 5 | | SD 15 24 5 |
| | 7 | 64024 104 | THIFTER SHAFT | | 1 | | | | 3 | | |
| | 8 | 11104 119 | ARM | | 1 | | | | 3 | | |
| | 9 | 320L 0525 | HEXAGON BOLT(PW) | | 1 | | | | 3 | | M5×25 |
| | 10 | 611L 0500 | PLAIN WASHER | | 1 | | | | 3 | | M5 |
| | 11 | 571L 0500 | FLANGE NUT | | 1 | | | | 3 | | M5 |
| | 12 | 61003 109 | THRUST PLATE | | 1 | | | | 5 | | |
| | 13 | 78003 130 | PINION | | 1 | | | | 3 | | |
| | 14 | 91097 101 | UNIVERSAL JOINT | | 1 | | | | 3 | | |
| | 15 | 812V 2000 | C-SNAP RING FOR SHAFT | | | 1 | | | 1 | | $\phi$20 |
| | 16 | 717B 0418 | PARALLEL PIN | | | 1 | | | 3 | | $\phi$4×18 |
| | 17 | 11097 106 | SHIFTER FORK | | 1 | | | | 3 | | |
| | 18 | 11104 137 | ARM | | 1 | | | | 3 | | |
| | 19 | 311M 0630 | (+)HEXAGON BOLT | | 1 | | | | 3 | | M6×30 |
| | 20 | 611L 0600 | PLAIN WASHER | | 1 | | | | 3 | | M6 |
| | 21 | 613L 0600 | PLAIN WASHER | | 1 | | | | 3 | | M6 |
| | 22 | 571L 0600 | FLANGE NUT | | 1 | | | | 3 | | M6 |
| | 23 | 61024 117 | SPACER | | 1 | | | | 5 | | |
| | 24 | 78001 162 | BEVEL GEAR | | 1 | | | | 3 | | |
| | 25 | 11129 107 | CLUTCH | | 1 | | | | 3 | | |
| | 26 | 64014 236 | SHAFT | | 1 | | | | 3 | | |
| | 27 | 68013 262 | SPRING | | 1 | | | | 3 | | |

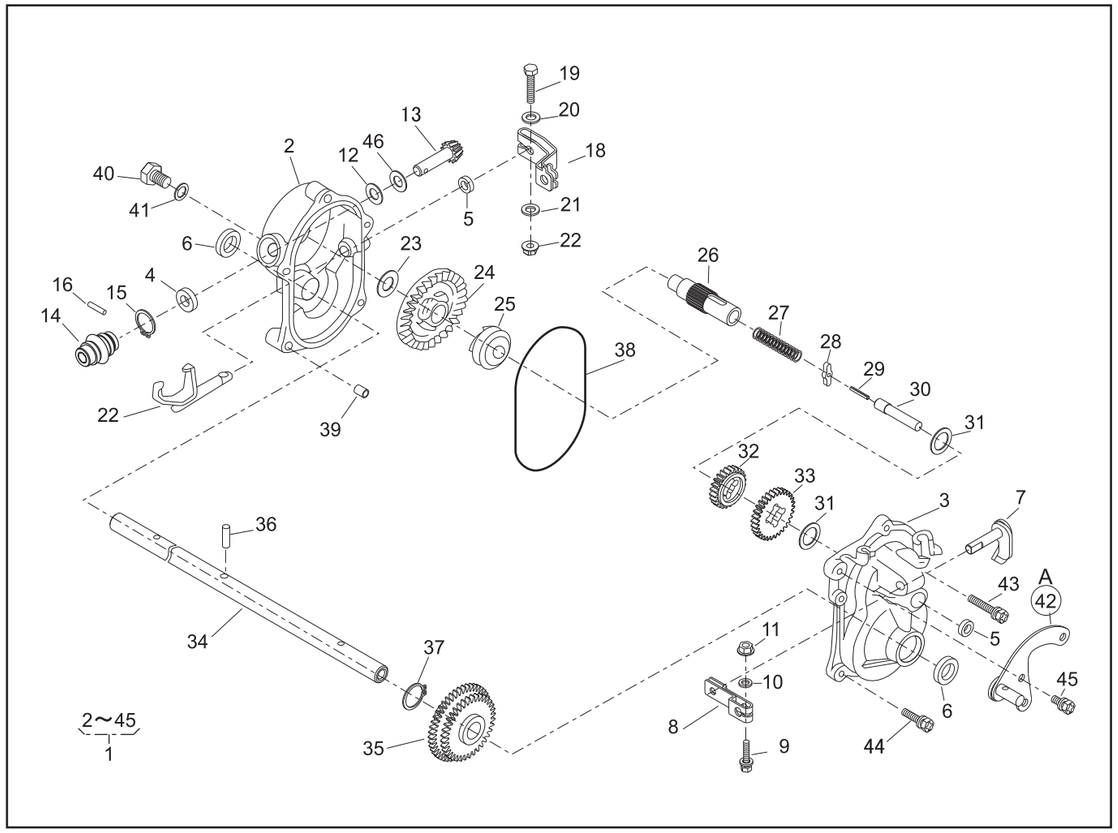


# PARTS LIST

## GEAR CASE ASSY (71008-326)

46014-307-01

| NOTE | REF. No. | PARTS No. | PARTS NAME | GEAR CASE Q'TY | INCLUDING | | | PRICE( ) | 2/2 RECOMM.(%) Lot.100 | | Dec. 26. 2006 REMARKS |
|---|---|---|---|---|---|---|---|---|---|---|---|
| | 28 | 31034 171 | PIN | | 1 | | | | 3 | | |
| | 29 | 736U 0320 | SPRING PIN | | 1 | | | | 3 | | |
| | 30 | 64014 235 | SHAFT | | 1 | | | | 3 | | |
| | 31 | 61024 118 | SPACER | | 2 | | | | 3 | | |
| | 32 | 78004 156 | GEAR | | 1 | | | | 3 | | |
| | 33 | 78004 155 | GEAR | | 1 | | | | 3 | | |
| | 34 | 64014 185 | SHAFT | | 1 | | | | 3 | | |
| | 35 | 78012 107 | GEAR C.P. | | 1 | | | | 3 | | |
| | 36 | 31034 150 | PIN | | 1 | | | | 3 | | |
| | 37 | 812V 2200 | C-SNAP RING FOR SHAFT | | 1 | | | | 1 | | $\phi$22 |
| | 38 | 214B 11000 | O-RING | | 1 | | | | 5 | | S110 |
| | 39 | 11083 201 | COLLAR | | 2 | | | | 5 | | |
| | 40 | 31057 262 | HEXAGON BOLT | | 1 | | | | 3 | | |
| | 41 | 68001 110 | FIBER WASHER | | 1 | | | | 3 | | |
| A | 42 | 11006 165 | STAY C.P. | | 1 | | | | 5 | | |
| | 43 | 315L 0625 | (+)HEXAGON BOLT(SW,PW) | | 3 | | | | 3 | | M6×25 |
| | 44 | 315L 0635 | (+)HEXAGON BOLT(SW,PW) | | 2 | | | | 3 | | M6×35 |
| | 45 | 318L 0612 | (+)HEXAGON BOLT(SW) | | 1 | | | | 3 | | M6×12 |
| | 46 | 68007 132 | SHIM | 0～2 | | | | | 3 | | |

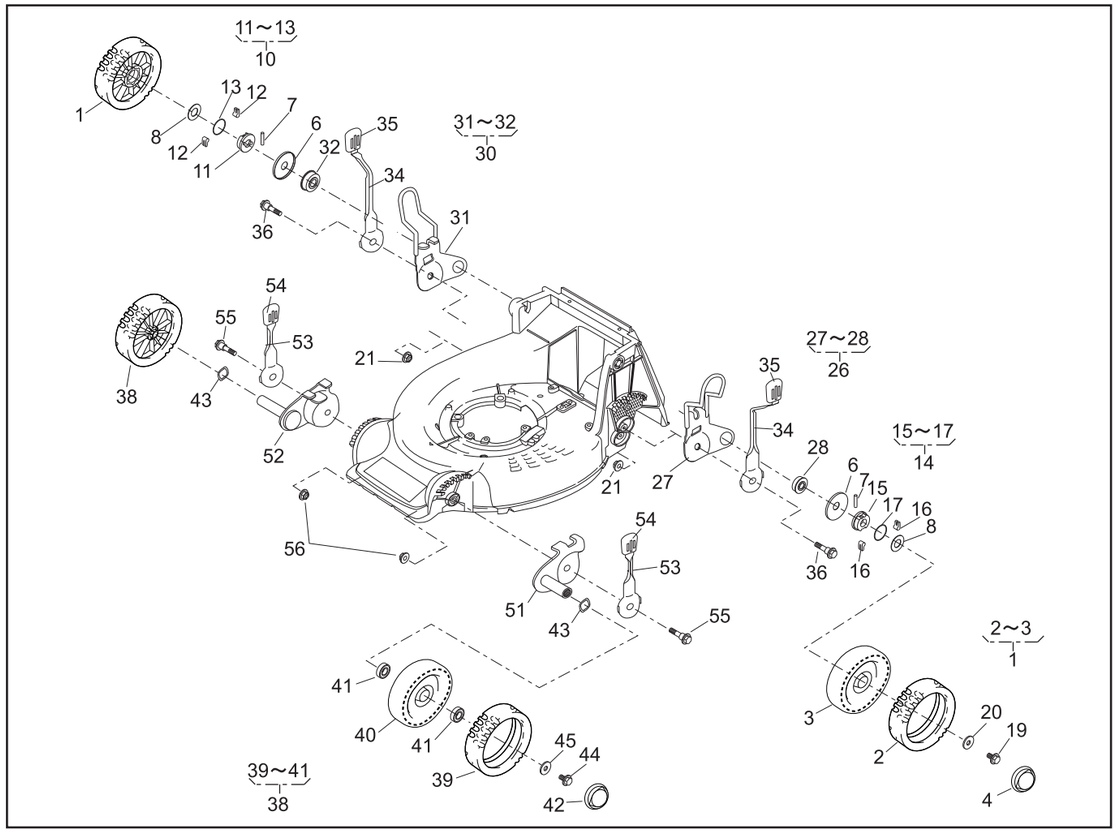


# PARTS LIST

46014-369-00

| | | | | WHEEL | | | | | 1/2 | | 14. Apr. 2006 |
|---|---|---|---|---|---|---|---|---|---|---|---|
| REF. No. | PARTS No. | | PARTS NAME | Q'TY | INCLUDING | | | PRICE( ) | RECOMM.(%) Lot.100 | | REMARKS |
| 1 | 71041 | 112 | WHEEL ASSY(R) | 2 | | | | | | | |
| 2 | 91086 | 106 | TIRE | | 2 | | | | | | |
| 3 | 36107 | 101 | WHEEL | | 2 | | | | | | |
| 4 | 36070 | 110 | CAP | 2 | | | | | | | |
| 5 | | | | | | | | | | | |
| 6 | 61003 | 112 | THRUST PLATE | 2 | | | | | | | |
| 7 | 31034 | 137 | PIN | 2 | | | | | | | |
| 8 | 68036 | 146 | WASHER | 2 | | | | | | | |
| 9 | | | | | | | | | | | |
| 10 | 71158 | 101 | RATCHET ASSY(RR) | 1 | | | | | | | |
| 11 | 11102 | 138 | HOLDER | | 1 | | | | | | |
| 12 | 31034 | 170 | PIN | | 2 | | | | | | |
| 13 | 68013 | 266 | SPRING | | 1 | | | | | | |
| 14 | 71158 | 102 | RATCHET ASSY(RL) | 1 | | | | | | | |
| 15 | 11102 | 138 | HOLDER | | 1 | | | | | | |
| 16 | 31034 | 170 | PIN | | 2 | | | | | | |
| 17 | 68013 | 266 | SPRING | | 1 | | | | | | |
| 18 | | | | | | | | | | | |
| 19 | 31057 | 181 | HEXAGON BOLT | 2 | | | | | | | |
| 20 | 68036 | 101 | WASHER | 2 | | | | | | | |
| 21 | 569L | 0800 | FLANGE NYLON NUT | 2 | | | | | | | |
| 22 | | | | | | | | | | | |
| 23 | | | | | | | | | | | |
| 24 | | | | | | | | | | | |
| 25 | | | | | | | | | | | |
| 26 | 71122 | 101 | ADJUSTER ASSY(RL) | 1 | | | | | | | |
| 27 | 11142 | 104 | ADJUSTER | | 1 | | | | | | |
| 28 | 945L | 0349 | BEARING | | 1 | | | | | | |

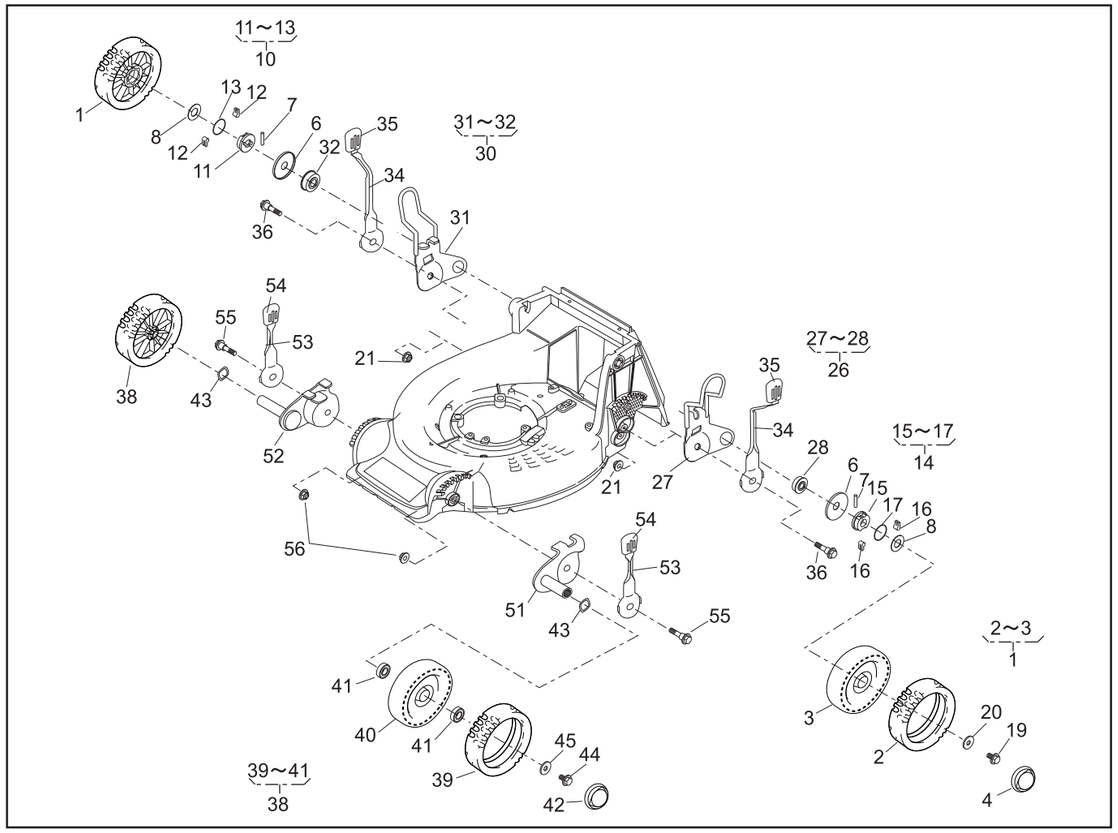


# PARTS LIST

46014-369-00

| | | | | WHEEL | | | | | 2/2 | | 14. Apr. 2006 |
|---|---|---|---|---|---|---|---|---|---|---|---|
| REF. No. | PARTS No. | | PARTS NAME | Q'TY | INCLUDING | | | PRICE( ) | RECOMM.(%) Lot.100 | | REMARKS |
| 29 | | | | | | | | | | | |
| 30 | 71122 | 102 | ADJUSTER ASSY(RR) | 1 | | | | | | | |
| 31 | 11142 | 105 | ADJUSTER | | 1 | | | | | | |
| 32 | 945L | 0349 | BEARING | | 1 | | | | | | |
| 33 | | | | | | | | | | | |
| 34 | 11150 | 102 | 09 ADJUST LEVER(R) | 2 | | | | | | | |
| 35 | 36061 | 121 | KNOB | 2 | | | | | | | |
| 36 | 31057 | 260 | HEXAGON BOLT | 2 | | | | | | | |
| 37 | | | | | | | | | | | |
| 38 | 71041 | 103 | WHEEL ASSY(F) | 2 | | | | | | | |
| 39 | 91086 | 102 | TIRE | | 2 | | | | | | |
| 40 | 36107 | 102 | WHEEL | | 2 | | | | | | |
| 41 | 932L | 0696 | BEARING | | | 4 | | | | | |
| 42 | 36070 | 110 | CAP | 2 | | | | | | | |
| 43 | 664V | 0626 | WAVE SPRING WASHER | 2 | | | | | | | |
| 44 | 31057 | 181 | HEXAGON BOLT | 2 | | | | | | | |
| 45 | 68036 | 101 | WASHER | 2 | | | | | | | |
| 46 | | | | | | | | | | | |
| 47 | | | | | | | | | | | |
| 48 | | | | | | | | | | | |
| 49 | | | | | | | | | | | |
| 50 | | | | | | | | | | | |
| 51 | 11142 | 112 | ADJUSTER(FL) | 1 | | | | | | | |
| 52 | 11142 | 113 | ADJUSTER(FR) | 1 | | | | | | | |
| 53 | 11150 | 107 | 09 ADJUST LEVER(F) | 2 | | | | | | | |
| 54 | 36061 | 121 | KNOB | 2 | | | | | | | |
| 55 | 31057 | 260 | HEXAGON BOLT | 2 | | | | | | | |
| 56 | 569L | 0800 | FLANGE NYLON NUT | 2 | | | | | | | |

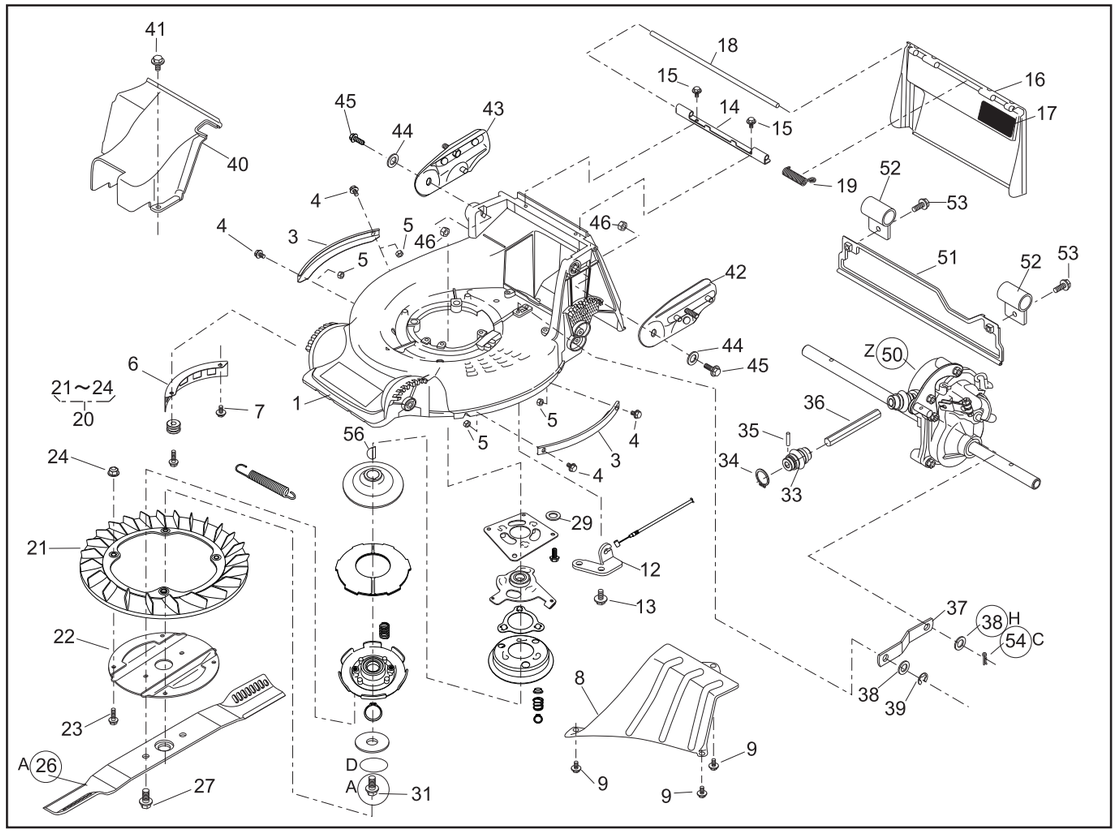


# PARTS LIST

P/L No. 46014-372-02

| NOTE | REF. No. | PARTS No. | PARTS NAME | GRASS-CUTTING Q'TY | INCLUDING | | | PRICE( ) | 1/2 RECOMM.(%) Lot.100 | | Dec. 26. 2006 REMARKS |
|---|---|---|---|---|---|---|---|---|---|---|---|
| | 1 | 51043 149 42 | HOUSING | 1 | | | | | | | |
| | 2 | | | | | | | | | | |
| | 3 | 51090 128 09 | PROTECTOR | 2 | | | | | | | |
| | 4 | 335L 0616 | FLANGE BOLT | 4 | | | | | | | |
| | 5 | 512L 0600 | HEXAGON NUT | 4 | | | | | | | |
| | 6 | 36065 180 | COVER | 1 | | | | | | | |
| | 7 | 342L 0612 | FLANGE BOLT TAPPING | 1 | | | | | | | |
| | 8 | 36065 400 | COVER | 1 | | | | | | | |
| | 9 | 342L 0612 | FLANGE BOLT TAPPING | 3 | | | | | | | |
| | 10 | | | | | | | | | | |
| | 11 | | | | | | | | | | |
| | 12 | 51002 118 | WIRE HOLDER | 1 | | | | | | | |
| | 13 | 342L 0612 | FLANGE BOLT TAPPING | 2 | | | | | | | |
| | 14 | 11113 292 | STAY | 1 | | | | | | | |
| | 15 | 342L 0612 | FLANGE BOLT TAPPING | 2 | | | | | | | |
| | 16 | 36068 188 46 | GUARD | 1 | | | | | | | |
| | 17 | 36080 149 | RUBBER SHEET | 1 | | | | | | | |
| | 18 | 64014 324 | SHAFT | 1 | | | | | | | |
| | 19 | 68013 336 | SPRING | 1 | | | | | | | |
| | 20 | 71082 111 | FAN ASSY | 1 | | | | | | | |
| | 21 | 51125 103 | FAN | | 1 | | | | | | |
| | 22 | 11102 151 | HOLDER | | 1 | | | | | | |
| | 23 | 31062 169 | PRE-COAT LOCK BOLT | | 4 | | | | | | |
| | 24 | 579L 0600 | FLANGE NUT | | 4 | | | | | | |
| | 25 | | | | | | | | | | |
| A | 26 | 91014 190 | BLADE | 1 | | | | | | | |
| | 27 | 335M 1020 | FLANGE BOLT | 2 | | | | | | | |
| | 28 | | | | | | | | | | |

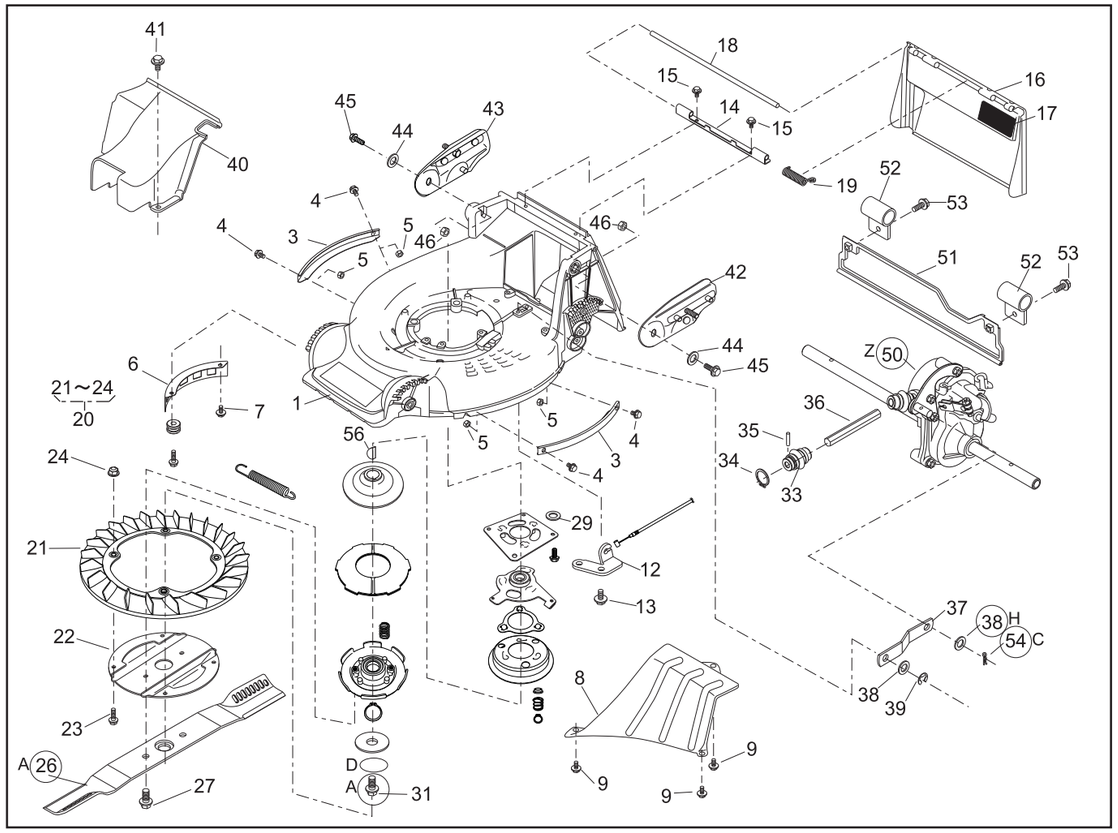


# PARTS LIST

P/L No. 46014-372-02

| NOTE | REF. No. | PARTS No. | PARTS NAME | GRASS-CUTTING Q'TY | INCLUDING | | | PRICE( ) | 2/2 RECOMM.(%) Lot.100 | | Dec. 26. 2006 REMARKS |
|---|---|---|---|---|---|---|---|---|---|---|---|
| | 29 | 68036 292 | WASHER | 4 | | | | | | | |
| | 30 | 71067 116 | BRAKE ASSY | 1 | | | | | | | |
| A | 31 | 31057 272 | HEXAGON BOLT | 1 | | | | | | | |
| D | 32 | | | | | | | | | | |
| | 33 | 91097 101 | UNIVERSAL JOINT | 1 | | | | | | | |
| | 34 | 812V 2000 | C-SNAP RING FOR SHAFT | | 1 | | | | | | |
| | 35 | 717B 0418 | PARALLEL PIN | | 1 | | | | | | |
| | 36 | 64014 372 | SHAFT | 1 | | | | | | | |
| | 37 | 91049 136 | CONNECTOR | 1 | | | | | | | |
| H | 38 | 68036 280 | WASHER | 2 | | | | | | | |
| | 39 | 816V 0800 | E-SNAP RING | 1 | | | | | | | |
| | 40 | 36065 455 | COVER | 1 | | | | | | | |
| | 41 | 335L 0616 | FLANGE BOLT | 1 | | | | | | | |
| | 42 | 51116 145 | HANDLE BRACKET(L) | 1 | | | | | | | |
| | 43 | 51116 146 | HANDLE BRACKET(R) | 1 | | | | | | | |
| | 44 | 68036 101 | WASHER | 2 | | | | | | | |
| | 45 | 312M 0830 | BOLT | 2 | | | | | | | |
| | 46 | 512L 0800 | HEXAGON NUT | 2 | | | | | | | |
| | 47 | | | | | | | | | | |
| | 48 | | | | | | | | | | |
| | 49 | | | | | | | | | | |
| Z | 50 | 71008 326 | GEAR CASE ASSY | 1 | | | | | | | |
| | 51 | 36046 122 | SAFETY GUARD | 1 | | | | | | | |
| | 52 | 11012 126 | HANGER BAND | 2 | | | | | | | |
| | 53 | 335L 0616 | FLANGE BOLT | 2 | | | | | | | |
| C | 54 | 733L 1000 | SNAP PIN | 1 | | | | | | | |
| | 55 | 122048 | ENGINE:KAWASAKI FJ151V-AC50 | 1 | | | | | | | |
| | 56 | 96007 183 | KEY | 1 | | | | | | | |

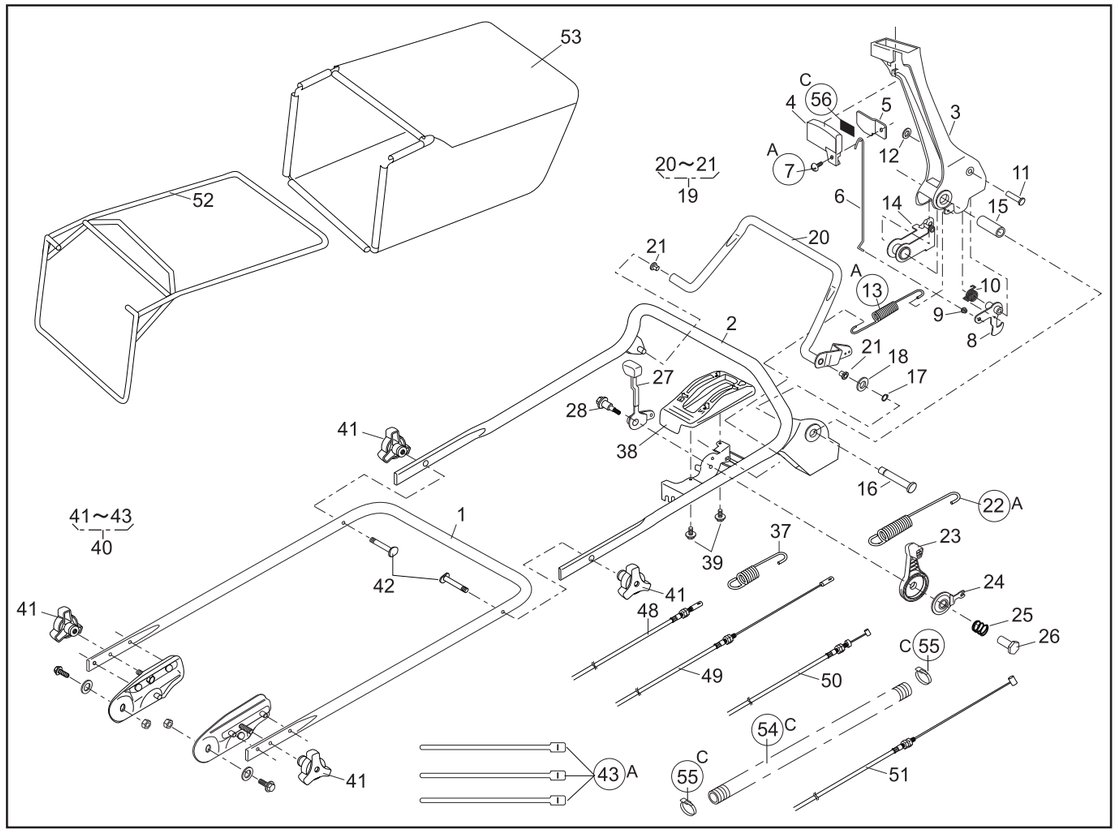


# PARTS LIST

P/L No. 46014-379-02

| NOTE | REF. No. | PARTS No. | PARTS NAME | HANDLE Q'TY | INCLUDING | | | PRICE( ) | 1/2 RECOMM.(%) Lot.100 | | Dec. 26. 2006 REMARKS |
|---|---|---|---|---|---|---|---|---|---|---|---|
| | 1 | 51027 146 | HANDLE | 1 | | | | | | | |
| | 2 | 51027 255 | HANDLE | 1 | | | | | | | |
| | 3 | 11095 172 | LEVER(BBC) | 1 | | | | | | | |
| | 4 | 36110 102 | BUTTON | 1 | | | | | | | |
| | 5 | 11049 109 | SLIDE PLATE | 1 | | | | | | | |
| | 6 | 64014 336 | SHAFT | 1 | | | | | | | |
| A | 7 | 376L 0612 | (+)TAPPING SCREW | 1 | | | | | | | |
| | 8 | 71203 135 | ARM C.P. | 1 | | | | | | | |
| | 9 | 76007 183 | BUSH | 1 | | | | | | | |
| | 10 | 68013 371 | SPRING | 1 | | | | | | | |
| | 11 | 31056 127 | GIB-HEADED PIN | 1 | | | | | | | |
| | 12 | 576V 0600 | PUSH NUT | 1 | | | | | | | |
| A | 13 | 68013 392 | SPRING | 1 | | | | | | | |
| | 14 | 11109 111 | LINK | 1 | | | | | | | |
| | 15 | 61023 190 | SLEEVE | 1 | | | | | | | |
| | 16 | 64014 337 | SHAFT | 1 | | | | | | | |
| | 17 | 812V 0800 | C-SNAP RING FOR SHAFT | 1 | | | | | | | |
| | 18 | 613L 0800 | WASHER | 1 | | | | | | | |
| | 19 | 71161 114 09 | LEVER ASSY | 1 | | | | | | | |
| | 20 | | LEVER | | 1 | | | | | | |
| | 21 | 76007 131 | BUSH | | 2 | | | | | | |
| A | 22 | 68013 391 | SPRING | 1 | | | | | | | |
| | 23 | 91010 194 | THROTTLE LEVER(FJ151V) | 1 | | | | | | | |
| | 24 | 61003 113 | THRUST PLATE | 1 | | | | | | | |
| | 25 | 68013 356 | SPRING | 1 | | | | | | | |
| | 26 | 31058 168 | NUT | 1 | | | | | | | |
| | 27 | 11095 117 | LEVER | 1 | | | | | | | |
| | 28 | 31062 109 | PRE-COAT LOCK BOLT | 1 | | | | | | | |

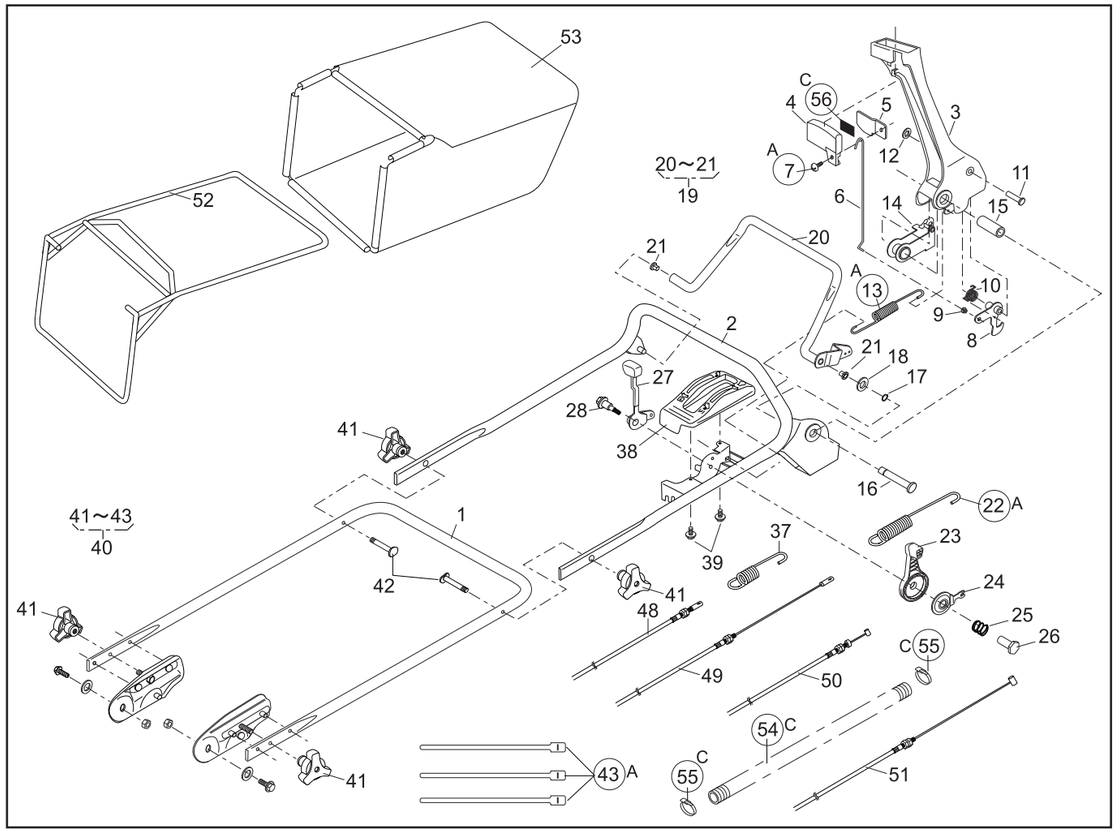


# PARTS LIST

P/L No. 46014-379-02

| NOTE | REF. No. | PARTS No. | PARTS NAME | HANDLE Q'TY | INCLUDING | | | PRICE( ) | 2/2 RECOMM.(%) Lot.100 | | Dec. 26. 2006 REMARKS |
|---|---|---|---|---|---|---|---|---|---|---|---|
| | 29 | | | | | | | | | | |
| | 30 | | | | | | | | | | |
| | 31 | | | | | | | | | | |
| | 32 | | | | | | | | | | |
| | 33 | | | | | | | | | | |
| | 34 | | | | | | | | | | |
| | 35 | | | | | | | | | | |
| | 36 | | | | | | | | | | |
| | 37 | 68013 161 | SPRING | 1 | | | | | | | |
| | 38 | 71900 796 | COVER ASSY | 1 | | | | | | | |
| | 39 | 470L 0514 | (+)TAPPING SCREW | 2 | | | | | | | |
| | 40 | 71052 119 | BOLT SET | 1 | | | | | | | |
| | 41 | 36061 118 | KNOB | | 4 | | | | | | |
| | 42 | 31057 134 | BOLT | | 2 | | | | | | |
| A | 43 | 68028 118 | WIRE BAND | | 3 | | | | | | |
| | 44 | | | | | | | | | | |
| | 45 | | | | | | | | | | |
| | 46 | | | | | | | | | | |
| | 47 | | | | | | | | | | |
| | 48 | 91003 125 | CONTROL CABLE | 1 | | | | | | | |
| | 49 | 91003 170 | CONTROL CABLE | 1 | | | | | | | |
| | 50 | 91001 337 | THROTTLE WIRE(FJ151V) | 1 | | | | | | | |
| | 51 | 91003 177 | CONTROL CABLE(BBC) | 1 | | | | | | | |
| | 52 | 11062 174 | FRAME C.P. | 1 | | | | | | | |
| | 53 | 36098 146 | GRASS BAG C.P.(ISEKI) | 1 | | | | | | | |
| C | 54 | 41003 201 | TUBE (15.6x800L) | 1 | | | | | | | |
| C | 55 | 68028 119 | WIRE BAND | 2 | | | | | | | |
| C | 56 | 36080 156 | RUBBER SHEET | 1 | | | | | | | |

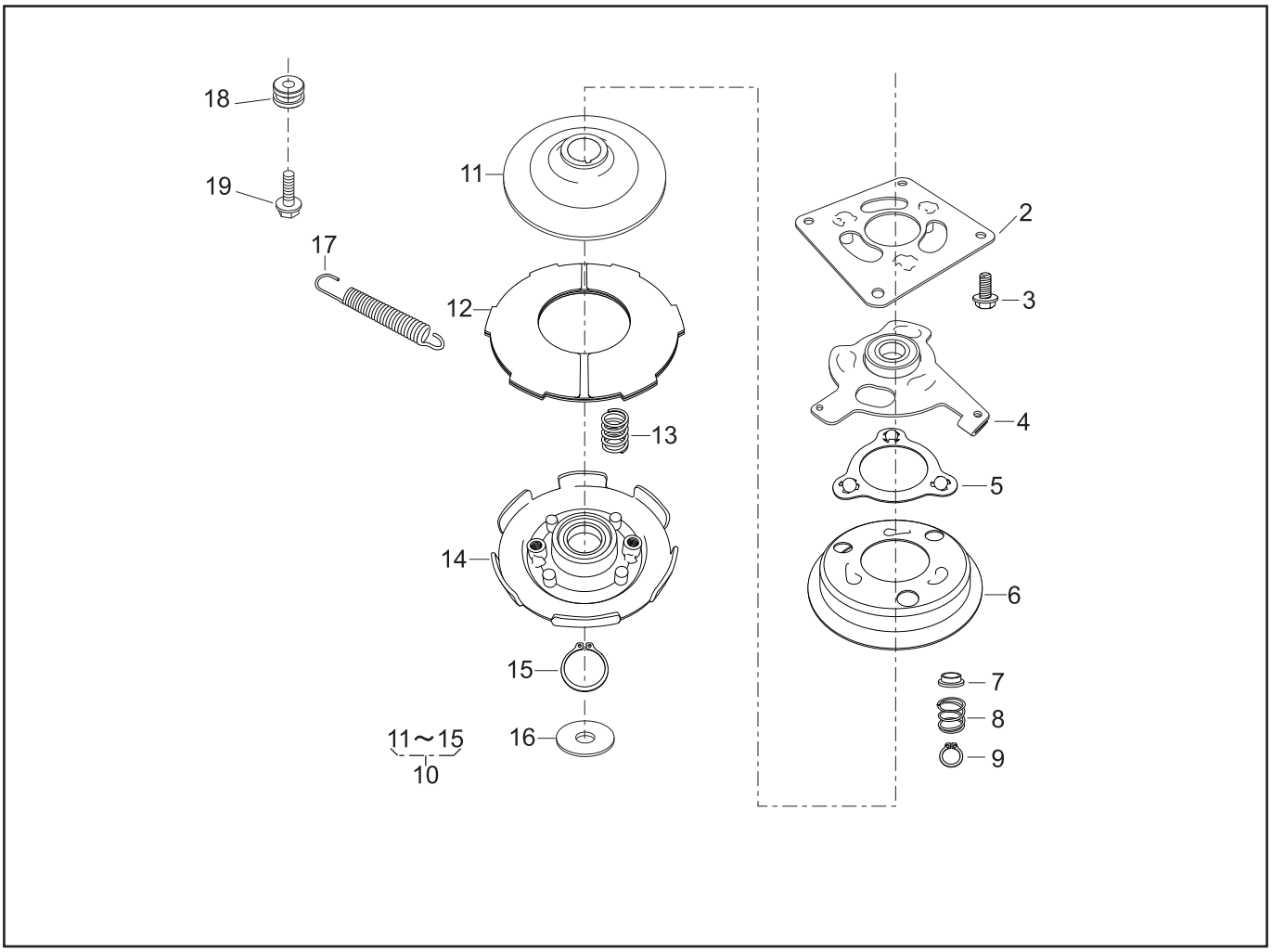


# PARTS LIST

## BRAKE ASS'Y (71067-116)

46014-387-02

| REF. No. | PARTS No. | PARTS NAME | BBC Q'TY | INCLUDING | | | PRICE( ) | 1/1 RECOMM.(%) Lot.100 | | 14. Apr. 2006 REMARKS |
|---|---|---|---|---|---|---|---|---|---|---|
| 1 | 71067 116 | BRAKE ASS'Y | 1 | | | | | - | | |
| 2 | 11006 158 | STAY C.P. | | 1 | | | | 3 | | |
| 3 | 335L 0818 | HEXAGON BOLT | | 4 | | | | 3 | | |
| 4 | 11107 116 | SWING ARM | | 1 | | | | 5 | | |
| 5 | 11106 107 | RETAINER | | 1 | | | | 10 | | |
| 6 | 11105 104 | BRAKE DRUM | | 1 | | | | 5 | | |
| 7 | 76007 197 | BUSH | | 3 | | | | 5 | | |
| 8 | 68013 378 | SPRING | | 3 | | | | 3 | | |
| 9 | 812V 1200 | C-SNAP RING | | 3 | | | | 3 | | |
| 10 | 71906 222 | BLADE HOLDER ASS'Y | | 1 | | | | - | | |
| 11 | 11096 102 | CLUTCH DISK | | | 1 | | | 3 | | |
| 12 | 68059 104 | FRICTION PLATE | | | 1 | | | 10 | | |
| 13 | 68013 379 | SPRING | | | 4 | | | 3 | | |
| 14 | 11108 101 | BLADE HOLDER | | | 1 | | | 5 | | |
| 15 | 812V 3000 | C-SNAP RING | | | 1 | | | 3 | | |
| 16 | 68036 174 | WASHER | | 1 | | | | 3 | | |
| 17 | 68013 380 | SPRING | | 1 | | | | 3 | | |
| 18 | 11083 270 | COLLAR | | 1 | | | | 3 | | |
| 19 | 342L 0620 | FLANGE TAPPING BOLT | | 1 | | | | 3 | | |
| 20 | | | | | | | | | | |
| 21 | | | | | | | | | | |
| 22 | | | | | | | | | | |
| 23 | | | | | | | | | | |
| 24 | | | | | | | | | | |
| 25 | | | | | | | | | | |
| 26 | | | | | | | | | | |
| 27 | | | | | | | | | | |
| 28 | | | | | | | | | | |

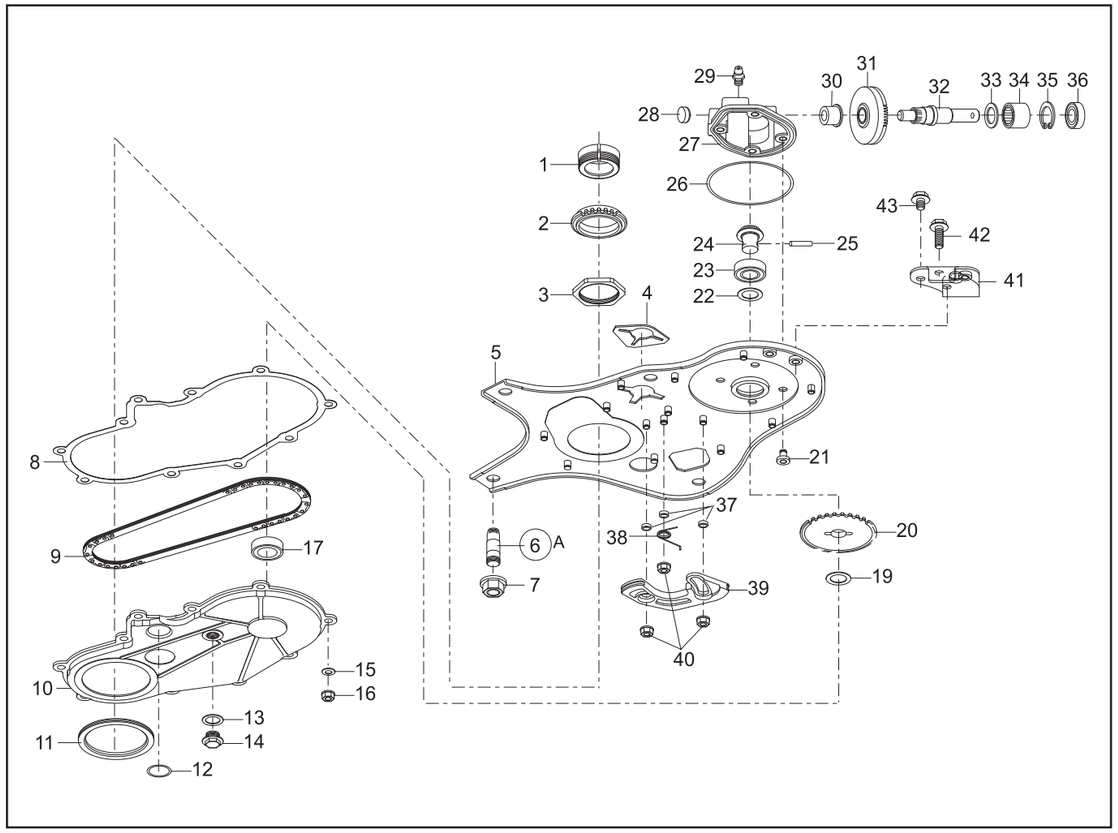


# PARTS LIST

P/L No. 46014-388-01

| NOTE | REF. No. | PARTS No. | PARTS NAME | Drive Shaft Unit Q'TY | INCLUDING | PRICE( ) | 1/2 RECOMM.(%) Lot.100 | REMARKS |
|---|---|---|---|---|---|---|---|---|
| | 1 | 51113 120 | RING | 1 | | | | |
| | 2 | 36112 146 | SPROCKET | 1 | | | | |
| | 3 | 31058 173 | HEXAGON NUT | 1 | | | | |
| | 4 | 61019 232 | PACKING | 1 | | | | |
| | 5 | 11137 132 | BASE C.P. | 1 | | | | |
| A | 6 | 31039 141 | STUD | 4 | | | | |
| | 7 | 579L 1000 | FLANGE NUT | 4 | | | | |
| | 8 | 61019 233 | PACKING | 1 | | | | |
| | 9 | 91074 136 | CHAIN | 1 | | | | |
| | 10 | 51141 102 | CHAIN CASE | 1 | | | | |
| | 11 | 76007 196 | BUSH | 1 | | | | |
| | 12 | 214B 1600 | O-RING | 1 | | | | |
| | 13 | 68001 110 | FIBER WASHER | 1 | | | | |
| | 14 | 31057 262 | HEXAGON BOLT | 1 | | | | |
| | 15 | 68062 112 | CONED DISC SPRING | 11 | | | | |
| | 16 | 579L 0500 | FLANGE NUT | 11 | | | | |
| | 17 | 913B 6901 | BEARING | 1 | | | | |
| | 18 | | | | | | | |
| | 19 | 68036 291 | WASHER | 1 | | | | |
| | 20 | 36112 145 | SPROCKET | 1 | | | | |
| | 21 | 31062 177 | PRE-COAT LOCK BOLT | 4 | | | | |
| | 22 | 68036 291 | WASHER | 1 | | | | |
| | 23 | 916B 6901 | BEARING | 1 | | | | |
| | 24 | 78002 207 | BEVEL PINION | 1 | | | | |
| | 25 | 31034 192 | PIN | 1 | | | | |
| | 26 | 214B 6300 | O-RING | 1 | | | | |
| | 27 | 51001 301 | GEAR CASE | 1 | | | | |
| | 28 | 91033 140 | BLIND COVER | 1 | | | | |

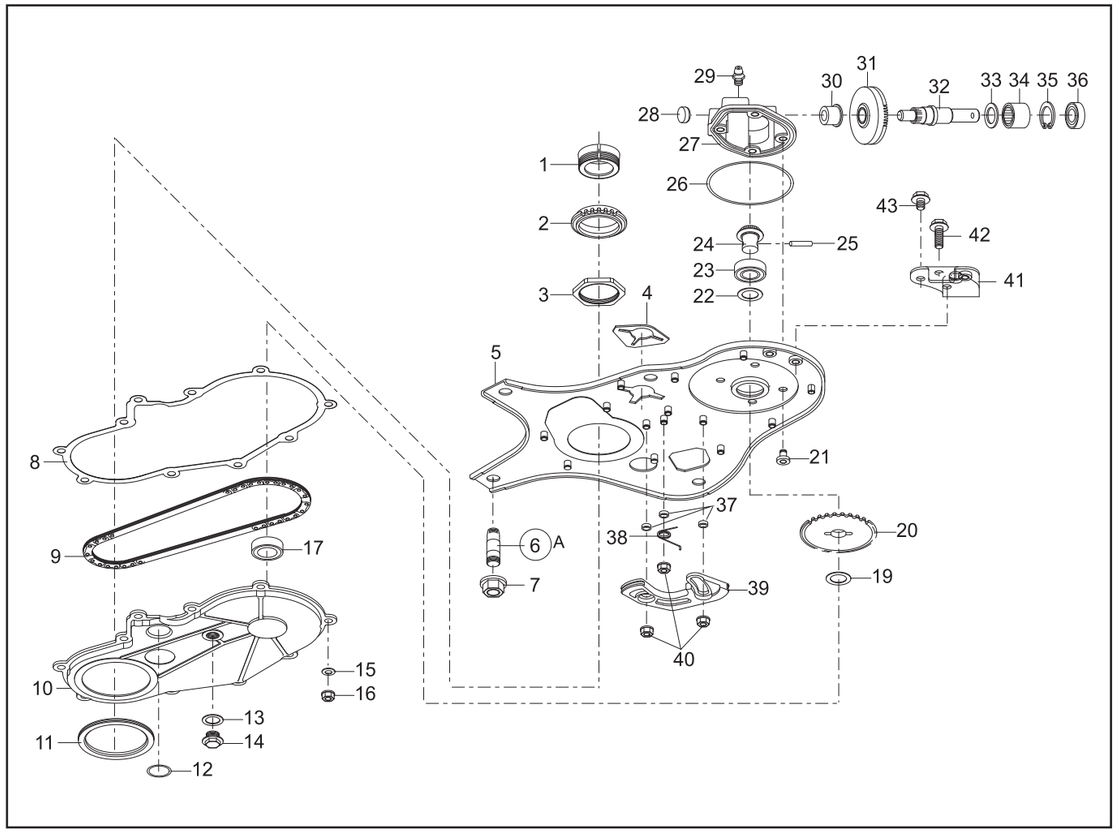


# PARTS LIST

P/L No. 46014-388-01

| NOTE | REF. No. | PARTS No. | PARTS NAME | Drive Shaft Unit Q'TY | INCLUDING | PRICE( ) | 2/2 RECOMM.(%) Lot.100 | REMARKS |
|---|---|---|---|---|---|---|---|---|
| | 29 | 91031 102 | GREASE NIPPLE | 1 | | | | |
| | 30 | 76007 194 | BUSH | 1 | | | | |
| | 31 | 78001 171 | BEVEL GEAR | 1 | | | | |
| | 32 | 64001 188 | SPLINE SHAFT | 1 | | | | |
| | 33 | 68036 291 | WASHER | 1 | | | | |
| | 34 | 937B 121912 | BEARING | 1 | | | | |
| | 35 | 811V 2000 | C-SNAP RING | 1 | | | | |
| | 36 | 61002 202 | OIL SEAL | 1 | | | | |
| | 37 | 76007 195 | BUSH | 3 | | | | |
| | 38 | 68013 388 | SPRING | 1 | | | | |
| | 39 | 51104 159 | GUIDE | 1 | | | | |
| | 40 | 579L 0500 | FLANGE NUT | 3 | | | | |
| | 41 | 11006 163 | STAY C.P. | 1 | | | | |
| | 42 | 342L 0630 | FLANGE BOLT TAPPING | 1 | | | | |
| | 43 | 335L 0612 | FLANGE BOLT | 2 | | | | |
| | 44 | | | | | | | |
| | 45 | | | | | | | |
| | 46 | | | | | | | |
| | 47 | | | | | | | |
| | 48 | | | | | | | |
| | 49 | | | | | | | |
| | 50 | | | | | | | |
| | 51 | | | | | | | |
| | 52 | | | | | | | |
| | 53 | | | | | | | |
| | 54 | | | | | | | |
| | 55 | | | | | | | |
| | 56 | | | | | | | |

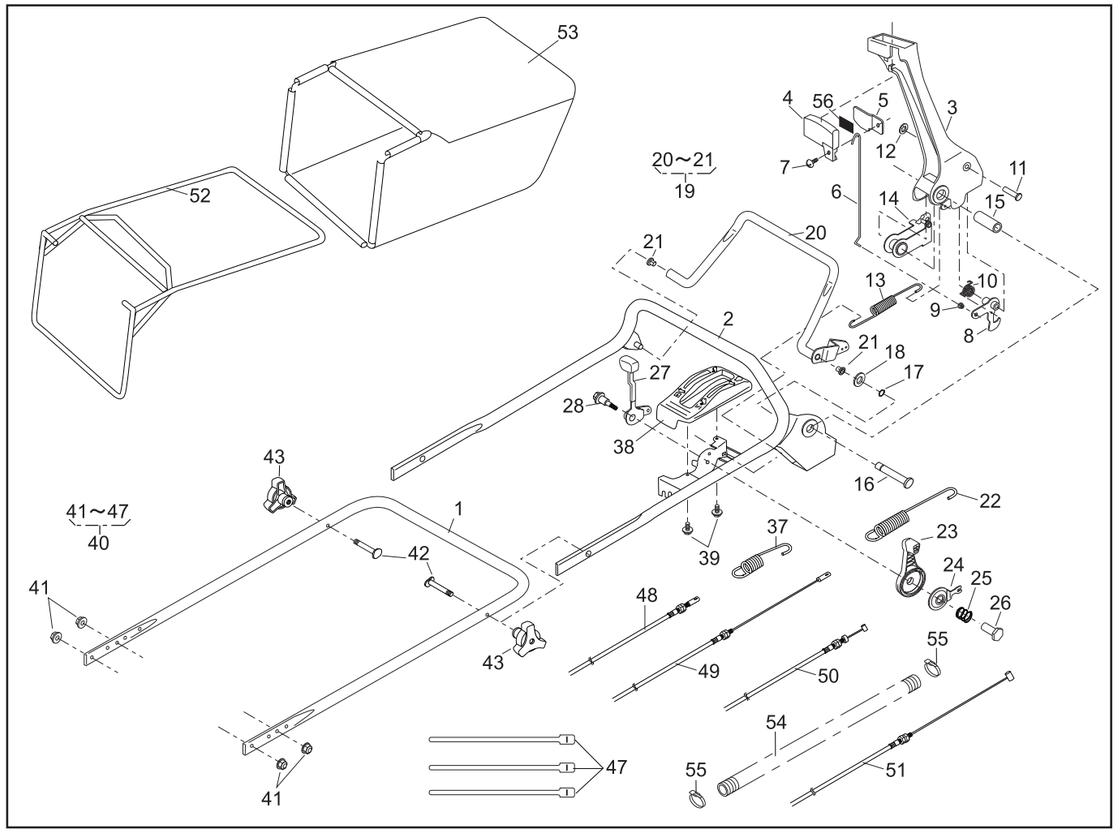


# PARTS LIST

P/L No. 46014-469-00

| REF. No. | PARTS No. | PARTS NAME | HANDLE Q'TY | INCLUDING | | | PRICE( ) | 1/2 RECOMM.(%) Lot.100 | | Dec. 25, 2006 REMARKS |
|---|---|---|---|---|---|---|---|---|---|---|
| 1 | 51027 254 | HANDLE | 1 | | | | | | | |
| 2 | 51027 255 | HANDLE | 1 | | | | | | | |
| 3 | 11095 172 | LEVER (BBC) | 1 | | | | | | | |
| 4 | 36110 102 | BUTTON | 1 | | | | | | | |
| 5 | 11049 109 | SLIDE PLATE | 1 | | | | | | | |
| 6 | 64014 336 | SHAFT | 1 | | | | | | | |
| 7 | 376L 0612 | (+)TRUSS SCREW | 1 | | | | | | | |
| 8 | 71203 135 | ARM C.P. | 1 | | | | | | | |
| 9 | 76007 183 | BUSH | 1 | | | | | | | |
| 10 | 68013 371 | SPRING | 1 | | | | | | | |
| 11 | 31056 127 | GIB-HEADED PIN | 1 | | | | | | | |
| 12 | 576V 0600 | PUSH NUT | 1 | | | | | | | |
| 13 | 68013 392 | SPRING | 1 | | | | | | | |
| 14 | 11109 111 | LINK | 1 | | | | | | | |
| 15 | 61023 190 | SLEEVE | 1 | | | | | | | |
| 16 | 64014 337 | SHAFT | 1 | | | | | | | |
| 17 | 812V 0800 | C-SNAP RING | 1 | | | | | | | |
| 18 | 613L 0800 | PLAINE WASHER | 1 | | | | | | | |
| 19 | 71161 114 09 | LEVER ASS'Y | 1 | | | | | | | |
| 20 | | LEVER | | 1 | | | | | | |
| 21 | 76007 131 | BUSH | | 2 | | | | | | |
| 22 | 68013 391 | SPRING | 1 | | | | | | | |
| 23 | 91010 169 | THROTTLE LEVER (GXV120/GXV160) | 1 | | | | | | | |
| 24 | 61003 113 | THRUST PLATE | 1 | | | | | | | |
| 25 | 68013 356 | SPRING | 1 | | | | | | | |
| 26 | 31058 168 | HEXAGON NUT | 1 | | | | | | | |
| 27 | 11095 117 | LEVER | 1 | | | | | | | |
| 28 | 31062 109 | PRE-COAT LOCK BOLT | 1 | | | | | | | |
| 29 | | | | | | | | | | |
| 30 | | | | | | | | | | |

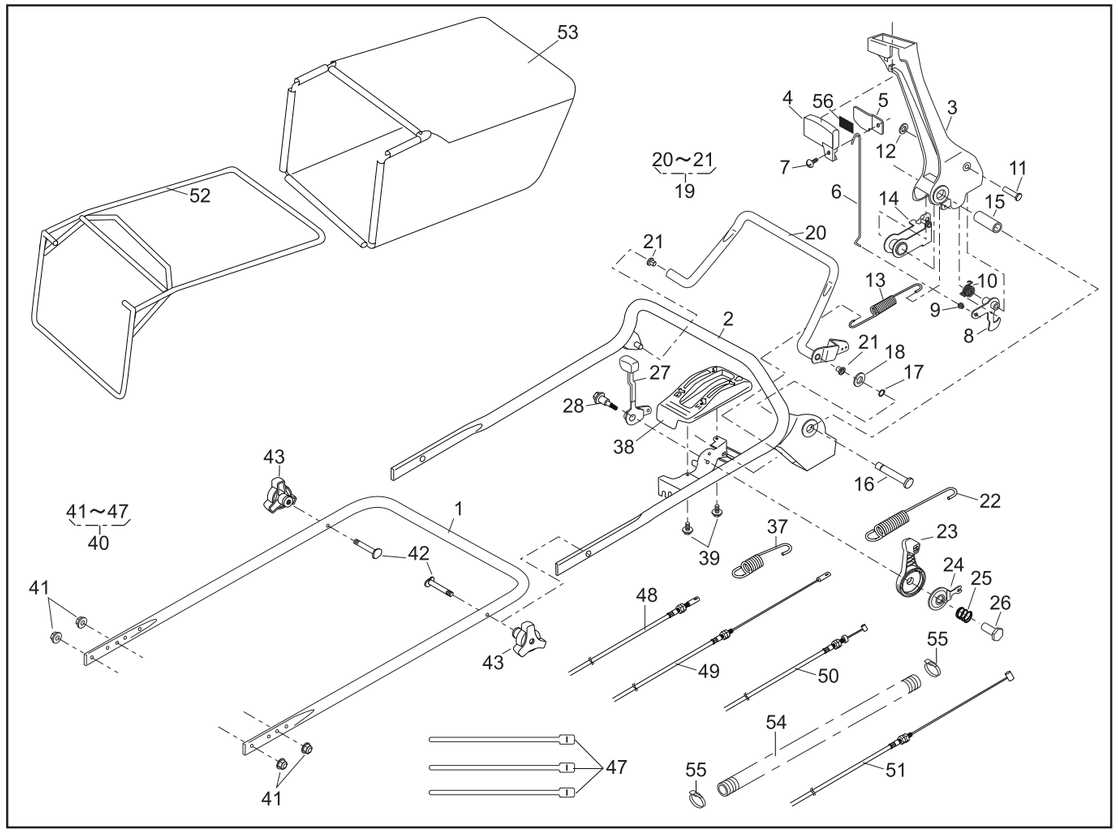


# PARTS LIST

P/L No. 46014-469-00

| REF. No. | PARTS No. | PARTS NAME | HANDLE Q'TY | INCLUDING | | | PRICE( ) | 2/2 RECOMM.(%) Lot.100 | | Dec. 25, 2006 REMARKS |
|---|---|---|---|---|---|---|---|---|---|---|
| 31 | | | | | | | | | | |
| 32 | | | | | | | | | | |
| 33 | | | | | | | | | | |
| 34 | | | | | | | | | | |
| 35 | | | | | | | | | | |
| 36 | | | | | | | | | | |
| 37 | 68013 161 | SPRING | 1 | | | | | | | |
| 38 | 71900 796 | COVER ASS'Y | 1 | | | | | | | |
| 39 | 470L 0514 | (+)TAPPING SCREW | 2 | | | | | | | |
| 40 | 71900 895 | BOLT SET | 1 | | | | | | | |
| 41 | 569L 0800 | FLANGE NYLON NUT | | 4 | | | | | | |
| 42 | 31057 134 | HEXAGON BOLT | | 2 | | | | | | |
| 43 | 36061 118 | KNOB | | 2 | | | | | | |
| 44 | | | | | | | | | | |
| 45 | | | | | | | | | | |
| 46 | | | | | | | | | | |
| 47 | 68028 118 | WIRE BAND | | 3 | | | | | | |
| 48 | 91003 125 | CONTROL CABLE | 1 | | | | | | | |
| 49 | 91003 170 | CONTROL CABLE | 1 | | | | | | | |
| 50 | 91001 329 | THROTTLE WIRE (GXV120/GXV160) | 1 | | | | | | | |
| 51 | 91003 169 | CONTROL CABLE (BBC) | 1 | | | | | | | |
| 52 | 11062 178 | FRAME C.P. | 1 | | | | | | | |
| 53 | 36098 145 | GRASS BAG C.P. (ISEKI) | 1 | | | | | | | |
| 54 | 41003 201 | TUBE (15.6x800L) | 1 | | | | | | | |
| 55 | 68028 119 | WIRE BAND | 2 | | | | | | | |
| 56 | 36080 156 | RUBBER SHEET | 1 | | | | | | | |
| 57 | | | | | | | | | | |
| 58 | | | | | | | | | | |
| 59 | | | | | | | | | | |
| 60 | | | | | | | | | | |

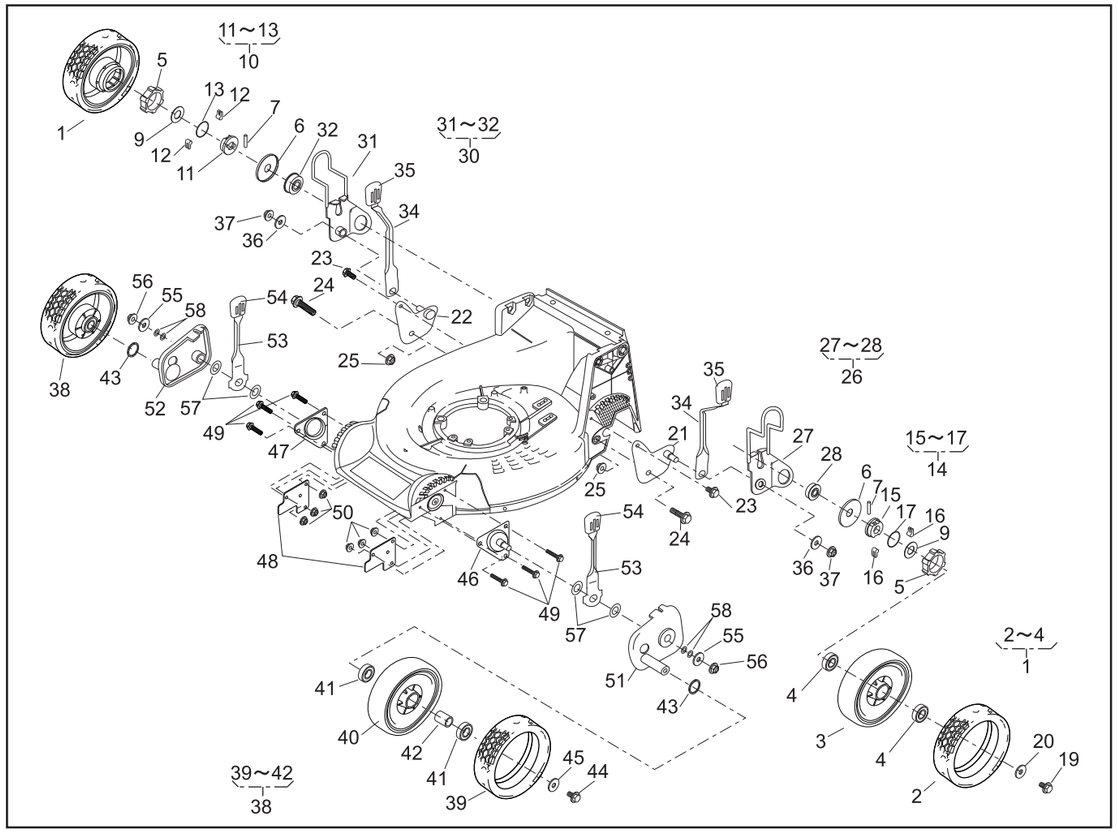


# PARTS LIST

P/L No. 46014-503-00

| NOTE | REF. No. | PARTS No. | PARTS NAME | 8"AI-WHEEL Q'TY | INCLUDING | | | PRICE( ) | 1/2 RECOMM.(%) Lot.100 | | Dec. 25, 2006 REMARKS |
|---|---|---|---|---|---|---|---|---|---|---|---|
| | 1 | 71041 136 | WHEEL ASSY(A.W.) | 2 | | | | | | | |
| | 2 | 91086 113 | TIRE | | 2 | | | | | | |
| | 3 | | WHEEL | | 2 | | | | | | |
| | 4 | 916B 6002 | BEARING | | 4 | | | | | | |
| | 5 | 11086 119 | STOPPER | 2 | | | | | | | |
| | 6 | 61003 112 | THRUST PLATE | 2 | | | | | | | |
| | 7 | 31034 137 | PIN | 2 | | | | | | | |
| | 8 | | | | | | | | | | |
| | 9 | 68036 146 | WASHER | 2 | | | | | | | |
| | 10 | 71158 101 | RATCHET ASSY(R) | 1 | | | | | | | |
| | 11 | 11102 138 | HOLDER | | 1 | | | | | | |
| | 12 | 31034 170 | PIN | | 2 | | | | | | |
| | 13 | 68013 266 | SPRING | | 1 | | | | | | |
| | 14 | 71158 102 | RATCHET ASSY(L) | 1 | | | | | | | |
| | 15 | 11102 138 | HOLDER | | 1 | | | | | | |
| | 16 | 31034 170 | PIN | | 2 | | | | | | |
| | 17 | 68013 266 | SPRING | | 1 | | | | | | |
| | 18 | | | | | | | | | | |
| | 19 | 31057 181 | HEXAGON BOLT | 2 | | | | | | | |
| | 20 | 68036 101 | WASHER | 2 | | | | | | | |
| | 21 | 11006 151 | STAY C.P.(RL) | 1 | | | | | | | |
| | 22 | 11006 152 | STAY C.P.(RR) | 1 | | | | | | | |
| | 23 | 342L 0612 | FLANGE BOLT TAPPING | 2 | | | | | | | |
| | 24 | 31057 255 | HEXAGON BOLT | 2 | | | | | | | |
| | 25 | 584L 0800 | U-FLANGE NUT | 2 | | | | | | | |
| | 26 | 71122 112 | ADJUSTER ASSY(L) | 1 | | | | | | | |
| | 27 | 11142 131 | ADJUSTER(RL) | | 1 | | | | | | |
| | 28 | 945L 0349 | BEARING | | 1 | | | | | | |
| | 29 | | | | | | | | | | |
| | 30 | 71122 113 | ADJUSTER ASSY(R) | 1 | | | | | | | |

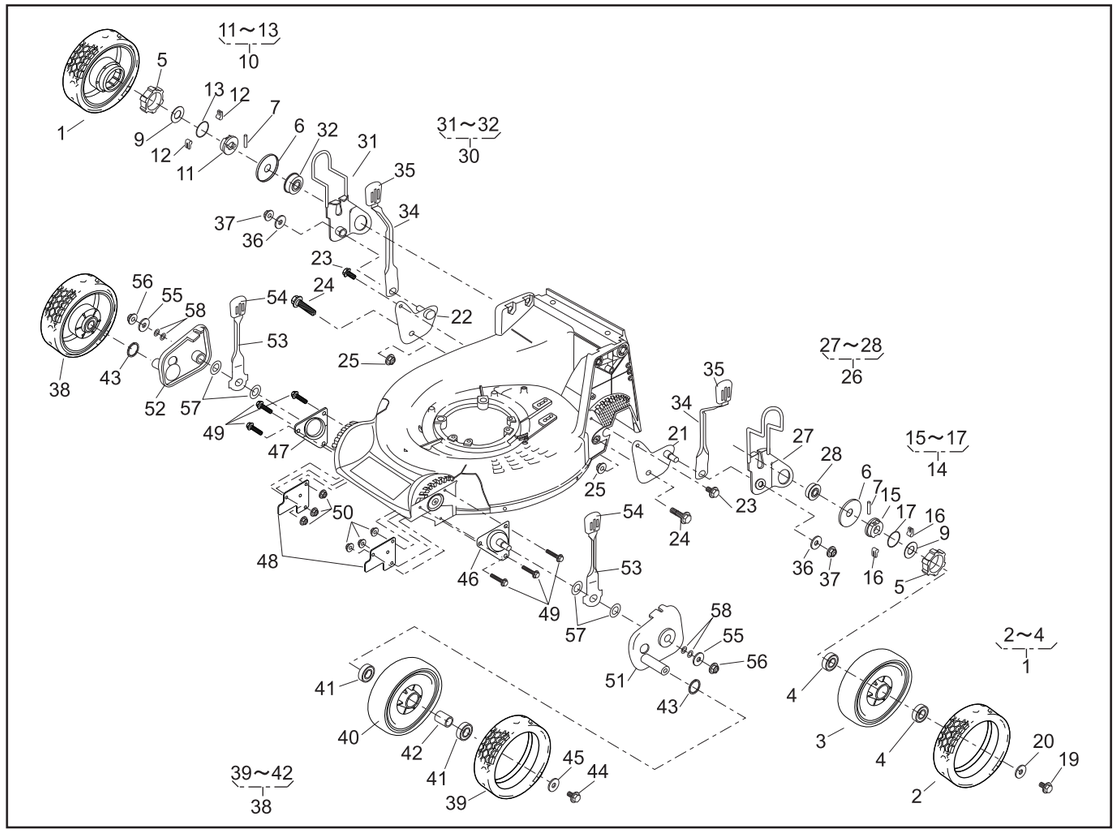


# PARTS LIST

P/L No. 46014-503-00

| NOTE | REF. No. | PARTS No. | PARTS NAME | 8"AI-WHEEL Q'TY | INCLUDING | | | PRICE( ) | 2/2 RECOMM.(%) Lot.100 | | Dec. 25, 2006 REMARKS |
|---|---|---|---|---|---|---|---|---|---|---|---|
| | 31 | 11142 132 | ADJUSTER(RR) | | 1 | | | | | | |
| | 32 | 945L 0349 | BEARING | | 1 | | | | | | |
| | 33 | | | | | | | | | | |
| | 34 | 11150 105 09 | ADJUST LEVER | 2 | | | | | | | |
| | 35 | 36061 121 | KNOB | 2 | | | | | | | |
| | 36 | 613L 0800 | WASHER | 2 | | | | | | | |
| | 37 | 569L 0800 | FLANGE NYLON NUT | 2 | | | | | | | |
| | 38 | 71041 135 | WHEEL ASSY(A.W.) | 2 | | | | | | | |
| | 39 | 91086 113 | TIRE | | 2 | | | | | | |
| | 40 | | WHEEL | | 2 | | | | | | |
| | 41 | 916B 6002 | BEARING | | 4 | | | | | | |
| | 42 | 11083 332 | COLLAR | | 2 | | | | | | |
| | 43 | 51113 119 | RING | 2 | | | | | | | |
| | 44 | 31057 181 | HEXAGON BOLT | 2 | | | | | | | |
| | 45 | 68036 101 | WASHER | 2 | | | | | | | |
| | 46 | 11006 153 | STAY C.P.(FL) | 1 | | | | | | | |
| | 47 | 11006 154 | STAY C.P.(FR) | 1 | | | | | | | |
| | 48 | 11113 409 | STAY | 2 | | | | | | | |
| | 49 | 335L 0625 | FLANGE BOLT | 6 | | | | | | | |
| | 50 | 569L 0600 | FLANGE NYLON NUT | 6 | | | | | | | |
| | 51 | 11142 129 | ADJUSTER(FL) | 1 | | | | | | | |
| | 52 | 11142 130 | ADJUSTER(FR) | 1 | | | | | | | |
| | 53 | 11150 109 09 | ADJUST LEVER | 2 | | | | | | | |
| | 54 | 36061 121 | KNOB | 2 | | | | | | | |
| | 55 | 68036 101 | WASHER | 2 | | | | | | | |
| | 56 | 584L 0800 | U-FLANGE NUT | 2 | | | | | | | |
| | 57 | 68013 393 | SPRING | 4 | | | | | | | |
| | 58 | 68007 105 | SHIM | 0~4 | | | | | | | |
| | 59 | | | | | | | | | | |
| | 60 | | | | | | | | | | |

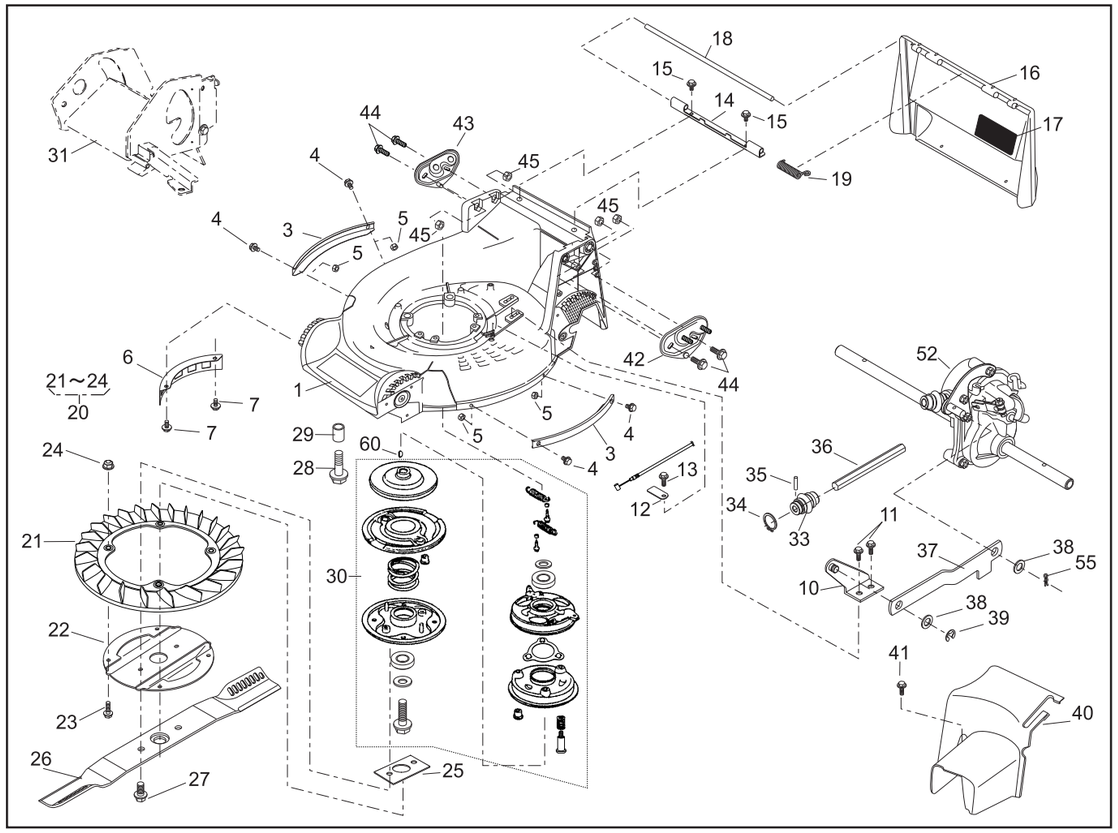


# PARTS LIST

P/L No. 46014-535-00

| NOTE | REF. No. | PARTS No. | PARTS NAME | GRASS-CUTTING Q'TY | INCLUDING | | | PRICE( ) | 1/2 RECOMM.(%) Lot.100 | | Dec. 25, 2006 REMARKS |
|---|---|---|---|---|---|---|---|---|---|---|---|
| | 1 | 51043 151 42 | HOUSING | 1 | | | | | | | |
| | 2 | | | | | | | | | | |
| | 3 | 51090 117 09 | PROTECTOR | 2 | | | | | | | |
| | 4 | 335L 0616 | FLANGE BOLT | 4 | | | | | | | |
| | 5 | 512L 0600 | HEXAGON NUT | 4 | | | | | | | |
| | 6 | 36065 180 | COVER | 1 | | | | | | | |
| | 7 | 342L 0612 | FLANGE TAPPING BOLT | 2 | | | | | | | |
| | 8 | | | | | | | | | | |
| | 9 | | | | | | | | | | |
| | 10 | 11006 155 | STAY C.P. | 1 | | | | | | | |
| | 11 | 342L 0612 | FLANGE TAPPING BOLT | 2 | | | | | | | |
| | 12 | 11113 407 | STAY | 1 | | | | | | | |
| | 13 | 342L 0612 | FLANGE TAPPING BOLT | 1 | | | | | | | |
| | 14 | 11113 292 | STAY | 1 | | | | | | | |
| | 15 | 342L 0612 | FLANGE TAPPING BOLT | 2 | | | | | | | |
| | 16 | 36068 196 46 | GUARD | 1 | | | | | | | |
| | 17 | 36080 149 | RUBBER SHEET | 1 | | | | | | | |
| | 18 | 64014 324 | SHAFT | 1 | | | | | | | |
| | 19 | 68013 336 | SPRING | 1 | | | | | | | |
| | 20 | 71082 111 | FAN ASS'Y | 1 | | | | | | | |
| | 21 | 51125 103 | FAN | | 1 | | | | | | |
| | 22 | 11102 151 | HOLDER | | 1 | | | | | | |
| | 23 | 31062 169 | PRE-COAT LOCK BOLT | | 4 | | | | | | |
| | 24 | 579L 0600 | FLANGE NUT | | 4 | | | | | | |
| | 25 | 61024 208 | SPACER | 1 | | | | | | | |
| | 26 | 91014 188 | BLADE | 1 | | | | | | | |
| | 27 | 31057 197 | HEXAGON BOLT | 2 | | | | | | | |
| | 28 | 31057 243 | HEXAGON BOLT | 4 | | | | | | | |
| | 29 | 61024 142 | SPACER | 3 | | | | | | | |
| | 30 | 71067 106 | BRAKE ASS'Y | 1 | | | | | | | |

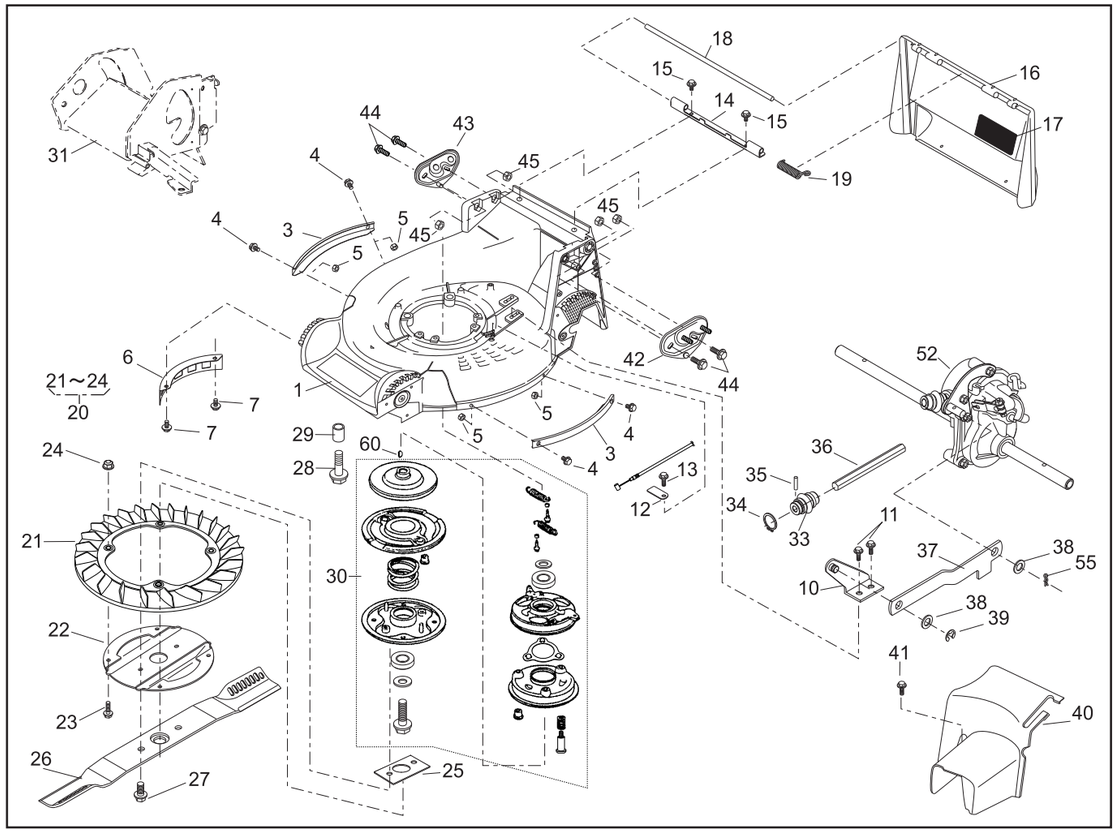


# PARTS LIST

P/L No. 46014-535-00

| NOTE | REF. No. | PARTS No. | PARTS NAME | GRASS-CUTTING Q'TY | INCLUDING | | | PRICE( ) | 2/2 RECOMM.(%) Lot.100 | | Dec. 25, 2006 REMARKS |
|---|---|---|---|---|---|---|---|---|---|---|---|
| | 31 | | COVER UNIT (Ref. P/L No. 46012-550-**) | | | | | | | | |
| | 32 | | | | | | | | | | |
| | 33 | 91097 101 | UNIVERSAL JOINT | 1 | | | | | | | |
| | 34 | 812V 2000 | C-SNAP RING | | 1 | | | | | | |
| | 35 | 717B 0418 | PARALLEL PIN | | 1 | | | | | | |
| | 36 | 64014 358 | SHAFT | 1 | | | | | | | |
| | 37 | 91049 135 | CONNECTOR | 1 | | | | | | | |
| | 38 | 68036 280 | WASHER | 2 | | | | | | | |
| | 39 | 816V 0800 | E-SNAP RING | 1 | | | | | | | |
| | 40 | 36065 438 | COVER | 1 | | | | | | | |
| | 41 | 342L 0616 | FLANGE TAPPING BOLT | 1 | | | | | | | |
| | 42 | 51116 149 | HANDLE BRACKET(L) | 1 | | | | | | | |
| | 43 | 51116 150 | HANDLE BRACKET(R) | 1 | | | | | | | |
| | 44 | 31057 255 | HEXAGON BOLT | 4 | | | | | | | |
| | 45 | 512L 0800 | HEXAGON NUT | 4 | | | | | | | |
| | 46 | | | | | | | | | | |
| | 47 | | | | | | | | | | |
| | 48 | | | | | | | | | | |
| | 49 | | | | | | | | | | |
| | 50 | | | | | | | | | | |
| | 51 | | | | | | | | | | |
| | 52 | 71008 275 | GEAR CASE ASS'Y | 1 | | | | | | | |
| | 53 | | | | | | | | | | |
| | 54 | | | | | | | | | | |
| | 55 | 733L 1000 | SNAP PIN | 1 | | | | | | | |
| | 56 | | | | | | | | | | |
| | 57 | | | | | | | | | | |
| | 58 | | | | | | | | | | |
| | 59 | 122040 | ENGINE:HONDA GXV160H2-SFL1-NH1 | 1 | | | | | | | |
| | 60 | | WOODRUFF KEY | 1 | | | | | | | |

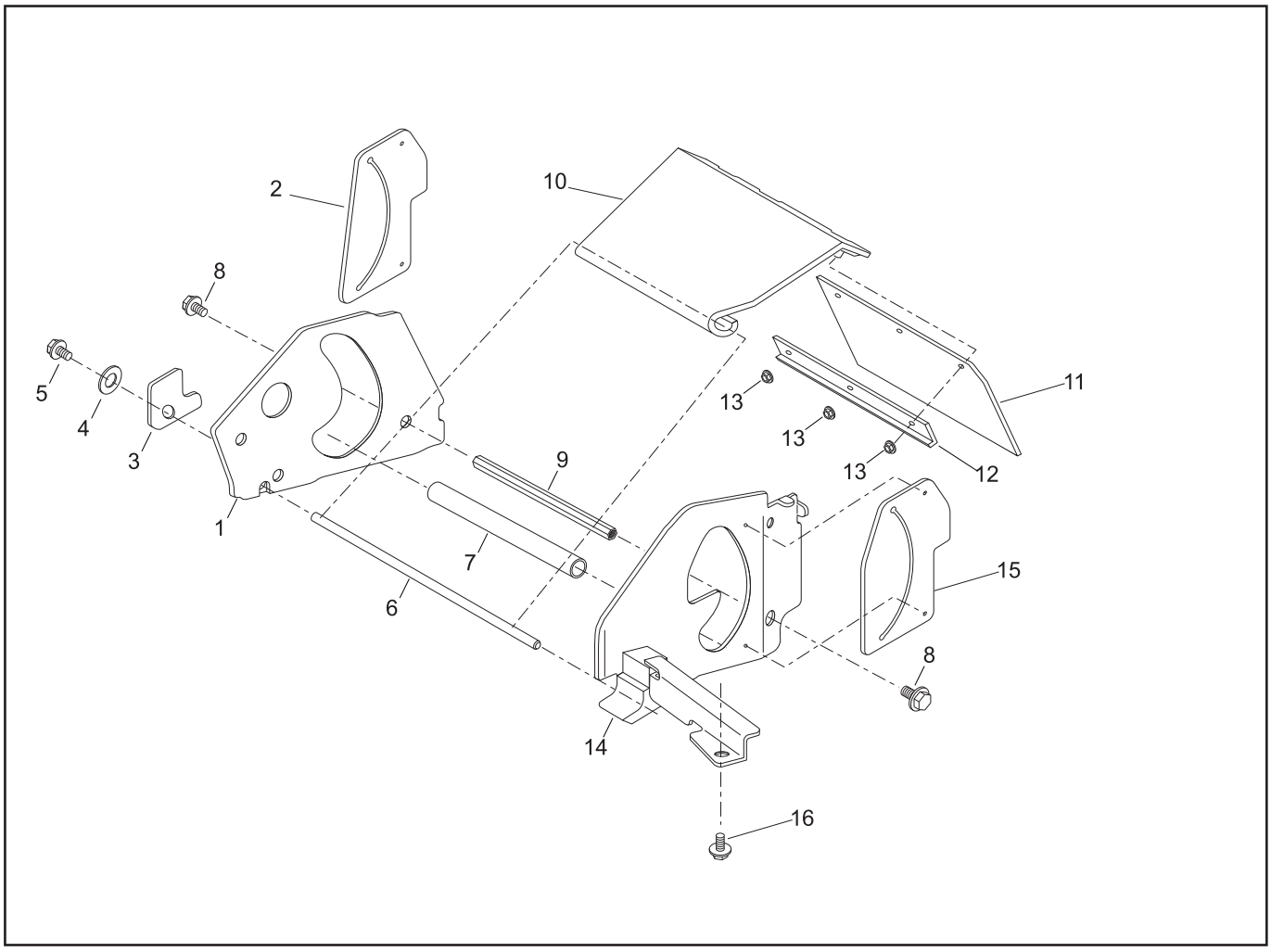


# PARTS LIST

## COVER UNIT (for 51043-151)

P/L No. 46014-550-00

| NOTE | REF. No. | PARTS No. | PARTS NAME | COVER UNIT Q'TY | INCLUDING | PRICE( ) | 1/1 RECOMM.(%) Lot.100 | Dec. 25. 2006 REMARKS |
|---|---|---|---|---|---|---|---|---|
| | 1 | 11006 166 | STAY C.P. | 1 | | | | |
| | 2 | 36080 154 | RUBBER SHEET | 1 | | | | |
| | 3 | 11113 420 | STAY | 1 | | | | |
| | 4 | 613L 0800 | PLAIN WASHER | 1 | | | | |
| | 5 | 423U 0812 | SOCKET SCREW FLANGE | 1 | | | | |
| | 6 | 64014 373 | SHAFT | 1 | | | | |
| | 7 | 11083 387 | COLLAR | 1 | | | | |
| | 8 | 31057 181 | HEXAGON BOLT | 2 | | | | |
| | 9 | 64014 374 | SHAFT | 1 | | | | |
| | 10 | 51079 124 | COVER C.P. | 1 | | | | |
| | 11 | 36080 153 | RUBBER SHEET | 1 | | | | |
| | 12 | 11050 182 | FIXING PLATE | 1 | | | | |
| | 13 | 569L 0400 | FLANGE NYLON NUT | 3 | | | | |
| | 14 | 11006 167 | STAY C.P. | 1 | | | | |
| | 15 | 36080 155 | RUBBER SHEET | 1 | | | | |
| | 16 | 342L 0612 | FLANGE TAPPING BOLT | 1 | | | | |
| | 17 | | | | | | | |
| | 18 | | | | | | | |
| | 19 | | | | | | | |
| | 20 | | | | | | | |
| | 21 | | | | | | | |
| | 22 | | | | | | | |
| | 23 | | | | | | | |
| | 24 | | | | | | | |
| | 25 | | | | | | | |
| | 26 | | | | | | | |
| | 27 | | | | | | | |
| | 28 | | | | | | | |