# Directions for use of Parts Catalogue

## 1. Applicable model of machines

All component and option parts used for SW521 Mower are listed in this parts catalogue.

Description of type of machines and particulars

| Type of Machines | Section | Engines | | |
|---|---|---|---|---|
| | | FC150V AB02 EB02 | FC150V AB03 FB03 GB03 | FC150V EB05 |
| SW521 | B | ○ | | |
| | BE01 | ○ | | |
| | E01 | | | ○ |
| | GB | | ○ | |
| | GBE01 | | ○ | |

Note : When you place an order for apare parts, please check and specify the Engine Model of your machine.

## 2. Explanation for head paragraph

K500-101

| KEY Réf. | PART CODE Pièces No. | DESCRIPTION | Désignation | QTY Quant. | TYPE OF MODEL Modèl FC150V AB03 | FC150V FB03 | FC150V GB03 | ITC | COL | GRP | REMARKS Remarques |
|---|---|---|---|---|---|---|---|---|---|---|---|
| 1 | 5130-702-077-XX | GUIDE | Guide | 1 | * | * | * | | | | 130702077 |
| 2 | 5510-012-214-XX | TANK-COMP-FUEL | Reservoir | 1 | * | * | * | | | | 510012214 |
| 3 | 5510-482-069-XX | CAP-ASSY-TANK | Ens. bouchon | 1 | * | * | * | | | | 510482069 |
| 4 | 5110-092-831-XX | GASKET | Joint | 1 | * | * | * | | | | 110092831 |
| | | BREATHER | Element | 1 | * | | | | | | 318292665600 |
| | | | Element | 1 | | * | * | | | | 491092054 |
| | | | | 1 | * | * | * | | | | 490192091 |
| | | | | 1 | * | * | * | | | | 490192094 |
| | | | | | * | * | * | | | | 1316823 |
| | | | | | | | * | | | | 1 |

① ② ③ ③ ④ ⑤ ⑥ ⑦ ⑧ ⑨ ⑩

① KEY shows the location of parts diagramed in the illustration.

② Parts numbers begin with ˋV´ and ˋW´ are standard parts of the market.

③ ˋLH´ and ˋRH´ on the parts name are described against the moving direction of the machine or are described on the condition how to install parts on the machines.

④ QTY shows the number of parts to be used for one unit of machine.

`M´ is indicated for parts supplied by a meter long.

`ℓ´ is indicated for parts supplied by liter.

`AR´ is indicated for parts need to be adjusted or regulated.

⑤ The following symbol classifies parts to be used for machines.

`*´ means standard parts.

`T´ shows that the parts can be installed as optional parts.

`R´ shows that the parts can be used as applicable parts to replace originally equipped parts.

⑥ Serial number : upper row shows the serial number for the first product and lower row for the last product.

Example : Serial no. 1 through to serial no. 1999.

⑦ ITC : Interchangeability

`1´…OLD ← NEW

New parts can be used in place of the old parts.

`2´…OLD → NEW

Old parts can be used in place of the new parts.

`3´…OLD NEW

Old parts and new parts can not be replaced each other.

⑧ COL : Color code

Color is signified with color code number for colored parts.

Please see the color list shown in the next page.

⑨ GRP : Parts shown in this column can be replaced by SET parts.

Exsample : Parts marked Ⓐ can be replaced by parts marked Ⓑ, and Ⓓ for Ⓒ, so the rest follow in the same alphabetical order.

⑩ Remarks

* Other maker's part code number is shown in this column.

* When Fig. No. is shown in the Remark column of SET parts or ASSY parts, each of their component parts are listed in said Fig. No.

3. Color :

The following colors are used for color parts.

| COLOR CODE | COLOR | SPRAY TYPE CODE NUMBER | PAINTS 4K DRUM | PAINTS 16K DRUM |
|---|---|---|---|---|
| 7 F | MIRROR BLACK | 1300-954-001-10 | 1300-954-003-00 | 1300-954-004-00 |
| 8 E | SILVER MIST | 1300-968-001-10 | 1300-968-003-00 | 1300-968-004-00 |

NOTE : Color code is signified only for the parts assigned by the maker as color parts.

4. Serial Numbers :

1) For engines serial number is stamped on CRANKCASE – COMP.
Please see FC150V – AB02,EB02 Fig.No.1-17, 18, 41, FC150V – AB03,FB03,GB03 Fig. No.1-17, 18, 39, FC150V – EB05 Fig.No.1-17

2) For chassies serial number is shown on the LABEL.
Please see

5. Parts Order

1) Parts numbers listed in the parts catalogue are all registered in "ISEKI on-line computer".

2) When you order parts, please make sure of correct numbers.

3) When substitute parts is available, the part number ordered will be automatically turned to a new part number.

4) Please be sure to use "ISEKI GENUINE PARTS".
Any other similar parts other than ISEKI parts when used may cause a trouble that makes us unable to repair or guarantee the warrant.

# MODE D'EMPLOI DE CE CATALOGUE

## 1. Machine concernée

Toutes les pièces et composants utilisés pour la tondeuse SW519 sont repris dans ce manuel.

Explication du modèle et particularités de la machine

| Machine | Modèle | Deutsch | English | Nederlands | Français | Moteur |
|---|---|---|---|---|---|---|

## 2. Explication du tableau principal

1) Réf. n° : C'est un numéro de référence pour trouver les pièces dans les plans.

2) Pièces n° : Chaque pièce possède son propre numéro de code à 12 chiffres avec lequel elle peut être contrôlée par ordinateur. Les pièces comportant un "V" ou un "W" dans leur numéro de code en tête sont procurable sur le marché.

3) "Gauche" et "Droite" dans la désignation de pièce se repère selon la direction de marche avant de la machine ou explique comment monter la pièce sur la machine.

4) Quant. : Cette collonne spécifie les quantités d'une pièce requise pour chaque section donnée.

"M" est utilisé pour des pièces fournies au mètre.
"l" est utilisé pour des pièces fournies au litre.
"AR" signifie "suivant les besoins".

5) Les symboles suivants classifient les pièces utilisées sur la machine.

"*" indique des pièces standards.
"T" indique des pièces pouvant être utilisées en option.
"R" indique des pièces pouvant remplacer des pièces montées d'origine.

6) Numéro de série : la ligne supérieure indique le numéro série de la première machine, la ligne inférieure le numéro de série de la dernière machine montée avec la pièce concernée.
Exemple : du n° de série 1 jusqu'au n° 1999.

7) ITC : Interchangeabilité

"1" : indique que la nouvelle pièce (modifiée) peut remplacer l'ancienne.
"2" : indique qu'une ancienne pièce peut remplacer la nouvelle pièce.
"3" : indique que l'ancienne et la nouvelle pièce ne sont sont pas interchangeable.

8) Col : Code couleur

Indique le numéro de code couleur pour les pièces peintes. Veuillez vous référer à la liste sur la page suivante.

9) GRP :

Indique que la pièce peut être remplacée par un kit de pièces.
Ex. : les pièces marqueés par un B remplacent des pièces marqueés d'un A, D remplace C, etc....

10) Remarques :

* N° des pièces utilisées par d'autres fabricants.
* Si le numéro de figure (fig. n°) suit des pièces reprises dans un kit ou dans un ensemble de pièces, les vues éclatées de ces pièces sont reprises sous la fig. mentionnée.

## 3. Peinture

Les peintures suivantes sont utilisées :

| Code couleur | Peinture | N° de code flacon spray | Peinture 4 kg | Peinture 16 kg |
|---|---|---|---|---|
| 4 G | Crystal blue | 1300-957-001-10 | 1300-957-003-00 | 1300-957-004-00 |
| 5 I | Sunset gray | 1300-959-001-10 | 1300-959-003-00 | 1300-959-004-00 |
| 6 G | Summer white | 1300-958-001-10 | 1300-958-003-00 | 1300-958-004-00 |
| 7 F | Mirror black | 1300-954-001-10 | 1300-954-003-00 | 1300-954-004-00 |

Note : ne s'applique que si la pièce est indiquée comme étant peinte par le fabricant.

## 4. Numéro de série

1) Le numéro moteur est estampé sur le bloc moteur.
Réf. fig. n° 5-1.

2) Le numéro de chassis est indiqué sur l'étiquette.
Réf.

## 5. Commande de pièces

1) Les numéros des pièces indiqués dans le catalogue de pièces sont repris dans "l'ordinateur en ligne" d'Iseki.

2) Veuillez vous assurer que les numéros des pièces commandées sont exacts.

3) Si une pièce a été substituée, le numéro de pièce est automatiquement remplacé par le nouveau numéro.

4) Utilisez des pièces d'origine Iseki. Toutes autres pièces utilisées semblables mais différentes des pièces Iseki peuvent causer une anomalie que nous ne pourrions plus réparer ou garantir.

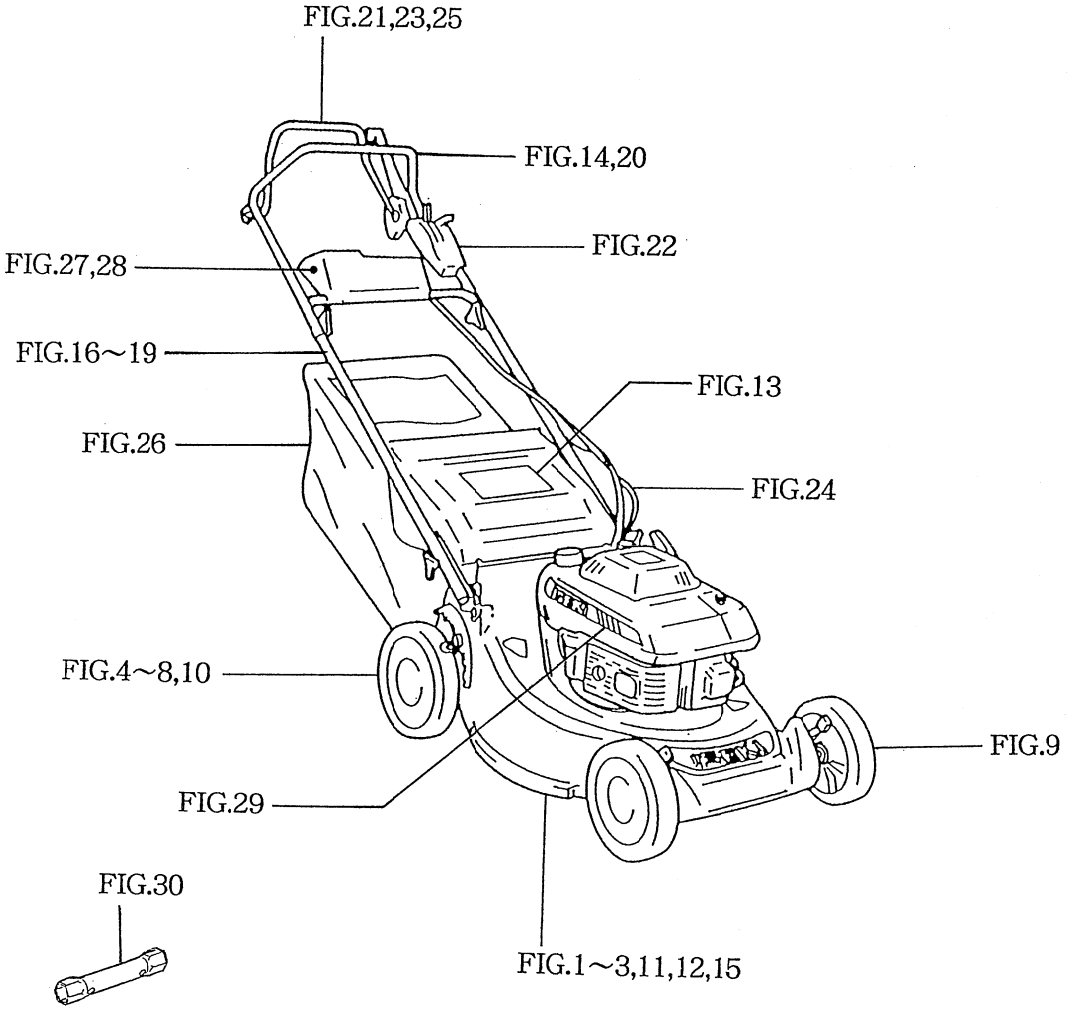
FIG.21,23,25
FIG.14,20
FIG.22
FIG.27,28
FIG.16～19
FIG.13
FIG.26
FIG.24
FIG.4～8,10
FIG.9
FIG.29
FIG.30
FIG.1～3,11,12,15

# CONTENTS

ENGINE (FC150V – AB02,EB02)

Moteur

CYLINDER/CRANKCASE ..... Fig. 1
Cylindre/Carter

PISTON/CRANKSHAFT ..... Fig. 2
Piston/Vilebrequin

VALVE/CRANKSHAFT ..... Fig. 3
Soupape/Arbre a cames

LUBRICATION – EQUIPMENT ..... Fig. 4
Lubrification

COOLING – EQUIPMENT ..... Fig. 5
Refroidissement

ELECTRIC – EQUIPMENT ..... Fig. 6
Eléctricite

CONTROL – EQUIPMENT ..... Fig. 7
Commandes

CARBURETOR (EB02) ..... Fig. 8
Carburateur

CARBURETOR (AB02) ..... Fig. 9
Carburateur

AIR – FILTER/MUFFLER ..... Fig. 10
Filtre à air/Echappement

FUEL – TANK/FUEL – VALVE ..... Fig. 11
Resservoir/Robinet à carburant

STARTER ..... Fig. 12
Démarreur

LABEL ..... Fig. 13
Etiquette

ACCESSORY ..... Fig. 14
Accessoire

# CONTENTS

ENGINE (FC150V – AB03,FB03,GB03)

Moteur

CYLINDER/CRANKCASE ..... Fig. 1
Cylindre/Carter

PISTON/CRANKSHAFT ..... Fig. 2
Piston/Vilebrequin

VALVE/CRANKSHAFT ..... Fig. 3
Soupape/Arbre à cames

LUBRICATION – EQUIPMENT ..... Fig. 4
Lubrification

COOLING – EQUIPMENT ..... Fig. 5
Refroidissement

ELECTRIC – EQUIPMENT ..... Fig. 6
Eléctricite

CONTROL – EQUIPMENT ..... Fig. 7
Commandes

CARBURETOR ..... Fig. 8
Carburateur

CARBURETOR (AB03) ..... Fig. 9
Carburateur

AIR – FILTER/MUFFLER ..... Fig. 10
Filtre à air/Echappement

FUEL – TANK/FUEL – VALVE ..... Fig. 11
Resevoir/Robinet à carburant

RECOIL STARTER ..... Fig. 12
Lanceur

ELECTRIC STARTER ..... Fig. 13
Démarreur

ELECTRIC STARTER (AB03) ..... Fig. 14
Démarreur

LABEL ..... Fig. 15
Etiquette

ACCESSORY ..... Fig. 16
Accessoire

# CONTENTS

ENGINE (FC150V – EB05)

Moteur

CYLINDER/CRANKCASE ..... Fig. 1
Cylindre/Carter

PISTON/CRANKSHAFT ..... Fig. 2
Piston/Vilebrequin

VALVE/CAMSHAFT ..... Fig. 3
Soupape/Arbre à cames

LUBRICATION – EQUIPMENT ..... Fig. 4
Lubrification

COOLING – EQUIPMENT ..... Fig. 5
Refroidissement

ELECTRIC – EQUIPMENT ..... Fig. 6
Electricite

CONTROL – EQUIPMENT ..... Fig. 7
Commandes

CARBURETOR ..... Fig. 8
Carburateur

AIR – FILTER/MUFFLER ..... Fig. 9
Filtre à air/Echappement

FUEL – TANK/FUEL – VALVE ..... Fig. 10
Reservoir/Robinet à carburant

STARTER ..... Fig. 11
Démarreur

BRAKE/COVER ..... Fig. 12
Plaque (modele R)

LABEL ..... Fig. 13
Etiquette

ACCESSORY ..... Fig. 14
Accessoire

# CONTENTS

## CHASSIS

ENGINE/BRAKE SYSTEM ..... Fig. 1
Système de freinage

B.B.C SYSTEM (B TYPE) ..... Fig. 2
Système de frein de lame (modèle B)

BLADE SYSTEM ..... Fig. 3
Lame

JOINT SYSTEM ..... Fig. 4
Cardane

CASE/MISSION SYSTEM ..... Fig. 5
Boitier de transmission

GEAR SYSTEM ..... Fig. 6
Pignonnerie

RACHET SYSTEM ..... Fig. 7
Cliquet

WHEEL/REAR SYSTEM ..... Fig. 8
Roue arriére

WHEEL/FRONT SYSTEM ..... Fig. 9
Roue avant

JOINT SYSTEM ..... Fig. 10
Cardan

DECK SYSTEM ..... Fig. 11
Carter de coupe

DECK/FAN SYSTEM ..... Fig. 12
Carter de coupe

COVER/DISCHARGE SYSTEM ..... Fig. 13
Deflecteur

HANDLE SYSTEM (B TYPE) ..... Fig. 14
Mancheron (modèle B)

HANDLE/BRACKET SYSTEM ..... Fig. 15
Mancheron

HANDLE/BRACKET SYSTEM (EXCEPT G TYPE) ..... Fig. 16
Mancheron (excepté modèle G)

BRACKET/BATTERY SYSTEM (G TYPE) ..... Fig. 17
Support/butterie (modèle G)

HANDLE/BRACKET SYSTEM (E01 TYPE) ..... Fig. 18
Mancheron (modèle E01)

HANDLE/BRACKET SYSTEM (G TYPE) ..... Fig. 19
Mancheron (modèle G)

HANDLE SYSTEM (E01 TYPE) ..... Fig. 20
Mancheron (modèle E01)

LEVER SYSTEM (B TYPE) ..... Fig. 21
Levier (modèle B)

CONTROL LEVER SYSTEM ..... Fig. 22
Levier de contrôle

LEVER SYSTEM (E01 TYPE) ..... Fig. 23
Levier (modèle E01)

CABLE SYSTEM ..... Fig. 24
Câble

LEVER SYSTEM (B TYPE) ..... Fig. 25
Levier (modèle B)

COLLECTOR SYSTEM ..... Fig. 26
Collecteur

HARNESS, BATTERY SYSTEM (G TYPE) ..... Fig. 27
Faisceau/batterie (modèle G)

HARNESS/BATTERY SYSTEM (GB TYPE) ..... Fig. 28
Faisceau/batterie (modèle GB)

MARK, ORNAMENT, LABEL SYSTEM ..... Fig. 29
Etiquettes

TOOLS, MANUAL SYSTEM ..... Fig. 30
Outils/manuel

# ENGINE
# Moteur

## FC150V – AB02
## FC150V – EB02

# FIG. 1 CYLINDER／CRANKCASE

## Cylinder／Carter

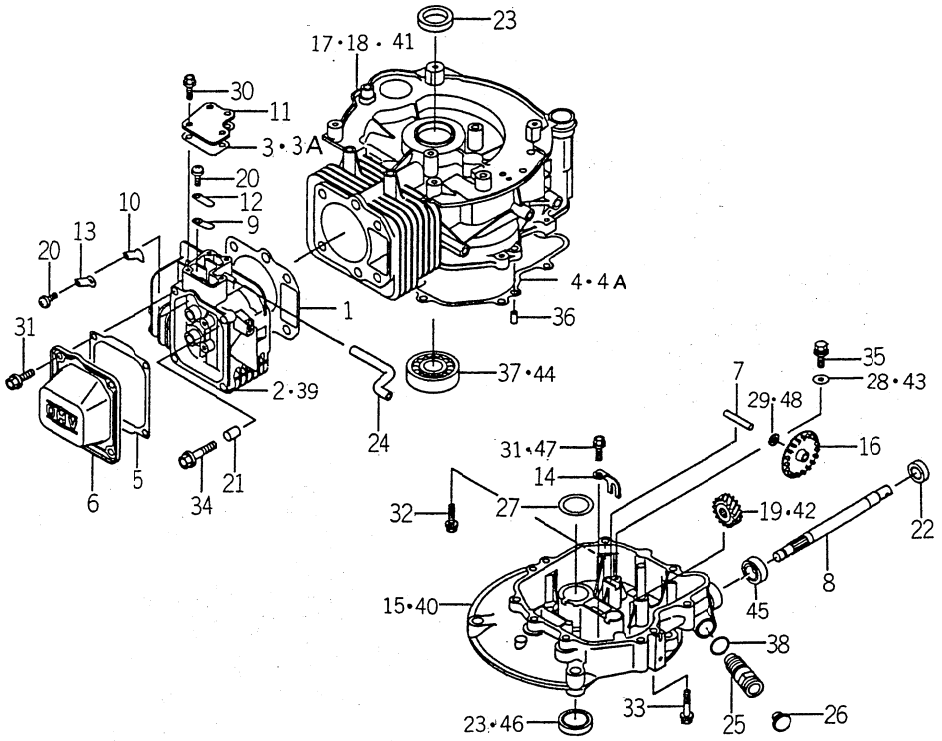


K621-3010

| KEY Réf. | PART CODE Pièces No. | DESCRIPTION | Désignation | QTY Quant. | TYPE OF MODEL Modél FC150V AB02 | FC150V EB02 | | ITC | COL | GRP | REMARKS Remarques |
|---|---|---|---|---|---|---|---|---|---|---|---|
| 1 | 5110-042-099-XX | GASKET HEAD | Joint de cylidre | 1 | * | * | | | | | 110042099 |
| 2 | 5110-086-023-XX | HEAD-COMP-CYLINDER | Culasse | 1 | | * | | | | | 110086023 |
| 3 | 5110-092-740-XX | GASKET-COVER | Joint | 1 | * | 1--C25867 | | | | | 110092740 |
| 3A | 5110-602-007-XX | GASKET-COVER | Joint | 1 | | C25868- | | | | | 110602007 |
| 4 | 5110-092-770-XX | GASKET-CRANKCASE | Joint | 1 | * | 1--C25867 | | | | | 110092770 |
| 4A | 5110-602-011-XX | GASKET-CRANKCASE | Joint | 1 | | C25868- | | | | | 110602011 |
| 5 | 5110-092-848-XX | GASKET-ROCKER | Joint | 1 | * | * | | | | | 110092848 |
| 6 | 5110-222-057-XX | CASE-ROCKER | Joint | 1 | * | * | | | | | 110222057 |
| 7 | 5131-072-202-XX | SHAFT | Arbre | 1 | * | * | | | | | 131072202 |
| 8 | 5131-072-220-XX | SHAFT | Arbre | 1 | * | * | | | | | 131072220 |
| 9 | 5131-832-258-XX | PLATE | Praque | 1 | * | * | | | | | 131832258 |
| 10 | 5131-832-259-XX | PLATE | Praque | 1 | * | * | | | | | 131832259 |
| 11 | 5140-242-180-XX | COVER | Capot | 1 | * | * | | | | | 140242180 |
| 12 | 5161-262-149-XX | VALVE | Soupape | 1 | * | * | | | | | 161262149 |
| 13 | 5161-262-150-XX | VALVE | Soupape | 1 | * | * | | | | | 161262150 |
| 14 | 5210-832-062-XX | ARM | Bras | 1 | * | * | | | | | 210832062 |
| 15 | 5490-156-088-XX | COVER-CRANKCASE | Carter | 1 | | * | | | | | 490156088 |
| 16 | 5490-732-055-XX | SLINGER-OIL | Déflecteur d'huile | 1 | * | * | | | | | 490732055 |
| 17 | 5491-202-240-XX | CRANKCASE-COMP | Carter | 1 | | * | | | | | 491202240 |
| 18 | 5491-202-246-XX | CRANKCASE-COMP | Carter | 1 | | * | | | | | 491202246 |
| 19 | 5590-562-790-XX | GEAR-HELICAL | Pignon | 1 | | * | | | | | 590562790 |
| 20 | 5920-092-166-XX | SCREW-5X8 | Vis | 2 | * | * | | | | | 920092166 |
| 21 | 5920-431-264-XX | PIN | Axe | 2 | * | * | | | | | 920431264 |
| 22 | 5920-492-204-XX | SEAL-OIL | Joint SPI | 1 | | * | | | | | 920492204 |
| 23 | 5920-492-208-XX | SEAL-OIL | Joint SPI | 2 | | * | | | | | 920492208 |

# FIG. 1 CYLINDER／CRANKCASE
## Cylindre／Carter

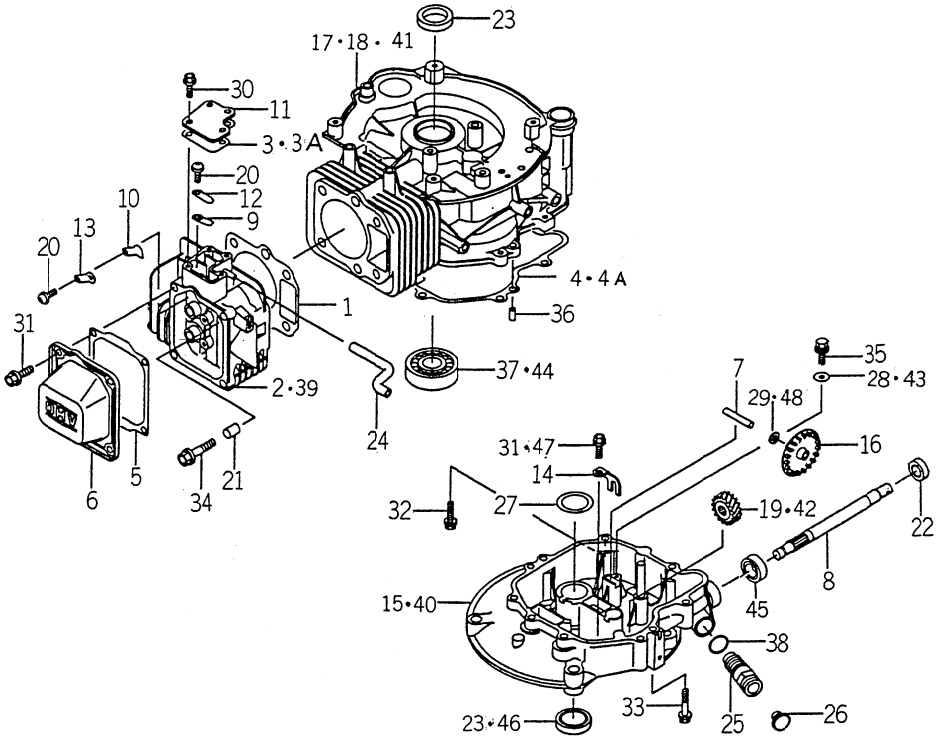


K621-0010

| KEY Réf. | PART CODE Pièces No. | DESCRIPTION | Désignation | QTY Quant. | TYPE OF MODEL Modèl FC150V AB02 | FC150V EB02 | | ITC | COL | GRP | REMARKS Remarques |
|---|---|---|---|---|---|---|---|---|---|---|---|
| 24 | 5920-592-256-XX | TUBE | Tuyau | 1 | * | * | | | | | 920592256 |
| 25 | 5920-662-180-XX | PLUG | Bouchon | 1 | * | * | | | | | 920662180 |
| 26 | 5920-662-193-XX | PLUG | Bouchon | 1 | | * | | | | | 920662193 |
| 27 | 5922-002-026-XX | WASHER-25X42X1.0 | Rondelle | 1 | | * | | | | | 922002026 |
| 28 | 5922-002-033-XX | WASHER-5X16X0.8 | Rondelle | 1 | | * | | | | | 922002033 |
| 29 | 5922-002-034-XX | WASHER-6X12X1.6 | Rondelle | 1 | | * | | | | | 922002034 |
| 30 | 5130-B05-10X-XX | BOLT-FLANGED | Vis | 4 | * | * | | | | | 130B0510 |
| 31 | 5130-B06-12X-XX | BOLT-FLANGED | Vis | 5 | * | * | | | | | 130B0612 |
| 32 | 5130-G06-25X-XX | BOLT-FLANGED | Vis | 5 | * | * | | | | | 130G0625 |
| 33 | 5130-G06-45X-XX | BOLT-FLANGED | Vis | 2 | * | * | | | | | 130G0645 |
| 34 | 5130-G08-45X-XX | BOLT-FLANGED | Vis | 4 | * | * | | | | | 130G0845 |
| 35 | 5187-B05-10X-XX | BOLT-UPSET-WSP | Vis | 1 | * | * | | | | | 187B0510 |
| 36 | 5551-A06-12X-XX | PIN-DOWEL | Pion | 2 | * | * | | | | | 551A0612 |
| 37 | 5601-B62-05X-XX | BEARING-BALL | Roulement à billes | 1 | | * | | | | | 601B6205 |
| 38 | 5670-D20-15X-XX | O-RING | Joint torique | 1 | * | * | | | | | 670D2015 |
| 39 | 5110-086-008-XX | HEAD-COMP-CYLINDER | Culasse | 1 | * | | | | | | 110086008 |
| 40 | 5490-156-055-XX | COVER-CRANKCASE | Carter | 1 | * | | | | | | 490156055 |
| 41 | 5491-202-184-XX | CRANKCASE-COMP | Carter | 1 | * | | | | | | 491202184 |
| 42 | 5590-562-790-XX | GEAR-HELICAL | Pignon | 1 | * | | | | | | 590562790 |
| 43 | 5145-V17-281-AX | WASHER | Rondelle | 1 | * | | | | | | 3145V17281A |
| 44 | 5920-452-155-XX | BEARING-BALL | Roulement à billes | 1 | * | | | | | | 920452155 |
| 45 | 5117-604-241-00 | SEAL-OIL | Joint SPI | 1 | * | | | | | | 311760424100 |
| 46 | 5158-014-231-AX | SEAL-OIL | Joint SPI | 2 | * | | | | | | 3158014231A |
| 47 | 5130-B06-14X-XX | BOLT-FLANGED | Vis | 1 | * | | | | | | 130B0614 |
| 48 | 5920-222-131-XX | WASHER | Rondelle | 1 | * | | | | | | 920222131 |

# FIG. 2 PISTON／CRANKSHAFT
## Piston／Vilebrequin

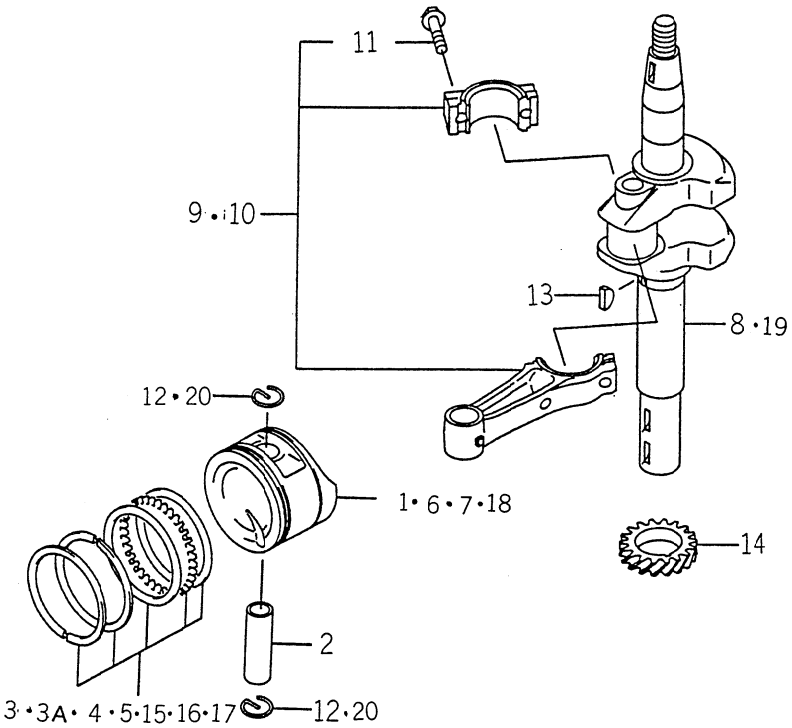


K621-0020

| KEY Réf. | PART CODE Pièces No. | DESCRIPTION | Désignation | QTY Quant. | TYPE OF MODEL Modél FC150V AB02 | FC150V EB02 | | ITC | COL | GRP | REMARKS Remarques |
|---|---|---|---|---|---|---|---|---|---|---|---|
| 1 | 5130-012-109-XX | PISTON-ENGINE | Piston | 1 | * | * | | | | | 130012109 |
| 2 | 5130-022-074-XX | PIN-PISTON | Axe de piston | 1 | * | * | | | | | 130022074 |
| 3 | 5130-086-017-XX | RING-SET-PISTON | Jeu de segments | 1 | * | 1--D58946 | | | | | 130086017 |
| 3A | 5130-086-030-XX | RING-SET-PISTON | Jeu de segments | 1 | | D58947- | | | | | 130086030 |
| 4 | 5130-256-013-XX | RING-SET-PISTONL | Jeu de segments | 1 | T | T | | | | | 130256013 |
| 5 | 5130-256-014-XX | RING-SET-PISTONL | Jeu de segments | 1 | T | T | | | | | 130256014 |
| 6 | 5130-292-094-XX | PISTON-ENGINEL-0.25 | Piston | 1 | T | T | | | | | 130292094 |
| 7 | 5130-292-095-XX | PISTON-ENGINEL-0.50 | Piston | 1 | T | T | | | | | 130292095 |
| 8 | 5130-372-453-XX | CRANKSHAFT | Vilebrequin | 1 | | * | | | | | 130372453 |
| 9 | 5132-516-025-XX | ROD-ASSY-CONNECTING | Bielle | 1 | * | * | | | | | 132516025 |
| 10 | 5132-516-027-XX | ROD-ASSY-CONNECTING | Bille | 1 | T | T | | | | | 132516027 |
| 11 | 5921-502-122-XX | BOLT-CONNECTING ROD | Vis | 2 | * | * | | | | | 921502122 |
| 12 | 5920-332-161-XX | RING-SNAP | Circlips | 2 | | * | | | | | 920332161 |
| 13 | 5920-382-093-XX | KEY | clavette | 1 | * | * | | | | | 920382093 |
| 14 | 5590-562-726-XX | GEAR-HELICAL | Pignon | 1 | * | * | | | | | 590562726 |
| 15 | 5130-246-002-XX | RING-SET-PISTON 0.75 | Jeu de segments | 1 | T | | | | | | 130246002 |
| 16 | 5130-256-003-XX | RING-SET-PISTON 0.25 | Jeu de segments | 1 | T | | | | | | 130256003 |
| 17 | 5130-256-004-XX | RING-SET-PISTON 0.50 | Jeu de segments | 1 | T | | | | | | 130256004 |
| 18 | 5130-272-058-XX | PISTON-ENGINE 0.75 | Piston | 1 | T | | | | | | 130272058 |
| 19 | 5130-372-359-XX | CRANKSHAFT | Vilebrequin | 1 | * | | | | | | 130372359 |
| 20 | 5920-013-122-XX | RING-SNAP | Circlips | 2 | * | | | | | | 920013122 |

# FIG. 3 VALVE／CRANKSHAFT
## Soupape／Arbre à cames

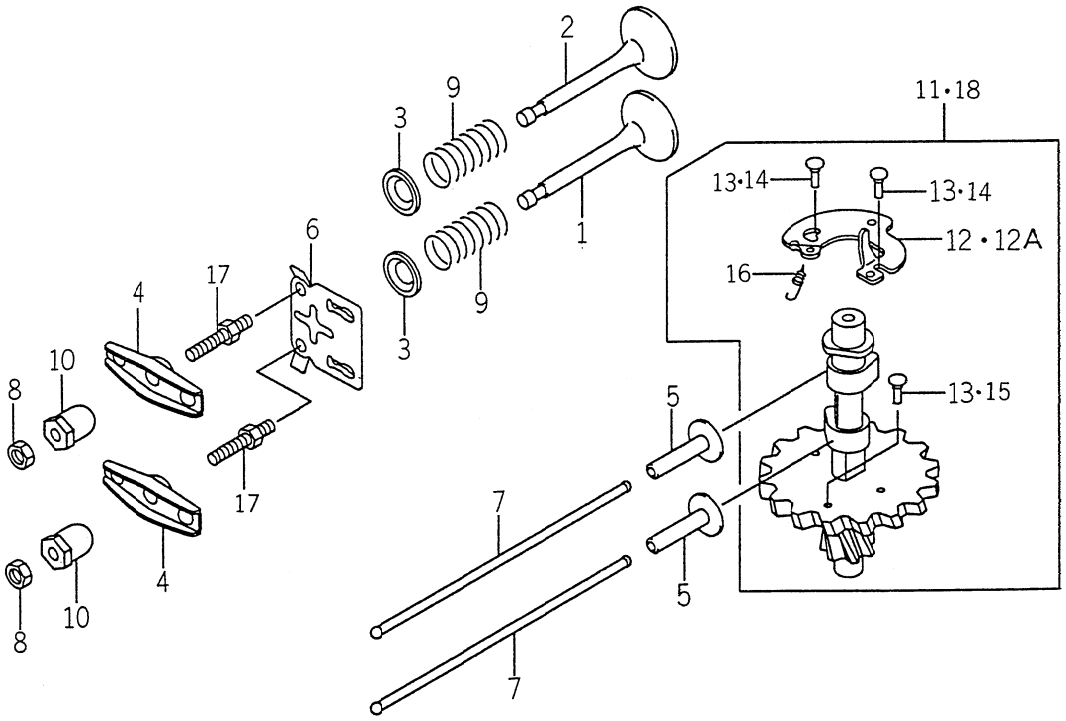


K621-0030

| KEY Réf. | PART CODE Pièces No. | DESCRIPTION | Désignation | QTY Quant. | TYPE OF MODEL Modél FC150V AB02 | FC150V EB02 | | I T C | C O L | G R P | REMARKS Remarques |
|---|---|---|---|---|---|---|---|---|---|---|---|
| 1 | 5120-042-090-XX | VALVE-INTAKE | Soupape d'admission | 1 | * | * | | | | | 120042090 |
| 2 | 5120-052-074-XX | VALVE-EXHAUST | Soupape d'echappement | 1 | * | * | | | | | 120052074 |
| 3 | 5120-092-062-XX | RETAINER-VALVE | Coupelle | 2 | * | * | | | | | 120092062 |
| 4 | 5120-162-057-XX | ARM-ROCKER | Culbuteur | 2 | * | * | | | | | 120162057 |
| 5 | 5120-322-065-XX | TAPPET | Poussoir | 2 | * | * | | | | | 120322065 |
| 6 | 5130-702-072-XX | GUIDE | Guide | 1 | * | * | | | | | 130702072 |
| 7 | 5131-162-065-XX | ROD-PUSH | Tige-poussoir | 2 | * | * | | | | | 131162065 |
| 8 | 5920-152-240-XX | NUT | Ecrou | 2 | * | * | | | | | 920152240 |
| 9 | 5490-782-064-XX | SPRING-ENGINE VALVE | Ressort | 2 | * | * | | | | | 490782064 |
| 10 | 5920-152-253-XX | NUT | Ecrou | 2 | * | * | | | | | 920152253 |
| 11 | 5491-182-119-XX | CAMSHAFT-COMP | Arbre a cames | 1 | | * | | | | | 491182119 |
| 12 | 5211-182-069-XX | DECOMPRESSOR | Décompresseur | 1 | * | 1-<br>-B74379 | | | | | 211182069 |
| 12A | 5211-182-082-XX | DECOMPRESSOR | Décompresseur | 1 | | B74380- | | | | | 211182082 |
| 13 | 5920-432-168-XX | PIN | Axe | 3 | | * | | | | | 920432168 |
| 14 | 5920-432-168-XX | PIN | Axe | 2 | * | | | | | | 920432168 |
| 15 | 5920-432-169-XX | PIN | Axe | 1 | * | | | | | | 920432169 |
| 16 | 5920-812-342-XX | SPRING | Ressort | 1 | * | * | | | | | 920812342 |
| 17 | 5921-502-102-XX | BOLT | Vis | 2 | * | * | | | | | 921502102 |
| 18 | 5491-182-068-XX | CAMSHAFT-COMP | Arbre acames | 1 | * | | | | | | 491182068 |

# FIG. 4 LUBRICATION – EQUIPMENT
## Lubrification

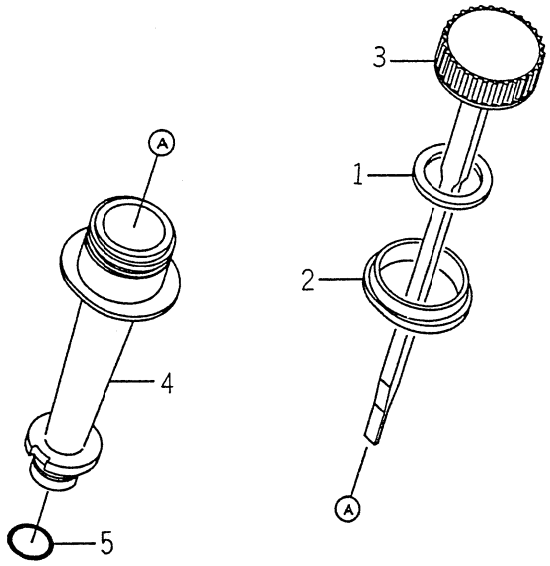


X621-0040

| KEY Réf. | PART CODE Pièces No. | DESCRIPTION | Désignation | QTY Quant. | TYPE OF MODEL Modél FC150V AB02 | FC150V EB02 | | I T C | C O L | G R P | REMARKS Remarques |
|---|---|---|---|---|---|---|---|---|---|---|---|
| 1 | 5110-092-346-XX | GASKET-OIL GAUGE | Joint | 1 | * | * | | | | | 110092346 |
| 2 | 5130-702-078-XX | GUIDE | Guide | 1 | * | * | | | | | 130702078 |
| 3 | 5520-052-094-XX | GAUGE-OIL | Jauge | 1 | * | * | | | | | 520052094 |
| 4 | 5592-312-071-XX | FILLER | Charge | 1 | * | * | | | | | 592312071 |
| 5 | 5670-D20-16X-XX | O RING | Joint torique | 1 | * | * | | | | | 670D2016 |

# FIG. 5 COOLING – EQUIPMENT

## Refroidissement

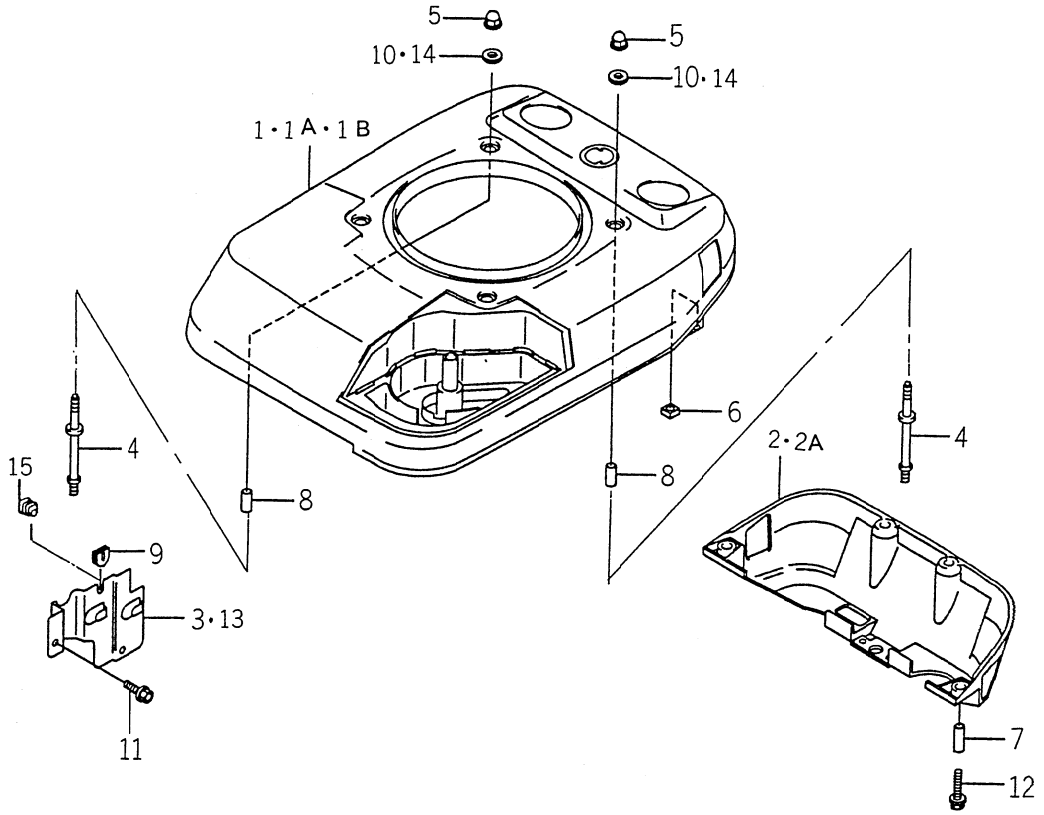


K621-0050

| KEY Réf. | PART CODE Pièces No. | DESCRIPTION | Désignation | QTY Quant. | TYPE OF MODEL Modél FC150V AB02 | FC150V EB02 | | ITC | COL | GRP | REMARKS Remarques |
|---|---|---|---|---|---|---|---|---|---|---|---|
| 1 | 5140-242-251-XX | COVER | Couvercle | 1 | 1- -B87759 | 1- -B87759 | | | | | 140242251 |
| 1A | 5140-242-289-XX | COVER-UPPER | Couvercle | 1 | B87760- | B87760- -C26560 | | | | | 140242289 |
| 1B | 5140-902-009-XX | COVER-UPPER | Couvercle | 1 | | C26561- | | | | | 140902009 |
| 2 | 5140-242-252-XX | COVER-LOWER | Couvercle | 1 | * | 1- -C26560 | | | | | 140242252 |
| 2A | 5140-902-013-XX | COVER-LOWER | Couvercle | 1 | | C26561- | | | | | 140902013 |
| 3 | 5140-902-023-XX | COVER | Couvercle | 1 | * | * | | | | | 140902023 |
| 4 | 5920-042-117-XX | STUD | Goujon | 4 | * | * | | | | | 920042117 |
| 5 | 5920-151-170-XX | NUT | Ecrou | 4 | * | * | | | | | 920151170 |
| 6 | 5920-152-241-XX | NUT-6MM | Ecrou | 4 | * | * | | | | | 920152241 |
| 7 | 5920-262-273-XX | SPACER-6.2X7.8X17 | Pièce d'écartement | 4 | * | * | | | | | 920262273 |
| 8 | 5920-262-274-XX | SPACER-6.2X7.8X22 | Pièce d'écartement | 4 | * | * | | | | | 920262274 |
| 9 | 5920-712-113-XX | GROMMET | Passe -fil | 1 | | * | | | | | 920712113 |
| 10 | 5922-002-078-XX | WASHER-6.5X18X2.0 | Rondelle | 4 | * | * | | | | | 922002078 |
| 11 | 5130-B05-10X-XX | BOLT-FLANGED | Vis | 2 | * | * | | | | | 130B0510 |
| 12 | 5130-G06-25X-XX | BOLT-FLANGED | Vis | 4 | * | * | | | | | 130G0625 |
| 13 | 5140-242-181-XX | COVER | Capot | 1 | * | | | | | | 140242181 |
| 14 | 5920-222-136-XX | WASHER | Rondelle | 4 | * | | | | | | 920222136 |
| 15 | 5920-712-109-XX | GROMMET | Passe -fil | 1 | * | | | | | | 920712109 |

# FIG. 6 ELECTRIC – EQUIPMENT

## Eléctricite

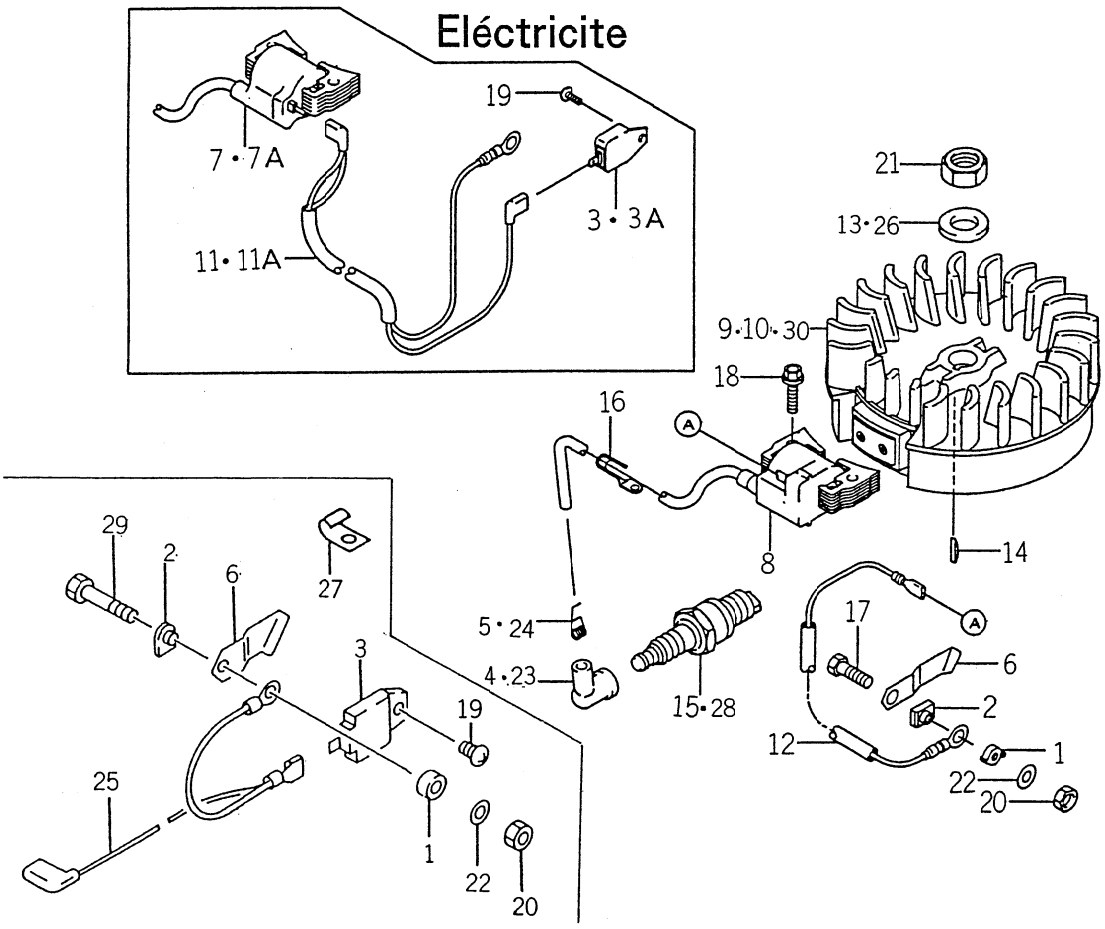


K621-0060

| KEY Réf. | PART CODE Pièces No. | DESCRIPTION | Désignation | QTY Quant. | TYPE OF MODEL Modél FC150V AB02 | FC150V EB02 | | ITC | COL | GRP | REMARKS Remarques |
|---|---|---|---|---|---|---|---|---|---|---|---|
| 1 | 5140-242-183-XX | COVER | Capot | 1 | * | * | | | | | 140242183 |
| 2 | 5160-732-124-XX | INSULATOR | Ecran thermique | 1 | * | * | | | | | 160732124 |
| 3 | 5211-192-119-XX | IGNITER | Bougie d'allumage | 1 | * | 1- -B50811 | | | | | 211192119 |
| 3A | 5211-192-139-XX | IGNITER | Bougie d'allumage | 1 | | B50812- | | | | | 211192139 |
| 4 | 5211-302-066-XX | CAP-SPARK PLUG | Capuchon | 1 | | * | | | | | 211302066 |
| 5 | 5211-692-004-XX | TERMINAL | Borne | 1 | | * | | | | | 211692004 |
| 6 | 5211-692-066-XX | TERMINAL | Borne | 1 | * | * | | | | | 211692066 |
| 7 | 5211-712-153-XX | COIL-ASSY-IGNITION | Ens. bobine d'allumage | 1 | * | 1- -B50811 | | | | | 211712153 |
| 7A | 5211-712-176-XX | COIL-ASSY-IGNITION | Ens. bobine d'allumage | 1 | | B50812- | | | | | 211712176 |
| 8 | 5211-712-200-XX | COIL-ASSY-IGNITION | Ens. bobine d'allumage | 1 | | * | | | | | 211712200 |
| 9 | 5211-942-218-XX | FLYWHEEL-COMP | Volant | 1 | | * | | | | | 211942218 |
| 10 | 5211-942-290-XX | FLYWHEEL-COMP | Volant | 1 | | * | | | | | 211942290 |
| 11 | 5260-112-246-XX | WIRE-LEAD | Fil | 1 | | 1- -C13447 | | | | | 260112246 |
| 11A | 5260-112-279-XX | WIRE-LEAD | Fil | 1 | | C13448- | | | | | 260112279 |
| 12 | 5260-112-306-XX | WIRE-LEAD | Fil | 1 | | * | | | | | 260112306 |
| 13 | 5920-222-102-XX | WASHER | Rondelle | 1 | | * | | | | | 920222102 |
| 14 | 5920-382-077-XX | KEY | Clavette | 1 | * | * | | | | | 920382077 |
| 15 | 5920-702-084-XX | PLUG-SPARK-BP6ES | Bougie | 1 | | * | | | | | 920702084 |
| 16 | 5921-702-041-XX | CLAMP | Attache | 1 | | * | | | | | 921702041 |
| 17 | 5112-B05-22X-XX | BOLT-UPSET | Vis | 1 | | * | | | | | 112B0522 |
| 18 | 5130-G06-25X-XX | BOLT-FLANGED | Vis | 2 | * | * | | | | | 130G0625 |
| 19 | 5241-B04-12X-XX | SCREW-PAN-WP | Vis | 1 | * | * | | | | | 241B0412 |
| 20 | 5311-B05-00X-XX | NUT-HEX | Ecrou | 1 | * | * | | | | | 311B0500 |
| 21 | 5314-G14-00X-XX | NUT-HEX-FINE | Ecrou | 1 | * | * | | | | | 314G1400 |
| 22 | 5410-B05-00X-XX | W-PLAIN-S | Rondelle | 1 | * | * | | | | | 410B0500 |

# FIG. 6 ELECTRIC – EQUIPMENT

## Eléctricite

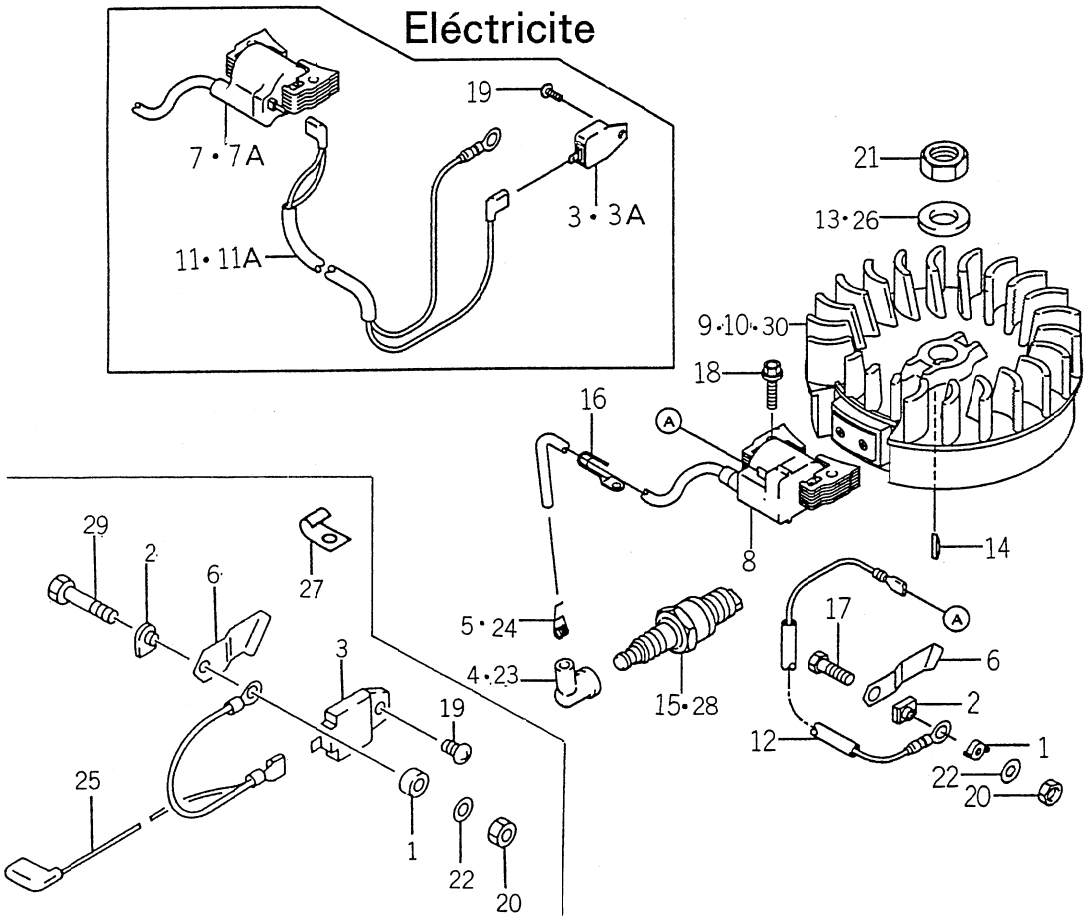


K500-101

| KEY Réf. | PART CODE Pièces No. | DESCRIPTION | Désignation | QTY Quant. | TYPE OF MODEL Modél FC150V AB02 | FC150V EB02 | | ITC | COL | GRP | REMARKS Remarques |
|---|---|---|---|---|---|---|---|---|---|---|---|
| 23 | 5172-708-418-BX | CAP-SPARK PLUG | Capuchon | 1 | * | | | | | | 3172708418B |
| 24 | 5172-708-419-AX | TERMINAL | Borne | 1 | * | | | | | | 3172708419A |
| 25 | 5260-112-224-XX | WIRE-LEAD | Fil | 1 | * | | | | | | 260112224 |
| 26 | 5144-013-482-AX | WASHER | Rondell | 1 | * | | | | | | 3144013482A |
| 27 | 5105-018-162-AX | CLAMP | Attache | 1 | * | | | | | | 3105018162A |
| 28 | 5920-702-081-XX | PLUG-SPARK, BP5ES(NGK | Bougie | 1 | * | | | | | | 920702081 |
| 29 | 5110-B05-22X-XX | BOLT-FLANGED | Vis | 1 | * | | | | | | 110B0522 |
| 30 | 5211-942-186-XX | FLYWHEEL-COMP | Volant | 1 | * | | | | | | 211942186 |

# FIG. 7 CONTROL – EQUIPMENT
## Commandes

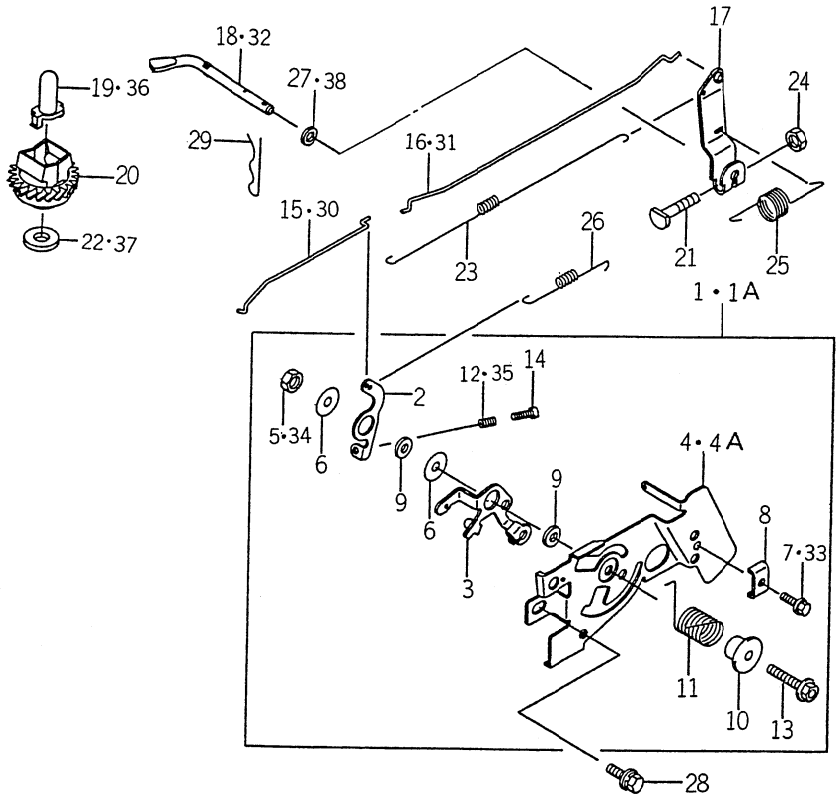


K621-0070

| KEY Réf. | PART CODE Pièces No. | DESCRIPTION | Désignation | QTY Quant. | TYPE OF MODEL Modèl FC150V AB02 | FC150V EB02 | | I T C | C O L | G R P | REMARKS Remarques |
|---|---|---|---|---|---|---|---|---|---|---|---|
| 1 | 5391-802-549-XX | PANEL-ASSY-CONTROL | Ens. panneau de commande | 1 | * | 1- -F06974 | | | | | 391802549 |
| 1A | 5391-802-904-XX | PANEL-ASSY-CONTROL | Ens. panneau de commande | 1 | | F06975- | | | | | 391802904 |
| 2 | 5131-682-288-XX | LEVER | Levier | 1 | * | * | | | | | 131682288 |
| 3 | 5131-682-298-XX | LEVER | Levier | 1 | * | * | | | | | 131682298 |
| 4 | 5592-262-201-XX | PANEL-CONTROL | Panneau de commande | 1 | * | 1- -F06974 | | | | | 592262201 |
| 4A | 5592-262-293-XX | PANEL-CONTROL | Panneau de commande | 1 | | F06975- | | | | | 592262293 |
| 5 | 5920-152-051-XX | NUT | Ecrou | 1 | * | * | | | | | 920152051 |
| 6 | 5920-222-372-XX | WASHER-6X19X1.2 | Rondelle | 2 | * | * | | | | | 920222372 |
| 7 | 5921-502-182-XX | BOLT-5X18 | Vis | 1 | * | * | | | | | 921502182 |
| 8 | 5920-372-209-XX | CLAMP | Attache | 1 | * | * | | | | | 920372209 |
| 9 | 5921-432-135-XX | COLLAR-6X13X2.3 | Entretoise | 2 | * | * | | | | | 921432135 |
| 10 | 5921-432-148-XX | COLLAR | Entretoise | 1 | * | * | | | | | 921432148 |
| 11 | 5921-442-211-XX | SPRING | Ressort | 1 | * | * | | | | | 921442211 |
| 12 | 5921-442-266-XX | SPRING | Ressort | 1 | | * | | | | | 921442266 |
| 13 | 5130-B06-30X-XX | BOLT-FLANGED | Vis | 1 | * | * | | | | | 130B0630 |
| 14 | 5214-B04-20X-XX | SCREW-PAN | Vis | 1 | * | * | | | | | 214B0420 |
| 15 | 5161-692-125-XX | LINK-CHOKE | Tige | 1 | | * | | | | | 161692125 |
| 16 | 5161-712-080-XX | LINK | Tige | 1 | | * | | | | | 161712080 |
| 17 | 5211-872-060-XX | ARM-ASSY | Ens. bras | 1 | * | * | | | | | 211872060 |
| 18 | 5390-032-071-XX | ARM-PIVOT | Bras | 1 | | * | | | | | 390032071 |
| 19 | 5420-362-051-XX | SLEEVE | Bague | 1 | | * | | | | | 420362051 |
| 20 | 5491-102-076-XX | GOVERNOR-ASSY | Ens. regulateur | 1 | * | * | | | | | 491102076 |
| 21 | 5920-022-269-XX | BOLT | Vis | 1 | * | * | | | | | 920022269 |
| 22 | 5920-222-019-XX | WASHER | Rondelle | 1 | | * | | | | | 920222019 |
| 23 | 5920-812-299-XX | SPRING-LINK | Ressort | 1 | * | * | | | | | 920812299 |

# FIG. 7 CONTROL – EQUIPMENT
## Commandes

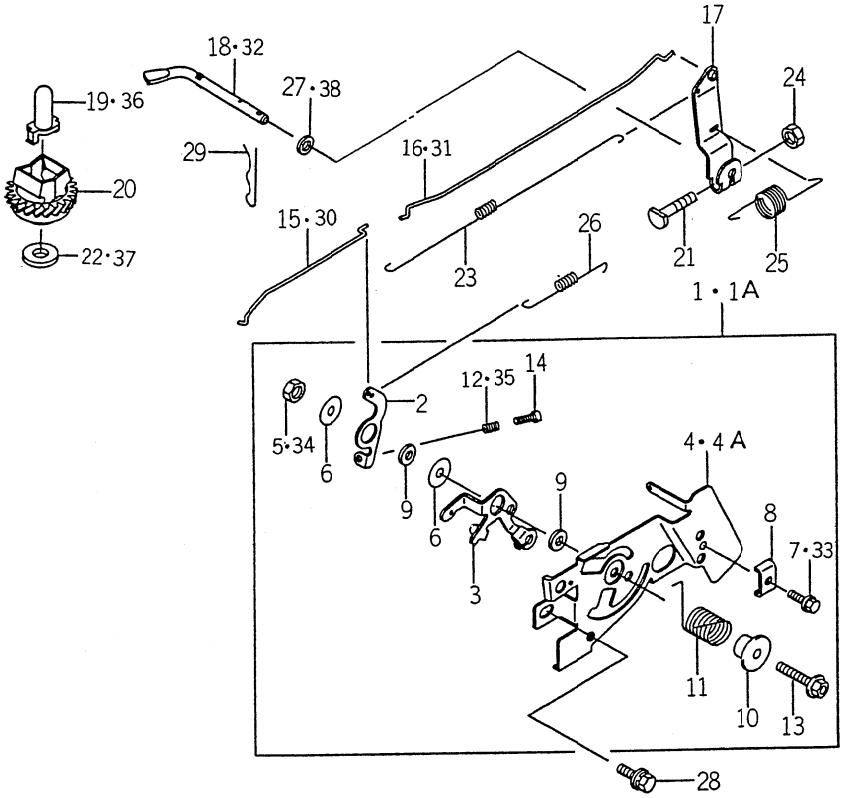


K621-0070

| KEY Réf. | PART CODE Pièces No. | DESCRIPTION | Désignation | QTY Quant. | TYPE OF MODEL Modél FC150V AB02 | FC150V EB02 | | ITC | COL | GRP | REMARKS Remarques |
|---|---|---|---|---|---|---|---|---|---|---|---|
| 24 | 5920-151-193-XX | NUT | Ecrou | 1 | * | * | | | | | 920151193 |
| 25 | 5921-442-213-XX | SPRING | Ressort | 1 | * | * | | | | | 921442213 |
| 26 | 5921-442-235-XX | SPRING | Ressort | 1 | * | * | | | | | 921442235 |
| 27 | 5922-002-029-XX | WASHER-6.5X11.5X2.0 | Rondelle | 1 | | * | | | | | 922002029 |
| 28 | 5187-B06-14X-XX | BOLT-UPSET-WSP | Vis | 2 | * | * | | | | | 187B0614 |
| 29 | 5554-A06-00X-XX | PIN-SNAP | Goupille à ressort | 1 | * | * | | | | | 554A0600 |
| 30 | 5161-692-104-XX | LINK-CHOKE | Tige | 1 | * | | | | | | 161692104 |
| 31 | 5161-712-060-XX | LINK | Tige | 1 | * | | | | | | 161712060 |
| 32 | 5390-032-066-XX | ARM-PIVOT | Bras | 1 | * | | | | | | 390032066 |
| 33 | 5107-011-225-AX | BOLT | Vis | 1 | * | | | | | | 3107011225A |
| 34 | 5144-015-385-AX | NUT | Ecrou | 1 | * | | | | | | 3144015385A |
| 35 | 5144-015-321-BX | SPRING | Ressort | 1 | * | | | | | | 3144015321B |
| 36 | 5144-015-121-BX | SLEEVE | Bague | 1 | * | | | | | | 3144015121B |
| 37 | 5144-015-135-AX | WASHER | Rondelle | 1 | * | | | | | | 3144015135A |
| 38 | 5410-B06-00X-XX | W-PLAIN-S | Rondelle | 1 | * | | | | | | 410B0600 |

# FIG. 8 CARBURETOR (EB02)

## Carburateur

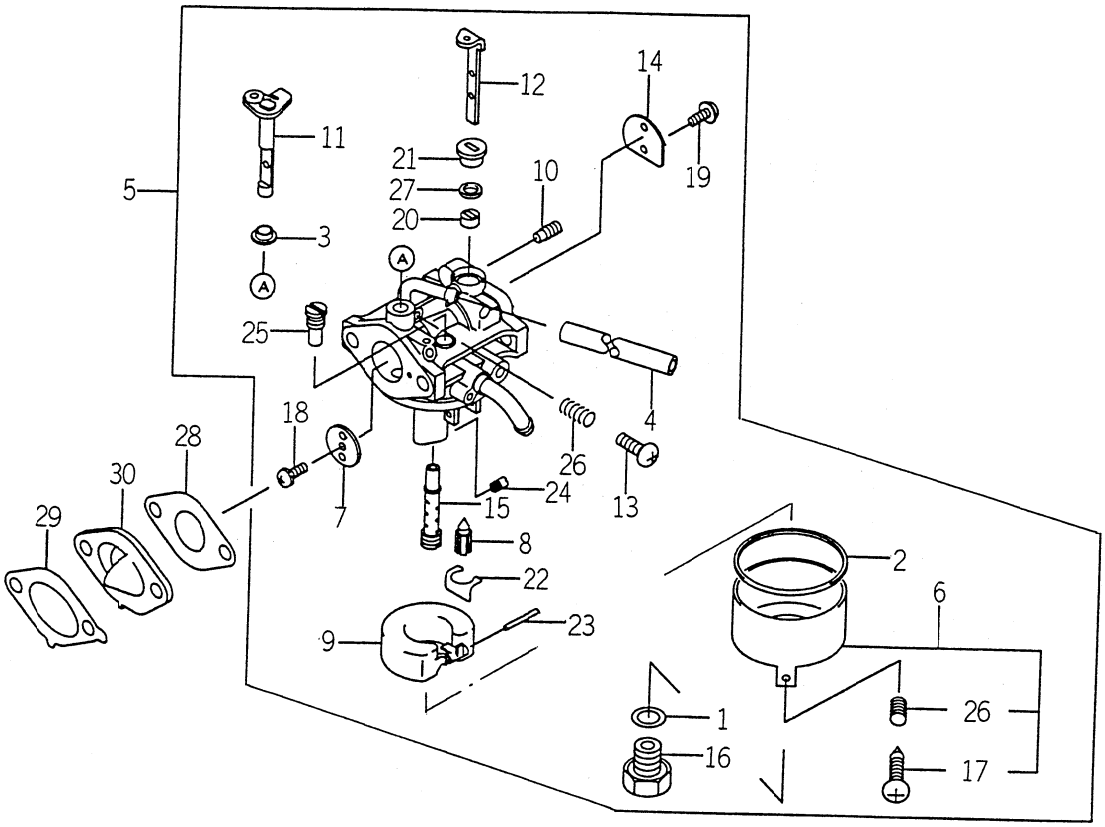


X621-0080

| KEY Réf. | PART CODE Pièces No. | DESCRIPTION | Désignation | QTY Quant. | TYPE OF MODEL Modél FC150V AB02 | FC150V EB02 | | ITC | COL | GRP | REMARKS Remarques |
|---|---|---|---|---|---|---|---|---|---|---|---|
| 1 | 5110-092-036-XX | GASKET | Joint | 1 | | * | | | | | 110092036 |
| 2 | 5110-092-037-XX | GASKET | Joint | 1 | | * | | | | | 110092037 |
| 3 | 5921-432-143-XX | COLLAR | Entretoise | 1 | | * | | | | | 921432143 |
| 4 | 5921-902-163-XX | TUBE-4X7X125 | Tuyau | 1 | | * | | | | | 921902163 |
| 5 | 5150-032-364-XX | CARBURETOR-ASSY | Ens. carburateur | 1 | | * | | | | | 150032364 |
| 6 | 5160-202-052-XX | CHAMBER-FLOAT | Chamber du flotteur | 1 | | * | | | | | 160202052 |
| 7 | 5160-252-001-XX | VALVE-THROTTLE 110 | Boisseau | 1 | | * | | | | | 160252001 |
| 8 | 5160-302-083-XX | VALVE-FLOAT | Soupape | 1 | | * | | | | | 160302083 |
| 9 | 5160-312-058-XX | FLOAT | Flotteur | 1 | | * | | | | | 160312058 |
| 10 | 5160-352-063-XX | JET-AIR 0.9 | Vis de richesse | 1 | | * | | | | | 160352063 |
| 11 | 5160-412-178-XX | SHAFT-CARBURETOR | Axe volet d'air | 1 | | * | | | | | 160412178 |
| 12 | 5160-412-197-XX | SHAFT-CARBURETOR | Axe volet d'air | 1 | | * | | | | | 160412197 |
| 13 | 5214-B04-12X-XX | SCREW-PAN | Vis | 1 | | * | | | | | 214B0412 |
| 14 | 5161-262-199-XX | VALVE | Volet d'air | 1 | | * | | | | | 161262199 |
| 15 | 5491-212-189-XX | NOZZLE-MAIN | Gicleur principal | 1 | | * | | | | | 491212189 |
| 16 | 5920-022-011-XX | BOLT | Vis | 1 | | * | | | | | 920022011 |
| 17 | 5920-092-015-XX | SCREW | Vis | 1 | | * | | | | | 920092015 |
| 18 | 5920-092-024-XX | SCREW | Vis | 1 | | * | | | | | 920092024 |
| 19 | 5920-092-149-XX | SCREW | Vis | 2 | | * | | | | | 920092149 |
| 20 | 5920-272-003-XX | COLLAR | Entretoise | 1 | | * | | | | | 920272003 |
| 21 | 5920-272-004-XX | COLLAR | Entretoise | 1 | | * | | | | | 920272004 |
| 22 | 5920-332-067-XX | RING-SNAP | Goupille à ressort | 1 | | * | | | | | 920332067 |
| 23 | 5920-432-006-XX | PIN | Axe | 1 | | * | | | | | 920432006 |
| 24 | 5920-632-096-XX | JET-MAIN 68.8 | Gicleur prinipal | 1 | | * | | | | | 920632096 |
| 25 | 5920-642-002-XX | JET-PILOT 45 | Vis de melange | 1 | | * | | | | | 920642002 |

# FIG. 8 CARBURETOR (EB02)

## Carburateur

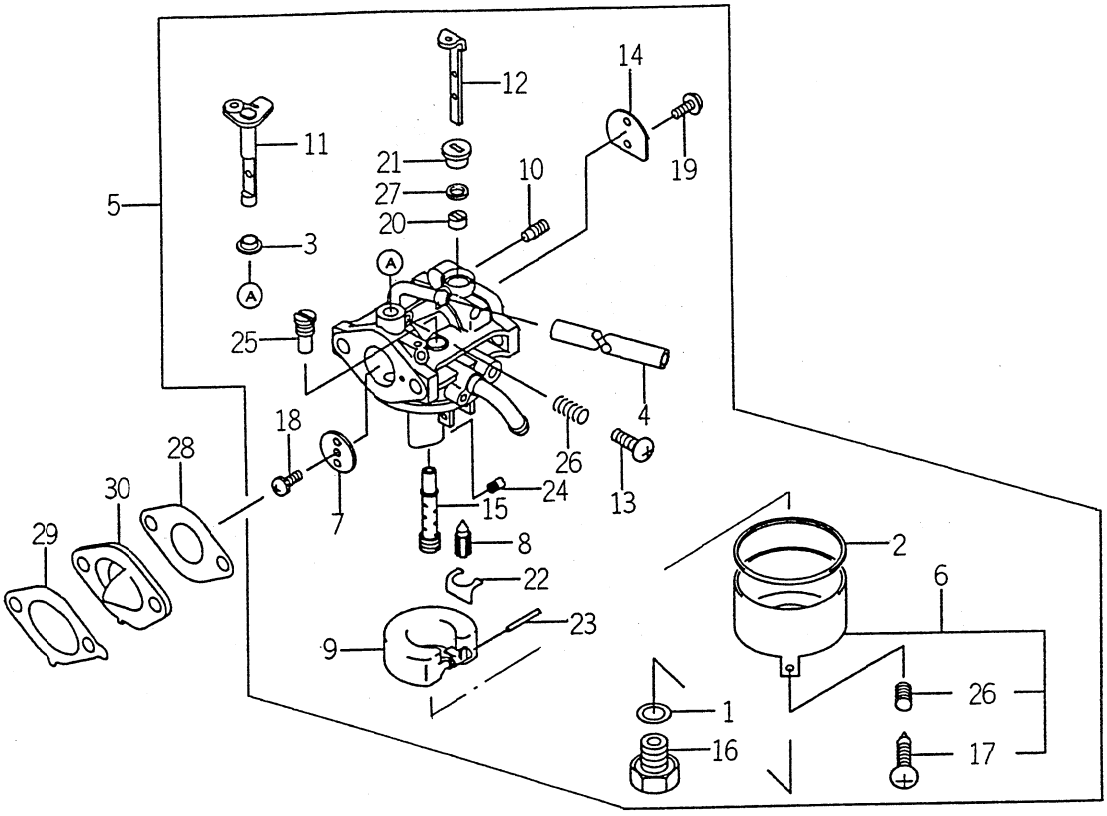


K621-0080

| KEY Réf. | PART CODE Pièces No. | DESCRIPTION | Désignation | QTY Quant. | TYPE OF MODEL Modél FC150V AB02 | FC150V EB02 | | ITC | COL | GRP | REMARKS Remarques |
|---|---|---|---|---|---|---|---|---|---|---|---|
| 26 | 5920-812-009-XX | SPRING | Ressort | 2 | | * | | | | | 920812009 |
| 27 | 5920-932-101-XX | SEAL | Joint | 1 | | * | | | | | 920932101 |
| 28 | 5110-602-010-XX | GASKET-CARBURETOR | Joint | 1 | | * | | | | | 110602010 |
| 29 | 5110-602-012-XX | GASKET-INSULATOR | Joint | 1 | | * | | | | | 110602012 |
| 30 | 5160-732-136-XX | INSULATOR | Ecran thermique | 1 | | * | | | | | 160732136 |

# FIG. 9 CARBURETOR (AB02)

## Carburateur

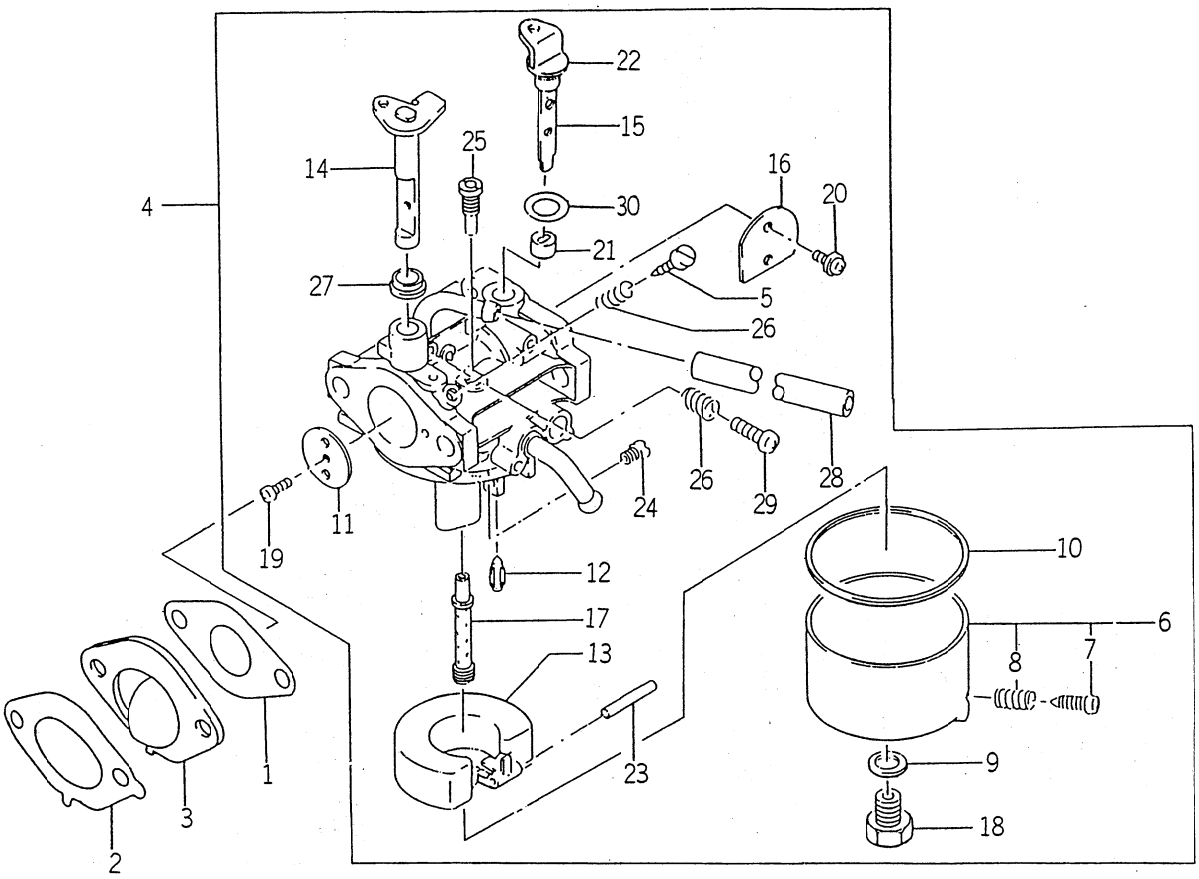


| KEY Réf. | PART CODE Pièces No. | DESCRIPTION | Désignation | QTY Quant. | TYPE OF MODEL Modél FC150V AB02 | FC150V EB02 | | ITC | COL | GRP | REMARKS Remarques |
|---|---|---|---|---|---|---|---|---|---|---|---|
| 1 | 5110-092-746-XX | GASKET, CARBURETOR | Joint | 1 | * | | | | | | 110092746 |
| 2 | 5110-092-833-XX | GASKET, INSULATOR | Joint | 1 | * | | | | | | 110092833 |
| 3 | 5160-732-136-XX | INSULATOR | Ecran thermique | 1 | * | | | | | | 160732136 |
| 4 | 5150-032-006-XX | CARBURETOR-ASSY. | Ens. carburateur | 1 | * | | | | | | 150032006 |
| 5 | 5164-706-114-00 | SCREW-PILOT AIR | Vis | 1 | * | | | | | | 316470611400 |
| 6 | 5145-766-130-AX | CHAMBER-FLOAT | Chambre du flotteur | 1 | * | | | | | | 3145766130A |
| 7 | 5154-706-133-AX | SCREW | Vis | 1 | * | | | | | | 3154706133A |
| 8 | 5131-226-116-00 | SPRING | Ressort | 1 | * | | | | | | 313122611600 |
| 9 | 5144-996-159-AX | GASKET | Joint | 1 | * | | | | | | 3144996159A |
| 10 | 5145-986-128-AX | GASKET | Joint | 1 | * | | | | | | 3145986128A |
| 11 | 5136-506-101-00 | VALVE-THROTTLE, #110 | Boisseau | 1 | * | | | | | | 313650610100 |
| 12 | 5144-996-122-AX | VALVE-FLOAT | Soupape | 1 | * | | | | | | 3144996122A |
| 13 | 5160-312-058-XX | FLOAT | Flotteur | 1 | * | | | | | | 160312058 |
| 14 | 5160-412-178-XX | SHAFT-CARBURETOR, TH | Axe voletd'air | 1 | * | | | | | | 160412178 |
| 15 | 5160-412-197-XX | SHAFT-CARBURETOR, CH | Axe voletd'air | 1 | * | | | | | | 160412197 |
| 16 | 5161-262-173-XX | VALVE, CHOKE | Volet d'air | 1 | * | | | | | | 161262173 |
| 17 | 5491-212-113-XX | NOZZLE-MAIN, #2A | Gicleur principal | 1 | * | | | | | | 491212113 |
| 18 | 5144-996-143-AX | BOLT | Vis | 1 | * | | | | | | 3144996143A |
| 19 | 5165-506-137-AX | SCREW | Vis | 1 | * | | | | | | 3165506137A |
| 20 | 5920-092-149-XX | SCREW | Vis | 2 | * | | | | | | 920092149 |
| 21 | 5145-986-138-AX | COLLAR | Entretoise | 1 | * | | | | | | 3145986138A |
| 22 | 5145-986-157-AX | COLLAR | Entretoise | 1 | * | | | | | | 3145986157A |
| 23 | 5144-996-127-AX | PIN | Axe | 1 | * | | | | | | 3144996127A |
| 24 | 5920-632-096-XX | JET-MAIN, #68.8 | Gicleur prinipal | 1 | * | | | | | | 920632096 |
| 25 | 5920-642-065-XX | JET-PILOT, #38.8 | Vis de melange | 1 | * | | | | | | 920642065 |

# FIG. 9 CARBURETOR (AB02)

## Carburateur

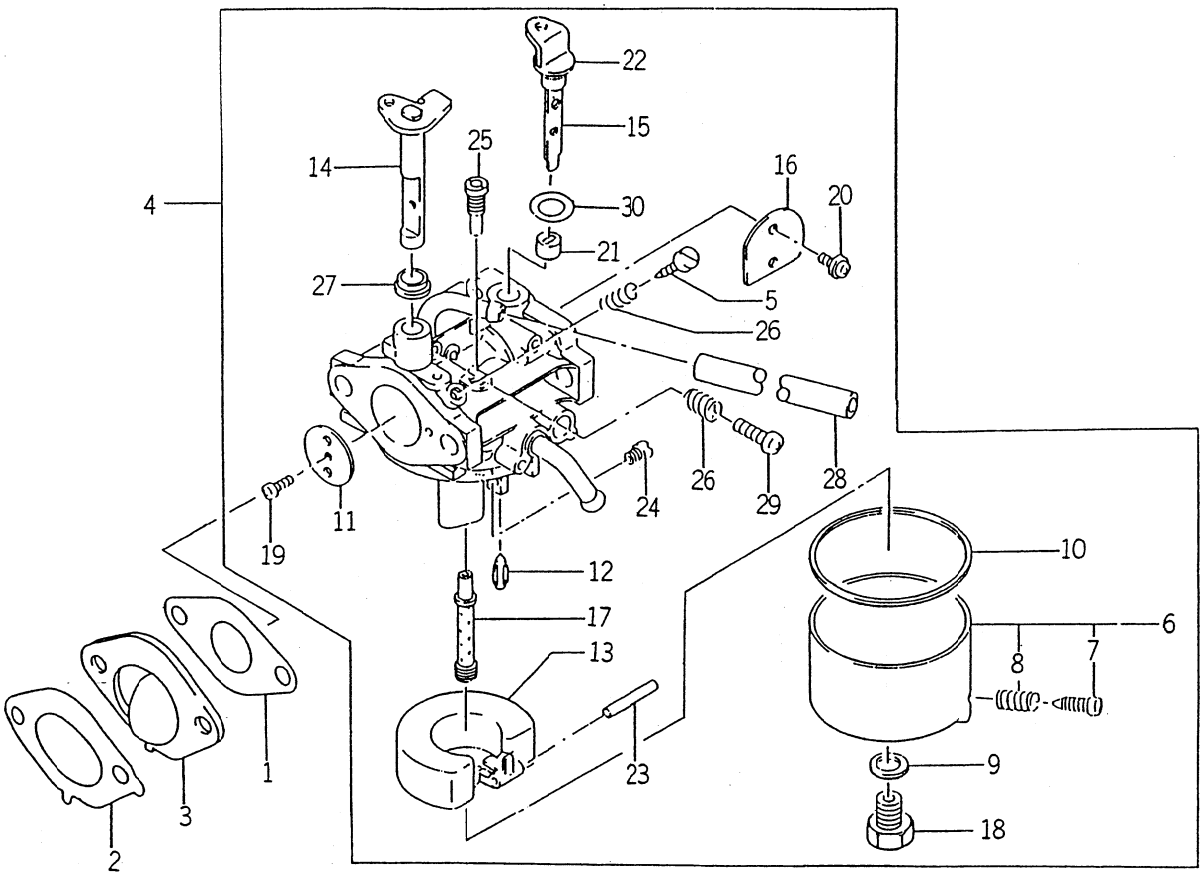


K500-101

| KEY Réf. | PART CODE Pièces No. | DESCRIPTION | Désignation | QTY Quant. | TYPE OF MODEL Modèl FC150V AB02 | FC150V EB02 | | ITC | COL | GRP | REMARKS Remarques |
|---|---|---|---|---|---|---|---|---|---|---|---|
| 26 | 5131-226-116-00 | SPRING | Ressort | 2 | * | | | | | | 313122611600 |
| 27 | 5921-432-143-XX | COLLAR | Entretoise | 1 | * | | | | | | 921432143 |
| 28 | 5921-902-003-XX | TUBE, 5x8x125 | Tuyau | 1 | * | | | | | | 921902003 |
| 29 | 5214-B04-12X-XX | SCREW-PAN+- | Vis | 1 | * | | | | | | 214B0412 |
| 30 | 5920-932-087-XX | SEAL | Joint | 1 | * | | | | | | 920932087 |

# FIG. 10 AIR – FILTER/MUFFLER
## Filter à air/Echappement

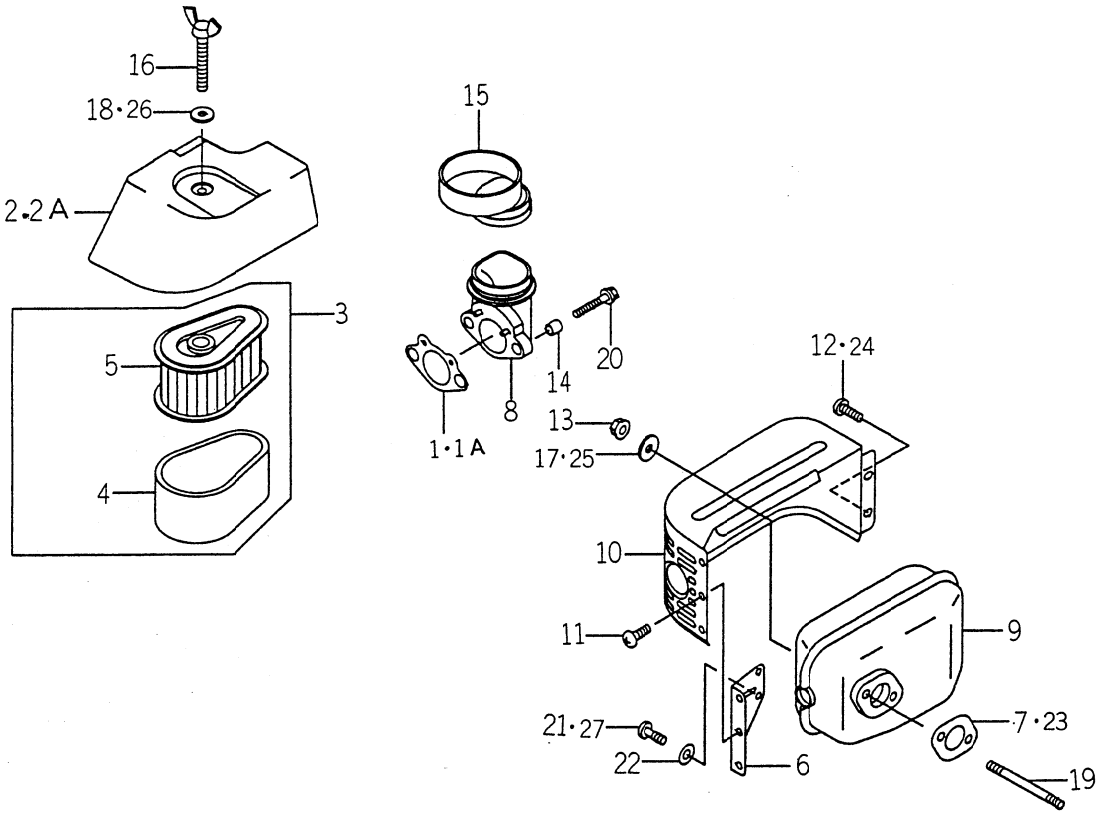


K621-0090

| KEY Réf. | PART CODE Pièces No. | DESCRIPTION | Désignation | QTY Quant. | TYPE OF MODEL Modèl FC150V AB02 | FC150V EB02 | | ITC | COL | GRP | REMARKS Remarques |
|---|---|---|---|---|---|---|---|---|---|---|---|
| 1 | 5110-092-742-XX | GASKET-INTAKE PIPE | Joint | 1 | * | 1- -C25867 | | | | | 110092742 |
| 1A | 5110-602-067-XX | GASKET-INTAKE PIPE | Joint | 1 | | C25868- | | | | | 110602067 |
| 2 | 5110-122-272-XX | CAP-AIR FILTER | Capuchon | 1 | * | 1- -C26560 | | | | | 110122272 |
| 2A | 5110-122-313-XX | CAP-AIR FILTER | Capuchon | 1 | | C26561- | | | | | 110122313 |
| 3 | 5110-292-002-XX | ELEMENT-ASSY | Ens. element | 1 | * | * | | | | | 110292002 |
| 4 | 5110-132-119-XX | ELEMENT-AIR FILTER | Element | 1 | * | * | | | | | 110132119 |
| 5 | 5110-132-120-XX | ELEMENT-AIR FILTER | Element | 1 | * | * | | | | | 110132120 |
| 6 | 5110-462-053-XX | BRACKET | Support | 1 | * | * | | | | | 110462053 |
| 7 | 5110-602-009-XX | GASKET-MUFFLER | Joint | 1 | | * | | | | | 110602009 |
| 8 | 5160-602-129-XX | PIPE-INTAKE | Tubulure d'admission | 1 | * | * | | | | | 160602129 |
| 9 | 5490-702-491-XX | MUFFLER-COMP | Echappement | 1 | * | * | | | | | 490702491 |
| 10 | 5491-062-446-XX | COVER-MUFFLER | Couvercle | 1 | * | * | | | | | 491062446 |
| 11 | 5920-092-166-XX | SCREW-5X8 | Vis | 3 | * | * | | | | | 920092166 |
| 12 | 5920-092-308-XX | SCREW | Vis | 2 | | * | | | | | 920092308 |
| 13 | 5920-151-193-XX | NUT | Ecrou | 2 | * | * | | | | | 920151193 |
| 14 | 5920-262-272-XX | SPACER-6.2X7.8X8 | Pièce d'écartement | 2 | * | * | | | | | 920262272 |
| 15 | 5920-592-257-XX | TUBE | Tuyau | 1 | * | * | | | | | 920592257 |
| 16 | 5921-502-101-XX | BOLT | Vis | 1 | * | * | | | | | 921502101 |
| 17 | 5922-002-032-XX | WASHER-7X21X2.3 | Rondelle | 2 | | * | | | | | 922002032 |
| 18 | 5922-002-078-XX | WASHER-6.5X18X2.0 | Rondelle | 1 | | * | | | | | 922002078 |
| 19 | 5172-G06-80X-XX | BOLT-STUD | Goujon | 2 | * | * | | | | | 172G0680 |
| 20 | 5186-B06-80X-XX | BOLT-UPSET-WP | Vis | 2 | * | * | | | | | 186B0680 |
| 21 | 5214-B05-10X-XX | SCREW-PAN | Vis | 2 | | * | | | | | 214B0510 |
| 22 | 5411-B05-00X-XX | WASHER-PLAIN | Rondelle | 2 | * | * | | | | | 411B0500 |
| 23 | 5110-092-743-XX | GASKET, MUFFLER | Joint | 1 | * | | | | | | 110092743 |

# FIG. 10 AIR – FILTER／MUFFLER
## Filtre à air／Echappement

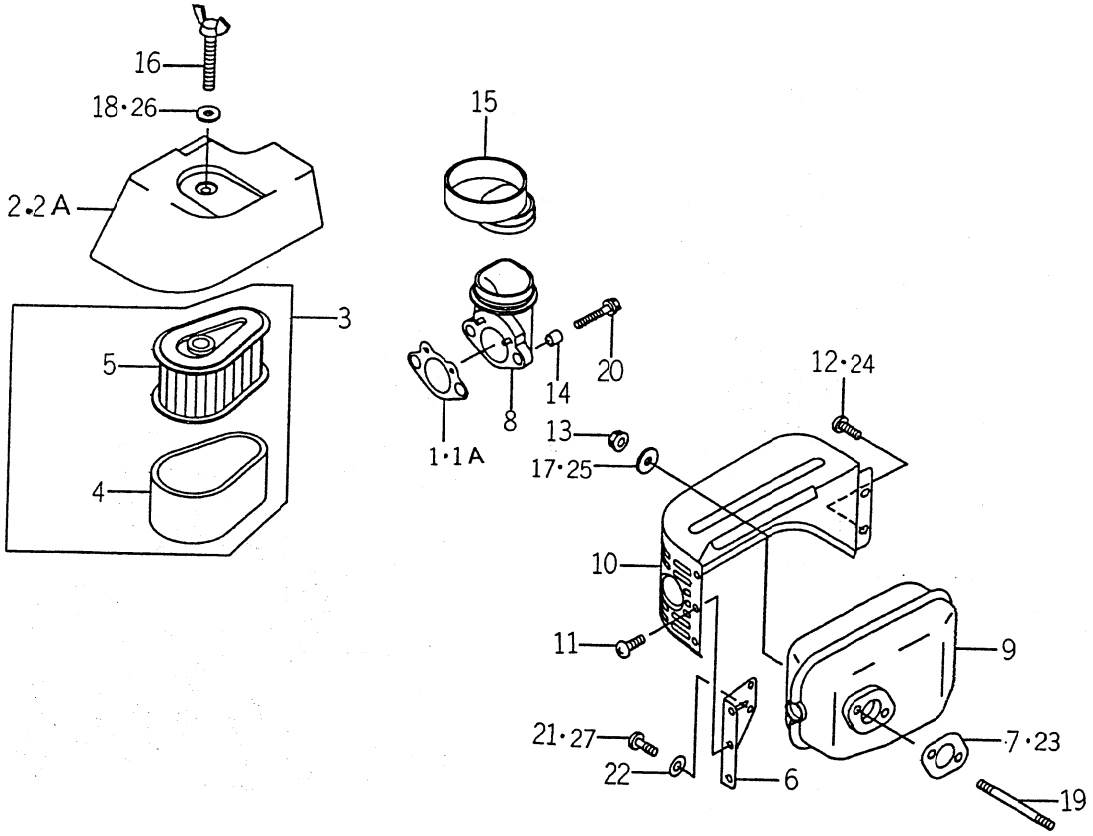


K500-101

| KEY Réf. | PART CODE Pièces No. | DESCRIPTION | Désignation | QTY Quant. | TYPE OF MODEL Modél FC150V AB02 | FC150V EB02 | | ITC | COL | GRP | REMARKS Remarques |
|---|---|---|---|---|---|---|---|---|---|---|---|
| 24 | 5920-092-104-XX | SCREW | Vis | 2 | * | | | | | | 920092104 |
| 25 | 5127-502-383-00 | WASHER | Rondelle | 2 | * | | | | | | 312750238300 |
| 26 | 5920-222-136-XX | WASHER | Rondelle | 1 | * | | | | | | 920222136 |
| 27 | 5130-B05-10X-XX | BOLT-FLANGED | Vis | 2 | * | | | | | | 130B0510 |

# FIG. 11 FUEL – TANK／FUEL – VALVE
## Resevoir／Robinet à carburant

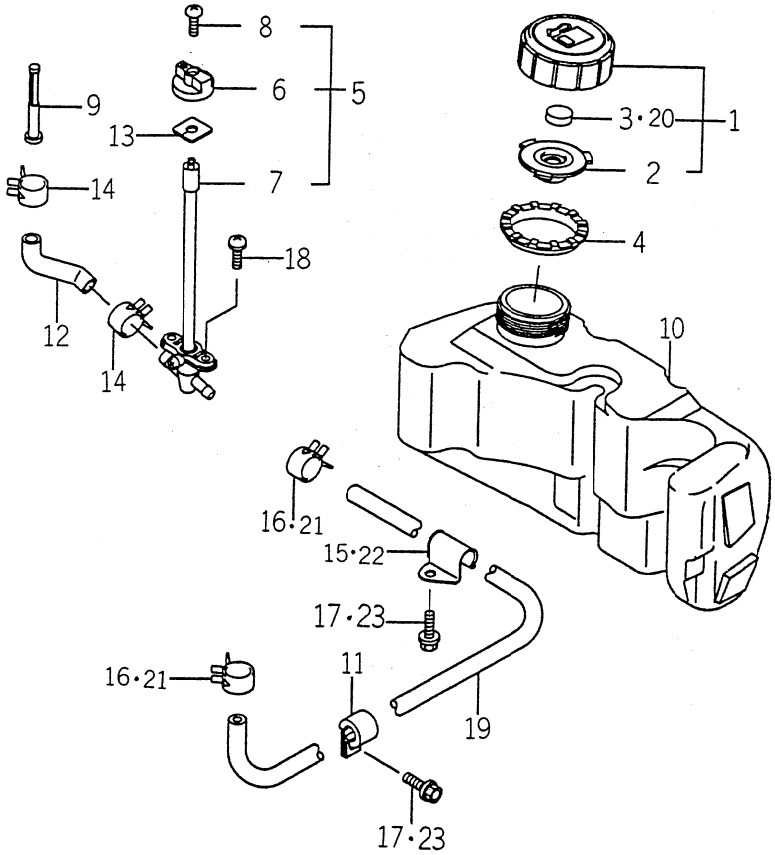


K621-0100

| KEY Réf. | PART CODE Pièces No. | DESCRIPTION | Désignation | QTY Quant. | TYPE OF MODEL Modél FC150V AB02 | FC150V EB02 | | ITC | COL | GRP | REMARKS Remarques |
|---|---|---|---|---|---|---|---|---|---|---|---|
| 1 | 5510-482-069-XX | CAP-ASSY-TANK | Ens. bouchon | 1 | * | * | | | | | 510482069 |
| 2 | 5110-092-831-XX | GASKET | Joint | 1 | * | * | | | | | 110092831 |
| 3 | 5491-092-054-XX | ELEMENT BREATHER | Element | 1 | | * | | | | | 491092054 |
| 4 | 5130-702-077-XX | GUIDE | Guide | 1 | * | * | | | | | 130702077 |
| 5 | 5490-192-094-XX | FILTER-FUEL | Robinet | 1 | * | * | | | | | 490192094 |
| 6 | 5131-682-303-XX | LEVER | Levier | 1 | * | * | | | | | 131682303 |
| 7 | 5161-042-052-XX | FILTER-COMP | Robinet | 1 | * | * | | | | | 161042052 |
| 8 | 5920-092-296-XX | SCREW | Vis | 1 | * | * | | | | | 920092296 |
| 9 | 5490-192-091-XX | FILTER-FUEL | Robinet | 1 | * | * | | | | | 490192091 |
| 10 | 5510-012-214-XX | TANK-COMP-FUEL | Reservoir | 1 | * | * | | | | | 510012214 |
| 11 | 5920-372-202-XX | CLAMP | Attache | 1 | * | * | | | | | 920372202 |
| 12 | 5920-592-262-XX | TUBE | Tuyau | 1 | * | * | | | | | 920592262 |
| 13 | 5920-932-088-XX | SEAL | Joint | 1 | | * | | | | | 920932088 |
| 14 | 5921-702-009-XX | CLAMP | Attache | 2 | * | * | | | | | 921702009 |
| 15 | 5921-702-037-XX | CLAMP | Attache | 1 | | * | | | | | 921702037 |
| 16 | 5921-702-043-XX | CLAMP | Attache | 2 | | * | | | | | 921702043 |
| 17 | 5130-B06-12X-XX | BOLT-FLANGED | Vis | 2 | | * | | | | | 130B0612 |
| 18 | 5233-B05-10X-XX | SCREW-PAN-WP | Vis | 2 | * | * | | | | | 233B0510 |
| 19 | 5705-A04-100-0X | TUBE-BRAID | Tuyau | 1 | * | * | | | | | 705A041000 |
| 20 | 5182-926-656-00 | ELEMENT-BREATHER | Element | 1 | * | | | | | | 318292665600 |
| 21 | 5171-966-812-00 | CLAMP | Attache | 2 | * | | | | | | 317196681200 |
| 22 | 5921-702-020-XX | CLAMP | Attache | 1 | * | | | | | | 921702020 |
| 23 | 5130-B06-10X-XX | BOLT-FLANGED | Vis | 2 | * | | | | | | 130B0610 |
| | | | | | | | | | | | |
| | | | | | | | | | | | |

# FIG. 12 STARTER
## Démarreur

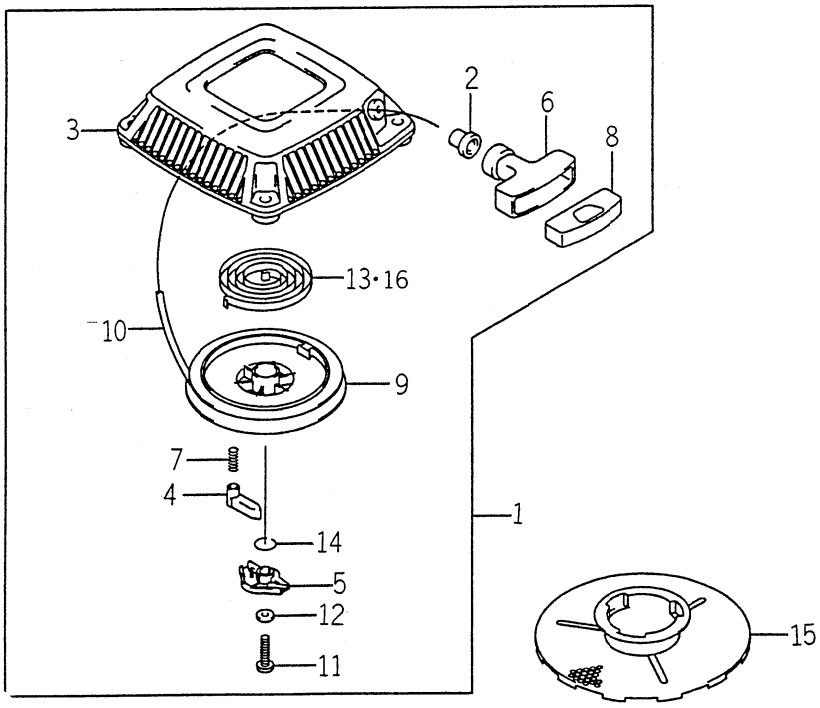


K621-0110

| KEY Réf. | PART CODE Pièces No. | DESCRIPTION | Désignation | QTY Quant. | TYPE OF MODEL Modél FC150V AB02 | FC150V EB02 | | I T C | C O L | G R P | REMARKS Remarques |
|---|---|---|---|---|---|---|---|---|---|---|---|
| 1 | 5490-882-379-XX | STARTER-RECOIL | Lanceur | 1 | * | * | | | | | 490882379 |
| 2 | 5130-702-064-XX | GUIDE-ROPE | Guide | 1 | * | * | | | | | 130702064 |
| 3 | 5130-912-113-XX | HOLDER-RECOIL | Support | 1 | * | * | | | | | 130912113 |
| 4 | 5131-652-072-XX | PAWL-RECOIL STARTER | Cliquet | 1 | * | * | | | | | 131652072 |
| 5 | 5391-082-059-XX | RETAINER-SPRING | Coupelle | 1 | * | * | | | | | 391082059 |
| 6 | 5460-752-082-XX | GRIP-RECOIL STARTER | Poignée | 1 | * | * | | | | | 460752082 |
| 7 | 5921-442-177-XX | SPRING-RETURN | Ressort de Rappel | 1 | * | * | | | | | 921442177 |
| 8 | 5110-122-255-XX | CAP-GRIP | Capuchon | 1 | * | * | | | | | 110122255 |
| 9 | 5591-012-079-XX | REEL-RECOIL-STARTER | Poulie | 1 | * | * | | | | | 591012079 |
| 10 | 5591-062-115-XX | ROPE-3.8X1600 | Corde | 1 | * | * | | | | | 591062115 |
| 11 | 5920-092-280-XX | SCREW-5X18 | Vis | 1 | * | * | | | | | 920092280 |
| 12 | 5920-222-384-XX | WASHER-5X12.8X1.2 | Rondelle | 1 | * | * | | | | | 920222384 |
| 13 | 5920-812-265-XX | SPRING-RECOIL | Ressort spiral | 1 | | * | | | | | 920812265 |
| 14 | 5921-442-176-XX | SPRING | Ressort | 1 | * | * | | | | | 921442176 |
| 15 | 5490-802-143-XX | PULLEY-STARTING | Bol | 1 | * | * | | | | | 490802143 |
| 16 | 5156-013-452-AX | SPRING, RECOIL | Ressort spiral | 1 | * | | | | | | 3156013452A |

# FIG. 13 LABEL
## Etiquette

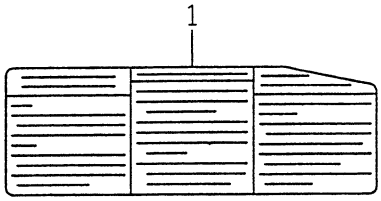


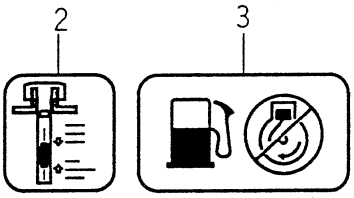


K621-0120

| KEY Réf. | PART CODE Pièces No. | DESCRIPTION | Désignation | QTY Quant. | TYPE OF MODEL Modél FC150V AB02 | FC150V EB02 | | ITC | COL | GRP | REMARKS Remarques |
|---|---|---|---|---|---|---|---|---|---|---|---|
| 1 | 5560-312-375-XX | LABEL-MANUAL | Etiquette | 1 | * | * | | | | | 560312375 |
| 2 | 5560-312-376-XX | LABEL-MANUAL | Etiquette | 1 | * | * | | | | | 560312376 |
| 3 | 5560-312-384-XX | LABEL-MANUAL | Etiquette | 1 | * | * | | | | | 560312384 |

# FIG. 14 ACCESSORY
## Accessoire

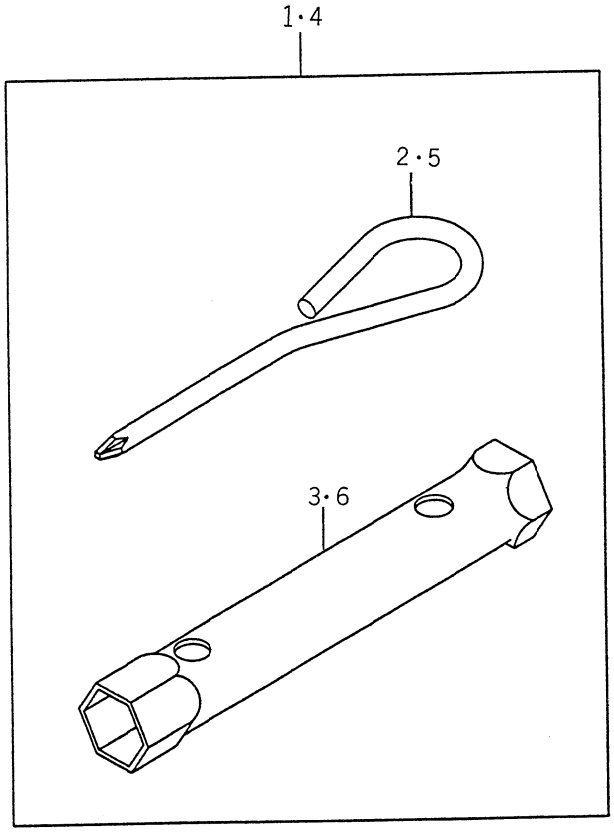


K621-0130

| KEY Réf. | PART CODE Pièces No. | DESCRIPTION | Désignation | QTY Quant. | TYPE OF MODEL Modél FC150V AB02 | FC150V EB02 | | ITC | COL | GRP | REMARKS Remarques |
|---|---|---|---|---|---|---|---|---|---|---|---|
| 1 | 5560-072-118-XX | TOOLKIT | Outil | 1 | * | * | | | | | 560072118 |
| 2 | 5921-072-057-XX | TOOL-DRIVER | Tournevis | 1 | * | * | | | | | 921072057 |
| 3 | 5921-102-093-XX | TOOL-WRENCH-19X21 | Clef plate | 1 | * | * | | | | | 921102093 |
| 4 | 5119-200-900-AX | TOOL KIT | Outil | 1 | * | | | | | | 3119200900A |
| 5 | 2500-930-002-00 | TOOL-DRIVER | Tournevis | 1 | * | | | | | | 3119200951A |
| 6 | 2500-930-001-00 | TOOL-WRENCH, 19x21 | Clef plate | 1 | * | | | | | | 3144900931A |

# ENGINE
# Moteur

## FC150V – AB03
## FC150V – FB03
## FC150V – GB03

# FIG. 1 CYLINDER／CRANKCASE

## Cylindre／Carter

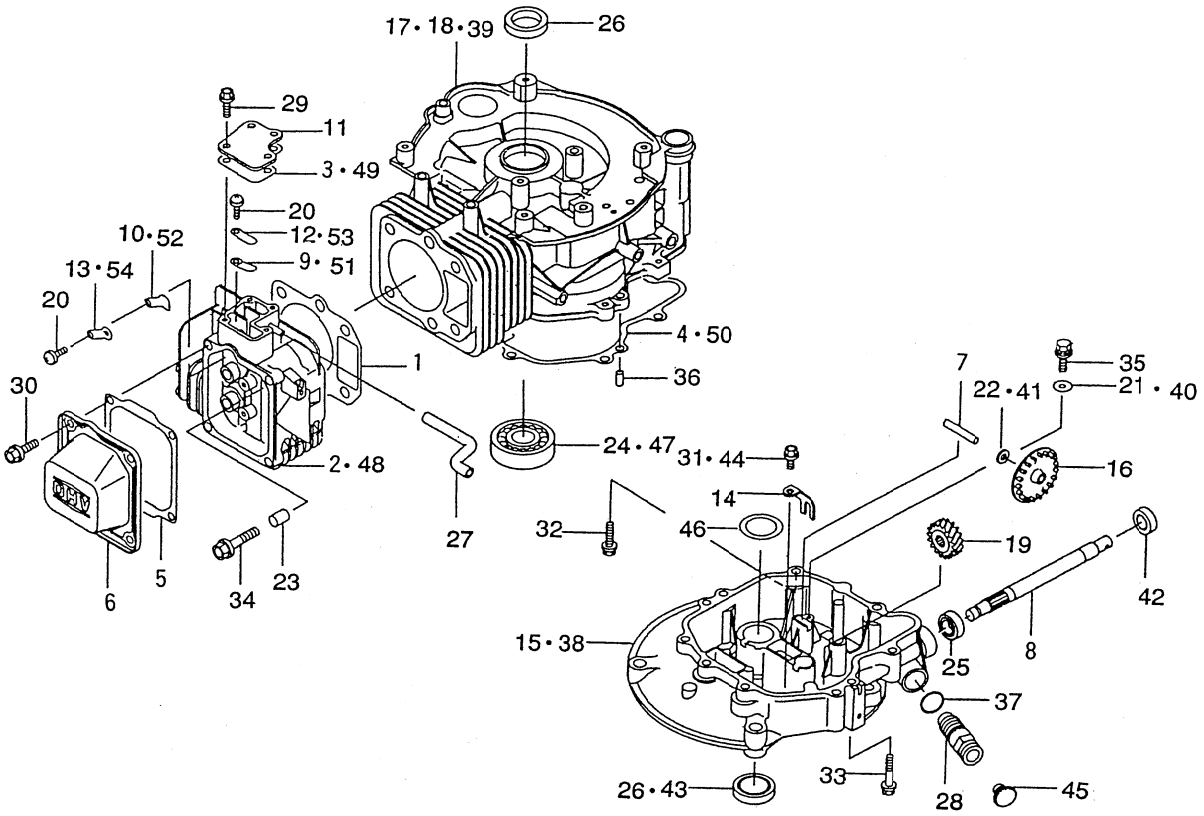


K500-101

| KEY Réf. | PART CODE Pièces No. | DESCRIPTION | Désignation | QTY Quant. | TYPE OF MODEL Modél FC150V AB03 | FC150V FB03 | FC150V GB03 | ITC | COL | GRP | REMARKS Remarques |
|---|---|---|---|---|---|---|---|---|---|---|---|
| 1 | 5110-042-099-XX | GASKET-HEAD | Joint de cylindre | 1 | * | * | * | | | | 110042099 |
| 2 | 5110-086-008-XX | HEAD-COMP-CYLINDER | Culasse | 1 | * | | | | | | 110086008 |
| 3 | 5110-092-740-XX | GASKET | Joint | 1 | * | 1--C27854 | | | | | 110092740 |
| 4 | 5110-092-770-XX | GASKET | Joint | 1 | * | 1--C27854 | | | | | 110092770 |
| 5 | 5110-092-848-XX | GASKET, ROCKER CASE | Joint de boitier | 1 | * | * | * | | | | 110092848 |
| 6 | 5110-222-057-XX | CASE-ROCKER | Boitier | 1 | * | * | * | | | | 110222057 |
| 7 | 5131-072-202-XX | SHAFT | Arbre | 1 | * | * | * | | | | 131072202 |
| 8 | 5131-072-220-XX | SHAFT | Arbre | 1 | * | * | * | | | | 131072220 |
| 9 | 5131-832-258-XX | PLATE | Praque | 1 | * | 1--F81465 | | | | | 131832258 |
| 10 | 5131-832-259-XX | PLATE | Praque | 1 | * | 1--F81465 | | | | | 131832259 |
| 11 | 5140-242-180-XX | COVER | Capot | 1 | * | * | * | | | | 140242180 |
| 12 | 5161-262-149-XX | VALVE | Soupape | 1 | * | 1--F81465 | | | | | 161262149 |
| 13 | 5161-262-150-XX | VALVE | Soupape | 1 | * | 1--F81465 | | | | | 161262150 |
| 14 | 5210-832-062-XX | ARM | Bras | 1 | * | * | * | | | | 210832062 |
| 15 | 5490-156-055-XX | COVER-CRANKCASE | Carter | 1 | * | | | | | | 490156055 |
| 16 | 5490-732-055-XX | SLINGER-OIL | Déflecteur d'huile | 1 | * | * | * | | | | 490732055 |
| 17 | 5491-202-247-XX | CRANKCASE-COMP | Carter | 1 | | * | * | | | | 491202247 |
| 18 | 5491-202-185-XX | CRANKCASE-COMP | Carter | 1 | * | | | | | | 491202185 |
| 19 | 5590-562-790-XX | GEAR-HELICAL | Pignon | 1 | * | * | * | | | | 590562790 |
| 20 | 5920-092-166-XX | SCREW, 5x8 | Vis | 2 | * | * | * | | | | 920092166 |
| 21 | 5145-V17-281-AX | WASHER | Rondelle | 1 | * | | | | | | 3145V17281A |
| 22 | 5920-222-131-XX | WASHER | Rondelle | 1 | * | | | | | | 920222131 |
| 23 | 5920-431-264-XX | PIN | Axe | 2 | * | * | * | | | | 920431264 |
| 24 | 5920-452-155-XX | BEARING-BALL | Roulement à billes | 1 | * | | | | | | 920452155 |
| 25 | 5117-604-241-00 | SEAL-OIL | Joint SPI | 1 | * | | | | | | 311760424100 |

# FIG. 1 CYLINDER／CRANKCASE
## Cylindre／Carter

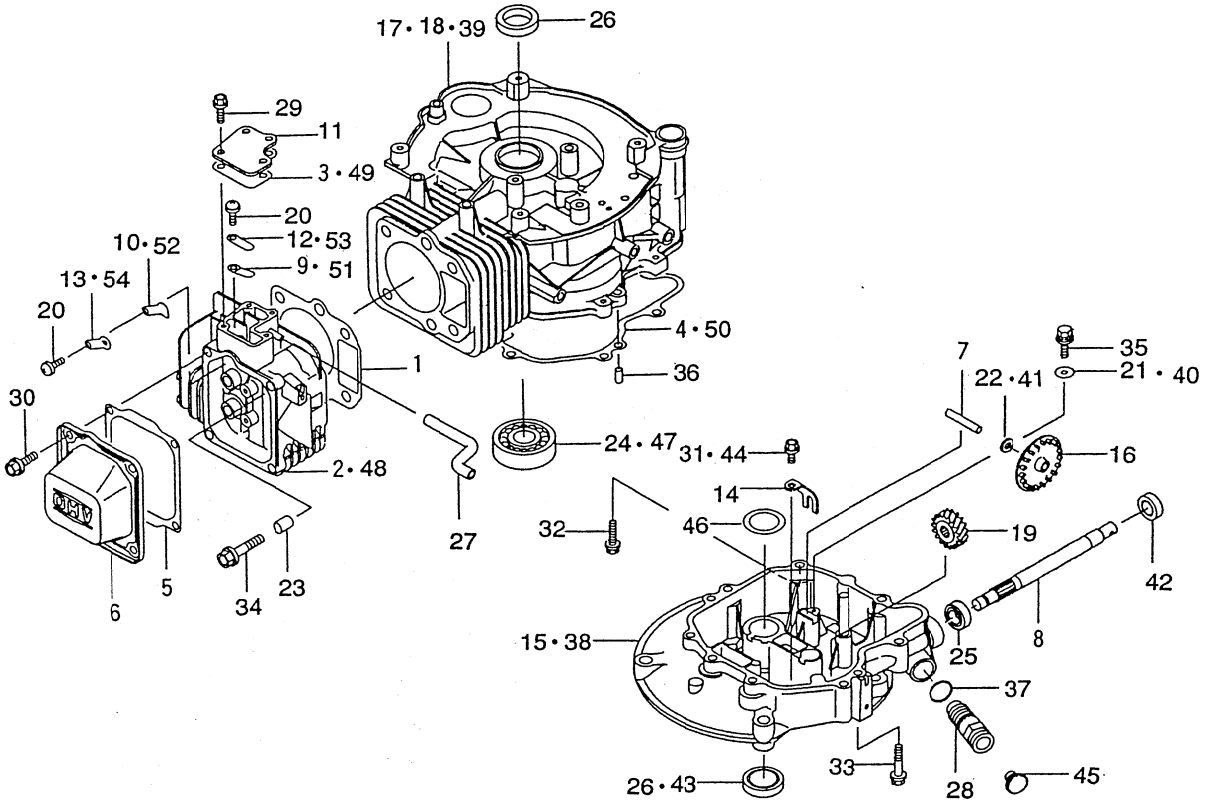


K500-101

| KEY Réf. | PART CODE Pièces No. | DESCRIPTION | Désignation | QTY Quant. | TYPE OF MODEL Modél FC150V AB03 | FC150V FB03 | FC150V GB03 | ITC | COL | GRP | REMARKS Remarques |
|---|---|---|---|---|---|---|---|---|---|---|---|
| 26 | 5158-014-231-AX | SEAL-OIL | Joint SPI | 2 | * | | | | | | 3158014231A |
| 27 | 5920-592-256-XX | TUBE | Tuyau | 1 | * | * | * | | | | 920592256 |
| 28 | 5920-662-180-XX | PLUG | Bouchon | 1 | * | * | * | | | | 920662180 |
| 29 | 5130-B05-10X-XX | BOLT-FLANGED | Vis | 4 | * | * | * | | | | 130B0510 |
| 30 | 5130-B06-12X-XX | BOLT-FLANGED | Vis | 4 | * | * | * | | | | 130B0612 |
| 31 | 5130-B06-14X-XX | BOLT-FLANGED | Vis | 1 | * | | | | | | 130B0614 |
| 32 | 5130-G06-25X-XX | BOLT-FLANGED | Vis | 5 | * | * | * | | | | 130G0625 |
| 33 | 5130-G06-45X-XX | BOLT-FLANGED | Vis | 2 | * | * | * | | | | 130G0645 |
| 34 | 5130-G08-45X-XX | BOLT-FLANGED | Vis | 4 | * | * | * | | | | 130G0845 |
| 35 | 5187-B05-10X-XX | BOLT-UPSET-WSP | Vis | 1 | * | * | * | | | | 187B0510 |
| 36 | 5551-A06-12X-XX | PIN-DOWEL | Pion | 2 | * | * | * | | | | 551A0612 |
| 37 | 5670-D20-15X-XX | O RING | Joint torique | 1 | * | * | * | | | | 670D2015 |
| 38 | 5490-156-088-XX | COVER-CRANKCASE | Carter | 1 | | * | * | | | | 490156088 |
| 39 | 5491-202-225-XX | CRANKCASE-COMP | Carter | 1 | | * | | | | | 491202225 |
| 40 | 5922-002-033-XX | WASHER | Rondelle | 1 | | * | * | | | | 922002033 |
| 41 | 5922-002-034-XX | WASHER | Rondelle | 1 | | * | * | | | | 922002034 |
| 42 | 5920-492-204-XX | SEAL-OIL | Joint SPI | 1 | | * | * | | | | 920492204 |
| 43 | 5920-492-208-XX | SEAL-OIL | Joint SPI | 2 | | * | * | | | | 920492208 |
| 44 | 5130-B06-12X-XX | BOLT-FLANGED | Vis | 5 | | * | * | | | | 130B0612 |
| 45 | 5920-662-193-XX | PLUG | Bouchon | 1 | | * | * | | | | 920662193 |
| 46 | 5922-002-026-XX | WASHER25X42X1 | Rondelle | 1 | | * | * | | | | 922002026 |
| 47 | 5601-B62-05X-XX | BEARING-BALL | Roulement à billes | 1 | | * | * | | | | 601B6205 |
| 48 | 5110-086-023-XX | HEAD-COMP-CYLINDER | Culasse | 1 | | * | * | | | | 110086023 |
| 49 | 5110-602-007-XX | GASKET | Joint | 1 | | C27855- | C27855- | | | | 110602007 |
| 50 | 5110-602-011-XX | GASKET | Joint | 1 | | C27855- | C27855- | | | | 110602011 |

# FIG. 1 CYLINDER／CEANKCASE

## Cylindre／Carter

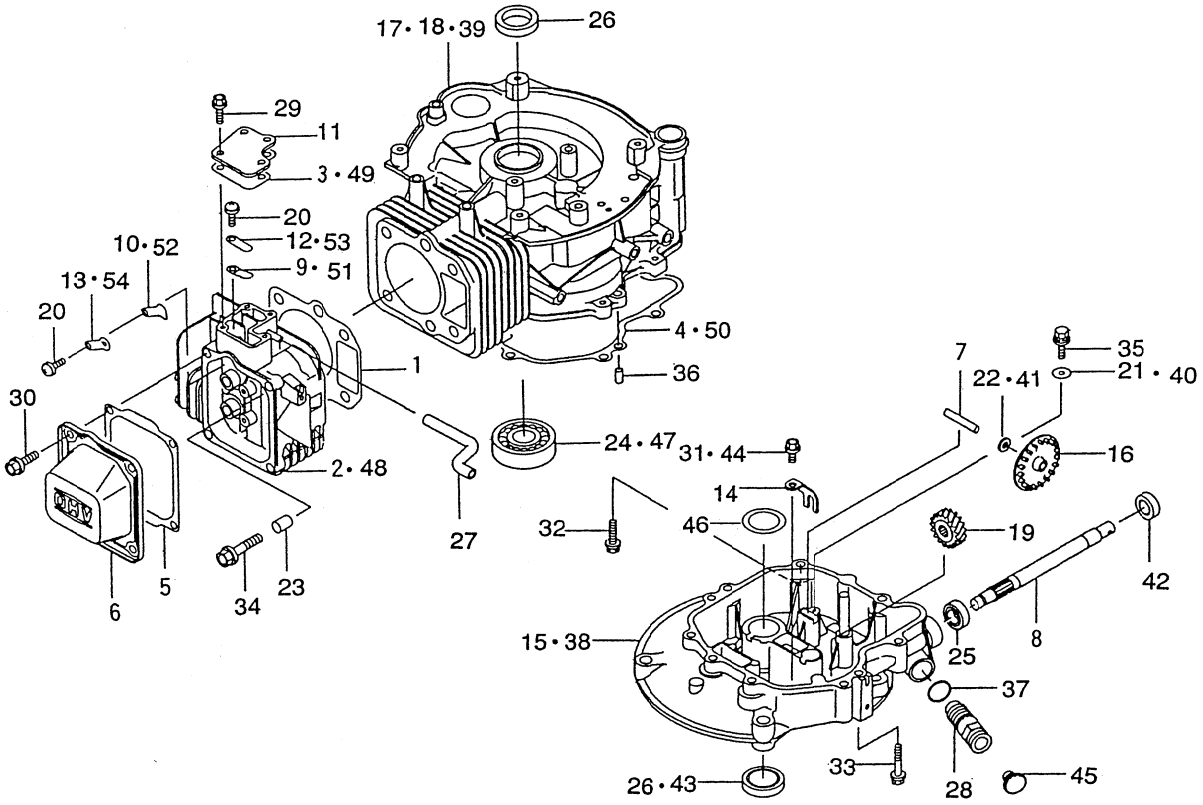


K500-101

| KEY Réf. | PART CODE Pièces No. | DESCRIPTION | Désignation | QTY Quant. | TYPE OF MODEL Modél FC150V AB03 | FC150V FB03 | FC150V GB03 | ITC | COL | GRP | REMARKS Remarques |
|---|---|---|---|---|---|---|---|---|---|---|---|
| 51 | 5132-702-049-XX | PLATE | Praque | 1 | | | F81466- | | | | 132702049 |
| 52 | 5132-702-050-XX | PLATE | Praque | 1 | | | F81466- | | | | 132702050 |
| 53 | 5161-262-201-XX | VALVE | Soupape | 1 | | | F81466- | | | | 161262201 |
| 54 | 5161-262-202-XX | VALVE | Soupape | 1 | | | F81466- | | | | 161262202 |

# FIG. 2 PISTON／CRANKSHAFT

## Piston／vilebrequin

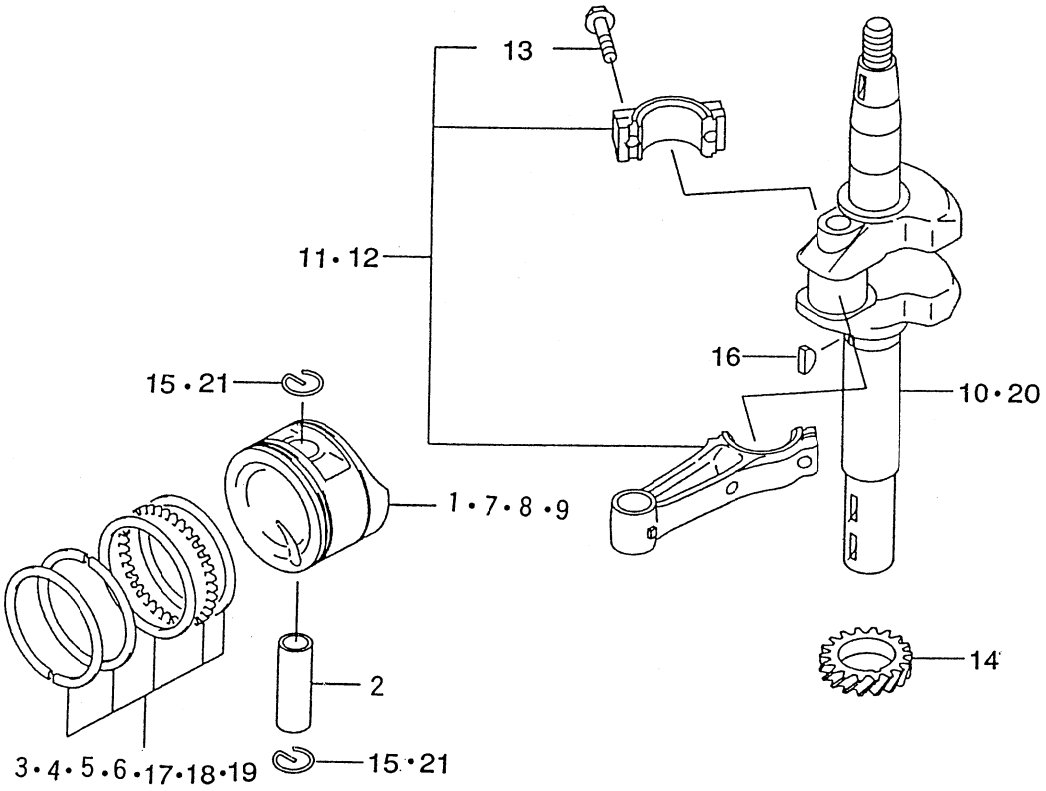


K500-101

| KEY Réf. | PART CODE Pièces No. | DESCRIPTION | Désignation | QTY Quant. | TYPE OF MODEL Modèl FC150V AB03 | FC150V FB03 | FC150V GB03 | ITC | COL | GRP | REMARKS Remarques |
|---|---|---|---|---|---|---|---|---|---|---|---|
| 1 | 5130-012-109-XX | PISTON-ENGINE | Piston | 1 | * | * | * | | | | 130012109 |
| 2 | 5130-022-074-XX | PIN-PISTON | Axe de piston | 1 | * | * | * | | | | 130022074 |
| 3 | 5130-086-017-XX | RING-SET-PISTON | Jeu de segments | 1 | * | 1- -D58946 | 1- -D58946 | | | | 130086017 |
| 4 | 5130-246-002-XX | RING-SET-PISTON 0.75 | Jeu de segments | 1 | T | | | | | | 130246002 |
| 5 | 5130-256-003-XX | RING-SET-PISTON 0.25 | Jeu de segments | 1 | T | | | | | | 130256003 |
| 6 | 5130-256-004-XX | RING-SET-PISTON 0.50 | Jeu de segments | 1 | T | | | | | | 130256004 |
| 7 | 5130-272-058-XX | PISTON-ENGINE 0.75 | Piston | 1 | T | | | | | | 130272058 |
| 8 | 5130-292-094-XX | PISTON-ENGINE L,0.25 | Piston | 1 | T | T | T | | | | 130292094 |
| 9 | 5130-292-095-XX | PISTON-ENGINE L,0.50 | Piston | 1 | T | T | T | | | | 130292095 |
| 10 | 5130-372-359-XX | CRANKSHAFT | Vilebrequin | 1 | * | | | | | | 130372359 |
| 11 | 5132-516-025-XX | ROD-ASSY-CONNECTING | Bielle | 1 | * | * | * | | | | 132516025 |
| 12 | 5132-516-027-XX | ROD-ASSY U/S=0.50 | Bielle | 1 | T | T | T | | | | 132516027 |
| 13 | 5921-502-122-XX | BOLT,CONNECTING ROD | Vis | 2 | * | * | * | | | | 921502122 |
| 14 | 5590-562-726-XX | GEAR-HELICAL | Pignon | 1 | * | * | * | | | | 590562726 |
| 15 | 5315-501-312-2A | RING-SNAP | Circlips | 2 | * | | | | | | 3155013122A |
| 16 | 5920-382-093-XX | KEY | Clavette | 1 | * | * | * | | | | 920382093 |
| 17 | 5130-086-030-XX | RING-SET-PISTON | Jeu de segments | 1 | | D58947- | D58947- | | | | 130086030 |
| 18 | 5130-256-013-XX | RING-SET-PISTON 0.25 | Jeu de segments | 1 | | T | T | | | | 130256013 |
| 19 | 5130-256-014-XX | RING-SET-PISTON 0.50 | Jeu de segments | 1 | | T | T | | | | 130256014 |
| 20 | 5130-372-453-XX | CRANKSHAFT | Vilebrequin | 1 | | * | * | | | | 130372453 |
| 21 | 5920-332-161-XX | RING-SNAP | Circlips | 2 | | * | * | | | | 920332161 |

# FIG. 3 VALVE/CRANKSHAFT
## Soupape/Arbre à cames

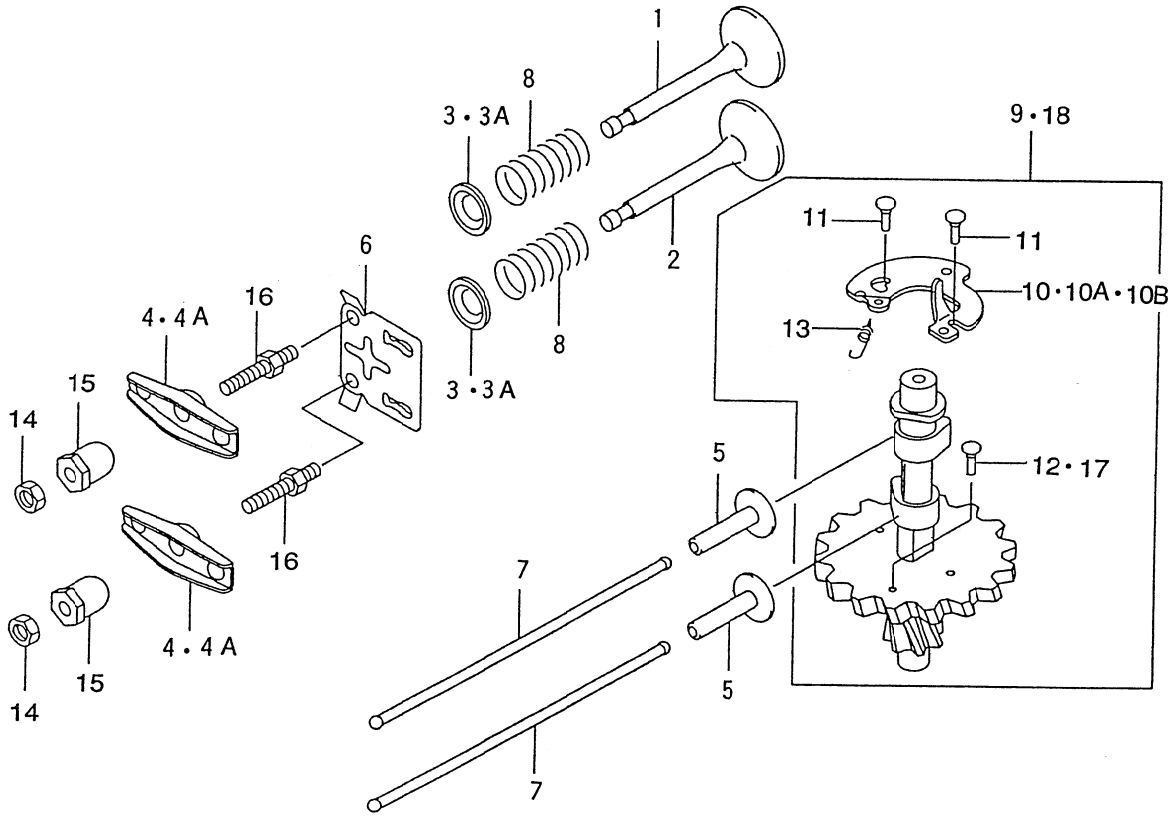


K500-101

| KEY Réf. | PART CODE Pièces No. | DESCRIPTION | Désignation | QTY Quant. | TYPE OF MODEL Modél FC150V AB03 | FC150V FB03 | FC150V GB03 | ITC | COL | GRP | REMARKS Remarques |
|---|---|---|---|---|---|---|---|---|---|---|---|
| 1 | 5120-042-090-XX | VALVE-INTAKE | Soupape d'admission | 1 | * | * | * | | | | 120042090 |
| 2 | 5120-052-074-XX | VALVE-EXHAUST | Soupape d'echappement | 1 | * | * | * | | | | 120052074 |
| 3 | 5120-092-062-XX | RETAINER-VALVE SPRIN | Coupelle | 2 | * | 1--F81465 | | | | | 120092062 |
| 3A | 5120-092-068-XX | RETAINER-VALVE SP | Coupelle | 2 | | | F81466- | | | | 120092068 |
| 4 | 5120-162-057-XX | ARM-ROCKER | Culbuteur | 2 | * | 1--G27059 | 1--G27059 | | | | 120162057 |
| 4A | 5120-162-062-XX | ARM-ROCKER | Culbuteur | | | | G27060- | | | | 2120162062 |
| 5 | 5120-322-065-XX | TAPPET | Poussoir | 2 | * | * | * | | | | 120322065 |
| 6 | 5130-702-072-XX | GUIDE | Guide | 1 | * | * | * | | | | 130702072 |
| 7 | 5131-162-065-XX | ROD-PUSH | Pige-poussoir | 2 | * | * | * | | | | 131162065 |
| 8 | 5490-782-064-XX | SPRING-ENGINE VALVE | Ressort | 2 | * | * | * | | | | 490782064 |
| 9 | 5491-182-068-XX | CAMSHAFT-COMP | Arbre a cames | 1 | * | | | | | | 491182068 |
| 10 | 5211-182-069-XX | DECOMPRESSOER | Décompresseur | 1 | * | 1--B74379 | | | | | 211182069 |
| 10A | 5211-182-082-XX | DECOMPRESSOR | Décompresseur | 1 | | B74380--F81465 | B74380--F81465 | | | | 211182082 |
| 10B | 5211-182-090-XX | DECOMPRESSOR | Décompresseur | 1 | | | F81466- | | | | 211182090 |
| 11 | 5920-432-168-XX | PIN | Axe | 2 | * | * | * | | | | 920432168 |
| 12 | 5920-432-169-XX | PIN | Axe | 1 | * | | | | | | 920432169 |
| 13 | 5920-812-342-XX | SPRING | Ressort | 1 | * | * | * | | | | 920812342 |
| 14 | 5920-152-240-XX | NUT, 6MM | Ecrou | 2 | * | * | * | | | | 920152240 |
| 15 | 5920-152-253-XX | NUT | Ecrou | 2 | * | * | * | | | | 920152253 |
| 16 | 5921-502-102-XX | BOLT | Vis | 2 | * | * | * | | | | 921502102 |
| 17 | 5920-432-168-XX | PIN | Axe | 1 | | * | * | | | | 920432168 |
| 18 | 5491-182-119-XX | CAMSHAFT-COMP | Arbre a cames | 1 | | * | * | | | | 491182119 |

# FIG. 4 LUBRICATION – EQUIPMENT
## Lubrification

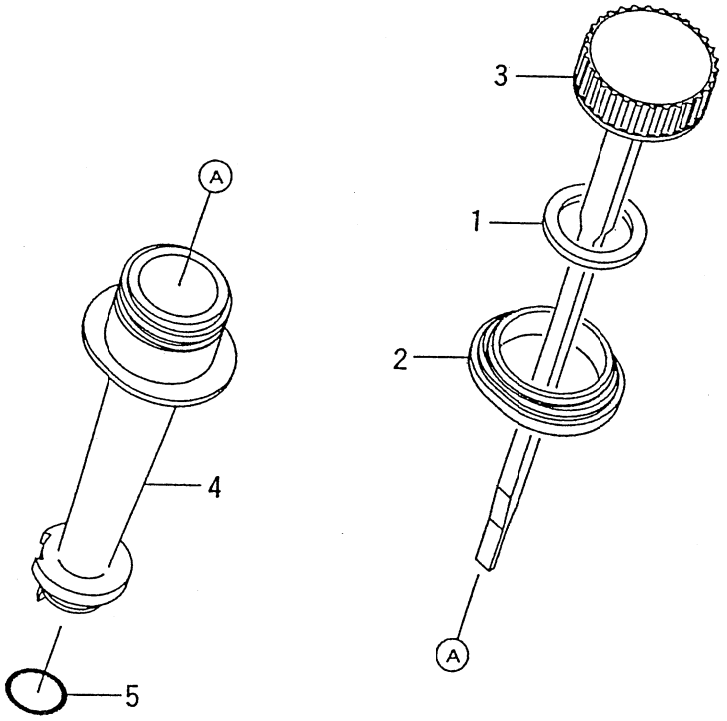


K500-101

| KEY Réf. | PART CODE Pièces No. | DESCRIPTION | Désignation | QTY Quant. | TYPE OF MODEL Modél FC150V AB03 | FC150V FB03 | FC150V GB03 | ITC | COL | GRP | REMARKS Remarques |
|---|---|---|---|---|---|---|---|---|---|---|---|
| 1 | 5110-092-346-XX | GASKET, OIL GAUGE | Joint | 1 | * | * | * | | | | 110092346 |
| 2 | 5130-702-078-XX | GUIDE | Guide | 1 | * | * | * | | | | 130702078 |
| 3 | 5520-052-094-XX | GAUGE | Guide | 1 | * | * | * | | | | 520052094 |
| 4 | 5592-312-071-XX | FILLER | Charge | 1 | * | * | * | | | | 592312071 |
| 5 | 5670-D20-16X-XX | O RING | Joint torique | 1 | * | * | * | | | | 670D2016 |

# FIG. 5 COOLING – EQUIPMENT
## Refroidissment

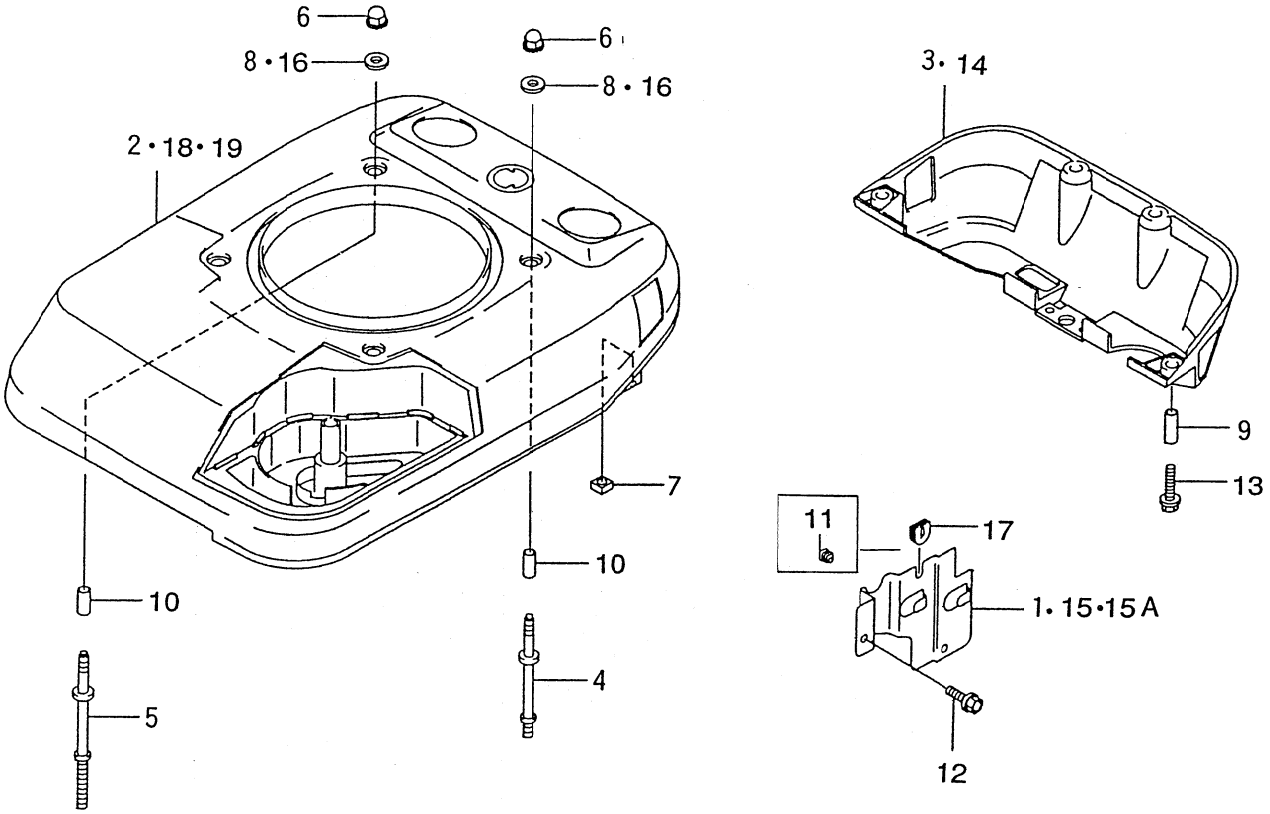


K500-101

| KEY Réf. | PART CODE Pièces No. | DESCRIPTION | Désignation | QTY Quant. | TYPE OF MODEL Modél FC150V AB03 | FC150V FB03 | FC150V GB03 | ITC | COL | GRP | REMARKS Remarques |
|---|---|---|---|---|---|---|---|---|---|---|---|
| 1 | 5140-242-181-XX | COVER | Capot | 1 | * | | | | | | 140242181 |
| 2 | 5140-242-251-XX | COVER | Couvercle | 1 | * | | | | | | 140242251 |
| 3 | 5140-242-252-XX | COVER, LOWER | Couvercle | 1 | * | * | | | | | 140242252 |
| 4 | 5920-042-117-XX | STUD | Goujon | 3 | * | * | * | | | | 920042117 |
| 5 | 5920-042-118-XX | STUD | Goujon | 1 | * | * | * | | | | 920042118 |
| 6 | 5920-151-170-XX | NUT | Ecrou | 4 | * | * | * | | | | 920151170 |
| 7 | 5920-152-241-XX | NUT, 6MM | Ecrou | 4 | * | * | * | | | | 920152241 |
| 8 | 5920-222-136-XX | WASHER | Rondelle | 4 | * | | | | | | 920222136 |
| 9 | 5920-262-273-XX | SPACER, 6.2x7.8x17 | Pièce d'écartement | 4 | * | * | * | | | | 920262273 |
| 10 | 5920-262-274-XX | SPACER, 6.2x7.8x22 | Pièce d'écartement | 4 | * | * | * | | | | 920262274 |
| 11 | 5920-712-109-XX | GROMMET | Passe-fil | 1 | * | | | | | | 920712109 |
| 12 | 5130-B05-10X-XX | BOLT-FLANGED | Vis | 2 | * | * | * | | | | 130B0510 |
| 13 | 5130-G06-25X-XX | BOLT-FLANGED | Vis | 4 | * | * | * | | | | 130G0625 |
| 14 | 5140-902-013-XX | COVER, LOWER | Couvercle | 1 | | | * | | | | 140902013 |
| 15 | 5140-902-023-XX | COVER | Couvercle | 1 | | * | 1- -G27059 | | | | 140902023 |
| 15A | 5140-902-074-XX | COVER | Couvercle | 1 | | | G27060- | | | | 140902074 |
| 16 | 5922-002-078-XX | WASHER | Rondelle | 4 | | * | * | | | | 922002078 |
| 17 | 5920-712-113-XX | GROMMET | Passe-fil | 1 | | * | * | | | | 920712113 |
| 18 | 5140-242-289-XX | COVER, UPPER | Couvercle | 1 | | * | | | | | 140242289 |
| 19 | 5140-902-009-XX | COVER, UPPER | Couvercle | 1 | | | * | | | | 140902009 |

# FIG. 6 ELECTRIC – EQUIPMENT

## Eléctricite

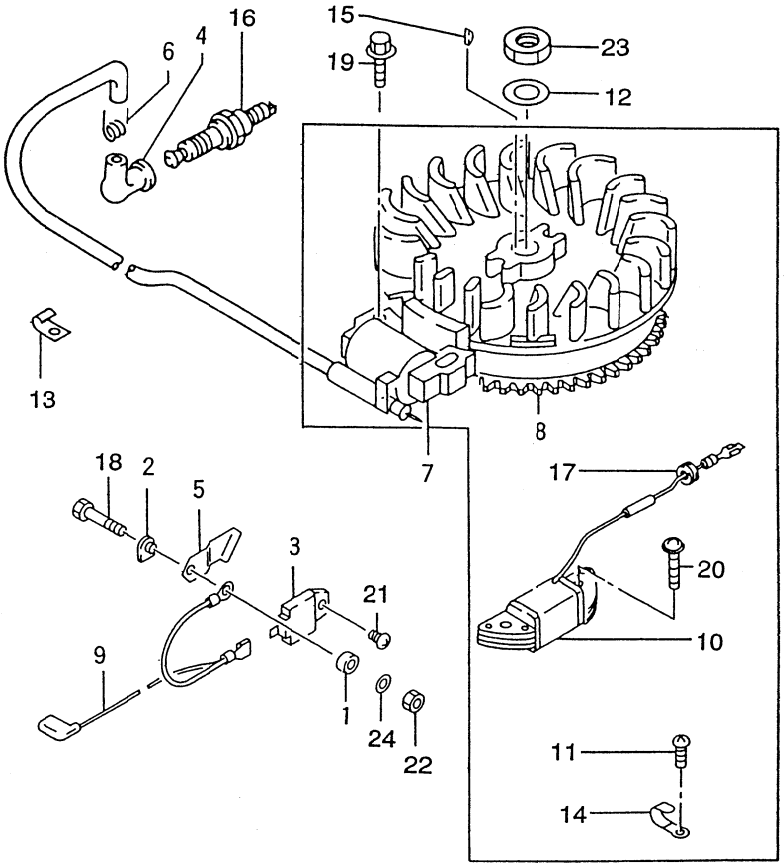


K500-101

| KEY Ref. | PART CODE Pieces No. | DESCRIPTION | Designation | QTY Quant. | TYPE OF MODEL Model FC150V AB03 | FC150V FB03 | FC150V GB03 | ITC | COL | GRP | REMARKS Remarques |
|---|---|---|---|---|---|---|---|---|---|---|---|
| 1 | 5140-242-183-XX | COVER | Capot | 1 | * | | | | | | 140242183 |
| 2 | 5160-732-124-XX | INSULATOR | Ecran thermique | 1 | * | | | | | | 160732124 |
| 3 | 5211-192-119-XX | IGNITER | Bougie d'allumage | 1 | * | | | | | | 211192119 |
| 4 | 5172-708-418-BX | CAP-SPARK PLUG | Capuchon | 1 | * | | | | | | 3172708418B |
| 5 | 5211-692-066-XX | TERMINAL | Borne | 1 | * | | | | | | 211692066 |
| 6 | 5172-708-419-AX | TERMINAL | Borne | 1 | * | | | | | | 3172708419A |
| 7 | 5211-712-153-XX | COIL-ASSY-IGNITION | Ens. bobine d'allumage | 1 | * | | | | | | 211712153 |
| 8 | 5211-932-086-XX | FLYWHEEL-COMP | Ens. volant | 1 | * | | | | | | 211932086 |
| 9 | 5260-112-224-XX | WIRE-LEAD | Fil | 1 | * | | | | | | 260112224 |
| 10 | 5590-312-076-XX | COIL CHARGING | Bobine de charge | 1 | * | | | | | | 590312076 |
| 11 | 5144-053-092-AX | SCREW | Vis | 1 | * | | | | | | 3144053092A |
| 12 | 5144-013-482-AX | WASHER | Rondelle | 1 | * | | | | | | 3144013482A |
| 13 | 5105-018-162-AX | CLAMP | Attache | 1 | * | | | | | | 3105018162A |
| 14 | 5920-372-104-XX | CLAMP | Attache | 1 | * | | | | | | 920372104 |
| 15 | 5920-382-077-XX | KEY | Clavette | 1 | * | | | | | | 920382077 |
| 16 | 5920-702-081-XX | PLUG-SPARK, BP5ES(NGK | Bougie | 1 | * | | | | | | 920702081 |
| 17 | 5920-712-122-XX | GROMMET | Passe-fil | 1 | * | | | | | | 920712122 |
| 18 | 5110-B05-22X-XX | BOLT-FLANGED | Vis | 1 | * | | | | | | 110B0522 |
| 19 | 5130-G06-25X-XX | BOLT-FLANGED | Vis | 2 | * | | | | | | 130G0625 |
| 20 | 5224-B06-25X-XX | SCREW-PAN-WP | Vis | 2 | * | | | | | | 224B0625 |
| 21 | 5241-B04-12X-XX | SCREW-PAN-WP+- | Vis | 1 | * | | | | | | 241B0412 |
| 22 | 5311-B05-00X-XX | NUT-HEX | Ecrou | 1 | * | | | | | | 311B0500 |
| 23 | 5314-G14-00X-XX | NUT-HEX-FINE | Ecrou | 1 | * | | | | | | 314G1400 |
| 24 | 5410-B05-00X-XX | W-PLAIN-S | Rondelle | 1 | * | | | | | | 410B0500 |
| | | | | | | | | | | | |

# FIG. 7 CONTROL – EQUIPMENT

## Commandes

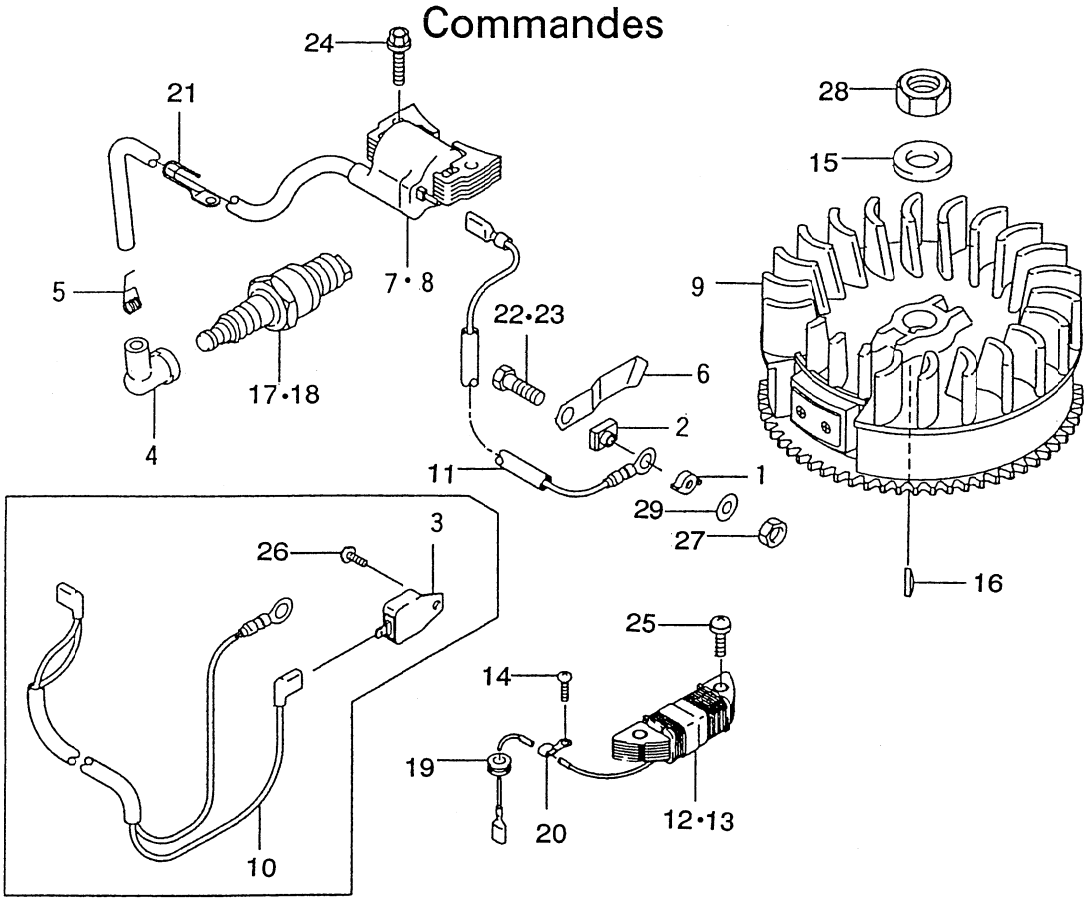


K500-101

| KEY Réf. | PART CODE Pièces No. | DESCRIPTION | Désignation | QTY Quant. | TYPE OF MODEL Modél FC150V AB03 | FC150V FB03 | FC150V GB03 | ITC | COL | GRP | REMARKS Remarques |
|---|---|---|---|---|---|---|---|---|---|---|---|
| 1 | 5140-242-183-XX | COVER | Capot | 1 | | * | * | | | | 140242183 |
| 2 | 5160-732-124-XX | INSULATOR | Ecran thermique | 1 | | * | * | | | | 160732124 |
| 3 | 5211-192-139-XX | IGNITER | Bougie d'allumage | 1 | | * | | | | | 211192139 |
| 4 | 5211-302-066-XX | CAP-SPARK PLUG | Capuchon | 1 | | * | * | | | | 211302066 |
| 5 | 5211-692-004-XX | TERMINAL | Borne | 1 | | * | * | | | | 211692004 |
| 6 | 5211-692-066-AX | TERMINAL | Borne | 1 | | * | * | | | | 211692066 |
| 7 | 5211-712-176-XX | COIL-ASSY-IGNITION | Ens. bobine d'allumage | 1 | | * | | | | | 211712176 |
| 8 | 5211-712-200-XX | COIL-ASSY-IGNITION | Ens. bobine d'allumage | 1 | | | * | | | | 211712200 |
| 9 | 5211-932-151-XX | FLYWHEEL-ASSY | Ens. volant | 1 | | * | * | | | | 211932151 |
| 10 | 5260-112-279-XX | WIRE-LEAD | Fil | 1 | | * | | | | | 260112279 |
| 11 | 5260-112-306-XX | WIRE-LEAD | Fil | 1 | | | * | | | | 260112306 |
| 12 | 5590-312-076-XX | COIL-CHARGING | Bobine de charge | 1 | | * | | | | | 590312076 |
| 13 | 5590-312-110-XX | COIL-CHARGING | Bobine de charge | 1 | | * | * | | | | 590312110 |
| 14 | 5920-092-307-XX | SCREW | Vis | 1 | | * | * | | | | 920092307 |
| 15 | 5920-222-102-XX | WASHER | Rondelle | 1 | | * | * | | | | 920222102 |
| 16 | 5920-382-077-XX | KEY | Clavette | 1 | | * | * | | | | 920382077 |
| 17 | 5920-702-084-XX | PLUG-SPARK, BP6ES (NGK | Bougie | 1 | | * | | | | | 920702084 |
| 18 | 5920-702-087-XX | PLUG-SPARK, BP6ES (NGK | Bougie | 1 | | | * | | | | 920702087 |
| 19 | 5920-712-122-XX | GROMMET | Passe-fil | 1 | | * | * | | | | 920712122 |
| 20 | 5921-702-029-XX | CLAMP | Attache | 2 | | * | * | | | | 921702029 |
| 21 | 5921-702-064-XX | CLAMP | Attache | 2 | | * | * | | | | 921702064 |
| 22 | 5110-B05-22X-XX | BOLT | Vis | 1 | | * | | | | | 110B0522 |
| 23 | 5112-B05-22X-XX | BOLT | Vis | 1 | | * | * | | | | 112B0522 |
| 24 | 5130-G06-25X-XX | BOLT | Vis | 2 | | * | * | | | | 130G0625 |
| 25 | 5224-B06-25X-XX | SCREW | Vis | 2 | | * | * | | | | 224B0625 |

# FIG. 7 CONTROL – EQUIPMENT

## Commandes

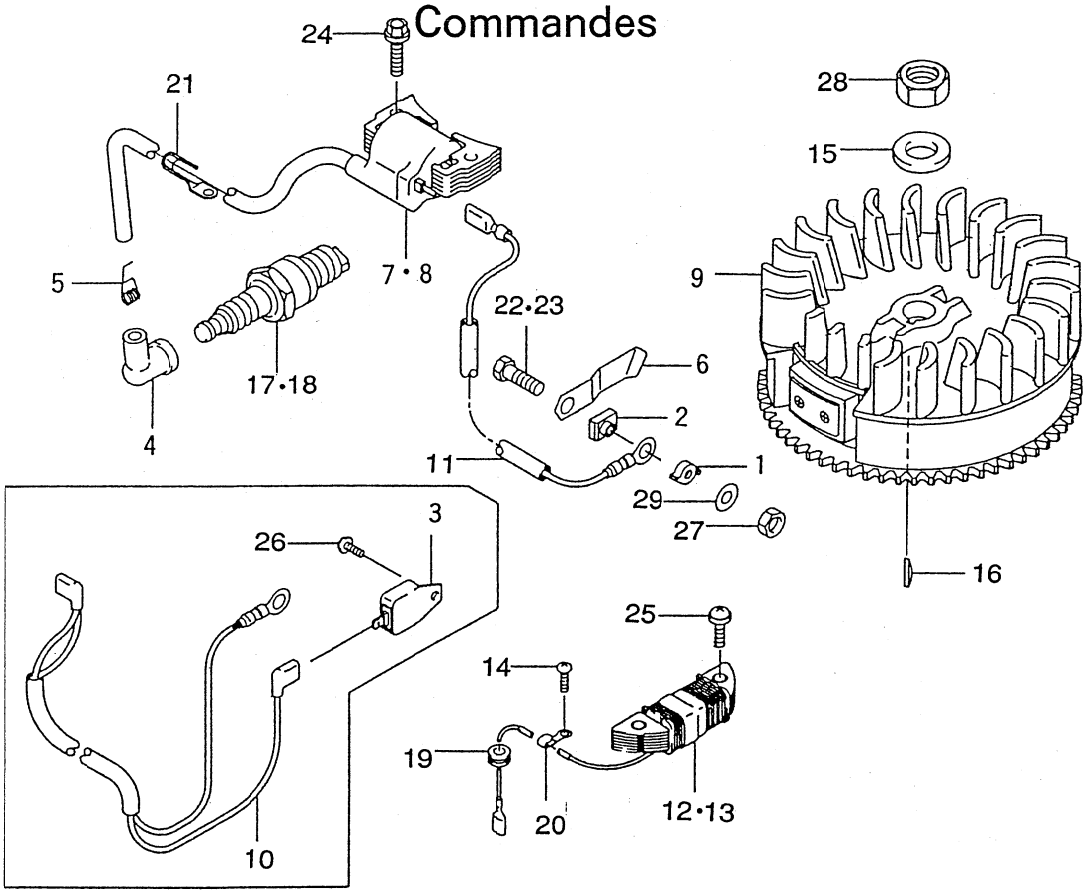


K500-101

| KEY Réf. | PART CODE Pièces No. | DESCRIPTION | Désignation | QTY Quant. | TYPE OF MODEL Modél FC150V AB03 | FC150V FB03 | FC150V GB03 | ITC | COL | GRP | REMARKS Remarques |
|---|---|---|---|---|---|---|---|---|---|---|---|
| 26 | 5241-B04-12X-XX | SCREW-PAN-WP+- | Vis | 1 | | * | | | | | 241B0412 |
| 27 | 5311-B05-00X-XX | NUT-HEX | Ecrou | 1 | | * | * | | | | 311B0500 |
| 28 | 5314-G14-00X-XX | NUT-HEX-FINE | Ecrou | 1 | | * | * | | | | 314G1400 |
| 29 | 5410-B05-00X-XX | W-PLAIN-S | Rondelle | 1 | | * | * | | | | 410B0500 |

# FIG. 8 CARBURETOR

## Carburateur

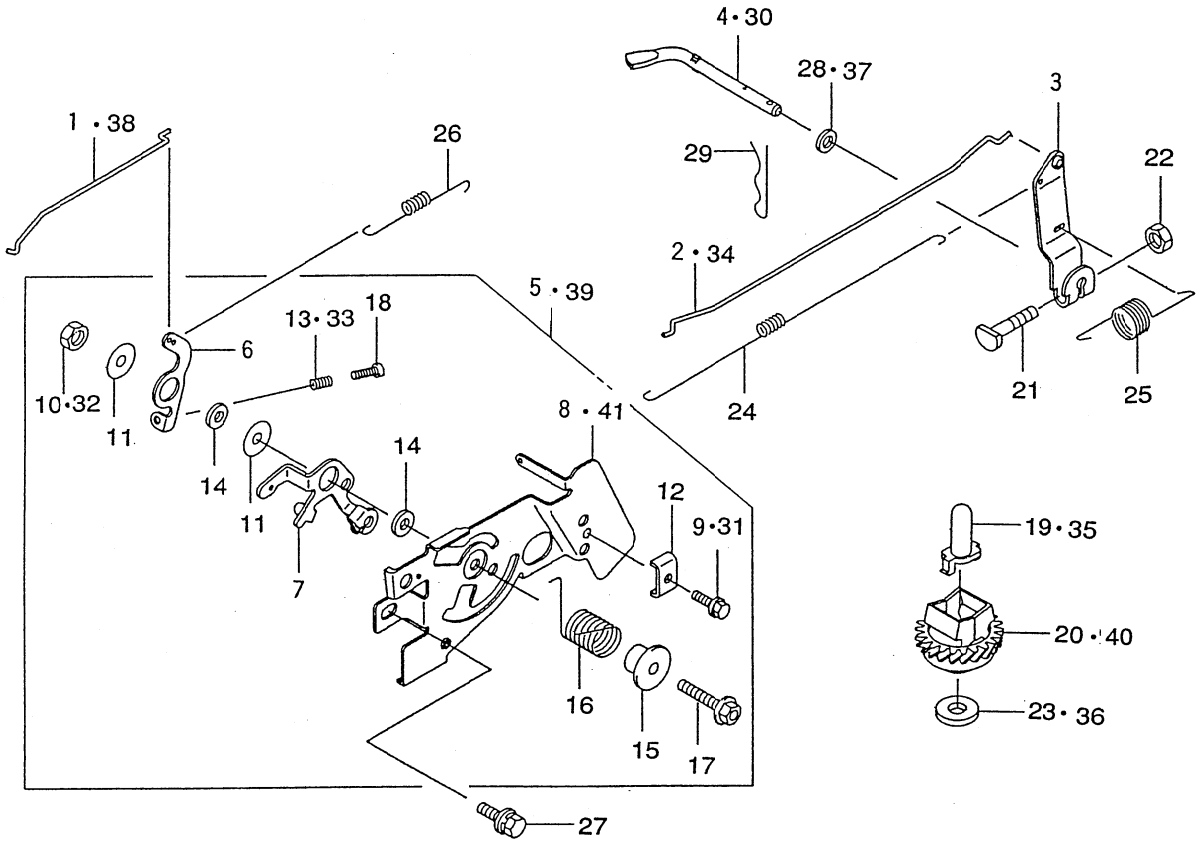


K500-101

| KEY Réf. | PART CODE Pièces No. | DESCRIPTION | Désignation | QTY Quant. | TYPE OF MODEL Modél FC150V AB03 | FC150V FB03 | FC150V GB03 | ITC | COL | GRP | REMARKS Remarques |
|---|---|---|---|---|---|---|---|---|---|---|---|
| 1 | 5161-692-104-XX | LINK-CHOKE | Tige | 1 | * | | | | | | 161692104 |
| 2 | 5161-712-060-XX | LINK | Tige | 1 | * | | | | | | 161712060 |
| 3 | 5211-872-060-XX | ARM-ASSY | Ens. bras | 1 | * | * | * | | | | 211872060 |
| 4 | 5390-032-066-XX | ARM-PIVOT | Bras | 1 | * | | | | | | 390032066 |
| 5 | 5391-802-549-XX | PANEL-ASSY-CONTROL | Ens. panneau de commande | 1 | 1--F06974 | | | | | | 391802549 |
| 6 | 5131-682-288-XX | LEVER | Levier | 1 | * | * | * | | | | 131682288 |
| 7 | 5131-682-298-XX | LEVER | Levier | 1 | * | * | * | | | | 131682298 |
| 8 | 5592-262-201-XX | PANEL-CONTROL | Panneau de commande | 1 | 1--F06974 | | | | | | 592262201 |
| 9 | 5107-011-225-AX | BOLT | Vis | 1 | * | | | | | | 3107011225A |
| 10 | 5144-015-385-AX | NUT | Ecrou | 1 | * | | | | | | 3144015385A |
| 11 | 5920-222-372-XX | WASHER, 6x19x1.2 | Rondelle | 2 | * | * | * | | | | 920222372 |
| 12 | 5920-372-209-XX | CLAMP | Attache | 1 | * | * | * | | | | 920372209 |
| 13 | 5144-015-321-BX | SPRING | Ressort | 1 | * | | | | | | 3144015321B |
| 14 | 5921-432-135-XX | COLLAR, 6x13x2.3 | Entretoise | 2 | * | * | * | | | | 921432135 |
| 15 | 5921-432-148-XX | COLLAR | Entretoise | 1 | * | * | * | | | | 921432148 |
| 16 | 5921-442-211-XX | SPRING | Ressort | 1 | * | * | * | | | | 921442211 |
| 17 | 5130-B06-30X-XX | BOLT-FLANGED | Vis | 1 | * | * | * | | | | 130B0630 |
| 18 | 5214-B04-20X-XX | SCREW-PAN+- | Vis | 1 | * | * | * | | | | 214B0420 |
| 19 | 5144-015-121-BX | SLEEVE | Bague | 1 | * | | | | | | 3144015121B |
| 20 | 5491-102-076-XX | GOVERNOR-ASSY | Ens. regulateur | 1 | 1--G27059 | 1--G27059 | | | | | 491102076 |
| 21 | 5920-022-269-XX | BOLT | Vis | 1 | * | * | * | | | | 920022269 |
| 22 | 5920-151-193-XX | NUT | Ecrou | 1 | * | * | * | | | | 920151193 |
| 23 | 5144-015-135-AX | WASHER | Rondelle | 1 | * | | | | | | 3144015135A |
| 24 | 5920-812-299-XX | SPRING, LINK | Ressort | 1 | * | * | * | | | | 920812299 |
| 25 | 5921-442-213-XX | SPRING | Ressort | 1 | * | * | * | | | | 921442213 |

# FIG. 8 CARBURETOR

## Carburateur

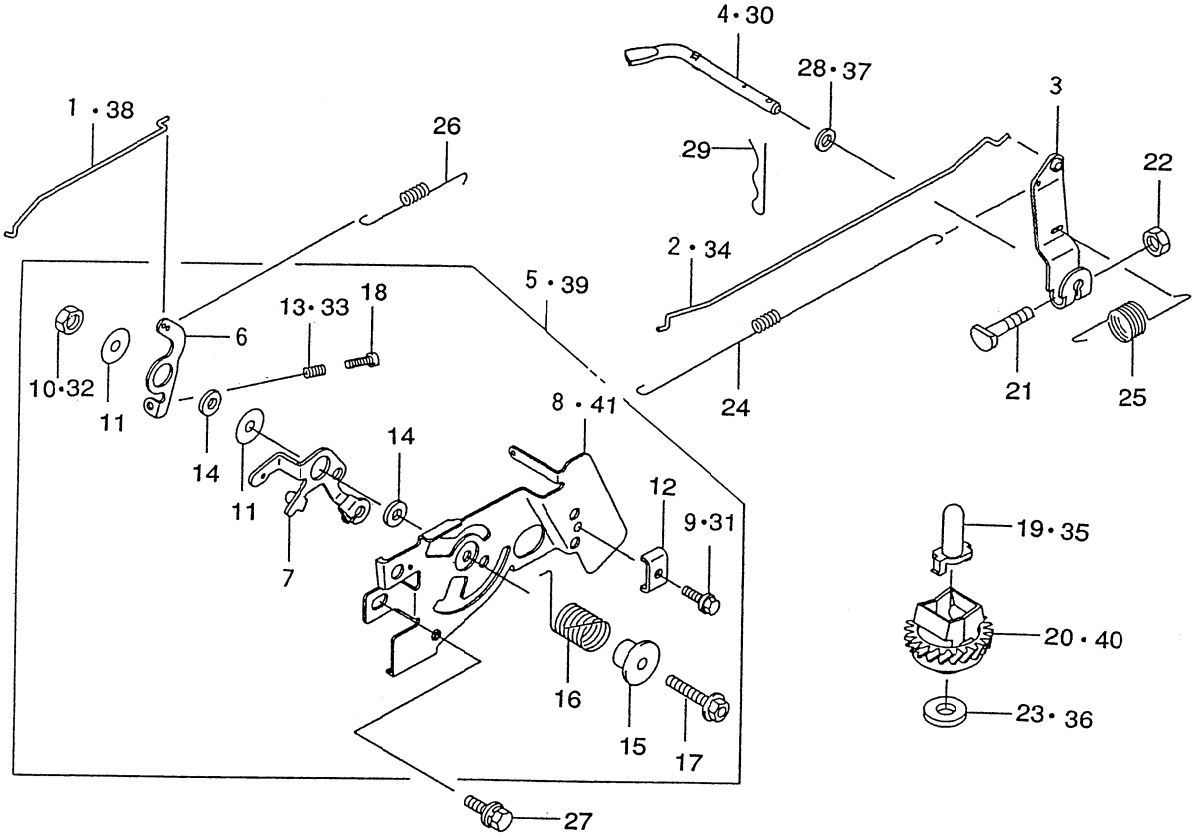


K500-101

| KEY Ref. | PART CODE Pieces No. | DESCRIPTION | Designation | QTY Quant. | TYPE OF MODEL Model FC150V AB03 | FC150V FB03 | FC150V GB03 | ITC | COL | GRP | REMARKS Remarques |
|---|---|---|---|---|---|---|---|---|---|---|---|
| 26 | 5921-442-235-XX | SPRING | Ressort | 1 | * | * | * | | | | 921442235 |
| 27 | 5187-B06-14X-XX | BOLT-UPSET-WSP | Vis | 2 | * | * | * | | | | 187B0614 |
| 28 | 5410-B06-00X-XX | W-PLAIN-S | Rondelle | 1 | * | | | | | | 410B0600 |
| 29 | 5554-A06-00X-XX | PIN-SNAP | Goupille à ressort | 1 | * | * | * | | | | 554A0600 |
| 30 | 5390-032-071-XX | ARM-PIVOT | Bras | 1 | | * | * | | | | 390032071 |
| 31 | 5921-502-182-XX | BOLT | Vis | 1 | | * | * | | | | 921502182 |
| 32 | 5920-152-051-XX | NUT | Ecrou | 1 | | * | * | | | | 920152051 |
| 33 | 5921-442-266-XX | SPRING | Ressort | 1 | | * | * | | | | 921442266 |
| 34 | 5161-712-080-XX | LINK | Tige | 1 | | * | * | | | | 161712080 |
| 35 | 5420-362-051-XX | SLEEVE | Bague | 1 | | * | * | | | | 420362051 |
| 36 | 5920-222-019-XX | WASHER | Rondelle | 1 | | * | * | | | | 920222019 |
| 37 | 5922-002-029-XX | W-PLAIN-S | Rondelle | 1 | | * | * | | | | 922002029 |
| 38 | 5161-692-125-XX | LINK-CHOKE | Tige | 1 | | * | * | | | | 161692125 |
| 39 | 5391-802-904-XX | PANEL-ASSY-CONTROL | Ens. panneau de commande | 1 | | F06975- | F06975- | | | | 391802904 |
| 40 | 5491-102-081-XX | GOVERNOR-ASSY | Ens. regulateur | 1 | | | G27060- | | | | 491102081 |
| 41 | 5592-262-293-XX | PANEL-CONTROL | Panneau de commande | 1 | | F06975- | F06975- | | | | 592262293 |

# FIG. 9 CARBURETOR (AB03)

## Carburateur

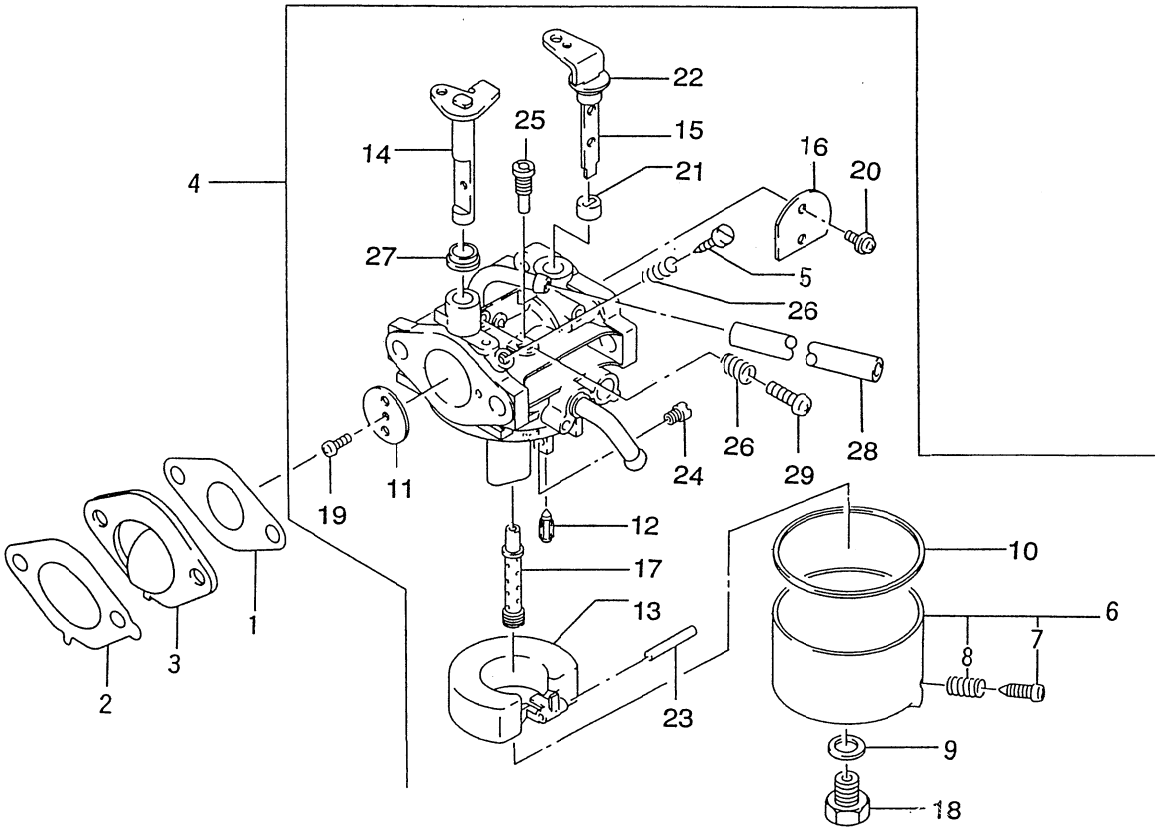


K500-101

| KEY Réf. | PART CODE Pièces No. | DESCRIPTION | Désignation | QTY Quant. | TYPE OF MODEL Modél FC150V AB03 | FC150V FB03 | FC150V GB03 | ITC | COL | GRP | REMARKS Remarques |
|---|---|---|---|---|---|---|---|---|---|---|---|
| 1 | 5110-092-746-XX | GASKET, CARBURETOR | Joint | 1 | * | | | | | | 110092746 |
| 2 | 5110-092-833-XX | GASKET, INSULATOR | Joint | 1 | * | | | | | | 110092833 |
| 3 | 5160-732-136-XX | INSULATOR | Ecran thermique | 1 | * | | | | | | 160732136 |
| 4 | 5150-032-006-XX | CARBURETOR-ASSY. | Ens. carburateau | 1 | * | | | | | | 150032006 |
| 5 | 5164-706-114-00 | SCREW-PILOT AIR | Vis | 1 | * | | | | | | 316470611400 |
| 6 | 5145-766-130-AX | CHAMBER-FLOAT | Chambre du flotteur | 1 | * | | | | | | 3145766130A |
| 7 | 5154-706-133-AX | SCREW | Vis | 1 | * | | | | | | 3154706133A |
| 8 | 5131-226-116-00 | SPRING | Ressoet | 1 | * | | | | | | 313122611600 |
| 9 | 5144-996-159-AX | GASKET | Joint | 1 | * | | | | | | 3144996159A |
| 10 | 5145-986-128-AX | GASKET | Joint | 1 | * | | | | | | 3145986128A |
| 11 | 5136-506-101-00 | VALVE-THROTTLE, #110 | Boisseau | 1 | * | | | | | | 313650610100 |
| 12 | 5144-996-122-AX | VALVE-FLOAT | Soupape | 1 | * | | | | | | 3144996122A |
| 13 | 5160-312-058-XX | FLOAT | Flotteur | 1 | * | | | | | | 160312058 |
| 14 | 5160-412-178-XX | SHAFT-CARBURETOR, TH | Axe papillon | 1 | * | | | | | | 160412178 |
| 15 | 5160-412-197-XX | SHAFT-CARBURETOR, CH | Axe papillon | 1 | * | | | | | | 160412197 |
| 16 | 5161-262-173-XX | VALVE, CHOKE | Volet d'air | 1 | * | | | | | | 161262173 |
| 17 | 5491-212-113-XX | NOZZLE-MAIN, #2A | Gicleur principal | 1 | * | | | | | | 491212113 |
| 18 | 5144-996-143-AX | BOLT | Vis | 1 | * | | | | | | 3144996143A |
| 19 | 5165-506-137-AX | SCREW | Vis | 1 | * | | | | | | 3165506137A |
| 20 | 5920-092-149-XX | SCREW | Vis | 2 | * | | | | | | 920092149 |
| 21 | 5145-986-138-AX | COLLAR | Entretoise | 1 | * | | | | | | 3145986138A |
| 22 | 5145-986-157-AX | COLLAR | Entretoise | 1 | * | | | | | | 3145986157A |
| 23 | 5144-996-127-AX | PIN | Axe | 1 | * | | | | | | 3144996127A |
| 24 | 5920-632-096-XX | JET-MAIN, #68.8 | Gicleur prinipal | 1 | * | | | | | | 920632096 |
| 25 | 5920-642-065-XX | JET-PILOT, #38.8 | Vis de melange | 1 | * | | | | | | 920642065 |

# FIG. 9 CARBURETOR (AB03)

## Carburateur

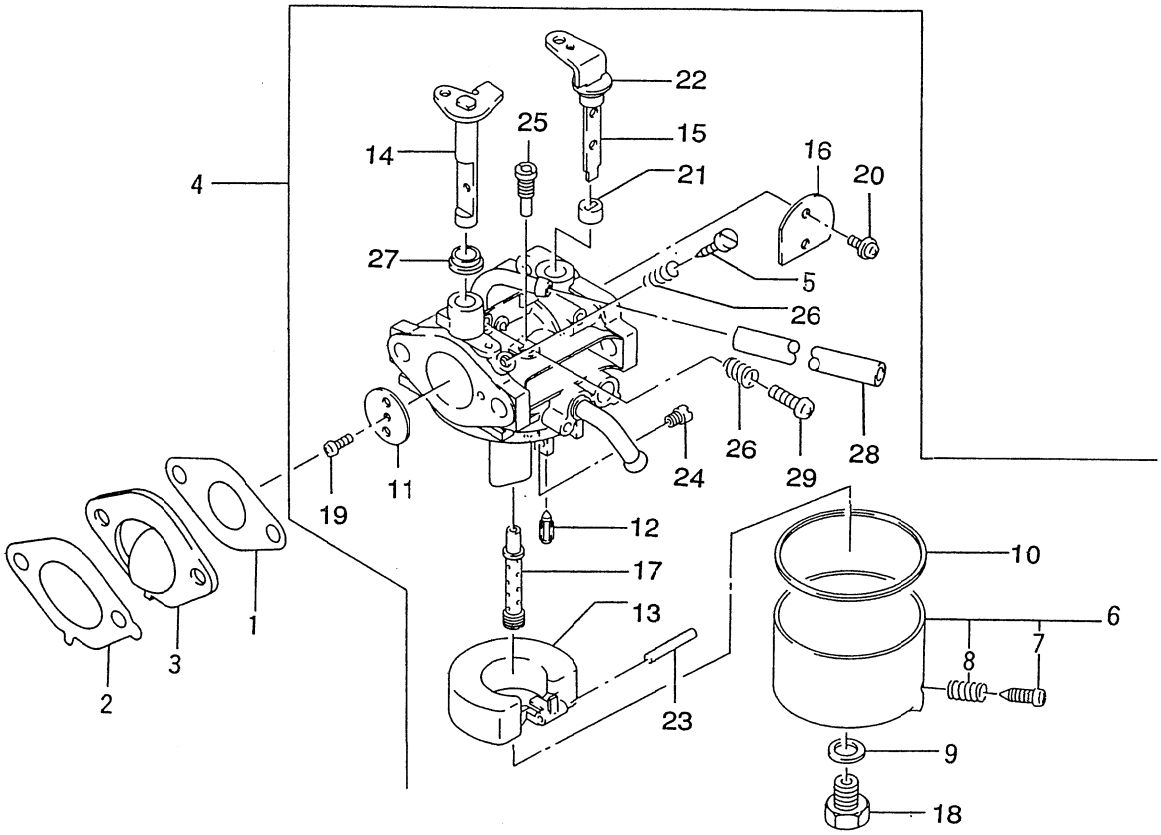


K500-101

| KEY Réf. | PART CODE Pièces No. | DESCRIPTION | Désignation | QTY Quant. | TYPE OF MODEL Modèl FC150V AB03 | FC150V FB03 | FC150V GB03 | ITC | COL | GRP | REMARKS Remarques |
|---|---|---|---|---|---|---|---|---|---|---|---|
| 26 | 5131-226-116-00 | SPRING | Ressort | 2 | * | | | | | | 313122611600 |
| 27 | 5921-432-143-XX | COLLAR | Entretoise | 1 | * | | | | | | 921432143 |
| 28 | 5921-902-003-XX | TUBE, 5x8x125 | Tuyau | 1 | * | | | | | | 921902003 |
| 29 | 5214-B04-12X-XX | SCREW-PAN+- | Vis | 1 | * | | | | | | 214B0412 |

# FIG. 10 AIR – FILTER/MUFFLER
## Filtre à air/Echappement

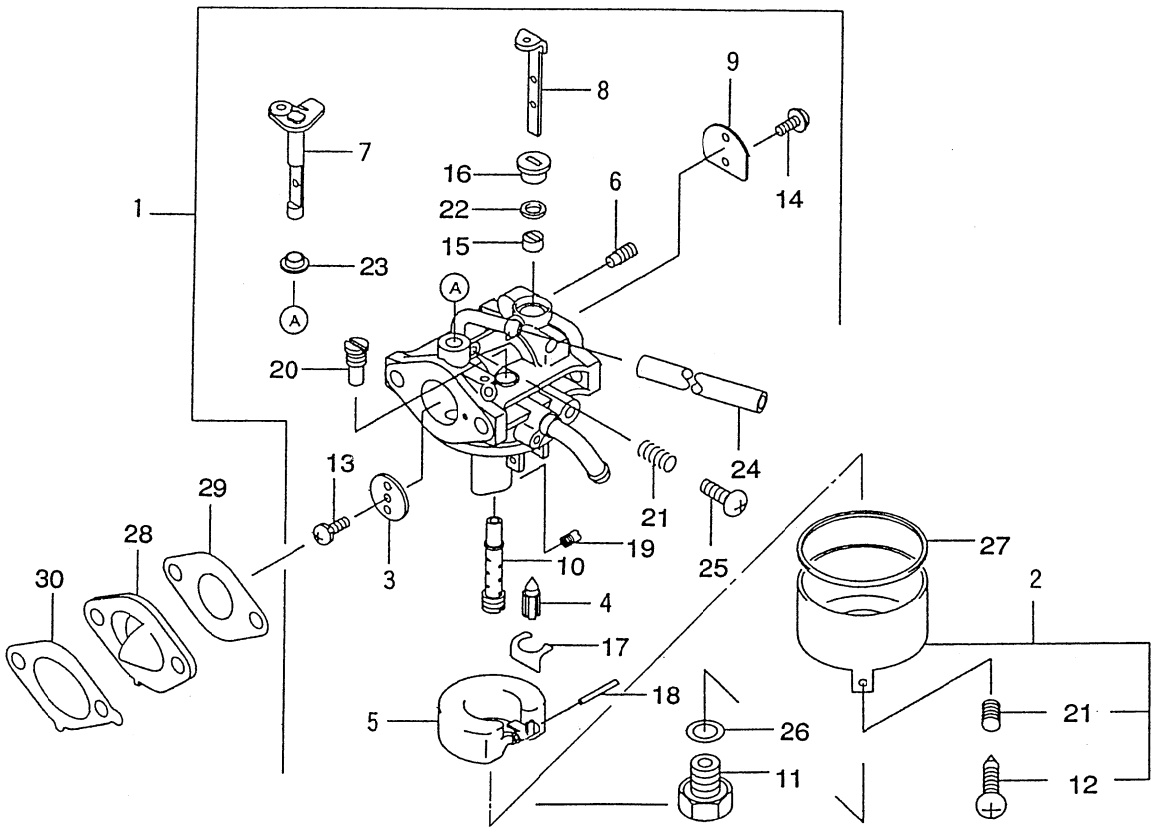


K500-101

| KEY Réf. | PART CODE Pièces No. | DESCRIPTION | Désignation | QTY Quant. | TYPE OF MODEL Modél FC150V AB03 | FC150V FB03 | FC150V GB03 | ITC | COL | GRP | REMARKS Remarques |
|---|---|---|---|---|---|---|---|---|---|---|---|
| 1 | 5150-032-364-XX | CARBURETOR-ASSY. | Ens. carburateur | 1 | | * | * | | | | 150032364 |
| 2 | 5160-202-052-XX | CHAMBER-FLOAT | Chambre du flotteur | 1 | | * | * | | | | 160202052 |
| 3 | 5160-252-001-XX | VALVE-THROTTLE, #110 | Boisseau | 1 | | * | * | | | | 160252001 |
| 4 | 5160-302-083-XX | VALVE-FLOAT | Soupape | 1 | | * | * | | | | 160302083 |
| 5 | 5160-312-058-XX | FLOAT | Flotteur | 1 | | * | * | | | | 160312058 |
| 6 | 5160-352-063-XX | JET-AIR, #0.9 | Vis de richesse | 1 | | * | * | | | | 160352063 |
| 7 | 5160-412-178-XX | SHAFT-CARBURETOR, TH | Axe volet d'air | 1 | | * | * | | | | 160412178 |
| 8 | 5160-412-197-XX | SHAFT-CARBURETOR, CH | Axe volet d'air | 1 | | * | * | | | | 160412197 |
| 9 | 5161-262-199-XX | VALVE, CHOKE | Volet d'air | 1 | | * | * | | | | 161262199 |
| 10 | 5491-212-189-XX | NOZZLE-MAIN, #2A | Gicleur principal | 1 | | * | * | | | | 491212189 |
| 11 | 5920-022-011-XX | BOLT | Vis | 1 | | * | * | | | | 920022011 |
| 12 | 5920-092-015-XX | SCREW | Vis | 1 | | * | * | | | | 920092015 |
| 13 | 5920-092-024-XX | SCREW | Vis | 1 | | * | * | | | | 920092024 |
| 14 | 5920-092-149-XX | SCREW | Vis | 2 | | * | * | | | | 920092149 |
| 15 | 5920-272-003-XX | COLLAR | Entretoise | 1 | | * | * | | | | 920272003 |
| 16 | 5920-272-004-XX | COLLAR | Entretoise | 1 | | * | * | | | | 920272004 |
| 17 | 5920-332-067-XX | RING-SNAP | Goupille à ressort | 1 | | * | * | | | | 920332067 |
| 18 | 5920-432-006-XX | PIN | Axe | 1 | | * | * | | | | 920432006 |
| 19 | 5920-632-096-XX | JET-MAIN, #68.8 | Gicleur prinipal | 1 | | * | * | | | | 920632096 |
| 20 | 5920-642-002-XX | JET-PILOT, #45 | Vis de melange | 1 | | * | * | | | | 920642002 |
| 21 | 5920-812-009-XX | SPRING | Ressort | 2 | | * | * | | | | 920812009 |
| 22 | 5920-932-101-XX | SEAL | Joint | 1 | | * | * | | | | 920932101 |
| 23 | 5921-432-143-XX | COLLAR | Entretoise | 1 | | * | * | | | | 921432143 |
| 24 | 5921-902-163-XX | TUBE, 4x7x125 | Tuyau | 1 | | * | * | | | | 921902163 |
| 25 | 5214-B04-12X-XX | SCREW-PAN+- | Vis | 1 | | * | * | | | | 214B0412 |

# FIG. 10 AIR – FILTER／MUFFLER
## Filtre à air／Echappement

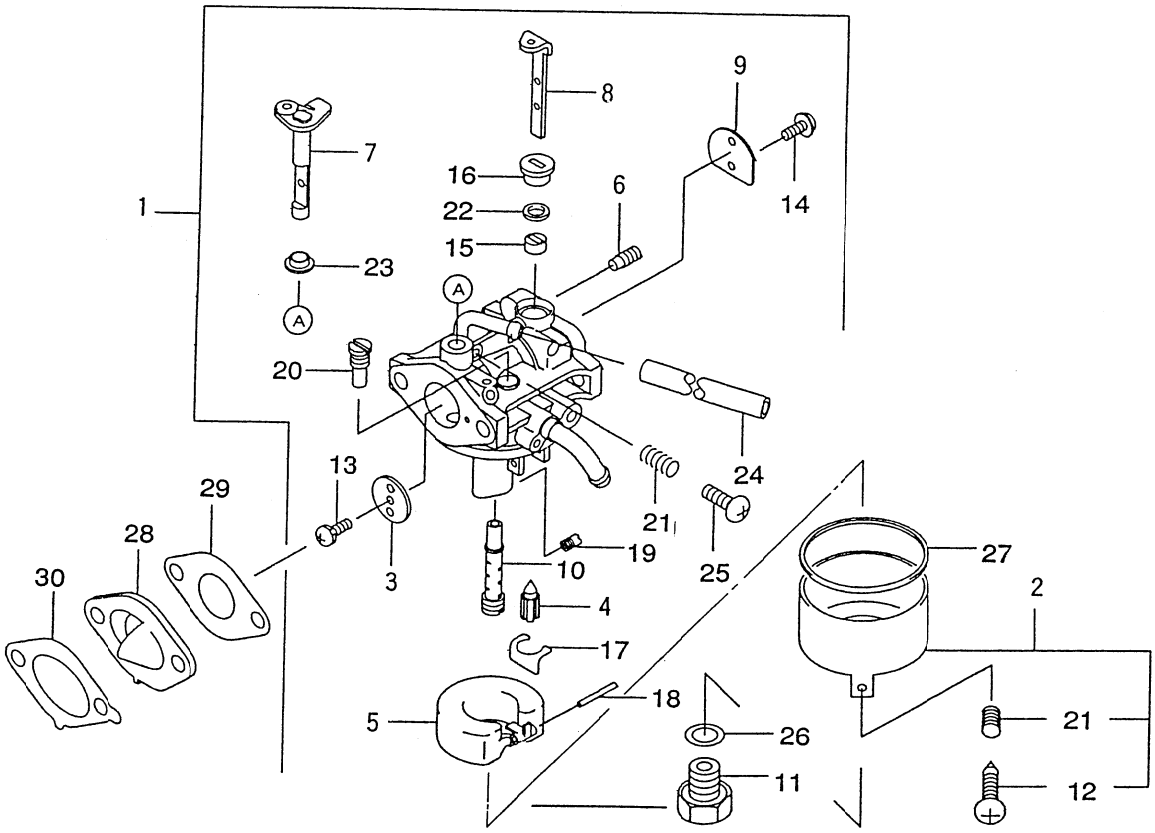


K500-101

| KEY Réf. | PART CODE Pièces No. | DESCRIPTION | Désignation | QTY Quant. | TYPE OF MODEL Modél FC150V AB03 | FC150V FB03 | FC150V GB03 | ITC | COL | GRP | REMARKS Remarques |
|---|---|---|---|---|---|---|---|---|---|---|---|
| 26 | 5110-092-036-XX | GASKET | Joint | 1 | | * | * | | | | 110092036 |
| 27 | 5110-092-037-XX | GASKET | Joint | 1 | | * | * | | | | 110092037 |
| 28 | 5160-732-136-XX | INSULATOR | Ecran thermique | 1 | | * | * | | | | 160732136 |
| 29 | 5110-602-010-XX | GASKET, CARBURETOR | Joint | 1 | | * | * | | | | 110602010 |
| 30 | 5110-602-012-XX | GASKET, INSULATOR | Joint | 1 | | * | * | | | | 110602012 |

# FIG. 11 FUEL – TANK/FUEL – VALVE

## Reservoir/Robinet à carburant

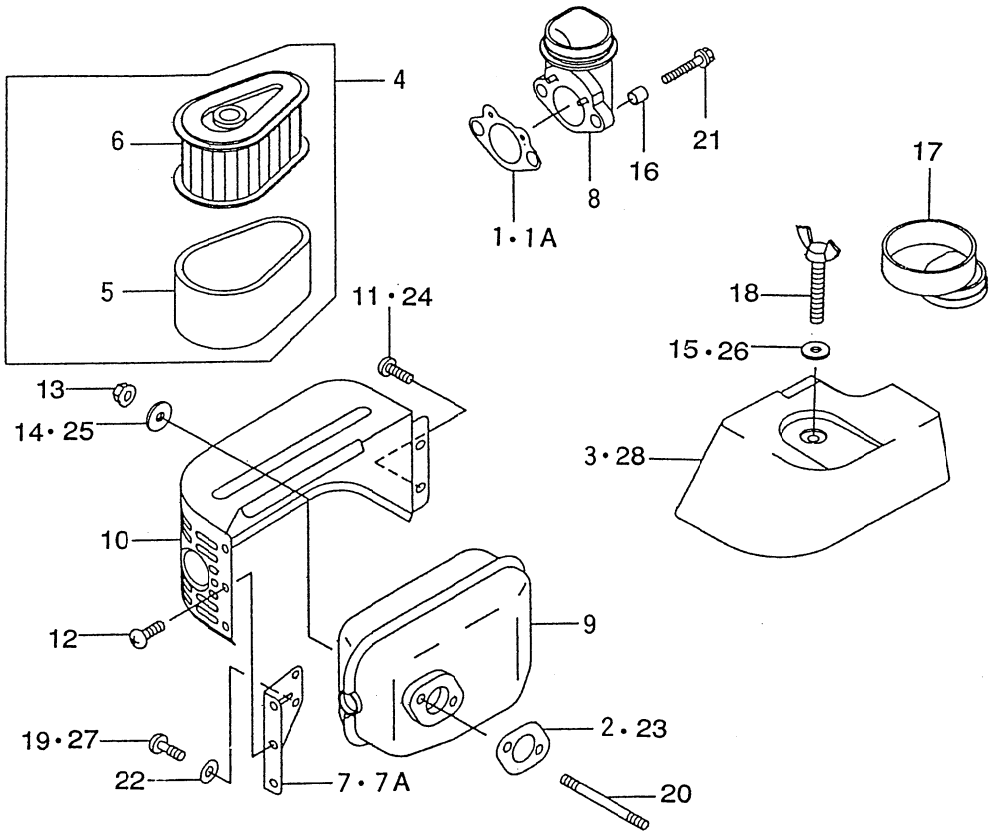


K500-101

| KEY Réf. | PART CODE Pièces No. | DESCRIPTION | Désignation | QTY Quant. | TYPE OF MODEL Modél FC150V AB03 | FC150V FB03 | FC150V GB03 | ITC | COL | GRP | REMARKS Remarques |
|---|---|---|---|---|---|---|---|---|---|---|---|
| 1 | 5110-092-742-XX | GASKET, INTAKE PIPE | Joint | 1 | * | 1-C27854 | | | | | 110092742 |
| 1A | 5110-602-067-XX | GASKET, INTAKE PIPE | Joint | 1 | | C27855- | * | | | | 110602067 |
| 2 | 5110-092-743-XX | GASKET, MUFFLER | Joint | 1 | * | | | | | | 110092743 |
| 3 | 5110-122-272-XX | CAP, AIR FILTER | Capuchon | 1 | * | * | | | | | 110122272 |
| 4 | 5110-292-002-XX | ELEMENT-ASSY-AIR FIL | Ens. element | 1 | * | * | * | | | | 110292002 |
| 5 | 5110-132-119-XX | ELEMENT-AIR FILTER | Element | 1 | * | * | * | | | | 110132119 |
| 6 | 5110-132-120-XX | ELEMENT-AIR FILTER | Element | 1 | * | * | * | | | | 110132120 |
| 7 | 5110-462-053-XX | BRACKET | Support | 1 | * | * | | | | | 110462053 |
| 7A | 5110-492-002-XX | BRACKET | Support | 1 | | | * | | | | 110492002 |
| 8 | 5160-602-129-XX | PIPE-INTAKE | Tubulure d'admission | 1 | * | * | * | | | | 160602129 |
| 9 | 5490-702-491-XX | MUFFLER-COMP | Echappement | 1 | * | * | * | | | | 490702491 |
| 10 | 5491-062-446-XX | COVER-MUFFLER | Couvercle | 1 | * | * | * | | | | 491062446 |
| 11 | 5920-092-104-XX | SCREW | Vis | 2 | * | | | | | | 920092104 |
| 12 | 5920-092-166-XX | SCREW, 5x8 | Vis | 3 | * | * | * | | | | 920092166 |
| 13 | 5920-151-193-XX | NUT | Ecrou | 2 | * | * | * | | | | 920151193 |
| 14 | 5127-502-883-00 | WASHER | Rondelle | 2 | * | | | | | | 312750288300 |
| 15 | 5920-222-136-XX | WASHER | Rondelle | 1 | * | | | | | | 920222136 |
| 16 | 5920-262-272-XX | SPACER, 6.2x7.8x8 | Pièce d'écartement | 2 | * | * | * | | | | 920262272 |
| 17 | 5920-592-257-XX | TUBE | Tuyau | 1 | * | * | * | | | | 920592257 |
| 18 | 5921-502-101-XX | BOLT | Vis | 1 | * | * | * | | | | 921502101 |
| 19 | 5130-B05-10X-XX | SCREW-PAN | Vis | 2 | * | | | | | | 130B0510 |
| 20 | 5172-G06-80X-XX | BOLT-STUD | Goujon | 2 | * | * | * | | | | 172G0680 |
| 21 | 5186-B06-80X-XX | BOLT-UPSET-WP | Vis | 2 | * | * | * | | | | 186B0680 |
| 22 | 5411-B05-00X-XX | WASHER-PLAIN | Rondelle | 2 | * | * | * | | | | 411B0500 |
| 23 | 5110-602-009-XX | GASKET, MUFFLER | Joint | 1 | | * | * | | | | 110602009 |

# FIG. 11 FUEL – TANK／FUEL – VALVE
## Reservoir／Robinet à carburant

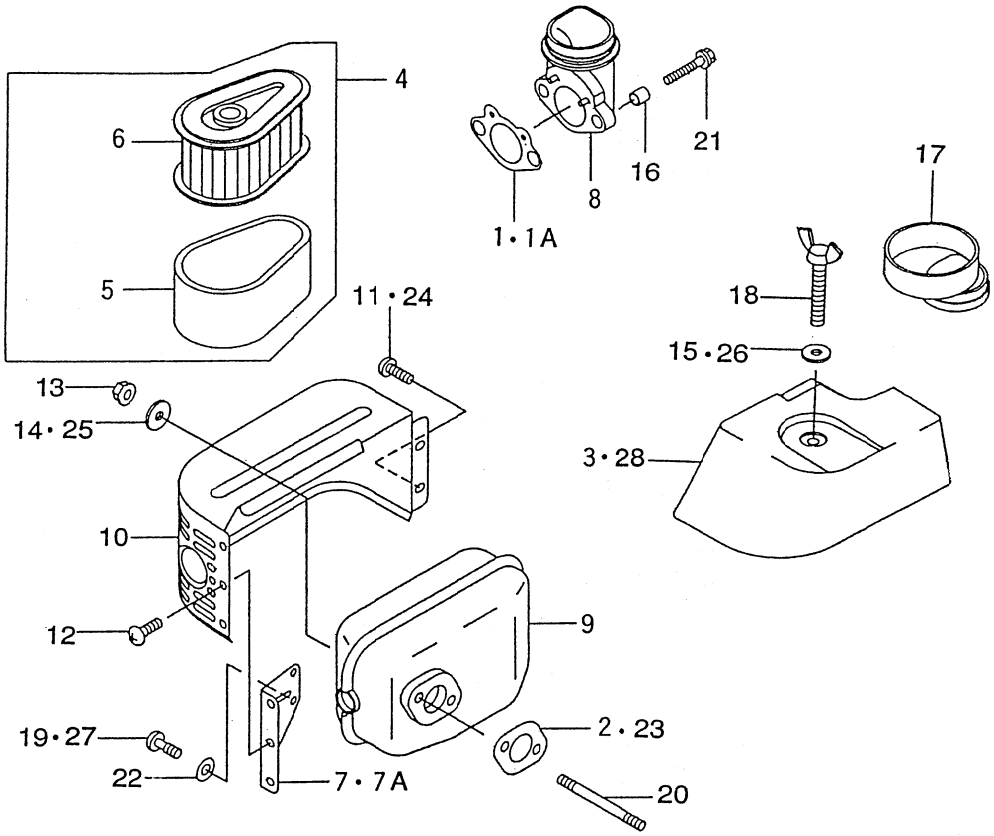


K500-101

| KEY Réf. | PART CODE Pièces No. | DESCRIPTION | Désignation | QTY Quant. | TYPE OF MODEL Modél FC150V AB03 | FC150V FB03 | FC150V GB03 | ITC | COL | GRP | REMARKS Remarques |
|---|---|---|---|---|---|---|---|---|---|---|---|
| 24 | 5920-092-308-XX | SCREW | Vis | 2 | | * | * | | | | 920092308 |
| 25 | 5922-002-032-XX | WASHER | Rondelle | 2 | | * | * | | | | 922002032 |
| 26 | 5922-002-078-XX | WASHER | Rondelle | 1 | | * | * | | | | 922002078 |
| 27 | 5214-B05-10X-XX | BOLT-FLANGED | Vis | 2 | | * | * | | | | 214B0510 |
| 28 | 5110-122-313-XX | CAP, AIR FILTER | Capuchon | 1 | | | * | | | | 110122313 |

# FIG. 12 RECOIL STARTER

## Lanceur

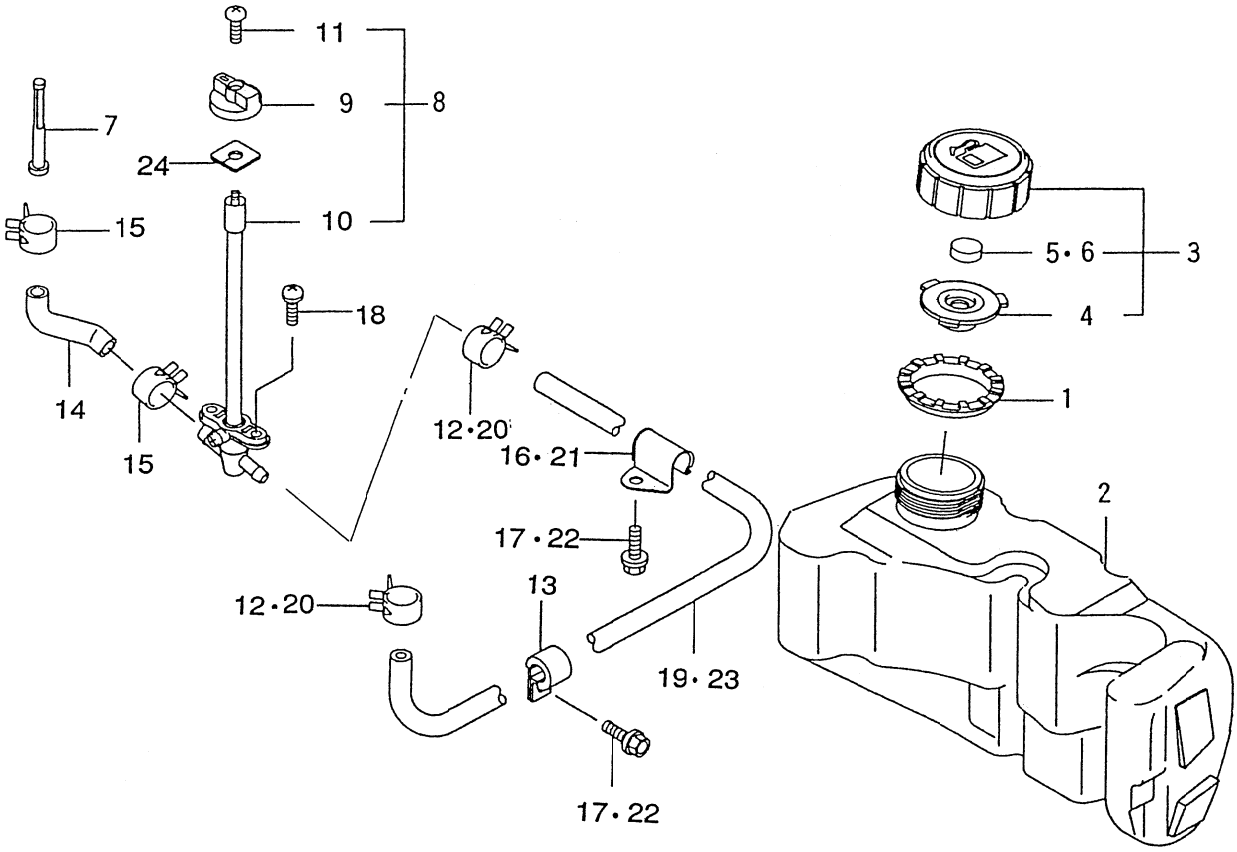


K500-101

| KEY Réf. | PART CODE Pièces No. | DESCRIPTION | Désignation | QTY Quant. | TYPE OF MODEL Modél FC150V AB03 | FC150V FB03 | FC150V GB03 | ITC | COL | GRP | REMARKS Remarques |
|---|---|---|---|---|---|---|---|---|---|---|---|
| 1 | 5130-702-077-XX | GUIDE | Guide | 1 | * | * | * | | | | 130702077 |
| 2 | 5510-012-214-XX | TANK-COMP-FUEL | Reservoir | 1 | * | * | * | | | | 510012214 |
| 3 | 5510-482-069-XX | CAP-ASSY-TANK | Ens. bouchon | 1 | * | * | * | | | | 510482069 |
| 4 | 5110-092-831-XX | GASKET | Joint | 1 | * | * | * | | | | 110092831 |
| 5 | 5182-926-656-00 | ELEMENT-BREATHER | Element | 1 | * | | | | | | 318292665600 |
| 6 | 5491-092-054-XX | ELEMENT-BREATHER | Element | 1 | | * | * | | | | 491092054 |
| 7 | 5490-192-091-XX | FILTER-FUEL | Robinet | 1 | * | * | * | | | | 490192091 |
| 8 | 5490-192-094-XX | FILTER-FUEL | Robinet | 1 | * | * | * | | | | 490192094 |
| 9 | 5131-682-303-XX | LEVER | Levier | 1 | * | * | * | | | | 131682303 |
| 10 | 5161-042-052-XX | FILTER-COMP | Robinet | 1 | * | * | * | | | | 161042052 |
| 11 | 5920-092-296-XX | SCREW | Vis | 1 | * | * | * | | | | 920092296 |
| 12 | 5171-966-812-00 | CLAMP | Attache | 2 | * | | | | | | 317196681200 |
| 13 | 5920-372-202-XX | CLAMP | Attache | 1 | * | * | * | | | | 920372202 |
| 14 | 5920-592-262-XX | TUBE | Tuyau | 1 | * | * | * | | | | 920592262 |
| 15 | 5921-702-009-XX | CLAMP | Attache | 2 | * | * | * | | | | 921702009 |
| 16 | 5921-702-020-XX | CLAMP | Attache | 1 | * | | | | | | 921702020 |
| 17 | 5130-B06-10X-XX | BOLT-FLANGED | Vis | 2 | * | | | | | | 130B0610 |
| 18 | 5233-B05-10X-XX | SCREW-PAN-WP+- | Vis | 2 | * | * | * | | | | 233B0510 |
| 19 | 5705-A04-100-0X | TUBE-BRAID L=405MM | Tuyau | 1 | * | | | | | | 705A041000 |
| 20 | 5921-702-043-XX | CLAMP | Attache | 2 | | * | * | | | | 921702043 |
| 21 | 5921-702-037-XX | CLAMP | Attache | 1 | | * | * | | | | 921702037 |
| 22 | 5130-B06-12X-XX | BOLT-FLANGED | Vis | 2 | | * | * | | | | 130B0612 |
| 23 | 5921-902-068-XX | TUBE-4. 8X10. 3X415 | Tuyau | 1 | | * | * | | | | 921902068 |
| 24 | 5920-932-088-XX | SEAL | Joint | 1 | | * | * | | | | 920932088 |

# FIG. 13 ELECTRIC STARTER
## Démarreur

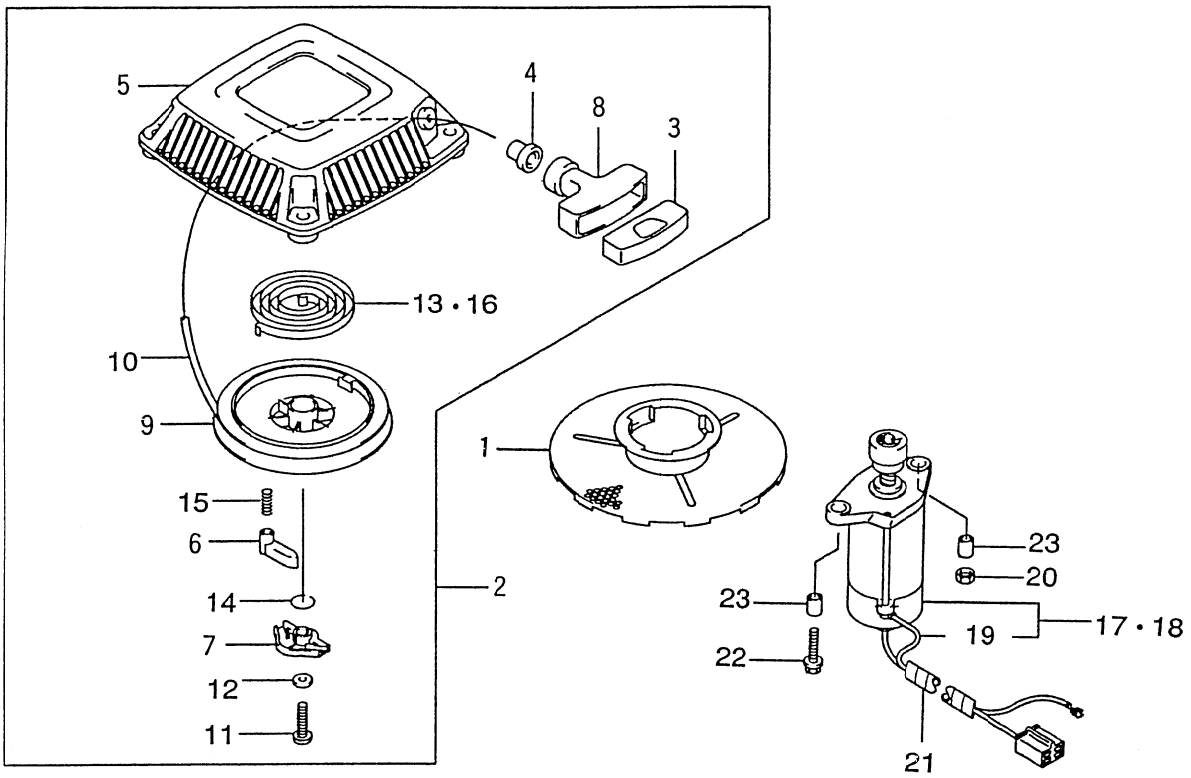


K500-101

| KEY Réf. | PART CODE Pièces No. | DESCRIPTION | Désignation | QTY Quant. | TYPE OF MODEL Modèl FC150V AB03 | FC150V FB03 | FC150V GB03 | ITC | COL | GRP | REMARKS Remarques |
|---|---|---|---|---|---|---|---|---|---|---|---|
| 1 | 5490-802-143-XX | PULLEY-STARTING | Bol | 1 | * | * | * | | | | 490802143 |
| 2 | 5490-882-379-XX | STARTER-RECOIL | Lanceur | 1 | * | * | * | | | | 490882379 |
| 3 | 5110-122-255-XX | CAP, GRIP | Capuchon | 1 | * | * | * | | | | 110122255 |
| 4 | 5130-702-064-XX | GUIDE, ROPE | Guide | 1 | * | * | * | | | | 130702064 |
| 5 | 5130-912-113-XX | HOLDER, RECOIL | Support | 1 | * | * | * | | | | 130912113 |
| 6 | 5131-652-072-XX | PAWL, RECOIL STARTER | Cliquet | 1 | * | * | * | | | | 131652072 |
| 7 | 5391-082-059-XX | RETAINER-SPRING | Coupelle | 1 | * | * | * | | | | 391082059 |
| 8 | 5460-752-082-XX | GRIP, RECOIL STARTER | Poignée | 1 | * | * | * | | | | 460752082 |
| 9 | 5591-012-079-XX | REEL, RECOIL STARTER | Poulie | 1 | * | * | * | | | | 591012079 |
| 10 | 5591-062-115-XX | ROPE, 3.8x1600 | Corde | 1 | * | * | * | | | | 591062115 |
| 11 | 5920-092-280-XX | SCREW, 5x18 | Vis | 1 | * | * | * | | | | 920092280 |
| 12 | 5920-222-384-XX | WASHER, 5x12.8x1.2 | Rondelle | 1 | * | * | * | | | | 920222384 |
| 13 | 5156-013-452-AX | SPRING, RECOIL | Ressort spiral | 1 | * | | | | | | 3156013452A |
| 14 | 5921-442-176-XX | SPRING | Ressort | 1 | * | * | * | | | | 921442176 |
| 15 | 5921-442-177-XX | SPRING, RETURN | Ressort de rappel | 1 | * | * | * | | | | 921442177 |
| 16 | 5920-812-265-XX | SPRING, RECOIL | Ressort spiral | 1 | | * | * | | | | 920812265 |
| 17 | 5211-632-100-XX | STARTER-ELECTRIC | Demarreur | 1 | | * | | | | | 211632100 |
| 18 | 5211-632-117-XX | STARTER-ELECTRIC | Demarreur | 1 | | | * | | | | 211632117 |
| 19 | 5260-112-283-XX | WIRE-LEAD | Fil | 1 | | * | * | | | | 260112283 |
| 20 | 5920-151-193-XX | NUT | Ecrou | 1 | | * | * | | | | 920151193 |
| 21 | 5920-592-261-XX | TUBE | Tuyau | 1 | | * | * | | | | 920592261 |
| 22 | 5130-G06-30X-XX | BOLT-FLANGED | Vis | 1 | | * | * | | | | 130G0630 |
| 23 | 5552-B10-12X-XX | PIN-DOWEL | Pion | 2 | | * | * | | | | 552B1012 |

# FIG. 14 ELECTRIC STARTER (AB03)

## Démarreur

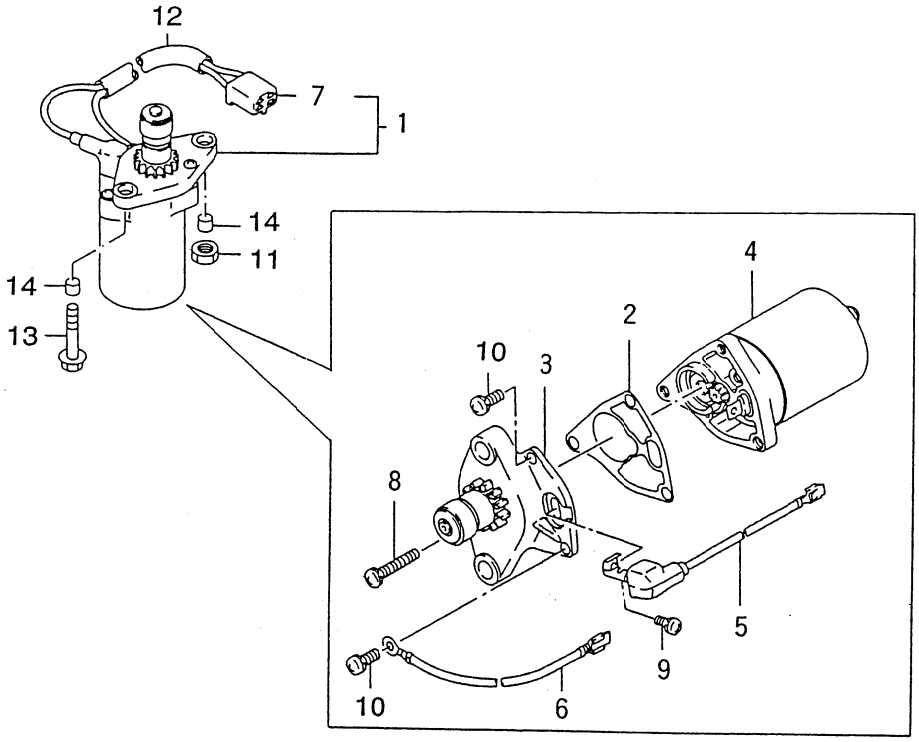


K500-101

| KEY Réf. | PART CODE Pièces No. | DESCRIPTION | Désignation | QTY Quant. | TYPE OF MODEL Modél FC150V AB03 | FC150V FB03 | FC150V GB03 | ITC | COL | GRP | REMARKS Remarques |
|---|---|---|---|---|---|---|---|---|---|---|---|
| 1 | 5122-632-079-XX | SRARTER-ELECTRIC | Demarreur | 1 | * | | | | | | 211632079 |
| 2 | 5110-092-786-XX | GASKET STARTER | Joint | 1 | * | | | | | | 110092786 |
| 3 | 5161-462-156-XX | COVER-ASSY STARTER | Couvercle | 1 | * | | | | | | 161462156 |
| 4 | 5211-742-051-XX | MOTOR-ELECTRIC | Moteur | 1 | * | | | | | | 211742051 |
| 5 | 5260-112-209-XX | WIRE-LEAD | Fil | 1 | * | | | | | | 260112209 |
| 6 | 5260-112-210-XX | WIRE-LEAD | Fil | 1 | * | | | | | | 260112210 |
| 7 | 5592-212-128-XX | CONNECTOR-CORD | Connecteur | 1 | * | | | | | | 592212128 |
| 8 | 5920-092-281-XX | SCREW 5X32 | Vis | 1 | * | | | | | | 920092281 |
| 9 | 5223-B04-06X-XX | SCREW-PAN-WS-CROS | Vis | 1 | * | | | | | | 223B0406 |
| 10 | 5223-D05-16X-XX | SCREW-PAN-WS-CROS | Vis | 2 | * | | | | | | 223D0516 |
| 11 | 5920-151-193-XX | NUT | Ecrou | 1 | * | | | | | | 920151193 |
| 12 | 5920-592-261-XX | TUBE | Tuyau | 1 | * | | | | | | 920592261 |
| 13 | 5187-G06-35X-XX | BOLT 6X35 | Vis | 1 | * | | | | | | 187G0635 |
| 14 | 5552-B10-12X-XX | PIN-DOWEL | Pion | 2 | * | | | | | | 552B1012 |

# FIG. 15 LABEL
## Etiquette

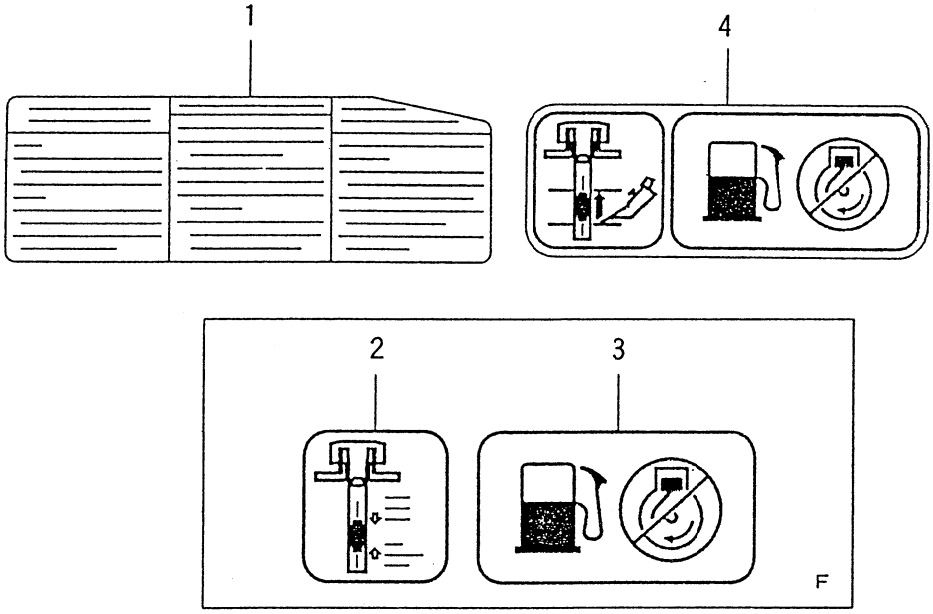


K500-101

| KEY Réf. | PART CODE Pièces No. | DESCRIPTION | Désignation | QTY Quant. | TYPE OF MODEL Modél FC150V AB03 | FC150V FB03 | FC150V GB03 | ITC | COL | GRP | REMARKS Remarques |
|---|---|---|---|---|---|---|---|---|---|---|---|
| 1 | 5560-312-375-XX | LABEL-MANUAL | Etiquette | 1 | * | * | * | | | | 560312375 |
| 2 | 5560-312-376-XX | LABEL-MANUAL | Etiquette | 1 | * | * | | | | | 560312376 |
| 3 | 5560-312-384-XX | LABEL-MANUAL | Etiquette | 1 | * | * | | | | | 560312384 |
| 4 | 5560-312-447-XX | LABEL-MANUAL | Etiquette | 1 | | | * | | | | 560312447 |

# FIG. 16 ACCESSORY
## Accessoire

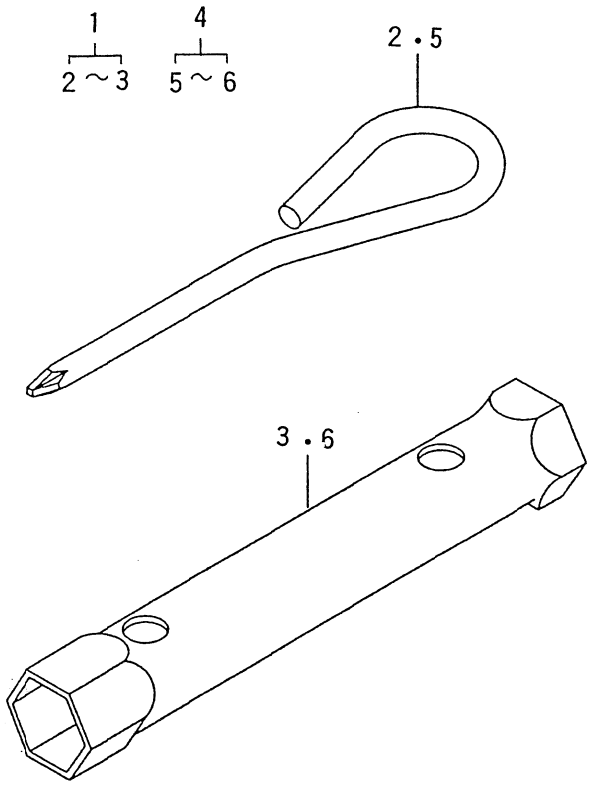


K500-101

| KEY Réf. | PART CODE Pièces No. | DESCRIPTION | Désignation | QTY Quant. | TYPE OF MODEL Modél FC150V AB03 | FC150V FB03 | FC150V GB03 | ITC | COL | GRP | REMARKS Remarques |
|---|---|---|---|---|---|---|---|---|---|---|---|
| 1 | 5119-200-900-AX | TOOL KIT | Outil | 1 | * | | | | | | 3119200900A |
| 2 | 2500-930-002-00 | TOOL-DRIVER | Tournevis | 1 | * | | | | | | 3119200951A |
| 3 | 2500-930-001-00 | TOOL-WRENCH, 19x21 | Clef plate | 1 | * | | | | | | 3144900931A |
| 4 | 5560-072-118-XX | TOOL KIT | Outil | 1 | | * | * | | | | 560072118 |
| 5 | 2921-072-057-XX | TOOL-DRIVER | Tournevis | 1 | | * | * | | | | 921072057 |
| 6 | 2921-102-093-XX | TOOL-WRENCH, 19x21 | Clef plate | 1 | | * | * | | | | 921102093 |

# ENGINE
# Moteur

## FC150V – EB05

# FIG. 1 CYLINDER／CRANKCASE
## Cylindre／Carter

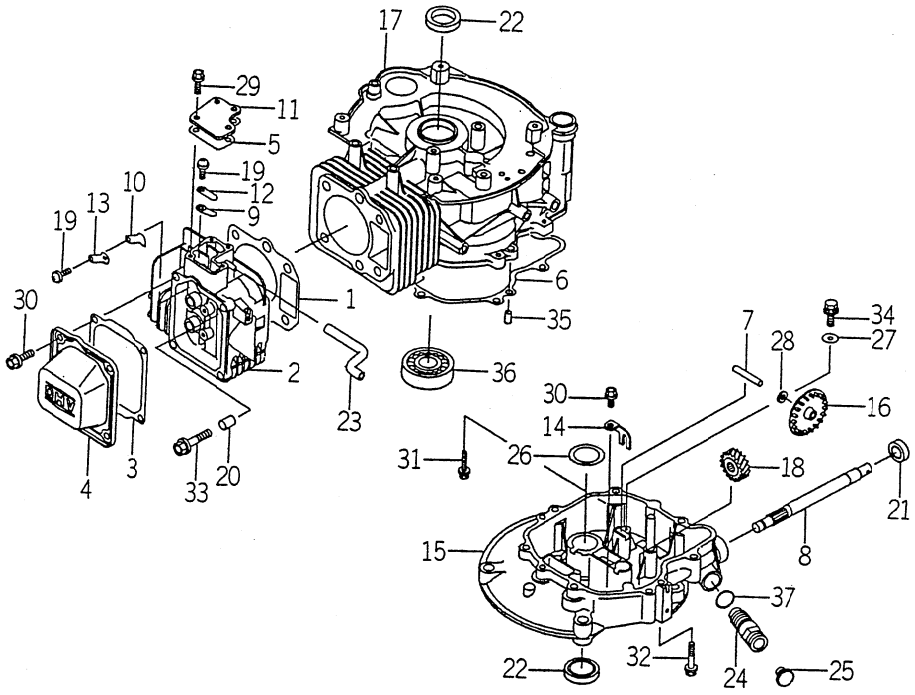


K500-101

| KEY Réf. | PART CODE Pièces No. | DESCRIPTION | Désignation | QTY Quant. | TYPE OF MODEL Modél FC150V EB05 | | | ITC | COL | GRP | REMARKS Remarques |
|---|---|---|---|---|---|---|---|---|---|---|---|
| 1 | 5110-042-099-XX | GASKET-HEAD | Joint de cylidre | 1 | * | | | | | | 110042099 |
| 2 | 5110-086-023-XX | HEAD-COMP-CYLINDER | Culasse | 1 | * | | | | | | 110086023 |
| 3 | 5110-092-848-XX | GASKET, ROCKER CASE | Joint de boitier | 1 | * | | | | | | 110092848 |
| 4 | 5110-222-057-XX | CASE-ROCKER | Boitier | 1 | * | | | | | | 110222057 |
| 5 | 5110-602-007-XX | GASKET, COVER | Joint | 1 | * | | | | | | 110602007 |
| 6 | 5110-602-011-XX | GASKET, CRANKCASE COV | Joint de carter | 1 | * | | | | | | 110602011 |
| 7 | 5131-072-202-XX | SHAFT | Arbre | 1 | * | | | | | | 131072202 |
| 8 | 5131-072-220-XX | SHAFT | Arbre | 1 | * | | | | | | 131072220 |
| 9 | 5132-702-049-XX | PLATE | Praque | 1 | * | | | | | | 1132702049 |
| 10 | 5132-702-050-XX | PLATE | Praque | 1 | * | | | | | | 1132702050 |
| 11 | 5140-242-180-XX | COVER | Capot | 1 | * | | | | | | 140242180 |
| 12 | 5161-262-201-XX | VALVE | Soupape | 1 | * | | | | | | 161262201 |
| 13 | 5161-262-202-XX | VALVE | Soupape | 1 | * | | | | | | 161262202 |
| 14 | 5210-832-062-XX | ARM | Bras | 1 | * | | | | | | 210832062 |
| 15 | 5490-156-088-XX | COVER-CRANKCASE | Carter | 1 | * | | | | | | 490156088 |
| 16 | 5490-732-055-XX | SLINGER-OIL | Déflecteur d'huile | 1 | * | | | | | | 490732055 |
| 17 | 5491-202-240-XX | CRANKCASE-COMP | Carter | 1 | * | | | | | | 491202240 |
| 18 | 5590-562-790-XX | GEARHELICAL | Pignon | 1 | * | | | | | | 590562790 |
| 19 | 5920-092-166-XX | SCREW, 5x8 | Vis | 2 | * | | | | | | 920092166 |
| 20 | 5920-431-264-XX | PIN | Axe | 2 | * | | | | | | 920431264 |
| 21 | 5920-452-204-XX | SEAL-OIL | Joint SPI | 1 | * | | | | | | 920452204 |
| 22 | 5920-492-208-XX | SEAL-OIL | Joint SPI | 2 | * | | | | | | 920492208 |
| 23 | 5920-592-256-XX | TUBE | Tuyau | 1 | * | | | | | | 920592256 |
| 24 | 5920-662-180-XX | PLUG | Bouchon | 1 | * | | | | | | 920662180 |
| 25 | 5920-662-193-XX | PLUG | Bouchon | 1 | * | | | | | | 920662193 |

# FIG. 1 CYLINDER／CRANKCASE
## Cylindre／Carter

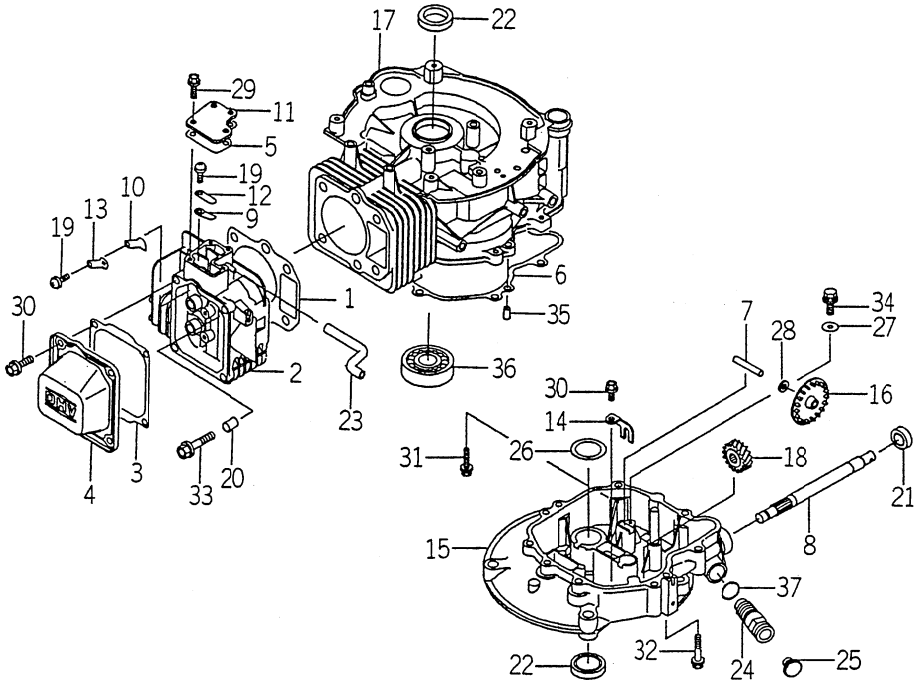


K500-101

| KEY Réf. | PART CODE Pièces No. | DESCRIPTION | Désignation | QTY Quant. | TYPE OF MODEL Modél FC150V EB05 | | | I T C | C O L | G R P | REMARKS Remarques |
|---|---|---|---|---|---|---|---|---|---|---|---|
| 26 | 5922-002-026-XX | WASHER/25X42X1.0 | Rondelle | 1 | * | | | | | | 922002026 |
| 27 | 5922-002-033-XX | WASHER, 5x16x0.8 | Rondelle | 1 | * | | | | | | 922002033 |
| 28 | 5922-002-034-XX | WASHER, 6x12x1.6 | Rondelle | 1 | * | | | | | | 922002034 |
| 29 | 5130-B05-10X-XX | BOLT-FLANGED | Vis | 4 | * | | | | | | 130B0510 |
| 30 | 5130-B06-12X-XX | BOLT-FLANGED | Vis | 4 | * | | | | | | 130B0612 |
| 31 | 5130-G06-25X-XX | BOLT-FLANGED | Vis | 7 | * | | | | | | 130G0625 |
| 32 | 5130-G06-45X-XX | BOLT-FLANGED | Vis | 1 | * | | | | | | 130G0645 |
| 33 | 5130-G08-45X-XX | BOLT-FLANGED | Vis | 4 | * | | | | | | 130G0845 |
| 34 | 5187-B05-10X-XX | BOLT-UPSET-WSP | Vis | 1 | * | | | | | | 187B0510 |
| 35 | 5551-A06-12X-XX | PIN-DOWEL | Pion | 2 | * | | | | | | 551A0612 |
| 36 | 5601-B62-05X-XX | BEARING-BALL | Roulement à billes | 1 | * | | | | | | 601B6205 |
| 37 | 5670-D20-15X-XX | O RING | Joint torique | 1 | * | | | | | | 670D2015 |

# FIG. 2 PISTON／CRANKSHAFT
## Piston／Vilebrequin

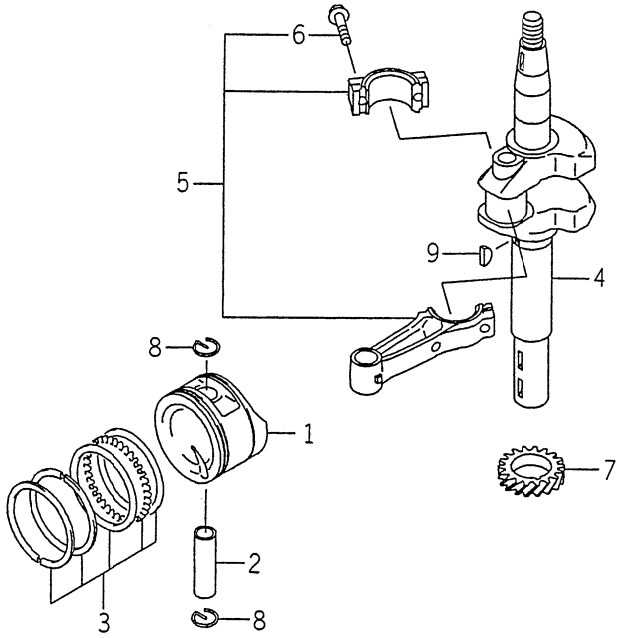


K500-101

| KEY Réf. | PART CODE Pièces No. | DESCRIPTION | Désignation | QTY Quant. | TYPE OF MODEL Modél FC150V EB05 | | | I T C | C O L | G R P | REMARKS Remarques |
|---|---|---|---|---|---|---|---|---|---|---|---|
| 1 | 5130-012-109-XX | PISTON-ENGINE | Piston | 1 | * | | | | | | 130012109 |
| 2 | 5130-292-094-XX | PISTON-ENGINE L, 0.25 | Piston | AR | * | | | | | | 130292094 |
| 3 | 5130-292-095-XX | PISTON-ENGINE L, 0.50 | Piston | AR | * | | | | | | 130292095 |
| 4 | 5130-022-074-XX | PIN-PISTON | Axe de piston | 1 | * | | | | | | 130022074 |
| 5 | 5130-086-030-XX | RING-SET-PISTON | Jeu de segments | 1 | * | | | | | | 130086030 |
| 6 | 5130-256-013-XX | RING-SET-PISTON 0.25 | Jeu de segments | AR | * | | | | | | 130256013 |
| 7 | 5130-256-014-XX | RING-SET-PISTON 0.50 | Jeu de segments | AR | * | | | | | | 130256014 |
| 8 | 5130-372-453-XX | CRANKSHAFT | Vilebrequin | 1 | * | | | | | | 130372453 |
| 9 | 5132-516-025-XX | ROD-ASSY-CONNECTING | Bielle | 1 | * | | | | | | 132516025 |
| 10 | 5132-516-027-XX | ROD-ASSY-CONNECTING, | Bielle | AR | * | | | | | | 132516027 |
| 11 | 5921-502-122-XX | BOLT, CONNECTING ROD | Vis | 2 | * | | | | | | 921502122 |
| 12 | 5590-562-726-XX | GEAR-HELICAL | Pignon | 1 | * | | | | | | 590562726 |
| 13 | 5920-332-161-XX | RING-SNAP | Circlips | 2 | * | | | | | | 920332161 |
| 14 | 5920-382-093-XX | KEY | Clavette | 1 | * | | | | | | 920382093 |

# FIG. 3 VALVE／CAMSHAFT
## Soupape／Arbre à cames

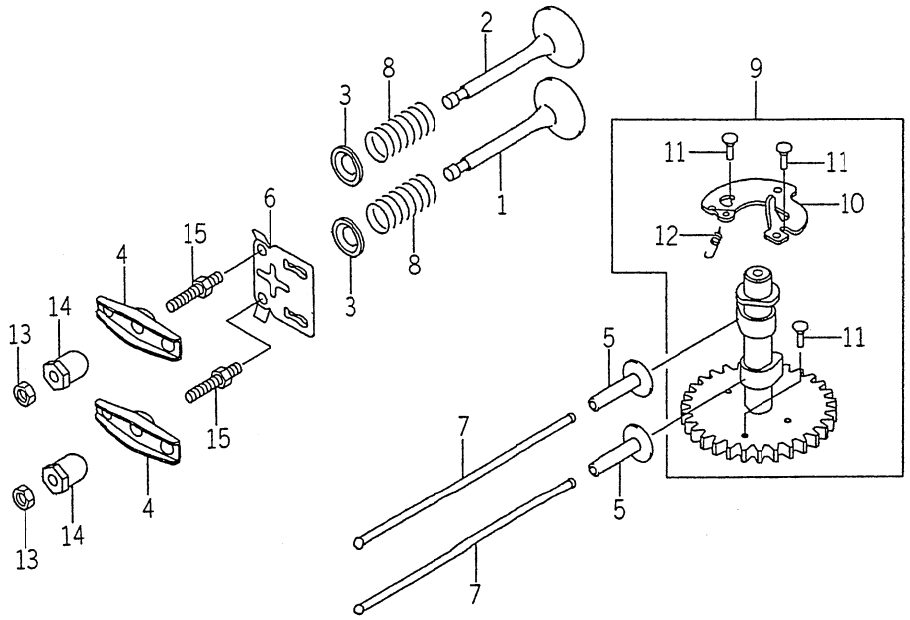


K500-101

| KEY Réf. | PART CODE Pièces No. | DESCRIPTION | Désignation | QTY Quant. | TYPE OF MODEL Modél FC150V EB05 | | | I T C | C O L | G R P | REMARKS Remarques |
|---|---|---|---|---|---|---|---|---|---|---|---|
| 1 | 5120-042-095-XX | VALVE-INTAKE | Soupape d'admission | 1 | * | | | | | | 120042095 |
| 2 | 5120-052-084-XX | VALVE-EXHAUST | Soupape d'echappement | 1 | * | | | | | | 120052084 |
| 3 | 5120-092-068-XX | RETAINER-VALVE SPRIN | Coupelle | 2 | * | | | | | | 120092068 |
| 4 | 5120-162-057-XX | ARM-ROCKER | Culbuteur | 2 | * | | | | | | 120162057 |
| 5 | 5120-322-065-XX | TAPPET | Poussoir | 2 | * | | | | | | 120322065 |
| 6 | 5130-702-072-XX | GUIDE | Guide | 1 | * | | | | | | 130702072 |
| 7 | 5131-162-065-XX | ROD-PUSH | Tige-poussoir | 2 | * | | | | | | 131162065 |
| 8 | 5490-782-064-XX | SPRING-ENGINE VALVE | Ressort | 2 | * | | | | | | 490782064 |
| 9 | 5491-182-119-XX | CAMSHAFT-COMP | Arbre a cames | 1 | * | | | | | | 491182119 |
| 10 | 5211-182-090-XX | DECOMPRESSOER | Décompresseur | 1 | * | | | | | | 211182090 |
| 11 | 5920-432-168-XX | PIN | Axe | 3 | * | | | | | | 920432168 |
| 12 | 5920-812-342-XX | SPRING | Ressort | 1 | * | | | | | | 920812342 |
| 13 | 5920-152-240-XX | NUT, 6MM | Ecrou | 2 | * | | | | | | 920152240 |
| 14 | 5920-152-253-XX | NUT | Ecrou | 2 | * | | | | | | 920152253 |
| 15 | 5921-502-102-XX | BOLT | Vis | 2 | * | | | | | | 921502102 |

# FIG. 4 LUBRICATION – EQUIPMENT
## Lubrification

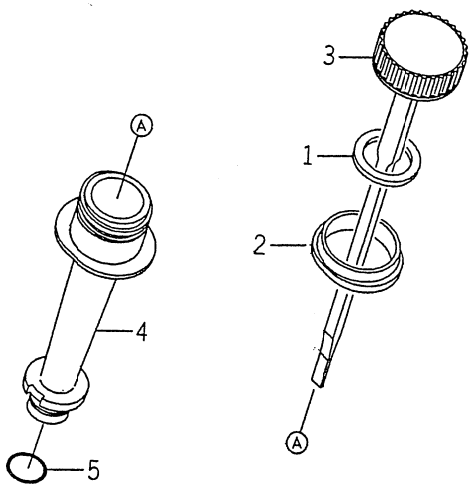


K500-101

| KEY Réf. | PART CODE Pièces No. | DESCRIPTION | Désignation | QTY Quant. | TYPE OF MODEL Modél FC150V EB05 | | | I T C | C O L | G R P | REMARKS Remarques |
|---|---|---|---|---|---|---|---|---|---|---|---|
| 1 | 5110-092-346-XX | GASKET, OIL GAUGE | Joint | 1 | * | | | | | | 110092346 |
| 2 | 5130-702-078-XX | GUIDE | Guide | 1 | * | | | | | | 130702078 |
| 3 | 5520-052-094-XX | GAUGE | Jauge | 1 | * | | | | | | 520052094 |
| 4 | 5592-312-071-XX | FILLER | Charge | 1 | * | | | | | | 592312071 |
| 5 | 5670-D20-16X-XX | O RING | Joint torique | 1 | * | | | | | | 670D2016 |

# FIG. 5 COOLING – EQUIPMENT
## Refroidissement

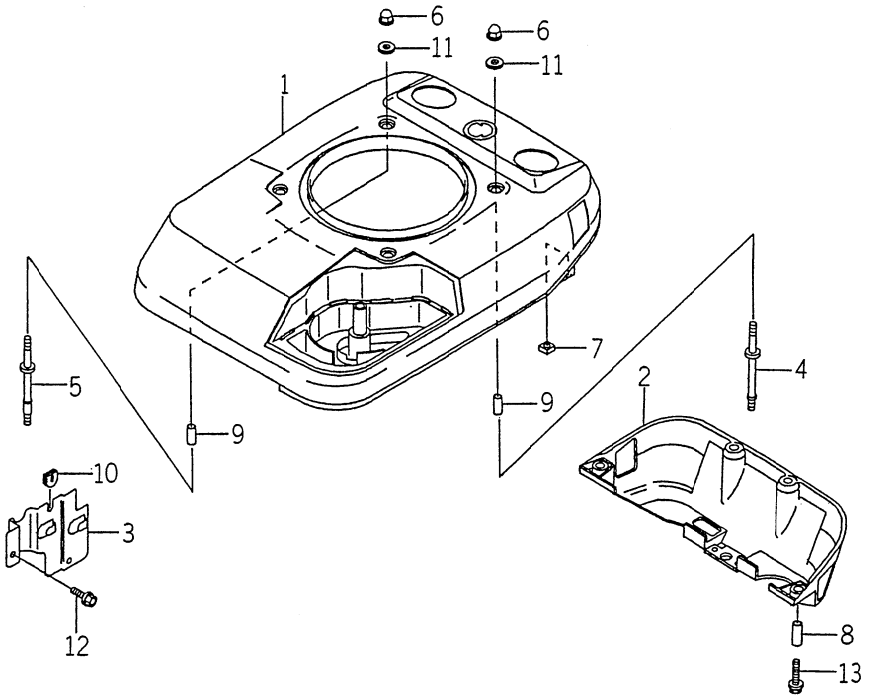


K500-101

| KEY Réf. | PART CODE Pièces No. | DESCRIPTION | Désignation | QTY Quant. | TYPE OF MODEL Modél FC150V EB05 | | | ITC | COL | GRP | REMARKS Remarques |
|---|---|---|---|---|---|---|---|---|---|---|---|
| 1 | 5140-902-009-XX | COVER, UPPER | Covrercle | 1 | * | | | | | | 140902009 |
| 2 | 5140-902-013-XX | COVER, LOWER | Covrercle | 1 | * | | | | | | 140902013 |
| 3 | 5140-902-023-XX | COVER | Capot | 1 | * | | | | | | 140902023 |
| 4 | 5920-042-117-XX | STUD | Goujon | 3 | * | | | | | | 920042117 |
| 5 | 5920-042-119-XX | STUD | Goujon | 1 | * | | | | | | 920042119 |
| 6 | 5920-151-170-XX | NUT | Ecrou | 4 | * | | | | | | 920151170 |
| 7 | 5920-152-241-XX | NUT, 6MM | Ecrou | 4 | * | | | | | | 920152241 |
| 8 | 5920-262-273-XX | SPACER, 6.2x7.8x17 | Pièce d'écartement | 4 | * | | | | | | 920262273 |
| 9 | 5920-262-274-XX | SPACER, 6.2x7.8x22 | Pièce d'écartement | 4 | * | | | | | | 920262274 |
| 10 | 5920-712-113-XX | GROMMET | Passe-fil | 1 | * | | | | | | 920712113 |
| 11 | 5922-002-037-XX | WASHER, 6.5x18x2.0 | Rondelle | 4 | * | | | | | | 922002037 |
| 12 | 5130-B05-10X-XX | BOLT-FLANGED | Vis | 2 | * | | | | | | 130B0510 |
| 13 | 5130-G06-25X-XX | BOLT-FLANGED | Vis | 4 | * | | | | | | 130G0625 |

# FIG. 6 ELECTRIC – EQUIPMENT

## Eléctricite

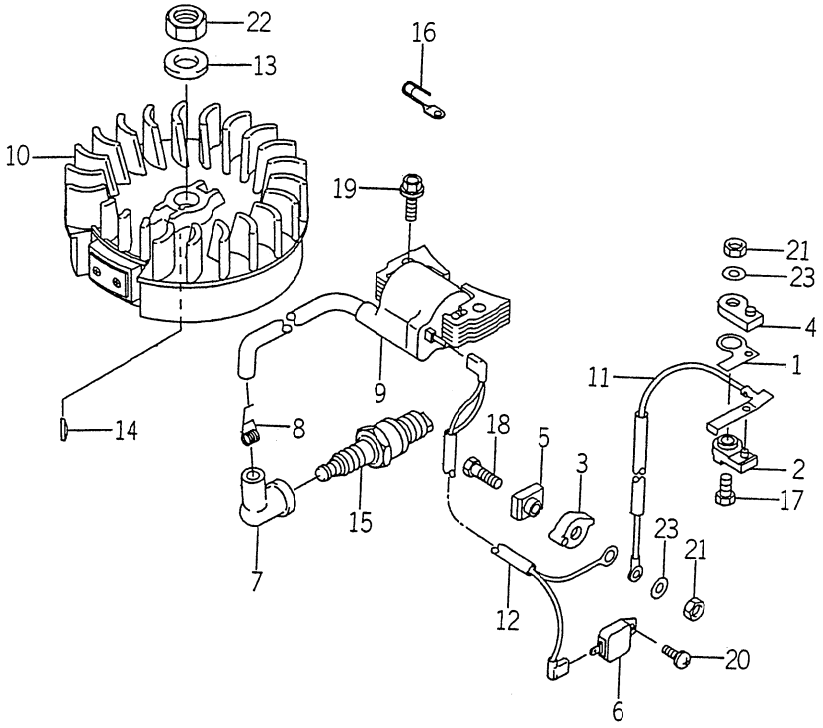


K500-101

| KEY Réf. | PART CODE Pièces No. | DESCRIPTION | Désignation | QTY Quant. | TYPE OF MODEL Modél FC150V EB05 | | | ITC | COL | GRP | REMARKS Remarques |
|---|---|---|---|---|---|---|---|---|---|---|---|
| 1 | 5131-832-475-XX | PLATE | Praque | 1 | * | | | | | | 131832475 |
| 2 | 5140-242-182-XX | COVER | Capot | 1 | * | | | | | | 140242182 |
| 3 | 5140-242-183-XX | COVER | Capot | 1 | * | | | | | | 140242183 |
| 4 | 5160-732-123-XX | INSULATOR | Ecran thermique | 1 | * | | | | | | 160732123 |
| 5 | 5160-732-124-XX | INSULATOR | Ecran thermique | 1 | * | | | | | | 160732124 |
| 6 | 5211-192-139-XX | IGNITER | Bougie d'allumage | 1 | * | | | | | | 211192139 |
| 7 | 5211-302-066-XX | CAP-SPARK PLUG | Capuchon | 1 | * | | | | | | 211302066 |
| 8 | 5211-692-004-XX | TERMINAL | Borne | 1 | * | | | | | | 211692004 |
| 9 | 5211-712-176-XX | COIL-ASSY-IGNITION | Ens. bobine d'allumage | 1 | * | | | | | | 211712176 |
| 10 | 5211-942-290-XX | FLYWHEEL-COMP | Volant | 1 | * | | | | | | 211942290 |
| 11 | 5260-112-191-XX | WIRE-LEAD | Fil | 1 | * | | | | | | 260112191 |
| 12 | 5260-112-279-XX | WIRE-LEAD | Fil | 1 | * | | | | | | 260112279 |
| 13 | 5920-222-102-XX | WASHER | Rondelle | 1 | * | | | | | | 90222102 |
| 14 | 5920-382-077-XX | KEY | Clavette | 1 | * | | | | | | 920382077 |
| 15 | 5920-702-087-XX | PLUG-SPARK, BP5ES(NGK | Bougie | 1 | * | | | | | | 920702087 |
| 16 | 5921-702-064-XX | CLAMP | Attache | 1 | * | | | | | | 921702064 |
| 17 | 5112-B05-16X-XX | BOLT-UPSET | Vis | 1 | * | | | | | | 112B0516 |
| 18 | 5112-B05-22X-XX | BOLT-UPSETED | Vis | 1 | * | | | | | | 1112B0522 |
| 19 | 5130-G06-25X-XX | BOLT-FLANGED | Vis | 2 | * | | | | | | 130G0625 |
| 20 | 5241-B04-12X-XX | SCREW-PAN-WP+- | Vis | 1 | * | | | | | | 241B0412 |
| 21 | 5311-B05-00X-XX | NUT-HEX | Ecrou | 1 | * | | | | | | 311B0500 |
| 22 | 5314-G14-00X-XX | NUT-HEX-FINE | Ecrou | 1 | * | | | | | | 314G1400 |
| 23 | 5410-B05-00X-XX | W-PLAIN-S | Rondelle | 1 | * | | | | | | 410B0500 |

# FIG. 7 CONTROL – EQUIPMENT

## Commandes

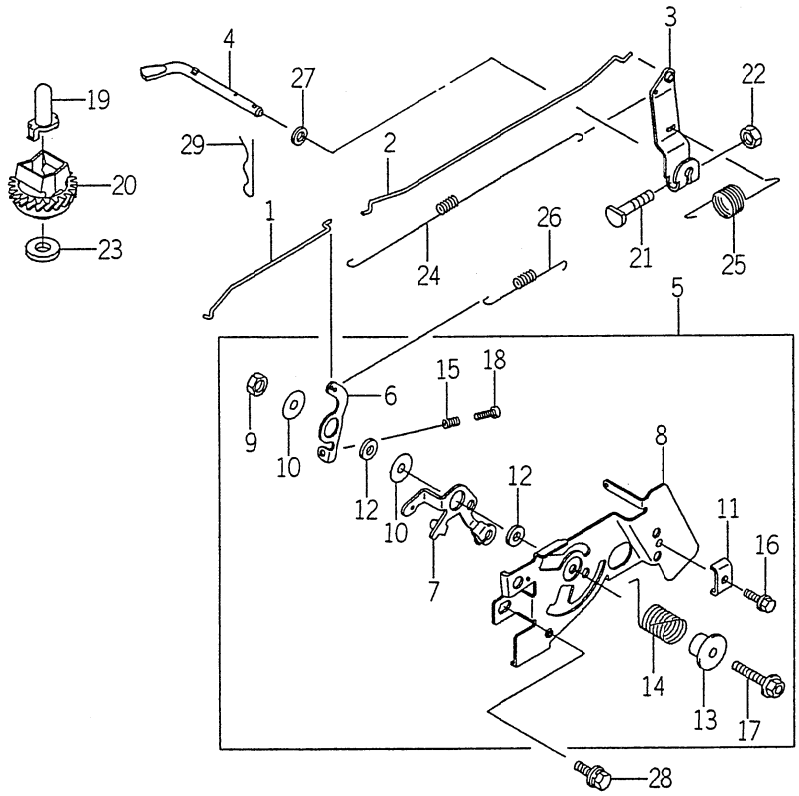


X500-101

| KEY Réf. | PART CODE Pièces No. | DESCRIPTION | Désignation | QTY Quant. | TYPE OF MODEL Modél FC150V EB05 | | | I T C | C O L | G R P | REMARKS Remarques |
|---|---|---|---|---|---|---|---|---|---|---|---|
| 1 | 5161-692-104-XX | LINK-CHOKE | Tige | 1 | * | | | | | | 161692104 |
| 2 | 5161-712-060-XX | LINK | Tige | 1 | * | | | | | | 161712060 |
| 3 | 5211-872-060-XX | ARM-ASSY | Ens. bras | 1 | * | | | | | | 211872060 |
| 4 | 5390-032-071-XX | ARM-PIVOT | Bras | 1 | * | | | | | | 390032071 |
| 5 | 5391-802-904-XX | PANEL-ASSY-CONTROL | Ens. panneau de commande | 1 | * | | | | | | 391802904 |
| 6 | 5131-682-288-XX | LEVER | Levier | 1 | * | | | | | | 131682288 |
| 7 | 5131-682-298-XX | LEVER | Levier | 1 | * | | | | | | 131682298 |
| 8 | 5592-262-293-XX | PANEL-CONTROL | Panneau de commande | 1 | * | | | | | | 592262293 |
| 9 | 5920-152-051-XX | NUT | Ecrou | 1 | * | | | | | | 920152051 |
| 10 | 5920-222-372-XX | WASHER, 6x19x1.2 | Rondelle | 2 | * | | | | | | 920222372 |
| 11 | 5920-372-209-XX | CLAMP | Attache | 1 | * | | | | | | 920372209 |
| 12 | 5921-432-135-XX | COLLAR, 6x13x2.3 | Entretoise | 2 | * | | | | | | 921432135 |
| 13 | 5921-432-148-XX | COLLAR | Entretoise | 1 | * | | | | | | 921432148 |
| 14 | 5921-442-211-XX | SPRING | Ressort | 1 | * | | | | | | 921442211 |
| 15 | 5921-442-266-XX | SPRING | Ressort | 1 | * | | | | | | 921442266 |
| 16 | 5921-502-182-XX | BOLT, 5x18 | Vis | 1 | * | | | | | | 921502182 |
| 17 | 5130-B06-30X-XX | BOLT-FLANGED | Vis | 1 | * | | | | | | 130B0630 |
| 18 | 5214-B04-20X-XX | SCREW-PAN+- | Vis | 1 | * | | | | | | 214B0420 |
| 19 | 5420-362-051-XX | SLEEVE | Bague | 1 | * | | | | | | 420362051 |
| 20 | 5491-102-076-XX | GOVERNOR-ASSY | Ens. regulateur | 1 | * | | | | | | 491102076 |
| 21 | 5920-022-269-XX | BOLT | Vis | 1 | * | | | | | | 920022269 |
| 22 | 5920-151-193-XX | NUT | Ecrou | 1 | * | | | | | | 920151193 |
| 23 | 5920-222-019-00 | WASHER | Rondelle | 1 | * | | | | | | 920222019 |
| 24 | 5920-812-299-XX | SPRING, LINK | Ressort | 1 | * | | | | | | 920812299 |
| 25 | 5921-442-213-XX | SPRING | Ressort | 1 | * | | | | | | 921442213 |

# FIG. 7 CONTROL – EQUIPMENT
## Commandes

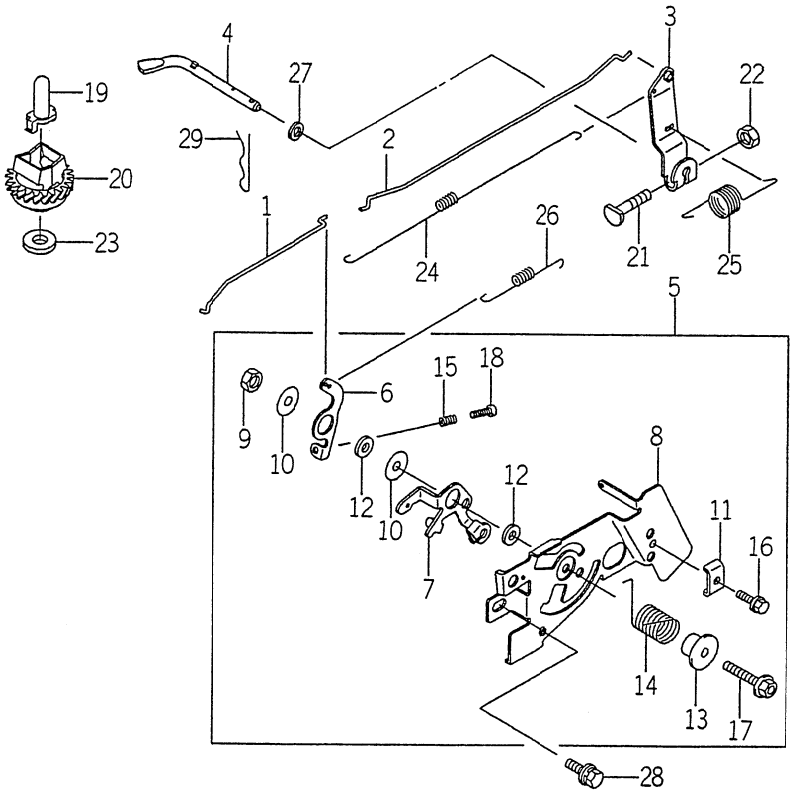


K500-101

| KEY Réf. | PART CODE Pièces No. | DESCRIPTION | Désignation | QTY Quant. | TYPE OF MODEL Modél FC150V EBC5 | | | I T C | C O L | G R P | REMARKS Remarques |
|---|---|---|---|---|---|---|---|---|---|---|---|
| 26 | 5921-442-235-XX | SPRING | Ressort | 1 | * | | | | | | 921442235 |
| 27 | 5922-002-029-XX | WASHER, 6.5x11.5x2.0 | Rondelle | 1 | * | | | | | | 922002029 |
| 28 | 5187-B06-14X-XX | BOLT-UPSET-WSP | Vis | 2 | * | | | | | | 187B0614 |
| 29 | 5554-A06-00X-XX | PIN-SNAP | Goupille à ressort | 1 | * | | | | | | 554A0600 |

# FIG. 8 CARBURETOR
## Carburateur

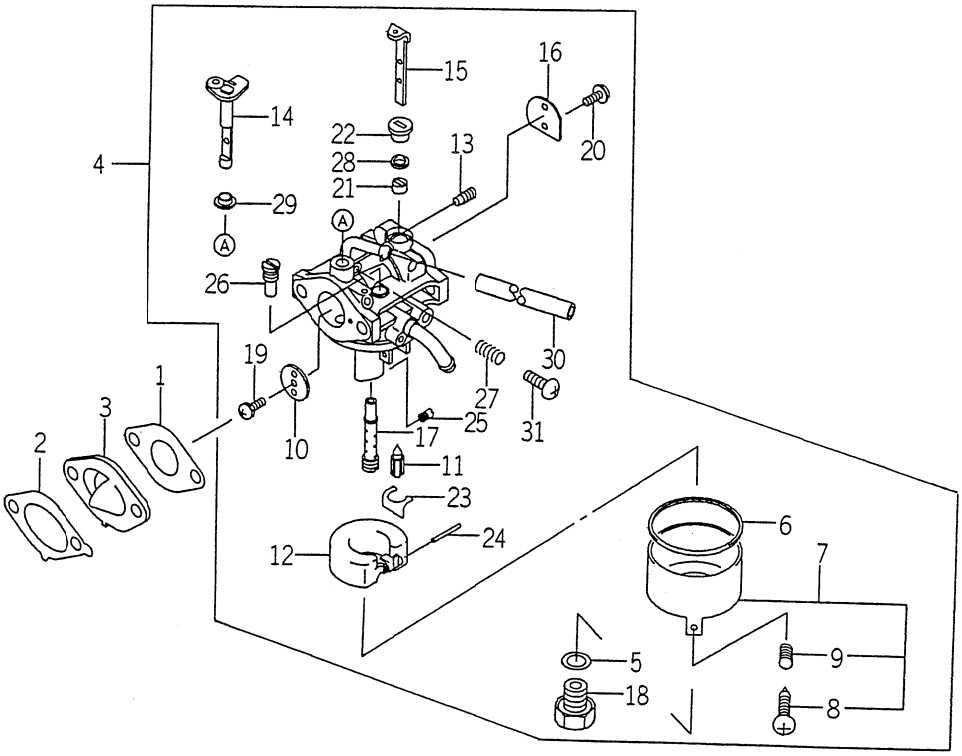


K500-101

| KEY Réf. | PART CODE Pièces No. | DESCRIPTION | Désignation | QTY Quant. | TYPE OF MODEL Modél FC150V EB05 | | | I T C | C O L | G R P | REMARKS Remarques |
|---|---|---|---|---|---|---|---|---|---|---|---|
| 1 | 5110-602-010-XX | GASKET, CARBURETOR | Joint | 1 | * | | | | | | 110602010 |
| 2 | 5110-602-012-XX | GASKET, INSULATOR | Joint | 1 | * | | | | | | 110602012 |
| 3 | 5160-732-136-XX | INSULATOR | Ecran thermique | 1 | * | | | | | | 160732136 |
| 4 | 5150-032-364-XX | CARBURETOR-ASSY. | Ens. carburateur | 1 | * | | | | | | 150032364 |
| 5 | 5110-092-036-XX | GASKET | Joint | 1 | * | | | | | | 110092036 |
| 6 | 5110-092-037-XX | GASKET | Joint | 1 | * | | | | | | 110092037 |
| 7 | 5160-202-052-XX | CHAMBER-FLOAT | Chambre du flotteur | 1 | * | | | | | | 160202052 |
| 8 | 5920-092-015-XX | SCREW | Vis | 1 | * | | | | | | 920092015 |
| 9 | 5920-812-009-XX | SPRING | Ressort | 1 | * | | | | | | 920812009 |
| 10 | 5160-252-001-XX | VALVE-THROTTLE, #110 | Boisseau | 1 | * | | | | | | 160252001 |
| 11 | 5160-302-083-XX | VALVE-FLOAT | Soupape | 1 | * | | | | | | 160302083 |
| 12 | 5160-312-058-XX | FLOAT | Flotteur | 1 | * | | | | | | 160312058 |
| 13 | 5160-352-063-XX | JET-AIR, #0.9 | Vis de richesse | 1 | * | | | | | | 160352063 |
| 14 | 5160-412-178-XX | SHAFT-CARBURETOR, TH | Axe volet d'air | 1 | * | | | | | | 160412178 |
| 15 | 5160-412-197-XX | SHAFT-CARBURETOR, CH | Axe volet d'air | 1 | * | | | | | | 160412197 |
| 16 | 5161-262-199-XX | VALVE | Soupape | 1 | * | | | | | | 161262199 |
| 17 | 5491-212-189-XX | NOZZLE-MAIN | Gicleur principal | 1 | * | | | | | | 491212189 |
| 18 | 5920-022-011-XX | BOLT | Vis | 1 | * | | | | | | 920022011 |
| 19 | 5920-092-024-XX | SCREW | Vis | 1 | * | | | | | | 920092024 |
| 20 | 5920-092-149-XX | SCREW | Vis | 2 | * | | | | | | 920092149 |
| 21 | 5920-272-003-XX | COLLAR | Entretoise | 1 | * | | | | | | 920272003 |
| 22 | 5920-272-004-XX | COLLAR | Entretoise | 1 | * | | | | | | 920272004 |
| 23 | 5920-332-067-XX | RING-SNAP | Circlips | 1 | * | | | | | | 920332067 |
| 24 | 5920-432-006-XX | PIN | Axe | 1 | * | | | | | | 920432006 |
| 25 | 5920-632-096-XX | JET-MAIN, #68.8 | Gicleur prinipal | 1 | * | | | | | | 920632096 |

# FIG. 8 CARBURETOR
## Carburateur

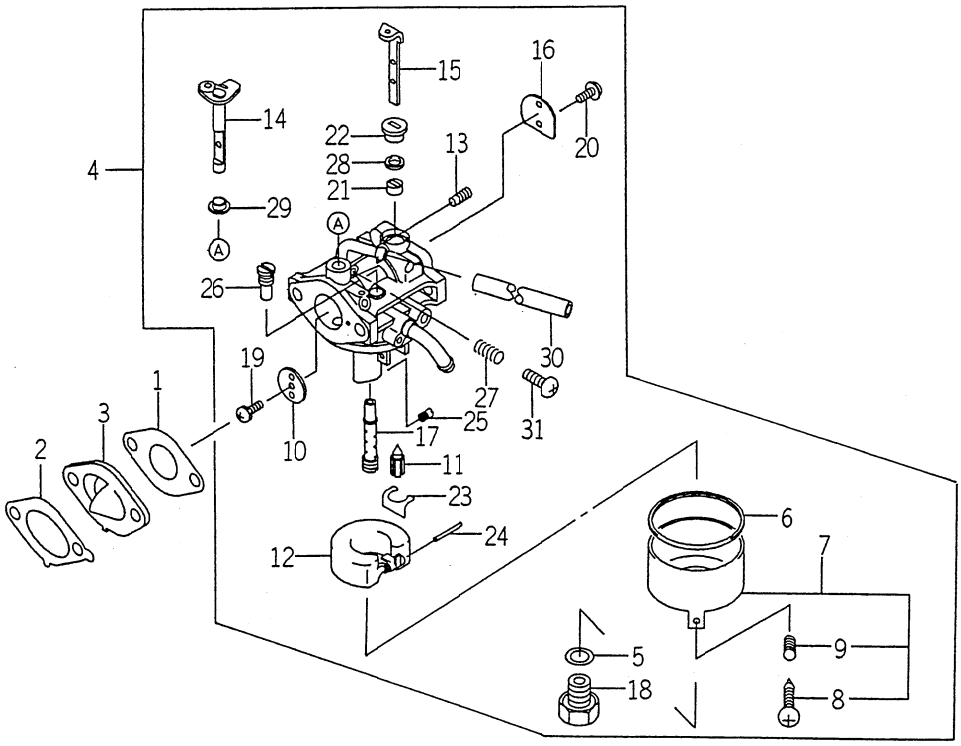


K500-101

| KEY Réf. | PART CODE Pièces No. | DESCRIPTION | Désignation | QTY Quant. | TYPE OF MODEL Modél FC150V EB05 | | | I T C | C O L | G R P | REMARKS Remarques |
|---|---|---|---|---|---|---|---|---|---|---|---|
| 26 | 5920-642-002-XX | JET-PILOT, #45 | Vis de melange | 1 | * | | | | | | 920642002 |
| 27 | 5920-812-009-XX | SPRING | Ressort | 1 | * | | | | | | 920812009 |
| 28 | 5920-932-101-XX | SEAL | Joint | 1 | * | | | | | | 920932101 |
| 29 | 5921-432-143-XX | COLLAR | Entretoise | 1 | * | | | | | | 921432143 |
| 30 | 5921-902-163-XX | TUBE, 4X7X125 | Tuyau | 1 | * | | | | | | 921902163 |
| 31 | 5214-B04-12X-XX | SCREW-PAN+- | Vis | 1 | * | | | | | | 214B0412 |

# FIG. 9 AIR – FILTER／MUFFLER
## Filtre a air／Echappement

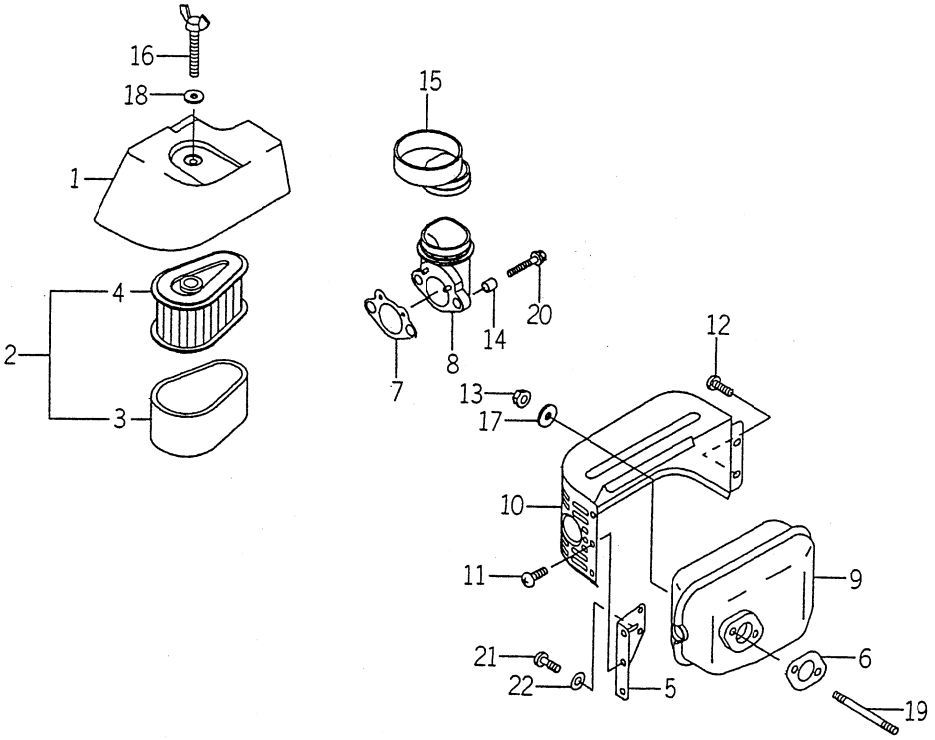


K500-101

| KEY Réf. | PART CODE Pièces No. | DESCRIPTION | Désignation | QTY Quant. | TYPE OF MODEL Modél FC150V EB05 | | | ITC | COL | GRP | REMARKS Remarques |
|---|---|---|---|---|---|---|---|---|---|---|---|
| 1 | 5110-122-313-XX | CAP, AIR FILTER | Capuchon | 1 | * | | | | | | 110122313 |
| 2 | 5110-292-002-XX | ELEMENT-ASSY-AIR FIL | Ens. element | 1 | * | | | | | | 110292002 |
| 3 | 5110-132-119-XX | ELEMENT-AIR FILTER | Element | 1 | * | | | | | | 110132119 |
| 4 | 5110-132-120-XX | ELEMENT-AIR FILTER | Element | 1 | * | | | | | | 110132120 |
| 5 | 5110-492-002-XX | BRACKET | Support | 1 | * | | | | | | 110492002 |
| 6 | 5110-602-009-XX | GASKET, MUFFLER | Joint | 1 | * | | | | | | 110602009 |
| 7 | 5110-602-067-XX | GASKET, INTAKE PIPE | Joint | 1 | * | | | | | | 110602067 |
| 8 | 5160-602-129-XX | PIPE-INTAKE | Tubulure d'admission | 1 | * | | | | | | 160602129 |
| 9 | 5490-702-491-XX | MUFFLER-COMP | Echappement | 1 | * | | | | | | 490702491 |
| 10 | 5491-062-446-XX | COVER-MUFFLER | Couvercle | 1 | * | | | | | | 491062446 |
| 11 | 5920-092-166-XX | SCREW, 5x8 | Vis | 3 | * | | | | | | 920092166 |
| 12 | 5920-092-308-XX | SCREW | Vis | 2 | * | | | | | | 920092308 |
| 13 | 5920-151-193-XX | NUT | Ecrou | 2 | * | | | | | | 920151193 |
| 14 | 5920-262-272-XX | SPACER, 6.2x7.8x8 | Pièce d'écartement | 2 | * | | | | | | 920262272 |
| 15 | 5920-592-257-XX | TUBE | Tuyau | 1 | * | | | | | | 920592257 |
| 16 | 5921-502-101-XX | BOLT | Vis | 1 | * | | | | | | 921502101 |
| 17 | 5922-002-032-XX | WASHER, 7x21x2.3 | Rondelle | 2 | * | | | | | | 922002032 |
| 18 | 5922-002-037-XX | WASHER, 6.5x18x2.0 | Rondelle | 1 | * | | | | | | 922002037 |
| 19 | 5172-G06-80X-XX | BOLT-STUD | Goujon | 2 | * | | | | | | 172G0680 |
| 20 | 5186-B06-80X-XX | BOLT-UPSET-WP | Vis | 2 | * | | | | | | 186B0680 |
| 21 | 5214-B05-10X-XX | SCREW-PAN+- | Vis | 2 | * | | | | | | 214B0510 |
| 22 | 5411-B05-00X-XX | WASHER-PLAIN | Rondelle | 2 | * | | | | | | 411B0500 |

# FIG. 10 FUEL – TANK／FUEL – VALVE
## Reservoir／Robinet a carburant

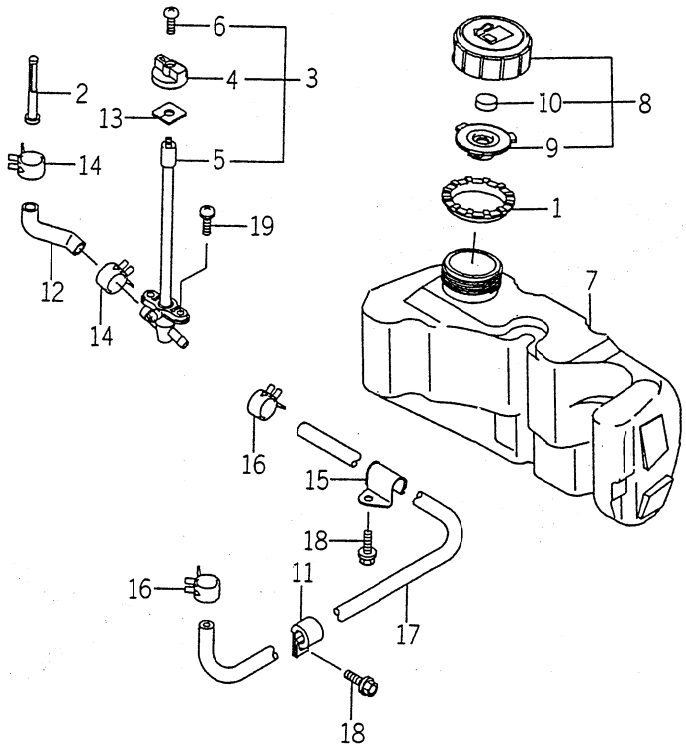


K500-101

| KEY Réf. | PART CODE Pièces No. | DESCRIPTION | Désignation | QTY Quant. | TYPE OF MODEL Modél FC150V EB05 | | | ITC | COL | GRP | REMARKS Remarques |
|---|---|---|---|---|---|---|---|---|---|---|---|
| 1 | 5130-702-077-XX | GUIDE | Guide | 1 | * | | | | | | 130702077 |
| 2 | 5490-192-091-XX | FILTER-FUEL | Robinet | 1 | * | | | | | | 490192091 |
| 3 | 5490-192-094-XX | FILTER-FUEL | Robinet | 1 | * | | | | | | 490192094 |
| 4 | 5131-682-303-XX | LEVER | Levier | 1 | * | | | | | | 131682303 |
| 5 | 5161-042-052-XX | FILTER-COMP | Robinet | 1 | * | | | | | | 161042052 |
| 6 | 5920-092-296-XX | SCREW | Vis | 1 | * | | | | | | 920092296 |
| 7 | 5510-012-214-XX | TANK-COMP-FUEL | Reservoir | 1 | * | | | | | | 510012214 |
| 8 | 5510-482-069-XX | CAP-ASSY-TANK | Ens. bouchon | 1 | * | | | | | | 510482069 |
| 9 | 5110-092-831-XX | GASKET | Joint | 1 | * | | | | | | 110092831 |
| 10 | 5491-092-054-XX | ELEMENT-BREATHER | Element | 1 | * | | | | | | 491092054 |
| 11 | 5920-372-202-XX | CLAMP | Attache | 1 | * | | | | | | 920372202 |
| 12 | 5920-592-262-XX | TUBE | Tuyau | 1 | * | | | | | | 920592262 |
| 13 | 5920-932-088-XX | SEAL | Joint | 1 | * | | | | | | 920932088 |
| 14 | 5921-702-009-XX | CLAMP | Attache | 2 | * | | | | | | 921702009 |
| 15 | 5921-702-037-XX | CLAMP | Attache | 1 | * | | | | | | 921702037 |
| 16 | 5921-702-043-XX | CLAMP | Attache | 2 | * | | | | | | 921702043 |
| 17 | 5921-902-068-XX | TUBE, 4. 8x10. 3x415 | Tuyau | 1 | * | | | | | | 921902068 |
| 18 | 5130-B06-12X-XX | BOLT-FLANGED | Vis | 2 | * | | | | | | 130B0612 |
| 19 | 5233-B05-10X-XX | SCREW-PAN-WP+- | Vis | 2 | * | | | | | | 233B0510 |

# FIG. 11 STARTER
## Démarreur

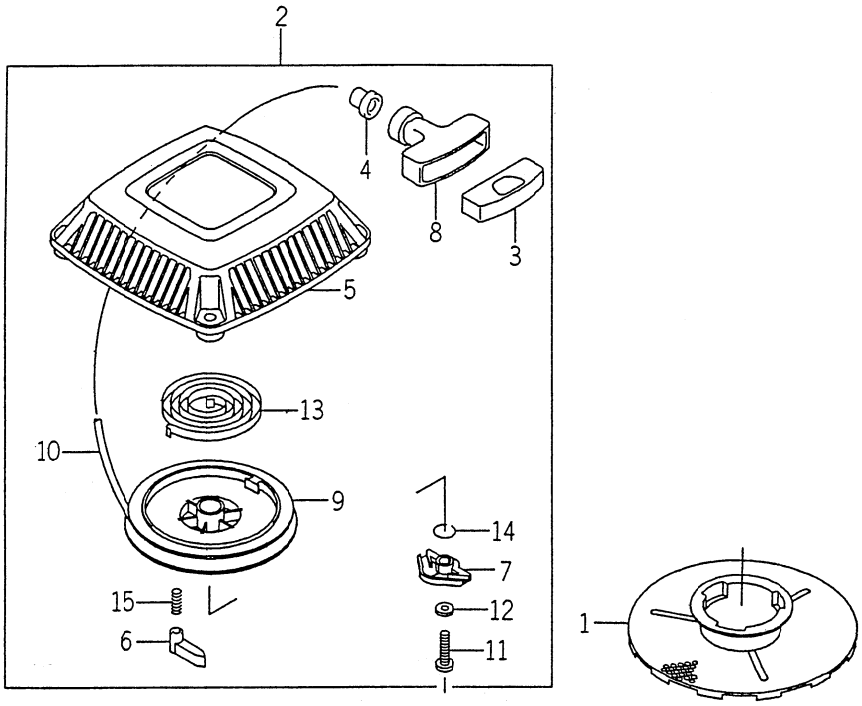


K500-101

| KEY Réf. | PART CODE Pièces No. | DESCRIPTION | Désignation | QTY Quant. | TYPE OF MODEL Modél FC150V EB05 | | | ITC | COL | GRP | REMARKS Remarques |
|---|---|---|---|---|---|---|---|---|---|---|---|
| 1 | 5490-802-143-XX | PULLEY-STARTING | Bol | 1 | * | | | | | | 490802143 |
| 2 | 5490-882-364-XX | STARTER-RECOIL | Lanceur | 1 | * | | | | | | 490882364 |
| 3 | 5110-122-255-XX | CAP, GRIP | Capuchon | 1 | * | | | | | | 110122255 |
| 4 | 5130-702-064-XX | GUIDE, ROPE | Guide | 1 | * | | | | | | 130702064 |
| 5 | 5130-912-113-XX | HOLDER, RECOIL | Support | 1 | * | | | | | | 130912113 |
| 6 | 5131-652-072-XX | PAWL, RECOIL STARTER | Cliquet | 1 | * | | | | | | 131652072 |
| 7 | 5391-082-059-XX | RETAINER-SPRING | Coupelle | 1 | * | | | | | | 391082059 |
| 8 | 5460-752-082-XX | GRIP, RECOIL STARTER | Poignée | 1 | * | | | | | | 460752082 |
| 9 | 5591-012-079-XX | REEL, RECOIL STARTER | Poulie | 1 | * | | | | | | 591012079 |
| 10 | 5591-062-110-XX | ROPE, 3.8x2000 | Corde | 1 | * | | | | | | 591062110 |
| 11 | 5920-092-280-XX | SCREW, 5x18 | Vis | 1 | * | | | | | | 920092280 |
| 12 | 5920-222-384-XX | WASHER, 5x12.8x1.2 | Rondelle | 1 | * | | | | | | 920222384 |
| 13 | 5920-812-265-XX | SPRING, RECOIL | Ressort spiral | 1 | * | | | | | | 920812265 |
| 14 | 5921-442-176-XX | SPRING | Ressort | 1 | * | | | | | | 921442176 |
| 15 | 5921-442-177-XX | SPRING, RETURN | Ressort de rappel | 1 | * | | | | | | 921442177 |

# FIG. 12 BRAKE／COVER
## Plaque (modele R)

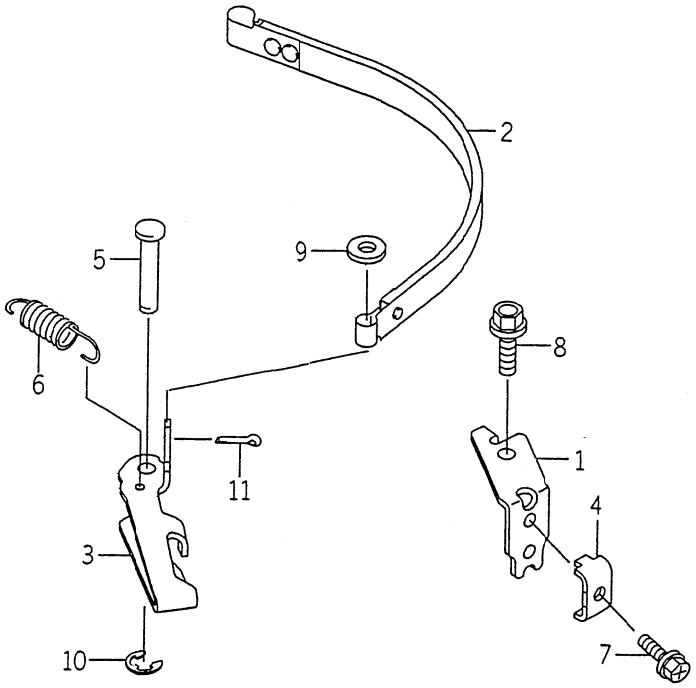


K500-101

| KEY Réf. | PART CODE Pièces No. | DESCRIPTION | Désignation | QTY Quant. | TYPE OF MODEL Modél FC150V EB05 | | | ITC | COL | GRP | REMARKS Remarques |
|---|---|---|---|---|---|---|---|---|---|---|---|
| 1 | 5110-482-028-XX | BRACKET | Support | 1 | * | | | | | | 110482028 |
| 2 | 5391-872-053-XX | BAND-BRAKE | Sangle | 1 | * | | | | | | 391872053 |
| 3 | 5430-012-054-XX | LEVER-BRAKE | Biellette | 1 | * | | | | | | 430012054 |
| 4 | 5920-372-209-XX | CLAMP | Attache | 1 | * | | | | | | 920372209 |
| 5 | 5920-432-170-XX | PIN | Axe | 1 | * | | | | | | 920432170 |
| 6 | 5921-442-351-XX | SPRING | Ressort | 1 | * | | | | | | 921442351 |
| 7 | 5921-502-182-XX | BOLT/5X18 | Vis | 1 | * | | | | | | 921502182 |
| 8 | 5130-B06-10X-XX | BOLT-FLANGED | Vis | 1 | * | | | | | | 130B0610 |
| 9 | 5410-B05-00X-XX | W-PLAIN-S | Rondelle | 1 | * | | | | | | 410B0500 |
| 10 | 5482-L40-00X-XX | CIRCLIP-TYPE-E | Circlips | 1 | * | | | | | | 482L4000 |
| 11 | 5550-D20-10X-XX | PIN COTTER | Covpille | 1 | * | | | | | | 550D2010 |

# FIG. 13 LABEL
## Etiquette

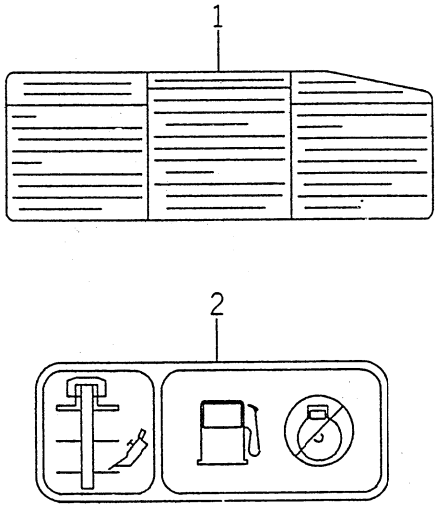


K500-101

| KEY Réf. | PART CODE Pièces No. | DESCRIPTION | Désignation | QTY Quant. | TYPE OF MODEL Modél FC150V EB05 | | | ITC | COL | GRP | REMARKS Remarques |
|---|---|---|---|---|---|---|---|---|---|---|---|
| 1 | 5560-312-375-XX | LABEL-MANUAL | Etiquette | 1 | * | | | | | | 560312375 |
| 2 | 5560-312-447-XX | LABEL-MANUAL | Etiquette | 1 | * | | | | | | 560312447 |

# FIG. 14 ACCESSORY
## Accessoire

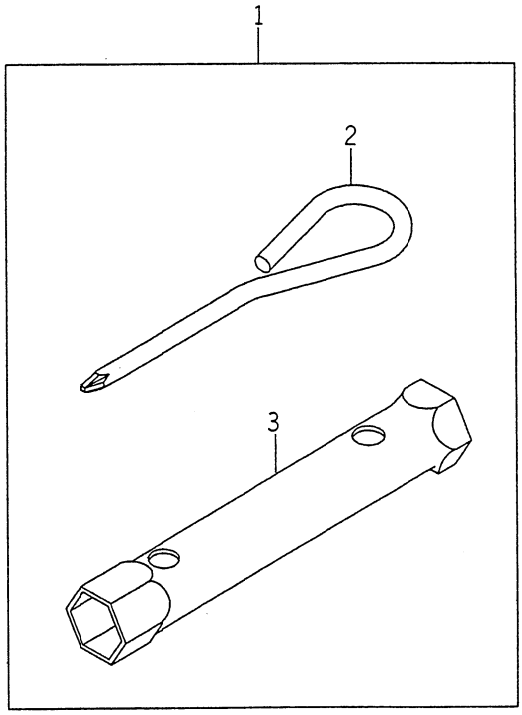


K500-101

| KEY Réf. | PART CODE Pièces No. | DESCRIPTION | Désignation | QTY Quant. | TYPE OF MODEL Modél FC150V EB05 | | | ITC | COL | GRP | REMARKS Remarques |
|---|---|---|---|---|---|---|---|---|---|---|---|
| 1 | 5560-072-118-XX | TOOL KIT | Outil | 1 | * | | | | | | 560072118 |
| 2 | 5921-072-057-XX | TOOL-DRIVER | Tournevis | 1 | * | | | | | | 921072057 |
| 3 | 5921-102-093-XX | TOOL-WRENCH, 19x21 | Clef plate | 1 | * | | | | | | 921102093 |

# CHASSIS

# FIG. 1 ENGINE／BRAKE SYSTEM
## Système de freinage

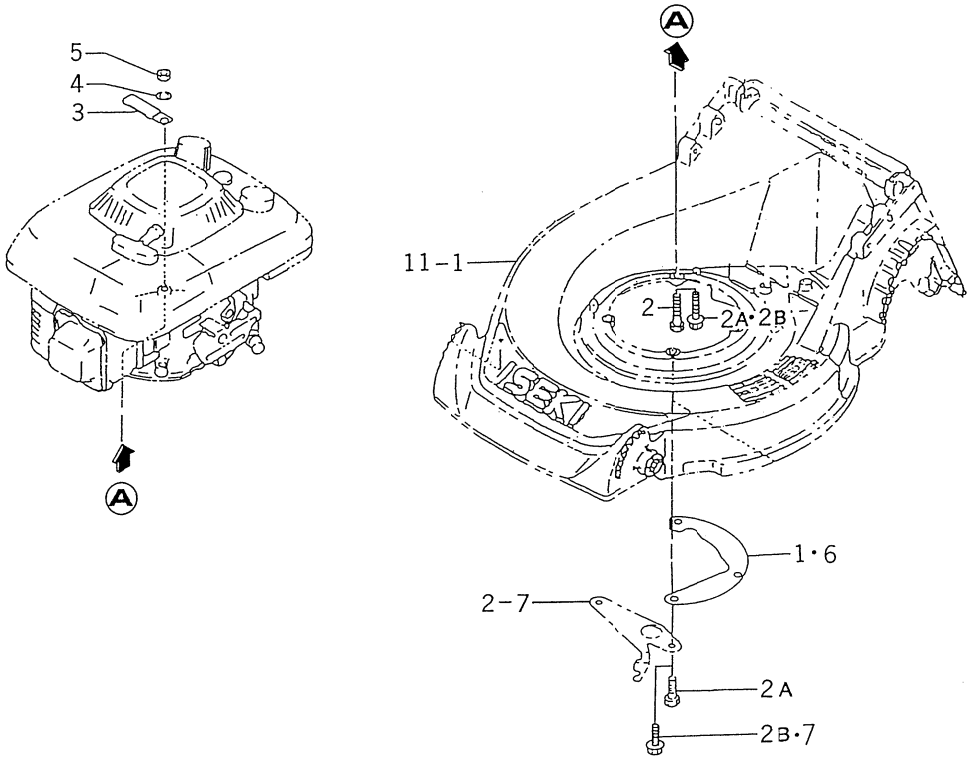


2500-101

| KEY Réf. | PART CODE Pièces No. | DESCRIPTION | Désignation | QTY Quant. | TYPE OF MODEL Modél B·B01 | E01 | GB·GBE01 | ITC | COL | GRP | REMARKS Remarques |
|---|---|---|---|---|---|---|---|---|---|---|---|
| 1 | 2500-215-004-00 | COVER/ENGINE/SHAFT | Couvercle | 1 | * | | * | | | | |
| 2 | V211-661-005-00 | BOLT/SP 7 | Vis | 1 | 1--100320 | 1--100320 | 1--100320 | | | | |
| 2A | 2500-101-001-00 | BOLT/FLANGE/M10X30 | Vis | 4 | 100321--102340 | 100321--102340 | 100321--102340 | | | | |
| 2B | 2500-151-001-00 | BOLT/FLANGE/M10X30 | Vis | 4 | 102341- | | 102341- | | | | |
| 3 | 3737-172-011-00 | CLAMP/FLASHER HARNES | Attache | 1 | | | * | | | | |
| 4 | V401-160-010-00 | WASHER, SP/M10 | Rondelle frein | 1 | | | * | | | | |
| 5 | V304-260-010-00 | NUT/M10 | Ecrou | 1 | | | * | | | | |
| 6 | 2500-215-004-00 | COVER/ENGINE/SHAFT | Couvercle | 1 | | * | | | | | |
| 7 | 2500-151-001-00 | BOLT/FLANGE/M10X30 | Vis | 4 | | 102346- | | | | | |

# FIG. 2 B.B.C SYSTEM (B TYPE)

## Systeme de frein de lame (modèle B)

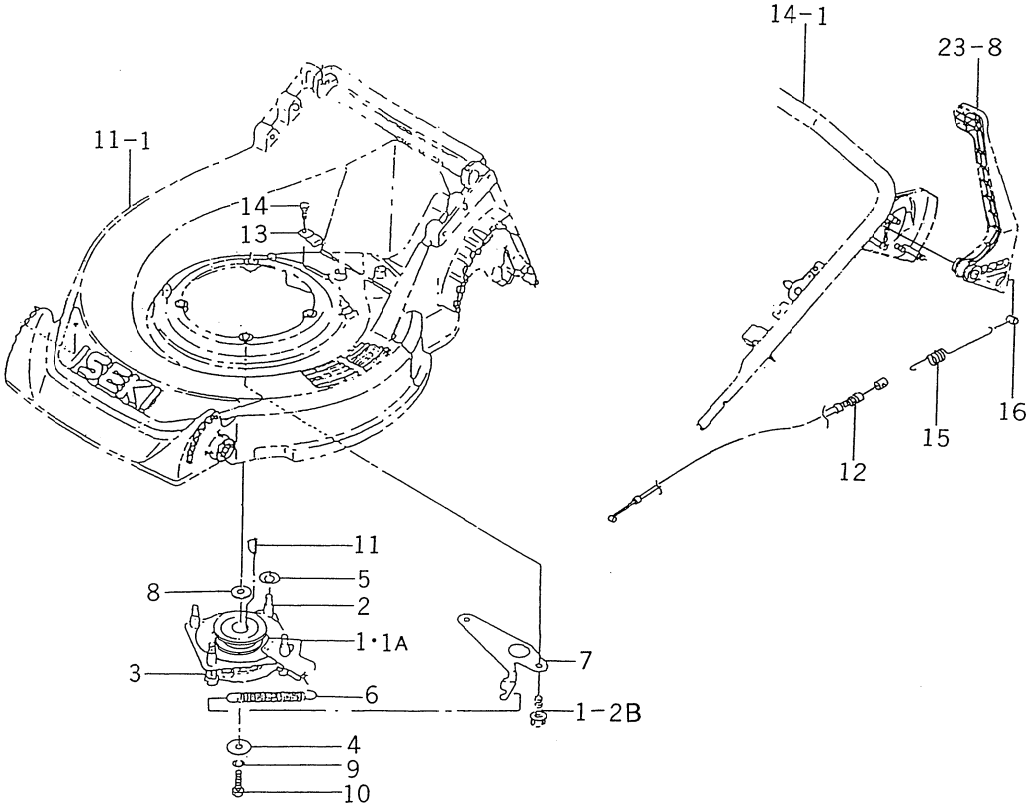


2500-210

| KEY Réf. | PART CODE Pièces No. | DESCRIPTION | Désignation | QTY Quant. | TYPE OF MODEL Modèl B·B01 | E01 | GB·GBE01 | ITC | COL | GRP | REMARKS Remarques |
|---|---|---|---|---|---|---|---|---|---|---|---|
| 1 | 2500-210-310-00 | B. B. C. ASSY | Embrayage de frein de lame | 1 | 1- -104712 | | 1- -104712 | | | | |
| 1A | 2500-260-310-10 | B. B. C. /5. 5PS ASSY | Embrayage de frein de lame | 1 | 104713- | | 104713- | | | | |
| 2 | 2500-210-301-00 | BOLT | Vis | 4 | * | | * | | | | |
| 3 | 2500-210-302-00 | SPRING/HC016 | Ressort | 4 | * | | * | | | | |
| 4 | 2500-210-303-00 | WASHER/11X45X03 | Rondelle | 1 | * | | * | | | | |
| 5 | V411-260-008-00 | WASHER, PL | Rondelle PL | 4 | * | | * | | | | |
| 6 | 2500-210-016-00 | SPRING/HE108 | Ressort | 1 | * | | * | | | | |
| 7 | 2500-210-017-00 | PLATE | Plaque | 1 | * | | * | | | | |
| 8 | 1376-121-001-00 | WASHER/11X22X3 | Rondelle | 1 | * | | * | | | | |
| 9 | 2500-210-202-00 | WASHER | Rondelle | 1 | * | | * | | | | |
| 10 | 2500-210-203-00 | BOLT/UNF3/8X31 | Vis UNF | 1 | * | | * | | | | |
| 11 | 2500-210-001-00 | KEY/04X06X16 | Claverre | 1 | * | | * | | | | |
| 12 | 2500-210-004-20 | CABLE/BBC | Cable | 1 | * | | * | | | | |
| 13 | 2500-210-002-00 | PLATE/WIRE | Plaque | 1 | * | | * | | | | |
| 14 | 2500-210-005-00 | BOLT/TAPPING/6X16 | Vis | 1 | * | | * | | | | |
| 15 | 2500-210-006-10 | SPRING | Ressort | 1 | * | | * | | | | |
| 16 | 2500-210-008-00 | PIN/8X14 | Axe | 1 | * | | * | | | | |

# FIG. 3 BRADE SYSTEM

## Lame

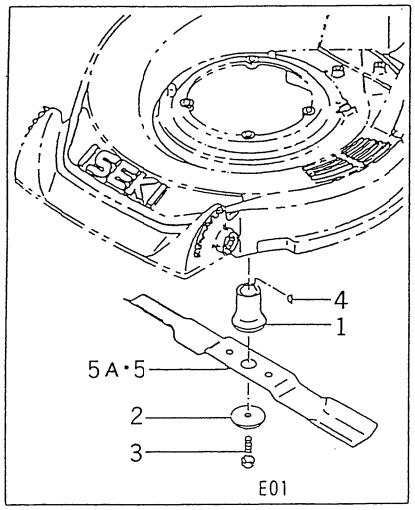


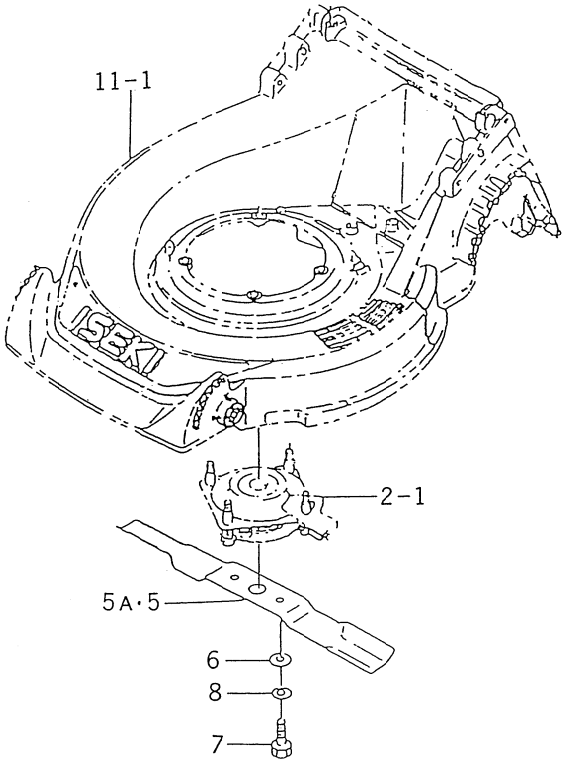


2500-215

| KEY Réf. | PART CODE Pièces No. | DESCRIPTION | Désignation | QTY Quant. | TYPE OF MODEL Modél B·B01 | E01 | GB·GBE01 | ITC | COL | GRP | REMARKS Remarques |
|---|---|---|---|---|---|---|---|---|---|---|---|
| 1 | 2500-215-001-00 | BOSS | Hoyeu | 1 | | * | | | | | |
| 2 | 2500-215-002-00 | WASHER/10X55X5 | Rondelle | 1 | | * | | | | | |
| 3 | 2500-215-003-00 | BOLT/UNF3/8X38 | Vis | 1 | | * | | | | | |
| 4 | 2500-210-001-00 | KEY/04X06X16 | Claverre | 1 | | * | | | | | |
| 5 | 2500-220-001-00 | BLADE/525 | Hoyeu | 1 | 1--104712 | 1--104712 | 1--104712 | | | | |
| 5A | 2500-265-001-30 | PLATE/520 | Plaque | 1 | 104713- | 104713- | 104713- | | | | |
| 6 | 1328-601-004-00 | WASHER | Rondelle | 2 | * | | * | | | | |
| 7 | V203-361-002-00 | BOLT/M10X1.25X20 | Vis | 2 | * | | * | | | | |
| 8 | V401-160-010-00 | WASHER, SP/M10 | Rondelle | 2 | * | | * | | | | |

# FIG. 4 JOINT SYSTEM

## Cardane

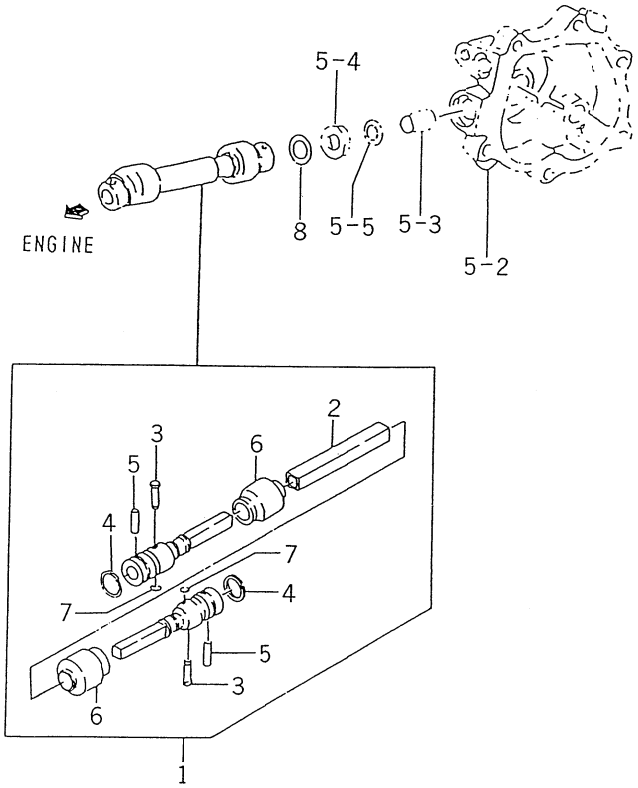


2500-302

| KEY Réf. | PART CODE Pièces No. | DESCRIPTION | Désignation | QTY Quant. | TYPE OF MODEL Modél B·B01 | E01 | GB·GBE01 | ITC | COL | GRP | REMARKS Remarques |
|---|---|---|---|---|---|---|---|---|---|---|---|
| 1 | 2500-302-200-00 | JOINT ASSY | Ensemble joint | 1 | * | * | * | | | | |
| 2 | 2500-302-203-00 | PIPE | Tubulure d'admission | 1 | * | * | * | | | | |
| 3 | 2500-302-204-00 | PIN, CROSS | Axe | 2 | * | * | * | | | | |
| 4 | 2500-302-206-00 | CIRCLIP | Attache | 2 | * | * | * | | | | |
| 5 | 2500-302-207-00 | PIN | Axe | 2 | * | * | * | | | | |
| 6 | 2500-302-208-00 | BOOT | Chaussere | 2 | * | * | * | | | | |
| 7 | 2500-302-209-00 | RING, SNAP/9 E | Circlips | 2 | * | * | * | | | | |
| 8 | V411-260-010-00 | WASHER | Rondelle | 1 | * | * | * | | | | |

# FIG. 5 CASE／MISSION SYSTEM
## Boitier de trnsmission

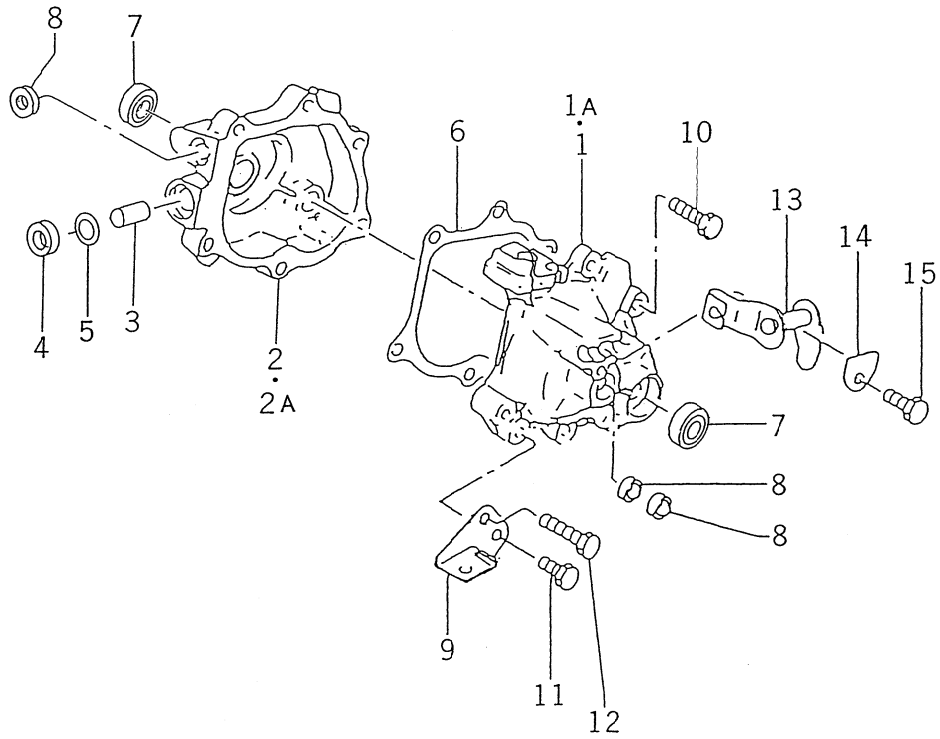


2500-310

| KEY Réf. | PART CODE Pièces No. | DESCRIPTION | Désignation | QTY Quant. | TYPE OF MODEL Modél B·B01 | E01 | GB·GBE01 | ITC | COL | GRP | REMARKS Remarques |
|---|---|---|---|---|---|---|---|---|---|---|---|
| 1 | 2500-310-001-00 | CASE, MISSION/LH | Boitier | 1 | 1- -102340 | 1- -102340 | 1- -102340 | | | | |
| 1A | 2500-310-001-10 | CASE, MISSION/LH | Boitier | 1 | 102341- | 102341- | 102341- | | | | |
| 2 | 2500-310-210-00 | CASE, MISSION/RH ASSY | Ensemble boitier | 1 | 1- -102340 | * | * | | | | |
| 2A | 2500-310-210-20 | CASE, MISSION ASSY | Ensemble boitier | 1 | 102341- | * | 102341- | | | | |
| 3 | 2500-310-004-00 | BUSH/10X12X20 | Douille | 1 | * | * | * | | | | |
| 4 | 2500-310-008-00 | SEAL, OIL | Joint SPI | 1 | * | * | * | | | | |
| 5 | 2500-510-006-00 | WASHER/11X20X01 | Rondelle | 1 | * | * | * | | | | |
| 6 | 2500-310-003-00 | GASKET | Joint | 1 | * | * | * | | | | |
| 7 | V744-112-220-70 | SEAL, OIL | Joint SPI | 2 | * | * | * | | | | |
| 8 | 2500-310-009-10 | SEAL, OIL | Joint SPI | 3 | * | * | * | | | | |
| 9 | 2500-310-005-10 | PLATE | Plaque | 1 | * | * | * | | | | |
| 10 | 2500-310-006-00 | BOLT/TAPPING/06X25 | Vis | 5 | * | * | * | | | | |
| 11 | 2500-210-005-00 | BOLT/TAPPING/6X16 | Vis | 2 | * | * | * | | | | |
| 12 | 2500-310-012-00 | BOLT, TAPPING/06X35 | Vis | 1 | * | * | * | | | | |
| 13 | 2500-310-200-00 | SHIFTER COMP | Fourchette complet | 1 | * | * | * | | | | |
| 14 | 2500-310-007-00 | HOLDER | Support | 1 | * | * | * | | | | |
| 15 | 2500-210-005-00 | BOLT/TAPPING/6X16 | Vis | 1 | * | * | * | | | | |

# FIG. 6 GEAR SYSTEM

## Pignonnerie

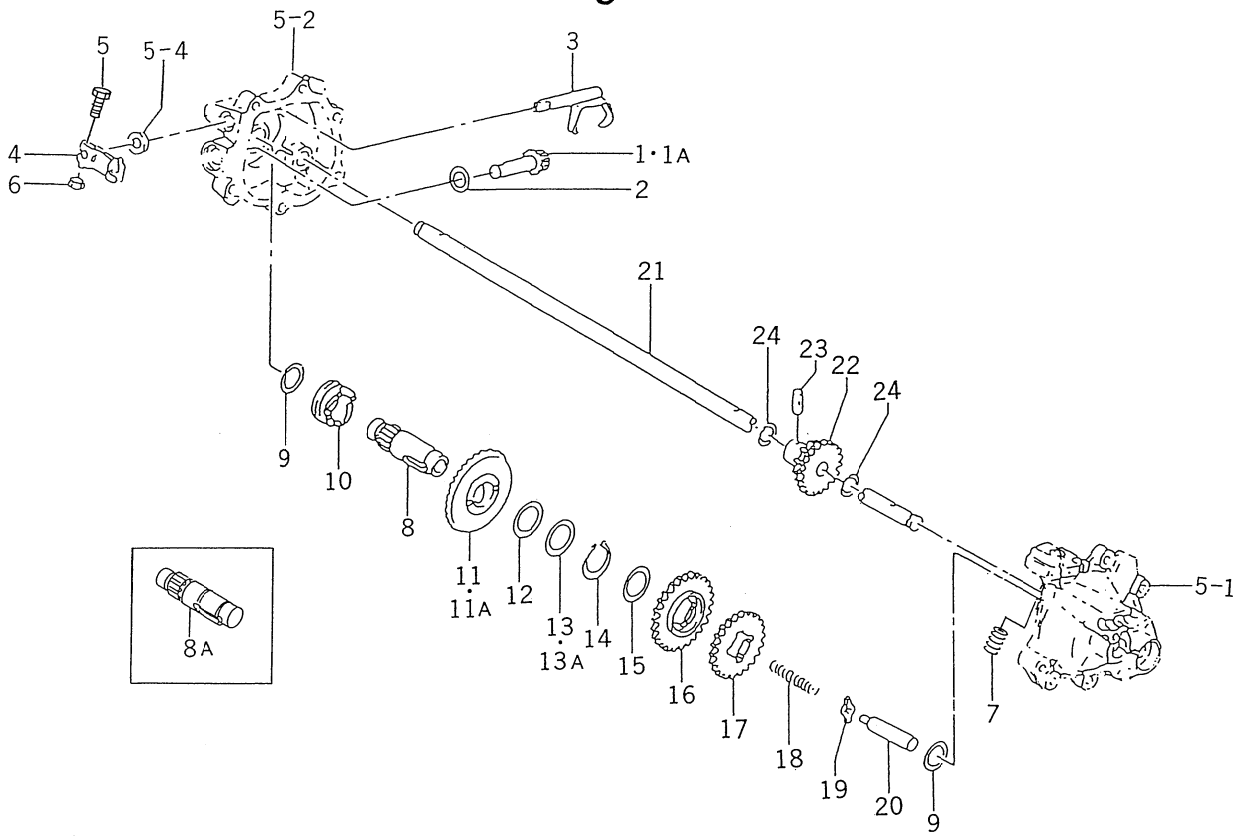


2500-311

| KEY Réf. | PART CODE Pièces No. | DESCRIPTION | Désignation | QTY Quant. | TYPE OF MODEL Modél B·B01 | E01 | GB·GBE01 | ITC | COL | GRP | REMARKS Remarques |
|---|---|---|---|---|---|---|---|---|---|---|---|
| 1 | 2500-311-001-00 | GEAR/BEVEL/14 | Pignon | 1 | 1--300210 | 1--300210 | 1--300210 | | | | |
| 1A | 2500-311-001-10 | GEAR/BEVEL/14 | Pignon | 1 | 300211- | 300211- | 300211- | | | | |
| 2 | 2500-510-006-00 | WASHER/11X20X01 | Rondelle | 1 | * | * | * | | | | |
| 3 | 2500-311-200-00 | FORK COMP | Fourchette complete | 1 | * | * | * | | | | |
| 4 | 2500-311-021-00 | ARM/CLUTCH | Bras | 1 | * | * | * | | | | |
| 5 | V200-260-502-00 | BOLT | Vis | 1 | * | * | * | | | | |
| 6 | V301-260-005-00 | NUT | Ecrou | 1 | * | * | * | | | | |
| 7 | 2500-311-015-10 | SPRING/HC039 | Ressort | 1 | * | * | * | | | | |
| 8 | 2500-311-005-10 | SHAFT, INPUT | Arbre d'admission | 1 | 1--104171 | 1--104171 | 1--104171 | | | | |
| 8A | 2500-311-005-20 | SHAFT, INPUT | Arbre d'admission | 1 | 104172- | 104172- | 104172- | | | | |
| 9 | 2500-311-013-00 | WASHER/17X24X01 | Rondelle | 2 | * | * | * | | | | |
| 10 | 2500-311-003-00 | CAM/DRIVE CLUTCH | Cames | 1 | * | * | * | | | | |
| 11 | 2500-311-002-00 | GEAR/BEVEL/55 | Pignon | 1 | 1--104171 | 1--104171 | 1--104171 | | | | |
| 11A | 2500-311-002-10 | GEAR/BEVEL/55 | Pignon | 1 | 104172- | 104172- | 104172- | | | | |
| 12 | 1365-224-002-00 | WASHER | Rondelle | 2 | * | * | * | | | | |
| 13 | 2500-311-018-00 | SHIM/0.5 | Cale | 1 | 1--104171 | 1--104171 | 1--104171 | | | | |
| 13A | 2500-311-019-00 | SHIM/0.3X20X30 | Cale | 1 | 104172- | 104172- | 104172- | | | | |
| 14 | V704-140-020-00 | RING, SNAP/20C | Circlips | 1 | * | * | * | | | | |
| 15 | 1365-224-002-00 | WASHER | Rondelle | 1 | * | * | * | | | | |
| 16 | 2500-311-006-00 | GEAR/SPAR/30 | Pignon | 1 | * | * | * | | | | |
| 17 | 2500-311-007-00 | GEAR/SPAR/26 | Pignon | 1 | * | * | * | | | | |
| 18 | 2500-311-016-00 | SPRING/HC048 | Ressort | 1 | * | * | * | | | | |
| 19 | 2500-311-017-00 | CAM, SHIFT | Cames | 1 | * | * | * | | | | |
| 20 | 2500-311-008-00 | PIN/8X49 | Axe | 1 | * | * | * | | | | |
| 21 | 2500-311-009-10 | SHAFT, WHEEL | Arbre | 1 | * | * | * | | | | |

# FIG. 6 GEAR SYSTEM
## Pignonnerie

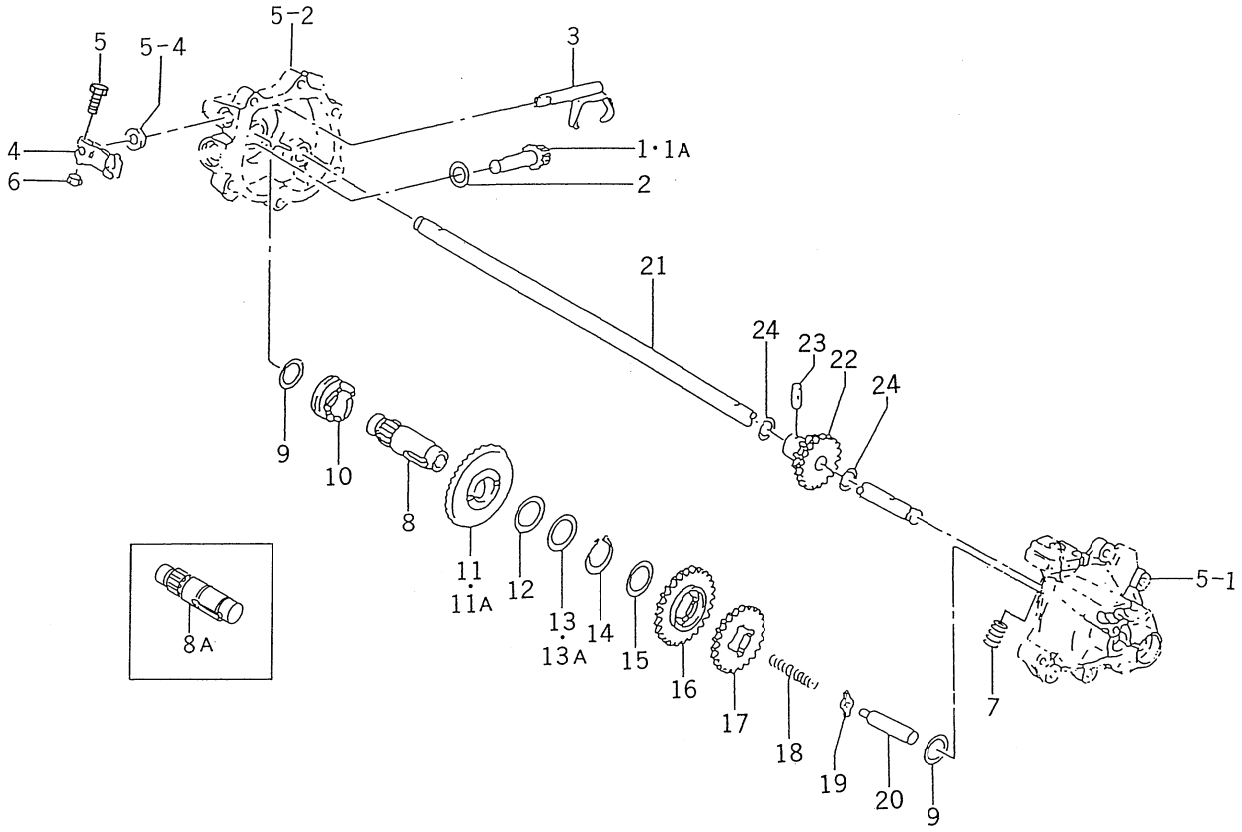


2500-311

| KEY Réf. | PART CODE Pièces No. | DESCRIPTION | Désignation | QTY Quant. | TYPE OF MODEL Modél B·B01 | E01 | GB·GBE01 | ITC | COL | GRP | REMARKS Remarques |
|---|---|---|---|---|---|---|---|---|---|---|---|
| 22 | 2500-311-011-10 | GEAR/OUTPUT | Pignon | 1 | * | * | * | | | | |
| 23 | 2500-311-004-00 | PIN, /05X22 | Axe | 1 | * | * | * | | | | |
| 24 | 2500-311-012-00 | WASHER/12X21X01 | Rondelle | 2 | * | * | * | | | | |

# FIG. 7 RACHET SYSTEM

## Cliquet

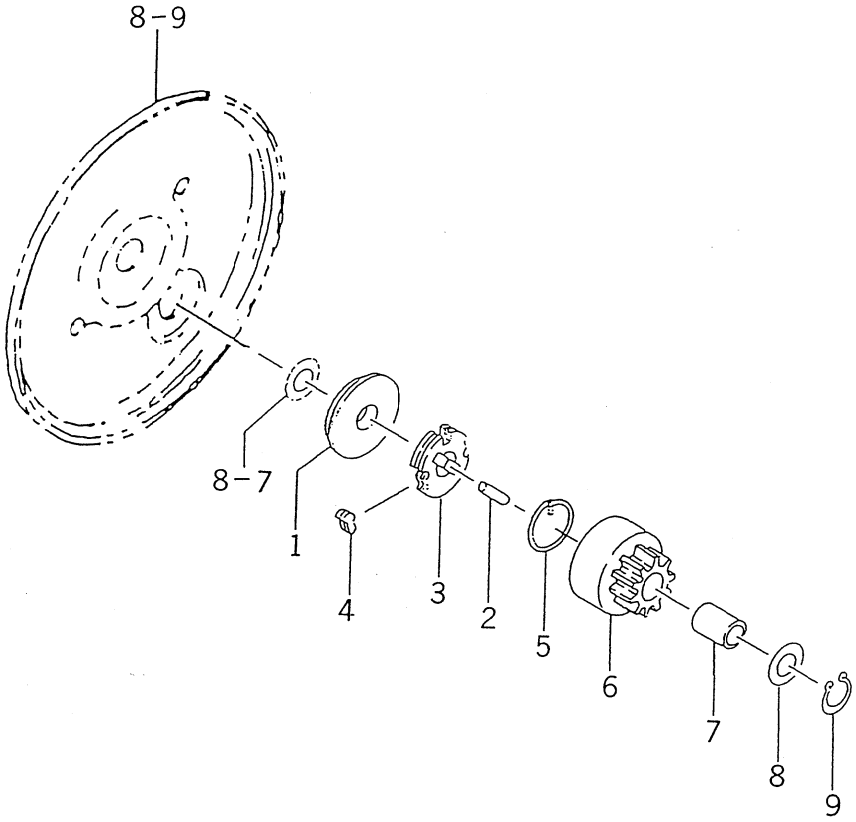


2500-312

| KEY Réf. | PART CODE Pièces No. | DESCRIPTION | Désignation | QTY Quant. | TYPE OF MODEL Modél B·B01 | E01 | GB·GBE01 | ITC | COL | GRP | REMARKS Remarques |
|---|---|---|---|---|---|---|---|---|---|---|---|
| 1 | 2500-312-002-00 | SEAL12X05 | Joint | 2 | * | * | * | | | | |
| 2 | 2500-312-008-10 | PIN, STRAIGHT/04X18/A | Axe | 2 | * | * | * | | | | |
| 3 | 2500-312-003-00 | HOLDER, RACHET | Support | 2 | * | * | * | | | | |
| 4 | 2500-312-004-10 | CAM/RACHET | Cames | 4 | * | * | * | | | | |
| 5 | 2500-312-005-10 | SPRING/RACHET | Ressort | 2 | * | * | * | | | | |
| 6 | 2500-312-200-00 | GEAR, SPUR/13 ASSY | Pignon | 2 | * | * | * | | | | |
| 7 | 3650-440-014-00 | BUSH/12X14X20 | Douille | 2 | * | * | * | | | | |
| 8 | 2500-311-012-00 | WASHER/12X21X01 | Rondelle | 2 | * | * | * | | | | |
| 9 | V704-140-012-00 | RING, SNAP/20C | Circlips | 2 | * | * | * | | | | |

# FIG. 8 WHEEL／REAR SYSTEM
## Roue arriere

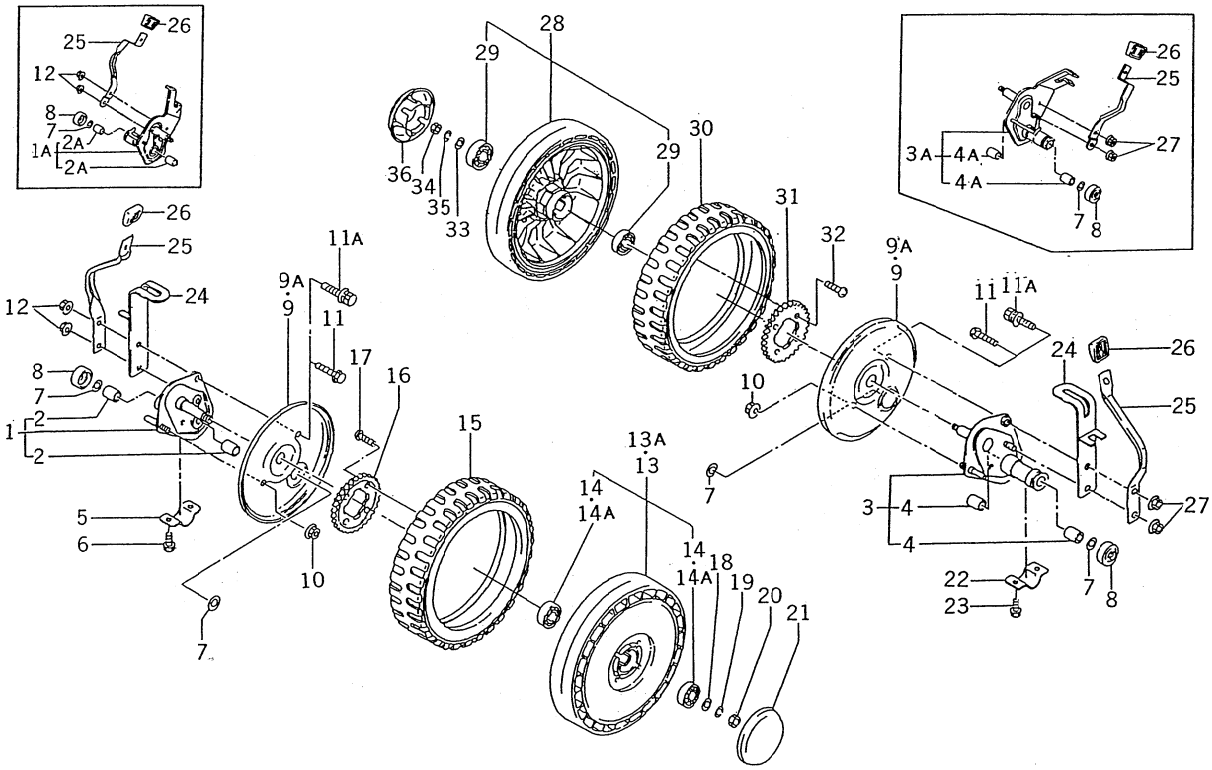


2500-326

| KEY Réf. | PART CODE Pièces No. | DESCRIPTION | Désignation | QTY Quant. | TYPE OF MODEL Modél B·B01 | E01 | GB·GBE01 | ITC | COL | GRP | REMARKS Remarques |
|---|---|---|---|---|---|---|---|---|---|---|---|
| 1 | 2500-326-240-00 | BRACKET/WHEEL/LH | Support | 1 | 1- -104712 104713- | 1- -104712 104713- | 1- -104712 104713- | | | | |
| 1A | 2500-326-240-10 | BRACKET/WHEEL/LH | Support | 1 | | | | | | | |
| 2 | 3650-440-014-00 | BUSH/12X14X20 | Douille | 2 | 1- -104712 104713- | 1- -104712 104713- | 1- -104712 104713- | | | | |
| 2A | 2500-376-008-20 | BUSH/12X15X20 | Douille | 2 | | | | | | | |
| 3 | 2500-326-250-00 | BRACKET/WHEEL/RH | Support | 1 | 1- -104712 104713- | 1- -104712 104713- | 1- -104712 104713- | | | | |
| 3A | 2500-326-250-10 | BRACKET/WHEEL/RH | Support | 1 | | | | | | | |
| 4 | 3650-440-014-00 | BUSH/12X14X20 | Douille | 2 | 1- -104712 104713- | 1- -104712 104713- | 1- -104712 104713- | | | | |
| 4A | 2500-376-008-20 | BUSH/12X15X20 | Douille | 2 | | | | | | | |
| 5 | 2500-326-009-00 | HOLDER, BRACKET, WHEEL | Support | 2 | * | * | * | | | | |
| 6 | 2500-210-005-00 | BOLT/TAPPING/6X16 | Vis | 4 | * | * | * | | | | |
| 7 | 2500-311-012-00 | WASHER/12X21X01 | Rondelle | 2 | * | * | * | | | | |
| 8 | 2500-326-021-00 | CAP | Capuchon | 2 | * | * | * | | | | |
| 9 | 2500-326-012-10 | COVER, WHEEL | Couvercle | 2 | 1- -104712 104713- | 1- -104712 104713- | 1- -104712 104713- | | | | |
| 9A | 2500-376-012-10 | COVER, WHEEL | Couvercle | 2 | | | | | | | |
| 10 | 2500-326-017-00 | NUT/FLANGE/M06 | Ecrou | 2 | * | * | * | | | | |
| 11 | 2500-326-019-00 | BOLT/FLANGE/M06X25 | Vis | 2 | 1- -104712 | 1- -104712 | 1- -104712 | | | | |
| 11A | V210-360-601-60 | BOLT, SP/M6X16 | Vis | 2 | 1- -104713 | 104713- | 104713- | | | | |
| 12 | 2500-326-017-00 | NUT/FLANGE/M06 | Ecrou | 4 | * | * | * | | | | |
| 13 | 2500-326-260-00 | RIM, REAR ASSY | Ens. roue arrire | 2 | 1- -104712 104713- | 1- -104712 104713- | 1- -104712 104713- | | | | |
| 13A | 2500-326-260-10 | RIM, REAR ASSY | Ens. roue arrire | 2 | | | | | | | |
| 14 | V600-130-620-10 | R. B. B. | Roulement | 4 | 1- -104712 104713- | 1- -104712 104713- | 1- -104712 104713- | | | | |
| 14A | V600-150-620-10 | BEARING, RB/6201 | Roulement | 4 | | | | | | | |
| 15 | 2500-326-006-00 | TYRE/9X2 | Pneu | 2 | * | * | * | | | | |
| 16 | 2500-326-002-00 | GEAR, SPUR/42 | Pignon | 2 | * | * | * | | | | |
| 17 | 2500-326-003-00 | SCREW, TAPPING/6X25 | Vis | 8 | * | * | * | | | | |

# FIG. 8 WHEEL/REAR SYSTEM

## Roue arriére

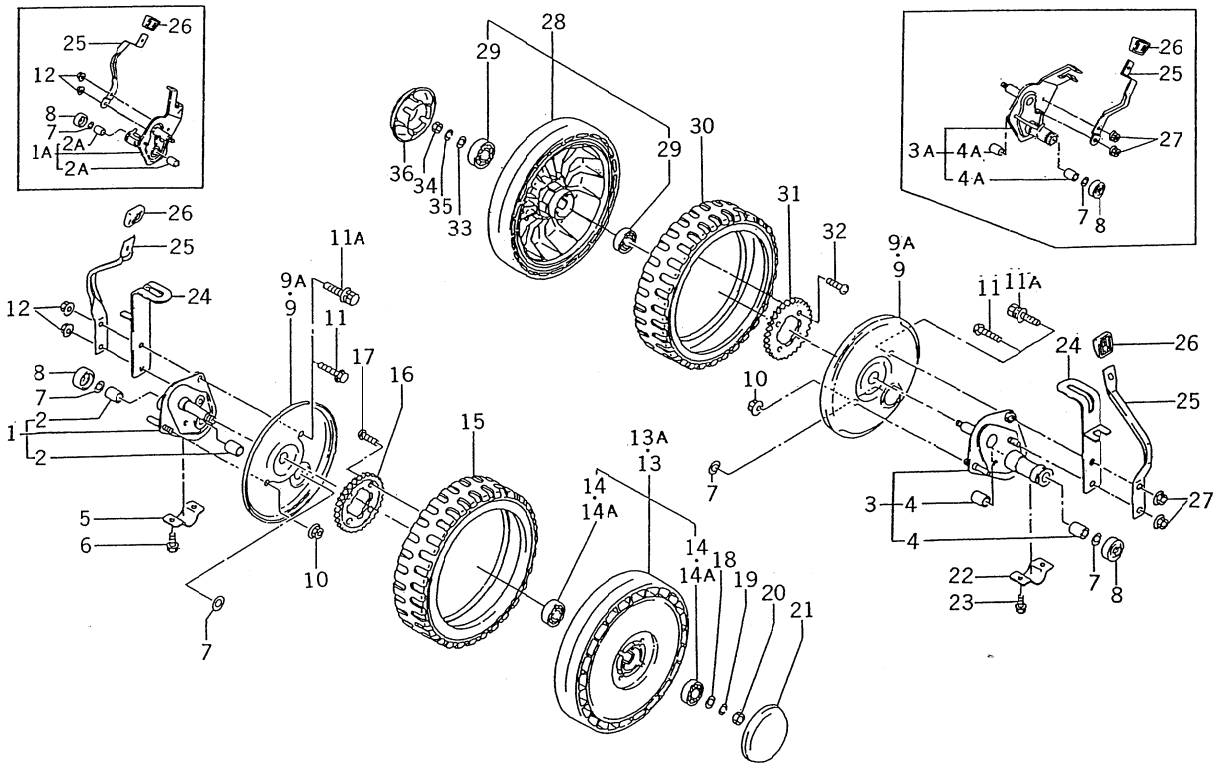


2500-326

| KEY Réf. | PART CODE Pièces No. | DESCRIPTION | Désignation | QTY Quant. | TYPE OF MODEL Modél B·B01 | E01 | GB·GBE01 | ITC | COL | GRP | REMARKS Remarques |
|---|---|---|---|---|---|---|---|---|---|---|---|
| 18 | V411-260-008-00 | WASHER, PL | Rondelle | 2 | * | * | * | | | | |
| 19 | V401-160-008-00 | WASHER, SP/M8 | Rondelle frein | 2 | * | * | * | | | | |
| 20 | V304-260-008-00 | NUT/M8 | Ecrou | 2 | * | * | * | | | | |
| 21 | 2500-326-015-00 | CAP/WHEEL | Capuchon | 2 | * | * | * | | | | |
| 22 | 2500-326-009-10 | HOLDER, BRACKET, WHEEL | Support | 2 | * | * | * | | | | |
| 23 | 2500-210-005-00 | BOLT/TAPPING/6X16 | Vis | 4 | * | * | * | | | | |
| 24 | 2500-326-230-00 | HOLRER, ADJ, HIGH COMP | Composant Qui tent | 2 | * | * | * | | | | |
| 25 | 2500-326-013-00 | LEVER, SPRING/REAR | Levier | 2 | * | * | * | | | | |
| 26 | 2500-326-014-00 | GRIP | Poignee | 2 | * | * | * | | | | |
| 27 | 2500-326-017-00 | NUT/FLANGE/M06 | Ecrou | 4 | * | * | * | | | | |
| 28 | 2500-326-260-00 | RIM, REAR ASSY | Joint arrière | 2 | * | * | * | | | | |
| 29 | V600-130-620-10 | R. B. B. | Roulement | 4 | * | * | * | | | | |
| 30 | 2500-326-006-00 | TYRE/9X2 | Pneu | 2 | * | * | * | | | | |
| 31 | 2500-326-002-00 | GEAR, SPUR/42 | Pignon | 2 | * | * | * | | | | |
| 32 | 2500-326-003-00 | SCREW, TAPPING/6X25 | Vis | 8 | * | * | * | | | | |
| 33 | V411-260-008-00 | WASHER, PL | Rondelle | 2 | * | * | * | | | | |
| 34 | V304-260-008-00 | NUT/M8 | Ecrou | 2 | * | * | * | | | | |
| 35 | V401-160-008-00 | WASHER, SP/M8 | Rondelle frein | 2 | * | * | * | | | | |
| 36 | 2500-326-015-00 | CAP/WHEEL | Capuchon | 2 | * | * | * | | | | |

# FIG. 9 WHEEL／FRONT SYSTEM

## Roue avant

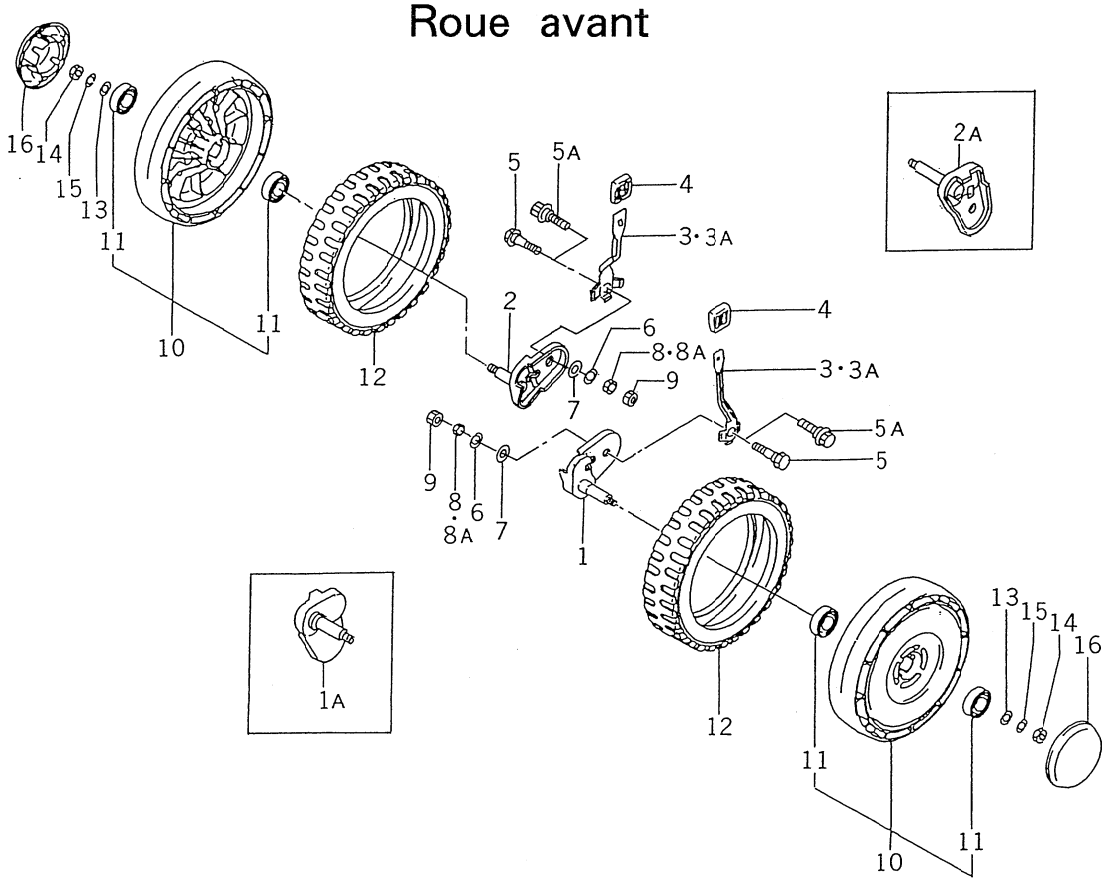


2500-336

| KEY Réf. | PART CODE Pièces No. | DESCRIPTION | Désignation | QTY Quant. | TYPE OF MODEL Modél B·B01 | E01 | GB·GBE01 | ITC | COL | GRP | REMARKS Remarques |
|---|---|---|---|---|---|---|---|---|---|---|---|
| 1 | 2500-336-200-00 | BRACKET, F WHEEL/LH | Support, roue AV. G. | 1 | 1- -104712 104713- | 1- -104712 104713- | 1- -104712 104713- | | | | |
| 1A | 2500-336-200-10 | BRACKET/F WHEEL/LH | Support, roue AV. G. | 1 | | | | | | | |
| 2 | 2500-336-210-00 | BRACKET/F WHEEL/RH | Support, roue AV. D. | 1 | 1- -104712 104713- | 1- -104712 104713- | 1- -104712 104713- | | | | |
| 2A | 2500-336-210-10 | BRACKET/F WHEEL/RH | Support, roue AV. D. | 1 | | | | | | | |
| 3 | 2500-336-004-00 | LEVER/SPRING/FRONT | Levier | 2 | 1- -104712 | 1- -104712 | 1- -104712 | | | | |
| 3A | 2500-386-004-40 | LEVER, SPRING, FRONT | Levier | 2 | 1- -104713 | 104713- | 104713 | | | | |
| 4 | 2500-326-014-00 | GRIP | Poignee | 2 | * | * | * | | | | |
| 5 | 2500-336-002-10 | BOLT/M8X30 | Vis | 2 | 1- -104712 104713- | 1- -104712 104713- | 1- -104712 104713- | | | | |
| 5A | 2500-386-002-30 | BOLT/M08X45 | Vis | 2 | | | | | | | |
| 6 | 1338-301-005-00 | WASHER, RL | Rondelle plate | 2 | * | * | * | | | | |
| 7 | V411-260-008-00 | WASHER, PL | Rondelle plate | 2 | * | * | * | | | | |
| 8 | 2144-117-002-00 | NUT/U/M8 | Ecrou | 2 | 1- -104712 104713- | 1- -104712 104713- | 1- -104712 104713- | | | | |
| 8A | 2500-386-001-00 | NUT/M08 | Ecrou | 2 | | | | | | | |
| 9 | V304-260-008-00 | NUT/M8 | Ecrou | 2 | * | * | * | | | | |
| 10 | 2500-336-260-00 | WHEEL/FRONT ASSY | Ens. roue avant | 2 | * | * | * | | | | |
| 11 | V600-150-620-10 | BEARING, RB/6201 | Roulement a dilles | 4 | * | * | * | | | | |
| 12 | 2500-336-006-00 | TYRE/8X2 | Pneu | 2 | * | * | * | | | | |
| 13 | V411-260-008-00 | WASHER, PL | Rondelle | 2 | * | * | * | | | | |
| 14 | V304-260-008-00 | NUT/M8 | Ecrou | 2 | * | * | * | | | | |
| 15 | V401-160-008-00 | WASHER, SP/M8 | Rondelle | 2 | * | * | * | | | | |
| 16 | 2500-326-015-00 | CAP/WHEEL | Capuchon | 2 | * | * | * | | | | |

# FIG. 10 JOINT SYSTEM

## Cardan

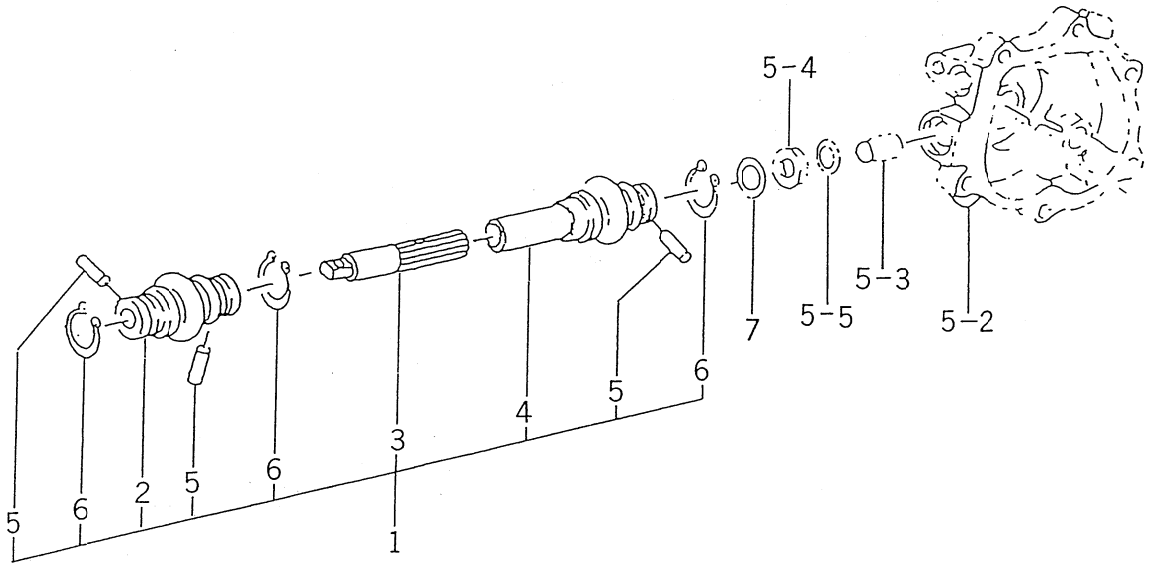


2500-352

| KEY Réf. | PART CODE Pièces No. | DESCRIPTION | Désignation | QTY Quant. | TYPE OF MODEL Modèl B·B01 | E01 | GB·GBE01 | ITC | COL | GRP | REMARKS Remarques |
|---|---|---|---|---|---|---|---|---|---|---|---|
| 1 | 2500-352-200-10 | JOINT ASSY | Ensemble joint | 1 | * | * | * | | | | |
| 2 | 2503-302-201-10 | JOINT/A | Ensemble joint | 1 | * | * | * | | | | |
| 3 | 2500-352-202-00 | SHAFT, SPLINE | Arbre | 1 | * | * | * | | | | |
| 4 | 2503-302-203-10 | JOINT/B | Ensemble joint | 1 | * | * | * | | | | |
| 5 | 2503-302-204-10 | PIN/4X18 | Axe | 3 | * | * | * | | | | |
| 6 | V704-140-020-00 | RING, SNAP/20C | Circlips | 3 | * | * | * | | | | |
| 7 | 2500-510-006-00 | WASHER/11X20X01 | Rondelle plate | 1 | * | * | * | | | | |

# FIG. 11 DECK SYSTEM
## Carter de coupe

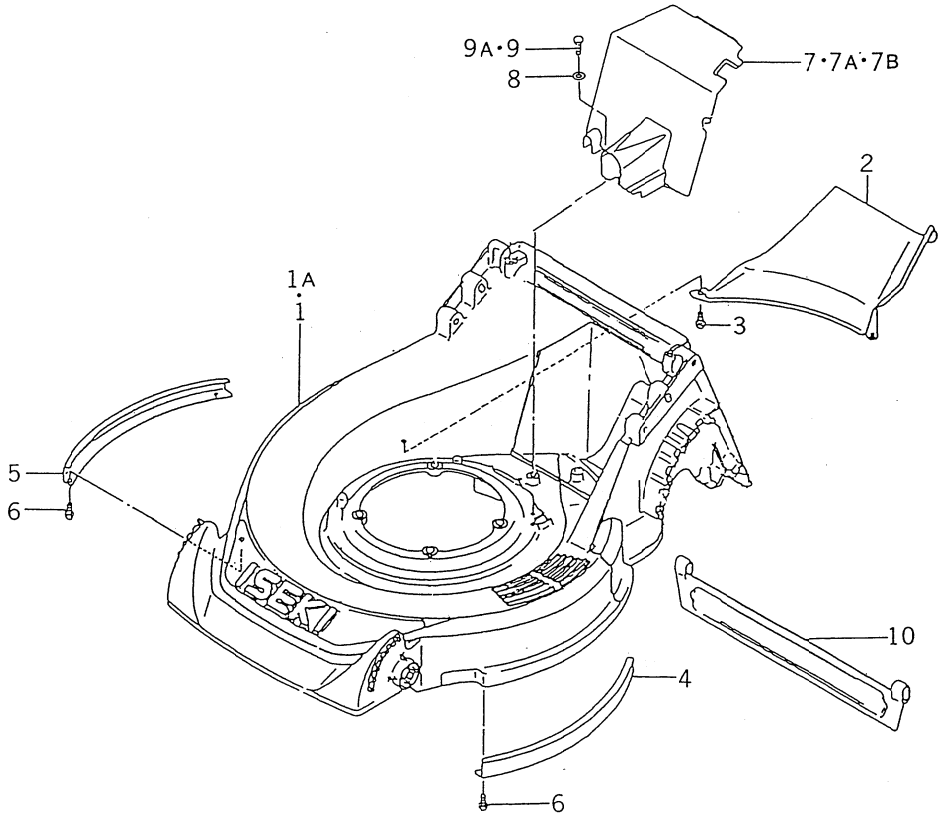


2500-401

| KEY Réf. | PART CODE Pièces No. | DESCRIPTION | Désignation | QTY Quant. | TYPE OF MODEL Modél B·B01 | E01 | GB·GBE01 | ITC | COL | GRP | REMARKS Remarques |
|---|---|---|---|---|---|---|---|---|---|---|---|
| 1 | 2500-401-011-00 | DECK | Tablier | 1 | 1--100320 100321- | 1--100320 100321- | 1--100320 100321- | | | | |
| 1A | 2500-401-011-10 | DECK | Tablier | 1 | | | | | | | |
| 2 | 2500-401-012-00 | COVER, UNDER | Couvercle | 1 | * | * | * | | | | |
| 3 | 2500-401-006-00 | BOLT/TAPPING/6X12 | Vis | 3 | * | * | * | | | | |
| 4 | 2500-401-002-00 | COVER, DECK/LH | Couvercle | 1 | * | * | * | | | | |
| 5 | 2500-401-003-00 | COVER, DECK/RH | Couvercle | 1 | * | * | * | | | | |
| 6 | 2500-401-006-00 | BOLT/TAPPING/6X12 | Vis | 4 | * | * | * | | | | |
| 7 | 2500-401-007-00 | COVER, MISSION | Couvercle | 1 | 1--100320 | 1--100320 | 1--100320 | | | | |
| 7A | 2500-451-007-10 | COVER, MISSION | Couvercle | 1 | 100321--102704 | 100321--102704 | 100321--102704 | | | | |
| 7B | 2500-451-007-20 | COVER, NISSION | Couvercle | 1 | 102705- | 102705- | 102705- | | | | |
| 8 | 3740-162-005-00 | WASHER | Rondelle | 1 | * | * | * | | | | |
| 9 | 2500-401-006-00 | BOLT/TAPPING/6X12 | Vis | 1 | 1--100320 100321- | 1--100320 100321- | 1--100320 100321- | | | | |
| 9A | 2500-210-005-00 | BOLT/TAPPING/6X16 | Vis | 1 | | | | | | | |
| 10 | 2500-401-014-00 | COVER, STONE GUARD | Couvercle | 1 | * | * | * | | | | |

# FIG. 12 DECK／FAN SYSTEM
## Carter de coupe

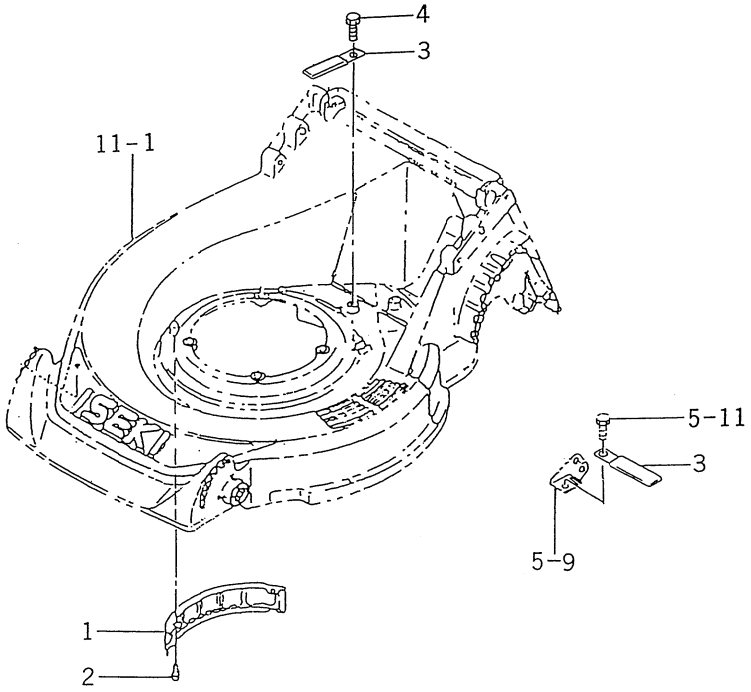


2500-401A

| KEY Réf. | PART CODE Pièces No. | DESCRIPTION | Désignation | QTY Quant. | TYPE OF MODEL Modél B·B01 | E01 | GB·GBE01 | ITC | COL | GRP | REMARKS Remarques |
|---|---|---|---|---|---|---|---|---|---|---|---|
| 1 | 2500-401-009-00 | COVER, FAN/N | Couvercle | 1 | * | * | * | | | | |
| 2 | 2500-401-006-00 | BOLT/TAPPING/6X12 | Vis | 2 | * | * | * | | | | |
| 3 | 3768-172-008-00 | CLAMP/7 | Attache | 2 | | | * | | | | |
| 4 | 2500-401-006-00 | BOLT/TAPPING/6X12 | Vis | 1 | | | * | | | | |

# FIG. 13 COVER／DISCHARGE SYSTEM
## Deflecteur

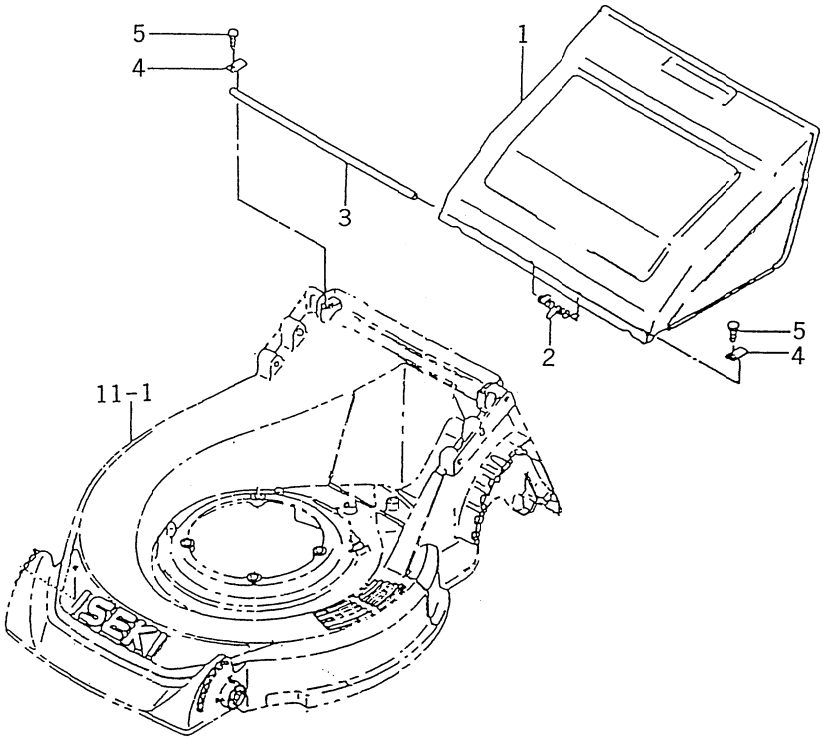


2500-420

| KEY Réf. | PART CODE Pièces No. | DESCRIPTION | Désignation | QTY Quant. | TYPE OF MODEL Modél | | | I T C | C O L | G R P | REMARKS Remarques |
|---|---|---|---|---|---|---|---|---|---|---|---|
| | | | | | B·B01 | E01 | GB·GBE01 | | | | |
| 1 | 2500-420-001-00 | COVER, DESCAHARGE | Couvercle | 1 | * | * | * | | | | |
| 2 | 2500-420-003-00 | SPRING/HC012 | Ressort | 1 | * | * | * | | | | |
| 3 | 2500-420-004-00 | PIN/08X334 | Axe | 1 | * | * | * | | | | |
| 4 | 2500-420-005-00 | PLATE, I/16X28 | Plaque | 2 | * | * | * | | | | |
| 5 | 2500-210-005-00 | BOLT/TAPPING/6X16 | Vis | 2 | * | * | * | | | | |

# FIG. 14 HANDLE SYSTEM (B TYPE)
## Mancheron (modèle B)

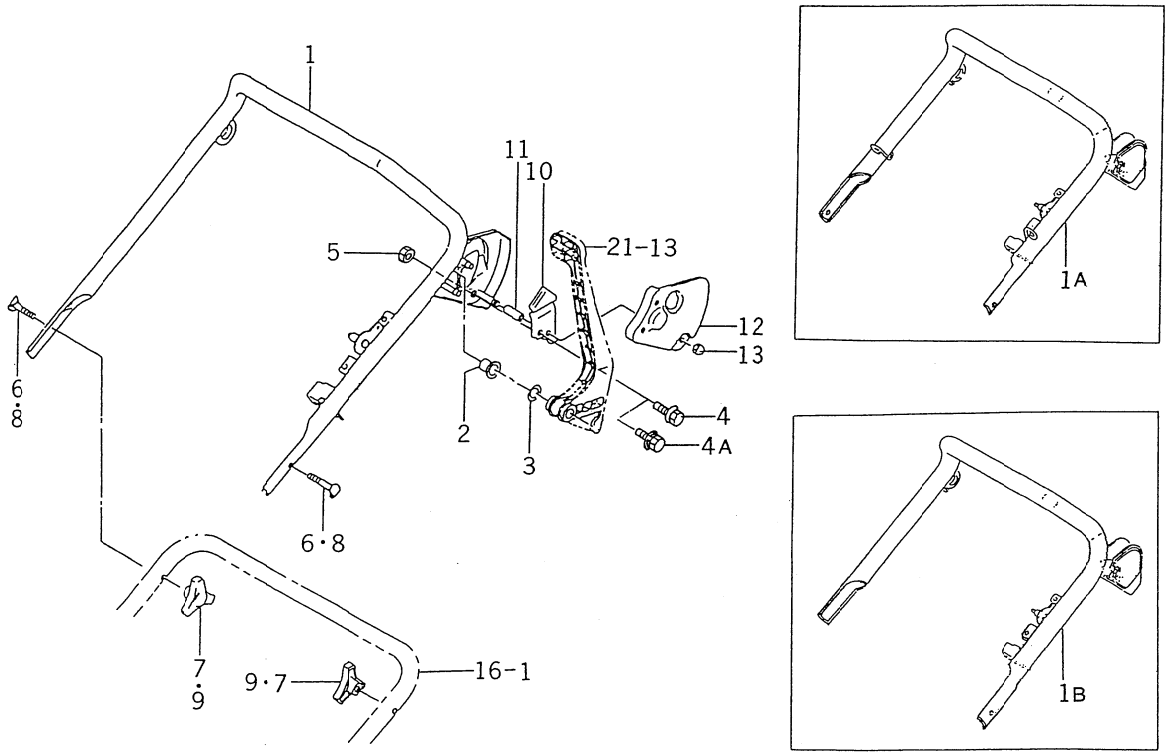


2500-501

| KEY Réf. | PART CODE Pièces No. | DESCRIPTION | Désignation | QTY Quant. | TYPE OF MODEL Modél B·B01 | E01 | GB·GBE01 | ITC | COL | GRP | REMARKS Remarques |
|---|---|---|---|---|---|---|---|---|---|---|---|
| 1 | 2500-501-210-20 | HANDEL, B COMP | Guidon | 1 | 1- -102704 | | 1- -102704 | | | | |
| 1A | 2500-501-210-30 | HANDLE, B COMP | Guidon | 1 | 102705- -300000 | | 102705- -300000 | | | | |
| 1B | 2500-501-210-40 | HANDLE, B COMP | Guidon | 1 | 300001- | | 300001- | | | | |
| 2 | 2500-501-013-00 | BUSH/14X16X10 | Douille | 1 | * | | * | | | | |
| 3 | 1560-601-017-00 | WASHER/6X14X2 | Rondelle | 1 | * | | * | | | | |
| 4 | V210-160-601-00 | BOLT/P | Vis | 2 | 1- -300000 | | 1- -300000 | | | | |
| 4A | V210-360-601-00 | BOLT/SP | Vis | 2 | 300001- | | 300001- | | | | |
| 5 | V340-120-006-00 | NUT | Ecrou | 2 | * | | * | | | | |
| 6 | 2500-501-019-00 | PIN/08X45 | Axe | 2 | * | | * | | | | |
| 7 | 2500-501-022-00 | NUT/KNOB/M8 | Ecrou | 2 | * | | * | | | | |
| 8 | 2500-501-019-00 | PIN/08X45 | Axe | 2 | * | | * | | | | |
| 9 | 2500-501-022-00 | NUT/KNOB/M8 | Ecrou | 2 | * | | * | | | | |
| 10 | 2500-501-002-10 | PLATE/SPRING | Plaque | 1 | * | | * | | | | |
| 11 | 2500-501-011-10 | COLLAR/6X10X32 | Entretoise | 1 | * | | * | | | | |
| 12 | 2500-501-041-10 | COVER, HOLDER | Couvercle | 1 | * | | * | | | | |
| 13 | V340-120-006-00 | NUT | Ecrou | 4 | * | | * | | | | |

# FIG. 15 HANDLE／BRACKET SYSTEM
## Mancheron

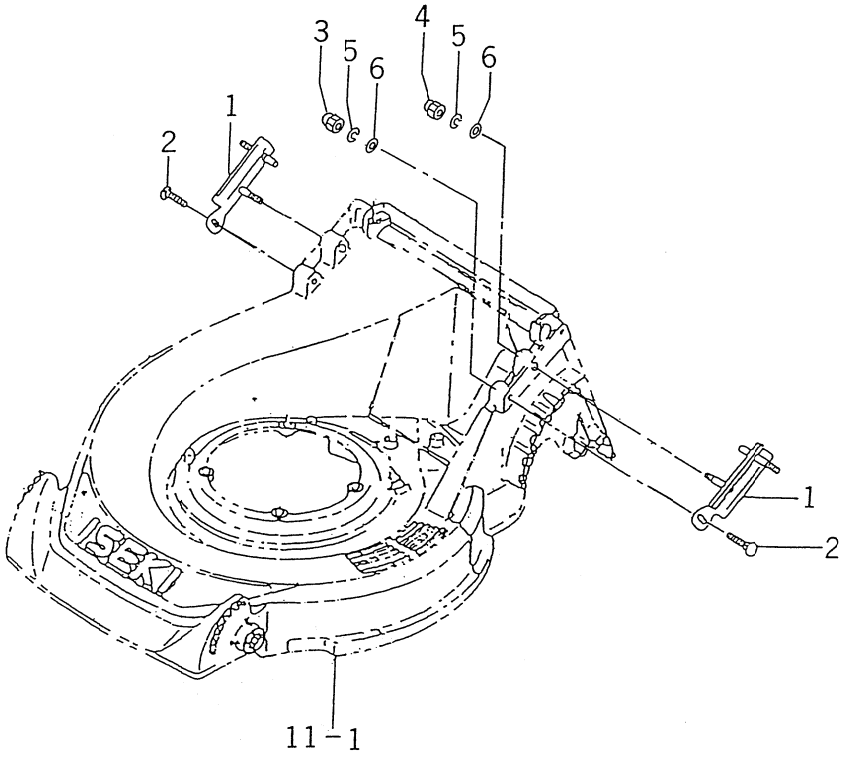


2500-501A

| KEY Réf. | PART CODE Pièces No. | DESCRIPTION | Désignation | QTY Quant. | TYPE OF MODEL Modél B·B01 | E01 | GB·GBE01 | ITC | COL | GRP | REMARKS Remarques |
|---|---|---|---|---|---|---|---|---|---|---|---|
| 1 | 2500-501-220-00 | BRACKET/HANDLE COMP | Support | 2 | 1- -104712 | 1- -104712 | 1- -104712 | | | | |
| 2 | 2500-501-003-00 | BOLT/M08X40 | Vis | 2 | 1- -104712 | 1- -104712 | 1- -104712 | | | | |
| 3 | V304-260-008-00 | NUT/M8 | Ecrou | 2 | 1- -104712 | 1- -104712 | 1- -104712 | | | | |
| 4 | V341-120-008-00 | NUT, CAP/M8 | Ecrou | 2 | 1- -104712 | 1- -104712 | 1- -104712 | | | | |
| 5 | V401-160-008-00 | WASHER, SP/M8 | Rondelle frein | 4 | 1- -104712 | 1- -104712 | 1- -104712 | | | | |
| 6 | V411-260-008-00 | WASHER, PL | Rondelle plate | 4 | 1- -104712 | 1- -104712 | 1- -104712 | | | | |

# FIG. 16 HANDLE/BRACKET SYSTEM (EXCEPT G TYPE)
## Mancheron (excepté modèle G)

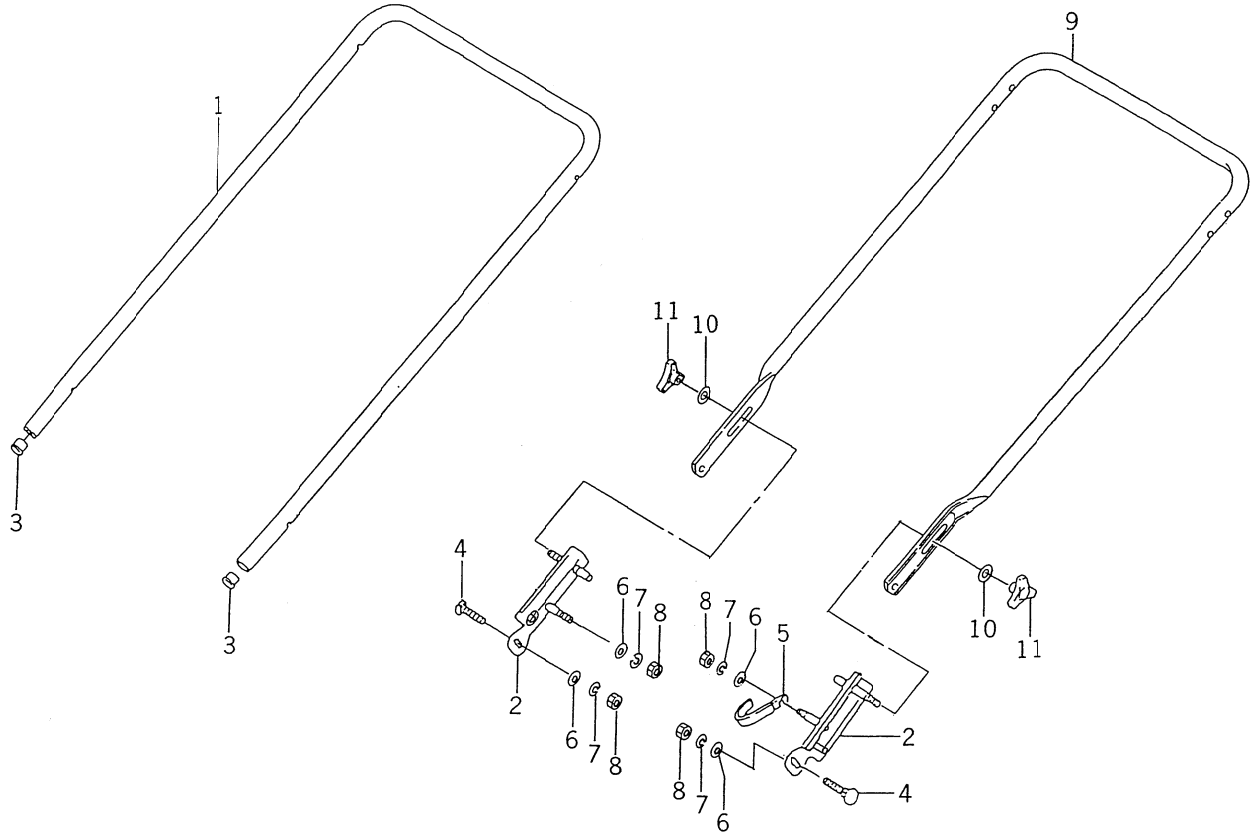


2500-502

| KEY Réf. | PART CODE Pièces No. | DESCRIPTION | Désignation | QTY Quant. | TYPE OF MODEL Modél B·B01 | E01 | GB·GBE01 | ITC | COL | GRP | REMARKS Remarques |
|---|---|---|---|---|---|---|---|---|---|---|---|
| 1 | 2500-501-021-20 | HANDLE, A | Guidon | 1 | 1- -104712 | 1- -104712 | | | | | |
| 2 | 2500-502-220-00 | BRACKET/HANDLE COMP | Support | 2 | 104713- | 104713- | | | | | |
| 3 | 2500-501-006-00 | PLUG, 19 | Bauchon | 2 | 104713- | 104713- | | | | | |
| 4 | 2500-501-003-10 | BOLT/M8X40 | Vis | 2 | 104713- | 104713- | | | | | |
| 5 | 1425-621-004-00 | CLAMP, HARNESS | Attache | 1 | 104713- | 104713- | | | | | |
| 6 | V411-260-008-00 | WASHER, PL | Rondelle plate | 3 | 104713- | 104713- | | | | | |
| 7 | V401-160-008-00 | WASHER, SP/M8 | Rondelle frein | 4 | 104713- | 104713- | | | | | |
| 8 | V341-120-008-00 | NUT, CAP/M8 | Ecrou | 4 | 104713- | 104713- | | | | | |
| 9 | 2500-552-002-20 | HANDLE/A | Guidon | 1 | 104713- | 104713- | | | | | |
| 10 | V411-260-008-00 | WASHER, PL | Rondelle plate | 2 | 104713- | 104713- | | | | | |
| 11 | 2500-501-022-00 | NUT/KNOB/M8 | Ecrou | 2 | 104713- | 104713- | | | | | |

# FIG. 17 BRACKET／BATTERY SYSTEM (G TYPE)

## Support／butterie (modèle G)

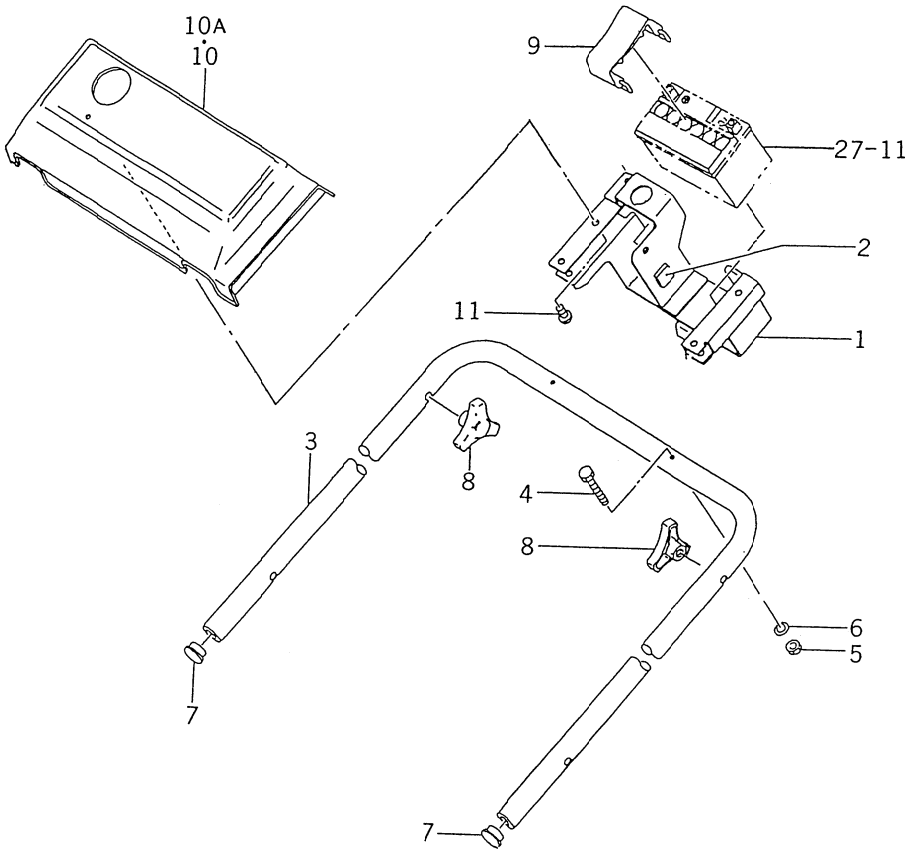


2500-502A

| KEY Réf. | PART CODE Pièces No. | DESCRIPTION | Désignation | QTY Quant. | TYPE OF MODEL Modél B·B01 | E01 | GB·GBE01 | ITC | COL | GRP | REMARKS Remarques |
|---|---|---|---|---|---|---|---|---|---|---|---|
| 1 | 2500-502-200-10 | BRACKET/BATTERY COMP | Support | 1 | | | * | | | | |
| 2 | 2500-502-008-00 | INSULATOR | Ecran themique | 5 | | | * | | | | |
| 3 | 2500-502-002-20 | HANDLE/A/G | Guidon | 1 | | | * | | | | |
| 4 | 2500-502-003-00 | BOLT/FLANGE/M8X35 | Vis | 2 | | | * | | | | |
| 5 | V304-260-008-00 | NUT/M8 | Ecrou | 2 | | | * | | | | |
| 6 | V401-160-008-00 | WASHER, SP/M8 | Rondelle frein | 2 | | | * | | | | |
| 7 | 2500-501-006-00 | PLUG/19 | Rondelle | 2 | | | * | | | | |
| 8 | 2500-501-022-00 | NUT/KNOB/M8 | Bauchon | 2 | | | * | | | | |
| 9 | 2500-502-004-00 | BAND/BATTERY | Bande | 1 | | | * | | | | |
| 10 | 2500-502-005-10 | PANEL/SELF | Panneau | 1 | | | 1--300000 | | | | |
| 10A | 2500-502-005-20 | PANEL/SELF | Panneau | 1 | | | 300001- | | | | |
| 11 | 2500-510-002-00 | SCREW/TAPPING/5X16 | Vis | 3 | | | * | | | | |

# FIG. 18 HANDLE/BRACKET SYSTEM (E01 TYPE)
## Mancheron (modèle E01)

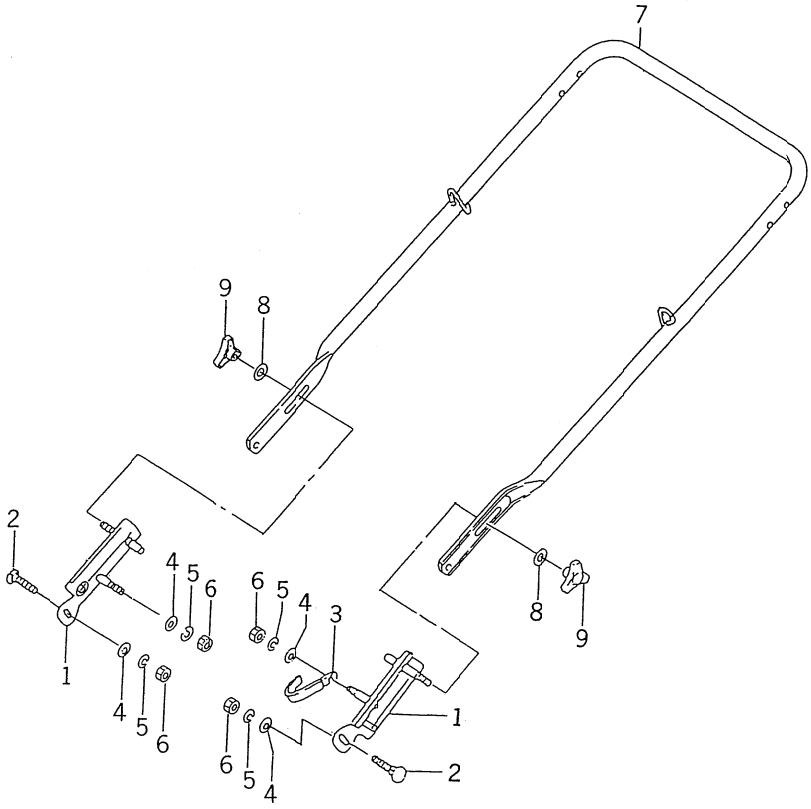


2500-502B

| KEY Réf. | PART CODE Pièces No. | DESCRIPTION | Désignation | QTY Quant. | TYPE OF MODEL Modél B·B01 | E01 | GB·GBE01 | ITC | COL | GRP | REMARKS Remarques |
|---|---|---|---|---|---|---|---|---|---|---|---|
| 1 | 2500-502-220-00 | BRACKET/HANDLE COMP | Support | 2 | | 104713- | | | | | |
| 2 | 2500-501-003-10 | BOLT/M8X40 | Vis | 2 | | 104713- | | | | | |
| 3 | 1425-621-004-00 | CLAMP, HARNESS | Attache | 1 | | 104713- | | | | | |
| 4 | V411-260-008-00 | WASHER, PL | Rondelle plate | 3 | | 104713- | | | | | |
| 5 | V401-160-008-00 | WASHER, SP/M8 | Rondelle frein | 4 | | 104713- | | | | | |
| 6 | V341-120-008-00 | NUT, CAP/M8 | Ecrou | 4 | | 104713- | | | | | |
| 7 | 2500-502-250-00 | HANDLE/A COMP | Guidon | 1 | | 104713- | | | | | |
| 8 | V411-260-008-00 | WASHER, PL | Rondelle plate | 2 | | 104713- | | | | | |
| 9 | 2500-501-022-00 | NUT/KNOB/M8 | Ecrou | 2 | | 104713- | | | | | |

# FIG. 19 HANDLE/BRACKET SYSTEM (G TYPE)
## Mancheron (modèle G)

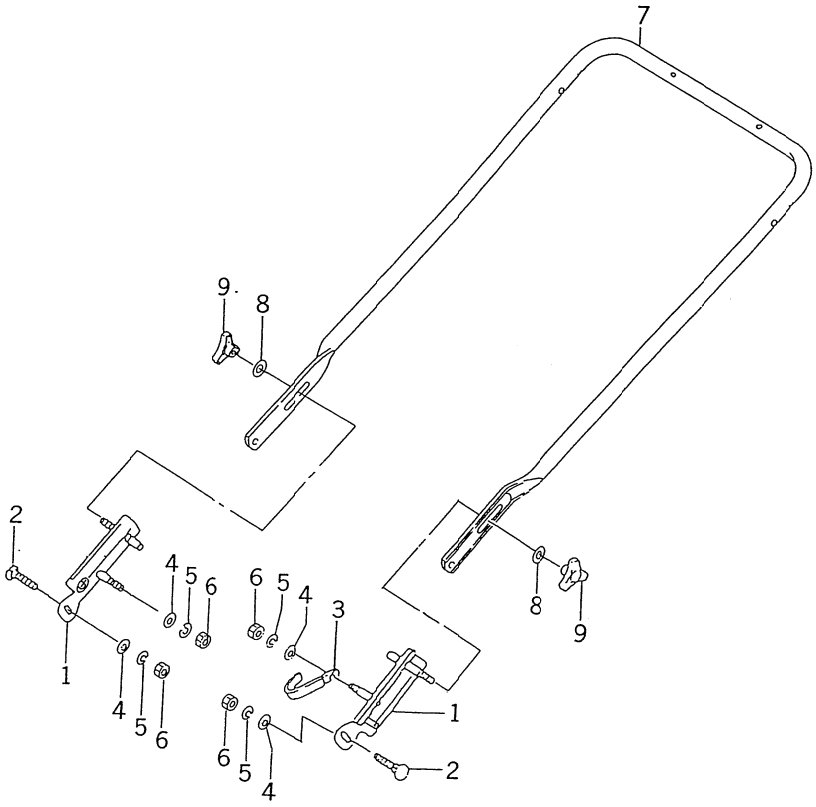


2500-502G

| KEY Réf. | PART CODE Pièces No. | DESCRIPTION | Désignation | QTY Quant. | TYPE OF MODEL Modél B·B01 | E01 | GB·GBE01 | ITC | COL | GRP | REMARKS Remarques |
|---|---|---|---|---|---|---|---|---|---|---|---|
| 1 | 2500-502-220-00 | BRACKET/HANDLE COMP | Support | 2 | | | 104713- | | | | |
| 2 | 2500-501-003-10 | BOLT/M8X40 | Vis | 2 | | | 104713- | | | | |
| 3 | 1425-621-004-00 | CLAMP, HARNESS | Attach | 1 | | | 104713- | | | | |
| 4 | V411-260-008-00 | WASHER, PL | Rondelle plate | 3 | | | 104713- | | | | |
| 5 | V401-160-008-00 | WASHER, SP/M8 | Rondelle frein | 4 | | | 104713- | | | | |
| 6 | V341-120-008-00 | NUT, CAP/M8 | Ecrou | 4 | | | 104713- | | | | |
| 7 | 2500-502-002-30 | HANDLE/A/G | Guidon | 1 | | | 104713- | | | | |
| 8 | V411-260-008-00 | WASHER, PL | Rondelle plate | 2 | | | 104713- | | | | |
| 9 | 2500-501-022-00 | NUT/KNOB/M8 | Ecrou | 2 | | | 104713- | | | | |

# FIG. 20 HANDLE SYSTEM (E01 TYPE)
## Mancheron (modèle E01)

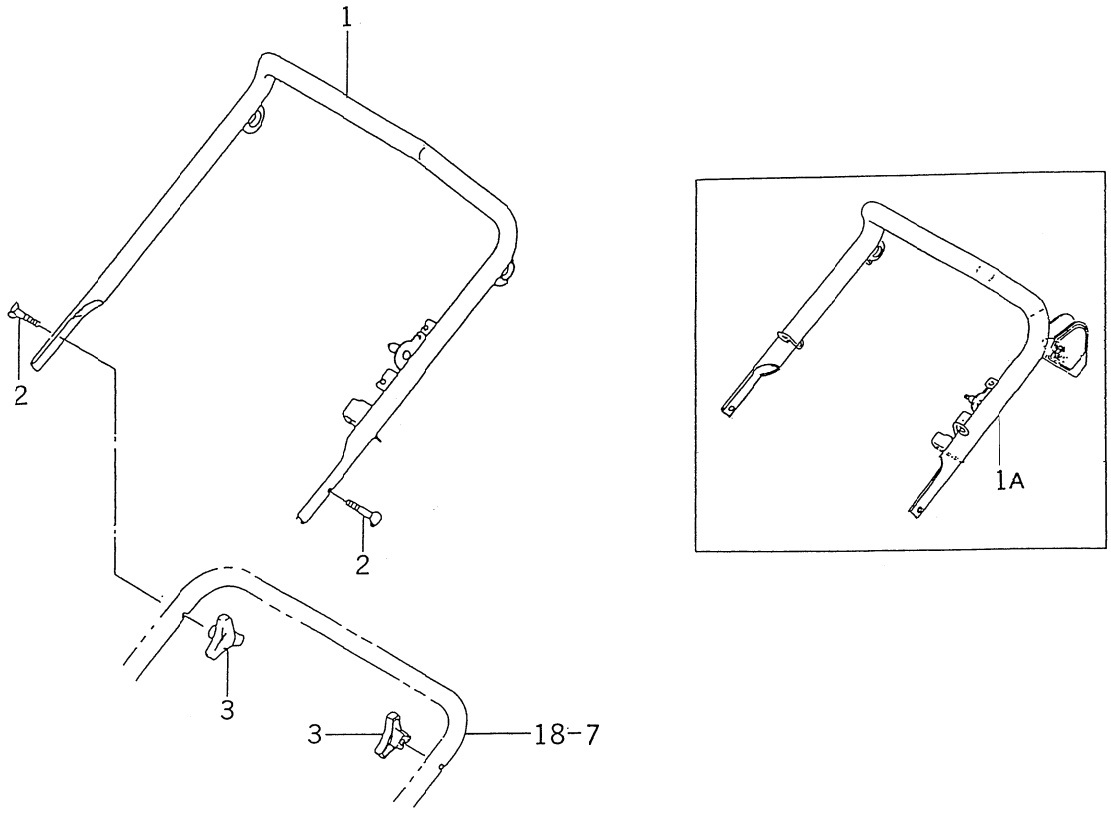


2500-505

| KEY Réf. | PART CODE Pièces No. | DESCRIPTION | Désignation | QTY Quant. | TYPE OF MODEL Modél B·B01 | E01 | GB·GBE01 | ITC | COL | GRP | REMARKS Remarques |
|---|---|---|---|---|---|---|---|---|---|---|---|
| 1 | 2500-505-210-30 | HANDLE/B/E COMP | Guidon | 1 | | 1--300000 | | | | | |
| 1A | 2500-505-210-40 | HANDLE/B/E COMP | Guidon | 1 | | 300001- | | | | | |
| 2 | 2500-501-019-00 | PIN/08X45 | Axe | 2 | | * | | | | | |
| 3 | 2500-501-022-00 | NUT/KNOB/M8 | Ecrou | 2 | | * | | | | | |

# FIG. 21 LEVER SYSTEM (B TYPE)
## Levier (modèle B)

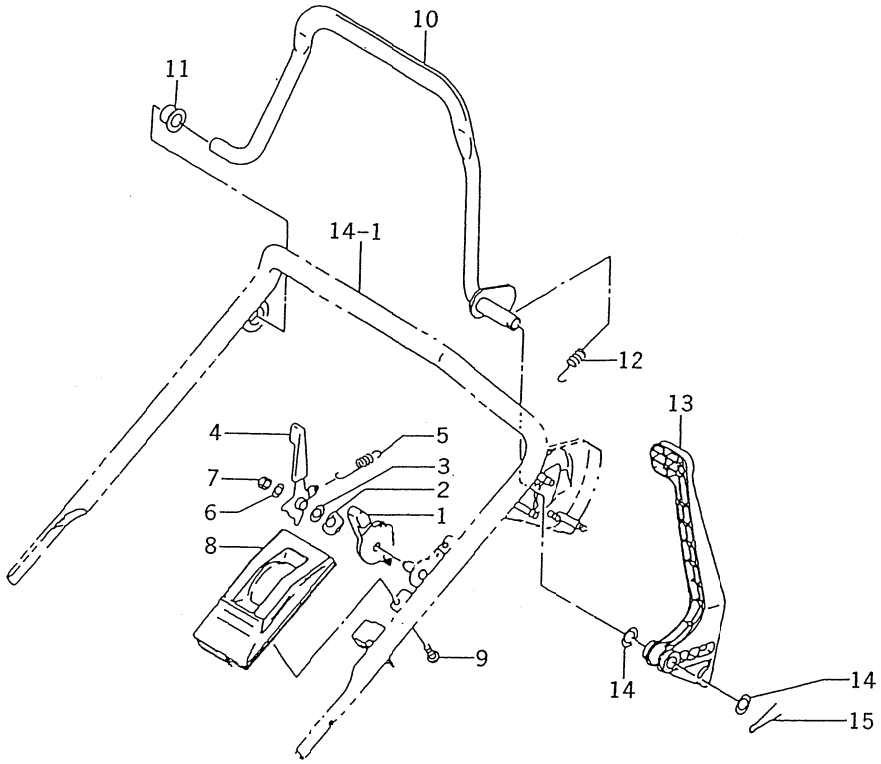


2500-510

| KEY Réf. | PART CODE Pièces No. | DESCRIPTION | Désignation | QTY Quant. | TYPE OF MODEL Modél B·B01 | E01 | GB·GBE01 | ITC | COL | GRP | REMARKS Remarques |
|---|---|---|---|---|---|---|---|---|---|---|---|
| 1 | 2500-510-011-00 | LEVER/AXLE | Levier | 1 | * | | * | | | | |
| 2 | 2500-510-005-00 | SPRING/DISK/10 | Ressort | 1 | * | | * | | | | |
| 3 | 2500-510-006-00 | WASHER/11X20X01 | Rondelle | 1 | * | | * | | | | |
| 4 | 2500-510-220-00 | LEVER/CHANGE COMP | Levier | 1 | * | | * | | | | |
| 5 | 2500-510-051-10 | SPRING/HE077 | Ressort | 1 | * | | * | | | | |
| 6 | 3740-162-005-00 | WASHER | Rondelle | 1 | * | | * | | | | |
| 7 | 2500-326-017-00 | NUT/FLANGE/M06 | Ecrou | 1 | * | | * | | | | |
| 8 | 2500-510-001-10 | COVER/CONTROL | Couvercle | 1 | * | | * | | | | |
| 9 | 2500-510-002-00 | SCREW/TAPPING/5X16 | Vis | 2 | * | | * | | | | |
| 10 | 2500-510-230-10 | LEVER, PIPE COMP | Levier | 1 | * | | * | | | | |
| 11 | 2500-510-013-00 | BUSH/14X20X11 | Douille | 1 | * | | * | | | | |
| 12 | 2500-510-051-10 | SPRING/HE077 | Ressort | 1 | * | | * | | | | |
| 13 | 2500-510-240-00 | LEVER/BBC | Levier | 1 | * | | * | | | | |
| 14 | 1427-601-003-00 | WASHER/15X24X2 | Rondelle | 2 | * | | * | | | | |
| 15 | V500-163-002-00 | PIN | Axe | 1 | * | | * | | | | |

# FIG. 22 CONTROL LEVER SYSTEM
## Levier de contrôle

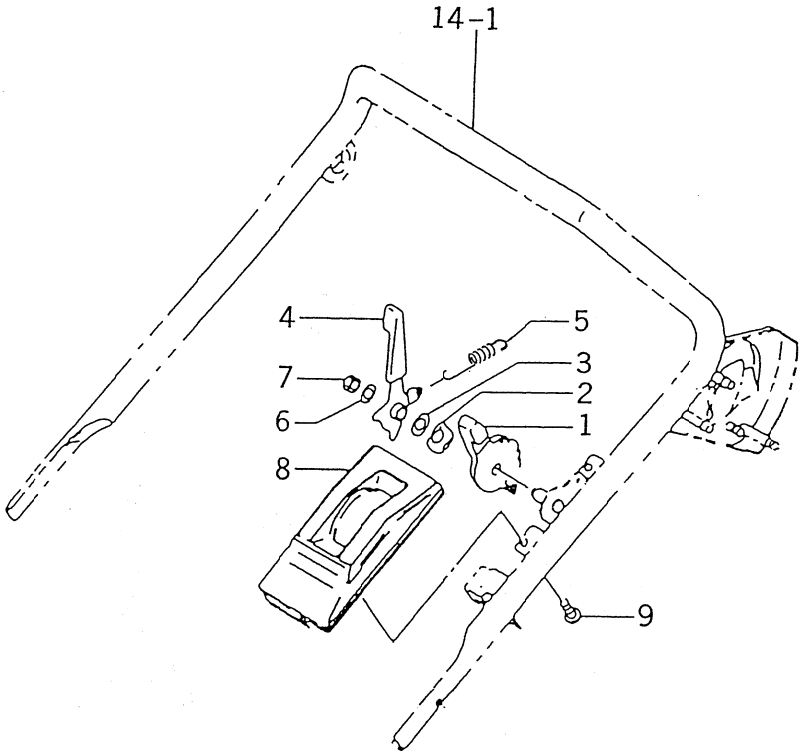


2503-510

| KEY Réf. | PART CODE Pièces No. | DESCRIPTION | Désignation | QTY Quant. | TYPE OF MODEL Modél B·B01 | E01 | GB·GBE01 | ITC | COL | GRP | REMARKS Remarques |
|---|---|---|---|---|---|---|---|---|---|---|---|
| 1 | 2500-510-011-00 | LEVER/AXLE | Levier | 1 | * | * | * | | | | |
| 2 | 2500-510-005-00 | SPRING/DISK/10 | Ressort | 1 | * | * | * | | | | |
| 3 | 2500-510-006-00 | WASHER/11X20X01 | Rondelle | 1 | * | * | * | | | | |
| 4 | 2500-510-220-00 | LEVER/CHANGE COMP | Levier | 1 | * | * | * | | | | |
| 5 | 2500-510-051-10 | SPRING/HE077 | Ressort | 1 | * | * | * | | | | |
| 6 | 3740-162-005-00 | WASHER | Rondelle | 1 | * | * | * | | | | |
| 7 | 2500-326-017-00 | NUT/FLANGE/M06 | Ecrou | 1 | * | * | * | | | | |
| 8 | 2500-510-001-10 | COVER/CONTROL | Couvercle | 1 | * | * | * | | | | |
| 9 | 2500-510-002-00 | SCREW/TAPPING/5X16 | Vis | 2 | * | * | * | | | | |

# FIG. 23 LEVER SYSTEM (E01 TYPE)
## Levier (modèle E01)

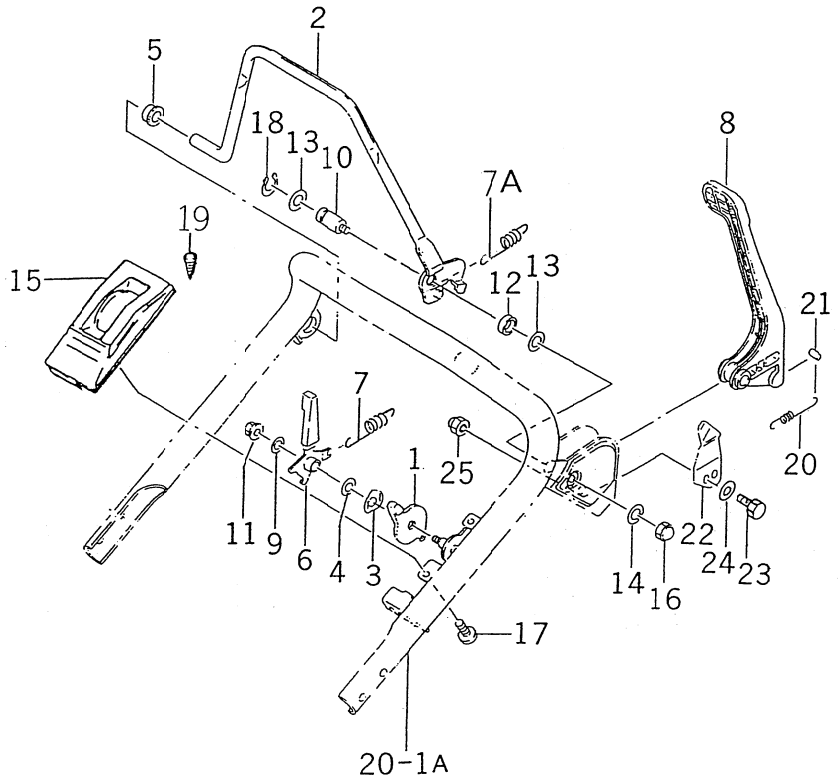


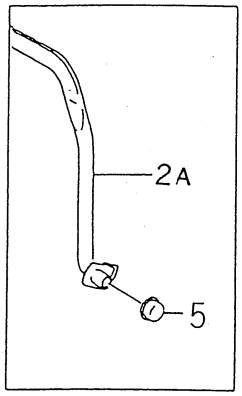


250C-515

| KEY Réf. | PART CODE Pièces No. | DESCRIPTION | Désignation | QTY Quant. | TYPE OF MODEL Modél B·B01 | E01 | GB·GBE01 | ITC | COL | GRP | REMARKS Remarques |
|---|---|---|---|---|---|---|---|---|---|---|---|
| 1 | 2500-510-011-00 | LEVER/AXLE | Levier | 1 | | 1--104712 | | | | | |
| 2 | 2500-515-230-10 | LEVER/PIPE/E COMP | Levier | 1 | | 1--300000 | | | | | |
| 2A | 2500-560-230-20 | LEVER COMP | Levier | 1 | | 300001- | | | | | |
| 3 | 2500-510-005-00 | SPRING/DISK/10 | Ressort | 1 | | 1--104712 | | | | | |
| 4 | 2500-510-006-00 | WASHER/11X20X01 | Rondelle | 1 | | 1--104712 | | | | | |
| 5 | 2500-510-013-00 | BUSH/14X20X11 | Douille | 2 | | * | | | | | |
| 6 | 2500-510-220-00 | LEVER/CHANGE COMP | Levier | 1 | | 1--104712 | | | | | |
| 7 | 2500-510-051-00 | SPRING/HE079 | Ressort | 1 | | 1--102340 | | | | | |
| 7A | 2500-510-051-10 | SPRING/HE077 | Ressort | 1 | | 102341- | | | | | |
| 8 | 2500-510-240-10 | LEVER/BBC | Levier | 1 | | * | | | | | |
| 9 | 3740-162-005-00 | WASHER | Rondelle | 1 | | 1--104712 | | | | | |
| 10 | 2503-510-003-20 | PIN/14X70 | Axe | 1 | | * | | | | | |
| 11 | 2500-326-017-00 | NUT/FLANGE/M06 | Ecrou | 1 | | 1--104712 | | | | | |
| 12 | 2503-510-004-20 | COLLAR/15X20X8 | Entretoise | 1 | | * | | | | | |
| 13 | 1427-601-003-00 | WASHER/15X24X2 | Rondelle | 2 | | * | | | | | |
| 14 | V401-160-008-00 | WASHER, SP/M8 | Rondelle frein | 1 | | * | | | | | |
| 15 | 2500-510-001-10 | COVER/CONTROL | Couvercle | 1 | | 1--104712 | | | | | |
| 16 | V341-120-008-00 | NUT, CAP/M8 | Ecrou | 1 | | * | | | | | |
| 17 | 2500-510-002-00 | SCREW/TAPPING/5X16 | Vis | 2 | | 1--104712 | | | | | |
| 18 | V704-140-014-00 | RING, SNAP/14C | Circlips | 1 | | * | | | | | |
| 19 | 1527-604-002-00 | CLIP | Attache | 1 | | * | | | | | |
| 20 | 2500-515-001-00 | SPRING/HE145 | Ressort | 1 | | * | | | | | |
| 21 | 2500-210-008-00 | PIN/8X14 | Axe | 1 | | * | | | | | |
| 22 | 2500-501-002-10 | PLATE/SPRING | Plaque | 1 | | * | | | | | |
| 23 | V200-260-601-00 | BOLT | Vis | 2 | | * | | | | | |

# FIG. 23 LEVER SYSTEM (E01 TYPE)
## Levier (modèle E01)

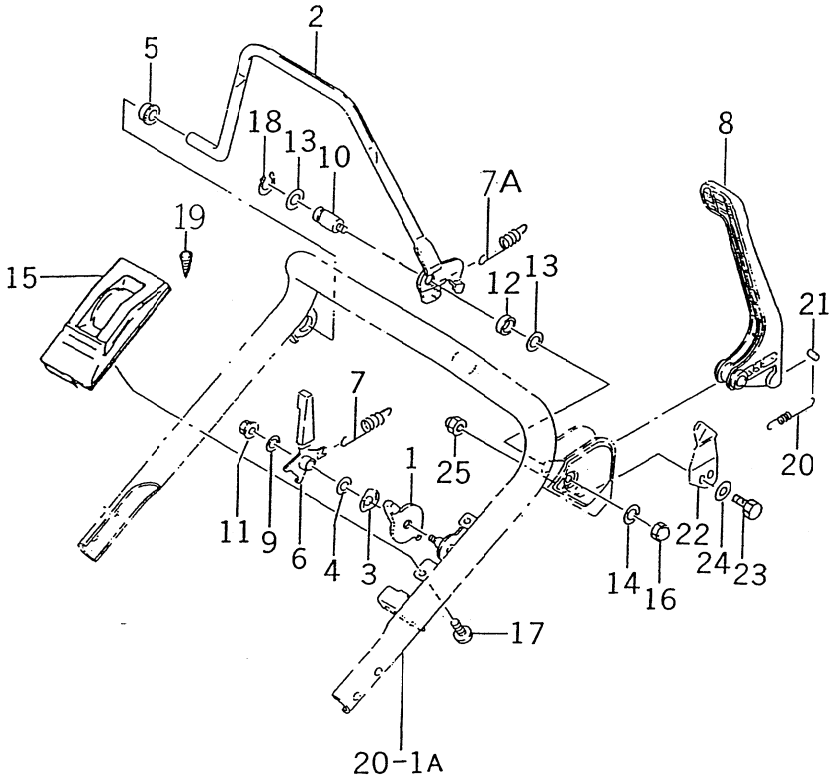


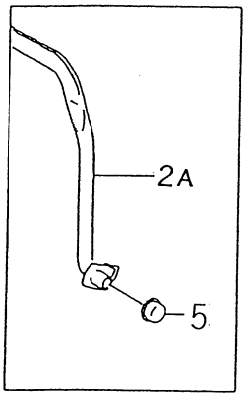


2500-515

| KEY Réf. | PART CODE Pièces No. | DESCRIPTION | Désignation | QTY Quant. | TYPE OF MODEL Modél B·B01 | E01 | GB·GBE01 | ITC | COL | GRP | REMARKS Remarques |
|---|---|---|---|---|---|---|---|---|---|---|---|
| 24 | V411-260-006-00 | WASHER, PL | Rondelle | 2 | | * | | | | | |
| 25 | V340-120-006-00 | NUT | Ecrou | 2 | | * | | | | | |

# FIG. 24 CABLE SYSTEM
## Câble

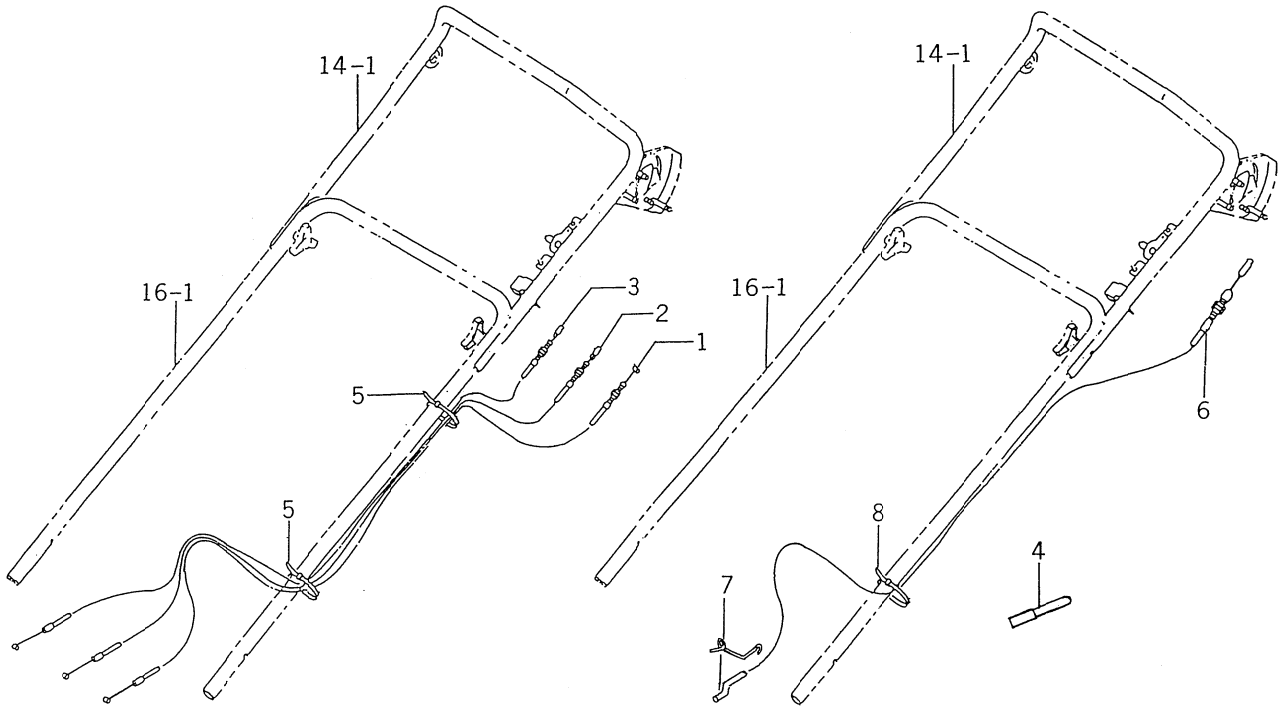


2500-520

| KEY Réf. | PART CODE Pièces No. | DESCRIPTION | Désignation | QTY Quant. | TYPE OF MODEL Modél B·B01 | E01 | GB·GBE01 | ITC | COL | GRP | REMARKS Remarques |
|---|---|---|---|---|---|---|---|---|---|---|---|
| 1 | 2500-520-001-10 | CABLE/THROTTLE | Cable | 1 | * | * | * | | | | |
| 2 | 2500-520-002-10 | CABLE/CHANGE | Cable | 1 | * | * | * | | | | |
| 3 | 2500-520-003-10 | CABLE/CLUTCH | Cable | 1 | * | * | * | | | | |
| 4 | 1425-621-004-00 | CLAMP, HARNESS | Attache | 1 | * | * | * | | | | |
| 5 | 1376-402-003-00 | BAND/WIRE/140 | Bande | 2 | * | * | * | | | | |
| 6 | 2500-520-006-00 | CABLE/BRAKE | Cable | 1 | | * | | | | | |
| 7 | 2500-520-007-00 | SPRING/HT07 | Ressort | 1 | | * | | | | | |
| 8 | 1376-402-003-00 | BAND/WIRE/140 | Bande | 1 | | * | | | | | |

# FIG. 25 LEVER SYSTEM (B TYPE)
## Levier (modèle B)

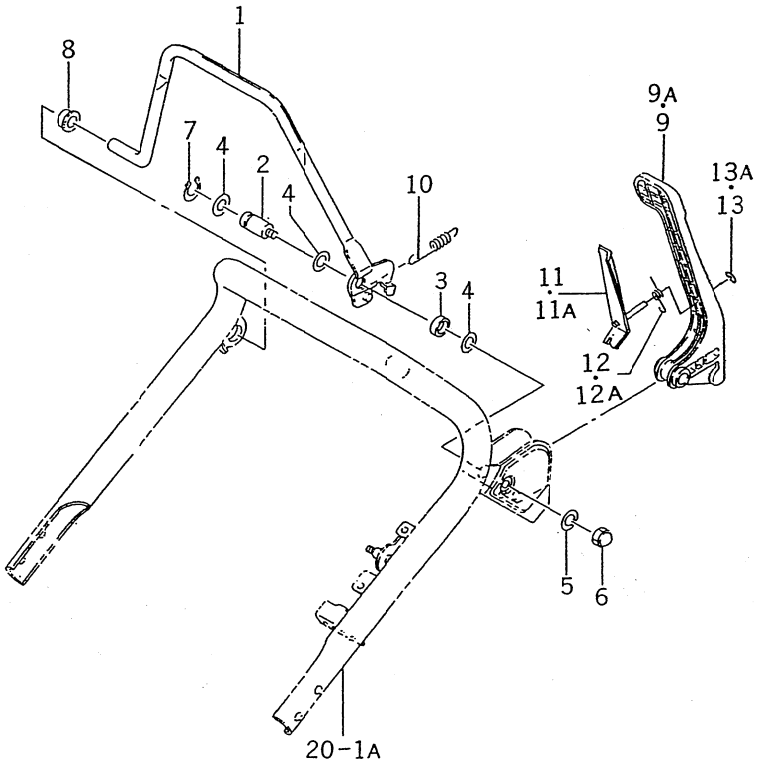


2500-560

| KEY Réf. | PART CODE Pièces No. | DESCRIPTION | Désignation | QTY Quant. | TYPE OF MODEL Modél B·B01 | E01 | GB·GBE01 | ITC | COL | GRP | REMARKS Remarques |
|---|---|---|---|---|---|---|---|---|---|---|---|
| 1 | 2500-560-230-20 | LEVER COMP | Levier | 1 | * | | * | | | | |
| 2 | 2503-510-003-20 | PIN/14X70 | Axe | 1 | * | | * | | | | |
| 3 | 2503-510-004-20 | COLLAR/15X20X8 | Entretoise | 1 | * | | * | | | | |
| 4 | 1427-601-003-00 | WASHER/15X24X2 | Rondelle | 2 | * | | * | | | | |
| 5 | V401-160-008-00 | WASHER, SP/M8 | Rondelle | 1 | * | | * | | | | |
| 6 | V341-120-008-00 | NUT, CAP/M8 | Ecrou | 1 | * | | * | | | | |
| 7 | V704-140-014-00 | RING, SNAP/14C | Circlips | 1 | * | | * | | | | |
| 8 | 2500-510-013-00 | BUSH/14X20X11 | Douille | 1 | * | | * | | | | |
| 9 | 2500-510-240-00 | LEVER/BBC | Levier | 1 | 1--300000 | | 1--300000 | | | | |
| 9A | 2500-510-240-10 | LEVER/BBC | Levier | 1 | 300001- | | 300001- | | | | |
| 10 | 2500-510-051-10 | SPRING/HE077 | Ressort | 1 | * | | * | | | | |
| 11 | 2500-510-410-00 | LEVER/LOCK COMP | Levier | 1 | 1--300210 | | 1--300210 | | | | |
| 11A | 2500-510-410-10 | LEVER/LOCK COMP | Levier | 1 | 300211- | | 300211- | | | | |
| 12 | 2500-510-003-00 | SPRING/HT010 | Ressort | 1 | 1--300210 | | 1--300210 | | | | |
| 12A | 2500-510-003-10 | SPRING/HT010 | Ressort | 1 | 300211- | | 300211- | | | | |
| 13 | V710-140-007-00 | RING, SNAP/7E | Circlips | 1 | 1--300210 | | 1--300210 | | | | |
| 13A | 2500-510-015-00 | RING, SNAP/7E | Circlips | 1 | 300211- | | 300211- | | | | |

# FIG. 26 COLLECTOR SYSTEM
## Collecteur

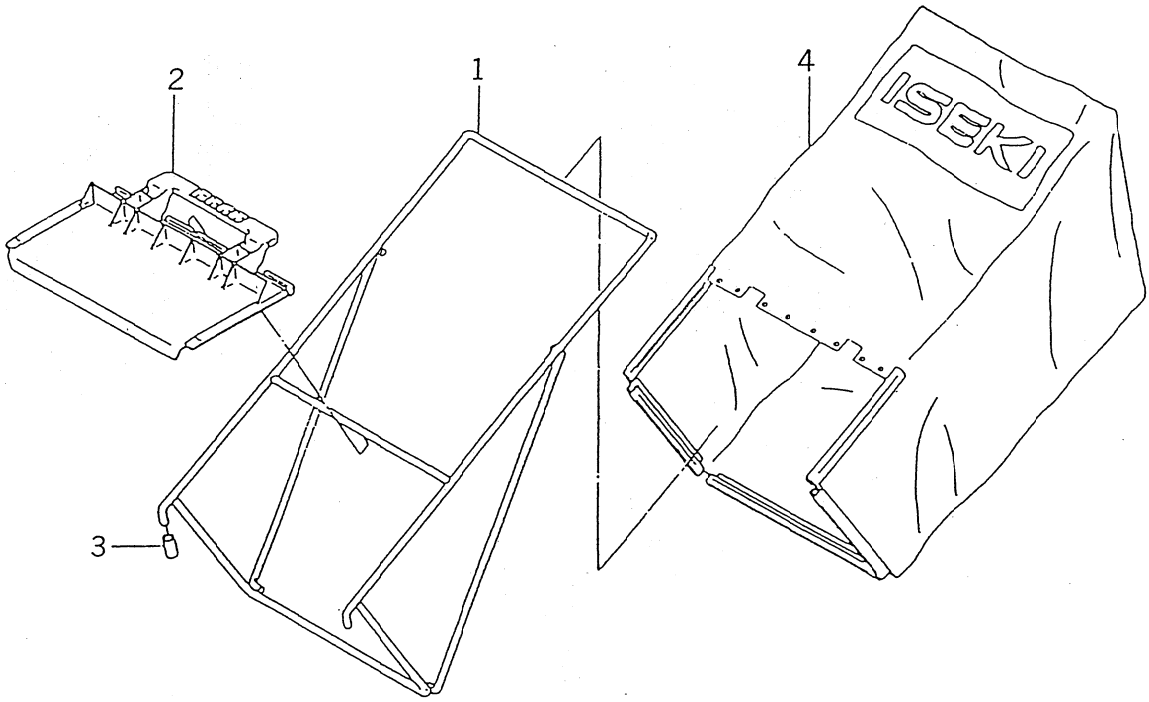


2500-607

| KEY Réf. | PART CODE Pièces No. | DESCRIPTION | Désignation | QTY Quant. | TYPE OF MODEL Modél B·B01 | E01 | GB·GBE01 | ITC | COL | GRP | REMARKS Remarques |
|---|---|---|---|---|---|---|---|---|---|---|---|
| 1 | 2500-607-200-00 | FRAME, COLLECTOR COMP | Longeron | 1 | * | * | * | | | | |
| 2 | 2500-607-001-00 | COVER, COLLECTOR | Couvercle | 1 | * | * | * | | | | |
| 3 | 2500-607-002-00 | HOSE | Tuyau | 2 | * | * | * | | | | |
| 4 | 2500-607-300-00 | CLOTH, COLLECTOR COMP | Etoffe | 1 | * | * | * | | | | |

# FIG. 27 HARNESS,BATTERY SYSTEM (G TYPE)

## Faisceau／batterie (modèle G)

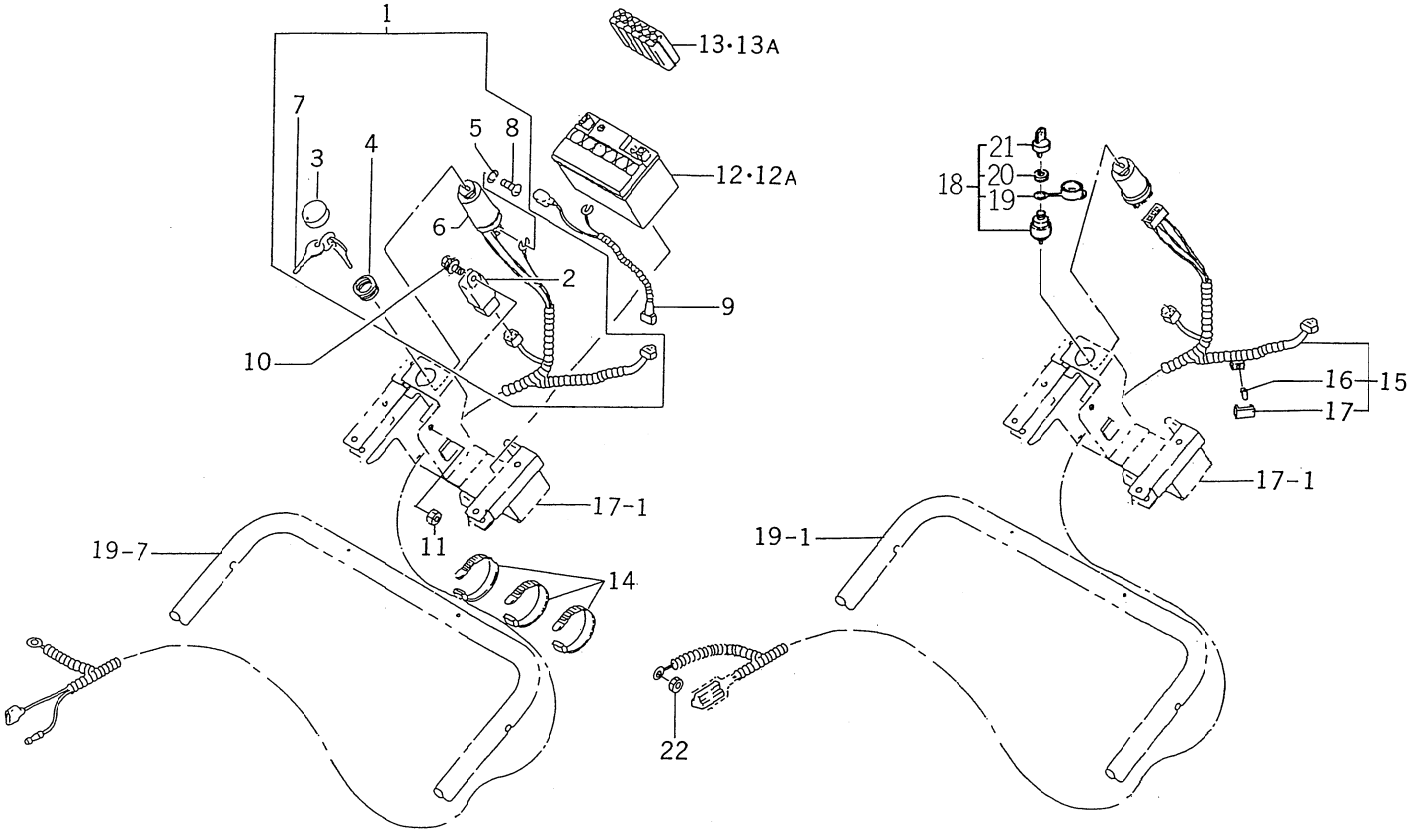


2500-623

| KEY Réf. | PART CODE Pièces No. | DESCRIPTION | Désignation | QTY Quant. | TYPE OF MODEL Modèl B·B01 | E01 | GB·GBE01 | ITC | COL | GRP | REMARKS Remarques |
|---|---|---|---|---|---|---|---|---|---|---|---|
| 1 | 2500-623-200-40 | HARNESS/MAIN ASSY | Faisceau de fils | 1 | | | 1--600915 | | | | |
| 2 | 2500-623-220-00 | RELAY/4P ASSY | Ens. relais | 1 | | | 1--600915 | | | | |
| 3 | 1386-624-292-00 | CAP | Capuchon | 1 | | | 1--600915 | | | | |
| 4 | 1386-624-293-00 | NUT, RING/M22X1.0 | Ecrou | 1 | | | 1--600915 | | | | |
| 5 | V401-160-004-00 | WASHER, SP/M4 | Rondelle frein | 3 | | | 1--600915 | | | | |
| 6 | 2500-623-271-00 | SWITCH/STATER | Interrupteur | 1 | | | 1--600915 | | | | |
| 7 | 1386-624-300-00 | SWITCH/KEY ASSY | Cle | 1 | | | 1--600915 | | | | |
| 8 | V111-164-000-60 | SCREW/M4X6 | Vis | 3 | | | 1--600915 | | | | |
| 9 | 2500-623-210-10 | HARNESS/BATTERY ASSY | Faiseau de fils | 1 | | | * | | | | |
| 10 | V210-360-601-20 | BOLT, SP/M6X12 | Vis | 1 | | | * | | | | |
| 11 | V301-260-005-00 | NUT | Ecrou | 1 | | | * | | | | |
| 12 | 2500-623-230-20 | BATTERY SET | Batterie | 1 | | | 1--100320 | | | | |
| 12A | 2500-623-230-30 | BATTERY/5 SET | Batterie | 1 | | | 100321- | | | | |
| 13 | 2500-623-290-10 | CONTAINER ASSY | Ens. reais | 1 | | | 1--600915 | | | | |
| 13A | 2500-623-290-20 | CONTAINER/5 ASSY | Ens. reais | 1 | | | 600916- | | | | |
| 14 | 1376-402-003-00 | BAND/WIRE/140 | Bande | 3 | | | * | | | | |
| 15 | 2500-623-200-50 | HARNESS/MAIN ASSY | Faisceau de fils | 1 | | | 600916- | | | | |
| 16 | 2500-623-201-00 | FUSE/BLADE/32V01A | Fusible | 1 | | | 600916- | | | | |
| 17 | 3659-836-202-00 | COVER/1P FUSE BOX | Couvercle | 1 | | | 600916- | | | | |
| 18 | 1105-621-260-00 | SWITCH/STARTER/5PSET | Interrupteur | 1 | | | 600916- | | | | |
| 19 | 2130-542-231-00 | CAP | Capuchon | 1 | | | 600916- | | | | |
| 20 | 2130-542-232-00 | NUT, RING/M22X1.0 | Ecrou | 1 | | | 600916- | | | | |
| 21 | 2130-542-240-00 | KEY ASSY | Clavette | 1 | | | 600916- | | | | |
| 22 | V301-260-005-00 | NUT | Ecrou | 1 | | | * | | | | |

# FIG. 28 HARNESS／BATTERY SYSTEM (GB TYPE)

## Faisceau／batterie (modèle GB)

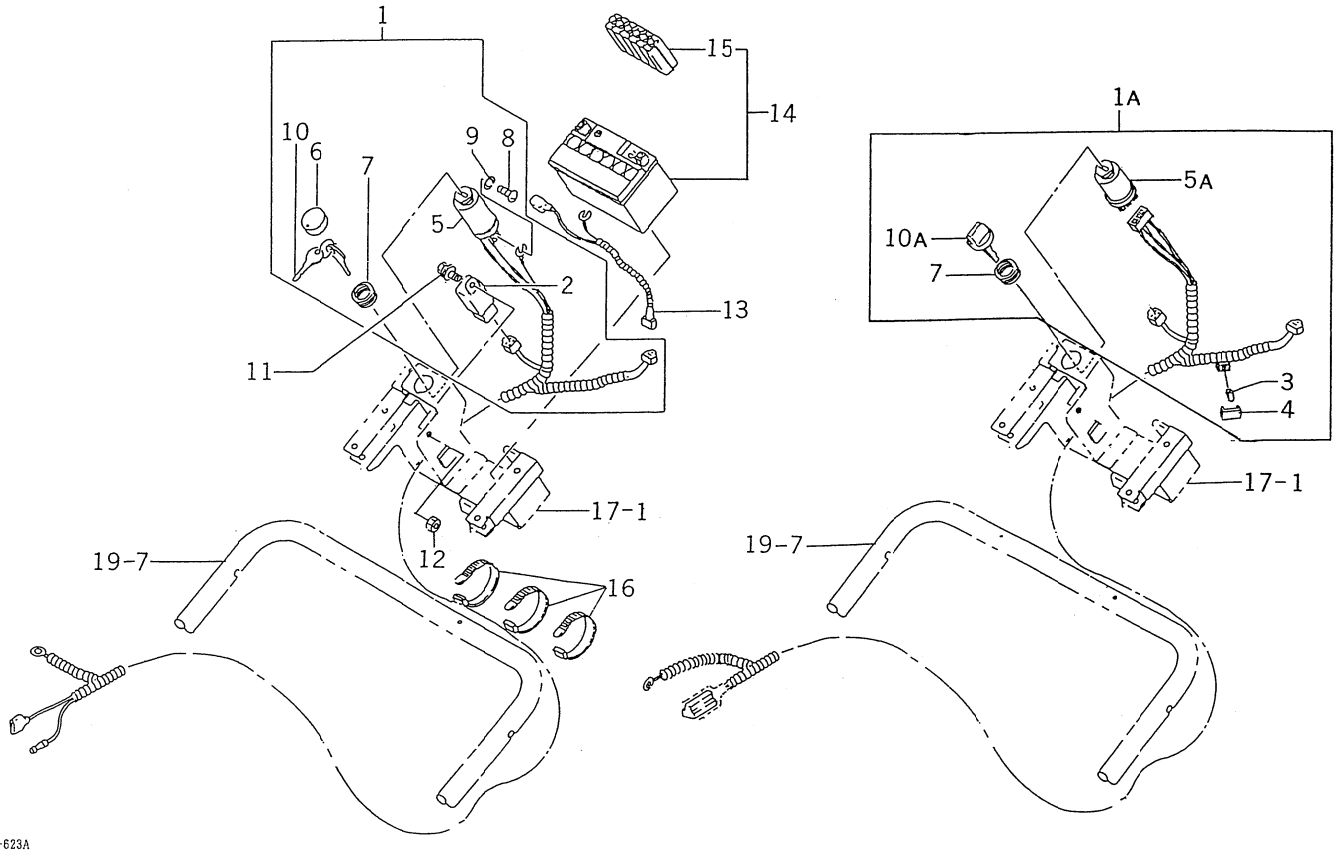


2500-623A

| KEY Réf. | PART CODE Pièces No. | DESCRIPTION | Désignation | QTY Quant. | TYPE OF MODEL Modél B·B01 | E01 | GB·GBE01 | ITC | COL | GRP | REMARKS Remarques |
|---|---|---|---|---|---|---|---|---|---|---|---|
| 1 | 2500-623-200-40 | HARNESS/MAIN ASSY | Faisceau de fils | 1 | | | 1- -600915 | | | | |
| 1A | 2500-623-200-50 | HARNESS/MAIN ASSY | Faisceau de fils | 1 | | | 600916- | | | | |
| 2 | 2500-623-220-00 | RELAY/4P ASSY | Ens. relais | 1 | | | * | | | | |
| 3 | 2500-623-201-00 | FUSE/BLADE/32V01A | Fusible | 1 | | | * | | | | |
| 4 | 3659-836-202-00 | COVER/1P FUSE BOX | Couversle | 1 | | | * | | | | |
| 5 | 2500-623-270-00 | SWITCH/STARTER ASSY | Intreeupteur | 1 | | | 1- -600915 | | | | |
| 5A | 1105-621-310-00 | SWITCH/STARTER/5P | Intreeupteur | 1 | | | 600916- | | | | |
| 6 | 1386-624-292-00 | CAP | Capuchon | 1 | | | * | | | | |
| 7 | 1386-624-293-00 | NUT, RING/M22X1.0 | Ecrou | 1 | | | * | | | | |
| 8 | V111-164-000-60 | SCREW/M4X6 | Vis | 3 | | | * | | | | |
| 9 | V401-160-004-00 | WASHER, SP/M4 | Rondelle | 3 | | | * | | | | |
| 10 | 1386-624-300-00 | SWITCH/KEY ASSY | Cle | 1 | | | 1- -600915 | | | | |
| 10A | 2130-542-240-00 | KEY ASSY | Clavette | 1 | | | 600916- | | | | |
| 11 | V210-360-601-20 | BOLT, SP/M6X12 | Vis | 1 | | | * | | | | |
| 12 | V301-260-005-00 | NUT | Ecrou | 1 | | | * | | | | |
| 13 | 2500-623-210-10 | HARNESS/BATTERY ASSY | Faisceau de fils | 1 | | | * | | | | |
| 14 | 2500-623-530-00 | BATTERY/J SET | Batterie | 1 | | | * | | | | |
| 15 | 2500-623-590-00 | CONTAINER/J ASSY | Ens. relais | 1 | | | * | | | | |
| 16 | 1376-402-003-00 | BAND/WIRE/140 | Bande | 2 | | | * | | | | |

# FIG. 29 MARK, ORNAMENT, LABEL SYSTEM

## Etiquettes

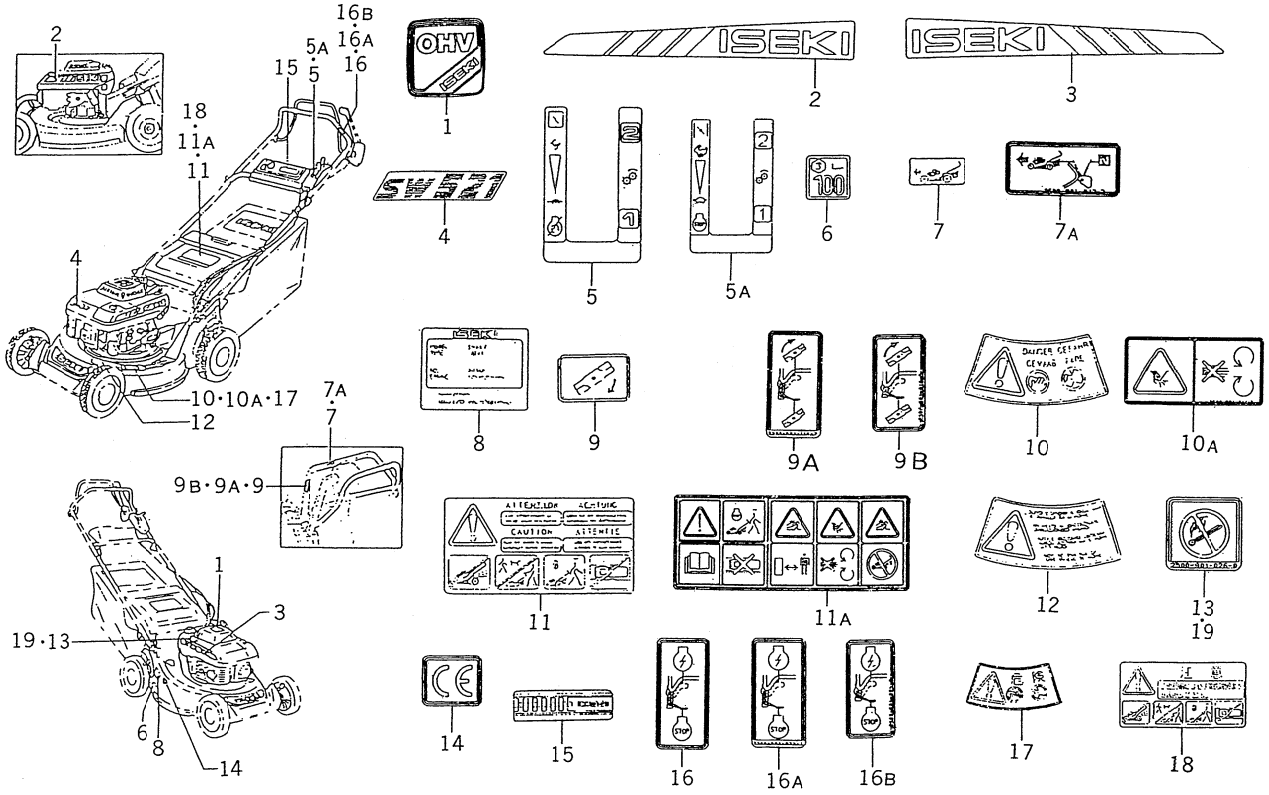


| KEY Réf. | PART CODE Pièces No. | DESCRIPTION | Désignation | QTY Quant. | TYPE OF MODEL Modél B·B01 | E01 | GB·GBE01 | ITC | COL | GRP | REMARKS Remarques |
|---|---|---|---|---|---|---|---|---|---|---|---|
| 1 | 2500-901-001-00 | LABEL, ENGINE/TOP | Etiquette | 1 | * | * | * | | | | |
| 2 | 2500-901-002-00 | LABEL, ENGINE/LH/A | Etiquette | 1 | * | * | * | | | | |
| 3 | 2500-901-004-00 | LABEL, ENGINE/RH | Etiquette | 1 | * | * | * | | | | |
| 4 | 2500-901-005-00 | ﾗﾍﾞﾙ(SW521) | Etiquette | 1 | * | * | * | | | | |
| 5 | 2500-901-007-00 | LABEL, CONTROL | Etiquette | 1 | 1--602240 | 1--602240 | 1--602240 | | | | |
| 5A | 2500-901-007-10 | LABEL, CONTROL | Etiquette | 1 | 602241- | 602241- | 602241- | | | | |
| 6 | 2500-901-008-00 | LABEL, NOISE/100 | Etiquette | 1 | * | * | * | | | | |
| 7 | 2500-901-017-00 | LABEL, TRAVEL | Etiquette | 1 | 1--600240 | 1--602240 | 1--602240 | | | | |
| 7A | 2500-901-017-20 | LABEL/TRAVEL | Etiquette | 1 | 602241- | 602241- | 602241- | | | | |
| 8 | J910-000-200-00 | LABEL/MODEL ASSY | Etiquette | 1 | * | * | * | | | | |
| 9 | 2500-901-018-00 | LABEL/BBC | Etiquette | 1 | 1--300150 | | 1--300150 | | | | |
| 9A | 2500-901-018-20 | LABEL/BBC | Etiquette | 1 | 300151--300390 | | 300151--300390 | | | | |
| 9B | 2500-901-018-30 | LABEL/BBC | Etiquette | 1 | 300391- | | 300391- | | | | |
| 10 | 2500-901-014-20 | LABEL/DANGER | Etiquette | 2 | 1--300000 | 1--300000 | 1--300000 | | | | |
| 10A | 2500-901-014-30 | LABEL/DANGER | Etiquette | 2 | 300001- | 300001- | 300001- | | | | |
| 11 | 2500-901-015-20 | LABEL/CAUTION | Etiquette | 1 | 1--300000 | 1--300000 | 1--300000 | | | | |
| 11A | 2500-901-015-30 | LABEL/CAUTION | Etiquette | 1 | 300001- | 300001- | 300001- | | | | |
| 12 | 2500-901-016-20 | LABEL/PLUG | Etiquette | 1 | * | * | * | | | | |
| 13 | 2500-901-026-00 | LABEL | Etiquette | 1 | * | * | * | | | | |
| 14 | 2500-901-027-00 | LABEL/CE | Etiquette | 1 | * | * | * | | | | |
| 15 | 2500-901-013-00 | LABEL/SELF | Etiquette | 1 | | | * | | | | |
| 16 | 2500-901-025-00 | LABEL/START | Etiquette | 1 | | 1--300150 | | | | | |
| 16A | 2500-901-025-10 | LABEL/START | Etiquette | 1 | | 300151--300390 | | | | | |
| 16B | 2500-901-025-20 | LABEL/START | Etiquette | 1 | | 300391- | | | | | |
| 17 | 2500-907-014-00 | LABEL/DANGER/J | Etiquette | 2 | * | | * | | | | |

# FIG. 29 MARK, ORNAMENT, LABEL SYSTEM

## Etiquettes

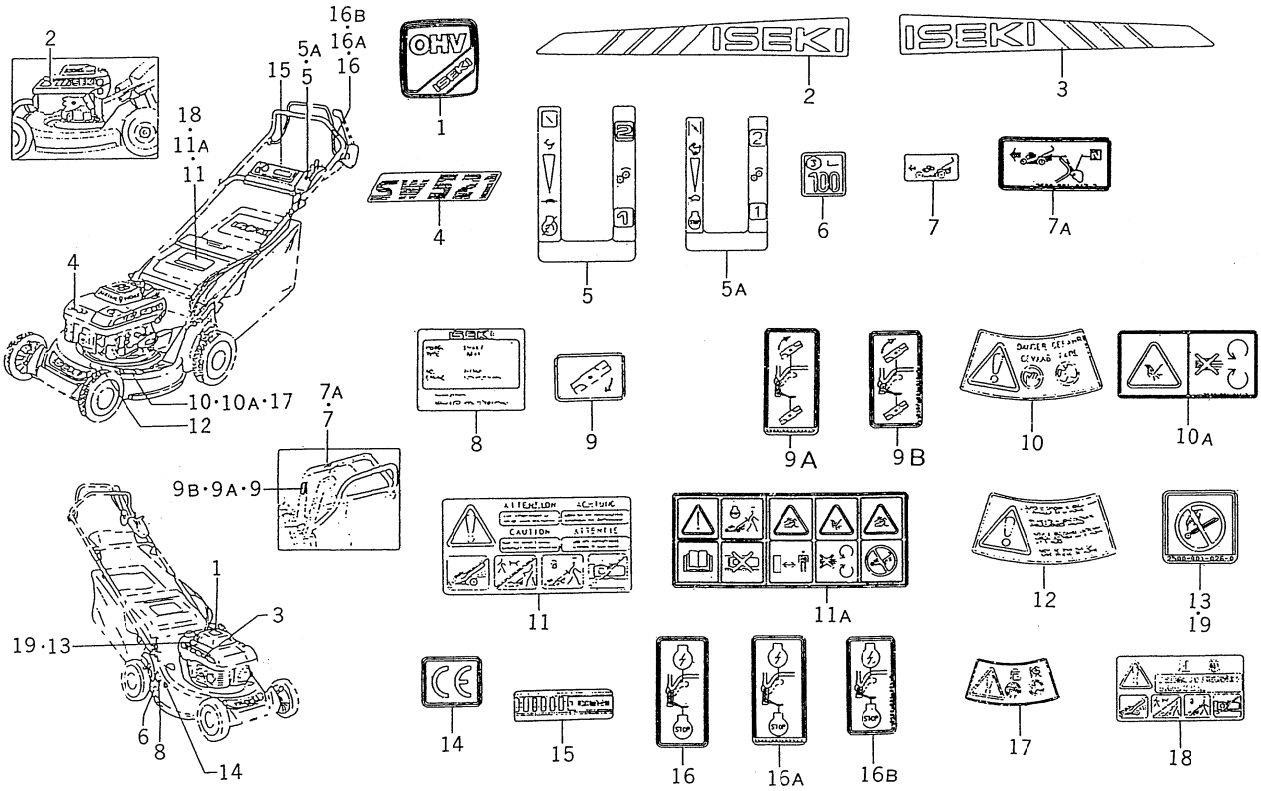


2500-907

| KEY Réf. | PART CODE Pièces No. | DESCRIPTION | Désignation | QTY Quant. | TYPE OF MODEL Modél B·B01 | E01 | GB·GBE01 | ITC | COL | GRP | REMARKS Remarques |
|---|---|---|---|---|---|---|---|---|---|---|---|
| 18 | 2500-907-015-00 | LABEL/CAUTION/J | Etiquette | 1 | * | | * | | | | |
| 19 | 2500-901-026-00 | LABEL | Etiquette | 1 | * | | * | | | | |

# FIG. 30 TOOLS, MANUAL SYSTEM
## Outils／manuel

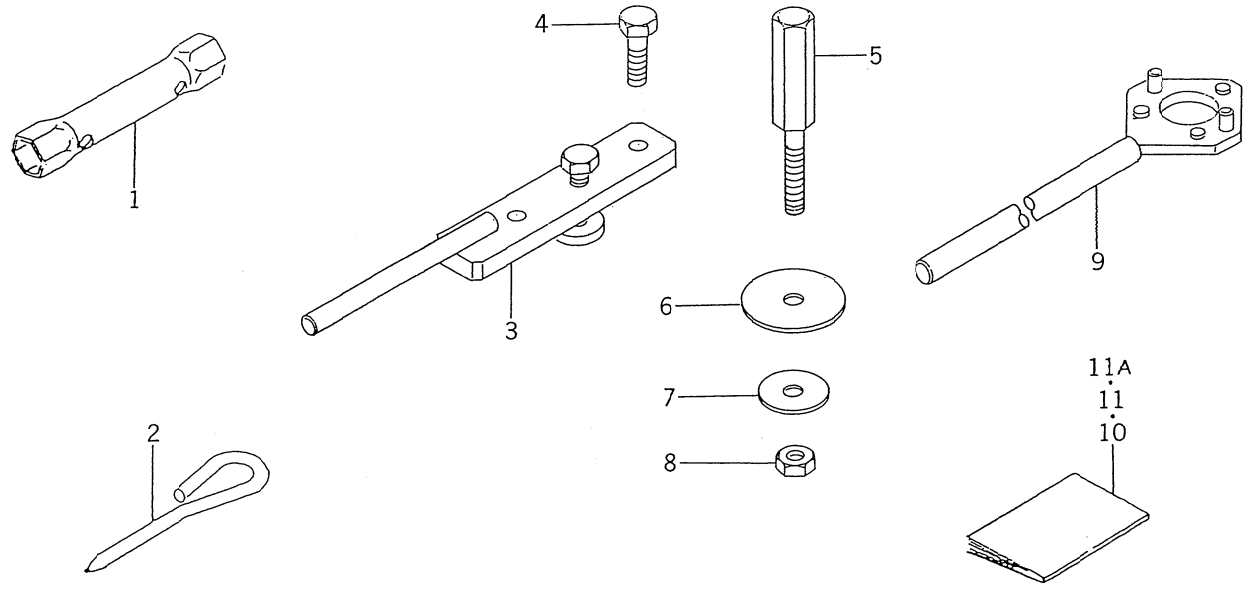


2500-930

| KEY Réf. | PART CODE Pièces No. | DESCRIPTION | Désignation | QTY Quant. | TYPE OF MODEL Modél B·B01 | E01 | GB·GBE01 | ITC | COL | GRP | REMARKS Remarques |
|---|---|---|---|---|---|---|---|---|---|---|---|
| 1 | 2500-930-001-00 | WRENCH/PLUG | Cle a bougie | 1 | * | * | * | | | | |
| 2 | 2500-930-002-00 | BAR/WRENCH | Tournevis | 1 | * | * | * | | | | |
| 3 | 2500-931-210-00 | SPECIAL TOOL COMP | Extractevr | 1 | T | | T | | | | |
| 4 | V203-361-003-00 | BOLT | Vis | 2 | T | | T | | | | |
| 5 | 2500-931-001-00 | BOLT/M10X55 | Vis | 1 | T | | T | | | | |
| 6 | 2500-215-002-00 | WASHER/10X55X5 | Rondelle | 1 | T | | T | | | | |
| 7 | 2500-265-014-00 | WASHER/10X37X06 | Rondelle | 1 | T | | T | | | | |
| 8 | V304-260-010-00 | NUT/M10 | Ecrou | 1 | T | | T | | | | |
| 9 | 2500-932-210-00 | SPECIAL TOOL/ENGINE | Manuel | 1 | T | T | T | | | | |
| 10 | 2500-990-001-00 | MANUAL/OPRATION/J | Manuel | 1 | * | | * | | | | |
| 11 | 2500-991-001-10 | MANUAL/OPRATION/4 | Manuel | 1 | 1-609210 | 1-609210 | 1-609210 | | | | |
| 11A | 2500-991-001-20 | MANUAL/OPRATION/4 | Manuel | 1 | 609211- | 609211- | 609211- | | | | |

# NUMERICAL INDEX

FC150V-AB02. EB02

| PART CODE Piéces No. | FIG. Réf No. | KEY No. | PART CODE Piéces No. | FIG. Réf No. | KEY No. | PART CODE Piéces No. | FIG. Réf No. | KEY No. |
|---|---|---|---|---|---|---|---|---|
| 2500-930-001-00 | 14 | 6 | 5130-086-030-XX | 2 | 3A | 5140-242-183-XX | 6 | 1 |
| 2500-930-002-00 | 14 | 5 | 5130-246-002-XX | 2 | 15 | 5140-242-251-XX | 5 | 1 |
| 5105-018-162-AX | 6 | 27 | 5130-256-003-XX | 2 | 16 | 5140-242-252-XX | 5 | 2 |
| 5107-011-225-AX | 7 | 33 | 5130-256-004-XX | 2 | 17 | 5140-242-289-XX | 5 | 1A |
| 5110-042-099-XX | 1 | 1 | 5130-256-013-XX | 2 | 4 | 5140-902-009-XX | 5 | 1B |
| 5110-086-008-XX | 1 | 39 | 5130-256-014-XX | 2 | 5 | 5140-902-013-XX | 5 | 2A |
| 5110-086-023-XX | 1 | 2 | 5130-272-058-XX | 2 | 18 | 5140-902-023-XX | 5 | 3 |
| 5110-092-036-XX | 8 | 1 | 5130-292-094-XX | 2 | 6 | 5144-013-482-AX | 6 | 26 |
| 5110-092-037-XX | 8 | 2 | 5130-292-095-XX | 2 | 7 | 5144-015-121-BX | 7 | 36 |
| 5110-092-346-XX | 4 | 1 | 5130-372-359-XX | 2 | 19 | 5144-015-135-AX | 7 | 37 |
| 5110-092-740-XX | 1 | 3 | 5130-372-453-XX | 2 | 8 | 5144-015-321-BX | 7 | 35 |
| 5110-092-742-XX | 10 | 1 | 5130-702-064-XX | 12 | 2 | 5144-015-385-AX | 7 | 34 |
| 5110-092-743-XX | 10 | 23 | 5130-702-072-XX | 3 | 6 | 5144-996-122-AX | 9 | 12 |
| 5110-092-746-XX | 9 | 1 | 5130-702-077-XX | 11 | 4 | 5144-996-127-AX | 9 | 23 |
| 5110-092-770-XX | 1 | 4 | 5130-702-078-XX | 4 | 2 | 5144-996-143-AX | 9 | 18 |
| 5110-092-831-XX | 11 | 2 | 5130-912-113-XX | 12 | 3 | 5144-996-159-AX | 9 | 9 |
| 5110-092-833-XX | 9 | 2 | 5130-B05-10X-XX | 1 | 30 | 5145-766-130-AX | 9 | 6 |
| 5110-092-848-XX | 1 | 5 | | 5 | 11 | 5145-986-128-AX | 9 | 10 |
| 5110-122-255-XX | 12 | 8 | | 10 | 27 | 5145-986-138-AX | 9 | 21 |
| 5110-122-272-XX | 10 | 2 | 5130-B06-10X-XX | 11 | 23 | 5145-986-157-AX | 9 | 22 |
| 5110-122-313-XX | 10 | 2A | 5130-B06-12X-XX | 1 | 31 | 5145-V17-281-AX | 1 | 43 |
| 5110-132-119-XX | 10 | 4 | | 11 | 17 | 5150-032-006-XX | 9 | 4 |
| 5110-132-120-XX | 10 | 5 | 5130-B06-14X-XX | 1 | 48 | 5150-032-364-XX | 8 | 5 |
| 5110-222-057-XX | 1 | 6 | 5130-B06-30X-XX | 7 | 13 | 5154-706-133-AX | 9 | 7 |
| 5110-292-002-XX | 10 | 3 | 5130-G06-25X-XX | 1 | 32 | 5156-013-452-AX | 12 | 16 |
| 5110-462-053-XX | 10 | 6 | | 5 | 12 | 5158-014-231-AX | 1 | 47 |
| 5110-602-007-XX | 1 | 3A | | 6 | 18 | 5160-202-052-XX | 8 | 6 |
| 5110-602-009-XX | 10 | 7 | 5130-G06-45X-XX | 1 | 33 | 5160-252-001-XX | 8 | 7 |
| 5110-602-010-XX | 8 | 28 | 5130-G08-45X-XX | 1 | 34 | 5160-302-083-XX | 8 | 8 |
| 5110-602-011-XX | 1 | 4A | 5131-072-202-XX | 1 | 7 | 5160-312-058-XX | 8 | 9 |
| 5110-602-012-XX | 8 | 29 | 5131-072-220-XX | 1 | 8 | | 9 | 13 |
| 5110-602-067-XX | 10 | 1A | 5131-162-065-XX | 3 | 7 | 5160-352-063-XX | 8 | 10 |
| 5110-B05-22X-XX | 6 | 29 | 5131-226-116-00 | 9 | 8 | 5160-412-178-XX | 8 | 11 |
| 5112-B05-22X-XX | 6 | 17 | | 9 | 26 | | 9 | 14 |
| 5117-604-241-00 | 1 | 46 | 5131-652-072-XX | 12 | 4 | 5160-412-197-XX | 8 | 12 |
| 5119-200-900-AX | 14 | 4 | 5131-682-288-XX | 7 | 2 | | 9 | 15 |
| 5120-042-090-XX | 3 | 1 | 5131-682-298-XX | 7 | 3 | 5160-602-129-XX | 10 | 8 |
| 5120-052-074-XX | 3 | 2 | 5131-682-303-XX | 11 | 6 | 5160-732-124-XX | 6 | 2 |
| 5120-092-062-XX | 3 | 3 | 5131-832-258-XX | 1 | 9 | 5160-732-136-XX | 8 | 30 |
| 5120-162-057-XX | 3 | 4 | 5131-832-259-XX | 1 | 10 | | 9 | 3 |
| 5120-322-065-XX | 3 | 5 | 5132-516-025-XX | 2 | 9 | 5161-042-052-XX | 11 | 7 |
| 5127-502-383-00 | 10 | 25 | 5132-516-027-XX | 2 | 10 | 5161-262-149-XX | 1 | 12 |
| 5130-012-109-XX | 2 | 1 | 5136-506-101-00 | 9 | 11 | 5161-262-150-XX | 1 | 13 |
| 5130-022-074-XX | 2 | 2 | 5140-242-180-XX | 1 | 11 | 5161-262-173-XX | 9 | 16 |
| 5130-086-017-XX | 2 | 3 | 5140-242-181-XX | 5 | 13 | 5161-262-199-XX | 8 | 14 |

| PART CODE Piéces No. | FIG. KEY Réf No. | | PART CODE Piéces No. | FIG. KEY Réf No. | | PART CODE Piéces No. | FIG. KEY Réf No. | |
|---|---|---|---|---|---|---|---|---|
| 5161-692-104-XX | 7 | 30 | 5391-802-904-XX | 7 | 1A | 5705-A04-100-0X | 11 | 19 |
| 5161-692-125-XX | 7 | 15 | 5410-B05-00X-XX | 6 | 22 | 5920-013-122-XX | 2 | 20 |
| 5161-712-060-XX | 7 | 31 | 5410-B06-00X-XX | 7 | 38 | 5920-022-011-XX | 8 | 16 |
| 5161-712-080-XX | 7 | 16 | 5411-B05-00X-XX | 10 | 22 | 5920-022-269-XX | 7 | 21 |
| 5164-706-114-00 | 9 | 5 | 5420-362-051-XX | 7 | 19 | 5920-042-117-XX | 5 | 4 |
| 5165-506-137-AX | 9 | 19 | 5460-752-082-XX | 12 | 6 | 5920-092-015-XX | 8 | 17 |
| 5171-966-812-00 | 11 | 21 | 5490-156-055-XX | 1 | 40 | 5920-092-024-XX | 8 | 18 |
| 5172-708-418-BX | 6 | 23 | 5490-156-088-XX | 1 | 15 | 5920-092-104-XX | 10 | 24 |
| 5172-708-419-AX | 6 | 24 | 5490-192-091-XX | 11 | 9 | 5920-092-149-XX | 8 | 19 |
| 5172-G06-80X-XX | 10 | 19 | 5490-192-094-XX | 11 | 5 | | 9 | 20 |
| 5182-926-656-00 | 11 | 20 | 5490-702-491-XX | 10 | 9 | 5920-092-166-XX | 1 | 20 |
| 5186-B06-80X-XX | 10 | 20 | 5490-732-055-XX | 1 | 16 | | 10 | 11 |
| 5187-B05-10X-XX | 1 | 35 | 5490-782-064-XX | 3 | 9 | 5920-092-280-XX | 12 | 11 |
| 5187-B06-14X-XX | 7 | 28 | 5490-802-143-XX | 12 | 15 | 5920-092-296-XX | 11 | 8 |
| 5210-832-062-XX | 1 | 14 | 5490-882-379-XX | 12 | 1 | 5920-092-308-XX | 10 | 12 |
| 5211-182-069-XX | 3 | 12 | 5491-062-446-XX | 10 | 10 | 5920-151-170-XX | 5 | 5 |
| 5211-182-082-XX | 3 | 12A | 5491-092-054-XX | 11 | 3 | 5920-151-193-XX | 7 | 24 |
| 5211-192-119-XX | 6 | 3 | 5491-102-076-XX | 7 | 20 | | 10 | 13 |
| 5211-192-139-XX | 6 | 3A | 5491-182-068-XX | 3 | 18 | 5920-152-051-XX | 7 | 5 |
| 5211-302-066-XX | 6 | 4 | 5491-182-119-XX | 3 | 11 | 5920-152-240-XX | 3 | 8 |
| 5211-692-004-XX | 6 | 5 | 5491-202-184-XX | 1 | 41 | 5920-152-241-XX | 5 | 6 |
| 5211-692-066-XX | 6 | 6 | 5491-202-240-XX | 1 | 17 | 5920-152-253-XX | 3 | 10 |
| 5211-712-153-XX | 6 | 7 | 5491-202-246-XX | 1 | 18 | 5920-222-019-XX | 7 | 22 |
| 5211-712-176-XX | 6 | 7A | 5491-212-113-XX | 9 | 17 | 5920-222-102-XX | 6 | 13 |
| 5211-712-200-XX | 6 | 8 | 5491-212-189-XX | 8 | 15 | 5920-222-131-XX | 1 | 44 |
| 5211-872-060-XX | 7 | 17 | 5510-012-214-XX | 11 | 10 | 5920-222-136-XX | 5 | 14 |
| 5211-942-186-XX | 6 | 30 | 5510-482-069-XX | 11 | 1 | | 10 | 26 |
| 5211-942-218-XX | 6 | 9 | 5520-052-094-XX | 4 | 3 | 5920-222-372-XX | 7 | 6 |
| 5211-942-290-XX | 6 | 10 | 5551-A06-12X-XX | 1 | 36 | 5920-222-384-XX | 12 | 12 |
| 5214-B04-12X-XX | 8 | 13 | 5554-A06-00X-XX | 7 | 29 | 5920-262-272-XX | 10 | 14 |
| | 9 | 29 | 5560-072-118-XX | 14 | 1 | 5920-262-273-XX | 5 | 7 |
| 5214-B04-20X-XX | 7 | 14 | 5560-312-375-XX | 13 | 1 | 5920-262-274-XX | 5 | 8 |
| 5214-B05-10X-XX | 10 | 21 | 5560-312-376-XX | 13 | 2 | 5920-272-003-XX | 8 | 20 |
| 5233-B05-10X-XX | 11 | 18 | 5560-312-384-XX | 13 | 3 | 5920-272-004-XX | 8 | 21 |
| 5241-B04-12X-XX | 6 | 19 | 5590-562-726-XX | 2 | 14 | 5920-332-067-XX | 8 | 22 |
| 5260-112-224-XX | 6 | 25 | 5590-562-790-XX | 1 | 19 | 5920-332-161-XX | 2 | 12 |
| 5260-112-246-XX | 6 | 11 | | 1 | 42 | 5920-372-202-XX | 11 | 11 |
| 5260-112-279-XX | 6 | 11A | 5591-012-079-XX | 12 | 9 | 5920-372-209-XX | 7 | 8 |
| 5260-112-306-XX | 6 | 12 | 5591-062-115-XX | 12 | 10 | 5920-382-077-XX | 6 | 14 |
| 5311-B05-00X-XX | 6 | 20 | 5592-262-201-XX | 7 | 4 | 5920-382-093-XX | 2 | 13 |
| 5314-G14-00X-XX | 6 | 21 | 5592-262-293-XX | 7 | 4A | 5920-431-264-XX | 1 | 21 |
| 5390-032-066-XX | 7 | 32 | 5592-312-071-XX | 4 | 4 | 5920-432-006-XX | 8 | 23 |
| 5390-032-071-XX | 7 | 18 | 5601-B62-05X-XX | 1 | 37 | 5920-432-168-XX | 3 | 13 |
| 5391-082-059-XX | 12 | 5 | 5670-D20-15X-XX | 1 | 38 | | 3 | 14 |
| 5391-802-549-XX | 7 | 1 | 5670-D20-16X-XX | 4 | 5 | 5920-432-169-XX | 3 | 15 |

FC150V-AB02. EB02

| PART CODE Piéces No. | FIG. KEY Réf No. | | PART CODE Piéces No. | FIG. KEY Réf No. | | PART CODE Piéces No. | FIG. KEY Réf No. | |
|---|---|---|---|---|---|---|---|---|
| 5920-452-155-XX | 1 | 45 | 5921-902-163-XX | 8 | 4 | | | |
| 5920-492-204-XX | 1 | 22 | 5922-002-026-XX | 1 | 27 | | | |
| 5920-492-208-XX | 1 | 23 | 5922-002-029-XX | 7 | 27 | | | |
| 5920-592-256-XX | 1 | 24 | 5922-002-032-XX | 10 | 17 | | | |
| 5920-592-257-XX | 10 | 15 | 5922-002-033-XX | 1 | 28 | | | |
| 5920-592-262-XX | 11 | 12 | 5922-002-034-XX | 1 | 29 | | | |
| 5920-632-096-XX | 8 | 24 | 5922-002-078-XX | 5 | 10 | | | |
| | 9 | 24 | | 10 | 18 | | | |
| 5920-642-002-XX | 8 | 25 | | | | | | |
| 5920-642-065-XX | 9 | 25 | | | | | | |
| 5920-662-180-XX | 1 | 25 | | | | | | |
| 5920-662-193-XX | 1 | 26 | | | | | | |
| 5920-702-081-XX | 6 | 28 | | | | | | |
| 5920-702-084-XX | 6 | 15 | | | | | | |
| 5920-712-109-XX | 5 | 15 | | | | | | |
| 5920-712-113-XX | 5 | 9 | | | | | | |
| 5920-812-009-XX | 8 | 26 | | | | | | |
| 5920-812-265-XX | 12 | 13 | | | | | | |
| 5920-812-299-XX | 7 | 23 | | | | | | |
| 5920-812-342-XX | 3 | 16 | | | | | | |
| 5920-932-087-XX | 9 | 30 | | | | | | |
| 5920-932-088-XX | 11 | 13 | | | | | | |
| 5920-932-101-XX | 8 | 27 | | | | | | |
| 5921-072-057-XX | 14 | 2 | | | | | | |
| 5921-102-093-XX | 14 | 3 | | | | | | |
| 5921-432-135-XX | 7 | 9 | | | | | | |
| 5921-432-143-XX | 8 | 3 | | | | | | |
| | 9 | 27 | | | | | | |
| 5921-432-148-XX | 7 | 10 | | | | | | |
| 5921-442-176-XX | 12 | 14 | | | | | | |
| 5921-442-177-XX | 12 | 7 | | | | | | |
| 5921-442-211-XX | 7 | 11 | | | | | | |
| 5921-442-213-XX | 7 | 25 | | | | | | |
| 5921-442-235-XX | 7 | 26 | | | | | | |
| 5921-442-266-XX | 7 | 12 | | | | | | |
| 5921-502-101-XX | 10 | 16 | | | | | | |
| 5921-502-102-XX | 3 | 17 | | | | | | |
| 5921-502-122-XX | 2 | 11 | | | | | | |
| 5921-502-182-XX | 7 | 7 | | | | | | |
| 5921-702-009-XX | 11 | 14 | | | | | | |
| 5921-702-020-XX | 11 | 22 | | | | | | |
| 5921-702-037-XX | 11 | 15 | | | | | | |
| 5921-702-041-XX | 6 | 16 | | | | | | |
| 5921-702-043-XX | 11 | 16 | | | | | | |
| 5921-902-003-XX | 9 | 28 | | | | | | |

# NUMERICAL INDEX

FC150V-AB03. FB03. GB03

| PART CODE Piéces No. | FIG. KEY Réf No. | | PART CODE Piéces No. | FIG. KEY Réf No. | | PART CODE Piéces No. | FIG. KEY Réf No. | |
|---|---|---|---|---|---|---|---|---|
| 2500-930-001-00 | 16 | 3 | 5120-162-057-XX | 3 | 4 | 5131-652-072-XX | 13 | 6 |
| 2500-930-002-00 | 16 | 2 | 5120-162-062-XX | 3 | 4A | 5131-682-288-XX | 8 | 6 |
| 2921-072-057-XX | 16 | 5 | 5120-322-065-XX | 3 | 5 | 5131-682-298-XX | 8 | 7 |
| 2921-102-093-XX | 16 | 6 | 5122-632-079-XX | 14 | 1 | 5131-682-303-XX | 12 | 9 |
| 5105-018-162-AX | 6 | 13 | 5127-502-883-00 | 11 | 14 | 5131-832-258-XX | 1 | 9 |
| 5107-011-225-AX | 8 | 9 | 5130-012-109-XX | 2 | 1 | 5131-832-259-XX | 1 | 10 |
| 5110-042-099-XX | 1 | 1 | 5130-022-074-XX | 2 | 2 | 5132-516-025-XX | 2 | 11 |
| 5110-086-008-XX | 1 | 2 | 5130-086-017-XX | 2 | 3 | 5132-516-027-XX | 2 | 12 |
| 5110-086-023-XX | 1 | 48 | 5130-086-030-XX | 2 | 17 | 5132-702-049-XX | 1 | 51 |
| 5110-092-036-XX | 10 | 26 | 5130-246-002-XX | 2 | 4 | 5132-702-050-XX | 1 | 52 |
| 5110-092-037-XX | 10 | 27 | 5130-256-003-XX | 2 | 5 | 5136-506-101-00 | 9 | 11 |
| 5110-092-346-XX | 4 | 1 | 5130-256-004-XX | 2 | 6 | 5140-242-180-XX | 1 | 11 |
| 5110-092-740-XX | 1 | 3 | 5130-256-013-XX | 2 | 18 | 5140-242-181-XX | 5 | 1 |
| 5110-092-742-XX | 11 | 1 | 5130-256-014-XX | 2 | 19 | 5140-242-183-XX | 6 | 1 |
| 5110-092-743-XX | 11 | 2 | 5130-272-058-XX | 2 | 7 | | 7 | 1 |
| 5110-092-746-XX | 9 | 1 | 5130-292-094-XX | 2 | 8 | 5140-242-251-XX | 5 | 2 |
| 5110-092-770-XX | 1 | 4 | 5130-292-095-XX | 2 | 9 | 5140-242-252-XX | 5 | 3 |
| 5110-092-786-XX | 14 | 2 | 5130-372-359-XX | 2 | 10 | 5140-242-289-XX | 5 | 18 |
| 5110-092-831-XX | 12 | 4 | 5130-372-453-XX | 2 | 20 | 5140-902-009-XX | 5 | 19 |
| 5110-092-833-XX | 9 | 2 | 5130-702-064-XX | 13 | 4 | 5140-902-013-XX | 5 | 14 |
| 5110-092-848-XX | 1 | 5 | 5130-702-072-XX | 3 | 6 | 5140-902-023-XX | 5 | 15 |
| 5110-122-255-XX | 13 | 3 | 5130-702-077-XX | 12 | 1 | 5140-902-074-XX | 5 | 15A |
| 5110-122-272-XX | 11 | 3 | 5130-702-078-XX | 4 | 2 | 5144-013-482-AX | 6 | 12 |
| 5110-122-313-XX | 11 | 28 | 5130-912-113-XX | 13 | 5 | 5144-015-121-BX | 8 | 19 |
| 5110-132-119-XX | 11 | 5 | 5130-B05-10X-XX | 1 | 29 | 5144-015-135-AX | 8 | 23 |
| 5110-132-120-XX | 11 | 6 | | 5 | 12 | 5144-015-321-BX | 8 | 13 |
| 5110-222-057-XX | 1 | 6 | | 11 | 19 | 5144-015-385-AX | 8 | 10 |
| 5110-292-002-XX | 11 | 4 | 5130-B06-10X-XX | 12 | 17 | 5144-053-092-AX | 6 | 11 |
| 5110-462-053-XX | 11 | 7 | 5130-B06-12X-XX | 1 | 30 | 5144-996-122-AX | 9 | 12 |
| 5110-492-002-XX | 11 | 7A | | 1 | 44 | 5144-996-127-AX | 9 | 23 |
| 5110-602-007-XX | 1 | 49 | | 12 | 22 | 5144-996-143-AX | 9 | 18 |
| 5110-602-009-XX | 11 | 23 | 5130-B06-14X-XX | 1 | 31 | 5144-996-159-AX | 9 | 9 |
| 5110-602-010-XX | 10 | 29 | 5130-B06-30X-XX | 8 | 17 | 5145-766-130-AX | 9 | 6 |
| 5110-602-011-XX | 1 | 50 | 5130-G06-25X-XX | 1 | 32 | 5145-986-128-AX | 9 | 10 |
| 5110-602-012-XX | 10 | 30 | | 5 | 13 | 5145-986-138-AX | 9 | 21 |
| 5110-602-067-XX | 11 | 1A | | 6 | 19 | 5145-986-157-AX | 9 | 22 |
| 5110-B05-22X-XX | 6 | 18 | | 7 | 24 | 5145-V17-281-AX | 1 | 21 |
| | 7 | 22 | 5130-G06-30X-XX | 13 | 22 | 5150-032-006-XX | 9 | 4 |
| 5112-B05-22X-XX | 7 | 23 | 5130-G06-45X-XX | 1 | 33 | 5150-032-364-XX | 10 | 1 |
| 5117-604-241-00 | 1 | 25 | 5130-G08-45X-XX | 1 | 34 | 5154-706-133-AX | 9 | 7 |
| 5119-200-900-AX | 16 | 1 | 5131-072-202-XX | 1 | 7 | 5156-013-452-AX | 13 | 13 |
| 5120-042-090-XX | 3 | 1 | 5131-072-220-XX | 1 | 8 | 5158-014-231-AX | 1 | 26 |
| 5120-052-074-XX | 3 | 2 | 5131-162-065-XX | 3 | 7 | 5160-202-052-XX | 10 | 2 |
| 5120-092-062-XX | 3 | 3 | 5131-226-116-00 | 9 | 8 | 5160-252-001-XX | 10 | 3 |
| 5120-092-068-XX | 3 | 3A | | 9 | 26 | 5160-302-083-XX | 10 | 4 |

FC150V-AB03. FB03. GB03

| PART CODE Piéces No. | FIG. KEY Réf No. | | PART CODE Piéces No. | FIG. KEY Réf No. | | PART CODE Piéces No. | FIG. KEY Réf No. | |
|---|---|---|---|---|---|---|---|---|
| 5160-312-058-XX | 9 | 13 | 5211-692-066-AX | 7 | 6 | 5490-192-094-XX | 12 | 8 |
| | 10 | 5 | 5211-692-066-XX | 6 | 5 | 5490-702-491-XX | 11 | 9 |
| 5160-352-063-XX | 10 | 6 | 5211-712-153-XX | 6 | 7 | 5490-732-055-XX | 1 | 16 |
| 5160-412-178-XX | 9 | 14 | 5211-712-176-XX | 7 | 7 | 5490-782-064-XX | 3 | 8 |
| | 10 | 7 | 5211-712-200-XX | 7 | 8 | 5490-802-143-XX | 13 | 1 |
| 5160-412-197-XX | 9 | 15 | 5211-742-051-XX | 14 | 4 | 5490-882-379-XX | 13 | 2 |
| | 10 | 8 | 5211-872-060-XX | 8 | 3 | 5491-062-446-XX | 11 | 10 |
| 5160-602-129-XX | 11 | 8 | 5211-932-086-XX | 6 | 8 | 5491-092-054-XX | 12 | 6 |
| 5160-732-124-XX | 6 | 2 | 5211-932-151-XX | 7 | 9 | 5491-102-076-XX | 8 | 20 |
| | 7 | 2 | 5214-B04-12X-XX | 9 | 29 | 5491-102-081-XX | 8 | 40 |
| 5160-732-136-XX | 9 | 3 | | 10 | 25 | 5491-182-068-XX | 3 | 9 |
| | 10 | 28 | 5214-B04-20X-XX | 8 | 18 | 5491-182-119-XX | 3 | 18 |
| 5161-042-052-XX | 12 | 10 | 5214-B05-10X-XX | 11 | 27 | 5491-202-185-XX | 1 | 18 |
| 5161-262-149-XX | 1 | 12 | 5223-B04-06X-XX | 14 | 9 | 5491-202-225-XX | 1 | 39 |
| 5161-262-150-XX | 1 | 13 | 5223-D05-16X-XX | 14 | 10 | 5491-202-247-XX | 1 | 17 |
| 5161-262-173-XX | 9 | 16 | 5224-B06-25X-XX | 6 | 20 | 5491-212-113-XX | 9 | 17 |
| 5161-262-199-XX | 10 | 9 | | 7 | 25 | 5491-212-189-XX | 10 | 10 |
| 5161-262-201-XX | 1 | 53 | 5233-B05-10X-XX | 12 | 18 | 5510-012-214-XX | 12 | 2 |
| 5161-262-202-XX | 1 | 54 | 5241-B04-12X-XX | 6 | 21 | 5510-482-069-XX | 12 | 3 |
| 5161-462-156-XX | 14 | 3 | | 7 | 26 | 5520-052-094-XX | 4 | 3 |
| 5161-692-104-XX | 8 | 1 | 5260-112-209-XX | 14 | 5 | 5551-A06-12X-XX | 1 | 36 |
| 5161-692-125-XX | 8 | 38 | 5260-112-210-XX | 14 | 6 | 5552-B10-12X-XX | 13 | 23 |
| 5161-712-060-XX | 8 | 2 | 5260-112-224-XX | 6 | 9 | | 14 | 14 |
| 5161-712-080-XX | 8 | 34 | 5260-112-279-XX | 7 | 10 | 5554-A06-00X-XX | 8 | 29 |
| 5164-706-114-00 | 9 | 5 | 5260-112-283-XX | 13 | 19 | 5560-072-118-XX | 16 | 4 |
| 5165-506-137-AX | 9 | 19 | 5260-112-306-XX | 7 | 11 | 5560-312-375-XX | 15 | 1 |
| 5171-966-812-00 | 12 | 12 | 5311-B05-00X-XX | 6 | 22 | 5560-312-376-XX | 15 | 2 |
| 5172-708-418-BX | 6 | 4 | | 7 | 27 | 5560-312-384-XX | 15 | 3 |
| 5172-708-419-AX | 6 | 6 | 5314-G14-00X-XX | 6 | 23 | 5560-312-447-XX | 15 | 4 |
| 5172-G06-80X-XX | 11 | 20 | | 7 | 28 | 5590-312-076-XX | 6 | 10 |
| 5182-926-656-00 | 12 | 5 | 5315-501-312-2A | 2 | 15 | | 7 | 12 |
| 5186-B06-80X-XX | 11 | 21 | 5390-032-066-XX | 8 | 4 | 5590-312-110-XX | 7 | 13 |
| 5187-B05-10X-XX | 1 | 35 | 5390-032-071-XX | 8 | 30 | 5590-562-726-XX | 2 | 14 |
| 5187-B06-14X-XX | 8 | 27 | 5391-082-059-XX | 13 | 7 | 5590-562-790-XX | 1 | 19 |
| 5187-G06-35X-XX | 14 | 13 | 5391-802-549-XX | 8 | 5 | 5591-012-079-XX | 13 | 9 |
| 5210-832-062-XX | 1 | 14 | 5391-802-904-XX | 8 | 39 | 5591-062-115-XX | 13 | 10 |
| 5211-182-069-XX | 3 | 10 | 5410-B05-00X-XX | 6 | 24 | 5592-212-128-XX | 14 | 7 |
| 5211-182-082-XX | 3 | 10A | | 7 | 29 | 5592-262-201-XX | 8 | 8 |
| 5211-182-090-XX | 3 | 10B | 5410-B06-00X-XX | 8 | 28 | 5592-262-293-XX | 8 | 41 |
| 5211-192-119-XX | 6 | 3 | 5411-B05-00X-XX | 11 | 22 | 5592-312-071-XX | 4 | 4 |
| 5211-192-139-XX | 7 | 3 | 5420-362-051-XX | 8 | 35 | 5601-B62-05X-XX | 1 | 47 |
| 5211-302-066-XX | 7 | 4 | 5460-752-082-XX | 13 | 8 | 5670-D20-15X-XX | 1 | 37 |
| 5211-632-100-XX | 13 | 17 | 5490-156-055-XX | 1 | 15 | 5670-D20-16X-XX | 4 | 5 |
| 5211-632-117-XX | 13 | 18 | 5490-156-088-XX | 1 | 38 | 5705-A04-100-0X | 12 | 19 |
| 5211-692-004-XX | 7 | 5 | 5490-192-091-XX | 12 | 7 | 5920-022-011-XX | 10 | 11 |

FC150V-AB03. FB03. GB03

| PART CODE Piéces No. | FIG. KEY Réf No. | | PART CODE Piéces No. | FIG. KEY Réf No. | | PART CODE Piéces No. | FIG. KEY Réf No. | |
|---|---|---|---|---|---|---|---|---|
| 5920-022-269-XX | 8 | 21 | 5920-431-264-XX | 1 | 23 | 5921-502-182-XX | 8 | 31 |
| 5920-042-117-XX | 5 | 4 | 5920-432-006-XX | 10 | 18 | 5921-702-009-XX | 12 | 15 |
| | 5 | 14 | 5920-432-168-XX | 3 | 11 | 5921-702-020-XX | 12 | 16 |
| 5920-042-118-XX | 5 | 5 | | 3 | 17 | 5921-702-029-XX | 7 | 20 |
| 5920-092-015-XX | 10 | 12 | 5920-432-169-XX | 3 | 12 | 5921-702-037-XX | 12 | 21 |
| 5920-092-024-XX | 10 | 13 | 5920-452-155-XX | 1 | 24 | 5921-702-043-XX | 12 | 20 |
| 5920-092-104-XX | 11 | 11 | 5920-492-204-XX | 1 | 42 | 5921-702-064-XX | 7 | 21 |
| 5920-092-149-XX | 9 | 20 | 5920-492-208-XX | 1 | 43 | 5921-902-003-XX | 9 | 28 |
| | 10 | 14 | 5920-592-256-XX | 1 | 27 | 5921-902-068-XX | 12 | 23 |
| 5920-092-166-XX | 1 | 20 | 5920-592-257-XX | 11 | 17 | 5921-902-163-XX | 10 | 24 |
| | 11 | 12 | 5920-592-261-XX | 13 | 21 | 5922-002-026-XX | 1 | 46 |
| 5920-092-280-XX | 13 | 11 | | 14 | 12 | 5922-002-029-XX | 8 | 37 |
| 5920-092-281-XX | 14 | 8 | 5920-592-262-XX | 12 | 14 | 5922-002-032-XX | 11 | 25 |
| 5920-092-296-XX | 12 | 11 | 5920-632-096-XX | 9 | 24 | 5922-002-033-XX | 1 | 40 |
| 5920-092-307-XX | 7 | 14 | | 10 | 19 | 5922-002-034-XX | 1 | 41 |
| 5920-092-308-XX | 11 | 24 | 5920-642-002-XX | 10 | 20 | 5922-002-078-XX | 5 | 16 |
| 5920-151-170-XX | 5 | 6 | 5920-642-065-XX | 9 | 25 | | 11 | 26 |
| 5920-151-193-XX | 8 | 22 | 5920-662-180-XX | 1 | 28 | | | |
| | 11 | 13 | 5920-662-193-XX | 1 | 45 | | | |
| | 13 | 20 | 5920-702-081-XX | 6 | 16 | | | |
| | 14 | 11 | 5920-702-084-XX | 7 | 17 | | | |
| 5920-152-051-XX | 8 | 32 | 5920-702-087-XX | 7 | 18 | | | |
| 5920-152-240-XX | 3 | 14 | 5920-712-109-XX | 5 | 11 | | | |
| 5920-152-241-XX | 5 | 7 | 5920-712-113-XX | 5 | 17 | | | |
| 5920-152-253-XX | 3 | 15 | 5920-712-122-XX | 6 | 17 | | | |
| 5920-222-019-XX | 8 | 36 | | 7 | 19 | | | |
| 5920-222-102-XX | 7 | 15 | 5920-812-009-XX | 10 | 21 | | | |
| 5920-222-131-XX | 1 | 22 | 5920-812-265-XX | 13 | 16 | | | |
| 5920-222-136-XX | 5 | 8 | 5920-812-299-XX | 8 | 24 | | | |
| | 11 | 15 | 5920-812-342-XX | 3 | 13 | | | |
| 5920-222-372-XX | 8 | 11 | 5920-932-088-XX | 12 | 24 | | | |
| 5920-222-384-XX | 13 | 12 | 5920-932-101-XX | 10 | 22 | | | |
| 5920-262-272-XX | 11 | 16 | 5921-432-135-XX | 8 | 14 | | | |
| 5920-262-273-XX | 5 | 9 | 5921-432-143-XX | 9 | 27 | | | |
| 5920-262-274-XX | 5 | 10 | | 10 | 23 | | | |
| 5920-272-003-XX | 10 | 15 | 5921-432-148-XX | 8 | 15 | | | |
| 5920-272-004-XX | 10 | 16 | 5921-442-176-XX | 13 | 14 | | | |
| 5920-332-067-XX | 10 | 17 | 5921-442-177-XX | 13 | 15 | | | |
| 5920-332-161-XX | 2 | 21 | 5921-442-211-XX | 8 | 16 | | | |
| 5920-372-104-XX | 6 | 14 | 5921-442-213-XX | 8 | 25 | | | |
| 5920-372-202-XX | 12 | 13 | 5921-442-235-XX | 8 | 26 | | | |
| 5920-372-209-XX | 8 | 12 | 5921-442-266-XX | 8 | 33 | | | |
| 5920-382-077-XX | 6 | 15 | 5921-502-101-XX | 11 | 18 | | | |
| | 7 | 16 | 5921-502-102-XX | 3 | 16 | | | |
| 5920-382-093-XX | 2 | 16 | 5921-502-122-XX | 2 | 13 | | | |

# NUMERICAL INDEX

FC150V-EB05

| PART CODE Piéces No. | FIG. | KEY Réf No. | PART CODE Piéces No. | FIG. | KEY Réf No. | PART CODE Piéces No. | FIG. | KEY Réf No. |
|---|---|---|---|---|---|---|---|---|
| 5110-042-099-XX | 1 | 1 | | 10 | 18 | 5187-B05-10X-XX | 1 | 34 |
| 5110-086-023-XX | 1 | 2 | 5130-B06-30X-XX | 7 | 17 | 5187-B06-14X-XX | 7 | 28 |
| 5110-092-036-XX | 8 | 5 | 5130-G06-25X-XX | 1 | 31 | 5210-832-062-XX | 1 | 14 |
| 5110-092-037-XX | 8 | 6 | | 5 | 13 | 5211-182-090-XX | 3 | 10 |
| 5110-092-346-XX | 4 | 1 | | 6 | 19 | 5211-192-139-XX | 6 | 6 |
| 5110-092-831-XX | 10 | 9 | 5130-G06-45X-XX | 1 | 32 | 5211-302-066-XX | 6 | 7 |
| 5110-092-848-XX | 1 | 3 | 5130-G08-45X-XX | 1 | 33 | 5211-692-004-XX | 6 | 8 |
| 5110-122-255-XX | 11 | 3 | 5131-072-202-XX | 1 | 7 | 5211-712-176-XX | 6 | 9 |
| 5110-122-313-XX | 9 | 1 | 5131-072-220-XX | 1 | 8 | 5211-872-060-XX | 7 | 3 |
| 5110-132-119-XX | 9 | 3 | 5131-162-065-XX | 3 | 7 | 5211-942-290-XX | 6 | 10 |
| 5110-132-120-XX | 9 | 4 | 5131-652-072-XX | 11 | 6 | 5214-B04-12X-XX | 8 | 31 |
| 5110-222-057-XX | 1 | 4 | 5131-682-288-XX | 7 | 6 | 5214-B04-20X-XX | 7 | 18 |
| 5110-292-002-XX | 9 | 2 | 5131-682-298-XX | 7 | 7 | 5214-B05-10X-XX | 9 | 21 |
| 5110-482-028-XX | 12 | 1 | 5131-682-303-XX | 10 | 4 | 5233-B05-10X-XX | 10 | 19 |
| 5110-492-002-XX | 9 | 5 | 5131-832-475-XX | 6 | 1 | 5241-B04-12X-XX | 6 | 20 |
| 5110-602-007-XX | 1 | 5 | 5132-516-025-XX | 2 | 9 | 5260-112-191-XX | 6 | 11 |
| 5110-602-009-XX | 9 | 6 | 5132-516-027-XX | 2 | 10 | 5260-112-279-XX | 6 | 12 |
| 5110-602-010-XX | 8 | 1 | 5132-702-049-XX | 1 | 9 | 5311-B05-00X-XX | 6 | 21 |
| 5110-602-011-XX | 1 | 6 | 5132-702-050-XX | 1 | 10 | 5314-G14-00X-XX | 6 | 22 |
| 5110-602-012-XX | 8 | 2 | 5140-242-180-XX | 1 | 11 | 5390-032-071-XX | 7 | 4 |
| 5110-602-067-XX | 9 | 7 | 5140-242-182-XX | 6 | 2 | 5391-082-059-XX | 11 | 7 |
| 5112-B05-16X-XX | 6 | 17 | 5140-242-183-XX | 6 | 3 | 5391-802-904-XX | 7 | 5 |
| 5112-B05-22X-XX | 6 | 18 | 5140-902-009-XX | 5 | 1 | 5391-872-053-XX | 12 | 2 |
| 5120-042-095-XX | 3 | 1 | 5140-902-013-XX | 5 | 2 | 5410-B05-00X-XX | 6 | 23 |
| 5120-052-084-XX | 3 | 2 | 5140-902-023-XX | 5 | 3 | | 12 | 9 |
| 5120-092-068-XX | 3 | 3 | 5150-032-364-XX | 8 | 4 | 5411-B05-00X-XX | 9 | 22 |
| 5120-162-057-XX | 3 | 4 | 5160-202-052-XX | 8 | 7 | 5420-362-051-XX | 7 | 19 |
| 5120-322-065-XX | 3 | 5 | 5160-252-001-XX | 8 | 10 | 5430-012-054-XX | 12 | 3 |
| 5130-012-109-XX | 2 | 1 | 5160-302-083-XX | 8 | 11 | 5460-752-082-XX | 11 | 8 |
| 5130-022-074-XX | 2 | 4 | 5160-312-058-XX | 8 | 12 | 5482-L40-00X-XX | 12 | 10 |
| 5130-086-030-XX | 2 | 5 | 5160-352-063-XX | 8 | 13 | 5490-156-088-XX | 1 | 15 |
| 5130-256-013-XX | 2 | 6 | 5160-412-178-XX | 8 | 14 | 5490-192-091-XX | 10 | 2 |
| 5130-256-014-XX | 2 | 7 | 5160-412-197-XX | 8 | 15 | 5490-192-094-XX | 10 | 3 |
| 5130-292-094-XX | 2 | 2 | 5160-602-129-XX | 9 | 8 | 5490-702-491-XX | 9 | 9 |
| 5130-292-095-XX | 2 | 3 | 5160-732-123-XX | 6 | 4 | 5490-732-055-XX | 1 | 16 |
| 5130-372-453-XX | 2 | 8 | 5160-732-124-XX | 6 | 5 | 5490-782-064-XX | 3 | 8 |
| 5130-702-064-XX | 11 | 4 | 5160-732-136-XX | 8 | 3 | 5490-802-143-XX | 11 | 1 |
| 5130-702-072-XX | 3 | 6 | 5161-042-052-XX | 10 | 5 | 5490-882-364-XX | 11 | 2 |
| 5130-702-077-XX | 10 | 1 | 5161-262-199-XX | 8 | 16 | 5491-062-446-XX | 9 | 10 |
| 5130-702-078-XX | 4 | 2 | 5161-262-201-XX | 1 | 12 | 5491-092-054-XX | 10 | 10 |
| 5130-912-113-XX | 11 | 5 | 5161-262-202-XX | 1 | 13 | 5491-102-076-XX | 7 | 20 |
| 5130-B05-10X-XX | 1 | 29 | 5161-692-104-XX | 7 | 1 | 5491-182-119-XX | 3 | 9 |
| | 5 | 12 | 5161-712-060-XX | 7 | 2 | 5491-202-240-XX | 1 | 17 |
| 5130-B06-10X-XX | 12 | 8 | 5172-G06-80X-XX | 9 | 19 | 5491-212-189-XX | 8 | 17 |
| 5130-B06-12X-XX | 1 | 30 | 5186-B06-80X-XX | 9 | 20 | 5510-012-214-XX | 10 | 7 |

FC150V-EB05

| PART CODE Piéces No. | FIG. KEY Réf No. | | PART CODE Piéces No. | FIG. KEY Réf No. | | PART CODE Piéces No. | FIG. KEY Réf No. | |
|---|---|---|---|---|---|---|---|---|
| 5510-482-069-XX | 10 | 8 | 5920-332-067-XX | 8 | 23 | | 12 | 7 |
| 5520-052-094-XX | 4 | 3 | 5920-332-161-XX | 2 | 13 | 5921-702-009-XX | 10 | 14 |
| 5550-D20-10X-XX | 12 | 11 | 5920-372-202-XX | 10 | 11 | 5921-702-037-XX | 10 | 15 |
| 5551-A06-12X-XX | 1 | 35 | 5920-372-209-XX | 7 | 11 | 5921-702-043-XX | 10 | 16 |
| 5554-A06-00X-XX | 7 | 29 | | 12 | 4 | 5921-702-064-XX | 6 | 16 |
| 5560-072-118-XX | 14 | 1 | 5920-382-077-XX | 6 | 14 | 5921-902-068-XX | 10 | 17 |
| 5560-312-375-XX | 13 | 1 | 5920-382-093-XX | 2 | 14 | 5921-902-163-XX | 8 | 30 |
| 5560-312-447-XX | 13 | 2 | 5920-431-264-XX | 1 | 20 | 5922-002-026-XX | 1 | 26 |
| 5590-562-726-XX | 2 | 12 | 5920-432-006-XX | 8 | 24 | 5922-002-029-XX | 7 | 27 |
| 5590-562-790-XX | 1 | 18 | 5920-432-168-XX | 3 | 11 | 5922-002-032-XX | 9 | 17 |
| 5591-012-079-XX | 11 | 9 | 5920-432-170-XX | 12 | 5 | 5922-002-033-XX | 1 | 27 |
| 5591-062-110-XX | 11 | 10 | 5920-452-204-XX | 1 | 21 | 5922-002-034-XX | 1 | 28 |
| 5592-262-293-XX | 7 | 8 | 5920-492-208-XX | 1 | 22 | 5922-002-037-XX | 5 | 11 |
| 5592-312-071-XX | 4 | 4 | 5920-592-256-XX | 1 | 23 | | 9 | 18 |
| 5601-B62-05X-XX | 1 | 36 | 5920-592-257-XX | 9 | 15 | | | |
| 5670-D20-15X-XX | 1 | 37 | 5920-592-262-XX | 10 | 12 | | | |
| 5670-D20-16X-XX | 4 | 5 | 5920-632-096-XX | 8 | 25 | | | |
| 5920-022-011-XX | 8 | 18 | 5920-642-002-XX | 8 | 26 | | | |
| 5920-022-269-XX | 7 | 21 | 5920-662-180-XX | 1 | 24 | | | |
| 5920-042-117-XX | 5 | 4 | 5920-662-193-XX | 1 | 25 | | | |
| 5920-042-119-XX | 5 | 5 | 5920-702-087-XX | 6 | 15 | | | |
| 5920-092-015-XX | 8 | 8 | 5920-712-113-XX | 5 | 10 | | | |
| 5920-092-024-XX | 8 | 19 | 5920-812-009-XX | 8 | 9 | | | |
| 5920-092-149-XX | 8 | 20 | | 8 | 27 | | | |
| 5920-092-166-XX | 1 | 19 | 5920-812-265-XX | 11 | 13 | | | |
| | 9 | 11 | 5920-812-299-XX | 7 | 24 | | | |
| 5920-092-280-XX | 11 | 11 | 5920-812-342-XX | 3 | 12 | | | |
| 5920-092-296-XX | 10 | 6 | 5920-932-088-XX | 10 | 13 | | | |
| 5920-092-308-XX | 9 | 12 | 5920-932-101-XX | 8 | 28 | | | |
| 5920-151-170-XX | 5 | 6 | 5921-072-057-XX | 14 | 2 | | | |
| 5920-151-193-XX | 7 | 22 | 5921-102-093-XX | 14 | 3 | | | |
| | 9 | 13 | 5921-432-135-XX | 7 | 12 | | | |
| 5920-152-051-XX | 7 | 9 | 5921-432-143-XX | 8 | 29 | | | |
| 5920-152-240-XX | 3 | 13 | 5921-432-148-XX | 7 | 13 | | | |
| 5920-152-241-XX | 5 | 7 | 5921-442-176-XX | 11 | 14 | | | |
| 5920-152-253-XX | 3 | 14 | 5921-442-177-XX | 11 | 15 | | | |
| 5920-222-019-00 | 7 | 23 | 5921-442-211-XX | 7 | 14 | | | |
| 5920-222-102-XX | 6 | 13 | 5921-442-213-XX | 7 | 25 | | | |
| 5920-222-372-XX | 7 | 10 | 5921-442-235-XX | 7 | 26 | | | |
| 5920-222-384-XX | 11 | 12 | 5921-442-266-XX | 7 | 15 | | | |
| 5920-262-272-XX | 9 | 14 | 5921-442-351-XX | 12 | 6 | | | |
| 5920-262-273-XX | 5 | 8 | 5921-502-101-XX | 9 | 16 | | | |
| 5920-262-274-XX | 5 | 9 | 5921-502-102-XX | 3 | 15 | | | |
| 5920-272-003-XX | 8 | 21 | 5921-502-122-XX | 2 | 11 | | | |
| 5920-272-004-XX | 8 | 22 | 5921-502-182-XX | 7 | 16 | | | |

# NUMERICAL INDEX

2500-098-100-10

| PART CODE Pieces No. | FIG. KEY Ref No. | | PART CODE Pieces No. | FIG. KEY Ref No. | | PART CODE Pieces No.. | FIG. KEY Ref No. | |
|---|---|---|---|---|---|---|---|---|
| 1105-621-260-00 | 27 | 18 | 2500-210-006-10 | 2 | 15 | 2500-311-003-00 | 6 | 10 |
| 1105-621-310-00 | 28 | 5A | 2500-210-008-00 | 2 | 16 | 2500-311-004-00 | 6 | 23 |
| 1328-601-004-00 | 3 | 6 | | 23 | 21 | 2500-311-005-10 | 6 | 8 |
| 1338-301-005-00 | 9 | 6 | 2500-210-016-00 | 2 | 6 | 2500-311-005-20 | 6 | 8A |
| 1365-224-002-00 | 6 | 12 | 2500-210-017-00 | 2 | 7 | 2500-311-006-00 | 6 | 16 |
| | 6 | 15 | 2500-210-202-00 | 2 | 9 | 2500-311-007-00 | 6 | 17 |
| 1376-121-001-00 | 2 | 8 | 2500-210-203-00 | 2 | 10 | 2500-311-008-00 | 6 | 20 |
| 1376-402-003-00 | 24 | 5 | 2500-210-301-00 | 2 | 2 | 2500-311-009-10 | 6 | 21 |
| | 24 | 8 | 2500-210-302-00 | 2 | 3 | 2500-311-011-10 | 6 | 22 |
| | 27 | 14 | 2500-210-303-00 | 2 | 4 | 2500-311-012-00 | 6 | 24 |
| | 28 | 16 | 2500-210-310-00 | 2 | 1 | | 7 | 8 |
| 1386-624-292-00 | 27 | 3 | 2500-215-001-00 | 3 | 1 | | 8 | 7 |
| | 28 | 6 | 2500-215-002-00 | 3 | 2 | 2500-311-013-00 | 6 | 9 |
| 1386-624-293-00 | 27 | 4 | | 30 | 6 | 2500-311-015-10 | 6 | 7 |
| | 28 | 7 | 2500-215-003-00 | 3 | 3 | 2500-311-016-00 | 6 | 18 |
| 1386-624-300-00 | 27 | 7 | 2500-215-004-00 | 1 | 1 | 2500-311-017-00 | 6 | 19 |
| | 28 | 10 | | 1 | 6 | 2500-311-018-00 | 6 | 13 |
| 1425-621-004-00 | 16 | 5 | 2500-220-001-00 | 3 | 5 | 2500-311-019-00 | 6 | 13A |
| | 18 | 3 | 2500-260-310-10 | 2 | 1A | 2500-311-021-00 | 6 | 4 |
| | 19 | 3 | 2500-265-001-30 | 3 | 5A | 2500-311-200-00 | 6 | 3 |
| | 24 | 4 | 2500-265-014-00 | 30 | 7 | 2500-312-002-00 | 7 | 1 |
| 1427-601-003-00 | 21 | 14 | 2500-302-200-00 | 4 | 1 | 2500-312-003-00 | 7 | 3 |
| | 23 | 13 | 2500-302-203-00 | 4 | 2 | 2500-312-004-10 | 7 | 4 |
| | 25 | 4 | 2500-302-204-00 | 4 | 3 | 2500-312-005-10 | 7 | 5 |
| 1527-604-002-00 | 23 | 19 | 2500-302-206-00 | 4 | 4 | 2500-312-008-10 | 7 | 2 |
| 1560-601-017-00 | 14 | 3 | 2500-302-207-00 | 4 | 5 | 2500-312-200-00 | 7 | 6 |
| 2130-542-231-00 | 27 | 19 | 2500-302-208-00 | 4 | 6 | 2500-326-002-00 | 8 | 16 |
| 2130-542-232-00 | 27 | 20 | 2500-302-209-00 | 4 | 7 | | 8 | 31 |
| 2130-542-240-00 | 27 | 21 | 2500-310-001-00 | 5 | 1 | 2500-326-003-00 | 8 | 17 |
| | 28 | 10A | 2500-310-001-10 | 5 | 1A | | 8 | 32 |
| 2144-117-002-00 | 9 | 8 | 2500-310-003-00 | 5 | 6 | 2500-326-006-00 | 8 | 15 |
| 2500-101-001-00 | 1 | 2A | 2500-310-004-00 | 5 | 3 | | 8 | 30 |
| 2500-151-001-00 | 1 | 2B | 2500-310-005-10 | 5 | 9 | 2500-326-009-00 | 8 | 5 |
| | 1 | 7 | 2500-310-006-00 | 5 | 10 | 2500-326-009-10 | 8 | 22 |
| 2500-210-001-00 | 2 | 11 | 2500-310-007-00 | 5 | 14 | 2500-326-012-10 | 8 | 9 |
| | 3 | 4 | 2500-310-008-00 | 5 | 4 | 2500-326-013-00 | 8 | 25 |
| 2500-210-002-00 | 2 | 13 | 2500-310-009-10 | 5 | 8 | 2500-326-014-00 | 8 | 26 |
| 2500-210-004-20 | 2 | 12 | 2500-310-012-00 | 5 | 12 | | 9 | 4 |
| 2500-210-005-00 | 2 | 14 | 2500-310-200-00 | 5 | 13 | 2500-326-015-00 | 8 | 21 |
| | 5 | 11 | 2500-310-210-00 | 5 | 2 | | 8 | 36 |
| | 5 | 15 | 2500-310-210-20 | 5 | 2A | | 9 | 16 |
| | 8 | 6 | 2500-311-001-00 | 6 | 1 | 2500-326-017-00 | 8 | 10 |
| | 8 | 23 | 2500-311-001-10 | 6 | 1A | | 8 | 12 |
| | 11 | 9A | 2500-311-002-00 | 6 | 11 | | 8 | 27 |
| | 13 | 5 | 2500-311-002-10 | 6 | 11A | | 21 | 7 |

2500-098-100-10

| PART CODE Pieces No. | FIG. KEY Ref No. | | PART CODE Pieces No. | FIG. KEY Ref No. | | PART CODE Pieces No.. | FIG. KEY Ref No. | |
|---|---|---|---|---|---|---|---|---|
| | 22 | 7 | 2500-451-007-10 | 11 | 7A | 2500-510-002-00 | 17 | 11 |
| | 23 | 11 | 2500-451-007-20 | 11 | 7B | | 21 | 9 |
| 2500-326-019-00 | 8 | 11 | 2500-501-002-10 | 14 | 10 | | 22 | 9 |
| 2500-326-021-00 | 8 | 8 | | 23 | 22 | | 23 | 17 |
| 2500-326-230-00 | 8 | 24 | 2500-501-003-00 | 15 | 2 | 2500-510-003-00 | 25 | 12 |
| 2500-326-240-00 | 8 | 1 | 2500-501-003-10 | 16 | 4 | 2500-510-003-10 | 25 | 12A |
| 2500-326-240-10 | 8 | 1A | | 18 | 2 | 2500-510-005-00 | 21 | 2 |
| 2500-326-250-00 | 8 | 3 | | 19 | 2 | | 22 | 2 |
| 2500-326-250-10 | 8 | 3A | 2500-501-006-00 | 16 | 3 | | 23 | 3 |
| 2500-326-260-00 | 8 | 13 | | 17 | 7 | 2500-510-006-00 | 5 | 5 |
| | 8 | 28 | 2500-501-011-10 | 14 | 11 | | 6 | 2 |
| 2500-326-260-10 | 8 | 13A | 2500-501-013-00 | 14 | 2 | | 10 | 7 |
| 2500-336-002-10 | 9 | 5 | 2500-501-019-00 | 14 | 6 | | 21 | 3 |
| 2500-336-004-00 | 9 | 3 | | 14 | 8 | | 22 | 3 |
| 2500-336-006-00 | 9 | 12 | | 20 | 2 | | 23 | 4 |
| 2500-336-200-00 | 9 | 1 | 2500-501-021-20 | 16 | 1 | 2500-510-011-00 | 21 | 1 |
| 2500-336-200-10 | 9 | 1A | 2500-501-022-00 | 14 | 7 | | 22 | 1 |
| 2500-336-210-00 | 9 | 2 | | 14 | 9 | | 23 | 1 |
| 2500-336-210-10 | 9 | 2A | | 16 | 11 | 2500-510-013-00 | 21 | 11 |
| 2500-336-260-00 | 9 | 10 | | 17 | 8 | | 23 | 5 |
| 2500-352-200-10 | 10 | 1 | | 18 | 9 | | 25 | 8 |
| 2500-352-202-00 | 10 | 3 | | 19 | 9 | 2500-510-015-00 | 25 | 13A |
| 2500-376-008-20 | 8 | 2A | | 20 | 3 | 2500-510-051-00 | 23 | 7 |
| | 8 | 4A | 2500-501-041-10 | 14 | 12 | 2500-510-051-10 | 21 | 5A |
| 2500-376-012-10 | 8 | 9A | 2500-501-210-20 | 14 | 1 | | 21 | 12A |
| 2500-386-001-00 | 9 | 8A | 2500-501-210-30 | 14 | 1A | | 22 | 5 |
| 2500-386-002-30 | 9 | 5A | 2500-501-210-40 | 14 | 1B | | 23 | 7A |
| 2500-386-004-40 | 9 | 3A | 2500-501-220-00 | 15 | 1 | | 25 | 10 |
| 2500-401-002-00 | 11 | 4 | 2500-502-002-20 | 17 | 3 | 2500-510-220-00 | 21 | 4 |
| 2500-401-003-00 | 11 | 5 | 2500-502-002-30 | 19 | 7 | | 22 | 4 |
| 2500-401-006-00 | 11 | 3 | 2500-502-003-00 | 17 | 4 | | 23 | 6 |
| | 11 | 6 | 2500-502-004-00 | 17 | 9 | 2500-510-230-10 | 21 | 10 |
| | 11 | 9 | 2500-502-005-10 | 17 | 10 | 2500-510-240-00 | 21 | 13 |
| | 12 | 2 | 2500-502-005-20 | 17 | 10A | | 25 | 9 |
| | 12 | 4 | 2500-502-008-00 | 17 | 2 | 2500-510-240-10 | 23 | 8 |
| 2500-401-007-00 | 11 | 7 | 2500-502-200-10 | 17 | 1 | | 25 | 9A |
| 2500-401-009-00 | 12 | 1 | 2500-502-220-00 | 16 | 2 | 2500-510-410-00 | 25 | 11 |
| 2500-401-011-00 | 11 | 1 | | 18 | 1 | 2500-510-410-10 | 25 | 11A |
| 2500-401-011-10 | 11 | 1A | | 19 | 1 | 2500-515-001-00 | 23 | 20 |
| 2500-401-012-00 | 11 | 2 | 2500-502-250-00 | 18 | 7 | 2500-515-230-10 | 23 | 2 |
| 2500-401-014-00 | 11 | 10 | 2500-505-210-30 | 20 | 1 | 2500-520-001-10 | 24 | 1 |
| 2500-420-001-00 | 13 | 1 | 2500-505-210-40 | 20 | 1A | 2500-520-002-10 | 24 | 2 |
| 2500-420-003-00 | 13 | 2 | 2500-510-001-10 | 21 | 8 | 2500-520-003-10 | 24 | 3 |
| 2500-420-004-00 | 13 | 3 | | 22 | 8 | 2500-520-006-00 | 24 | 6 |
| 2500-420-005-00 | 13 | 4 | | 23 | 15 | 2500-520-007-00 | 24 | 7 |

2500-098-100-10

| PART CODE Pieces No. | FIG. | KEY Ref No. | PART CODE Pieces No. | FIG. | KEY Ref No. | PART CODE Pieces No.. | FIG. | KEY Ref No. |
|---|---|---|---|---|---|---|---|---|
| 2500-552-002-20 | 16 | 9 | 2500-901-025-20 | 29 | 16B | V301-260-005-00 | 6 | 6 |
| 2500-560-230-20 | 23 | 2A | 2500-901-026-00 | 29 | 13 | | 27 | 11 |
| | 25 | 1 | | 29 | 19 | | 27 | 22 |
| 2500-607-001-00 | 26 | 2 | 2500-901-027-00 | 29 | 14 | | 28 | 12 |
| 2500-607-002-00 | 26 | 3 | 2500-907-014-00 | 29 | 17 | V304-260-008-00 | 8 | 20 |
| 2500-607-200-00 | 26 | 1 | 2500-907-015-00 | 29 | 18 | | 8 | 34 |
| 2500-607-300-00 | 26 | 4 | 2500-930-001-00 | 30 | 1 | | 9 | 9 |
| 2500-623-200-40 | 27 | 1 | 2500-930-002-00 | 30 | 2 | | 9 | 14 |
| | 28 | 1 | 2500-931-001-00 | 30 | 5 | | 15 | 3 |
| 2500-623-200-50 | 27 | 15 | 2500-931-210-00 | 30 | 3 | | 17 | 5 |
| | 28 | 1A | 2500-932-210-00 | 30 | 9 | V304-260-010-00 | 1 | 5 |
| 2500-623-201-00 | 27 | 16 | 2500-990-001-00 | 30 | 10 | | 30 | 8 |
| | 28 | 3 | 2500-991-001-10 | 30 | 11 | V340-120-006-00 | 14 | 5 |
| 2500-623-210-10 | 27 | 9 | 2500-991-001-20 | 30 | 11A | | 14 | 13 |
| | 28 | 13 | 2503-302-201-10 | 10 | 2 | | 23 | 25 |
| 2500-623-220-00 | 27 | 2 | 2503-302-203-10 | 10 | 4 | V341-120-008-00 | 15 | 4 |
| | 28 | 2 | 2503-302-204-10 | 10 | 5 | | 16 | 8 |
| 2500-623-230-20 | 27 | 12 | 2503-510-003-20 | 23 | 10 | | 18 | 6 |
| 2500-623-230-30 | 27 | 12A | | 25 | 2 | | 19 | 6 |
| 2500-623-270-00 | 28 | 5 | 2503-510-004-20 | 23 | 12 | | 23 | 16 |
| 2500-623-271-00 | 27 | 6 | | 25 | 3 | | 25 | 6 |
| 2500-623-290-10 | 27 | 13 | 3650-440-014-00 | 7 | 7 | V401-160-004-00 | 27 | 5 |
| 2500-623-290-20 | 27 | 13A | | 8 | 2 | | 28 | 9 |
| 2500-623-530-00 | 28 | 14 | | 8 | 4 | V401-160-008-00 | 8 | 19 |
| 2500-623-590-00 | 28 | 15 | 3659-836-202-00 | 27 | 17 | | 8 | 35 |
| 2500-901-001-00 | 29 | 1 | | 28 | 4 | | 9 | 15 |
| 2500-901-002-00 | 29 | 2 | 3737-172-011-00 | 1 | 3 | | 15 | 5 |
| 2500-901-004-00 | 29 | 3 | 3740-162-005-00 | 11 | 8 | | 16 | 7 |
| 2500-901-005-00 | 29 | 4 | | 21 | 6A | | 17 | 6 |
| 2500-901-007-00 | 29 | 5 | | 22 | 6 | | 18 | 5 |
| 2500-901-007-10 | 29 | 5A | | 23 | 9 | | 19 | 5 |
| 2500-901-008-00 | 29 | 6 | 3768-172-008-00 | 12 | 3 | | 23 | 14 |
| 2500-901-013-00 | 29 | 15 | J910-000-200-00 | 29 | 8 | | 25 | 5 |
| 2500-901-014-20 | 29 | 10 | V111-164-000-60 | 27 | 8 | V401-160-010-00 | 1 | 4 |
| 2500-901-014-30 | 29 | 10A | | 28 | 8 | | 3 | 8 |
| 2500-901-015-20 | 29 | 11 | V200-260-502-00 | 6 | 5 | V411-260-006-00 | 23 | 24 |
| 2500-901-015-30 | 29 | 11A | V200-260-601-00 | 23 | 23 | V411-260-008-00 | 2 | 5 |
| 2500-901-016-20 | 29 | 12 | V203-361-002-00 | 3 | 7 | | 8 | 18 |
| 2500-901-017-00 | 29 | 7 | V203-361-003-00 | 30 | 4 | | 8 | 33 |
| 2500-901-017-20 | 29 | 7A | V210-160-601-00 | 14 | 4 | | 9 | 7 |
| 2500-901-018-00 | 29 | 9 | V210-360-601-00 | 14 | 4A | | 9 | 13 |
| 2500-901-018-20 | 29 | 9A | V210-360-601-20 | 27 | 10 | | 15 | 6 |
| 2500-901-018-30 | 29 | 9B | | 28 | 11 | | 16 | 6 |
| 2500-901-025-00 | 29 | 16 | V210-360-601-60 | 8 | 11A | | 16 | 10 |
| 2500-901-025-10 | 29 | 16A | V211-661-005-00 | 1 | 2 | | 18 | 4 |

2500-098-100-10

| PART CODE Pieces No. | FIG. KEY Ref No. | | PART CODE Pieces No. | FIG. KEY Ref No. | PART CODE Pieces No.. | FIG. KEY Ref No. |
|---|---|---|---|---|---|---|
| | 18 | 8 | | | | |
| | 19 | 4 | | | | |
| | 19 | 8 | | | | |
| V411-260-010-00 | 4 | 8 | | | | |
| V500-163-002-00 | 21 | 15 | | | | |
| V600-130-620-10 | 8 | 14 | | | | |
| | 8 | 29 | | | | |
| V600-150-620-10 | 8 | 14A | | | | |
| | 9 | 11 | | | | |
| V704-140-012-00 | 7 | 9 | | | | |
| V704-140-014-00 | 23 | 18 | | | | |
| | 25 | 7 | | | | |
| V704-140-020-00 | 6 | 14 | | | | |
| | 10 | 6 | | | | |
| V710-140-007-00 | 25 | 13 | | | | |
| V744-112-220-70 | 5 | 7 | | | | |

# ALPHABETICAL INDEX

FC150V-AB02. EB02


| DESCRIPTION | FIG. | KEY | DESCRIPTION | FIG. | KEY |
|---|---|---|---|---|---|
| 6 21ANGED | 6 | 29 | COVER | 1 | 11 |
| O RING | 4 | 5 | COVER | 6 | 1 |
| O-RING | 1 | 38 | COVER | 5 | 1 |
| ARM | 1 | 14 | COVER | 5 | 3 |
| ARM-ASSY | 7 | 17 | COVER-CRANKCASE | 1 | 15 |
| ARM-PIVOT | 7 | 18 | COVER-LOWER | 5 | 2 |
| ARM-PIVOT | 7 | 32 | COVER-LOWER | 5 | 2A |
| ARM-ROCKER | 3 | 4 | COVER-MUFFLER | 10 | 10 |
| BOLT | 8 | 16 | COVER-UPPER | 5 | 1A |
| BOLT | 7 | 21 | COVER-UPPER | 5 | 1B |
| BOLT | 10 | 16 | CAMSHAFT-COMP | 3 | 11 |
| BOLT | 3 | 17 | CAMSHAFT-COMP | 3 | 18 |
| BOLT-5X18 | 7 | 7 | CAP-AIR FILTER | 10 | 2 |
| BOLT-CONNECTING ROD | 2 | 11 | CAP-AIR FILTER | 10 | 2A |
| BOLT-FLANGED | 1 | 30 | CAP-ASSY-TANK | 11 | 1 |
| BOLT-FLANGED | 5 | 11 | CAP-GRIP | 12 | 8 |
| BOLT-FLANGED | 1 | 31 | CAP-SPARK PLUG | 6 | 23 |
| BOLT-FLANGED | 11 | 17 | CAP-SPARK PLUG | 6 | 4 |
| BOLT-FLANGED | 7 | 13 | CARBURETOR-ASSY | 8 | 5 |
| BOLT-FLANGED | 1 | 32 | CARBURETOR-ASSY. | 9 | 4 |
| BOLT-FLANGED | 5 | 12 | CASE-ROCKER | 1 | 6 |
| BOLT-FLANGED | 6 | 18 | CHAMBER-FLOAT | 8 | 6 |
| BOLT-FLANGED | 1 | 33 | CHAMBER-FLOAT | 9 | 6 |
| BOLT-FLANGED | 1 | 34 | CLAMP | 6 | 27 |
| BOLT-STUD | 10 | 19 | CLAMP | 11 | 21 |
| BOLT-UPSET | 6 | 17 | CLAMP | 11 | 11 |
| BOLT-UPSET-WP | 10 | 20 | CLAMP | 7 | 8 |
| BOLT-UPSET-WSP | 1 | 35 | CLAMP | 11 | 14 |
| BOLT-UPSET-WSP | 7 | 28 | CLAMP | 11 | 22 |
| BEARING-BALL | 1 | 37 | CLAMP | 11 | 15 |
| BEARING-BALL | 1 | 45 | CLAMP | 6 | 16 |
| BOLT | 7 | 33 | CLAMP | 11 | 16 |
| BOLT | 9 | 18 | COLLAR | 9 | 21 |
| BOLT-FLANGED | 10 | 27 | COLLAR | 9 | 22 |
| BOLT-FLANGED | 11 | 23 | COLLAR | 9 | 27 |
| BOLT-FLANGED | 1 | 48 | COVER | 5 | 13 |
| BRACKET | 10 | 6 | COVER-CRANKCASE | 1 | 40 |
| COIL-ASSY-IGNITION | 6 | 7 | CRANKCASE-COMP | 1 | 17 |
| COIL-ASSY-IGNITION | 6 | 7A | CRANKCASE-COMP | 1 | 18 |
| COIL-ASSY-IGNITION | 6 | 8 | CRANKCASE-COMP | 1 | 41 |
| COLLAR | 8 | 20 | CRANKSHAFT | 2 | 19 |
| COLLAR | 8 | 21 | CRANKSHAFT | 2 | 8 |
| COLLAR | 8 | 3 | DECOMPRESSOR | 3 | 12 |
| COLLAR | 7 | 10 | DECOMPRESSOR | 3 | 12A |
| COLLAR-6X13X2. 3 | 7 | 9 | ELEMENT BREATHER | 11 | 3 |

FC150V-AB02. EB02

| DESCRIPTION | FIG. | KEY | DESCRIPTION | FIG. | KEY |
|---|---|---|---|---|---|
| ELEMENT-AIR FILTER | 10 | 4 | HOLDER-RECOIL | 12 | 3 |
| ELEMENT-AIR FILTER | 10 | 5 | HEAD-COMP-CYLINDER | 1 | 39 |
| ELEMENT-ASSY | 10 | 3 | HEAD-COMP-CYLINDER | 1 | 2 |
| ELEMENT-BREATHER | 11 | 20 | IGNITER | 6 | 3 |
| FILLER | 4 | 4 | IGNITER | 6 | 3A |
| FILTER-COMP | 11 | 7 | INSULATOR | 6 | 2 |
| FILTER-FUEL | 11 | 9 | INSULATOR | 8 | 30 |
| FILTER-FUEL | 11 | 5 | INSULATOR | 9 | 3 |
| FLOAT | 8 | 9 | JET-AIR 0.9 | 8 | 10 |
| FLOAT | 9 | 13 | JET-MAIN 68.8 | 8 | 24 |
| FLYWHEEL-COMP | 6 | 9 | JET-MAIN, #68.8 | 9 | 24 |
| FLYWHEEL-COMP | 6 | 10 | JET-PILOT 45 | 8 | 25 |
| FLYWHEEL-COMP | 6 | 30 | JET-PILOT, #38.8 | 9 | 25 |
| GOVERNOR-ASSY | 7 | 20 | KEY | 6 | 14 |
| GASKET | 8 | 1 | KEY | 2 | 13 |
| GASKET | 8 | 2 | LABEL-MANUAL | 13 | 1 |
| GASKET | 11 | 2 | LABEL-MANUAL | 13 | 2 |
| GASKET | 9 | 9 | LABEL-MANUAL | 13 | 3 |
| GASKET | 9 | 10 | LEVER | 7 | 2 |
| GASKET HEAD | 1 | 1 | LEVER | 7 | 3 |
| GASKET, CARBURETOR | 9 | 1 | LEVER | 11 | 6 |
| GASKET, INSULATOR | 9 | 2 | LINK | 7 | 31 |
| GASKET, MUFFLER | 10 | 23 | LINK | 7 | 16 |
| GASKET-OIL GAUGE | 4 | 1 | LINK-CHOKE | 7 | 15 |
| GASKET-COVER | 1 | 3 | LINK-CHOKE | 7 | 30 |
| GASKET-COVER | 1 | 3A | MUFFLER-COMP | 10 | 9 |
| GASKET-CARBURETOR | 8 | 28 | NOZZLE-MAIN | 8 | 15 |
| GASKET-CRANKCASE | 1 | 4 | NOZZLE-MAIN, #2A | 9 | 17 |
| GASKET-CRANKCASE | 1 | 4A | NUT | 7 | 34 |
| GASKET-INSULATOR | 8 | 29 | NUT | 5 | 5 |
| GASKET-INTAKE PIPE | 10 | 1 | NUT | 7 | 24 |
| GASKET-INTAKE PIPE | 10 | 1A | NUT | 10 | 13 |
| GASKET-MUFFLER | 10 | 7 | NUT | 7 | 5 |
| GASKET-ROCKER | 1 | 5 | NUT | 3 | 8 |
| GAUGE-OIL | 4 | 3 | NUT | 3 | 10 |
| GEAR-HELICAL | 2 | 14 | NUT-6MM | 5 | 6 |
| GEAR-HELICAL | 1 | 19 | NUT-HEX | 6 | 20 |
| GEAR-HELICAL | 1 | 42 | NUT-HEX-FINE | 6 | 21 |
| GROMMET | 5 | 9 | PANEL-ASSY-CONTROL | 7 | 1 |
| GRIP-RECOIL STARTER | 12 | 6 | PANEL-ASSY-CONTROL | 7 | 1A |
| GROMMET | 5 | 15 | PANEL-CONTROL | 7 | 4 |
| GUIDE | 3 | 6 | PANEL-CONTROL | 7 | 4A |
| GUIDE | 11 | 4 | PAWL-RECOIL STARTER | 12 | 4 |
| GUIDE | 4 | 2 | PIN | 9 | 23 |
| GUIDE-ROPE | 12 | 2 | PIN | 1 | 21 |

FC150V-AB02. EB02

| DESCRIPTION | FIG. | KEY | DESCRIPTION | FIG. | KEY |
|---|---|---|---|---|---|
| PIN | 8 | 23 | SCREW-5X18 | 12 | 11 |
| PIN | 3 | 13 | SCREW-5X8 | 1 | 20 |
| PIN | 3 | 14 | SCREW-5X8 | 10 | 11 |
| PIN | 3 | 15 | SCREW-PAN | 8 | 13 |
| PIN-DOWEL | 1 | 36 | SCREW-PAN | 7 | 14 |
| PIN-PISTON | 2 | 2 | SCREW-PAN | 10 | 21 |
| PIN-SNAP | 7 | 29 | SCREW-PAN+- | 9 | 29 |
| PIPE-INTAKE | 10 | 8 | SCREW-PAN-WP | 11 | 18 |
| PISTON-ENGINE | 2 | 1 | SCREW-PAN-WP | 6 | 19 |
| PISTON-ENGINEL-0. 25 | 2 | 6 | SCREW-PILOT AIR | 9 | 5 |
| PISTON-ENGINEL-0. 50 | 2 | 7 | SEAL | 9 | 30 |
| PISTON-ENGINE 0. 75 | 2 | 18 | SEAL | 11 | 13 |
| PLATE | 1 | 9 | SEAL | 8 | 27 |
| PLATE | 1 | 10 | SEAL-OIL | 1 | 22 |
| PLUG | 1 | 25 | SEAL-OIL | 1 | 23 |
| PLUG | 1 | 26 | SEAL-OIL | 1 | 46 |
| PLUG-SPARK, BP5ES(NGK | 6 | 28 | SEAL-OIL | 1 | 47 |
| PLUG-SPARK-BP6ES | 6 | 15 | SHAFT | 1 | 7 |
| PULLEY-STARTING | 12 | 15 | SHAFT | 1 | 8 |
| ROD-ASSY-CONNECTING | 2 | 9 | SHAFT-CARBURETOR | 8 | 11 |
| ROD-ASSY-CONNECTING | 2 | 10 | SHAFT-CARBURETOR | 8 | 12 |
| ROD-PUSH | 3 | 7 | SHAFT-CARBURETOR, CH | 9 | 15 |
| ROPE-3. 8X1600 | 12 | 10 | SHAFT-CARBURETOR, TH | 9 | 14 |
| REEL-RECOIL-STARTER | 12 | 9 | SLEEVE | 7 | 36 |
| RETAINER-SPRING | 12 | 5 | SLEEVE | 7 | 19 |
| RETAINER-VALVE | 3 | 3 | SLINGER-OIL | 1 | 16 |
| RING-SET-PISTON | 2 | 3 | SPACER-6. 2X7. 8X17 | 5 | 7 |
| RING-SET-PISTON | 2 | 3A | SPACER-6. 2X7. 8X22 | 5 | 8 |
| RING-SET-PISTONL | 2 | 4 | SPACER-6. 2X7. 8X8 | 10 | 14 |
| RING-SET-PISTONL | 2 | 5 | SPRING | 9 | 8 |
| RING-SET-PISTON 0. 25 | 2 | 16 | SPRING | 9 | 26 |
| RING-SET-PISTON 0. 50 | 2 | 17 | SPRING | 7 | 35 |
| RING-SET-PISTON 0. 75 | 2 | 15 | SPRING | 8 | 26 |
| RING-SNAP | 2 | 20 | SPRING | 3 | 16 |
| RING-SNAP | 8 | 22 | SPRING | 12 | 14 |
| RING-SNAP | 2 | 12 | SPRING | 7 | 11 |
| SCREW | 9 | 7 | SPRING | 7 | 25 |
| SCREW | 9 | 19 | SPRING | 7 | 26 |
| SCREW | 8 | 17 | SPRING | 7 | 12 |
| SCREW | 8 | 18 | SPRING, RECOIL | 12 | 16 |
| SCREW | 10 | 24 | SPRING-ENGINEVALVE | 3 | 9 |
| SCREW | 8 | 19 | SPRING-LINK | 7 | 23 |
| SCREW | 9 | 20 | SPRING-RECOIL | 12 | 13 |
| SCREW | 11 | 8 | SPRING-RETURN | 12 | 7 |
| SCREW | 10 | 12 | STARTER-RECOIL | 12 | 1 |

FC150V-AB02. EB02

| DESCRIPTION | FIG. | KEY | DESCRIPTION | FIG. | KEY |
|---|---|---|---|---|---|
| STUD | 5 | 4 | WASHER-6X12X1. 6 | 1 | 29 |
| TOOL-DRIVER | 14 | 2 | WASHER-6X19X1. 2 | 7 | 6 |
| TOOL-WRENCH-19X21 | 14 | 3 | WASHER-7X21X2. 3 | 10 | 17 |
| TOOLKIT | 14 | 1 | WASHER-PLAIN | 10 | 22 |
| TANK-COMP-FUEL | 11 | 10 | WIRE-LEAD | 6 | 25 |
| TAPPET | 3 | 5 | WIRE-LEAD | 6 | 11 |
| TERMINAL | 6 | 24 | WIRE-LEAD | 6 | 11A |
| TERMINAL | 6 | 5 | WIRE-LEAD | 6 | 12 |
| TERMINAL | 6 | 6 | | | |
| TOOL KIT | 14 | 4 | | | |
| TOOL-DRIVER | 14 | 5 | | | |
| TOOL-WRENCH, 19x21 | 14 | 6 | | | |
| TUBE | 1 | 24 | | | |
| TUBE | 10 | 15 | | | |
| TUBE | 11 | 12 | | | |
| TUBE, 5x8x125 | 9 | 28 | | | |
| TUBE-4X7X125 | 8 | 4 | | | |
| TUBE-BRAID | 11 | 19 | | | |
| VALVE | 1 | 12 | | | |
| VALVE | 1 | 13 | | | |
| VALVE | 8 | 14 | | | |
| VALVE, CHOKE | 9 | 16 | | | |
| VALVE-EXHAUST | 3 | 2 | | | |
| VALVE-FLOAT | 8 | 8 | | | |
| VALVE-FLOAT | 9 | 12 | | | |
| VALVE-INTAKE | 3 | 1 | | | |
| VALVE-THROTTLE 110 | 8 | 7 | | | |
| VALVE-THROTTLE, #110 | 9 | 11 | | | |
| W-PLAIN-S | 6 | 22 | | | |
| W-PLAIN-S | 7 | 38 | | | |
| WASHER | 10 | 25 | | | |
| WASHER | 6 | 26 | | | |
| WASHER | 7 | 37 | | | |
| WASHER | 1 | 43 | | | |
| WASHER | 7 | 22 | | | |
| WASHER | 6 | 13 | | | |
| WASHER | 1 | 44 | | | |
| WASHER | 5 | 14 | | | |
| WASHER | 10 | 26 | | | |
| WASHER-25X42X1. 0 | 1 | 27 | | | |
| WASHER-5X12. 8X1. 2 | 12 | 12 | | | |
| WASHER-5X16X0. 8 | 1 | 28 | | | |
| WASHER-6. 5X11. 5X2. 0 | 7 | 27 | | | |
| WASHER-6. 5X18X2. 0 | 5 | 10 | | | |
| WASHER-6. 5X18X2. 0 | 10 | 18 | | | |

# ALPHABETICAL INDEX

FC150V-AB03. FB03. GB03


| DESCRIPTION | FIG. | KEY | DESCRIPTION | FIG. | KEY |
|---|---|---|---|---|---|
| 6 21ANGED | 6 | 18 | CAP, AIR FILTER | 11 | 28 |
| ARM | 1 | 14 | CAP, GRIP | 13 | 3 |
| ARM-ASSY | 8 | 3 | CAP-ASSY-TANK | 12 | 3 |
| ARM-PIVOT | 8 | 4 | CAP-SPARK PLUG | 6 | 4 |
| ARM-PIVOT | 8 | 30 | CAP-SPARK PLUG | 7 | 4 |
| ARM-ROCKER | 3 | 4 | CARBURETOR-ASSY. | 9 | 4 |
| ARM-ROCKER | 3 | 4A | CARBURETOR-ASSY. | 10 | 1 |
| BEARING-BALL | 1 | 47 | CASE-ROCKER | 1 | 6 |
| BEARING-BALL | 1 | 24 | CHAMBER-FLOAT | 9 | 6 |
| BOLT | 8 | 9 | CHAMBER-FLOAT | 10 | 2 |
| BOLT | 7 | 22 | CLAMP | 6 | 13 |
| BOLT | 7 | 23 | CLAMP | 12 | 12 |
| BOLT | 7 | 24 | CLAMP | 6 | 14 |
| BOLT | 9 | 18 | CLAMP | 12 | 13 |
| BOLT | 10 | 11 | CLAMP | 8 | 12 |
| BOLT | 8 | 21 | CLAMP | 12 | 15 |
| BOLT | 11 | 18 | CLAMP | 12 | 16 |
| BOLT | 3 | 16 | CLAMP | 7 | 20 |
| BOLT | 8 | 31 | CLAMP | 12 | 21 |
| BOLT 6X35 | 14 | 13 | CLAMP | 12 | 20 |
| BOLT, CONNECTING ROD | 2 | 13 | CLAMP | 7 | 21 |
| BOLT-FLANGED | 1 | 29 | COIL CHARGING | 6 | 10 |
| BOLT-FLANGED | 5 | 12 | COIL-ASSY-IGNITION | 6 | 7 |
| BOLT-FLANGED | 12 | 17 | COIL-ASSY-IGNITION | 7 | 7 |
| BOLT-FLANGED | 1 | 30 | COIL-ASSY-IGNITION | 7 | 8 |
| BOLT-FLANGED | 1 | 44 | COIL-CHARGING | 7 | 12 |
| BOLT-FLANGED | 12 | 22 | COIL-CHARGING | 7 | 13 |
| BOLT-FLANGED | 1 | 31 | COLLAR | 9 | 21 |
| BOLT-FLANGED | 8 | 17 | COLLAR | 9 | 22 |
| BOLT-FLANGED | 1 | 32 | COLLAR | 10 | 15 |
| BOLT-FLANGED | 5 | 13 | COLLAR | 10 | 16 |
| BOLT-FLANGED | 6 | 19 | COLLAR | 9 | 27 |
| BOLT-FLANGED | 13 | 22 | COLLAR | 10 | 23 |
| BOLT-FLANGED | 1 | 33 | COLLAR | 8 | 15 |
| BOLT-FLANGED | 1 | 34 | COLLAR, 6x13x2. 3 | 8 | 14 |
| BOLT-FLANGED | 11 | 27 | CONNECTOR-CORD | 14 | 7 |
| BOLT-STUD | 11 | 20 | COVER | 1 | 11 |
| BOLT-UPSET-WP | 11 | 21 | COVER | 5 | 1 |
| BOLT-UPSET-WSP | 1 | 35 | COVER | 6 | 1 |
| BOLT-UPSET-WSP | 8 | 27 | COVER | 7 | 1 |
| BRACKET | 11 | 7 | COVER | 5 | 2 |
| BRACKET | 11 | 7A | COVER | 5 | 15 |
| CAMSHAFT-COMP | 3 | 9 | COVER | 5 | 15A |
| CAMSHAFT-COMP | 3 | 18 | COVER, LOWER | 5 | 3 |
| CAP, AIR FILTER | 11 | 3 | COVER, LOWER | 5 | 14 |

FC150V-AB03. FB03. GB03

| DESCRIPTION | FIG. | KEY | DESCRIPTION | FIG. | KEY |
|---|---|---|---|---|---|
| COVER, UPPER | 5 | 18 | GASKET, OIL GAUGE | 4 | 1 |
| COVER, UPPER | 5 | 19 | GASKET, ROCKER CASE | 1 | 5 |
| COVER-ASSY STARTER | 14 | 3 | GASKET-HEAD | 1 | 1 |
| COVER-CRANKCASE | 1 | 15 | GAUGE | 4 | 3 |
| COVER-CRANKCASE | 1 | 38 | GEAR-HELICAL | 2 | 14 |
| COVER-MUFFLER | 11 | 10 | GEAR-HELICAL | 1 | 19 |
| CRANKCASE-COMP | 1 | 18 | GOVERNOR-ASSY | 8 | 20 |
| CRANKCASE-COMP | 1 | 39 | GOVERNOR-ASSY | 8 | 40 |
| CRANKCASE-COMP | 1 | 17 | GRIP, RECOIL STARTER | 13 | 8 |
| CRANKSHAFT | 2 | 10 | GROMMET | 5 | 11 |
| CRANKSHAFT | 2 | 20 | GROMMET | 5 | 17 |
| DECOMPRESSOER | 3 | 10 | GROMMET | 6 | 17 |
| DECOMPRESSOR | 3 | 10A | GROMMET | 7 | 19 |
| DECOMPRESSOR | 3 | 10B | GUIDE | 3 | 6 |
| ELEMENT-AIR FILTER | 11 | 5 | GUIDE | 12 | 1 |
| ELEMENT-AIR FILTER | 11 | 6 | GUIDE | 4 | 2 |
| ELEMENT-ASSY-AIR FIL | 11 | 4 | GUIDE, ROPE | 13 | 4 |
| ELEMENT-BREATHER | 12 | 5 | HEAD-COMP-CYLINDER | 1 | 2 |
| ELEMENT-BREATHER | 12 | 6 | HEAD-COMP-CYLINDER | 1 | 48 |
| FILLER | 4 | 4 | HOLDER, RECOIL | 13 | 5 |
| FILTER-COMP | 12 | 10 | IGNITER | 6 | 3 |
| FILTER-FUEL | 12 | 7 | IGNITER | 7 | 3 |
| FILTER-FUEL | 12 | 8 | INSULATOR | 6 | 2 |
| FLOAT | 9 | 13 | INSULATOR | 7 | 2 |
| FLOAT | 10 | 5 | INSULATOR | 9 | 3 |
| FLYWHEEL-ASSY | 7 | 9 | INSULATOR | 10 | 28 |
| FLYWHEEL-COMP | 6 | 8 | JET-AIR, #0. 9 | 10 | 6 |
| GASKET | 10 | 26 | JET-MAIN, #68. 8 | 9 | 24 |
| GASKET | 10 | 27 | JET-MAIN, #68. 8 | 10 | 19 |
| GASKET | 1 | 3 | JET-PILOT, #38. 8 | 9 | 25 |
| GASKET | 1 | 4 | JET-PILOT, #45 | 10 | 20 |
| GASKET | 12 | 4 | KEY | 6 | 15 |
| GASKET | 1 | 49 | KEY | 7 | 16 |
| GASKET | 1 | 50 | KEY | 2 | 16 |
| GASKET | 9 | 9 | LABEL-MANUAL | 15 | 1 |
| GASKET | 9 | 10 | LABEL-MANUAL | 15 | 2 |
| GASKET STARTER | 14 | 2 | LABEL-MANUAL | 15 | 3 |
| GASKET, CARBURETOR | 9 | 1 | LABEL-MANUAL | 15 | 4 |
| GASKET, CARBURETOR | 10 | 29 | LEVER | 8 | 6 |
| GASKET, INSULATOR | 9 | 2 | LEVER | 8 | 7 |
| GASKET, INSULATOR | 10 | 30 | LEVER | 12 | 9 |
| GASKET, INTAKE PIPE | 11 | 1 | LINK | 8 | 2 |
| GASKET, INTAKE PIPE | 11 | 1A | LINK | 8 | 34 |
| GASKET, MUFFLER | 11 | 2 | LINK-CHOKE | 8 | 1 |
| GASKET, MUFFLER | 11 | 23 | LINK-CHOKE | 8 | 38 |

FC150V-AB03. FB03. GB03

| DESCRIPTION | FIG. | KEY | DESCRIPTION | FIG. | KEY |
|---|---|---|---|---|---|
| MOTOR-ELECTRIC | 14 | 4 | PLUG | 1 | 28 |
| MUFFLER-COMP | 11 | 9 | PLUG | 1 | 45 |
| NOZZLE-MAIN, #2A | 9 | 17 | PLUG-SPARK, BP5ES(NGK | 6 | 16 |
| NOZZLE-MAIN, #2A | 10 | 10 | PLUG-SPARK, BP6ES(NGK | 7 | 17 |
| NUT | 8 | 10 | PLUG-SPARK, BP6ES(NGK | 7 | 18 |
| NUT | 5 | 6 | PULLEY-STARTING | 13 | 1 |
| NUT | 8 | 22 | REEL, RECOIL STARTER | 13 | 9 |
| NUT | 11 | 13 | RETAINER-SPRING | 13 | 7 |
| NUT | 13 | 20 | RETAINER-VALVE SP | 3 | 3A |
| NUT | 14 | 11 | RETAINER-VALVE SPRIN | 3 | 3 |
| NUT | 8 | 32 | RING-SET-PISTON | 2 | 3 |
| NUT | 3 | 15 | RING-SET-PISTON | 2 | 17 |
| NUT, 6MM | 3 | 14 | RING-SET-PISTON 0.25 | 2 | 5 |
| NUT, 6MM | 5 | 7 | RING-SET-PISTON 0.25 | 2 | 18 |
| NUT-HEX | 6 | 22 | RING-SET-PISTON 0.50 | 2 | 6 |
| NUT-HEX | 7 | 27 | RING-SET-PISTON 0.50 | 2 | 19 |
| NUT-HEX-FINE | 6 | 23 | RING-SET-PISTON 0.75 | 2 | 4 |
| NUT-HEX-FINE | 7 | 28 | RING-SNAP | 2 | 15 |
| O RING | 1 | 37 | RING-SNAP | 10 | 17 |
| O RING | 4 | 5 | RING-SNAP | 2 | 21 |
| PANEL-ASSY-CONTROL | 8 | 5 | ROD-ASSY U/S=0.50 | 2 | 12 |
| PANEL-ASSY-CONTROL | 8 | 39 | ROD-ASSY-CONNECTING | 2 | 11 |
| PANEL-CONTROL | 8 | 8 | ROD-PUSH | 3 | 7 |
| PANEL-CONTROL | 8 | 41 | ROPE, 3.8x1600 | 13 | 10 |
| PAWL, RECOIL STARTER | 13 | 6 | SCREW | 6 | 11 |
| PIN | 9 | 23 | SCREW | 9 | 7 |
| PIN | 1 | 23 | SCREW | 9 | 19 |
| PIN | 10 | 18 | SCREW | 7 | 25 |
| PIN | 3 | 11 | SCREW | 10 | 12 |
| PIN | 3 | 17 | SCREW | 10 | 13 |
| PIN | 3 | 12 | SCREW | 11 | 11 |
| PIN-DOWEL | 1 | 36 | SCREW | 9 | 20 |
| PIN-DOWEL | 13 | 23 | SCREW | 10 | 14 |
| PIN-DOWEL | 14 | 14 | SCREW | 12 | 11 |
| PIN-PISTON | 2 | 2 | SCREW | 7 | 14 |
| PIN-SNAP | 8 | 29 | SCREW | 11 | 24 |
| PIPE-INTAKE | 11 | 8 | SCREW 5X32 | 14 | 8 |
| PISTON-ENGINE | 2 | 1 | SCREW, 5x18 | 13 | 11 |
| PISTON-ENGINE 0.75 | 2 | 7 | SCREW, 5x8 | 1 | 20 |
| PISTON-ENGINE L, 0.25 | 2 | 8 | SCREW, 5x8 | 11 | 12 |
| PISTON-ENGINE L, 0.50 | 2 | 9 | SCREW-PAN | 11 | 19 |
| PLATE | 1 | 9 | SCREW-PAN+- | 9 | 29 |
| PLATE | 1 | 10 | SCREW-PAN+- | 10 | 25 |
| PLATE | 1 | 51 | SCREW-PAN+- | 8 | 18 |
| PLATE | 1 | 52 | SCREW-PAN-WP | 6 | 20 |

| DESCRIPTION | FIG. | KEY | DESCRIPTION | FIG. | KEY |
|---|---|---|---|---|---|
| SCREW-PAN-WP+- | 12 | 18 | STUD | 5 | 5 |
| SCREW-PAN-WP+- | 6 | 21 | TANK-COMP-FUEL | 12 | 2 |
| SCREW-PAN-WP+- | 7 | 26 | TAPPET | 3 | 5 |
| SCREW-PAN-WS-CROS | 14 | 9 | TERMINAL | 6 | 6 |
| SCREW-PAN-WS-CROS | 14 | 10 | TERMINAL | 7 | 5 |
| SCREW-PILOT AIR | 9 | 5 | TERMINAL | 7 | 6 |
| SEAL | 12 | 24 | TERMINAL | 6 | 5 |
| SEAL | 10 | 22 | TOOL KIT | 16 | 1 |
| SEAL-OIL | 1 | 25 | TOOL KIT | 16 | 4 |
| SEAL-OIL | 1 | 26 | TOOL-DRIVER | 16 | 2 |
| SEAL-OIL | 1 | 42 | TOOL-DRIVER | 16 | 5 |
| SEAL-OIL | 1 | 43 | TOOL-WRENCH, 19x21 | 16 | 3 |
| SHAFT | 1 | 7 | TOOL-WRENCH, 19x21 | 16 | 6 |
| SHAFT | 1 | 8 | TUBE | 1 | 27 |
| SHAFT-CARBURETOR, CH | 9 | 15 | TUBE | 11 | 17 |
| SHAFT-CARBURETOR, CH | 10 | 8 | TUBE | 13 | 21 |
| SHAFT-CARBURETOR, TH | 9 | 14 | TUBE | 14 | 12 |
| SHAFT-CARBURETOR, TH | 10 | 7 | TUBE | 12 | 14 |
| SLEEVE | 8 | 19 | TUBE, 4x7x125 | 10 | 24 |
| SLEEVE | 8 | 35 | TUBE, 5x8x125 | 9 | 28 |
| SLINGER-OIL | 1 | 16 | TUBE-4. 8X10. 3X415 | 12 | 23 |
| SPACER, 6. 2x7. 8x17 | 5 | 9 | TUBE-BRAID L=405MM | 12 | 19 |
| SPACER, 6. 2x7. 8x22 | 5 | 10 | VALVE | 1 | 12 |
| SPACER, 6. 2x7. 8x8 | 11 | 16 | VALVE | 1 | 13 |
| SPRING | 9 | 8 | VALVE | 1 | 53 |
| SPRING | 9 | 26 | VALVE | 1 | 54 |
| SPRING | 8 | 13 | VALVE, CHOKE | 9 | 16 |
| SPRING | 10 | 21 | VALVE, CHOKE | 10 | 9 |
| SPRING | 3 | 13 | VALVE-EXHAUST | 3 | 2 |
| SPRING | 13 | 14 | VALVE-FLOAT | 9 | 12 |
| SPRING | 8 | 16 | VALVE-FLOAT | 10 | 4 |
| SPRING | 8 | 25 | VALVE-INTAKE | 3 | 1 |
| SPRING | 8 | 26 | VALVE-THROTTLE, #110 | 9 | 11 |
| SPRING | 8 | 33 | VALVE-THROTTLE, #110 | 10 | 3 |
| SPRING, LINK | 8 | 24 | W-PLAIN-S | 6 | 24 |
| SPRING, RECOIL | 13 | 13 | W-PLAIN-S | 7 | 29 |
| SPRING, RECOIL | 13 | 16 | W-PLAIN-S | 8 | 28 |
| SPRING, RETURN | 13 | 15 | W-PLAIN-S | 8 | 37 |
| SPRING-ENGINE VALVE | 3 | 8 | WASHER | 11 | 14 |
| SRARTER-ELECTRIC | 14 | 1 | WASHER | 6 | 12 |
| STARTER-ELECTRIC | 13 | 17 | WASHER | 8 | 23 |
| STARTER-ELECTRIC | 13 | 18 | WASHER | 1 | 21 |
| STARTER-RECOIL | 13 | 2 | WASHER | 8 | 36 |
| STUD | 5 | 4 | WASHER | 7 | 15 |
| STUD | 5 | 14 | WASHER | 1 | 22 |

FC150V-AB03. FB03. GB03

| DESCRIPTION | FIG. | KEY | DESCRIPTION | FIG. KEY |
|---|---|---|---|---|
| WASHER | 5 | 8 | | |
| WASHER | 11 | 15 | | |
| WASHER | 11 | 25 | | |
| WASHER | 1 | 40 | | |
| WASHER | 1 | 41 | | |
| WASHER | 5 | 16 | | |
| WASHER | 11 | 26 | | |
| WASHER, 5x12. 8x1. 2 | 13 | 12 | | |
| WASHER, 6x19x1. 2 | 8 | 11 | | |
| WASHER-PLAIN | 11 | 22 | | |
| WASHER25X42X1 | 1 | 46 | | |
| WIRE-LEAD | 14 | 5 | | |
| WIRE-LEAD | 14 | 6 | | |
| WIRE-LEAD | 6 | 9 | | |
| WIRE-LEAD | 7 | 10 | | |
| WIRE-LEAD | 13 | 19 | | |
| WIRE-LEAD | 7 | 11 | | |

# ALPHABETICAL INDEX

FC150V-EB05


| DESCRIPTION | FIG. | KEY |
|---|---|---|
| ARM | 1 | 14 |
| ARM-ASSY | 7 | 3 |
| ARM-PIVOT | 7 | 4 |
| ARM-ROCKER | 3 | 4 |
| BAND-BRAKE | 12 | 2 |
| BEARING-BALL | 1 | 36 |
| BOLT | 8 | 18 |
| BOLT | 7 | 21 |
| BOLT | 9 | 16 |
| BOLT | 3 | 15 |
| BOLT, 5x18 | 7 | 16 |
| BOLT, CONNECTING ROD | 2 | 11 |
| BOLT-FLANGED | 1 | 29 |
| BOLT-FLANGED | 5 | 12 |
| BOLT-FLANGED | 12 | 8 |
| BOLT-FLANGED | 1 | 30 |
| BOLT-FLANGED | 10 | 18 |
| BOLT-FLANGED | 7 | 17 |
| BOLT-FLANGED | 1 | 31 |
| BOLT-FLANGED | 5 | 13 |
| BOLT-FLANGED | 6 | 19 |
| BOLT-FLANGED | 1 | 32 |
| BOLT-FLANGED | 1 | 33 |
| BOLT-STUD | 9 | 19 |
| BOLT-UPSET | 6 | 17 |
| BOLT-UPSET-WP | 9 | 20 |
| BOLT-UPSET-WSP | 1 | 34 |
| BOLT-UPSET-WSP | 7 | 28 |
| BOLT-UPSETED | 6 | 18 |
| BOLT/5X18 | 12 | 7 |
| BRACKET | 12 | 1 |
| BRACKET | 9 | 5 |
| CAMSHAFT-COMP | 3 | 9 |
| CAP, AIR FILTER | 9 | 1 |
| CAP, GRIP | 11 | 3 |
| CAP-ASSY-TANK | 10 | 8 |
| CAP-SPARK PLUG | 6 | 7 |
| CARBURETOR-ASSY. | 8 | 4 |
| CASE-ROCKER | 1 | 4 |
| CHAMBER-FLOAT | 8 | 7 |
| CIRCLIP-TYPE-E | 12 | 10 |
| CLAMP | 10 | 11 |
| CLAMP | 7 | 11 |
| CLAMP | 12 | 4 |
| CLAMP | 10 | 14 |
| CLAMP | 10 | 15 |
| CLAMP | 10 | 16 |
| CLAMP | 6 | 16 |
| COIL-ASSY-IGNITION | 6 | 9 |
| COLLAR | 8 | 21 |
| COLLAR | 8 | 22 |
| COLLAR | 8 | 29 |
| COLLAR | 7 | 13 |
| COLLAR, 6x13x2.3 | 7 | 12 |
| COVER | 1 | 11 |
| COVER | 6 | 2 |
| COVER | 6 | 3 |
| COVER | 5 | 3 |
| COVER, LOWER | 5 | 2 |
| COVER, UPPER | 5 | 1 |
| COVER-CRANKCASE | 1 | 15 |
| COVER-MUFFLER | 9 | 10 |
| CRANKCASE-COMP | 1 | 17 |
| CRANKSHAFT | 2 | 8 |
| DECOMPRESSOER | 3 | 10 |
| ELEMENT-AIR FILTER | 9 | 3 |
| ELEMENT-AIR FILTER | 9 | 4 |
| ELEMENT-ASSY-AIR FIL | 9 | 2 |
| ELEMENT-BREATHER | 10 | 10 |
| FILLER | 4 | 4 |
| FILTER-COMP | 10 | 5 |
| FILTER-FUEL | 10 | 2 |
| FILTER-FUEL | 10 | 3 |
| FLOAT | 8 | 12 |
| FLYWHEEL-COMP | 6 | 10 |
| GASKET | 8 | 5 |
| GASKET | 8 | 6 |
| GASKET | 10 | 9 |
| GASKET, CARBURETOR | 8 | 1 |
| GASKET, COVER | 1 | 5 |
| GASKET, CRANKCASE COV | 1 | 6 |
| GASKET, INSULATOR | 8 | 2 |
| GASKET, INTAKE PIPE | 9 | 7 |
| GASKET, MUFFLER | 9 | 6 |
| GASKET, OIL GAUGE | 4 | 1 |
| GASKET, ROCKER CASE | 1 | 3 |
| GASKET-HEAD | 1 | 1 |
| GAUGE | 4 | 3 |
| GEAR-HELICAL | 2 | 12 |
| GEARHELICAL | 1 | 18 |

FC150V-EB05

| DESCRIPTION | FIG. | KEY | DESCRIPTION | FIG. | KEY |
|---|---|---|---|---|---|
| GOVERNOR-ASSY | 7 | 20 | PIN | 12 | 5 |
| GRIP, RECOIL STARTER | 11 | 8 | PIN COTTER | 12 | 11 |
| GROMMET | 5 | 10 | PIN-DOWEL | 1 | 35 |
| GUIDE | 3 | 6 | PIN-PISTON | 2 | 4 |
| GUIDE | 10 | 1 | PIN-SNAP | 7 | 29 |
| GUIDE | 4 | 2 | PIPE-INTAKE | 9 | 8 |
| GUIDE, ROPE | 11 | 4 | PISTON-ENGINE | 2 | 1 |
| HEAD-COMP-CYLINDER | 1 | 2 | PISTON-ENGINE L, 0.25 | 2 | 2 |
| HOLDER, RECOIL | 11 | 5 | PISTON-ENGINE L, 0.50 | 2 | 3 |
| IGNITER | 6 | 6 | PLATE | 6 | 1 |
| INSULATOR | 6 | 4 | PLATE | 1 | 9 |
| INSULATOR | 6 | 5 | PLATE | 1 | 10 |
| INSULATOR | 8 | 3 | PLUG | 1 | 24 |
| JET-AIR, #0.9 | 8 | 13 | PLUG | 1 | 25 |
| JET-MAIN, #68.8 | 8 | 25 | PLUG-SPARK, BP5ES(NGK | 6 | 15 |
| JET-PILOT, #45 | 8 | 26 | PULLEY-STARTING | 11 | 1 |
| KEY | 6 | 14 | REEL, RECOIL STARTER | 11 | 9 |
| KEY | 2 | 14 | RETAINER-SPRING | 11 | 7 |
| LABEL-MANUAL | 13 | 1 | RETAINER-VALVE SPRIN | 3 | 3 |
| LABEL-MANUAL | 13 | 2 | RING-SET-PISTON | 2 | 5 |
| LEVER | 7 | 6 | RING-SET-PISTON 0.25 | 2 | 6 |
| LEVER | 7 | 7 | RING-SET-PISTON 0.50 | 2 | 7 |
| LEVER | 10 | 4 | RING-SNAP | 8 | 23 |
| LEVER-BRAKE | 12 | 3 | RING-SNAP | 2 | 13 |
| LINK | 7 | 2 | ROD-ASSY-CONNECTING | 2 | 9 |
| LINK-CHOKE | 7 | 1 | ROD-ASSY-CONNECTING, | 2 | 10 |
| MUFFLER-COMP | 9 | 9 | ROD-PUSH | 3 | 7 |
| NOZZLE-MAIN | 8 | 17 | ROPE, 3.8x2000 | 11 | 10 |
| NUT | 5 | 6 | SCREW | 8 | 8 |
| NUT | 7 | 22 | SCREW | 8 | 19 |
| NUT | 9 | 13 | SCREW | 8 | 20 |
| NUT | 7 | 9 | SCREW | 10 | 6 |
| NUT | 3 | 14 | SCREW | 9 | 12 |
| NUT, 6MM | 3 | 13 | SCREW, 5x18 | 11 | 11 |
| NUT, 6MM | 5 | 7 | SCREW, 5x8 | 1 | 19 |
| NUT-HEX | 6 | 21 | SCREW, 5x8 | 9 | 11 |
| NUT-HEX-FINE | 6 | 22 | SCREW-PAN+- | 8 | 31 |
| O RING | 1 | 37 | SCREW-PAN+- | 7 | 18 |
| O RING | 4 | 5 | SCREW-PAN+- | 9 | 21 |
| PANEL-ASSY-CONTROL | 7 | 5 | SCREW-PAN-WP+- | 10 | 19 |
| PANEL-CONTROL | 7 | 8 | SCREW-PAN-WP+- | 6 | 20 |
| PAWL, RECOIL STARTER | 11 | 6 | SEAL | 10 | 13 |
| PIN | 1 | 20 | SEAL | 8 | 28 |
| PIN | 8 | 24 | SEAL-OIL | 1 | 21 |
| PIN | 3 | 11 | SEAL-OIL | 1 | 22 |

FC150V-EB05

| DESCRIPTION | FIG. | KEY | DESCRIPTION | FIG. | KEY |
|---|---|---|---|---|---|
| SHAFT | 1 | 7 | WASHER | 7 | 23 |
| SHAFT | 1 | 8 | WASHER | 6 | 13 |
| SHAFT-CARBURETOR, CH | 8 | 15 | WASHER, 5x12.8x1.2 | 11 | 12 |
| SHAFT-CARBURETOR, TH | 8 | 14 | WASHER, 5x16x0.8 | 1 | 27 |
| SLEEVE | 7 | 19 | WASHER, 6.5x11.5x2.0 | 7 | 27 |
| SLINGER-OIL | 1 | 16 | WASHER, 6.5x18x2.0 | 5 | 11 |
| SPACER, 6.2x7.8x17 | 5 | 8 | WASHER, 6.5x18x2.0 | 9 | 18 |
| SPACER, 6.2x7.8x22 | 5 | 9 | WASHER, 6x12x1.6 | 1 | 28 |
| SPACER, 6.2x7.8x8 | 9 | 14 | WASHER, 6x19x1.2 | 7 | 10 |
| SPRING | 8 | 9 | WASHER, 7x21x2.3 | 9 | 17 |
| SPRING | 8 | 27 | WASHER-PLAIN | 9 | 22 |
| SPRING | 3 | 12 | WASHER/25X42X1.0 | 1 | 26 |
| SPRING | 11 | 14 | WIRE-LEAD | 6 | 11 |
| SPRING | 7 | 14 | WIRE-LEAD | 6 | 12 |
| SPRING | 7 | 25 | | | |
| SPRING | 7 | 26 | | | |
| SPRING | 7 | 15 | | | |
| SPRING | 12 | 6 | | | |
| SPRING, LINK | 7 | 24 | | | |
| SPRING, RECOIL | 11 | 13 | | | |
| SPRING, RETURN | 11 | 15 | | | |
| SPRING-ENGINE VALVE | 3 | 8 | | | |
| STARTER-RECOIL | 11 | 2 | | | |
| STUD | 5 | 4 | | | |
| STUD | 5 | 5 | | | |
| TANK-COMP-FUEL | 10 | 7 | | | |
| TAPPET | 3 | 5 | | | |
| TERMINAL | 6 | 8 | | | |
| TOOL KIT | 14 | 1 | | | |
| TOOL-DRIVER | 14 | 2 | | | |
| TOOL-WRENCH, 19x21 | 14 | 3 | | | |
| TUBE | 1 | 23 | | | |
| TUBE | 9 | 15 | | | |
| TUBE | 10 | 12 | | | |
| TUBE, 4.8x10.3x415 | 10 | 17 | | | |
| TUBE, 4X7X125 | 8 | 30 | | | |
| VALVE | 8 | 16 | | | |
| VALVE | 1 | 12 | | | |
| VALVE | 1 | 13 | | | |
| VALVE-EXHAUST | 3 | 2 | | | |
| VALVE-FLOAT | 8 | 11 | | | |
| VALVE-INTAKE | 3 | 1 | | | |
| VALVE-THROTTLE, #110 | 8 | 10 | | | |
| W-PLAIN-S | 6 | 23 | | | |
| W-PLAIN-S | 12 | 9 | | | |

# ALPHABETICAL INDEX

CHASSIS


| DESCRIPTION | FIG. | KEY | DESCRIPTION | FIG. | KEY |
|---|---|---|---|---|---|
| ARM/CLUTCH | 6 | 4 | BOLT/TAPPING/6X16 | 2 | 14 |
| B. B. C. ASSY | 2 | 1 | BOLT/TAPPING/6X16 | 5 | 11 |
| B. B. C. /5. 5PS ASSY | 2 | 1A | BOLT/TAPPING/6X16 | 5 | 15 |
| BAND/BATTERY | 17 | 9 | BOLT/TAPPING/6X16 | 8 | 6 |
| BAND/WIRE/140 | 24 | 5 | BOLT/TAPPING/6X16 | 8 | 23 |
| BAND/WIRE/140 | 24 | 8 | BOLT/TAPPING/6X16 | 11 | 9A |
| BAND/WIRE/140 | 27 | 14 | BOLT/TAPPING/6X16 | 13 | 5 |
| BAND/WIRE/140 | 28 | 16 | BOLT/UNF3/8X31 | 2 | 10 |
| BAR/WRENCH | 30 | 2 | BOLT/UNF3/8X38 | 3 | 3 |
| BATTERY SET | 27 | 12 | BOOT | 4 | 6 |
| BATTERY/5 SET | 27 | 12A | BOSS | 3 | 1 |
| BATTERY/J SET | 28 | 14 | BRACKET, F WHEEL/LH | 9 | 1 |
| BEARING, RB/6201 | 8 | 14A | BRACKET/BATTERY COMP | 17 | 1 |
| BEARING, RB/6201 | 9 | 11 | BRACKET/F WHEEL/LH | 9 | 1A |
| BLADE/525 | 3 | 5 | BRACKET/F WHEEL/RH | 9 | 2 |
| BOLT | 2 | 2 | BRACKET/F WHEEL/RH | 9 | 2A |
| BOLT | 6 | 5 | BRACKET/HANDLE COMP | 15 | 1 |
| BOLT | 23 | 23 | BRACKET/HANDLE COMP | 16 | 2 |
| BOLT | 30 | 4 | BRACKET/HANDLE COMP | 18 | 1 |
| BOLT, SP/M6X12 | 27 | 10 | BRACKET/HANDLE COMP | 19 | 1 |
| BOLT, SP/M6X12 | 28 | 11 | BRACKET/WHEEL/LH | 8 | 1 |
| BOLT, SP/M6X16 | 8 | 11A | BRACKET/WHEEL/LH | 8 | 1A |
| BOLT, TAPPING/06X35 | 5 | 12 | BRACKET/WHEEL/RH | 8 | 3 |
| BOLT/FLANGE/M06X25 | 8 | 11 | BRACKET/WHEEL/RH | 8 | 3A |
| BOLT/FLANGE/M10X30 | 1 | 2A | BUSH/10X12X20 | 5 | 3 |
| BOLT/FLANGE/M10X30 | 1 | 2B | BUSH/12X14X20 | 7 | 7 |
| BOLT/FLANGE/M10X30 | 1 | 7 | BUSH/12X14X20 | 8 | 2 |
| BOLT/FLANGE/M8X35 | 17 | 4 | BUSH/12X14X20 | 8 | 4 |
| BOLT/M08X40 | 15 | 2 | BUSH/12X15X20 | 8 | 2A |
| BOLT/M08X45 | 9 | 5A | BUSH/12X15X20 | 8 | 4A |
| BOLT/M10X1. 25X20 | 3 | 7 | BUSH/14X16X10 | 14 | 2 |
| BOLT/M10X55 | 30 | 5 | BUSH/14X20X11 | 21 | 11 |
| BOLT/M8X30 | 9 | 5 | BUSH/14X20X11 | 23 | 5 |
| BOLT/M8X40 | 16 | 4 | BUSH/14X20X11 | 25 | 8 |
| BOLT/M8X40 | 18 | 2 | CABLE/BBC | 2 | 12 |
| BOLT/M8X40 | 19 | 2 | CABLE/BRAKE | 24 | 6 |
| BOLT/P | 14 | 4 | CABLE/CHANGE | 24 | 2 |
| BOLT/SP | 14 | 4A | CABLE/CLUTCH | 24 | 3 |
| BOLT/SP 7 | 1 | 2 | CABLE/THROTTLE | 24 | 1 |
| BOLT/TAPPING/06X25 | 5 | 10 | CAM, SHIFT | 6 | 19 |
| BOLT/TAPPING/6X12 | 11 | 3 | CAM/DRIVE CLUTCH | 6 | 10 |
| BOLT/TAPPING/6X12 | 11 | 6 | CAM/RACHET | 7 | 4 |
| BOLT/TAPPING/6X12 | 11 | 9 | CAP | 27 | 3 |
| BOLT/TAPPING/6X12 | 12 | 2 | CAP | 28 | 6 |
| BOLT/TAPPING/6X12 | 12 | 4 | CAP | 27 | 19 |

| DESCRIPTION | FIG. | KEY | DESCRIPTION | FIG. | KEY |
|---|---|---|---|---|---|
| CAP | 8 | 8 | FORK COMP | 6 | 3 |
| CAP/WHEEL | 8 | 21 | FRAME, COLLECTOR COMP | 26 | 1 |
| CAP/WHEEL | 8 | 36 | FUSE/BLADE/32V01A | 27 | 16 |
| CAP/WHEEL | 9 | 16 | FUSE/BLADE/32V01A | 28 | 3 |
| CASE, MISSION ASSY | 5 | 2A | GASKET | 5 | 6 |
| CASE, MISSION/LH | 5 | 1 | GEAR, SPUR/13 ASSY | 7 | 6 |
| CASE, MISSION/LH | 5 | 1A | GEAR, SPUR/42 | 8 | 16 |
| CASE, MISSION/RH ASSY | 5 | 2 | GEAR, SPUR/42 | 8 | 31 |
| CIRCLIP | 4 | 4 | GEAR/BEVEL/14 | 6 | 1 |
| CLAMP, HARNESS | 16 | 5 | GEAR/BEVEL/14 | 6 | 1A |
| CLAMP, HARNESS | 18 | 3 | GEAR/BEVEL/55 | 6 | 11 |
| CLAMP, HARNESS | 19 | 3 | GEAR/BEVEL/55 | 6 | 11A |
| CLAMP, HARNESS | 24 | 4 | GEAR/OUTPUT | 6 | 22 |
| CLAMP/7 | 12 | 3 | GEAR/SPAR/26 | 6 | 17 |
| CLAMP/FLASHER HARNES | 1 | 3 | GEAR/SPAR/30 | 6 | 16 |
| CLIP | 23 | 19 | GRIP | 8 | 26 |
| CLOTH, COLLECTOR COMP | 26 | 4 | GRIP | 9 | 4 |
| COLLAR/15X20X8 | 23 | 12 | HANDEL, B COMP | 14 | 1 |
| COLLAR/15X20X8 | 25 | 3 | HANDLE, A | 16 | 1 |
| COLLAR/6X10X32 | 14 | 11 | HANDLE, B COMP | 14 | 1A |
| CONTAINER ASSY | 27 | 13 | HANDLE, B COMP | 14 | 1B |
| CONTAINER/5 ASSY | 27 | 13A | HANDLE/A | 16 | 9 |
| CONTAINER/J ASSY | 28 | 15 | HANDLE/A COMP | 18 | 7 |
| COVER, COLLECTOR | 26 | 2 | HANDLE/A/G | 17 | 3 |
| COVER, DECK/LH | 11 | 4 | HANDLE/A/G | 19 | 7 |
| COVER, DECK/RH | 11 | 5 | HANDLE/B/E COMP | 20 | 1 |
| COVER, DESCAHARGE | 13 | 1 | HANDLE/B/E COMP | 20 | 1A |
| COVER, FAN/N | 12 | 1 | HARNESS/BATTERY ASSY | 27 | 9 |
| COVER, HOLDER | 14 | 12 | HARNESS/BATTERY ASSY | 28 | 13 |
| COVER, MISSION | 11 | 7 | HARNESS/MAIN ASSY | 27 | 1 |
| COVER, MISSION | 11 | 7A | HARNESS/MAIN ASSY | 28 | 1 |
| COVER, NISSION | 11 | 7B | HARNESS/MAIN ASSY | 27 | 15 |
| COVER, STONE GUARD | 11 | 10 | HARNESS/MAIN ASSY | 28 | 1A |
| COVER, UNDER | 11 | 2 | HOLDER | 5 | 14 |
| COVER, WHEEL | 8 | 9 | HOLDER, BRACKET, WHEEL | 8 | 5 |
| COVER, WHEEL | 8 | 9A | HOLDER, BRACKET, WHEEL | 8 | 22 |
| COVER/1P FUSE BOX | 27 | 17 | HOLDER, RACHET | 7 | 3 |
| COVER/1P FUSE BOX | 28 | 4 | HOLRER, ADJ, HIGH COMP | 8 | 24 |
| COVER/CONTROL | 21 | 8 | HOSE | 26 | 3 |
| COVER/CONTROL | 22 | 8 | INSULATOR | 17 | 2 |
| COVER/CONTROL | 23 | 15 | JOINT ASSY | 4 | 1 |
| COVER/ENGINE/SHAFT | 1 | 1 | JOINT ASSY | 10 | 1 |
| COVER/ENGINE/SHAFT | 1 | 6 | JOINT/A | 10 | 2 |
| DECK | 11 | 1 | JOINT/B | 10 | 4 |
| DECK | 11 | 1A | KEY ASSY | 27 | 21 |

| DESCRIPTION | FIG. | KEY | DESCRIPTION | FIG. | KEY |
|---|---|---|---|---|---|
| KEY ASSY | 28 | 10A | LEVER/LOCK COMP | 25 | 11A |
| KEY/04X06X16 | 2 | 11 | LEVER/PIPE/E COMP | 23 | 2 |
| KEY/04X06X16 | 3 | 4 | LEVER/SPRING/FRONT | 9 | 3 |
| LABEL | 29 | 13 | MANUAL/OPRATION/4 | 30 | 11 |
| LABEL | 29 | 19 | MANUAL/OPRATION/4 | 30 | 11A |
| LABEL, CONTROL | 29 | 5 | MANUAL/OPRATION/J | 30 | 10 |
| LABEL, CONTROL | 29 | 5A | NUT | 6 | 6 |
| LABEL, ENGINE/LH/A | 29 | 2 | NUT | 27 | 11 |
| LABEL, ENGINE/RH | 29 | 3 | NUT | 27 | 22 |
| LABEL, ENGINE/TOP | 29 | 1 | NUT | 28 | 12 |
| LABEL, NOISE/100 | 29 | 6 | NUT | 14 | 5 |
| LABEL, TRAVEL | 29 | 7 | NUT | 14 | 13 |
| LABEL/BBC | 29 | 9 | NUT | 23 | 25 |
| LABEL/BBC | 29 | 9A | NUT, CAP/M8 | 15 | 4 |
| LABEL/BBC | 29 | 9B | NUT, CAP/M8 | 16 | 8 |
| LABEL/CAUTION | 29 | 11 | NUT, CAP/M8 | 18 | 6 |
| LABEL/CAUTION | 29 | 11A | NUT, CAP/M8 | 19 | 6 |
| LABEL/CAUTION/J | 29 | 18 | NUT, CAP/M8 | 23 | 16 |
| LABEL/CE | 29 | 14 | NUT, CAP/M8 | 25 | 6 |
| LABEL/DANGER | 29 | 10 | NUT, RING/M22X1.0 | 27 | 4 |
| LABEL/DANGER | 29 | 10A | NUT, RING/M22X1.0 | 28 | 7 |
| LABEL/DANGER/J | 29 | 17 | NUT, RING/M22X1.0 | 27 | 20 |
| LABEL/MODEL ASSY | 29 | 8 | NUT/FLANGE/M06 | 8 | 10 |
| LABEL/PLUG | 29 | 12 | NUT/FLANGE/M06 | 8 | 12 |
| LABEL/SELF | 29 | 15 | NUT/FLANGE/M06 | 8 | 27 |
| LABEL/START | 29 | 16 | NUT/FLANGE/M06 | 21 | 7 |
| LABEL/START | 29 | 16A | NUT/FLANGE/M06 | 22 | 7 |
| LABEL/START | 29 | 16B | NUT/FLANGE/M06 | 23 | 11 |
| LABEL/TRAVEL | 29 | 7A | NUT/KNOB/M8 | 14 | 7 |
| LEVER COMP | 23 | 2A | NUT/KNOB/M8 | 14 | 9 |
| LEVER COMP | 25 | 1 | NUT/KNOB/M8 | 16 | 11 |
| LEVER, PIPE COMP | 21 | 10 | NUT/KNOB/M8 | 17 | 8 |
| LEVER, SPRING, FRONT | 9 | 3A | NUT/KNOB/M8 | 18 | 9 |
| LEVER, SPRING/REAR | 8 | 25 | NUT/KNOB/M8 | 19 | 9 |
| LEVER/AXLE | 21 | 1 | NUT/KNOB/M8 | 20 | 3 |
| LEVER/AXLE | 22 | 1 | NUT/M08 | 9 | 8A |
| LEVER/AXLE | 23 | 1 | NUT/M10 | 1 | 5 |
| LEVER/BBC | 21 | 13 | NUT/M10 | 30 | 8 |
| LEVER/BBC | 25 | 9 | NUT/M8 | 8 | 20 |
| LEVER/BBC | 23 | 8 | NUT/M8 | 8 | 34 |
| LEVER/BBC | 25 | 9A | NUT/M8 | 9 | 9 |
| LEVER/CHANGE COMP | 21 | 4 | NUT/M8 | 9 | 14 |
| LEVER/CHANGE COMP | 22 | 4 | NUT/M8 | 15 | 3 |
| LEVER/CHANGE COMP | 23 | 6 | NUT/M8 | 17 | 5 |
| LEVER/LOCK COMP | 25 | 11 | NUT/U/M8 | 9 | 8 |

| DESCRIPTION | FIG. | KEY | DESCRIPTION | FIG. | KEY |
|---|---|---|---|---|---|
| PANEL/SELF | 17 | 10 | SCREW/M4X6 | 28 | 8 |
| PANEL/SELF | 17 | 10A | SCREW/TAPPING/5X16 | 17 | 11 |
| PIN | 4 | 5 | SCREW/TAPPING/5X16 | 21 | 9 |
| PIN | 21 | 15 | SCREW/TAPPING/5X16 | 22 | 9 |
| PIN, /05X22 | 6 | 23 | SCREW/TAPPING/5X16 | 23 | 17 |
| PIN, CROSS | 4 | 3 | SEAL, OIL | 5 | 4 |
| PIN, STRAIGHT/04X18/A | 7 | 2 | SEAL, OIL | 5 | 8 |
| PIN/08X334 | 13 | 3 | SEAL, OIL | 5 | 7 |
| PIN/08X45 | 14 | 6 | SEAL12X05 | 7 | 1 |
| PIN/08X45 | 14 | 8 | SHAFT, INPUT | 6 | 8 |
| PIN/08X45 | 20 | 2 | SHAFT, INPUT | 6 | 8A |
| PIN/14X70 | 23 | 10 | SHAFT, SPLINE | 10 | 3 |
| PIN/14X70 | 25 | 2 | SHAFT, WHEEL | 6 | 21 |
| PIN/4X18 | 10 | 5 | SHIFTER COMP | 5 | 13 |
| PIN/8X14 | 2 | 16 | SHIM/0. 3X20X30 | 6 | 13A |
| PIN/8X14 | 23 | 21 | SHIM/0. 5 | 6 | 13 |
| PIN/8X49 | 6 | 20 | SPECIAL TOOL COMP | 30 | 3 |
| PIPE | 4 | 2 | SPECIAL TOOL/ENGINE | 30 | 9 |
| PLATE | 2 | 7 | SPRING | 2 | 15 |
| PLATE | 5 | 9 | SPRING/DISK/10 | 21 | 2 |
| PLATE, I/16X28 | 13 | 4 | SPRING/DISK/10 | 22 | 2 |
| PLATE/520 | 3 | 5A | SPRING/DISK/10 | 23 | 3 |
| PLATE/SPRING | 14 | 10 | SPRING/HC012 | 13 | 2 |
| PLATE/SPRING | 23 | 22 | SPRING/HC016 | 2 | 3 |
| PLATE/WIRE | 2 | 13 | SPRING/HC039 | 6 | 7 |
| PLUG, 19 | 16 | 3 | SPRING/HC048 | 6 | 18 |
| PLUG/19 | 17 | 7 | SPRING/HE077 | 21 | 5A |
| R. B. B. | 8 | 14 | SPRING/HE077 | 21 | 12A |
| R. B. B. | 8 | 29 | SPRING/HE077 | 22 | 5 |
| RELAY/4P ASSY | 27 | 2 | SPRING/HE077 | 23 | 7A |
| RELAY/4P ASSY | 28 | 2 | SPRING/HE077 | 25 | 10 |
| RIM, REAR ASSY | 8 | 13 | SPRING/HE079 | 23 | 7 |
| RIM, REAR ASSY | 8 | 28 | SPRING/HE108 | 2 | 6 |
| RIM, REAR ASSY | 8 | 13A | SPRING/HE145 | 23 | 20 |
| RING, SNAP/14C | 23 | 18 | SPRING/HT010 | 25 | 12 |
| RING, SNAP/14C | 25 | 7 | SPRING/HT010 | 25 | 12A |
| RING, SNAP/20C | 7 | 9 | SPRING/HT07 | 24 | 7 |
| RING, SNAP/20C | 6 | 14 | SPRING/RACHET | 7 | 5 |
| RING, SNAP/20C | 10 | 6 | SWITCH/KEY ASSY | 27 | 7 |
| RING, SNAP/7E | 25 | 13A | SWITCH/KEY ASSY | 28 | 10 |
| RING, SNAP/7E | 25 | 13 | SWITCH/STARTER ASSY | 28 | 5 |
| RING, SNAP/9 E | 4 | 7 | SWITCH/STARTER/5P | 28 | 5A |
| SCREW, TAPPING/6X25 | 8 | 17 | SWITCH/STARTER/5PSET | 27 | 18 |
| SCREW, TAPPING/6X25 | 8 | 32 | SWITCH/STATER | 27 | 6 |
| SCREW/M4X6 | 27 | 8 | TYRE/8X2 | 9 | 12 |

| DESCRIPTION | FIG. | KEY | DESCRIPTION | FIG. | KEY |
|---|---|---|---|---|---|
| TYRE/9X2 | 8 | 15 | WASHER/11X20X01 | 21 | 3 |
| TYRE/9X2 | 8 | 30 | WASHER/11X20X01 | 22 | 3 |
| WASHER | 3 | 6 | WASHER/11X20X01 | 23 | 4 |
| WASHER | 6 | 12 | WASHER/11X22X3 | 2 | 8 |
| WASHER | 6 | 15 | WASHER/11X45X03 | 2 | 4 |
| WASHER | 2 | 9 | WASHER/12X21X01 | 6 | 24 |
| WASHER | 11 | 8 | WASHER/12X21X01 | 7 | 8 |
| WASHER | 21 | 6A | WASHER/12X21X01 | 8 | 7 |
| WASHER | 22 | 6 | WASHER/15X24X2 | 21 | 14 |
| WASHER | 23 | 9 | WASHER/15X24X2 | 23 | 13 |
| WASHER | 4 | 8 | WASHER/15X24X2 | 25 | 4 |
| WASHER, PL | 23 | 24 | WASHER/17X24X01 | 6 | 9 |
| WASHER, PL | 2 | 5 | WASHER/6X14X2 | 14 | 3 |
| WASHER, PL | 8 | 18 | WHEEL/FRONT ASSY | 9 | 10 |
| WASHER, PL | 8 | 33 | WRENCH/PLUG | 30 | 1 |
| WASHER, PL | 9 | 7 | ﾗﾍﾞﾙ(SW521) | 29 | 4 |
| WASHER, PL | 9 | 13 | | | |
| WASHER, PL | 15 | 6 | | | |
| WASHER, PL | 16 | 6 | | | |
| WASHER, PL | 16 | 10 | | | |
| WASHER, PL | 18 | 4 | | | |
| WASHER, PL | 18 | 8 | | | |
| WASHER, PL | 19 | 4 | | | |
| WASHER, PL | 19 | 8 | | | |
| WASHER, RL | 9 | 6 | | | |
| WASHER, SP/M10 | 1 | 4 | | | |
| WASHER, SP/M10 | 3 | 8 | | | |
| WASHER, SP/M4 | 27 | 5 | | | |
| WASHER, SP/M4 | 28 | 9 | | | |
| WASHER, SP/M8 | 8 | 19 | | | |
| WASHER, SP/M8 | 8 | 35 | | | |
| WASHER, SP/M8 | 9 | 15 | | | |
| WASHER, SP/M8 | 15 | 5 | | | |
| WASHER, SP/M8 | 16 | 7 | | | |
| WASHER, SP/M8 | 17 | 6 | | | |
| WASHER, SP/M8 | 18 | 5 | | | |
| WASHER, SP/M8 | 19 | 5 | | | |
| WASHER, SP/M8 | 23 | 14 | | | |
| WASHER, SP/M8 | 25 | 5 | | | |
| WASHER/10X37X06 | 30 | 7 | | | |
| WASHER/10X55X5 | 3 | 2 | | | |
| WASHER/10X55X5 | 30 | 6 | | | |
| WASHER/11X20X01 | 5 | 5 | | | |
| WASHER/11X20X01 | 6 | 2 | | | |
| WASHER/11X20X01 | 10 | 7 | | | |