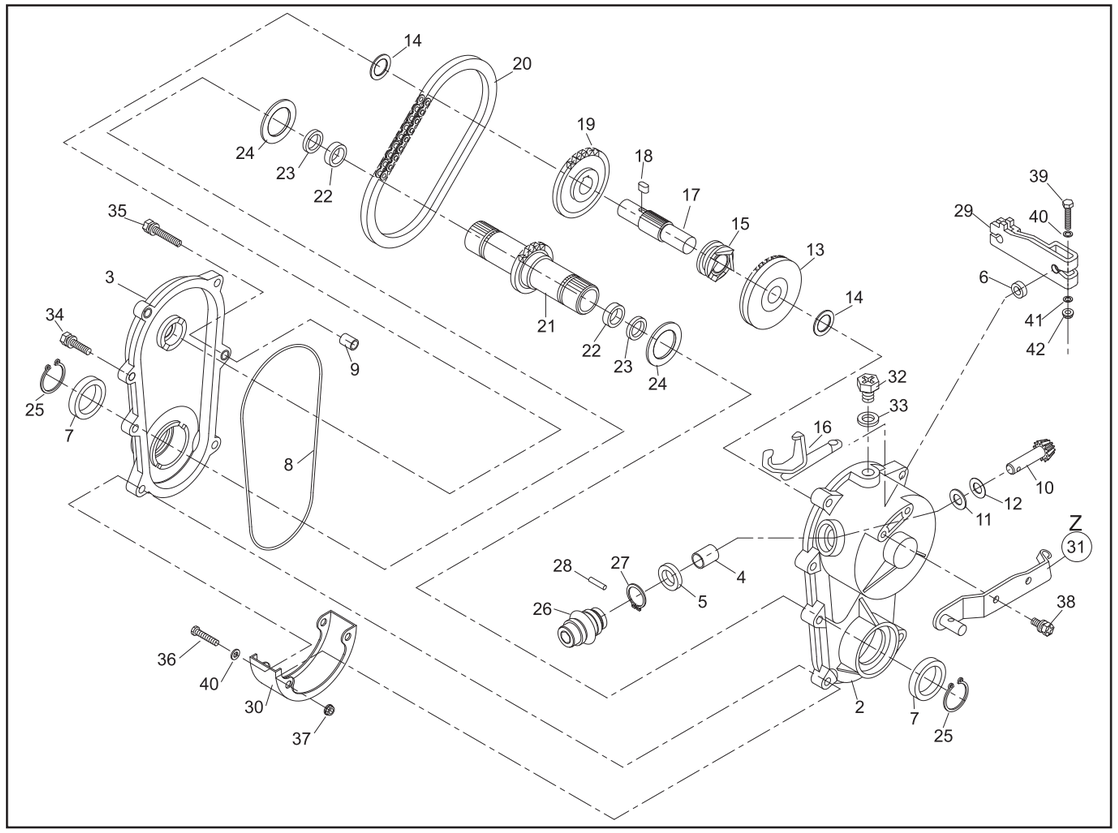

PARTS LIST

GEAR CASE ASSY (71008-369)

P/L No. 46014-265-02

NOTE	REF. No.	PARTS No.	PARTS NAME	GEAR CASE Q'TY	INCLUDING			PRICE( )	1/2 RECOMM.(%) Lot.100		Dec. 25, 2006 REMARKS
	1	71008 369	GEAR CASE ASSY	1					-		
	2	51001 279	GEAR CASE(L)		1				3		
	3	51001 280	GEAR CASE(R)		1				3		
	4	76007 167	BUSH		1				3		
	5	61002 161	OIL SEAL		1				5		SD 10 20 5
	6	61002 162	OIL SEAL		1				5		SD 8 14 4
	7	61002 188	OIL SEAL		2				5		SD 28 38 6
	8	214B 1350	O-RING		1				5		
	9	11083 201	COLLAR		2				3		
	10	78003 130	PINION		1				5		
	11	61003 109	THRUST PLATE		1				3		
	12	68007 132	SIM	0~2					5		
	13	78001 162	BEVEL GEAR		1				3		
	14	61024 118	SPACER		2				3		ϕ16.2×ϕ24×t1
	15	11129 107	CLUTCH		1				3		
	16	11097 106	SHIFTER FORK		1				5		
	17	64014 242	SHAFT		1				3		
	18	91020 147	KEY		1				3		
	19	36112 115	SPROCKET		1				3		
	20	91074 107	CHAIN		1				3		
	21	64014 243	SHAFT		1				3		
	22	927B 1512	NEEDLE BEARING		2				3		FJ1512
	23	61002 189	OIL SEAL		2				5		SO 15 21 3
	24	61024 171	SPACER		2				3		ϕ28.2×ϕ36×t1
	25	812V 2800	C-SNAP RING		2				3		ϕ28

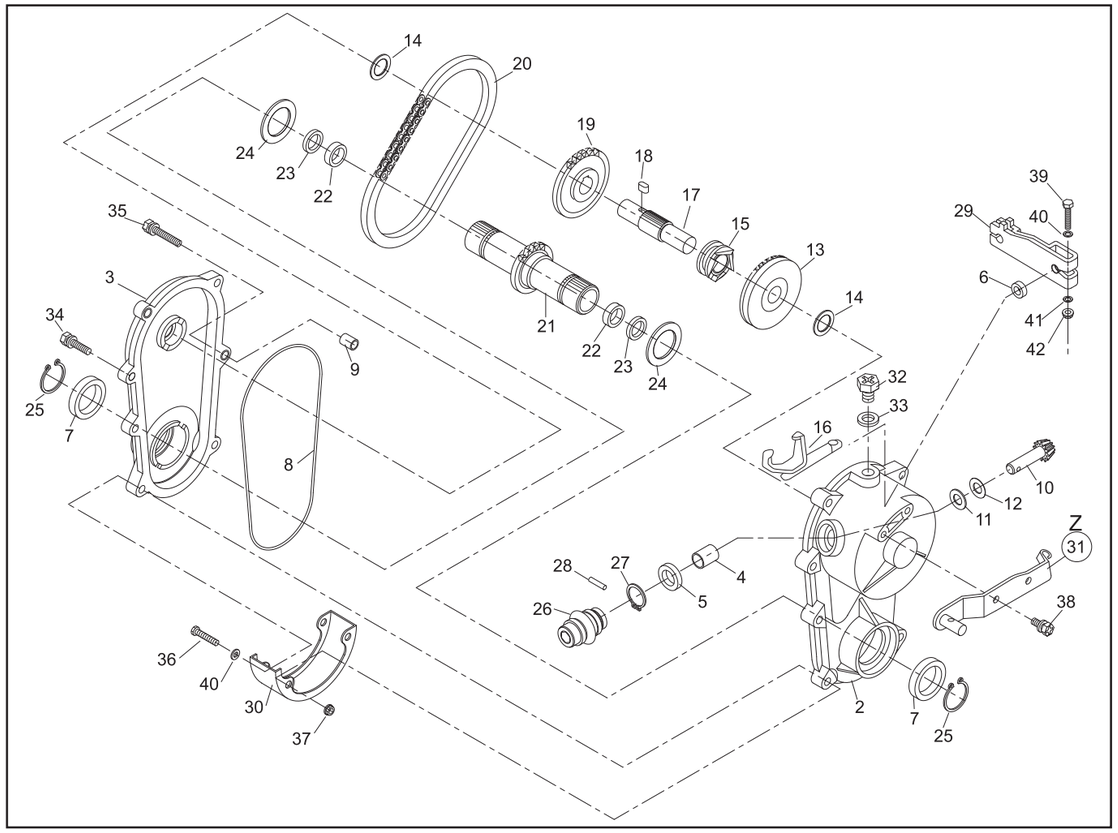

PARTS LIST

GEAR CASE ASSY (71008-369)

P/L No. 46014-265-02

NOTE	REF. No.	PARTS No.	PARTS NAME	GEAR CASE Q'TY	INCLUDING			PRICE( )	2/2 RECOMM.(%) Lot.100		Dec. 25, 2006 REMARKS
	26	91097 101	UNIVERSAL JOINT		1				3		
	27	812V 2000	C-SNAP RING			1			3		ϕ20
	28	717B 0418	PARALLEL PIN			1			3		ϕ4×18
	29	11104 169	ARM		1				3		
	30	36065 311	COVER		1				3		
Z	31	11006 148	STAY C.P.		1				5		
	32	31057 262	HEXAGON BOLT		1				3		
	33	68001 110	FIBER WASHER		1				3		
	34	315L 0625	(+)HEXAGON BOLT(SW,PW)		3				3		M6×25
	35	315L 0630	(+)HEXAGON BOLT(SW,PW)		2				3		M6×30
	36	322L 0635	(+)HEXAGON BOLT		2				3		M6×35
	37	580L 0600	FLANGE LOCK NUT		2				3		M6
	38	315L 0616	(+)HEXAGON BOLT(SW,PW)		2				3		M6×16
	39	311M 0630	HEXAGON BOLT		1				3		M6×30 8T
	40	611L 0600	PLAIN WASHER		3				3		M6
	41	613L 0600	PLAIN WASHER		1				3		M6
	42	571L 0600	FLANGE NUT		1				3		M6

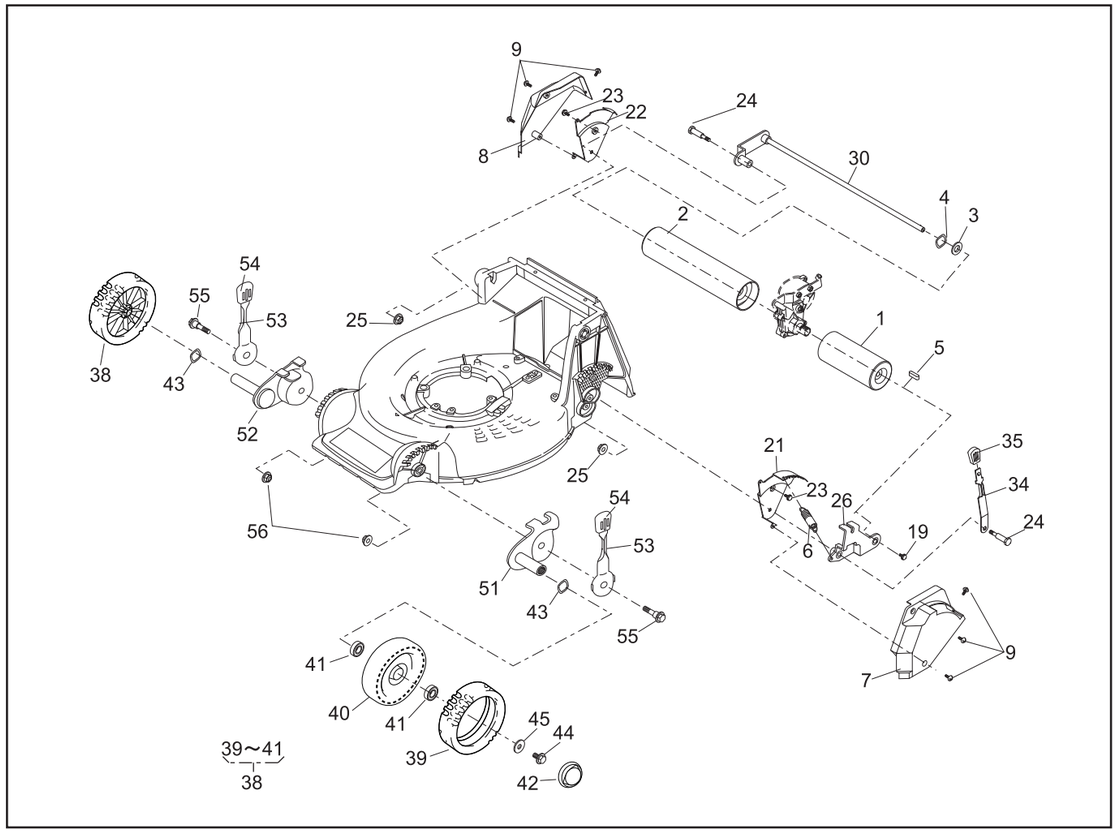

PARTS LIST

46014-371-00

REF. No.	PARTS No.	PARTS NAME	ROLLER Q'TY	INCLUDING			PRICE( )	1/2 RECOMM.(%) Lot.100		14. Apr. 2006 REMARKS
1	36099 121	ROLLER(L)	1							
2	36099 122	ROLLER(R)	1							
3	61024 118	SPACER	0~2							
4	664V 0016	WAVE SPRING WASHER	0~2							
5	91020 131	KEY	1							
6	68013 265	SPRING	1							
7	36065 404	COVER(L)	1							
8	36065 405	COVER(R)	1							
9	475L 0516	(+)TAPPING SCREW	6							
10										
11										
12										
13										
14										
15										
16										
17										
18										
19	31057 181	HEXAGON BOLT	1							
20										
21	11113 294	STAY(L)	1							
22	11113 295	STAY(R)	1							
23	342L 0612	FLANGE BOLT TAPPING	2							
24	31057 200	HEXAGON BOLT	2							
25	569L 0800	FLANGE NYLON NUT	2							
26	11142 110	ADJUSTER(RL)	1							
27										
28										

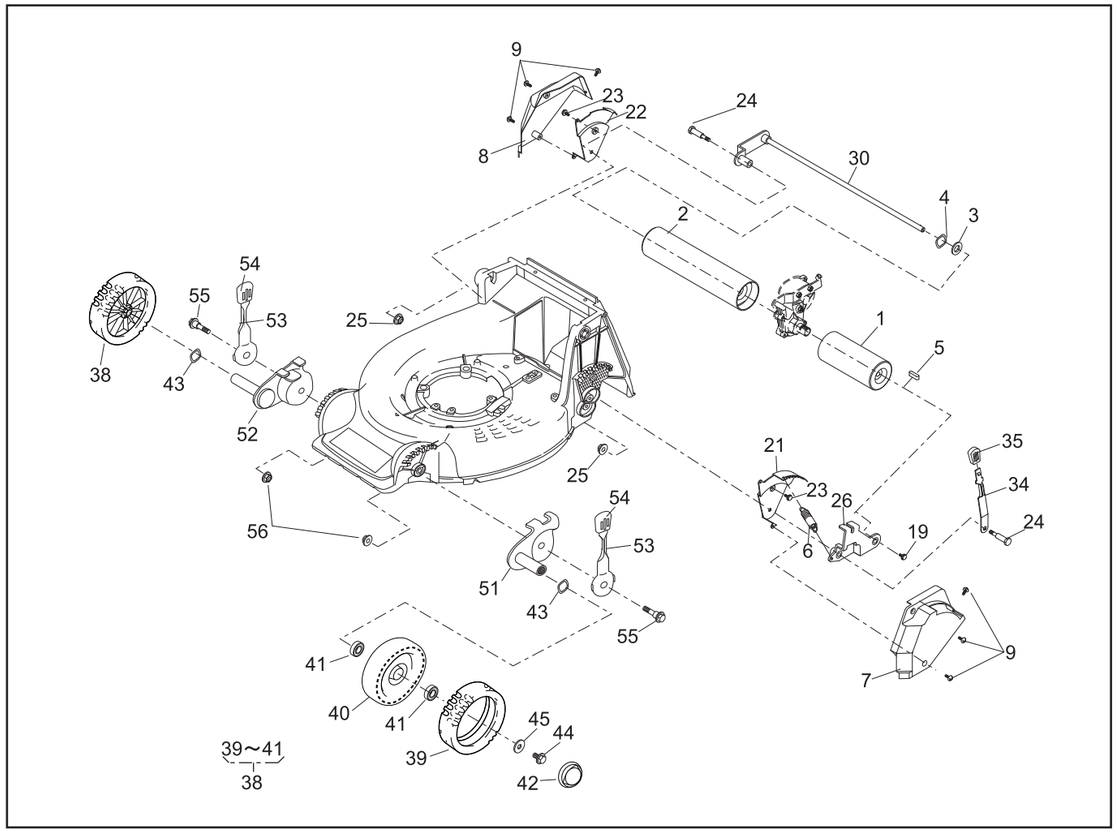

PARTS LIST

46014-371-00

REF. No.	PARTS No.	PARTS NAME	ROLLER Q'TY	INCLUDING			PRICE( )	2/2 RECOMM.(%) Lot.100		14. Apr. 2006 REMARKS
29										
30	11142 121	ADJUSTER(RR)	1							
31										
32										
33										
34	11150 104 09	ADJUST LEVER(R)	1							
35	36061 121	KNOB	1							
36										
37										
38	71041 103	WHEEL ASSY	2							
39	91086 102	TIRE		2						
40	36107 102	WHEEL		2						
41	932L 0696	BEARING			4					
42	36070 110	CAP	2							
43	664V 0626	WAVE SPRING WASHER	2							
44	31057 181	HEXAGON BOLT	2							
45	68036 101	WASHER	2							
46										
47										
48										
49										
50										
51	11142 112	ADJUSTER(FL)	1							
52	11142 113	ADJUSTER(FR)	1							
53	11150 107 09	ADJUST LEVER(F)	2							
54	36061 121	KNOB	2							
55	31057 260	HEXAGON BOLT	2							
56	569L 0800	FLANGE NYLON NUT	2							

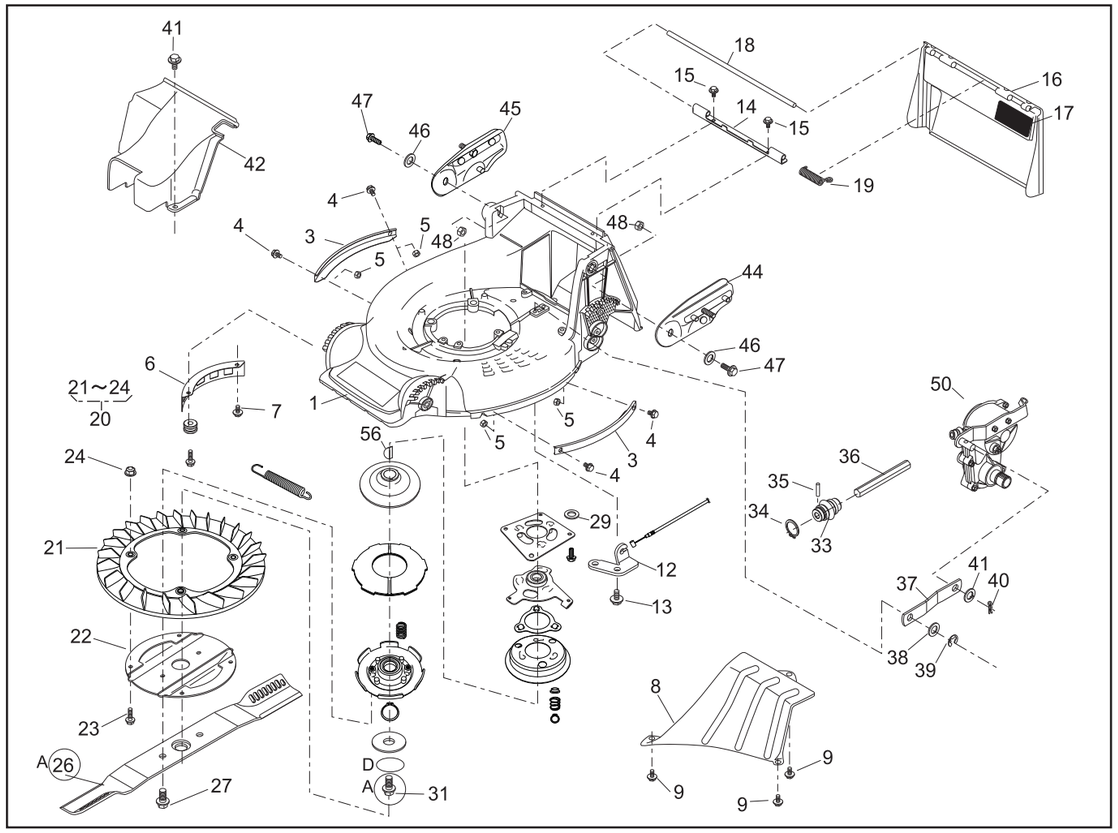

PARTS LIST

P/L No. 46014-376-02

NOTE	REF. No.	PARTS No.	PARTS NAME	GRASS-CUTTING Q'TY	INCLUDING			PRICE( )	1/2 RECOMM.(%) Lot.100		Dec. 26. 2006 REMARKS
	1	51043 149 42	HOUSING	1							
	2										
	3	51090 128 09	PROTECTOR	2							
	4	335L 0616	FLANGE BOLT	4							
	5	512L 0600	HEXAGON NUT	4							
	6	36065 180	COVER	1							
	7	342L 0612	FLANGE BOLT TAPPING	1							
	8	36065 400	COVER	1							
	9	342L 0612	FLANGE BOLT TAPPING	3							
	10										
	11										
	12	51002 118	WIRE HOLDER	1							
	13	342L 0612	FLANGE BOLT TAPPING	2							
	14	11113 292	STAY	1							
	15	342L 0612	FLANGE BOLT TAPPING	2							
	16	36068 188 46	GUARD	1							
	17	36080 149	RUBBER SHEET	1							
	18	64014 324	SHAFT	1							
	19	68013 336	SPRING	1							
	20	71082 111	FAN ASSY	1							
	21	51125 103	FAN		1						
	22	11102 151	HOLDER		1						
	23	31062 169	PRE-COAT LOCK BOLT		4						
	24	579L 0600	FLANGE NUT		4						
	25										
A	26	91014 190	BLADE	1							
	27	335M 1020	FLANGE BOLT	2							
	28										

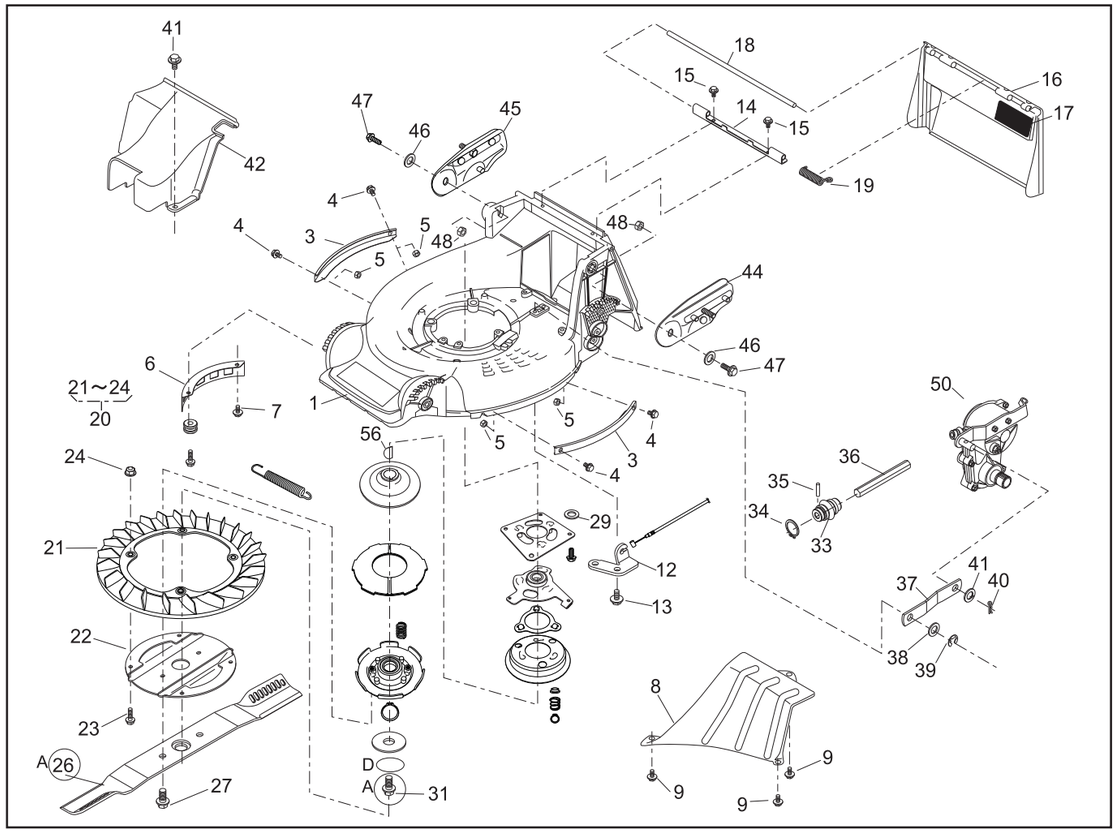

PARTS LIST

P/L No. 46014-376-02

NOTE	REF. No.	PARTS No.	PARTS NAME	GRASS-CUTTING Q'TY	INCLUDING			PRICE( )	2/2 RECOMM.(%) Lot.100		Dec. 26. 2006 REMARKS
	29	68036 292	WASHER	4							
	30	71067 116	BRAKE ASSY	1							
A	31	31057 272	HEXAGON BOLT	1							
D	32										
	33	91097 101	UNIVERSAL JOINT	1							
	34	812V 2000	C-SNAP RING FOR SHAFT		1						
	35	717B 0418	PARALLEL PIN		1						
	36	64014 372	SHAFT	1							
	37	91049 137	CONNECTOR	1							
	38	68036 280	WASHER	1							
	39	816V 0800	E-SNAP RING	1							
	40	733L 1000	SNAP PIN	1							
	41	68036 280	WASHER	1							
	42	36065 455	COVER	1							
	43	335L 0616	FLANGE BOLT	1							
	44	51116 145	HANDLE BRACKET(L)	1							
	45	51116 146	HANDLE BRACKET(R)	1							
	46	68036 101	WASHER	2							
	47	312M 0830	BOLT	2							
	48	512L 0800	HEXAGON NUT	2							
	49										
	50	71008 369	GEAR CASE ASSY	1							
	51										
	52										
	53										
	54										
	55	122048	ENGINE:KAWASAKI FJ151V-AC50	1							
	56	96007 183	KEY	1							

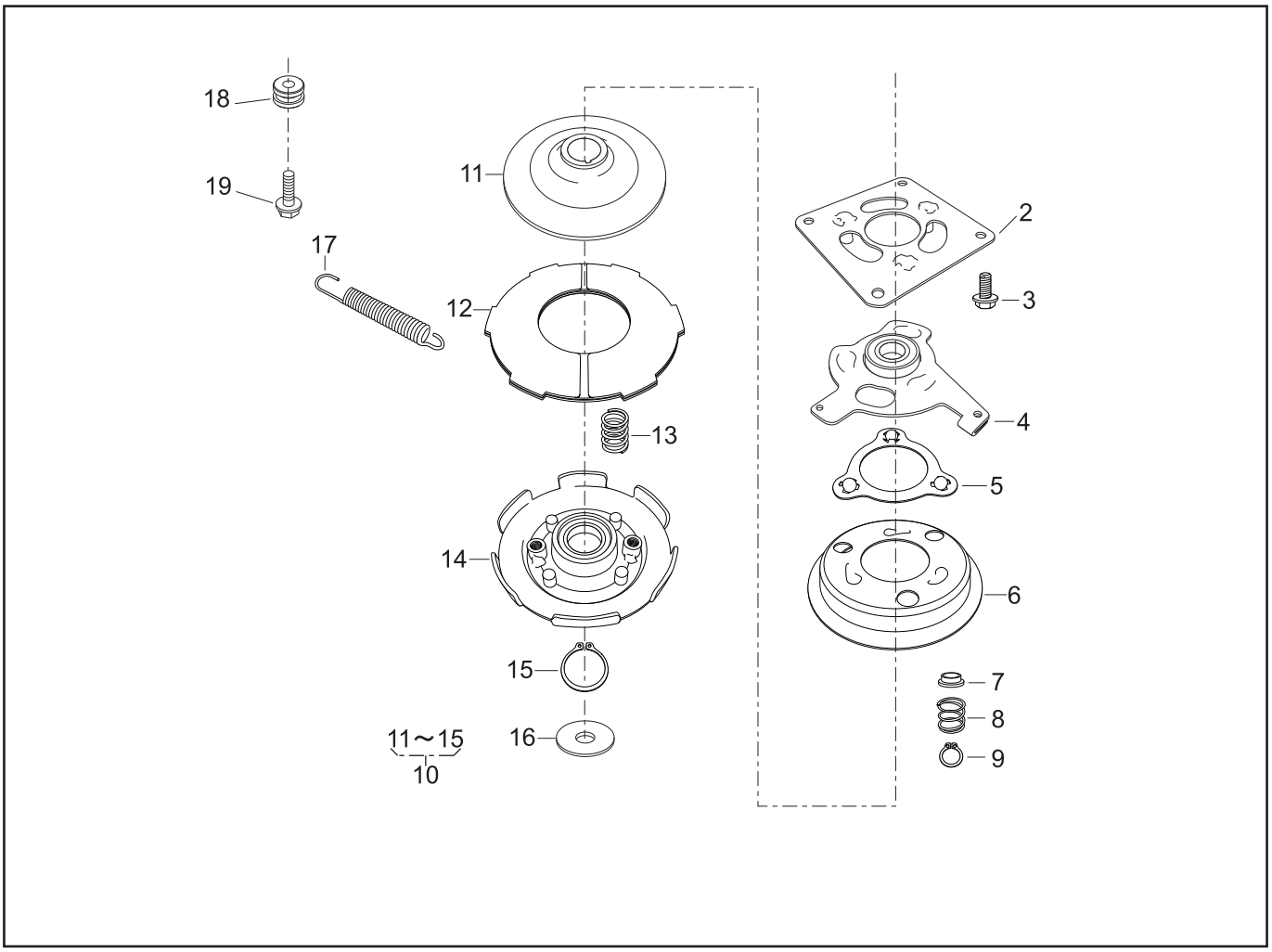

PARTS LIST

BRAKE ASS'Y (71067-116)

46014-387-02

REF. No.	PARTS No.	PARTS NAME	BBC Q'TY	INCLUDING			PRICE( )	1/1 RECOMM.(%) Lot.100		14. Apr. 2006 REMARKS
1	71067 116	BRAKE ASS'Y	1					-		
2	11006 158	STAY C.P.		1				3		
3	335L 0818	HEXAGON BOLT		4				3		
4	11107 116	SWING ARM		1				5		
5	11106 107	RETAINER		1				10		
6	11105 104	BRAKE DRUM		1				5		
7	76007 197	BUSH		3				5		
8	68013 378	SPRING		3				3		
9	812V 1200	C-SNAP RING		3				3		
10	71906 222	BLADE HOLDER ASS'Y		1				-		
11	11096 102	CLUTCH DISK			1			3		
12	68059 104	FRICTION PLATE			1			10		
13	68013 379	SPRING			4			3		
14	11108 101	BLADE HOLDER			1			5		
15	812V 3000	C-SNAP RING			1			3		
16	68036 174	WASHER		1				3		
17	68013 380	SPRING		1				3		
18	11083 270	COLLAR		1				3		
19	342L 0620	FLANGE TAPPING BOLT		1				3		
20										
21										
22										
23										
24										
25										
26										
27										
28										

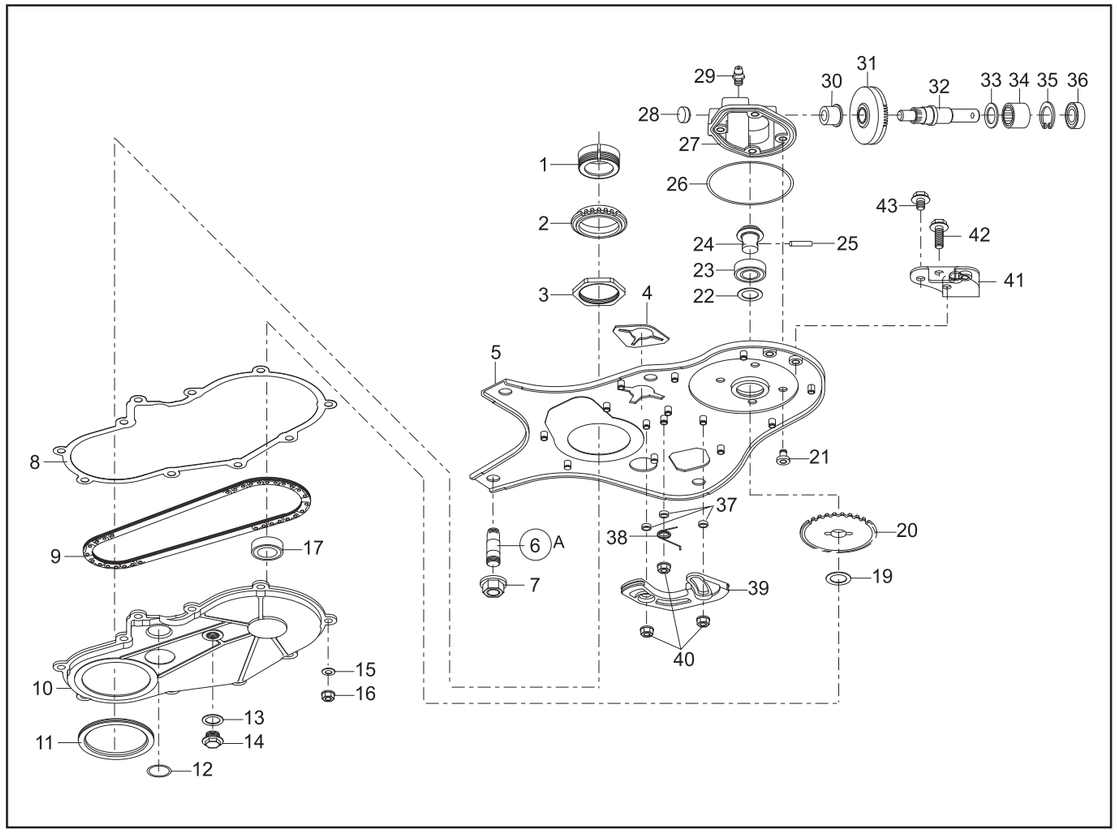

PARTS LIST

P/L No. 46014-388-01

NOTE	REF. No.	PARTS No.	PARTS NAME	Drive Shaft Unit Q'TY	INCLUDING	PRICE( )	1/2 RECOMM.(%) Lot.100	REMARKS
	1	51113 120	RING	1				
	2	36112 146	SPROCKET	1				
	3	31058 173	HEXAGON NUT	1				
	4	61019 232	PACKING	1				
	5	11137 132	BASE C.P.	1				
A	6	31039 141	STUD	4				
	7	579L 1000	FLANGE NUT	4				
	8	61019 233	PACKING	1				
	9	91074 136	CHAIN	1				
	10	51141 102	CHAIN CASE	1				
	11	76007 196	BUSH	1				
	12	214B 1600	O-RING	1				
	13	68001 110	FIBER WASHER	1				
	14	31057 262	HEXAGON BOLT	1				
	15	68062 112	CONED DISC SPRING	11				
	16	579L 0500	FLANGE NUT	11				
	17	913B 6901	BEARING	1				
	18							
	19	68036 291	WASHER	1				
	20	36112 145	SPROCKET	1				
	21	31062 177	PRE-COAT LOCK BOLT	4				
	22	68036 291	WASHER	1				
	23	916B 6901	BEARING	1				
	24	78002 207	BEVEL PINION	1				
	25	31034 192	PIN	1				
	26	214B 6300	O-RING	1				
	27	51001 301	GEAR CASE	1				
	28	91033 140	BLIND COVER	1				

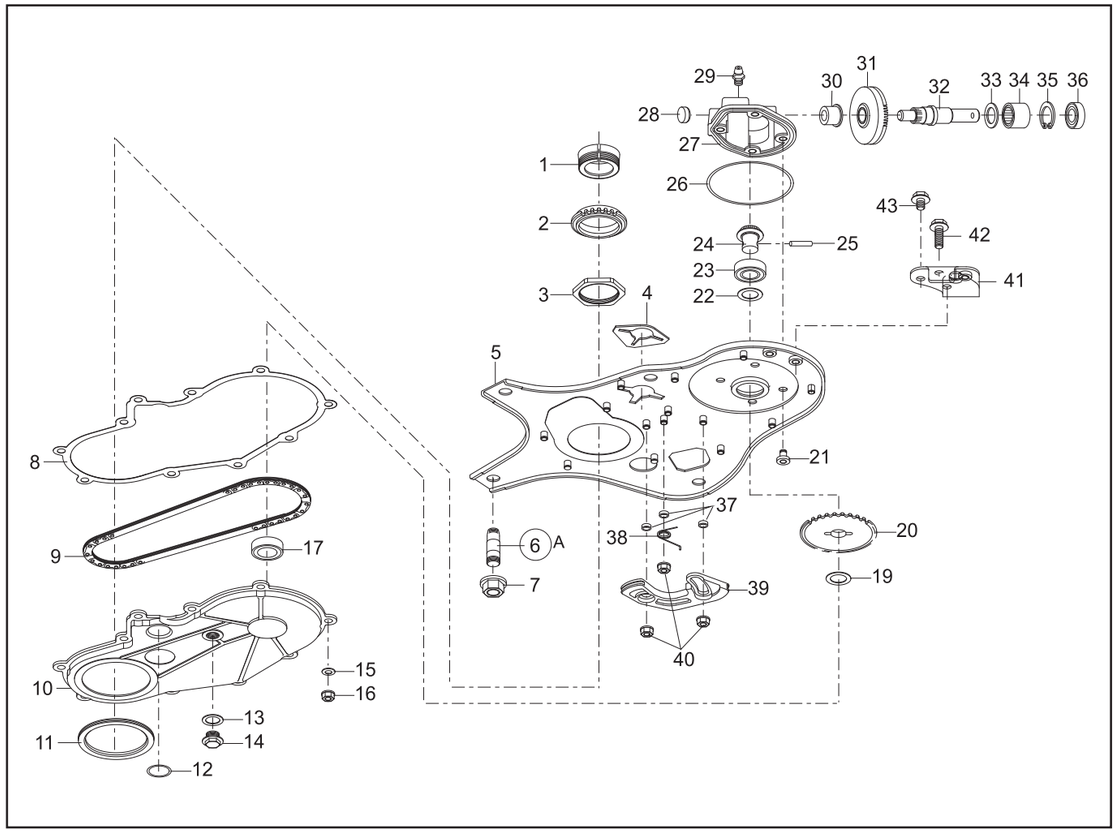

PARTS LIST

P/L No. 46014-388-01

NOTE	REF. No.	PARTS No.	PARTS NAME	Drive Shaft Unit Q'TY	INCLUDING	PRICE( )	2/2 RECOMM.(%) Lot.100	REMARKS
	29	91031 102	GREASE NIPPLE	1				
	30	76007 194	BUSH	1				
	31	78001 171	BEVEL GEAR	1				
	32	64001 188	SPLINE SHAFT	1				
	33	68036 291	WASHER	1				
	34	937B 121912	BEARING	1				
	35	811V 2000	C-SNAP RING	1				
	36	61002 202	OIL SEAL	1				
	37	76007 195	BUSH	3				
	38	68013 388	SPRING	1				
	39	51104 159	GUIDE	1				
	40	579L 0500	FLANGE NUT	3				
	41	11006 163	STAY C.P.	1				
	42	342L 0630	FLANGE BOLT TAPPING	1				
	43	335L 0612	FLANGE BOLT	2				
	44							
	45							
	46							
	47							
	48							
	49							
	50							
	51							
	52							
	53							
	54							
	55							
	56							

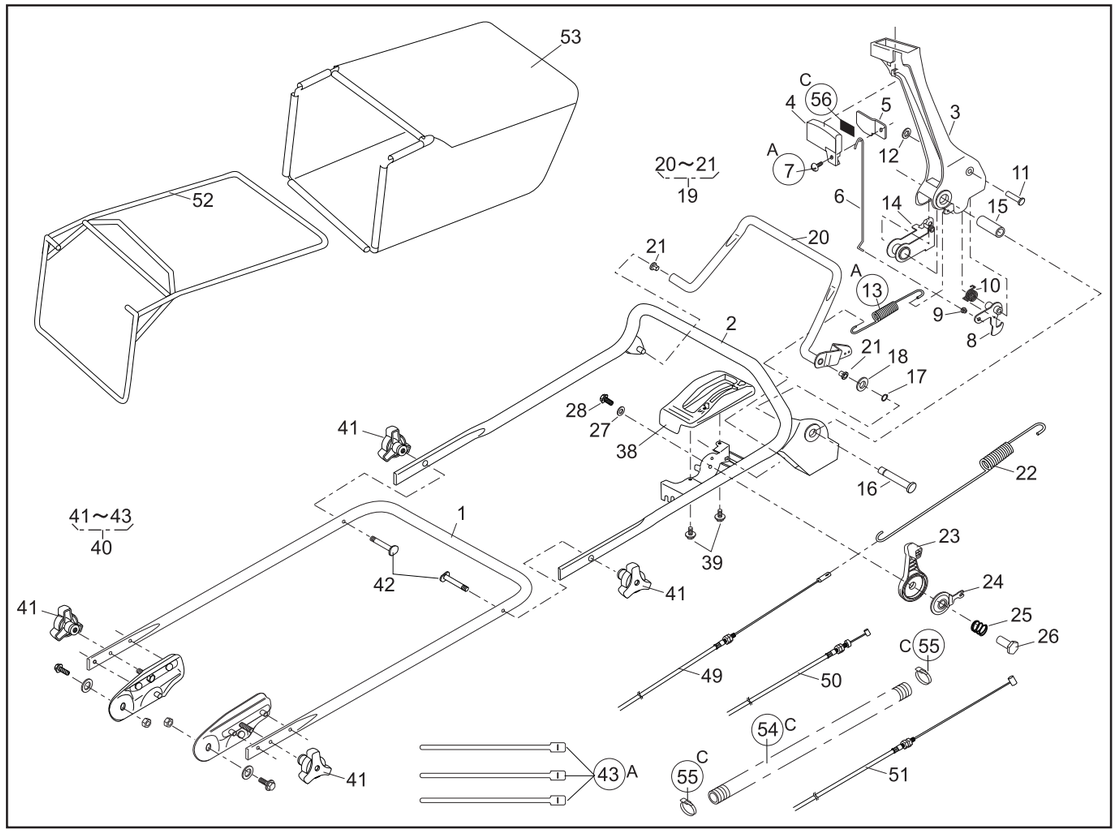

PARTS LIST

P/L No. 46014-421-02

NOTE	REF. No.	PARTS No.	PARTS NAME	HANDLE-ROLLER Q'TY	INCLUDING			PRICE( )	1/2 RECOMM.(%) Lot.100		Dec. 26. 2006 REMARKS
	1	51027 146	HANDLE	1							
	2	51027 255	HANDLE	1							
	3	11095 172	LEVER(BBC)	1							
	4	36110 102	BUTTON	1							
	5	11049 109	SLIDE PLATE	1							
	6	64014 336	SHAFT	1							
A	7	376L 0612	(+)TAPPING SCREW	1							
	8	71203 135	ARM C.P.	1							
	9	76007 183	BUSH	1							
	10	68013 371	SPRING	1							
	11	31056 127	GIB-HEADED PIN	1							
	12	576V 0600	PUSH NUT	1							
A	13	68013 392	SPRING	1							
	14	11109 111	LINK	1							
	15	61023 190	SLEEVE	1							
	16	64014 337	SHAFT	1							
	17	812V 0800	C-SNAP RING FOR SHAFT	1							
	18	613L 0800	WASHER	1							
	19	71161 114 09	LEVER ASSY	1							
	20		LEVER		1						
	21	76007 131	BUSH		2						
	22	68013 382	SPRING	1							
	23	91010 194	THROTTLE LEVER(FJ151V)	1							
	24	61003 113	THRUST PLATE	1							
	25	68013 356	SPRING	1							
	26	31058 168	NUT	1							
	27	68036 125	WASHER	1							
	28	318L 0612	(+)HEX.BOLT(SW)	1							

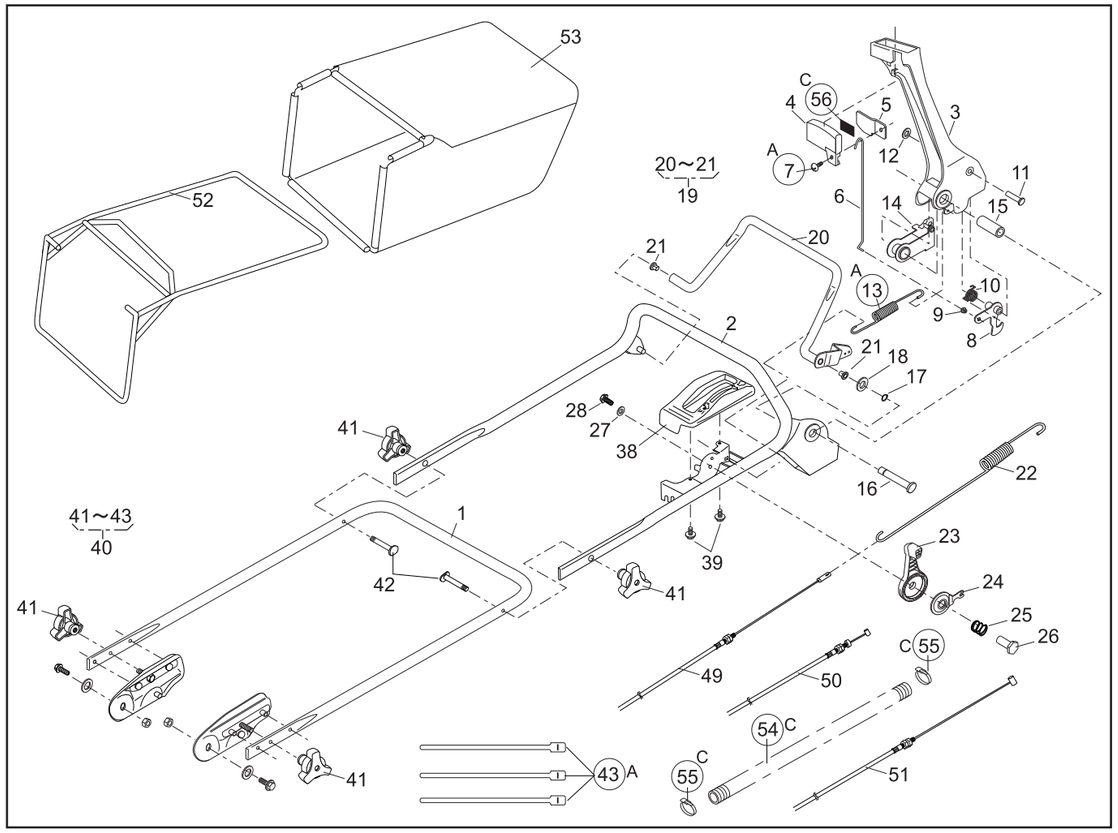

PARTS LIST

P/L No. 46014-421-02

NOTE	REF. No.	PARTS No.	PARTS NAME	HANDLE-ROLLER Q'TY	INCLUDING			PRICE( )	2/2 RECOMM.(%) Lot.100		Dec. 26. 2006 REMARKS
	29										
	30										
	31										
	32										
	33										
	34										
	35										
	36										
	37										
	38	71900 797	COVER ASSY	1							
	39	470L 0514	(+)TAPPING SCREW	2							
	40	71052 119	BOLT SET	1							
	41	36061 118	KNOB		4						
	42	31057 134	BOLT		2						
A	43	68028 118	WIRE BAND		3						
	44										
	45										
	46										
	47										
	48										
	49	91003 165	CONTROL CABLE	1							
	50	91001 337	THROTTLE WIRE(FJ151V)	1							
	51	91003 177	CONTROL CABLE(BBC)	1							
	52	11062 174	FRAME C.P.	1							
	53	36098 146	GRASS BAG C.P.(ISEKI)	1							
C	54	41003 201	TUBE (15.6x800L)	1							
C	55	68028 119	WIRE BAND	2							
C	56	36080 156	RUBBER SHEET	1							

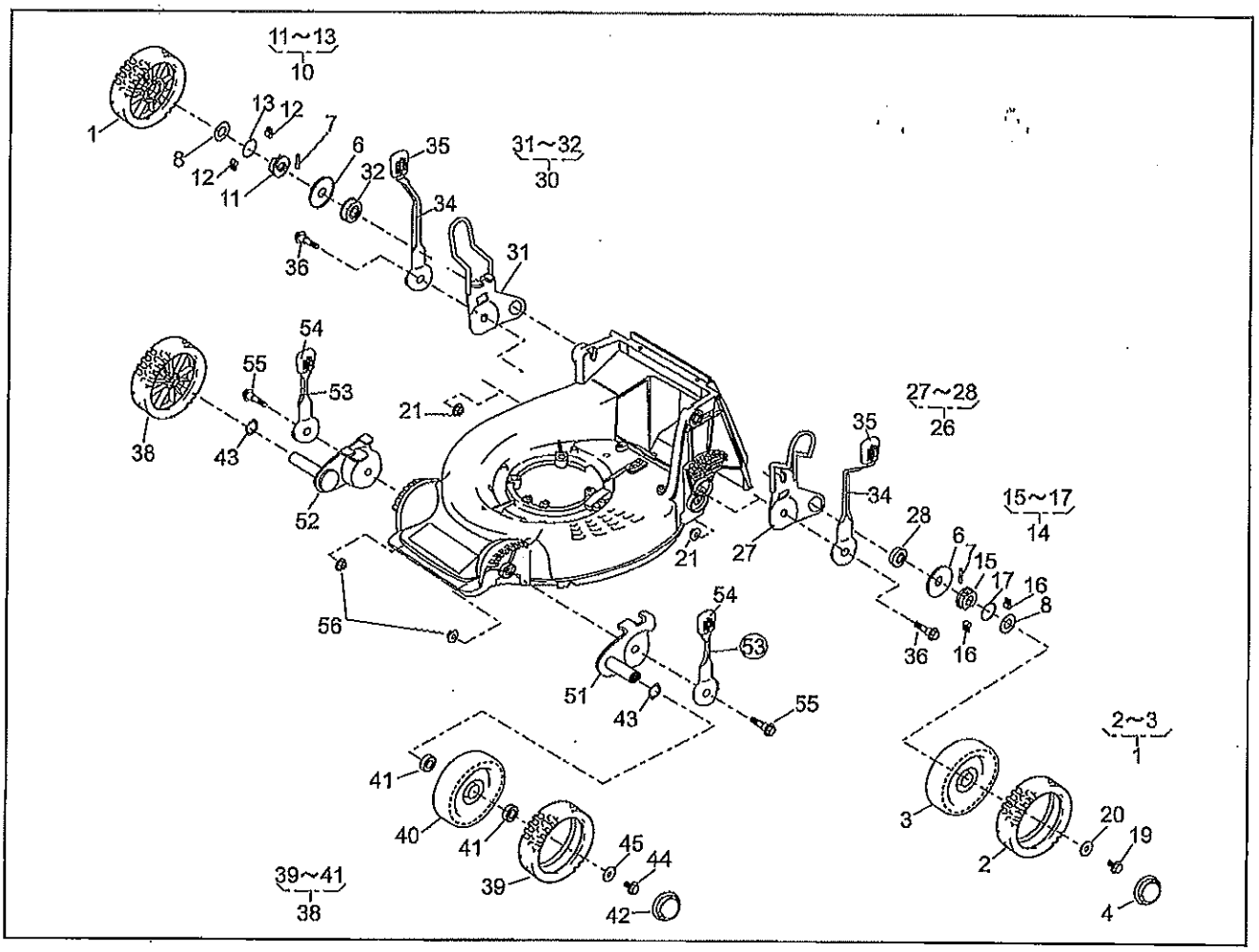

PARTS LIST

46014-369-01

NOTE	REF. No.	PARTS No.			PARTS NAME	WHEEL Q'TY	INCLUDING			PRICE( )	2/2 RECOMM.(%) Lot.100		14. Apr. 2006 REMARKS
	29												
	30	71122	102		ADJUSTER ASSY(RR)	1							
	31	11142	105		ADJUSTER		1						
	32	945L	0349		BEARING		1						
	33												
	34	11150	102	09	ADJUST LEVER(R)	2							
	35	36061	121		KNOB	2							
	36	31057	260		HEXAGON BOLT	2							
	37												
	38	71041	103		WHEEL ASSY(F)	2							
	39	91086	102		TIRE		2						
	40	36107	102		WHEEL		2						
	41	932L	0696		BEARING			4					
	42	36070	110		CAP	2							
	43	664V	0626		WAVE SPRING WASHER	2							
	44	31057	181		HEXAGON BOLT	2							
	45	68036	101		WASHER	2							
	46												
	47												
	48												
	49												
	50												
	51	11142	112		ADJUSTER(FL)	1							
	52	11142	113		ADJUSTER(FR)	1							
B	53	11150	101	09	ADJUST LEVER(F)	2							
	54	36061	121		KNOB	2							
	55	31057	260		HEXAGON BOLT	2							
	56	569L	0800		FLANGE NYLON NUT	2							

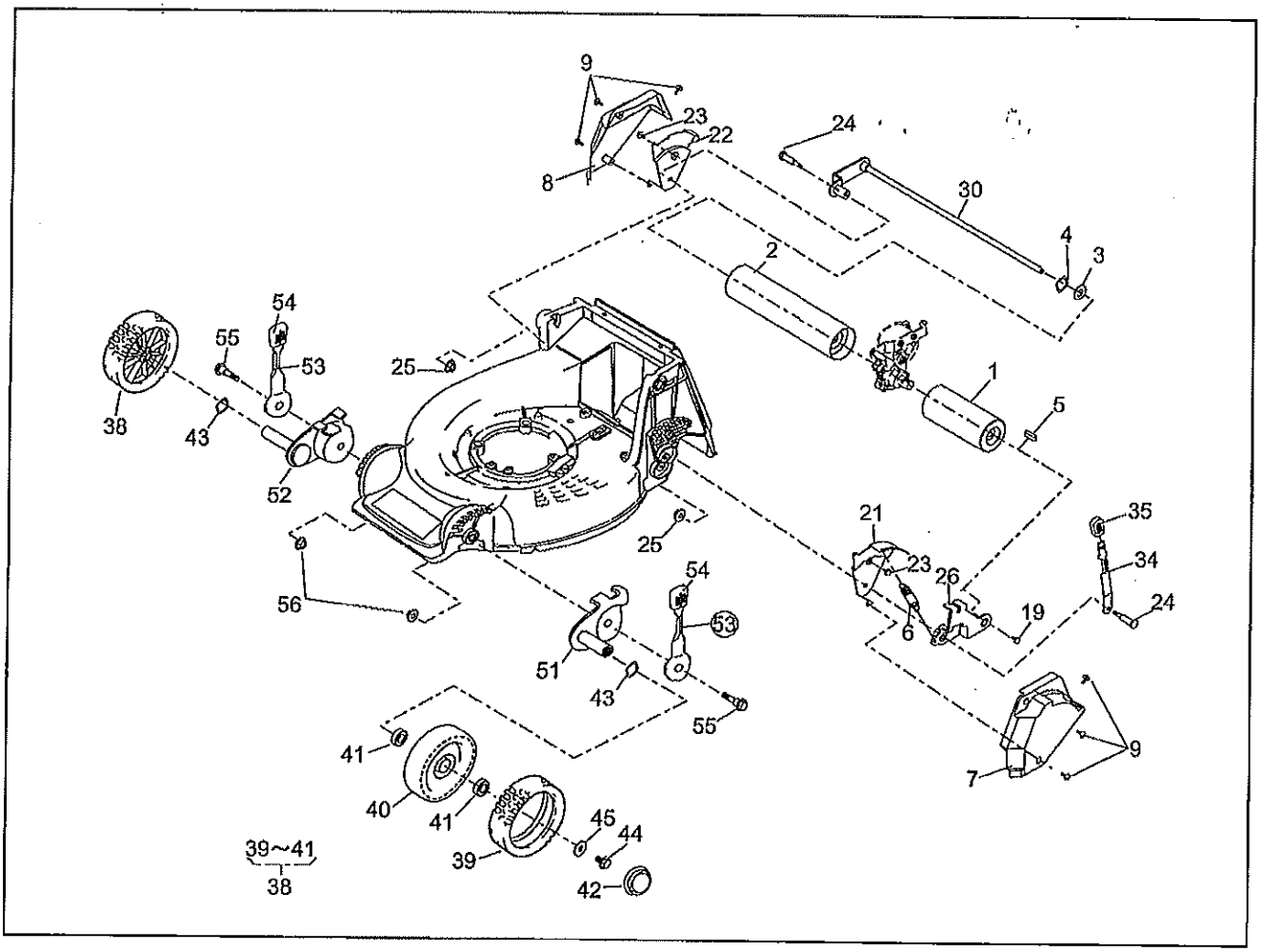

PARTS LIST

46014-371-01

NOTE	REF. No.	PARTS No.			PARTS NAME	ROLLER Q'TY	INCLUDING			PRICE( )	2/2 RECOMM.(%) Lot.100		14. Apr. 2006 REMARKS
	29												
	30	11142	121		ADJUSTER(RR)	1							
	31												
	32												
	33												
	34	11150	104	09	ADJUST LEVER(R)	1							
	35	36061	121		KNOB	1							
	36												
	37												
	38	71041	103		WHEEL ASSY	2							
	39	91086	102		TIRE		2						
	40	36107	102		WHEEL		2						
	41	932L	0696		BEARING			4					
	42	36070	110		CAP	2							
	43	664V	0626		WAVE SPRING WASHER	2							
	44	31057	181		HEXAGON BOLT	2							
	45	68036	101		WASHER	2							
	46												
	47												
	48												
	49												
	50												
	51	11142	112		ADJUSTER(FL)	1							
	52	11142	113		ADJUSTER(FR)	1							
B	53	11150	101	09	ADJUST LEVER(F)	2							
	54	36061	121		KNOB	2							
	55	31057	260		HEXAGON BOLT	2							
	56	569L	0800		FLANGE NYLON NUT	2							