ISEKI

Parts Catalogue

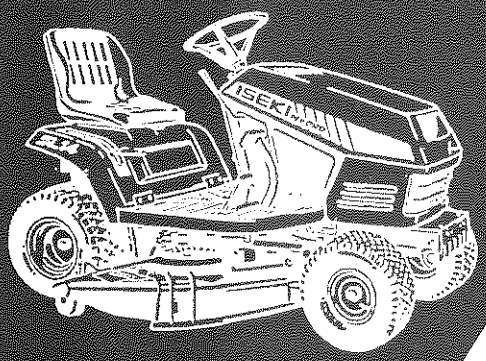

Model **SL14H**

SL14H - 40CE20, 40CE40, 40CE50,
40CE50T, 40E20, 40E40, 40E50

SSM40

SBC250

Type of Machine **RIDE – ON MOWER**

Directions for use of Parts Catalogue

1. Applicable model of machines

All component and option parts used for SL14H tractors are listed in this parts catalogue.

Description of type of machines and particulars

Type of Machines	Section	DESTINATION	Engine	
S L14H	40CE20	GERMANY	FC420V – CB00	FC420V – FB00
	40CE40	U.K		
	40CE50	FRANCE		
	40CE50T	ITALY		
	40E20	GERMANY		
	40E40	U.K		
	40E50	FRANCE		

Note : When you place an order for apare parts, please check and specify the Engine Model of your machine.

2. Explanation for head paragraph

KEY	PART CODE	DESCRIPTION	QTY	TYPE OF MODEL						ITC	COL	GRP	REMARKS
				TF15	TF17	TF19							
126	1614-508-200-00	FILTER(SUCTION) ASSY	1		*						4E		
127	V721-103-103-50	O-RING	1		*								
128	1614-508-260-00	FILTER(SUCTION) ASSY	1		*	981- -1799							
129	1614-508-262-00	FILTER(LH)	1	*	*	*							FIG. 164
		ASSY	1	*	*	*					4E	A	
			1	*	*	*							
					*	1- -1999 *				3			
										1	4E	A	

① ② ③ ④ ⑤ ⑥ ⑦ ⑧ ⑨ ⑩

① KEY shows the location of parts diagramed in the illustration.

② Parts numbers begin with `V´ and `W´ are standard parts of the market.

③ `LH´ and `RH´ on the parts name are described against the moving direction of the machine or are described on the condition how to install parts on the machines.

④ QTY shows the number of parts to be used for one unit of machine.

`M´ is indicated for parts supplied by a meter long.

`ℓ´ is indicated for parts supplied by liter.

`AR´ is indicated for parts need to be adjusted or regulated.

⑤ The following symbol classifies parts to be used for machines.

`*´ means standard parts.

`T´ shows that the parts can be installed as optional parts.

`R´ shows that the parts can be used as applicable parts to replace originally equipped parts.

⑥ Serial number : upper row shows the serial number for the first product and lower row for the last product.

Example : Serial no. 1 through to serial no. 1999.

⑦ ITC : Interchangeability

`1´…OLD ← NEW

New parts can be used in place of the old parts.

`2´…OLD → NEW

Old parts can be used in place of the new parts.

`3´…OLD →← NEW

Old parts and new parts can not be replaced each other.

⑧ COL : Color code

Color is signified with color code number for colored parts.

Please see the color list shown in the next page.

⑨ GRP : Parts shown in this column can be replaced by SET parts.

Exsample : Parts marked Ⓐ can be replaced by parts marked Ⓑ, and Ⓓ for Ⓒ, so the rest follow in the same alphabetical order.

⑩ Remarks

* Other maker's part code number is shown in this column.
* When Fig. No. is shown in the Remark column of SET parts or ASSY parts, each of their component parts are listed in said Fig. No.

3. Color :

The following colors are used for color parts.

COLOR CODE	COLOR	SPRAY TYPE CODE NUMBER	PAINTS 4K DRUM	PAINTS 16K DRUM
4 G	CRYSTAL BLUE	1300-957-001-10	1300-957-003-00	1300-957-004-00
6 G	SUMMER WHITE	1300-958-001-10	1300-958-003-00	1300-958-004-00
7 F	MIRROR BLACK	1300-954-001-10	1300-954-003-00	1300-954-004-00

NOTE : Color code is signified only for the parts assigned by the maker as color parts.

4. Serial Numbers :

1) For engines serial number is stamped on CYLINDER BODY ASSY.
   Please see Fig. No. 1 – 14,15.
2) For chassies serial number is shown on the LABEL.
   Please see

5. Parts Order

1) Parts numbers listed in the parts catalogue are all registered in "ISEKI on-line computer".
2) When you order parts, please make sure of correct numbers.
3) When substitute parts is available, the part number ordered will be automatically turned to a new part number.
4) Please be sure to use "ISEKI GENUINE PARTS".

Any other similar parts other than ISEKI parts when used may cause a trouble that makes us unable to repair or guarantee the warrant.

P. 1 *** STRUCTURE TABLE OF MODEL ***

MODEL / FIG	SL 14444 40000 HCCCC EEEE 2455 0000 T	444 000 EEE 245 000									
1	****	***									
2	****	***									
3	****	***									
4	****	***									
5	****	***									
6	****	***									
7	****	***									
8	****	***									
9	****	***									
10	****	***									
11	****	***									
12	****	***									
13	****	***									
14	****	***									
15	****	***									
16	****	***									
17	****	***									
18	****	***									
19	****	***									

P. 1 *** STRUCTURE TABLE OF MODEL ***

MODEL / FIG	S S MEEEE 42455 00000 T										
20	****										
21	****										
22	****										

P. 1 *** STRUCTURE TABLE OF MODEL ***

MODEL / FIG	S B CEEEE 22455 50000 0 T										
23	****										
24	****										
25	****										
26	****										

CONTENTS

SL14H

ENGINE (FC420V−CB00)

(FC420V−FB00)

CYLINDER CRANKCASE ..... Fig. 1
PISTON CRANKSHAFT ..... Fig. 2
VALVE CAMSHAFT ..... Fig. 3
LUBRICATION EQUIPMENT ..... Fig. 4
COOLING EQUIPMENT ..... Fig. 5
ELECTRIC EQUIPMENT ..... Fig. 6
CONTROL EQUIPMENT ..... Fig. 7
CARBURETOR ..... Fig. 8
AIR FILTER MUFFLER ..... Fig. 9
FUEL TANK FUEL VALVE ..... Fig. 10
STARTER ..... Fig. 11
LABEL ..... Fig. 12
ACCESSORY ..... Fig. 13

CONTENTS

CHASSIS

SL14H

SHROUD AND FUEL TANK SYSTEM ..... Fig. 1
BATTERY SYSTEM ..... Fig. 2
THROTTLE SYSTEM ..... Fig. 3
BELT (DRIVING) AND HST SYSTEM ..... Fig. 4
PEDAL (HST) SYSTEM ..... Fig. 5
CASE (TRANSMISSION) SYSTEM ..... Fig. 6
BRAKE SYSTEM ..... Fig. 7
TIRE (REAR) SYSTEM ..... Fig. 8
CHASSIS SYSTEM ..... Fig. 9
AXLE (FRONT) SYSTEM ..... Fig. 10
STEERING SYSTEM ..... Fig. 11
TIRE (FRONT) SYSTEM ..... Fig. 12
P.T.O. SYSTEM ..... Fig. 13
LINK SYSTEM ..... Fig. 14
HOOD AND PANEL SYSTEM ..... Fig. 15
FENDER AND SEAT SYSTEM ..... Fig. 16
ELECTRICAL SYSTEM ..... Fig. 17
ORNAMENT ..... Fig. 18
LABEL ..... Fig. 19

SSM40

DRIVING SYSTEM ..... Fig. 20
DECK AND COVER SYSTEM ..... Fig. 21
LABEL ..... Fig. 22

SBC250

FAN AND COVER SYSTEM ..... Fig. 23
PANEL AND FRAME SYSTEM ..... Fig. 24
COVER AND PIPE SYSTEM ..... Fig. 25
LABEL ..... Fig. 26

ENGINE

FC420V-CB00

FC420V-FB00

FIG. 1 CYLINDER CRANKCASE

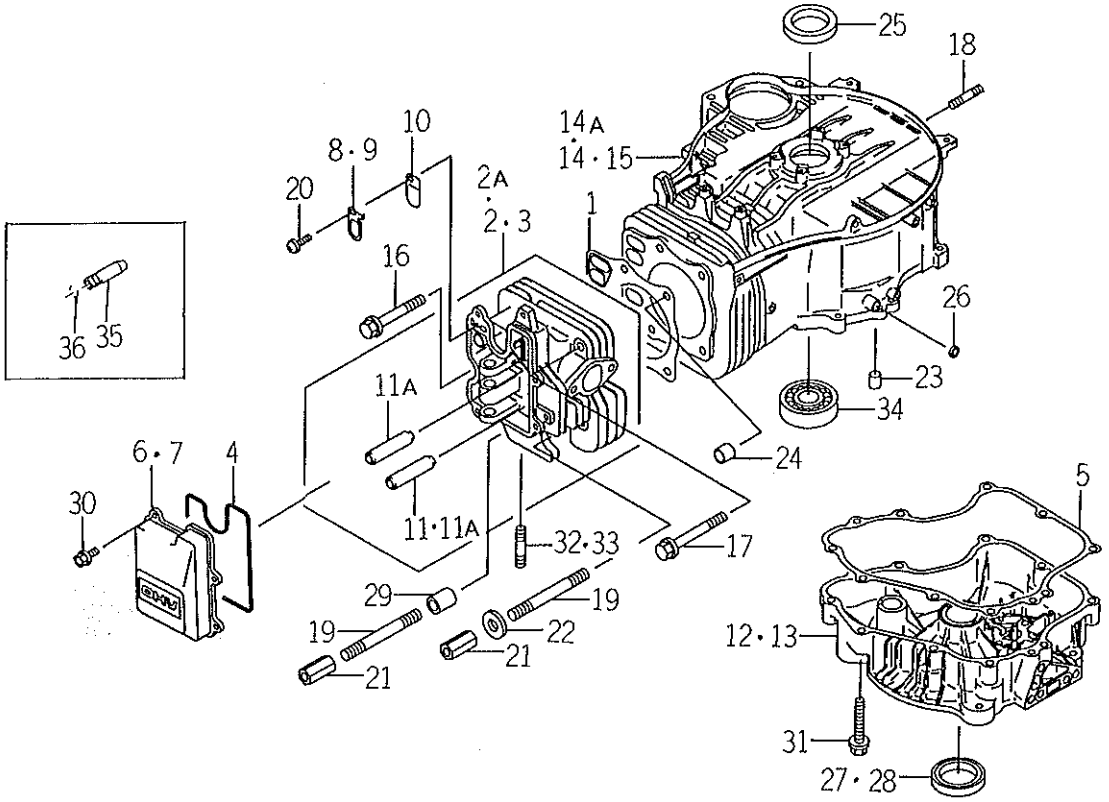

K502-0010

KEY	PART CODE	DESCRIPTION	QTY	TYPE OF MODEL FC420V C800	TYPE OF MODEL FC420V FB00	ITC	COL	GRP	REMARKS
1	5110 – 042 – 096 – XX	GASKET – HEAD	1	*	*				110042096
2	5110 – 086 – 011 – XX	HEAD – COMP – CYLINDER	1	1- -119615					110086011
2A	5110 – 086 – 016 – XX	HEAD – COMP – CYLINDER	1	119161-					110086016
3	5110 – 086 – 026 – XX	HEAD – COMP – CYLINDER	1		*				110086026
4	5110 – 092 – 433 – XX	GASKET – ROCKER CASE	1	*	*				110092433
5	5110 – 092 – 947 – XX	GASKET – CRANKCASE	1	*	*				110092947
6	5110 – 222 – 055 – XX	CASE – ROCKER	1	*					110222055
7	5110 – 222 – 070 – XX	CASE – ROCKER	1		*				110222070
8	5131 – 692 – 436 – XX	PLATE	1	*					131692436
9	5132 – 702 – 055 – XX	PLATE	1		*				132702055
10	5161 – 262 – 113 – XX	VALVE	1	*	*				161262113
11	5490 – 022 – 078 – XX	GUIDE – VALV EX	1	1- -119615					490022078
11A	5490 – 022 – 107 – XX	GUIDE – VALVE	2	119616-	*				490022107
12	5490 – 156 – 028 – XX	COVER – CRANKCASE	1	*					490156028
13	5490 – 156 – 174 – XX	COVER – CRANKCASE	1		*				490156174
14	5491 – 206 – 019 – XX	CRANKCASE – COMP	1	1- -119615					491206019
14A	5491 – 206 – 061 – XX	CRANKCASE – COMP	1	119616-					491206061
15	5491 – 206 – 106 – XX	CRANKCASE – COMP	1		*				491206106
16	5920 – 022 – 273 – XX	BOLT	3	*	*				920022273
17	5920 – 022 – 310 – XX	BOLT	2	*	*				920022310
18	5920 – 042 – 083 – XX	STUD – 6X14	4	*	*				920042083
19	5920 – 042 – 094 – XX	STUD	2	*					920042094
20	5920 – 092 – 308 – XX	SCREW	1	*	*				920092308
21	5920 – 152 – 166 – XX	NUT	2	*					920152166
22	5920 – 222 – 206 – XX	WASHER – 10X20X2	1	*					920222206

FIG. 1 CYLINDER CRANKCASE

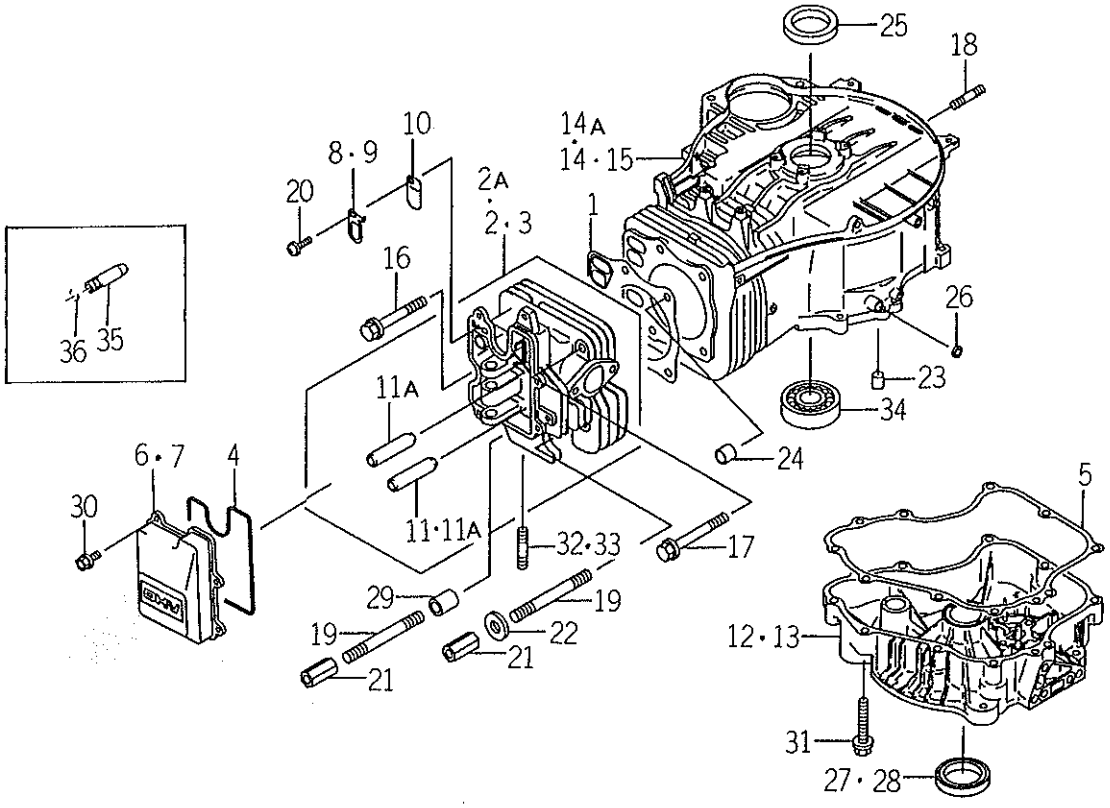

K502-G010

KEY	PART CODE	DESCRIPTION	QTY	TYPE OF MODEL FC420V CB00	FC420V FB00	ITC	COL	GRP	REMARKS
23	5920 - 431 - 263 - XX	PIN	2	*	*				920431263
24	5920 - 431 - 266 - XX	PIN	2	*	*				920431266
25	5920 - 492 - 096 - XX	SEAL - OIL	1	*	*				920492096
26	5920 - 492 - 097 - XX	SEAL - OIL	1	*	*				920492097
27	5920 - 492 - 104 - XX	SEAL - OIL	1	*	*				920492104
28	5920 - 492 - 227 - XX	SEAL - OIL	1		*				920492227
29	5921 - 432 - 005 - XX	COLLAR	1	*					921432005
30	5130 - B06 - 14X - XX	BOLT - FLANGED	4	*	*				130B0614
31	5130 - T08 - 45X - XX	BOLT - FLANGED	9	*	*				130T0845
32	5171 - G08 - 18X - XX	BOLT - STUD	2	*					171G0818
33	5171 - G08 - 20X - XX	BOLT - STUD	2		*				171G0820
34	5601 - A63 - 07X - XX	BEARING - BALL	1	*	*				601A6307
35	5490 - 022 - 097 - XX	GUIDE,VALVE IN	1	1-119615					490022097
36	5920 - 360 - 23X - XX	RING,SNAP	2	1--119615					92036023

FIG. 2 PISTON CRANKSHAFT

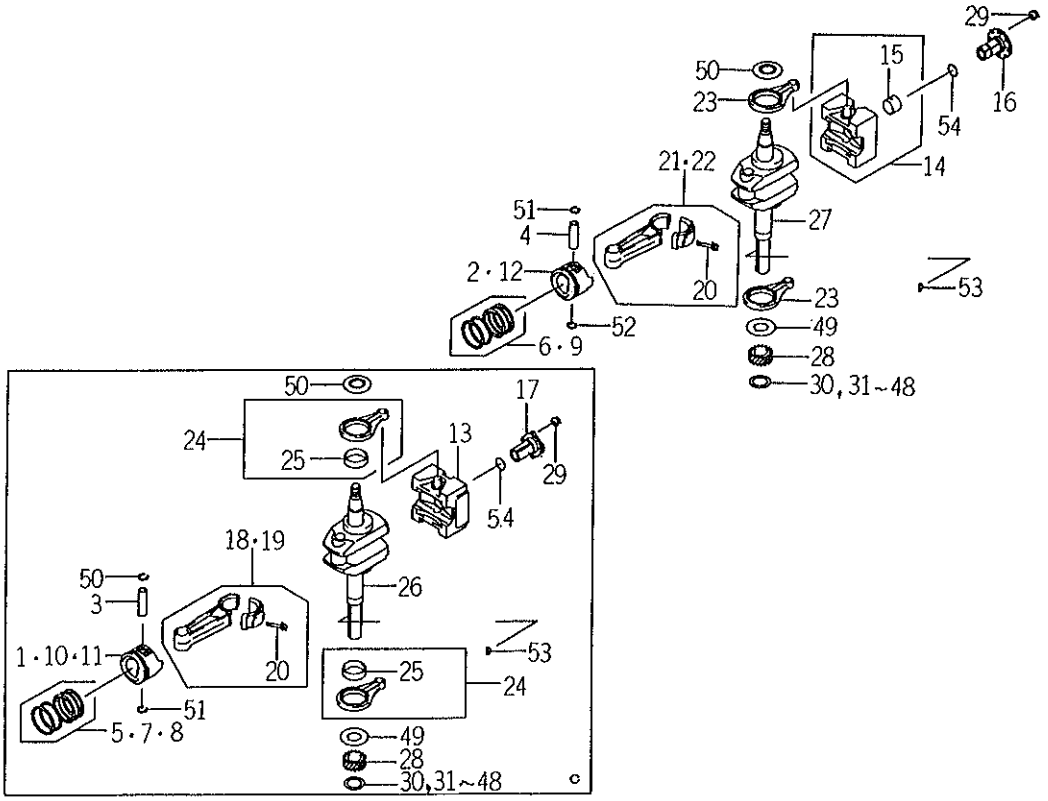

X502-0020

KEY	PART CODE	DESCRIPTION	QTY	TYPE OF MODEL FC420V CB00	FC420V FB00	ITC	COL	GRP	REMARKS
1	5130 - 012 - 092 - XX	PISTON - ENGINE	1	*					130012092
2	5130 - 012 - 130 - XX	PISTON - ENGINE	1		*				130012130
3	5130 - 022 - 070 - XX	PIN - PISTON	1	*					130022070
4	5130 - 022 - 078 - XX	PIN - PISTON	1		*				130022078
5	5130 - 086 - 001 - XX	RING - SET - PISTON	1	*					130086001
6	5130 - 086 - 053 - XX	RING - SET - PISTON	1		*				130086053
7	5130 - 086 - 002 - XX	RING - SET - PISTONL	AR	*					130086002
8	5130 - 086 - 003 - XX	RING - SET - PISTONL	AR	*					130086003
9	5130 - 256 - 020 - XX	RING - SET - PISTONL	AR		*				130256020
10	5130 - 292 - 078 - XX	PISTON - ENGINEL - 0.25	AR	*					130292078
11	5130 - 292 - 079 - XX	PISTON - ENGINEL - 0.50	AR	*					130292079
12	5130 - 292 - 106 - XX	PISTON - ENGINEL - 0.50	AR		*				130292106
13	5130 - 426 - 008 - XX	WEIGHT	1	*					130426008
14	5130 - 426 - 010 - XX	WEIGHT	1		*				130426010
15	5921 - 412 - 112 - XX	BEARING - PLANE	1		*				921412112
16	5131 - 072 - 088 - XX	SHAFT	1		*				131072088
17	5131 - 072 - 232 - XX	SHAFT	1	*					131072232
18	5132 - 516 - 019 - XX	ROD - ASSY - CONNECTING	1	*					132516019
19	5132 - 516 - 020 - XX	ROD - ASSY - CONNECTING	AR	*					132516020
20	5921 - 502 - 193 - XX	BOLT	2	*	*				921502193
21	5132 - 516 - 039 - XX	ROD - ASSY - CONNECTING	1		*				132516039
22	5132 - 516 - 041 - XX	ROD - ASSY - CONNECTING	AR		*				132516041
23	5461 - 022 - 077 - XX	ROD	2		*				461022077
24	5461 - 026 - 007 - XX	ROD	2	*					461026007
25	5921 - 412 - 108 - XX	BEARING - PLANE	2	*					921412108

FIG. 2 PISTON CRANKSHAFT

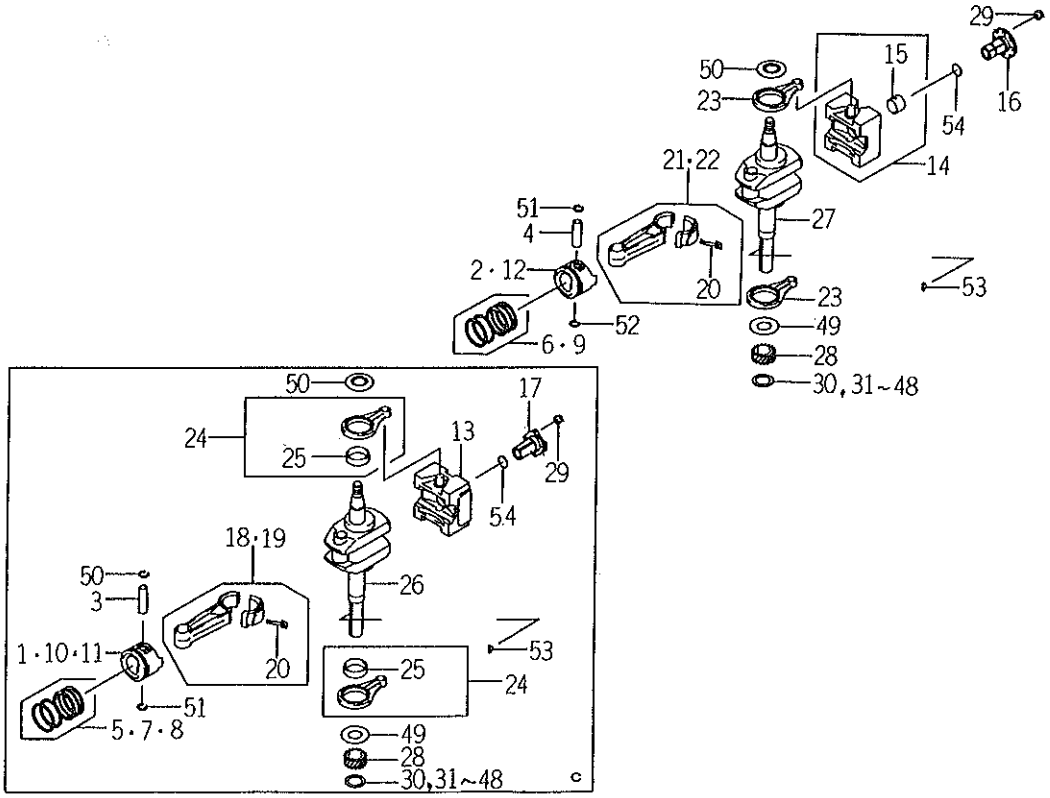

K502-0020

KEY	PART CODE	DESCRIPTION	QTY	TYPE OF MODEL FC420V CB00	TYPE OF MODEL FC420V FB00	ITC	COL	GRP	REMARKS
26	5491 - 192 - 134 - XX	CRANKSHAFT - ASSY	1	*					491192134
27	5491 - 192 - 179 - XX	CRANKSHAFT - ASSY	1		*				491192179
28	5590 - 562 - 101 - XX	GEAR - HELICAL	1	*	*				590562101
29	5920 - 151 - 193 - XX	NUT	4	*	*				920151193
30	5920 - 252 - 210 - XX	SHIM,1.18	AR	*	*				920252210
31	5920 - 252 - 211 - XX	SHIM,T = 1.215	AR	*	*				920252211
32	5920 - 252 - 212 - XX	SHIM,T = 1.25	AR	*	*				920252212
33	5920 - 252 - 213 - XX	SHIM,T = 1.285	AR	*	*				920252213
34	5920 - 252 - 214 - XX	SHIM,T = 1.32	AR	*	*				920252214
35	5920 - 252 - 215 - XX	SHIM,T = 1.355	AR	*	*				920252215
36	5920 - 252 - 216 - XX	SHIM,T = 1.39	AR	*	*				920252216
37	5920 - 252 - 217 - XX	SHIM,T = 1.425	AR	*	*				920252217
38	5920 - 252 - 218 - XX	SHIM,T = 1.46	AR	*	*				920252218
39	5920 - 252 - 219 - XX	SHIM,T = 1.495	AR	*	*				920252219
40	5920 - 252 - 220 - XX	SHIM,T = 1.53	AR	*	*				920252220
41	5920 - 252 - 221 - XX	SHIM,T = 1.565	AR	*	*				920252221
42	5920 - 252 - 222 - XX	SHIM,T = 1.60	AR	*	*				920252222
43	5920 - 252 - 223 - XX	SHIM,T = 1.635	AR	*	*				920252223
44	5920 - 252 - 224 - XX	SHIM,T = 1.67	AR	*	*				920252224
45	5920 - 252 - 225 - XX	SHIM,T = 1.705	AR	*	*				920252225
46	5920 - 252 - 226 - XX	SHIM,T = 1.74	AR	*	*				920252226
47	5920 - 252 - 227 - XX	SHIM,T = 1.775	AR	*	*				920252227
48	5920 - 252 - 228 - XX	SHIM,T = 1.81	AR	*	*				920252228
49	5920 - 262 - 156 - XX	SPACER	1	*	*				920262156
50	5920 - 262 - 160 - XX	SPACER	1	*	*				920262160

FIG. 2 PISTON CRANKSHAFT

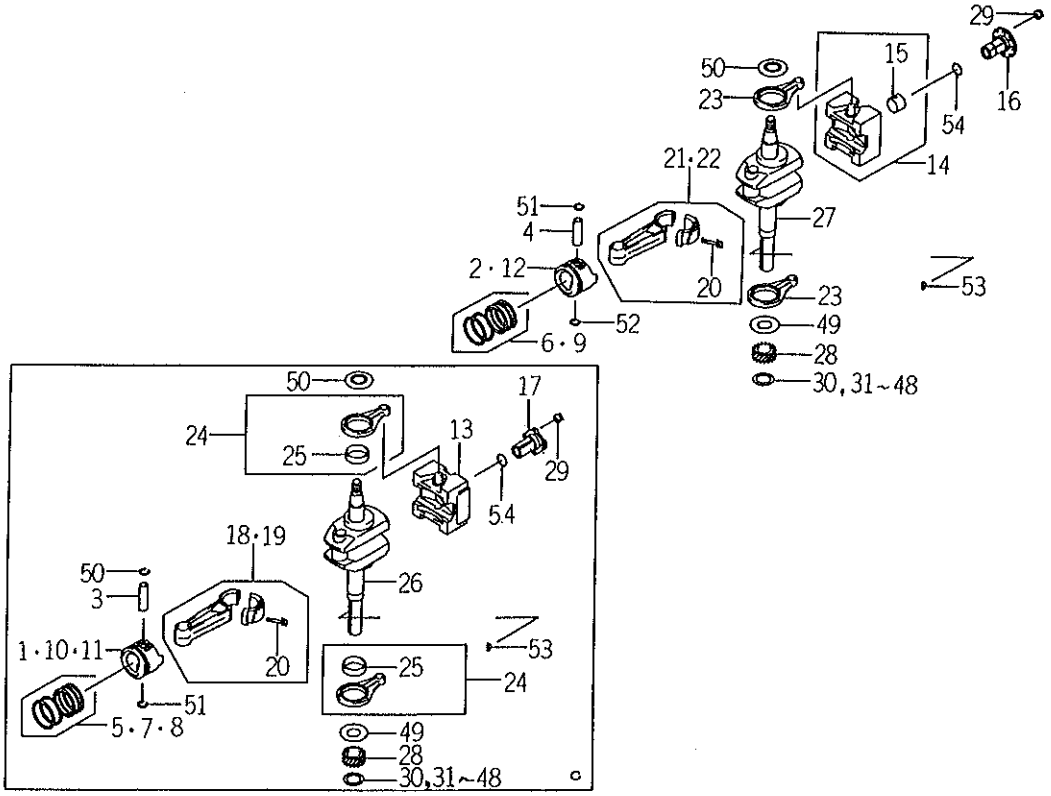

K502-0020

KEY	PART CODE	DESCRIPTION	QTY	TYPE OF MODEL FC420V CB00	FC420V FB00	ITC	COL	GRP	REMARKS
51	5920 - 332 - 080 - XX	RING - SNAP	2	*					920332080
52	5920 - 360 - 08X - XX	RING - SNAP	2		*				92036008
53	5920 - 382 - 094 - XX	KEY	1	*	*				920382094
54	5920 - 552 - 072 - XX	RING - O	1	*	*				920552072

FIG. 3 VALVE CAMSHAFT

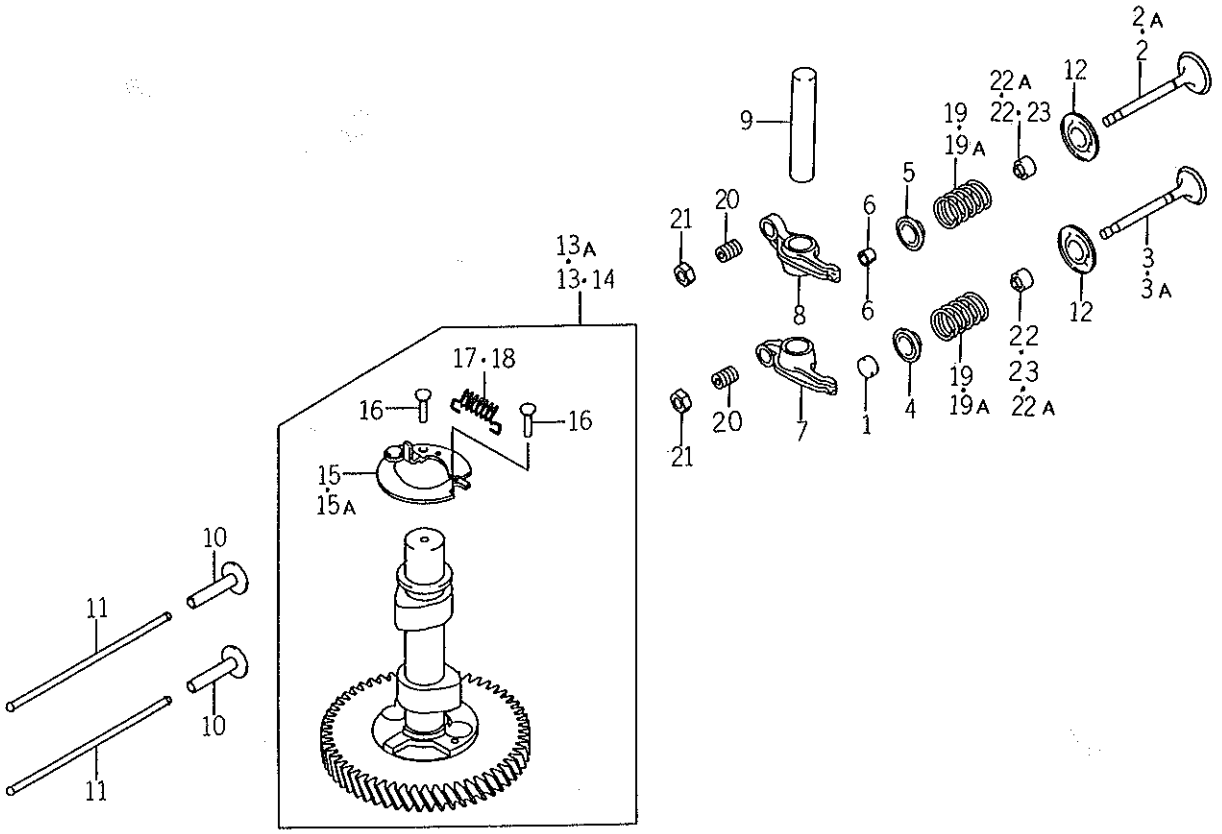

K502-0030

KEY	PART CODE	DESCRIPTION	QTY	TYPE OF MODEL FC420V CB00	TYPE OF MODEL FC420V FB00	ITC	COL	GRP	REMARKS
1	5110 - 122 - 189 - XX	CAP,VALVE	1	*					110122189
2	5120 - 042 - 085 - XX	VALVE - INTAKE	1	1- -119615					120042085
2A	5120 - 042 - 097 - XX	VALVE - INTAKE	1	119616-					120042097
3	5120 - 052 - 070 - XX	VALVE - EXHAUST	1	1- -119615					120052070
3A	5120 - 052 - 086 - XX	VALVE - EXHAUST	1	119616-	*				120052086
4	5120 - 092 - 058 - XX	RETAINER - VALVE	1	*	*				120092058
5	5120 - 092 - 060 - XX	RETAINER - VALVE	1	*	*				120092060
6	5120 - 112 - 052 - XX	COLLET	2	*	*				120112052
7	5120 - 162 - 054 - XX	ARM - ROCKER	1	*					120162054
8	5120 - 162 - 055 - XX	ARM - ROCKER	1	*	*				120162055
9	5120 - 202 - 058 - XX	SHAFT - ROCKER	1	*	*				120202058
10	5120 - 322 - 068 - XX	TAPPET	2	*	*				120322068
11	5131 - 162 - 056 - XX	ROD - PUSH	2	*	*				131162056
12	5160 - 072 - 052 - XX	SEAT - SPRING	2	*	*				160072052
13	5491 - 182 - 077 - XX	CAMSHAFT - COMP	1	1- -119615					491182077
13A	5491 - 182 - 099 - XX	CAMSHAFT - COMP	1	119616-					491182099
14	5491 - 182 - 132 - XX	CAMSHAFT - COMP	1		*				491182132
15	5211 - 182 - 077 - XX	DECOMPRESSOR	1	1- -119615					211182077
15A	5211 - 182 - 083 - XX	DECOMPRESSOR	1	119616-	*				211182083
16	5920 - 432 - 113 - XX	PIN	2	*	*				920432113
17	5920 - 812 - 033 - XX	SPRING	2	*					920812033
18	5921 - 442 - 323 - XX	SPRING	1	*	*				921442323
19	5490 - 782 - 061 - XX	SPRING - ENGINE VALVE	2	1- -119615					490782061
19A	5490 - 782 - 068 - XX	SPRING - ENGINE VALVE	2	119616-	*				490782068
20	5920 - 092 - 182 - XX	SCREW	2	*	*				920092182

FIG. 3 VALVE CAMSHAFT

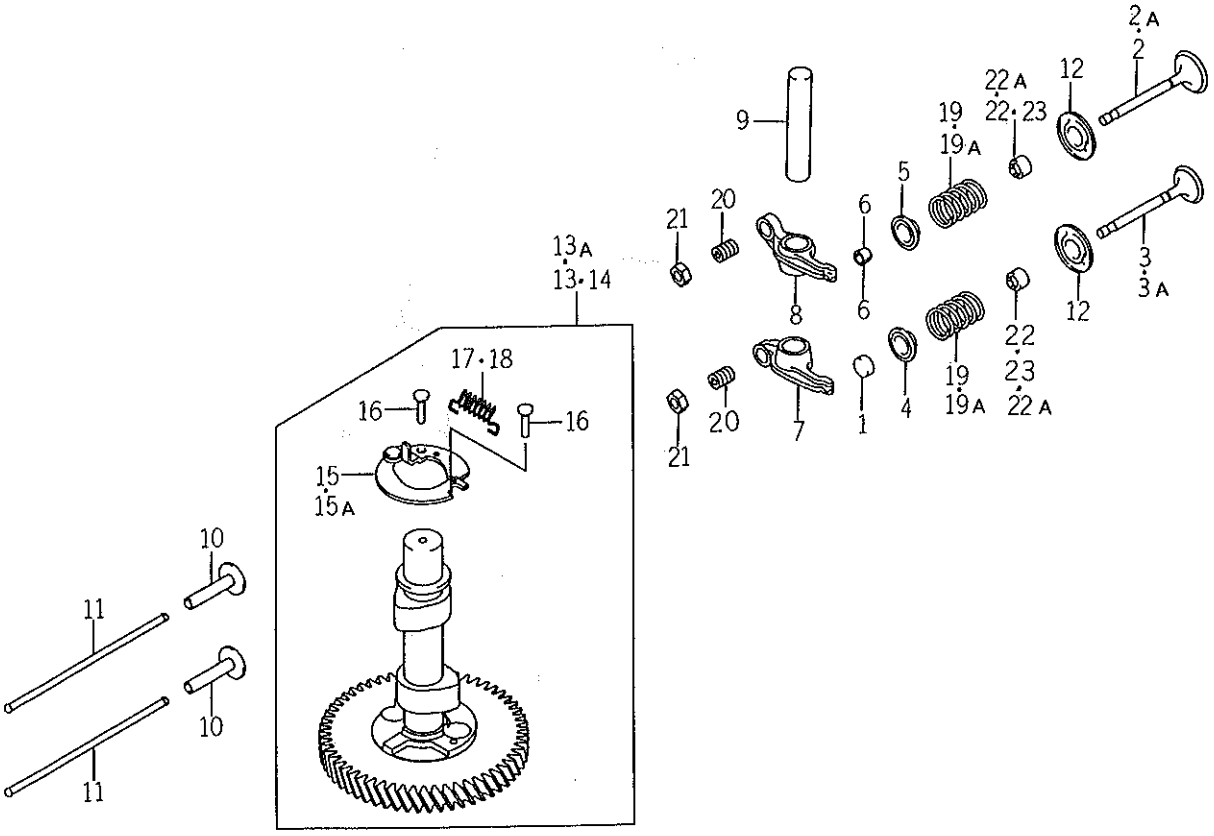

K5G2-G030

KEY	PART CODE	DESCRIPTION	QTY	TYPE OF MODEL FC420V CB00	TYPE OF MODEL FC420V FB00	ITC	COL	GRP	REMARKS
21	5920 - 152 - 139 - XX	NUT	2	*	*				920152139
22	5920 - 492 - 100 - XX	SEAL - OIL	2	1- -119615					920492100
22A	5920 - 492 - 054 - XX	SEAL - OIL	2	119616-					920492054
23	5920 - 492 - 223 - XX	SEAL - OIL	2		*				920492223

FIG. 4 LUBRICATION EQUIPMENT

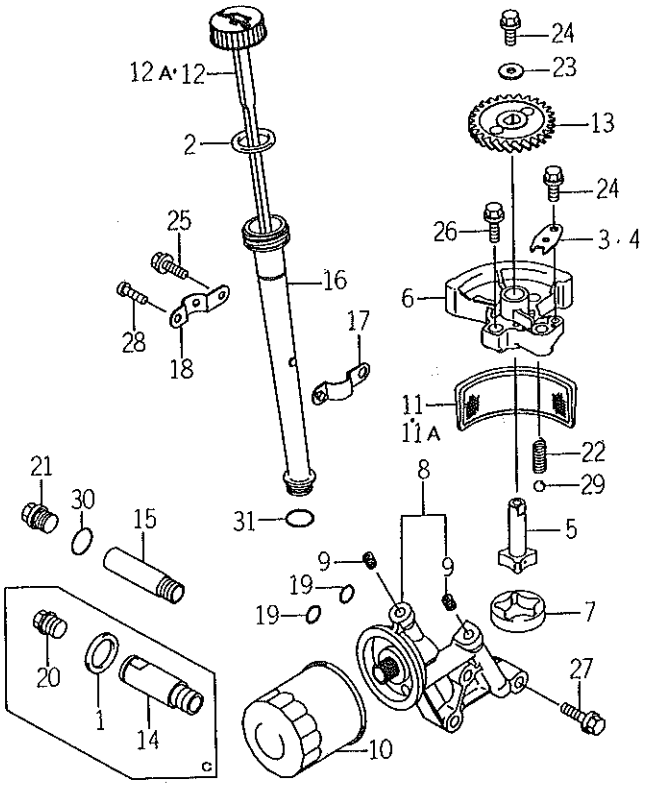

K502-0040

KEY	PART CODE	DESCRIPTION	QTY	TYPE OF MODEL FC420V CB00	TYPE OF MODEL FC420V F800	ITC	COL	GRP	REMARKS
1	5110 - 092 - 175 - XX	GASKET	1	*					110092175
2	5110 - 092 - 346 - XX	GASKET,OIL GAUGE	1	*	*				110092346
3	5131 - 692 - 360 - XX	PLATE	1	*					131692360
4	5132 - 702 - 054 - XX	PLATE	1		*				132702054
5	5160 - 822 - 059 - XX	PUMP - ASSY - OIL	1	*	*				160822059
6	5161 - 422 - 053 - XX	COVER - PUMP	1	*	*				161422053
7	5161 - 542 - 052 - XX	ROTOR - PUMP	1	*	*				161542052
8	5310 - 646 - 001 - XX	PIPE - COMP	1	*	*				310646001
9	5920 - 662 - 211 - XX	PLUG	2	*	*				920662211
10	5490 - 652 - 071 - XX	FILTER - OIL	1	*	*				490652071
11	5490 - 652 - 059 - XX	FILTER - OIL	1	1-119615					490652059
11A	5490 - 652 - 073 - XX	FILTER - OIL	1	119616-	*				490652073
12	5520 - 052 - 070 - XX	GAUGE	1	1-119615					520052070
12A	5520 - 052 - 105 - XX	GAUGE	1	119616-	*				520052105
13	5590 - 562 - 090 - XX	GEAR - HERICAL	1	*	*				590562090
14	5590 - 712 - 070 - XX	JOINT	1	*					590712070
15	5590 - 712 - 114 - XX	JOINT	1		*				590712114
16	5592 - 312 - 062 - XX	FILLER	1	*	*				592312062
17	5920 - 372 - 199 - XX	CLAMP	1	*	*				920372199
18	5920 - 372 - 200 - XX	CLAMP	1	*	*				920372200
19	5920 - 552 - 073 - XX	RING - O	2	*	*				920552073
20	5920 - 662 - 092 - XX	PLUG,DRAIN	1	*					920662092
21	5920 - 662 - 207 - XX	PLUG	1		*				920662207
22	5920 - 812 - 305 - XX	SPRING	1	*	*				920812305
23	5922 - 002 - 035 - XX	WASHER	1	*	*				922002035

FIG. 4 LUBRICATION EQUIPMENT

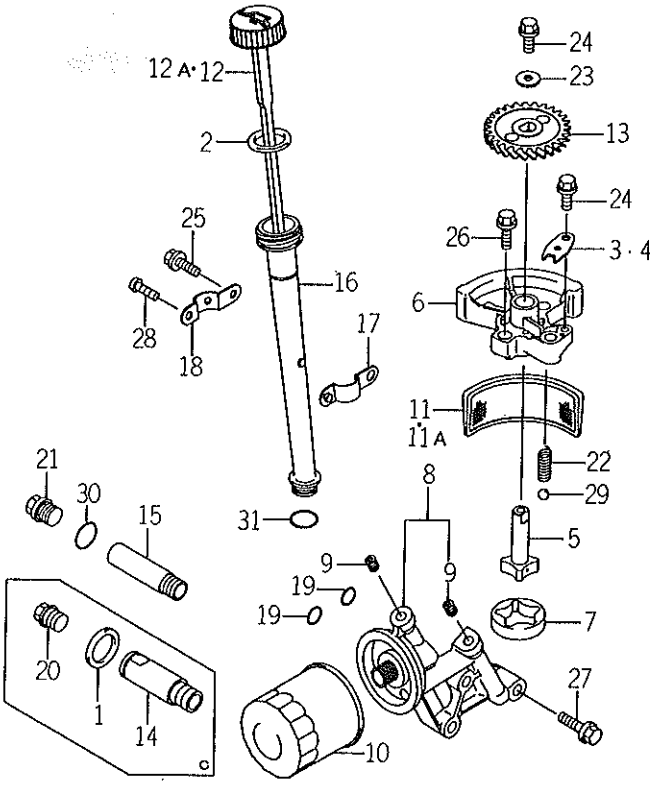

X502-0040

KEY	PART CODE	DESCRIPTION	QTY	TYPE OF MODEL FC420V CB00	FC420V FB00	ITC	COL	GRP	REMARKS
24	5130 - B06 - 10X - XX	BOLT - FLANGED	2	*	*				130B0610
25	5130 - B06 - 14X - XX	BOLT - FLANGED	1	*	*				130B0614
26	5130 - B08 - 30X - XX	BOLT - FLANGED	2	*	*				130B0830
27	5130 - B08 - 40X - XX	BOLT - FLANGED	3	*	*				130B0840
28	5220 - B06 - 08X - XX	SCREW - PAN - CROS	1	*	*				220B0608
29	5600 - A10 - 00X - XX	BALL - STEEL	1	*	*				600A1000
30	5670 - D20 - 11X - XX	O RING	1		*				670D2011
31	5670 - D20 - 16X - XX	O RING	1	*	*				670D2016

FIG. 5 COOLING EQUIPMENT

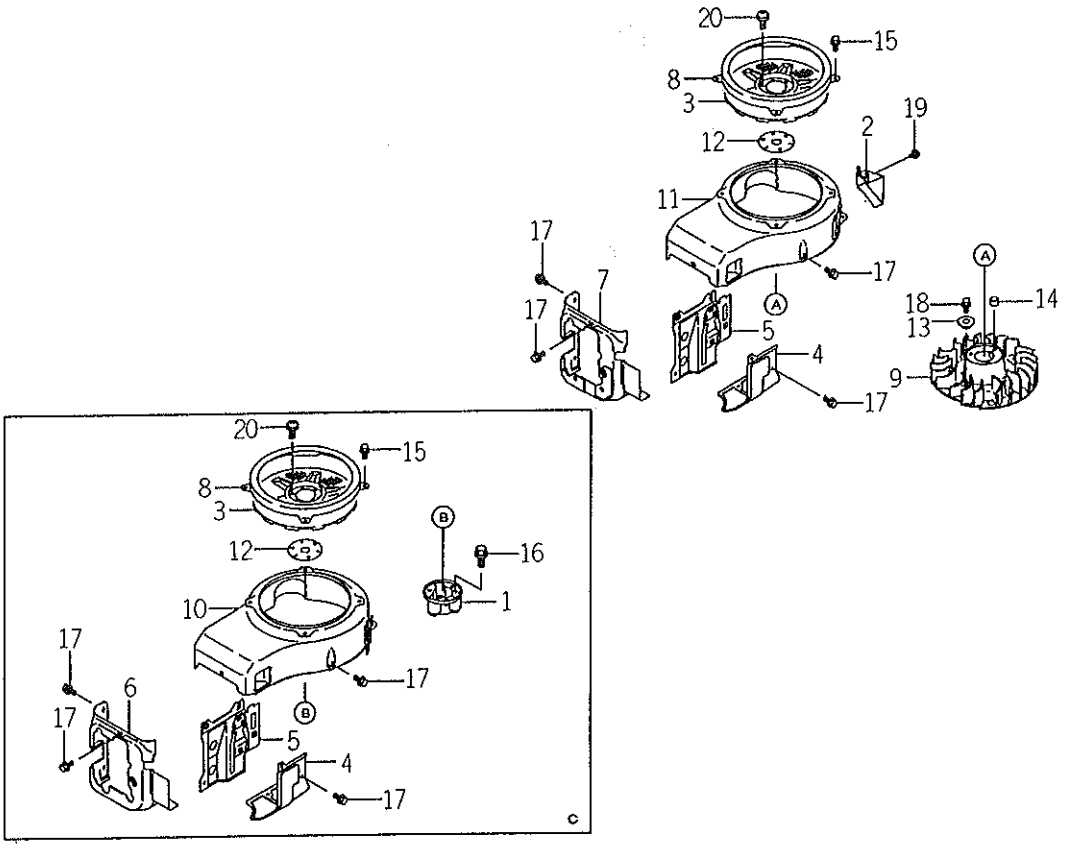

K502-005C

KEY	PART CODE	DESCRIPTION	QTY	TYPE OF MODEL FC420V CB00	TYPE OF MODEL FC420V F800	ITC	COL	GRP	REMARKS
1	5110 – 442 – 084 – XX	BRACKET	1	*					110442084
2	5140 – 242 – 294 – 9H	COVER	1		*				1402422949H
3	5140 – 372 – 104 – 9H	SCREEN	1	*	*				1403721049H
4	5490 – 892 – 232 – 9H	SHROUD – ENGINE	1	*	*				4908922329H
5	5490 – 892 – 233 – 9H	SHROUD – ENGINE	1	*	*				4908922339H
6	5490 – 892 – 330 – 9H	SHROUD – ENGINE	1	*					4908923309H
7	5490 – 892 – 392 – 9H	SHROUD – ENGINE	1		*				4908923929H
8	5550 – 202 – 079 – 9H	GUARD	1	*	*				5502020799H
9	5590 – 412 – 087 – XX	FAN	1		*				590412087
10	5590 – 662 – 431 – 9H	HOUSING – FAN	1	*					5906624319H
11	5590 – 662 – 564 – 9H	HAUSING – FAN	1		*				5906625649H
12	5920 – 252 – 003 – XX	SHIM,T = 1.20	AR	*	*				920252003
13	5921 – 432 – 179 – XX	COLLAR	4		*				921432179
14	5921 – 432 – 182 – XX	COLLAR,6.2X7.8X5	3		*				921432182
15	5130 – B06 – 10X – XX	BOLT – FLANGED	4	*	*				130B0610
16	5130 – B08 – 20X – XX	BOLT – FLANGED	3	*					130B0820
17	5130 – G06 – 12X – XX	BOLT – FLANGED	12	*	*				130G0612
18	5130 – G06 – 14X – XX	BOLT – FLANGED	4		*				130G0614
19	5224 – B04 – 08X – XX	SCREW – PAN – WP – CROS	2		*				224B0408
20	5224 – B06 – 16X – XX	SCREW – PAN – WP – CROS	3	*	*				224B0616

FIG. 6 ELECTRIC EQUIPMENT

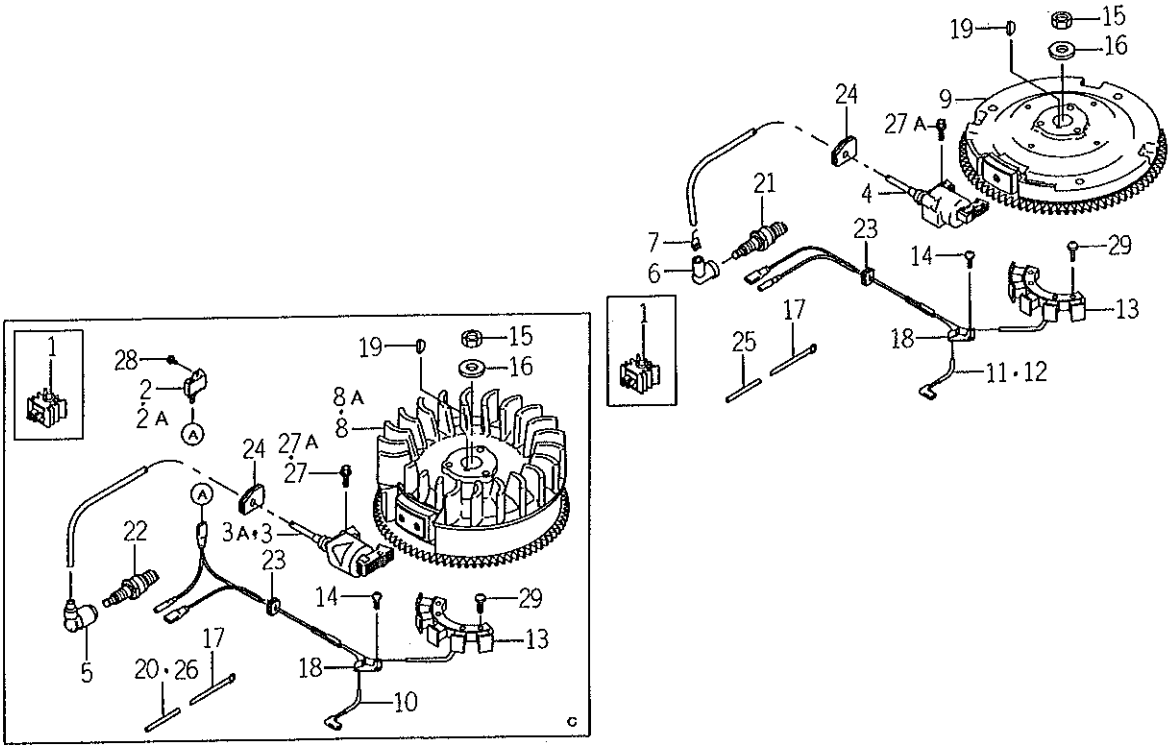

X502-0C60

KEY	PART CODE	DESCRIPTION	QTY	TYPE OF MODEL FC420V C800	TYPE OF MODEL FC420V FB00	ITC	COL	GRP	REMARKS
1	5210 - 661 - 020 - XX	REGULATOR - VOLTAGE	1	*	*				210661020
2	5211 - 192 - 095 - XX	IGNITER	1	1- -119615					211192095
2A	5211 - 192 - 101 - XX	IGNITER	1	119616-					211192101
3	5211 - 212 - 008 - XX	COIL - IGNITION	1	1- -119615					211212008
3A	5211 - 212 - 070 - XX	COIL - IGNITION	1	119616-					211212070
4	5211 - 212 - 086 - XX	COIL - IGNITION	1		*				211212086
5	5211 - 302 - 060 - XX	CAP - SPARK PLUG	1	*					211302060
6	5211 - 302 - 066 - XX	CAP - SPARK PLUG	1		*				211302066
7	5211 - 692 - 004 - XX	TERMINAL	1		*				211692004
8	5211 - 932 - 072 - XX	FLYWHEEL - ASSY	1	1- -119615					211932072
8A	5211 - 932 - 126 - XX	FLYWHEEL - ASSY	1	119616-					211932126
9	5211 - 932 - 154 - XX	FLYWHEEL - ASSY	1		*				211932154
10	5260 - 112 - 104 - XX	WIRE - LEAD	1	*					260112104
11	5260 - 112 - 314 - XX	WIRE - LEAD	1		1- B52571				260112314
12	5260 - 112 - 331 - XX	WIRE - LEAD,L = 260	1		*				260112331
13	5590 - 312 - 086 - XX	COIL - CHARGING	1	*	*				590312086
14	5920 - 092 - 308 - XX	SCREW	1	*	*				920092308
15	5920 - 152 - 167 - XX	NUT	1	*	*				920152167
16	5920 - 222 - 229 - XX	WASHER	1	*	*				920222229
17	5920 - 372 - 063 - XX	CLAMP	1	*	*				920372063
18	5920 - 372 - 177 - XX	CLAMP	1	*	*				920372177
19	5920 - 382 - 094 - XX	KEY	1	*	*				920382094
20	5920 - 592 - 012 - XX	TUBE,5X6X55	1	*					920592012
21	5920 - 702 - 075 - XX	PLUG - SPARK,RN11YC	1		*				920702075
22	5920 - 702 - 077 - XX	PLUG - SPARK,8PR5ES	1	*					920702077

FIG. 6 ELECTRIC EQUIPMENT

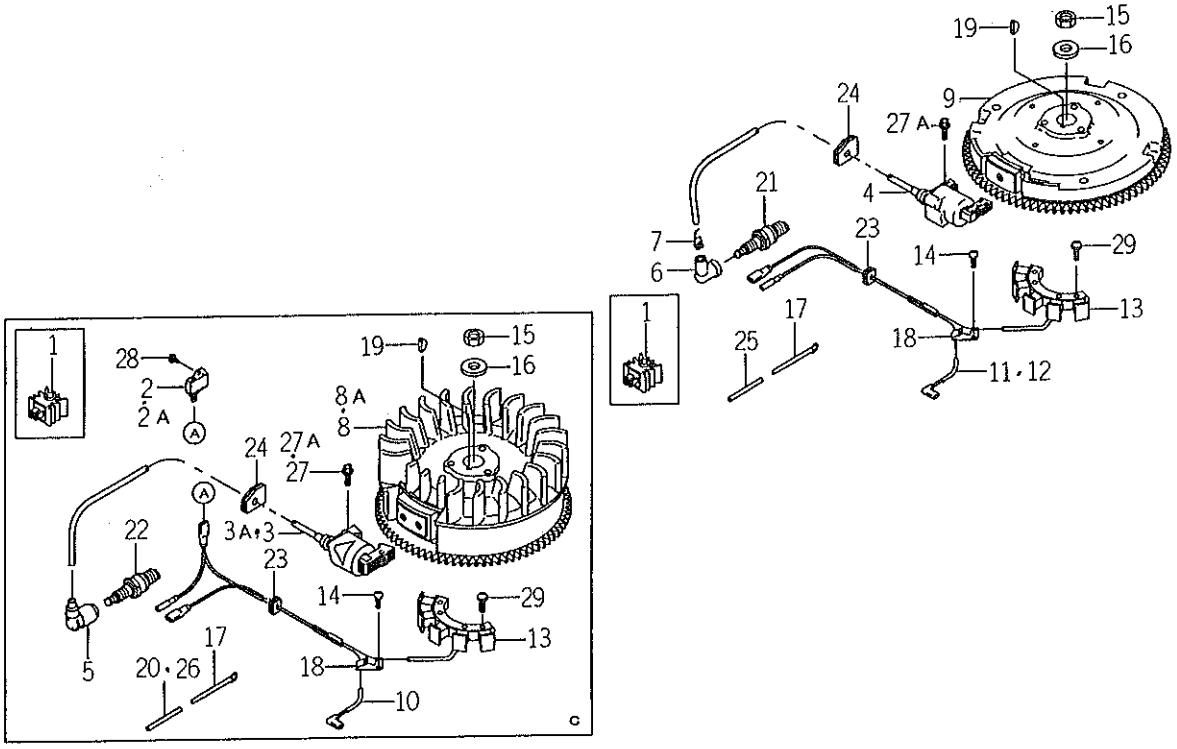

X502-0060

KEY	PART CODE	DESCRIPTION	QTY	TYPE OF MODEL FC420V CB00	TYPE OF MODEL FC420V FB00	ITC	COL	GRP	REMARKS
23	5920 - 712 - 099 - XX	GROMMET	1	*	*				920712099
24	5920 - 712 - 112 - XX	GROMMET	1	*	*				920712112
25	5921 - 902 - 167 - XX	TUBE	1		*				921902167
26	5921 - 902 - 167 - XX	TUBE	1	*					921902167
27	5130 - B05 - 25X - XX	BOLT - FLANGED	2	1- -119615					130B0525
27A	5130 - B05 - 20X - XX	BOLT - FLANGED	2	119616-	*				130B0520
28	5224 - B04 - 08X - XX	SCREW - PAN - WP - CROS	1	*					224B0408
29	5224 - B06 - 20X - XX	SCREW - PAN - WP - CROS	2	*	*				224B0620

FIG. 7 CONTROL EQUIPMENT

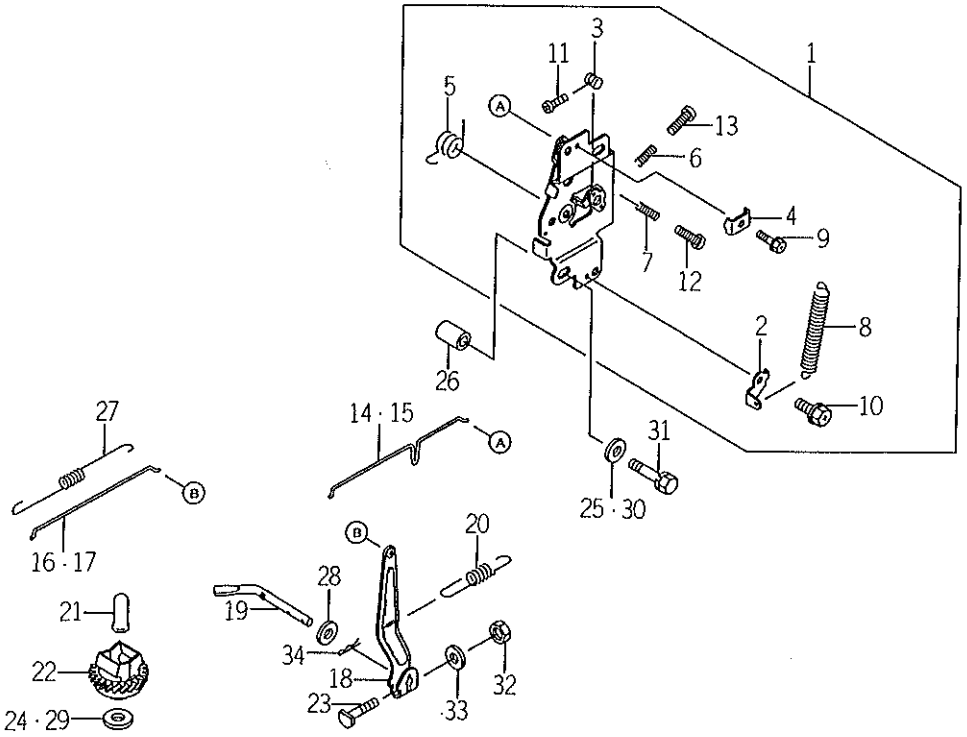

K502-0070

KEY	PART CODE	DESCRIPTION	QTY	TYPE OF MODEL FC420V CB00	TYPE OF MODEL FC420V FB00	ITC	COL	GRP	REMARKS
1	5491 - 132 - 098 - XX	PANEL - COMP - CONTROL	1	*	*				491132098
2	5110 - 472 - 028 - XX	BRACKET	1	*	*				110472028
3	5920 - 152 - 120 - XX	NUT	1	*	*				920152120
4	5920 - 372 - 020 - XX	CLAMP	1	*	*				920372020
5	5920 - 812 - 316 - XX	SPRING	1	*	*				920812316
6	5921 - 442 - 220 - XX	SPRING	1	*	*				921442220
7	5921 - 442 - 266 - XX	SPRING	1	*	*				921442266
8	5921 - 442 - 281 - XX	SPRING	1	*	*				921442281
9	5921 - 502 - 182 - XX	BOLT,5X18	1	*	*				921502182
10	5130 - B05 - 08X - XX	BOLT - FLANGED	1	*	*				130B0508
11	5214 - B04 - 12X - XX	SCREW - PAN	1	*	*				214B0412
12	5214 - B04 - 20X - XX	SCREW - PAN	1	*	*				214B0420
13	5214 - B04 - 25X - XX	SCREW - PAN	1	*	*				214B0425
14	5161 - 692 - 088 - XX	LINK - CHOKE	1	*	*				161692088
15	5161 - 692 - 130 - XX	LINK - CHOKE	1		*				161692130
16	5161 - 712 - 056 - XX	LINK,GOVERNOR	1	*					161712056
17	5161 - 712 - 079 - XX	LINK,GOVERNOR	1		*				161712079
18	5211 - 872 - 055 - XX	ARM - ASSY	1	*	*				211872055
19	5390 - 032 - 073 - XX	ARM - PIVOT	1	*	*				390032073
20	5391 - 292 - 011 - XX	SPRING - GOVERNOR	1	*	*				391292011
21	5420 - 362 - 060 - XX	SLEEVE	1	*	*				420362060
22	5491 - 102 - 067 - XX	GOVERNOR - ASSY	1	*	*				491102067
23	5920 - 022 - 269 - XX	BOLT	1	*	*				920022269
24	5920 - 222 - 019 - XX	WASHER (~148906)	1	1-148906					920222019
25	5920 - 222 - 089 - XX	WASHER	1	*					920222089

FIG. 7 CONTROL EQUIPMENT

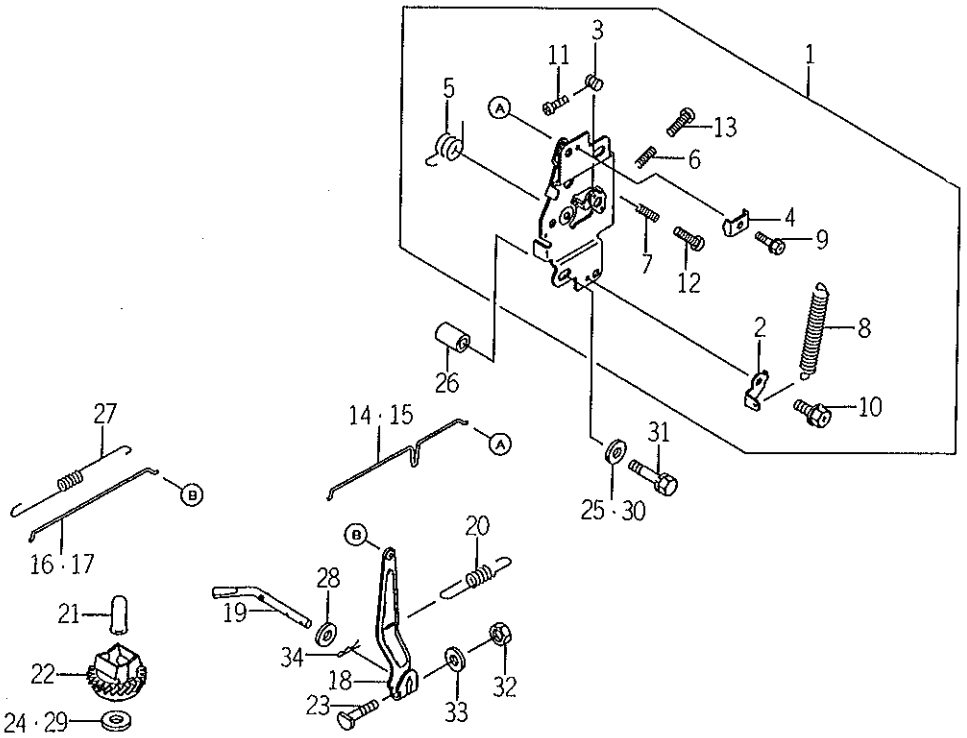

K502-007C

KEY	PART CODE	DESCRIPTION	QTY	TYPE OF MODEL FC420V C800	TYPE OF MODEL FC420V FB00	ITC	COL	GRP	REMARKS
26	5921 - 432 - 006 - XX	COLLAR	2	*	*				921432006
27	5921 - 442 - 033 - XX	SPRING	1	*	*				921442033
28	5922 - 002 - 029 - XX	WASHER,6.5X11.5X2.0	1	*	*				922002029
29	5922 - 002 - 036 - XX	WASHER	1	*	*				922002036
30	5922 - 002 - 070 - XX	WASHER	2	*	*				922002070
31	5180 - B06 - 35X - XX	BOLT - UPSET - WS	2	*	*				180B0635
32	5311 - B06 - 00X - XX	NUT - HEX	1	*	*				311B0600
33	5411 - B06 - 00X - XX	WASHER - PLAIN	1	*	*				411B0600
34	5554 - A06 - 00X - XX	PIN - SNAP	1	*	*				554A0600

FIG. 8 CARBURETOR

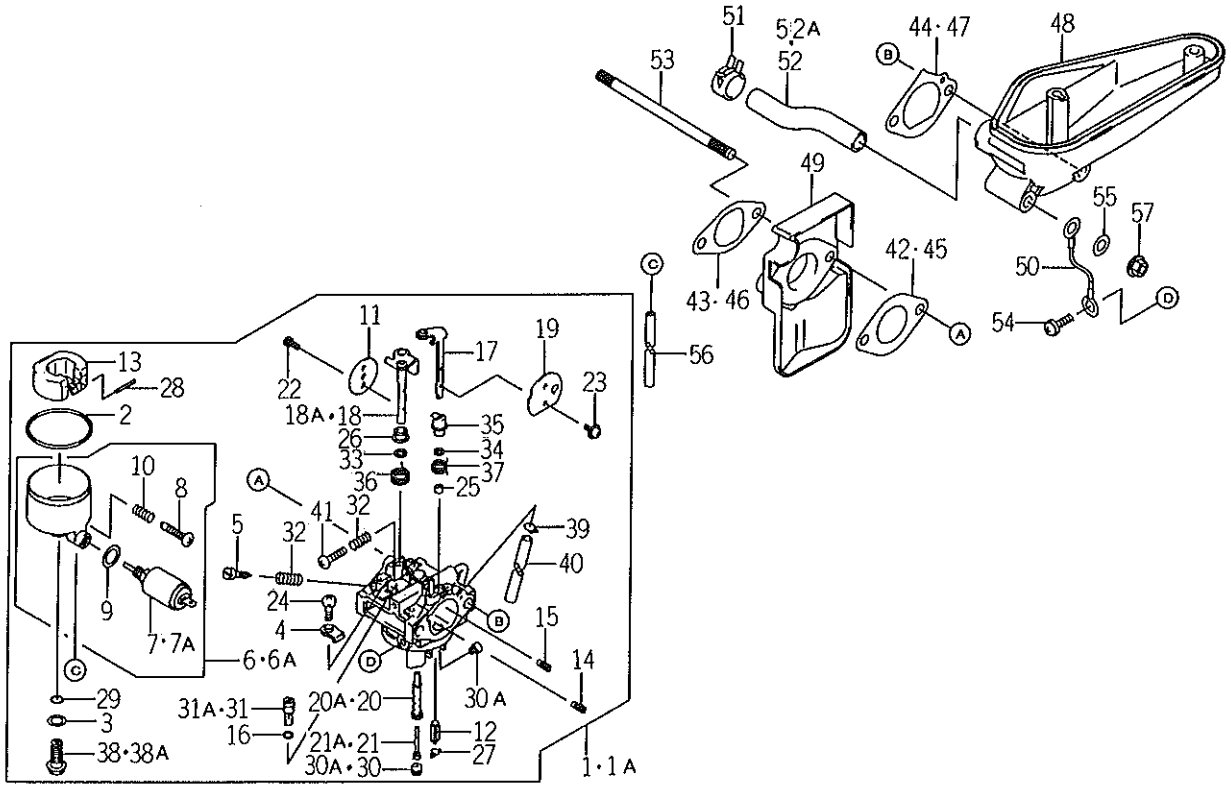

K502-0C5C

KEY	PART CODE	DESCRIPTION	QTY	TYPE OF MODEL FC420V CB00	TYPE OF MODEL FC420V FB00	ITC	COL	GRP	REMARKS
1	5150 - 032 - 090 - XX	CARBURETOR - ASSY	1	1- -119615					150032090
1A	5150 - 032 - 164 - XX	CARBURETOR - ASSY	1	119616-	*				150032164
2	5110 - 092 - 024 - XX	GASKET	1	*	*				110092024
3	5110 - 092 - 769 - XX	GASKET	1	*	*				110092769
4	5131 - 832 - 252 - XX	PLATE	1	*	*				131832252
5	5160 - 142 - 010 - XX	SCREW - PILOT AIR	1	*	*				160142010
6	5160 - 202 - 096 - XX	CHAMBER - FLOAT	1	1- -119615					160202096
6A	5160 - 202 - 122 - XX	CHAMBER - FLOAT	1	119616-	*				160202122
7	5211 - 882 - 001 - XX	SOLENOID,CARBURETOR	1	1- -119615					211882001
7A	5211 - 882 - 004 - XX	SOLENOID,CARBURETOR	1	119616-	*				211882004
8	5920 - 092 - 025 - XX	SCREW	1	*	*				920092025
9	5920 - 650 - 78X - XX	WASHER	1	*	*				92065078
10	5921 - 442 - 174 - XX	SPRING	1	*	*				921442174
11	5160 - 252 - 137 - XX	VALVE - THROTTLE 90	1	*	*				160252137
12	5160 - 302 - 067 - XX	VALVE - FLOAT	1	*	*				160302067
13	5160 - 312 - 066 - XX	FLOAT	1	*	*				160312066
14	5160 - 352 - 056 - XX	JET - AIR 1.8	1	*	*				160352056
15	5160 - 352 - 058 - XX	JET - AIR 1.1	1	*	*				160352058
16	5160 - 380 - 24X - XX	GASKET	1	*	*				16038024
17	5160 - 412 - 163 - XX	SHAFT - CARBURETOR	1	*	*				160412163
18	5160 - 412 - 163 - XX	SHAFT - CARBURETOR	1	1- -119615					160412163
18A	5160 - 412 - 215 - XX	SHAFT - CARBURETOR	1	119616-	*				160412215
19	5161 - 262 - 151 - XX	VALVE,CHOKE	1	*	*				161262151
20	5491 - 212 - 106 - XX	NOZZLE - MAIN 65A	1	1- -119615					491212106
20A	5491 - 212 - 152 - XX	NOZZLE - MAIN 65A	1	119616-	*				491212152

FIG. 8 CARBURETOR

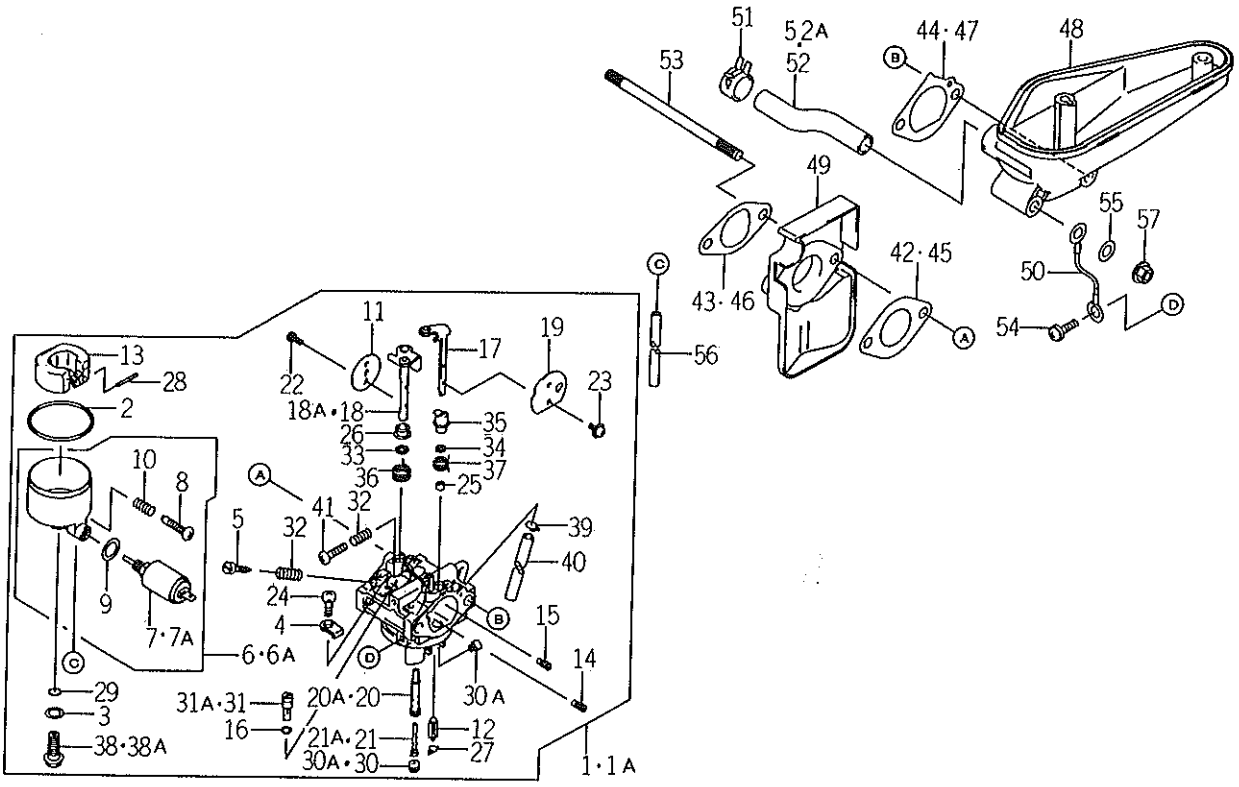

K502-0060

KEY	PART CODE	DESCRIPTION	QTY	TYPE OF MODEL FC420V CB00	TYPE OF MODEL FC420V F800	ITC	COL	GRP	REMARKS
21	5491 - 232 - 005 - XX	HOLDER - MAIN JET	1	1--119615					491232058
21A	5491 - 232 - 068 - XX	HOLDER - MAIN JET	1	119616-	*				491232068
22	5920 - 092 - 080 - XX	SCREW	2	*	*				920092080
23	5920 - 092 - 081 - XX	SCREW	2	*	*				920092081
24	5920 - 092 - 244 - XX	SCREW	1	*	*				920092244
25	5920 - 272 - 003 - XX	COLLAR	1	*	*				920272003
26	5920 - 272 - 025 - XX	COLLAR	1	*	*				920272025
27	5920 - 332 - 067 - XX	RING - SNAP	1	*	*				920332067
28	5920 - 432 - 006 - XX	PIN	1	*	*				920432006
29	5920 - 552 - 148 - XX	O RING	1	*	*				920552148
30	5920 - 632 - 149 - XX	JET - MAIN 97.5	1	1--119615					920632149
30A	5920 - 632 - 197 - XX	JET - MAIN 97.5	1	119616-	*				920632197
31	5920 - 642 - 062 - XX	JET - PILOT 60	1	1--119615					920642062
31A	5920 - 642 - 079 - XX	JET - PILOT 60	1	119616-	*				920642079
32	5920 - 812 - 009 - XX	SPRING	2	*	*				920812009
33	5920 - 932 - 002 - XX	SEAL	1	*	*				920932002
34	5920 - 932 - 069 - XX	SEAL	1	*	*				920932069
35	5921 - 432 - 142 - XX	COLLAR	1	*	*				921432142
36	5921 - 442 - 037 - XX	SPRING	1	*	*				921442037
37	5921 - 442 - 160 - XX	SPRING	1	*	*				921442160
38	5921 - 502 - 121 - XX	BOLT	1	1--119615					921502121
38A	5921 - 502 - 218 - XX	BOLT	1	119616-	*				921502218
39	5921 - 702 - 023 - XX	CLAMP	1	*	*				921702023
40	5921 - 902 - 011 - XX	TUBE,4.5X6.5X100	1	*	*				921902011
41	5214 - B04 - 14X - XX	SCREW - PAN	1	*	*				214B0414

FIG. 8 CARBURETOR

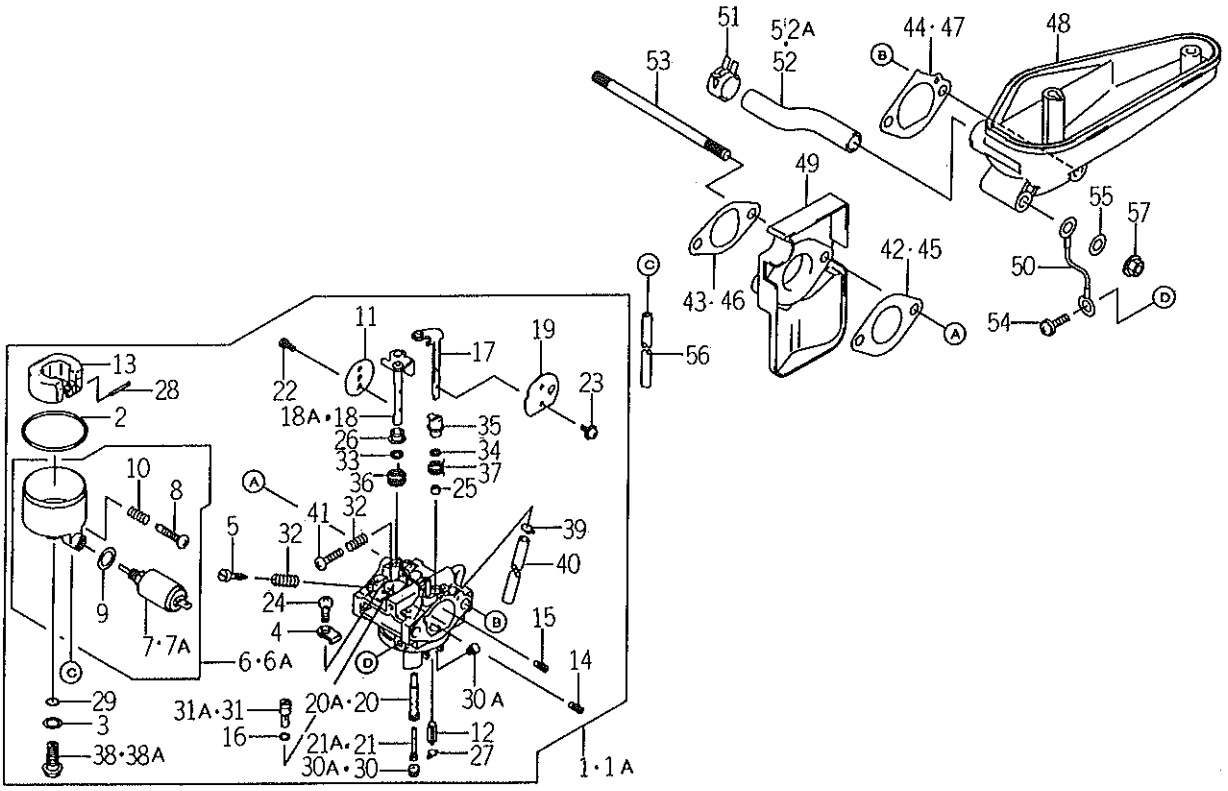

K5G2-CC80

KEY	PART CODE	DESCRIPTION	QTY	TYPE OF MODEL FC420V CB00	TYPE OF MODEL FC420V FB00	ITC	COL	GRP	REMARKS
42	5110 - 092 - 944 - XX	GASKET,CARBURETOR	1	*					110092944
43	5110 - 092 - 945 - XX	GASKET,INSULATOR	1	*					110092945
44	5110 - 092 - 946 - XX	GASKET,INTAKE PIPE	1	*					110092946
45	5110 - 602 - 339 - XX	GASKET,CARBURETOR	1		*				110602339
46	5110 - 602 - 340 - XX	GASKET,INSULATOR	1		*				110602340
47	5110 - 602 - 341 - XX	GASKET,INTAKE PIPE	1		*				110602341
48	5160 - 606 - 001 - XX	PIPE - INTAKE	1	*	*				160606001
49	5160 - 736 - 001 - XX	INSULATOR	1	*	*				160736001
50	5260 - 112 - 233 - XX	WIRE - LEAD	1	*	*				260112233
51	5920 - 372 - 012 - XX	CLAMP	1	*	*				920372012
52	5920 - 592 - 226 - XX	TUBE,11.6X16X116	1	1--119615					920592226
52A	5921 - 902 - 066 - XX	TUBE,11.6X16X116	1	119616-	*				921902066
53	5172 - G06 - 115 - XX	BOLT - STUD	2	*	*				172G06115
54	5224 - B05 - 08X - XX	SCREW - PAN - WP - CROS	1	*	*				22480508
55	5410 - B06 - 00X - XX	W - PLAIN - S	1	*	*				41080600
56	5702 - A04 - 100 - 0X	TUBE - RUBBER	1	*	*				702A041000
57	5920 - 151 - 193 - XX	NUT	2	*	*				920151193

FIG. 9 AIR FILTER MUFFLER

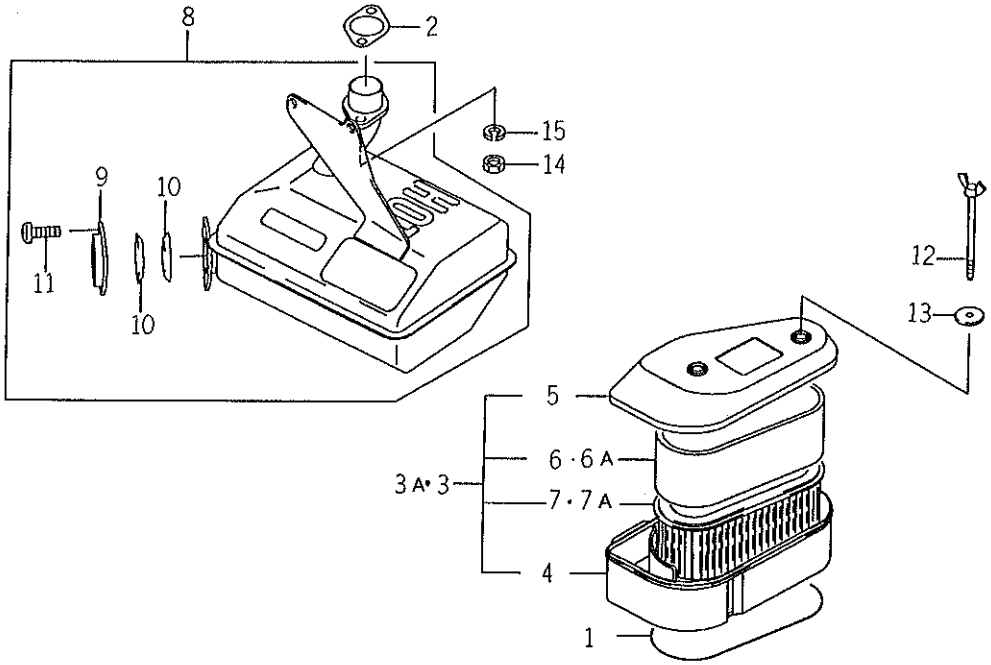

X502-0090

KEY	PART CODE	DESCRIPTION	QTY	TYPE OF MODEL FC420V C800	TYPE OF MODEL FC420V FB00	ITC	COL	GRP	REMARKS
1	5110 - 092 - 505 - XX	GASKET,AIR FILTER	1	*	*				110092505
2	5110 - 092 - 943 - XX	GASKET ,MUFFLER	1	*	*				110092943
3	5110 - 102 - 327 - XX	FILTER - ASSY - AIR	1	1- -119615					110102327
3A	5110 - 102 - 421 - XX	FILTER - ASSY - AIR	1	119616-	*				110102421
4	5110 - 112 - 227 - XX	CASE - AIR FILTER	1	*	*				110112227
5	5110 - 122 - 223 - XX	CAP,AIR FILTER	1	*	*				110122223
6	5110 - 132 - 140 - XX	ELEMENT - AIR FILTER	1	1- -119615					110132140
6A	5110 - 132 - 109 - XX	ELEMENT - AIR FILTER	1	119616-	*				110132109
7	5110 - 132 - 110 - XX	ELEMENT - AIR FILTER	1	1- -119615					110132110
7A	5110 - 132 - 141 - XX	ELEMENT - AIR FILTER	1	119616-	*				110132141
8	5490 - 702 - 547 - 9Y	MUFFLER - COMP	1	*	*				4907025479Y
9	5110 - 122 - 251 - 9Y	CAP,SPARK ARRESTER	1	*	*				1101222519Y
10	5180 - 772 - 052 - XX	ARRESTER - SPARK	2	*	*				180772052
11	5920 - 092 - 166 - XX	SCREW,5X8	3	*	*				920092166
12	5920 - 022 - 274 - XX	BOLT	2	*	*				920022274
13	5920 - 222 - 220 - XX	WASHER	2	*	*				920222220
14	5317 - R08 - 00X - XX	NUT - HEX - SMALL	2	*	*				317R0800
15	5461 - F08 - 00X - XX	WASHER - SPRING	2	*	*				461F0800

FIG. 10 FUEL TANK FUEL VALVE

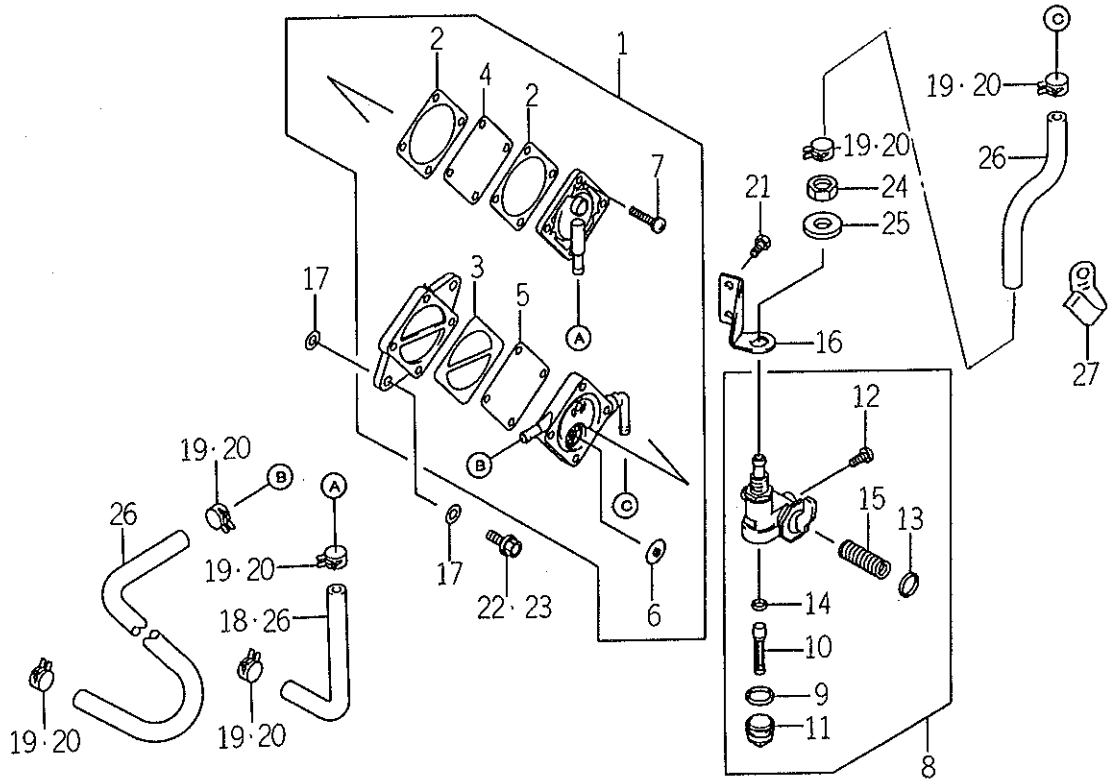

K502-0100

KEY	PART CODE	DESCRIPTION	QTY	TYPE OF MODEL FC420V CB00	FC420V FB00	ITC	COL	GRP	REMARKS
1	5490 - 402 - 066 - XX	PUMP - FUEL	1	*	*				490402066
2	5110 - 092 - 763 - XX	GASKET,FUEL PUMP	2	*	*				110092763
3	5110 - 092 - 764 - XX	GASKET,FUEL PUMP	1	*	*				110092764
4	5430 - 282 - 068 - XX	DIAPHRAGM	1	*	*				430282068
5	5430 - 282 - 069 - XX	DIAPHRAGM	1	*	*				430282069
6	5491 - 162 - 055 - XX	VALVE - ASSY	2	*	*				491162055
7	5920 - 092 - 212 - XX	SCREW	4	*	*				920092212
8	5510 - 232 - 130 - XX	TAP - ASSY	1	*	*				510232130
9	5110 - 092 - 526 - XX	GASKET	1	*	*				110092526
10	5140 - 432 - 064 - XX	FILTER,FUEL TAP	1	*	*				140432064
11	5510 - 362 - 068 - XX	CUP,FUEL TAP	1	*	*				510362068
12	5920 - 092 - 004 - XX	SCREW	1	*	*				920092004
13	5920 - 551 - 299 - XX	RING - O	1	*	*				920551299
14	5920 - 552 - 083 - XX	RING - O	1	*	*				920552083
15	5921 - 442 - 043 - XX	SPRING	1	*	*				921442043
16	5491 - 052 - 096 - XX	BRACKET - TAP	1	*	*				491052096
17	5920 - 225 - 53X - XX	WASHER	4	*					92022553
18	5920 - 592 - 169 - XX	TUBE	1	*					920592169
19	5921 - 702 - 043 - XX	CLAMP	6	*					921702043
20	5921 - 702 - 088 - XX	CLAMP	6		*				921702088
21	5130 - B05 - 08X - XX	BOLT - FLANGED	2	*	*				130B0508
22	5130 - B06 - 16X - XX	BOLT - FLANGED	2	*					130B0616
23	5130 - G06 - 14X - XX	BOLT - FLANGED	2		*				130G0614
24	5315 - B12 - 00X - XX	NUT - HEX - FINE	1	*	*				315B1200
25	5410 - B12 - 00X - XX	W - PLAIN - S	1	*	*				410B1200

FIG. 10 FUEL TANK FUEL VALVE

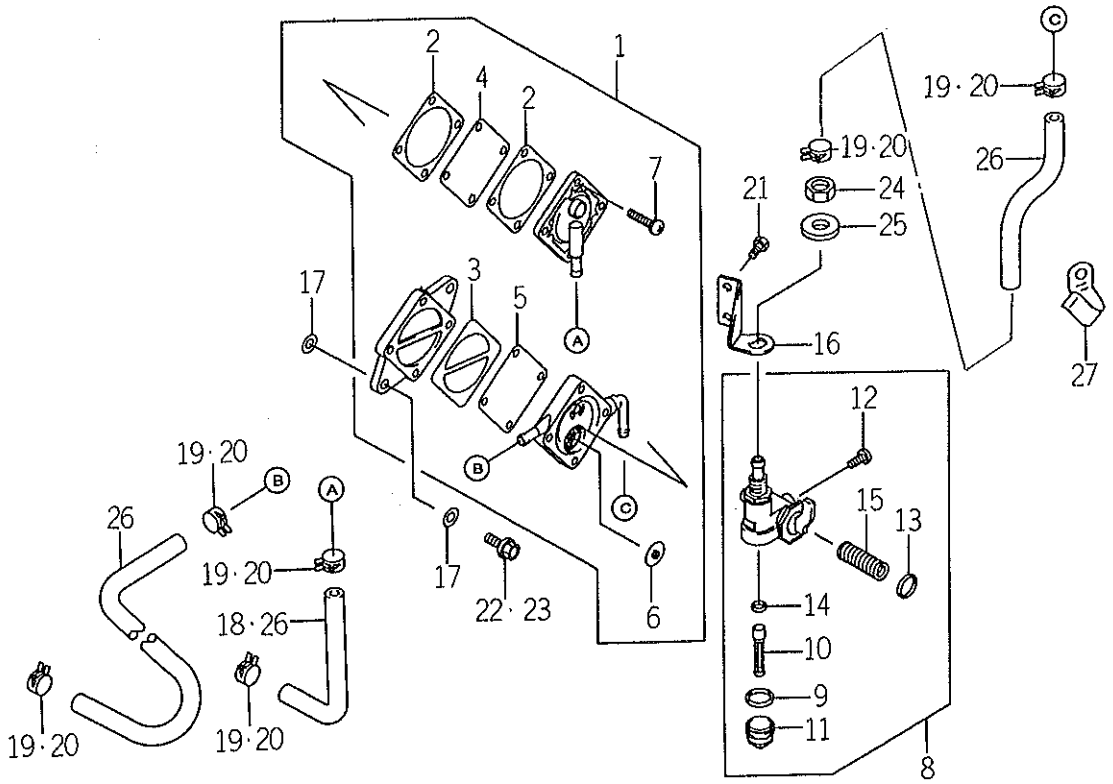

K502-0100

KEY	PART CODE	DESCRIPTION	QTY	TYPE OF MODEL FC420V GB00	TYPE OF MODEL FC420V FB00	ITC	COL	GRP	REMARKS
26	5705 - A06 - 100 - 0X	TUBE - BRAID	3	*	*				705A061000
27	5920 - 372 - 176 - XX	CLAMP	1	1- -119615					920372176

FIG. 11 STARTER

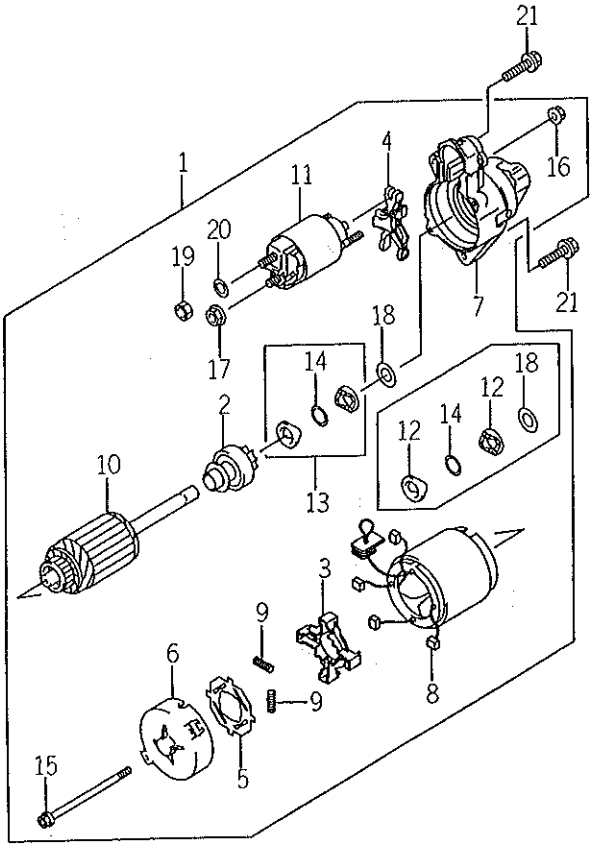

K502-0110

KEY	PART CODE	DESCRIPTION	QTY	TYPE OF MODEL FC420V CB00	TYPE OF MODEL FC420V FB00	ITC	COL	GRP	REMARKS
1	5211 - 632 - 073 - XX	STARTER - ELECTRIC	1	*	*				211632073
2	5130 - 812 - 085 - XX	CLUTCH - ASSY	1	*	*				130812085
3	5130 - 912 - 068 - XX	HOLDER,BRUSH	1	*	*				130912068
4	5131 - 682 - 131 - XX	LEVER,SHIFT	1	*	*				131682131
5	5160 - 732 - 098 - XX	INSULATOR	1	*	*				160732098
6	5161 - 462 - 077 - XX	COVER - ASSY	1	*	*				161462077
7	5161 - 462 - 106 - XX	COVER - ASSY	1	*	*				161462106
8	5210 - 392 - 059 - XX	BRUSH	4	*	*				210392059
9	5210 - 402 - 052 - XX	SPRING - BRUSH	4	*	*				210402052
10	5210 - 802 - 054 - XX	ARMATURE	1	*	*				210802054
11	5270 - 102 - 122 - XX	SWITCH	1	*	*				270102122
12	5320 - 852 - 066 - XX	STOPPER	1	*	*				320852066
13	5320 - 852 - 097 - XX	STOPPER	1	*	*				320852097
14	5920 - 332 - 081 - XX	RING - SNAP	1	*	*				920332081
15	5920 - 022 - 277 - XX	BOLT	2	*	*				920022277
16	5920 - 152 - 146 - XX	NUT	2	*	*				920152146
17	5920 - 152 - 147 - XX	NUT	1	*	*				920152147
18	5920 - 222 - 218 - XX	WASHER	1	*	*				920222218
19	5317 - B08 - 00X - XX	NUT - HEX - SMALL	1	*	*				317B0800
20	5461 - F08 - 00X - XX	WASHER - SPRING	1	*	*				461F0800
21	5130 - B08 - 35X - XX	BOLT - FLANGED	2	*	*				130B0835

FIG. 12 LABEL

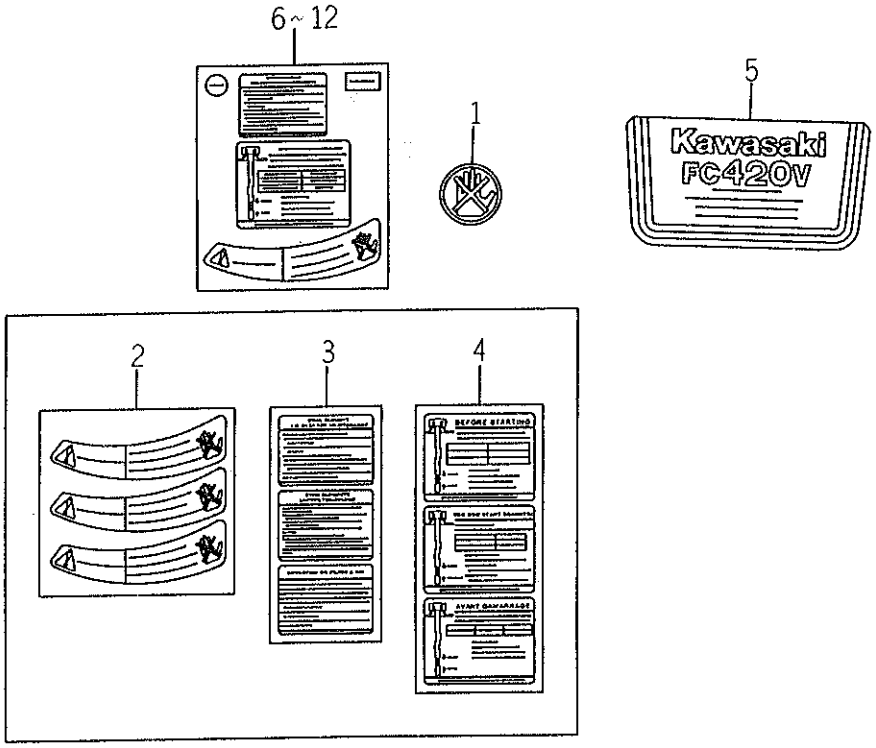

X502-0120

KEY	PART CODE	DESCRIPTION	QTY	TYPE OF MODEL FC420V C800	TYPE OF MODEL FC420V FB00	ITC	COL	GRP	REMARKS
1	5560 - 302 - 142 - XX	LABEL	1	*	*				560302142
2	5560 - 302 - 307 - XX	LABEL	1	1- -139597					560302307
3	5560 - 312 - 316 - XX	LABEL - MANUAL	1	1- -139597					560312316
4	5560 - 312 - 317 - XX	LABEL - MANUAL	1	1- -139597					560312317
5	5560 - 382 - 504 - XX	LABEL - BRAND	1	139598-	*				560382504
6	5560 - 402 - 285 - XX	LABEL - WARNING,GB	1	139598-	*				560402285
7	5560 - 402 - 286 - XX	LABEL - WARNING,F	1	139598-	*				560402286
8	5560 - 402 - 287 - XX	LABEL - WARNING,D	1	139598-	*				560402287
9	5560 - 402 - 288 - XX	LABEL - WARNING,I	1	139598-	*				560402288
10	5560 - 402 - 289 - XX	LABEL - WARNING,E	1	139598-	*				560402289
11	5560 - 402 - 290 - XX	LABEL - WARNING,NL	1	139598-	*				560402290
12	5560 - 402 - 291 - XX	LABEL - WARNING,S	1	139598-	*				560402291

FIG. 13 ACCESSORY

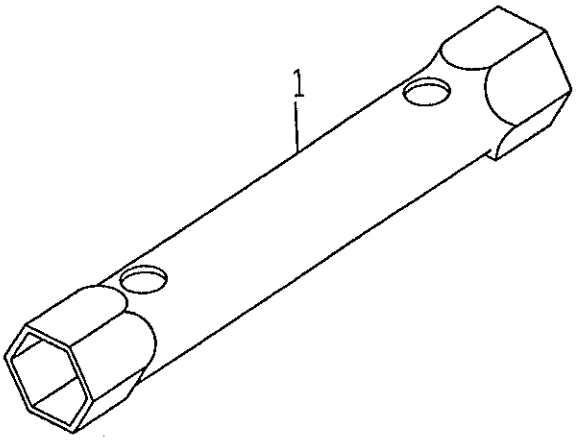

K502-0130

KEY	PART CODE	DESCRIPTION	QTY	TYPE OF MODEL FC420V CB00	TYPE OF MODEL FC420V FB00	ITC	COL	GRP	REMARKS
1	5921 - 102 - 093 - XX	TOOL - WRENCH,19X21	1	*	*				921102093

CHASSIS

FIG. 1 SHROUD AND FUEL TANK SYSTEM

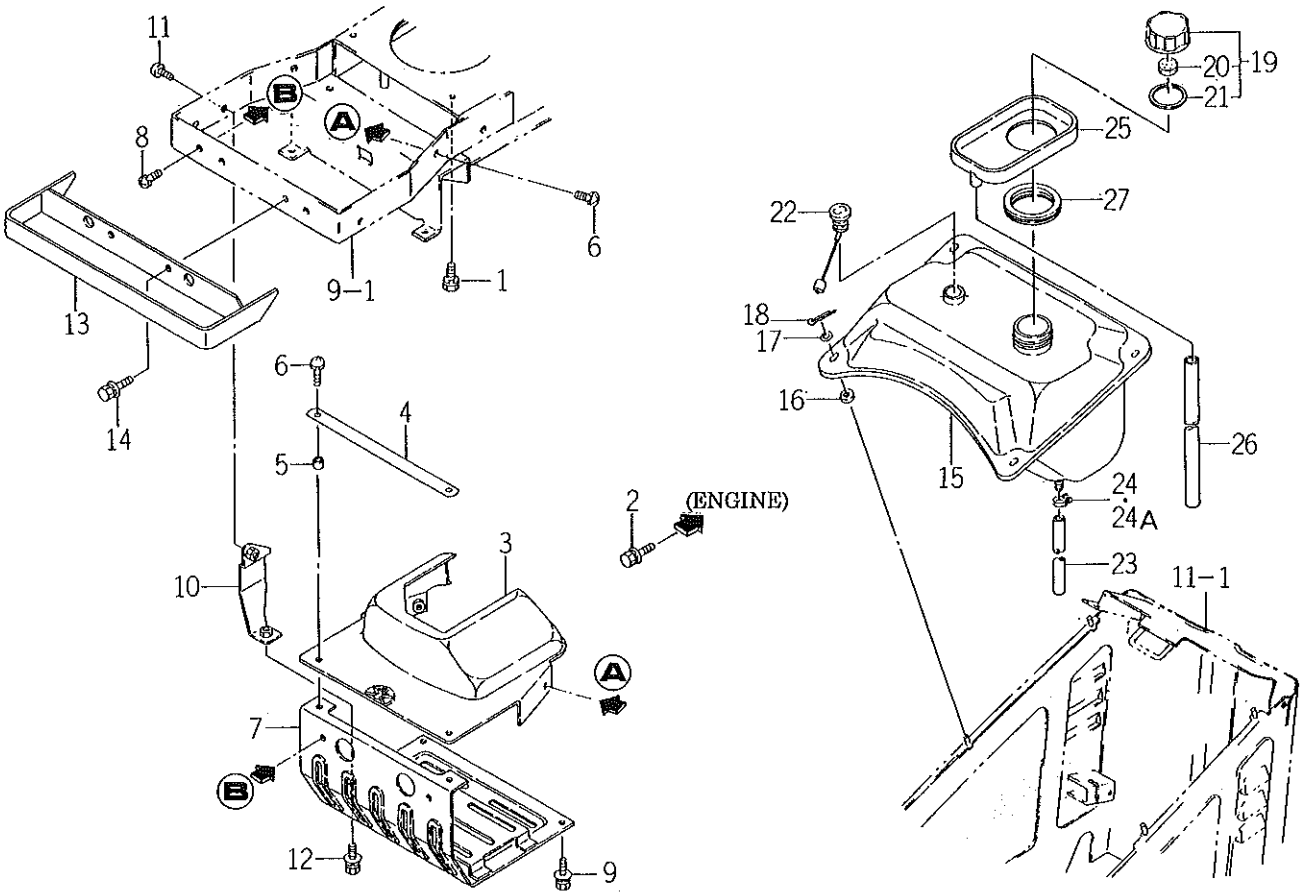

2502-101

KEY	PART CODE	DESCRIPTION	QTY	TYPE OF MODEL SL14H		ITC	COL	GRP	REMARKS
1	V211 - 260 - 802 - 50	BOLT/S	4	*					
2	V211 - 360 - 802 - 00	BOLT (SP) M8X20	2	*					
3	2502 - 101 - 210 - 30	SHROUD,UPPER COMP	1	*					
4	2502 - 101 - 003 - 00	PLATE/IR/22X290	1	*					
5	4334 - 155 - 003 - 00	COLLAR/6.5X10.5X8	2	*					
6	1581 - 740 - 116 - 00	SCREW/M6X20	4	*					
7	2502 - 101 - 220 - 10	SHROUD,LOWER COMP	1	*					
8	1581 - 740 - 116 - 00	SCREW/M6X20	2	*					
9	V210 - 360 - 602 - 00	BOLT/M6X20	2	*					
10	2502 - 101 - 230 - 00	STAY,SHROUD COMP	1	*					
11	1581 - 740 - 116 - 00	SCREW/M6X20	1	*					
12	V210 - 360 - 602 - 00	BOLT/M6X20	1	*					
13	2502 - 101 - 240 - 00	GUIDE,MUFFLER COMP	1	*					
14	V211 - 360 - 802 - 00	BOLT (SP) M8X20	2	*					
15	2502 - 105 - 001 - 10	TANK,FUEL	1	*					
16	2502 - 105 - 003 - 00	INSULATOR/09X20X04	4	*					
17	V411 - 260 - 008 - 00	WASHER,PL/M 8	4	*					
18	V500 - 163 - 002 - 00	PIN,SPLIT/3 X20	4	*					
19	1593 - 612 - 220 - 10	CAP,TANK	1	*					
20	2706 - 501 - 003 - 00	BREATHER,TANK CAP	1	*					
21	2706 - 501 - 004 - 00	GASKET	1	*					
22	1593 - 612 - 230 - 00	GAUGE,FUEL	1	*					
23	2502 - 105 - 002 - 00	HOSE/350	1	*					
24	3741 - 141 - 005 - 00	BAND,HOSE ASSY/12	2	1- -2935 2936-					
24A	J061 - 210 - 012 - 00	CLSMP,WIRE/10 - 12	2						

FIG. 1 SHROUD AND FUEL TANK SYSTEM

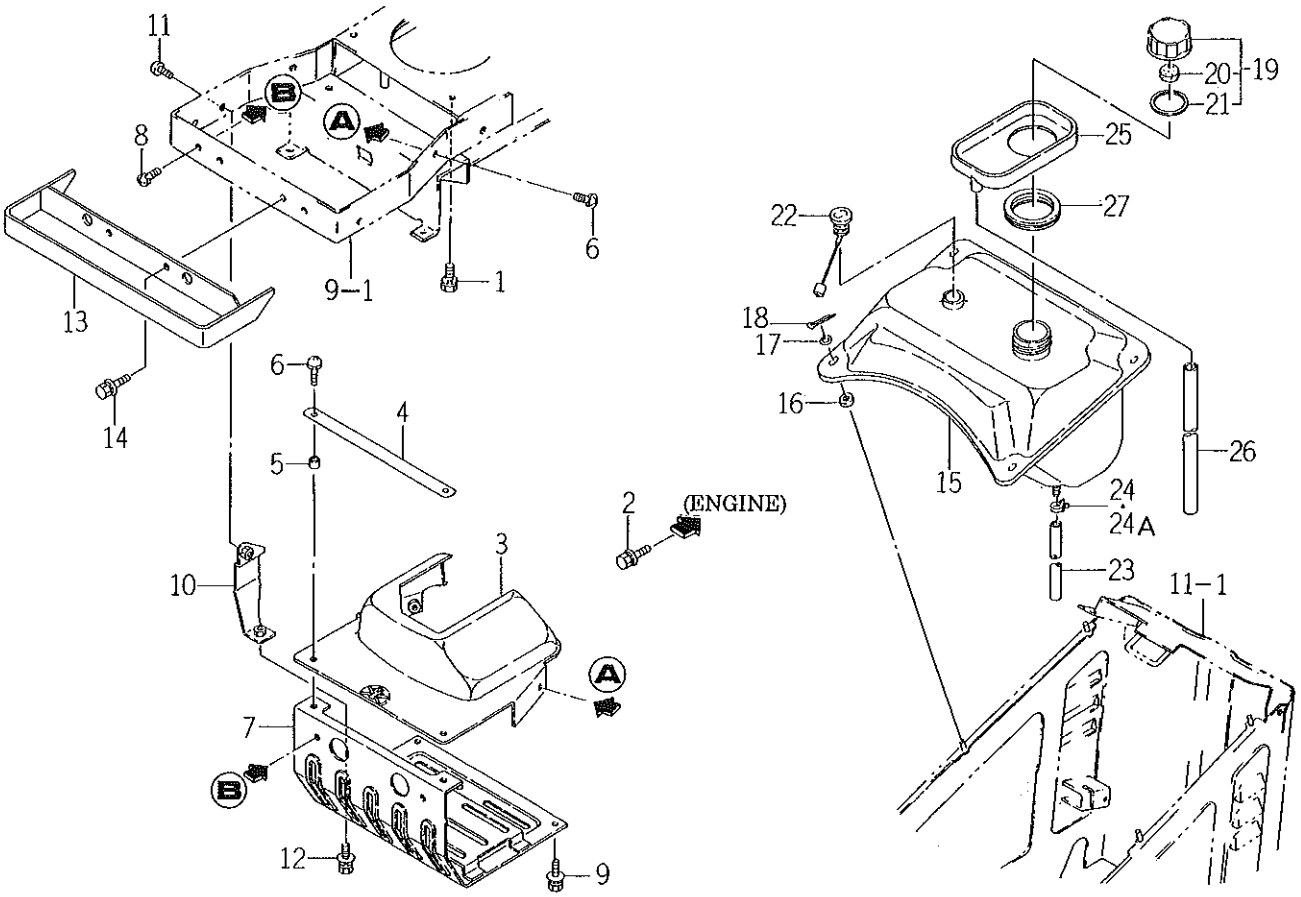

2502-105

KEY	PART CODE	DESCRIPTION	QTY	TYPE OF MODEL SL14H		ITC	COL	GRP	REMARKS
25	2502 - 105 - 004 - 10	CUP,FUEL	1	*					
26	2502 - 105 - 005 - 10	HOSE/600	1	*					
27	2502 - 105 - 006 - 00	GROMMET/48X68X02	1	*					

FIG. 2 BATTERY SYSTEM

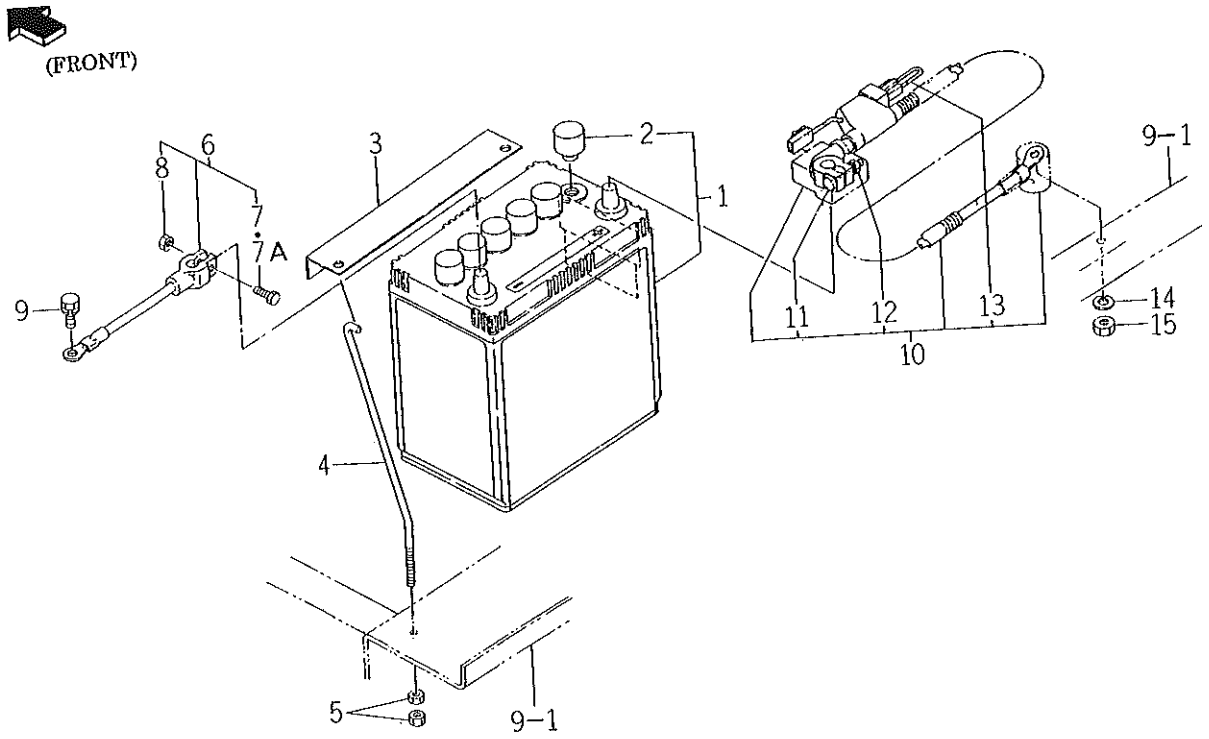

2502-112

KEY	PART CODE	DESCRIPTION	QTY	TYPE OF MODEL SL14H		ITC	COL	GRP	REMARKS
1	1593 - 112 - 200 - 00	BATTERY,	1	*					
2	1427 - 621 - 002 - 10	CAP,BATTERY	1	*					
3	1593 - 112 - 051 - 30	HOLDER,BATTERY	1	*					
4	2502 - 112 - 001 - 20	BOLT,BATTERY	2	*					
5	V301 - 260 - 006 - 00	NUT/M 6	4	*					
6	1593 - 112 - 003 - 20	CABLE,EARTH	1	*					
7	1600 - 112 - 231 - 00	BOLT/M06X32	1	1- -433 434-					
7A	1593 - 112 - 222 - 00	BOLT/M06X28	1						
8	1600 - 112 - 232 - 00	NUT/M06	1	*					
9	V211 - 260 - 801 - 60	BOLT,SEMS (S) M8X16	1	*					
10	2502 - 112 - 210 - 10	CABLE,BATTERY ASSY	1	*					
11	1600 - 112 - 231 - 00	BOLT/M06X32	1	*					
12	1600 - 112 - 232 - 00	NUT/M06	1	*					
13	3652 - 261 - 202 - 00	LINK,FUSIBLE	1	*					
14	V401 - 160 - 008 - 00	WASHER,SP/M 8	1	*					
15	V304 - 260 - 008 - 00	NUT/M 8	1	*					

FIG. 3 THROTTLE SYSTEM

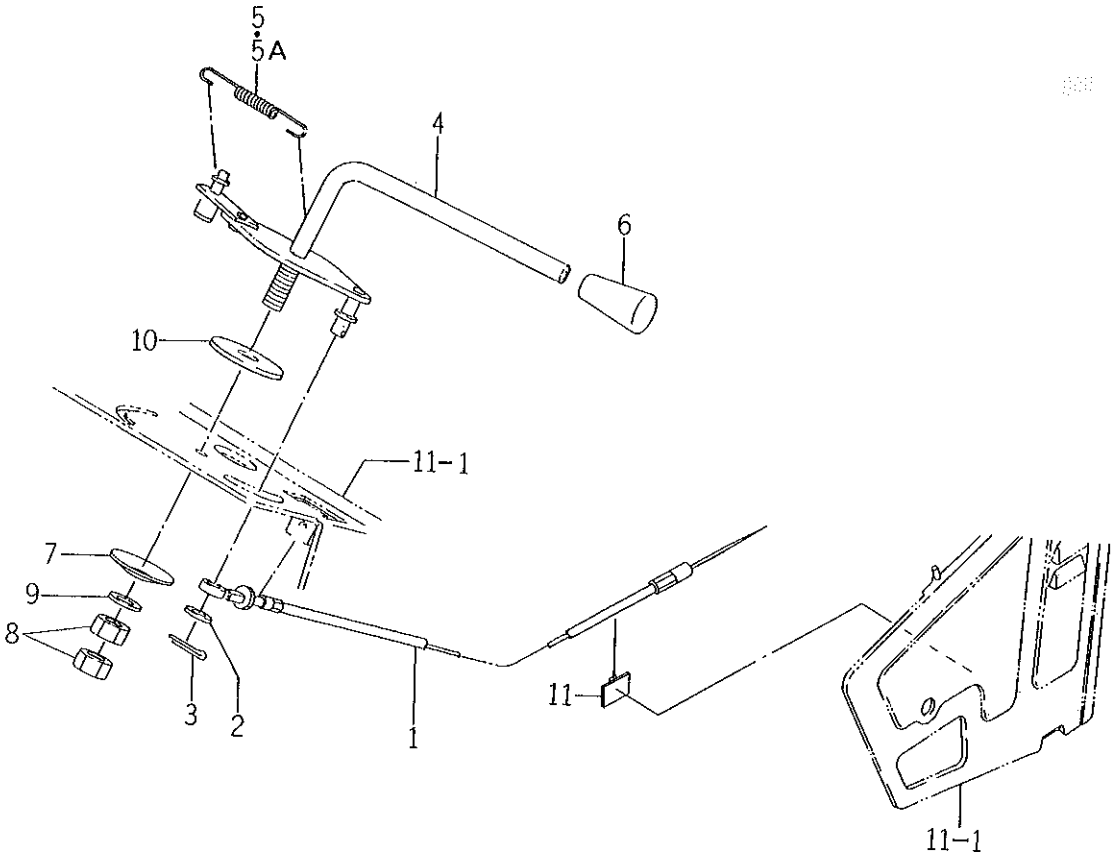

2502-117

KEY	PART CODE	DESCRIPTION	QTY	TYPE OF MODEL SL14H		ITC	COL	GRP	REMARKS
1	2502 - 117 - 200 - 20	CABLE,AXLE ASSY	1	*					
2	V411 - 260 - 006 - 00	WASHER / M6	1	*					
3	V500 - 162 - 501 - 50	PIN,SPLIT/2.5X15	1	*					
4	2502 - 117 - 210 - 30	LEVER,AXLE COMP	1	*					
5	2502 - 117 - 001 - 20	SPRING/HE049	1	1- -448					
5A	2502 - 117 - 001 - 30	SPRING/HE047	1	449-					
6	4106 - 105 - 303 - 00	KNOB	1	*					
7	1593 - 117 - 003 - 10	SPRING,DISK	1	*					
8	V304 - 260 - 010 - 00	NUT	2	*					
9	V411 - 260 - 010 - 00	WASHER/M10	1	*					
10	1600 - 505 - 007 - 00	LINING/13X50X3	1	*					
11	1426 - 621 - 038 - 00	CLAMP,HARNESS	1	*					

FIG. 4 BELT (DRIVING) AND HST SYSTEM

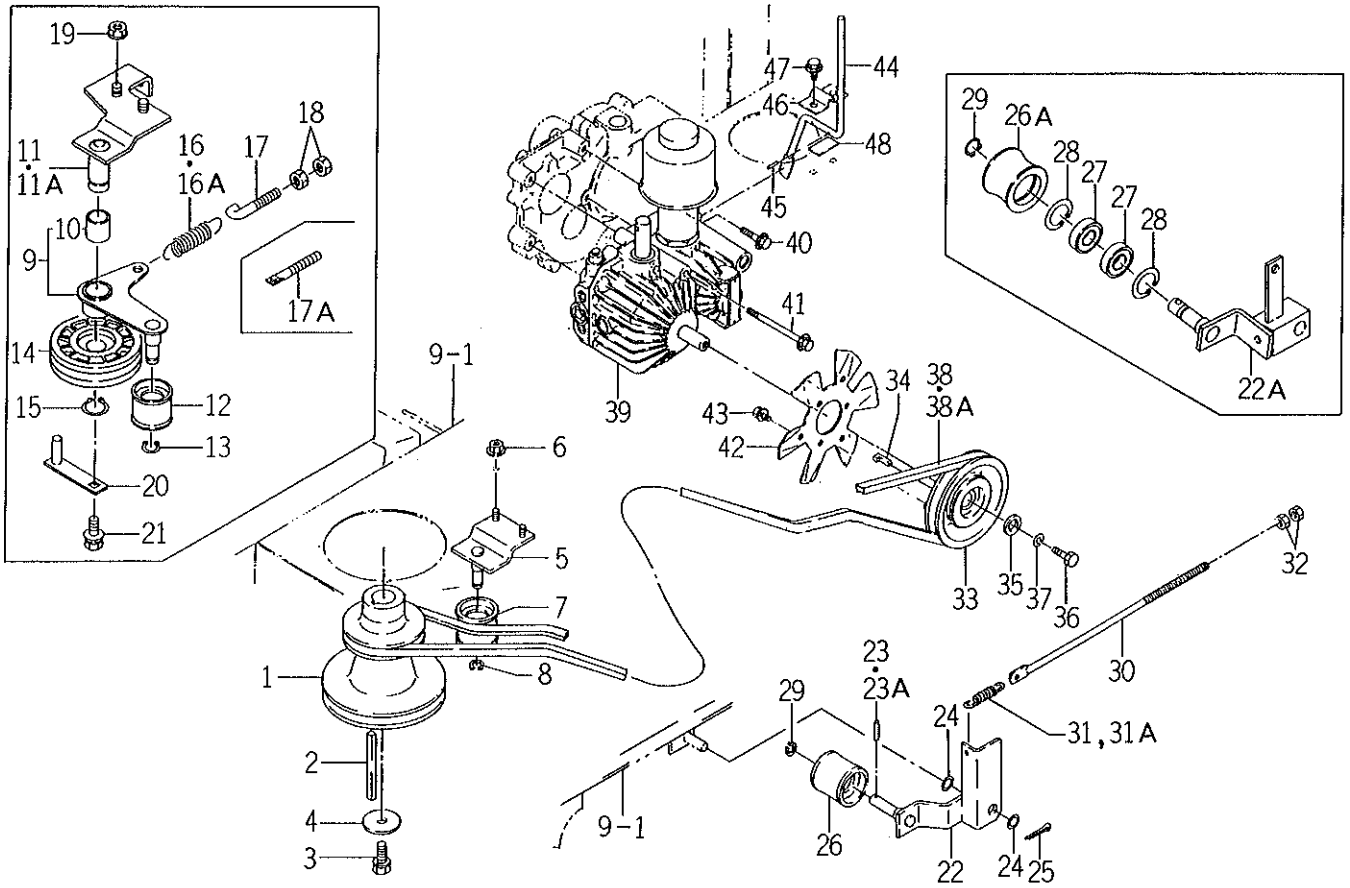

2502-201

KEY	PART CODE	DESCRIPTION	QTY	TYPE OF MODEL SL14H		ITC	COL	GRP	REMARKS
1	2502 - 201 - 003 - 20	PULLEY/V2B120B90	1	*					
2	2502 - 201 - 004 - 10	KEY/06X07X63	1	*					
3	V211 - 561 - 003 - 00	BOLT/M10X30	1	*					
4	1383 - 301 - 002 - 00	WASHER/11X44X5	1	*					
5	2502 - 201 - 210 - 40	ARM,TENSION/F COMP	1	1- -790					
6	V363 - 260 - 008 - 00	NUT,LOCK/M8	2	1- -790					
7	3614 - 125 - 001 - 00	PULLEY,TENSION	1	1- -790					
8	V704 - 140 - 012 - 00	RING,SNAP/12 C	1	1- -790					
9	2502 - 201 - 200 - 00	ARM/TENSION/F	1	791-					
10	8650 - 203 - 001 - 10	BUSH/20X23X20	1	791-					
11	2502 - 201 - 260 - 00	BRACKET/TENSION	1	1- -790					
11A	2502 - 201 - 260 - 10	BRACKET/TENSION COMP	1	791-					
12	3614 - 125 - 001 - 00	PULLEY,TENSION	1	791-					
13	V704 - 140 - 012 - 00	RING,SNAP/12 C	1	791-					
14	4131 - 206 - 015 - 00	PULLEY/TENSION	1	791-					
15	V704 - 140 - 020 - 00	RING.SNAP/20	1	791-					
16	1325 - 401 - 009 - 00	SPRING,MAIN CLUTCH	1	1- -647					
16A	3640 - 703 - 001 - 00	SPRING,MAIN CLUTCH	1	648-					
17	3737 - 341 - 007 - 00	ROD	1	1- -790					
17A	3737 - 233 - 006 - 00	ROD	1	791-					
18	V304 - 260 - 008 - 00	NUT/M 8	2	791-					
19	V363 - 260 - 008 - 00	NUT,LOCK/M8	2	791-					
20	2502 - 201 - 270 - 00	PLATE/I/19X78 COMP	1	*					
21	V211 - 360 - 801 - 60	BOLT,SEMS (SP)	1	*					
22	2502 - 201 - 220 - 40	ARM,TENSION/HST COMP	1	1- -647					

FIG. 4 BELT (DRIVING) AND HST SYSTEM

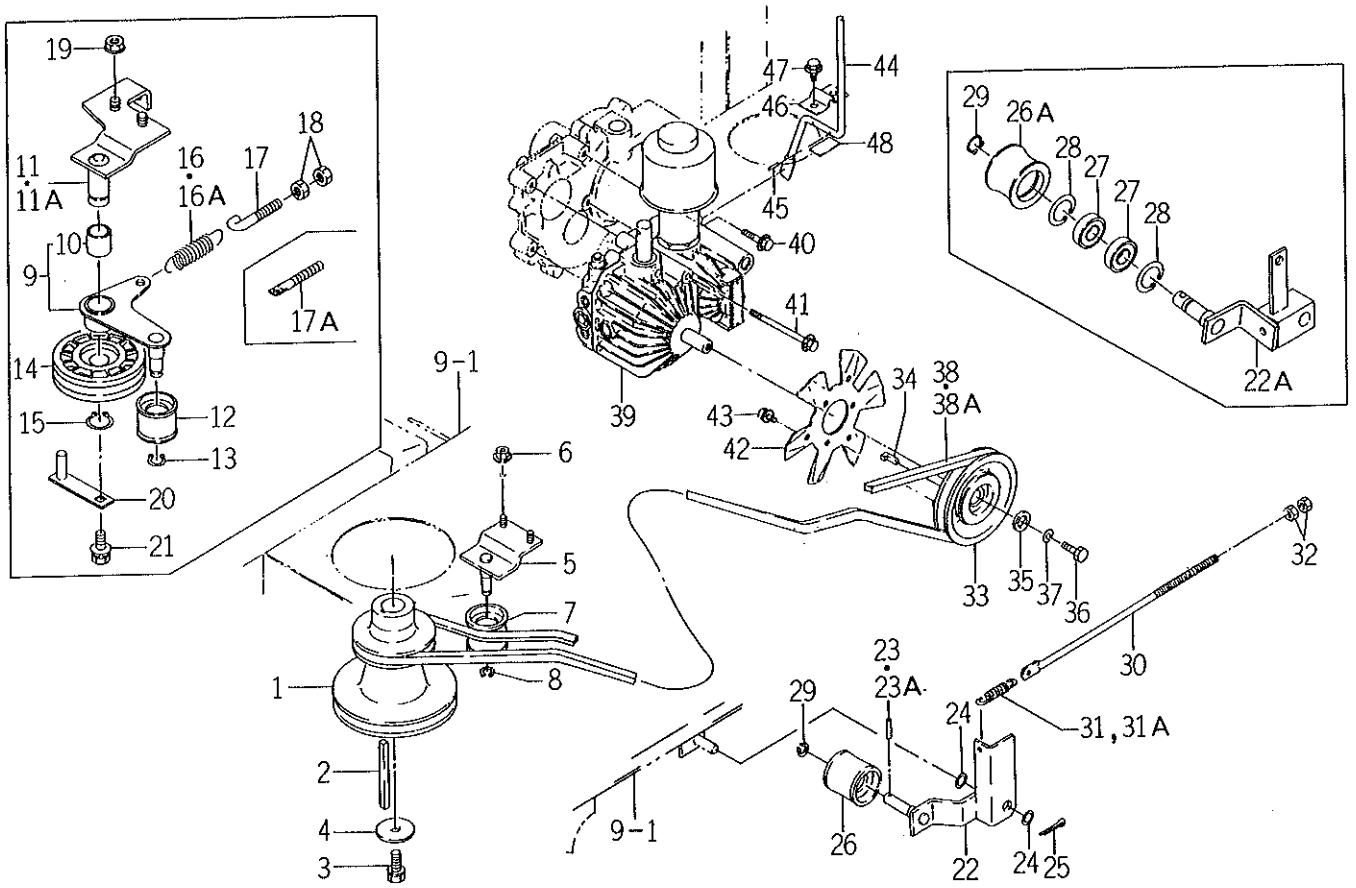

2502-201

KEY	PART CODE	DESCRIPTION	QTY	TYPE OF MODEL SL14H		ITC	COL	GRP	REMARKS
22A	2502 - 201 - 220 - 50	ARM,TENSION/HST COMP	1	648-					
23	V580 - 140 - 604 - 00	PIN,APRING/6 X40 W	1	1- -647					
23A	V580 - 140 - 604 - 50	PIN,SPRING/6 X40 W	1	648-					
24	V411 - 260 - 014 - 00	WASHER,PL/M14	2	*					
25	V500 - 163 - 002 - 50	PIN,SPLIT/3 X25	1	*					
26	2502 - 532 - 002 - 10	PULLEY,TENSION/045	1	1- -647					
26A	2502 - 201 - 014 - 00	PULLEY,TENSION/045	1	648-					
27	2502 - 201 - 015 - 00	BEARING RB	2	648-					
28	V705 - 140 - 035 - 00	RING,SNAP/35 C	2	648-					
29	V704 - 140 - 015 - 00	RING,SNAP/15 C	1	*					
30	2502 - 201 - 007 - 20	ROD/M08X295	1	*					
31	1325 - 401 - 009 - 00	SPRING,MAIN CLUTCH	1	1- -647					
31A	3640 - 703 - 001 - 00	SPRING,MAIN CLUTCH	1	648-					
32	V304 - 260 - 008 - 00	NUT/M 8	2	*					
33	2502 - 201 - 001 - 10	PULLEY/VB105	1	*					
34	2502 - 201 - 005 - 10	KEY/05X05X24	1	*					
35	3754 - 371 - 011 - 00	WASHER	1	*					
36	V200 - 360 - 601 - 60	BOLT	1	*					
37	V401 - 160 - 006 - 00	S.W	1	*					
38	2502 - 201 - 006 - 20	BELT/VB079	1	1- -790					
38A	2502 - 201 - 006 - 30	BELT/VB078.5	1	791-					
39	2502 - 205 - 200 - 00	HST ASSY	1	*					
40	V211 - 360 - 804 - 00	BOLT,SP/M8X40	2	*					
41	V211 - 360 - 811 - 00	BOLT,SP/M8X110	2	*					
42	2502 - 205 - 001 - 10	FAN,HST	1	*					

FIG. 4 BELT (DRIVING) AND HST SYSTEM

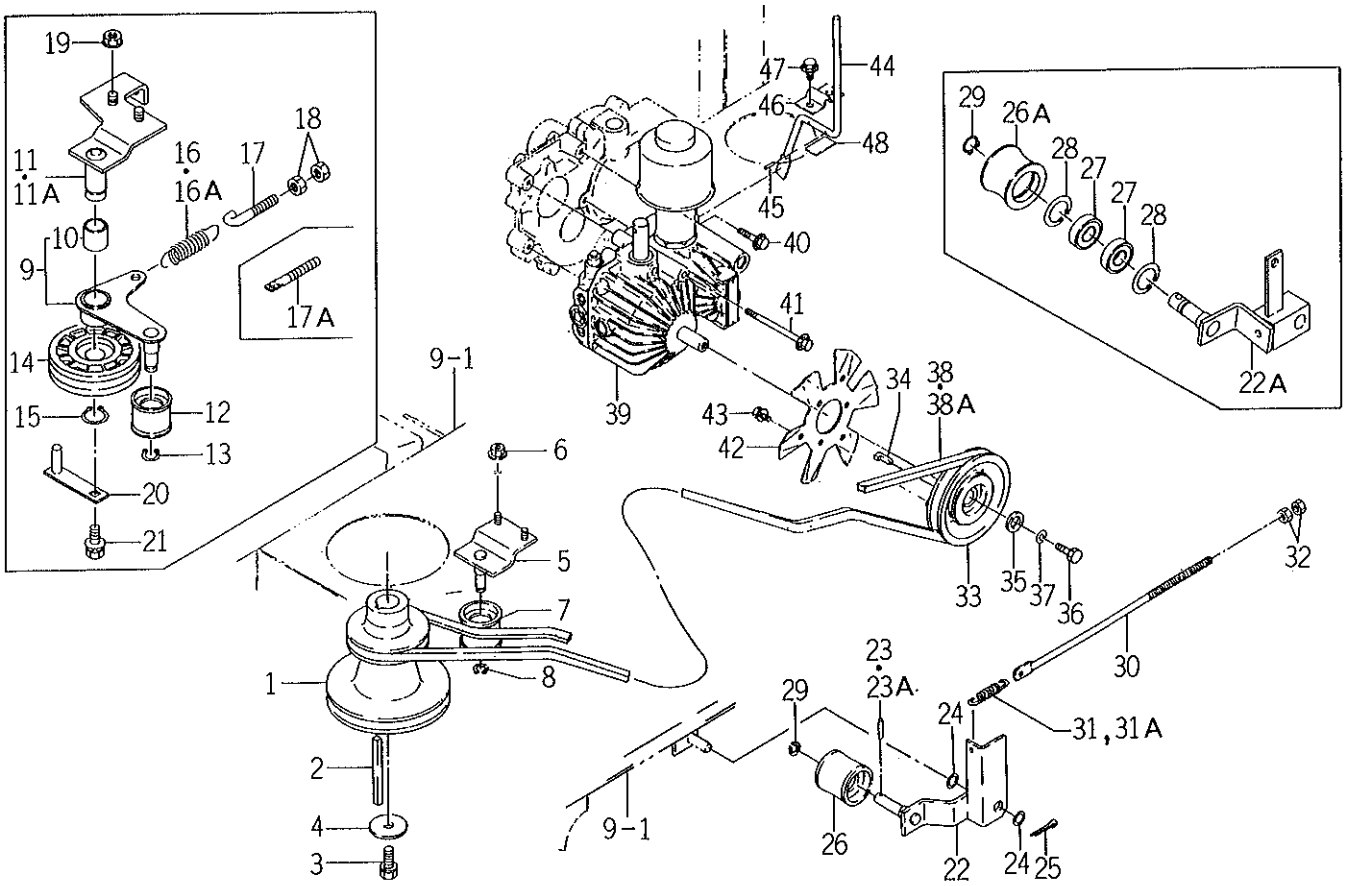

2502-205

KEY	PART CODE	DESCRIPTION	QTY	TYPE OF MODEL SL14H		ITC	COL	GRP	REMARKS
43	V210 - 360 - 601 - 60	BOLT (SP) /M6X16	3	*					
44	2502 - 205 - 003 - 10	LEVER,PUSH	1	*					
45	V580 - 140 - 302 - 00	PIN,ROLL	2	*					
46	2502 - 205 - 004 - 00	BRACKET,BAR	1	*					
47	V211 - 360 - 801 - 60	BOLT,SEMS (SP)	2	*					
48	2502 - 205 - 005 - 00	INSULATOR/20X35X01	1	*					

FIG. 5 PEDAL (HST) SYSTEM

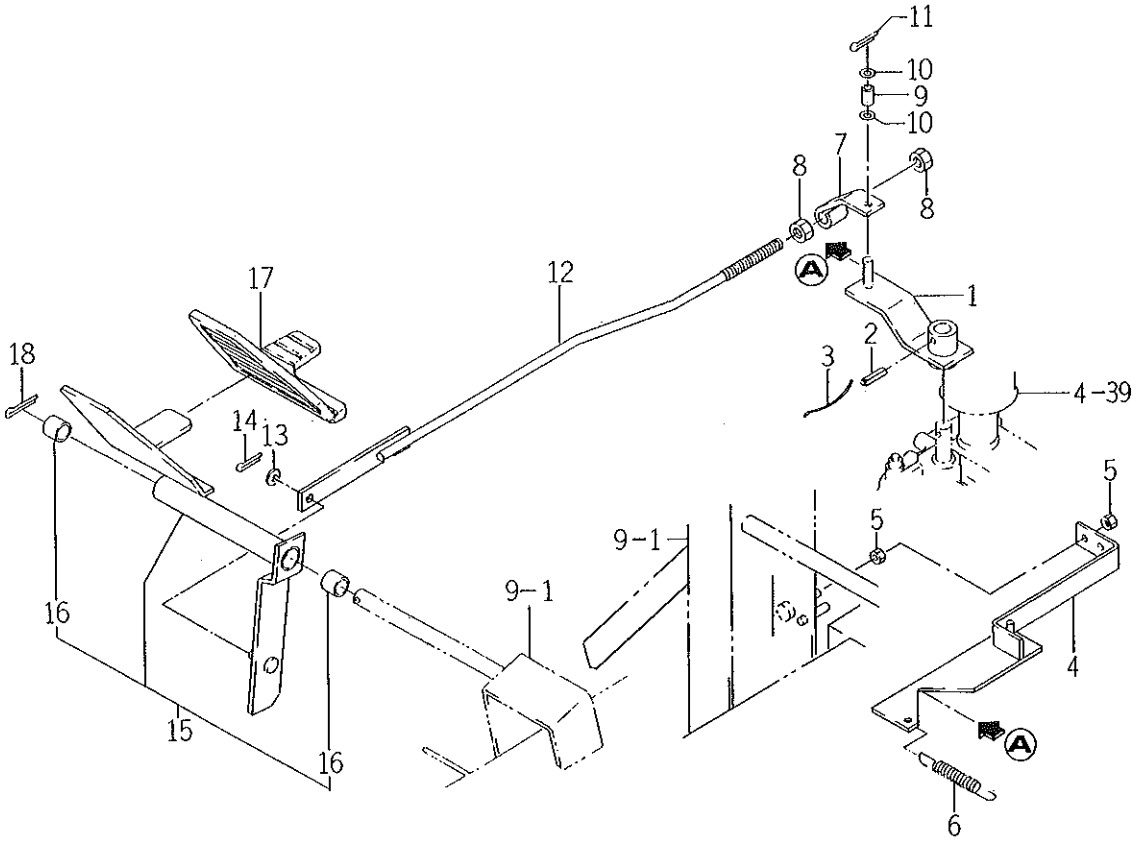

2502-221

KEY	PART CODE	DESCRIPTION	QTY	TYPE OF MODEL SL14H		ITC	COL	GRP	REMARKS
1	2502 - 221 - 210 - 20	HUB,TRINION COMP	1	*					
2	V580 - 140 - 602 - 50	PIN,SPRING/6 X25 W	1	*					
3	V590 - 131 - 210 - 00	WIRE/1.2X100	1	*					
4	2502 - 221 - 220 - 20	LINK,NEWTRIL COMP	1	*					
5	V304 - 260 - 008 - 00	NUT/M 8	2	*					
6	1415 - 120 - 006 - 00	SPRING,TENSION/86	1	*					
7	2502 - 221 - 001 - 10	PLATE,ADJUST	1	*					
8	V304 - 260 - 010 - 00	NUT	2	*					
9	2502 - 221 - 003 - 00	HUB/08X12X15	1	*					
10	V411 - 260 - 008 - 00	WASHER,PL/M 8	2	*					
11	V500 - 163 - 001 - 50	PIN,SPLIT/3 X15	1	*					
12	2502 - 221 - 250 - 10	ROD/M10X505 COMP	1	*					
13	V411 - 260 - 008 - 00	WASHER,PL/M 8	1	*					
14	V500 - 163 - 001 - 50	PIN,SPLIT/3 X15	1	*					
15	2502 - 221 - 200 - 00	PEDAL,HST ASSY	1	*					
16	2502 - 221 - 236 - 00	BUSH/18X20X15	2	*					
17	2502 - 221 - 002 - 20	PAD,PEDAL	1	*					
18	V500 - 163 - 002 - 50	PIN,SPLIT/3 X25	1	*					

FIG. 6 CASE (TRANSMISSION) SYSTEM

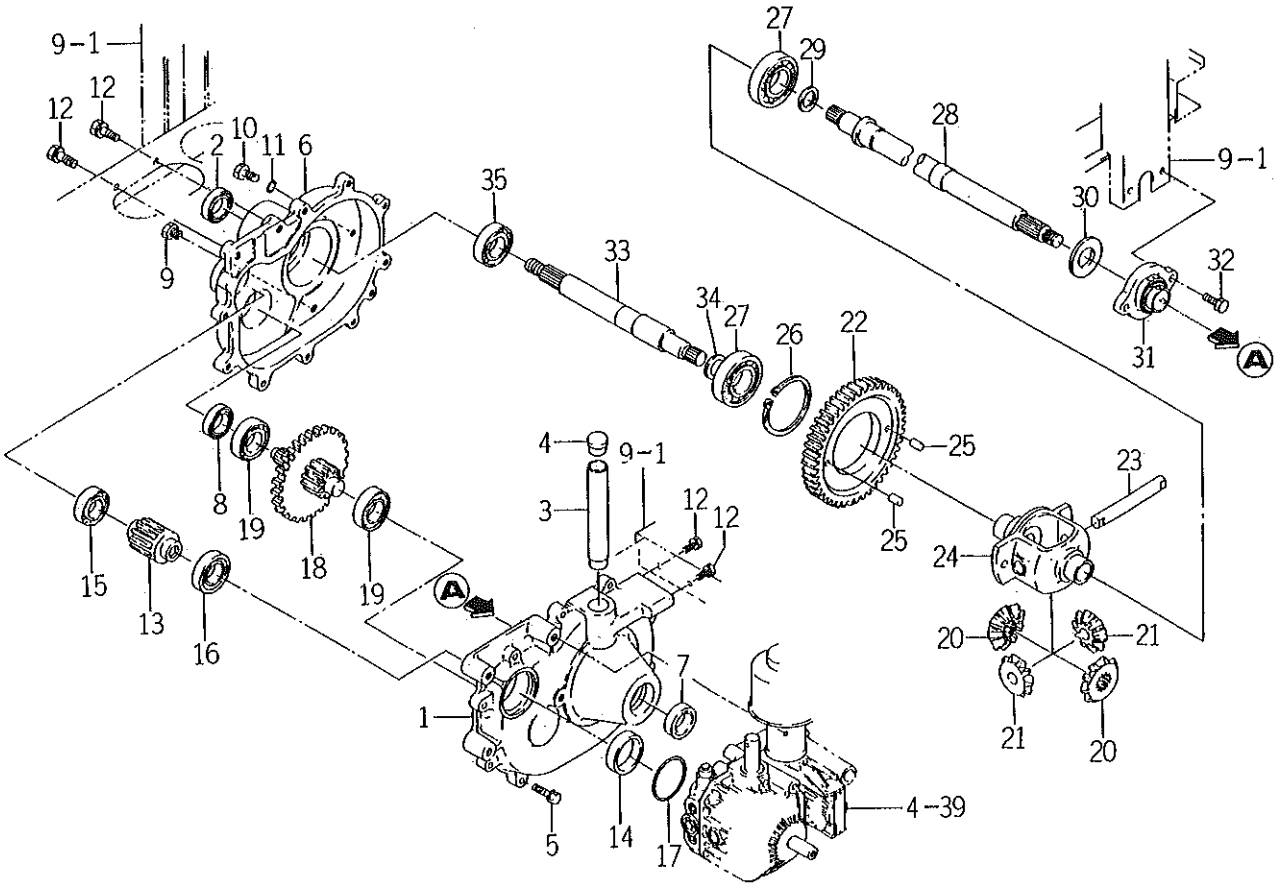

2502-301

KEY	PART CODE	DESCRIPTION	QTY	TYPE OF MODEL SL14H		ITC	COL	GRP	REMARKS
1	2502 - 301 - 001 - 30	CASE,TRANSMISSION/LH	1	*					
2	V744 - 125 - 400 - 80	SEAL,OIL/TC25408	1	*					
3	2502 - 301 - 003 - 20	TUBE/140	1	*					
4	2111 - 101 - 011 - 00	PLUG,OIL	1	*					
5	V211 - 260 - 803 - 00	BOLT,SEMS	10	*					
6	2502 - 301 - 002 - 30	CASE,TRANSMISSON/RH	1	*					
7	V744 - 125 - 400 - 80	SEAL,OIL/TC25408	1	*					
8	V744 - 120 - 350 - 70	SEAL,OIL/TC20357	1	*					
9	7955 - 201 - 026 - 00	PLUG,DRAIN (1/4)	1	*					
10	V201 - 260 - 801 - 60	BOLT/M 8X16	1	*					
11	V720 - 101 - 900 - 80	O - RING/P 8	1	*					
12	V211 - 560 - 802 - 00	BOLT/M8X20	6	*					
13	2502 - 302 - 001 - 30	GEAR/12T	1	*					
14	2502 - 302 - 002 - 20	COLLAR/42X47X13	1	*					
15	V600 - 110 - 600 - 40	BEARING,RB/6004	1	*					
16	V600 - 110 - 600 - 50	BEARING,RB/6005	1	*					
17	V721 - 103 - 104 - 50	O - RING/G45	1	*					
18	2502 - 303 - 210 - 10	GEAR,SHAFT/9 - 43TCOMP	1	*					
19	V600 - 110 - 620 - 40	BEARING,RB/6204	2	*					
20	2502 - 304 - 002 - 20	GEAR/15T	2	*					
21	2502 - 304 - 003 - 20	GEAR/11T	2	*					
22	2502 - 304 - 004 - 30	GEAR/51T	1	*					
23	2502 - 304 - 005 - 20	PIN,DIFF PINION	1	*					
24	2502 - 304 - 001 - 20	CASE,DIFF	1	*					
25	1593 - 304 - 008 - 00	PIN (10X18)	2	*					

FIG. 6 CASE (TRANSMISSION) SYSTEM

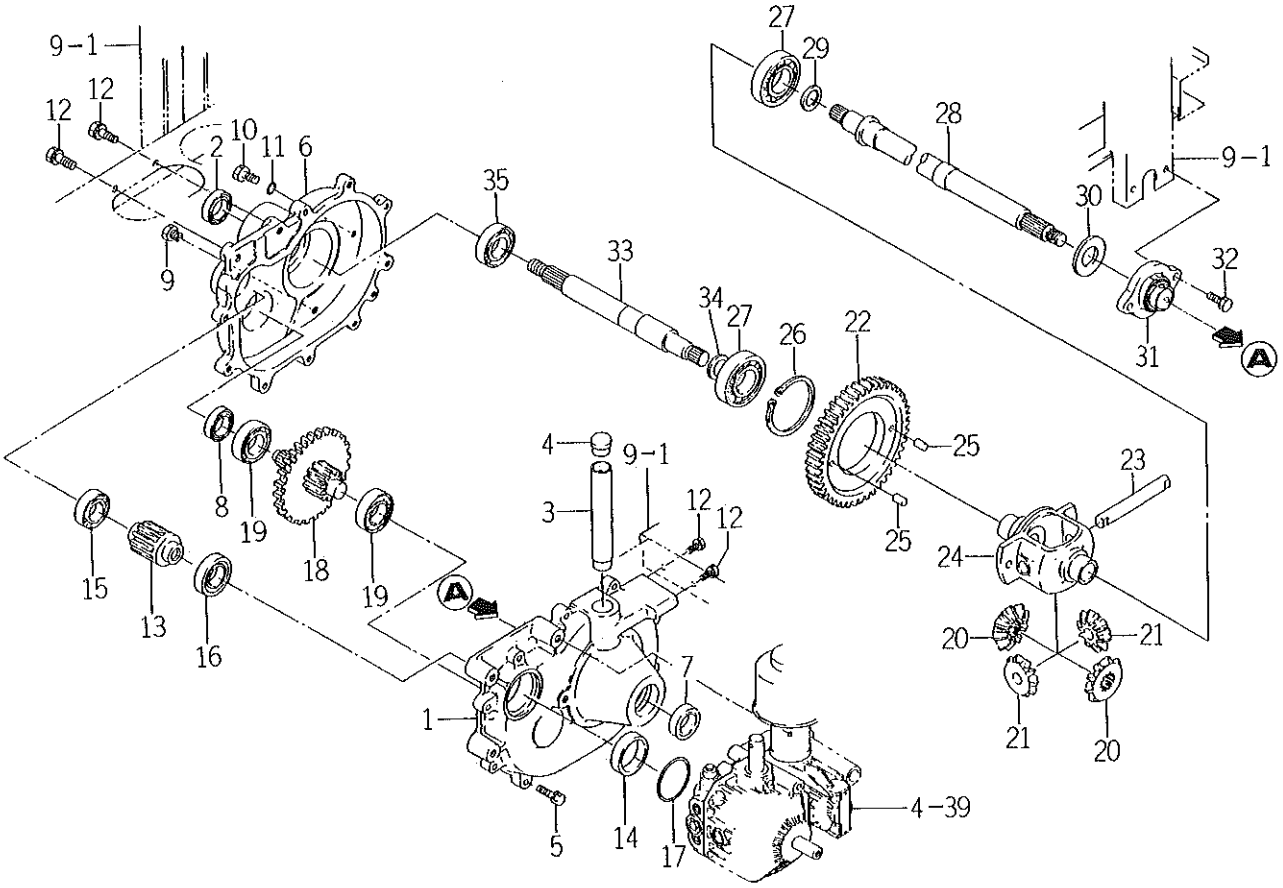

2502-304

KEY	PART CODE	DESCRIPTION	QTY	TYPE OF MODEL SL14H		ITC	COL	GRP	REMARKS
26	V706 - 140 - 080 - 00	RING,SNAP,S80	1	*					
27	V600 - 110 - 620 - 60	BEARING,RB/6206	2	*					
28	2502 - 307 - 001 - 40	SHAFT,WHEEL/LH	1	*					
29	2502 - 307 - 003 - 00	COLLAR/20X30X03	1	*					
30	2502 - 307 - 004 - 00	COLLAR/25X50X04	1	*					
31	2502 - 307 - 210 - 00	BEARING,BALL UNIT	1	*					
32	V211 - 260 - 802 - 50	BOLT/S	2	*					
33	2502 - 307 - 002 - 40	SHAFT,WHEEL/RH	1	*					
34	2502 - 307 - 003 - 00	COLLAR/20X30X03	1	*					
35	V600 - 110 - 620 - 50	BEARING,RB/6205	1	*					

FIG. 7 BRAKE SYSTEM

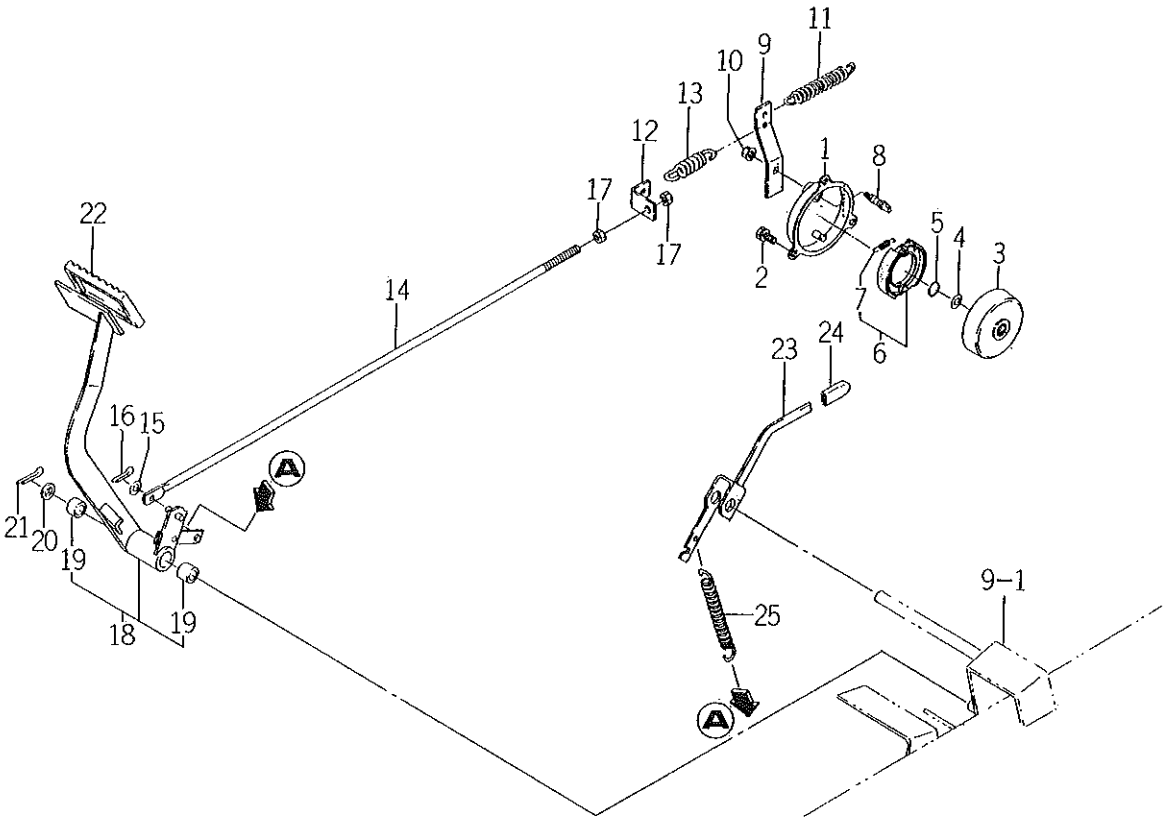

2502-310

KEY	PART CODE	DESCRIPTION	QTY	TYPE OF MODEL SL14H		ITC	COL	GRP	REMARKS
1	2502 - 310 - 240 - 10	COVER,BRAKE COMP	1	*					
2	V211 - 260 - 801 - 60	BOLT,SEMS (S) M8X16	3	*					
3	1593 - 310 - 520 - 20	DRUM,BRAKE	1	*					
4	V411 - 260 - 012 - 00	WASHER /M12	1	*					
5	V704 - 140 - 012 - 00	RING,SNAP/12 C	1	*					
6	1593 - 310 - 540 - 00	SHOE,BRAKE ASSY	1	*					
7	1323 - 220 - 012 - 00	SPRING,BRAKE SHOE	1	*					
8	1593 - 310 - 054 - 20	PIN/15X47	1	*					
9	2502 - 310 - 001 - 20	ARM,BRAKE	1	*					
10	V363 - 260 - 008 - 00	NUT,LOCK/M8	1	*					
11	2130 - 601 - 006 - 20	SPRING,TENSION	1	*					
12	2502 - 310 - 002 - 20	ADJUSTER,ROD	1	*					
13	2111 - 441 - 027 - 10	SPRING,HYD CLUTCH	1	*					
14	2502 - 310 - 003 - 20	ROD/M08X555	1	*					
15	V411 - 260 - 008 - 00	WASHER,PL/M 8	1	*					
16	V500 - 163 - 001 - 50	PIN,SPLIT/3 X15	1	*					
17	V304 - 260 - 008 - 00	NUT/M 8	2	*					
18	2502 - 310 - 200 - 10	HUB,BRAKE ASSY	1	*					
19	2502 - 221 - 236 - 00	BUSH/18X20X15	2	*					
20	V411 - 260 - 018 - 00	WASHER/M18	1	*					
21	V500 - 163 - 003 - 00	PIN,SPLIT/3 X30	1	*					
22	1518 - 122 - 002 - 00	PEDL B	1	*					
23	2502 - 311 - 210 - 30	LEVER,PARKING COMP	1	*					
24	3600 - 201 - 013 - 00	GRIP,BRAKE	1	*					
25	1415 - 120 - 006 - 00	SPRING,TENSION/86	1	*					

FIG. 8 TIRE (REAR) SYSTEM

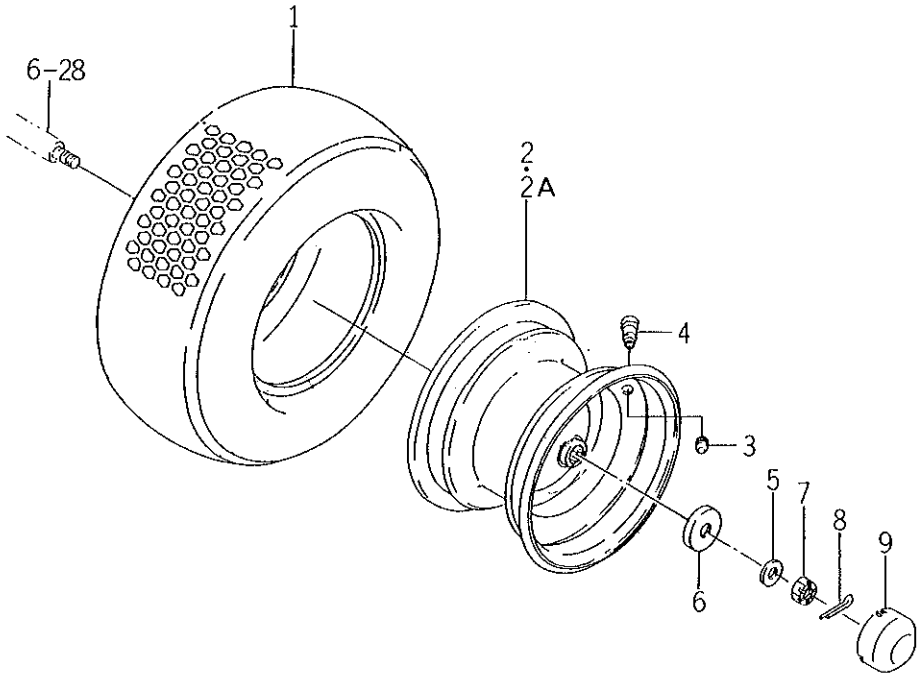

2502-317

KEY	PART CODE	DESCRIPTION	QTY	TYPE OF MODEL SL14H		ITC	COL	GRP	REMARKS
1	2502 - 317 - 201 - 00	TIRE,TURF/18 - 8.5	2	*					
2	2502 - 317 - 210 - 00	WHEEL/7.0X8 COMP	2	1- -1889					
2A	2502 - 317 - 210 - 10	WHEEL/7.0X8 COMP	2	1990-					
3	V999 - 200 - 003 - 00	CAP,TIRE VALVE	2	*					
4	1386 - 241 - 002 - 00	BULB	2	*					
5	V411 - 260 - 014 - 00	WASHER,PL/M14	2	*					
6	2502 - 317 - 003 - 00	WASHER/14X47X07	2	*					
7	V327 - 262 - 214 - 00	NUT/M14X1.5	2	*					
8	V500 - 163 - 003 - 00	PIN,SPLIT/3 X30	2	*					
9	2502 - 317 - 002 - 00	CAP,WHEEL	2	*					

FIG. 9 SHASSIS SYSTEM

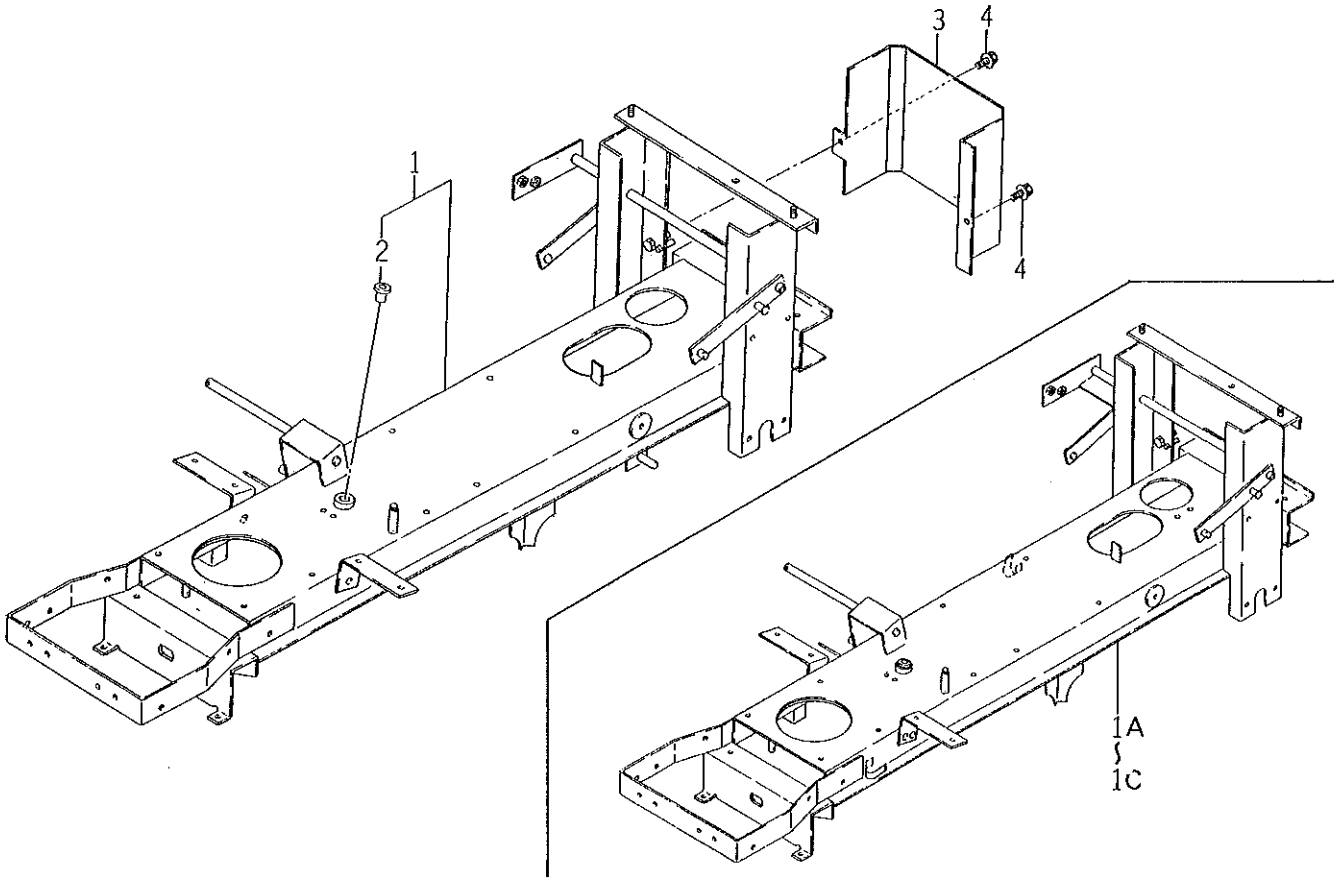

2502-401

KEY	PART CODE	DESCRIPTION	QTY	TYPE OF MODEL SL14H		ITC	COL	GRP	REMARKS
1	2502 - 401 - 200 - 40	CHASSIS,HST ASSY	1	1- -790					
1A	2502 - 401 - 200 - 50	CHASSIS,HST ASSY	1	791- -1161					
1B	2502 - 401 - 200 - 60	CHASSIS,HST ASSY	1	1162- -100002					
1C	2502 - 401 - 200 - 70	CHASSIS,HST ASSY	1	100003-					
2	2502 - 401 - 003 - 10	BUSH/15X17X21	1	*					
3	2502 - 401 - 002 - 20	COVER,REAR	1	*					
4	V211 - 360 - 801 - 60	BOLT,SEMS (SP)	2	*					

FIG. 10 AXLE (FRONT) SYSTEM

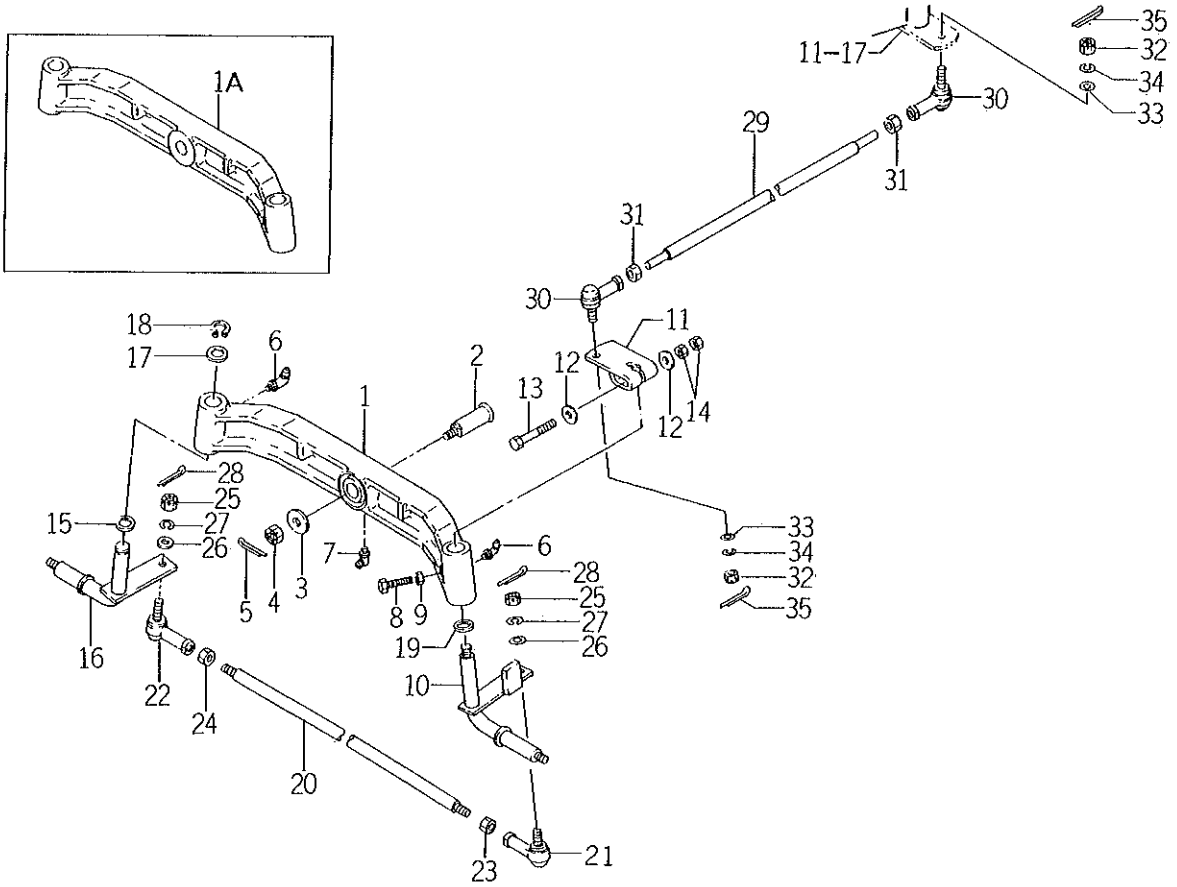

2502-402

KEY	PART CODE	DESCRIPTION	QTY	TYPE OF MODEL SL14H		ITC	COL	GRP	REMARKS
1	2502 - 402 - 005 - 30	AXLE,FRONT	1	1--1990					
1A	2502 - 402 - 005 - 40	AXLE,FRONT	1	1991-					
2	2502 - 402 - 001 - 20	PIN/22X77	1	*					
3	3621 - 702 - 003 - 00	WASHER,PULLEY	1	*					
4	V328 - 262 - 112 - 00	NUT/M12X1.25	1	*					
5	V500 - 163 - 002 - 50	PIN,SPLIT/3 X25	1	*					
6	V760 - 150 - 000 - 00	NIPPLE,GREASE	2	*					
7	V762 - 150 - 000 - 00	NIPPLE,GREASE/B - M6F	1	*					
8	W201 - 361 - 006 - 00	BOLT/M10X60	1	*					
9	V304 - 260 - 010 - 00	NUT	1	*					
10	2502 - 403 - 210 - 40	ARM,KNUCKLE/LH COMP	1	*					
11	2502 - 403 - 004 - 10	ARM,PIT MAN	1	*					
12	3659 - 170 - 003 - 00	WASHER/11X30X3	2	*					
13	2502 - 403 - 006 - 00	BOLT	1	*					
14	V304 - 460 - 010 - 00	NUT/M10	2	*					
15	1365 - 224 - 002 - 00	WASHER	1	*					
16	2502 - 403 - 220 - 30	ARM,KNUCKLE/RH COMP	1	*					
17	2502 - 403 - 007 - 00	WASHER/20X28X2	1	*					
18	V704 - 140 - 020 - 00	RING.SNAP/20	1	*					
19	1365 - 224 - 002 - 00	WASHER	1	*					
20	2502 - 403 - 001 - 20	ROD,TIE	1	*					
21	2502 - 403 - 002 - 20	JOINT,BALL/LH	1	*					
22	1593 - 403 - 001 - 10	JOINT,BALL/RH	1	*					
23	2502 - 403 - 005 - 00	NUT/LH M10X1.25	1	*					
24	V334 - 260 - 010 - 00	NUT/M10	1	*					

FIG. 10 AXLE (FRONT) SYSTEM

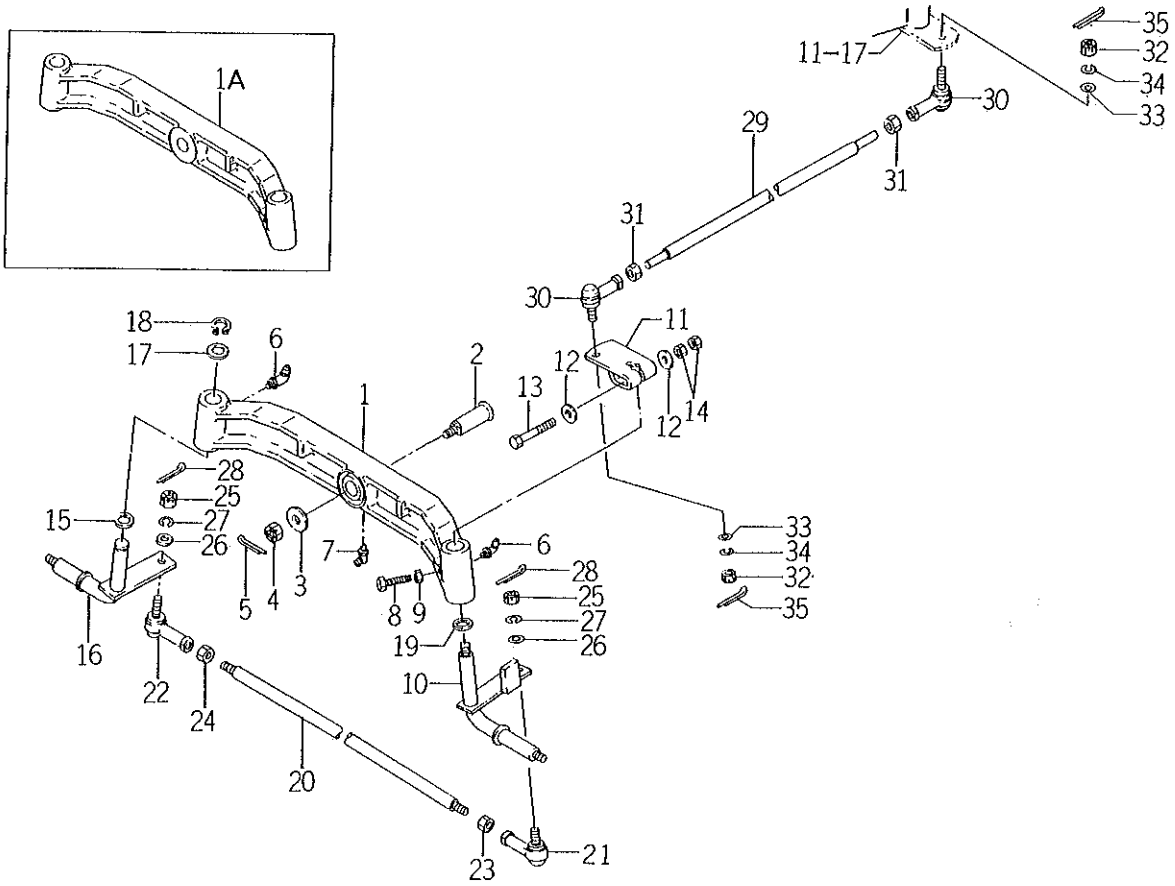

2502-403

KEY	PART CODE	DESCRIPTION	QTY	TYPE OF MODEL SL14H		ITC	COL	GRP	REMARKS
25	V328 - 262 - 110 - 00	NUT/M10X1.25	2	*					
26	V411 - 260 - 010 - 00	WASHER/M10	2	*					
27	V401 - 160 - 010 - 00	WASHER,SP/M10	2	*					
28	V500 - 162 - 502 - 00	PIN,SPLIT/2.5X20	2	*					
29	2502 - 403 - 003 - 20	ROD,DRUG	1	*					
30	1593 - 403 - 005 - 00	JOINT,BALL	2	*					
31	V335 - 260 - 012 - 00	NUT/M12X1.25	2	*					
32	V328 - 262 - 112 - 00	NUT/M12X1.25	2	*					
33	V411 - 260 - 012 - 00	WASHER /M12	2	*					
34	V401 - 160 - 012 - 00	WASHER,SP/M12	1	*					
35	V500 - 163 - 002 - 50	PIN,SPLIT/3 X25	2	*					

FIG. 11 STEERING SYSTEM

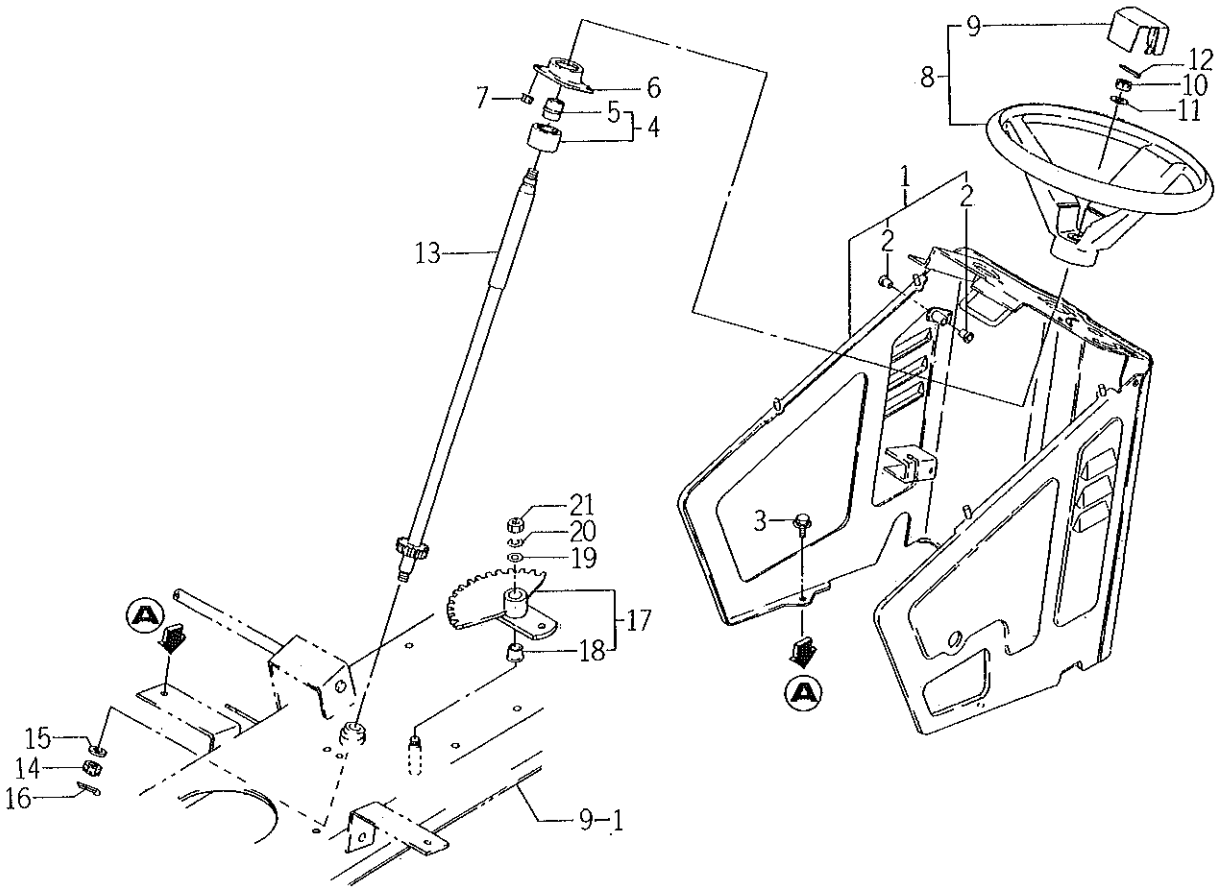

2502-406

KEY	PART CODE	DESCRIPTION	QTY	TYPE OF MODEL SL14H		ITC	COL	GRP	REMARKS
1	2502 - 406 - 200 - 20	COVER,LOWER ASSY	1	*					
2	1564 - 512 - 001 - 00	BUSH/10X12X10	2	*					
3	V211 - 360 - 801 - 60	BOLT,SEMS (SP)	4	*					
4	1593 - 406 - 250 - 00	COLUMM,STEERING ASSY	1	*					
5	1593 - 406 - 005 - 10	BUSH,COLUMN	1	*					
6	2502 - 406 - 001 - 10	HUB,STEERING COLUMN	2	*					
7	V363 - 260 - 008 - 00	NUT,LOCK/M8	2	*					
8	1593 - 406 - 240 - 10	WHEEL,STEERING ASSY	1	*					
9	1593 - 406 - 006 - 00	PAD,STEERING WHEEL	1	*					
10	V328 - 262 - 110 - 00	NUT/M10X1.25	1	*					
11	V411 - 260 - 010 - 00	WASHER/M10	1	*					
12	V500 - 162 - 502 - 00	PIN,SPLIT/2.5X20	1	*					
13	2502 - 407 - 210 - 30	SHAFT,STEERING COMP	1	*					
14	V328 - 262 - 110 - 00	NUT/M10X1.25	1	*					
15	3659 - 170 - 003 - 00	WASHER/11X30X3	1	*					
16	V500 - 162 - 502 - 00	PIN,SPLIT/2.5X20	1	*					
17	2502 - 407 - 200 - 20	GEAR/25T ASSY	1	*					
18	2502 - 407 - 001 - 10	BUSH/15X17X11	2	*					
19	3659 - 170 - 003 - 00	WASHER/11X30X3	1	*					
20	V401 - 160 - 010 - 00	WASHER,SP/M10	1	*					
21	V304 - 260 - 010 - 00	NUT	1	*					

FIG. 12 TIRE (FRONT) SYSTEM

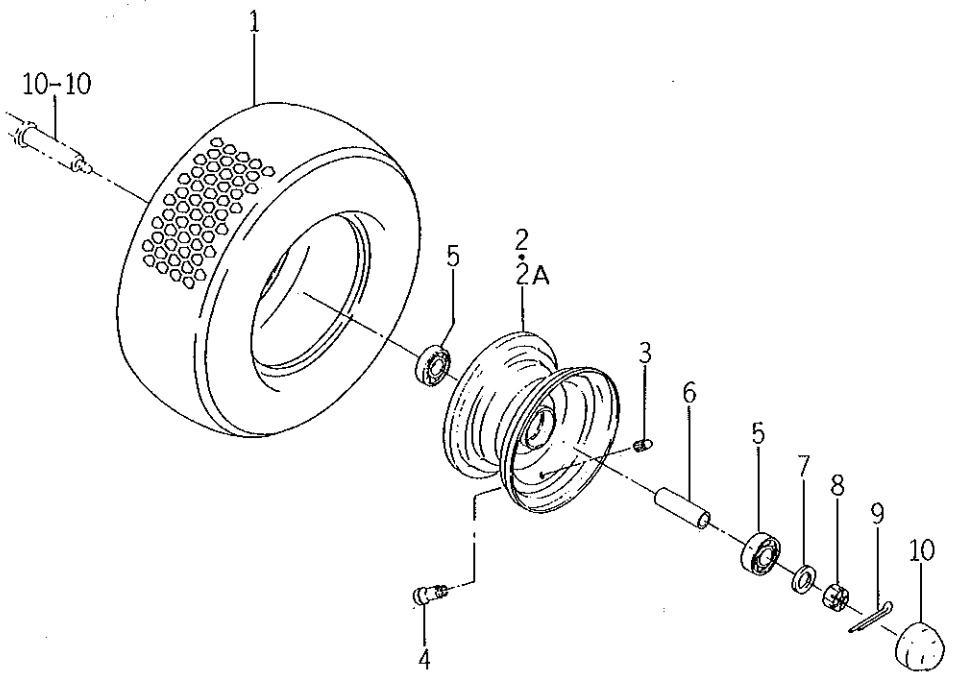

2502-411

KEY	PART CODE	DESCRIPTION	QTY	TYPE OF MODEL SL14H		ITC	COL	GRP	REMARKS
1	2502 - 411 - 201 - 00	TIRE,TURF/14 - 5	2	*					
2	2502 - 411 - 210 - 00	WHEEL/3.5X6 COMP	2	1- -1889					
2A	2502 - 411 - 210 - 10	WHEEL/3.5X6 COMP	2	1990-					
3	V999 - 200 - 003 - 00	CAP,TIRE VALVE	2	*					
4	1386 - 241 - 002 - 00	BULB	2	*					
5	V600 - 150 - 600 - 40	BEARING,RB/6004SS	4	*					
6	2502 - 411 - 001 - 00	COLLAR/21X25X46	2	*					
7	3659 - 170 - 003 - 00	WASHER/11X30X3	2	*					
8	V328 - 262 - 110 - 00	NUT/M10X1.25	2	*					
9	V500 - 162 - 502 - 50	PIN,SPLIT/2.5X25	2	*					
10	2502 - 317 - 002 - 00	CAP,WHEEL	2	*					

FIG. 13 P.T.O. SYSTEM

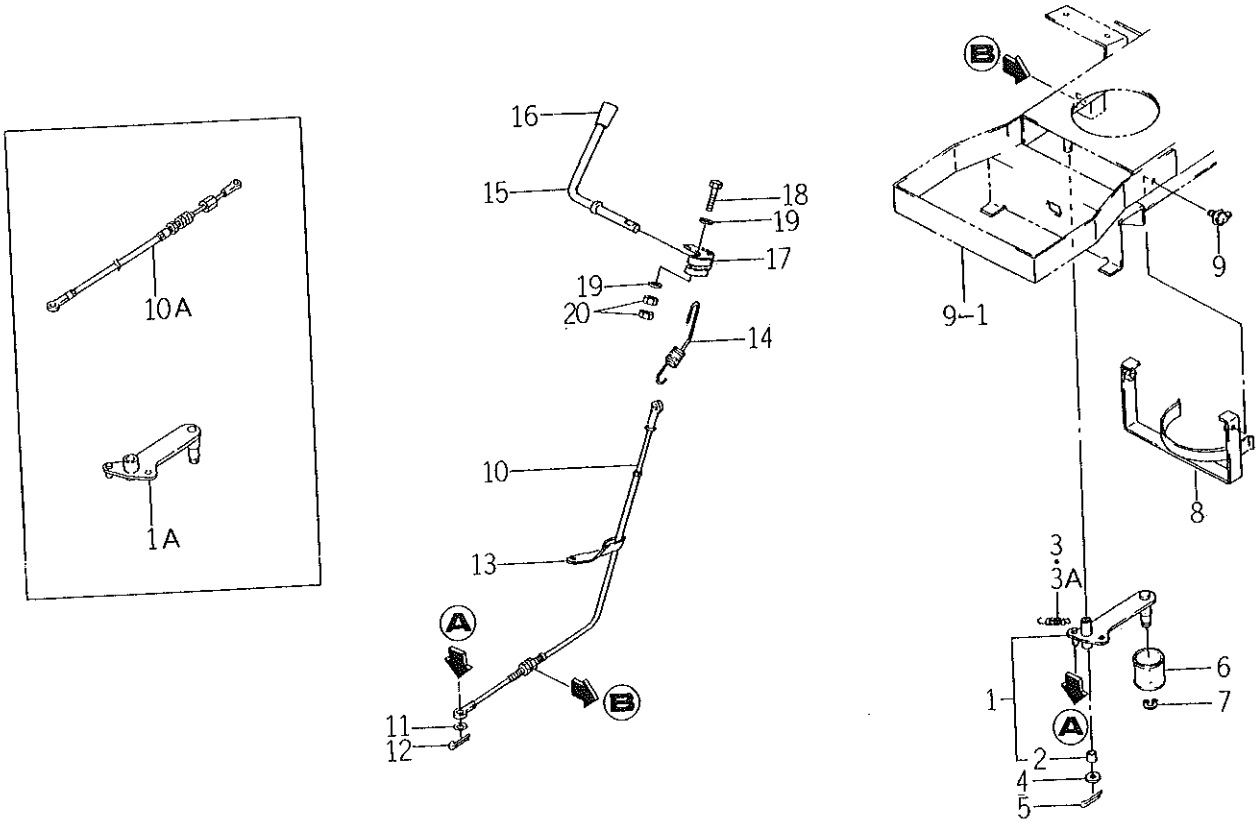

2502-532

KEY	PART CODE	DESCRIPTION	QTY	TYPE OF MODEL SL14H		ITC	COL	GRP	REMARKS
1	2502 - 532 - 230 - 20	ARM,PTO TENSION ASSY	1	1- -2395					
1A	2502 - 532 - 230 - 30	ARM,PTO TENSION ASSY	1	2396-					
2	2502 - 532 - 001 - 10	BUSH/15X17X15	2	*					
3	1415 - 125 - 021 - 00	SPRING,TENSION/46	1	1- -1350					
3A	3656 - 565 - 006 - 00	SPRING,HE066	1	1351-					
4	V411 - 260 - 014 - 00	WASHER,PL/M14	1	*					
5	V500 - 163 - 002 - 50	PIN,SPLIT/3 X25	1	*					
6	2502 - 532 - 002 - 10	PULLEY,TENSION/045	1	*					
7	V704 - 140 - 015 - 00	RING,SNAP/15 C	1	*					
8	2502 - 532 - 220 - 40	STOPPER,BELT COMP	1	*					
9	V273 - 360 - 802 - 50	BOLT,WING SP/M8X25	2	*					
10	2502 - 532 - 200 - 20	CABLE,PTO ASSY	1	1- -2395					
10A	2502 - 532 - 200 - 30	CABLE,PTO ASSY	1	2396-					
11	V411 - 260 - 008 - 00	WASHER,PL/M 8	1	*					
12	V500 - 163 - 001 - 50	PIN,SPLIT/3 X15	1	*					
13	1425 - 621 - 004 - 00	CLAMP,HARNESS	1	*					
14	1593 - 332 - 052 - 10	SPRING/HE014	1	*					
15	2502 - 533 - 230 - 00	LEVER,PTO COMP	1	*					
16	4106 - 105 - 303 - 00	KNOB	1	*					
17	2502 - 533 - 002 - 10	PLATE,PTO LEVER	1	*					
18	V201 - 260 - 804 - 50	BOLT/M 8X45	1	*					
19	V411 - 260 - 008 - 00	WASHER,PL/M 8	2	*					
20	V304 - 260 - 008 - 00	NUT/M 8	2	*					

FIG. 14 LINK SYSTEM

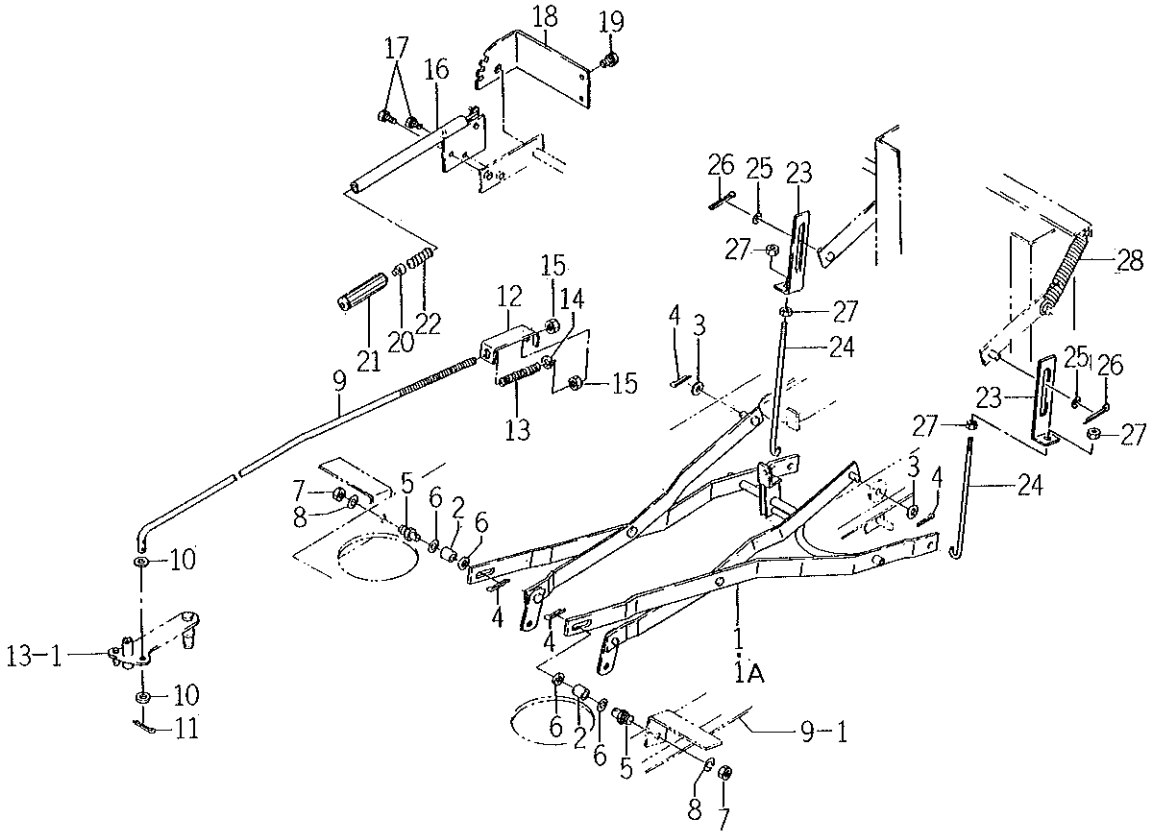

2502-553

KEY	PART CODE	DESCRIPTION	QTY	TYPE OF MODEL SL14H		ITC	COL	GRP	REMARKS
1	2502 - 553 - 210 - 30	LINK COMP	1	1- -790 791-					
1A	2502 - 553 - 210 - 40	LINK COMP	1						
2	2502 - 553 - 001 - 20	COLLAR/11X15X07	2	*					
3	V411 - 260 - 012 - 00	WASHER /M12	2	*					
4	V500 - 162 - 502 - 50	PIN,SPLIT/2.5X25	4	*					
5	2502 - 553 - 003 - 10	PIN/M12X43	2	*					
6	3750 - 242 - 008 - 00	WASHER,ROOT TENSION	4	*					
7	V304 - 260 - 012 - 00	NUT/M12	2	*					
8	V401 - 160 - 012 - 00	WASHER,SP/M12	2	*					
9	2502 - 553 - 002 - 10	ROD/M08X751	1	*					
10	V411 - 260 - 008 - 00	WASHER,PL/M 8	2	*					
11	V500 - 162 - 502 - 50	PIN,SPLIT/2.5X25	1	*					
12	2502 - 553 - 004 - 00	PLATE,U/79X22	1	*					
13	2710 - 206 - 025 - 00	SPRING,RETURN	1	*					
14	V411 - 260 - 008 - 00	WASHER,PL/M 8	1	*					
15	V304 - 260 - 008 - 00	NUT/M 8	2	*					
16	2502 - 554 - 210 - 40	LEVER,LIFT COMP	1	*					
17	V211 - 560 - 802 - 50	BOLT,SEMS/M8X25 7T	2	*					
18	2502 - 554 - 008 - 10	PLATE	1	*					
19	V211 - 560 - 802 - 50	BOLT,SEMS/M8X25 7T	2	*					
20	2502 - 554 - 003 - 10	PIN,PUSH	1	*					
21	2502 - 554 - 004 - 10	GRIP,LIFT	1	*					
22	2502 - 554 - 007 - 00	SPRING/HC057	1	*					
23	2502 - 554 - 001 - 10	PLATE,L/32X154	2	*					
24	2502 - 554 - 005 - 20	ROD/M10X246	2	*					

FIG. 14 LINK SYSTEM

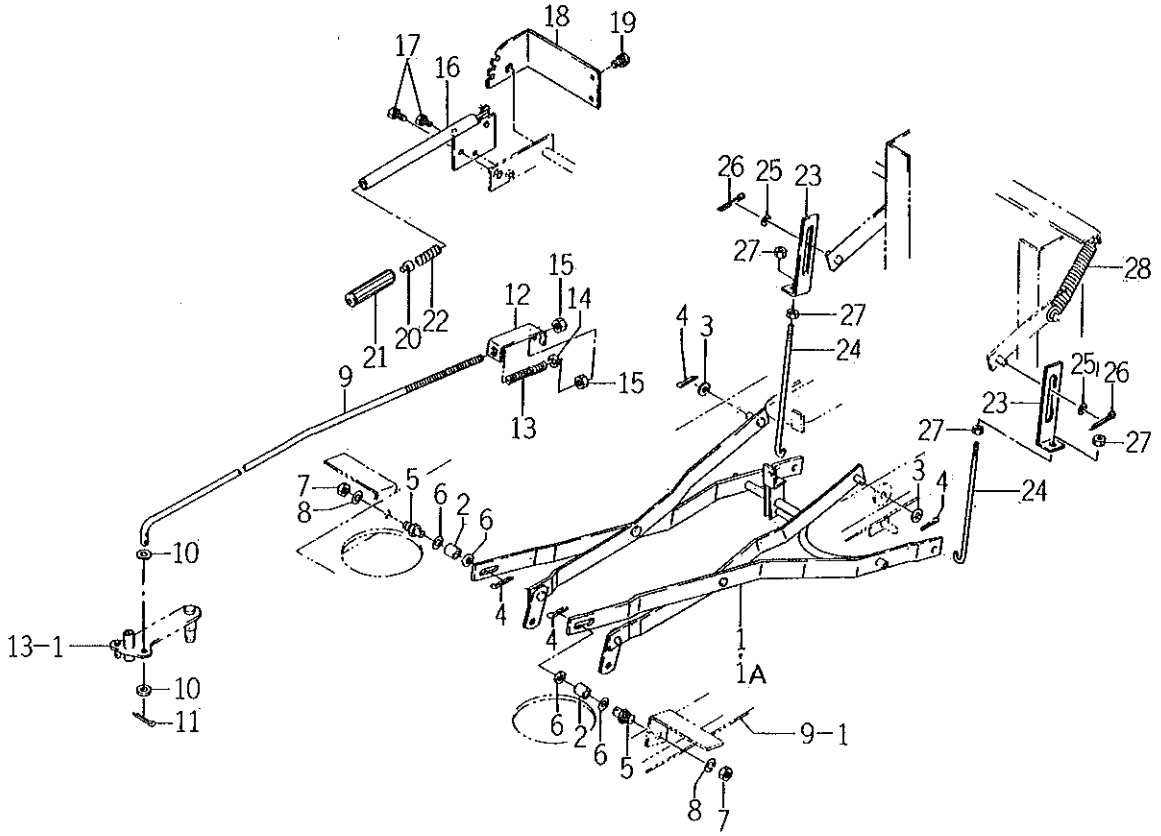

2502-554

KEY	PART CODE	DESCRIPTION	QTY	TYPE OF MODEL SL14H		ITC	COL	GRP	REMARKS
25	V411 - 260 - 012 - 00	WASHER /M12	2	*					
26	V500 - 162 - 502 - 50	PIN,SPLIT/2.5X25	2	*					
27	V304 - 260 - 010 - 00	NUT	4	*					
28	2502 - 554 - 006 - 20	SPRING/HE100	2	*					

FIG. 15 HOOD AND PANEL SYSTEM

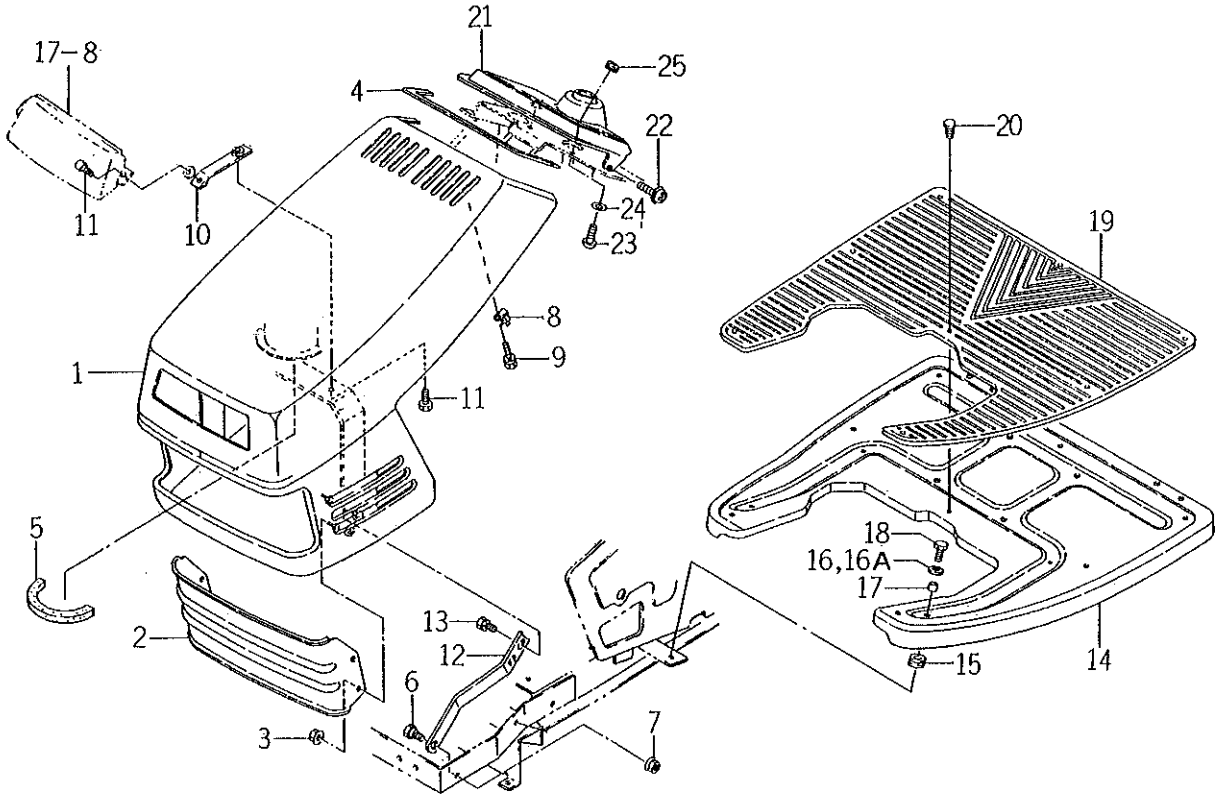

2502-601

KEY	PART CODE	DESCRIPTION	QTY	TYPE OF MODEL SL14H		ITC	COL	GRP	REMARKS
1	2502 - 601 - 210 - 40	HOOD COMP	1	*					
2	2502 - 601 - 001 - 20	COVER,FRONT	1	*					
3	V360 - 260 - 006 - 00	NUT/M6	4	*					
4	2502 - 601 - 006 - 00	TRIM/1X06X540	1	*					
5	2502 - 601 - 002 - 00	SEAL/15X15X320	1	*					
6	2502 - 601 - 003 - 00	BOLT/M08X20	2	*					
7	2502 - 601 - 005 - 00	NUT/M08	2	*					
8	3610 - 631 - 002 - 00	HANGER,SUPPORT	2	*					
9	V211 - 260 - 801 - 20	BOLT,SEMS (S) M8X12	2	*					
10	2502 - 601 - 220 - 30	PLATE COMP	2	*					
11	V210 - 260 - 601 - 60	BOLT,SEMS (S)	2	*					
12	2502 - 601 - 004 - 10	ARM,HOOD	2	*					
13	V211 - 260 - 801 - 60	BOLT,SEMS (S) M8X16	4	*					
14	2502 - 616 - 001 - 40	STEP	1	*					
15	1414 - 606 - 002 - 00	GROMMET/12X19	6	*					
16	1444 - 601 - 011 - 00	WASHER (9X24X1.6)	6	1-2355					
16A	3560 - 201 - 015 - 00	WASHER	6	2356-					
17	2502 - 616 - 004 - 00	COLLAR/08X12X10	6	*					
18	V201 - 260 - 802 - 50	BOLT/M 8X25	6	*					
19	2502 - 616 - 002 - 20	MAT	1	*					
20	1527 - 604 - 002 - 00	CLIP (B)	8	*					
21	2502 - 621 - 001 - 00	PANEL,INSTRUMENT	1	*					
22	V120 - 266 - 001 - 60	SCREW SEEMS/M6X16	2	*					
23	1581 - 740 - 116 - 00	SCREW/M6X20	2	*					
24	1593 - 601 - 073 - 00	WASHER/06X16X01	2	*					

FIG. 15 HOOD AND PANEL SYSTEM

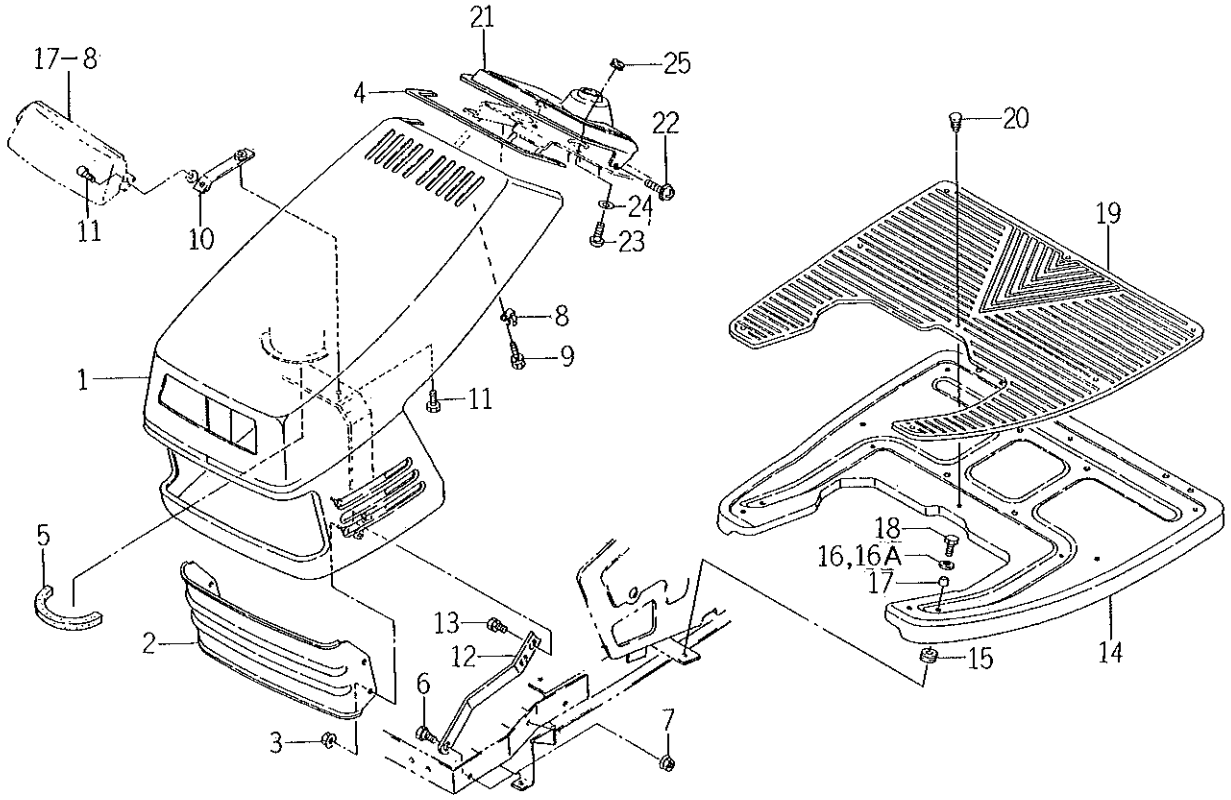

2502-621

KEY	PART CODE	DESCRIPTION	QTY	TYPE OF MODEL SL14H		ITC	COL	GRP	REMARKS
25	1427 – 621 – 012 – 00	GROMMET	1	*					

FIG. 16 FENDER AND SEAT SYSTEM

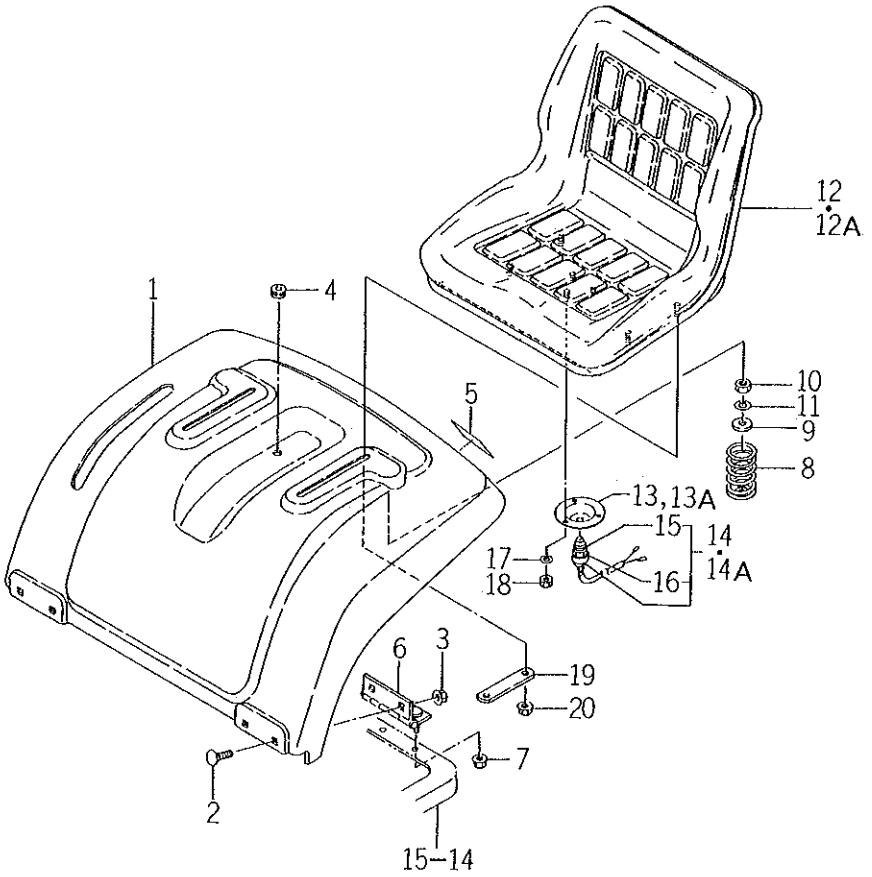

2502-606

KEY	PART CODE	DESCRIPTION	QTY	TYPE OF MODEL SL14H		ITC	COL	GRP	REMARKS
1	2502 – 606 – 003 – 10	FENDER	1	*					
2	2502 – 606 – 002 – 00	BOLT/M06X16	4	*					
3	V360 – 260 – 006 – 00	NUT/M6	4	*					
4	1427 – 621 – 012 – 00	GROMMET	1	*					
5	2502 – 606 – 001 – 00	REFLECTER	2	*					
6	2502 – 606 – 220 – 10	HINGE/102 COMP	2	*					
7	V363 – 260 – 008 – 00	NUT,LOCK/M8	4	*					
8	1593 – 611 – 014 – 00	SPRING/D = 6	2	*					
9	1376 – 606 – 005 – 00	WASHER/9X32X2	2	*					
10	V304 – 260 – 008 – 00	NUT/M 8	2	*					
11	V401 – 160 – 008 – 00	WASHER,SP/M 8	2	*					
12	2502 – 611 – 210 – 00	SEAT ASSY	1	1- -1990					
12A	2502 – 611 – 210 – 10	SEAT ASSY	1	1991-					
13	1593 – 611 – 011 – 10	HOLDER/SWITCH	1	1- -1990					
13A	1593 – 611 – 011 – 20	HOLDER/SWITCH	1	1991-					
14	1593 – 623 – 270 – 00	SWITCH,SEAT ASSY	1	1- -100000					
14A	1593 – 623 – 270 – 10	SWITCH,SEAT ASSY	1	100001-					
15	1593 – 623 – 272 – 00	BOOT	1	*					
16	1593 – 623 – 273 – 00	NUT	1	*					
17	V401 – 160 – 006 – 00	S.W	3	*					
18	V301 – 260 – 006 – 00	NUT/M 6	3	*					
19	2502 – 611 – 001 – 00	PLATE	2	*					
20	V362 – 260 – 008 – 00	NUT	4	*					

FIG. 17 ELECTRICAL SYSTEM

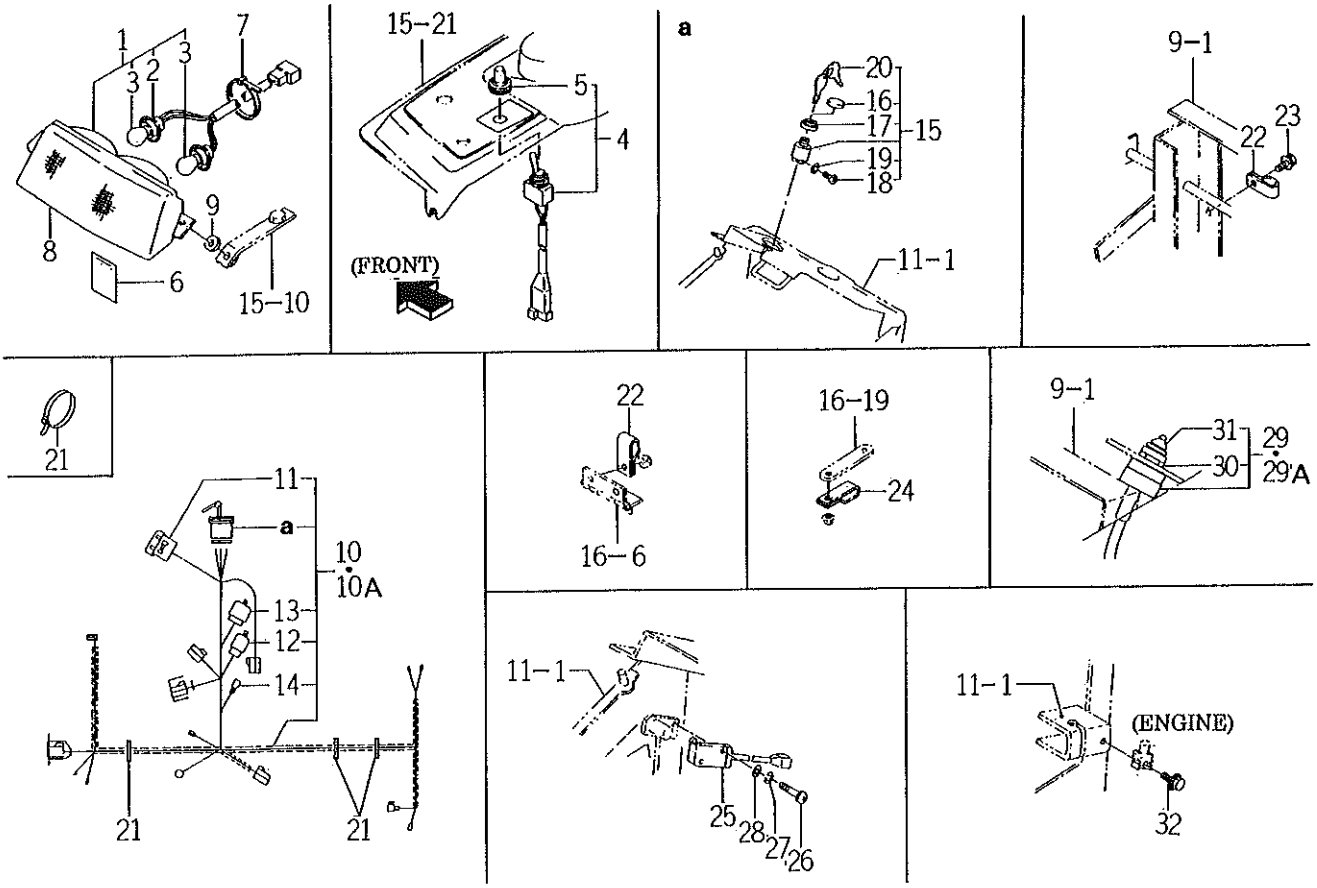

1593-622B

KEY	PART CODE	DESCRIPTION	QTY	TYPE OF MODEL SL14H		ITC	COL	GRP	REMARKS
1	1593 - 622 - 250 - 00	LAMP,HEAD ASSY	1	T					
2	1593 - 622 - 240 - 00	LEAD	1	T					
3	1564 - 654 - 213 - 00	BULB,LAMP/12V21W	2	T					
4	1593 - 622 - 270 - 00	SWITCH,HEAD LAMP	1	T					
5	3631 - 270 - 003 - 00	COVER,SWITCH	1	T					
6	1593 - 622 - 001 - 10	LABEL,SWITCH	1	T					
7	3737 - 172 - 010 - 00	BAND,HARNESS	3	T					
8	1593 - 622 - 211 - 10	LENS	1	*					
9	1444 - 601 - 015 - 00	WASHER/6X14X3	2	*					
10	2502 - 623 - 200 - 30	HARNESS,MAIN ASSY	1	1-100000					
10A	2502 - 623 - 200 - 40	HARNESS,MAIN ASSY	1	100001-					
11	1575 - 623 - 010 - 00	FUSE/32V10A	2	*					
12	2500 - 623 - 220 - 00	RELAY,4P ASSY	1	*					
13	1593 - 623 - 530 - 00	RELAY,5P ASSY	1	*					
14	2502 - 623 - 202 - 00	DIODE/1.5A	1	*					
15	1386 - 624 - 330 - 00	SWITCH,STARTER SET	1	*					
16	1386 - 624 - 292 - 00	CAP	1	*					
17	1386 - 624 - 293 - 00	NUT,RING	1	*					
18	V111 - 164 - 000 - 60	SCREW M4X6	3	*					
19	V401 - 160 - 004 - 00	WASHER,SP/M 4	3	*					
20	1386 - 624 - 300 - 00	KEY ASSY	1	*					
21	3746 - 172 - 013 - 00	BAND,HARNESS	3	*					
22	1425 - 621 - 004 - 00	CLAMP,HARNESS	5	*					
23	V211 - 360 - 801 - 20	BOLT,SEMS	2	*					
24	3768 - 172 - 008 - 00	CLAMPER,7 LONG	1	*					

FIG. 17 ELECTRICAL SYSTEM

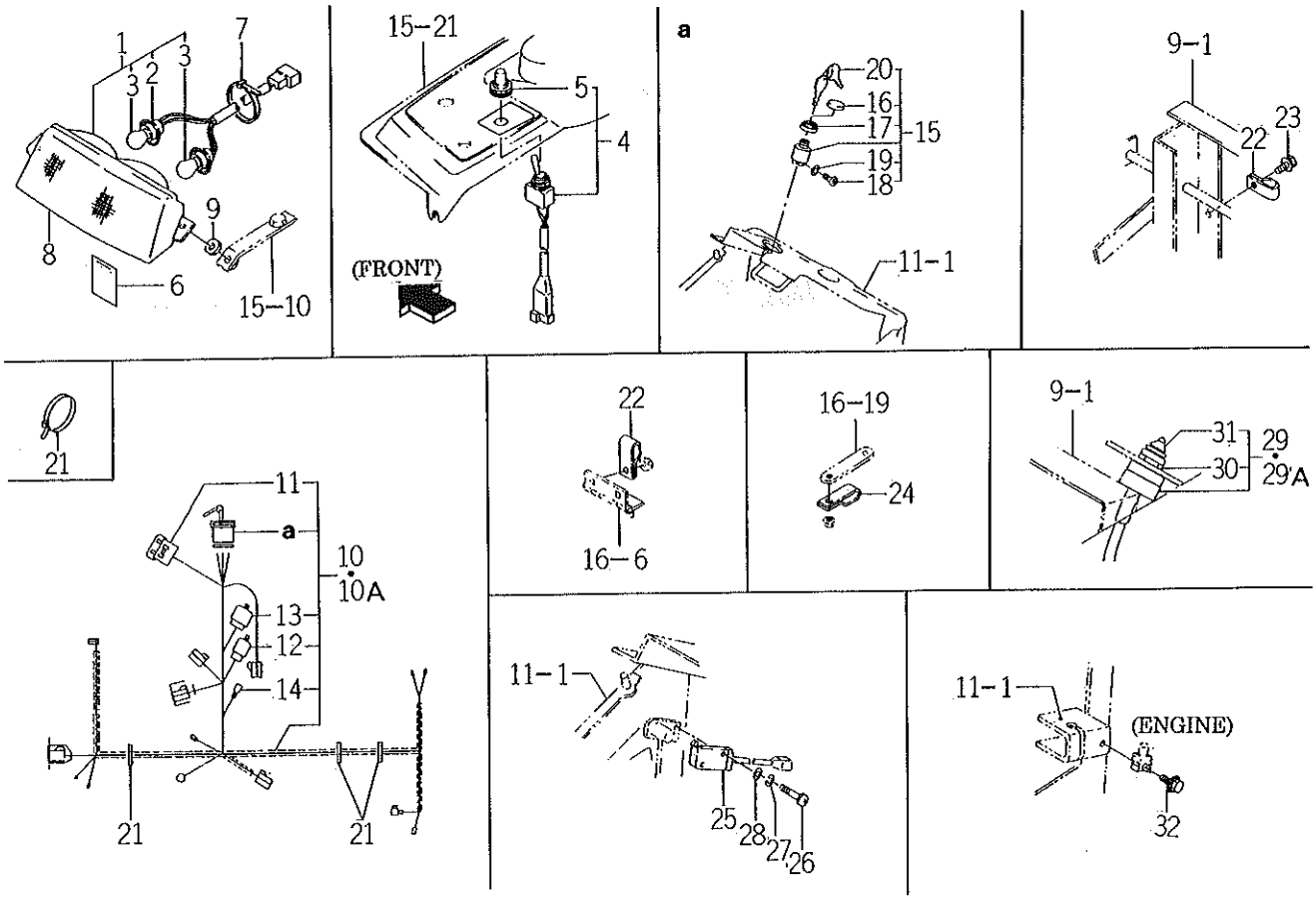

2502-623

KEY	PART CODE	DESCRIPTION	QTY	TYPE OF MODEL SL14H		ITC	COL	GRP	REMARKS
25	1593 - 623 - 520 - 00	SWITCH,MERIT	1	*					
26	V111 - 163 - 001 - 60	SCREW/M3X16	2	*					
27	V401 - 160 - 003 - 00	WASHER,SP/M 3	2	*					
28	V411 - 260 - 003 - 00	WASHER/M3	2	*					
29	1560 - 664 - 250 - 00	SWITCH,PUSH	1	1- -2520					
29A	1614 - 680 - 250 - 00	SWITCH,PUSH SET	1	2521-					
30	1560 - 664 - 252 - 00	NUT	1	*					
31	1560 - 664 - 253 - 00	BOOT	1	*					
32	V210 - 360 - 603 - 00	BOLT,SP	1	*					

FIG. 18 ORNAMENT

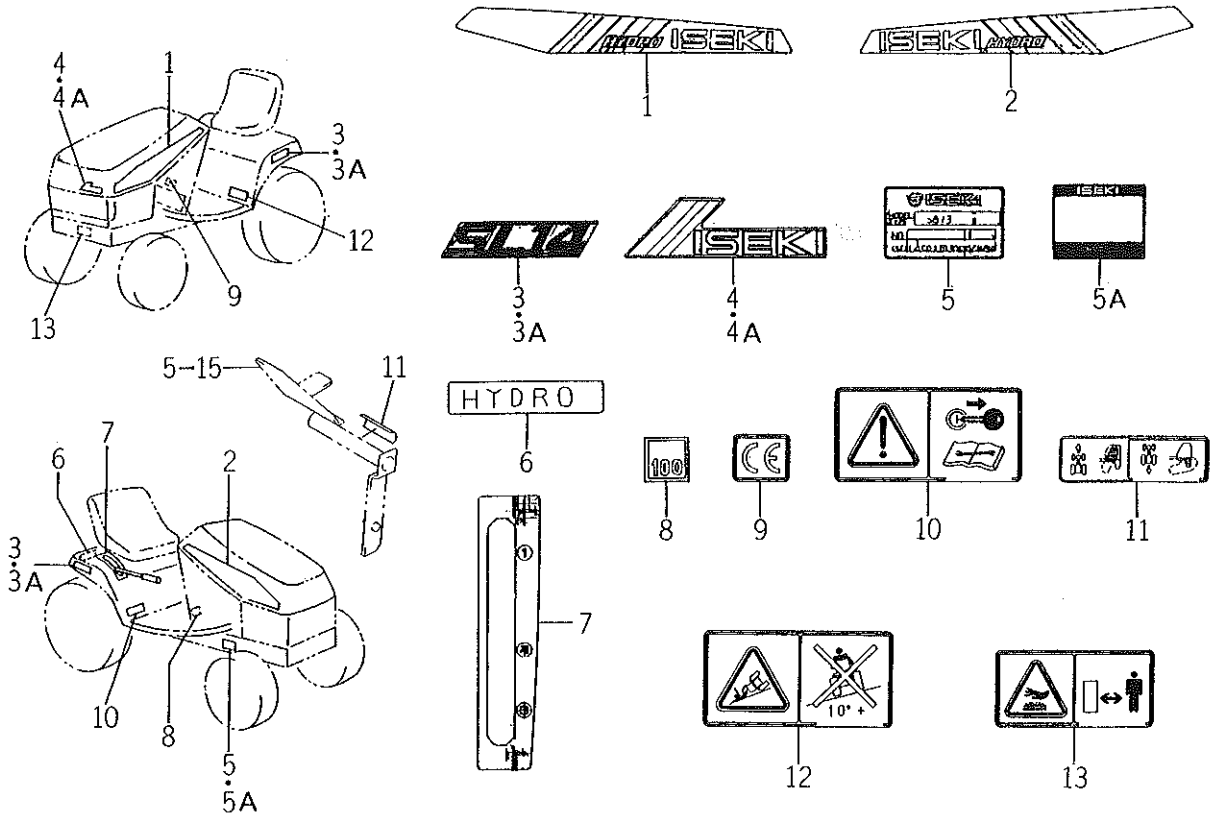

2502-901

KEY	PART CODE	DESCRIPTION	QTY	TYPE OF MODEL SL14H		ITC	COL	GRP	REMARKS
1	2502 - 901 - 001 - 20	ORNAMENT/LH	1	*					
2	2502 - 901 - 002 - 30	ORNAMENT/RH	1	*					
3	2502 - 901 - 003 - 00	ORNAMENT/14	2	1- -1990					
3A	2502 - 901 - 003 - 10	ORNAMENT/14	2	1991-					
4	2502 - 901 - 004 - 10	ORNAMENT/F	1	1- -1990					
4A	2502 - 901 - 004 - 20	ORNAMENT/F	1	1991-					
5	2502 - 901 - 006 - 10	LABEL,MODEL/SL14	1	1- -100000					
5A		LABEL,MODEL ASSY	1	100001-					
6	1608 - 901 - 004 - 00	ORNAMENT (HYDRAULIC)	1	*					
7	2502 - 901 - 007 - 00	LABEL,LIFT LEVER	1	*					
8	2500 - 901 - 008 - 00	LABEL,NOZZLE/100	1	*					
9	2500 - 901 - 027 - 00	LABEL/CE	1	*					
10	1593 - 901 - 015 - 00	LABEL/MENTENANSU	1	*					
11	2502 - 901 - 008 - 00	LABEL/HST	1	*					
12	1636 - 901 - 015 - 00	LABEL/CAUTION/SROOP	1	*					
13	8595 - 901 - 007 - 00	LABELCAUTION/HOT	1	*					

FIG. 19 LABEL

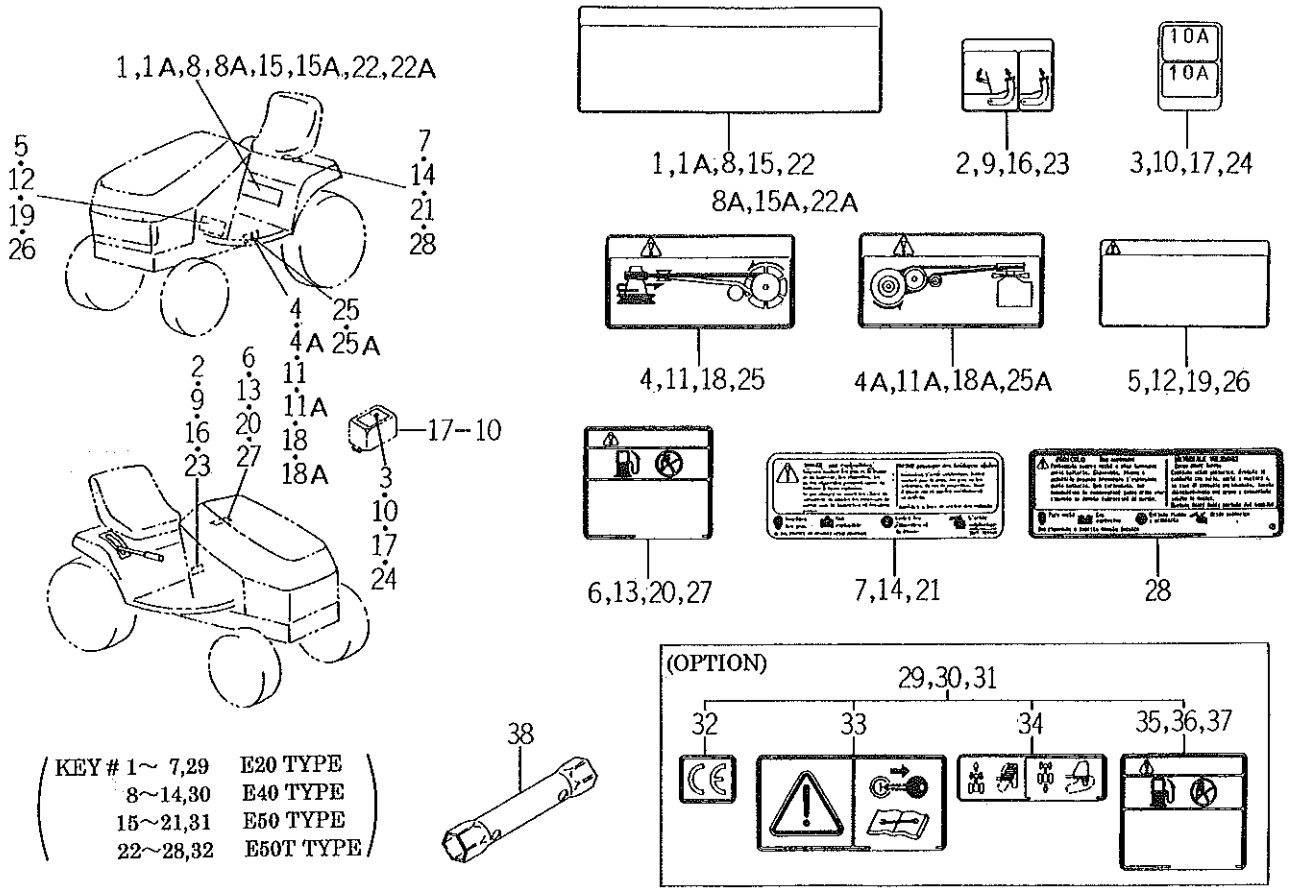

KEY # 1~ 7,29 E20 TYPE
8~14,30 E40 TYPE
15~21,31 E50 TYPE
22~28,32 E50T TYPE

2502-905

KEY	PART CODE	DESCRIPTION	QTY	TYPE OF MODEL SL14H		ITC	COL	GRP	REMARKS
1	2502 - 905 - 001 - 00	LABEL,OPERATION/D	1	1- -1999 2000-					
1A	2502 - 905 - 001 - 10	LABEL,OPERATION/D	1						
2	2502 - 905 - 002 - 00	LABEL,PARKING/D	1	*					
3	2502 - 905 - 003 - 00	LABEL,FUSE/D	1	*					
4	2502 - 905 - 004 - 00	LABEL,BELT CAUTION/D	1	1- -790					
4A	2502 - 905 - 006 - 00	LABEL,BELT CAUTION/D	1	791-					
5	2502 - 905 - 005 - 00	LABEL,CAUTION D	1	*					
6	2502 - 905 - 021 - 00	LABEL/D/FUEL/D	1	*					
7	1640 - 903 - 036 - 00	LABEL/D/BATTERY	1	*					
8	2502 - 906 - 001 - 10	LABEL,PARKING/E	1	1- -2347					
8A	2502 - 906 - 001 - 20	LABEL,OPERATION/E	1	2348-					
9	2502 - 906 - 002 - 00	LABEL,PARKING/E	1	*					
10	2502 - 906 - 003 - 20	LABEL,FUSE/E	1	*					
11	2502 - 906 - 004 - 00	LABEL,BELT CAUTION/E	1	1- -790					
11A	2502 - 906 - 006 - 00	LABEL,BELT CAUTION/E	1	791-					
12	2502 - 906 - 005 - 00	LABEL,CAUTION/E	1	*					
13	2502 - 906 - 021 - 00	LABEL/D/FUEL/G	1	*					
14	1640 - 904 - 016 - 00	LABEL/D/BATTERY	1	*					
15	2502 - 907 - 001 - 00	LABEL,OPERATION/F	1	1- -1999 2000-					
15A	2502 - 907 - 001 - 10	LABEL,OPERATION/F	1						
16	2502 - 907 - 002 - 00	LABEL,PARKING/F	1	*					
17	2502 - 907 - 003 - 00	LABEL,FUSE/F	1	*					
18	2502 - 907 - 004 - 00	LABEL,BELT CAUTION/F	1	1- -790					
18A	2502 - 907 - 006 - 00	LABEL,BELT CAUTION/F	1	791-					
19	2502 - 907 - 005 - 00	LABEL,OPTION/E	1	*					

FIG. 19 LABEL

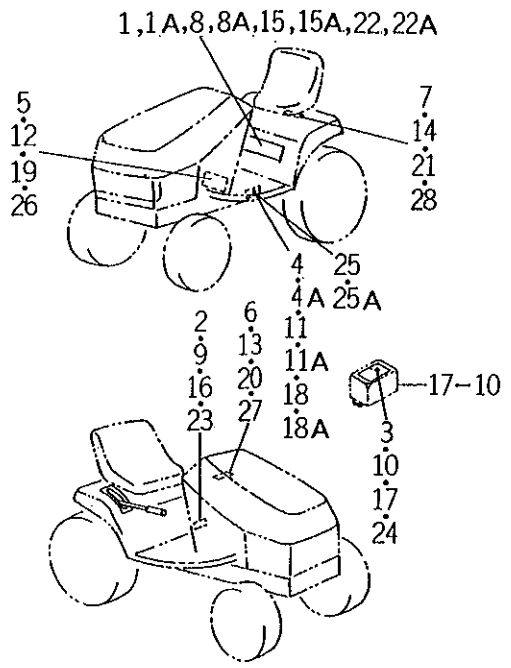

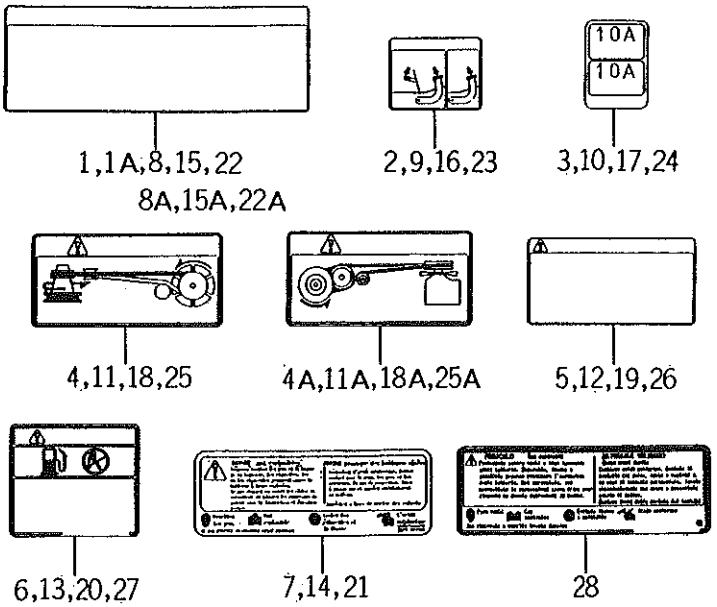

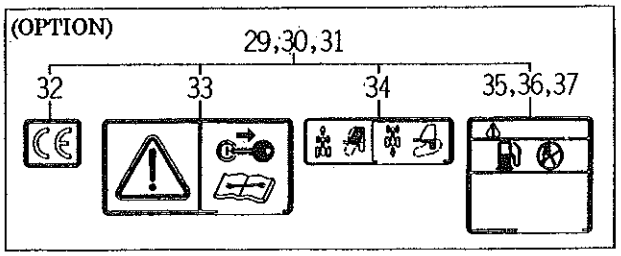

KEY #		
1~ 7,29	E20 TYPE
8~14,30	E40 TYPE
15~21,31	E50 TYPE
22~28,32	E50T TYPE

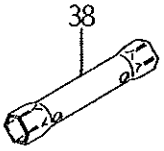

2502-907

KEY	PART CODE	DESCRIPTION	QTY	TYPE OF MODEL SL14H		ITC	COL	GRP	REMARKS
20	2502 - 907 - 021 - 00	LABEL/D/FUEL/F	1	*					
21	1640 - 903 - 016 - 00	LABEL/D/BATTERY	1	*					
22	2502 - 910 - 001 - 00	LABEL,OPERATION/I	1	1--1994					
22A	2502 - 910 - 001 - 10	LABEL,OPERATION/I	1	1995-					
23	2502 - 910 - 002 - 00	LABEL/PARKING/I	1	*					
24	2502 - 910 - 003 - 00	LABEL/FUSE/I	1	*					
25	2502 - 910 - 004 - 00	LABEL,BELT CAUTION/I	1	1--790					
25A	2502 - 910 - 006 - 00	LABEL,BELT CAUTION/I	1	791-					
26	2502 - 910 - 005 - 00	LABEL/CAUTION/I	1	*					
27	2502 - 910 - 021 - 00	LABEL/D/FUEL/T	1	*					
28	1640 - 905 - 016 - 00	LABEL,CAUTION/BATTRY	1	*					
29	2502 - 905 - 200 - 00	LABEL/SL/D SET	1	T					
30	2502 - 906 - 200 - 00	LABEL/SL/G SET	1	T					
31	2502 - 907 - 200 - 00	LABEL/SL/F SET	1	T					
32	2500 - 901 - 027 - 00	LABEL/CE	1	T					
33	1593 - 901 - 015 - 00	LABEL/MENTENANSU	1	T					
34	2502 - 901 - 008 - 00	LABEL/HST	1	T					
35	2502 - 905 - 021 - 00	LABEL/D/FUEL/D	1	T					
36	2502 - 906 - 021 - 00	LABEL/D/FUEL/G	1	T					
37	2502 - 907 - 021 - 00	LABEL/D/FUEL/F	1	T					
38	2500 - 930 - 001 - 00	WRENCH/PLUG	1	*					

FIG. 20 DRIVING SYSTEM

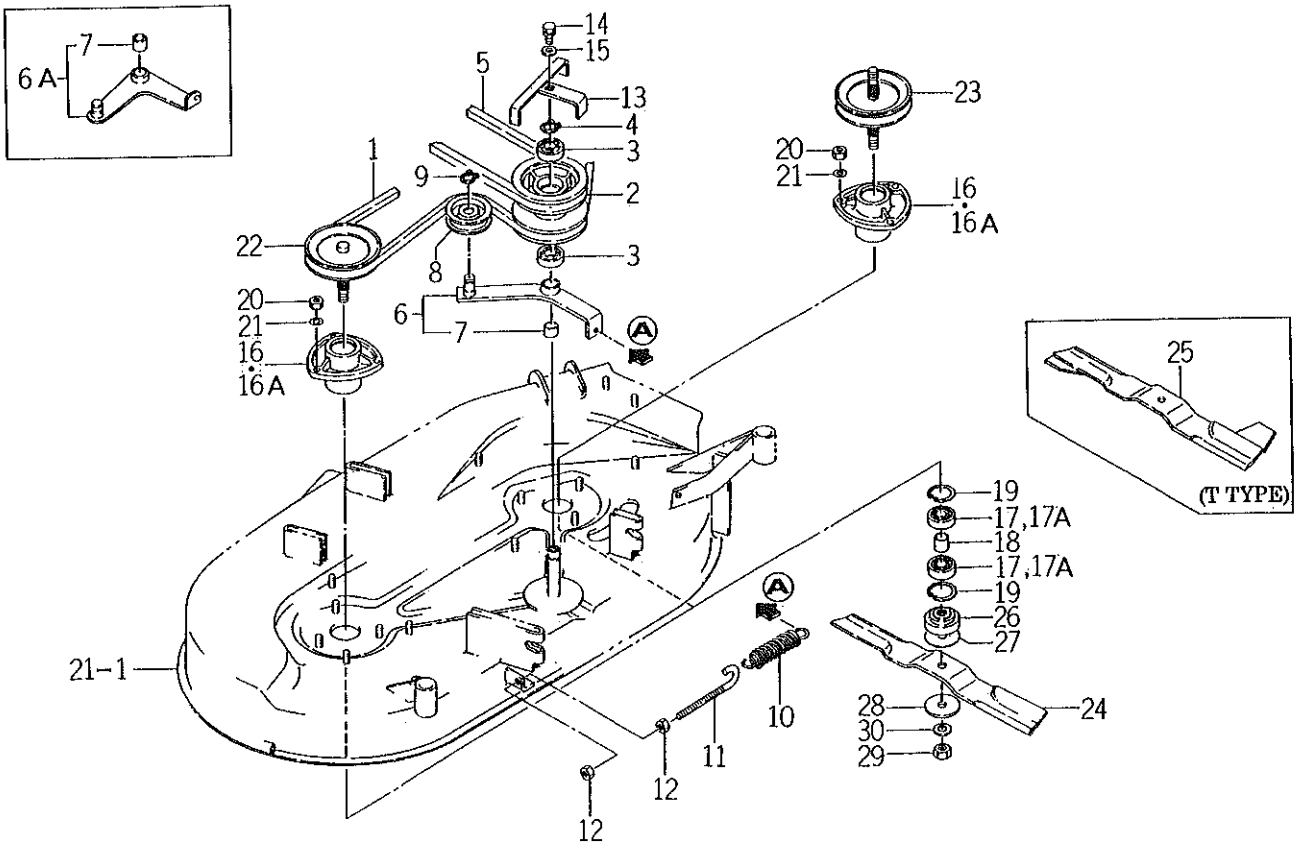

8650-101

KEY	PART CODE	DESCRIPTION	QTY	TYPE OF MODEL SSM40		ITC	COL	GRP	REMARKS
1	8650 - 101 - 002 - 00	BELT/VB066	1	*					
2	8650 - 201 - 001 - 10	PULLEY/V2B120	1	*					
3	8650 - 201 - 002 - 00	BEARING,RB	2	*					
4	V704 - 140 - 020 - 00	RING.SNAP/20	1	*					
5	8650 - 101 - 001 - 10	BELT/VB066	1	*					
6	8650 - 203 - 200 - 10	ARM,TENSION ASSY	1	1--790					
6A	8650 - 203 - 200 - 20	ARM,TENSION ASSY	1	791-					
7	8650 - 203 - 001 - 10	BUSH/20X23X20	1	*					
8	8593 - 014 - 200 - 10	PULLEY/FT/85X22 COMP	1	*					
9	V704 - 140 - 017 - 00	RING,SNAP/17 C	1	*					
10	3737 - 341 - 006 - 00	SPRING,CHAIN TENSION	1	*					
11	3737 - 341 - 007 - 00	ROD	1	*					
12	V304 - 260 - 008 - 00	NUT/M 8	2	*					
13	8650 - 204 - 210 - 10	GUIDE,BELT COMP	1	*					
14	V211 - 260 - 802 - 00	BOLT,SEMS (S)	1	*					
15	2130 - 407 - 003 - 00	WASHER,CAM	1	*					
16	8595 - 301 - 001 - 70	METAL	2	1--200000					
16A	8595 - 301 - 001 - 80	METAL	2	200001-					
17	8595 - 301 - 008 - 00	BEARING,RB	4	1--790					
17A	8595 - 301 - 008 - 10	BEARING,RB	4	791-					
18	8595 - 301 - 004 - 30	HUB/18X22X20	2	*					
19	V705 - 140 - 040 - 00	RING,SNAP/40 C	4	*					
20	V304 - 260 - 008 - 00	NUT/M 8	6	*					
21	V401 - 160 - 008 - 00	WASHER,SP/M 8	6	*					
22	8595 - 301 - 500 - 50	PULLEY/VB120 COMP	1	*					

FIG. 20 DRIVING SYSTEM

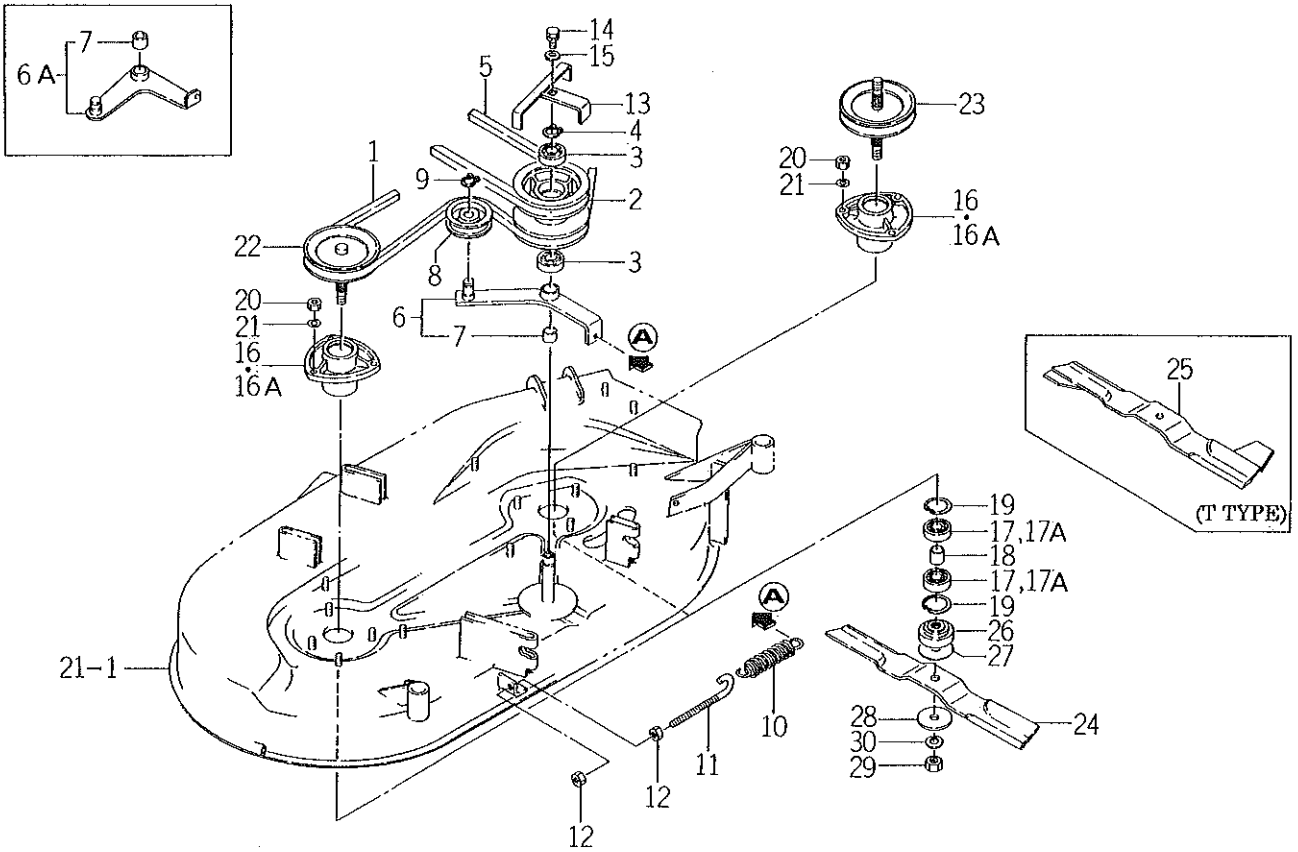

8650-301

KEY	PART CODE	DESCRIPTION	QTY	TYPE OF MODEL SSM40		ITC	COL	GRP	REMARKS
23	8650 - 301 - 210 - 20	PULLEY/VB120 COMP	1	*					
24	8650 - 302 - 001 - 00	BLADE/57X514	2	*					
25	8651 - 103 - 210 - 00	BLADE/57X514 COMP	2	*					
26	8595 - 301 - 005 - 30	HUB,BLADE	2	*					
27	8595 - 305 - 011 - 00	SHIM/1.2	1	*					
28	8595 - 305 - 012 - 00	WASHER/14X55X05	2	*					
29	V304 - 460 - 014 - 00	NUT/M14	2	*					
30	V401 - 160 - 014 - 00	WASHER,SP/M14	2	*					

FIG. 21 DECK AND COVER SYSTEM

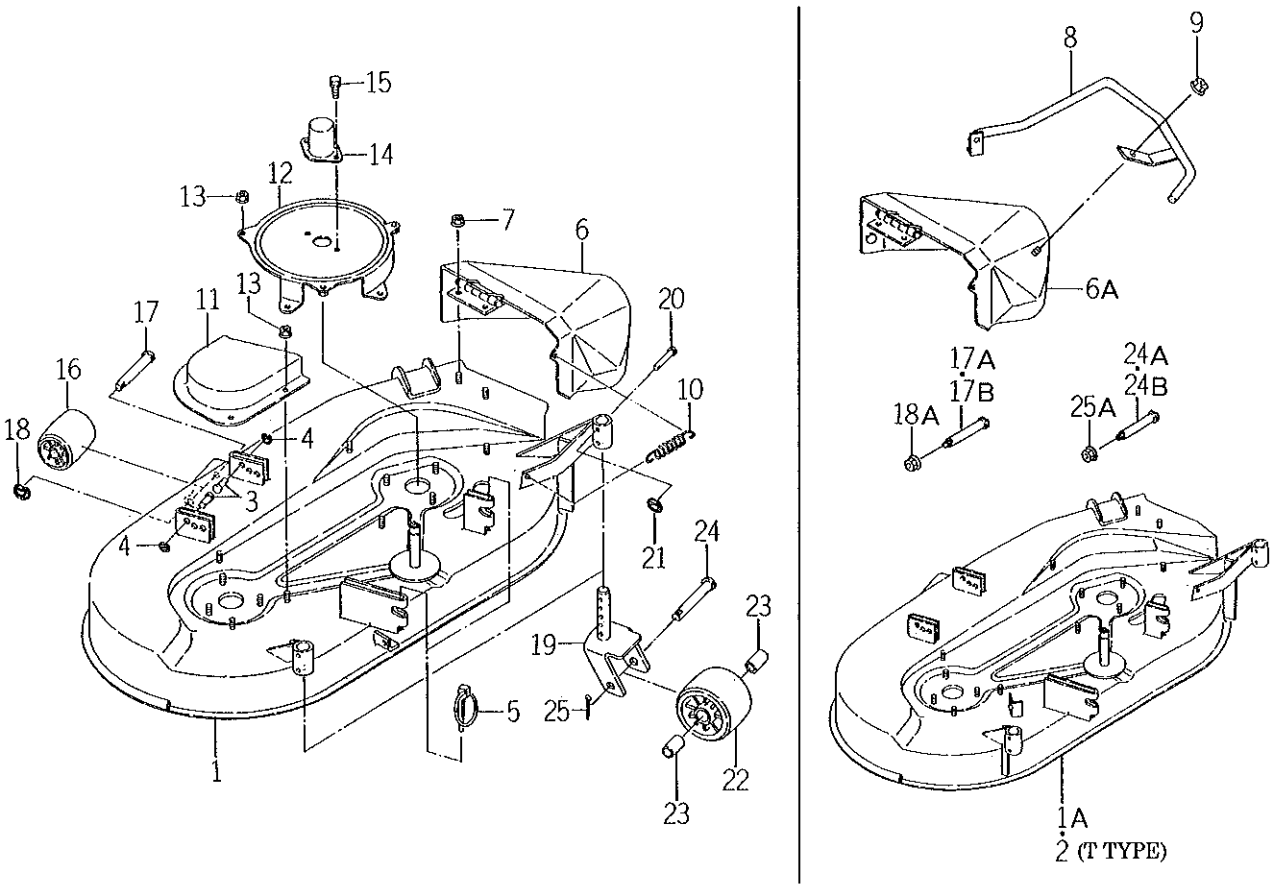

8650-401

KEY	PART CODE	DESCRIPTION	QTY	TYPE OF MODEL SSM40		ITC	COL	GRP	REMARKS
1	8650 - 401 - 210 - 30	DECK,MOWER/40 COMP	1	1- -790					
1A	8650 - 401 - 210 - 40	DEK,MOWER/40 COMP	1	791-					
2	8650 - 401 - 250 - 00	DEK,MOWER/40 COMP	1	*					
3	8650 - 401 - 001 - 10	PIN/12X22	2	*					
4	1427 - 317 - 003 - 00	CLIP,PIN	2	*					
5	8595 - 405 - 500 - 20	PIN,STOPPER ASSY	2	*					
6	8650 - 402 - 210 - 10	COVER,DISCHARGE COMP	1	1- -200000					
6A	8650 - 402 - 210 - 20	COVER,DISCHARGE COMP	1	200001-					
7	V363 - 260 - 008 - 00	NUT,LOCK/M8	2	*					
8	8650 - 402 - 220 - 00	GUIDE,DISCHARGE COMP	1	*					
9	V363 - 260 - 008 - 00	NUT,LOCK/M8	2	*					
10	3768 - 112 - 001 - 00	SPRING,CLUTCH RETURN	1	*					
11	8650 - 403 - 001 - 10	COVER,PULLEY/LH	1	*					
12	8650 - 403 - 210 - 10	COVER,PULLEY/RH COMP	1	*					
13	V363 - 260 - 008 - 00	NUT,LOCK/M8	7	*					
14	1427 - 130 - 260 - 00	CAP,SHAFT (A) COMP	1	*					
15	V211 - 260 - 801 - 20	BOLT,SEMS (S) M8X12	2	*					
16	8595 - 501 - 001 - 10	WHEEL,GAUGE FRONT	1	*					
17	8595 - 505 - 051 - 00	PIN/12X104	1	1- -1889					
17A	8595 - 505 - 051 - 10	PIN/12X108	1	1990- -2520					
17B	8595 - 505 - 051 - 20	PIN/12X108	1	2521-					
18	1427 - 317 - 003 - 00	CLIP,PIN	1	1- -1889					
18A	V363 - 260 - 008 - 00	NUT,LOCK/M8	1	1990-					
19	8650 - 502 - 210 - 00	FORK,WHEEL COMP	2	*					
20	8595 - 505 - 002 - 00	PIN/08X44	2	*					

FIG. 21 DECK AND COVER SYSTEM

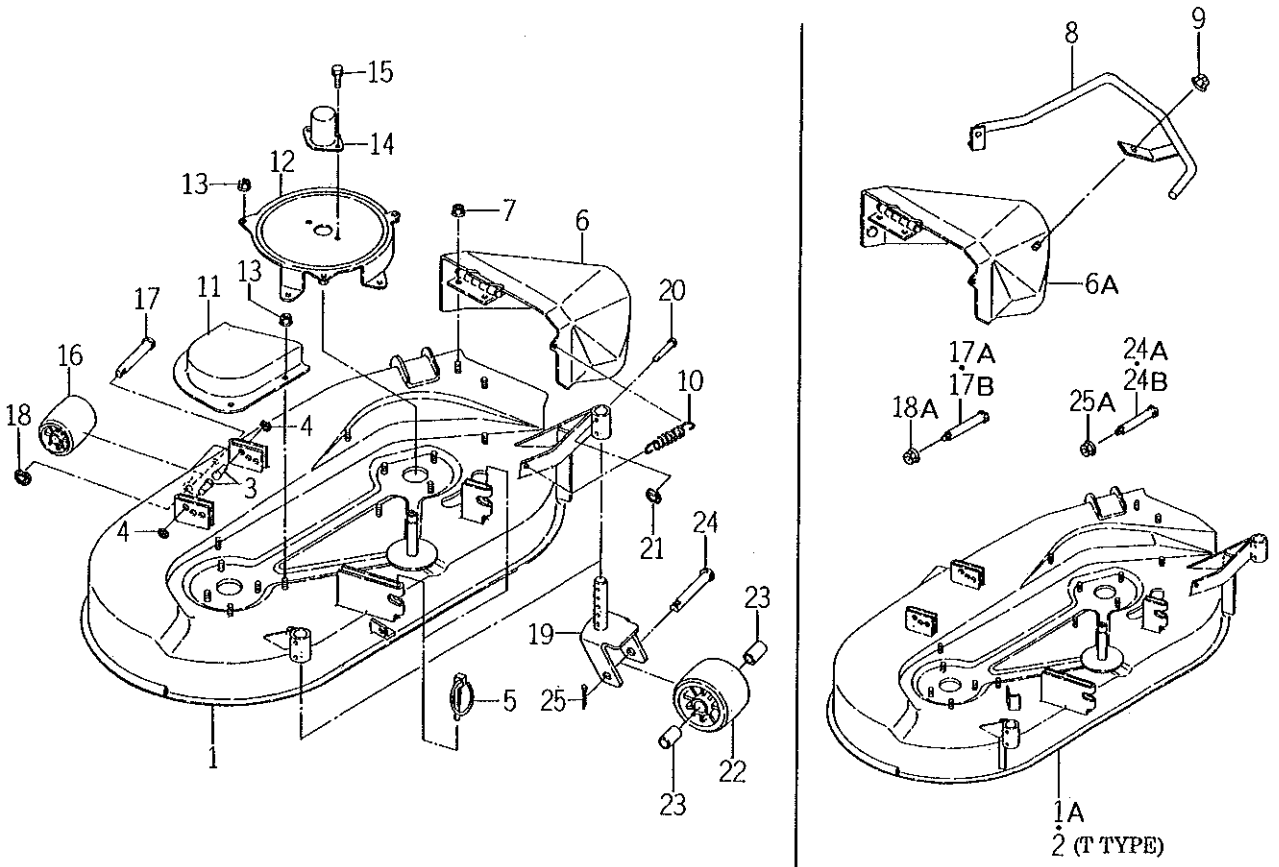

8650-502

KEY	PART CODE	DESCRIPTION	QTY	TYPE OF MODEL SSM40		ITC	COL	GRP	REMARKS
21	1427 - 317 - 003 - 00	CLIP,PIN	2	*					
22	8595 - 501 - 004 - 00	WHEEL/GAUGE/REAR	2	*					
23	1560 - 285 - 006 - 20	BUSH/16X24X21	4	*					
24	8595 - 501 - 005 - 00	PIN/16X88	2	1- -1889					
24A	8595 - 501 - 005 - 10	PIN/16X94	2	1990- -2520					
24B	8595 - 501 - 005 - 20	PIN/16X94	2	2521-					
25	V500 - 163 - 003 - 00	PIN,SPLIT/3 X30	2	1- -1889					
25A	V363 - 260 - 010 - 00	NUT	2	1990-					

FIG. 22 LABEL

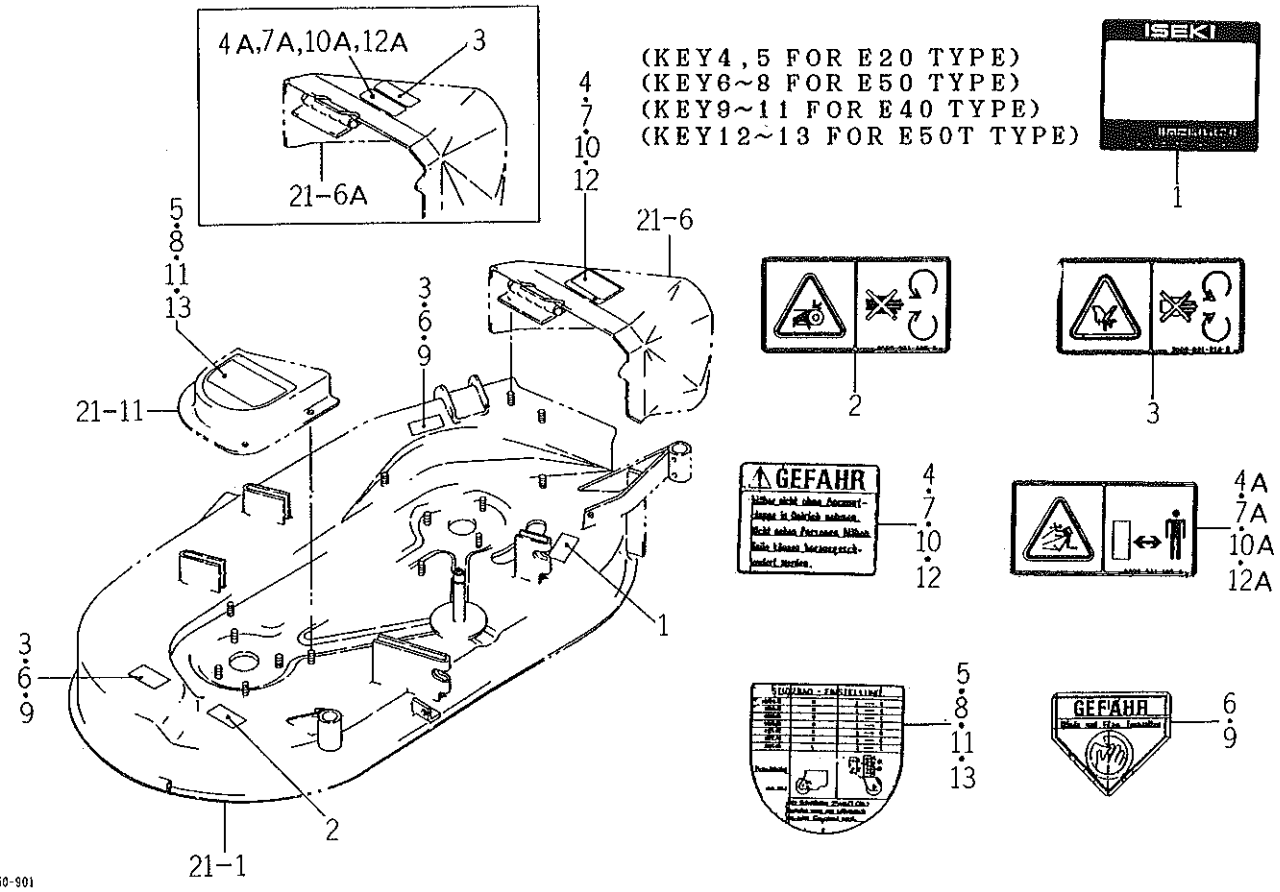

8650-901

KEY	PART CODE	DESCRIPTION	QTY	TYPE OF MODEL SSM40		ITC	COL	GRP	REMARKS
1		LABEL,MODEL ASSY	1	*					
2	8595 - 901 - 006 - 00	LABEL/CAUTION/BELT	1	*					
3	2500 - 901 - 014 - 30	LABEL/DISCHARGE	3	*					
4	8595 - 901 - 003 - 00	LABEL,DISCHARGE/D	1	1- -200000					
4A	8595 - 901 - 005 - 00	LABEL,DISCHARGE	1	200001-					
5	8650 - 901 - 002 - 00	LABEL,GAUGE WHEEL/D	1	*					
6	8595 - 902 - 001 - 10	LABEL (DANGER/F)	2	*					
7	8595 - 902 - 002 - 00	LABEL,DISCHARGE/F	1	1- -100000					
7A	8595 - 901 - 005 - 00	LABEL,DISCHARGE	1	100001-					
8	8650 - 902 - 001 - 00	LABEL,GAUGE WHEEL/F	1	*					
9	8595 - 903 - 001 - 00	LABEL	2	*					
10	8595 - 903 - 002 - 00	LABEL	1	1- -100000					
10A	8595 - 901 - 005 - 00	LABEL,DISCHARGE	1	100001-					
11	8650 - 903 - 001 - 00	LABEL,GAUGE WHEEL/E	1	*					
12	8650 - 910 - 002 - 00	LABEL/DISCHARGE	1	1- -200000					
12A	8595 - 901 - 005 - 00	LABEL,DISCHARGE	1	200001-					
13	8650 - 910 - 001 - 00	LABEL/WHEEL,GAUGE/I	1	*					

FIG. 23 FAN AND COVER SYSTEM

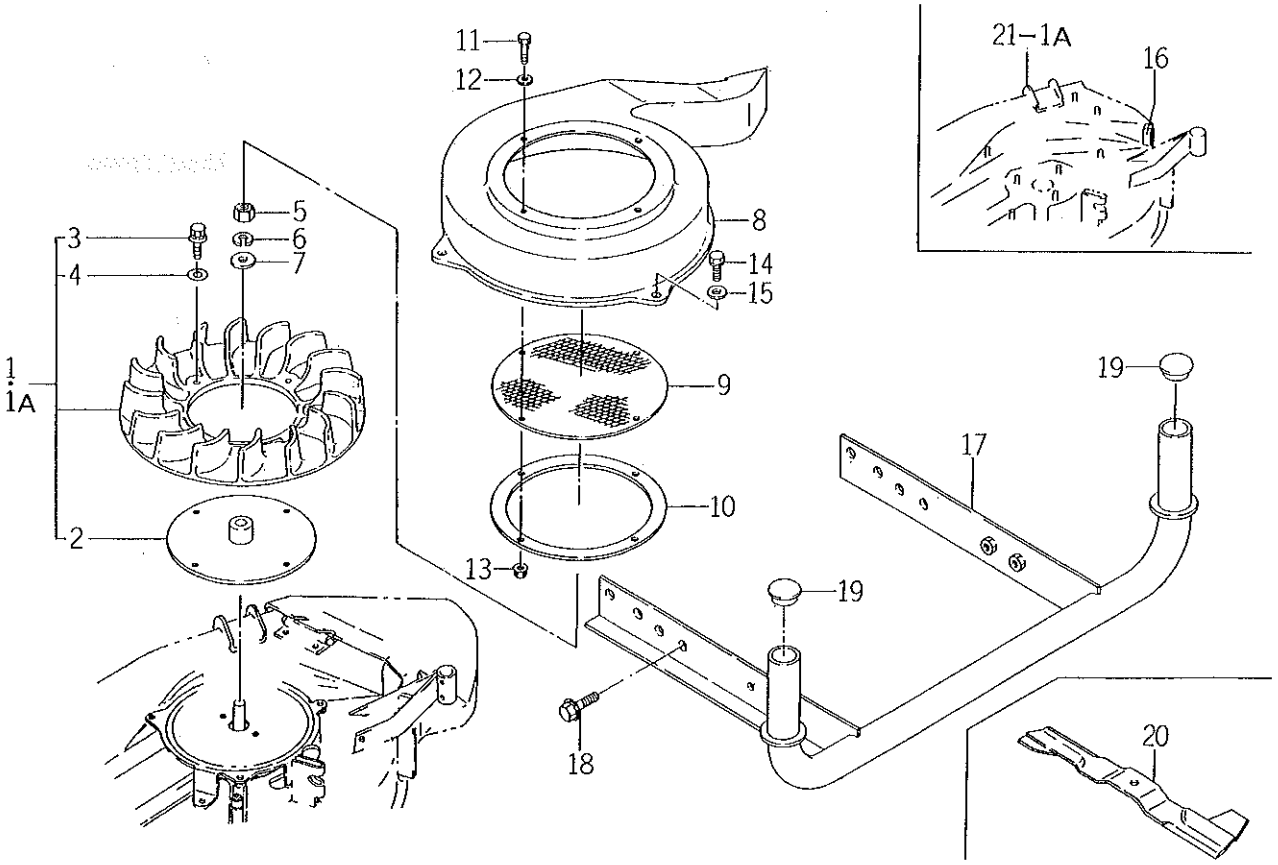

8651-101

KEY	PART CODE	DESCRIPTION	QTY	TYPE OF MODEL SBC250		ITC	COL	GRP	REMARKS
1	8651 - 101 - 200 - 00	FAN,SHIRKO ASSY	1	1-5 6-					
1A	8651 - 101 - 200 - 10	FAN	1						
2	8651 - 101 - 210 - 10	HUB COMP	1	*					
3	V210 - 360 - 601 - 60	BOLT (SP) /M6X16	4	*					
4	3761 - 212 - 004 - 00	WASHER,HOLDER COVER	4	*					
5	V304 - 260 - 014 - 00	NUT/M14	1	*					
6	V401 - 160 - 014 - 00	WASHER,SP/M14	1	*					
7	V411 - 260 - 014 - 00	WASHER,PL/M14	1	*					
8	8651 - 102 - 201 - 00	CASE,FAN	1	*					
9	8651 - 102 - 202 - 00	NET,FAN	1	*					
10	8651 - 102 - 203 - 00	PLATE,FAN	1	*					
11	V200 - 260 - 601 - 60	BOLT/M 6X16	4	*					
12	3567 - 402 - 004 - 00	WASHER,THROWER	4	*					
13	V361 - 260 - 006 - 00	NUT	4	*					
14	V211 - 560 - 802 - 00	BOLT/M8X20	2	*					
15	1373 - 121 - 001 - 00	WASHER/9X22X2	2	*					
16	8651 - 102 - 001 - 00	SEAL/20X20X70	1	*					
17	8651 - 201 - 210 - 10	HITCH,COLLECTOR COMP	1	*					
18	V211 - 361 - 002 - 50	BOLT/M10X25	4	*					
19	3615 - 820 - 003 - 00	PLUG	2	*					
20	8651 - 103 - 210 - 00	BLADE/57X514 COMP	2	*					

FIG. 24 PANEL AND FRAME SYSTEM

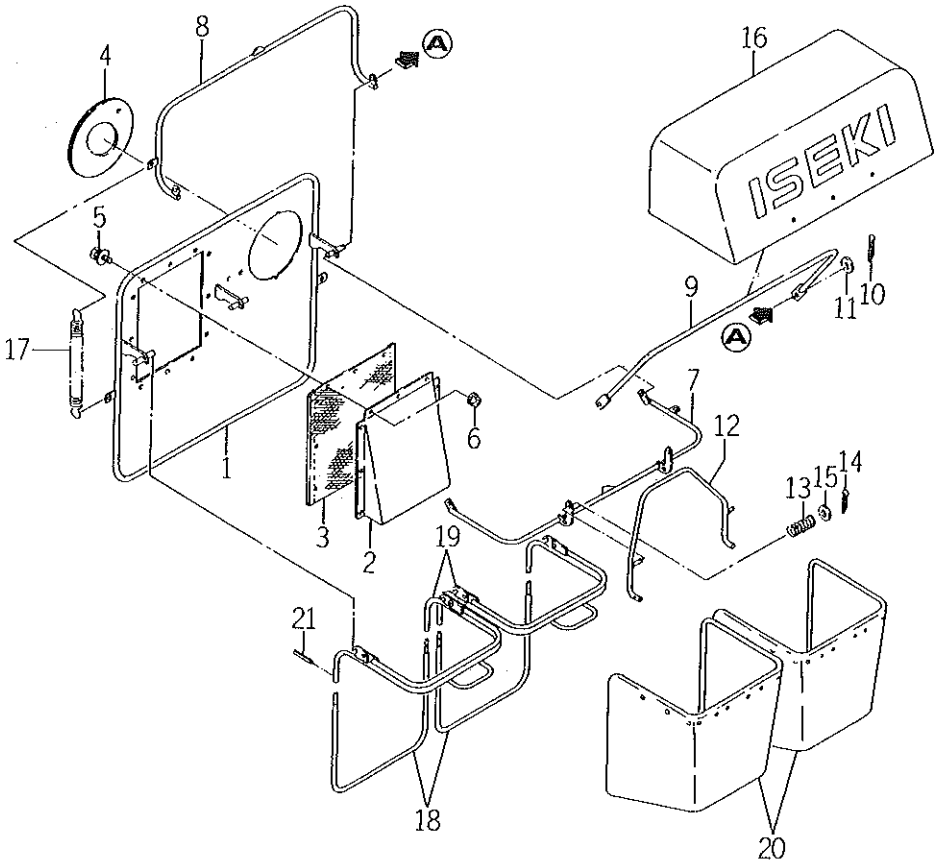

8651-202

KEY	PART CODE	DESCRIPTION	QTY	TYPE OF MODEL SBC250		ITC	COL	GRP	REMARKS
1	8651 - 202 - 210 - 10	PANEL,CONECTOR COMP	1	*					
2	8651 - 202 - 201 - 00	COVER,PANEL	1	*					
3	8651 - 202 - 202 - 00	NET,PANEL	1	*					
4	8651 - 202 - 001 - 00	GROMMET,PANEL	1	*					
5	V210 - 360 - 601 - 60	BOLT (SP) /M6X16	11	*					
6	V361 - 260 - 006 - 00	NUT	12	*					
7	8651 - 203 - 210 - 20	FRAME/A COMP	1	*					
8	8651 - 203 - 220 - 00	FRAME/B COMP	1	*					
9	8651 - 203 - 250 - 00	FRAME/C COMP	1	*					
10	V500 - 163 - 002 - 00	PIN,SPLIT/3 X20	2	*					
11	V411 - 260 - 012 - 00	WASHER /M12	2	*					
12	8651 - 203 - 230 - 00	LEVER,FRAME COMP	1	*					
13	2130 - 525 - 001 - 10	SPRING	1	*					
14	V500 - 163 - 002 - 00	PIN,SPLIT/3 X20	1	*					
15	V411 - 260 - 012 - 00	WASHER /M12	1	*					
16	8651 - 203 - 240 - 00	COVER,CONECTOR COMP	1	*					
17	3614 - 820 - 004 - 00	SPRING,SHUTTER	1	*					
18	8651 - 204 - 201 - 00	FRAME	2	*					
19	8651 - 204 - 210 - 00	FRAME,BAG COMP	2	*					
20	8651 - 204 - 220 - 00	BAG,COLLECTOR COMP	2	*					
21	V580 - 140 - 402 - 00	PIN,SPRING/4 X20 W	4	*					

FIG. 25 COVER AND PIPE SYSTEM

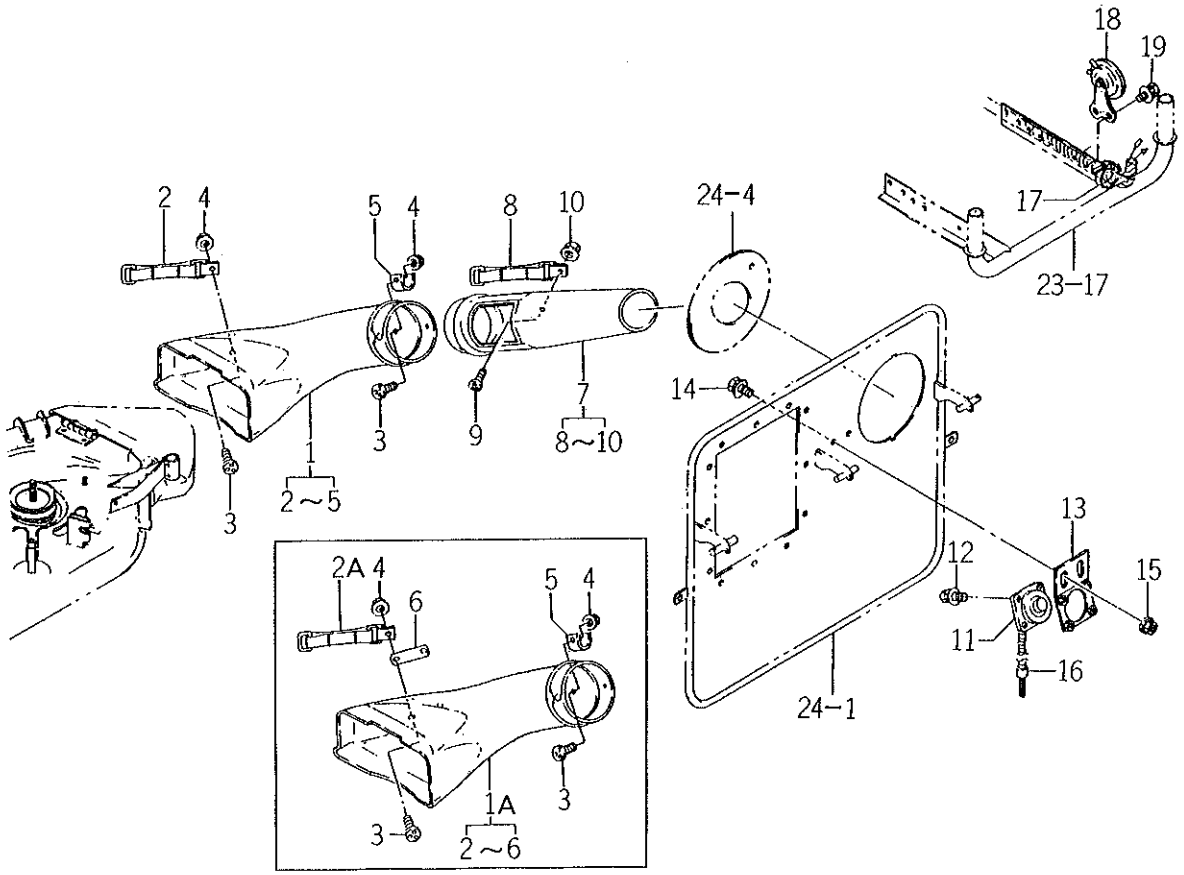

8651-301

KEY	PART CODE	DESCRIPTION	QTY	TYPE OF MODEL SBC250		ITC	COL	GRP	REMARKS
1	8651 - 301 - 200 - 20	COVER,SHOOTER ASSY	1	1- -200000					
1A	8651 - 301 - 200 - 30	COVER,SHOOTER ASSY	1	200001-					
2	8651 - 301 - 210 - 10	HOLDER,BAND COMP	1	1- -1250					
2A	8651 - 301 - 230 - 00	BAND,SHUTER ASSY	1	1251-					
3	8651 - 301 - 202 - 00	BOLT/M8X16	3	*					
4	V363 - 260 - 008 - 00	NUT,LOCK/M8	3	*					
5	8651 - 301 - 211 - 10	HOLDER,BAND	1	*					
6	8651 - 301 - 203 - 00	PLATE/IR/54X156	1	*					
7	8651 - 302 - 200 - 00	PIPE,SHOOTER ASSY	1	*					
8	8651 - 302 - 210 - 10	PIPE,SHUTER COMP	1	*					
9	8651 - 301 - 202 - 00	BOLT/M8X16	1	*					
10	V363 - 260 - 008 - 00	NUT,LOCK/M8	1	*					
11	8651 - 601 - 200 - 10	SENSOR ASSY	1	*					
12	V210 - 360 - 601 - 60	BOLT (SP) /M6X16	2	*					
13	3615 - 820 - 240 - 10	PLATE	1	*					
14	V210 - 360 - 601 - 60	BOLT (SP) /M6X16	2	*					
15	V361 - 260 - 006 - 00	NUT	2	*					
16	8651 - 601 - 210 - 00	HARNESS,SENSOR ASSY	1	*					
17	1342 - 402 - 006 - 00	BAND,WIRE/250	2	*					
18	3656 - 271 - 290 - 10	HORN ASSY	1	*					
19	V210 - 360 - 601 - 60	BOLT (SP) /M6X16	2	*					

FIG. 26 LABEL

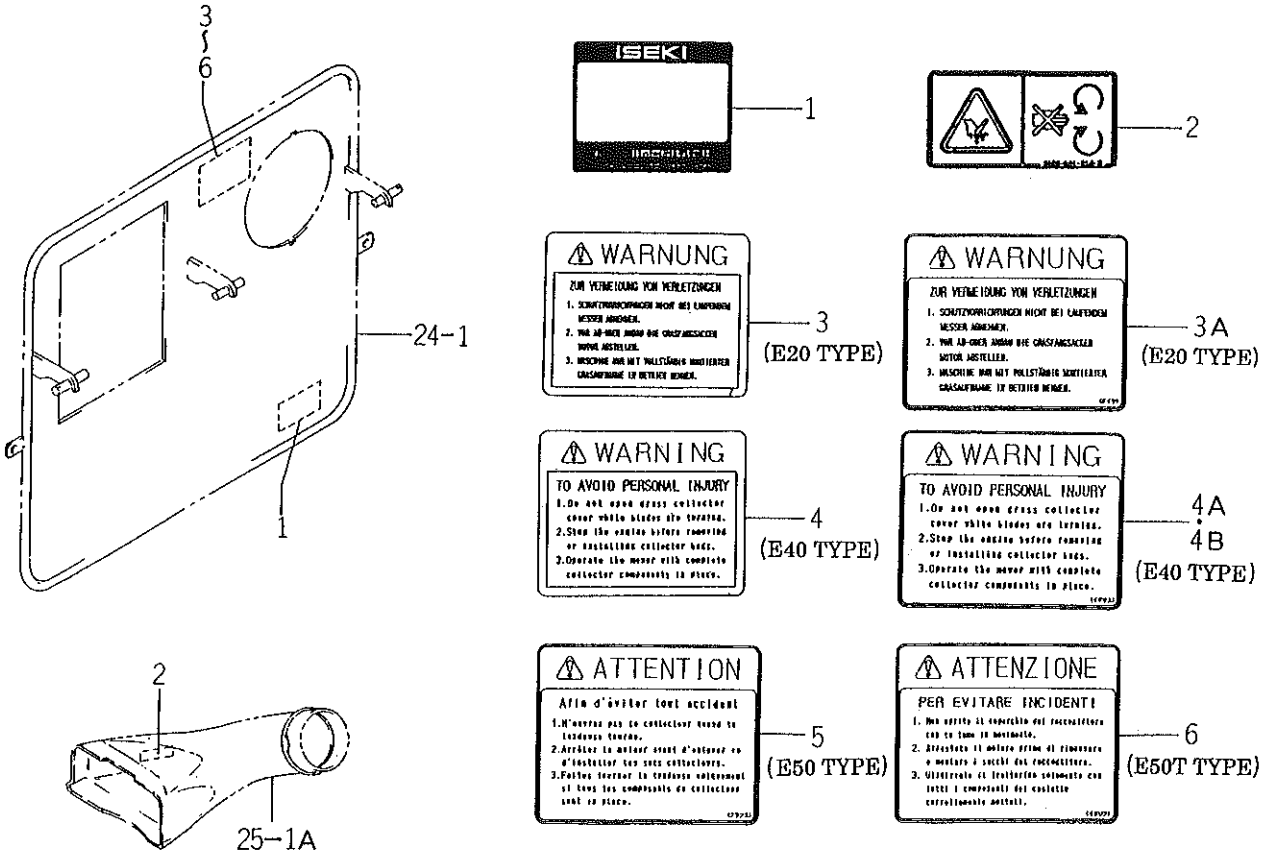

8651-901

KEY	PART CODE	DESCRIPTION	QTY	TYPE OF MODEL SBC250		ITC	COL	GRP	REMARKS
1		LABEL,MODEL ASSY	1	*					
2	2500 - 901 - 014 - 30	LABEL/DISCHARGE	1	*					
3	8651 - 901 - 002 - 00	LABEL,WORNING/D	1	1- -632					
3A	8651 - 901 - 002 - 10	LABEL,WARING/D	1	633-					
4	8651 - 902 - 001 - 00	LABEL,WORNING/E	1	1- -5					
4A	8651 - 902 - 001 - 10	LABEL,WORNING/E	1	6- -632					
4B	8651 - 902 - 001 - 20	LABEL,WARNING/E	1	633-					
5	8651 - 903 - 001 - 20	LABEL,WARNING/F	1	*					
6	8651 - 910 - 001 - 00	LABEL,WORNING/I	1	*					

NUMERICAL INDEX

PART CODE	FIG.	KEY	PART CODE	FIG.	KEY	PART CODE	FIG.	KEY
5110-042-096-XX	1	1	5120-322-068-XX	3	10	5132-702-054-XX	4	4
5110-086-011-XX	1	2	5130-012-092-XX	2	1	5132-702-055-XX	1	9
5110-086-016-XX	1	2A	5130-012-130-XX	2	2	5140-242-294-9H	5	2
5110-086-026-XX	1	3	5130-022-070-XX	2	3	5140-372-104-9H	5	3
5110-092-024-XX	8	2	5130-022-078-XX	2	4	5140-432-064-XX	10	10
5110-092-175-XX	4	1	5130-086-001-XX	2	5	5150-032-090-XX	8	1
5110-092-346-XX	4	2	5130-086-002-XX	2	7	5150-032-164-XX	8	1A
5110-092-433-XX	1	4	5130-086-003-XX	2	8	5160-072-052-XX	3	12
5110-092-505-XX	9	1	5130-086-053-XX	2	6	5160-142-010-XX	8	5
5110-092-526-XX	10	9	5130-256-020-XX	2	9	5160-202-096-XX	8	6
5110-092-763-XX	10	2	5130-292-078-XX	2	10	5160-202-122-XX	8	6A
5110-092-764-XX	10	3	5130-292-079-XX	2	11	5160-252-137-XX	8	11
5110-092-769-XX	8	3	5130-292-106-XX	2	12	5160-302-067-XX	8	12
5110-092-943-XX	9	2	5130-426-008-XX	2	13	5160-312-066-XX	8	13
5110-092-944-XX	8	42	5130-426-010-XX	2	14	5160-352-056-XX	8	14
5110-092-945-XX	8	43	5130-812-085-XX	11	2	5160-352-058-XX	8	15
5110-092-946-XX	8	44	5130-912-068-XX	11	3	5160-380-24X-XX	8	16
5110-092-947-XX	1	5	5130-B05-08X-XX	7	10	5160-412-163-XX	8	17
5110-102-327-XX	9	3		10	21		8	18
5110-102-421-XX	9	3A	5130-B05-20X-XX	6	27A	5160-412-215-XX	8	18A
5110-112-227-XX	9	4	5130-B05-25X-XX	6	27	5160-606-001-XX	8	48
5110-122-189-XX	3	1	5130-B06-10X-XX	4	24	5160-732-098-XX	11	5
5110-122-223-XX	9	5		5	15	5160-736-001-XX	8	49
5110-122-251-9Y	9	9	5130-B06-14X-XX	1	30	5160-822-059-XX	4	5
5110-132-109-XX	9	6A		4	25	5161-262-113-XX	1	10
5110-132-110-XX	9	7	5130-B06-16X-XX	10	22	5161-262-151-XX	8	19
5110-132-140-XX	9	6	5130-B08-20X-XX	5	16	5161-422-053-XX	4	6
5110-132-141-XX	9	7A	5130-B08-30X-XX	4	26	5161-462-077-XX	11	6
5110-222-055-XX	1	6	5130-B08-35X-XX	11	21	5161-462-106-XX	11	7
5110-222-070-XX	1	7	5130-B08-40X-XX	4	27	5161-542-052-XX	4	7
5110-442-084-XX	5	1	5130-G06-12X-XX	5	17	5161-692-088-XX	7	14
5110-472-028-XX	7	2	5130-G06-14X-XX	5	18	5161-692-130-XX	7	15
5110-602-339-XX	8	45		10	23	5161-712-056-XX	7	16
5110-602-340-XX	8	46	5130-T08-45X-XX	1	31	5161-712-079-XX	7	17
5110-602-341-XX	8	47	5131-072-088-XX	2	16	5171-G08-18X-XX	1	32
5120-042-085-XX	3	2	5131-072-232-XX	2	17	5171-G08-20X-XX	1	33
5120-042-097-XX	3	2A	5131-162-056-XX	3	11	5172-G06-115-XX	8	53
5120-052-070-XX	3	3	5131-682-131-XX	11	4	5180-772-052-XX	9	10
5120-052-086-XX	3	3A	5131-692-360-XX	4	3	5180-B06-35X-XX	7	31
5120-092-058-XX	3	4	5131-692-436-XX	1	8	5210-392-059-XX	11	8
5120-092-060-XX	3	5	5131-832-252-XX	8	4	5210-402-052-XX	11	9
5120-112-052-XX	3	6	5132-516-019-XX	2	18	5210-661-020-XX	6	1
5120-162-054-XX	3	7	5132-516-020-XX	2	19	5210-802-054-XX	11	10
5120-162-055-XX	3	8	5132-516-039-XX	2	21	5211-182-077-XX	3	15
5120-202-058-XX	3	9	5132-516-041-XX	2	22	5211-182-083-XX	3	15A

PART CODE	FIG.	KEY	PART CODE	FIG.	KEY	PART CODE	FIG.	KEY
5211-192-095-XX	6	2	5461-022-077-XX	2	23	5560-312-317-XX	12	4
5211-192-101-XX	6	2A	5461-026-007-XX	2	24	5560-382-504-XX	12	5
5211-212-008-XX	6	3	5461-F08-00X-XX	9	15	5560-402-285-XX	12	6
5211-212-070-XX	6	3A		11	20	5560-402-286-XX	12	7
5211-212-086-XX	6	4	5490-022-078-XX	1	11	5560-402-287-XX	12	8
5211-302-060-XX	6	5	5490-022-097-XX	1	35	5560-402-288-XX	12	9
5211-302-066-XX	6	6	5490-022-107-XX	1	11A	5560-402-289-XX	12	10
5211-632-073-XX	11	1	5490-156-028-XX	1	12	5560-402-290-XX	12	11
5211-692-004-XX	6	7	5490-156-174-XX	1	13	5560-402-291-XX	12	12
5211-872-055-XX	7	18	5490-402-066-XX	10	1	5590-312-086-XX	6	13
5211-882-001-XX	8	7	5490-652-059-XX	4	11	5590-412-087-XX	5	9
5211-882-004-XX	8	7A	5490-652-071-XX	4	10	5590-562-090-XX	4	13
5211-932-072-XX	6	8	5490-652-073-XX	4	11A	5590-562-101-XX	2	28
5211-932-126-XX	6	8A	5490-702-547-9Y	9	8	5590-662-431-9H	5	10
5211-932-154-XX	6	9	5490-782-061-XX	3	19	5590-662-564-9H	5	11
5214-B04-12X-XX	7	11	5490-782-068-XX	3	19A	5590-712-070-XX	4	14
5214-B04-14X-XX	8	41	5490-892-232-9H	5	4	5590-712-114-XX	4	15
5214-B04-20X-XX	7	12	5490-892-233-9H	5	5	5592-312-062-XX	4	16
5214-B04-25X-XX	7	13	5490-892-330-9H	5	6	5600-A10-00X-XX	4	29
5220-B06-08X-XX	4	28	5490-892-392-9H	5	7	5601-A63-07X-XX	1	34
5224-B04-08X-XX	5	19	5491-052-096-XX	10	16	5670-D20-11X-XX	4	30
	6	28	5491-102-067-XX	7	22	5670-D20-16X-XX	4	31
5224-B05-08X-XX	8	54	5491-132-098-XX	7	1	5702-A04-100-0X	8	56
5224-B06-16X-XX	5	20	5491-162-055-XX	10	6	5705-A06-100-0X	10	26
5224-B06-20X-XX	6	29	5491-182-077-XX	3	13	5920-022-269-XX	7	23
5260-112-104-XX	6	10	5491-182-099-XX	3	13A	5920-022-273-XX	1	16
5260-112-233-XX	8	50	5491-182-132-XX	3	14	5920-022-274-XX	9	12
5260-112-314-XX	6	11	5491-192-134-XX	2	26	5920-022-277-XX	11	15
5260-112-331-XX	6	12	5491-192-179-XX	2	27	5920-022-310-XX	1	17
5270-102-122-XX	11	11	5491-206-019-XX	1	14	5920-042-083-XX	1	18
5310-646-001-XX	4	8	5491-206-061-XX	1	14A	5920-042-094-XX	1	19
5311-B06-00X-XX	7	32	5491-206-106-XX	1	15	5920-092-004-XX	10	12
5315-B12-00X-XX	10	24	5491-212-106-XX	8	20	5920-092-025-XX	8	8
5317-B08-00X-XX	11	19	5491-212-152-XX	8	20A	5920-092-080-XX	8	22
5317-R08-00X-XX	9	14	5491-232-005-XX	8	21	5920-092-081-XX	8	23
5320-852-066-XX	11	12	5491-232-068-XX	8	21A	5920-092-166-XX	9	11
5320-852-097-XX	11	13	5510-232-130-XX	10	8	5920-092-182-XX	3	20
5390-032-073-XX	7	19	5510-362-068-XX	10	11	5920-092-212-XX	10	7
5391-292-011-XX	7	20	5520-052-070-XX	4	12	5920-092-244-XX	8	24
5410-B06-00X-XX	8	55	5520-052-105-XX	4	12A	5920-092-308-XX	1	20
5410-B12-00X-XX	10	25	5550-202-079-9H	5	8		6	14
5411-B06-00X-XX	7	33	5554-A06-00X-XX	7	34	5920-151-193-XX	2	29
5420-362-060-XX	7	21	5560-302-142-XX	12	1		8	57
5430-282-068-XX	10	4	5560-302-307-XX	12	2	5920-152-120-XX	7	3
5430-282-069-XX	10	5	5560-312-316-XX	12	3	5920-152-139-XX	3	21

PART CODE	FIG.	KEY	PART CODE	FIG.	KEY	PART CODE	FIG.	KEY
5920-152-146-XX	11	16	5920-372-199-XX	4	17	5921-432-006-XX	7	26
5920-152-147-XX	11	17	5920-372-200-XX	4	18	5921-432-142-XX	8	35
5920-152-166-XX	1	21	5920-382-094-XX	2	53	5921-432-179-XX	5	13
5920-152-167-XX	6	15		6	19	5921-432-182-XX	5	14
5920-222-019-XX	7	24	5920-431-263-XX	1	23	5921-442-033-XX	7	28
5920-222-089-XX	7	25	5920-431-266-XX	1	24	5921-442-037-XX	8	36
5920-222-206-XX	1	22	5920-432-006-XX	8	28	5921-442-043-XX	10	15
5920-222-218-XX	11	18	5920-432-113-XX	3	16	5921-442-160-XX	8	37
5920-222-220-XX	9	13	5920-492-054-XX	3	22A	5921-442-174-XX	8	10
5920-222-229-XX	6	16	5920-492-096-XX	1	25	5921-442-220-XX	7	6
5920-225-53X-XX	10	17	5920-492-097-XX	1	26	5921-442-266-XX	7	7
5920-252-003-XX	5	12	5920-492-100-XX	3	22	5921-442-281-XX	7	8
5920-252-210-XX	2	30	5920-492-104-XX	1	27	5921-442-323-XX	3	18
5920-252-211-XX	2	31	5920-492-223-XX	3	23	5921-502-121-XX	8	38
5920-252-212-XX	2	32	5920-492-227-XX	1	28	5921-502-182-XX	7	9
5920-252-213-XX	2	33	5920-551-299-XX	10	13	5921-502-193-XX	2	20
5920-252-214-XX	2	34	5920-552-072-XX	2	54	5921-502-218-XX	8	38A
5920-252-215-XX	2	35	5920-552-073-XX	4	19	5921-702-023-XX	8	39
5920-252-216-XX	2	36	5920-552-083-XX	10	14	5921-702-043-XX	10	19
5920-252-217-XX	2	37	5920-552-148-XX	8	29	5921-702-088-XX	10	20
5920-252-218-XX	2	38	5920-592-012-XX	6	20	5921-902-011-XX	8	40
5920-252-219-XX	2	39	5920-592-169-XX	10	18	5921-902-066-XX	8	52A
5920-252-220-XX	2	40	5920-592-226-XX	8	52	5921-902-167-XX	6	25
5920-252-221-XX	2	41	5920-632-149-XX	8	30		6	26
5920-252-222-XX	2	42	5920-632-197-XX	8	30A	5922-002-029-XX	7	28
5920-252-223-XX	2	43	5920-642-062-XX	8	31	5922-002-035-XX	4	23
5920-252-224-XX	2	44	5920-642-079-XX	8	31A	5922-002-036-XX	7	29
5920-252-225-XX	2	45	5920-650-78X-XX	8	9	5922-002-070-XX	7	30
5920-252-226-XX	2	46	5920-662-092-XX	4	20			
5920-252-227-XX	2	47	5920-662-207-XX	4	21			
5920-252-228-XX	2	48	5920-662-211-XX	4	9			
5920-262-156-XX	2	49	5920-702-075-XX	6	21			
5920-262-160-XX	2	50	5920-702-077-XX	6	22			
5920-272-003-XX	8	25	5920-712-099-XX	6	23			
5920-272-025-XX	8	26	5920-712-112-XX	6	24			
5920-332-067-XX	8	27	5920-812-009-XX	8	32			
5920-332-080-XX	2	51	5920-812-033-XX	3	17			
5920-332-081-XX	11	14	5920-812-305-XX	4	22			
5920-360-08X-XX	2	52	5920-812-316-XX	7	5			
5920-360-23X-XX	1	36	5920-932-002-XX	8	33			
5920-372-012-XX	8	51	5920-932-069-XX	8	34			
5920-372-020-XX	7	4	5921-102-093-XX	13	1			
5920-372-063-XX	6	17	5921-412-108-XX	2	25			
5920-372-176-XX	10	27	5921-412-112-XX	2	15			
5920-372-177-XX	6	18	5921-432-005-XX	1	29			

NUMERICAL INDEX

2502-098-100-00

PART CODE	FIG.	KEY	PART CODE	FIG.	KEY	PART CODE	FIG.	KEY
1323-220-012-00	7	7	1593-112-200-00	2	1	2111-101-011-00	6	4
1325-401-009-00	4	31	1593-112-222-00	2	7A	2111-441-027-10	7	13
1342-402-006-00	25	17	1593-117-003-10	3	7	2130-407-003-00	20	15
1365-224-002-00	10	15	1593-304-008-00	6	25	2130-525-001-10	24	13
	10	19	1593-310-054-20	7	8	2130-601-006-20	7	11
1373-121-001-00	23	15	1593-310-520-20	7	3	2500-623-220-00	17	12
1376-606-005-00	16	9	1593-310-540-00	7	6	2500-901-008-00	18	8
1383-301-002-00	4	4	1593-332-052-10	13	14	2500-901-014-30	22	3
1386-241-002-00	8	4	1593-403-001-10	10	22		26	2
	12	4	1593-403-005-00	10	30	2500-901-027-00	18	9
1386-624-292-00	17	16	1593-406-005-10	11	5		19	32
1386-624-293-00	17	17	1593-406-006-00	11	9	2500-930-001-00	19	38
1386-624-300-00	17	20	1593-406-240-10	11	8	2502-101-003-00	1	4
1386-624-330-00	17	15	1593-406-250-00	11	4	2502-101-210-30	1	3
1414-606-002-00	15	15	1593-601-073-00	15	24	2502-101-220-10	1	7
1415-120-006-00	5	6	1593-611-011-10	16	13	2502-101-230-00	1	10
	7	25	1593-611-011-20	16	13A	2502-101-240-00	1	13
1415-125-021-00	13	3	1593-611-014-00	16	8	2502-105-001-10	1	15
1425-621-004-00	13	13	1593-612-220-10	1	19	2502-105-002-00	1	23
	17	22	1593-612-230-00	1	22	2502-105-003-00	1	16
1426-621-038-00	3	11	1593-622-001-10	17	6	2502-105-004-10	1	25
1427-130-260-00	21	14	1593-622-211-10	17	8	2502-105-005-10	1	26
1427-317-003-00	21	4	1593-622-240-00	17	2	2502-105-006-00	1	27
	21	18	1593-622-250-00	17	1	2502-112-001-20	2	4
	21	21	1593-622-270-00	17	4	2502-112-210-10	2	10
1427-621-002-10	2	2	1593-623-270-00	16	14	2502-117-001-20	3	5
1427-621-012-00	15	25	1593-623-270-10	16	14A	2502-117-001-30	3	5A
	16	4	1593-623-272-00	16	15	2502-117-200-20	3	1
1444-601-011-00	15	16	1593-623-273-00	16	16	2502-117-210-30	3	4
1444-601-015-00	17	9	1593-623-520-00	17	25	2502-201-001-10	4	33
1518-122-002-00	7	22	1593-623-530-00	17	13	2502-201-003-20	4	1
1527-604-002-00	15	20	1593-901-015-00	18	10	2502-201-004-10	4	2
1560-285-006-20	21	23		19	33	2502-201-005-10	4	34
1560-664-250-00	17	29	1600-112-231-00	2	7	2502-201-006-20	4	38
1560-664-252-00	17	30		2	11	2502-201-006-30	4	38A
1560-664-253-00	17	31	1600-112-232-00	2	8	2502-201-007-20	4	30
1564-512-001-00	11	2		2	12	2502-201-014-00	4	26A
1564-654-213-00	17	3	1600-505-007-00	3	10	2502-201-015-00	4	27
1575-623-010-00	17	11	1608-901-004-00	18	6	2502-201-200-00	4	9
1581-740-116-00	1	6	1614-680-250-00	17	29A	2502-201-210-40	4	5
	1	8	1636-901-015-00	18	12	2502-201-220-40	4	22
	1	11	1640-903-016-00	19	21	2502-201-220-50	4	22A
	15	23	1640-903-036-00	19	7	2502-201-260-00	4	11
1593-112-003-20	2	6	1640-904-016-00	19	14'	2502-201-260-10	4	11A
1593-112-051-30	2	3	1640-905-016-00	19	28	2502-201-270-00	4	20

2502-098-100-00

PART CODE	FIG.	KEY	PART CODE	FIG.	KEY	PART CODE	FIG.	KEY
2502-205-001-10	4	42	2502-401-200-40	9	1	2502-554-006-20	14	28
2502-205-003-10	4	44	2502-401-200-50	9	1A	2502-554-007-00	14	22
2502-205-004-00	4	46	2502-401-200-60	9	1B	2502-554-008-10	14	18
2502-205-005-00	4	48	2502-401-200-70	9	1C	2502-554-210-40	14	16
2502-205-200-00	4	39	2502-402-001-20	10	2	2502-601-001-20	15	2
2502-221-001-10	5	7	2502-402-005-30	10	1	2502-601-002-00	15	5
2502-221-002-20	5	17	2502-402-005-40	10	1A	2502-601-003-00	15	6
2502-221-003-00	5	9	2502-403-001-20	10	20	2502-601-004-10	15	12
2502-221-200-00	5	15	2502-403-002-20	10	21	2502-601-005-00	15	7
2502-221-210-20	5	1	2502-403-003-20	10	29	2502-601-006-00	15	4
2502-221-220-20	5	4	2502-403-004-10	10	11	2502-601-210-40	15	1
2502-221-236-00	5	16	2502-403-005-00	10	23	2502-601-220-30	15	10
	7	19	2502-403-006-00	10	13	2502-606-001-00	16	5
2502-221-250-10	5	12	2502-403-007-00	10	17	2502-606-002-00	16	2
2502-301-001-30	6	1	2502-403-210-40	10	10	2502-606-003-10	16	1
2502-301-002-30	6	6	2502-403-220-30	10	16	2502-606-220-10	16	6
2502-301-003-20	6	3	2502-406-001-10	11	6	2502-611-001-00	16	19
2502-302-001-30	6	13	2502-406-200-20	11	1	2502-611-210-00	16	12
2502-302-002-20	6	14	2502-407-001-10	11	18	2502-611-210-10	16	12A
2502-303-210-10	6	18	2502-407-200-20	11	17	2502-616-001-40	15	14
2502-304-001-20	6	24	2502-407-210-30	11	13	2502-616-002-20	15	19
2502-304-002-20	6	20	2502-411-001-00	12	6	2502-616-004-00	15	17
2502-304-003-20	6	21	2502-411-201-00	12	1	2502-621-001-00	15	21
2502-304-004-30	6	22	2502-411-210-00	12	2	2502-623-200-30	17	10
2502-304-005-20	6	23	2502-411-210-10	12	2A	2502-623-200-40	17	10A
2502-307-001-40	6	28	2502-532-001-10	13	2	2502-623-202-00	17	14
2502-307-002-40	6	33	2502-532-002-10	4	26	2502-901-001-20	18	1
2502-307-003-00	6	29		13	6	2502-901-002-30	18	2
	6	34	2502-532-200-20	13	10	2502-901-003-00	18	3
2502-307-004-00	6	30	2502-532-200-30	13	10A	2502-901-003-10	18	3A
2502-307-210-00	6	31	2502-532-220-40	13	8	2502-901-004-10	18	4
2502-310-001-20	7	9	2502-532-230-20	13	1	2502-901-004-20	18	4A
2502-310-002-20	7	12	2502-532-230-30	13	1A	2502-901-006-10	18	5
2502-310-003-20	7	14	2502-533-002-10	13	17	2502-901-007-00	18	7
2502-310-200-10	7	18	2502-533-230-00	13	15	2502-901-008-00	18	11
2502-310-240-10	7	1	2502-553-001-20	14	2		19	34
2502-311-210-30	7	23	2502-553-002-10	14	9	2502-905-001-00	19	1
2502-317-002-00	8	9	2502-553-003-10	14	5	2502-905-001-10	19	1A
	12	10	2502-553-004-00	14	12	2502-905-002-00	19	2
2502-317-003-00	8	6	2502-553-210-30	14	1	2502-905-003-00	19	3
2502-317-201-00	8	1	2502-553-210-40	14	1A	2502-905-004-00	19	4
2502-317-210-00	8	2	2502-554-001-10	14	23	2502-905-005-00	19	5
2502-317-210-10	8	2A	2502-554-003-10	14	20	2502-905-006-00	19	4A
2502-401-002-20	9	3	2502-554-004-10	14	21	2502-905-021-00	19	6
2502-401-003-10	9	2	2502-554-005-20	14	24		19	35

2502-098-100-00

PART CODE	FIG.	KEY	PART CODE	FIG.	KEY	PART CODE	FIG.	KEY
2502-905-200-00	19	29	3652-261-202-00	2	13	8595-901-005-00	22	4A
2502-906-001-10	19	8	3656-271-290-10	25	18		22	7A
2502-906-001-20	19	8A	3656-565-006-00	13	3A		22	10A
2502-906-002-00	19	9	3659-170-003-00	10	12		22	12A
2502-906-003-20	19	10		11	15	8595-901-006-00	22	2
2502-906-004-00	19	11		11	19	8595-901-007-00	18	13
2502-906-005-00	19	12		12	7	8595-902-001-10	22	6
2502-906-006-00	19	11A	3737-172-010-00	17	7	8595-902-002-00	22	7
2502-906-021-00	19	13	3737-233-006-00	4	17A	8595-903-001-00	22	9
	19	36	3737-341-006-00	20	10	8595-903-002-00	22	10
2502-906-200-00	19	30	3737-341-007-00	4	17	8650-101-001-10	20	5
2502-907-001-00	19	15		20	11	8650-101-002-00	20	1
2502-907-001-10	19	15A	3741-141-005-00	1	24	8650-201-001-10	20	2
2502-907-002-00	19	16	3746-172-013-00	17	21	8650-201-002-00	20	3
2502-907-003-00	19	17	3750-242-008-00	14	6	8650-203-001-10	4	10
2502-907-004-00	19	18	3754-371-011-00	4	35		20	7
2502-907-005-00	19	19	3761-212-004-00	23	4	8650-203-200-10	20	6
2502-907-006-00	19	18A	3768-112-001-00	21	10	8650-203-200-20	20	6A
2502-907-021-00	19	20	3768-172-008-00	17	24	8650-204-210-10	20	13
	19	37	4106-105-303-00	3	6	8650-301-210-20	20	23
2502-907-200-00	19	31		13	16	8650-302-001-00	20	24
2502-910-001-00	19	22	4131-206-015-00	4	14	8650-401-001-10	21	3
2502-910-001-10	19	22A	4334-155-003-00	1	5	8650-401-210-30	21	1
2502-910-002-00	19	23	7955-201-026-00	6	9	8650-401-210-40	21	1A
2502-910-003-00	19	24	8593-014-200-10	20	8	8650-401-250-00	21	2
2502-910-004-00	19	25	8595-301-001-70	20	16	8650-402-210-10	21	6
2502-910-005-00	19	26	8595-301-001-80	20	16A	8650-402-210-20	21	6A
2502-910-006-00	19	25A	8595-301-004-30	20	18	8650-402-220-00	21	8
2502-910-021-00	19	27	8595-301-005-30	20	25	8650-403-001-10	21	11
2706-501-003-00	1	20	8595-301-008-00	20	17	8650-403-210-10	21	12
2706-501-004-00	1	21	8595-301-008-10	20	17A	8650-502-210-00	21	19
2710-206-025-00	14	13	8595-301-500-50	20	22	8650-901-002-00	22	5
3560-201-015-00	15	16A	8595-305-011-00	20	26	8650-902-001-00	22	8
3567-402-004-00	23	12	8595-305-012-00	20	27	8650-903-001-00	22	11
3600-201-013-00	7	24	8595-405-500-20	21	5	8650-910-001-00	22	13
3610-631-002-00	15	8	8595-501-001-10	21	16	8650-910-002-00	22	12
3614-125-001-00	4	7	8595-501-004-00	21	22	8651-101-200-00	23	1
	4	12	8595-501-005-00	21	24	8651-101-200-10	23	1A
3614-820-004-00	24	17	8595-501-005-10	21	24A	8651-101-210-10	23	2
3615-820-003-00	23	19	8595-501-005-20	21	24B	8651-102-001-00	23	16
3615-820-240-10	25	13	8595-505-002-00	21	20	8651-102-201-00	23	8
3621-702-003-00	10	3	8595-505-051-00	21	17	8651-102-202-00	23	9
3631-270-003-00	17	5	8595-505-051-10	21	17A	8651-102-203-00	23	10
3640-703-001-00	4	16	8595-505-051-20	21	17B	8651-103-210-00	20	24A
	4	31A	8595-901-003-00	22	4		23	20

2502-098-100-00

PART CODE	FIG.	KEY	PART CODE	FIG.	KEY	PART CODE	FIG.	KEY
8651-201-210-10	23	17	V210-360-601-60	4	43		20	20
8651-202-001-00	24	4		23	3	V304-260-010-00	3	8
8651-202-201-00	24	2		24	5		5	8
8651-202-202-00	24	3		25	12		10	9
8651-202-210-10	24	1		25	14		11	21
8651-203-210-20	24	7		25	19		14	27
8651-203-220-00	24	8	V210-360-602-00	1	9	V304-260-012-00	14	7
8651-203-230-00	24	12		1	12	V304-260-014-00	23	5
8651-203-240-00	24	16	V210-360-603-00	17	32	V304-460-010-00	10	14
8651-203-250-00	24	9	V211-260-801-20	15	9	V304-460-014-00	20	28
8651-204-201-00	24	18		21	15	V327-262-214-00	8	7
8651-204-210-00	24	19	V211-260-801-60	2	9	V328-262-110-00	10	25
8651-204-220-00	24	20		7	2		11	10
8651-301-200-20	25	1		15	13		11	14
8651-301-200-30	25	1A	V211-260-802-00	20	14		12	8
8651-301-202-00	25	3	V211-260-802-50	1	1	V328-262-112-00	10	4
	25	9		6	32		10	32
8651-301-203-00	25	6	V211-260-803-00	6	5	V334-260-010-00	10	24
8651-301-210-10	25	2	V211-360-801-20	17	23	V335-260-012-00	10	31
8651-301-211-10	25	5	V211-360-801-60	4	21	V360-260-006-00	15	3
8651-301-230-00	25	2A		4	47		16	3
8651-302-200-00	25	7		9	4	V361-260-006-00	23	13
8651-302-210-10	25	8		11	3		24	6
8651-601-200-10	25	11	V211-360-802-00	1	2		25	15
8651-601-210-00	25	16		1	14	V362-260-008-00	16	20
8651-901-002-00	26	3	V211-360-804-00	4	40	V363-260-008-00	4	6
8651-901-002-10	26	3A	V211-360-811-00	4	41		4	19
8651-902-001-00	26	4	V211-361-002-50	23	18		7	10
8651-902-001-10	26	4A	V211-560-802-00	6	12		11	7
8651-902-001-20	26	4B		23	14		16	7
8651-903-001-20	26	5	V211-560-802-50	14	17		21	7
8651-910-001-00	26	6		14	19		21	9
J061-210-012-00	1	24A	V211-561-003-00	4	3		21	13
J910-000-200-00	18	5A	V273-360-802-50	13	9		21	18A
	22	1	V301-260-006-00	2	5		25	4
	26	1		16	18		25	10
V111-163-001-60	17	26	V304-260-008-00	2	15	V363-260-010-00	21	25A
V111-164-000-60	17	18		4	18	V401-160-003-00	17	27
V120-266-001-60	15	22		4	32	V401-160-004-00	17	19
V200-260-601-60	23	11		5	5	V401-160-006-00	4	37
V200-360-601-60	4	36		7	17		16	17
V201-260-801-60	6	10		13	20	V401-160-008-00	2	14
V201-260-802-50	15	18		14	15		16	11
V201-260-804-50	13	18		16	10		20	21
V210-260-601-60	15	11		20	12	V401-160-010-00	10	27

2502-098-100-00

PART CODE	FIG.	KEY	PART CODE	FIG.	KEY	PART CODE	FIG.	KEY
	11	20		5	18			
V401-160-012-00	10	34		10	5			
	14	8		10	35			
V401-160-014-00	20	29		13	5			
	23	6	V500-163-003-00	7	21			
V411-260-003-00	17	28		8	8			
V411-260-006-00	3	2		21	25			
V411-260-008-00	1	17	V580-140-302-00	4	45			
	5	10	V580-140-402-00	24	21			
	5	13	V580-140-602-50	5	2			
	7	15	V580-140-604-50	4	23			
	13	11	V590-131-210-00	5	3			
	13	19	V600-110-600-40	6	15			
	14	10	V600-110-600-50	6	16			
	14	14	V600-110-620-40	6	19			
V411-260-010-00	3	9	V600-110-620-50	6	35			
	10	26	V600-110-620-60	6	27			
	11	11	V600-150-600-40	12	5			
V411-260-012-00	7	4	V704-140-012-00	4	8			
	10	33		4	13			
	14	3		7	5			
	14	25	V704-140-015-00	4	29			
	24	11		13	7			
	24	15	V704-140-017-00	20	9			
V411-260-014-00	4	24	V704-140-020-00	4	15			
	8	5		10	18			
	13	4		20	4			
	23	7	V705-140-035-00	4	28			
V411-260-018-00	7	20	V705-140-040-00	20	19			
V500-162-501-50	3	3	V706-140-080-00	6	26			
V500-162-502-00	10	28	V720-101-900-80	6	11			
	11	12	V721-103-104-50	6	17			
	11	16	V744-120-350-70	6	8			
V500-162-502-50	12	9	V744-125-400-80	6	2			
	14	4		6	7			
	14	11	V760-150-000-00	10	6			
	14	26	V762-150-000-00	10	7			
V500-163-001-50	5	11	V999-200-003-00	8	3			
	5	14		12	3			
	7	16	W201-361-006-00	10	8			
	13	12						
V500-163-002-00	1	18						
	24	10						
	24	14						
V500-163-002-50	4	25						

ALPHABETICAL INDEX

DESCRIPTION	FIG.	KEY	DESCRIPTION	FIG.	KEY
ARM-ASSY	7	18	COLLET	3	6
ARM-PIVOT	7	19	COVER	5	2
ARM-ROCKER	3	7	COVER-CRANKCASE	1	12
ARM-ROCKER	3	8	COVER-CRANKCASE	1	13
ARMATURE	11	10	CAMSHAFT-COMP	3	13
ARRESTER-SPARK	9	10	CAMSHAFT-COMP	3	13A
BOLT	1	16	CAMSHAFT-COMP	3	14
BOLT	1	17	CAP, AIR FILTER	9	5
BOLT	2	20	CAP, SPARK ARRESTER	9	9
BOLT-FLANGED	10	21	CAP, VALVE	3	1
BOLT-FLANGED	1	30	CAP-SPARK PLUG	6	5
BOLT-FLANGED	1	31	CAP-SPARK PLUG	6	6
BOLT-STUD	1	32	CARBURETOR-ASSY	8	1
BOLT-STUD	1	33	CARBURETOR-ASSY	8	1A
BALL-STEEL	4	29	CASE-AIR FILTER	9	4
BEARING-BALL	1	34	CASE-ROCKER	1	6
BEARING-PLANE	2	25	CASE-ROCKER	1	7
BEARING-PLANE	2	15	CHAMBER-FLOAT	8	6
BOLT	7	23	CHAMBER-FLOAT	8	6A
BOLT	9	12	CLAMP	8	51
BOLT	11	15	CLAMP	7	4
BOLT	8	38	CLAMP	6	17
BOLT	8	38A	CLAMP	10	27
BOLT, 5X18	7	9	CLAMP	6	18
BOLT-FLANGED	7	10	CLAMP	4	17
BOLT-FLANGED	6	27A	CLAMP	4	18
BOLT-FLANGED	6	27	CLAMP	8	39
BOLT-FLANGED	4	24	CLAMP	10	19
BOLT-FLANGED	5	15	CLAMP	10	20
BOLT-FLANGED	4	25	CLUTCH-ASSY	11	2
BOLT-FLANGED	10	22	COIL-CHARGING	6	13
BOLT-FLANGED	5	16	COIL-IGNITION	6	3
BOLT-FLANGED	4	26	COIL-IGNITION	6	3A
BOLT-FLANGED	11	21	COIL-IGNITION	6	4
BOLT-FLANGED	4	27	COLLAR	8	25
BOLT-FLANGED	5	17	COLLAR	8	26
BOLT-FLANGED	5	18	COLLAR	7	26
BOLT-FLANGED	10	23	COLLAR	8	35
BOLT-STUD	8	53	COLLAR	5	13
BOLT-UPSET-WS	7	31	COLLAR, 6. 2X7. 8X5	5	14
BRACKET	5	1	COVER-ASSY	11	6
BRACKET	7	2	COVER-ASSY	11	7
BRACKET-TAP	10	16	COVER-PUMP	4	6
BRUSH	11	8	CRANKCASE-COMP	1	14
COLLAR	1	29	CRANKCASE-COMP	1	14A

DESCRIPTION	FIG.	KEY	DESCRIPTION	FIG.	KEY
CRANKCASE-COMP	1	15	GEAR-HELICAL	2	28
CRANKSHAFT-ASSY	2	26	GEAR-HERICAL	4	13
CRANKSHAFT-ASSY	2	27	GOVERNOR-ASSY	7	22
CUP, FUEL TAP	10	11	GROMMET	6	23
DECOMPRESSOR	3	15	GROMMET	6	24
DECOMPRESSOR	3	15A	GUARD	5	8
DIAPHRAGM	10	4	GUIDE, VALVE IN	1	35
DIAPHRAGM	10	5	GUIDE-VALV EX	1	11
ELEMENT-AIR FILTER	9	6A	GUIDE-VALVE	1	11A
ELEMENT-AIR FILTER	9	7	HAUSING-FAN	5	11
ELEMENT-AIR FILTER	9	6	HEAD-COMP-CYLINDER	1	2
ELEMENT-AIR FILTER	9	7A	HEAD-COMP-CYLINDER	1	2A
FAN	5	9	HEAD-COMP-CYLINDER	1	3
FILLER	4	16	HOLDER, BRUSH	11	3
FILTER, FUEL TAP	10	10	HOLDER-MAIN JET	8	21
FILTER-ASSY-AIR	9	3	HOLDER-MAIN JET	8	21A
FILTER-ASSY-AIR	9	3A	HOUSING-FAN	5	10
FILTER-OIL	4	11	IGNITER	6	2
FILTER-OIL	4	10	IGNITER	6	2A
FILTER-OIL	4	11A	INSULATOR	11	5
FLOAT	8	13	INSULATOR	8	49
FLYWHEEL-ASSY	6	8	JET-AIR 1.1	8	15
FLYWHEEL-ASSY	6	8A	JET-AIR 1.8	8	14
FLYWHEEL-ASSY	6	9	JET-MAIN 97.5	8	30
GASKET	8	2	JET-MAIN 97.5	8	30A
GASKET	4	1	JET-PILOT 60	8	31
GASKET	10	9	JET-PILOT 60	8	31A
GASKET	8	3	JOINT	4	14
GASKET	8	16	JOINT	4	15
GASKET , MUFFLER	9	2	KEY	2	53
GASKET, OIL GAUGE	4	2	KEY	6	19
GASKET, AIR FILTER	9	1	LABEL	12	1
GASKET, CARBURETOR	8	42	LABEL(~139597)	12	2
GASKET, CARBURETOR	8	45	LABEL-BRAND	12	5
GASKET, FUEL PUMP	10	2	LABEL-MANUAL(~139597	12	3
GASKET, FUEL PUMP	10	3	LABEL-MANUAL(~139597	12	4
GASKET, INSULATOR	8	43	LABEL-WARNING, D	12	8
GASKET, INSULATOR	8	46	LABEL-WARNING, E	12	10
GASKET, INTAKE PIPE	8	44	LABEL-WARNING, F	12	7
GASKET, INTAKE PIPE	8	47	LABEL-WARNING, GB	12	6
GASKET-CRANKCASE	1	5	LABEL-WARNING, I	12	9
GASKET-HEAD	1	1	LABEL-WARNING, NL	12	11
GASKET-ROCKER CASE	1	4	LABEL-WARNING, S	12	12
GAUGE	4	12	LEVER, SHIFT	11	4
GAUGE	4	12A	LINK, GOVERNOR	7	16

DESCRIPTION	FIG.	KEY	DESCRIPTION	FIG.	KEY
LINK, GOVERNOR	7	17	PLUG-SPARK, RN11YC	6	21
LINK-CHOKE	7	14	PUMP-ASSY-OIL	4	5
LINK-CHOKE	7	15	PUMP-FUEL	10	1
MUFFLER-COMP	9	8	ROD	2	23
NOZZLE-MAIN 65A	8	20	ROD	2	24
NOZZLE-MAIN 65A	8	20A	ROD-ASSY-CONNECTING	2	18
NUT	2	29	ROD-ASSY-CONNECTING	2	19
NUT	8	57	ROD-ASSY-CONNECTING	2	21
NUT	7	3	ROD-ASSY-CONNECTING	2	22
NUT	3	21	REGULATOR-VOLTAGE	6	1
NUT	11	16	RETAINER-VALVE	3	4
NUT	11	17	RETAINER-VALVE	3	5
NUT	1	21	RING, SNAP	1	36
NUT	6	15	RING-O	2	54
NUT-HEX	7	32	RING-O	10	13
NUT-HEX-FINE	10	24	RING-O	4	19
NUT-HEX-SMALL	11	19	RING-O	10	14
NUT-HEX-SMALL	9	14	RING-SET-PISTON	2	5
O RING	4	30	RING-SET-PISTON	2	6
O RING	4	31	RING-SET-PISTONL	2	7
O RING	8	29	RING-SET-PISTONL	2	8
PANEL-COMP-CONTROL	7	1	RING-SET-PISTONL	2	9
PIN	1	23	RING-SNAP	8	27
PIN	1	24	RING-SNAP	2	51
PIN	8	28	RING-SNAP	11	14
PIN	3	16	RING-SNAP	2	52
PIN-PISTON	2	3	ROD-PUSH	3	11
PIN-PISTON	2	4	ROTOR-PUMP	4	7
PIN-SNAP	7	34	SCREEN	5	3
PIPE-COMP	4	8	SCREW	10	12
PIPE-INTAKE	8	48	SCREW	8	8
PISTON-ENGINE	2	1	SCREW	8	22
PISTON-ENGINE	2	2	SCREW	8	23
PISTON-ENGINEL-0.25	2	10	SCREW	3	20
PISTON-ENGINEL-0.50	2	11	SCREW	10	7
PISTON-ENGINEL-0.50	2	12	SCREW	8	24
PLATE	4	3	SCREW	1	20
PLATE	1	8	SCREW	6	14
PLATE	8	4	SCREW, 5X8	9	11
PLATE	4	4	SCREW-PAN	7	11
PLATE	1	9	SCREW-PAN	8	41
PLUG	4	21	SCREW-PAN	7	12
PLUG	4	9	SCREW-PAN	7	13
PLUG, DRAIN	4	20	SCREW-PAN-CROS	4	28
PLUG-SPARK, BPR5ES	6	22	SCREW-PAN-WP-CROS	5	19

DESCRIPTION	FIG.	KEY	DESCRIPTION	FIG.	KEY
SCREW-PAN-WP-CROS	6	28	SLEEVE	7	21
SCREW-PAN-WP-CROS	8	54	SOLENOID, CARBURETOR	8	7
SCREW-PAN-WP-CROS	5	20	SOLENOID, CARBURETOR	8	7A
SCREW-PAN-WP-CROS	6	29	SPACER	2	49
SCREW-PILOT AIR	8	5	SPACER	2	50
SEAL	8	33	SPRING	8	32
SEAL	8	34	SPRING	3	17
SEAL-OIL	1	25	SPRING	4	22
SEAL-OIL	1	26	SPRING	7	5
SEAL-OIL	1	27	SPRING	7	28
SEAL-OIL	1	28	SPRING	8	36
SEAL-OIL	3	22A	SPRING	10	15
SEAL-OIL	3	22	SPRING	8	37
SEAL-OIL	3	23	SPRING	8	10
SEAT-SPRING	3	12	SPRING	7	6
SHAFT	2	16	SPRING	7	7
SHAFT	2	17	SPRING	7	8
SHAFT-CARBURETOR	8	17	SPRING	3	18
SHAFT-CARBURETOR	8	18	SPRING-BRUSH	11	9
SHAFT-CARBURETOR	8	18A	SPRING-ENGINE VALVE	3	19
SHAFT-ROCKER	3	9	SPRING-ENGINE VALVE	3	19A
SHIM, 1.18	2	30	SPRING-GOVERNOR	7	20
SHIM, T=1.20	5	12	STARTER-ELECTRIC	11	1
SHIM, T=1.215	2	31	STOPPER	11	12
SHIM, T=1.25	2	32	STOPPER	11	13
SHIM, T=1.285	2	33	STUD	1	19
SHIM, T=1.32	2	34	STUD-6X14	1	18
SHIM, T=1.355	2	35	SWITCH	11	11
SHIM, T=1.39	2	36	TAP-ASSY	10	8
SHIM, T=1.425	2	37	TAPPET	3	10
SHIM, T=1.46	2	38	TERMINAL	6	7
SHIM, T=1.495	2	39	TOOL-WRENCH, 19X21	13	1
SHIM, T=1.53	2	40	TUBE	10	18
SHIM, T=1.565	2	41	TUBE	6	25
SHIM, T=1.60	2	42	TUBE	6	26
SHIM, T=1.635	2	43	TUBE, 11.6X16X116	8	52
SHIM, T=1.67	2	44	TUBE, 11.6X16X116	8	52A
SHIM, T=1.705	2	45	TUBE, 4.5X6.5X100	8	40
SHIM, T=1.74	2	46	TUBE, 5X6X55	6	20
SHIM, T=1.775	2	47	TUBE-BRAID	10	26
SHIM, T=1.81	2	48	TUBE-RUBBER	8	56
SHROUD-ENGINE	5	7	VALVE	1	10
SHROUD-ENGINE	5	4	VALVE, CHOKE	8	19
SHROUD-ENGINE	5	5	VALVE-ASSY	10	6
SHROUD-ENGINE	5	6	VALVE-EXHAUST	3	3

DESCRIPTION	FIG.	KEY	DESCRIPTION	FIG.	KEY
VALVE-EXHAUST	3	3A			
VALVE-FLOAT	8	12			
VALVE-INTAKE	3	2			
VALVE-INTAKE	3	2A			
VALVE-THROTTLE 90	8	11			
W-PLAIN-S	8	55			
W-PLAIN-S	10	25			
WASHER	7	25			
WASHER	11	18			
WASHER	9	13			
WASHER	6	16			
WASHER	10	17			
WASHER	8	9			
WASHER	4	23			
WASHER	7	29			
WASHER	7	30			
WASHER(~148906)	7	24			
WASHER, 6.5X11.5X2.0	7	28			
WASHER-10X20X2	1	22			
WASHER-PLAIN	7	33			
WASHER-SPRING	9	15			
WASHER-SPRING	11	20			
WEIGHT	2	13			
WEIGHT	2	14			
WIRE-LEAD	6	10			
WIRE-LEAD	8	50			
WIRE-LEAD(~B52571)	6	11			
WIRE-LEAD, L=260	6	12			

ALPHABETICAL INDEX

CHASSIS

DESCRIPTION	FIG.	KEY	DESCRIPTION	FIG.	KEY
ADJUSTER, ROD	7	12	BOLT(SP)/M6X16	4	43
ARM, BRAKE	7	9	BOLT(SP)/M6X16	23	3
ARM, HOOD	15	12	BOLT(SP)/M6X16	24	5
ARM, KNUCKLE/LH COMP	10	10	BOLT(SP)/M6X16	25	12
ARM, KNUCKLE/RH COMP	10	16	BOLT(SP)/M6X16	25	14
ARM, PIT MAN	10	11	BOLT(SP)/M6X16	25	19
ARM, PTO TENSION ASSY	13	1	BOLT, BATTERY	2	4
ARM, PTO TENSION ASSY	13	1A	BOLT, SEMS	6	5
ARM, TENSION ASSY	20	6	BOLT, SEMS	17	23
ARM, TENSION ASSY	20	6A	BOLT, SEMS (S)	15	11
ARM, TENSION/F COMP	4	5	BOLT, SEMS (SP)	4	21
ARM, TENSION/HST COMP	4	22	BOLT, SEMS (SP)	4	47
ARM, TENSION/HST COMP	4	22A	BOLT, SEMS (SP)	9	4
ARM/TENSION/F	4	9	BOLT, SEMS (SP)	11	3
AXLE, FRONT	10	1	BOLT, SEMS (S)	20	14
AXLE, FRONT	10	1A	BOLT, SEMS (S) M8X12	15	9
BAG, COLLECTOR COMP	24	20	BOLT, SEMS (S) M8X12	21	15
BAND, HARNESS	17	7	BOLT, SEMS (S) M8X16	2	9
BAND, HARNESS	17	21	BOLT, SEMS (S) M8X16	7	2
BAND, HOSE ASSY/12	1	24	BOLT, SEMS (S) M8X16	15	13
BAND, SHUTER ASSY	25	2A	BOLT, SEMS/M8X25 7T	14	17
BAND, WIRE/250	25	17	BOLT, SEMS/M8X25 7T	14	19
BATTERY,	2	1	BOLT, SP	17	32
BEARING RB	4	27	BOLT, SP/M8X110	4	41
BEARING, BALL UNIT	6	31	BOLT, SP/M8X40	4	40
BEARING, RB	20	17	BOLT, WING SP/M8X25	13	9
BEARING, RB	20	17A	BOLT/M 6X16	23	11
BEARING, RB	20	3	BOLT/M 8X16	6	10
BEARING, RB/6004	6	15	BOLT/M 8X25	15	18
BEARING, RB/6004SS	12	5	BOLT/M 8X45	13	18
BEARING, RB/6005	6	16	BOLT/M06X16	16	2
BEARING, RB/6204	6	19	BOLT/M06X28	2	7A
BEARING, RB/6205	6	35	BOLT/M06X32	2	7
BEARING, RB/6206	6	27	BOLT/M06X32	2	11
BELT/VB066	20	5	BOLT/M08X20	15	6
BELT/VB066	20	1	BOLT/M10X25	23	18
BELT/VB078.5	4	38A	BOLT/M10X30	4	3
BELT/VB079	4	38	BOLT/M10X60	10	8
BLADE/57X514	20	24	BOLT/M6X20	1	9
BLADE/57X514 COMP	20	24A	BOLT/M6X20	1	12
BLADE/57X514 COMP	23	20	BOLT/M8X16	25	3
BOLT	10	13	BOLT/M8X16	25	9
BOLT	4	36	BOLT/M8X20	6	12
BOLT(SP) M8X20	1	2	BOLT/M8X20	23	14
BOLT(SP) M8X20	1	14	BOLT/S	1	1

DESCRIPTION	FIG.	KEY	DESCRIPTION	FIG.	KEY
BOLT/S	6	32	CLIP(B)	15	20
BOOT	17	31	CLIP, PIN	21	4
BOOT	16	15	CLIP, PIN	21	18
BRACKET, BAR	4	46	CLIP, PIN	21	21
BRACKET/TENSION	4	11	CLSMP, WIRE/10-12	1	24A
BRACKET/TENSION COMP	4	11A	COLLAR/08X12X10	15	17
BREATHER, TANK CAP	1	20	COLLAR/11X15X07	14	2
BULB	8	4	COLLAR/20X30X03	6	29
BULB	12	4	COLLAR/20X30X03	6	34
BULB, LAMP/12V21W	17	3	COLLAR/21X25X46	12	6
BUSH, COLUMN	11	5	COLLAR/25X50X04	6	30
BUSH/10X12X10	11	2	COLLAR/42X47X13	6	14
BUSH/15X17X11	11	18	COLLAR/6.5X10.5X8	1	5
BUSH/15X17X15	13	2	COLUMM, STEERING ASSY	11	4
BUSH/15X17X21	9	2	COVER, BRAKE COMP	7	1
BUSH/16X24X21	21	23	COVER, CONECTOR COMP	24	16
BUSH/18X20X15	5	16	COVER, DISCHARGE COMP	21	6
BUSH/18X20X15	7	19	COVER, DISCHARGE COMP	21	6A
BUSH/20X23X20	4	10	COVER, FRONT	15	2
BUSH/20X23X20	20	7	COVER, LOWER ASSY	11	1
CABLE, AXLE ASSY	3	1	COVER, PANEL	24	2
CABLE, BATTERY ASSY	2	10	COVER, PULLEY/LH	21	11
CABLE, EARTH	2	6	COVER, PULLEY/RH COMP	21	12
CABLE, PTO ASSY	13	10	COVER, REAR	9	3
CABLE, PTO ASSY	13	10A	COVER, SHOOTER ASSY	25	1
CAP	17	16	COVER, SHOOTER ASSY	25	1A
CAP, BATTERY	2	2	COVER, SWITCH	17	5
CAP, SHAFT(A)COMP	21	14	CUP, FUEL	1	25
CAP, TANK	1	19	DECK, MOWER/40 COMP	21	1
CAP, TIRE VALVE	8	3	DEK, MOWER/40 COMP	21	1A
CAP, TIRE VALVE	12	3	DEK, MOWER/40 COMP	21	2
CAP, WHEEL	8	9	DIODE/1.5A	17	14
CAP, WHEEL	12	10	DRUM, BRAKE	7	3
CASE, DIFF	6	24	FAN	23	1A
CASE, FAN	23	8	FAN, HST	4	42
CASE, TRANSMISSION/LH	6	1	FAN, SHIRKO ASSY	23	1
CASE, TRANSMISSON/RH	6	6	FENDER	16	1
CHASSIS, HST ASSY	9	1	FORK, WHEEL COMP	21	19
CHASSIS, HST ASSY	9	1A	FRAME	24	18
CHASSIS, HST ASSY	9	1B	FRAME, BAG COMP	24	19
CHASSIS, HST ASSY	9	1C	FRAME/A COMP	24	7
CLAMP, HARNESS	13	13	FRAME/B COMP	24	8
CLAMP, HARNESS	17	22	FRAME/C COMP	24	9
CLAMP, HARNESS	3	11	FUSE/32V10A	17	11
CLAMPER, 7 LONG	17	24	GASKET	1	21

DESCRIPTION	FIG.	KEY	DESCRIPTION	FIG.	KEY
GAUGE, FUEL	1	22	KEY/05X05X24	4	34
GEAR, SHAFT/9-43TCOMP	6	18	KEY/06X07X63	4	2
GEAR/11T	6	21	KNOB	3	6
GEAR/12T	6	13	KNOB	13	16
GEAR/15T	6	20	LABEL	22	9
GEAR/25T ASSY	11	17	LABEL	22	10
GEAR/51T	6	22	LABEL(DANGER/F)	22	6
GRIP, BRAKE	7	24	LABEL, BELT CAUTION/D	19	4
GRIP, LIFT	14	21	LABEL, BELT CAUTION/D	19	4A
GROMMET	15	25	LABEL, BELT CAUTION/E	19	11
GROMMET	16	4	LABEL, BELT CAUTION/E	19	11A
GROMMET, PANEL	24	4	LABEL, BELT CAUTION/F	19	18
GROMMET/12X19	15	15	LABEL, BELT CAUTION/F	19	18A
GROMMET/48X68X02	1	27	LABEL, BELT CAUTION/I	19	25
GUIDE, BELT COMP	20	13	LABEL, BELT CAUTION/I	19	25A
GUIDE, DISCHARGE COMP	21	8	LABEL, CAUTION D	19	5
GUIDE, MUFFLER COMP	1	13	LABEL, CAUTION/BATTRY	19	28
HANGER, SUPPORT	15	8	LABEL, CAUTION/E	19	12
HARNESS, MAIN ASSY	17	10	LABEL, DISCHARGE	22	4A
HARNESS, MAIN ASSY	17	10A	LABEL, DISCHARGE	22	7A
HARNESS, SENSOR ASSY	25	16	LABEL, DISCHARGE	22	10A
HINGE/102 COMP	16	6	LABEL, DISCHARGE	22	12A
HITCH, COLLECTOR COMP	23	17	LABEL, DISCHARGE/D	22	4
HOLDER, BAND	25	5	LABEL, DISCHARGE/F	22	7
HOLDER, BAND COMP	25	2	LABEL, FUSE/D	19	3
HOLDER, BATTERY	2	3	LABEL, FUSE/E	19	10
HOLDER/SWITCH	16	13	LABEL, FUSE/F	19	17
HOLDER/SWITCH	16	13A	LABEL, GAUGE WHEEL/D	22	5
HOOD COMP	15	1	LABEL, GAUGE WHEEL/E	22	11
HORN ASSY	25	18	LABEL, GAUGE WHEEL/F	22	8
HOSE/350	1	23	LABEL, LIFT LEVER	18	7
HOSE/600	1	26	LABEL, MODEL ASSY	18	5A
HST ASSY	4	39	LABEL, MODEL ASSY	22	1
HUB COMP	23	2	LABEL, MODEL ASSY	26	1
HUB, BLADE	20	25	LABEL, MODEL/SL14	18	5
HUB, BRAKE ASSY	7	18	LABEL, NOZZLE/100	18	8
HUB, STEERING COLUMN	11	6	LABEL, OPERATION/D	19	1
HUB, TRINION COMP	5	1	LABEL, OPERATION/D	19	1A
HUB/08X12X15	5	9	LABEL, OPERATION/E	19	8A
HUB/18X22X20	20	18	LABEL, OPERATION/F	19	15
INSULATOR/09X20X04	1	16	LABEL, OPERATION/F	19	15A
INSULATOR/20X35X01	4	48	LABEL, OPERATION/I	19	22
JOINT, BALL	10	30	LABEL, OPERATION/I	19	22A
JOINT, BALL/LH	10	21	LABEL, OPTION/E	19	19
JOINT, BALL/RH	10	22	LABEL, PARKING/D	19	2

DESCRIPTION	FIG.	KEY	DESCRIPTION	FIG.	KEY
LABEL, PARKING/E	19	8	LEVER, LIFT COMP	14	16
LABEL, PARKING/E	19	9	LEVER, PARKING COMP	7	23
LABEL, PARKING/F	19	16	LEVER, PTO COMP	13	15
LABEL, SWITCH	17	6	LEVER, PUSH	4	44
LABEL, WARING/D	26	3A	LINING/13X50X3	3	10
LABEL, WARNING/E	26	4B	LINK COMP	14	1
LABEL, WARNING/F	26	5	LINK COMP	14	1A
LABEL, WORNING/D	26	3	LINK, FUSIBLE	2	13
LABEL, WORNING/E	26	4	LINK, NEWTRIL COMP	5	4
LABEL, WORNING/E	26	4A	MAT	15	19
LABEL, WORNING/I	26	6	METAL	20	16
LABEL/CAUTION/BELT	22	2	METAL	20	16A
LABEL/CAUTION/I	19	26	NET, FAN	23	9
LABEL/CAUTION/SROOP	18	12	NET, PANEL	24	3
LABEL/CE	18	9	NIPPLE, GREASE	10	6
LABEL/CE	19	32	NIPPLE, GREASE/B-M6F	10	7
LABEL/D/BATTERY	19	21	NUT	17	30
LABEL/D/BATTERY	19	7	NUT	16	16
LABEL/D/BATTERY	19	14	NUT	3	8
LABEL/D/FUEL/D	19	6	NUT	5	8
LABEL/D/FUEL/D	19	35	NUT	10	9
LABEL/D/FUEL/F	19	20	NUT	11	21
LABEL/D/FUEL/F	19	37	NUT	14	27
LABEL/D/FUEL/G	19	13	NUT	23	13
LABEL/D/FUEL/G	19	36	NUT	24	6
LABEL/D/FUEL/T	19	27	NUT	25	15
LABEL/DISCHARGE	22	3	NUT	16	20
LABEL/DISCHARGE	26	2	NUT	21	25A
LABEL/DISCHARGE	22	12	NUT, LOCK/M8	4	6
LABEL/FUSE/I	19	24	NUT, LOCK/M8	4	19
LABEL/HST	18	11	NUT, LOCK/M8	7	10
LABEL/HST	19	34	NUT, LOCK/M8	11	7
LABEL/MENTENANSU	18	10	NUT, LOCK/M8	16	7
LABEL/MENTENANSU	19	33	NUT, LOCK/M8	21	7
LABEL/PARKING/I	19	23	NUT, LOCK/M8	21	9
LABEL/SL/D SET	19	29	NUT, LOCK/M8	21	13
LABEL/SL/F SET	19	31	NUT, LOCK/M8	21	18A
LABEL/SL/G SET	19	30	NUT, LOCK/M8	25	4
LABEL/WHEEL, GAUGE/I	22	13	NUT, LOCK/M8	25	10
LABELCAUTION/HOT	18	13	NUT, RING	17	17
LAMP, HEAD ASSY	17	1	NUT/LH M10X1.25	10	23
LEAD	17	2	NUT/M 6	2	5
LENS	17	8	NUT/M 6	16	18
LEVER, AXLE COMP	3	4	NUT/M 8	2	15
LEVER, FRAME COMP	24	12	NUT/M 8	4	18

DESCRIPTION	FIG.	KEY	DESCRIPTION	FIG.	KEY
NUT/M 8	4	32	PIN, SPLIT/2. 5X15	3	3
NUT/M 8	5	5	PIN, SPLIT/2. 5X20	10	28
NUT/M 8	7	17	PIN, SPLIT/2. 5X20	11	12
NUT/M 8	13	20	PIN, SPLIT/2. 5X20	11	16
NUT/M 8	14	15	PIN, SPLIT/2. 5X25	12	9
NUT/M 8	16	10	PIN, SPLIT/2. 5X25	14	4
NUT/M 8	20	12	PIN, SPLIT/2. 5X25	14	11
NUT/M 8	20	20	PIN, SPLIT/2. 5X25	14	26
NUT/M06	2	8	PIN, SPLIT/3 X15	5	11
NUT/M06	2	12	PIN, SPLIT/3 X15	5	14
NUT/M08	15	7	PIN, SPLIT/3 X15	7	16
NUT/M10	10	14	PIN, SPLIT/3 X15	13	12
NUT/M10	10	24	PIN, SPLIT/3 X20	1	18
NUT/M10X1. 25	10	25	PIN, SPLIT/3 X20	24	10
NUT/M10X1. 25	11	10	PIN, SPLIT/3 X20	24	14
NUT/M10X1. 25	11	14	PIN, SPLIT/3 X25	4	25
NUT/M10X1. 25	12	8	PIN, SPLIT/3 X25	5	18
NUT/M12	14	7	PIN, SPLIT/3 X25	10	5
NUT/M12X1. 25	10	4	PIN, SPLIT/3 X25	10	35
NUT/M12X1. 25	10	32	PIN, SPLIT/3 X25	13	5
NUT/M12X1. 25	10	31	PIN, SPLIT/3 X30	7	21
NUT/M14	23	5	PIN, SPLIT/3 X30	8	8
NUT/M14	20	28	PIN, SPLIT/3 X30	21	25
NUT/M14X1. 5	8	7	PIN, SPRING/4 X20 W	24	21
NUT/M6	15	3	PIN, SPRING/6 X25 W	5	2
NUT/M6	16	3	PIN, SPRING/6 X40 W	4	23
O-RING/G45	6	17	PIN, STOPPER ASSY	21	5
O-RING/P 8	6	11	PIN/08X44	21	20
ORNAMENT (HYDRAULIC)	18	6	PIN/12X104	21	17
ORNAMENT/14	18	3	PIN/12X108	21	17A
ORNAMENT/14	18	3A	PIN/12X108	21	17B
ORNAMENT/F	18	4	PIN/12X22	21	3
ORNAMENT/F	18	4A	PIN/15X47	7	8
ORNAMENT/LH	18	1	PIN/16X88	21	24
ORNAMENT/RH	18	2	PIN/16X94	21	24A
PAD, PEDAL	5	17	PIN/16X94	21	24B
PAD, STEERING WHEEL	11	9	PIN/22X77	10	2
PANEL, CONECTOR COMP	24	1	PIN/M12X43	14	5
PANEL, INSTRUMENT	15	21	PIPE, SHOOTER ASSY	25	7
PEDAL, HST ASSY	5	15	PIPE, SHUTER COMP	25	8
PEDL B	7	22	PLATE	14	18
PIN (10X18)	6	25	PLATE	16	19
PIN, DIFF PINION	6	23	PLATE	25	13
PIN, PUSH	14	20	PLATE COMP	15	10
PIN, ROLL	4	45	PLATE, ADJUST	5	7

DESCRIPTION	FIG.	KEY	DESCRIPTION	FIG.	KEY
PLATE, FAN	23	10	ROD/M10X246	14	24
PLATE, L/32X154	14	23	ROD/M10X505 COMP	5	12
PLATE, PTO LEVER	13	17	S. W	4	37
PLATE, U/79X22	14	12	S. W	16	17
PLATE/I/19X78 COMP	4	20	SCREW M4X6	17	18
PLATE/IR/22X290	1	4	SCREW SEEMS/M6X16	15	22
PLATE/IR/54X156	25	6	SCREW/M3X16	17	26
PLUG	23	19	SCREW/M6X20	1	6
PLUG, DRAIN (1/4)	6	9	SCREW/M6X20	1	8
PLUG, OIL	6	4	SCREW/M6X20	1	11
PULLEY, TENSION	4	7	SCREW/M6X20	15	23
PULLEY, TENSION	4	12	SEAL, OIL/TC20357	6	8
PULLEY, TENSION/045	4	26A	SEAL, OIL/TC25408	6	2
PULLEY, TENSION/045	4	26	SEAL, OIL/TC25408	6	7
PULLEY, TENSION/045	13	6	SEAL/15X15X320	15	5
PULLEY/FT/85X22 COMP	20	8	SEAL/20X20X70	23	16
PULLEY/TENSION	4	14	SEAT ASSY	16	12
PULLEY/V2B120	20	2	SEAT ASSY	16	12A
PULLEY/V2B120B90	4	1	SENSOR ASSY	25	11
PULLEY/VB105	4	33	SHAFT, STEERING COMP	11	13
PULLEY/VB120 COMP	20	22	SHAFT, WHEEL/LH	6	28
PULLEY/VB120 COMP	20	23	SHAFT, WHEEL/RH	6	33
REFLECTER	16	5	SHIM/1. 2	20	26
RELAY, 4P ASSY	17	12	SHOE, BRAKE ASSY	7	6
RELAY, 5P ASSY	17	13	SHROUD, LOWER COMP	1	7
RING, SNAP, S80	6	26	SHROUD, UPPER COMP	1	3
RING, SNAP/12 C	4	8	SPRING	24	13
RING, SNAP/12 C	4	13	SPRING, BRAKE SHOE	7	7
RING, SNAP/12 C	7	5	SPRING, CHAIN TENSION	20	10
RING, SNAP/15 C	4	29	SPRING, CLUTCH RETURN	21	10
RING, SNAP/15 C	13	7	SPRING, DISK	3	7
RING, SNAP/17 C	20	9	SPRING, HE066	13	3A
RING, SNAP/35 C	4	28	SPRING, HYD CLUTCH	7	13
RING, SNAP/40 C	20	19	SPRING, MAIN CLUTCH	4	31
RING. SNAP/20	4	15	SPRING, MAIN CLUTCH	4	16
RING. SNAP/20	10	18	SPRING, MAIN CLUTCH	4	31A
RING. SNAP/20	20	4	SPRING, RETURN	14	13
ROD	4	17A	SPRING, SHUTTER	24	17
ROD	4	17	SPRING, TENSION	7	11
ROD	20	11	SPRING, TENSION/46	13	3
ROD, DRUG	10	29	SPRING, TENSION/86	5	6
ROD, TIE	10	20	SPRING, TENSION/86	7	25
ROD/M08X295	4	30	SPRING/D=6	16	8
ROD/M08X555	7	14	SPRING/HC057	14	22
ROD/M08X751	14	9	SPRING/HE014	13	14

DESCRIPTION	FIG.	KEY	DESCRIPTION	FIG.	KEY
SPRING/HE047	3	5A	WASHER, PULLEY	10	3
SPRING/HE049	3	5	WASHER, ROOT TENSION	14	6
SPRING/HE100	14	28	WASHER, SP/M 3	17	27
STAY, SHROUD COMP	1	10	WASHER, SP/M 4	17	19
STEP	15	14	WASHER, SP/M 8	2	14
STOPPER, BELT COMP	13	8	WASHER, SP/M 8	16	11
SWITCH, HEAD LAMP	17	4	WASHER, SP/M 8	20	21
SWITCH, KEY ASSY	17	20	WASHER, SP/M10	10	27
SWITCH, MERIT	17	25	WASHER, SP/M10	11	20
SWITCH, PUSH	17	29	WASHER, SP/M12	10	34
SWITCH, PUSH SET	17	29A	WASHER, SP/M12	14	8
SWITCH, SEAT ASSY	16	14A	WASHER, SP/M14	20	29
SWITCH, SEAT ASSY	16	14	WASHER, SP/M14	23	6
SWITCH, STARTER SET	17	15	WASHER, THROWER	23	12
TANK, FUEL	1	15	WASHER/06X16X01	15	24
TIRE, TURF/14-5	12	1	WASHER/11X30X3	10	12
TIRE, TURF/18-8.5	8	1	WASHER/11X30X3	11	15
TRIM/1X06X540	15	4	WASHER/11X30X3	11	19
TUBE/140	6	3	WASHER/11X30X3	12	7
WASHER	10	15	WASHER/11X44X5	4	4
WASHER	10	19	WASHER/14X47X07	8	6
WASHER	15	16A	WASHER/14X55X05	20	27
WASHER	4	35	WASHER/20X28X2	10	17
WASHER (9X24X1.6)	15	16	WASHER/6X14X3	17	9
WASHER / M6	3	2	WASHER/9X22X2	23	15
WASHER /M12	7	4	WASHER/9X32X2	16	9
WASHER /M12	10	33	WASHER/M10	3	9
WASHER /M12	14	3	WASHER/M10	10	26
WASHER /M12	14	25	WASHER/M10	11	11
WASHER /M12	24	11	WASHER/M18	7	20
WASHER /M12	24	15	WASHER/M3	17	28
WASHER, CAM	20	15	WHEEL, GAUGE FRONT	21	16
WASHER, HOLDER COVER	23	4	WHEEL, STEERING ASSY	11	8
WASHER, PL/M 8	1	17	WHEEL/3.5X6 COMP	12	2
WASHER, PL/M 8	5	10	WHEEL/3.5X6 COMP	12	2A
WASHER, PL/M 8	5	13	WHEEL/7.0X8 COMP	8	2
WASHER, PL/M 8	7	15	WHEEL/7.0X8 COMP	8	2A
WASHER, PL/M 8	13	11	WHEEL/GAUGE/REAR	21	22
WASHER, PL/M 8	13	19	WIRE/1.2X100	5	3
WASHER, PL/M 8	14	10	WRENCH/PLUG	19	38
WASHER, PL/M 8	14	14			
WASHER, PL/M14	4	24			
WASHER, PL/M14	8	5			
WASHER, PL/M14	13	4			
WASHER, PL/M14	23	7			

ISEKI & CO., LTD.

ISEKI & CO., LTD.

INTERNATIONAL BUSINESS DIVISION
3-14, 5-Chome, Nishinippori,
Arakawa-ku, Tokyo, 116, Japan
Fax : 03-5604-7703
Phone : 03-5604-7658～7661

Catalogue No.

2502-098-100-00

Printed in Japan June, 1996