Directions for use of Parts Catalogue

1. Applicable model of machines

All component and option parts used for SG153H lawn & garden tractors are listed in this parts catalogue.

1) MODEL TYPE

48····· SIDE DISCHARGE MOWER: CUTTING WIDTH 48(inch)

R····· REAR DISCHARGE MOWER

EXCEPT S··· E262-G (ENGINE)

S····· E262-G01 (ENGINE)

·

2) AREA CODE

E20····· GERMANY

E40····· UNITED KINGDOM & OCEANIA

E42M····· EUROPE STANDARDIZED MODEL (ILLUSTRATION LABEL)

E50····· FRANCE

E50T····· ITALY

2. Explanation for head paragraph

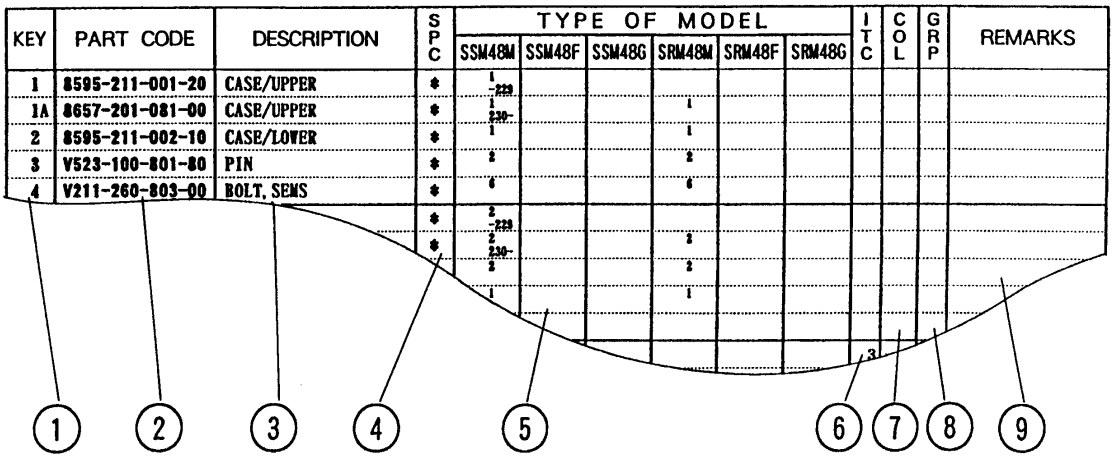

KEY	PART CODE	DESCRIPTION	SPC	TYPE OF MODEL						ITC	COL	GRP	REMARKS
				SSM48M	SSM48F	SSM48G	SRM48M	SRM48F	SRM48G				
1	8595-211-001-20	CASE/UPPER	*	1 -229									
1A	8657-201-081-00	CASE/UPPER	*	1 230-			1						
2	8595-211-002-10	CASE/LOWER	*	1			1						
3	V523-100-801-80	PIN	*	2			2						
4	V211-260-803-00	BOLT, SEMS	*	6			6						
			*	2 -229									
			*	2 230-			3						
				2			2						
				1			1						
										3			

① ② ③ ④ ⑤ ⑥ ⑦ ⑧ ⑨

① KEY shows the location of parts diagramed in the illustration.

② Parts numbers begin with `V´ and `W´ are standard parts of the market.

③ `LH´ and `RH´ on the parts name are described against the moving

direction of the machine or are described on the condition how to install parts on the machines.

④ SPC : The following symbol classifies parts to be used for machines.

`＊´ means standard parts.

`T´ shows that the parts can be installed as optional parts.

`R´ shows that the parts can be used as applicable parts to replace originally equipped parts.

⑤ Upper column : QTY shows the number of parts to be used for one unit of machine.

`M´ is indicated for parts supplied by a meter long.

`l´ is indicated for parts supplied by liter.

`AR´ is indicated for parts need to be adjusted or regulated.

Lower column : serial number

—229 means serial number up to 229.

230— means serial number 230 and after.

⑥ ITC : Interchangeability

`1´…OLD ← NEW

New parts can be used in place of the old parts.

`2´…OLD → NEW

Old parts can be used in place of the new parts.

`3´…OLD →← NEW

Old parts and new parts can not be replaced each other.

⑦ COL : Color code

Color is signified with color code number for colored parts.

Please see the color list shown in the next page.

⑧ GRP : Parts shown in this column can be replaced by SET parts.

Example : Parts marked Ⓐ can be replaced by parts marked Ⓑ, and Ⓓ for Ⓒ, so the rest follow in the same alphabetical order.

⑨ Remarks

＊Other maker's part code number is shown in this column.

＊When Fig. No. is shown in the Remark column of SET parts or ASSY parts, each of their component parts are listed in said Fig. No.

3. Color :

The following colors are used color parts.

COLOR CODE	COLOR	SPRAY TYPE CODE NUMBER	PAINTS 4K DRUM	PAINTS 16K DRUM
4 L	NEO-BLUE	1300-985-001-10	1300-985-003-00	————
6 G	SUMMER WHITE	1300-958-001-10	1300-958-003-00	1300-958-004-00
7 F	MIRROR BLACK	1300-954-001-10	1300-954-003-00	1300-954-004-00
8 E	SILVER MIST	1300-968-001-10	1300-968-003-00	1300-968-004-00

NOTE : Color code is signified only for the parts assigned by the maker as color parts.

4. Serial Numbers :

1) For engines serial number is stamped on CYLINDER BLOCK ASSY.
   Please see Fig. No. 5－1.
2) For chassies serial number is shown on the LABEL.
   Please see

5. Parts Order

1) Parts numbers listed in the parts catalogue are all registered in “ISEKI on-line computer”.
2) When you order parts, please make sure of correct numbers.
3) When substitute parts is available, the part number ordered will be

automatically turned to a new part number.

4) Please be sure to use “ISEKI GENUINE PARTS”.
Any other similar parts other than ISEKI parts when used may cause a trouble that makes us unable to repair or guarantee the warrant.

*** Structure Table of Model ***

MODEL / FIG.	SG153H	E20S	48E20	48E20S	48E40	48E40S	48E42M	48E42MS	48E50	48E50S	48E50T	48RE40	48RE40S
1							*	*					
2		*	*	*	*	*	*	*	*	*	*	*	*
3		*	*	*	*	*	*	*	*	*	*	*	*
4		*	*	*	*	*	*	*	*	*	*	*	*
5		*	*	*	*	*	*	*	*	*	*	*	*
6		*	*	*	*	*			*	*	*	*	*
7							*	*					
8		*	*	*	*	*	*	*	*	*	*	*	*
9		*	*	*	*	*	*	*	*	*	*	*	*
10		*	*	*	*	*	*	*	*	*	*	*	*
11		*	*	*	*	*	*	*	*	*	*	*	*
12		*	*	*	*	*	*	*	*	*	*	*	*
13		*	*	*	*	*	*	*	*	*	*	*	*
14		*	*	*	*	*	*	*	*	*	*	*	*
15		*	*	*	*	*	*	*	*	*	*	*	*
16		*	*	*	*	*	*	*	*	*	*	*	*
17		*	*	*	*	*	*	*	*	*	*	*	*
18		*	*	*	*	*	*	*	*	*	*	*	*
19		*	*	*	*	*	*	*	*	*	*	*	*
20		*	*	*	*	*	*	*	*	*	*	*	*
21		*	*	*	*	*	*	*	*	*	*	*	*
22		*	*	*	*	*	*	*	*	*	*	*	*
23		*	*	*	*	*	*	*	*	*	*	*	*
24		*	*	*	*	*	*	*	*	*	*	*	*
25		*	*	*	*	*	*	*	*	*	*	*	*
26		*	*	*	*	*	*	*	*	*	*	*	*
27		*	*	*	*	*	*	*	*	*	*	*	*
28		*	*	*	*	*	*	*	*	*	*	*	*
29		*	*	*	*	*			*	*	*	*	*
30							*	*					
31		*	*	*	*	*			*	*	*	*	*
32		*	*	*	*	*			*	*	*	*	*
33							*	*					
34		*	*	*	*	*	*	*	*	*	*	*	*
35		*	*	*	*	*	*	*	*	*	*	*	*
36		*	*	*	*	*	*	*	*	*	*	*	*
37			*		*		*		*		*	*	
38		*		*		*		*		*			*
39		*	*	*	*	*	*	*	*	*	*	*	*
40		*	*	*									
41									*	*			
42					*	*						*	*
43							*	*					
44											*		
45		*	*	*	*	*	*	*	*	*	*	*	*

*** Structure Table of Model ***

FIG. \ MODEL	SG153H	E20S	48E20	48E20S	48E40	48E40S	48E42M	48E42MS	48E50	48E50S	48E50T	48RE40	48RE40S
46		T	T	T	T	T	T	T	T	T	T	T	T
47		T	T	T	T	T	T	T	T	T	T	T	T
48		T	T	T	T	T	T	T	T	T	T	T	T
49		T	T	T	T	T	T	T	T	T	T	T	T
50		T	T	T	T	T	T	T	T	T	T	T	T
51		*	*	*	*	*	*	*	*	*	*	*	*

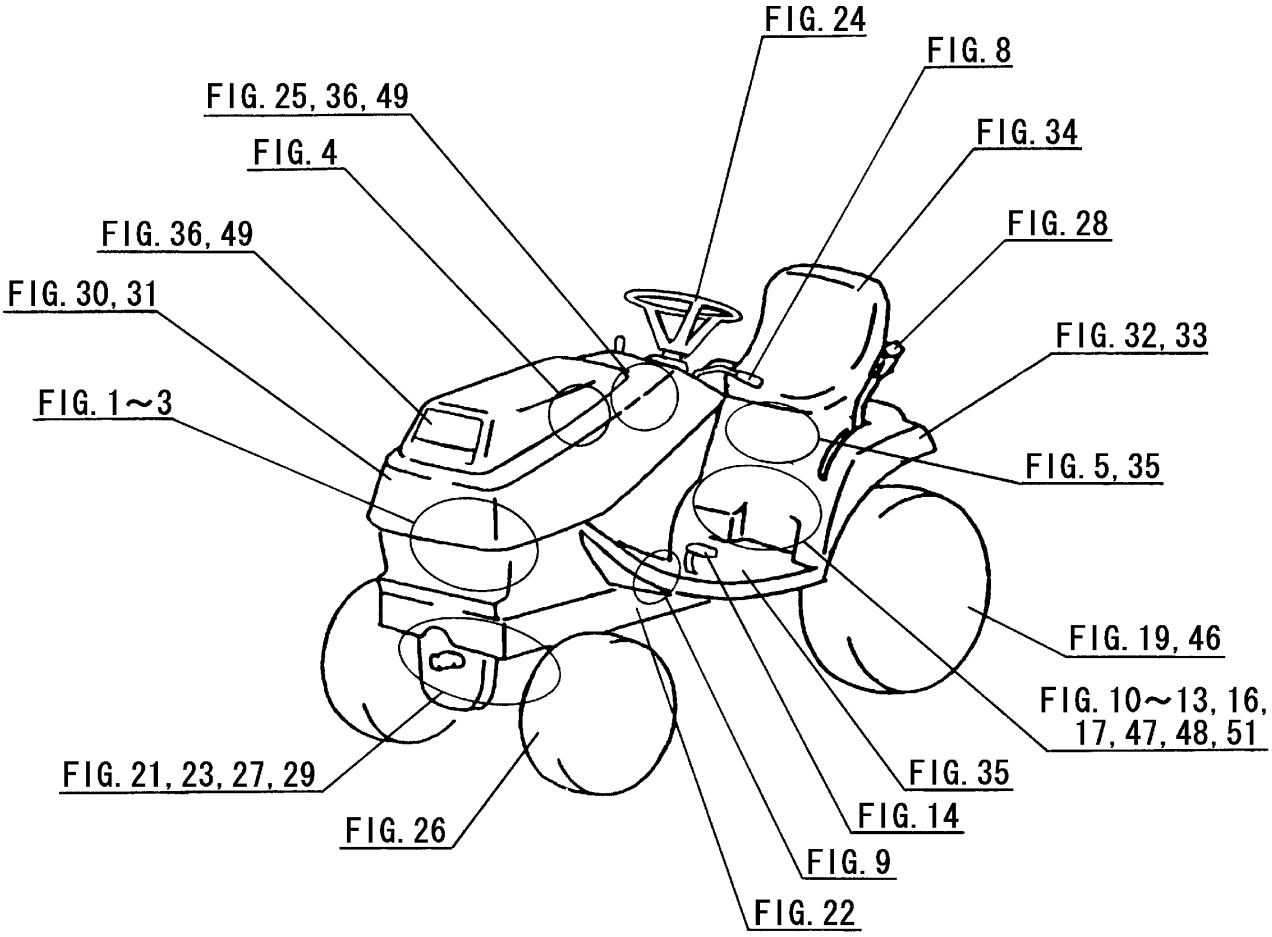
FIG. 24
FIG. 8
FIG. 25, 36, 49
FIG. 34
FIG. 4
FIG. 28
FIG. 36, 49
FIG. 30, 31
FIG. 32, 33
FIG. 1~3
FIG. 5, 35
FIG. 19, 46
FIG. 10~13, 16, 17, 47, 48, 51
FIG. 21, 23, 27, 29
FIG. 35
FIG. 14
FIG. 26
FIG. 9
FIG. 22

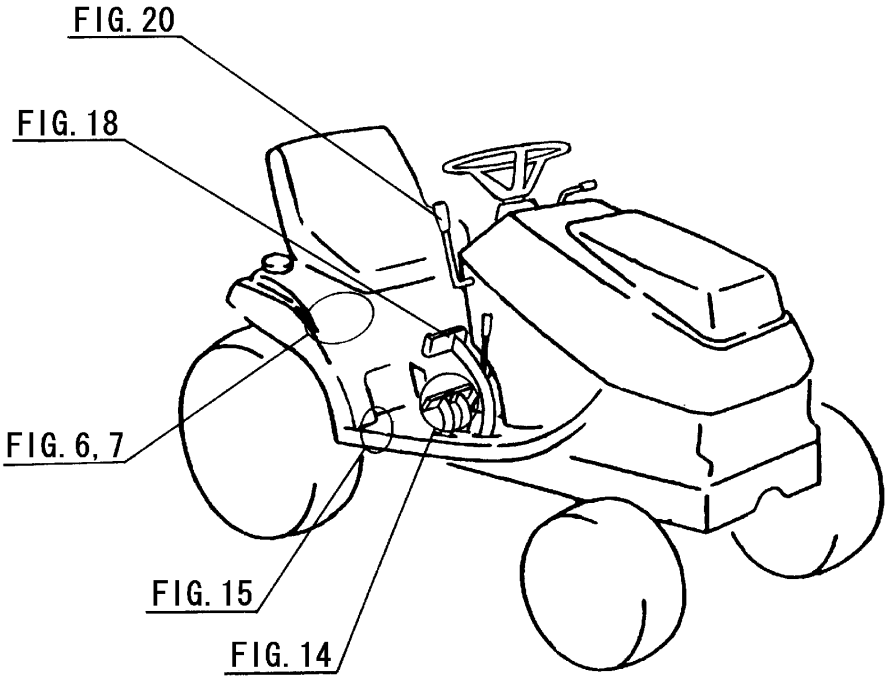
FIG. 20
FIG. 18
FIG. 6, 7
FIG. 15
FIG. 14

Contents

SG153 (EXCEPT S-TYPE)

ENGINE(E262G)

CYLINDER HEAD····· Fig. 1
CYLINDER HEAD COVER····· Fig. 2
INLET MANIFOLD····· Fig. 3
EXHAUST MANIFOLD····· Fig. 4
CYLINDER BLOCK····· Fig. 5
BEARING/UNDER SIZE (OPTION)····· Fig. 6
OIL PAN····· Fig. 7
REAR PLATE····· Fig. 8
REAR PLATE····· Fig. 9
TIMING GEAR CASE····· Fig. 10
HANGER····· Fig. 11
VALVE····· Fig. 12
CAM SHAFT····· Fig. 13
PISTON····· Fig. 14
PISTON····· Fig. 15
PISTON/OVER SIZE (OPTION)····· Fig. 16
PISTON/OVER SIZE (OPTION)····· Fig. 17
CRANK SHAFT····· Fig. 18
OIL PUMP····· Fig. 19
WATER PUMP····· Fig. 20
WATER PUMP····· Fig. 21
COOLING FAN····· Fig. 22
INJECTION NOZZLE····· Fig. 23
INJECTION PUMP····· Fig. 24

FUEL PIPE……Fig. 25
ADAPTER……Fig. 26
ELECTRIC (1)……Fig. 27
ELECTRIC (2)……Fig. 28
REPAIR PARTS (OPTION)……Fig. 29
COMPONENT PARTS
FOR 6215-300-005-00 ON Fig.23……Fig. 30
COMPONENT PARTS
FOR 6215-300-030-00 ON Fig.23……Fig. 31
COMPONENT PARTS
FOR 6215-300-037-00 ON Fig.23……Fig. 32
COMPONENT PARTS
FOR 6215-600-057-10 ON Fig.24……Fig. 33
COMPONENT PARTS
FOR 6281-100-003-10 ON Fig.27……Fig. 34
COMPONENT PARTS
FOR 6281-200-007-00 ON Fig.27……Fig. 35

Contents

SG153 (S-TYPE)

ENGINE(E262G01)

CYLINDER HEAD····· Fig. 1
CYLINDER HEAD COVER····· Fig. 2
INLET MANIFOLD····· Fig. 3
EXHAUST MANIFOLD····· Fig. 4
CYLINDER BLOCK····· Fig. 5
BEARING/UNDER SIZE (OPTION)····· Fig. 6
OIL PAN····· Fig. 7
REAR PLATE····· Fig. 8
TIMING GEAR CASE····· Fig. 9
HANGER····· Fig. 10
VALVE····· Fig. 11
CAM SHAFT····· Fig. 12
PISTON····· Fig. 13
PISTON····· Fig. 14
PISTON/OVER SIZE (OPTION)····· Fig. 15
PISTON/OVER SIZE (OPTION)····· Fig. 16
CRANK SHAFT····· Fig. 17
OIL PUMP····· Fig. 18
WATER PUMP····· Fig. 19
WATER PUMP····· Fig. 20
COOLING FAN····· Fig. 21
INJECTION NOZZLE····· Fig. 22
INJECTION PUMP····· Fig. 23
FUEL PIPE····· Fig. 24

ADAPTER····· Fig. 25
ELECTRIC (1)····· Fig. 26
ELECTRIC (2)····· Fig. 27
REPAIR PARTS (OPTION)····· Fig. 28
COMPONENT PARTS
FOR 6215-300-005-00 ON Fig.22····· Fig. 29
COMPONENT PARTS
FOR 6215-300-030-00 ON Fig.22····· Fig. 30
COMPONENT PARTS
FOR 6215-300-037-00 ON Fig.22····· Fig. 31
COMPONENT PARTS
FOR 6215-600-057-10 ON Fig.23····· Fig. 32
COMPONENT PARTS
FOR 6281-100-003-10 ON Fig.26····· Fig. 33
COMPONENT PARTS
FOR 6281-200-005-00 ON Fig.26····· Fig. 34
COMPONENT PARTS
FOR 6281-200-016-00 ON Fig.26····· Fig. 35

Contents

CHASSIS

ENGINE BRACKET SYSTEM
(M TYPE-No.301563-)····· Fig. 1
ENGINE BRACKET SYSTEM
(EXCEPT M TYPE-No.1-/M TYPE-No.1-301562)····· Fig. 2
RADIATOR SYSTEM····· Fig. 3
MUFFLER AND AIR CLEANER SYSTEM····· Fig. 4
FUEL FILTER AND FUEL HOSE SYSTEM····· Fig. 5
BATTERY SYSTEM (EXCEPT M TYPE)····· Fig. 6
BATTERY SYSTEM (M TYPE)····· Fig. 7
ACCELERATOR SYSTEM····· Fig. 8
DRIVE SHAFT SYSTEM····· Fig. 9
TRANSMISSION CASE SYSTEM····· Fig. 10
TRANSMISSION GEAR SYSTEM····· Fig. 11
HST (1) SYSTEM····· Fig. 12
HST (2) SYSTEM····· Fig. 13
HST (3) SYSTEM(1/3)-(3/3)····· Fig. 14
HST (UNLOAD) SYSTEM····· Fig. 15
DIFFERENTIAL GEAR
AND WHEEL SHAFT SYSTEM····· Fig. 16
BRAKE SYSTEM····· Fig. 17
BRAKE PEDAL AND ARM SYSTEM····· Fig. 18
REAR TIRE SYSTEM····· Fig. 19
PTO CLUTCH SYSTEM····· Fig. 20
PTO SHAFT SYSTEM····· Fig. 21
CHASSIS AND FRONT AXLE SYSTEM····· Fig. 22
KNUCKLE ARM SYSTEM····· Fig. 23
STEERING WHEEL SYSTEM····· Fig. 24

STEERING SYSTEM ..... Fig. 25
FRONT TIRE SYSTEM ..... Fig. 26
LIFT AND LINK SYSTEM ..... Fig. 27
LIFT CAM SYSTEM ..... Fig. 28
PTO COVER SYSTEM (EXCEPT M TYPE) ..... Fig. 29
HOOD SYSTEM (M TYPE) ..... Fig. 30
HOOD SYSTEM (EXCEPT M TYPE) ..... Fig. 31
FENDER SYSTEM (EXCEPT M TYPE) ..... Fig. 32
FENDER SYSTEM (M TYPE) ..... Fig. 33
SEAT SYSTEM ..... Fig. 34
FUEL TANK AND STEP SYSTEM ..... Fig. 35
PANEL SYSTEM ..... Fig. 36
HARNESS SYSTEM (EXCEPT S TYPE) ..... Fig. 37
HARNESS SYSTEM (S TYPE) ..... Fig. 38
MARK ..... Fig. 39
LABEL (GERMAN) (E20 TYPE) ..... Fig. 40
LABEL (FRENCH) (E50 TYPE EXCEPT T) ..... Fig. 41
LABEL (ENGLISH) (E40 TYPE) ..... Fig. 42
LABEL (ENGLISH) (E42 TYPE) ..... Fig. 43
LABEL (ITALIAN) (E50T TYPE) ..... Fig. 44
TOOL ..... Fig. 45

OPTIONAL PARTS

REAR TIRE (FIELD) SYSTEM (OPTION) ..... Fig. 46
REAR PTO SYSTEM (OPTION) ..... Fig. 47
REAR HITCH SYSTEM (OPTION) ..... Fig. 48
HEAD LAMP
AND HOUR METER SET (OPTION) ..... Fig. 49
BUMPER WEIGHT SET (OPTION) ..... Fig. 50

COMPONENT PARTS

COMPONENT PARTS
FOR K211-012-000-00 ON Fig.13 ····· Fig. 51

WIRING DIAGRAM/SG153
WIRING DIAGRAM/SG153/S
REAL WIRING DIAGRAM/SG153
REAL WIRING DIAGRAM/SG153/S

E N G I N E

E262G···SG153(EXCEPT S-TYPE)

FIG. 1 CYLINDER HEAD

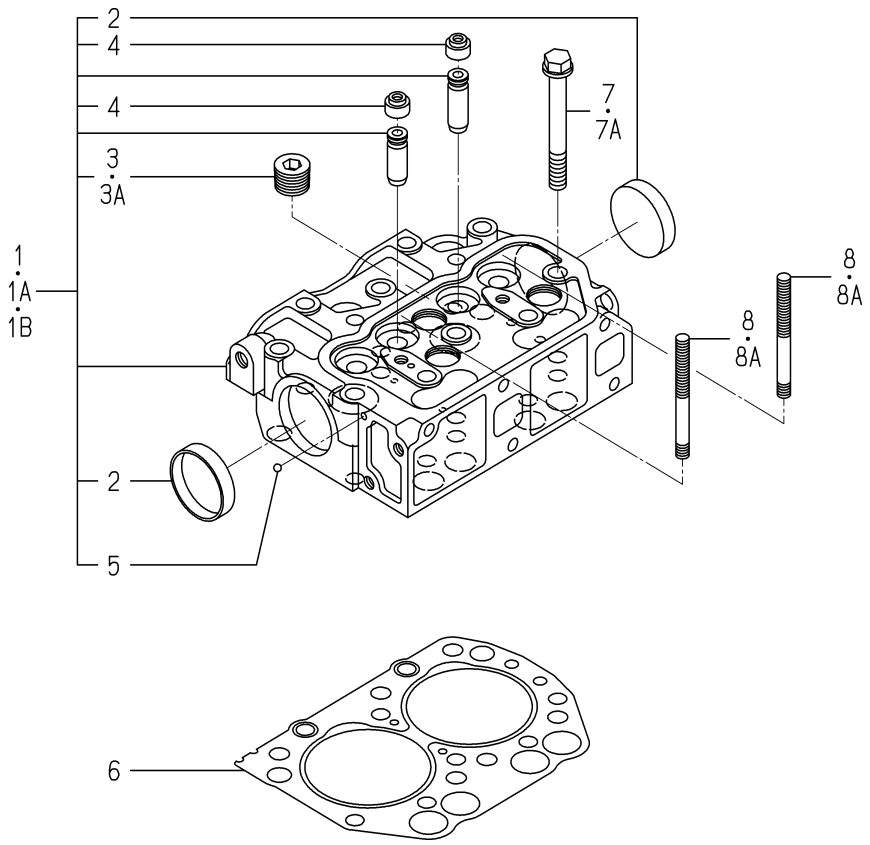

6003-101G-0100,6003-101G-0200

KEY	PART CODE	DESCRIPTION	SPC	TYPE OF MODEL E262G		ITC	COL	GRP	REMARKS
1	6211-110-018-20	SYLINDER HEAD ASSY	*	1 -155756					
1A	6211-110-061-10	CYLINDERHEAD ASSY	*	1 -211473					
1B	6211-110-061-20	CYLINDERHEAD ASSY	*	1 211474-		1			
2	6911-129-006-00	CAP,SEALING	*	2					
3	6209-605-004-00	PLUG/PT1/2	*	3 -139376					
3A	6209-605-004-10	PLUG/PT1/2	*	3 139377-					
4	6212-569-002-00	SEAL,OIL	*	4					
5	V682-200-000-60	BALL	*	1					
6	6211-141-018-10	GASKET,CYL HEAD	*	1					
7	6209-000-003-00	BOLT/M10X1.25X82	*	10 -255564					
7A	6209-000-044-00	BOLT	*	10 255565-					
8	6909-830-212-00	STUD,HEAD COVER	*	2 -171437					
8A	6209-300-014-00	STUD	*	2 171438-					

FIG. 2 CYLINDER HEAD COVER

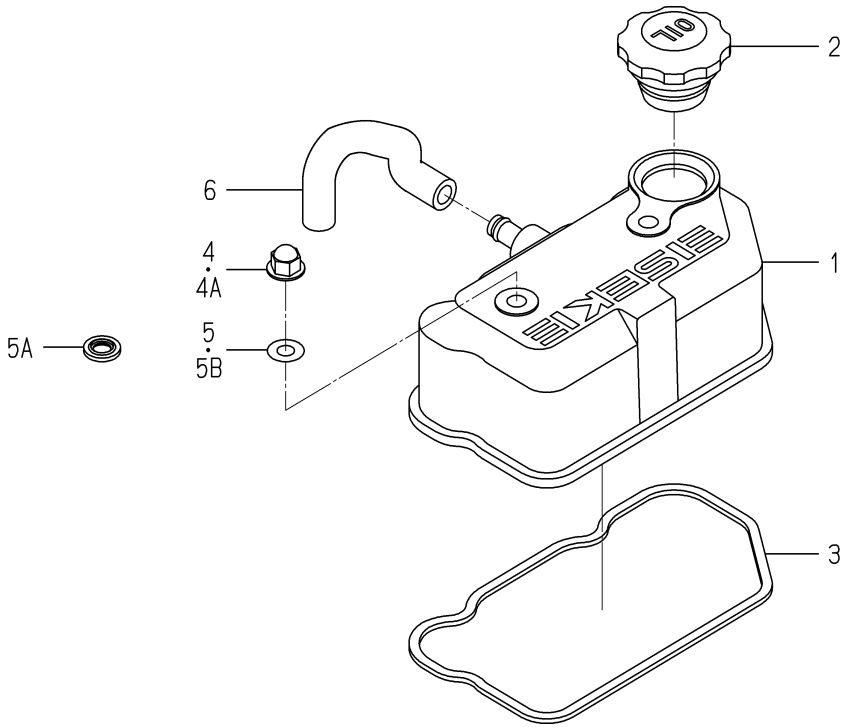

6003-110A-0100

KEY	PART CODE	DESCRIPTION	SPC	TYPE OF MODEL E262G		ITC	COL	GRP	REMARKS
1	6211-170-006-10	COVER/CYLINDER/HEAD	*	1					
2	6211-751-001-10	CAP,OIL FILLER	*	1					
3	6211-173-004-00	SEAL,CYL COVER	*	1					
4	6209-490-002-00	NUT,CAP	*	2 -213417					
4A	6209-490-002-10	NUT/CAP	*	2 213418-		1			
5	6909-572-008-00	PACKING	*	2 -205580					
5A	6209-572-002-00	GASKET	*	2 -221570					
5B	6209-572-003-00	GASKET	*	2 221571-					
6	6209-360-028-10	HOSE/RABBER	*	1					

FIG. 3 INLET MANIFOLD

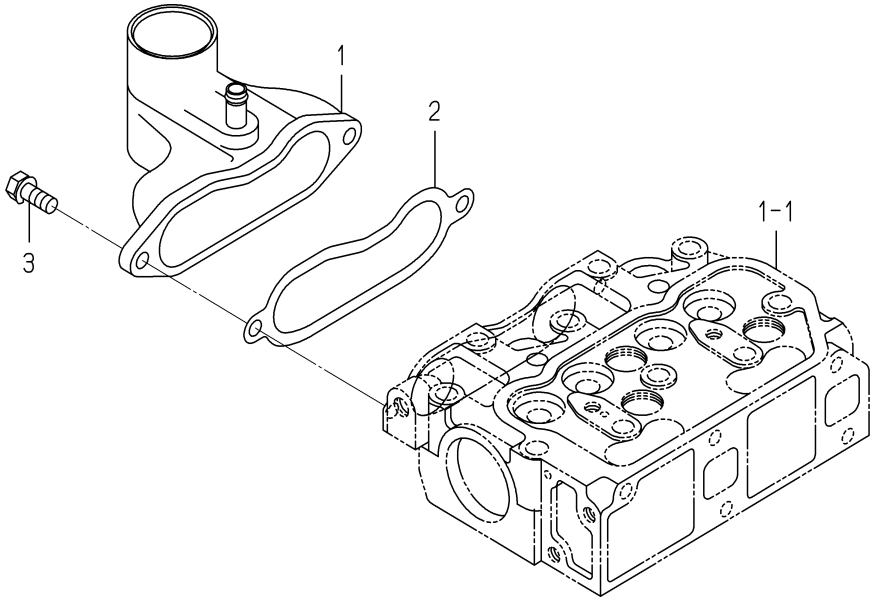

6003-120A-0100

KEY	PART CODE	DESCRIPTION	SPC	TYPE OF MODEL		ITC	COL	GRP	REMARKS
				E262G					
1	6214-111-014-00	MANIFOLD ASSY	*	1					
2	6214-115-002-20	GASKET	*	1					
3	V231-360-802-00	FLANGEBOLT	*	2					

FIG. 4 EXHAUST MANIFOLD

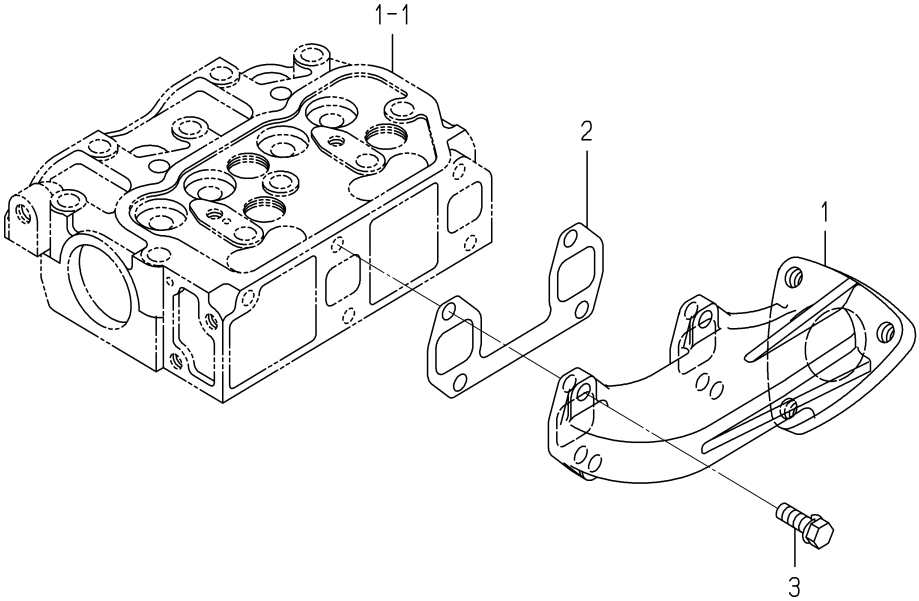

6003-140G-0100

KEY	PART CODE	DESCRIPTION	SPC	TYPE OF MODEL E262G		ITC	COL	GRP	REMARKS
1	6214-141-015-00	MANIFOLD,EXHAUST	*	1					
2	6214-145-006-10	GASKET EXHAUST MANIF	*	1					
3	V211-560-802-50	BOLT,SEMS/M8X25 7T	*	4					

FIG. 5 CYLINDER BLOCK

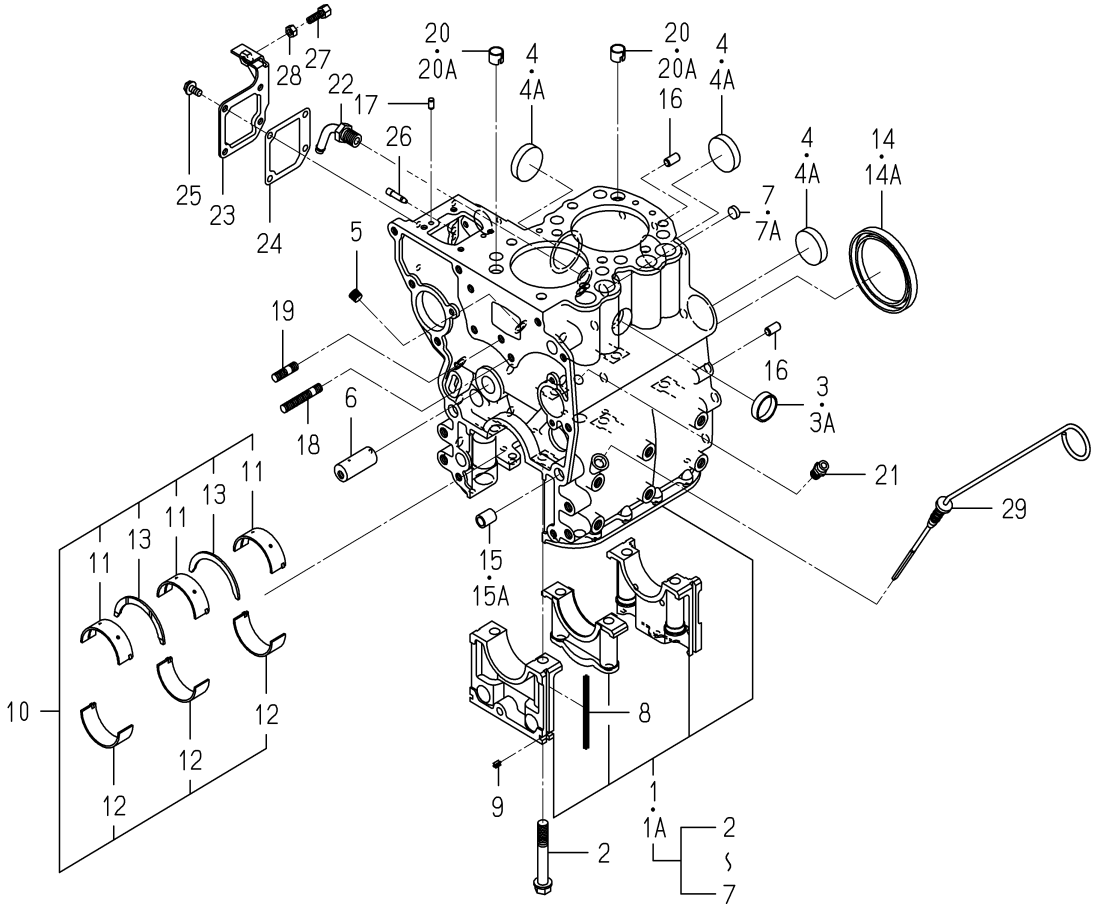

6003-201L-0100

KEY	PART CODE	DESCRIPTION	SPC	TYPE OF MODEL E262G		ITC	COL	GRP	REMARKS
1	6211-210-021-10	CYLINDERBLOCK ASSY	*	1 -161192					
1A	6211-210-021-20	CYLINDERBLOCK ASSY	*	1 161193-		1			
2	6209-000-004-10	BOLT	*	6		1			
3	6209-610-001-00	CAP,SEALING	*	1 -202173					
3A	6209-610-001-10	CUP/SEALING/28	*	1 202174-		1			
4	6911-219-195-00	CAP,SEALING	*	3 -201995					
4A	6209-610-009-00	CUP/SEALING/36	*	3 201996-					
5	6509-605-019-10	PLUG	*	2					
6	6212-531-005-10	PIN/IDLEGEAR	*	1					
7	6911-129-083-00	CAP,SEALING	*	1 -202039					
7A	6209-610-008-00	CUP/SEALING/12	*	1 202040-					
8	6211-258-001-00	SEAL,BEARING CAP	*	4					
9	6211-258-002-00	SEAL,BEARING CAP/7	*	2					
10	6211-510-002-00	METAL,CRANK	*	1					
11	6211-511-003-00	BEARING/CRANK/UPPER	*	3					
12	6211-511-004-00	BEARING/CRANK/LOWER	*	3					
13	6211-599-001-10	BEARING,THRUST CRANK	*	2					
14	6209-625-001-00	SEAL,OIL	*	1 -185627					
14A	6209-625-012-00	OILSEAL	*	1 185628-					
15	6209-749-001-10	PIN,TUBE	*	2 -140551					
15A	6209-749-001-20	PIN/TUBE	*	2 140552-		1			
16	6213-129-006-00	PIN/STRAIGHT	*	2					
17	6213-129-005-00	PIN/STRAIGHT	*	2					
18	6904-110-840-00	STUD/M8X40	*	1					
19	6904-110-818-00	STUD	*	1					
20	6894-453-344-00	DOWEL	*	2 -125999					
20A	6294-453-002-00	DOWEL	*	2 126000-					
21	6909-902-299-00	NIPPLE	*	1					
22	6213-721-001-00	PIPE,WATER DRAIN	*	1					
23	6211-291-001-10	COVER,INJ PUMP	*	1					

FIG. 5 CYLINDER BLOCK

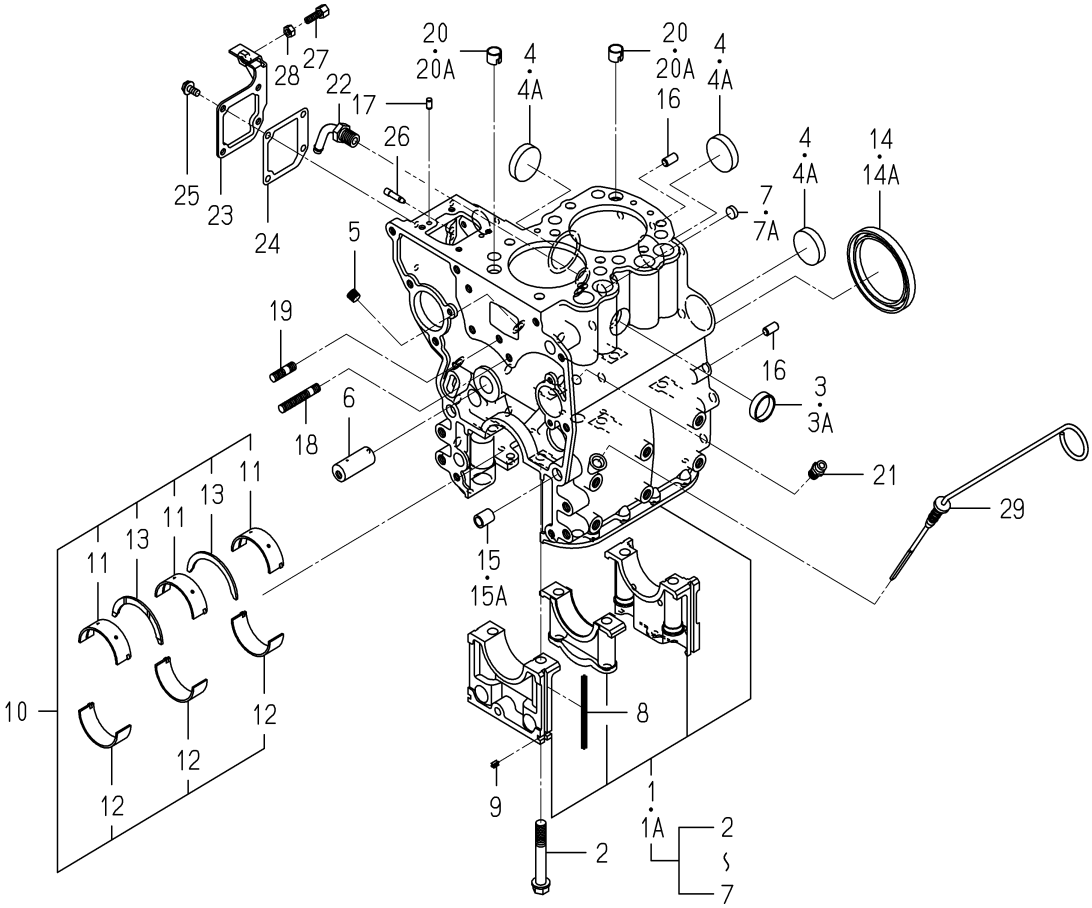

6003-201L-0100

KEY	PART CODE	DESCRIPTION	SPC	TYPE OF MODEL E262G		ITC	COL	GRP	REMARKS
24	6211-292-001-20	GASKET/COVER	*	1					
25	V230-360-601-20	FLANGEBOLT	*	4					
26	6215-549-001-10	PIN,STARTING SPRING	*	1					
27	6209-788-001-00	BOLT,ADJUST	*	1					
28	6909-110-406-00	NUT	*	1					
29	6211-760-003-10	LEVELGAGE	*	1					

FIG. 6 BEARING/UNDER SIZE (OPTION)

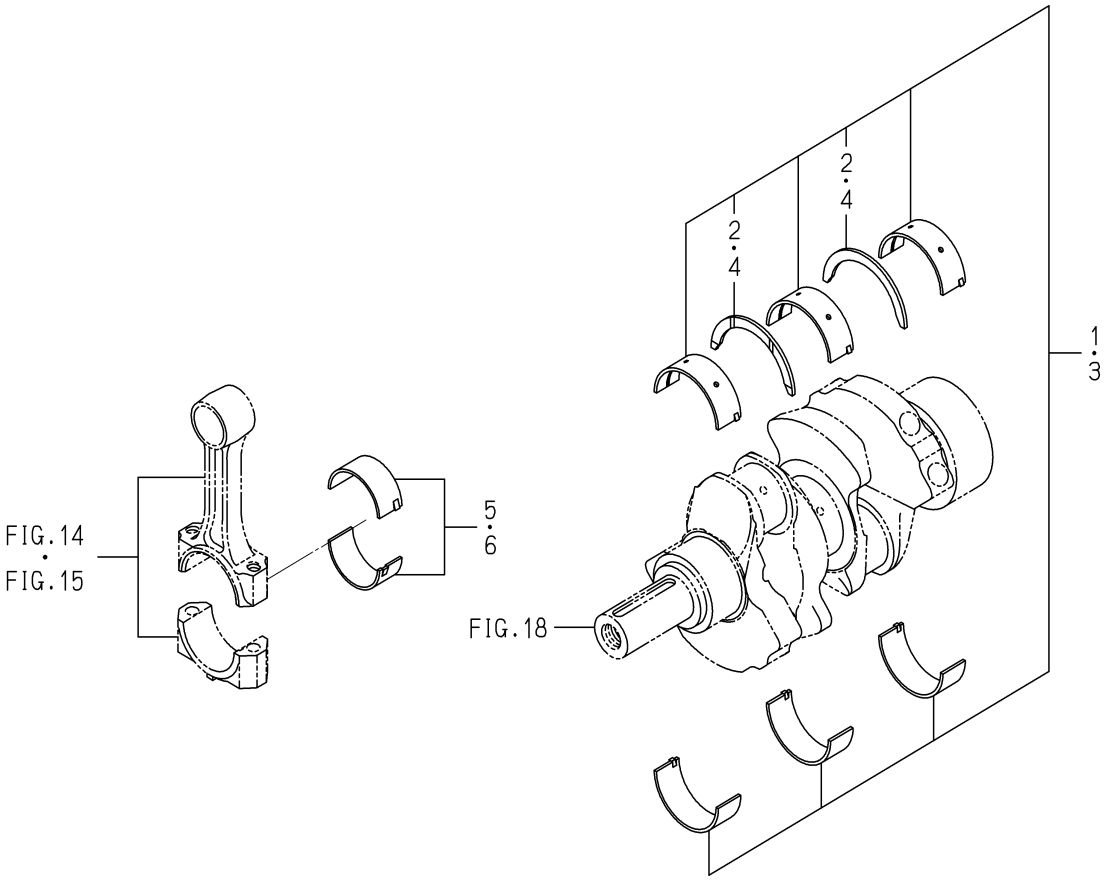

6003-209A-0100

KEY	PART CODE	DESCRIPTION	SPC	TYPE OF MODEL E262G		ITC	COL	GRP	REMARKS
1	6211-540-002-00	METAL,CRANK	T	1					
2	6211-599-001-10	BEARING,THRUST CRANK	T	2					
3	6211-560-002-00	METAL,CRANK	T	1					
4	6211-599-001-10	BEARING,THRUST CRANK	T	2					
5	6212-274-016-00	BEARING/CONNECTING R	T	2					
6	6212-276-016-00	BEARING/CONNECTING R	T	2					

FIG. 7 OIL PAN

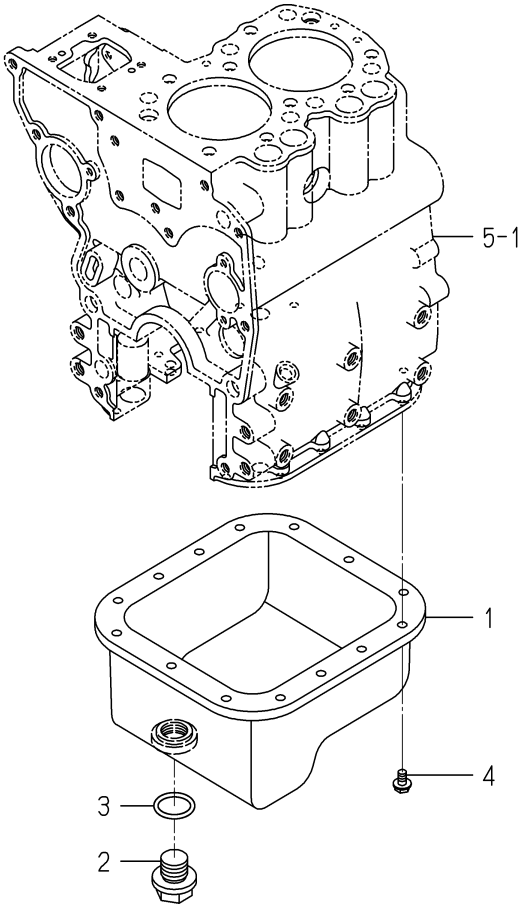

6003-210F-0100

KEY	PART CODE	DESCRIPTION	SPC	TYPE OF MODEL E262G		ITC	COL	GRP	REMARKS
1	6211-361-019-10	PAN,OIL COMP	*	1					
2	6209-600-002-00	PLUG/20	*	1					
3	6209-623-001-00	RING,0/G25	*	1					
4	V230-360-601-00	FLANGEBOLT	*	14					

FIG. 8 REAR PLATE

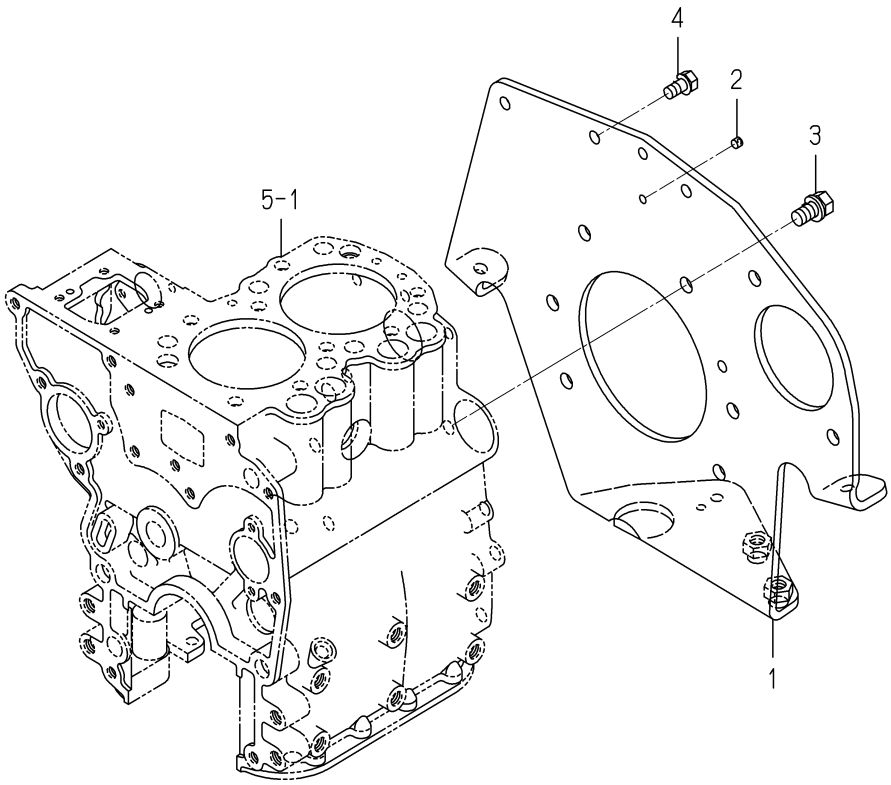

6003-220D-0100

KEY	PART CODE	DESCRIPTION	SPC	TYPE OF MODEL E262G		ITC	COL	GRP	REMARKS
1	6211-340-001-30	PLATE/REAR COMP	*	1 -203592					
2	6211-342-001-30	POINTER	*	1 -203592					
3	6901-911-020-00	BOLT,SEMS/M10X20	*	6 -203592					
4	6901-910-816-00	BOLT,SEMS/M8X16	*	2 -203592					

FIG. 9 REAR PLATE

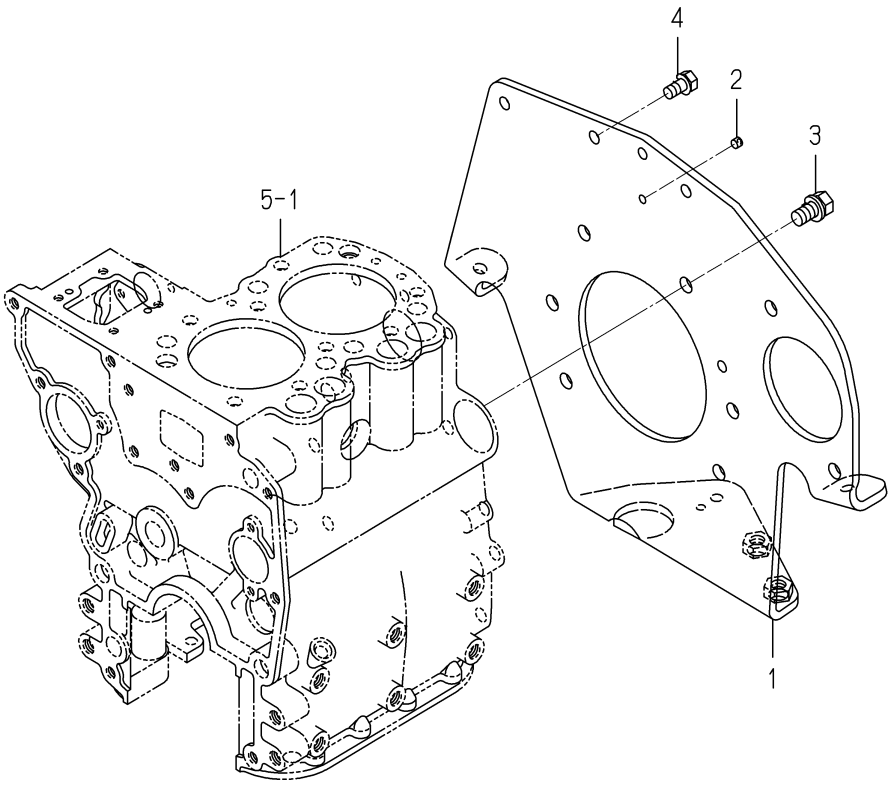

6003-220G-0100

KEY	PART CODE	DESCRIPTION	SPC	TYPE OF MODEL E262G		ITC	COL	GRP	REMARKS
1	6211-340-002-30	PLATE/REAR COMP	*	1 203593-					
2	6211-342-001-30	POINTER	*	1 203593-					
3	6901-911-020-00	BOLT,SEMS/M10X20	*	6 203593-					
4	6901-910-816-00	BOLT,SEMS/M8X16	*	2 203593-					

FIG. 10 TIMING GEAR CASE

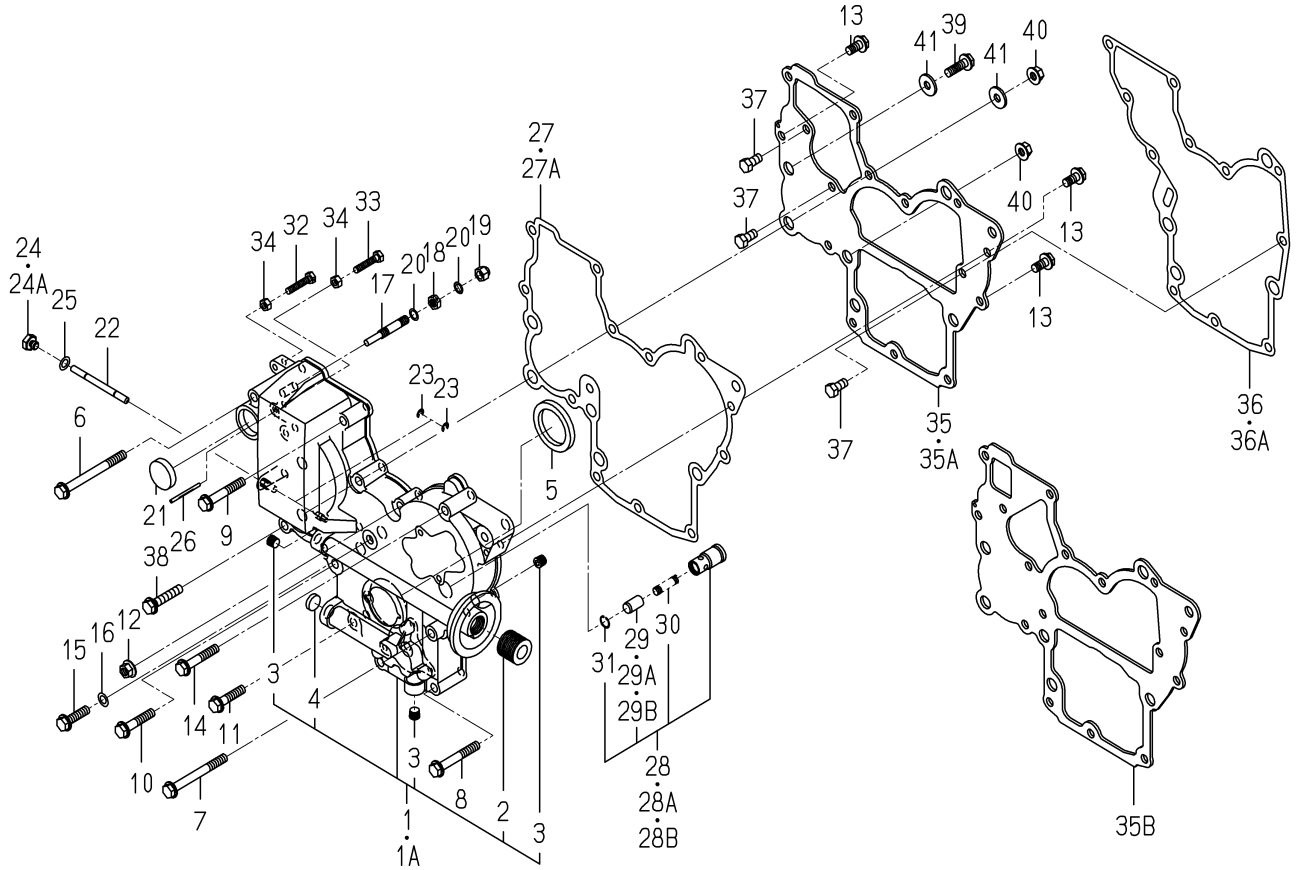

6003-240C-0100,6003-240C-0200

KEY	PART CODE	DESCRIPTION	SPC	TYPE OF MODEL E262G		ITC	COL	GRP	REMARKS
1	6211-310-006-20	GEARCASE ASSY	*	1 -150775					
1A	6211-310-006-30	GEARCASE ASSY	*	1 150776-		1			
2	6213-319-001-00	CONNECTOR,OIL FILTER	*	1					
3	6509-605-019-10	PLUG	*	3					
4	6209-610-002-10	CUP/SEALING/16	*	1					
5	6209-625-002-00	SEAL,OIL	*	1					
6	V231-360-808-50	FLANGEBOLT	*	1					
7	V231-360-807-50	FLANGEBOLT	*	1					
8	V231-360-805-50	FLANGEBOLT	*	2					
9	V231-360-805-00	FLANGEBOLT	*	2					
10	V231-360-804-00	FLANGEBOLT	*	1					
11	V231-360-803-50	FLANGEBOLT	*	1					
12	3817-401-001-00	NUT/M08	*	1					
13	V231-360-801-60	FLANGEBOLT	*	3					
14	V231-360-804-50	FLANGEBOLT	*	1					
15	V231-360-803-00	FLANGEBOLT	*	1					
16	6209-500-003-00	WASHER/08X14X01	*	1					
17	6215-546-001-00	STOPPER,FULL-LOAD	*	1					
18	6209-409-001-00	NUT/M8	*	1					
19	V341-120-008-00	NUT,CAP/M 8	*	1					
20	6209-920-002-00	PACKING	*	2					
21	3625-540-004-00	CAP,BLANK/30	*	1					
22	6215-542-001-10	PIN/ARM	*	1					
23	V710-140-004-00	RING,SNAP/ 4 E	*	2					
24	6909-202-308-00	PLUG	*	1 -205580					
24A	6209-600-004-00	PLUG/SCREW	*	1 205581-					
25	6209-500-003-00	WASHER/08X14X01	*	1					
26	6209-740-001-00	PIN,GROOVE	*	1					
27	6211-312-001-20	GASKET/GEARCASE	*	1 -148221					
27A	6211-312-001-30	GASKET/GEARCASE	*	1 148222-		1			

FIG. 10 TIMING GEAR CASE

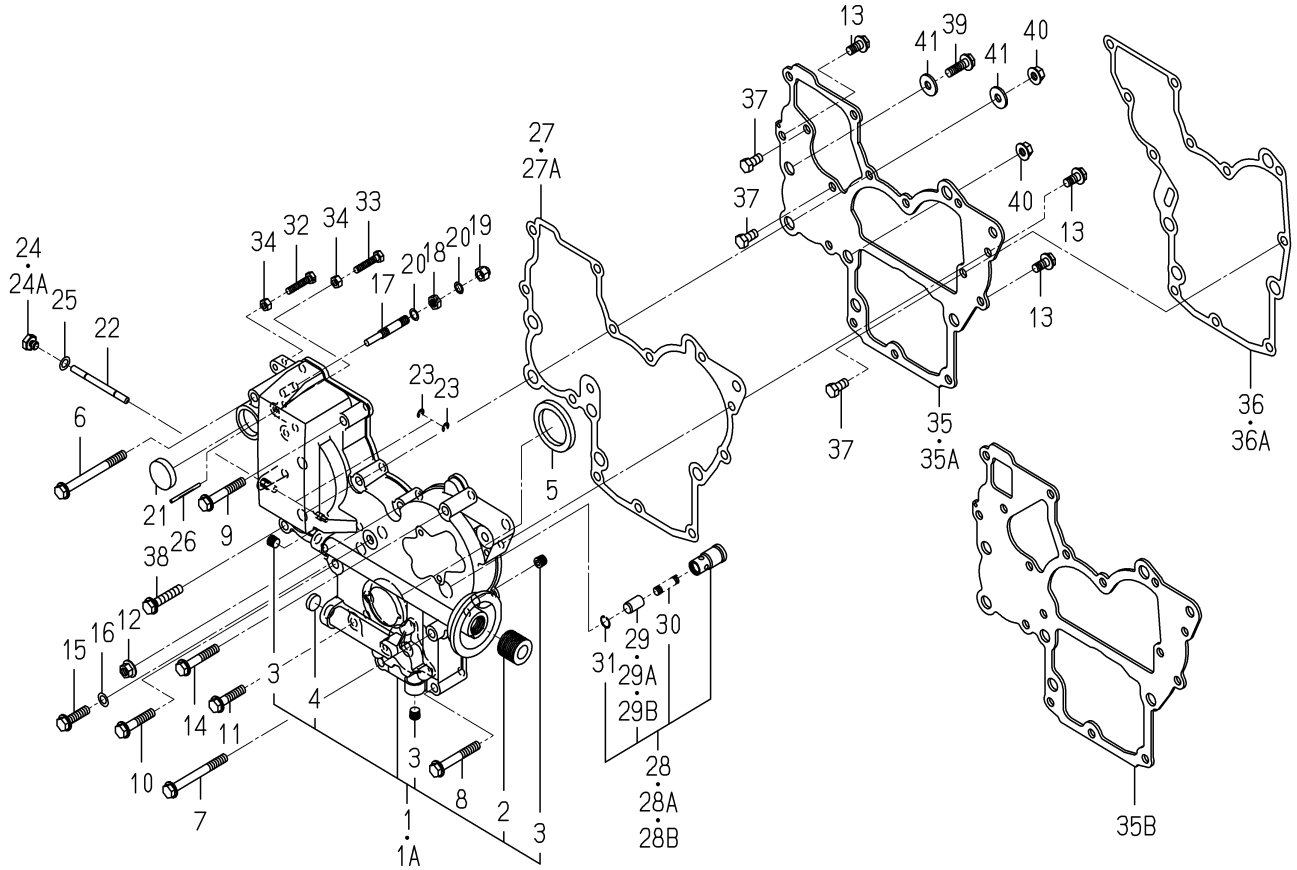

6003-240C-0100,6003-240C-0200

KEY	PART CODE	DESCRIPTION	SPC	TYPE OF MODEL E262G		ITC	COL	GRP	REMARKS
28	6213-160-002-00	VALVE/RELIEF ASSY	*	1 -160774					
28A	6213-160-002-10	VALVE/RELIEF ASSY	*	1 -162896		1			
28B	6213-160-002-20	VALVE/RELIEF ASSY	*	1 162897-		1			
29	6213-161-001-00	PISTON/RELIEF VALVE	*	1 -160774					
29A	6213-161-001-10	PISTON/VALVE/RELIEF	*	1 -162896		1			
29B	6213-161-001-20	PISTON/VALVE/RELIEF	*	1 162897-		1			
30	6213-164-001-00	SPRING/RELIEF VALVE	*	1					
31	V705-140-012-00	RING,SNAP/12 C	*	1					
32	6209-050-001-00	BOLT/M6	*	1					
33	6209-050-002-00	BOLT/M6	*	1					
34	6909-110-406-00	NUT	*	2					
35	6211-311-005-10	PLATE,FRONT	*	1 -197034					
35A	6211-311-005-20	PLATE/FRONT	*	1 -210418		1			
35B	6211-311-005-30	PLATE/FRONT	*	1 210419-		1			
36	6211-312-002-20	GASKET/PLATE	*	1 -148221					
36A	6211-312-002-30	GASKET/PLATE	*	1 148222-		1			
37	6902-050-816-00	BOLT	*	3					
38	V231-360-804-00	FLANGEBOLT	*	2					
39	V231-360-802-50	FLANGEBOLT	*	1					
40	3817-401-001-00	NUT/M08	*	2					
41	1373-121-001-00	WASHER/9X22X2	*	2					

FIG. 11 HANGER

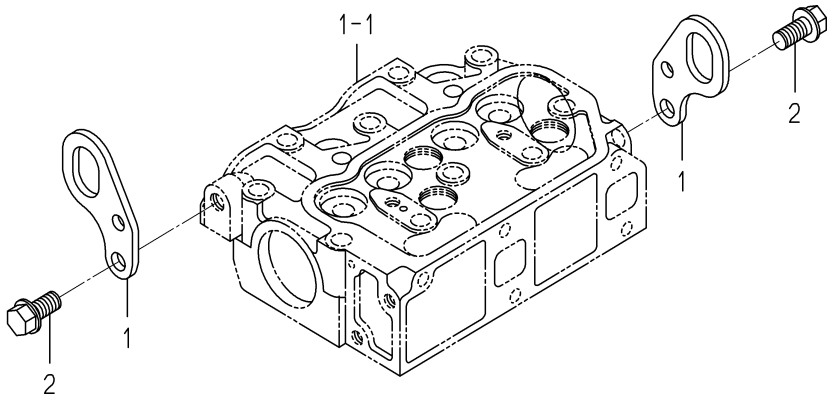

6003-290 -0100

KEY	PART CODE	DESCRIPTION	SPC	TYPE OF MODEL		ITC	COL	GRP	REMARKS
				E262G					
1	6211-777-007-30	HANGER	*	2		1			
2	V233-361-002-00	FLANGEBOLT	*	2					

FIG. 12 VALVE

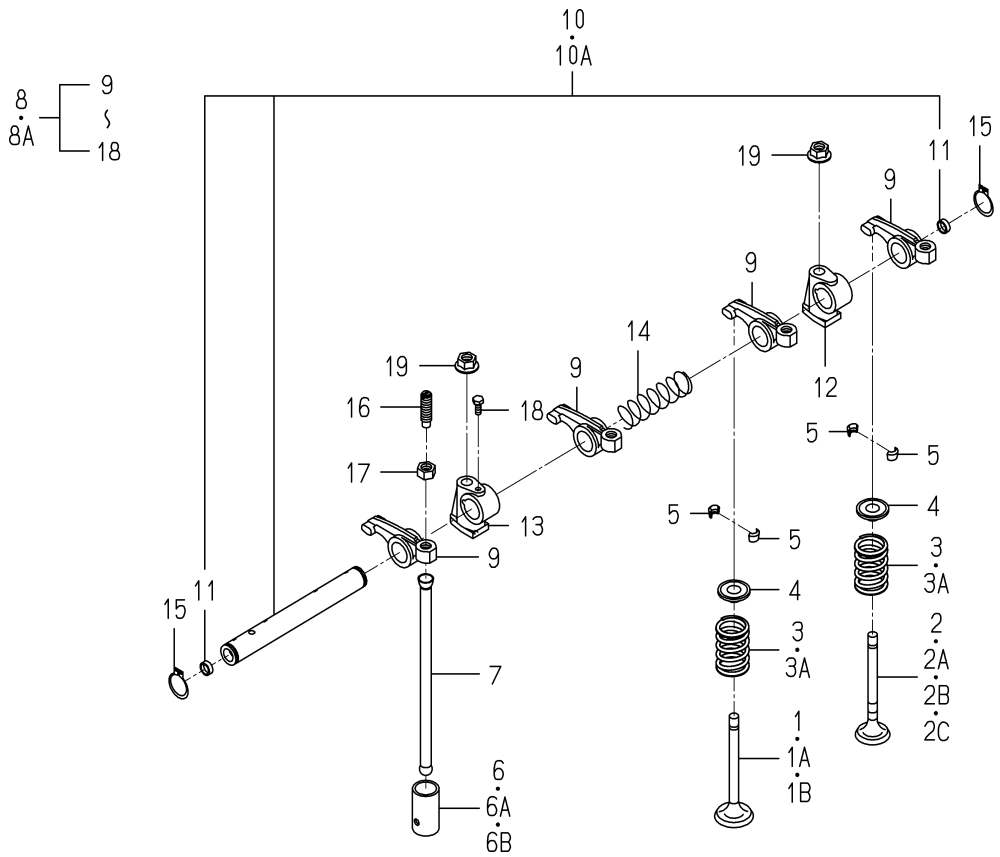

6003-301A-0100

KEY	PART CODE	DESCRIPTION	SPC	TYPE OF MODEL E262G		ITC	COL	GRP	REMARKS
1	6212-551-001-00	VALVE,INTAKE	*	2 -215014					
1A	6212-551-001-10	VALVE/INTAKE	*	2 -240792		1			
1B	6212-551-028-00	VALVE/INTAKE	*	2 240793-					
2	6212-552-001-00	VALVE,EXHAUST	*	2 -162896					
2A	6212-552-001-10	VALVE/EXHAUST	*	2 -215014		1			
2B	6212-552-001-20	VALVE/EXHAUST	*	2 -240792		1			
2C	6212-552-014-00	VALVE/EXHAUST	*	2 240793-					
3	6212-561-001-00	SPRING/VALVE	*	4 -212419					
3A	6212-561-001-10	SPRING/VALVE	*	4 212420-		1			
4	6212-563-001-00	SEAT,VALVE SPRING	*	4					
5	6212-565-001-00	CUTTER,VALVE	*	8					
6	6212-571-001-10	TAPPET	*	4 -140829					
6A	6212-571-003-00	TAPPET	*	4 -212167					
6B	6212-571-006-00	TAPPET	*	4 212168-					
7	6212-575-001-00	ROD,PUSH	*	4					
8	6212-600-003-00	SHAFT,ROCKER	*	1 -188643					
8A	6212-600-003-10	ROCKERSHAFT ASSY	*	1 188644-		1			
9	6212-611-004-10	ROCKERARM	*	4					
10	6212-620-002-10	SHAFT,ROCKER ARMASSY	*	1 -188643					
10A	6212-620-002-20	SHAFT/ROCKERARM ASSY	*	1 188644-		1			
11	6212-626-002-10	PLUG	*	2					
12	6212-628-004-00	BRACKET ROCKER SHAFT	*	1					
13	6212-628-005-00	BRACKET,ROCKER SHAFT	*	1					
14	6209-940-004-00	SPRING	*	1					
15	V704-140-016-00	RING,SNAP/16 C	*	2					
16	6212-616-002-00	SCREW ADJUST	*	4					
17	6209-409-003-00	NUT	*	4					
18	6209-000-002-00	BOLT	*	1					
19	3817-401-001-00	NUT/M08	*	2					

FIG. 13 CAM SHAFT

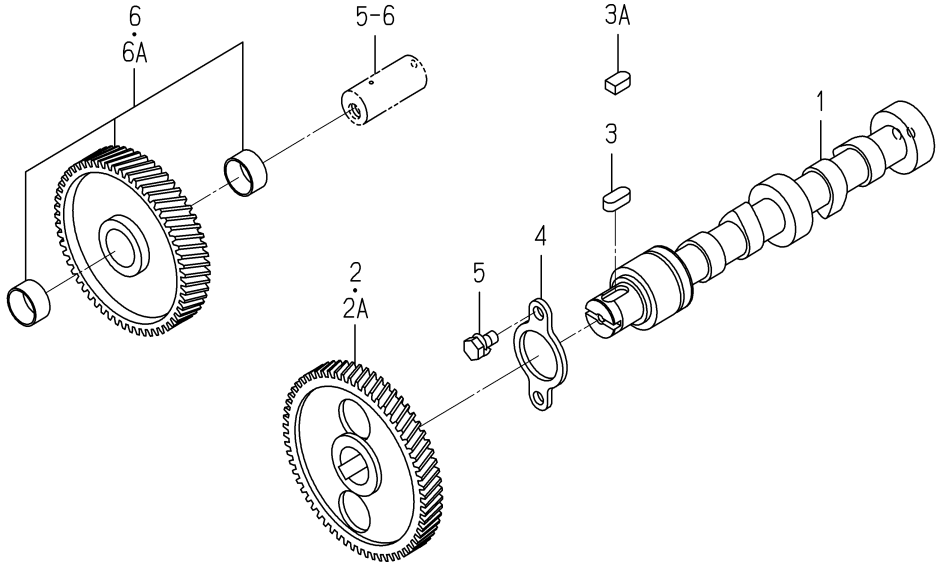

6003-310A-0100

KEY	PART CODE	DESCRIPTION	SPC	TYPE OF MODEL E262G		ITC	COL	GRP	REMARKS
1	6212-511-004-00	SHAFT,CAM	*	1					
2	6212-522-003-00	GEAR,CAMSHAFT	*	1 -207271					
2A	6212-522-010-00	GEAR/CAMSHAFT	*	1 207272-					
3	6908-000-716-00	KEY	*	1 -204888					
3A	6209-730-005-00	KEY/07X05X09	*	1 204889-					
4	6212-535-001-00	PLATE,THRUST	*	1					
5	6901-910-612-00	BOLT,SEMS/M6X12	*	2					
6	6212-523-003-00	GEAR,IDLE	*	1 -206825					
6A	6212-523-023-00	GEAR/IDLE ASSY	*	1 206826-					

FIG. 14 PISTON

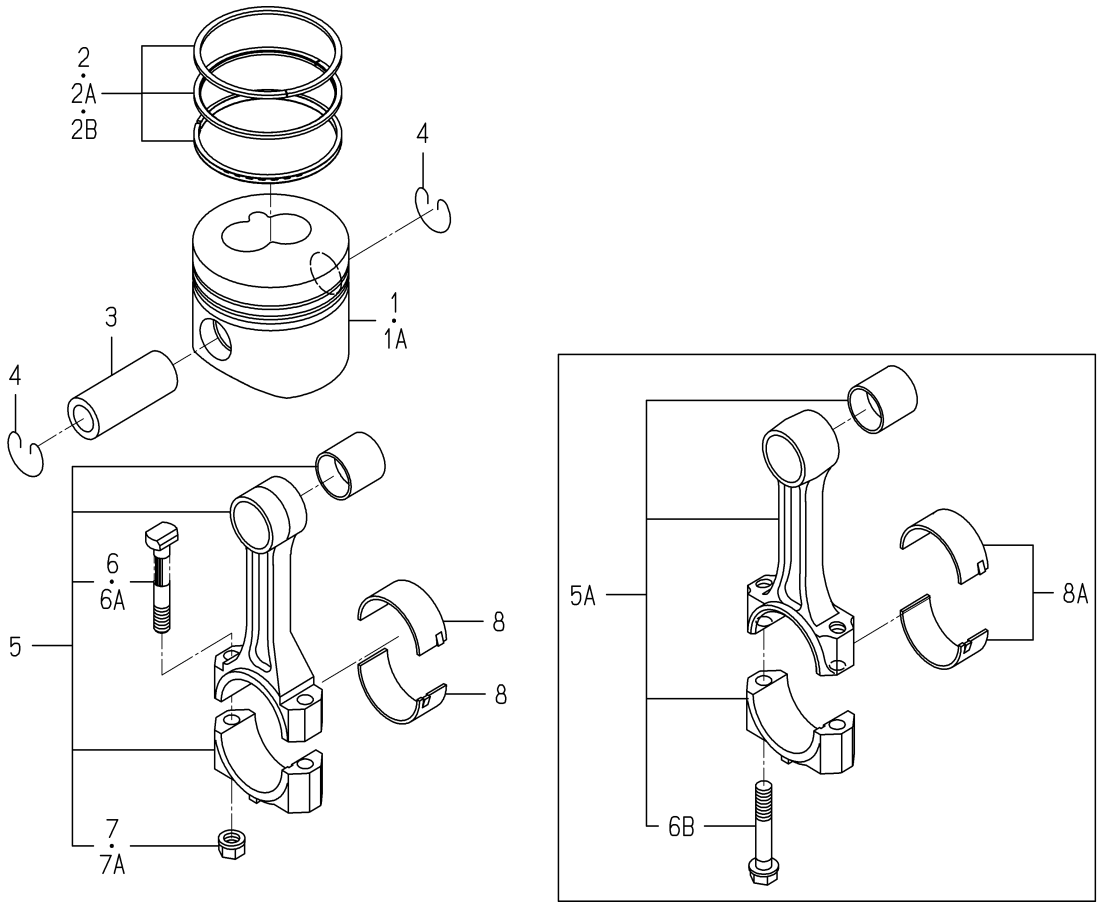

6003-340D-0100

KEY	PART CODE	DESCRIPTION	SPC	TYPE OF MODEL E262G		ITC	COL	GRP	REMARKS
1	6212-111-015-00	PISTON	*	2 -121372					
1A	6212-111-015-10	PISTON	*	2 -252844		1			
2	6212-121-008-00	RING(PISTON) SET	*	2 -180837					
2A	6212-121-008-10	RING/PISTON SET	*	2 -189686		1			
2B	6212-121-008-20	RING/PISTON SET	*	2 -252844		1			
3	6212-211-001-10	PIN,PISTON	*	2 -252844					
4	6209-587-001-00	RING,SNAP	*	4 -252844					
5	6212-230-003-00	ROD,CONNECTING	*	2 -219825					
5A	6212-230-003-10	CONNECTINGROD ASSY	*	2 -252844		3			
6	6212-235-001-00	BOLT,CONN ROD	*	4 -142430					
6A	6212-235-001-10	BOLT/CONNECTINGROD	*	4 -219825		1			
6B	6212-235-005-00	BOLT/CONNECTINGROD	*	4 -252844					
7	6894-240-902-00	NUT,FLANGE	*	4 -194270					
7A	6209-440-003-00	NUT/FLANGE	*	4 -219825					
8	6212-261-006-00	BEARING/CONN ROD	*	4 -212644					
8A	6212-271-006-00	BEARING/CONNECTING R	*	2 -252844					

FIG. 15 PISTON

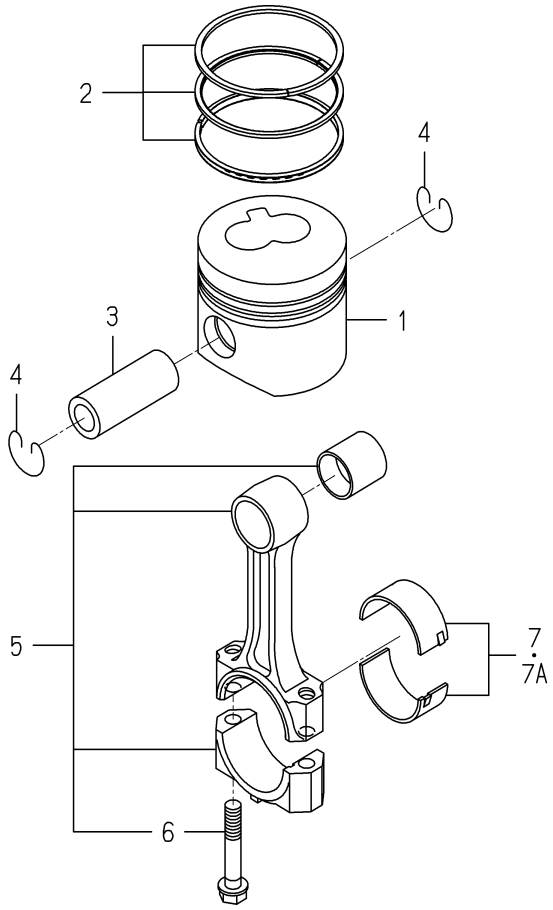

6003-340I-0100

KEY	PART CODE	DESCRIPTION	SPC	TYPE OF MODEL E262G		ITC	COL	GRP	REMARKS
1	6212-111-080-10	PISTON	*	2 252845-					
2	6212-121-008-20	RING/PISTON SET	*	2 252845-					
3	6212-211-001-10	PIN,PISTON	*	2 252845-					
4	6209-587-001-00	RING,SNAP	*	4 252845-					
5	6212-230-003-10	CONNECTINGROD ASSY	*	2 252845-					
6	6212-235-005-00	BOLT/CONNECTINGROD	*	4 252845-					
7	6212-271-006-00	BEARING/CONNECTING R	*	2 -258015					
7A	6212-271-016-00	BEARING/CONNECTING R	*	2 258016-					

FIG. 16 PISTON/OVER SIZE (OPTION)

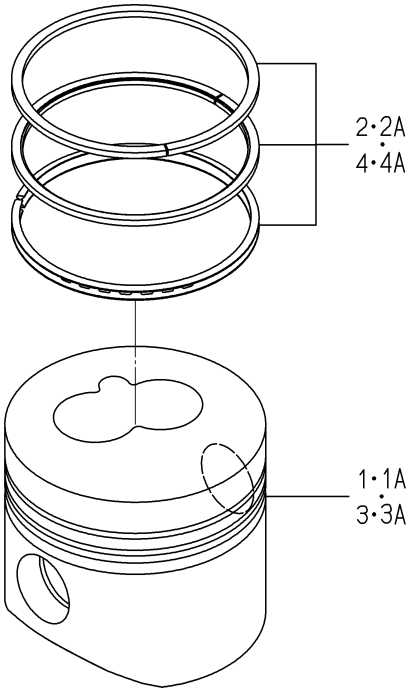

6003-349D-0100

KEY	PART CODE	DESCRIPTION	SPC	TYPE OF MODEL E262G		ITC	COL	GRP	REMARKS
1	6212-114-015-00	PISTON/OV0.50	T	2 -121372					
1A	6212-114-015-10	PISTON/OV	T	2 -252844		1			
2	6212-124-008-00	RING(PISTON/OV50)SET	T	2 -180837					
2A	6212-124-008-10	RING/PISTON/OV SET	T	2 -252844		1			
3	6212-116-015-00	PISTON(OV/100)	T	2 -121372					
3A	6212-116-015-10	PISTON/OV	T	2 -252844		1			
4	6212-126-008-00	RING(PISTON/OV)SET	T	2 -180837					
4A	6212-126-008-10	RING/PISTON/OV SET	T	2 -252844		1			

FIG. 17 PISTON/OVER SIZE (OPTION)

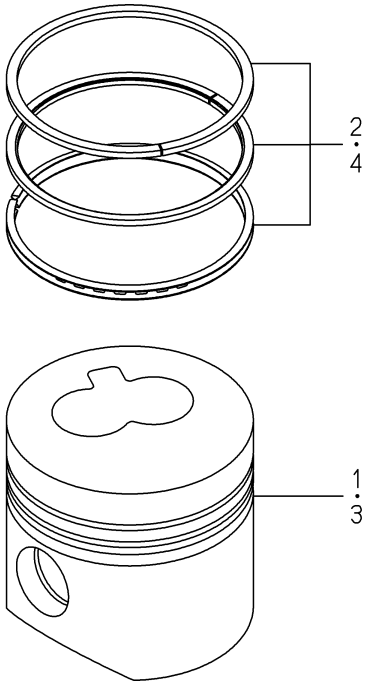

6003-349H-0100

KEY	PART CODE	DESCRIPTION	SPC	TYPE OF MODEL E262G		ITC	COL	GRP	REMARKS
1	6212-114-080-10	PISTON/OV	T	2 252845-					
2	6212-124-008-10	RING/PISTON/OV SET	T	2 252845-					
3	6212-116-080-10	PISTON/OV	T	2 252845-					
4	6212-126-008-10	RING/PISTON/OV SET	T	2 252845-					

FIG. 18 CRANK SHAFT

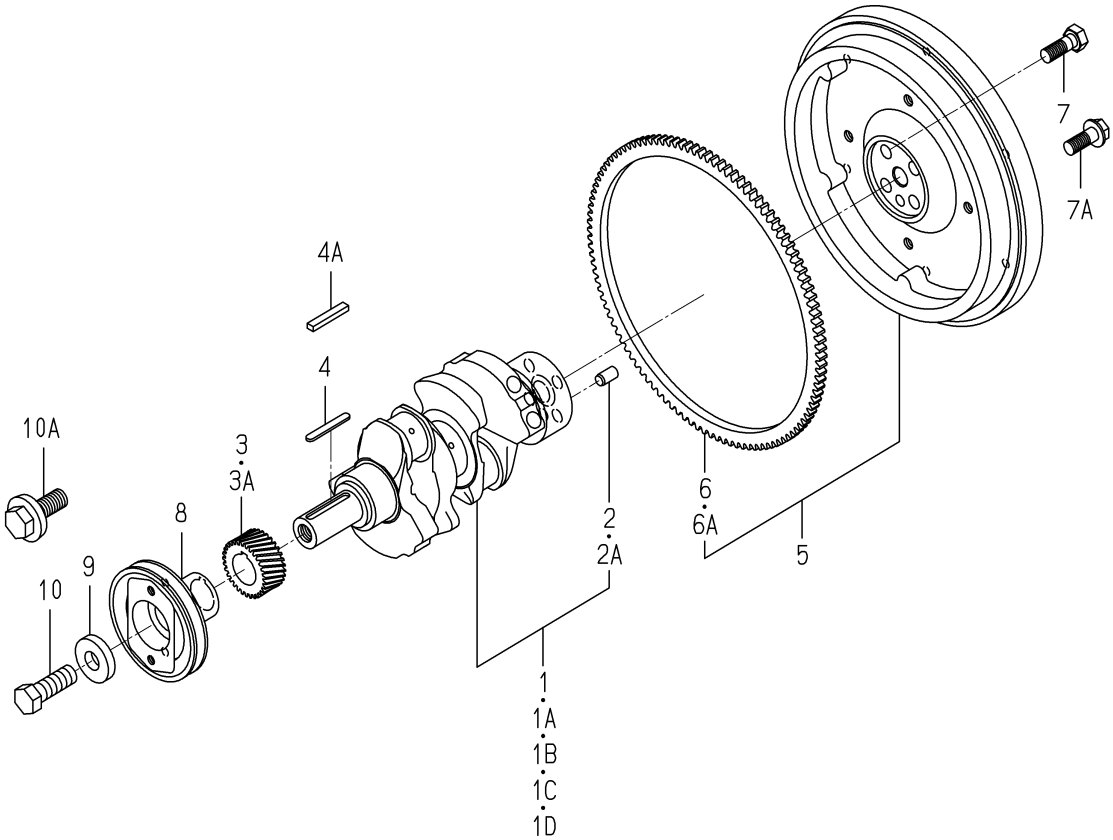

6003-350F-0100

KEY	PART CODE	DESCRIPTION	SPC	TYPE OF MODEL E262G		ITC	COL	GRP	REMARKS
1	6212-310-010-00	SHAFT,CRANK	*	1 -113377					
1A	6212-310-010-10	CRANKSHAFT ASSY	*	1 -177349		1			
1B	6212-310-010-20	CRANKSHAFT ASSY	*	1 -191904		1			
1C	6212-310-010-30	CRANKSHAFT ASSY	*	1 -239510		1			
1D	6212-310-010-50	CRANKSHAFT ASSY	*	1 239511-		1			
2	6908-161-018-00	PIN	*	1 -123469					
2A	V523-101-001-80	PIN	*	1 123470-					
3	6212-521-002-00	GEAR,CRANK SHAFT	*	1 -206918					
3A	6212-521-008-00	GEAR/CRANK	*	1 206919-					
4	6908-000-750-00	KEY	*	1 -205580					
4A	6209-730-006-00	KEY/07X05X43	*	1 205581-					
5	6212-330-013-30	FLYWHEEL	*	1					
6	6212-333-001-00	GEAR,RING	*	1 -134270					
6A	6212-333-003-00	RINGGEAR	*	1 134271-					
7	6209-000-013-00	BOLT	*	4 -194421					
7A	6209-046-015-00	BOLT/FLANGE	*	4 194422-					
8	6212-371-014-20	PULLEY	*	1					
9	6212-379-001-00	WASHER	*	1 -261516					
10	6901-066-645-00	BOLT	*	1 -261516					
10A	6209-000-043-00	BOLT/CRANK	*	1 261517-					

FIG. 19 OIL PUMP

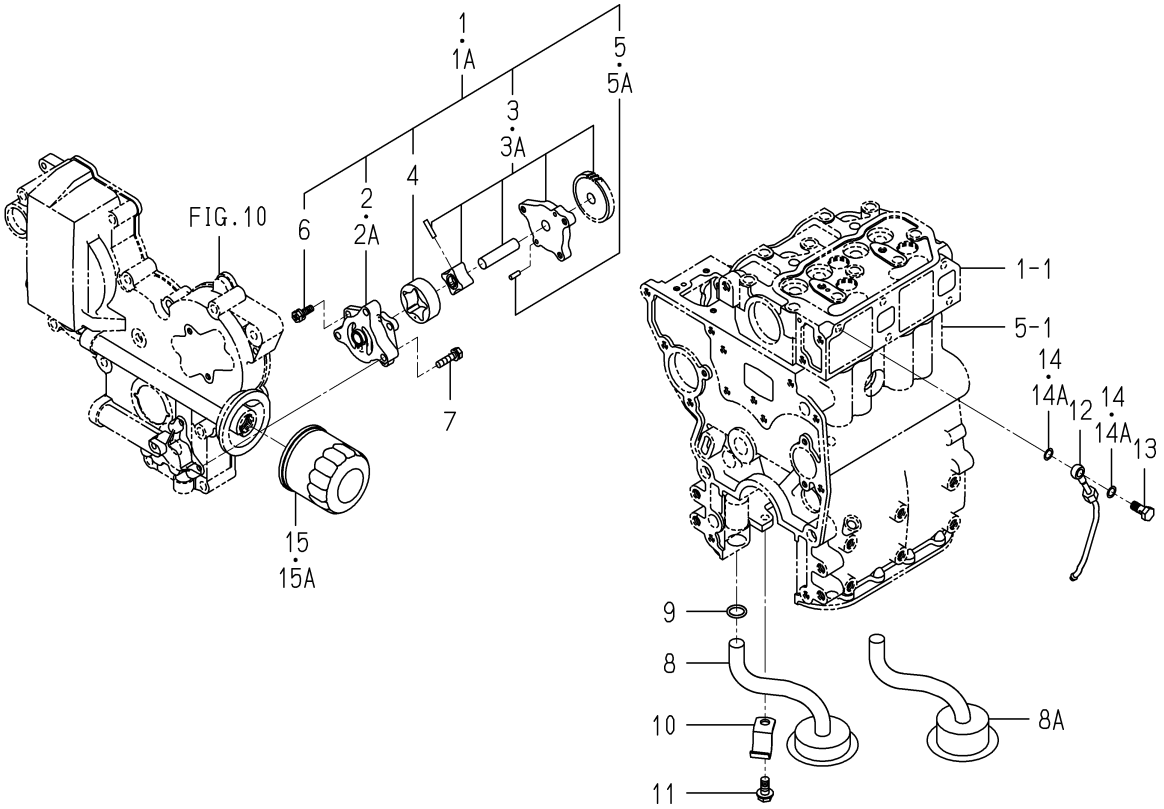

6003-401A-0100

KEY	PART CODE	DESCRIPTION	SPC	TYPE OF MODEL E262G		ITC	COL	GRP	REMARKS
1	6213-100-003-20	PUMP,OIL ASSY	*	1 -146749					
1A	6213-100-003-30	OILPUMP ASSY	*	1 146750-		1			
2	6213-111-001-20	BODY/OILPUMP	*	1 -189679					
2A	6213-111-001-30	BODY/OILPUMP	*	1 189680-		3			
3	6213-120-003-00	GEAR/OILPUMP ASSY	*	1 -146755					
3A	6213-120-003-20	GEAR/OILPUMP ASSY	*	1 146756-		1			
4	6213-125-001-00	ROTOR/OUTER	*	1					
5	6908-160-408-00	PIN/STRAIGHT	*	2 -189679					
5A	6213-129-003-00	PIN/STRAIGHT	*	2 189680-					
6	6213-119-001-00	BOLT/WS	*	3					
7	6901-910-625-00	BOLT	*	3					
8	6213-140-004-10	STRAINER	*	1 -194421					
8A	6213-140-004-20	STRAINER COMP	*	1 194422-		1			
9	V720-102-401-50	O-RING/P15	*	1					
10	6213-149-001-00	CLAMP,STRAINER	*	1					
11	V231-360-801-60	FLANGEBOLT	*	1					
12	6213-311-003-10	PIPE,OIL	*	1					
13	6909-906-105-10	BOLT,JOINT	*	1					
14	6909-920-843-00	PACKING	*	2 -135557					
14A	6209-920-002-00	PACKING	*	2 135558-					
15	6213-240-002-00	CARTRIDGE,OIL FILTER	*	1 -159738					
15A	6213-240-002-10	CARTRIDGE/OILFILTER	*	1 159739-		1			

FIG. 20 WATER PUMP

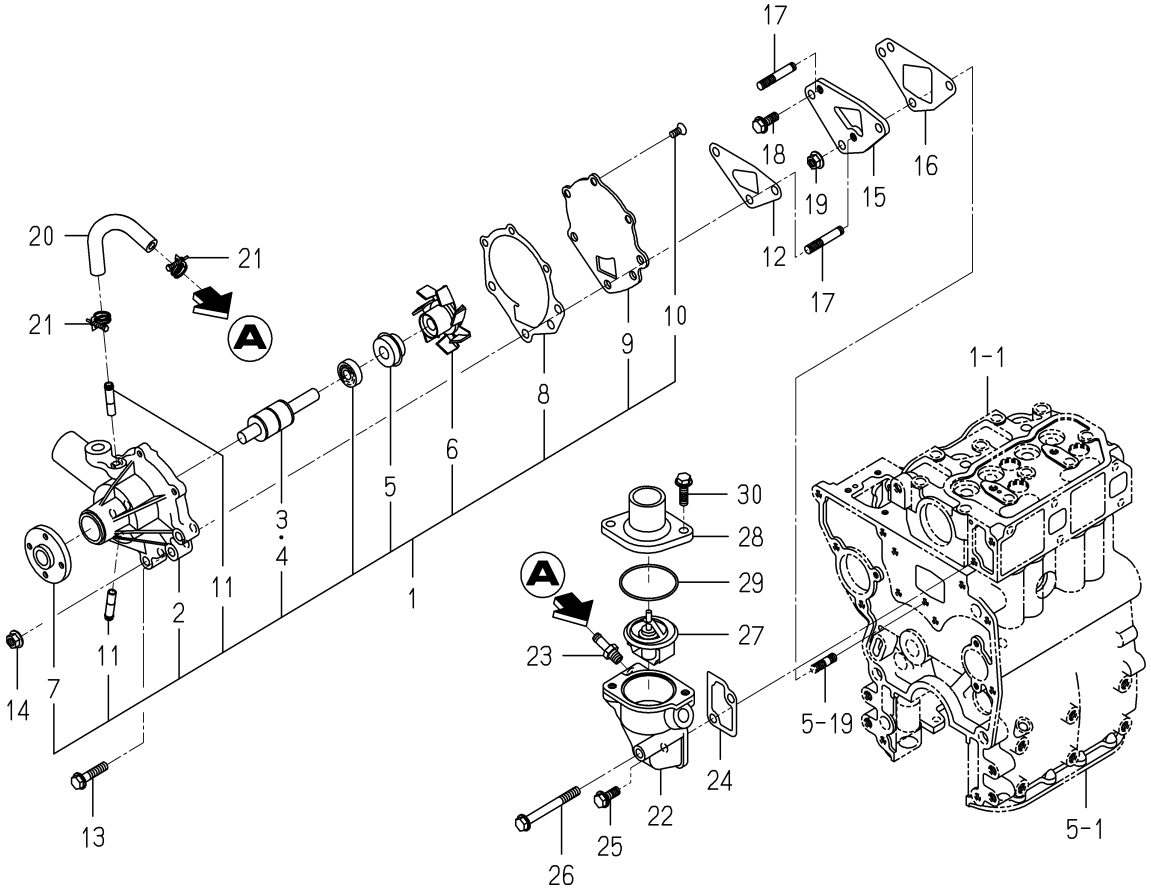

6003-420B-0100

KEY	PART CODE	DESCRIPTION	SPC	TYPE OF MODEL E262G		ITC	COL	GRP	REMARKS
1	6213-610-005-30	WATERPUMP ASSY	*	1 -116762					
2	6213-611-003-20	BODY/WATERPUMP	*	1 -116762					
3	6213-631-002-00	BEARING/WATER PUMP	*	1 -116762					
4	6213-631-005-00	BEARING/WATERPUMP	*	1 -116762					
5	6213-622-002-10	SEAL SET/WATER PUMP	*	1 -116762					
6	6213-621-003-00	ROTOR/WATERPUMP	*	1 -116762					
7	6213-642-002-00	SEAL/WATER PUMPPULLE	*	1 -116762					
8	6213-613-002-10	GASKET	*	1 -116762					
9	6213-612-004-00	PLATE/WATER PUMP	*	1 -116762					
10	6213-619-003-00	SCREW/WATER PUMP	*	3 -116762					
11	6213-619-002-00	PIPE/WATER PUMP	*	2 -116762					
12	6213-614-003-10	GASKET/WATER PUMP	*	1 -116762					
13	V231-360-804-50	FLANGEBOLT	*	1 -116762					
14	3817-401-001-00	NUT/M08	*	2 -116762					
15	6213-619-005-00	SPACER,WATER PUMP	*	1 -116762					
16	6213-614-006-10	GASKET/SPACER	*	1 -116762					
17	6209-300-002-00	STUD	*	2 -116762					
18	V231-360-802-00	FLANGEBOLT	*	1 -116762					
19	3817-401-001-00	NUT/M08	*	1 -116762					
20	6213-729-001-00	HOSE,RUBBER	*	1 -116762					
21	J061-210-015-00	CLAMP/WIRE/10-15	*	2 -116762					
22	6213-716-001-40	HOUSING/THERMOSTAT	*	1 -116762					
23	6213-721-003-00	PIPE,PUMP HOUSING	*	1 -116762					
24	6213-743-002-10	GASKET/HOUSING	*	1 -116762					
25	V231-360-802-00	FLANGEBOLT	*	1 -116762					
26	V231-360-807-50	FLANGEBOLT	*	1 -116762					
27	6513-770-022-10	THERMOSTAT	*	1 -116762					
28	6213-711-003-20	PIPE,WATER OUTLET	*	1 -116762					
29	V723-102-005-50	O-RING	*	1 -116762					
30	V231-360-802-50	FLANGEBOLT	*	2 -116762					

FIG. 21 WATER PUMP

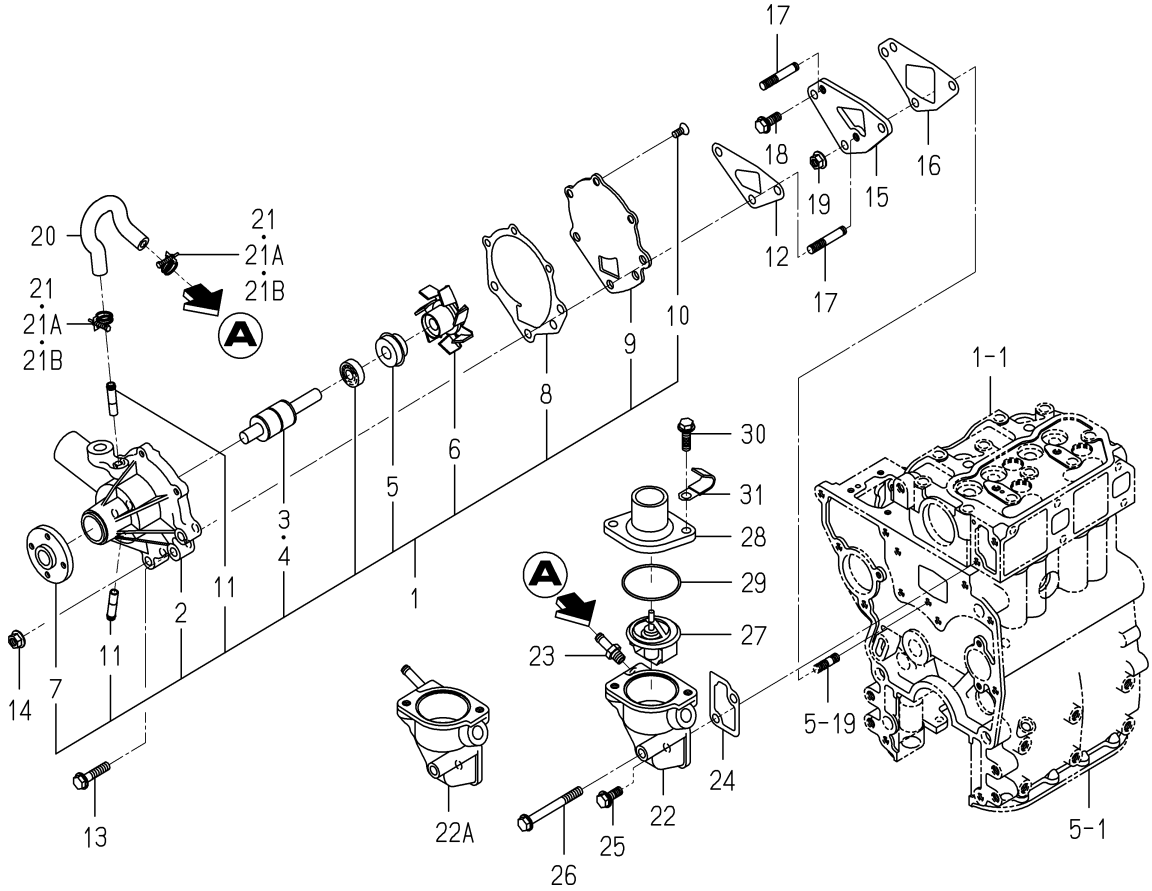

6003-420G-0100

KEY	PART CODE	DESCRIPTION	SPC	TYPE OF MODEL E262G		ITC	COL	GRP	REMARKS
1	6213-610-005-40	WATERPUMP ASSY	*	1 116763-					
2	6213-611-003-20	BODY/WATERPUMP	*	1 116763-					
3	6213-631-002-00	BEARING/WATER PUMP	*	1 116763-					
4	6213-631-005-00	BEARING/WATERPUMP	*	1 116763-					
5	6213-622-002-10	SEAL SET/WATER PUMP	*	1 116763-					
6	6213-621-003-00	ROTOR/WATERPUMP	*	1 116763-					
7	6213-642-002-00	SEAL/WATER PUMPPULLE	*	1 116763-					
8	6213-613-002-10	GASKET	*	1 116763-					
9	6213-612-004-00	PLATE/WATER PUMP	*	1 116763-					
10	6213-619-003-00	SCREW/WATER PUMP	*	3 116763-					
11	6213-619-002-00	PIPE/WATER PUMP	*	2 116763-					
12	6213-614-003-10	GASKET/WATER PUMP	*	1 116763-					
13	V231-360-804-50	FLANGEBOLT	*	1 116763-					
14	3817-401-001-00	NUT/M08	*	2 116763-					
15	6213-619-005-00	SPACER,WATER PUMP	*	1 116763-					
16	6213-614-006-10	GASKET/SPACER	*	1 116763-					
17	6209-300-002-00	STUD	*	2 116763-					
18	V231-360-802-00	FLANGEBOLT	*	1 116763-					
19	3817-401-001-00	NUT/M08	*	1 116763-					
20	6213-729-013-10	HOSE/RUBBER	*	1 116763-					
21	J061-210-015-00	CLAMP/WIRE/10-15	*	2 -198868					
21A	J062-138-148-00	CLIP/HOSE/13.8-14.8	*	2 -198888					
21B	J061-210-015-00	CLAMP/WIRE/10-15	*	2 198889-					
22	6213-716-001-40	HOUSING/THERMOSTAT	*	1 -207142					
22A	6213-716-001-50	HOUSING/THERMOSTAT	*	1 207143-		1			
23	6213-721-003-00	PIPE,PUMP HOUSING	*	1 -208007					
24	6213-743-002-10	GASKET/HOUSING	*	1 116763-					
25	V231-360-802-00	FLANGEBOLT	*	1 116763-					
26	V231-360-807-50	FLANGEBOLT	*	1 116763-					
27	6513-770-022-10	THERMOSTAT	*	1 116763-					

FIG. 21 WATER PUMP

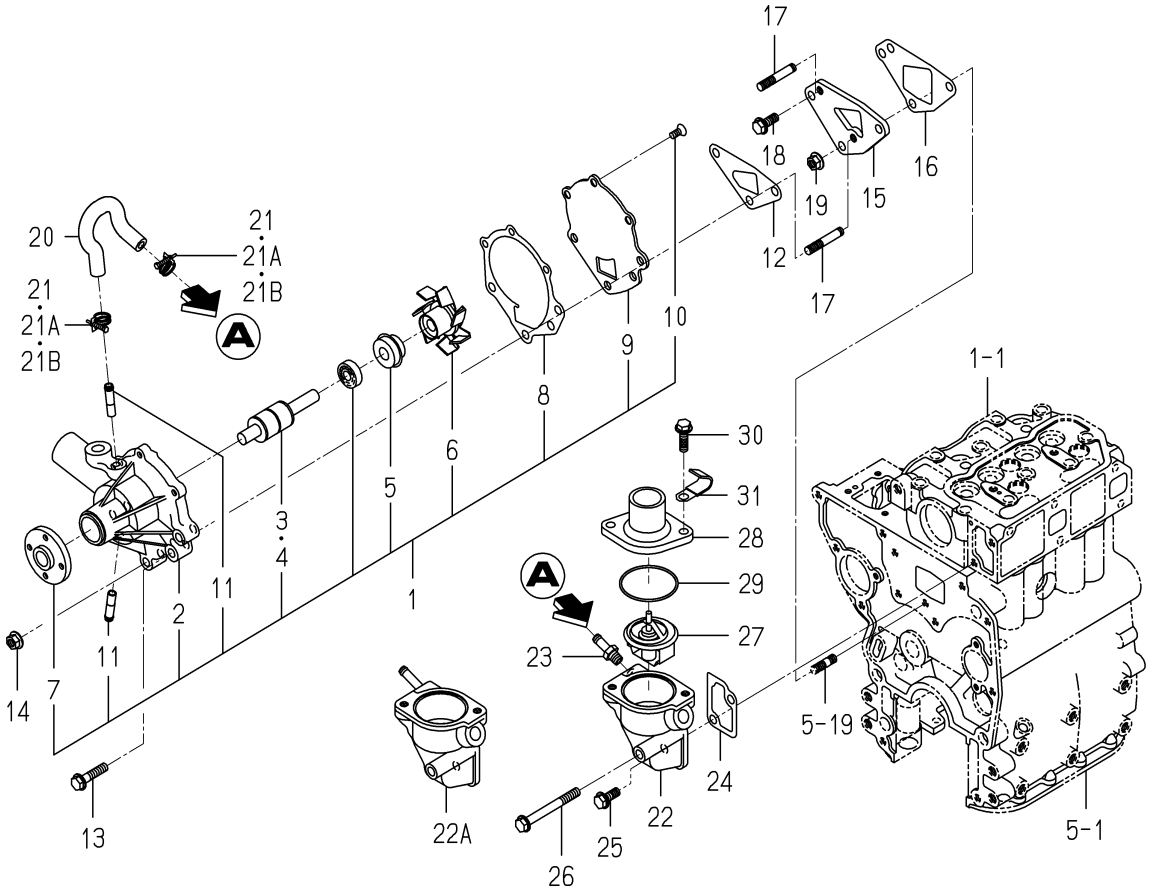

6003-420G-0100

KEY	PART CODE	DESCRIPTION	SPC	TYPE OF MODEL E262G		ITC	COL	GRP	REMARKS
28	6213-711-003-20	PIPE,WATER OUTLET	*	1 116763-					
29	V723-102-005-50	O-RING	*	1 116763-					
30	V231-360-802-50	FLANGEBOLT	*	2 116763-					
31	3747-172-012-00	CLAMP,HARNESS D	*	1 116763-					

FIG. 22 COOLING FAN

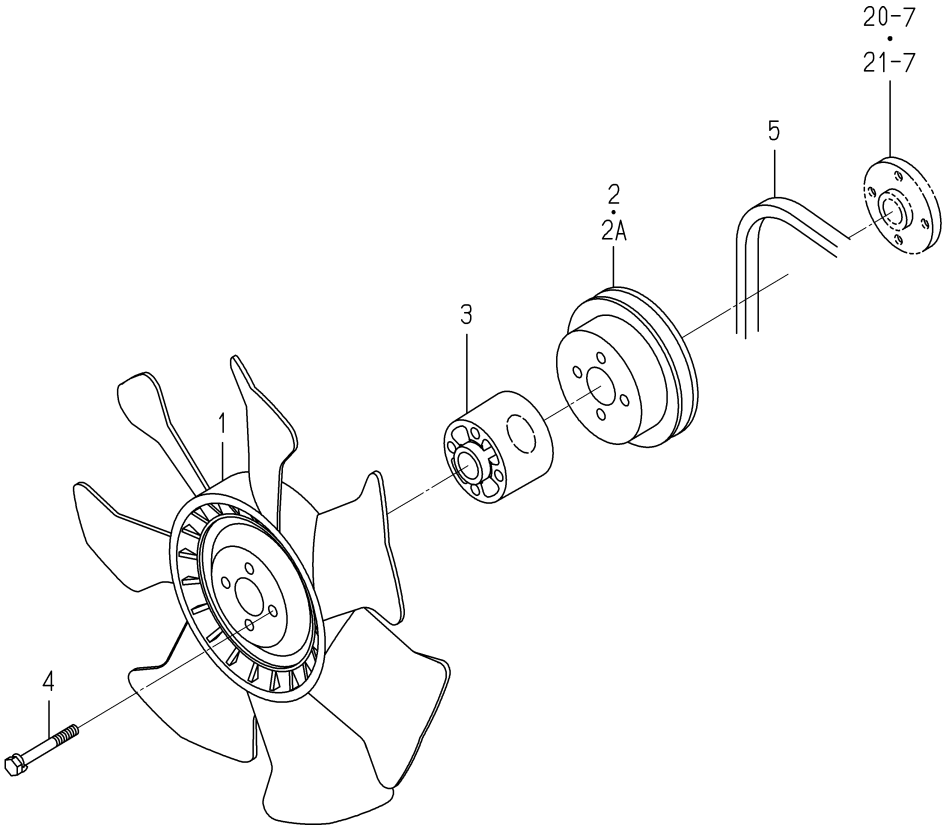

6003-480G-0100

KEY	PART CODE	DESCRIPTION	SPC	TYPE OF MODEL E262G		ITC	COL	GRP	REMARKS
1	6213-660-006-00	FAN,COOLING	*	1					
2	6213-641-004-00	PULLEY,WATER PUMP	*	1 -195757					
2A	6213-641-004-10	PULLEY,WATER PUMP	*	1 195758-		1			
3	6213-669-002-00	SPACER,FAN/39	*	1					
4	6209-030-041-00	BOLT	*	4					
5	6213-671-012-00	BELT/VHM34.5/FAN	*	1					

FIG. 23 INJECTION NOZZLE

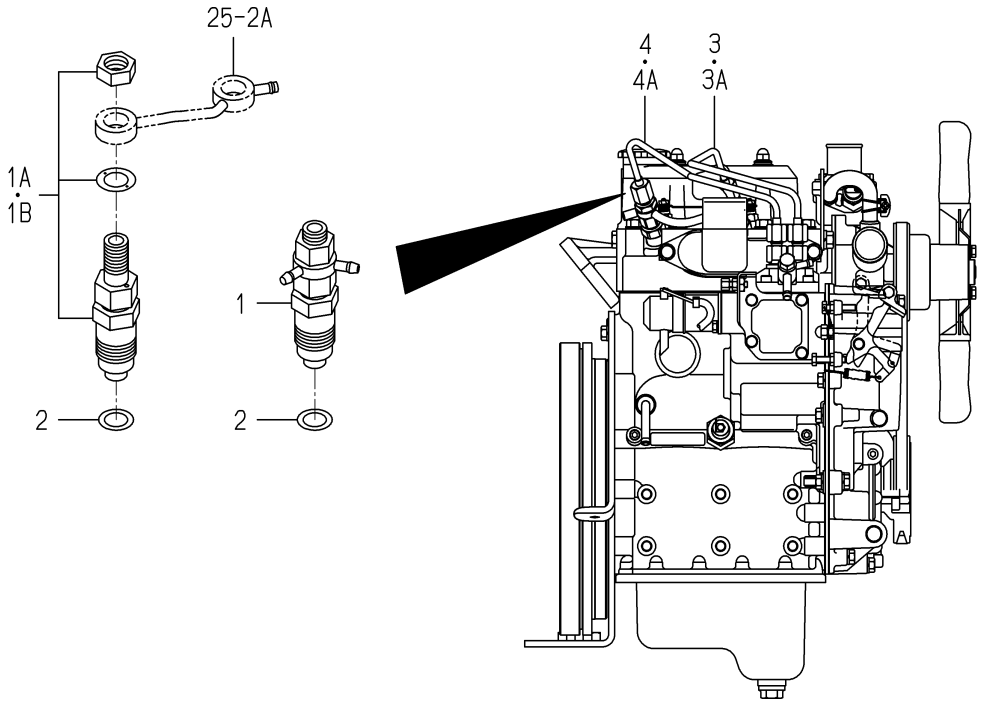

6003-501C-0100

KEY	PART CODE	DESCRIPTION	SPC	TYPE OF MODEL E262G		ITC	COL	GRP	REMARKS
1	6215-300-005-00	NOZZLE,INJ.ASSY	*	2 -121249					FIG 030
1A	6215-300-030-00	INJECTIONNOZZLE ASSY	*	2 -140829					FIG 031
1B	6215-300-037-00	INJECTIONNOZZLE ASSY	*	2 140830-					FIG 032
2	6215-315-002-00	GASKET,NOZZLE	*	2					
3	6215-410-035-10	PIPE,INJ	*	1 -154904					
3A	6215-411-111-00	PIPE/INJECTION ASSY	*	1 154905-					
4	6215-410-036-10	PIPE,INJ	*	1 -154904					
4A	6215-411-112-00	PIPE/INJECTION ASSY	*	1 154905-					

FIG. 24 INJECTION PUMP

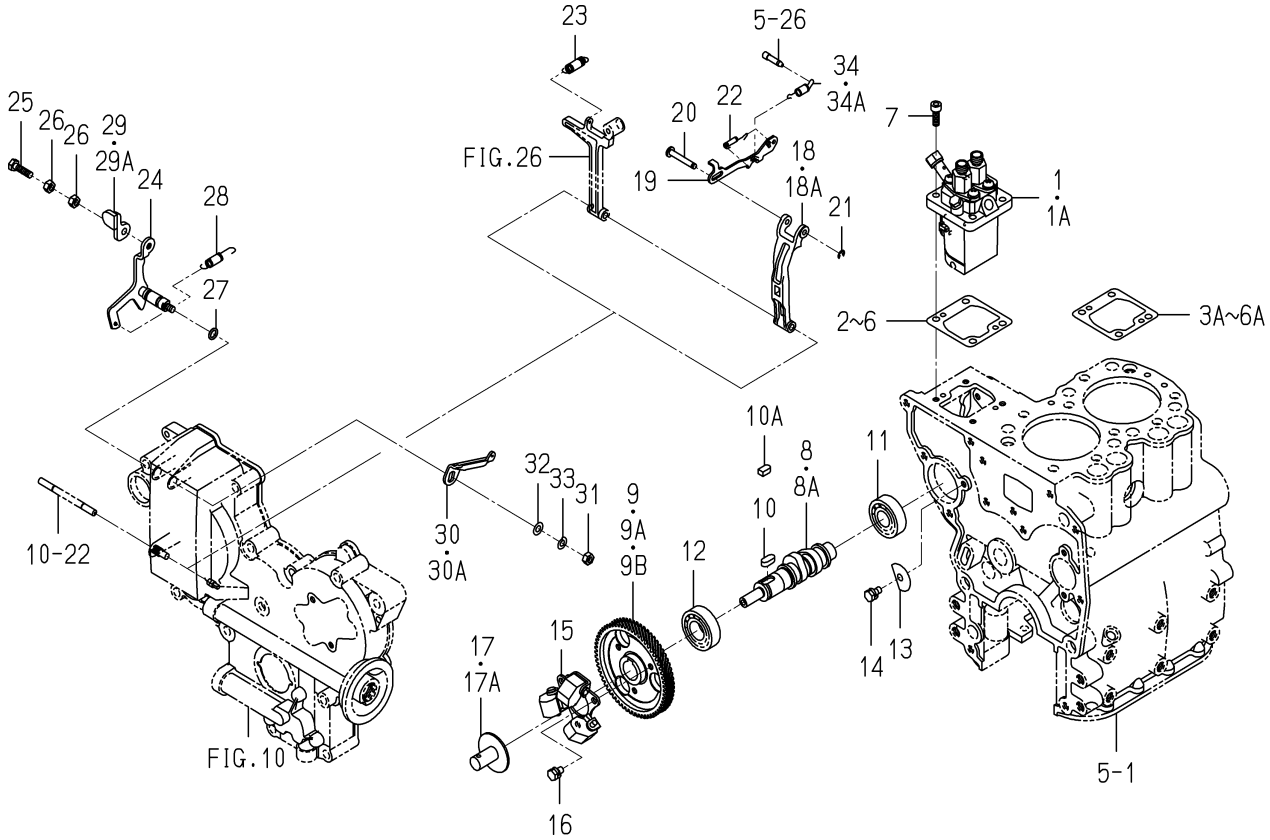

6003-510F-0100

KEY	PART CODE	DESCRIPTION	SPC	TYPE OF MODEL E262G		ITC	COL	GRP	REMARKS
1	6215-600-057-00	PUMP,INJ ASSY	*	1 -211781					FIG 033
1A	6215-600-057-10	INJECTIONPUMP ASSY	*	1 211782-		1			FIG 033
2	6219-752-011-00	SHIM/INJECTTON P/0.1	*	1 -243645					
3	6219-752-012-00	SHIM/INJECTION P/0.2	*	1 -243645					
3A	6219-752-036-00	SHIM/INJECTIONPUMP	*	1 243646-					
4	6219-752-013-00	SHIM/INJECTION P/0.3	*	1 -243645					
4A	6219-752-037-00	SHIM/INJECTIONPUMP	*	1 243646-					
5	6219-752-014-00	SHIM/INJECTION P/0.4	*	1 -243645					
5A	6219-752-038-00	SHIM/INJECTIONPUMP	*	1 243646-					
6	6219-752-015-00	SHIM/INJECTION P/0.5	*	1 -229905					
6A	6219-752-039-00	SHIM/INJECTIONPUMP	*	1 243646-					
7	6209-056-001-00	BOLT/M6X18	*	4					
8	6215-621-004-10	SHAFT,CAM/INJ.PUMP	*	1 -206838					
8A	6215-621-004-20	CAMSHAFT/INJPUMP	*	1 206839-		1			
9	6212-524-002-00	GEAR,INJ PUMP	*	1 -207994					
9A	6212-524-002-10	GEAR/INJECTIONPUMP	*	1 -208021		1			
9B	6212-524-002-20	GEAR/INJECTIONPUMP	*	1 208022-		1			
10	6908-000-716-00	KEY	*	1 -205580					
10A	6209-730-005-00	KEY/07X05X09	*	1 205581-					
11	V600-110-620-30	BEARING,RB/6203	*	1					
12	V600-110-600-40	BEARING,RB/6004	*	1					
13	6212-535-002-00	PLATE,THRUST INJPUMP	*	1					
14	6901-910-612-00	BOLT,SEMS/M6X12	*	1					
15	6215-520-001-00	FLYWEIGHT	*	1					
16	6209-030-043-00	BOLT/M6X10	*	3					
17	6215-526-001-10	PIECE,THRUST	*	1 -211721					
17A	6215-526-004-00	THRUSTPIECE	*	1 211722-					
18	6215-541-001-00	ARM,FLOATING	*	1 -156998					
18A	6215-541-001-10	ARM/FLOATING COMP	*	1 156999-		1			
19	6215-543-003-20	LINK/CONTROL	*	1					

FIG. 24 INJECTION PUMP

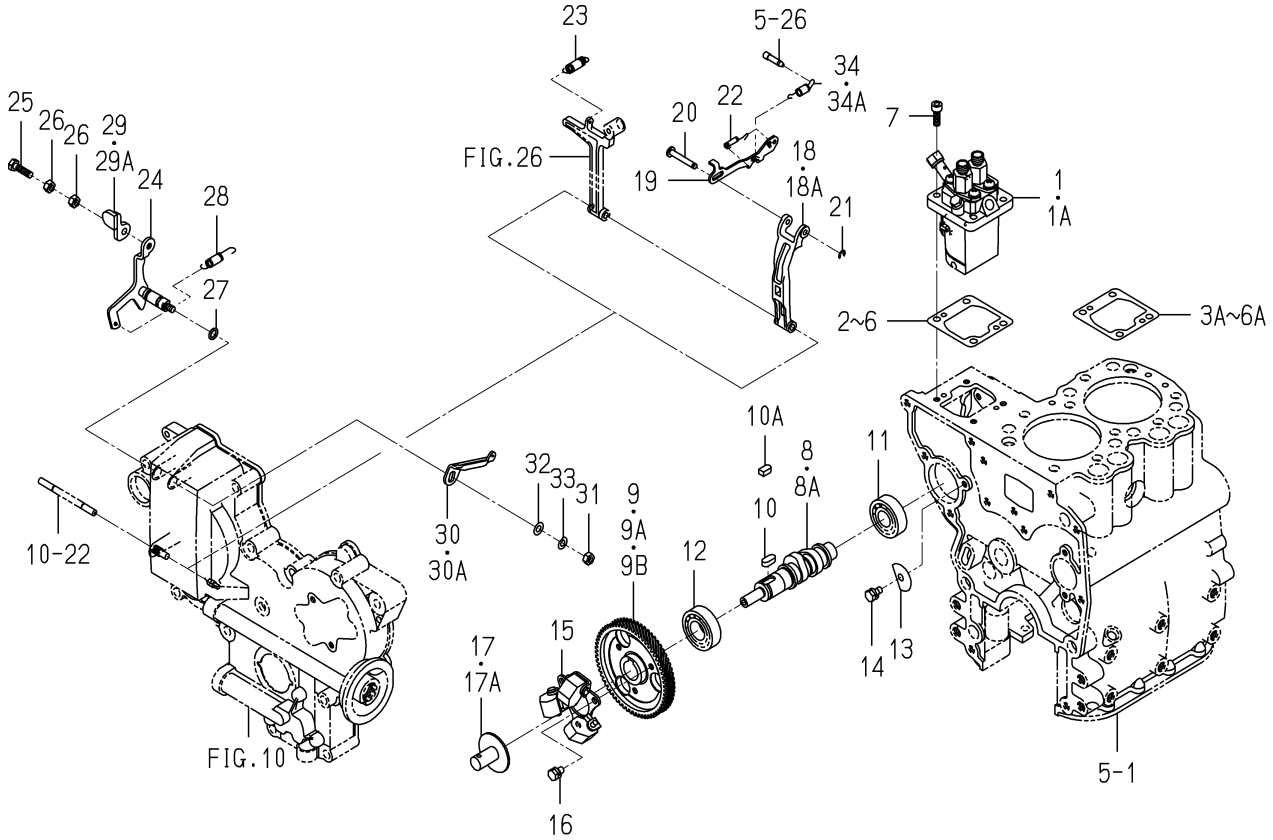

6003-510F-0100

KEY	PART CODE	DESCRIPTION	SPC	TYPE OF MODEL E262G		ITC	COL	GRP	REMARKS
20	6215-542-002-00	PIN,CONTROL LINK	*	1					
21	V710-140-004-00	RING,SNAP/ 4 E	*	1					
22	6215-549-003-00	SPRING,SETTING	*	1					
23	6215-531-005-00	SPRING,GOVERNOR	*	1					
24	6215-541-003-10	LEVER,CONTROL	*	1					
25	6209-044-001-00	BOLT/M6X18	*	1					
26	6909-111-406-00	NUT	*	2					
27	V720-101-900-80	O-RING/P 8	*	1					
28	6209-580-002-10	SPRING,RETURN	*	1					
29	6215-549-021-00	PLATE,CONTROL VALVE	*	1 -195382					
29A	6215-549-021-10	PLATE(CONTROLLEVER)	*	1 195383-		1			
30	6215-549-007-00	ARM,CONTROL	*	1 -119456					
30A	6215-549-007-10	ARM/CONTROL	*	1 119457-		1			
31	6909-110-406-00	NUT	*	1					
32	V411-260-006-00	WASHER / M6	*	1					
33	V401-160-006-00	WASHER,SP/M 6	*	1					
34	6215-549-008-00	SPRING,STARTING	*	1 -181535					
34A	6215-549-008-10	SPRING/STARTING	*	1 181536-		1			

FIG. 25 FUEL PIPE

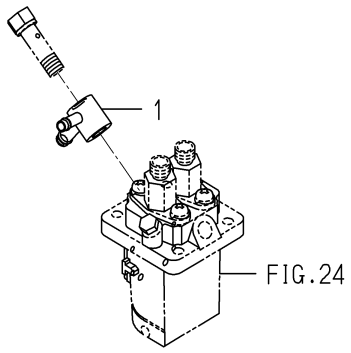

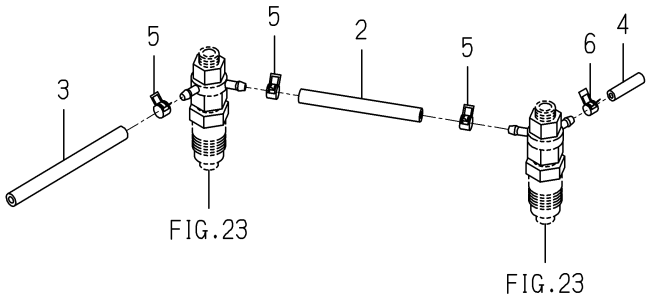

(NO.1~121249)

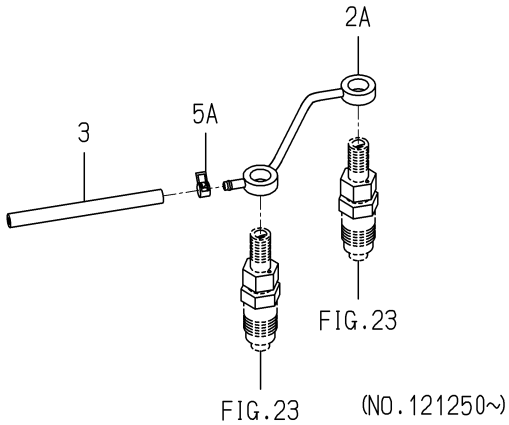

(NO.121250~)

6003-550F-0100

KEY	PART CODE	DESCRIPTION	SPC	TYPE OF MODEL E262G		ITC	COL	GRP	REMARKS
1	6215-412-001-20	CONNECTOR/FUEL	*	1					
2	6209-360-010-00	HOSE,RUBBER	*	1 -121249					
2A	6215-411-079-10	PIPE/FUEL	*	1 121250-					
3	6509-360-912-10	HOSE,RUBBER	*	1					
4	6515-419-014-00	CAP	*	1 -121249					
5	J062-076-082-00	CLIP/HOSE/7.6-8.2	*	1					
6	J062-062-067-00	CLIP/HOSE/6.2-6.7	*	1 -121249					

FIG. 26 ADAPTER

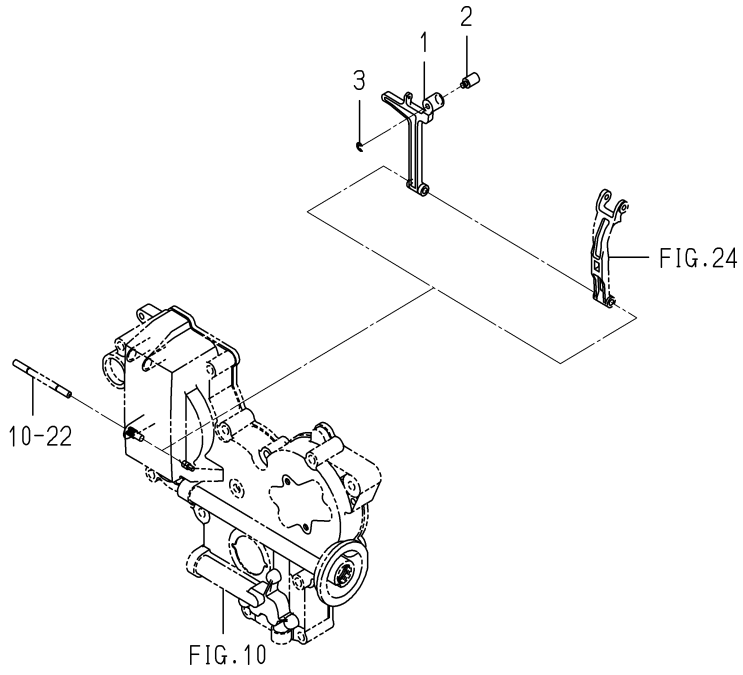

6003-560J-0100

KEY	PART CODE	DESCRIPTION	SPC	TYPE OF MODEL E262G		ITC	COL	GRP	REMARKS
1	6215-541-002-10	ARM,TENSION	*	1					
2	6215-549-029-00	PIN,ADAPTER	*	1					
3	V710-140-004-00	RING,SNAP/4 E	*	1					

FIG. 27 ELECTRIC (1)

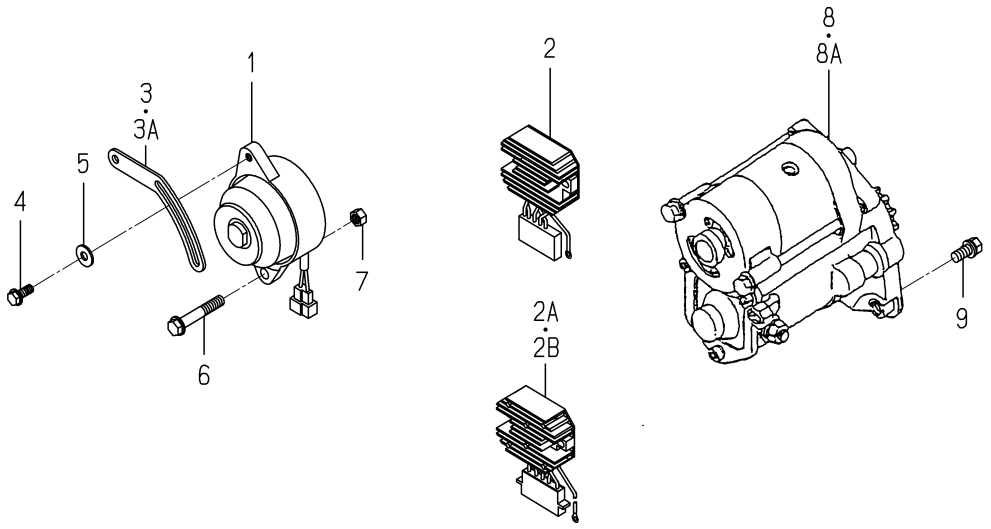

6003-801 -0100,6003-801 -0200

KEY	PART CODE	DESCRIPTION	SPC	TYPE OF MODEL E262G		ITC	COL	GRP	REMARKS
1	6281-200-007-00	GENERATOR/12V-8.5A	*	1					FIG 035
2	6281-270-001-00	REGULATOR	*	1 -215054					
2A	6281-270-001-10	REGULATOR	*	1 -252026		1			
2B	6281-270-001-20	REGULATOR	*	1 252027-		1			
3	6213-674-004-10	PLATE,ADJUST	*	1 -196582					
3A	6213-674-004-20	PLATE/ADJUST	*	1 196583-		1			
4	V231-360-802-00	FLANGEBOLT	*	1					
5	1373-121-001-00	WASHER/9X22X2	*	1					
6	V233-361-006-00	FLANGEBOLT	*	1					
7	6909-110-410-00	NUT/M10	*	1					
8	6281-100-003-00	STARTER ASSY	*	1 -159252					FIG 034
8A	6281-100-003-10	STARTER ASSY	*	1 159253-		1			FIG 034
9	6901-911-025-00	BOLT	*	2					

FIG. 28 ELECTRIC (2)

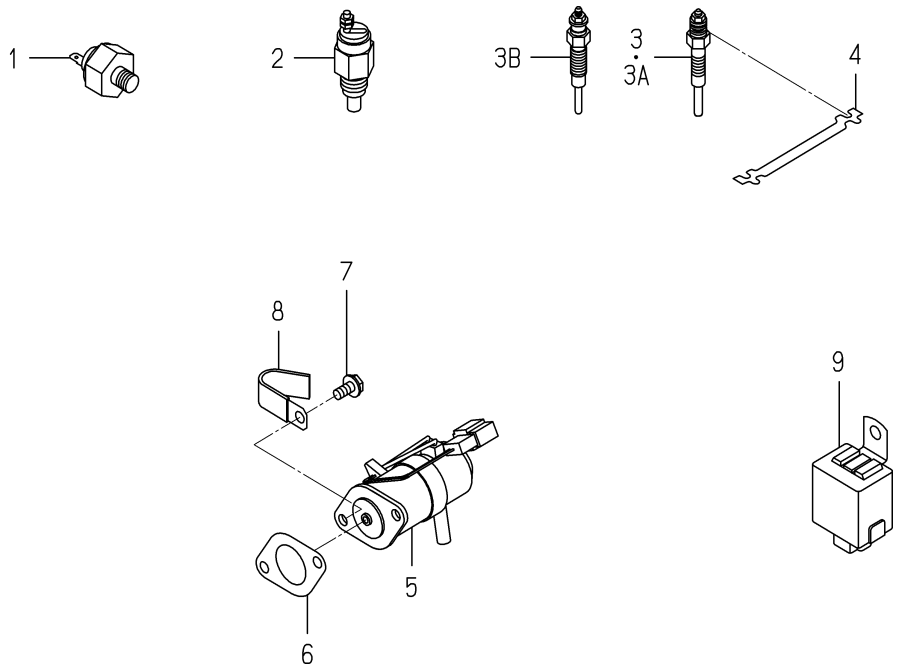

6003-820E-0100,6003-820E-0200

KEY	PART CODE	DESCRIPTION	SPC	TYPE OF MODEL E262G		ITC	COL	GRP	REMARKS
1	6281-971-001-10	SWITCH/OILPRESSURE	*	1					
2	6582-450-014-00	SWITCH,THERMETER	*	1					
3	6281-410-002-20	PLUG,GLOW	*	2 -142628					
3A	6281-410-010-00	GLOWPLUG	*	2 -226295					
3B	6281-410-023-00	GLOWPLUG	*	2 226296-					
4	6219-732-003-00	CONNECTOR,GLOW PLUG	*	1					
5	6281-910-001-00	SOLENOID	*	1					
6	6209-630-002-10	GASKET	*	1					
7	V230-360-601-20	FLANGEBOLT	*	2					
8	3748-172-007-00	CLAMP,7	*	1 186940-					
9	6281-920-001-00	RELAY,SOLENOID	*	1					

FIG. 29 REPAIR PARTS (OPTION)

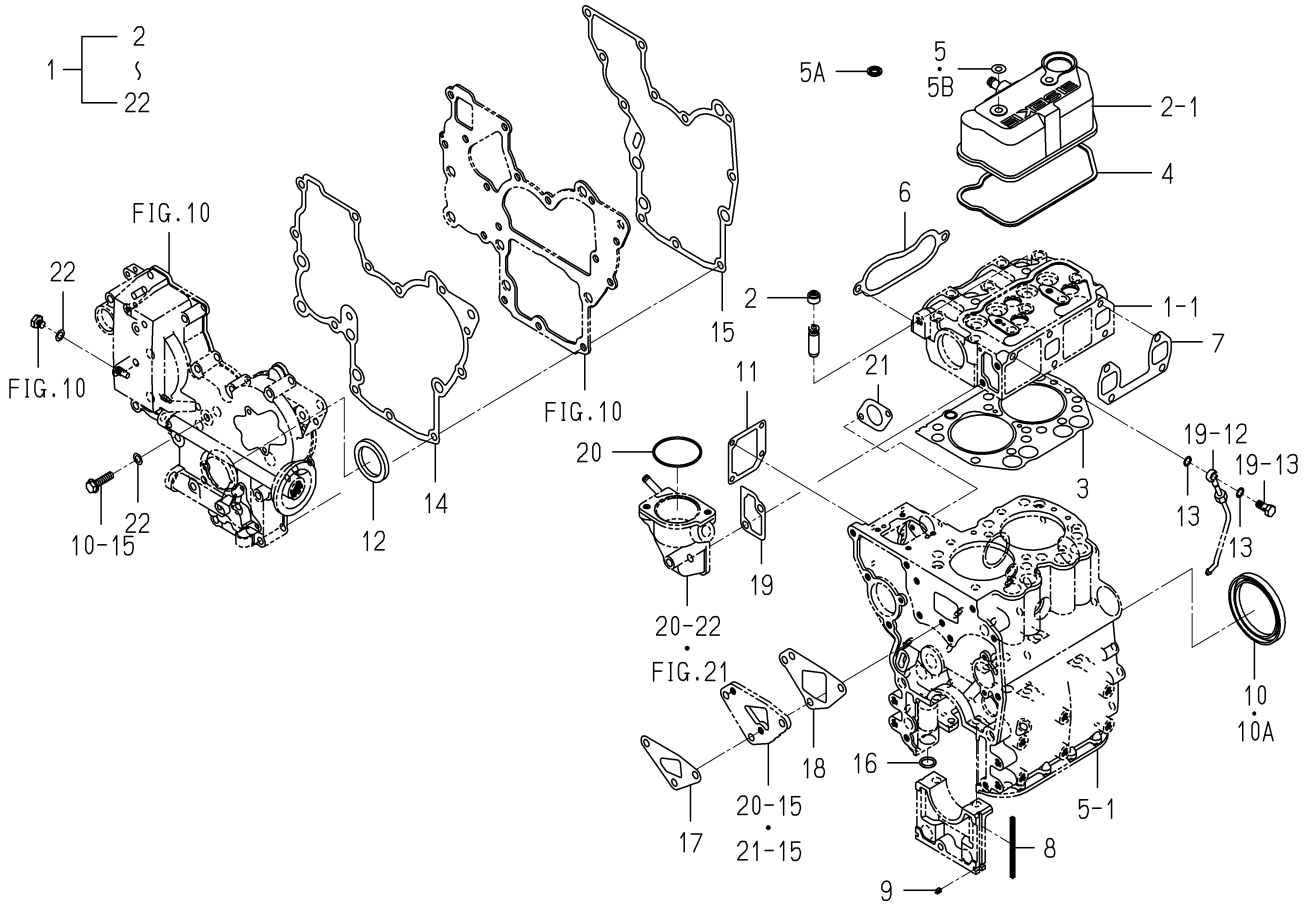

6003-999B-0100

KEY	PART CODE	DESCRIPTION	SPC	TYPE OF MODEL E262G		ITC	COL	GRP	REMARKS
1	6287-810-006-20	REPAIR/ENGINE SET	R	1		1			
2	6212-569-002-00	SEAL,OIL	R	4					
3	6211-141-018-10	GASKET,CYL HEAD	R	1					
4	6211-173-004-00	SEAL,CYL COVER	R	1					
5	6909-572-008-00	PACKING	R	2 -205580					
5A	6209-572-002-00	GASKET	R	2 -221570					
5B	6209-572-003-00	GASKET	R	2 221571-					
6	6214-115-002-20	GASKET	R	1					
7	6214-145-006-10	GASKET EXHAUST MANIF	R	1					
8	6211-258-001-00	SEAL,BEARING CAP	R	4					
9	6211-258-002-00	SEAL,BEARING CAP/7	R	2					
10	6209-625-001-00	SEAL,OIL	R	1 -185627					
10A	6209-625-012-00	OILSEAL	R	1 185628-					
11	6211-292-001-20	GASKET/COVER	R	1					
12	6209-625-002-00	SEAL,OIL	R	1					
13	6209-920-002-00	PACKING	R	2					
14	6211-312-001-30	GASKET/GEARCASE	R	1		1			
15	6211-312-002-30	GASKET/PLATE	R	1		1			
16	V720-102-401-50	O-RING/P15	R	1					
17	6213-614-003-10	GASKET/WATER PUMP	R	1					
18	6213-614-006-10	GASKET/SPACER	R	1					
19	6213-743-002-10	GASKET/HOUSING	R	1					
20	V723-102-005-50	O-RING	R	1					
21	6209-630-002-10	GASKET	R	1					
22	6209-500-003-00	WASHER/08X14X01	R	2					

FIG. 30 COMPONENT PARTS FOR 6215-300-005-00 ON Fig.23

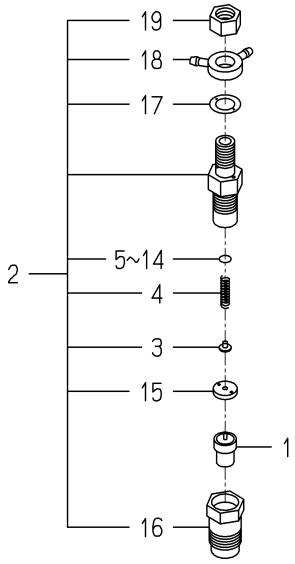

6215-300-005-0B

KEY	PART CODE	DESCRIPTION	SPC	TYPE OF MODEL E262G		ITC	COL	GRP	REMARKS
1	6215-311-005-00	NOZZLE	*	2-121249					
2	6215-330-007-00	HOLDER,NOZZLE ASSY	*	2-121249					
3	6215-342-002-00	SPRINGSEAT	*	2-121249					
4	6215-343-002-00	SPRING,NOZZLE	*	2-121249					
5	6215-345-044-00	SHIM/0.10	*	2-121249					
6	6215-345-045-00	SHIM/0.20	*	2-121249					
7	6215-345-046-00	SHIM/0.30	*	2-121249					
8	6215-345-047-00	SHIM/0.40	*	2-121249					
9	6215-345-048-00	SHIM/0.50	*	2-121249					
10	6215-345-049-00	SHIM/0.52	*	2-121249					
11	6215-345-050-00	SHIM/0.54	*	2-121249					
12	6215-345-051-00	SHIM/0.56	*	2-121249					
13	6215-345-052-00	SHIM/0.58	*	2-121249					
14	6215-345-053-00	SHIM/0.80	*	2-121249					
15	6215-339-002-00	SPACER	*	2-121249					
16	6215-332-002-00	NUT,RETAINING	*	2-121249					
17	6215-359-003-00	GASKET	*	2-121249					
18	6215-355-003-00	EYE	*	2-121249					
19	6215-359-004-00	NUT	*	2-121249					

FIG. 31 COMPONENT PARTS FOR 6215-300-030-00 ON Fig.23

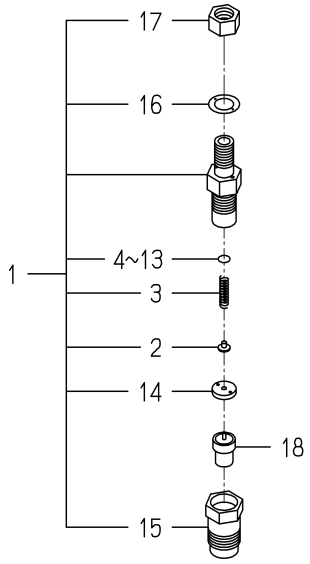

6215-300-030-0

KEY	PART CODE	DESCRIPTION	SPC	TYPE OF MODEL E262G		ITC	COL	GRP	REMARKS
1	6215-330-021-00	HOLDER/NOZZLE ASSY	*	2 -140829					
2	6215-342-002-00	SPRINGSEAT	*	2 -140829					
3	6215-343-002-00	SPRING,NOZZLE	*	2 -140829					
4	6215-345-044-00	SHIM/0.10	*	2 -140829					
5	6215-345-045-00	SHIM/0.20	*	2 -140829					
6	6215-345-046-00	SHIM/0.30	*	2 -140829					
7	6215-345-047-00	SHIM/0.40	*	2 -140829					
8	6215-345-048-00	SHIM/0.50	*	2 -140829					
9	6215-345-049-00	SHIM/0.52	*	2 -140829					
10	6215-345-050-00	SHIM/0.54	*	2 -140829					
11	6215-345-051-00	SHIM/0.56	*	2 -140829					
12	6215-345-052-00	SHIM/0.58	*	2 -140829					
13	6215-345-053-00	SHIM/0.80	*	2 -140829					
14	6215-339-002-00	SPACER	*	2 -140829					
15	6215-332-002-00	NUT,RETAINING	*	2 -140829					
16	6215-359-003-00	GASKET	*	2 -140829					
17	6215-359-004-00	NUT	*	2 -140829					
18	6215-311-005-00	NOZZLE	*	2 -140829					

FIG. 32 COMPONENT PARTS FOR 6215-300-037-00 ON Fig.23

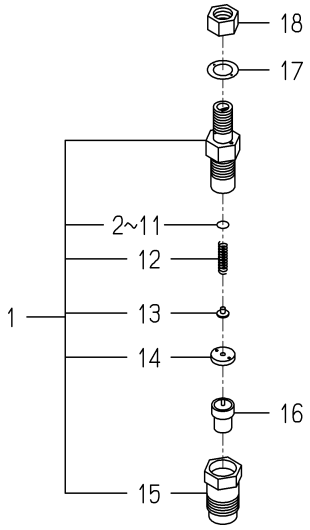

6215-300-037-0E

KEY	PART CODE	DESCRIPTION	SPC	TYPE OF MODEL E262G		ITC	COL	GRP	REMARKS
1	6215-330-022-00	HOLDER/NOZZLE ASSY	*	2 140830-					
2	6215-345-044-00	SHIM/0.10	*	2 140830-					
3	6215-345-045-00	SHIM/0.20	*	2 140830-					
4	6215-345-046-00	SHIM/0.30	*	2 140830-					
5	6215-345-047-00	SHIM/0.40	*	2 140830-					
6	6215-345-048-00	SHIM/0.50	*	2 140830-					
7	6215-345-049-00	SHIM/0.52	*	2 140830-					
8	6215-345-050-00	SHIM/0.54	*	2 140830-					
9	6215-345-051-00	SHIM/0.56	*	2 140830-					
10	6215-345-052-00	SHIM/0.58	*	2 140830-					
11	6215-345-053-00	SHIM/0.80	*	2 140830-					
12	6215-343-002-00	SPRING,NOZZLE	*	2 140830-					
13	6215-342-002-00	SPRINGSEAT	*	2 140830-					
14	6215-339-004-00	SPACER	*	2 140830-					
15	6215-332-006-00	NUT/NOZZLERETAINING	*	2 140830-					
16	6215-311-005-00	NOZZLE	*	2 140830-					
17	6215-359-003-00	GASKET	*	2 141051-					
18	6215-359-004-00	NUT	*	2 141051-					

FIG. 33 COMPONENT PARTS FOR 6215-600-057-10 ON Fig.24

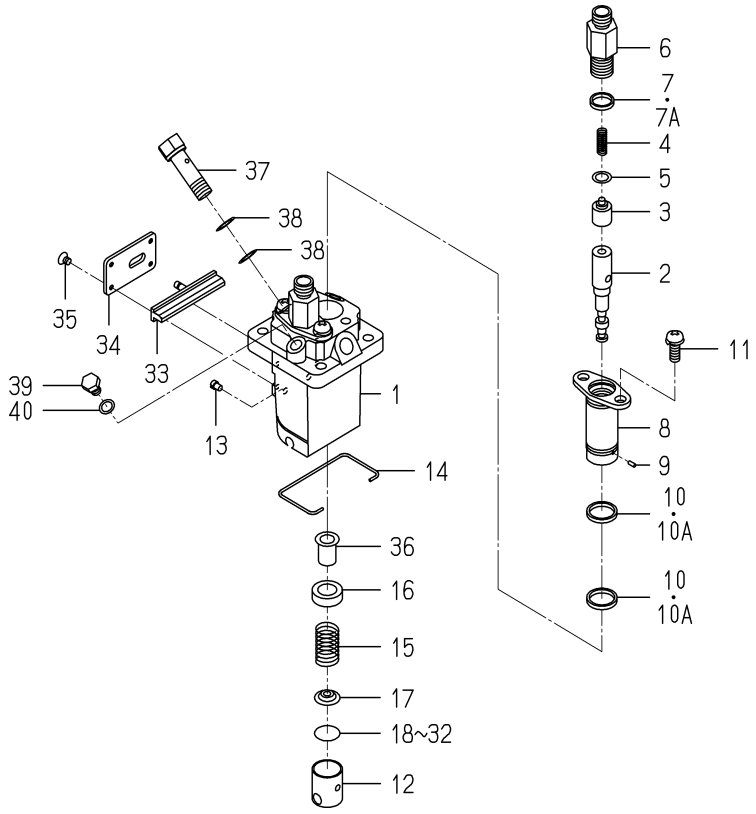

6215-600-057-1H

KEY	PART CODE	DESCRIPTION	SPC	TYPE OF MODEL E262G		ITC	COL	GRP	REMARKS
1	6215-611-003-00	HOUSING PUMP	*	1					
2	6215-631-004-00	PLUNGER ASSY	*	2					
3	6215-641-002-00	VALVE,DELIVERY	*	2					
4	6215-643-003-00	SPRING,DELIVERYVALVE	*	2					
5	6215-649-003-00	GASKET	*	2					
6	6215-644-003-00	HOLDER,DELIVERYVALVE	*	2					
7	6215-649-004-00	O-RING	*	2 -211460					
7A	6215-649-004-10	ORING	*	2 211461-		1			
8	6215-635-002-00	SLEEVE,FRANGE	*	2					
9	6215-649-005-00	PIN	*	2					
10	6215-649-006-00	O-RING	*	4 -211460					
10A	6215-649-006-10	ORING	*	4 211461-		1			
11	6215-649-007-00	SCREW	*	4					
12	6215-622-002-00	TAPPET	*	2					
13	6215-629-017-00	PIN	*	2					
14	6215-629-019-00	RING SNAP	*	1					
15	6215-634-002-00	SPRING,PLUNGER	*	2					
16	6215-639-006-00	SEAT,SPRING	*	2					
17	6215-639-007-00	SEAT,SPRING	*	2					
18	6215-629-020-00	PLATE/T=1.80	*	1					
19	6215-629-021-00	PLATE/T=1.85	*	1					
20	6215-629-022-00	PLATE/T=1.90	*	1					
21	6215-629-023-00	PLATE/T=1.95	*	1					
22	6215-629-024-00	PLATE/T=2.00	*	1					
23	6215-629-025-00	PLATE/T=2.05	*	1					
24	6215-629-026-00	PLATE/T=2.10	*	1					
25	6215-629-027-00	PLATE/T=2.15	*	1					
26	6215-629-028-00	PLATE/T=2.20	*	1					
27	6215-629-029-00	PLATE/T=2.25	*	1					
28	6215-629-030-00	PLATE/T=2.30	*	1					

FIG. 33 COMPONENT PARTS FOR 6215-600-057-10 ON Fig.24

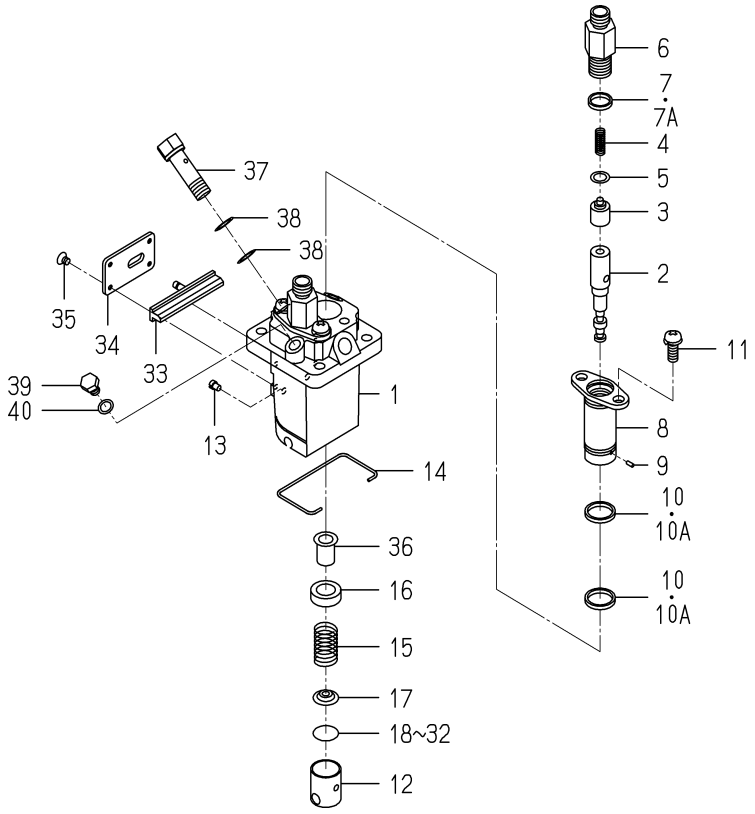

6215-600-057-1H

KEY	PART CODE	DESCRIPTION	SPC	TYPE OF MODEL E262G		ITC	COL	GRP	REMARKS
29	6215-629-031-00	PLATE/T=2.35	*	1					
30	6215-629-032-00	PLATE/T=2.40	*	1					
31	6215-629-033-00	PLATE/T=2.45	*	1					
32	6215-629-034-00	PLATE/T=2.50	*	1					
33	6215-637-003-00	ROD CONTROL	*	1					
34	6215-612-003-00	PLATE	*	1					
35	6215-619-012-00	SCREW	*	4					
36	6215-635-003-00	SLEEVE,CONTROL	*	2 -148658					
36A	6215-635-008-00	CONTROLSLEEVE	*	2 148659-					
37	6215-619-013-00	BOLT,EYE	*	1					
38	6215-619-014-00	GASKET	*	2					
39	6215-619-015-00	BOLT	*	1					
40	6215-619-016-00	GASKET	*	1					

FIG. 34 COMPONENT PARTS FOR 6281-100-003-10 ON Fig.27

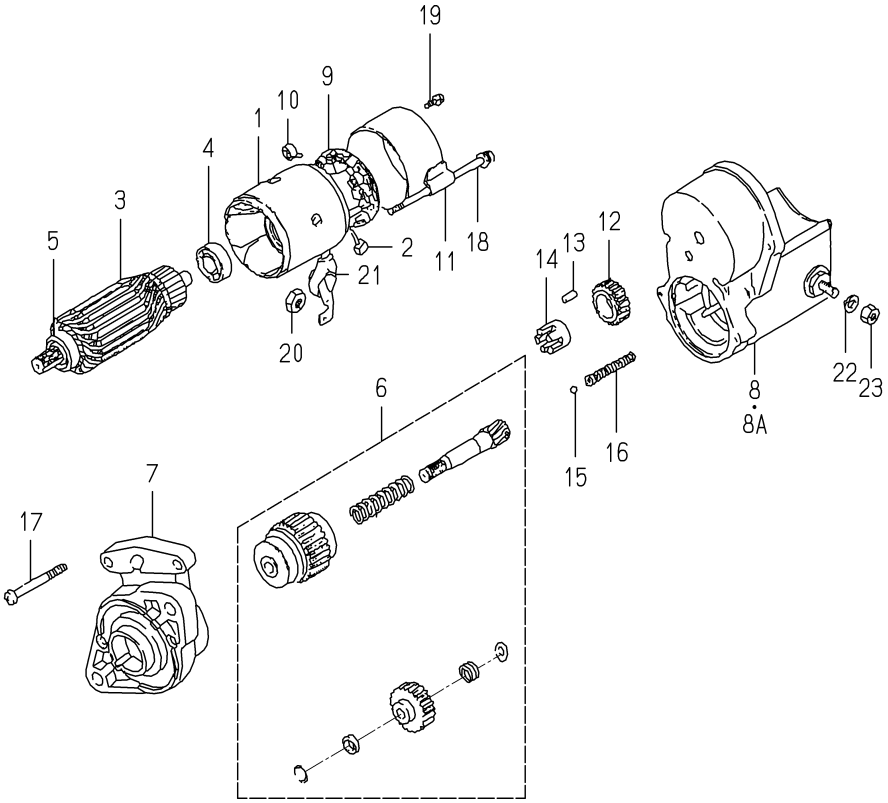

6281-100-003-1D

KEY	PART CODE	DESCRIPTION	SPC	TYPE OF MODEL E262G		ITC	COL	GRP	REMARKS
1	6281-111-002-00	YOKE/STARTER	*	1					
2	6281-116-002-00	STARTER KIT	*	2					
3	6281-121-003-00	ARMATURE	*	1					
4	6281-129-010-00	BEARING,BALL	*	1					
5	6281-129-011-00	BEARING,BALL	*	1					
6	6281-124-001-00	STARTER KIT	*	1					
7	6281-129-007-00	HOUSING/STARTER ASSY	*	1					
8	6281-151-004-00	SWITCH/STARTER ASSY	*	1 -159252					
8A	6281-151-004-10	SWITCH/STARTER ASSY	*	1 159253-		1			
9	6281-118-001-00	HOLDER ASSY	*	1					
10	6581-117-007-00	SPRING,BRUSH	*	4					
11	6281-115-004-00	FRAME/STARTER END	*	1					
12	6581-123-011-00	PINION,STARTER	*	1					
13	6581-129-099-00	RORA	*	5					
14	6581-129-100-00	RETAINER	*	1					
15	6581-129-092-00	BALL	*	1					
16	6581-129-096-00	SPRING	*	1					
17	6281-129-006-00	SCREW	*	2					
18	6281-129-008-00	BOLT/WS	*	2					
19	6281-129-009-00	SCREW/WS	*	2					
20	6909-111-508-00	NUT	*	1					
21	6281-129-019-00	CAP/RABBER	*	4					
22	6909-150-508-00	WASHER	*	1					
23	6909-110-408-00	NUT/M8	*	1					

FIG. 35 COMPONENT PARTS FOR 6281-200-007-00 ON Fig.27

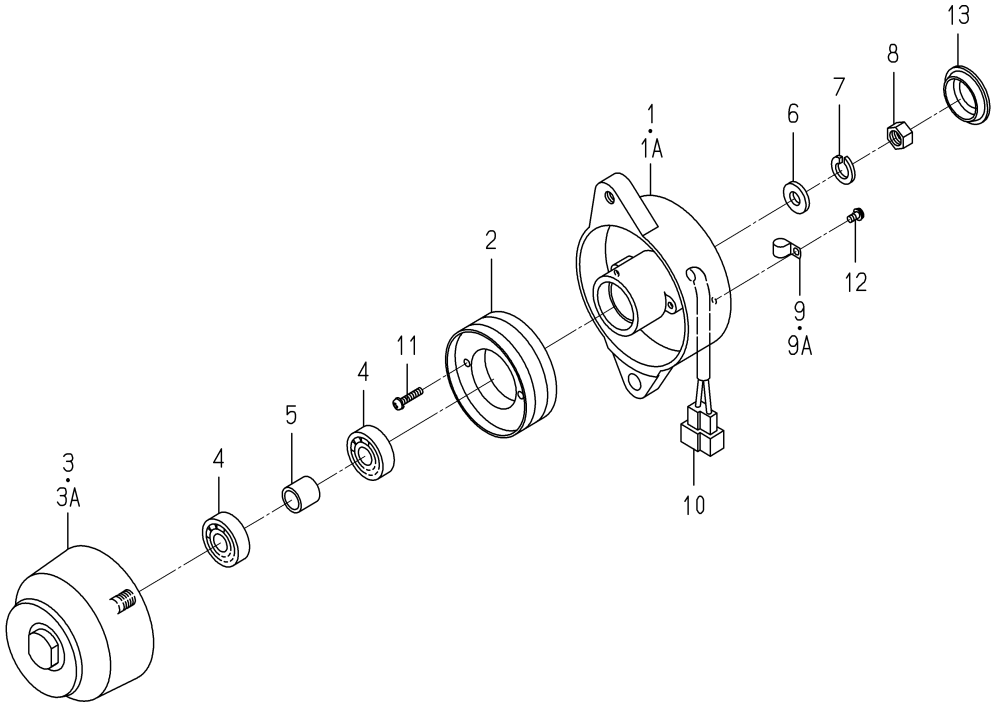

6281-200-007-0G

KEY	PART CODE	DESCRIPTION	SPC	TYPE OF MODEL E262G		ITC	COL	GRP	REMARKS
1	6281-213-008-00	PLATE	*	1 -151089					
1A	6281-213-016-10	PLATE COMP	*	1 151090-		3			
2	6281-211-004-00	STARTER	*	1					
3	6281-222-007-00	PULLEY	*	1 -151089					
3A	6281-222-010-10	PULLEY COMP	*	1 151090-		3			
4	6281-229-031-00	BEARING,BALL	*	2					
5	6281-229-021-00	COLLAR	*	1					
6	6281-229-022-00	WASHER	*	1					
7	6281-229-023-00	WASHER	*	1					
8	6281-229-024-00	NUT	*	1					
9	6281-229-025-00	CLAMP	*	1 -131694					
9A	6281-229-025-10	CLAMP	*	1 131695-		3			
10	6281-229-026-00	COUPLER	*	1					
11	6281-229-027-00	SCREW	*	2					
12	6281-229-028-00	SCREW	*	1					
13	6281-214-006-00	CAP	*	1 -243556					

E N G I N E

E262G01···SG153(S-TYPE)

6003-097-130-10

FIG. 1 CYLINDER HEAD

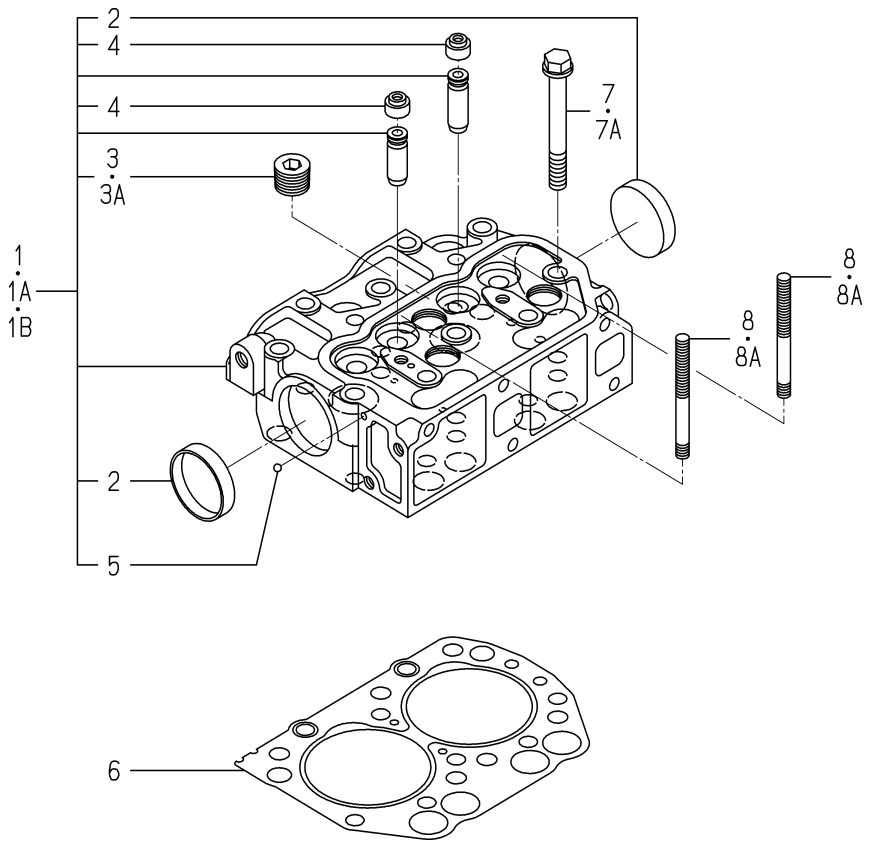

6003-101G-0100,6003-101G-0200

KEY	PART CODE	DESCRIPTION	SPC	TYPE OF MODEL E262G01		ITC	COL	GRP	REMARKS
1	6211-110-018-20	SYLINDER HEAD ASSY	*	1 -155756					
1A	6211-110-061-10	CYLINDERHEAD ASSY	*	1 -211473					
1B	6211-110-061-20	CYLINDERHEAD ASSY	*	1 211474-		1			
2	6911-129-006-00	CAP,SEALING	*	2					
3	6209-605-004-00	PLUG/PT1/2	*	3 -139376					
3A	6209-605-004-10	PLUG/PT1/2	*	3 139377-					
4	6212-569-002-00	SEAL,OIL	*	4					
5	V682-200-000-60	BALL	*	1					
6	6211-141-018-10	GASKET,CYL HEAD	*	1					
7	6209-000-003-00	BOLT/M10X1.25X82	*	10 -255564					
7A	6209-000-044-00	BOLT	*	10 255565-					
8	6909-830-212-00	STUD,HEAD COVER	*	2 -171437					
8A	6209-300-014-00	STUD	*	2 171438-					

FIG. 2 CYLINDER HEAD COVER

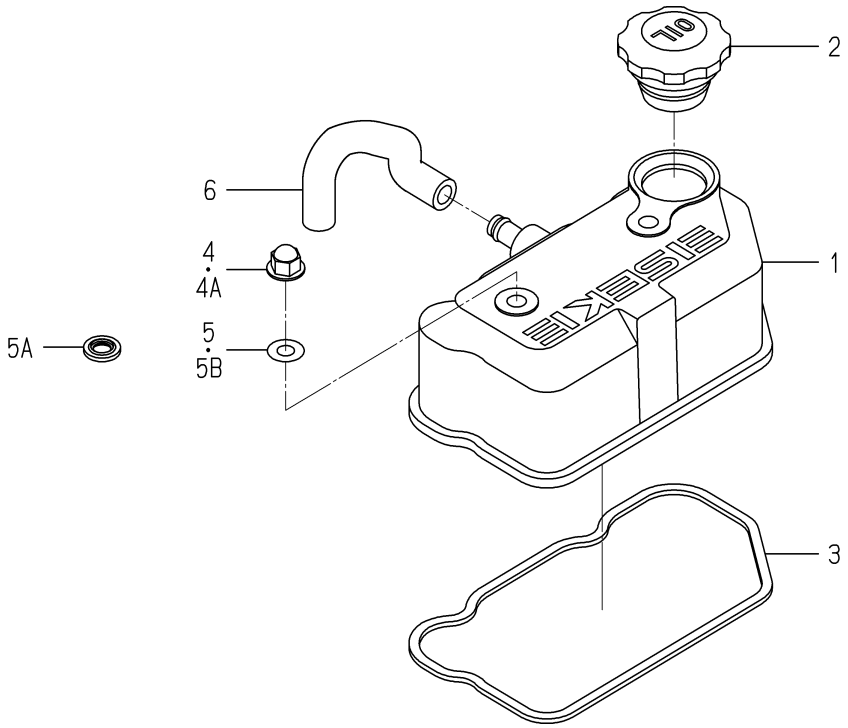

6003-110A-0100

KEY	PART CODE	DESCRIPTION	SPC	TYPE OF MODEL E262G01		ITC	COL	GRP	REMARKS
1	6211-170-006-10	COVER/CYLINDER/HEAD	*	1					
2	6211-751-001-10	CAP,OIL FILLER	*	1					
3	6211-173-004-00	SEAL,CYL COVER	*	1					
4	6209-490-002-00	NUT,CAP	*	2 -213417					
4A	6209-490-002-10	NUT/CAP	*	2 213418-		1			
5	6909-572-008-00	PACKING	*	2 -205580					
5A	6209-572-002-00	GASKET	*	2 -221570					
5B	6209-572-003-00	GASKET	*	2 221571-					
6	6209-360-028-10	HOSE/RABBER	*	1					

FIG. 3 INLET MANIFOLD

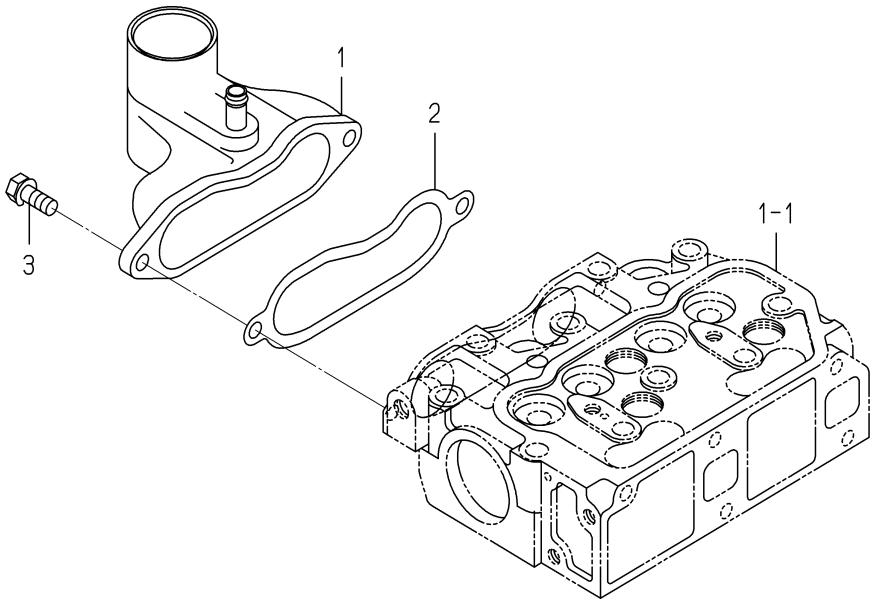

6003-120A-0100

KEY	PART CODE	DESCRIPTION	SPC	TYPE OF MODEL		ITC	COL	GRP	REMARKS
				E262G01					
1	6214-111-014-00	MANIFOLD ASSY	*	1					
2	6214-115-002-20	GASKET	*	1					
3	V231-360-802-00	FLANGEBOLT	*	2					

FIG. 4 EXHAUST MANIFOLD

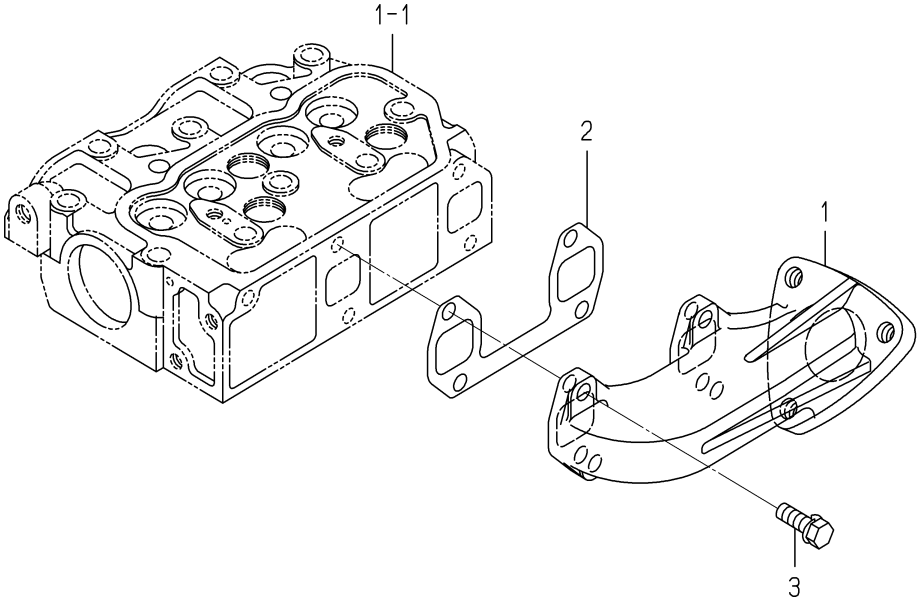

6003-140G-0100

KEY	PART CODE	DESCRIPTION	SPC	TYPE OF MODEL		ITC	COL	GRP	REMARKS
				E262G01					
1	6214-141-015-00	MANIFOLD,EXHAUST	*	1					
2	6214-145-006-10	GASKET EXHAUST MANIF	*	1					
3	V211-560-802-50	BOLT,SEMS/M8X25 7T	*	4					

FIG. 5 CYLINDER BLOCK

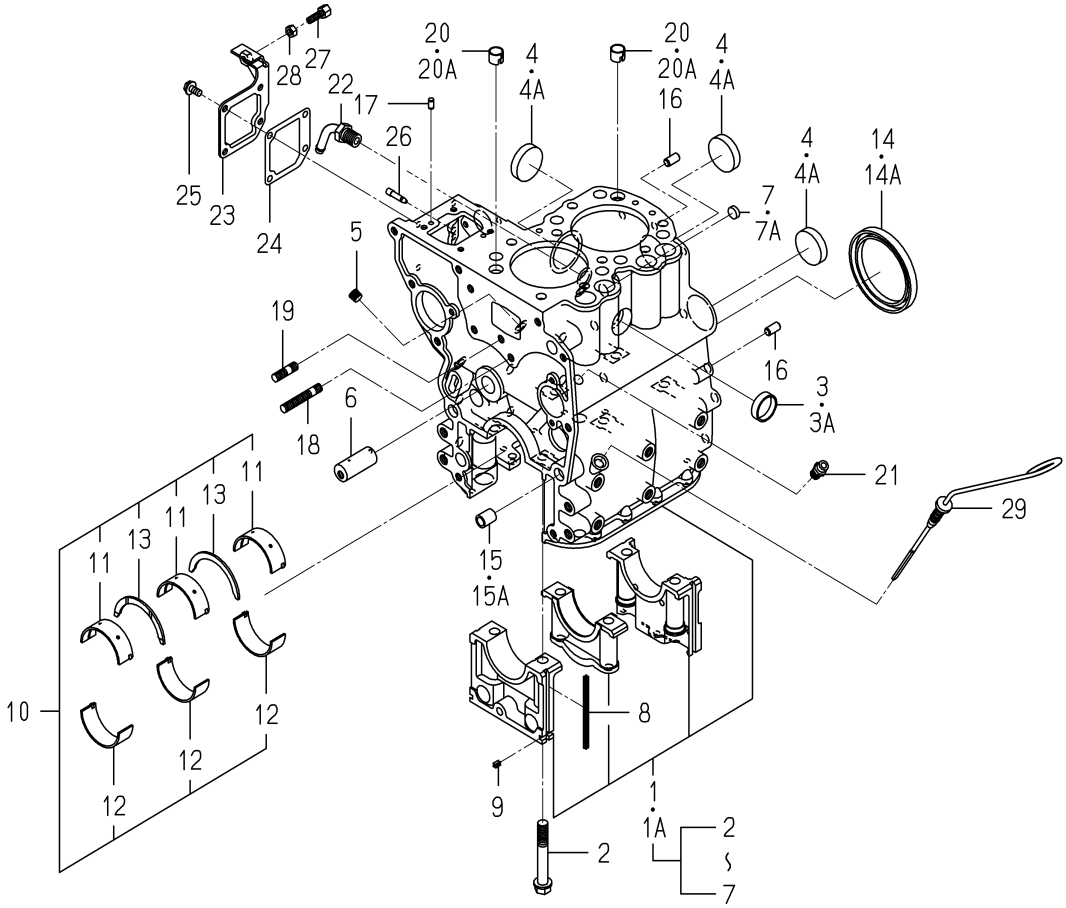

6003-201S-0100

KEY	PART CODE	DESCRIPTION	SPC	TYPE OF MODEL E262G01		ITC	COL	GRP	REMARKS
1	6211-210-021-10	CYLINDERBLOCK ASSY	*	1 -161192					
1A	6211-210-021-20	CYLINDERBLOCK ASSY	*	1 161193-		1			
2	6209-000-004-10	BOLT	*	6		1			
3	6209-610-001-00	CAP,SEALING	*	1 -202173					
3A	6209-610-001-10	CUP/SEALING/28	*	1 202174-		1			
4	6911-219-195-00	CAP,SEALING	*	3 -201995					
4A	6209-610-009-00	CUP/SEALING/36	*	3 201996-					
5	6509-605-019-10	PLUG	*	2					
6	6212-531-005-10	PIN/IDLEGEAR	*	1					
7	6911-129-083-00	CAP,SEALING	*	1 -202039					
7A	6209-610-008-00	CUP/SEALING/12	*	1 202040-					
8	6211-258-001-00	SEAL,BEARING CAP	*	4					
9	6211-258-002-00	SEAL,BEARING CAP/7	*	2					
10	6211-510-002-00	METAL,CRANK	*	1					
11	6211-511-003-00	BEARING/CRANK/UPPER	*	3					
12	6211-511-004-00	BEARING/CRANK/LOWER	*	3					
13	6211-599-001-10	BEARING,THRUST CRANK	*	2					
14	6209-625-001-00	SEAL,OIL	*	1 -185645					
14A	6209-625-012-00	OILSEAL	*	1 185646-					
15	6209-749-001-10	PIN,TUBE	*	2 -140551					
15A	6209-749-001-20	PIN/TUBE	*	2 140552-		1			
16	6213-129-006-00	PIN/STRAIGHT	*	2					
17	6213-129-005-00	PIN/STRAIGHT	*	2					
18	6904-110-840-00	STUD/M8X40	*	1					
19	6904-110-818-00	STUD	*	1					
20	6894-453-344-00	DOWEL	*	2 -127844					
20A	6294-453-002-00	DOWEL	*	2 127845-					
21	6909-902-299-00	NIPPLE	*	1					
22	6213-721-001-00	PIPE,WATER DRAIN	*	1					
23	6211-291-001-10	COVER,INJ PUMP	*	1					

FIG. 5 CYLINDER BLOCK

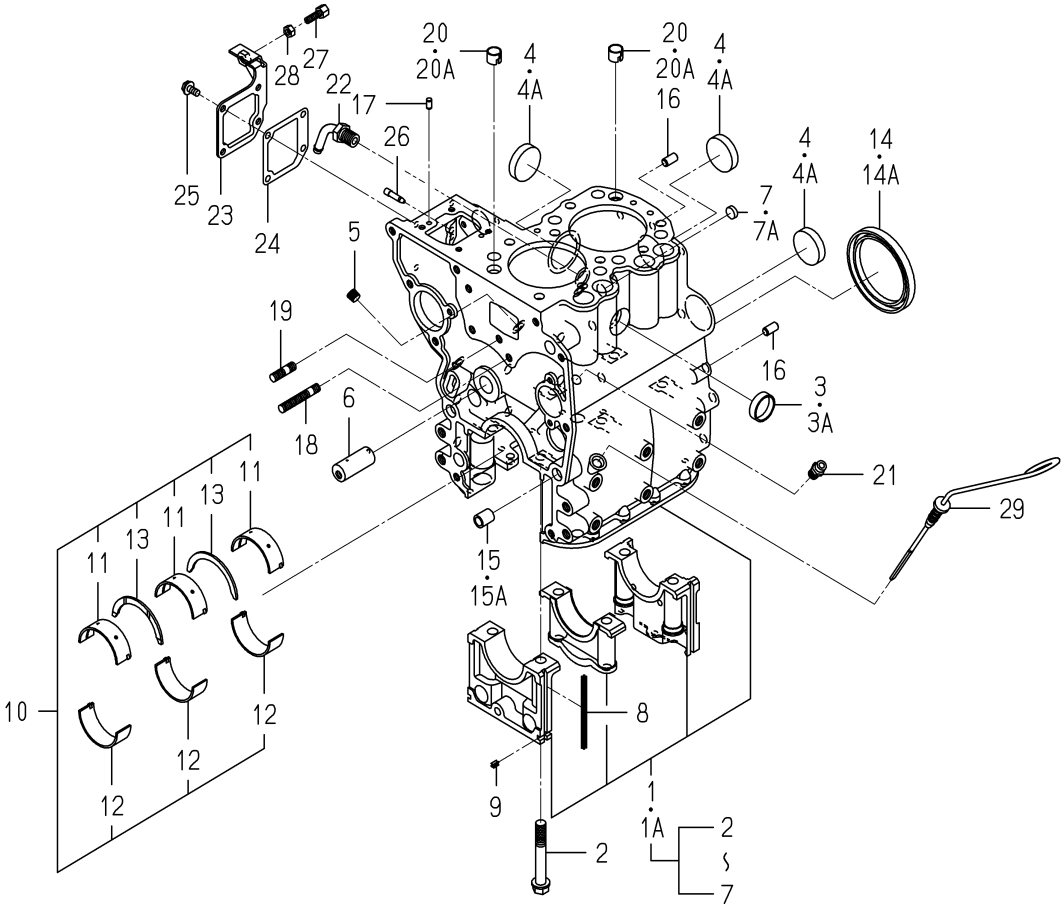

6003-201S-0100

KEY	PART CODE	DESCRIPTION	SPC	TYPE OF MODEL E262G01		ITC	COL	GRP	REMARKS
24	6211-292-001-20	GASKET/COVER	*	1					
25	V230-360-601-20	FLANGEBOLT	*	4					
26	6215-549-001-10	PIN,STARTING SPRING	*	1					
27	6209-788-001-00	BOLT,ADJUST	*	1					
28	6909-110-406-00	NUT	*	1					
29	6211-760-012-20	LEVELGAGE	*	1					

FIG. 6 BEARING/UNDER SIZE (OPTION)

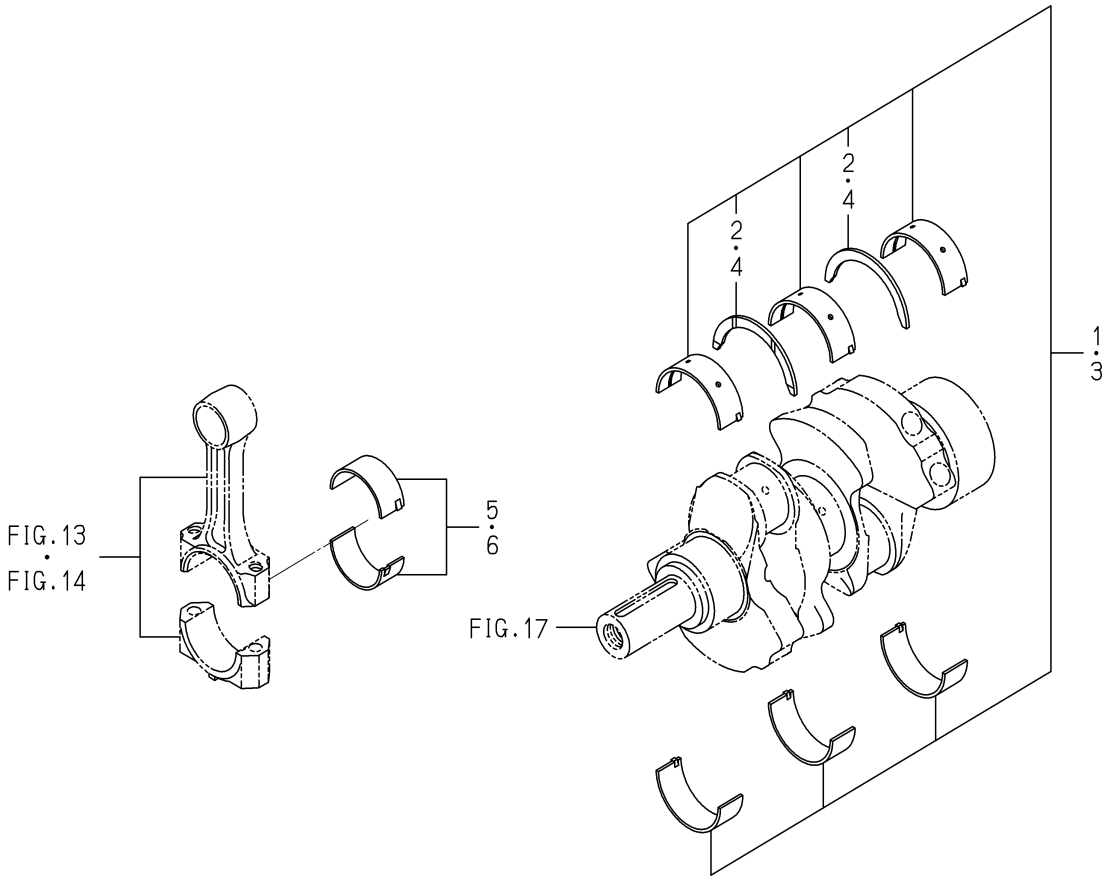

6003-209A-0100

KEY	PART CODE	DESCRIPTION	SPC	TYPE OF MODEL E262G01		ITC	COL	GRP	REMARKS
1	6211-540-002-00	METAL,CRANK	T	1					
2	6211-599-001-10	BEARING,THRUST CRANK	T	2					
3	6211-560-002-00	METAL,CRANK	T	1					
4	6211-599-001-10	BEARING,THRUST CRANK	T	2					
5	6212-274-016-00	BEARING/CONNECTING R	T	2					
6	6212-276-016-00	BEARING/CONNECTING R	T	2					

FIG. 7 OIL PAN

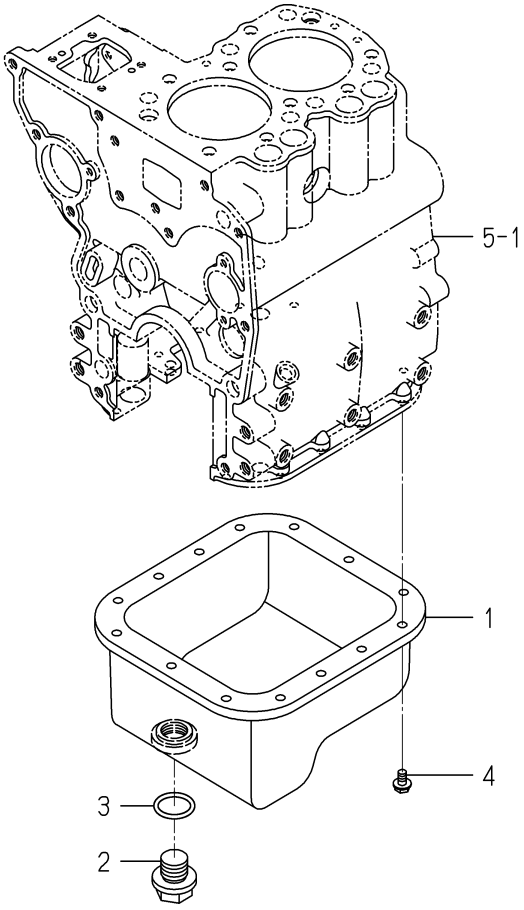

6003-210F-0100

KEY	PART CODE	DESCRIPTION	SPC	TYPE OF MODEL E262G01		ITC	COL	GRP	REMARKS
1	6211-361-019-10	PAN,OIL COMP	*	1					
2	6209-600-002-00	PLUG/20	*	1					
3	6209-623-001-00	RING,0/G25	*	1					
4	V230-360-601-00	FLANGEBOLT	*	14					

FIG. 8 REAR PLATE

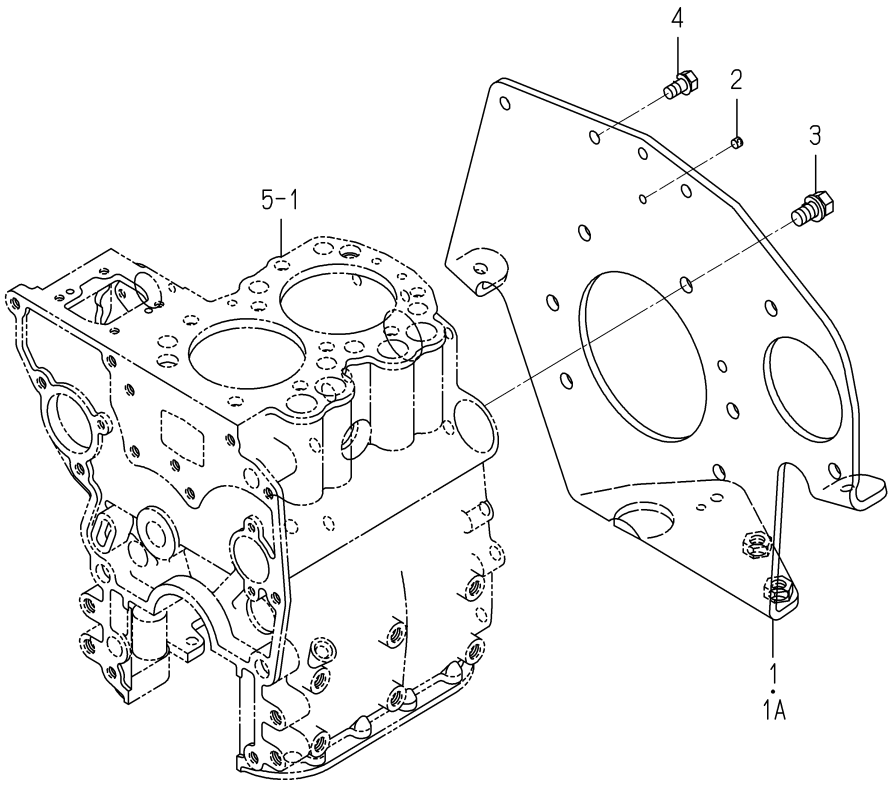

6003-220G-0100

KEY	PART CODE	DESCRIPTION	SPC	TYPE OF MODEL E262G01		ITC	COL	GRP	REMARKS
1	6211-340-002-20	PLATE/REAR COMP	*	1 -203592					
1A	6211-340-002-30	PLATE/REAR COMP	*	1 203593-					
2	6211-342-001-30	POINTER	*	1					
3	6901-911-020-00	BOLT,SEMS/M10X20	*	6					
4	6901-910-816-00	BOLT,SEMS/M8X16	*	2					

FIG. 9 TIMING GEAR CASE

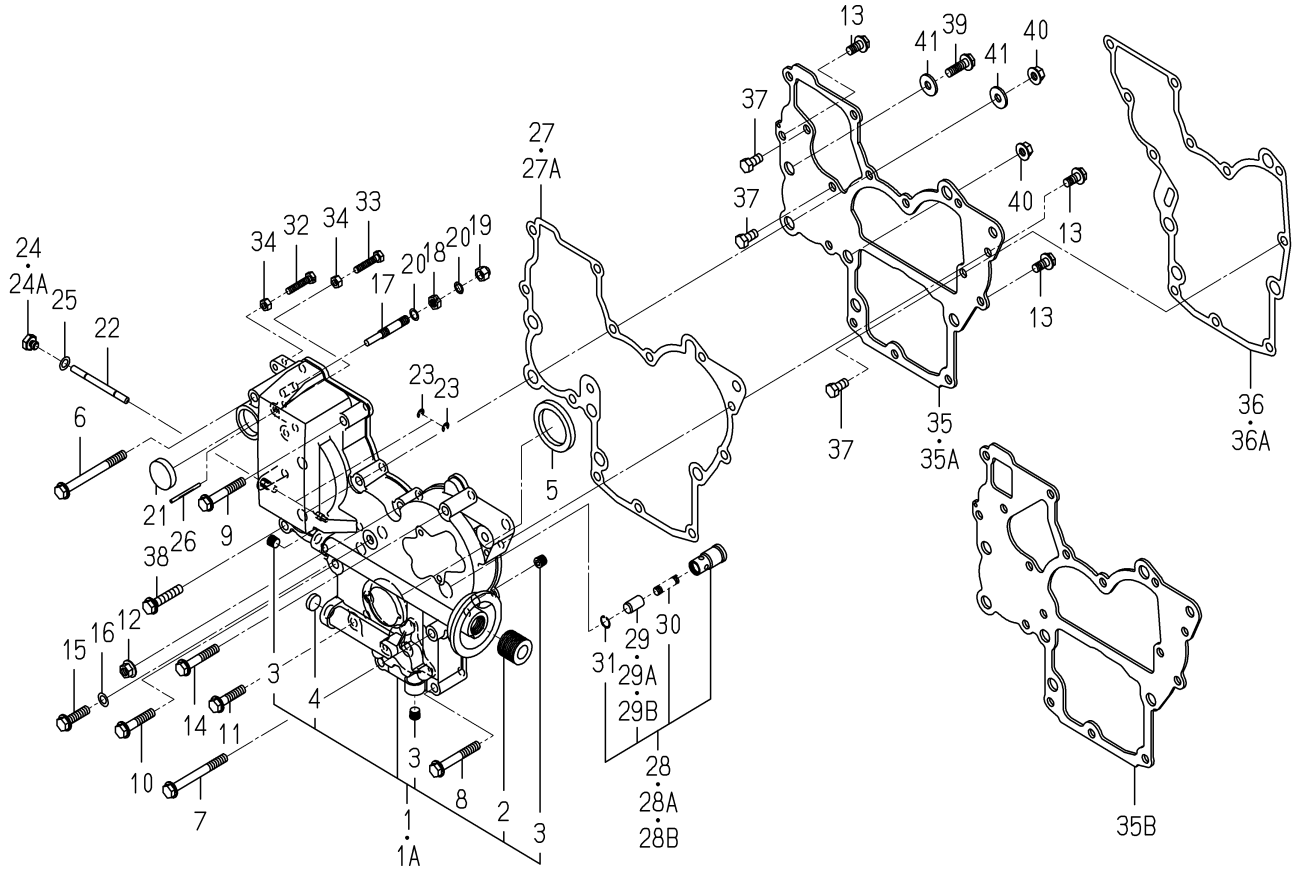

6003-240C-0100,6003-240C-0200

KEY	PART CODE	DESCRIPTION	SPC	TYPE OF MODEL E262G01		ITC	COL	GRP	REMARKS
1	6211-310-006-20	GEARCASE ASSY	*	1 -150775					
1A	6211-310-006-30	GEARCASE ASSY	*	1 150776-		1			
2	6213-319-001-00	CONNECTOR,OIL FILTER	*	1					
3	6509-605-019-10	PLUG	*	3					
4	6209-610-002-10	CUP/SEALING/16	*	1					
5	6209-625-002-00	SEAL,OIL	*	1					
6	V231-360-808-50	FLANGEBOLT	*	1					
7	V231-360-807-50	FLANGEBOLT	*	1					
8	V231-360-805-50	FLANGEBOLT	*	2					
9	V231-360-805-00	FLANGEBOLT	*	2					
10	V231-360-804-00	FLANGEBOLT	*	1					
11	V231-360-803-50	FLANGEBOLT	*	1					
12	3817-401-001-00	NUT/M08	*	1					
13	V231-360-801-60	FLANGEBOLT	*	3					
14	V231-360-804-50	FLANGEBOLT	*	1					
15	V231-360-803-00	FLANGEBOLT	*	1					
16	6209-500-003-00	WASHER/08X14X01	*	1					
17	6215-546-001-00	STOPPER,FULL-LOAD	*	1					
18	6209-409-001-00	NUT/M8	*	1					
19	V341-120-008-00	NUT,CAP/M 8	*	1					
20	6209-920-002-00	PACKING	*	2					
21	3625-540-004-00	CAP,BLANK/30	*	1					
22	6215-542-001-10	PIN/ARM	*	1					
23	V710-140-004-00	RING,SNAP/ 4 E	*	2					
24	6909-202-308-00	PLUG	*	1 -205580					
24A	6209-600-004-00	PLUG/SCREW	*	1 205581-					
25	6209-500-003-00	WASHER/08X14X01	*	1					
26	6209-740-001-00	PIN,GROOVE	*	1					
27	6211-312-001-20	GASKET/GEARCASE	*	1 -148221					
27A	6211-312-001-30	GASKET/GEARCASE	*	1 148222-		1			

FIG. 9 TIMING GEAR CASE

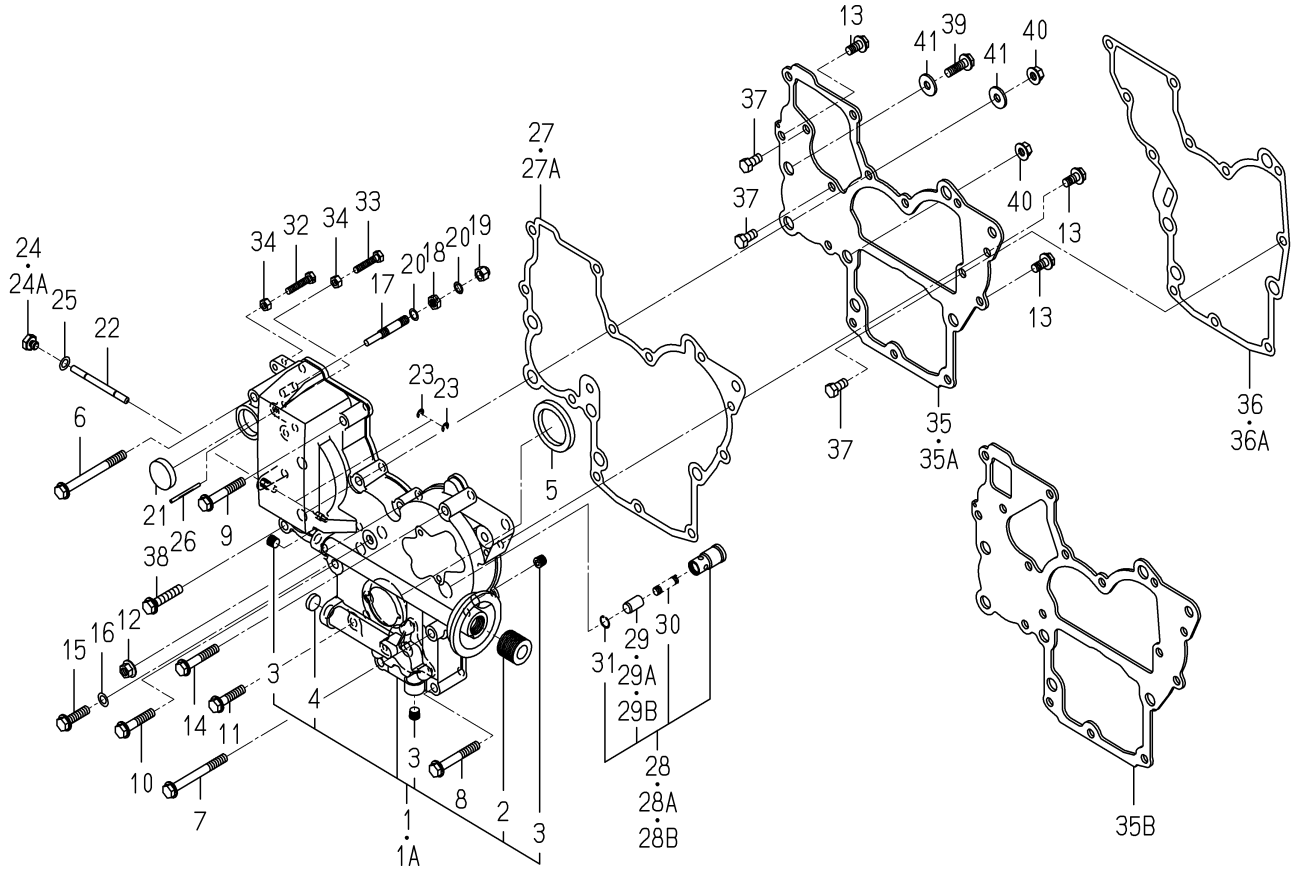

6003-240C-0100,6003-240C-0200

KEY	PART CODE	DESCRIPTION	SPC	TYPE OF MODEL E262G01		ITC	COL	GRP	REMARKS
28	6213-160-002-00	VALVE/RELIEF ASSY	*	1 -160774					
28A	6213-160-002-10	VALVE/RELIEF ASSY	*	1 -162896		1			
28B	6213-160-002-20	VALVE/RELIEF ASSY	*	1 162897-		1			
29	6213-161-001-00	PISTON/RELIEF VALVE	*	1 -160774					
29A	6213-161-001-10	PISTON/VALVE/RELIEF	*	1 -162896		1			
29B	6213-161-001-20	PISTON/VALVE/RELIEF	*	1 162897-		1			
30	6213-164-001-00	SPRING/RELIEF VALVE	*	1					
31	V705-140-012-00	RING,SNAP/12 C	*	1					
32	6209-050-001-00	BOLT/M6	*	1					
33	6209-050-002-00	BOLT/M6	*	1					
34	6909-110-406-00	NUT	*	2					
35	6211-311-005-10	PLATE,FRONT	*	1 -197034					
35A	6211-311-005-20	PLATE/FRONT	*	1 -210418		1			
35B	6211-311-005-30	PLATE/FRONT	*	1 210419-		1			
36	6211-312-002-20	GASKET/PLATE	*	1 -148221					
36A	6211-312-002-30	GASKET/PLATE	*	1 148222-		1			
37	6902-050-816-00	BOLT	*	3					
38	V231-360-804-00	FLANGEBOLT	*	2					
39	V231-360-802-50	FLANGEBOLT	*	1					
40	3817-401-001-00	NUT/M08	*	2					
41	1373-121-001-00	WASHER/9X22X2	*	2					

FIG. 10 HANGER

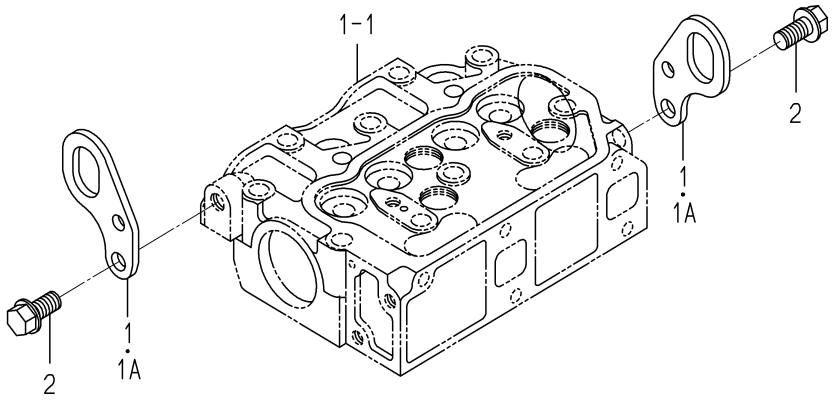

6003-290 -0100

KEY	PART CODE	DESCRIPTION	SPC	TYPE OF MODEL E262G01		ITC	COL	GRP	REMARKS
1	6211-777-007-20	HANGER	*	2 -195527					
1A	6211-777-007-30	HANGER	*	2 195528-		1			
2	V233-361-002-00	FLANGEBOLT	*	2					

FIG. 11 VALVE

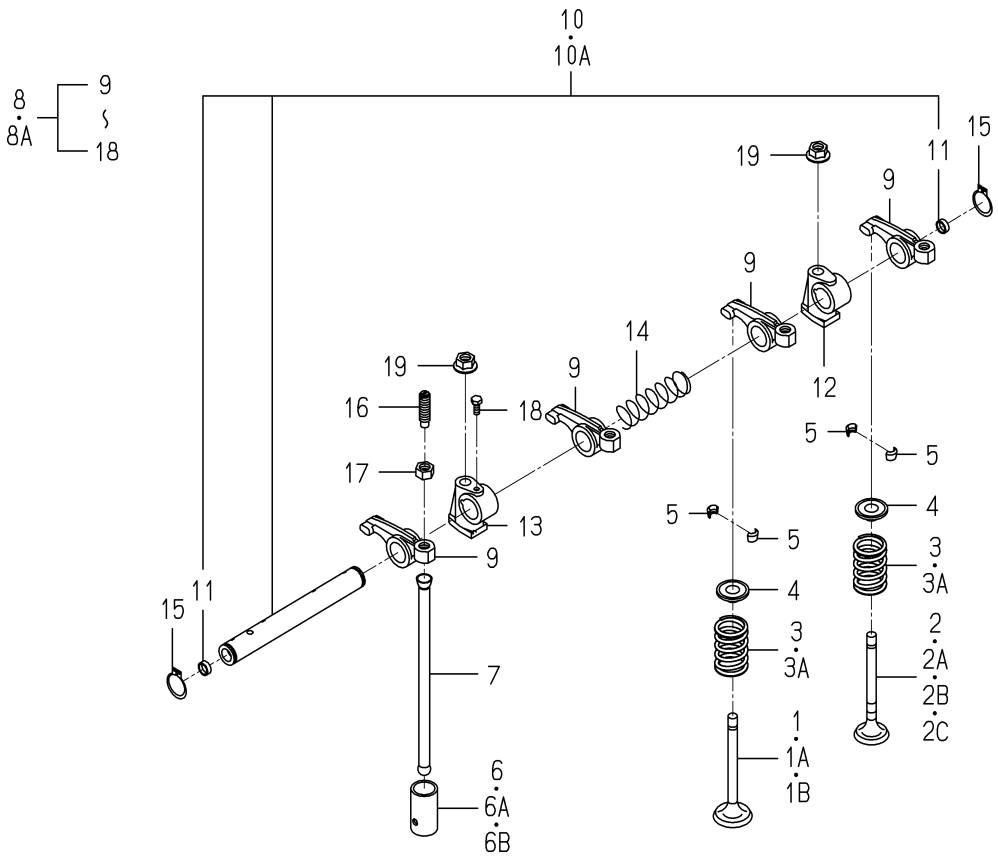

6003-301A-0100

KEY	PART CODE	DESCRIPTION	SPC	TYPE OF MODEL E262G01		ITC	COL	GRP	REMARKS
1	6212-551-001-00	VALVE,INTAKE	*	2 -215014					
1A	6212-551-001-10	VALVE/INTAKE	*	2 -240792		1			
1B	6212-551-028-00	VALVE/INTAKE	*	2 240793-					
2	6212-552-001-00	VALVE,EXHAUST	*	2 -162896					
2A	6212-552-001-10	VALVE/EXHAUST	*	2 -215014		1			
2B	6212-552-001-20	VALVE/EXHAUST	*	2 -240792		1			
2C	6212-552-014-00	VALVE/EXHAUST	*	2 240793-					
3	6212-561-001-00	SPRING/VALVE	*	4 -212419					
3A	6212-561-001-10	SPRING/VALVE	*	4 212420-		1			
4	6212-563-001-00	SEAT,VALVE SPRING	*	4					
5	6212-565-001-00	CUTTER,VALVE	*	8					
6	6212-571-001-10	TAPPET	*	4 -140829					
6A	6212-571-003-00	TAPPET	*	4 -212167					
6B	6212-571-006-00	TAPPET	*	4 212168-					
7	6212-575-001-00	ROD,PUSH	*	4					
8	6212-600-003-00	SHAFT,ROCKER	*	1 -188643					
8A	6212-600-003-10	ROCKERSHAFT ASSY	*	1 188644-		1			
9	6212-611-004-10	ROCKERARM	*	4					
10	6212-620-002-10	SHAFT,ROCKER ARMASSY	*	1 -188643					
10A	6212-620-002-20	SHAFT/ROCKERARM ASSY	*	1 188644-		1			
11	6212-626-002-10	PLUG	*	2					
12	6212-628-004-00	BRACKET ROCKER SHAFT	*	1					
13	6212-628-005-00	BRACKET,ROCKER SHAFT	*	1					
14	6209-940-004-00	SPRING	*	1					
15	V704-140-016-00	RING,SNAP/16 C	*	2					
16	6212-616-002-00	SCREW ADJUST	*	4					
17	6209-409-003-00	NUT	*	4					
18	6209-000-002-00	BOLT	*	1					
19	3817-401-001-00	NUT/M08	*	2					

FIG. 12 CAM SHAFT

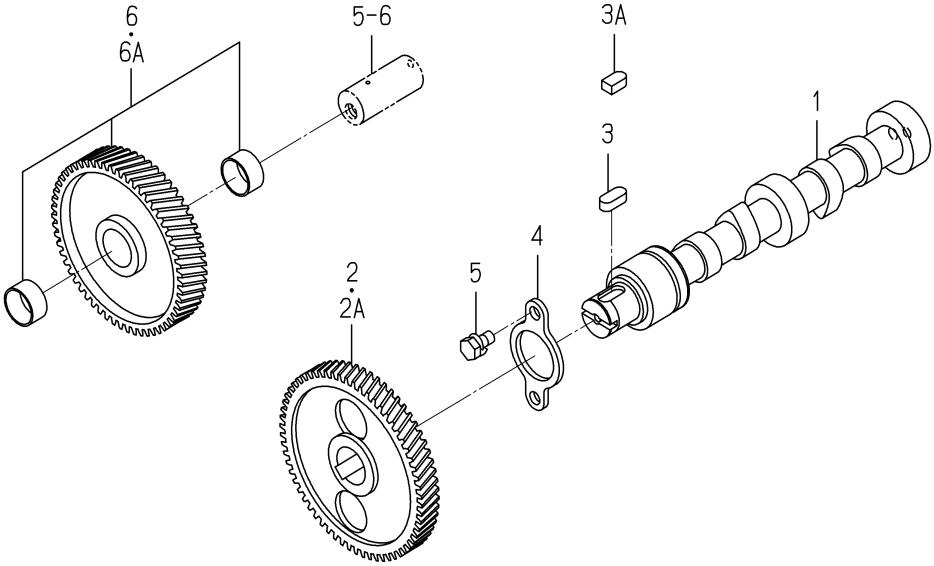

6003-310A-0100

KEY	PART CODE	DESCRIPTION	SPC	TYPE OF MODEL E262G01		ITC	COL	GRP	REMARKS
1	6212-511-004-00	SHAFT,CAM	*	1					
2	6212-522-003-00	GEAR,CAMSHAFT	*	1 -207271					
2A	6212-522-010-00	GEAR/CAMSHAFT	*	1 207272-					
3	6908-000-716-00	KEY	*	1 -204888					
3A	6209-730-005-00	KEY/07X05X09	*	1 204889-					
4	6212-535-001-00	PLATE,THRUST	*	1					
5	6901-910-612-00	BOLT,SEMS/M6X12	*	2					
6	6212-523-003-00	GEAR,IDLE	*	1 -206825					
6A	6212-523-023-00	GEAR/IDLE ASSY	*	1 206826-					

FIG. 13 PISTON

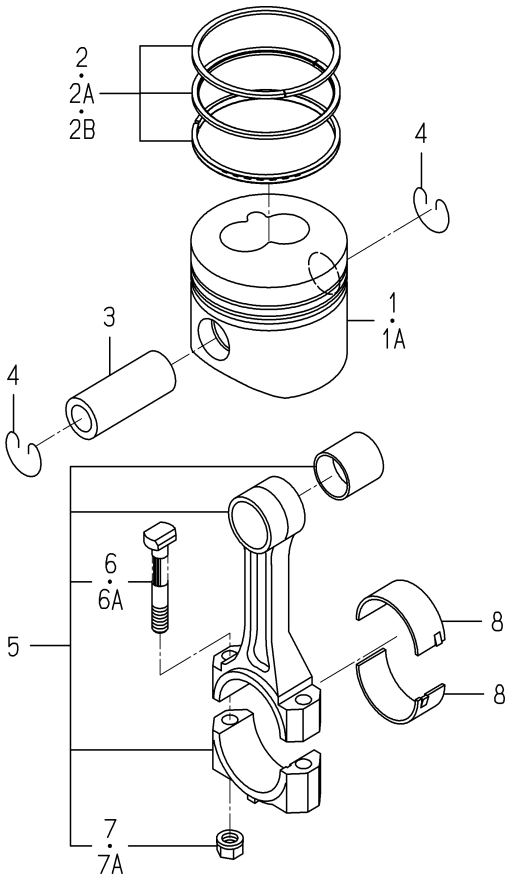

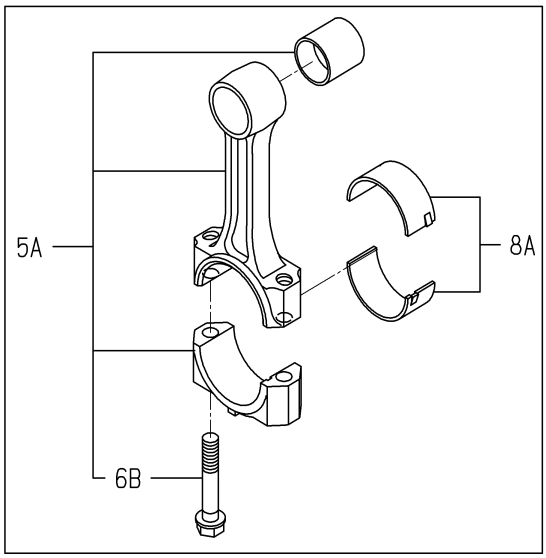

6003-340D-0100

KEY	PART CODE	DESCRIPTION	SPC	TYPE OF MODEL E262G01		ITC	COL	GRP	REMARKS
1	6212-111-015-00	PISTON	*	2 -121372					
1A	6212-111-015-10	PISTON	*	2 -252844		1			
2	6212-121-008-00	RING(PISTON) SET	*	2 -180837					
2A	6212-121-008-10	RING/PISTON SET	*	2 -189686		1			
2B	6212-121-008-20	RING/PISTON SET	*	2 -252844		1			
3	6212-211-001-10	PIN,PISTON	*	2 -252844					
4	6209-587-001-00	RING,SNAP	*	4 -252844					
5	6212-230-003-00	ROD,CONNECTING	*	2 -219825					
5A	6212-230-003-10	CONNECTINGROD ASSY	*	2 -252844		3			
6	6212-235-001-00	BOLT,CONN ROD	*	4 -142430					
6A	6212-235-001-10	BOLT/CONNECTINGROD	*	4 -219825		1			
6B	6212-235-005-00	BOLT/CONNECTINGROD	*	4 -252844					
7	6894-240-902-00	NUT,FLANGE	*	4 -194270					
7A	6209-440-003-00	NUT/FLANGE	*	4 -219825					
8	6212-261-006-00	BEARING/CONN ROD	*	4 -212644					
8A	6212-271-006-00	BEARING/CONNECTING R	*	2 -252844					

FIG. 14 PISTON

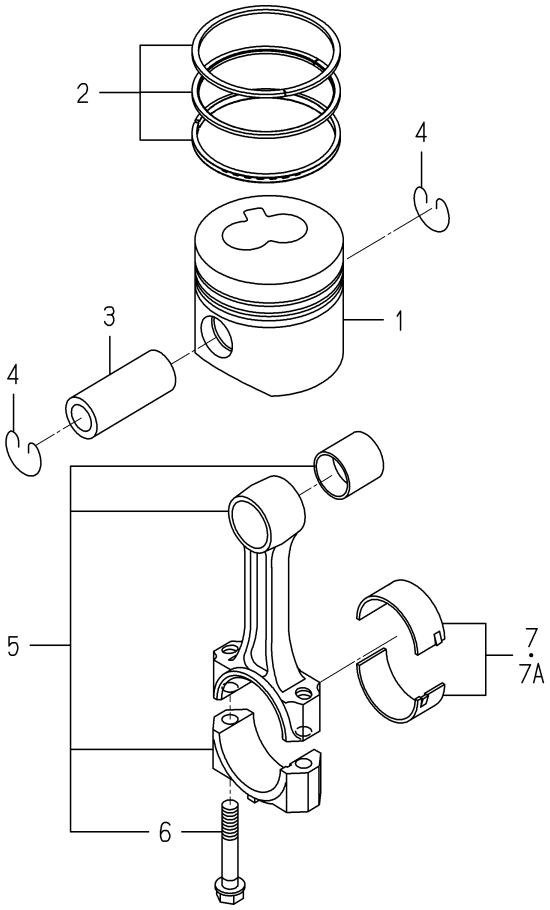

6003-340I-0100

KEY	PART CODE	DESCRIPTION	SPC	TYPE OF MODEL E262G01		ITC	COL	GRP	REMARKS
1	6212-111-080-10	PISTON	*	2 252845-					
2	6212-121-008-20	RING/PISTON SET	*	2 252845-					
3	6212-211-001-10	PIN,PISTON	*	2 252845-					
4	6209-587-001-00	RING,SNAP	*	4 252845-					
5	6212-230-003-10	CONNECTINGROD ASSY	*	2 252845-					
6	6212-235-005-00	BOLT/CONNECTINGROD	*	4 252845-					
7	6212-271-006-00	BEARING/CONNECTING R	*	2 -258015					
7A	6212-271-016-00	BEARING/CONNECTING R	*	2 258016-					

FIG. 15 PISTON/OVER SIZE (OPTION)

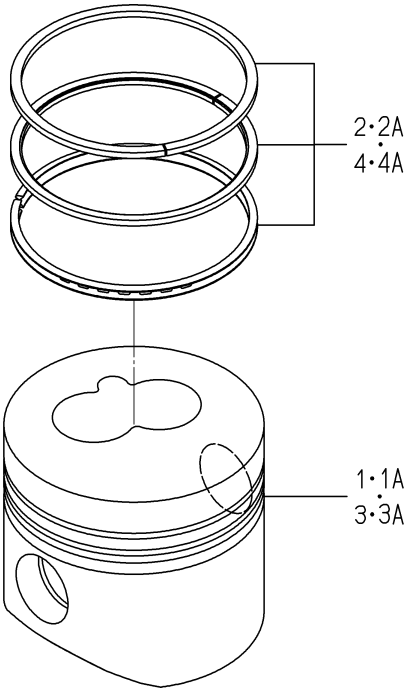

6003-349D-0100

KEY	PART CODE	DESCRIPTION	SPC	TYPE OF MODEL E262G01		ITC	COL	GRP	REMARKS
1	6212-114-015-00	PISTON/OV0.50	T	2-121372					
1A	6212-114-015-10	PISTON/OV	T	2-252844		1			
2	6212-124-008-00	RING(PISTON/OV50)SET	T	2-180837					
2A	6212-124-008-10	RING/PISTON/OV SET	T	2-252844		1			
3	6212-116-015-00	PISTON(OV/100)	T	2-121372					
3A	6212-116-015-10	PISTON/OV	T	2-252844		1			
4	6212-126-008-00	RING(PISTON/OV)SET	T	2-180837					
4A	6212-126-008-10	RING/PISTON/OV SET	T	2-252844		1			

FIG. 16 PISTON/OVER SIZE (OPTION)

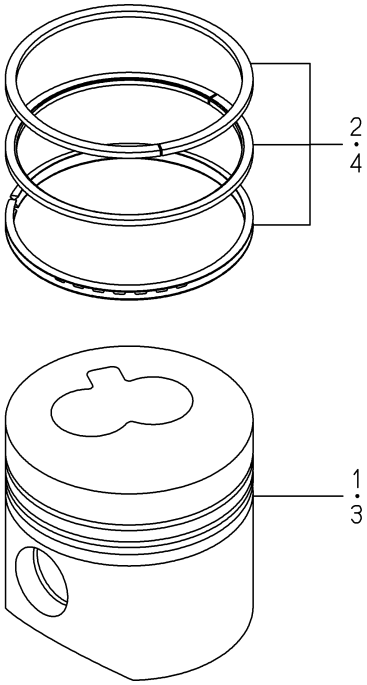

6003-349H-0100

KEY	PART CODE	DESCRIPTION	SPC	TYPE OF MODEL E262G01		ITC	COL	GRP	REMARKS
1	6212-114-080-10	PISTON/OV	T	2 252845-					
2	6212-124-008-10	RING/PISTON/OV SET	T	2 252845-					
3	6212-116-080-10	PISTON/OV	T	2 252845-					
4	6212-126-008-10	RING/PISTON/OV SET	T	2 252845-					

FIG. 17 CRANK SHAFT

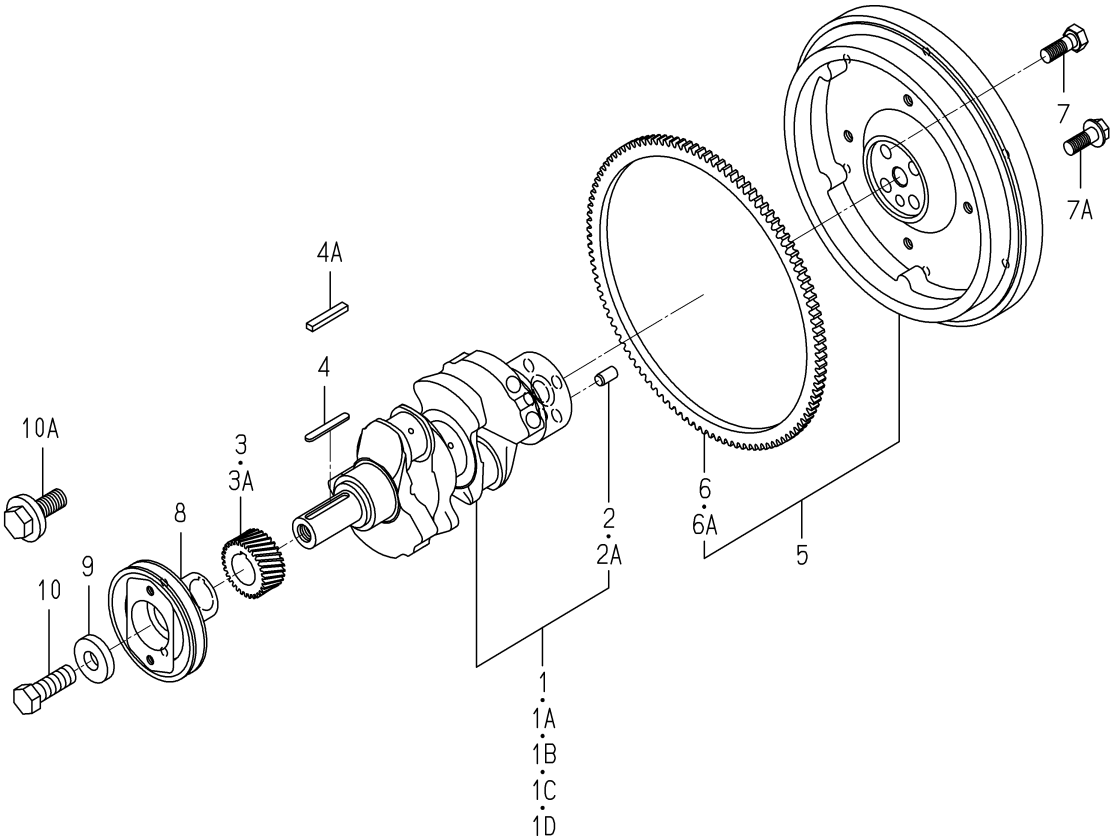

6003-350F-0100

KEY	PART CODE	DESCRIPTION	SPC	TYPE OF MODEL E262G01		ITC	COL	GRP	REMARKS
1	6212-310-010-00	SHAFT,CRANK	*	1 -113377					
1A	6212-310-010-10	CRANKSHAFT ASSY	*	1 -177349		1			
1B	6212-310-010-20	CRANKSHAFT ASSY	*	1 -191904		1			
1C	6212-310-010-30	CRANKSHAFT ASSY	*	1 -239510		1			
1D	6212-310-010-50	CRANKSHAFT ASSY	*	1 239511-		1			
2	6908-161-018-00	PIN	*	1 -123469					
2A	V523-101-001-80	PIN	*	1 123470-					
3	6212-521-002-00	GEAR,CRANK SHAFT	*	1 -206918					
3A	6212-521-008-00	GEAR/CRANK	*	1 206919-					
4	6908-000-750-00	KEY	*	1 -205580					
4A	6209-730-006-00	KEY/07X05X43	*	1 205581-					
5	6212-330-013-30	FLYWHEEL	*	1					
6	6212-333-001-00	GEAR,RING	*	1 -134270					
6A	6212-333-003-00	RINGGEAR	*	1 134271-					
7	6209-000-013-00	BOLT	*	4 -194421					
7A	6209-046-015-00	BOLT/FLANGE	*	4 194422-					
8	6212-371-014-20	PULLEY	*	1					
9	6212-379-001-00	WASHER	*	1 -261516					
10	6901-066-645-00	BOLT	*	1 -261516					
10A	6209-000-043-00	BOLT/CRANK	*	1 261517-					

FIG. 18 OIL PUMP

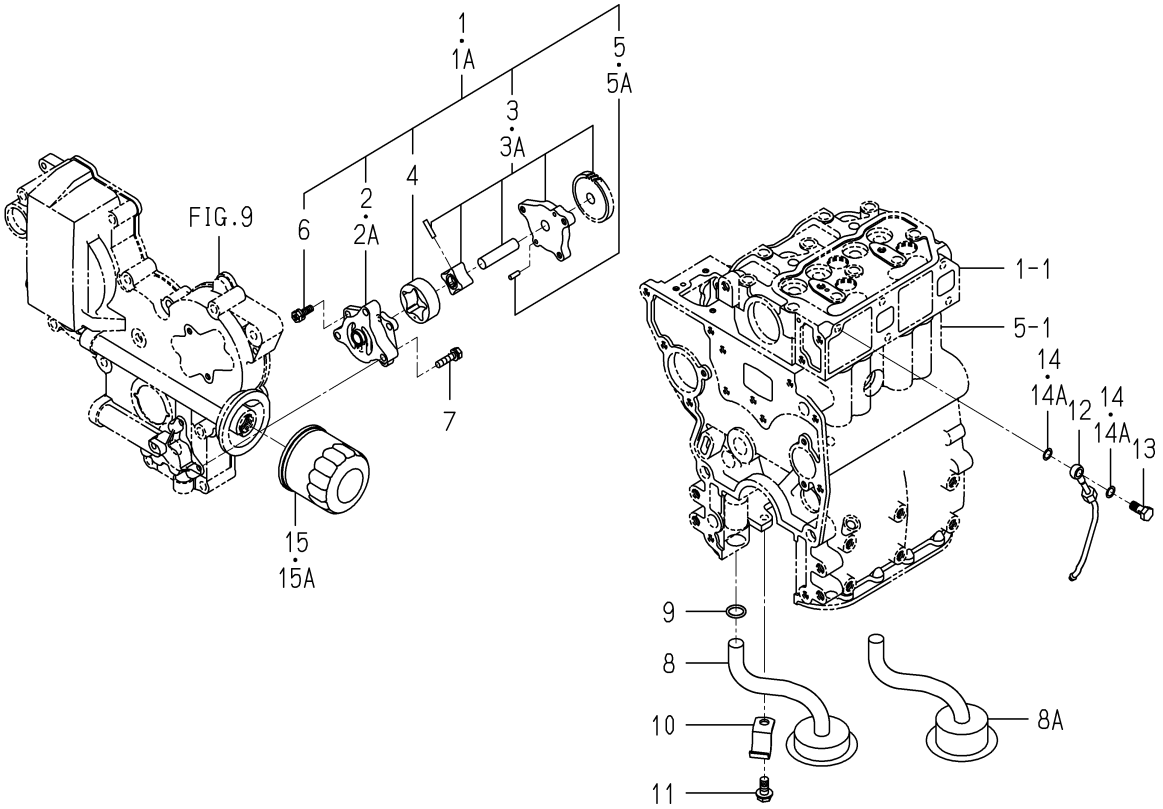

6003-401A-0100

KEY	PART CODE	DESCRIPTION	SPC	TYPE OF MODEL E262G01		ITC	COL	GRP	REMARKS
1	6213-100-003-20	PUMP,OIL ASSY	*	1 -146749					
1A	6213-100-003-30	OILPUMP ASSY	*	1 146750-		1			
2	6213-111-001-20	BODY/OILPUMP	*	1 -189679					
2A	6213-111-001-30	BODY/OILPUMP	*	1 189680-		3			
3	6213-120-003-00	GEAR/OILPUMP ASSY	*	1 -146755					
3A	6213-120-003-20	GEAR/OILPUMP ASSY	*	1 146756-		1			
4	6213-125-001-00	ROTOR/OUTER	*	1					
5	6908-160-408-00	PIN/STRAIGHT	*	2 -189679					
5A	6213-129-003-00	PIN/STRAIGHT	*	2 189680-					
6	6213-119-001-00	BOLT/WS	*	3					
7	6901-910-625-00	BOLT	*	3					
8	6213-140-004-10	STRAINER	*	1 -194421					
8A	6213-140-004-20	STRAINER COMP	*	1 194422-		1			
9	V720-102-401-50	O-RING/P15	*	1					
10	6213-149-001-00	CLAMP,STRAINER	*	1					
11	V231-360-801-60	FLANGEBOLT	*	1					
12	6213-311-003-10	PIPE,OIL	*	1					
13	6909-906-105-10	BOLT,JOINT	*	1					
14	6909-920-843-00	PACKING	*	2 -135557					
14A	6209-920-002-00	PACKING	*	2 135558-					
15	6213-240-002-00	CARTRIDGE,OIL FILTER	*	1 -159738					
15A	6213-240-002-10	CARTRIDGE/OILFILTER	*	1 159739-		1			

FIG. 19 WATER PUMP

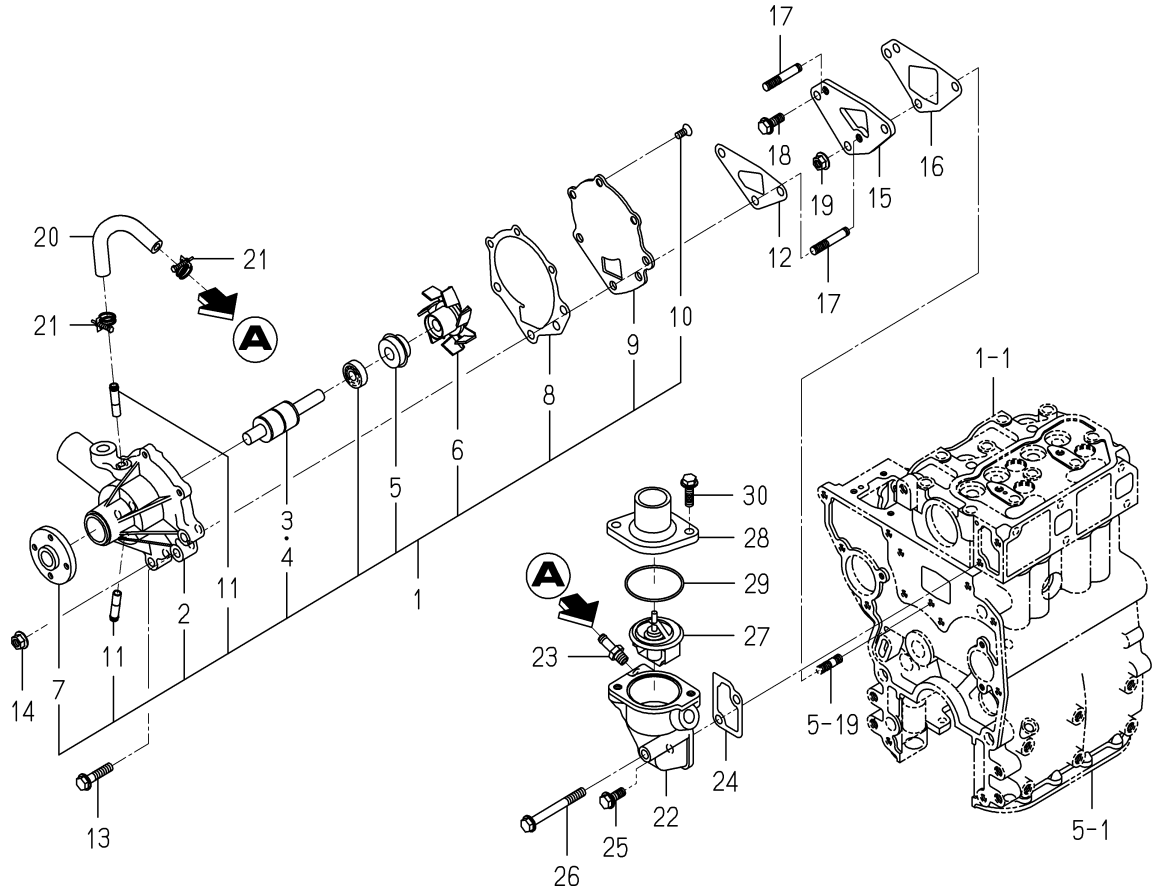

6003-420B-0100

KEY	PART CODE	DESCRIPTION	SPC	TYPE OF MODEL E262G01		ITC	COL	GRP	REMARKS
1	6213-610-005-30	WATERPUMP ASSY	*	1 -116762					
2	6213-611-003-20	BODY/WATERPUMP	*	1 -116762					
3	6213-631-002-00	BEARING/WATER PUMP	*	1 -116762					
4	6213-631-005-00	BEARING/WATERPUMP	*	1 -116762					
5	6213-622-002-10	SEAL SET/WATER PUMP	*	1 -116762					
6	6213-621-003-00	ROTOR/WATERPUMP	*	1 -116762					
7	6213-642-002-00	SEAL/WATER PUMPPULLE	*	1 -116762					
8	6213-613-002-10	GASKET	*	1 -116762					
9	6213-612-004-00	PLATE/WATER PUMP	*	1 -116762					
10	6213-619-003-00	SCREW/WATER PUMP	*	3 -116762					
11	6213-619-002-00	PIPE/WATER PUMP	*	2 -116762					
12	6213-614-003-10	GASKET/WATER PUMP	*	1 -116762					
13	V231-360-804-50	FLANGEBOLT	*	1 -116762					
14	3817-401-001-00	NUT/M08	*	2 -116762					
15	6213-619-005-00	SPACER,WATER PUMP	*	1 -116762					
16	6213-614-006-10	GASKET/SPACER	*	1 -116762					
17	6209-300-002-00	STUD	*	2 -116762					
18	V231-360-802-00	FLANGEBOLT	*	1 -116762					
19	3817-401-001-00	NUT/M08	*	1 -116762					
20	6213-729-001-00	HOSE,RUBBER	*	1 -116762					
21	J061-210-015-00	CLAMP/WIRE/10-15	*	2 -116762					
22	6213-716-001-40	HOUSING/THERMOSTAT	*	1 -116762					
23	6213-721-003-00	PIPE,PUMP HOUSING	*	1 -116762					
24	6213-743-002-10	GASKET/HOUSING	*	1 -116762					
25	V231-360-802-00	FLANGEBOLT	*	1 -116762					
26	V231-360-807-50	FLANGEBOLT	*	1 -116762					
27	6513-770-022-10	THERMOSTAT	*	1 -116762					
28	6213-711-003-20	PIPE,WATER OUTLET	*	1 -116762					
29	V723-102-005-50	O-RING	*	1 -116762					
30	V231-360-802-50	FLANGEBOLT	*	2 -116762					

FIG. 20 WATER PUMP

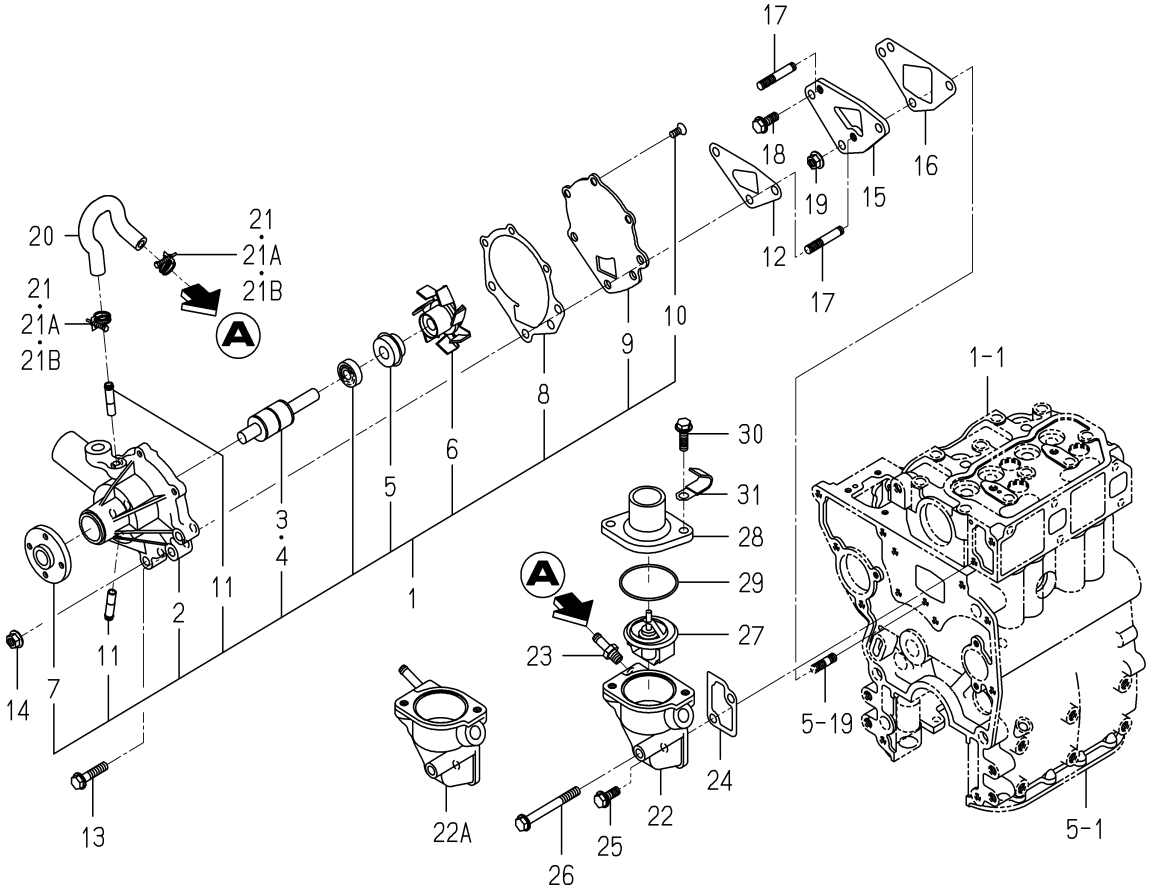

6003-420G-0100

KEY	PART CODE	DESCRIPTION	SPC	TYPE OF MODEL E262G01		ITC	COL	GRP	REMARKS
1	6213-610-005-40	WATERPUMP ASSY	*	1 116763-					
2	6213-611-003-20	BODY/WATERPUMP	*	1 116763-					
3	6213-631-002-00	BEARING/WATER PUMP	*	1 116763-					
4	6213-631-005-00	BEARING/WATERPUMP	*	1 116763-					
5	6213-622-002-10	SEAL SET/WATER PUMP	*	1 116763-					
6	6213-621-003-00	ROTOR/WATERPUMP	*	1 116763-					
7	6213-642-002-00	SEAL/WATER PUMPPULLE	*	1 116763-					
8	6213-613-002-10	GASKET	*	1 116763-					
9	6213-612-004-00	PLATE/WATER PUMP	*	1 116763-					
10	6213-619-003-00	SCREW/WATER PUMP	*	3 116763-					
11	6213-619-002-00	PIPE/WATER PUMP	*	2 116763-					
12	6213-614-003-10	GASKET/WATER PUMP	*	1 116763-					
13	V231-360-804-50	FLANGEBOLT	*	1 116763-					
14	3817-401-001-00	NUT/M08	*	2 116763-					
15	6213-619-005-00	SPACER,WATER PUMP	*	1 116763-					
16	6213-614-006-10	GASKET/SPACER	*	1 116763-					
17	6209-300-002-00	STUD	*	2 116763-					
18	V231-360-802-00	FLANGEBOLT	*	1 116763-					
19	3817-401-001-00	NUT/M08	*	1 116763-					
20	6213-729-013-10	HOSE/RUBBER	*	1 116763-					
21	J061-210-015-00	CLAMP/WIRE/10-15	*	2 -198868					
21A	J062-138-148-00	CLIP/HOSE/13.8-14.8	*	2 -198888					
21B	J061-210-015-00	CLAMP/WIRE/10-15	*	2 198889-					
22	6213-716-001-40	HOUSING/THERMOSTAT	*	1 -207142					
22A	6213-716-001-50	HOUSING/THERMOSTAT	*	1 207143-		1			
23	6213-721-003-00	PIPE,PUMP HOUSING	*	1 -208007					
24	6213-743-002-10	GASKET/HOUSING	*	1 116763-					
25	V231-360-802-00	FLANGEBOLT	*	1 116763-					
26	V231-360-807-50	FLANGEBOLT	*	1 116763-					
27	6513-770-022-10	THERMOSTAT	*	1 116763-					

FIG. 20 WATER PUMP

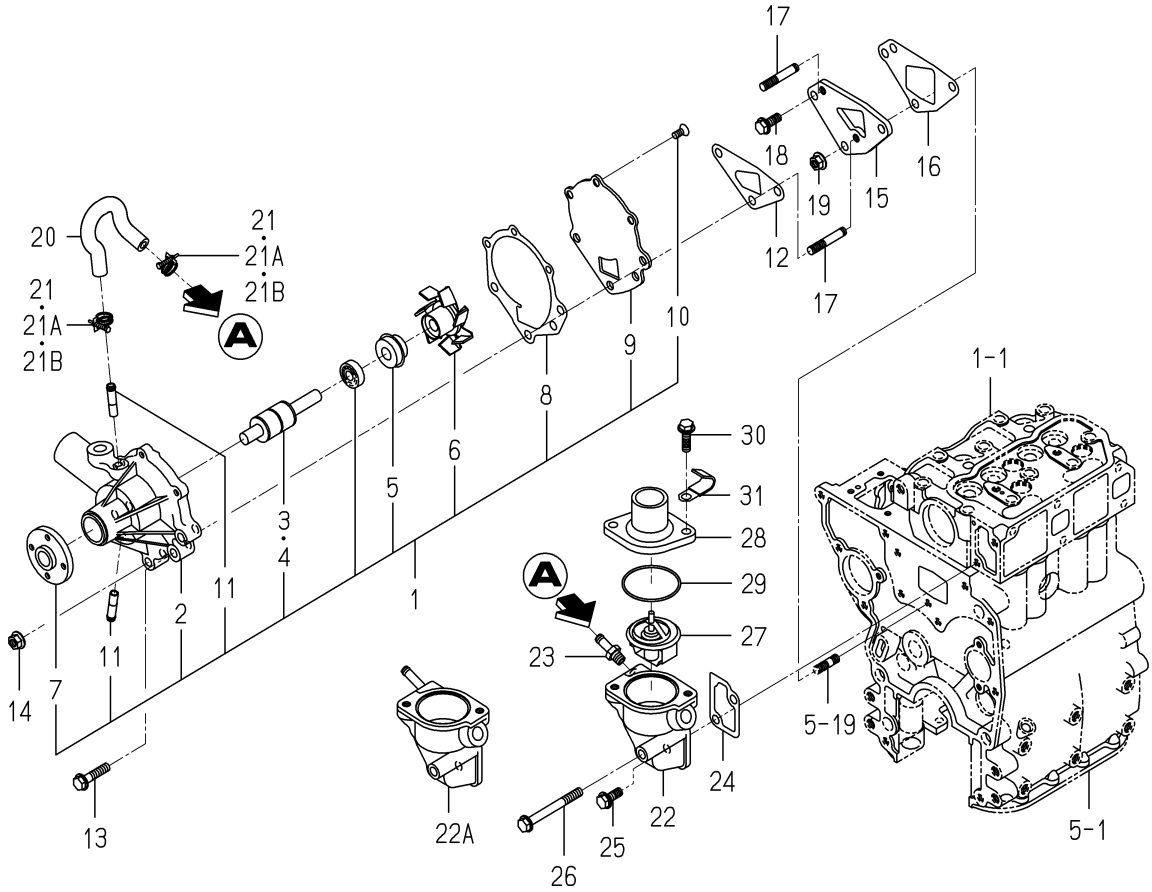

6003-420G-0100

KEY	PART CODE	DESCRIPTION	SPC	TYPE OF MODEL E262G01		ITC	COL	GRP	REMARKS
28	6213-711-003-20	PIPE,WATER OUTLET	*	1 116763-					
29	V723-102-005-50	O-RING	*	1 116763-					
30	V231-360-802-50	FLANGEBOLT	*	2 116763-					
31	3747-172-012-00	CLAMP,HARNESS D	*	1 116763-					

FIG. 21 COOLING FAN

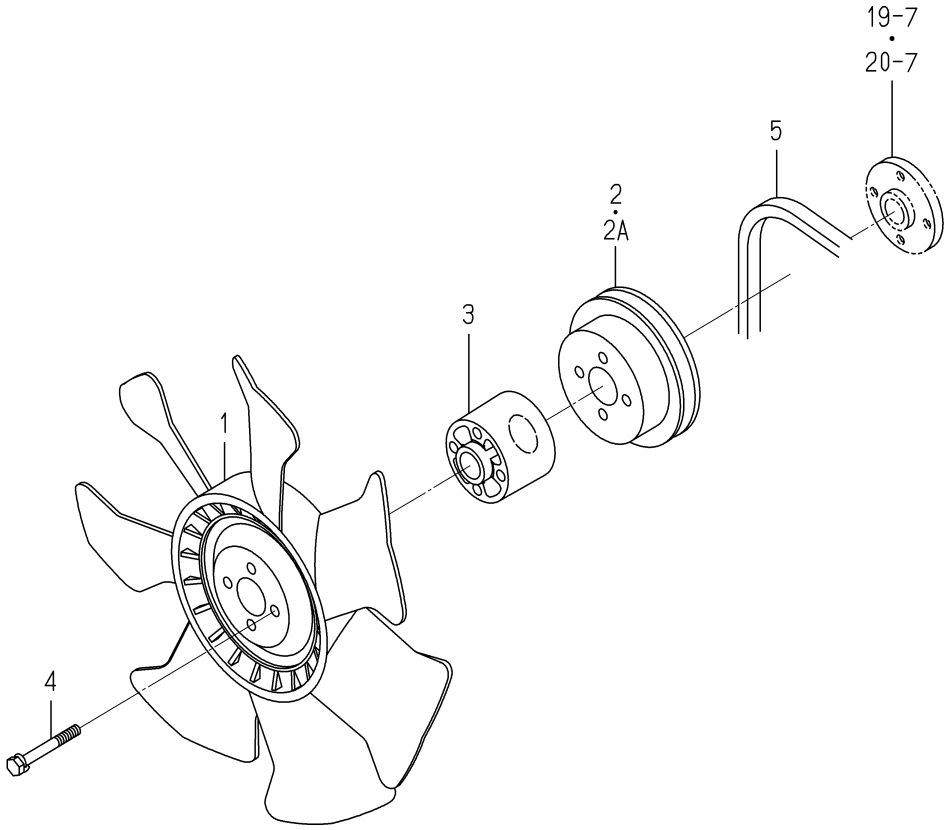

6003-480C-0100

KEY	PART CODE	DESCRIPTION	SPC	TYPE OF MODEL E262G01		ITC	COL	GRP	REMARKS
1	6213-660-006-00	FAN,COOLING	*	1					
2	6213-641-004-00	PULLEY,WATER PUMP	*	1 -195757					
2A	6213-641-004-10	PULLEY,WATER PUMP	*	1 195758-		1			
3	6213-669-002-00	SPACER,FAN/39	*	1					
4	6209-030-041-00	BOLT	*	4					
5	6213-671-003-00	BELT VHM034	*	1					

FIG. 22 INJECTION NOZZLE

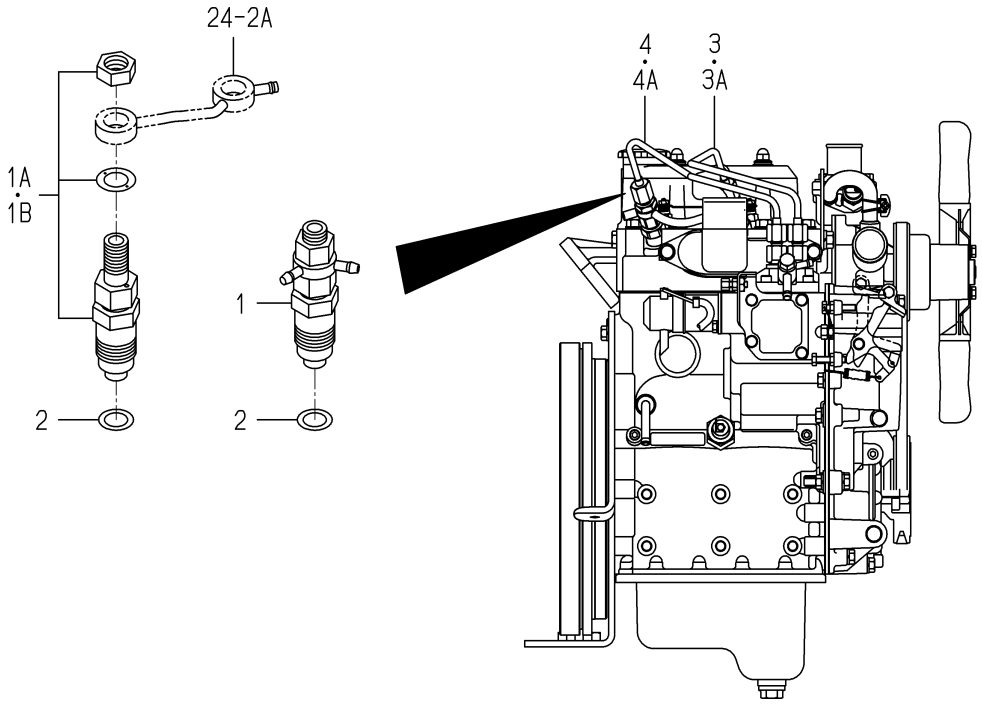

6003-501C-0100

KEY	PART CODE	DESCRIPTION	SPC	TYPE OF MODEL E262G01		ITC	COL	GRP	REMARKS
1	6215-300-005-00	NOZZLE,INJ.ASSY	*	2 -121249					FIG 029
1A	6215-300-030-00	INJECTIONNOZZLE ASSY	*	2 -140829					FIG 030
1B	6215-300-037-00	INJECTIONNOZZLE ASSY	*	2 140830-					FIG 031
2	6215-315-002-00	GASKET,NOZZLE	*	2					
3	6215-410-035-10	PIPE,INJ	*	1 -154904					
3A	6215-411-111-00	PIPE/INJECTION ASSY	*	1 154905-					
4	6215-410-036-10	PIPE,INJ	*	1 -154904					
4A	6215-411-112-00	PIPE/INJECTION ASSY	*	1 154905-					

FIG. 23 INJECTION PUMP

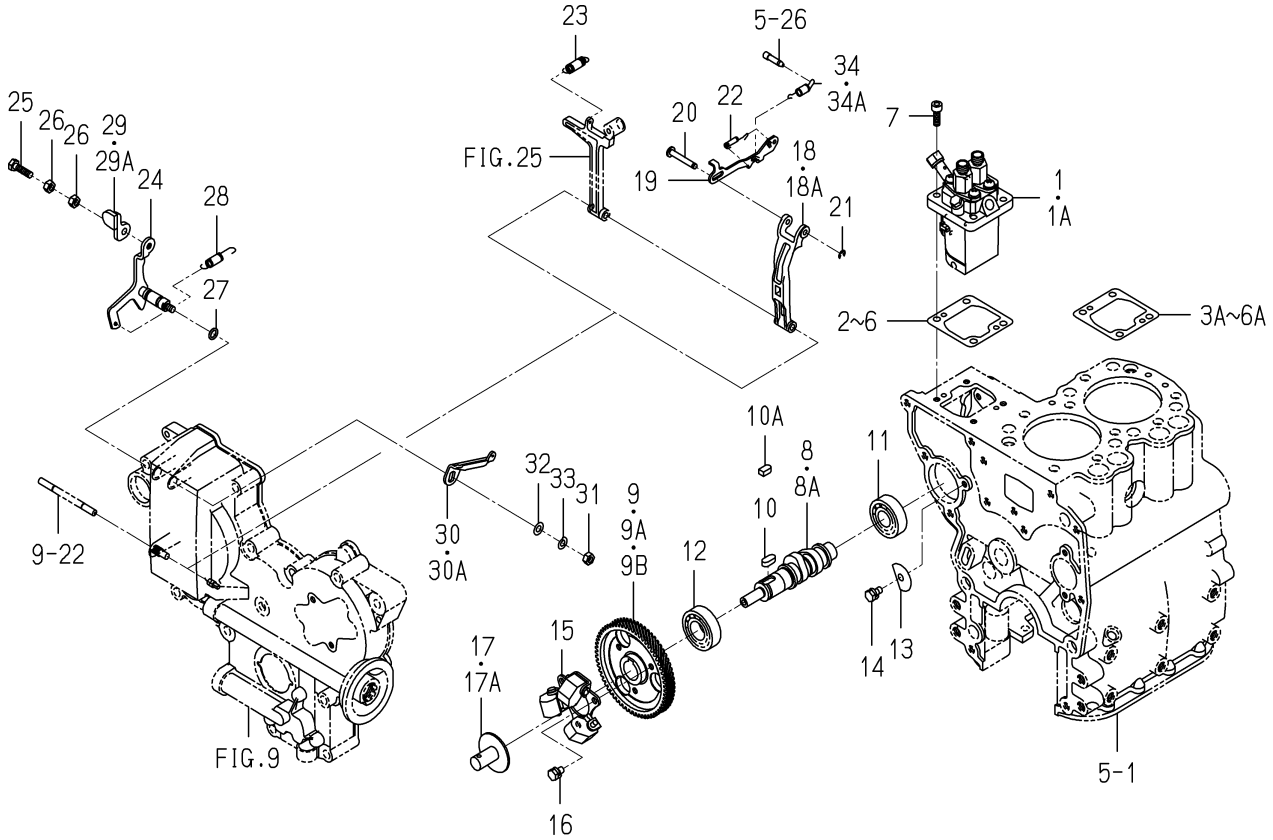

6003-510F-0100

KEY	PART CODE	DESCRIPTION	SPC	TYPE OF MODEL E262G01		ITC	COL	GRP	REMARKS
1	6215-600-057-00	PUMP,INJ ASSY	*	1 -211781					FIG 032
1A	6215-600-057-10	INJECTIONPUMP ASSY	*	1 211782-		1			FIG 032
2	6219-752-011-00	SHIM/INJECTTON P/0.1	*	1 -243645					
3	6219-752-012-00	SHIM/INJECTION P/0.2	*	1 -243645					
3A	6219-752-036-00	SHIM/INJECTIONPUMP	*	1 243646-					
4	6219-752-013-00	SHIM/INJECTION P/0.3	*	1 -243645					
4A	6219-752-037-00	SHIM/INJECTIONPUMP	*	1 243646-					
5	6219-752-014-00	SHIM/INJECTION P/0.4	*	1 -243645					
5A	6219-752-038-00	SHIM/INJECTIONPUMP	*	1 243646-					
6	6219-752-015-00	SHIM/INJECTION P/0.5	*	1 -229905					
6A	6219-752-039-00	SHIM/INJECTIONPUMP	*	1 243646-					
7	6209-056-001-00	BOLT/M6X18	*	4					
8	6215-621-004-10	SHAFT,CAM/INJ.PUMP	*	1 -206838					
8A	6215-621-004-20	CAMSHAFT/INJPUMP	*	1 206839-		1			
9	6212-524-002-00	GEAR,INJ PUMP	*	1 -207994					
9A	6212-524-002-10	GEAR/INJECTIONPUMP	*	1 -208021		1			
9B	6212-524-002-20	GEAR/INJECTIONPUMP	*	1 208022-		1			
10	6908-000-716-00	KEY	*	1 -205580					
10A	6209-730-005-00	KEY/07X05X09	*	1 205581-					
11	V600-110-620-30	BEARING,RB/6203	*	1					
12	V600-110-600-40	BEARING,RB/6004	*	1					
13	6212-535-002-00	PLATE,THRUST INJPUMP	*	1					
14	6901-910-612-00	BOLT,SEMS/M6X12	*	1					
15	6215-520-001-00	FLYWEIGHT	*	1					
16	6209-030-043-00	BOLT/M6X10	*	3					
17	6215-526-001-10	PIECE,THRUST	*	1 -211721					
17A	6215-526-004-00	THRUSTPIECE	*	1 211722-					
18	6215-541-001-00	ARM,FLOATING	*	1 -156998					
18A	6215-541-001-10	ARM/FLOATING COMP	*	1 156999-		1			
19	6215-543-003-20	LINK/CONTROL	*	1					

FIG. 23 INJECTION PUMP

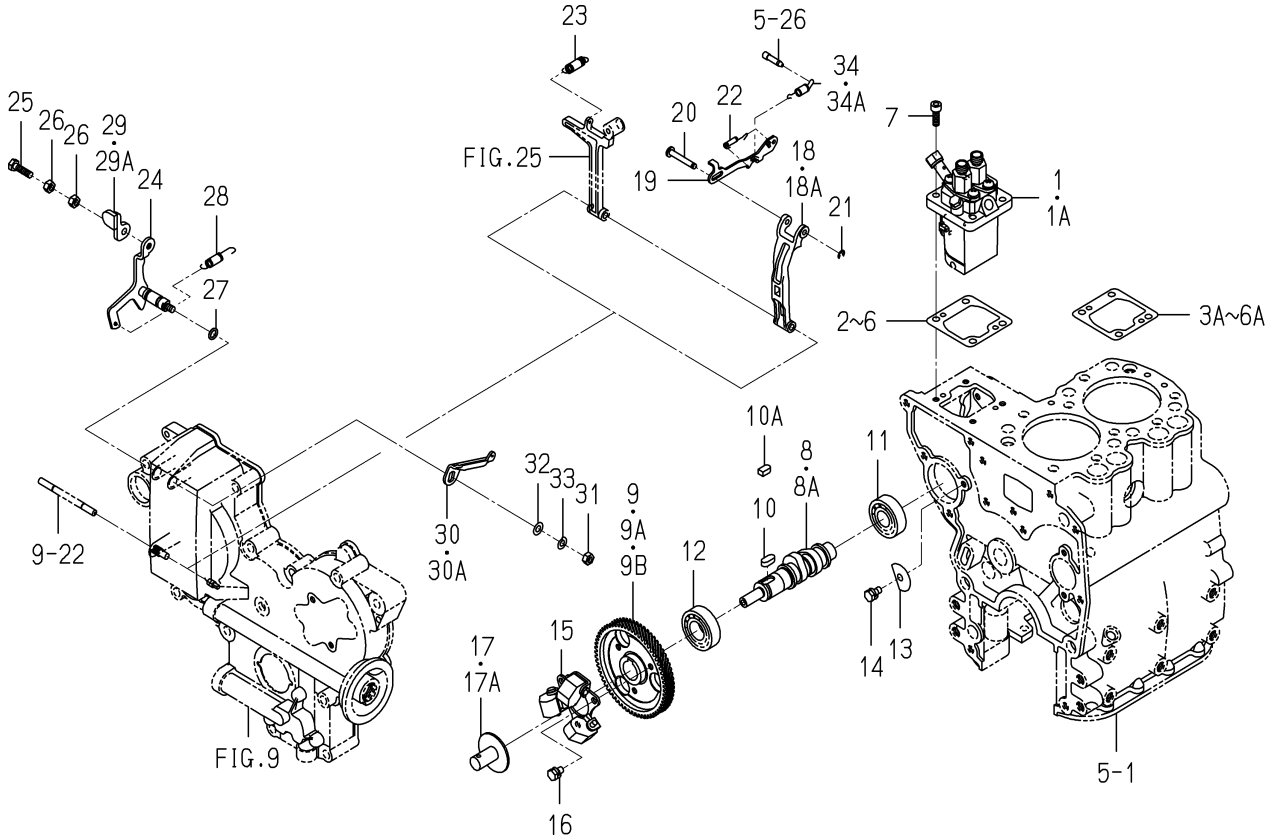

6003-510F-0100

KEY	PART CODE	DESCRIPTION	SPC	TYPE OF MODEL E262G01		ITC	COL	GRP	REMARKS
20	6215-542-002-00	PIN,CONTROL LINK	*	1					
21	V710-140-004-00	RING,SNAP/ 4 E	*	1					
22	6215-549-003-00	SPRING,SETTING	*	1					
23	6215-531-005-00	SPRING,GOVERNOR	*	1					
24	6215-541-003-10	LEVER,CONTROL	*	1					
25	6209-044-001-00	BOLT/M6X18	*	1					
26	6909-111-406-00	NUT	*	2					
27	V720-101-900-80	O-RING/P 8	*	1					
28	6209-580-002-10	SPRING,RETURN	*	1					
29	6215-549-021-00	PLATE,CONTROL VALVE	*	1 -195382					
29A	6215-549-021-10	PLATE(CONTROLLEVER)	*	1 195383-		1			
30	6215-549-007-00	ARM,CONTROL	*	1 -119456					
30A	6215-549-007-10	ARM/CONTROL	*	1 119457-		1			
31	6909-110-406-00	NUT	*	1					
32	V411-260-006-00	WASHER / M6	*	1					
33	V401-160-006-00	WASHER,SP/M 6	*	1					
34	6215-549-008-00	SPRING,STARTING	*	1 -181535					
34A	6215-549-008-10	SPRING/STARTING	*	1 181536-		1			

FIG. 24 FUEL PIPE

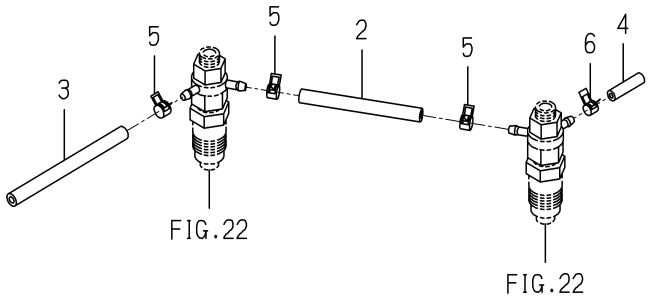

(NO.1~121249)

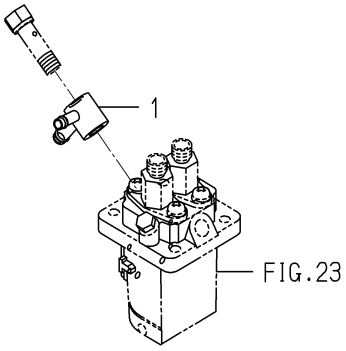

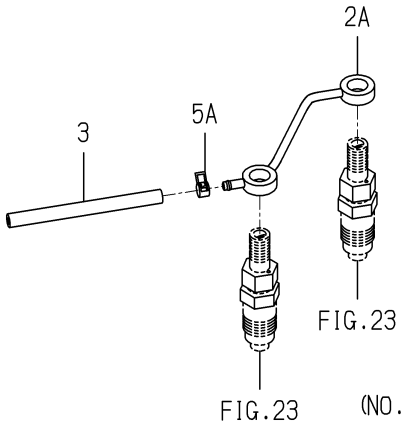

(NO.121250~)

6003-550F-0100

KEY	PART CODE	DESCRIPTION	SPC	TYPE OF MODEL E262G01		ITC	COL	GRP	REMARKS
1	6215-412-001-20	CONNECTOR/FUEL	*	1					
2	6209-360-010-00	HOSE,RUBBER	*	1 -121249					
2A	6215-411-079-10	PIPE/FUEL	*	1 121250-					
3	6509-360-912-10	HOSE,RUBBER	*	1					
4	6515-419-014-00	CAP	*	1 -121249					
5	J062-076-082-00	CLIP/HOSE/7.6-8.2	*	1					
6	J062-062-067-00	CLIP/HOSE/6.2-6.7	*	1 -121249					

FIG. 25 ADAPTER

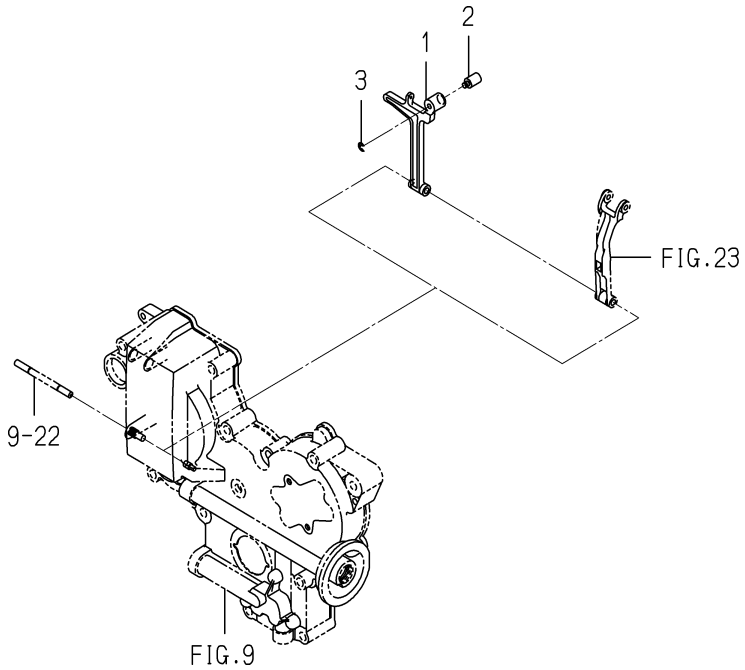

6003-560J-0100

KEY	PART CODE	DESCRIPTION	SPC	TYPE OF MODEL		ITC	COL	GRP	REMARKS
				E262G01					
1	6215-541-002-10	ARM,TENSION	*	1					
2	6215-549-029-00	PIN,ADAPTER	*	1					
3	V710-140-004-00	RING,SNAP/ 4 E	*	1					

FIG. 26 ELECTRIC (1)

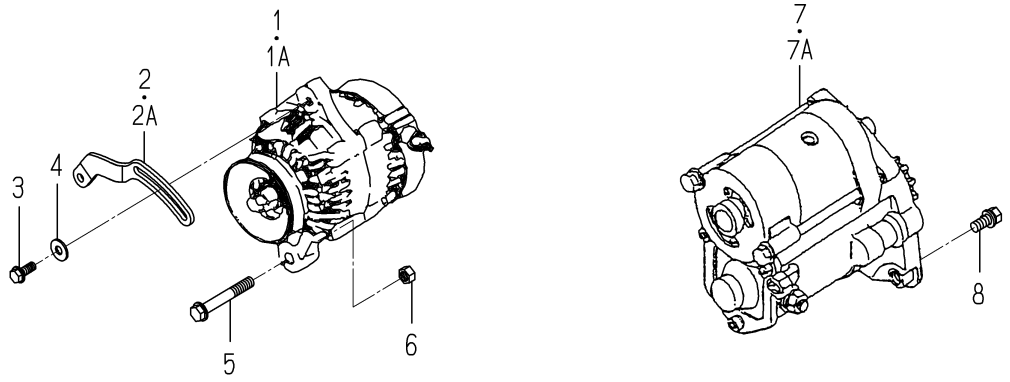

6003-801G-0100,6003-801G-0200

KEY	PART CODE	DESCRIPTION	SPC	TYPE OF MODEL E262G01		ITC	COL	GRP	REMARKS
1	6281-200-016-00	GENERATOR ASSY	*	1 -130376					FIG 035
1A	6281-200-005-00	GENERATOR ASSY	*	1 130377-					FIG 034
2	6213-674-006-10	PLATE/ADJUST	*	1 -195140					
2A	6213-674-006-20	PLATE/ADJUST	*	1 195141-		1			
3	V231-360-802-00	FLANGEBOLT	*	1					
4	1373-121-001-00	WASHER/9X22X2	*	1					
5	V233-361-007-00	FLANGEBOLT	*	1					
6	6909-110-410-00	NUT/M10	*	1					
7	6281-100-003-00	STARTER ASSY	*	1 -159252					FIG 033
7A	6281-100-003-10	STARTER ASSY	*	1 159253-		1			FIG 033
8	6901-911-025-00	BOLT	*	2					

FIG. 27 ELECTRIC (2)

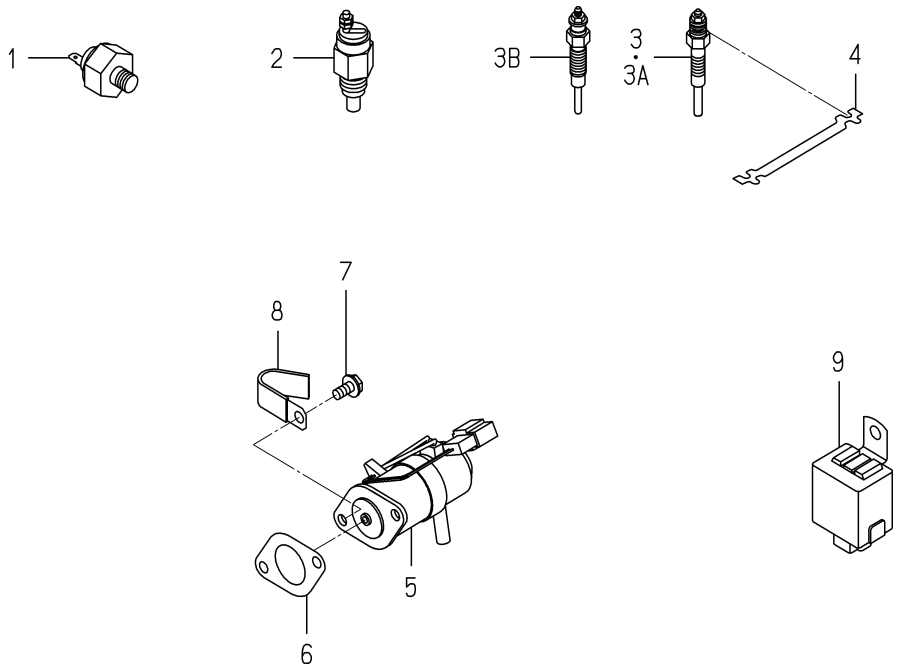

6003-820E-0100,6003-820E-0200

KEY	PART CODE	DESCRIPTION	SPC	TYPE OF MODEL E262G01		ITC	COL	GRP	REMARKS
1	6281-971-001-10	SWITCH/OILPRESSURE	*	1					
2	6582-450-014-00	SWITCH,THERMETER	*	1					
3	6281-410-002-20	PLUG,GLOW	*	2 -142628					
3A	6281-410-010-00	GLOWPLUG	*	2 -226295					
3B	6281-410-023-00	GLOWPLUG	*	2 226296-					
4	6219-732-003-00	CONNECTOR,GLOW PLUG	*	1					
5	6281-910-001-00	SOLENOID	*	1					
6	6209-630-002-10	GASKET	*	1					
7	V230-360-601-20	FLANGEBOLT	*	2					
8	3748-172-007-00	CLAMP,7	*	1 186940-					
9	6281-920-001-00	RELAY,SOLENOID	*	1					

FIG. 28 REPAIR PARTS (OPTION)

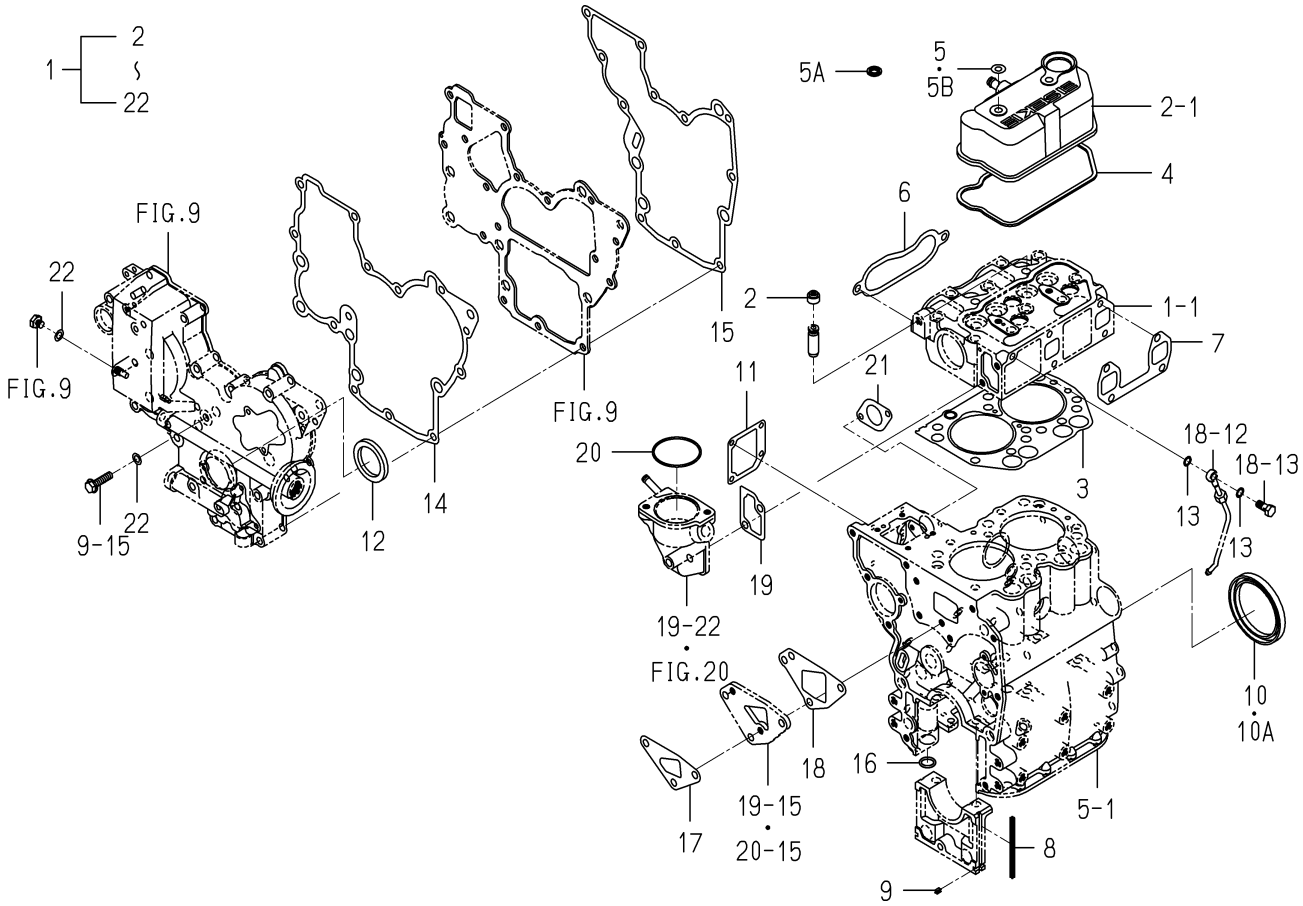

6003-999B-0100

KEY	PART CODE	DESCRIPTION	SPC	TYPE OF MODEL E262G01		ITC	COL	GRP	REMARKS
1	6287-810-006-20	REPAIR/ENGINE SET	R	1		1			
2	6212-569-002-00	SEAL,OIL	R	4					
3	6211-141-018-10	GASKET,CYL HEAD	R	1					
4	6211-173-004-00	SEAL,CYL COVER	R	1					
5	6909-572-008-00	PACKING	R	2 -205580					
5A	6209-572-002-00	GASKET	R	2 -221570					
5B	6209-572-003-00	GASKET	R	2 221571-					
6	6214-115-002-20	GASKET	R	1					
7	6214-145-006-10	GASKET EXHAUST MANIF	R	1					
8	6211-258-001-00	SEAL,BEARING CAP	R	4					
9	6211-258-002-00	SEAL,BEARING CAP/7	R	2					
10	6209-625-001-00	SEAL,OIL	R	1 -185645					
10A	6209-625-012-00	OILSEAL	R	1 185646-					
11	6211-292-001-20	GASKET/COVER	R	1					
12	6209-625-002-00	SEAL,OIL	R	1					
13	6209-920-002-00	PACKING	R	2					
14	6211-312-001-30	GASKET/GEARCASE	R	1		1			
15	6211-312-002-30	GASKET/PLATE	R	1		1			
16	V720-102-401-50	O-RING/P15	R	1					
17	6213-614-003-10	GASKET/WATER PUMP	R	1					
18	6213-614-006-10	GASKET/SPACER	R	1					
19	6213-743-002-10	GASKET/HOUSING	R	1					
20	V723-102-005-50	O-RING	R	1					
21	6209-630-002-10	GASKET	R	1					
22	6209-500-003-00	WASHER/08X14X01	R	2					

FIG. 29 COMPONENT PARTS FOR 6215-300-005-00 ON Fig.22

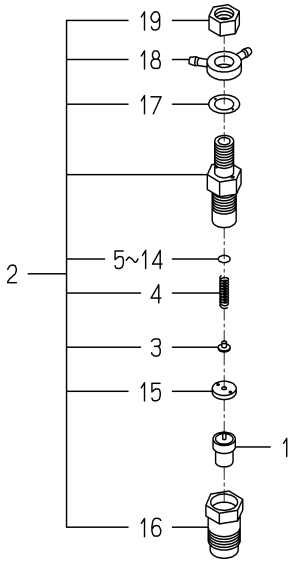

6215-300-005-0B

KEY	PART CODE	DESCRIPTION	SPC	TYPE OF MODEL E262G01		ITC	COL	GRP	REMARKS
1	6215-311-005-00	NOZZLE	*	2 -121249					
2	6215-330-007-00	HOLDER,NOZZLE ASSY	*	2 -121249					
3	6215-342-002-00	SPRINGSEAT	*	2 -121249					
4	6215-343-002-00	SPRING,NOZZLE	*	2 -121249					
5	6215-345-044-00	SHIM/0.10	*	2 -121249					
6	6215-345-045-00	SHIM/0.20	*	2 -121249					
7	6215-345-046-00	SHIM/0.30	*	2 -121249					
8	6215-345-047-00	SHIM/0.40	*	2 -121249					
9	6215-345-048-00	SHIM/0.50	*	2 -121249					
10	6215-345-049-00	SHIM/0.52	*	2 -121249					
11	6215-345-050-00	SHIM/0.54	*	2 -121249					
12	6215-345-051-00	SHIM/0.56	*	2 -121249					
13	6215-345-052-00	SHIM/0.58	*	2 -121249					
14	6215-345-053-00	SHIM/0.80	*	2 -121249					
15	6215-339-002-00	SPACER	*	2 -121249					
16	6215-332-002-00	NUT,RETAINING	*	2 -121249					
17	6215-359-003-00	GASKET	*	2 -121249					
18	6215-355-003-00	EYE	*	2 -121249					
19	6215-359-004-00	NUT	*	2 -121249					

FIG. 30 COMPONENT PARTS FOR 6215-300-030-00 ON Fig.22

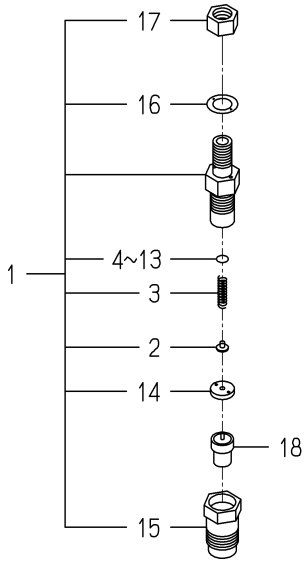

6215-300-030-0

KEY	PART CODE	DESCRIPTION	SPC	TYPE OF MODEL E262G01		ITC	COL	GRP	REMARKS
1	6215-330-021-00	HOLDER/NOZZLE ASSY	*	2 -140829					
2	6215-342-002-00	SPRINGSEAT	*	2 -140829					
3	6215-343-002-00	SPRING,NOZZLE	*	2 -140829					
4	6215-345-044-00	SHIM/0.10	*	2 -140829					
5	6215-345-045-00	SHIM/0.20	*	2 -140829					
6	6215-345-046-00	SHIM/0.30	*	2 -140829					
7	6215-345-047-00	SHIM/0.40	*	2 -140829					
8	6215-345-048-00	SHIM/0.50	*	2 -140829					
9	6215-345-049-00	SHIM/0.52	*	2 -140829					
10	6215-345-050-00	SHIM/0.54	*	2 -140829					
11	6215-345-051-00	SHIM/0.56	*	2 -140829					
12	6215-345-052-00	SHIM/0.58	*	2 -140829					
13	6215-345-053-00	SHIM/0.80	*	2 -140829					
14	6215-339-002-00	SPACER	*	2 -140829					
15	6215-332-002-00	NUT,RETAINING	*	2 -140829					
16	6215-359-003-00	GASKET	*	2 -140829					
17	6215-359-004-00	NUT	*	2 -140829					
18	6215-311-005-00	NOZZLE	*	2 -140829					

FIG. 31 COMPONENT PARTS FOR 6215-300-037-00 ON Fig.22

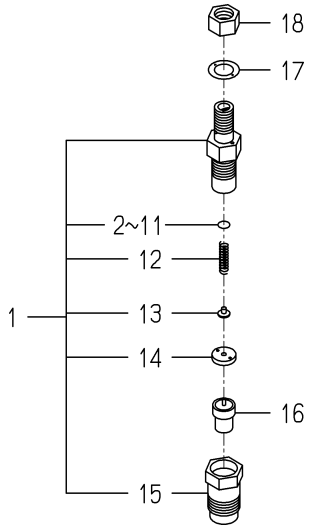

6215-300-037-0E

KEY	PART CODE	DESCRIPTION	SPC	TYPE OF MODEL E262G01		ITC	COL	GRP	REMARKS
1	6215-330-022-00	HOLDER/NOZZLE ASSY	*	2 140830-					
2	6215-345-044-00	SHIM/0.10	*	2 140830-					
3	6215-345-045-00	SHIM/0.20	*	2 140830-					
4	6215-345-046-00	SHIM/0.30	*	2 140830-					
5	6215-345-047-00	SHIM/0.40	*	2 140830-					
6	6215-345-048-00	SHIM/0.50	*	2 140830-					
7	6215-345-049-00	SHIM/0.52	*	2 140830-					
8	6215-345-050-00	SHIM/0.54	*	2 140830-					
9	6215-345-051-00	SHIM/0.56	*	2 140830-					
10	6215-345-052-00	SHIM/0.58	*	2 140830-					
11	6215-345-053-00	SHIM/0.80	*	2 140830-					
12	6215-343-002-00	SPRING,NOZZLE	*	2 140830-					
13	6215-342-002-00	SPRINGSEAT	*	2 140830-					
14	6215-339-004-00	SPACER	*	2 140830-					
15	6215-332-006-00	NUT/NOZZLERETAINING	*	2 140830-					
16	6215-311-005-00	NOZZLE	*	2 140830-					
17	6215-359-003-00	GASKET	*	2 141051-					
18	6215-359-004-00	NUT	*	2 141051-					

FIG. 32 COMPONENT PARTS FOR 6215-600-057-10 ON Fig.23

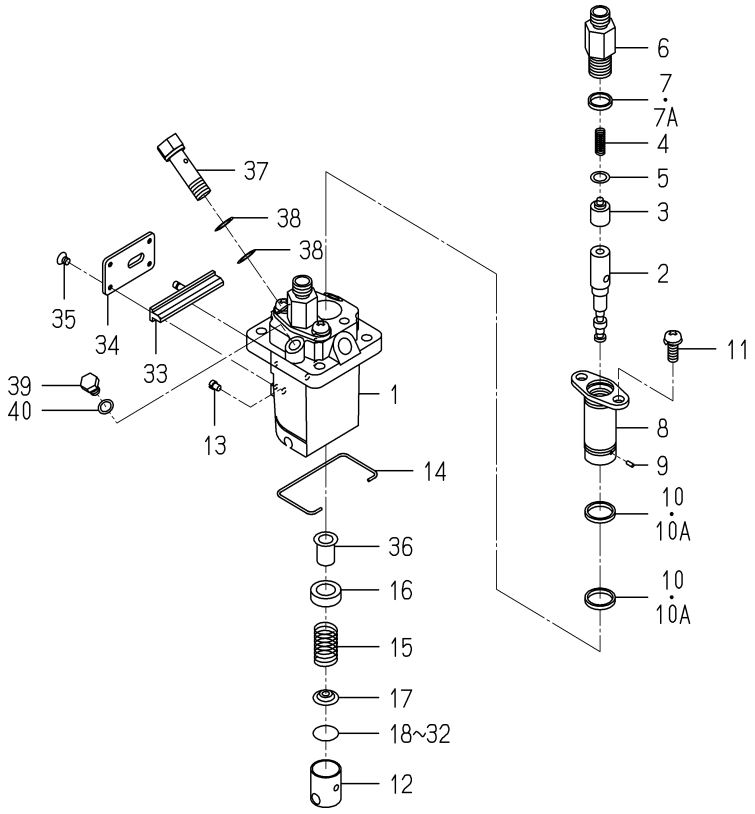

6215-600-057-1H

KEY	PART CODE	DESCRIPTION	SPC	TYPE OF MODEL E262G01		ITC	COL	GRP	REMARKS
1	6215-611-003-00	HOUSING PUMP	*	1					
2	6215-631-004-00	PLUNGER ASSY	*	2					
3	6215-641-002-00	VALVE,DELIVERY	*	2					
4	6215-643-003-00	SPRING,DELIVERYVALVE	*	2					
5	6215-649-003-00	GASKET	*	2					
6	6215-644-003-00	HOLDER,DELIVERYVALVE	*	2					
7	6215-649-004-00	O-RING	*	2 -211460					
7A	6215-649-004-10	ORING	*	2 211461-		1			
8	6215-635-002-00	SLEEVE,FRANGE	*	2					
9	6215-649-005-00	PIN	*	2					
10	6215-649-006-00	O-RING	*	4 -211460					
10A	6215-649-006-10	ORING	*	4 211461-		1			
11	6215-649-007-00	SCREW	*	4					
12	6215-622-002-00	TAPPET	*	2					
13	6215-629-017-00	PIN	*	2					
14	6215-629-019-00	RING SNAP	*	1					
15	6215-634-002-00	SPRING,PLUNGER	*	2					
16	6215-639-006-00	SEAT,SPRING	*	2					
17	6215-639-007-00	SEAT,SPRING	*	2					
18	6215-629-020-00	PLATE/T=1.80	*	1					
19	6215-629-021-00	PLATE/T=1.85	*	1					
20	6215-629-022-00	PLATE/T=1.90	*	1					
21	6215-629-023-00	PLATE/T=1.95	*	1					
22	6215-629-024-00	PLATE/T=2.00	*	1					
23	6215-629-025-00	PLATE/T=2.05	*	1					
24	6215-629-026-00	PLATE/T=2.10	*	1					
25	6215-629-027-00	PLATE/T=2.15	*	1					
26	6215-629-028-00	PLATE/T=2.20	*	1					
27	6215-629-029-00	PLATE/T=2.25	*	1					
28	6215-629-030-00	PLATE/T=2.30	*	1					

FIG. 32 COMPONENT PARTS FOR 6215-600-057-10 ON Fig.23

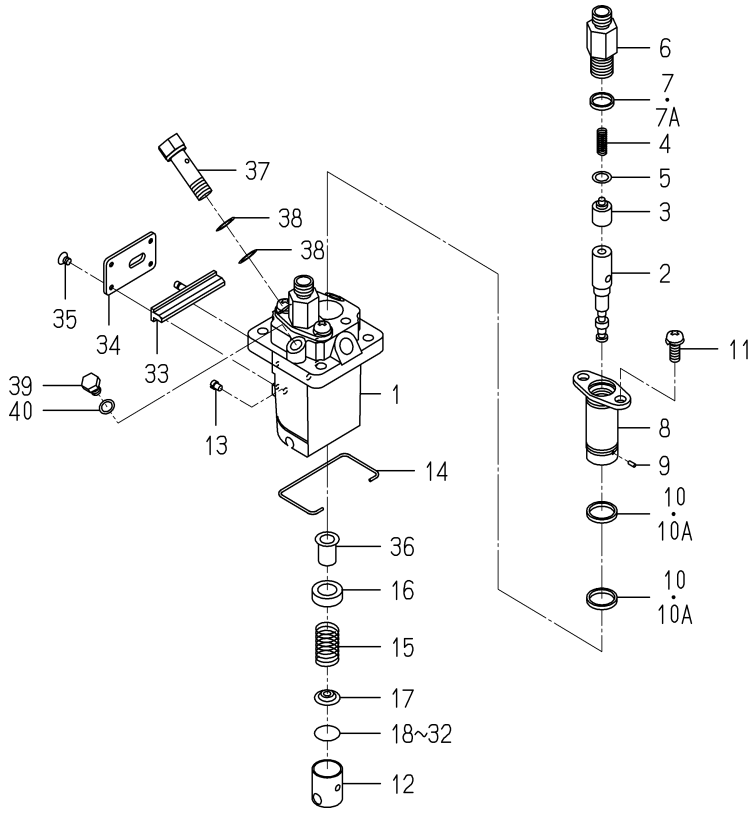

6215-600-057-1H

KEY	PART CODE	DESCRIPTION	SPC	TYPE OF MODEL E262G01		ITC	COL	GRP	REMARKS
29	6215-629-031-00	PLATE/T=2.35	*	1					
30	6215-629-032-00	PLATE/T=2.40	*	1					
31	6215-629-033-00	PLATE/T=2.45	*	1					
32	6215-629-034-00	PLATE/T=2.50	*	1					
33	6215-637-003-00	ROD CONTROL	*	1					
34	6215-612-003-00	PLATE	*	1					
35	6215-619-012-00	SCREW	*	4					
36	6215-635-003-00	SLEEVE,CONTROL	*	2 -148658					
36A	6215-635-008-00	CONTROLSLEEVE	*	2 148659-					
37	6215-619-013-00	BOLT,EYE	*	1					
38	6215-619-014-00	GASKET	*	2					
39	6215-619-015-00	BOLT	*	1					
40	6215-619-016-00	GASKET	*	1					

FIG. 33 COMPONENT PARTS FOR 6281-100-003-10 ON Fig.26

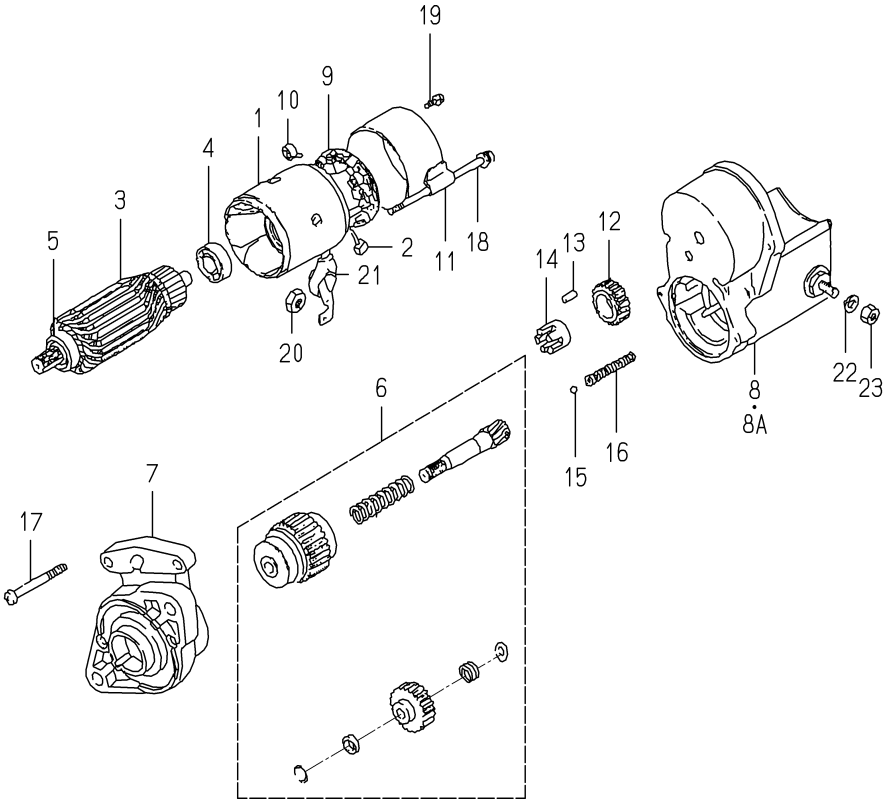

6281-100-003-1D

KEY	PART CODE	DESCRIPTION	SPC	TYPE OF MODEL E262G01		ITC	COL	GRP	REMARKS
1	6281-111-002-00	YOKE/STARTER	*	1					
2	6281-116-002-00	STARTER KIT	*	2					
3	6281-121-003-00	ARMATURE	*	1					
4	6281-129-010-00	BEARING,BALL	*	1					
5	6281-129-011-00	BEARING,BALL	*	1					
6	6281-124-001-00	STARTER KIT	*	1					
7	6281-129-007-00	HOUSING/STARTER ASSY	*	1					
8	6281-151-004-00	SWITCH/STARTER ASSY	*	1 -159252					
8A	6281-151-004-10	SWITCH/STARTER ASSY	*	1 159253-		1			
9	6281-118-001-00	HOLDER ASSY	*	1					
10	6581-117-007-00	SPRING,BRUSH	*	4					
11	6281-115-004-00	FRAME/STARTER END	*	1					
12	6581-123-011-00	PINION,STARTER	*	1					
13	6581-129-099-00	RORA	*	5					
14	6581-129-100-00	RETAINER	*	1					
15	6581-129-092-00	BALL	*	1					
16	6581-129-096-00	SPRING	*	1					
17	6281-129-006-00	SCREW	*	2					
18	6281-129-008-00	BOLT/WS	*	2					
19	6281-129-009-00	SCREW/WS	*	2					
20	6909-111-508-00	NUT	*	1					
21	6281-129-019-00	CAP/RABBER	*	4					
22	6909-150-508-00	WASHER	*	1					
23	6909-110-408-00	NUT/M8	*	1					

FIG. 34 COMPONENT PARTS FOR 6281-200-005-00 ON Fig.26

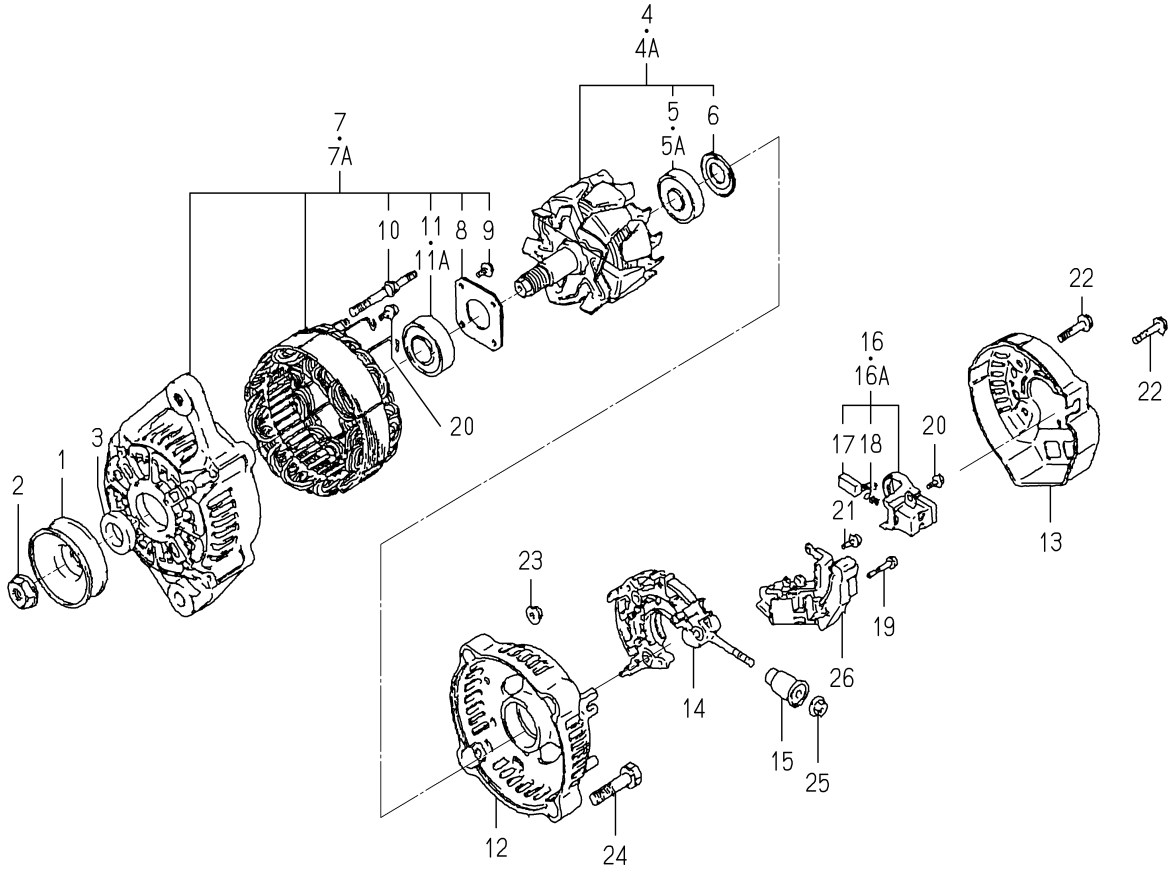

6281-200-005-0B

KEY	PART CODE	DESCRIPTION	SPC	TYPE OF MODEL E262G01		ITC	COL	GRP	REMARKS
1	6281-222-004-00	PULLEY	*	1 130377-					
2	6281-229-002-00	NUT	*	1 130377-					
3	6281-229-003-00	COLLOR	*	1 130377-					
4	6281-221-001-00	ROTOR ASSY	*	1 -186338					
4A	6281-221-007-00	ROTOR ASSY	*	1 186339-					
5	6281-229-005-00	BEARING	*	1 -186338					
5A	6281-229-004-00	COVER,BEARING	*	1 130377-					
6	6281-229-032-00	BEARING/BALL	*	1 186339-					
7	6281-213-006-00	FRAME ASSY	*	1 -186338					
7A	6281-213-018-00	FRAME/DRIVEEND ASSY	*	1 186339-					
8	6281-229-006-00	PLATE	*	1 130377-					
9	6281-229-007-00	BOLT	*	4 130377-					
10	6281-229-008-00	BOLT	*	2 130377-					
11	6281-229-009-00	BEARING	*	1 -186338					
11A	6281-229-033-00	BEARING/BALL	*	1 186339-					
12	6281-214-003-00	FRAME	*	1 130377-					
13	6281-214-004-00	COVER	*	1 130377-					
14	6281-229-029-00	HOLDER ASSY	*	1 130377-					
15	6281-229-011-00	BUSH	*	1 130377-					
16	6281-217-001-00	HOLDER,BRUSH ASSY	*	1 -186338					
16A	6281-217-002-00	HOLDER/BRUSH ASSY	*	1 186339-					
17	6281-215-001-00	BRUSH	*	2 130377-					
18	6281-216-001-00	SPRING	*	2 130377-					
19	6281-229-012-00	BOLT	*	2 130377-					
20	6281-229-013-00	BOLT	*	6 130377-					
21	6281-229-014-00	BOLT	*	1 130377-					
22	6281-229-015-00	BOLT	*	3 130377-					
23	6281-229-016-00	NUT	*	2 130377-					
24	6281-229-017-00	BOLT	*	2 130377-					
25	6281-229-018-00	NUT	*	1 130377-					

FIG. 34 COMPONENT PARTS FOR 6281-200-005-00 ON Fig.26

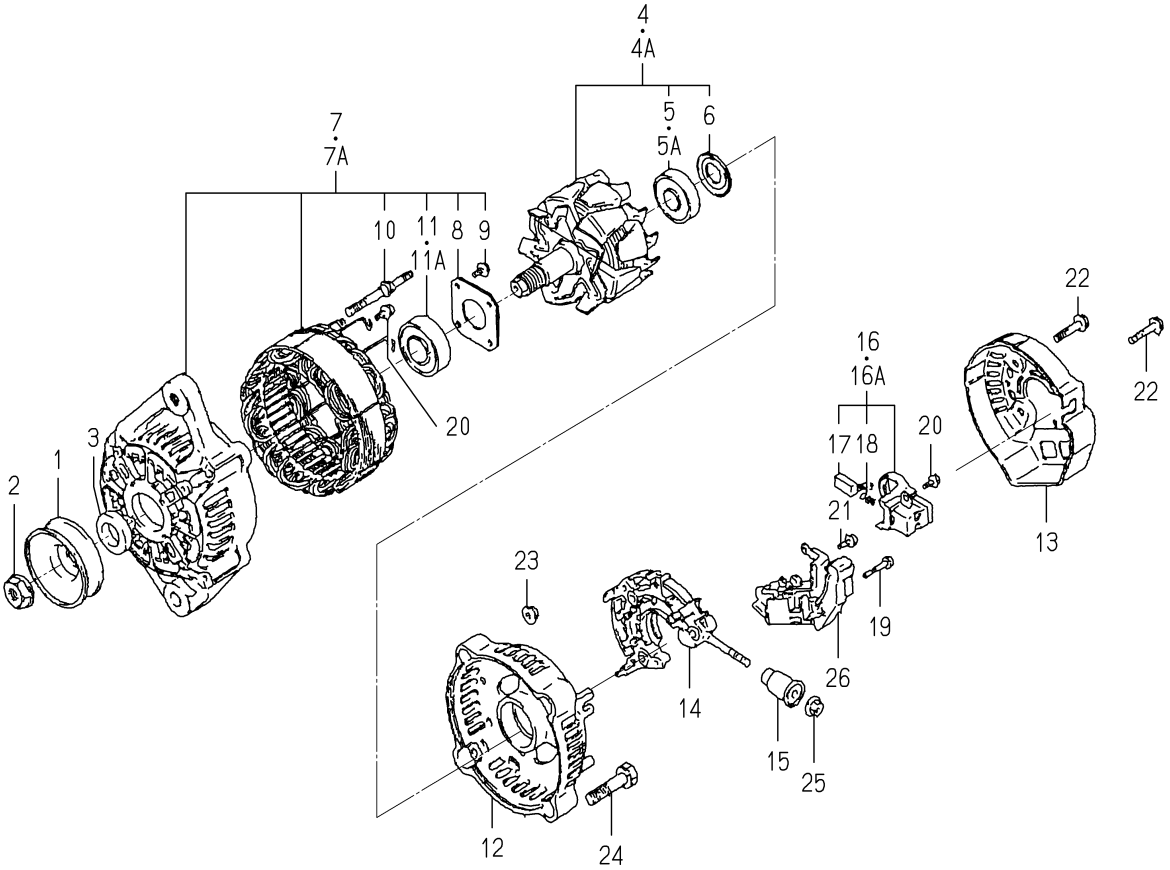

6281-200-005-0B

KEY	PART CODE	DESCRIPTION	SPC	TYPE OF MODEL E262G01		ITC	COL	GRP	REMARKS
26	6281-271-002-00	REGULATOR ASSY	*	1 130377-					

FIG. 35 COMPONENT PARTS FOR 6281-200-016-00 ON Fig.26

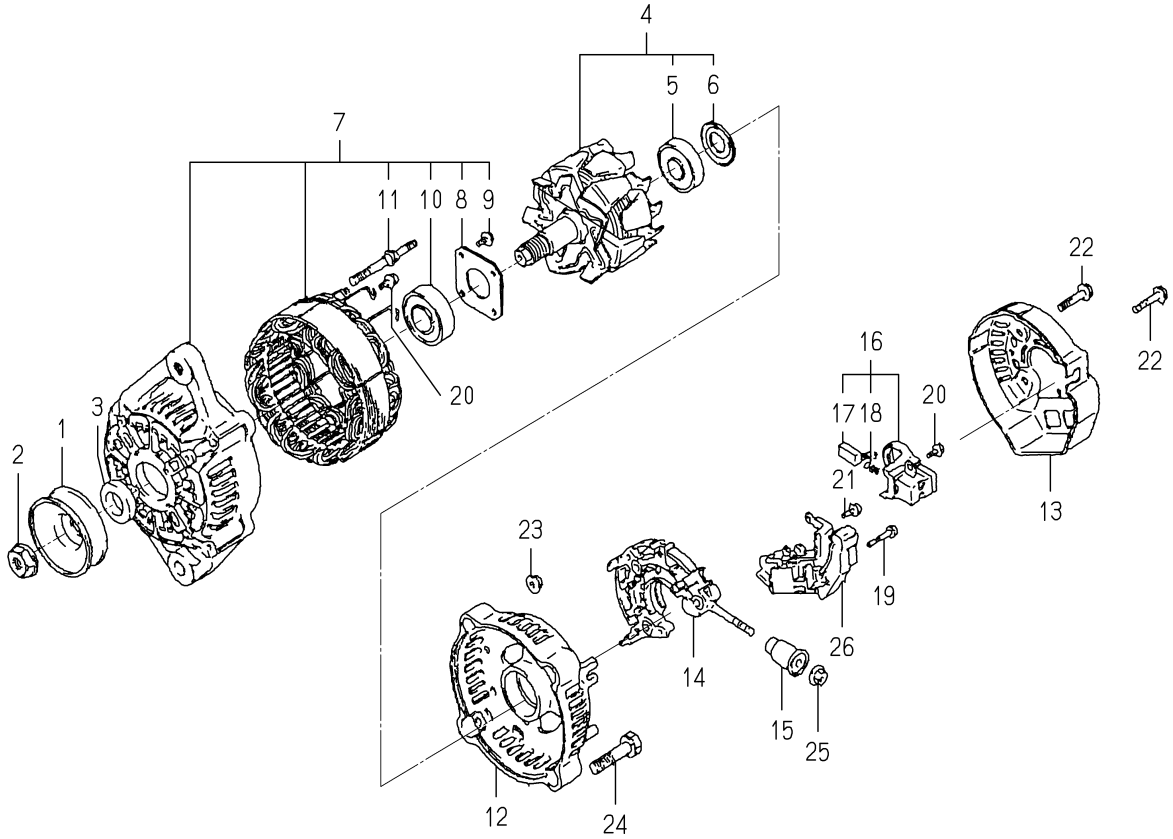

6281-200-016-0C

KEY	PART CODE	DESCRIPTION	SPC	TYPE OF MODEL E262G01		ITC	COL	GRP	REMARKS
1	6281-222-004-00	PULLEY	*	1 -130376					
2	6281-229-002-00	NUT	*	1 -130376					
3	6281-229-003-00	COLLOR	*	1 -130376					
4	6281-221-001-00	ROTOR ASSY	*	1 -130376					
5	6281-229-005-00	BEARING	*	1 -130376					
6	6281-229-004-00	COVER,BEARING	*	1 -130376					
7	6281-213-003-00	FRAME,DRIVE END ASSY	*	1 -130376					
8	6281-229-006-00	PLATE	*	1 -130376					
9	6281-229-007-00	BOLT	*	4 -130376					
10	6281-229-009-00	BEARING	*	1 -130376					
11	6281-229-008-00	BOLT	*	2 -130376					
12	6281-214-003-00	FRAME	*	1 -130376					
13	6281-214-004-00	COVER	*	1 -130376					
14	6281-229-010-00	HOLDER ASSY	*	1 -130376					
15	6281-229-011-00	BUSH	*	1 -130376					
16	6281-217-001-00	HOLDER,BRUSH ASSY	*	1 -130376					
17	6281-215-001-00	BRUSH	*	2 -130376					
18	6281-216-001-00	SPRING	*	2 -130376					
19	6281-229-012-00	BOLT	*	2 -130376					
20	6281-229-013-00	BOLT	*	6 -130376					
21	6281-229-014-00	BOLT	*	1 -130376					
22	6281-229-015-00	BOLT	*	3 -130376					
23	6281-229-016-00	NUT	*	2 -130376					
24	6281-229-017-00	BOLT	*	2 -130376					
25	6281-229-018-00	NUT	*	1 -130376					
26	6281-271-002-00	REGULATOR ASSY	*	1 -130376					

C H A S S I S

FIG. 1 ENGINE BRACKET SYSTEM

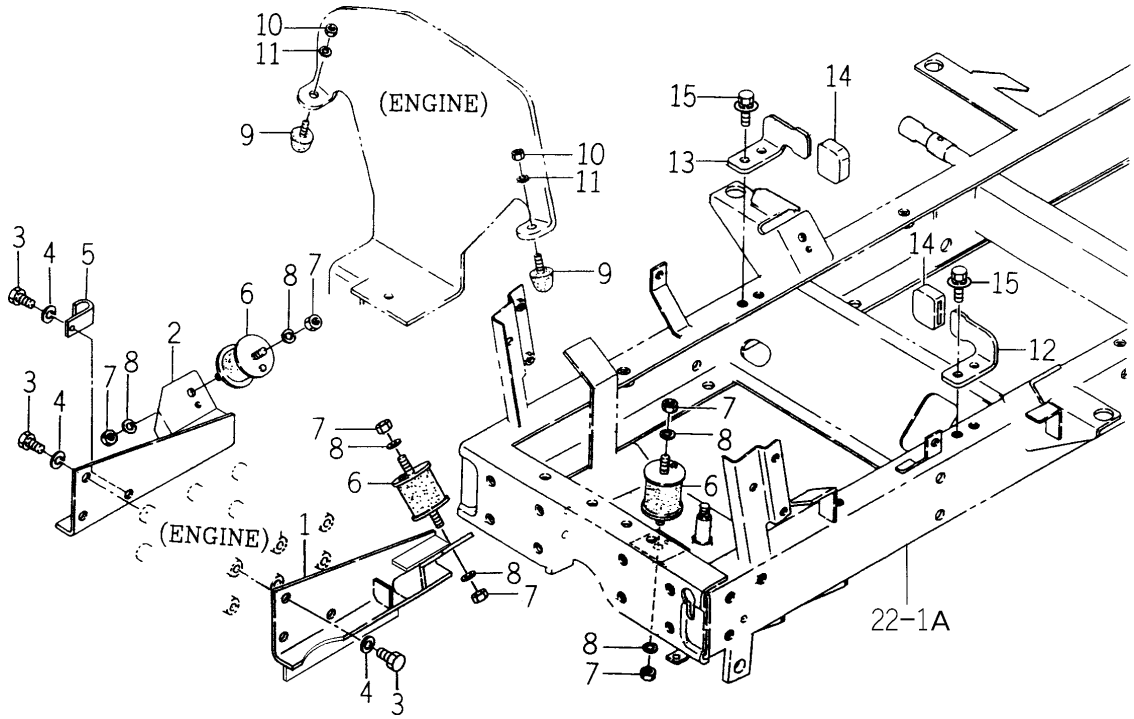

1631-101 -0100

KEY	PART CODE	DESCRIPTION	SPC	TYPE OF MODEL SG153H		ITC	COL	GRP	REMARKS
1	1631-101-210-10	BLACKET/ENGINE/LH	*	1 301563-					
2	1593-101-220-50	BRACKET/ENGINE/RH	*	1 301563-					
3	V203-461-002-00	BOLT/M10X1.25X20	*	6 301563-					
4	V401-160-010-00	WASHER,SP/M10	*	6 301563-					
5	3737-172-011-00	CLAMP,HARNESS	*	1 301563-					
6	1593-101-003-20	INSULATOR	*	3 301563-					
7	V304-260-008-00	NUT	*	6 301563-					
8	V401-160-008-00	WASHER,SP/M 8	*	6 301563-					
9	3631-221-001-00	CUSHION,PEDAL/RUBBER	*	2 301563-					
10	V301-260-006-00	NUT/M 6	*	2 301563-					
11	V401-160-006-00	WASHER,SP/M 6	*	2 301563-					
12	1593-101-009-10	GUIDE/LH ENGINE	*	1 301563-					
13	1593-101-011-10	GUIDE/RH ENGINE	*	1 301563-					
14	1593-101-012-00	STOPPER	*	2 301563-					
15	V211-360-802-50	BOLT/SP	*	4 301563-					

FIG. 2 ENGINE BRACKET SYSTEM (EXCEPT M TYPE-No.1-/M TYPE-No.1-301562)

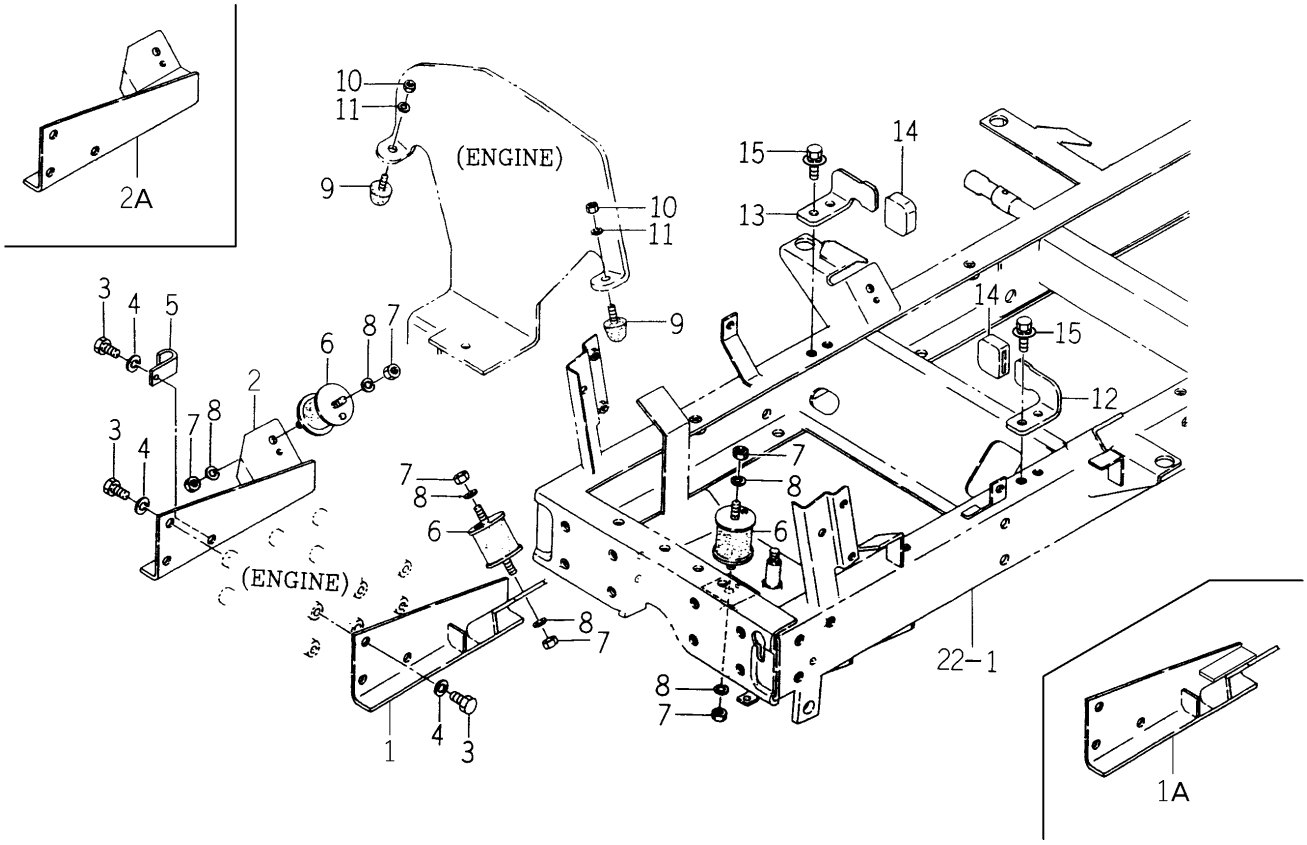

1593-101C-0100

KEY	PART CODE	DESCRIPTION	SPC	TYPE OF MODEL SG153H		ITC	COL	GRP	REMARKS
1	1593-101-210-40	BRACKET,ENGINE/LH	*	1 -300633					
1A	1593-101-210-50	BRACKET/ENGINE/LH	*	1 300634-		1			
2	1593-101-220-40	BRACKET,ENGINE/RH	*	1 -300633					
2A	1593-101-220-50	BRACKET/ENGINE/RH	*	1 300634-		1			
3	V203-461-002-00	BOLT/M10X1.25X20	*	6					
4	V401-160-010-00	WASHER,SP/M10	*	6					
5	3737-172-011-00	CLAMP,HARNESS	*	1					
6	1593-101-003-20	INSULATOR	*	3					
7	V304-260-008-00	NUT	*	6					
8	V401-160-008-00	WASHER,SP/M 8	*	6					
9	3631-221-001-00	CUSHION,PEDAL/RUBBER	*	2					
10	V301-260-006-00	NUT/M 6	*	2					
11	V401-160-006-00	WASHER,SP/M 6	*	2					
12	1593-101-009-10	GUIDE/LH ENGINE	*	1					
13	1593-101-011-10	GUIDE/RH ENGINE	*	1					
14	1593-101-012-00	STOPPER	*	2					
15	V211-360-802-50	BOLT/SP	*	4					

FIG. 3 RADIATOR SYSTEM

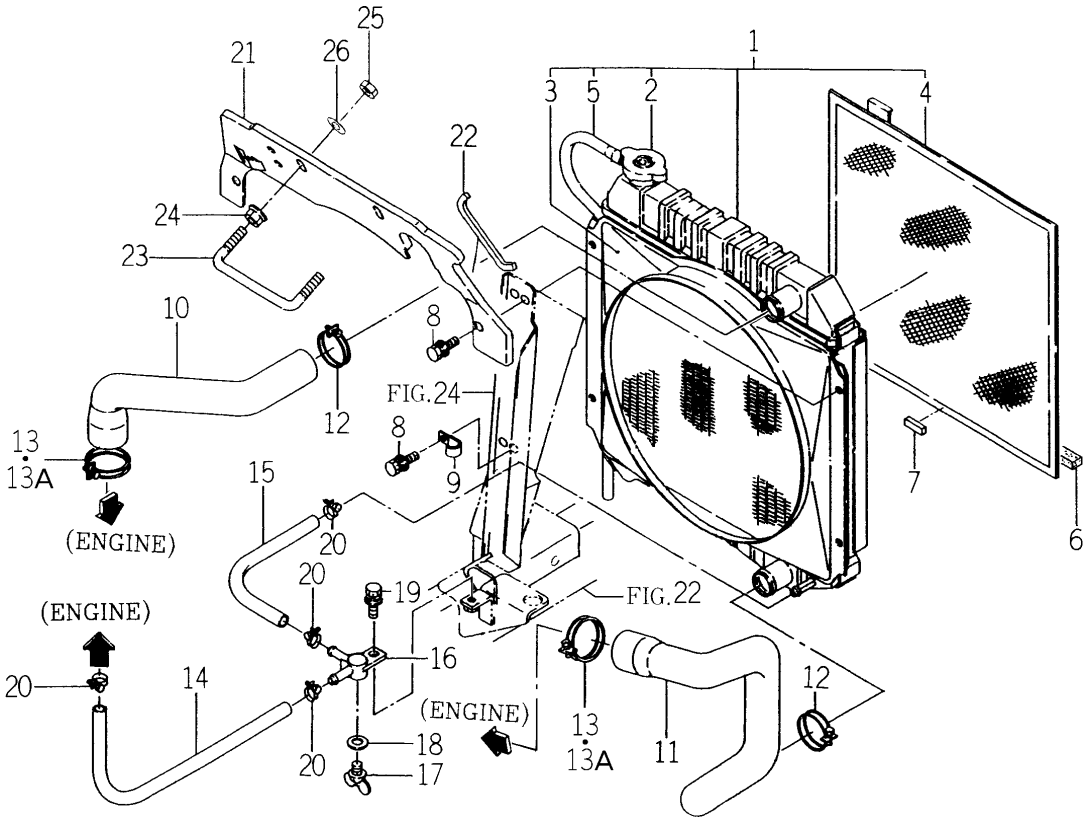

1593-102A-0100

KEY	PART CODE	DESCRIPTION	SPC	TYPE OF MODEL SG153H		ITC	COL	GRP	REMARKS
1	1593-102-500-10	RADIATOR ASSY	*	1					
2	1593-102-502-00	CAP	*	1					
3	1593-102-503-00	SHRUOD,FAN	*	1					
4	1593-102-504-00	PROTECTOR,FRONT	*	1					
5	1593-102-505-00	HOSE,VINYL	*	1					
6	1593-102-005-30	SEAL (10X10X340)	*	1					
7	1593-102-011-00	SEAL (10X05X27)	*	1					
8	V211-360-802-00	BOLT/SP	*	4					
9	1425-621-004-00	HOLDER/JE/9-9	*	1					
10	1593-102-001-10	HOSE,RADIATOR/UP	*	1					
11	1593-102-002-10	HOSE,RADIATOR/LW	*	1					
12	J061-232-040-00	CLAMP/WIRE/32-40	*	2					
13	J061-238-046-00	CLAMP/WIRE/38-46	*	2 -300488					
13A	J061-236-044-00	CLAMP/WIRE/36-44	*	2 300489-					
14	1593-102-003-20	HOSE/270	*	1					
15	1593-102-004-20	HOSE/210	*	1					
16	1560-104-010-40	CONNECTOR	*	1					
17	1424-101-203-00	PLUG	*	1					
18	1424-101-204-00	PACKING	*	1					
19	V211-360-802-00	BOLT/SP	*	1					
20	J061-210-015-00	CLAMP/WIRE/10-15	*	4					
21	1593-102-006-50	PANEL/RADIATOR	*	1					
22	1593-102-012-00	SEAL (10X05X130)	*	1					
23	1593-102-009-10	HOOK,RADIATOR PANEL	*	1					
24	V363-260-010-00	NUT/M10	*	2					
25	V304-260-010-00	NUT	*	2					
26	V411-260-010-00	WASHER/M10	*	2					

FIG. 4 MUFFLER AND AIR CLEANER SYSTEM

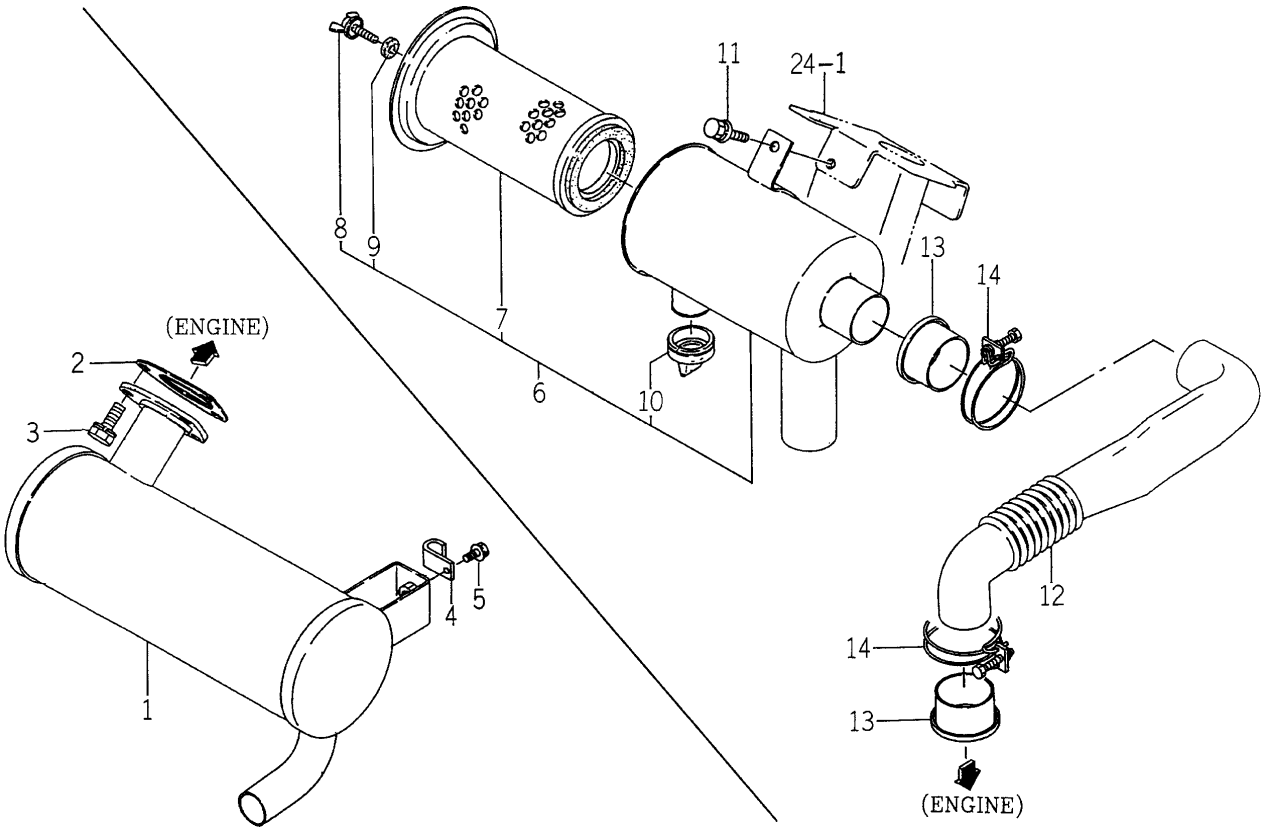

1593-103B-0100,1593-104A-0100

KEY	PART CODE	DESCRIPTION	SPC	TYPE OF MODEL SG153H		ITC	COL	GRP	REMARKS
1	1593-103-500-10	MUFFLER	*	1					
2	1593-103-054-00	GASKET,MUFFLER	*	1					
3	V211-561-002-00	BOLT/M10X20	*	3					
4	1425-621-004-00	HOLDER/JE/9-9	*	1					
5	V211-660-802-00	BOLT/8X20	*	1					
6	1593-104-500-00	CLEANER,AIR ASSY	*	1					
7	1593-104-502-00	ELEMENT	*	1					
8	V271-160-602-50	BOLT/M6X25	*	1					
9	1544-104-204-00	PACKING	*	1					
10	1544-104-205-00	VALVE	*	1					
11	V211-360-802-00	BOLT/SP	*	1					
12	1593-104-001-40	HOSE/AIR CLEANER	*	1					
13	1593-104-004-00	SEAL,CLEANER	*	2					
14	J061-247-055-00	CLAMP/WIRE/47-55	*	2					

FIG. 5 FUEL FILTER AND FUEL HOSE SYSTEM

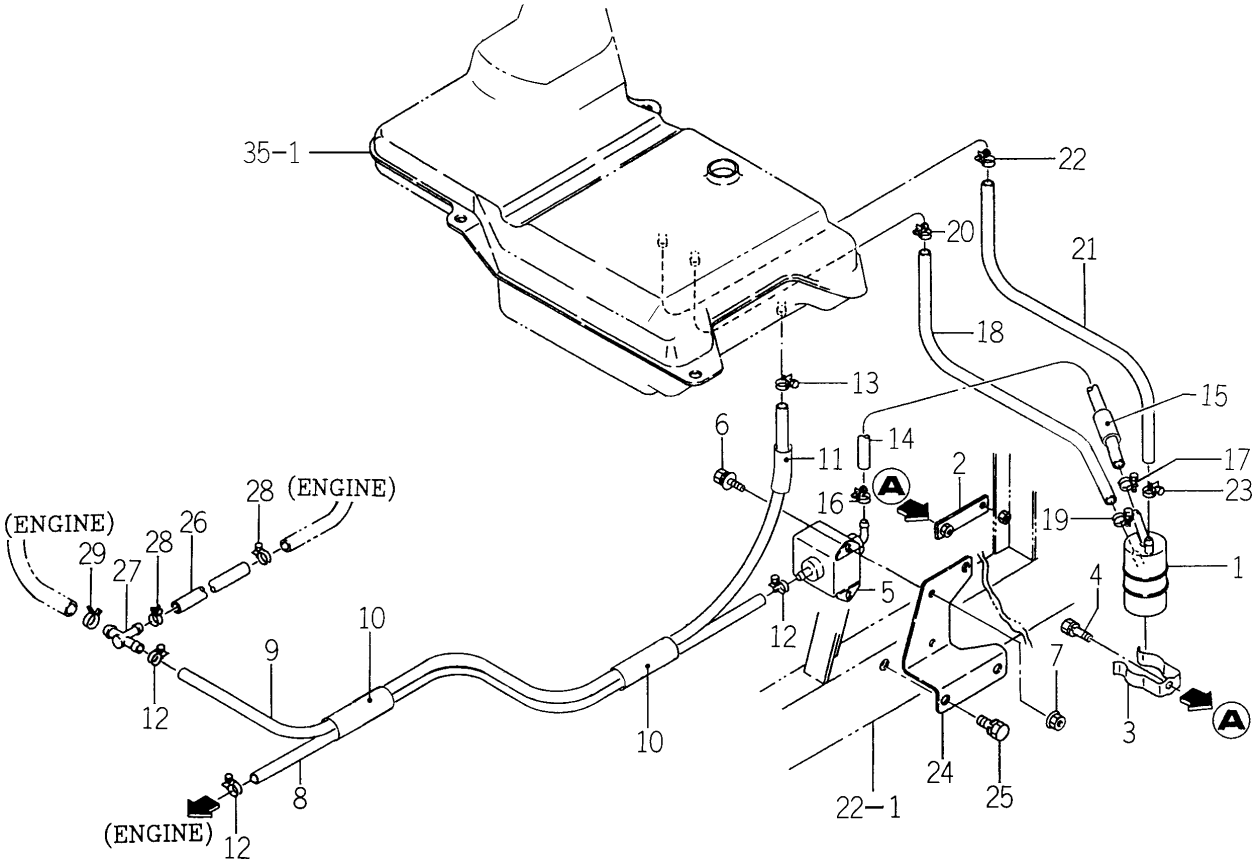

1608-105 -0100

KEY	PART CODE	DESCRIPTION	SPC	TYPE OF MODEL SG153H		ITC	COL	GRP	REMARKS
1	6213-200-002-10	FILTER,FUEL	*	1					
2	1608-105-230-00	PLATE/I/19X85 COMP	*	1					
3	6219-755-001-00	HOLDER(FUEL FILTER)	*	1					
4	V211-260-801-60	BOLT,SEMS (S) M8X16	*	1					
5	1588-105-210-00	PUMP,FUEL	*	1					
6	V210-360-601-60	BOLT(SP)/M6X16	*	2					
7	V360-260-006-00	NUT/M6	*	2					
8	1608-105-221-00	HOSE 1300	*	1					
9	1608-105-222-10	HOSE/1970	*	1					
10	1593-105-213-10	PROTECTOR	*	2					
11	1608-105-223-00	PROTECTOR	*	2					
12	J061-210-012-00	CLAMP/WIRE/10-12	*	3					
13	J061-211-013-00	CLAMP/WIRE/11-13	*	1					
14	1608-105-001-40	HOSE/225	*	1					
15	1608-105-223-00	PROTECTOR	*	1					
16	J061-210-012-00	CLAMP/WIRE/10-12	*	1					
17	J061-211-013-00	CLAMP/WIRE/11-13	*	1					
18	1608-105-240-20	HOSE/06X10X365	*	1					
19	J061-210-012-00	CLAMP/WIRE/10-12	*	1					
20	J061-209-011-00	CLAMP/WIRE/09-11	*	1					
21	1608-105-003-30	HOSE/06X12X115	*	1					
22	J061-210-012-00	CLAMP/WIRE/10-12	*	1					
23	J061-211-013-00	CLAMP/WIRE/11-13	*	1					
24	1608-105-211-00	PLATE/FUELPUMP	*	1					
25	V211-261-002-00	BOLT,SEMS	*	2					
26	3659-310-004-00	HOSE/07X13X120	*	1					
27	3643-586-001-00	JOINTT-TYPE	*	1					
28	J061-210-012-00	CLAMP/WIRE/10-12	*	2					
29	J062-081-087-00	CLIP/HOSE/8.1-8.7	*	1					

FIG. 6 BATTERY SYSTEM (EXCEPT M TYPE)

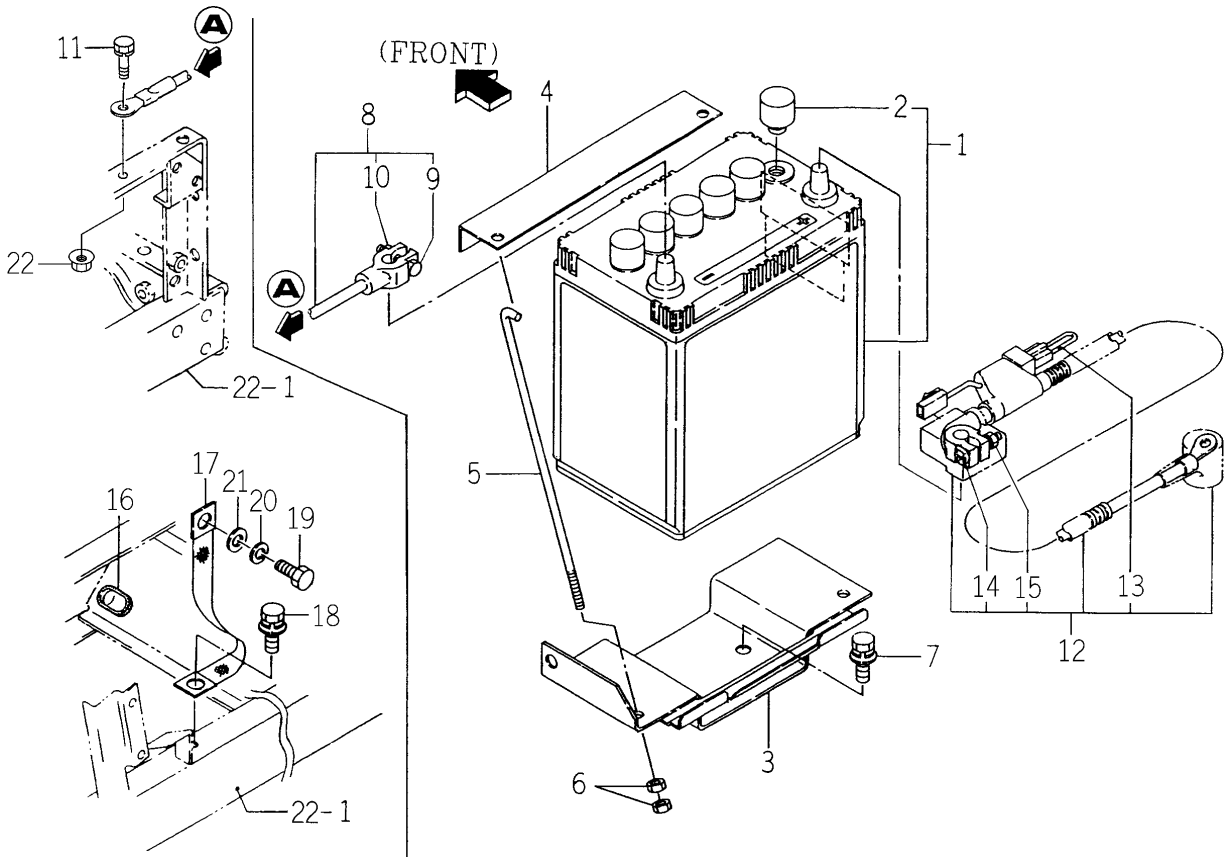

1593-112 -0100

KEY	PART CODE	DESCRIPTION	SPC	TYPE OF MODEL SG153H		ITC	COL	GRP	REMARKS
1	1593-112-200-10	BATTERY/38B20L ASSY	*	1					
2	1427-621-002-10	CAP,BATTERY	*	6					
3	1593-112-510-30	PLATE,BATTERY	*	1					
4	1593-112-051-30	HOLDER,BATTERY	*	1					
5	1593-112-002-50	BOLT,BATTERY	*	2					
6	V301-260-006-00	NUT/M 6	*	4					
7	V211-360-802-00	BOLT/SP	*	3					
8	1593-112-003-20	CABLE,EARTH	*	1					
9	1593-112-222-00	BOLT/M06X28	*	1					
10	1600-112-232-00	NUT/M06	*	1					
11	V211-260-801-60	BOLT,SEMS (S) M8X16	*	1					
12	1593-112-520-10	CABLE	*	1					
13	3652-261-202-00	LINK,FUSIBLE	*	1					
14	1600-112-231-00	BOLT/M06X32	*	1					
15	1600-112-232-00	NUT/M06	*	1					
16	1593-623-001-00	GROMMET	*	1					
17	3626-276-003-00	CABLE,WIRE	*	1					
18	V211-361-002-00	BOLT,SEMS	*	1					
19	V203-461-002-00	BOLT/M10X1.25X20	*	1					
20	V401-160-010-00	WASHER,SP/M10	*	1					
21	V411-260-010-00	WASHER/M10	*	1					
22	V363-260-008-00	NUT/WASHER	*	1					

FIG. 7 BATTERY SYSTEM (M TYPE)

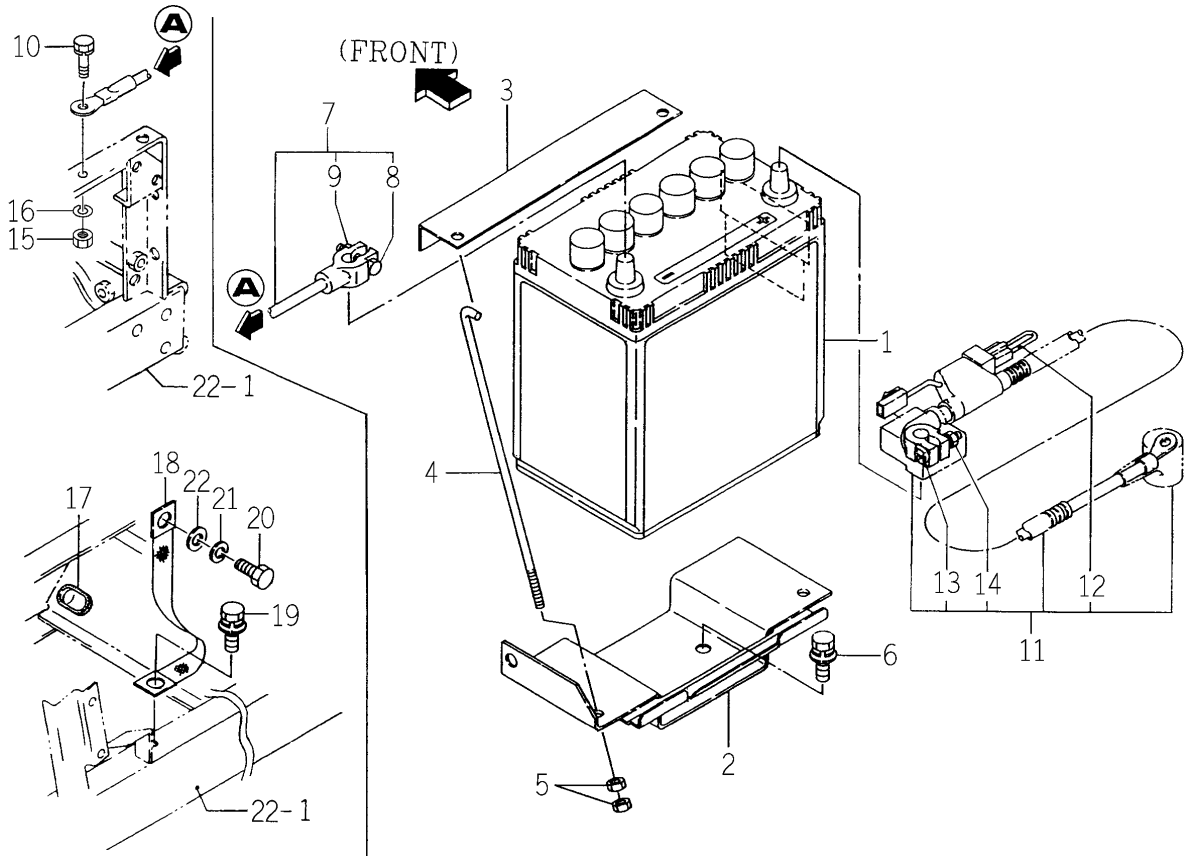

1608-112 -0100

KEY	PART CODE	DESCRIPTION	SPC	TYPE OF MODEL SG153H		ITC	COL	GRP	REMARKS
1	3660-260-210-30	BATTERY(44B19L) ASSY	*	1					
2	1593-112-510-30	PLATE,BATTERY	*	1					
3	1593-112-051-30	HOLDER,BATTERY	*	1					
4	1593-112-002-50	BOLT,BATTERY	*	2					
5	V301-260-006-00	NUT/M 6	*	4					
6	V211-360-802-00	BOLT/SP	*	3					
7	1593-112-003-20	CABLE,EARTH	*	1					
8	1593-112-222-00	BOLT/M06X28	*	1					
9	1600-112-232-00	NUT/M06	*	1					
10	V211-260-801-60	BOLT,SEMS (S) M8X16	*	1					
11	1593-112-520-10	CABLE	*	1					
12	3652-261-202-00	LINK,FUSIBLE	*	1					
13	1600-112-231-00	BOLT/M06X32	*	1					
14	1600-112-232-00	NUT/M06	*	1					
15	V304-260-008-00	NUT	*	1					
16	V401-160-008-00	WASHER,SP/M 8	*	1					
17	1593-623-001-00	GROMMET	*	1					
18	3626-276-003-00	CABLE,WIRE	*	1					
19	V211-361-002-00	BOLT,SEMS	*	1					
20	V203-461-002-00	BOLT/M10X1.25X20	*	1					
21	V401-160-010-00	WASHER,SP/M10	*	1					
22	V411-260-010-00	WASHER/M10	*	1					

FIG. 8 ACCELERATOR SYSTEM

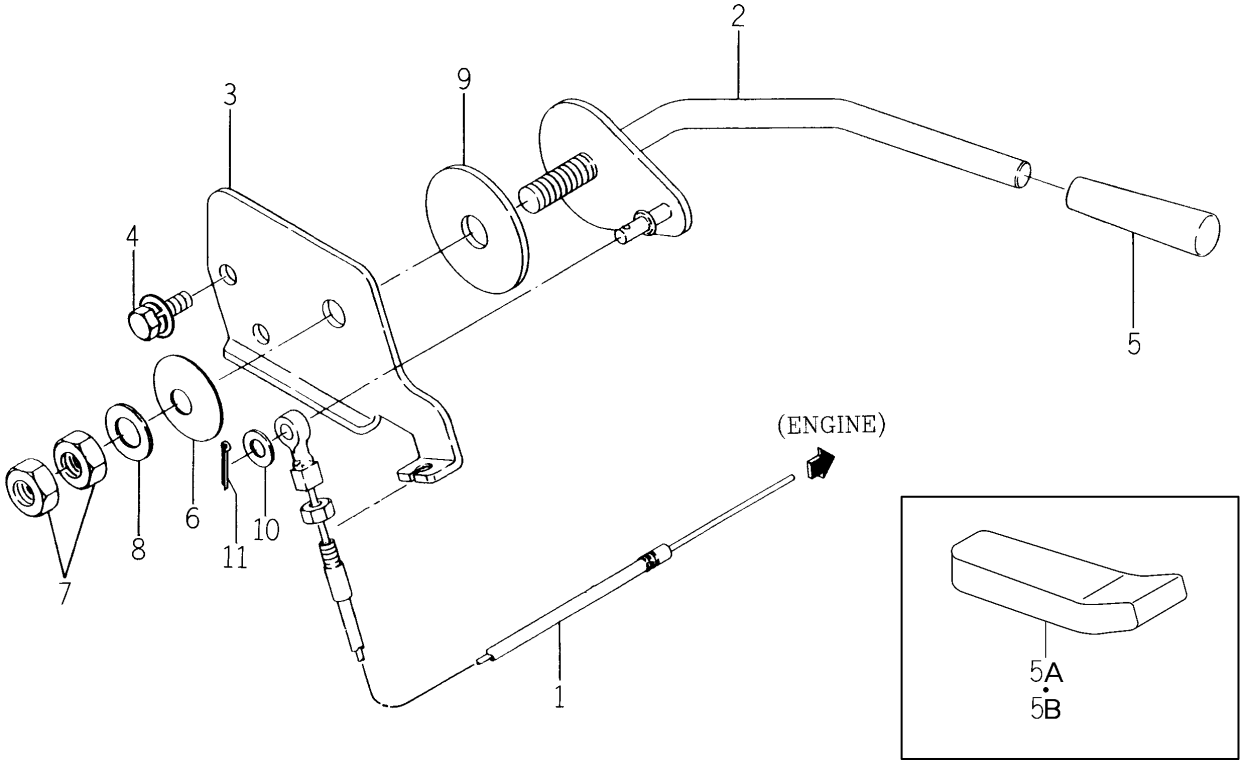

1593-117A-0100

KEY	PART CODE	DESCRIPTION	SPC	TYPE OF MODEL SG153H		ITC	COL	GRP	REMARKS
1	1593-117-200-20	CABLE/ACCELERATOR	*	1					
2	1593-117-510-20	LEVER,AXLE	*	1					
3	1593-117-001-40	PLATE,AXLE	*	1					
4	V210-360-601-60	BOLT(SP)/M6X16	*	2					
5	4106-105-303-00	KNOB	*	1 -301366					
5A	1646-116-051-00	GRIP/THROTTLE	*	1 -301734					
5B	1646-116-051-10	GRIP/THROTTLE	*	1 301735-		1			
6	1593-117-003-10	SPRING,DISK	*	1					
7	V304-260-010-00	NUT	*	2					
8	V411-260-010-00	WASHER/M10	*	1					
9	1600-505-007-00	LINING/13X50X3	*	1					
10	V411-260-006-00	WASHER / M6	*	1					
11	V500-162-501-50	PIN,SPLIT/2.5X15	*	1					

FIG. 9 DRIVE SHAFT SYSTEM

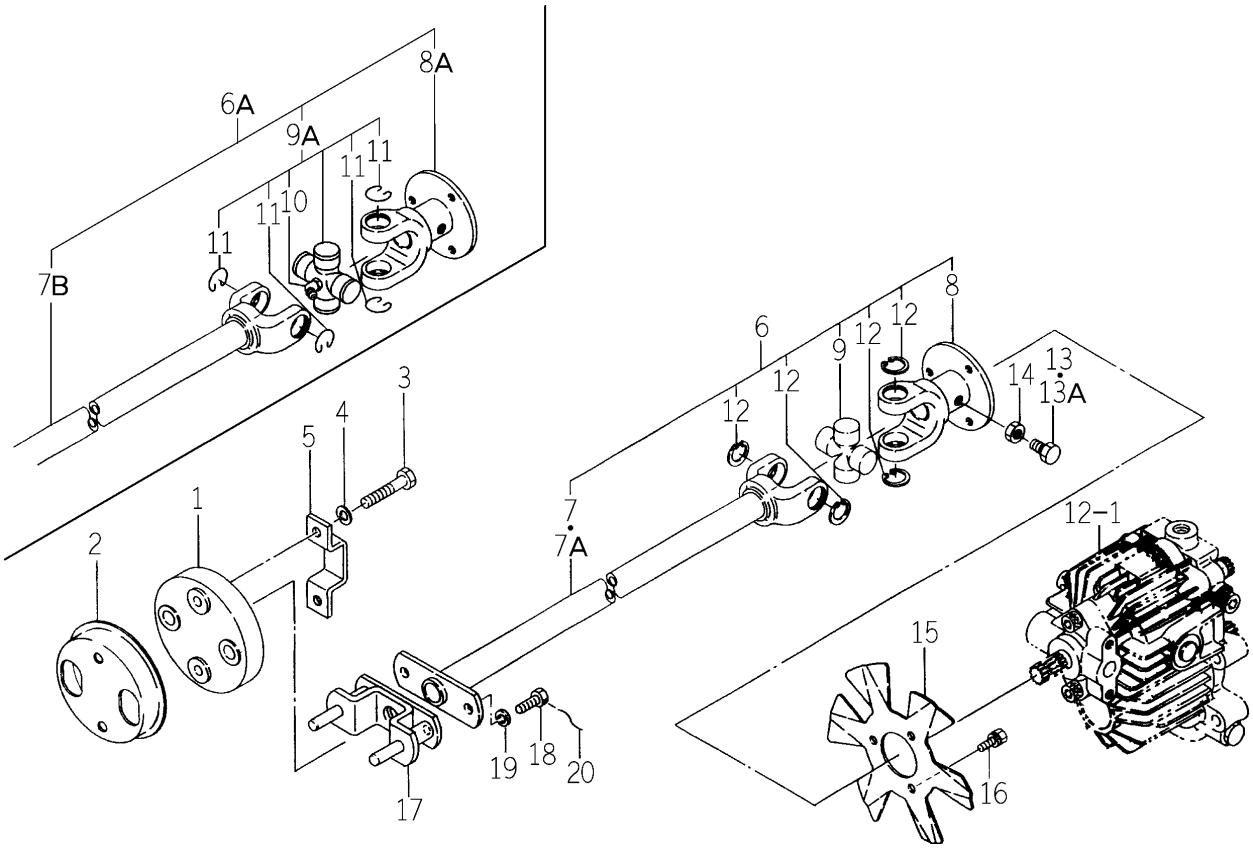

1608-122 -0100

KEY	PART CODE	DESCRIPTION	SPC	TYPE OF MODEL SG153H		ITC	COL	GRP	REMARKS
1	1593-122-051-00	COUPLING	*	1					
2	1608-122-004-00	COVER/COUPLING	*	1					
3	V201-460-804-50	BOLT/M8X45	*	2					
4	V401-160-008-00	WASHER,SP/M 8	*	2					
5	1608-122-003-00	PLATE,STOPPER	*	1					
6	1608-122-200-50	JOINT UNIVERSAL ASSY	*	1 -301921					
6A	1608-122-200-60	JOINT/UNIVERSAL ASSY	*	1 301922-		3			
7	1608-122-210-20	JOINT/HST/F COMP	*	1 -301366					
7A	1608-122-206-00	FLANGEYOKE ASSY	*	1 -301921					
7B	1608-122-206-10	FLANGEYOKE ASSY	*	1 301922-		3			
8	1608-122-220-20	JOINT/HST/R COMP	*	1 -301366					
8A	1608-122-207-00	SHAFTYOKE ASSY	*	1 301367-					
9	8592-011-204-00	JOURNAL KIT	*	1 -301366					
9A	8654-101-230-00	JOURNALCROSSE ASSY	*	1 301367-					
10	8654-101-232-00	GREASENIPPLE	*	1 301367-					
11	8654-101-233-00	SURCLIP/HOLE	*	4 301367-					
12	V705-140-020-00	RING,SNAP/20 C	*	4 -301366					
13	V201-460-802-00	BOLT/M 8X20	*	1 -301953					
13A	V201-460-802-50	BOLT/M 8X25	*	1 301954-					
14	V304-460-008-00	NUT/M8	*	1					
15	1608-122-002-10	FAN(HST)	*	1					
16	V210-260-601-20	BOLT/S	*	3					
17	1608-122-230-10	JOINT,CAP LING	*	1					
18	1416-209-005-00	BOLT	*	2					
19	V401-160-008-00	WASHER,SP/M 8	*	2					
20		WIRE	*	1					

FIG. 10 TRANSMISSION CASE SYSTEM

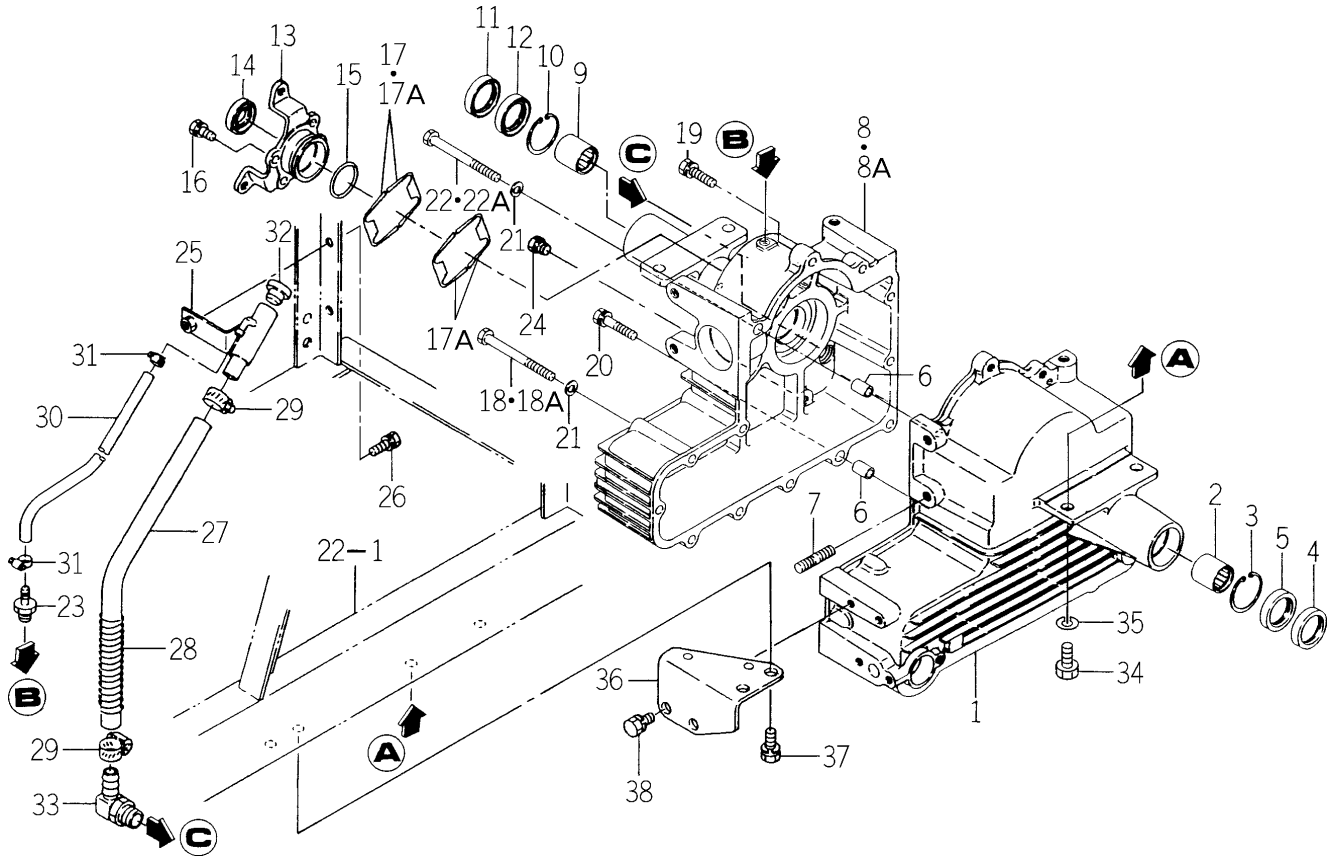

1608-201 -0100

KEY	PART CODE	DESCRIPTION	SPC	TYPE OF MODEL SG153H		ITC	COL	GRP	REMARKS
1	1608-201-001-40	CASE/TRANSMISSION LH	*	1					
2	V653-430-403-00	BEARING,NR/TA3030Z	*	1					
3	V705-140-042-00	RING,SNAP/42 C	*	1					
4	V744-130-420-80	SEAL,OIL/TC30428	*	1					
5	V740-130-420-80	SEAL,OIL	*	1					
6	3737-113-005-00	PIN,KNOCK	*	2					
7	V251-261-004-5D	BOLT/STUD/SEAL	*	1					
8	1608-201-002-30	CASE/TRANSMISSION RH	*	1 -301514					
8A	1608-201-002-40	CASE/TRANSMISSION/RH	*	1 301515-		1			
9	V653-430-403-00	BEARING,NR/TA3030Z	*	1					
10	V705-140-042-00	RING,SNAP/42 C	*	1					
11	V744-130-420-80	SEAL,OIL/TC30428	*	1					
12	V740-130-420-80	SEAL,OIL	*	1					
13	1608-201-004-20	METAL,BRAKE	*	1					
14	V744-120-350-70	SEAL,OIL/TC20357	*	1					
15	V721-103-104-50	O-RING/G45	*	1					
16	V211-260-801-60	BOLT,SEMS (S) M8X16	*	4					
17	1608-201-005-10	SHIM(BRAKE METAL)	*	2 -301848					
17A	1608-201-005-10	SHIM(BRAKE METAL)	*	4 301849-					
18	V201-260-809-50	BOLT/M 8X95	*	6 -301394					
18A	V201-260-809-50	BOLT/M 8X95	*	5 301395-					
19	V211-260-803-00	BOLT,SEMS	*	6					
20	V211-260-804-00	BOLT,SEMS	*	1					
21	V401-160-008-00	WASHER,SP/M 8	*	6					
22	V201-260-810-50	BOLT/M 8X105	*	1 -302197					
22A	V201-260-810-00	BOLT/M 8X100	*	1 302198-					
23	2137-223-004-00	ADAPTER(STRAIGHT)	*	1					
24	7955-201-026-00	PLUG,DRAIN (1/4)	*	1					
25	1608-201-200-20	PLATE,FILLER COMP	*	1					
26	V211-260-802-00	BOLT/S	*	1					

FIG. 10 TRANSMISSION CASE SYSTEM

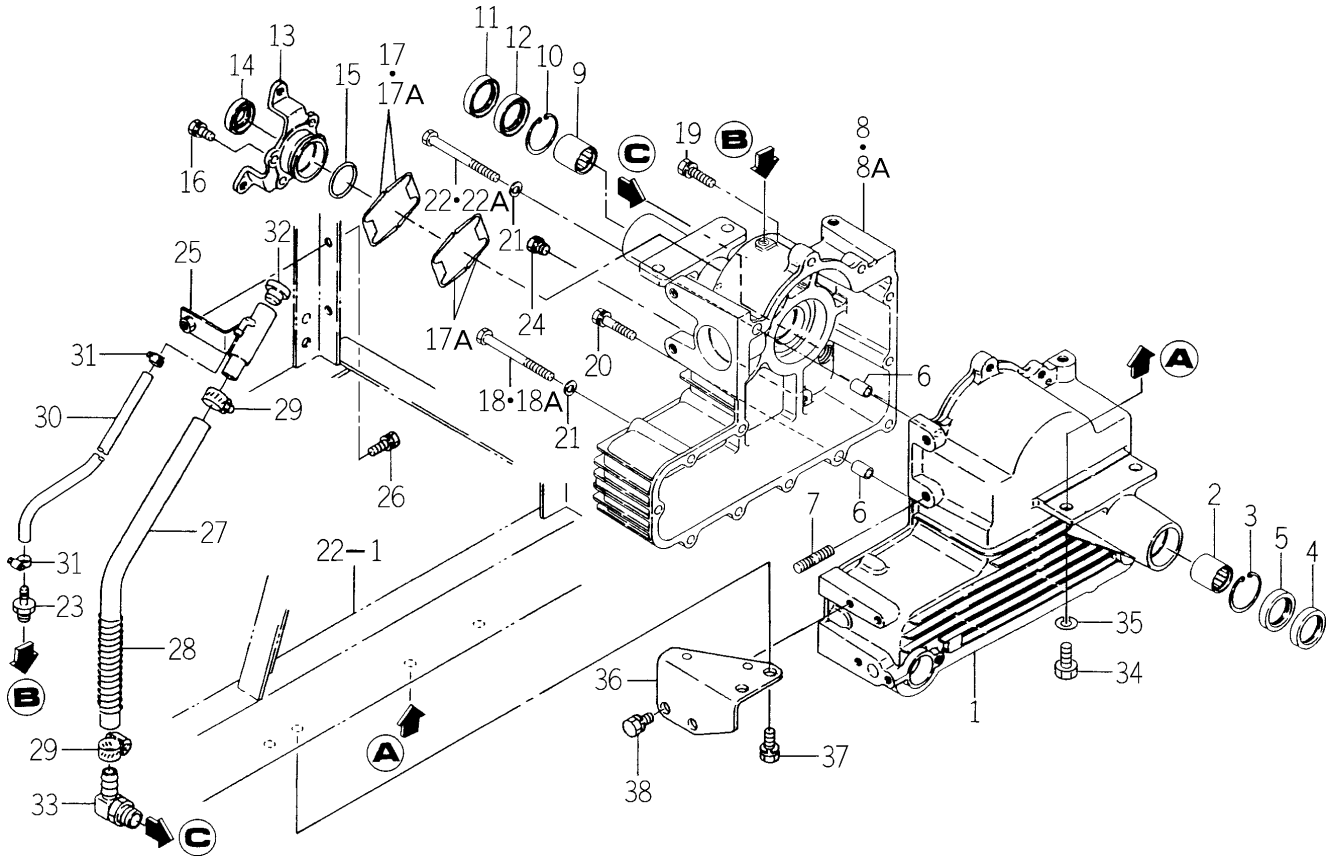

1608-201 -0100

KEY	PART CODE	DESCRIPTION	SPC	TYPE OF MODEL SG153H		ITC	COL	GRP	REMARKS
27	1608-201-006-20	HOSE/360	*	1					
28	1608-201-013-00	SPRING(HC135)	*	1					
29	J061-114-024-00	CLAMP/WORM/14-24	*	2					
30	1608-201-008-10	HOSE/320	*	1					
31	J062-104-111-00	CLIP/HOSE/10.4-11.1	*	2					
32	2111-101-011-00	PLUG,OIL	*	1					
33	3631-353-001-10	ADAPTER(LOW PRESS)	*	1					
34	V201-461-003-00	BOLT/M10X30	*	4					
35	V401-160-010-00	WASHER,SP/M10	*	4					
36	1608-201-011-20	PLATE/CASE	*	1					
37	V211-561-002-00	BOLT/M10X20	*	2					
38	V211-561-001-60	BOLT(S)7	*	2					

FIG. 11 TRANSMISSION GEAR SYSTEM

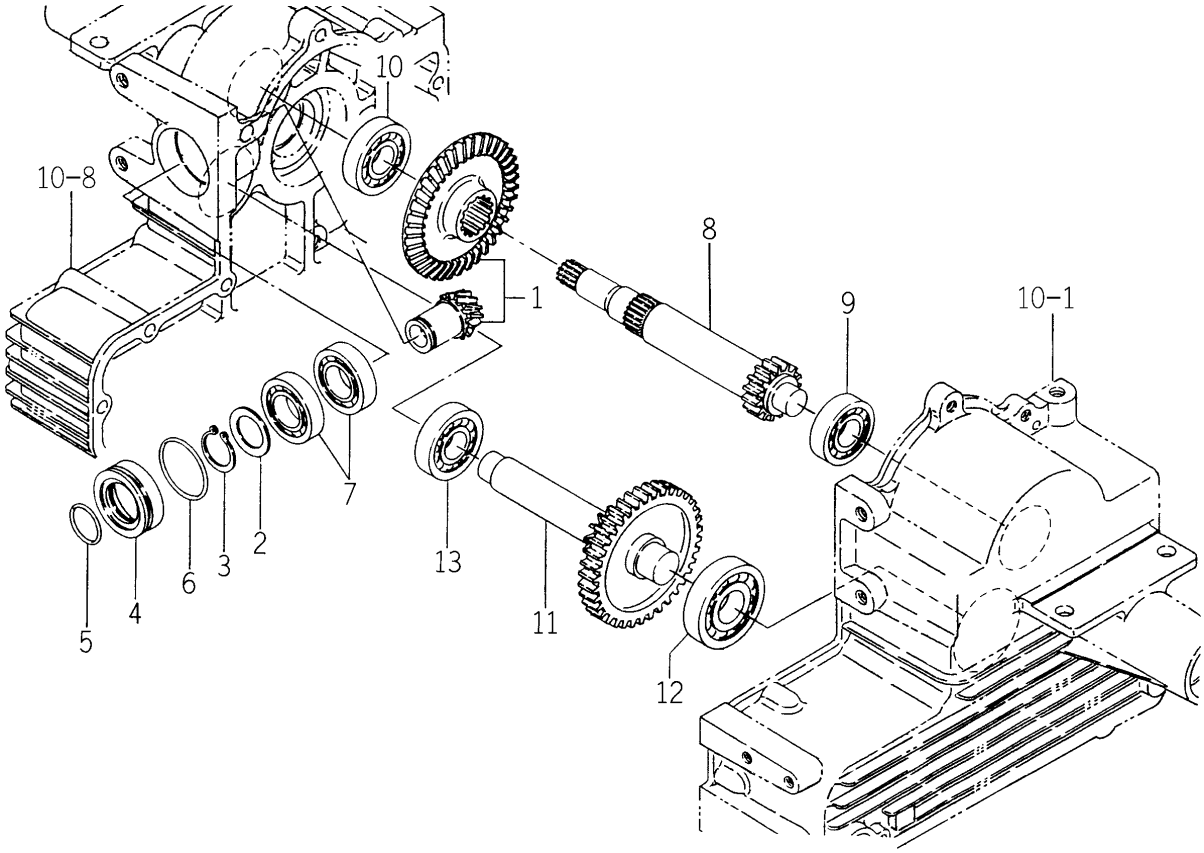

1608-203 -0100

KEY	PART CODE	DESCRIPTION	SPC	TYPE OF MODEL SG153H		ITC	COL	GRP	REMARKS
1	1608-203-200-00	GEAR,BEVEL/T12-45SET	*	1					
2	1593-203-058-20	COLLAR/25X35X02	*	1					
3	V704-140-025-00	RING,SNAP/25 C	*	1					
4	1608-203-002-30	HUB,SEAL/INPUT	*	1					
5	V721-103-103-00	O-RING/G30	*	1					
6	V721-103-104-50	O-RING/G45	*	1					
7	V600-110-600-50	BEARING,RB/6005	*	2					
8	1608-203-003-20	GEAR/SPUR 15	*	1					
9	V600-110-620-40	BEARING,RB/6204	*	1					
10	V600-110-620-50	BEARING,RB/6205	*	1					
11	1608-203-210-00	GEAR(T12-40)	*	1					
12	V600-110-630-50	BEARING,RB/6305	*	1					
13	V600-110-630-40	BEARING,RB/6304	*	1					

FIG. 12 HST (1) SYSTEM

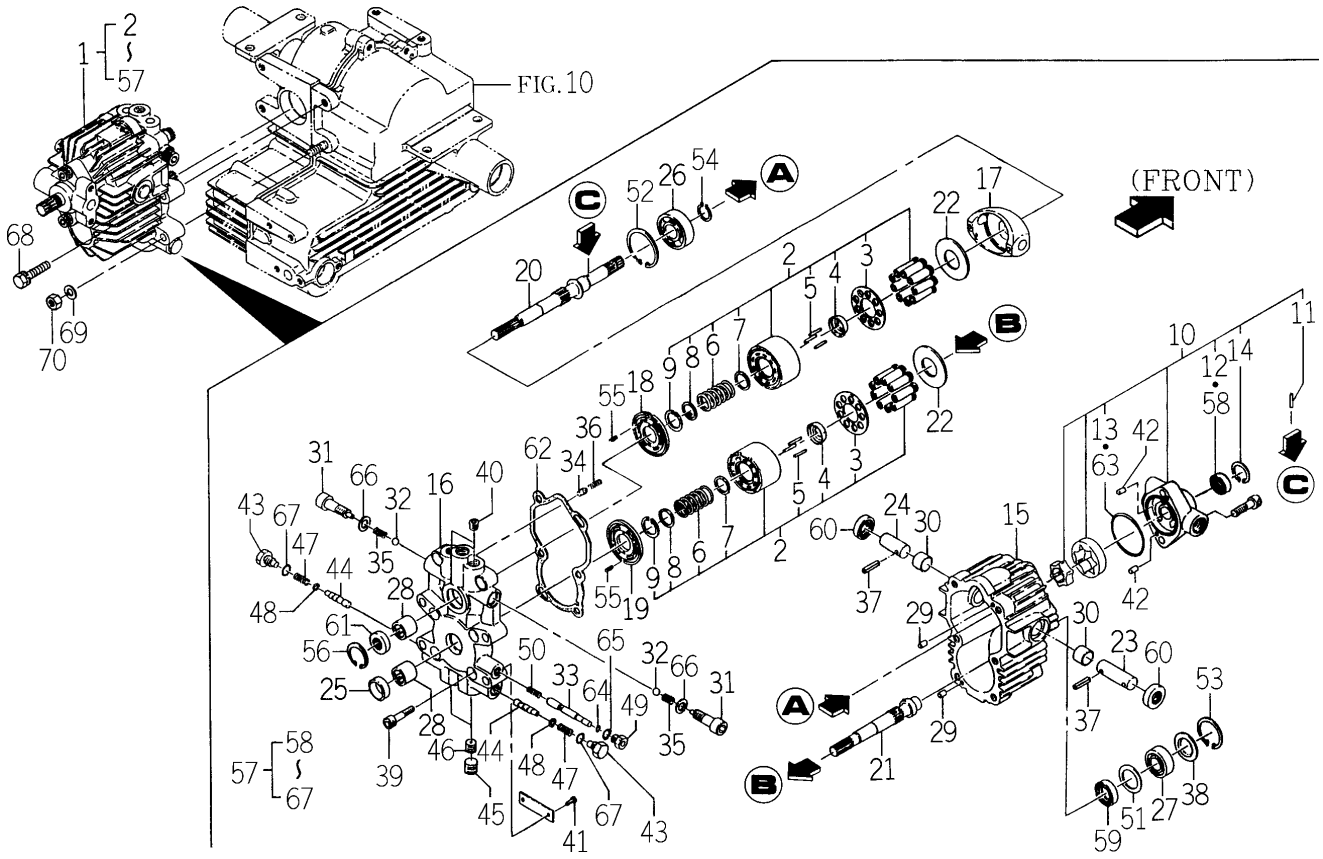

1608-205 -0100

KEY	PART CODE	DESCRIPTION	SPC	TYPE OF MODEL SG153H		ITC	COL	GRP	REMARKS
1	1608-205-200-10	HST ASSY	*	1					
2	1608-205-260-00	CYLINDERBLOCK ASSY	*	2					
3	1608-205-263-00	RETAINERPLATE	*	2					
4	1608-205-264-00	RETAINERHOLDER	*	2					
5	1608-205-265-00	PIN	*	6					
6	1608-205-266-00	SPRING	*	2					
7	1608-205-267-00	SPRINGHOLDER	*	2					
8	1608-205-268-00	WASHER	*	2					
9	1608-205-269-00	SNAPRING	*	2					
10	1608-205-280-00	CHARGEPUMP ASSY	*	1					
11	1608-205-283-00	PIN	*	1					
12	1608-205-284-00	SEAL,OIL	*	1					
13	1608-205-285-00	O-RING	*	1					
14	V705-140-030-00	RING,SNAP/30 C	*	1					
15	1608-205-201-00	CASE	*	1					
16	1608-205-202-00	PORTBLOCK	*	1					
17	1608-205-203-00	SLANTBOARD/P	*	1					
18	1608-205-204-00	VALVEPLATE	*	1					
19	1608-205-205-00	VALVEPLATE	*	1					
20	1608-205-206-10	SHAFT/P	*	1					
21	1608-205-207-00	SHAFT/M	*	1					
22	1608-205-208-00	THRUST PLATE	*	2					
23	1608-205-209-00	TRUNNIONPIN	*	1					
24	1608-205-211-00	TRUNNIONPIN	*	1					
25	1608-205-212-00	COLLAR	*	1					
26	1608-205-213-00	BALLBEARING	*	1					
27	1608-205-214-00	BALLBEARING	*	1					
28	1608-205-215-00	NEEDLEBEARING	*	2					
29	1608-205-216-00	PIN	*	2					
30	1608-205-217-00	BUSH	*	2					

FIG. 12 HST (1) SYSTEM

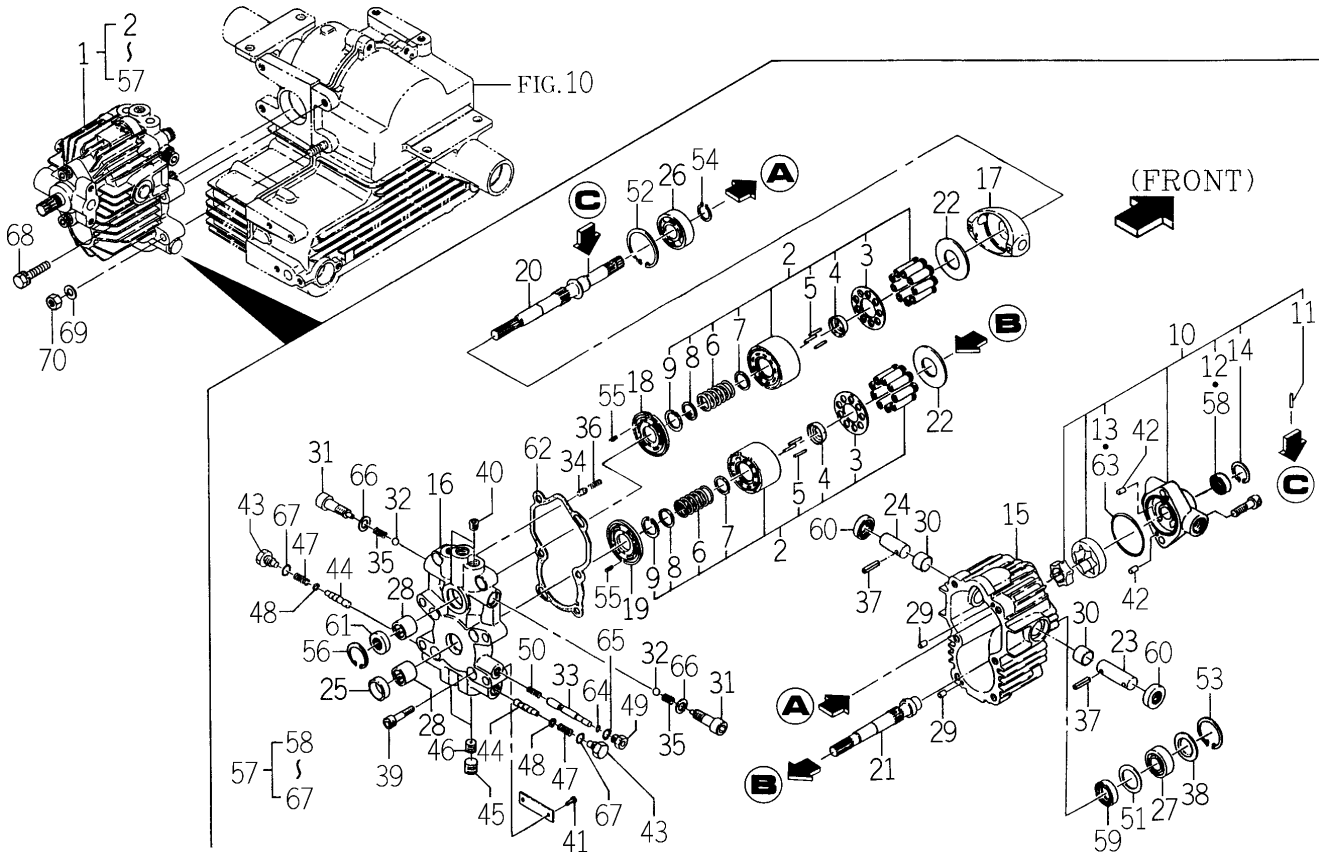

1608-205 -0100

KEY	PART CODE	DESCRIPTION	SPC	TYPE OF MODEL SG153H		ITC	COL	GRP	REMARKS
31	1608-205-218-00	PLUG	*	2					
32	1608-205-219-00	STEELBALL	*	2					
33	1608-205-221-00	UNLOADINGVALVE	*	1					
34	1608-205-222-00	VALVE RELIEF	*	1					
35	1608-205-223-00	SPRING	*	2					
36	1608-205-224-00	SPRING	*	1					
37	1608-205-225-00	SPRINGPIN	*	2					
38	1608-205-226-00	COVER	*	1					
39	1608-205-234-00	SOCKET-HEADBOLT	*	8					
40	1608-205-235-00	PLUG	*	2					
41	1608-205-236-00	DRIVESCREW	*	2					
42	1608-205-237-00	PIN	*	2					
43	1608-205-238-00	PLUG	*	2					
44	1608-205-239-00	VALVE	*	2					
45	1608-205-241-00	PLUG	*	2					
46	1608-205-242-00	ORIFICE	*	2					
47	1608-205-243-00	SPRING	*	2					
48	1608-205-244-00	SPRINGHOLDER	*	2					
49	1608-205-245-00	PLUG	*	1					
50	1608-205-246-00	SPRING	*	1					
51	1608-205-247-00	PLATE	*	1					
52	V705-140-052-00	RING,SNAP/52 C	*	1					
53	V705-140-040-00	RING,SNAP/40 C	*	1					
54	V704-140-020-00	RING,SNAP/20C	*	1					
55	V580-140-401-00	PIN/SPRING	*	2					
56	V705-140-030-00	RING,SNAP/30 C	*	1					
57	1608-205-290-00	SEALKIT	*	1	301511-				
58	1608-205-284-00	SEAL,OIL	*	1	301511-				
59	1608-205-227-00	OILSEAL	*	1					
60	1608-205-228-00	OILSEAL	*	2					

FIG. 12 HST (1) SYSTEM

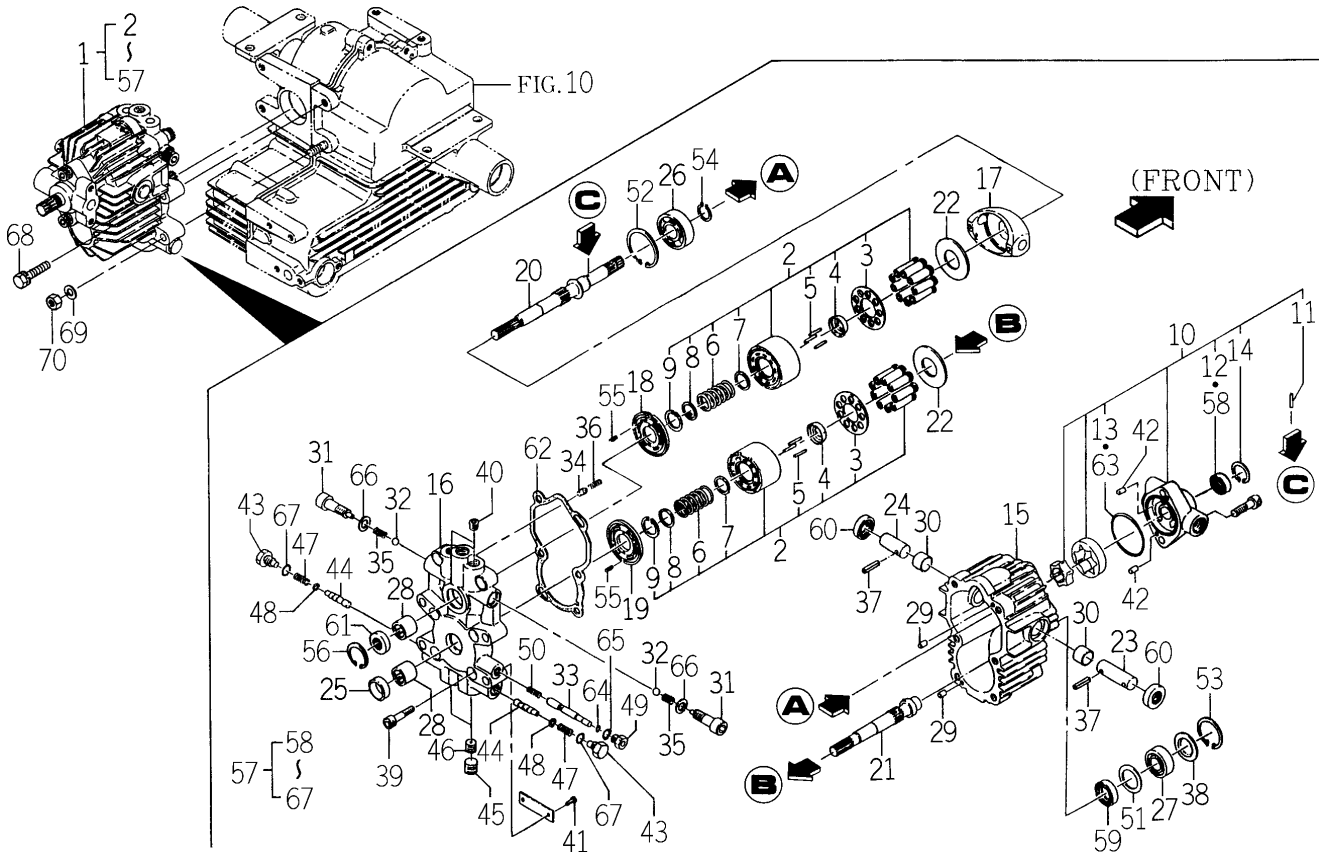

1608-205 -0100

KEY	PART CODE	DESCRIPTION	SPC	TYPE OF MODEL SG153H		ITC	COL	GRP	REMARKS
61	1608-205-229-00	SEAL,OIL	*	1					
62	1608-205-231-00	GASKET	*	1					
63	1608-205-285-00	O-RING	*	1					
64	1608-205-232-00	O-RING	*	1	301511-				
65	V720-111-900-80	O-RING/P8	*	1					
66	1608-205-233-00	BONDEDSEAL	*	2					
67	V720-112-401-10	RING/O	*	2					
68	V211-261-004-50	BOLT (S)/M10X45	*	3					
69	V401-160-010-00	WASHER,SP/M10	*	1					
70	V304-260-010-00	NUT	*	1					

FIG. 13 HST (2) SYSTEM

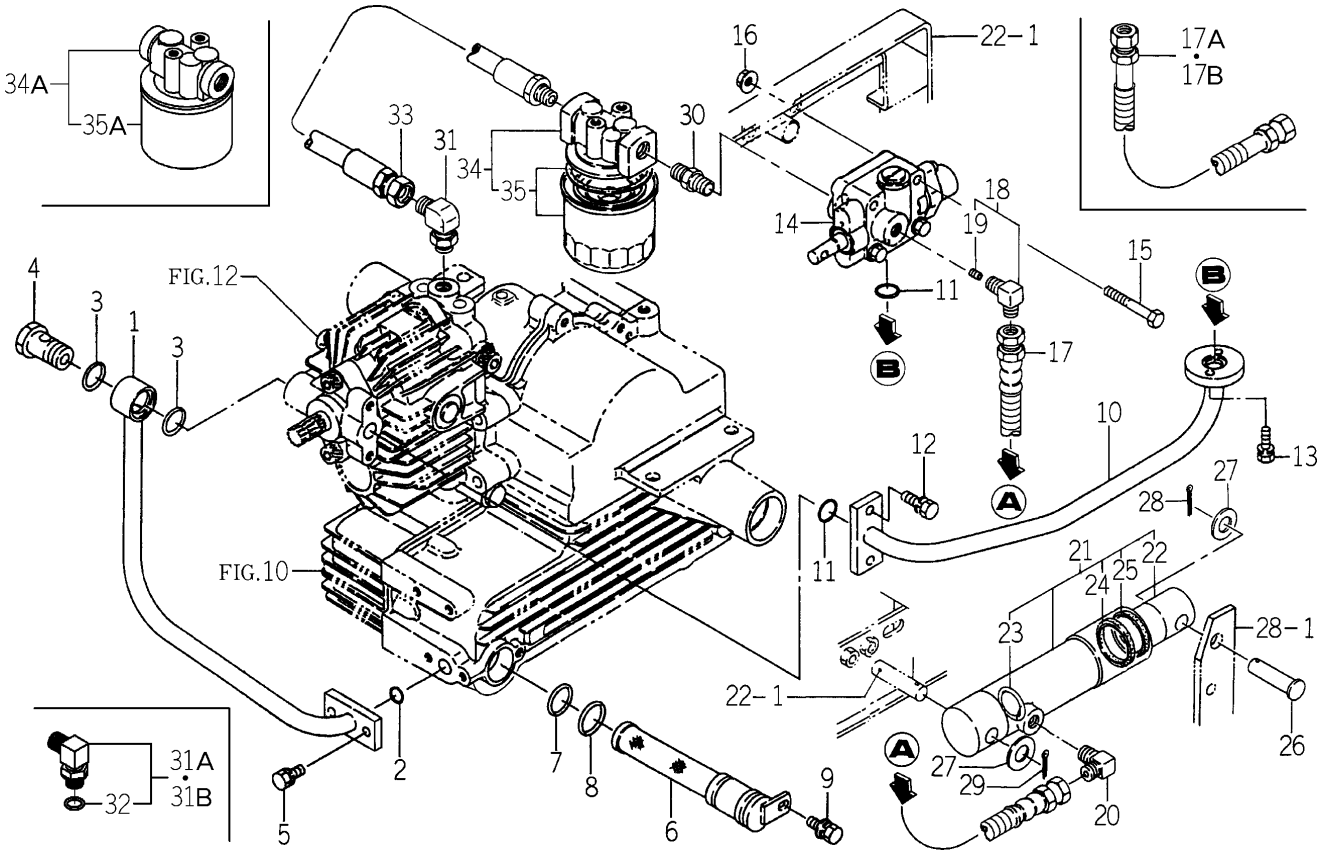

1608-206 -0100

KEY	PART CODE	DESCRIPTION	SPC	TYPE OF MODEL SG153H		ITC	COL	GRP	REMARKS
1	1608-206-200-30	PIPE/SUCTION	*	1					
2	V720-102-401-80	O-RING/P18	*	1					
3	V720-102-402-20	O-RING/P22	*	2					
4	1608-206-001-00	BOLT(CONNECTER/PF1/2	*	1					
5	V211-260-802-00	BOLT/S	*	2					
6	1435-201-220-00	FILTER,SUCTION(HST)	*	1					
7	V720-103-502-40	O-RING/P24	*	1					
8	V720-103-502-60	O-RING/P26	*	1					
9	V211-360-801-60	BOLT,SEMS (SP)	*	1					
10	1608-206-210-20	PIPE/BOOST	*	1					
11	V720-102-401-80	O-RING/P18	*	2					
12	V211-260-802-00	BOLT/S	*	2					
13	V210-260-602-00	BOLT/S	*	2					
14	K211-012-000-00	VALVE,COUNTROL	*	1					FIG 051
15	V201-260-806-00	BOLT/M 8X60	*	2					
16	V363-260-008-00	NUT/WASHER	*	2					
17	3664-351-006-00	HOSE ASSY	*	1 -300856					
17A	2161-439-220-10	HOSE(620)	*	1 -301993					
17B	1705-408-350-00	HOSE/HYDRO/610 ASSY	*	1 301994-					
18	1608-206-240-00	ADAPTER(90ß)ORIFICE	*	1					
19	1608-206-241-00	ORIFICEBOLT/2.2	*	1					
20	3768-185-022-10	ADAPTER(90ß/PUMP)	*	1					
21	K182-032-000-00	CYLINDER ASSY	*	1					
22	K182-032-001-00	PISTON	*	1					
23	K182-002-002-00	STOPPER,PISTON	*	1					
24	K182-032-002-00	ROD PACKING	*	1					
25	K182-032-003-00	DUST/SEAL	*	1					
26	1608-206-002-00	PIN (14X54)	*	1					
27	V411-260-014-00	WASHER,PL/M14	*	2					
28	V500-163-002-50	PIN,SPLIT/3 X25	*	1					

FIG. 13 HST (2) SYSTEM

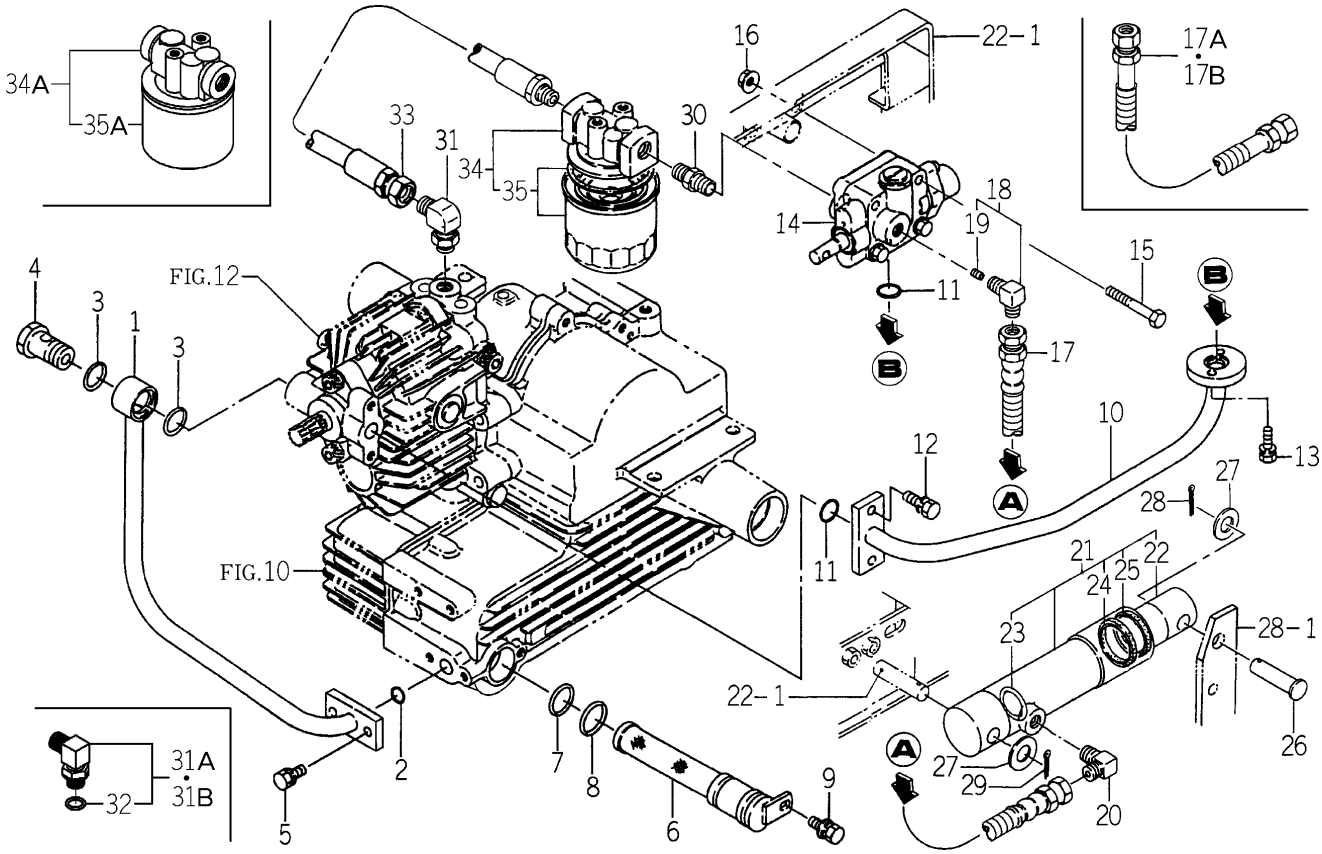

1608-206 -0100

KEY	PART CODE	DESCRIPTION	SPC	TYPE OF MODEL SG153H		ITC	COL	GRP	REMARKS
29	V500-164-003-00	PIN,SPLIT/4 X30	*	1					
30	1608-206-004-00	ADAPTER(FILTER/B)	*	1					
31	3631-353-002-10	ADAPTER(HIGH PRESS)	*	1 -300873					
31A	P117-501-250-00	ELBOW ASSY	*	1 -300964					
31B	1689-502-250-00	ADAPTER/L/G3/8 ASSY	*	1 300965-					
32	V720-112-401-40	O-RING/P14	*	1 300874-					
33	1608-206-005-00	HOSE/HYDRAULIC/350	*	1					
34	3667-354-220-10	FILTER ASSY	*	1 -300683					
34A	1608-206-250-00	OIL/FILTER ASSY	*	1 300684-					
35	3667-354-240-00	CARTRIDGE/80 ASSY	*	1 -300683					
35A	1608-206-260-00	CARTRIDGE ASSY	*	1 300684-					

FIG. 14 HST (3) SYSTEM(1/3)

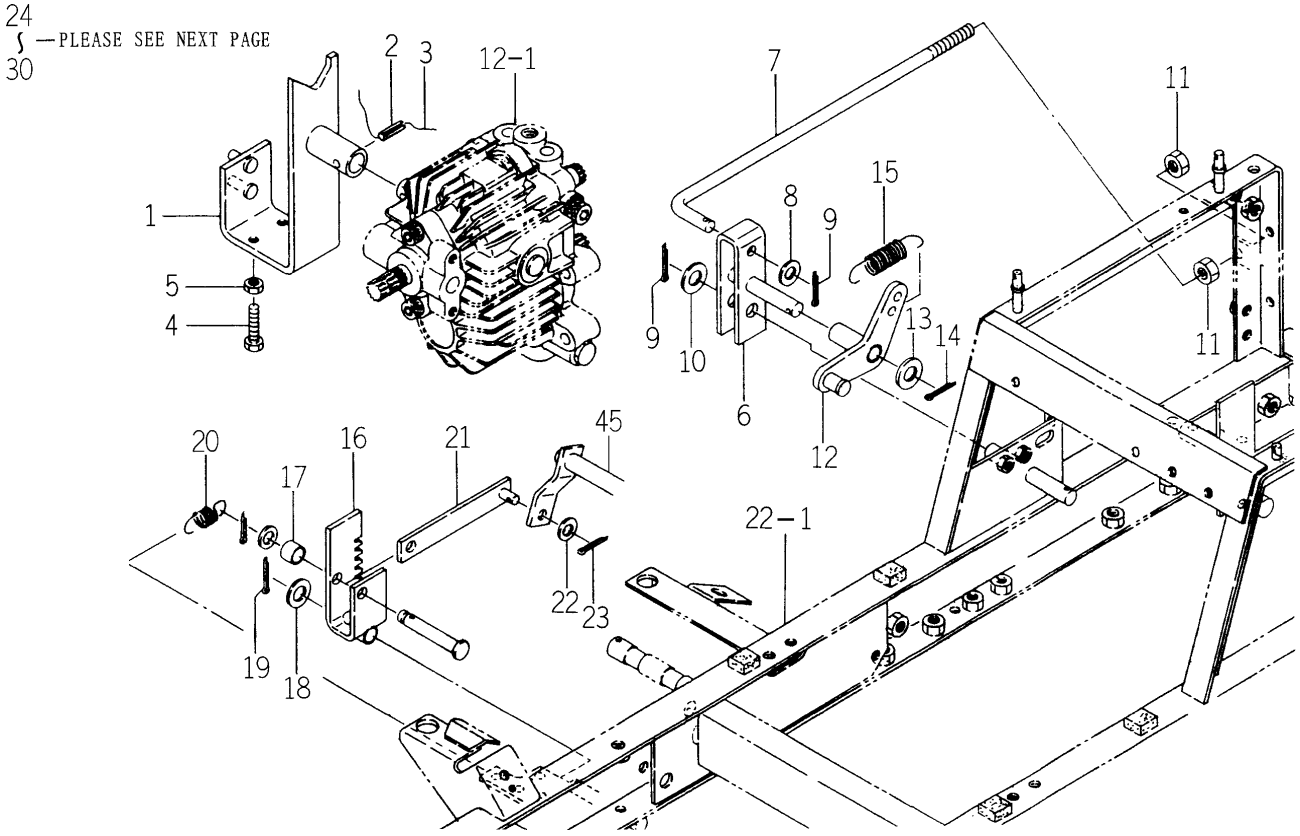

1608-207 -0100

KEY	PART CODE	DESCRIPTION	SPC	TYPE OF MODEL SG153H		ITC	COL	GRP	REMARKS
1	1608-207-200-30	PLATE,TRANON	*	1					
2	V580-140-602-50	PIN,SPRING/6 X25 W	*	1					
3		WIRE	*	1					
4	V201-260-803-50	BOLT/M 8X35	*	2					
5	V304-260-008-00	NUT	*	2					
6	1608-207-210-20	PIN(NEUTRAL)	*	1					
7	1608-207-011-00	ROD(NEUTRAL)	*	1					
8	V411-260-010-00	WASHER/M10	*	1					
9	V500-163-002-00	PIN,SPLIT/3 X20	*	2					
10	V411-260-012-00	WASHER /M12	*	1					
11	V304-260-010-00	NUT	*	2					
12	1608-207-220-20	LOCK(NEUTRAL)	*	1					
13	V411-260-012-00	WASHER /M12	*	1					
14	V500-163-002-00	PIN,SPLIT/3 X20	*	1					
15	3656-115-001-00	SPRING(HE085)	*	1					
16	1608-207-230-00	PLATE(HOOK) COMP	*	1					
17	1608-207-012-00	COLLAR(12X16X12)	*	1					
18	V411-260-012-00	WASHER /M12	*	2					
19	V500-163-002-00	PIN,SPLIT/3 X20	*	1					
20	3631-671-003-00	SPRING,ROD COVER	*	1					
21	1608-207-280-10	PLSTE(I/22X134)COMP	*	1					
22	V411-260-008-00	WASHER,PL/M 8	*	1					
23	V500-163-001-50	PIN,SPLIT/3 X15	*	1					
24	1608-207-240-20	ARM(HST/F) COMP	*	1					
25	V762-150-000-00	NIPPLE,GREASE/B-M6F	*	1					
26	V401-160-006-00	WASHER,SP/M 6	*	1					
27	1608-207-310-00	ROD(HST/F)COMP	*	1					
28	1608-207-004-10	PLATE(L/22X100)	*	1					
29	V411-260-008-00	WASHER,PL/M 8	*	2					
30	V500-163-001-50	PIN,SPLIT/3 X15	*	2					

FIG. 14 HST (3) SYSTEM(2/3)

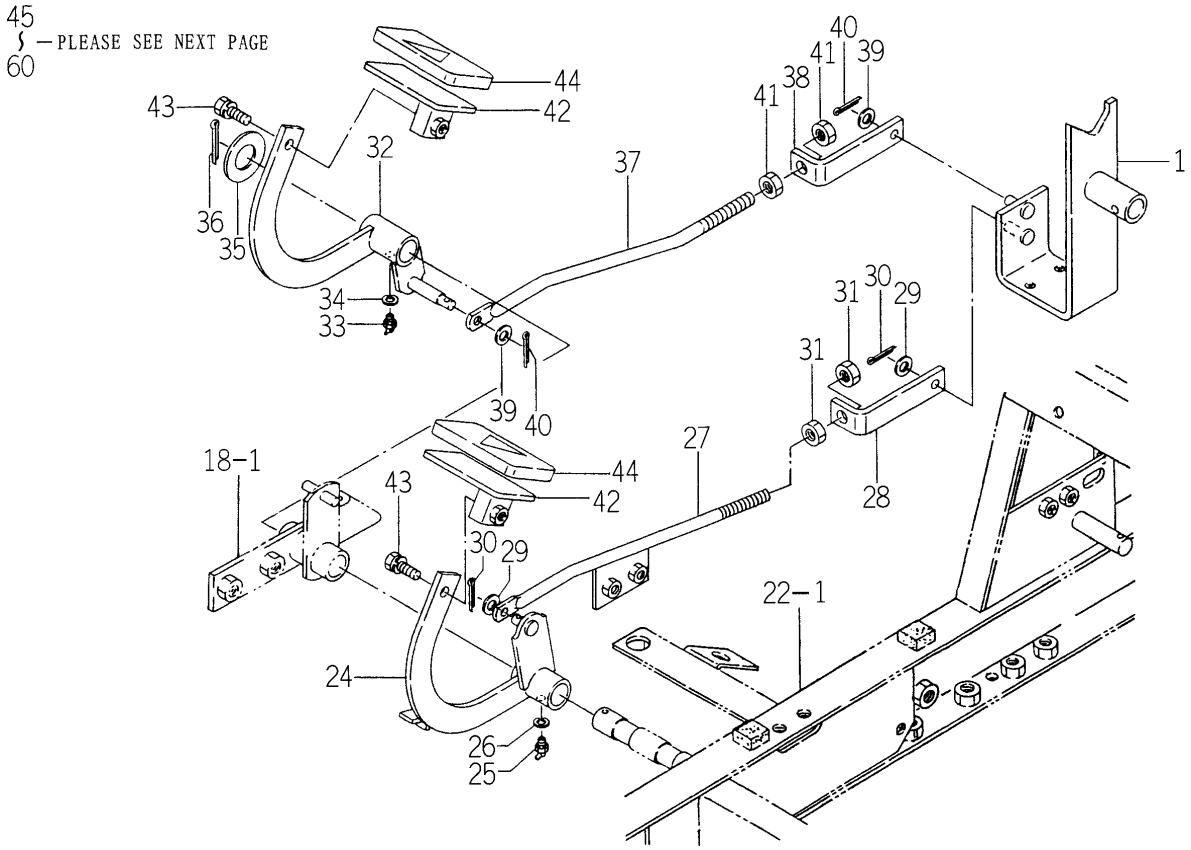

1608-207 -0100

KEY	PART CODE	DESCRIPTION	SPC	TYPE OF MODEL SG153H		ITC	COL	GRP	REMARKS
31	V304-260-010-00	NUT	*	2					
32	1608-207-250-20	ARM(HST/REVERSE)	*	1					
33	V762-150-000-00	NIPPLE,GREASE/B-M6F	*	1					
34	V401-160-006-00	WASHER,SP/M 6	*	1					
35	V411-260-020-00	WASHER/M20	*	1					
36	V500-163-003-00	PIN,SPLIT/3X30	*	1					
37	1608-207-003-20	ROD(HST/REVERSE)	*	1					
38	1608-207-004-10	PLATE(L/22X100)	*	1					
39	V411-260-008-00	WASHER,PL/M 8	*	2					
40	V500-163-001-50	PIN,SPLIT/3 X15	*	2					
41	V304-260-010-00	NUT	*	2					
42	1608-207-260-20	PEDAL (HST)	*	2					
43	V211-260-802-00	BOLT/S	*	2					
44	1608-207-014-00	PAD (HST)	*	2					
45	1608-207-270-10	SHAFT(HOOK)	*	1					
46	V411-260-014-00	WASHER,PL/M14	*	1					
47	V500-163-002-50	PIN,SPLIT/3 X25	*	1					
48	1608-207-290-00	ARM(HOOK)	*	1					
49	1593-101-012-00	STOPPER	*	1					
50	V201-260-805-00	BOLT/M 8X50	*	1					
51	V411-260-008-00	WASHER,PL/M 8	*	2					
52	V304-260-008-00	NUT	*	2					
53	1608-207-006-10	ROD(M10X85)	*	1					
54	1608-207-007-10	PLATE(L/32X178)	*	1					
55	V304-260-010-00	NUT	*	2					
56	V411-260-008-00	WASHER,PL/M 8	*	1					
57	V500-163-001-50	PIN,SPLIT/3 X15	*	1					
58	V411-260-010-00	WASHER/M10	*	1					
59	V500-163-002-00	PIN,SPLIT/3 X20	*	1					
60	1608-207-008-00	PIN (10X70)	*	1					

FIG. 14 HST (3) SYSTEM(3/3)

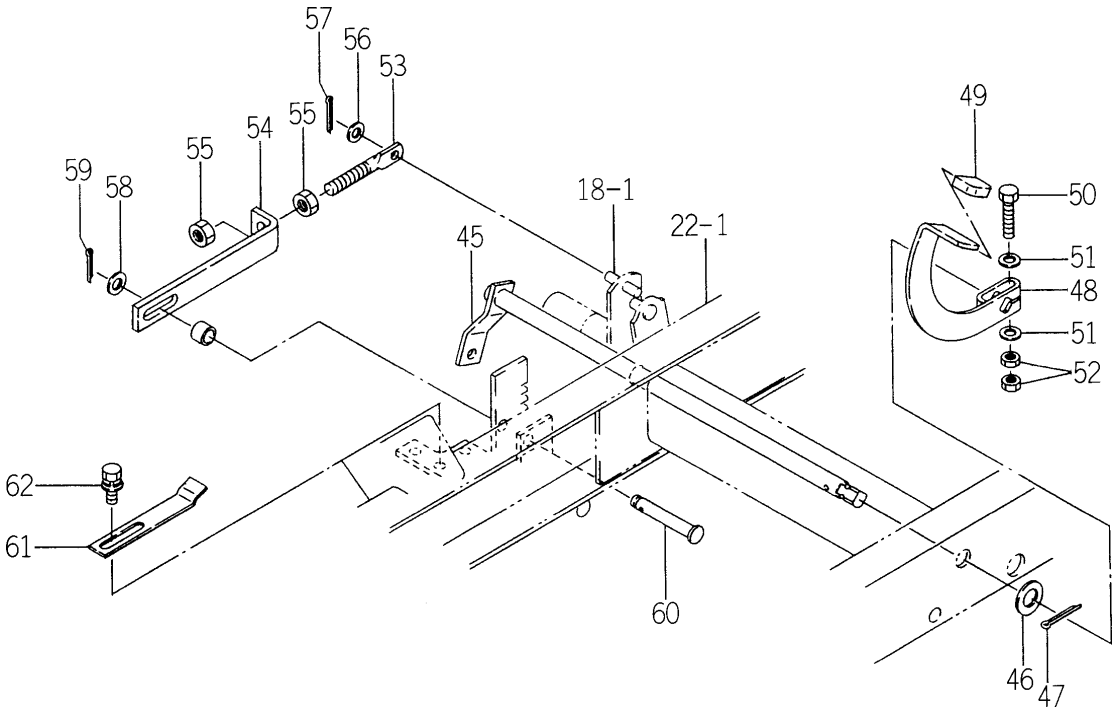

1608-207 -0100

KEY	PART CODE	DESCRIPTION	SPC	TYPE OF MODEL SG153H		ITC	COL	GRP	REMARKS
61	1608-207-009-20	PLATE(I/20X122)	*	1					
62	V211-360-801-60	BOLT,SEMS (SP)	*	2					

FIG. 15 HST (UNLOAD) SYSTEM

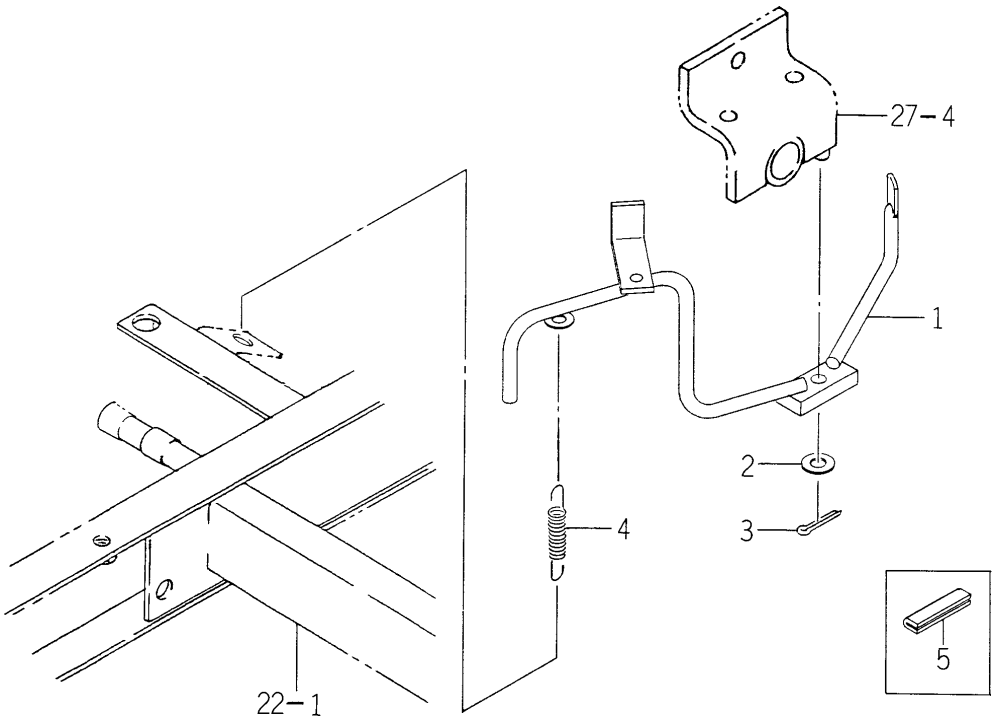

1608-208 -0100

KEY	PART CODE	DESCRIPTION	SPC	TYPE OF MODEL SG153H		ITC	COL	GRP	REMARKS
1	1608-208-200-10	LEVER/UNLOAD COMP	*	1		1			
2	V411-260-010-00	WASHER/M10	*	1					
3	V500-163-002-00	PIN,SPLIT/3 X20	*	1					
4	1415-120-006-00	SPRING,TENSION/86	*	1					
5	3661-212-001-00	LINING/50	*	1					

FIG. 16 DIFFERENTIAL GEAR AND WHEEL SHAFT SYSTEM

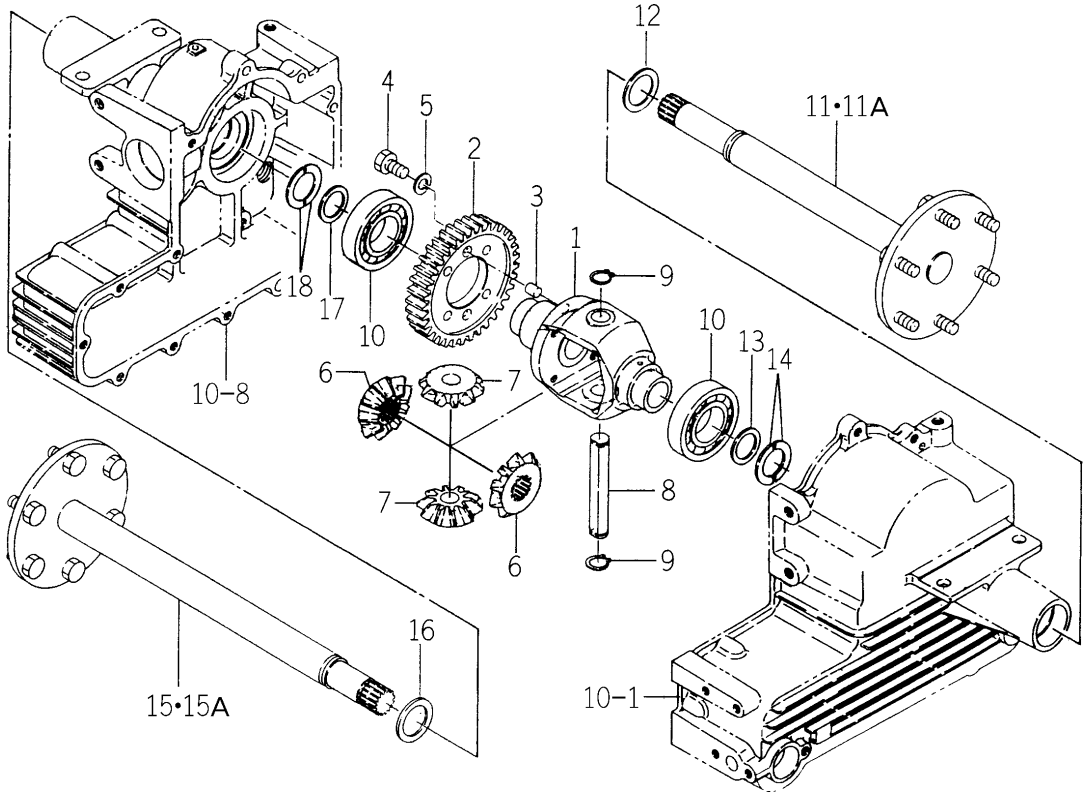

1608-304 -0100,1608-307 -0100

KEY	PART CODE	DESCRIPTION	SPC	TYPE OF MODEL SG153H		ITC	COL	GRP	REMARKS
1	1593-304-051-20	CASE,DIFF	*	1					
2	1608-304-001-00	GEAR/T40	*	1					
3	1593-304-008-00	PIN (10X18)	*	2					
4	1593-304-054-10	BOLT/M10X1.25X25	*	4					
5	V401-160-010-00	WASHER,SP/M10	*	4					
6	1593-304-053-10	GEAR,BEVEL/12	*	2					
7	1593-304-055-10	PINION,BEVEL/11	*	2					
8	1593-304-057-10	PIN,DIFF PINION	*	1					
9	V704-140-016-00	RING,SNAP/16 C	*	2					
10	V600-110-620-70	BEARING,RB/6207	*	2					
11	1608-307-200-20	SHAFT/WHEEL/LH COMP	*	1 -300485					
11A	1608-307-200-30	SHAFT/WHEEL/LH COMP	*	1 300486-		1			
12	1593-307-051-20	COLLAR/31X41X03	*	1					
13	1593-307-052-10	COLLAR/26X35X03	*	1					
14	1593-307-053-10	COLLAR,WHEEL THRUST	*	2					
15	1608-307-210-20	SHAFT/WHEEL/RH COMP	*	1 -300485					
15A	1608-307-210-30	SHAFT/WHEEL/RH COMP	*	1 300486-		1			
16	1593-307-051-20	COLLAR/31X41X03	*	1					
17	1593-307-052-10	COLLAR/26X35X03	*	1					
18	1593-307-053-10	COLLAR,WHEEL THRUST	*	2					

FIG. 17 BRAKE SYSTEM

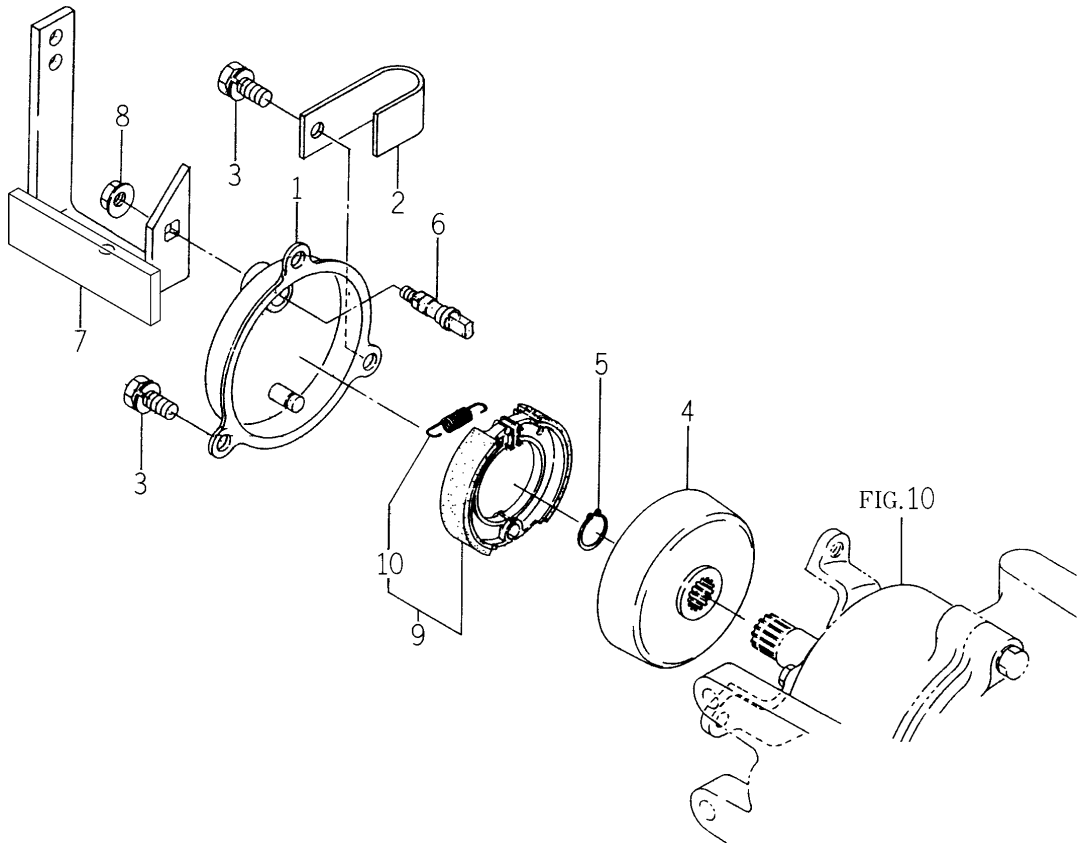

1608-310A-0100

KEY	PART CODE	DESCRIPTION	SPC	TYPE OF MODEL SG153H		ITC	COL	GRP	REMARKS
1	1608-310-200-10	COVER(BRAKE)	*	1					
2	1608-310-002-00	PLATE(UX27X71)	*	1					
3	V211-260-801-60	BOLT,SEMS (S) M8X16	*	3					
4	1593-310-520-20	DRUM,BRAKE	*	1					
5	V704-140-017-00	RING,SNAP/17 C	*	1					
6	1593-310-054-20	PIN/15X47	*	1					
7	1608-310-210-00	ARM/BRAKE COMP	*	1					
8	V363-260-008-00	NUT/WASHER	*	1					
9	1593-310-540-00	SHOE/BRAKE/NON ASBES	*	1					
10	1323-220-012-00	SPRING,BRAKE SHOE	*	1					

FIG. 18 BRAKE PEDAL AND ARM SYSTEM

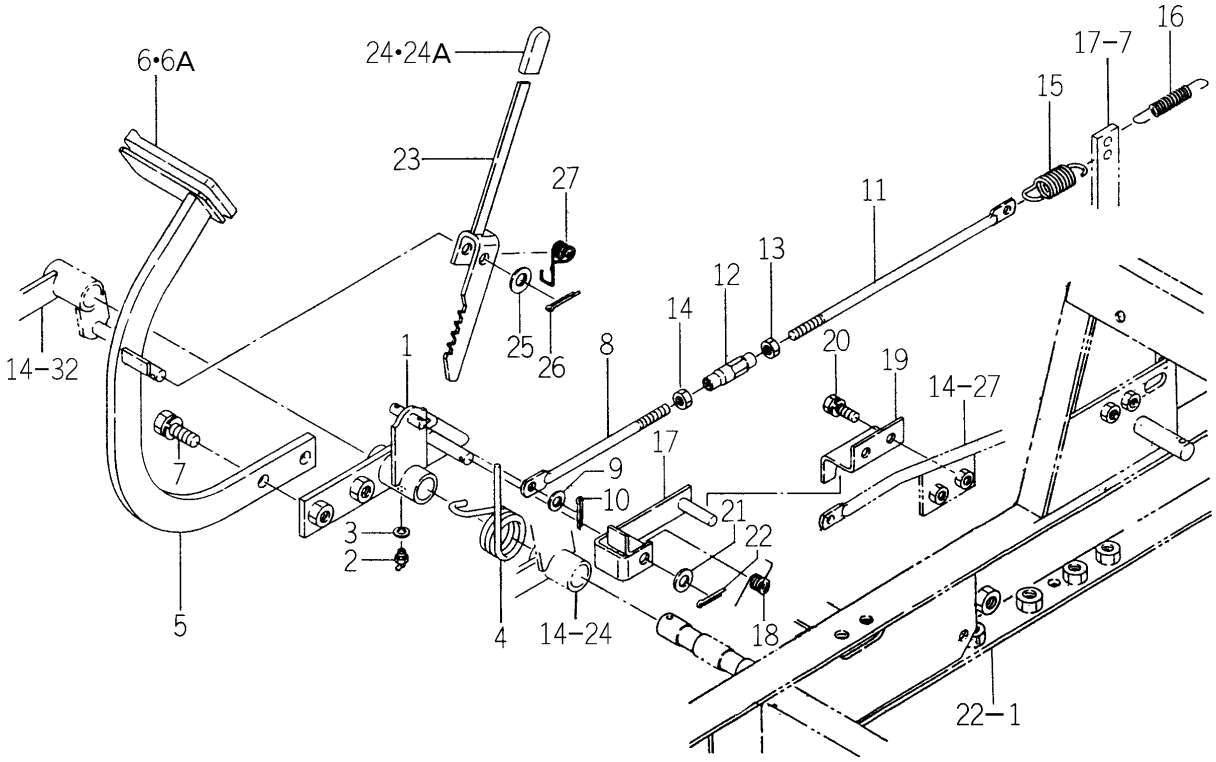

1608-312 -0100,1608-313 -0100

KEY	PART CODE	DESCRIPTION	SPC	TYPE OF MODEL SG153H		ITC	COL	GRP	REMARKS
1	1608-312-200-40	ARM/BRAKE COMP	*	1					
2	V760-150-000-00	NIPPLE,GREASE	*	1					
3	V401-160-006-00	WASHER,SP/M 6	*	1					
4	1608-312-005-00	SPRING(HT035)	*	1					
5	1608-312-210-20	ARM(PEDAL)	*	1					
6	1524-122-001-00	PAD	*	1 -301366					
6A	1636-313-011-10	PAD/BRAKE	*	1 301367-					
7	V211-261-002-50	BOLT(S) M10X25	*	2					
8	1608-312-007-00	ROD/M08X140	*	1					
9	V411-260-008-00	WASHER,PL/M 8	*	1					
10	V500-163-001-50	PIN,SPLIT/3 X15	*	1					
11	1608-312-003-40	ROD/M08X250	*	1					
12	1444-122-002-00	TURNBUCKLE/M8	*	1					
13	V304-260-008-00	NUT	*	1					
14	1560-132-007-30	NUT/M8	*	1					
15	1337-401-006-00	SPRING	*	1					
16	1415-120-006-00	SPRING,TENSION/86	*	1					
17	1608-312-220-00	PLATE(BRAKE LOCK)	*	1					
18	1593-312-056-20	SPRING/HT013	*	1					
19	1608-312-006-20	PLATE,LOCK	*	1					
20	V211-260-802-00	BOLT/S	*	2					
21	V411-260-010-00	WASHER/M10	*	1					
22	V500-163-002-00	PIN,SPLIT/3 X20	*	1					
23	1608-313-200-10	PLATE(PARKING) COMP	*	1					
24	3600-201-013-00	GRIP,BRAKE	*	1 -301366					
24A	2171-213-002-00	GRIP/04X12X50	*	1 301367-					
25	V411-260-010-00	WASHER/M10	*	1					
26	V500-163-002-00	PIN,SPLIT/3 X20	*	1					
27	1593-312-056-20	SPRING/HT013	*	1					

FIG. 19 REAR TIRE SYSTEM

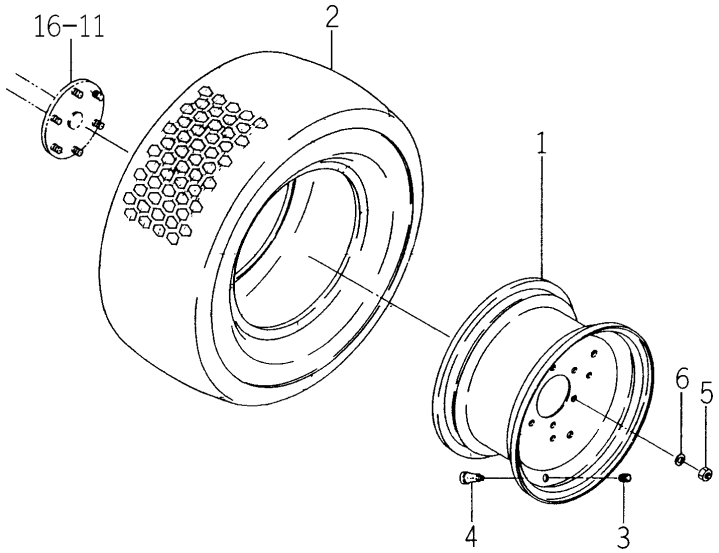

1593-317 -0100

KEY	PART CODE	DESCRIPTION	SPC	TYPE OF MODEL SG153H		ITC	COL	GRP	REMARKS
1	1593-317-210-00	RIM,WHEEL	*	2			6G		
2	1593-317-201-00	TIRE,TURF/23-12	*	2					
3	V999-200-003-00	CAP,TIRE VALVE	*	2					
4	1386-241-002-00	VALVE/RIM	*	2					
5	V304-460-010-00	NUT/M10	*	12					
6	V401-160-010-00	WASHER,SP/M10	*	12					

FIG. 20 PTO CLUTCH SYSTEM

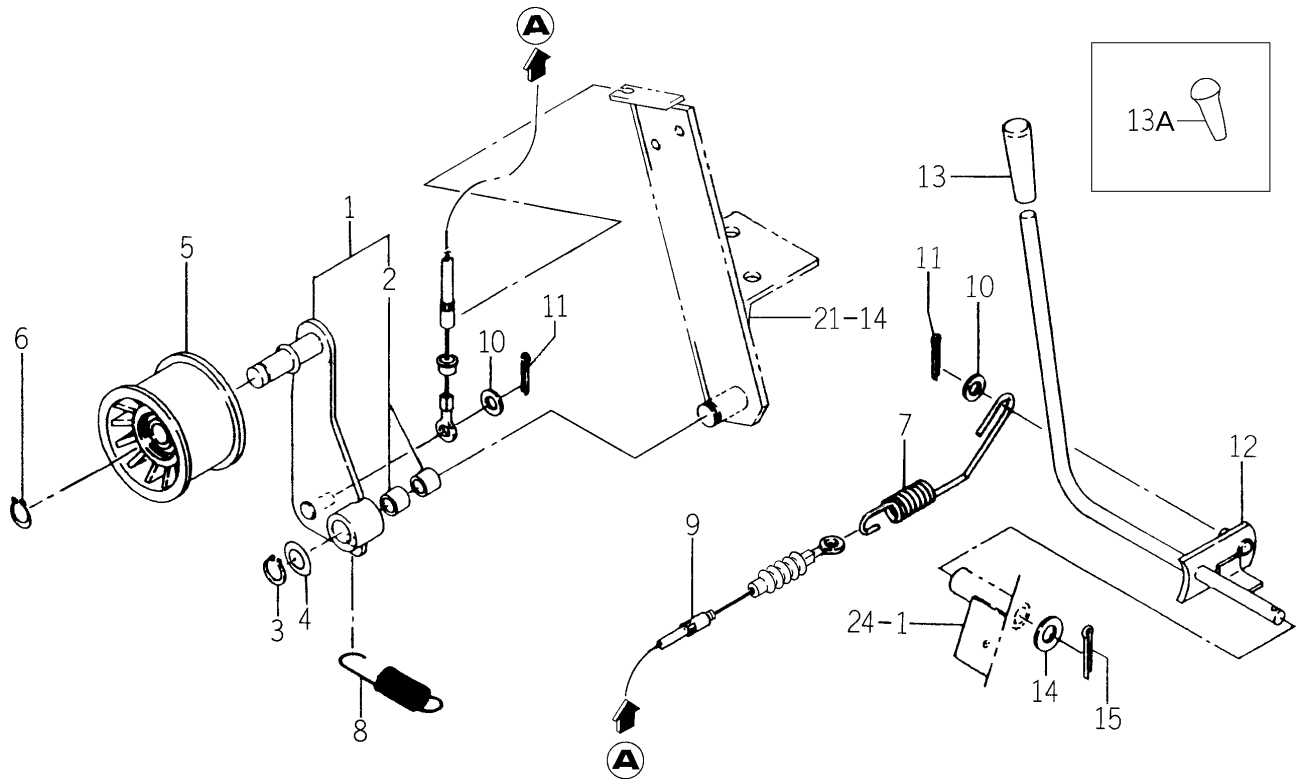

1593-332A-0100,1593-333A-0100

KEY	PART CODE	DESCRIPTION	SPC	TYPE OF MODEL SG153H		ITC	COL	GRP	REMARKS
1	1593-332-520-30	ARM/PTO ASSY	*	1					
2	2502-407-001-10	BUSH/15X17X11	*	2					
3	V704-140-015-00	RING,SNAP/15 C	*	1					
4	1427-601-003-00	WASHER/15X24X2	*	1					
5	3648-703-001-00	PULLEY/FT80X47	*	1					
6	V704-140-015-00	RING,SNAP/15 C	*	1					
7	1593-332-052-10	SPRING/HE014	*	1					
8	1593-332-053-00	SPRING/HE083	*	1					
9	1593-332-051-30	CABLE/PTO ASSY	*	1					
10	V411-260-008-00	WASHER,PL/M 8	*	2					
11	V500-163-001-50	PIN,SPLIT/3 X15	*	2					
12	1593-333-500-30	LEVER,PTO	*	1					
13	4106-105-303-00	KNOB	*	1 -301366					
13A	1705-333-001-00	GRIP/PTO	*	1 301367-					
14	V411-260-010-00	WASHER/M10	*	1					
15	V500-163-002-50	PIN,SPLIT/3 X25	*	1					

FIG. 21 PTO SHAFT SYSTEM

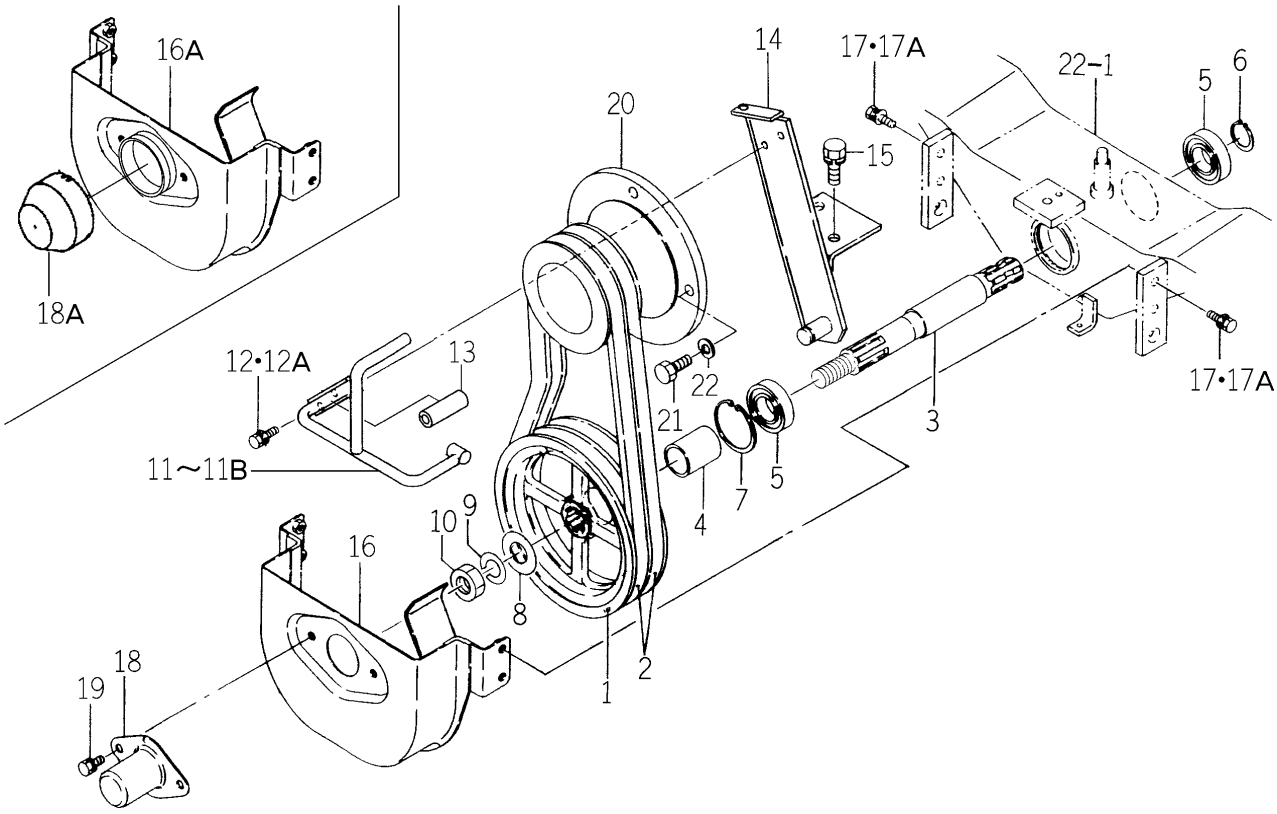

1593-334B-0100,1593-335 -0100

KEY	PART CODE	DESCRIPTION	SPC	TYPE OF MODEL SG153H		ITC	COL	GRP	REMARKS
1	1593-334-056-50	PULLY/V2B173	*	1					
2	1593-334-054-30	BELT/VB038	*	2					
3	1593-334-052-00	SHAFT/PTO/MID	*	1					
4	1593-334-055-00	COLLAR/26X32X41	*	1					
5	V600-150-600-50	BEARING,RB/6005SS	*	2					
6	V704-140-025-00	RING,SNAP/25 C	*	1					
7	V705-140-047-00	RING,SNAP/47 C	*	1					
8	3746-111-011-00	WASHER	*	1					
9	V401-160-016-00	WASHER,SP/M16	*	1					
10	V304-460-016-00	NUT/M16	*	2					
11	1593-334-300-20	BAR/PTO	*	1 -300959					
11A	1593-334-300-30	BAR/PTO	*	1 -301119		1			
11B	1593-334-300-40	BAR/PTO	*	1 301120-		1			
12	V210-360-601-60	BOLT(SP)/M6X16	*	2 -300959					
12A	V210-360-602-00	BOLT/SP	*	2 300960-					
13	1701-509-007-00	GROMMET/10X18X50	*	1					
14	1593-334-310-20	BRACKET,PTO/F	*	1					
15	V211-261-002-50	BOLT(S) M10X25	*	2					
16	1593-335-500-50	COVER,F/PTO COMP	*	1 -301690					
16A	1593-335-500-60	COVER/FRONT/PTO COMP	*	1 301691-		3			
17	V210-360-602-00	BOLT/SP	*	4 -301684					
17A	V210-660-602-00	BOLT/SP	*	4 301685-					
18	1427-130-260-00	CAP,SHAFT(A)COMP	*	1 -301690					
18A	1593-411-053-20	CAP/WHEEL	*	1 301691-					
19	V210-260-601-20	BOLT/S	*	2 -301690					
20	1593-335-058-00	PULLEY,V/2B105	*	1					
21	V203-461-002-50	BOLT/M10X25	*	4					
22	V401-160-010-00	WASHER,SP/M10	*	4					

FIG. 22 CHASSIS AND FRONT AXLE SYSTEM

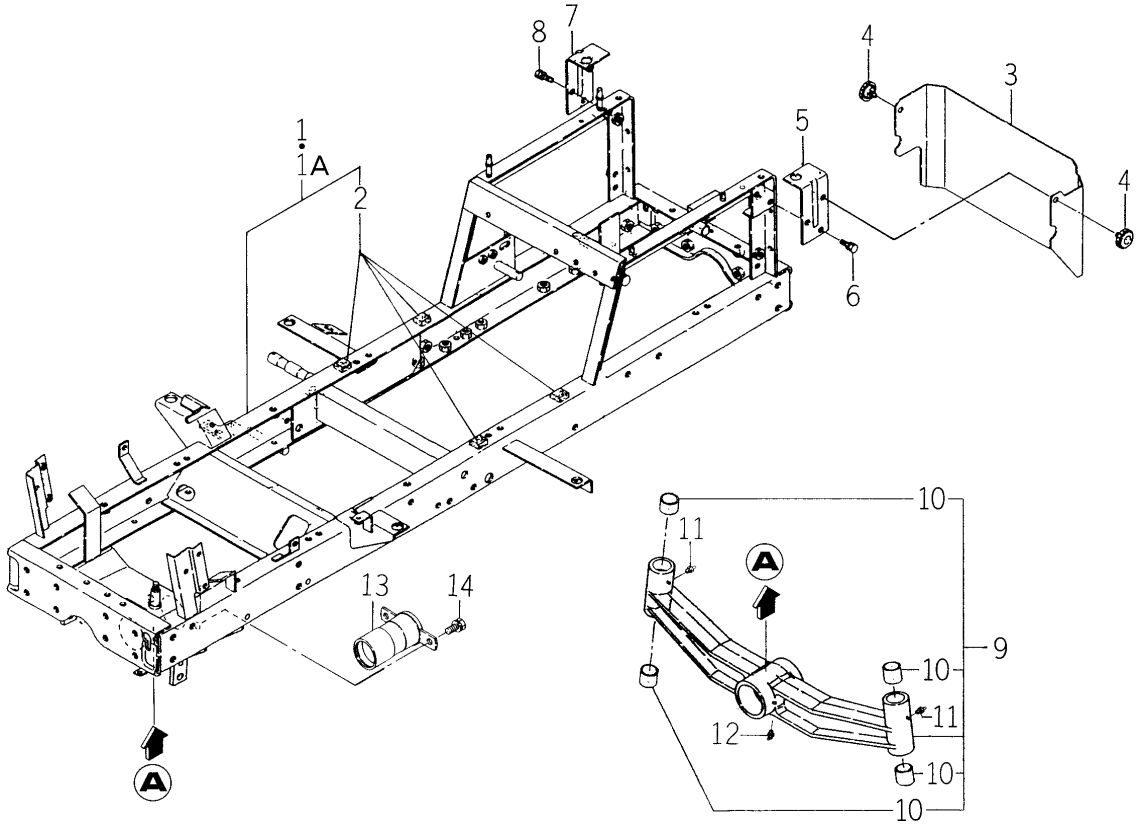

1608-401 -0100,1593-402A-0100

KEY	PART CODE	DESCRIPTION	SPC	TYPE OF MODEL SG153H		ITC	COL	GRP	REMARKS
1	1608-401-250-00	CHASSIS COMP	*	1 -300230					
1A	1608-401-250-20	CHASSIS COMP	*	1 300231-		1			
2	1593-401-007-20	INSULATOR/22	*	4					
3	1593-401-071-50	COVER/REAR	*	1					
4	3623-820-013-00	KNOB,SET/12	*	2					
5	1631-401-300-00	STAY,FENDER/LH	*	1					
6	V211-360-802-00	BOLT/SP	*	2					
7	1631-401-310-00	STAY,FENDER/RH	*	1					
8	V211-260-801-60	BOLT,SEMS (S) M8X16	*	2					
9	1593-402-210-00	AXLE/FRONT ASSY	*	1					
10	1593-402-051-10	BUSH/25X28X25	*	4					
11	V760-150-000-00	NIPPLE,GREASE	*	2					
12	V762-150-000-00	NIPPLE,GREASE/B-M6F	*	1					
13	1593-402-510-40	HUB,PTO FRONT	*	1					
14	V211-261-002-00	BOLT,SEMS	*	2					

FIG. 23 KNUCKLE ARM SYSTEM

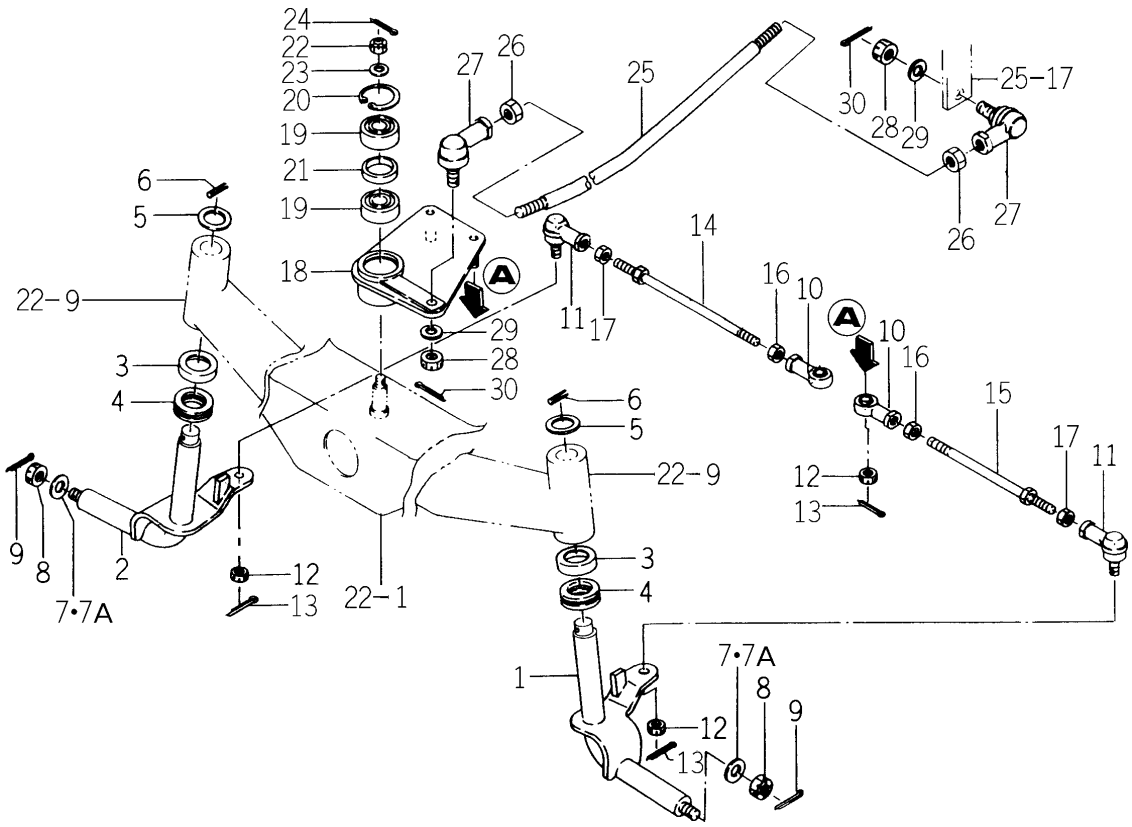

1593-403A-0100

KEY	PART CODE	DESCRIPTION	SPC	TYPE OF MODEL SG153H		ITC	COL	GRP	REMARKS
1	1593-403-500-80	ARM/KNUCKLE/LH COMP	*	1					
2	1593-403-510-80	ARM/KNUCKLE/RH COMP	*	1					
3	1593-403-004-10	COVER/44X10	*	2					
4	1593-403-009-00	THRUST	*	2					
5	V411-260-018-00	WASHER,PL/M18	*	2					
6	V580-140-503-20	PIN,SPRING/5 X32 W	*	2					
7	3621-702-003-00	WASHER,PULLEY	*	2 -300741					
7A	3805-701-018-00	WASHER(13X34X05)	*	2 300742-					
8	V328-262-112-00	NUT/M12X1.25	*	2					
9	V500-163-002-50	PIN,SPLIT/3 X25	*	2					
10	1593-403-003-10	JOINT,BALL/LH	*	2					
11	1593-403-001-10	JOINT,BALL/RH	*	2					
12	V328-262-110-00	NUT	*	4					
13	V500-162-502-00	PIN,SPLIT/2.5X20	*	4					
14	1593-403-052-30	ROD/D=8.90-8.94	*	1					
15	1593-403-056-40	ROD/TIE/M10X193	*	1					
16	3625-212-007-00	NUT/M10	*	2					
17	V334-260-010-00	NUT/M10	*	2					
18	1593-403-530-60	ARM,PITMAN	*	1					
19	V600-150-620-30	BEARING,RB/6203SS	*	2					
20	V705-140-040-00	RING,SNAP/40 C	*	1					
21	1593-403-007-20	COLLAR/31X38X06	*	1					
22	V328-262-110-00	NUT	*	1					
23	1376-121-001-00	WASHER/11X22X3	*	1					
24	V500-162-502-00	PIN,SPLIT/2.5X20	*	1					
25	1593-403-058-30	ROD/DRAG	*	1					
26	V335-260-012-00	NUT	*	2					
27	1593-403-005-00	JOINT,BALL	*	2					
28	V328-262-112-00	NUT/M12X1.25	*	2					
29	V401-160-012-00	WASHER,SP/M12	*	2					

FIG. 23 KNUCKLE ARM SYSTEM

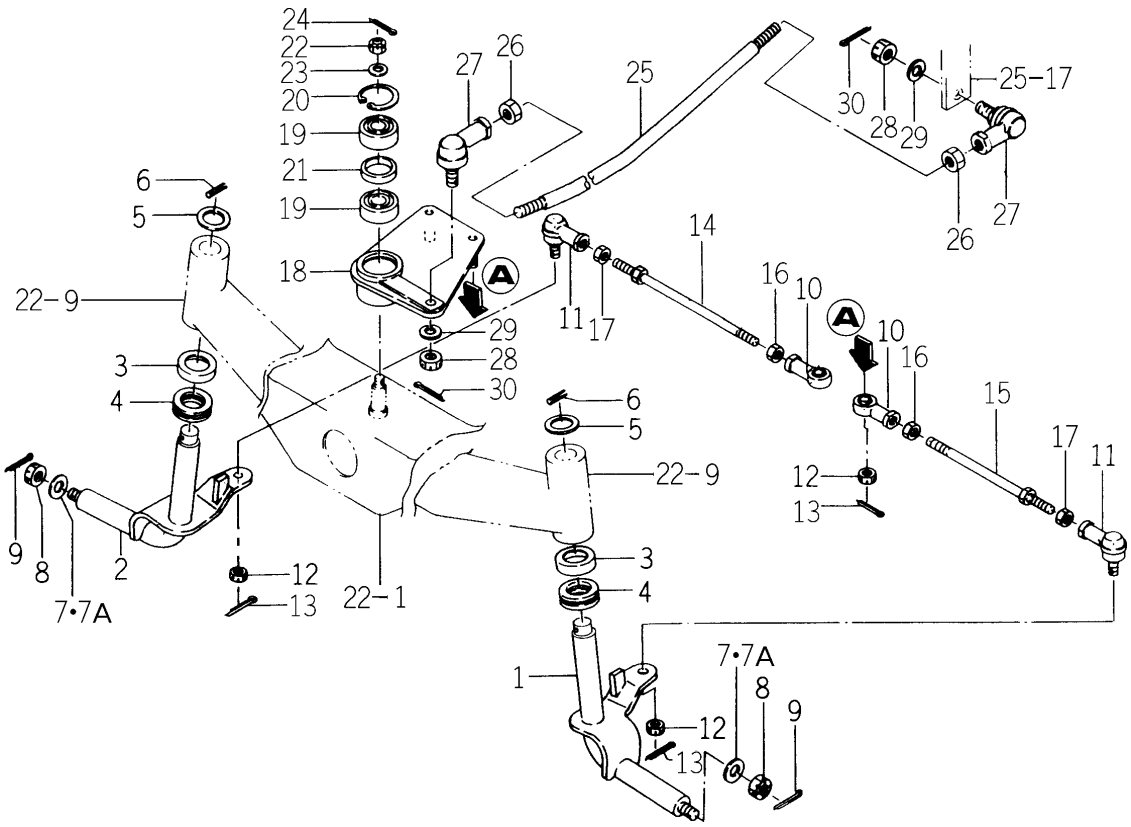

1593-403A-0100

KEY	PART CODE	DESCRIPTION	SPC	TYPE OF MODEL SG153H		ITC	COL	GRP	REMARKS
30	V500-163-002-50	PIN,SPLIT/3 X25	*	2					

FIG. 24 STEERING WHEEL SYSTEM

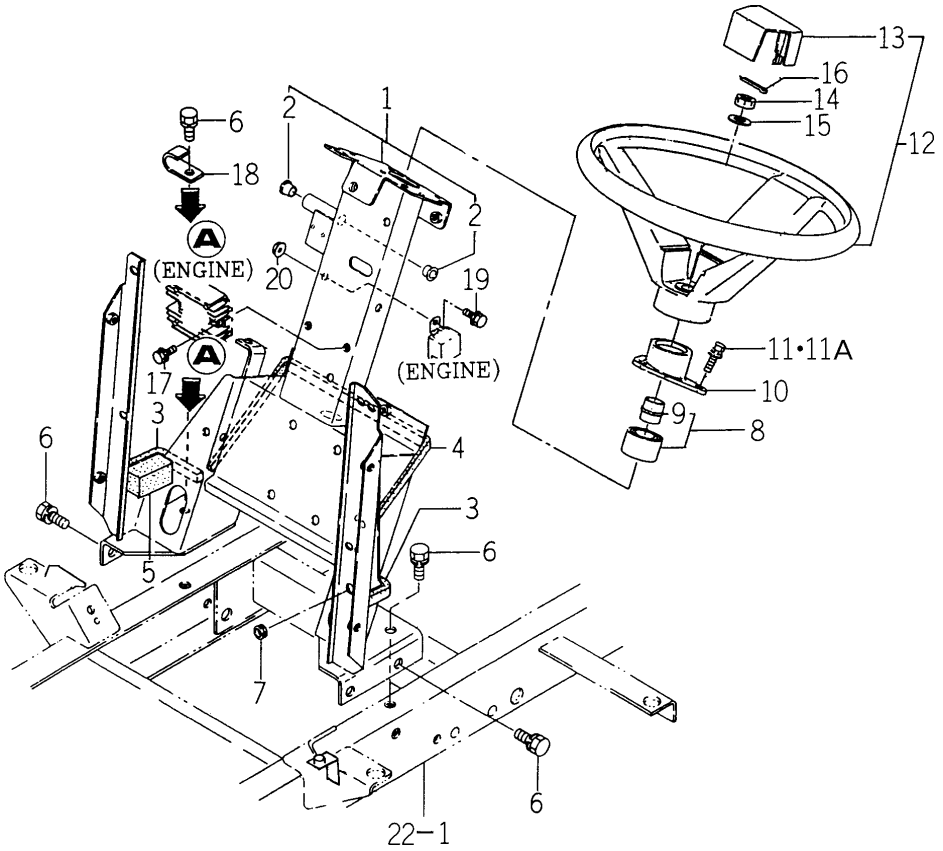

1593-406A-0100

KEY	PART CODE	DESCRIPTION	SPC	TYPE OF MODEL SG153H		ITC	COL	GRP	REMARKS
1	1593-406-500-30	POST/STEERING ASSY	*	1					
2	1564-512-001-00	BUSH/10X12X10	*	2					
3	1593-601-069-00	SEAL/15X20X120	*	2					
4	1593-601-065-10	SEAL/20X15X530	*	1					
5	1593-406-008-00	SEAL/30X30X50	*	2					
6	V211-561-002-50	BOLT/M10X25	*	6					
7	1427-621-012-00	GROMMET	*	1					
8	1593-406-250-00	COLUMM,STEERING ASSY	*	1					
9	1593-406-005-10	BUSH,COLUMN	*	1					
10	1593-406-004-00	HUB,STEERING COLUMN	*	1					
11	V210-360-602-00	BOLT/SP	*	3 -301510					
11A	V210-360-602-50	BOLT/SP	*	3 301511-					
12	1593-406-240-10	WHEEL,STEERING ASSY	*	1					
13	1593-406-006-00	PAD,STEERING WHEEL	*	1					
14	V328-262-110-00	NUT	*	1					
15	V411-260-010-00	WASHER/M10	*	1					
16	V500-162-502-00	PIN,SPLIT/2.5X20	*	1					
17	V210-360-602-00	BOLT/SP	*	2					
18	3737-172-011-00	CLAMP,HARNESS	*	1					
19	V211-360-801-60	BOLT,SEMS (SP)	*	1					
20	V363-260-008-00	NUT/WASHER	*	1					

FIG. 25 STEERING SYSTEM

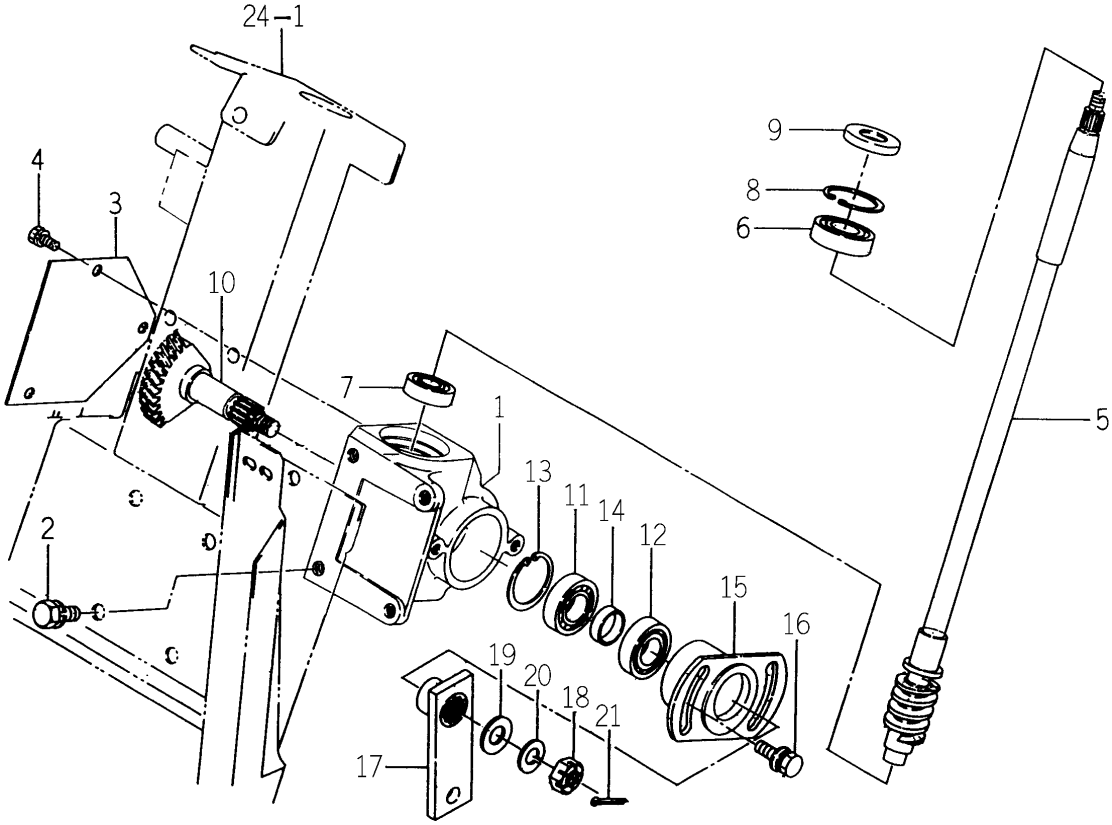

1593-407A-0100

KEY	PART CODE	DESCRIPTION	SPC	TYPE OF MODEL SG153H		ITC	COL	GRP	REMARKS
1	1593-407-051-70	CASE/STEERING	*	1		3			
2	V211-261-002-00	BOLT,SEMS	*	4					
3	1593-407-004-40	PLATE,STEERING	*	1					
4	V210-260-601-20	BOLT/S	*	3					
5	1593-407-200-60	SHAFT/STEERING COMP	*	1		1			
6	1593-407-002-00	BEARING,RB/7004	*	1					
7	1593-407-006-00	BEARING,RB/7202	*	1					
8	V705-140-042-00	RING,SNAP/42 C	*	1					
9	V742-120-420-60	SEAL,OIL/VC20426	*	1					
10	1593-407-510-50	GEAR(HELICAL/T72)	*	1					
11	V600-110-600-40	BEARING,RB/6004	*	1					
12	V600-140-600-40	BEARING,RB/6004S	*	1					
13	V705-140-042-00	RING,SNAP/42 C	*	1					
14	1593-407-007-20	COLLAR/21X25X08	*	1					
15	1593-407-520-40	FLANGE/CONTROL COMP	*	1					
16	V211-360-802-00	BOLT/SP	*	2					
17	1593-407-530-40	ARM/DRAG COMP	*	1					
18	V328-262-112-00	NUT/M12X1.25	*	1					
19	V411-260-012-00	WASHER /M12	*	1					
20	V401-160-012-00	WASHER,SP/M12	*	1					
21	V500-163-002-50	PIN,SPLIT/3 X25	*	1					

FIG. 26 FRONT TIRE SYSTEM

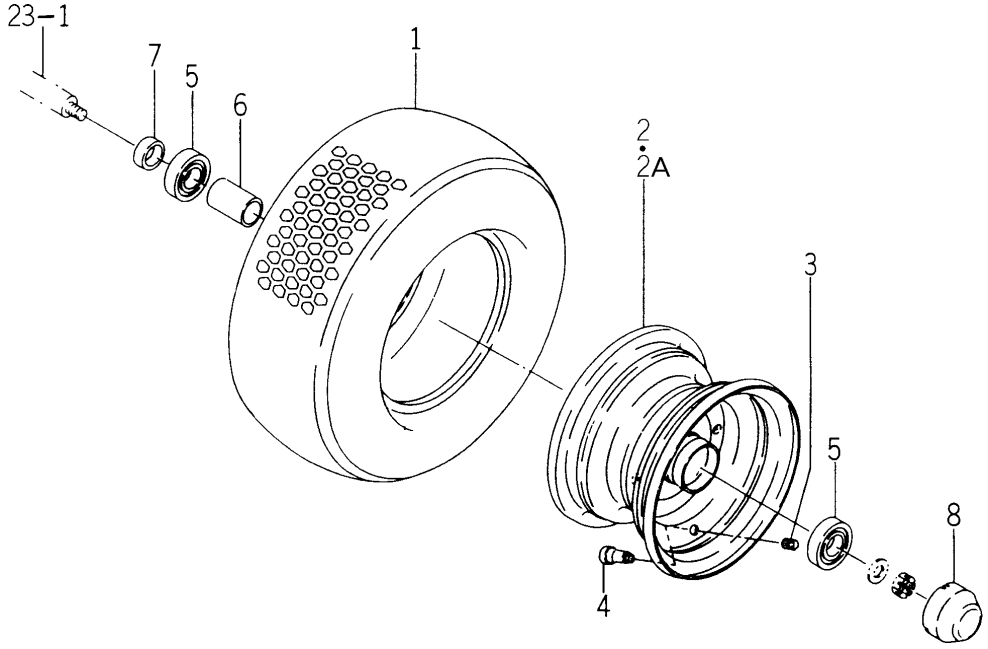

1593-411A-0100

KEY	PART CODE	DESCRIPTION	SPC	TYPE OF MODEL SG153H		ITC	COL	GRP	REMARKS
1	1593-411-201-00	TIRE,TURF/16-8	*	2					
2	1593-411-610-10	RIM,WHEEL FRONT	*	2 -300976			6G		
2A	1689-440-230-00	RIM/WHEEL COMP	*	2 300977-			6G		
3	V999-200-003-00	CAP,TIRE VALVE	*	2					
4	1386-241-002-00	VALVE/RIM	*	2					
5	V600-150-620-50	BEARING,RB/6205SS	*	4					
6	1593-411-001-10	COLLAR/26X32X53	*	2					
7	1593-411-052-20	COLLAR,26X32X14	*	2					
8	1593-411-053-20	CAP/WHEEL	*	2					

FIG. 27 LIFT AND LINK SYSTEM

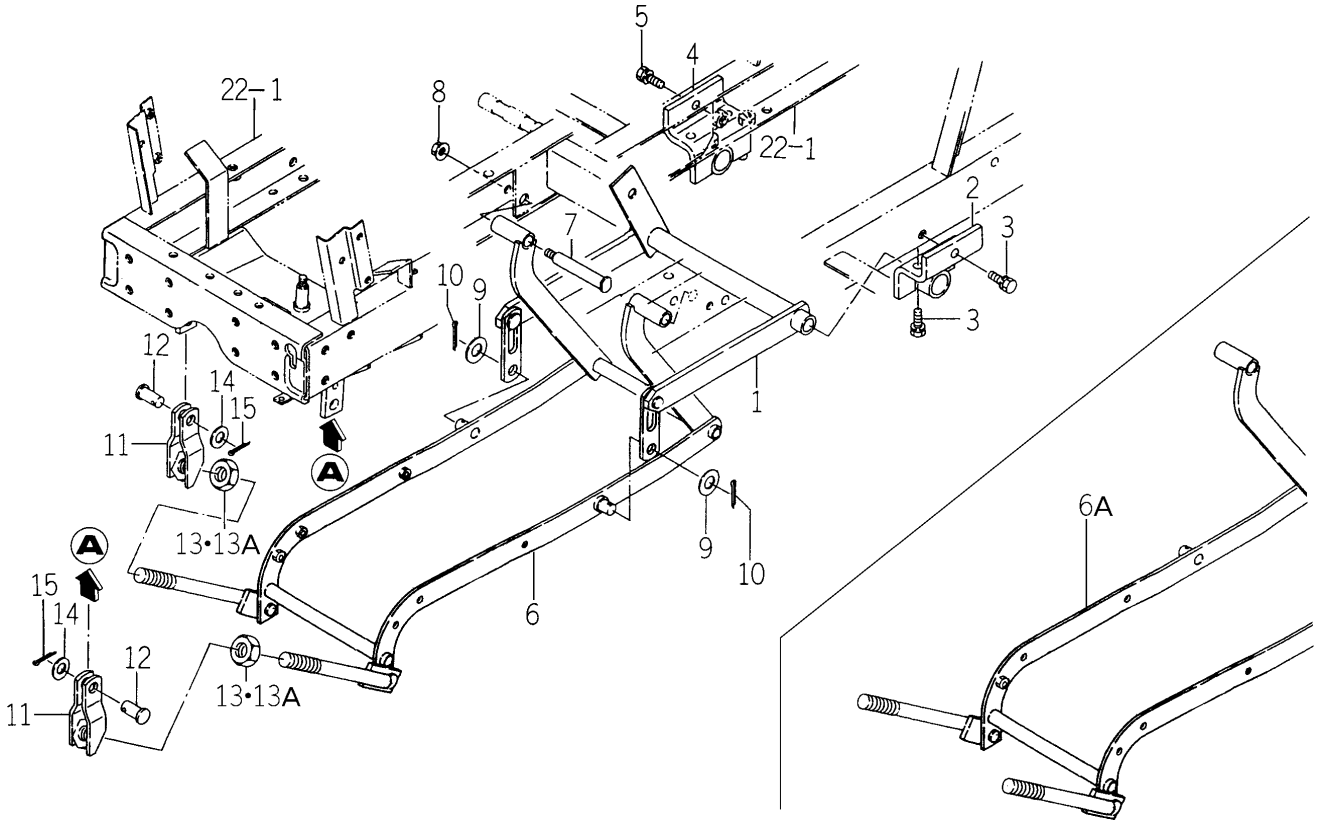

1608-553 -0100,1593-553A-0100

KEY	PART CODE	DESCRIPTION	SPC	TYPE OF MODEL SG153H		ITC	COL	GRP	REMARKS
1	1608-553-200-40	LIFT/270 COMP	*	1					
2	1593-553-670-30	METAL,LIFTARM	*	1					
3	V211-561-002-50	BOLT/M10X25	*	3					
4	1608-553-210-00	METAL,LIFTARM/R COMP	*	1					
5	V211-561-002-50	BOLT/M10X25	*	3					
6	1593-553-280-00	LINK COMP	*	1 -300363					
6A	1593-553-280-10	LINK COMP	*	1 300364-		1			
7	1593-553-003-20	PIN/15X108	*	2					
8	V363-260-010-00	NUT/M10	*	2					
9	V411-260-014-00	WASHER,PL/M14	*	2					
10	V500-163-002-50	PIN,SPLIT/3 X25	*	2					
11	1593-553-550-10	LINK/A	*	2					
12	1593-553-007-20	PIN/15X32	*	2					
13	V305-260-020-00	NUT/M20	*	2 -300552					
13A	V304-260-020-00	NUT/M20	*	2 300553-					
14	V411-260-014-00	WASHER,PL/M14	*	2					
15	V500-163-002-50	PIN,SPLIT/3 X25	*	2					

FIG. 28 LIFT CAM SYSTEM

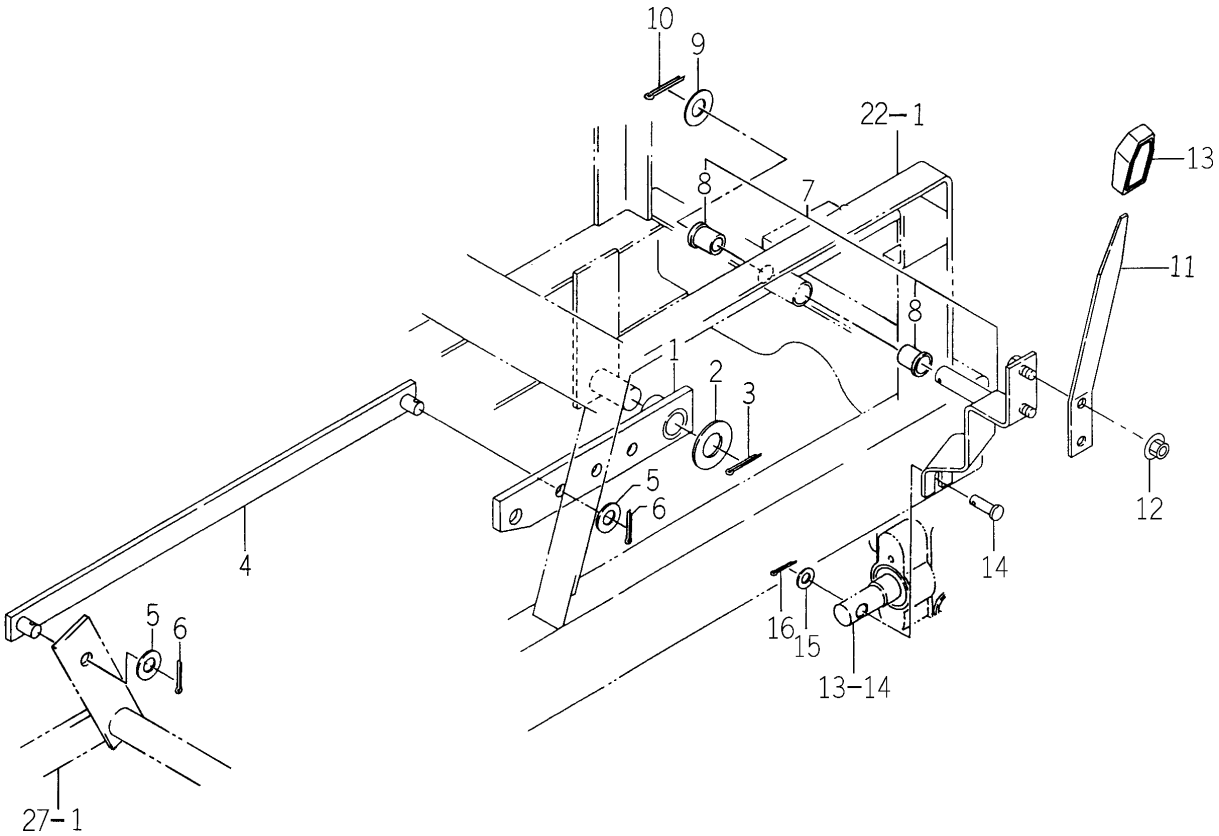

1608-554 -0100

KEY	PART CODE	DESCRIPTION	SPC	TYPE OF MODEL SG153H		ITC	COL	GRP	REMARKS
1	1608-554-200-10	ARM(LIFT)	*	1					
2	V411-260-020-00	WASHER/M20	*	1					
3	V500-163-003-00	PIN,SPLIT/3X30	*	1					
4	1608-554-210-10	PLATE,I/25X486	*	1					
5	V411-260-012-00	WASHER /M12	*	3					
6	V500-163-002-00	PIN,SPLIT/3 X20	*	2					
7	1608-554-600-20	ARM/CONTROL ASSY	*	1					
8	3656-221-001-10	BUSH/15X17X16	*	2					
9	V411-260-014-00	WASHER,PL/M14	*	1					
10	V500-163-002-50	PIN,SPLIT/3 X25	*	1					
11	1608-554-001-00	LEVER(HST LIFT)	*	1					
12	V362-260-008-00	NUT/WASHER	*	2					
13	1432-242-004-00	GRIP,B	*	1					
14	1608-554-002-00	PIN/08X26	*	1					
15	V411-260-008-00	WASHER,PL/M 8	*	1					
16	V500-163-001-50	PIN,SPLIT/3 X15	*	1					

FIG. 29 PTO COVER SYSTEM (EXCEPT M TYPE)

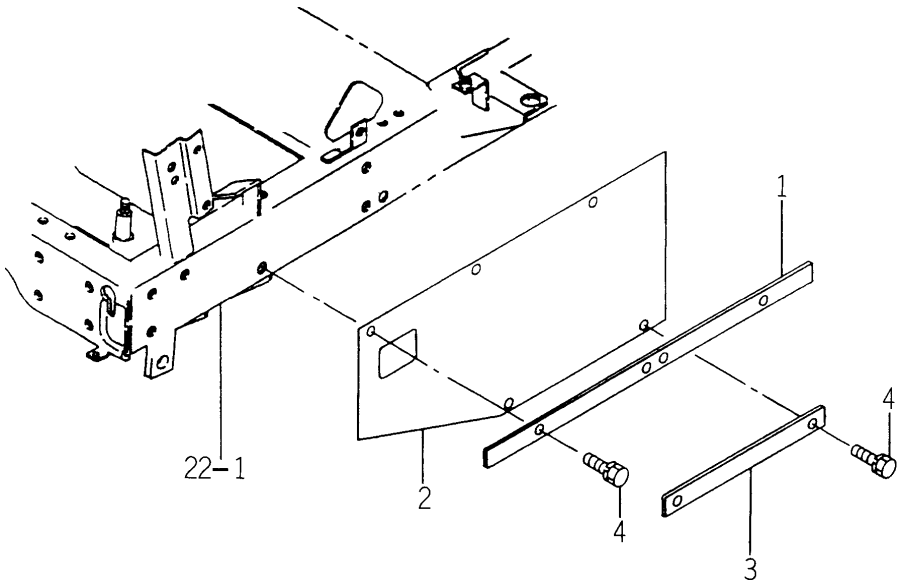

1593-555 -0100

KEY	PART CODE	DESCRIPTION	SPC	TYPE OF MODEL SG153H		ITC	COL	GRP	REMARKS
1	1593-555-011-00	PLATE,I/22X475	*	2 -300364					
2	1593-555-012-00	COVER	*	2 -300364					
3	1593-555-013-00	PLATE,I/22X240	*	2 -300364					
4	V211-260-802-50	BOLT/S	*	10 -300364					

FIG. 30 HOOD SYSTEM (M TYPE)

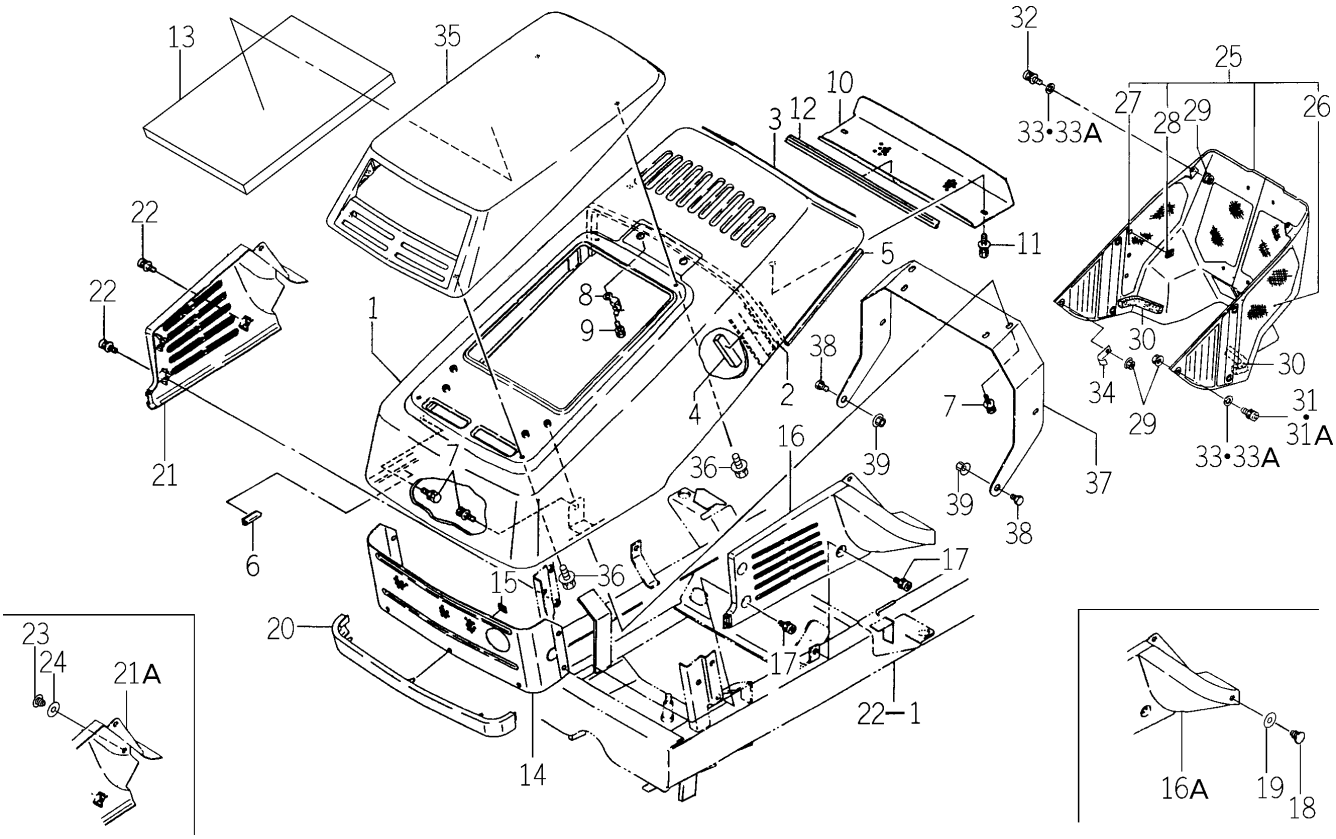

1608-601 -0100

KEY	PART CODE	DESCRIPTION	SPC	TYPE OF MODEL SG153H		ITC	COL	GRP	REMARKS
1	1593-601-500-52	HOOD/A COMP	*	1					
2	1593-601-062-20	SEAL/20X10X690	*	1					
3	1593-601-067-30	TRIM/1X06X570	*	1					
4	1593-601-071-00	SEAL(20X10X130)	*	1					
5	1593-601-072-00	TRIM/1X6X360	*	2					
6	3661-212-001-00	LINING/50	*	2					
7	V210-360-601-60	BOLT(SP)/M6X16	*	6					
8	3610-631-002-00	HANGER,SUPPORT	*	2					
9	V211-260-801-60	BOLT,SEMS (S) M8X16	*	2					
10	1593-601-009-00	NET/100X388	*	1					
11	4301-210-002-00	BOLT (S/N6X16)	*	2					
12	1593-601-072-00	TRIM/1X6X360	*	2					
13	1593-601-015-00	INSULATOR/HOOD	*	3					
14	1593-601-002-40	COVER/FRONT/MESH	*	1			7F		
15	V350-160-006-00	NUT,SPEED/P6	*	3					
16	1608-601-001-00	COVER/FRONT/LH	*	1 -301908					
16A	1608-601-001-10	COVER/FRONT/LH	*	1 301909-		1			
17	V120-376-001-60	SCREW/SP	*	3					
18	1527-604-002-00	CLIP(B)	*	1 301909-					
19	V411-260-008-00	WASHER,PL/M 8	*	1 301909-					
20	1608-601-003-00	COVER/FRONT/C	*	1					
21	1608-601-002-00	COVER/FRONT/RH	*	1 -301907					
21A	1608-601-002-10	COVER/FRONT/RH	*	1 301908-		1			
22	V120-376-001-60	SCREW/SP	*	3					
23	1527-604-002-00	CLIP(B)	*	1 301908-					
24	V411-260-008-00	WASHER,PL/M 8	*	1 301908-					
25	1593-601-300-00	COVER/LOWER ASSY	*	1					
26	1593-601-524-10	NET,LOWER COVER/LH	*	1					
27	1593-601-525-10	NET,LOWER COVER/RH	*	1					
28	V350-160-004-00	NUT,SPEED/P4	*	33					

FIG. 30 HOOD SYSTEM (M TYPE)

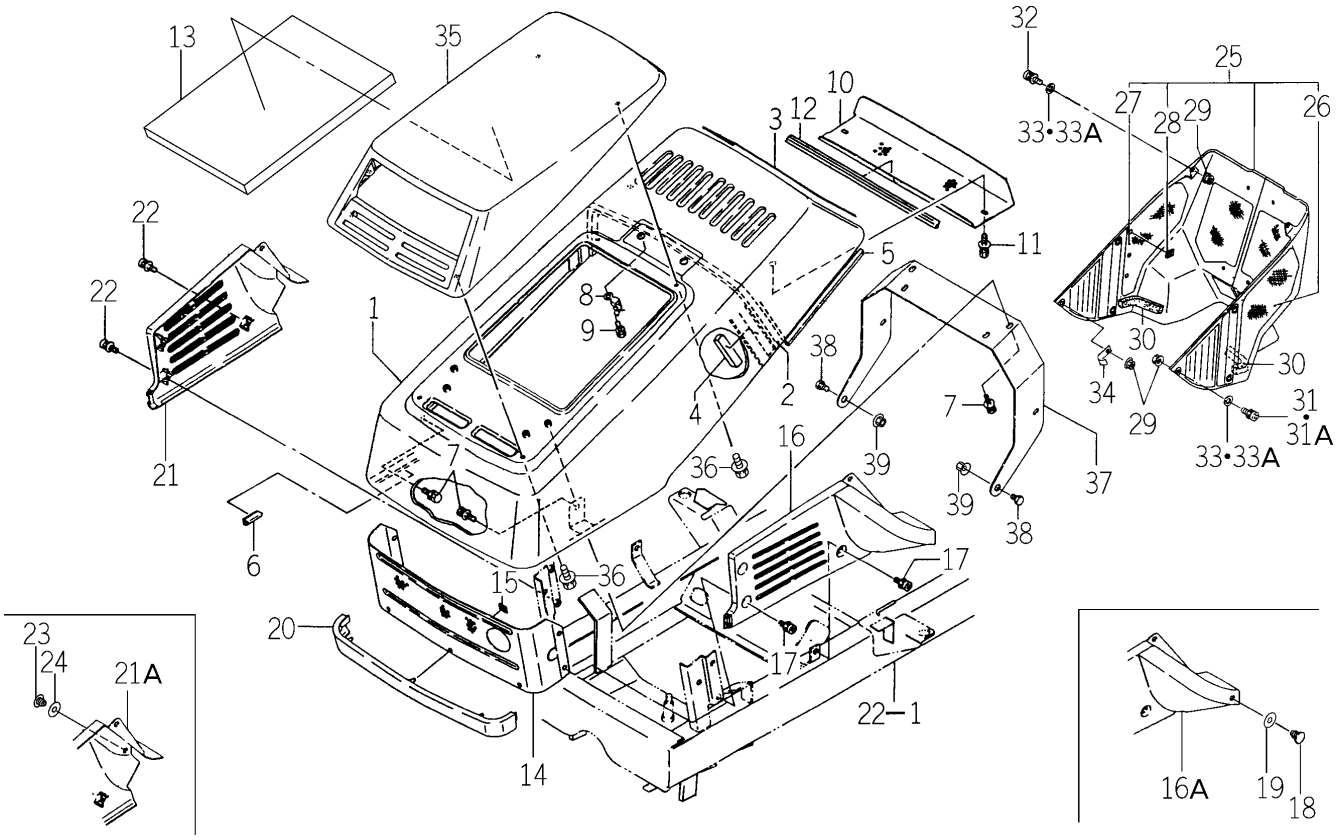

1608-601 -0100

KEY	PART CODE	DESCRIPTION	SPC	TYPE OF MODEL SG153H		ITC	COL	GRP	REMARKS
29	V361-260-006-00	NUT	*	4					
30	1593-601-064-20	SEAL/15X20X170	*	2					
31	V120-376-002-00	SCREW/SP	*	6 -302216					
31A	1725-604-052-00	SCREW/SP/M06X20	*	4 302217-					
32	V120-376-002-50	SCREW/SP	*	8					
33	1593-601-073-00	WASHER/06X16X01	*	12 -302216					
33A	1593-601-073-00	WASHER/06X16X01	*	8 302217-					
34	3737-172-009-00	CLAMP,MAIN HARNESS	*	1					
35	1593-601-014-00	HOOD/B	*	1					
36	V210-360-601-20	BOLT,SEMS	*	4					
37	1593-601-061-40	ARM/HOOD	*	1					
38	1593-601-054-00	SCREW/M8X11	*	2					
39	V363-260-008-00	NUT/WASHER	*	2					

FIG. 31 HOOD SYSTEM (EXCEPT M TYPE)

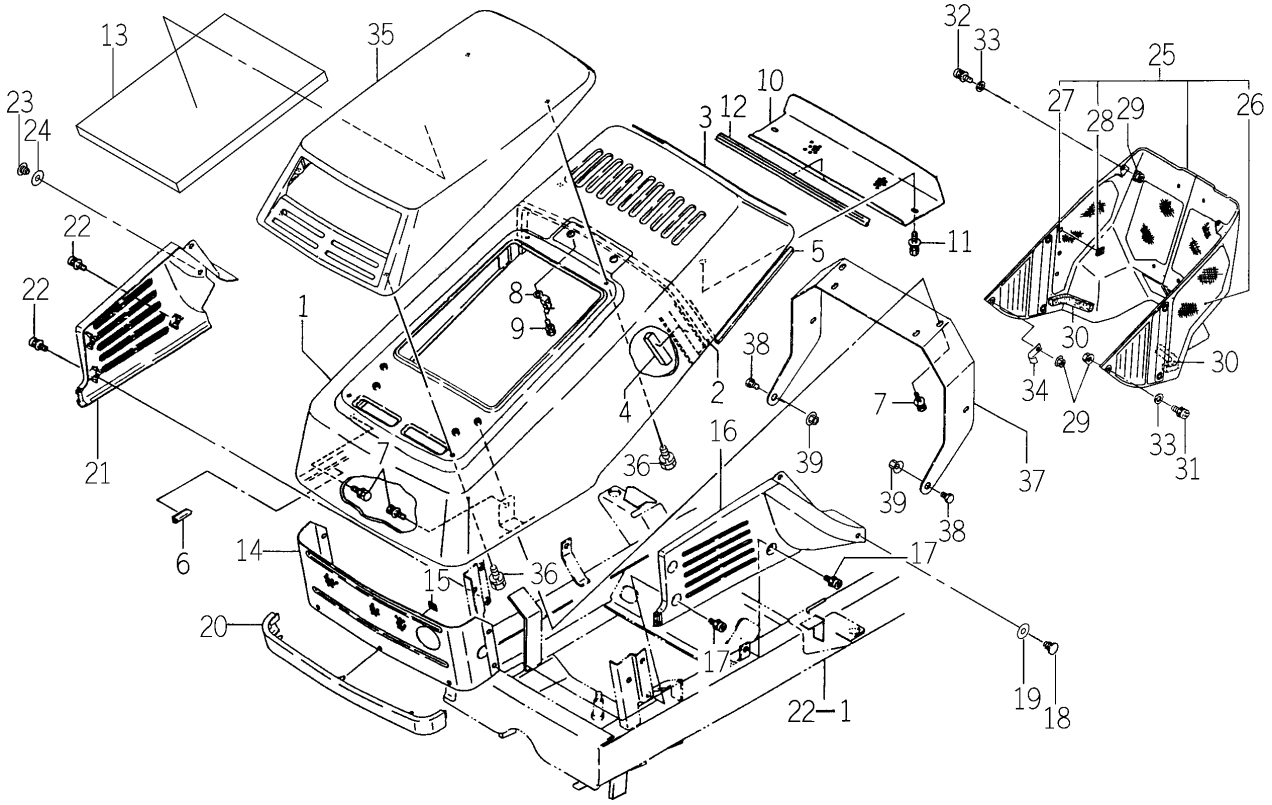

1593-601B-0100

KEY	PART CODE	DESCRIPTION	SPC	TYPE OF MODEL SG153H		ITC	COL	GRP	REMARKS
1	1593-601-500-51	HOOD/A COMP	*	1			4G		
2	1593-601-062-20	SEAL/20X10X690	*	1					
3	1593-601-067-30	TRIM/1X06X570	*	1					
4	1593-601-071-00	SEAL(20X10X130)	*	1					
5	1593-601-072-00	TRIM/1X6X360	*	2					
6	3661-212-001-00	LINING/50	*	2					
7	V210-360-601-60	BOLT(SP)/M6X16	*	6					
8	3610-631-002-00	HANGER,SUPPORT	*	2					
9	V211-260-801-60	BOLT,SEMS (S) M8X16	*	2					
10	1593-601-009-00	NET/100X388	*	1					
11	4301-210-002-00	BOLT (S/N6X16)	*	2					
12	1593-601-072-00	TRIM/1X6X360	*	2					
13	1593-601-015-00	INSULATOR/HOOD	*	3					
14	1593-601-002-41	COVER/FRONT/MESH	*	1			8E		
15	V350-160-006-00	NUT,SPEED/P6	*	3					
16	1593-601-011-10	COVER/FRONT/LH	*	1		1			
17	V120-366-001-60	SCREW	*	3					
18	1527-604-002-00	CLIP(B)	*	1					
19	V411-260-008-00	WASHER,PL/M 8	*	1					
20	1593-601-012-00	COVER/FRONT/C	*	1					
21	1593-601-013-10	COVER/FRONT/RH	*	1		1			
22	V120-366-001-60	SCREW	*	3					
23	1527-604-002-00	CLIP(B)	*	1					
24	V411-260-008-00	WASHER,PL/M 8	*	1					
25	1593-601-300-00	COVER/LOWER ASSY	*	1					
26	1593-601-524-10	NET,LOWER COVER/LH	*	1					
27	1593-601-525-10	NET,LOWER COVER/RH	*	1					
28	V350-160-004-00	NUT,SPEED/P4	*	33					
29	V361-260-006-00	NUT	*	4					
30	1593-601-064-20	SEAL/15X20X170	*	2					

FIG. 31 HOOD SYSTEM (EXCEPT M TYPE)

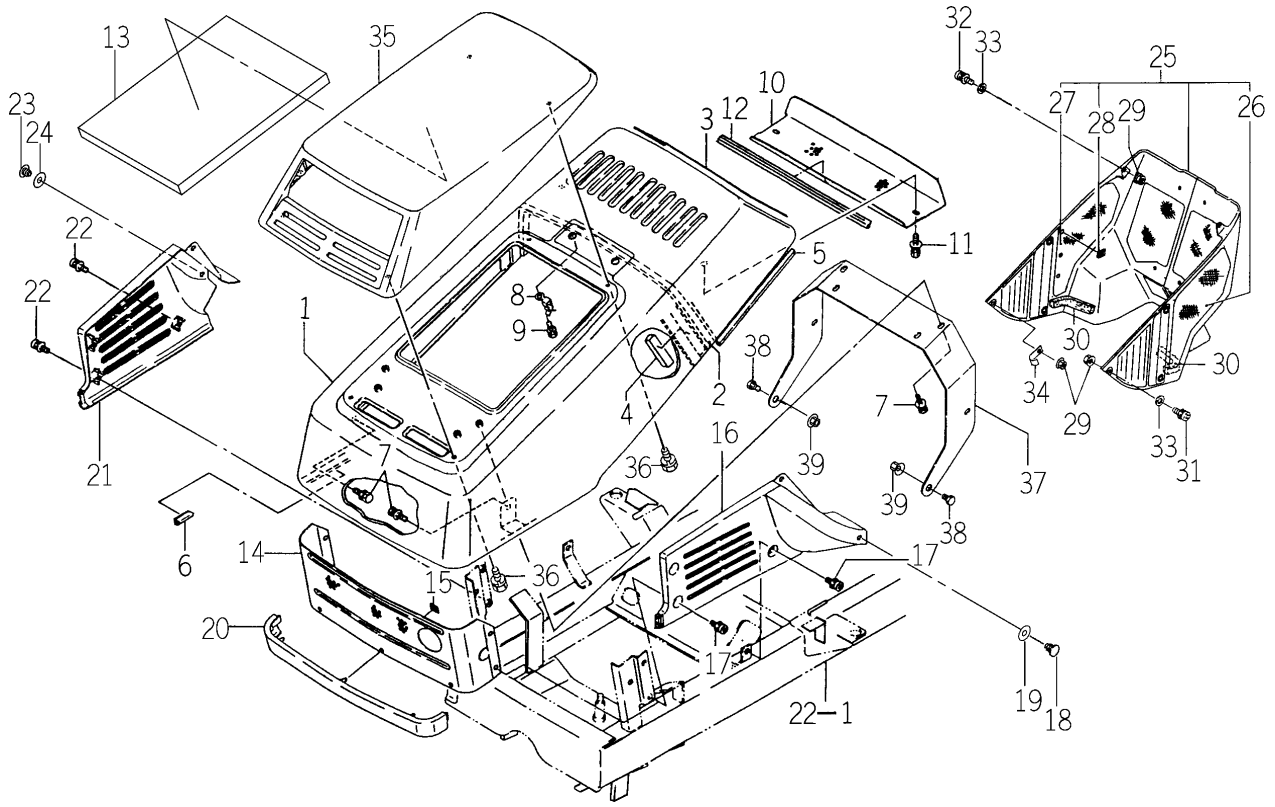

1593-601B-0100

KEY	PART CODE	DESCRIPTION	SPC	TYPE OF MODEL SG153H		ITC	COL	GRP	REMARKS
31	V120-376-002-00	SCREW/SP	*	6					
32	1593-601-074-00	SCREW/M6X25	*	6					
33	1593-601-073-00	WASHER/06X16X01	*	12					
34	3737-172-009-00	CLAMP,MAIN HARNESS	*	1					
35	1593-601-014-00	HOOD/B	*	1					
36	V210-260-601-20	BOLT/S	*	4					
37	1593-601-061-40	ARM/HOOD	*	1					
38	1593-601-054-00	SCREW/M8X11	*	2					
39	V363-260-008-00	NUT/WASHER	*	2					

FIG. 32 FENDER SYSTEM (EXCEPT M TYPE)

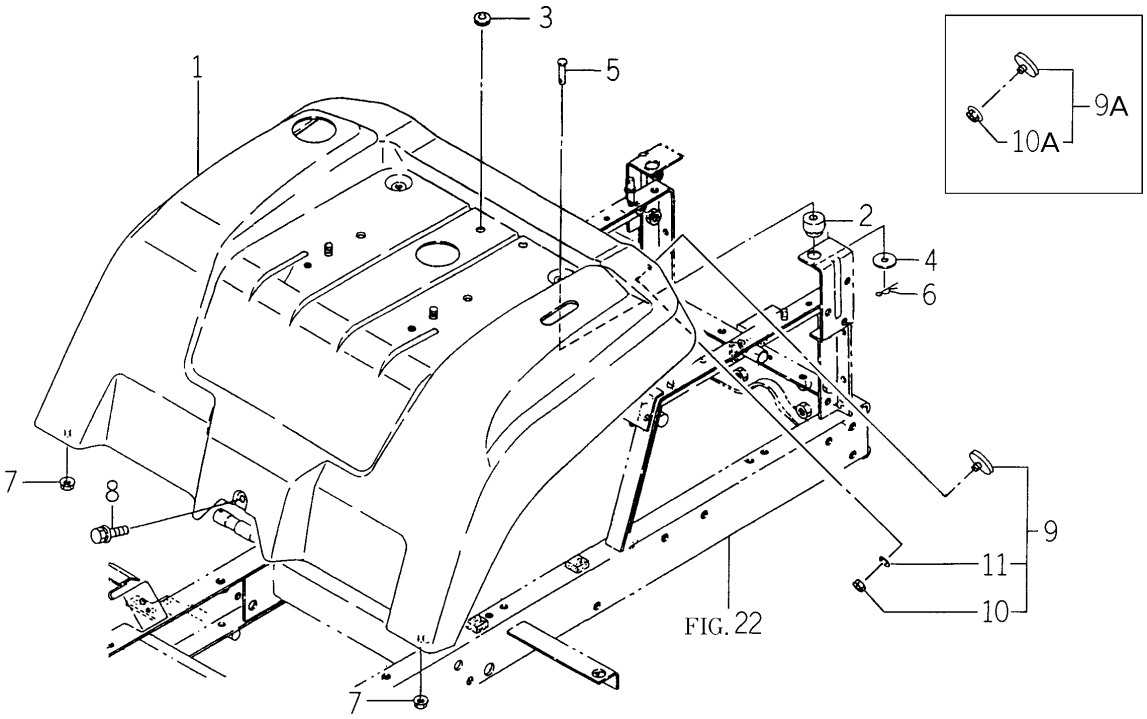

1608-606 -0100

KEY	PART CODE	DESCRIPTION	SPC	TYPE OF MODEL SG153H		ITC	COL	GRP	REMARKS
1	1608-606-200-41	FENDER COMP	*	1			4G		
2	1427-621-012-00	GROMMET	*	1					
3	1593-616-004-20	GROMMET/10X30X5	*	2					
4	V411-260-008-00	WASHER,PL/M 8	*	2					
5	1593-606-006-10	PIN/8X36	*	2					
6	3908-170-020-00	PIN,SNAP/8	*	2					
7	V363-260-008-00	NUT/WASHER	*	2					
8	V211-360-801-60	BOLT,SEMS (SP)	*	1					
9	1416-600-057-00	REFLECTOR ASSY	*	2 -302187					
9A	1416-600-057-10	REFLECTOR ASSY	*	2 302188-		1			
10	V301-260-005-00	NUT/M5	*	2 -302187					
10A	V360-260-005-00	NUT/M5	*	2 302188-					
11	V401-160-005-00	WASHER,SP/M 5	*	2 -302187					

FIG. 33 FENDER SYSTEM (M TYPE)

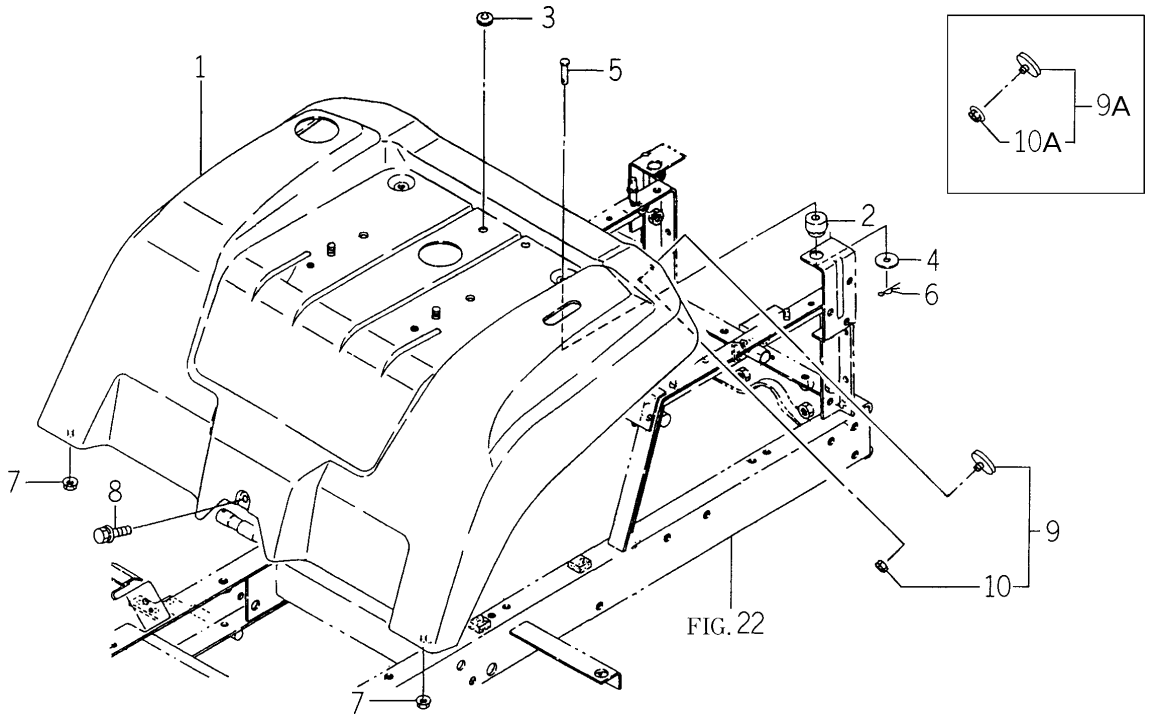

1608-606A-0100

KEY	PART CODE	DESCRIPTION	SPC	TYPE OF MODEL SG153H		ITC	COL	GRP	REMARKS
1	1608-606-200-42	FENDER COMP	*	1					
2	1427-621-012-00	GROMMET	*	1					
3	1593-616-004-20	GROMMET/10X30X5	*	2					
4	V411-260-008-00	WASHER,PL/M 8	*	2					
5	1593-606-006-10	PIN/8X36	*	2					
6	3908-170-020-00	PIN,SNAP/8	*	2					
7	V363-260-008-00	NUT/WASHER	*	2					
8	V211-360-801-60	BOLT,SEMS (SP)	*	1					
9	1416-600-057-00	REFLECTOR ASSY	*	2 -302187					
9A	1416-600-057-10	REFLECTOR ASSY	*	2 302188-		1			
10	V301-260-005-00	NUT/M5	*	2 -302187					
10A	V360-260-005-00	NUT/M5	*	2 302188-					

FIG. 34 SEAT SYSTEM

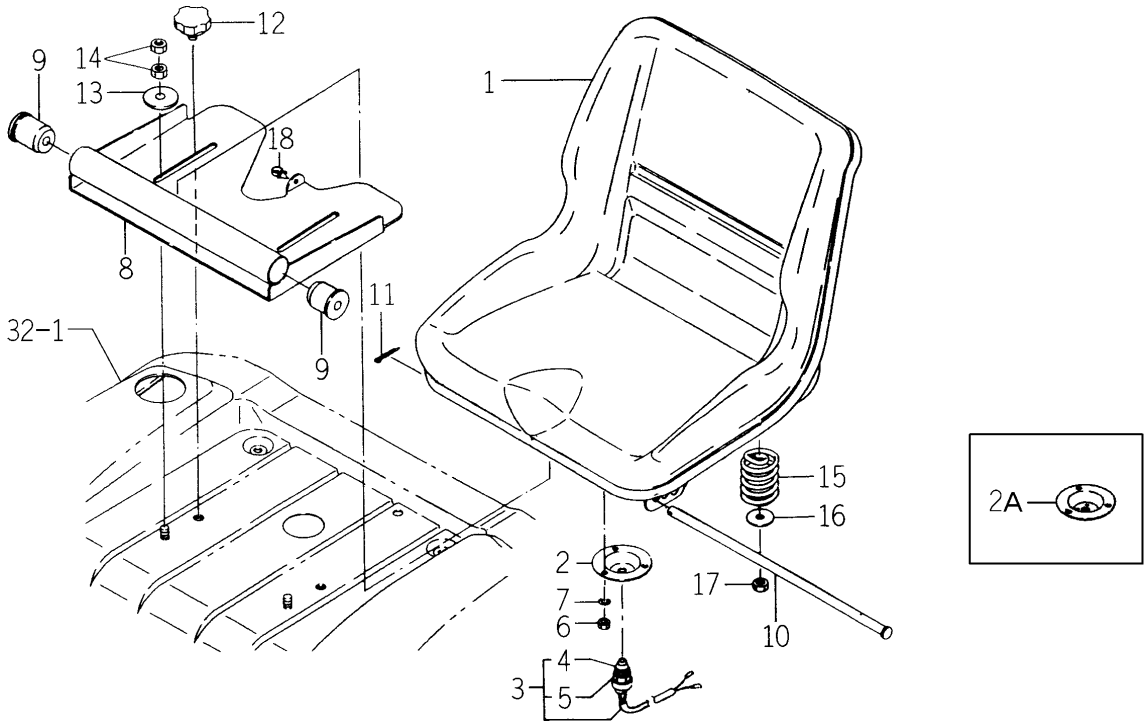

1631-611A-0100

KEY	PART CODE	DESCRIPTION	SPC	TYPE OF MODEL SG153H		ITC	COL	GRP	REMARKS
1	1631-611-210-20	SEAT ASSY	*	1					
2	1593-611-011-20	HOLDER/SWITCH	*	1 -300667					
2A	1593-611-011-30	HOLDER/SWITCH	*	1 300668-		1			
3	1593-623-280-00	SEATSWITCH ASSY	*	1					
4	1593-623-272-00	BOOT	*	1					
5	1593-623-273-00	NUT	*	1					
6	V301-260-006-00	NUT/M 6	*	3					
7	V401-160-006-00	WASHER,SP/M 6	*	3					
8	1593-611-200-51	STAY/SEAT COMP	*	1			4G		
8	1593-611-200-52	STAY/SEAT COMP	*	1					
9	1488-611-001-00	RUBBER,CUSHION (A)	*	2					
10	1593-611-013-00	PIN/10X382	*	1					
11	V500-163-002-00	PIN,SPLIT/3 X20	*	1					
12	1593-611-058-00	BOLT,KMOB	*	2					
13	1593-611-001-00	WASHER/11X35X02	*	2					
14	V305-260-010-00	NUT/M10	*	4					
15	1593-611-014-00	SPRING/D=6	*	2					
16	1376-606-005-00	WASHER/9X32X2	*	2					
17	2144-117-002-00	NUT/M8	*	2					
18	1444-621-008-00	CLAMP	*	1					

FIG. 35 FUEL TANK AND STEP SYSTEM

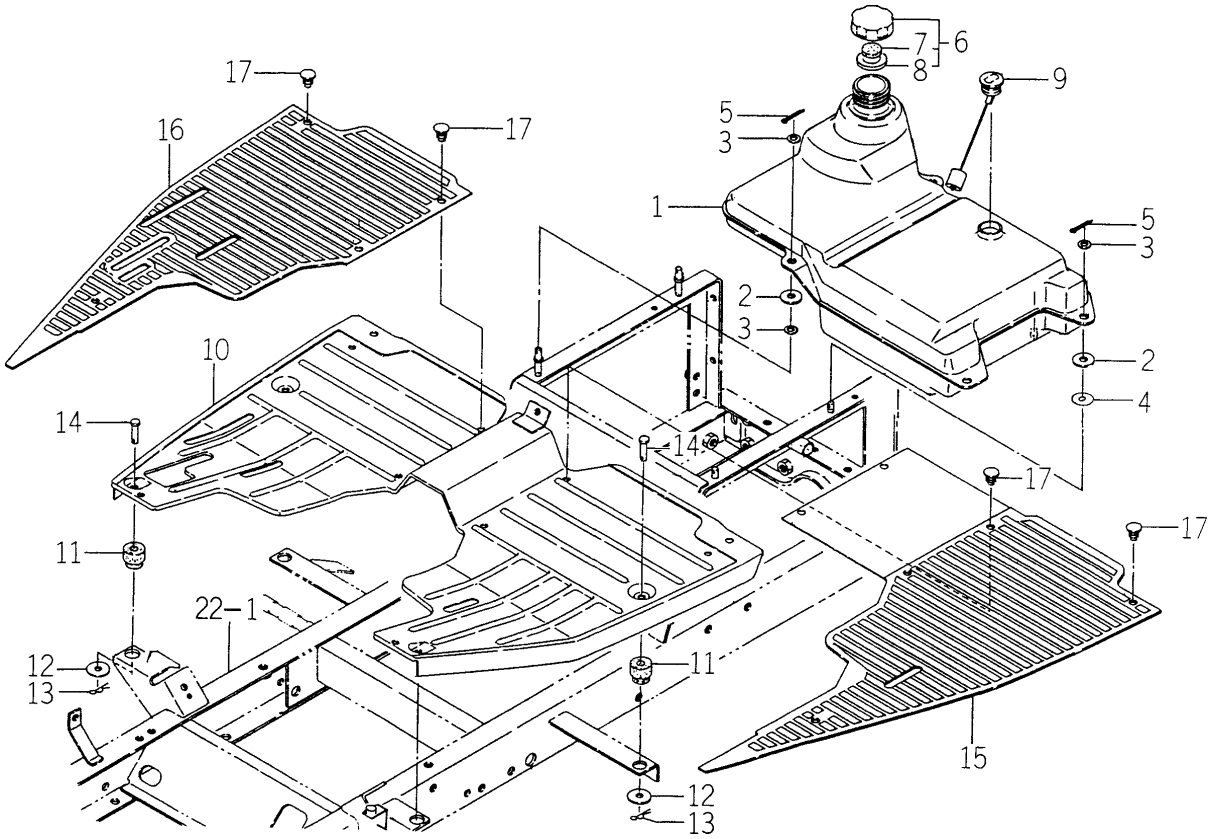

1593-612 -0100,1608-616 -0100

KEY	PART CODE	DESCRIPTION	SPC	TYPE OF MODEL SG153H		ITC	COL	GRP	REMARKS
1	1593-612-004-00	TANK,FUEL	*	1					
2	1593-612-005-00	INSULATOR/10X30X03	*	4					
3	V411-260-008-00	WASHER,PL/M 8	*	4					
4	3560-201-015-00	WASHER,BINDING SHAFT	*	4					
5	V500-162-501-50	PIN,SPLIT/2.5X15	*	4					
6	1593-612-220-10	CAP,TANK	*	1					
7	2706-501-003-00	BREATHER,TANK CAP	*	1					
8	2706-501-004-00	GASKET	*	1					
9	1593-612-230-00	GAUGE,FUEL	*	1					
10	1608-616-200-31	STEP COMP	*	1		1	4G		
10	1608-616-200-32	STEP COMP	*	1		1			
11	1593-616-004-20	GROMMET/10X30X5	*	4					
12	V411-260-008-00	WASHER,PL/M 8	*	4					
13	V560-160-008-00	PIN/SNAP	*	4					
14	1593-606-006-10	PIN/8X36	*	4					
15	1608-616-001-10	MAT (LH)	*	1					
16	1608-616-002-20	MAT/RH	*	1					
17	1527-604-002-00	CLIP(B)	*	8					

FIG. 36 PANEL SYSTEM

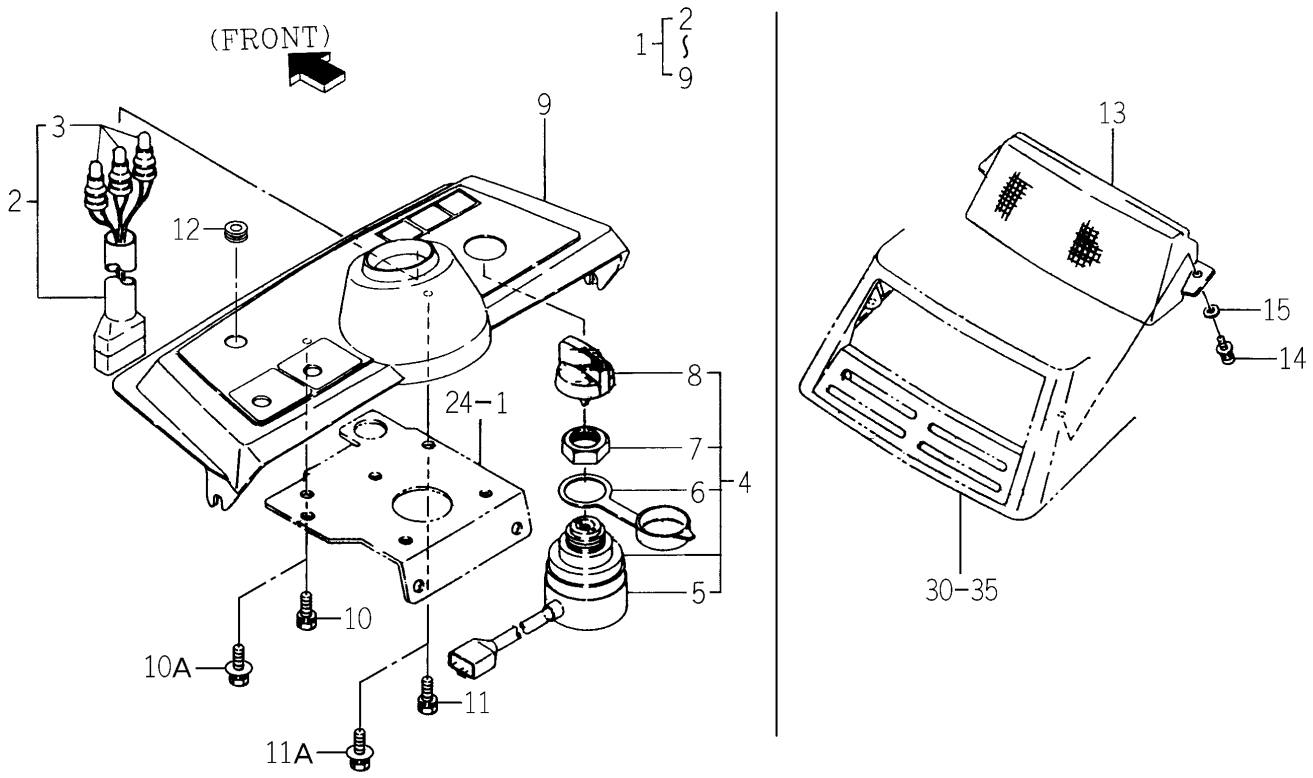

1608-621A-0100,1593-622 -0101

KEY	PART CODE	DESCRIPTION	SPC	TYPE OF MODEL SG153H		ITC	COL	GRP	REMARKS
1	1608-621-200-00	PANEL/INSTRUMEN SET	*	1					
2	1593-621-510-30	LAMP,MONITOR	*	1					
3	3650-270-214-00	BULB	*	3					
4	1593-621-250-10	SWITCH(STARTER) ASSY	*	1					
5	1593-621-252-00	COVER	*	1					
6	1444-621-311-00	CAP	*	1					
7	1444-621-312-00	NUT,RING/M28X1.0	*	1					
8	3614-261-002-00	KEY ASSY	*	1					
9	1593-621-005-00	PANEL/INSTRUMENT	*	1					
10	V210-260-601-60	BOLT/S	*	1 -301510					
10A	V210-360-601-60	BOLT(SP)/M6X16	*	1 301511-					
11	V210-260-602-00	BOLT/S	*	2 -301510					
11A	V210-360-602-00	BOLT/SP	*	2 301511-					
12	1427-621-012-00	GROMMET	*	1					
13	1593-622-211-10	LENS	*	1					
14	4301-210-002-00	BOLT (S/N6X16)	*	2					
15	1444-601-015-00	WASHER/6X14X3	*	2					

FIG. 37 HARNESS SYSTEM (EXCEPT S TYPE)

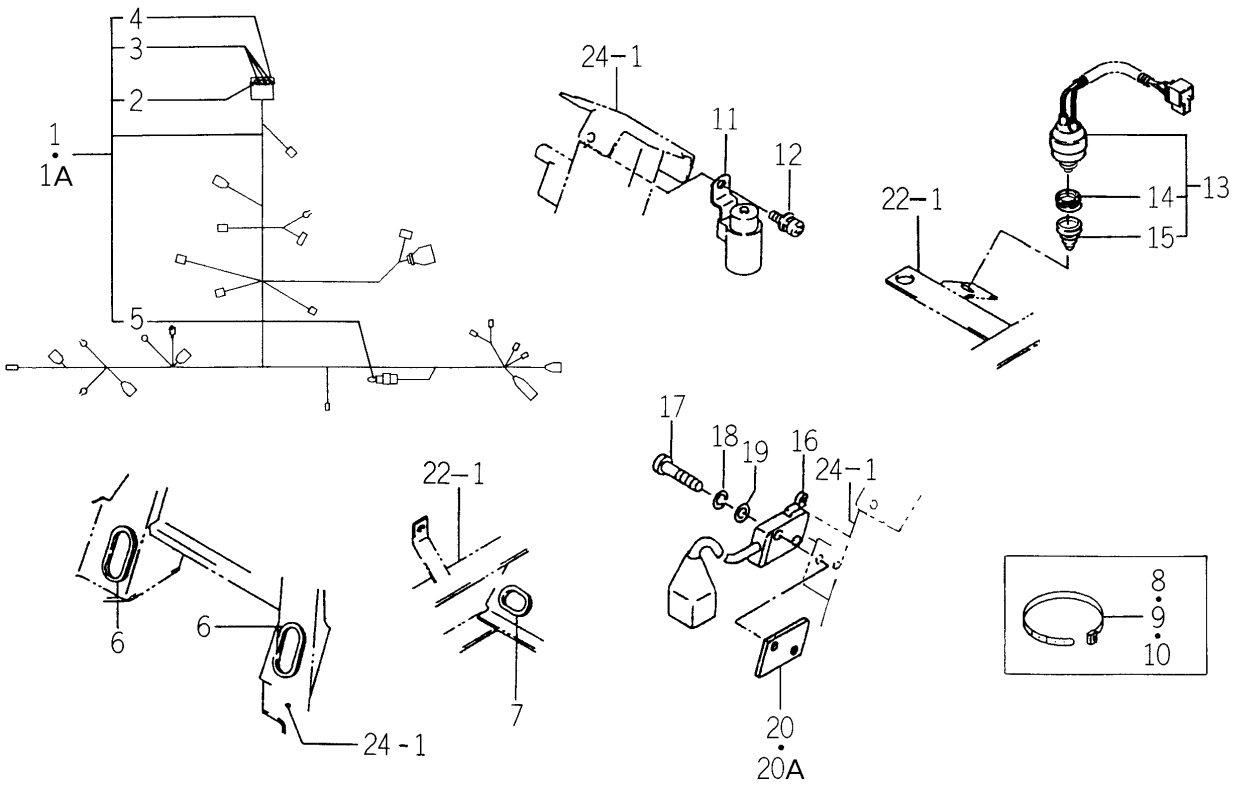

1608-623B-0100

KEY	PART CODE	DESCRIPTION	SPC	TYPE OF MODEL SG153H		ITC	COL	GRP	REMARKS
1	1608-623-200-00	HARNESS/MAIN ASSY	*	1 -301437					
1A	1608-623-200-10	HARNESS/MAIN ASSY	*	1 301438-		1			
2	1575-623-009-00	FUSE/32V03A	*	1					
3	1575-623-010-00	FUSE/32V10A	*	3					
4	1593-623-503-00	CAP,FUSE BOX	*	1					
5	1593-623-504-00	SHORT COUPLER/REAR/P	*	1					
6	1593-623-002-00	GROMMET/150	*	2					
7	1593-623-001-00	GROMMET	*	1					
8	1593-623-003-00	BAND	*	2					
9	3737-172-010-00	BAND/202	*	15					
10	3746-185-014-00	BAND,HOSE	*	2					
11	1581-621-290-00	RELAY/4P	*	1					
12	V120-366-001-60	SCREW	*	1					
13	1560-664-250-00	SWITCH/PUSH SET	*	1					
14	1560-664-252-00	NUT	*	1					
15	1560-664-253-00	BOOT	*	1					
16	1593-623-520-00	SWITCH,MERIT	*	1					
17	V111-163-002-00	SCREW M3X20	*	2					
18	V401-160-003-00	WASHER,SP/M 3	*	2					
19	V411-260-003-00	WASHER/M3	*	2					
20	3664-276-001-00	PLATE/IRX13X35	*	1 -302216					
20A	3642-496-007-10	PLATE,SWITCH	*	1 302217-					

FIG. 38 HARNESS SYSTEM (S TYPE)

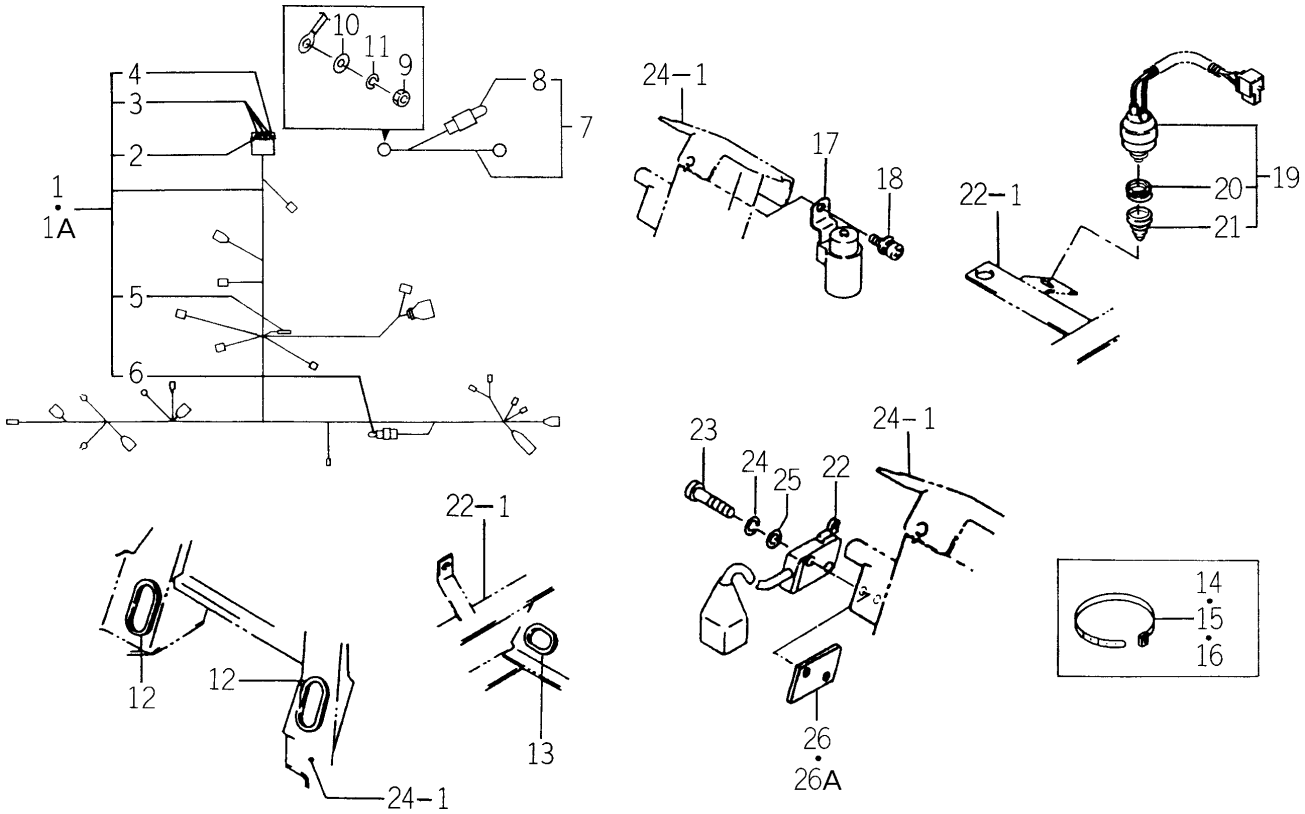

1608-623C-0100

KEY	PART CODE	DESCRIPTION	SPC	TYPE OF MODEL SG153H		ITC	COL	GRP	REMARKS
1	1608-623-210-00	HARNESS/MAIN/S ASSY	*	1 -301505					
1A	1608-623-210-10	HARNESS/MAIN/S ASSY	*	1 301506-		1			
2	1575-623-009-00	FUSE/32V03A	*	1					
3	1575-623-010-00	FUSE/32V10A	*	3					
4	1593-623-503-00	CAP,FUSE BOX	*	1					
5	3650-262-202-00	DIODE/3.0A	*	1					
6	1593-623-504-00	SHORT COUPLER/REAR/P	*	1					
7	1593-623-610-00	HARNESS/GENERATOR	*	1					
8	3650-261-261-00	LINK,FUSIBLE	*	1					
9	V301-260-006-00	NUT/M 6	*	1					
10	V411-260-006-00	WASHER / M6	*	1					
11	V401-160-006-00	WASHER,SP/M 6	*	1					
12	1593-623-002-00	GROMMET/150	*	2					
13	1593-623-001-00	GROMMET	*	1					
14	1593-623-003-00	BAND	*	3					
15	3737-172-010-00	BAND/202	*	15					
16	3746-185-014-00	BAND,HOSE	*	3					
17	1581-621-290-00	RELAY/4P	*	1					
18	V120-366-001-60	SCREW	*	1					
19	1560-664-250-00	SWITCH/PUSH SET	*	1					
20	1560-664-252-00	NUT	*	1					
21	1560-664-253-00	BOOT	*	1					
22	1593-623-520-00	SWITCH,MERIT	*	1					
23	V111-163-002-00	SCREW M3X20	*	2					
24	V401-160-003-00	WASHER,SP/M 3	*	2					
25	V411-260-003-00	WASHER/M3	*	2					
26	3664-276-001-00	PLATE/IRX13X35	*	1 -302216					
26A	3642-496-007-10	PLATE,SWITCH	*	1 302217-					

FIG. 39 MARK

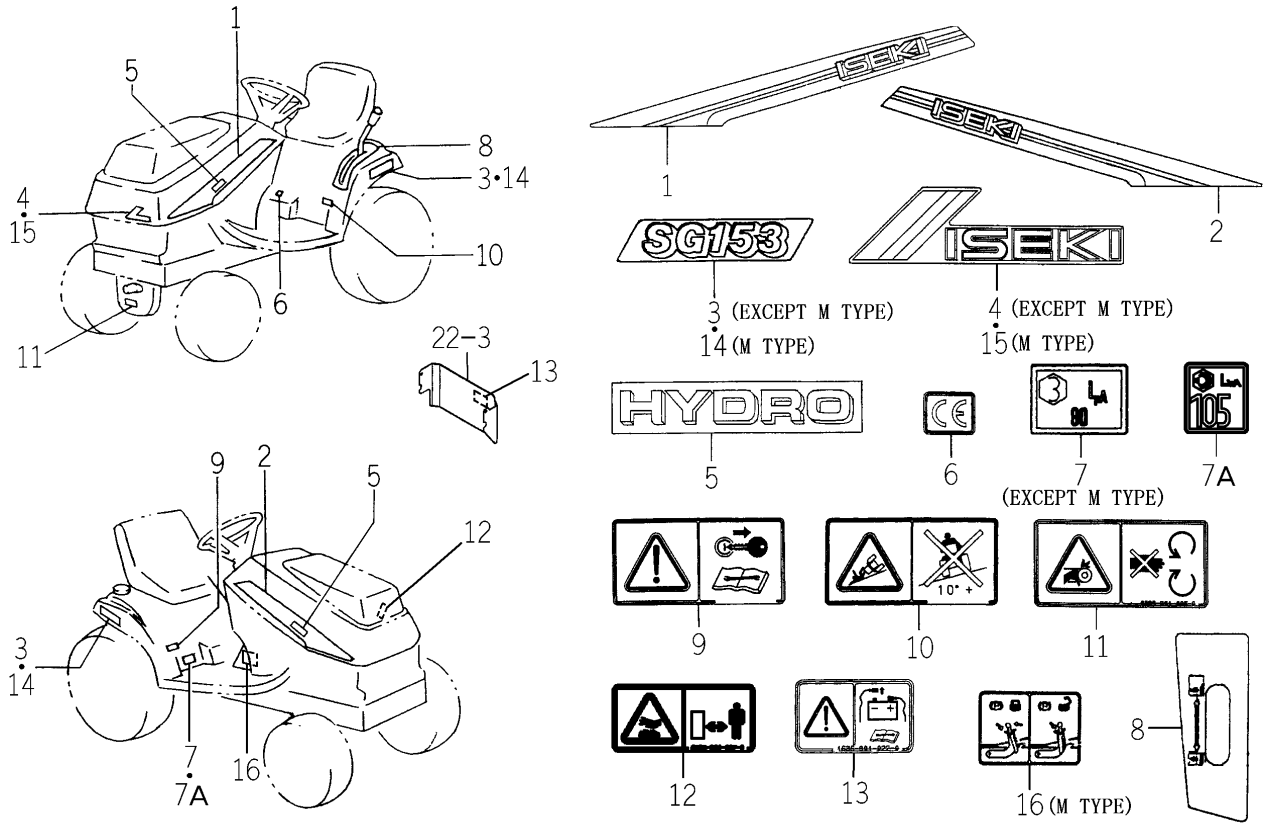

(KEY8～13 FOR EXCEPT M TYPE)

1608-901D-0100,1608-901F-0100

KEY	PART CODE	DESCRIPTION	SPC	TYPE OF MODEL SG153H		ITC	COL	GRP	REMARKS
1	1593-901-016-00	ORNAMENT/LH	*	1					
2	1593-901-017-00	ORNAMENT/RH	*	1					
3	1608-901-009-00	ORNAMENT/153	*	2					
4	1593-901-019-00	ORNAMENT/F	*	1					
5	1608-901-008-00	ORNAMENT/HYDRO	*	2					
6	2500-901-027-00	LABEL/CE	*	1					
7	1636-901-009-00	LABEL/NOISE/LPA/90	*	1 -301197					
7A	1705-904-011-00	LABEL/NOISE/LWA/105	*	1					
8	1608-901-003-10	LABEL (LIFT)	*	1					
9	1593-901-015-00	LABEL/MAINTENANCE	*	1					
10	1636-901-015-00	LABEL/WARNING/SLOPE	*	1					
11	8595-901-006-00	LABEL/WARNING/BELT	*	2					
12	8595-901-007-00	LABEL/WARNING/HOT	*	2 300119-					
13	1636-901-022-00	LABEL/CAUTION/BATTER	*	1 300119-					
14	1608-901-011-00	ORNAMENT/153/NEO	*	2					
15	1608-901-012-00	ORNAMENT/ISEKI/NEO	*	1					
16	1631-901-021-00	LABEL/PARKING	*	1					

FIG. 40 LABEL (GERMAN) (E20 TYPE)

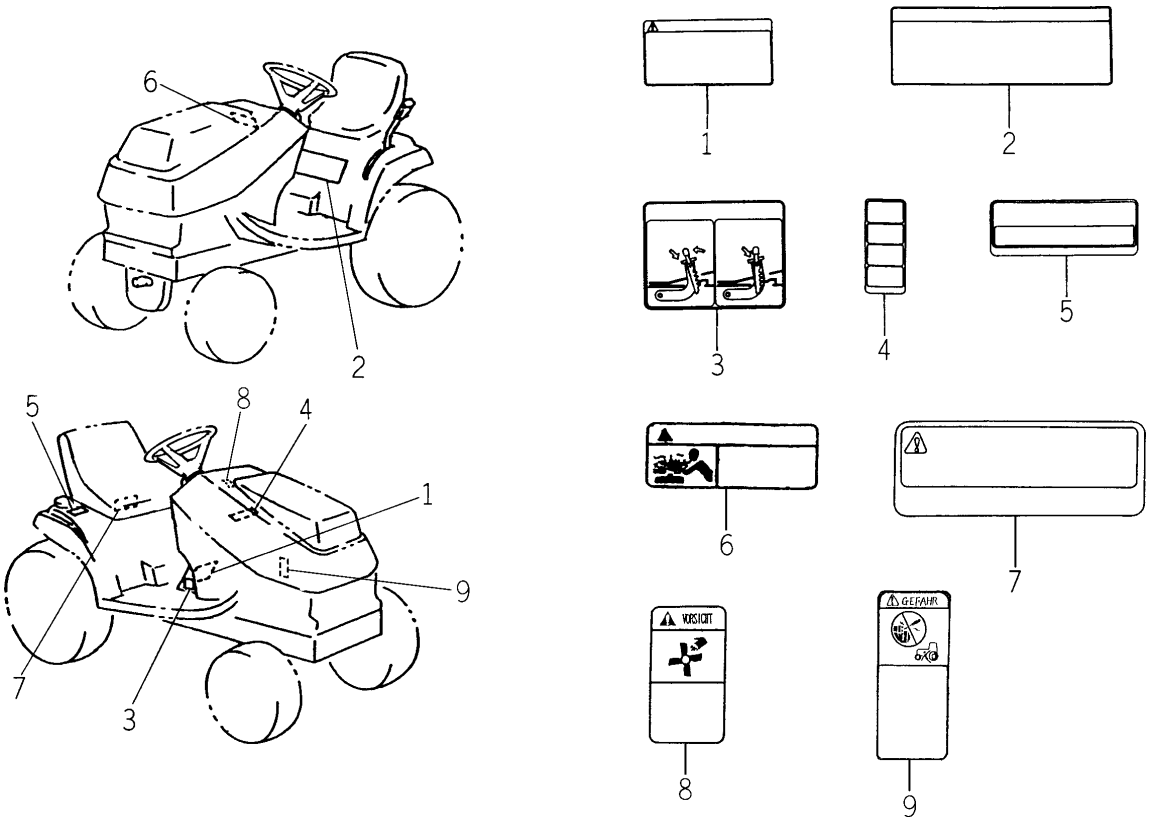

1608-904A-0100

KEY	PART CODE	DESCRIPTION	SPC	TYPE OF MODEL SG153H		ITC	COL	GRP	REMARKS
1	1593-904-001-00	LABEL,CAUTION/D	*	1					
2	1608-904-002-00	LABEL/OPERATION/D	*	1					
3	1593-904-012-00	LABEL/PARKING/D	*	1					
4	1608-904-006-00	LABEL(FUSE/D)	*	1					
5	1600-902-023-00	LABEL,FUEL/D	*	1					
6	1640-903-033-00	LABEL/W/RADIATOR	*	1					
7	1640-903-036-00	LABEL/D/BATTERY	*	1					
8	1640-903-026-00	LABEL/W/FAN	*	1 300119-					
9	1640-903-035-00	LABEL/D/STARTER	*	1 300119-					

FIG. 41 LABEL (FRENCH) (E50 TYPE EXCEPT T)

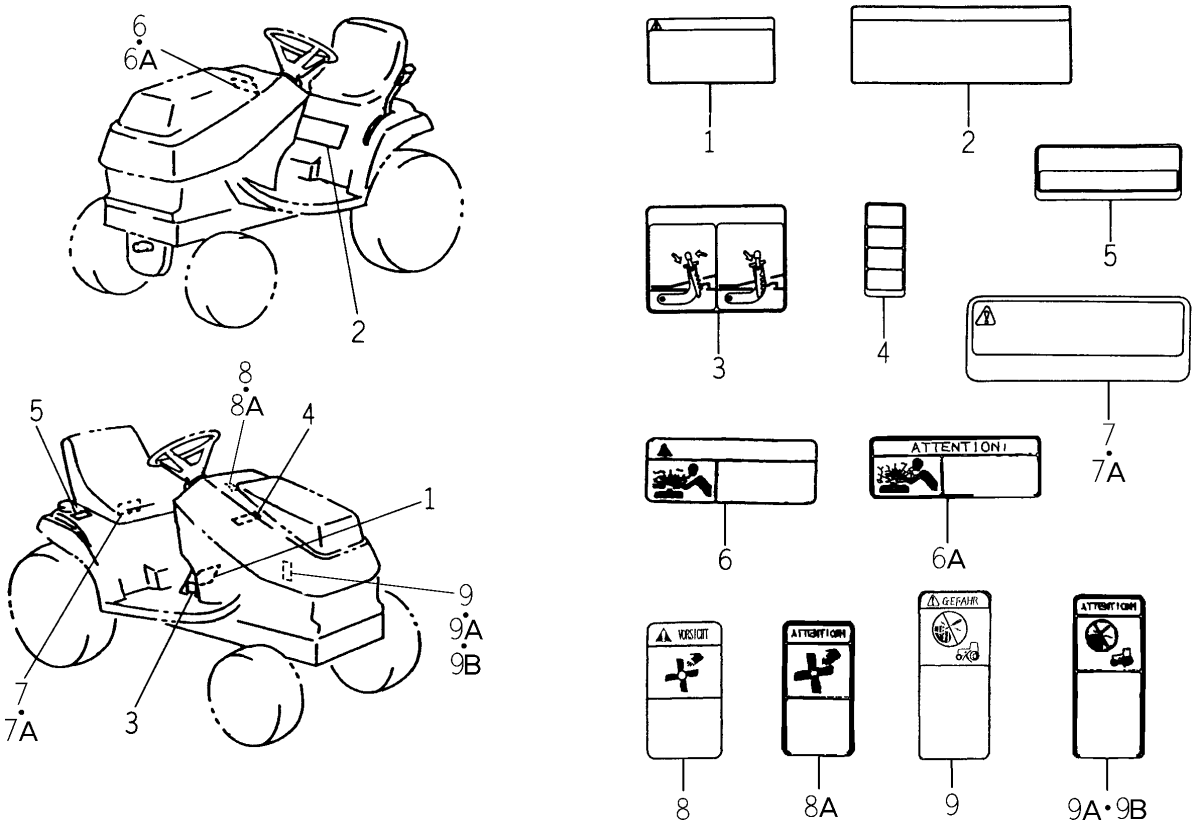

1608-905A-0100

KEY	PART CODE	DESCRIPTION	SPC	TYPE OF MODEL SG153H		ITC	COL	GRP	REMARKS
1	1593-905-001-00	LABEL,CAUTION/F	*	1					
2	1608-905-002-00	LABEL/OPERATION/F	*	1					
3	1593-905-012-00	LABEL/PARKING/F	*	1					
4	1608-905-006-00	LABEL(FUSE/F)	*	1					
5	1427-934-013-00	MARK,FUEL/FR	*	1					
6	1640-903-013-00	LABEL/W/RADIATOR	*	1 -300283					
6A	1640-903-013-10	LABEL/W/RADIATOR/F	*	1 300284-		3			
7	1640-903-016-00	LABEL/D/BATTERY	*	1 -300283					
7A	1640-903-016-10	LABEL/D/BATTERY/F	*	1 300284-		3			
8	1640-903-006-00	LABEL/W/FAN	*	1 -300283					
8A	1640-903-006-10	LABEL/W/FAN/F	*	1 300284-		3			
9	1640-903-015-00	LABEL/D/STARTER	*	1 -300283					
9A	1640-903-015-10	LABEL/D/STARTER/F	*	1 -300302		3			
9B	1640-903-015-20	LABEL/D/STARTER/F	*	1 300303-		1			

FIG. 42 LABEL (ENGLISH) (E40 TYPE)

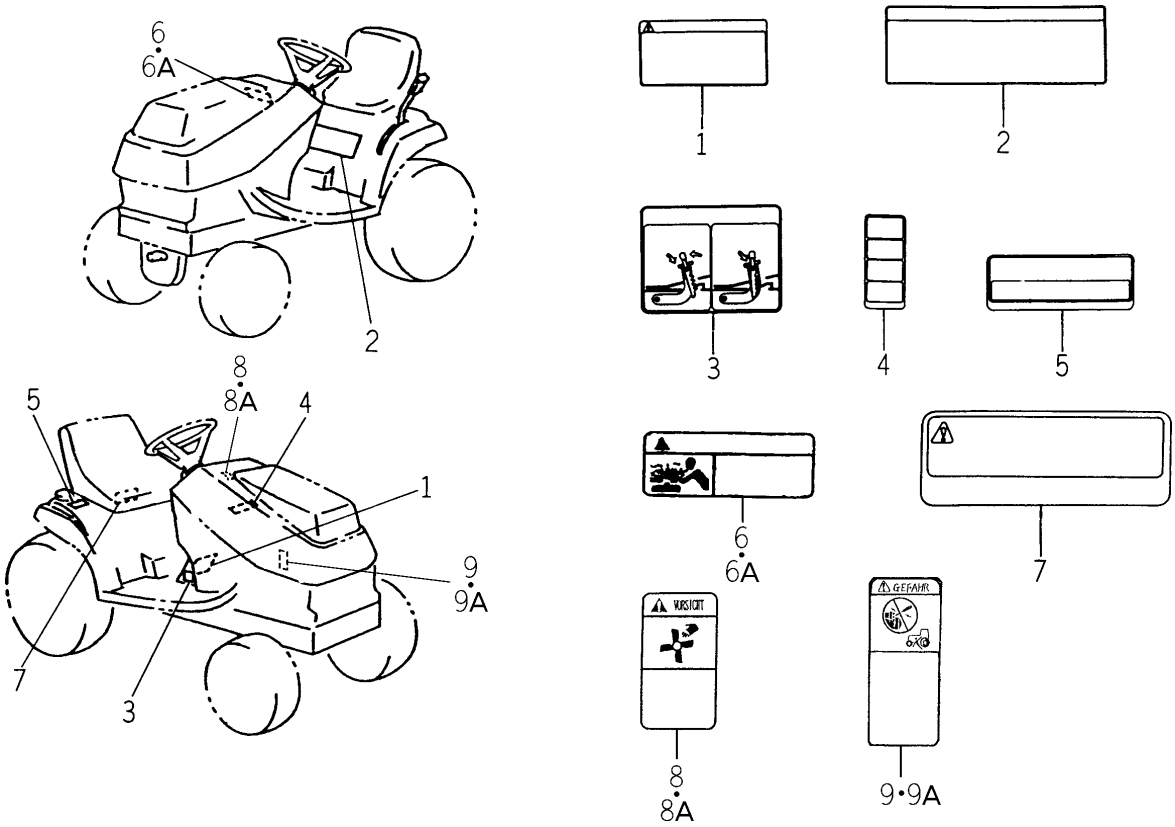

1608-906A-0100

KEY	PART CODE	DESCRIPTION	SPC	TYPE OF MODEL SG153H		ITC	COL	GRP	REMARKS
1	1593-906-001-00	LABEL,CAUTION/E	*	1					
2	1608-906-002-00	LABEL/OPERATION/E	*	1					
3	1593-906-012-00	LABEL/PARKING/E	*	1					
4	1608-906-006-00	LABEL(FUSE/E)	*	1					
5	1427-941-016-00	MARK,FUEL	*	1					
6	1640-904-013-00	LABEL/W/RADIATOR	*	1 -300883					
6A	1640-904-013-10	LABEL/W/RADIATOR	*	1 300884-		1			
7	1640-904-016-10	LABEL/D/BATTERY	*	1		1			
8	1640-904-006-00	LABEL/W/FAN	*	1 -300883					
8A	1640-904-006-10	LABEL/W/FAN	*	1 300884-		1			
9	1640-904-019-00	LABEL/D/STARTER	*	1 -300883					
9A	1640-904-019-10	LABEL/D/STARTER	*	1 300884-		1			

FIG. 43 LABEL (ENGLISH) (E42 TYPE)

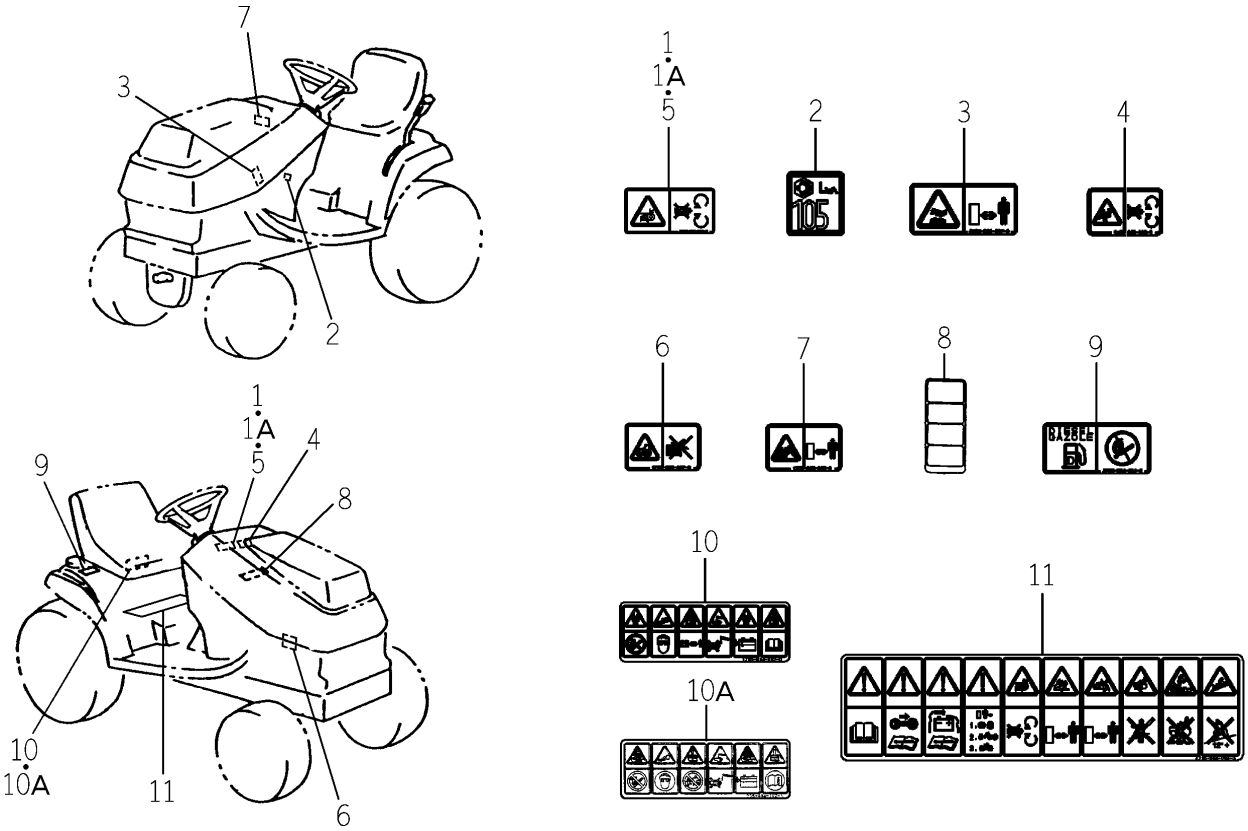

1608-908 -0100

KEY	PART CODE	DESCRIPTION	SPC	TYPE OF MODEL SG153H		ITC	COL	GRP	REMARKS
1	8595-901-006-00	LABEL/WARNING/BELT	*	1 -301510					
1A	1674-904-008-00	LABEL/WARNING/BELT	*	1 301511-					
2	1705-904-011-00	LABEL/NOISE/LWA/105	*	1					
3	8595-901-007-00	LABEL/WARNING/HOT	*	2					
4	1705-902-006-00	LABEL/W/FAN	*	1					
5	8595-901-006-00	LABEL/WARNING/BELT	*	1					
6	1705-902-007-00	LABEL/W/STARTER	*	1					
7	1705-902-008-00	LABEL/W/RADIATOR	*	1					
8	1608-906-006-00	LABEL(FUSE/E)	*	1					
9	1705-904-001-00	LABEL/FUEL	*	1					
10	1705-904-002-00	LABEL/BATTERY	*	1 -301736					
10A	1705-904-002-10	LABEL/BATTERY	*	1 301737-		1			
11	1705-904-004-00	LABEL/CAUTION	*	1					

FIG. 44 LABEL (ITALIAN) (E50T TYPE)

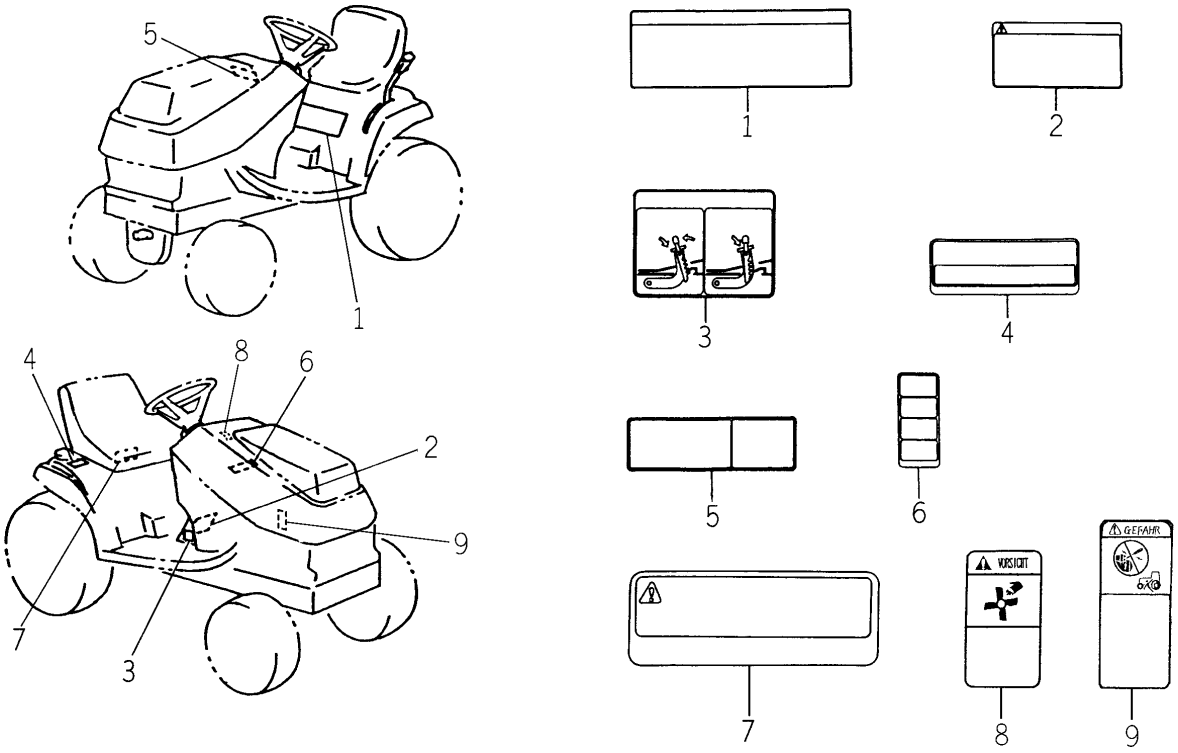

1631-910A-0100

KEY	PART CODE	DESCRIPTION	SPC	TYPE OF MODEL SG153H		ITC	COL	GRP	REMARKS
1	1631-910-008-00	LABEL/OPERATION/I	*	1					
2	1631-910-002-00	LABEL/CAUTION/I	*	1					
3	1631-910-009-00	LABEL/PARKING/I	*	1					
4	1631-910-004-00	LABEL/FUEL/I	*	1					
5	1640-905-013-00	LABEL/W/RADIATOR/T	*	1					
6	1631-910-006-00	LABEL/FUSE/I	*	1					
7	1640-905-016-00	LABEL/D/BATTERY/T	*	1					
8	1640-905-006-00	LABEL/W/FAN/T	*	1 300119-					
9	1640-905-015-00	LABEL/D/STARTER/T	*	1 300119-					

FIG. 45 TOOL

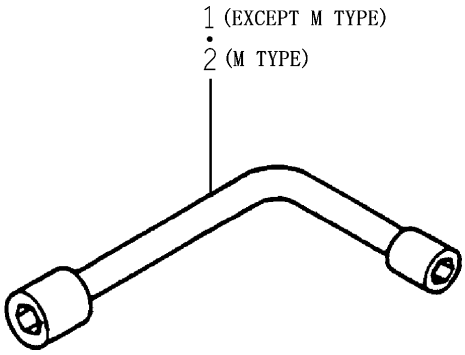

1593-930 -0100,1608-930 -0100

KEY	PART CODE	DESCRIPTION	SPC	TYPE OF MODEL		ITC	COL	GRP	REMARKS
				SG153H					
1	4319-911-001-00	SPANNER/L-TYPE	*	1					
2	1608-930-001-00	WRENCH/BOX/10X12	*	1 301382-					

FIG. 46 REAR TIRE (FIELD) SYSTEM (OPTION)

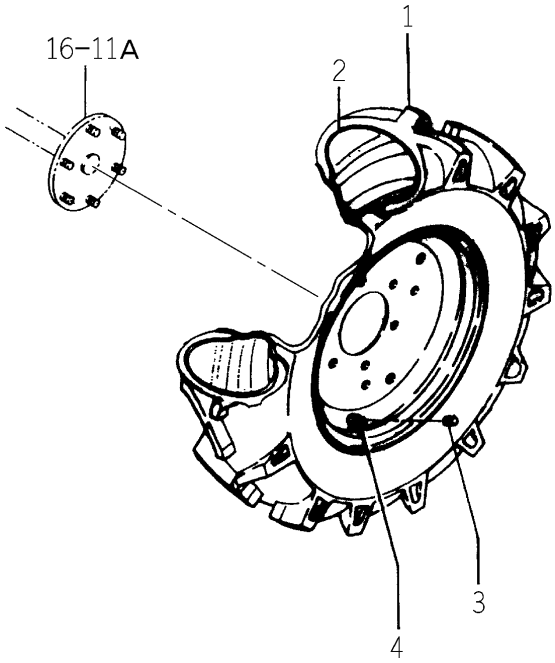

1593-317A-0100

KEY	PART CODE	DESCRIPTION	SPC	TYPE OF MODEL SG153H		ITC	COL	GRP	REMARKS
1	8523-202-241-00	TIRE/23-12	T	2					
2	8523-202-242-00	TUBE/23-12	T	2					
3	V999-200-003-00	CAP,TIRE VALVE	T	2					
4	1386-241-002-00	VALVE/RIM	T	2					

FIG. 47 REAR PTO SYSTEM (OPTION)

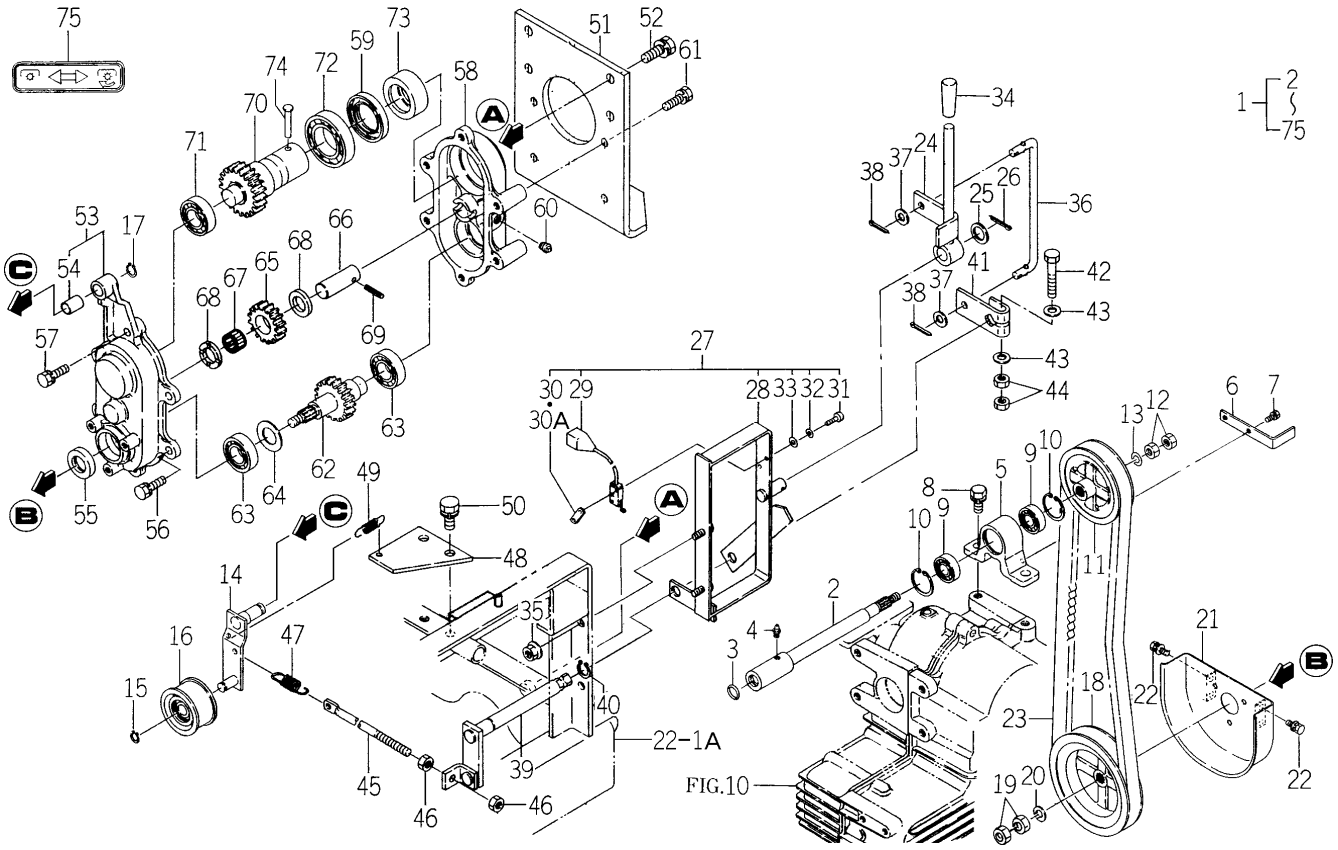

1608-341B-0101

KEY	PART CODE	DESCRIPTION	SPC	TYPE OF MODEL SG153H		ITC	COL	GRP	REMARKS
1	1608-341-300-40	PTO/REAR SET	T	1					
2	1608-341-210-30	SHAFT,JOINT/PTO	T	1					
3	V720-102-401-50	O-RING/P15	T	1					
4	V760-150-000-00	NIPPLE,GREASE	T	1					
5	1608-341-001-20	METAL/PTO	T	1					
6	1608-341-026-00	PLATE(L/16X101)	T	1					
7	V210-260-601-20	BOLT/S	T	2					
8	V211-561-002-00	BOLT/M10X20	T	2					
9	V600-150-620-20	BEARING,RB/6202SS	T	2					
10	V705-140-035-00	RING,CIRCLIP	T	2					
11	1608-341-003-20	PULLEY/VC100	T	1					
12	V334-460-010-00	NUT/M10 7T P=1.25	T	2					
13	V401-160-010-00	WASHER,SP/M10	T	1					
14	1608-341-220-20	ARM,TENTION COMP	T	1					
15	V704-140-012-00	RING,SNAP/12 C	T	1					
16	3737-122-001-00	PULLEY,TENSION	T	1					
17	V704-140-015-00	RING,SNAP/15 C	T	1					
18	1608-341-006-10	PULLEY(VC135)	T	1					
19	V334-460-010-00	NUT/M10 7T P=1.25	T	2					
20	V401-160-010-00	WASHER,SP/M10	T	1					
21	1608-341-330-00	COVER (BELT)	T	1					
22	V210-360-601-20	BOLT,SEMS	T	4					
23	1608-341-008-00	BELT/VC-31	T	1					
24	1608-341-230-20	LEVER (PTO)	T	1					
25	3517-205-007-00	WASHER	T	1					
26	V500-163-002-50	PIN,SPLIT/3 X25	T	1					
27	1608-341-270-00	STAY/LEVER ASSY	T	1					
28	1608-341-240-30	STAY/LEVER COMP	T	1					
29	1593-623-520-00	SWITCH,MERIT	T	1					
30	3664-276-001-00	PLATE/IRX13X35	T	1 -302216					

FIG. 47 REAR PTO SYSTEM (OPTION)

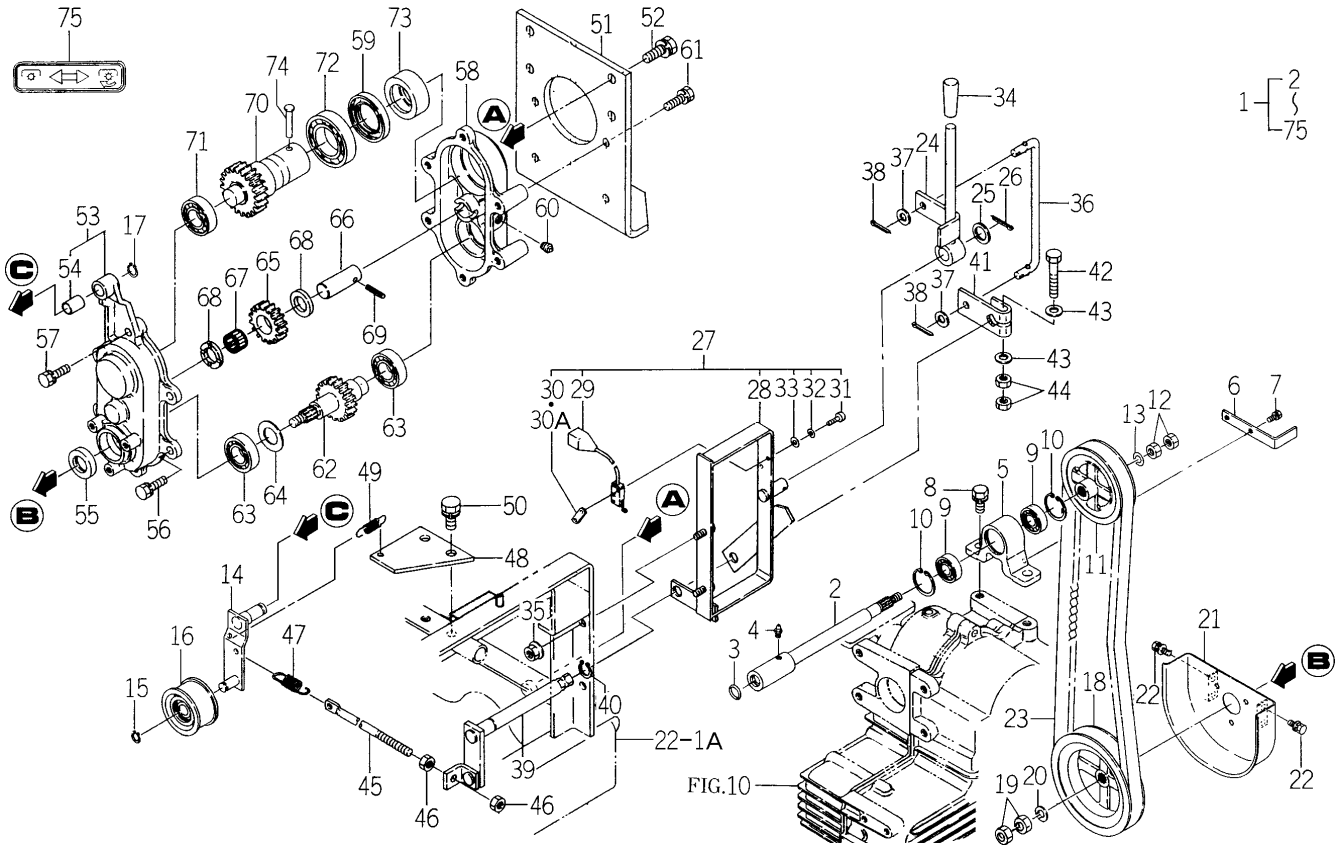

1608-341B-0101

KEY	PART CODE	DESCRIPTION	SPC	TYPE OF MODEL SG153H		ITC	COL	GRP	REMARKS
30A	3642-496-007-10	PLATE,SWITCH	T	1 302217-					
31	V111-163-002-00	SCREW M3X20	T	2					
32	V401-160-003-00	WASHER,SP/M 3	T	2					
33	V411-260-003-00	WASHER/M3	T	2					
34	4106-105-303-00	KNOB	T	1					
35	V363-260-008-00	NUT/WASHER	T	2					
36	1608-341-023-00	ROD(REAR PTO)	T	1					
37	V411-260-008-00	WASHER,PL/M 8	T	2					
38	V500-162-501-50	PIN,SPLIT/2.5X15	T	2					
39	1608-341-260-30	SHAFT COMP	T	1					
40	V704-140-015-00	RING,SNAP/15 C	T	1					
41	1608-341-021-10	ARM (40)	T	1					
42	V201-260-805-00	BOLT/M 8X50	T	1					
43	V411-260-008-00	WASHER,PL/M 8	T	2					
44	V304-260-008-00	NUT	T	2					
45	3728-552-008-00	TRIGGER,TENSION	T	1					
46	V304-260-008-00	NUT	T	2					
47	1337-401-006-00	SPRING	T	1					
48	1608-341-025-10	PLATE(RETURN)	T	1					
49	1415-125-021-00	SPRING,TENSION/46	T	1					
50	V211-561-002-00	BOLT/M10X20	T	2					
51	1593-342-001-00	PLATE/170X215	T	1					
52	V211-261-002-50	BOLT(S) M10X25	T	4					
53	1608-341-200-00	CASE(PTO/FRONT)	T	1					
54	1608-341-027-00	BUSH(12X14X20)	T	1					
55	V744-120-350-70	SEAL,OIL/TC20357	T	1					
56	V211-260-802-00	BOLT/S	T	5					
57	V211-260-803-00	BOLT,SEMS	T	1					
58	1608-341-012-00	CASE(PTO/RAER)	T	1					
59	V744-135-550-80	SEAL,OIL/TC35558	T	1					

FIG. 47 REAR PTO SYSTEM (OPTION)

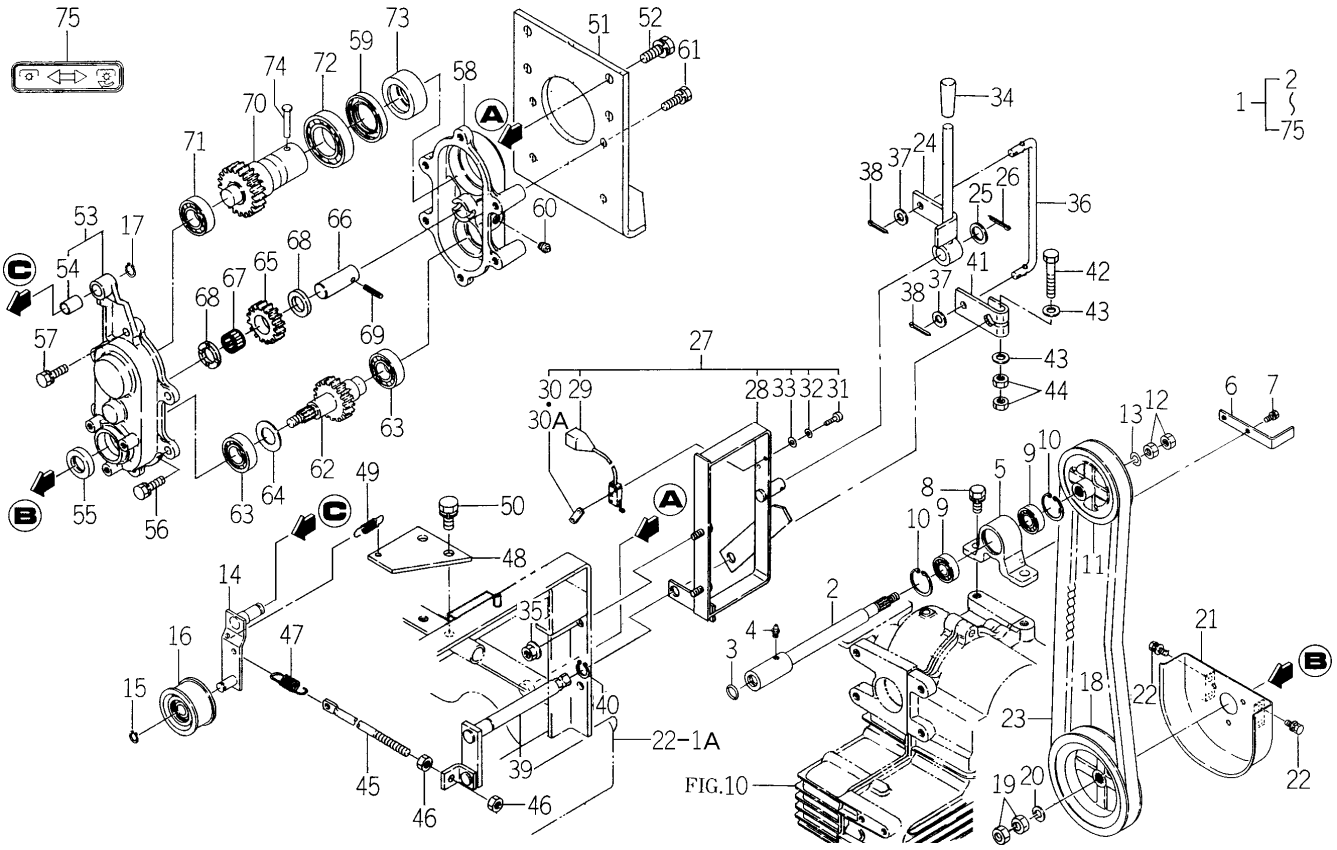

1608-341B-0101

KEY	PART CODE	DESCRIPTION	SPC	TYPE OF MODEL SG153H		ITC	COL	GRP	REMARKS
60	V781-160-000-40	PLUG/SCREW	T	1					
61	V211-260-802-00	BOLT/S	T	4					
62	1608-341-310-30	SHAFT/PTO/INPUT	T	1					
63	V600-110-600-40	BEARING,RB/6004	T	2					
64	1608-341-013-00	COLLAR(21X35X02)	T	1					
65	1608-341-014-10	GEAR(T16)	T	1					
66	1608-341-015-00	PIN (18X52)	T	1					
67	V654-418-221-60	NEEDLE(GAGE)	T	1					
68	1608-341-016-00	COLLAR/18X30X05	T	2					
69	V580-140-502-50	PIN,SPRING/5 X25 W	T	1					
70	1608-341-320-10	SHAFT(PTO) COMP	T	1					
71	V600-110-600-40	BEARING,RB/6004	T	1					
72	V600-110-600-70	BEARING,RB/6007	T	1					
73	1593-341-008-00	RING,PTO	T	1					
74	1593-341-009-00	PIN,PTO	T	1					
75	1593-341-012-10	LABEL/PTO	T	1					

FIG. 48 REAR HITCH SYSTEM (OPTION)

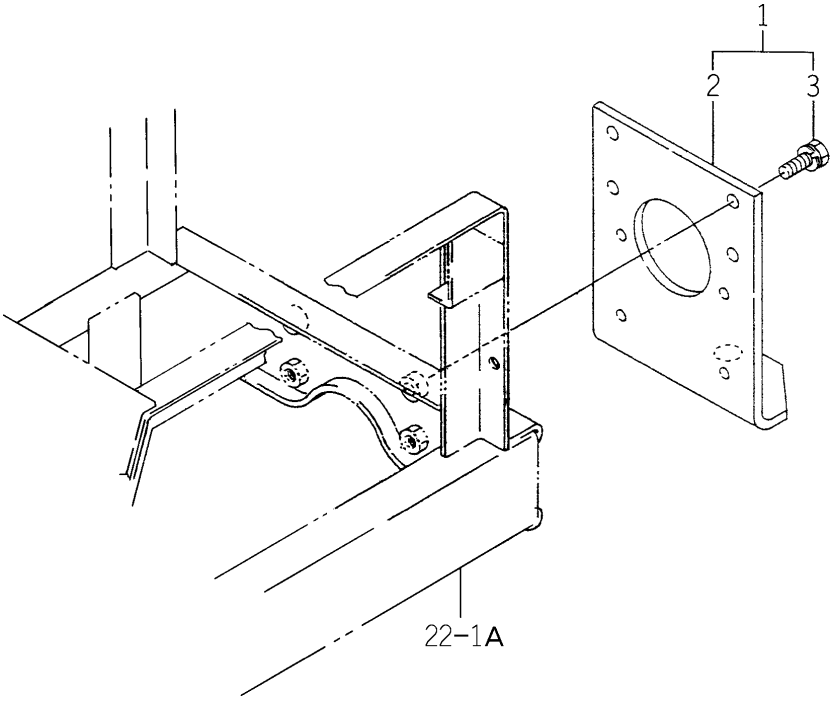

1593-342B-0101

KEY	PART CODE	DESCRIPTION	SPC	TYPE OF MODEL SG153H		ITC	COL	GRP	REMARKS
1	1593-342-200-00	HITCH/REAR SET	T	1					
2	1593-342-001-00	PLATE/170X215	T	1					
3	V211-261-002-50	BOLT(S) M10X25	T	4					

FIG. 49 HEAD LAMP AND HOUR METER SET (OPTION)

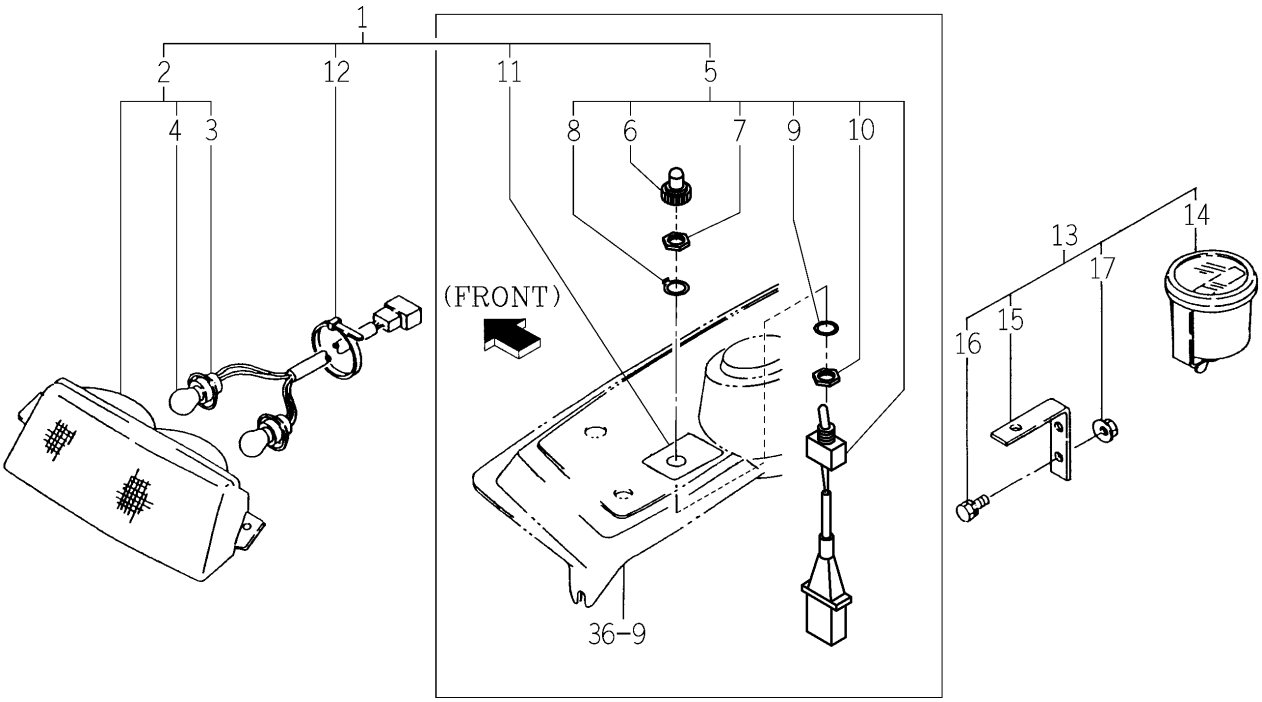

1593-622D-0100,1593-630D-0100

KEY	PART CODE	DESCRIPTION	SPC	TYPE OF MODEL SG153H		ITC	COL	GRP	REMARKS
1	1593-622-280-00	LAMP/HEAD SET	T	1					
2	1593-622-250-00	LAMP,HEAD ASSY	T	1					
3	1593-622-240-00	LEAD	T	1					
4	1564-654-213-00	BULB,LAMP/12V21W	T	2					
5	1593-622-270-00	SWITCH,HEAD LAMP	T	1					
6	3631-270-003-00	COVER/SWITCH	T	1					
7	1593-622-272-00	NUT/A/M12	T	1					
8	1593-622-273-00	WASHER/13X18X01	T	1					
9	1593-622-274-00	WASHER	T	1					
10	1593-622-275-00	NUT/B/M12	T	1					
11	1593-622-004-00	LABEL/SW/HEAD LAMP	T	1					
12	3737-172-010-00	BAND/202	T	3					
13	1593-630-230-00	METER/HOUR SET	T	1					
14	1593-630-210-00	METER,HOUR ASSY	T	1					
15	1593-630-211-00	PLATE/L/15X55	T	1					
16	V210-260-601-60	BOLT/S	T	2					
17	V360-260-006-00	NUT/M6	T	2					

FIG. 50 BUMPER WEIGHT SET (OPTION)

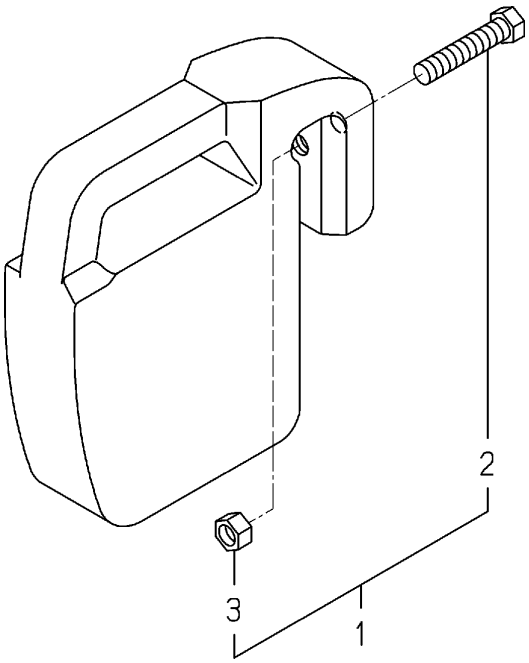

1614-922 -0100

KEY	PART CODE	DESCRIPTION	SPC	TYPE OF MODEL SG153H		ITC	COL	GRP	REMARKS
1	1614-922-200-20	WEIGHT/15 SET	T	1		1			
2	W201-261-206-00	BOLT/M12X60	T	1					
3	V305-260-012-00	NUT/M12	T	1					

FIG. 51 COMPONENT PARTS FOR K211-012-000-00 ON Fig.13

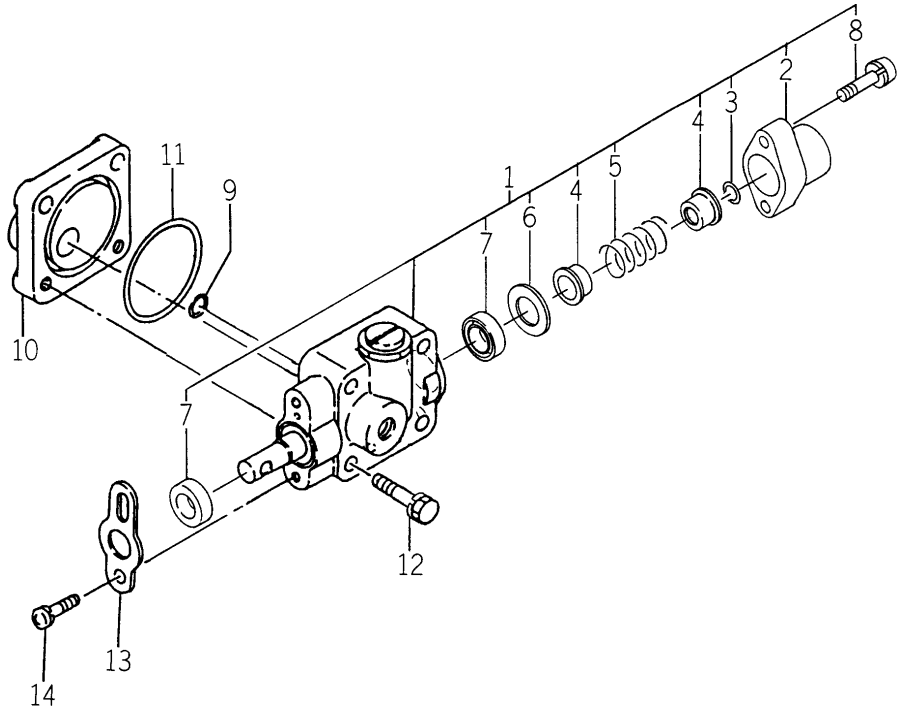

K211-012-000-0I

KEY	PART CODE	DESCRIPTION	SPC	TYPE OF MODEL SG153H		ITC	COL	GRP	REMARKS
1	K211-012-100-00	VALVE SET	*	1					
2	K211-012-003-00	COVER/SPOOL	*	1					
3	K211-012-009-00	RING,SNAP	*	1					
4	K211-012-005-00	STOPPER/SPRING	*	2					
5	K211-012-006-00	SPRING/HC042	*	1					
6	K211-012-007-00	COLLAR/17X27X02	*	1					
7	K211-004-007-00	SEAL,OIL/TC4,14247	*	2					
8	V120-266-002-50	SCREW,SEMS	*	2					
9	V720-101-900-60	O-RING/P 6	*	1					
10	K211-012-008-00	COVER/BODY	*	1					
11	V721-103-105-50	O-RING/G55	*	1					
12	V211-260-804-50	BOLT(S) M8X45	*	2					
13	K211-012-011-00	PLATE	*	1					
14	V120-266-001-20	SCREW SEMS M6X12	*	2					

WIRING DIAGRAM/SG153

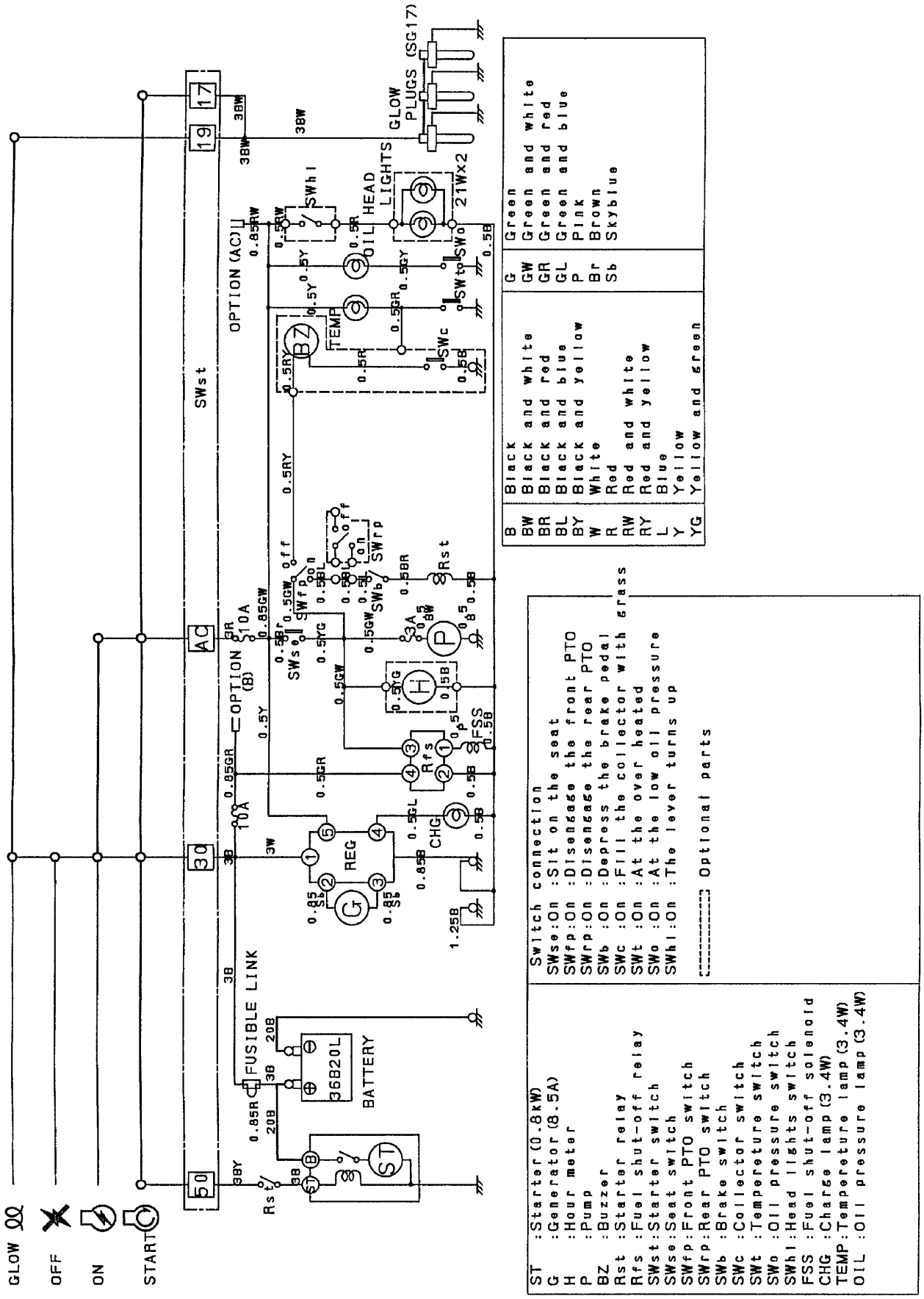

WIRING DIAGRAM/SG153/S

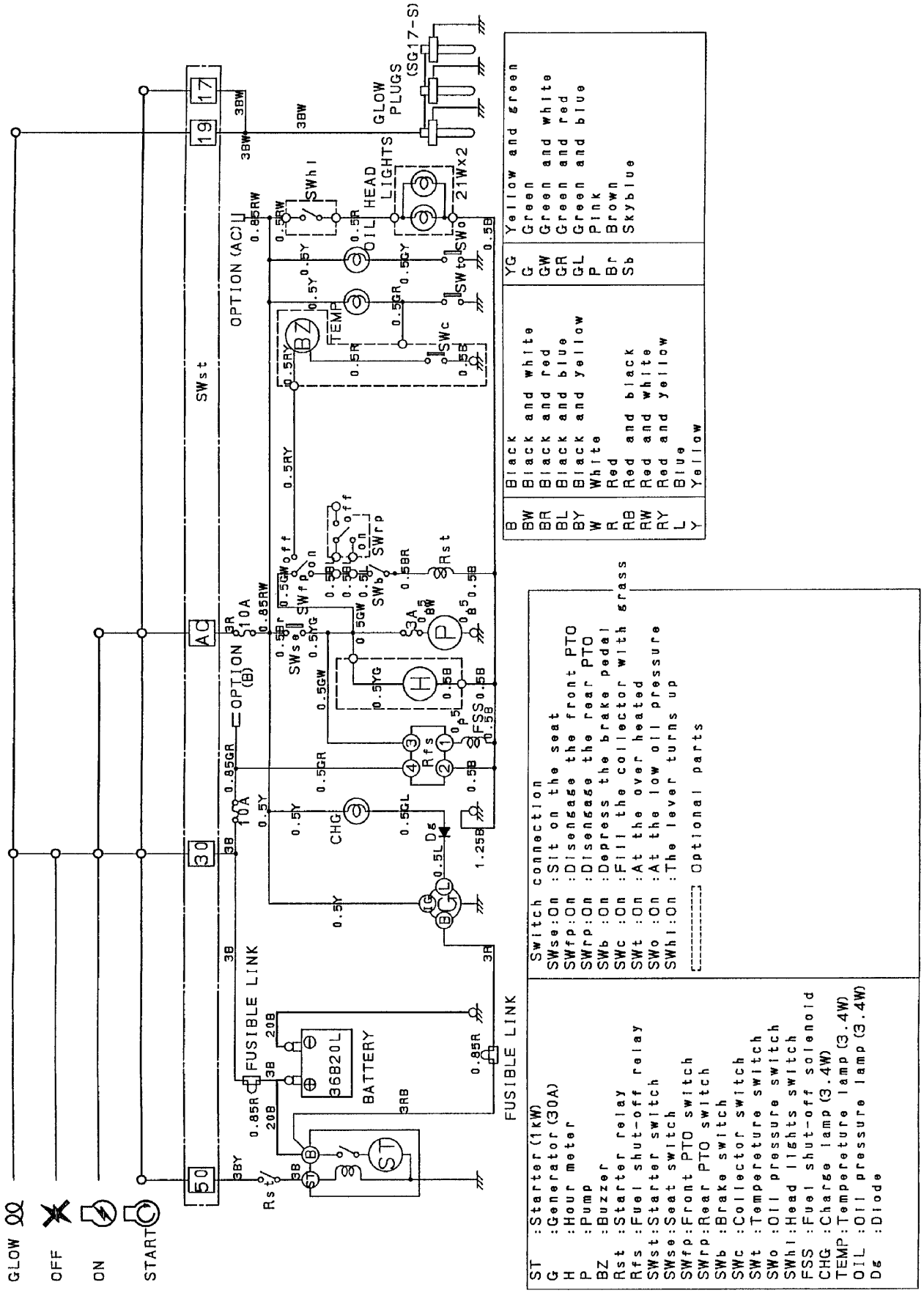

REAL WIRING DIAGRAM/SG153

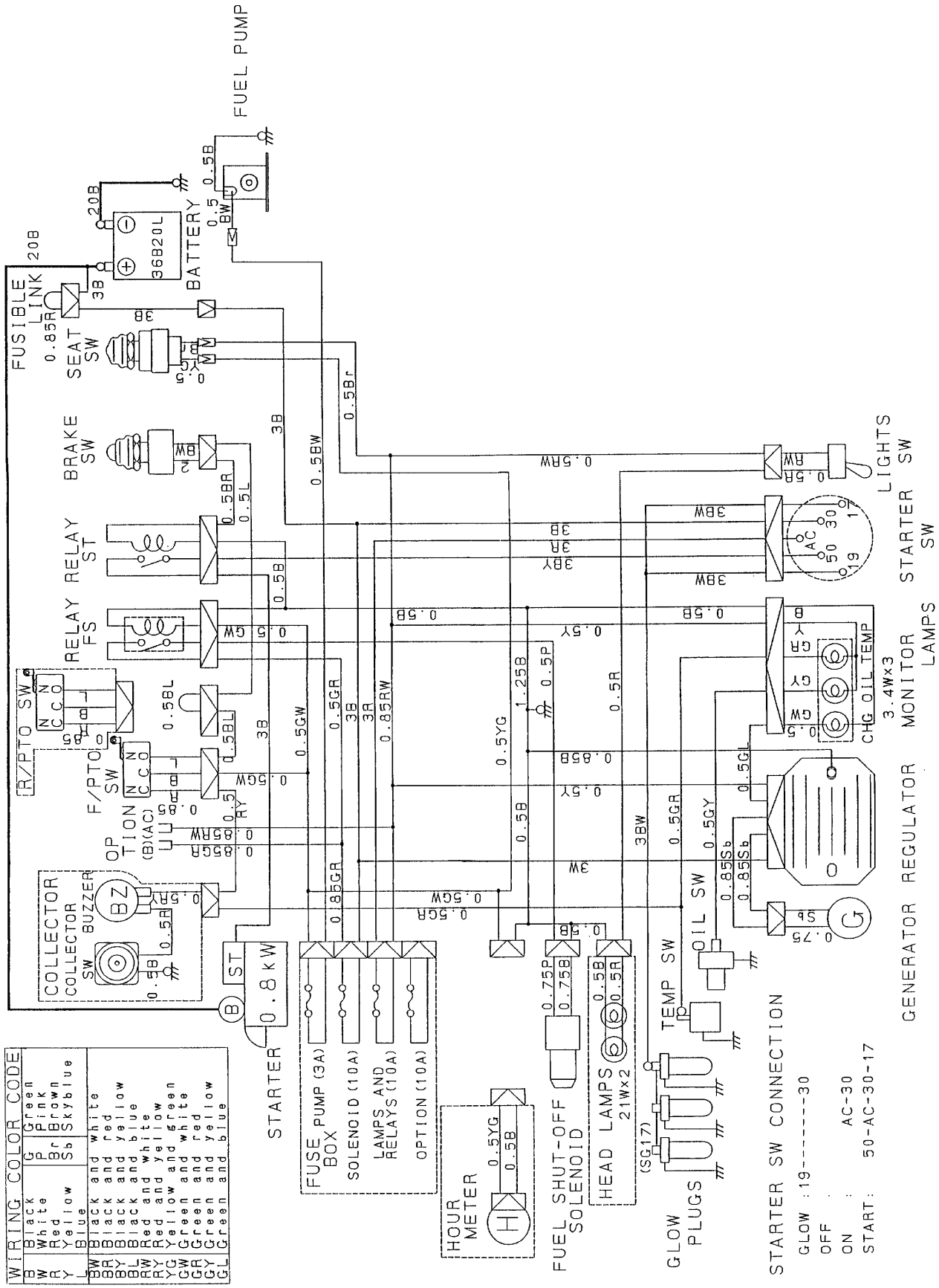

REAL WIRING DIAGRAM/SG153/S

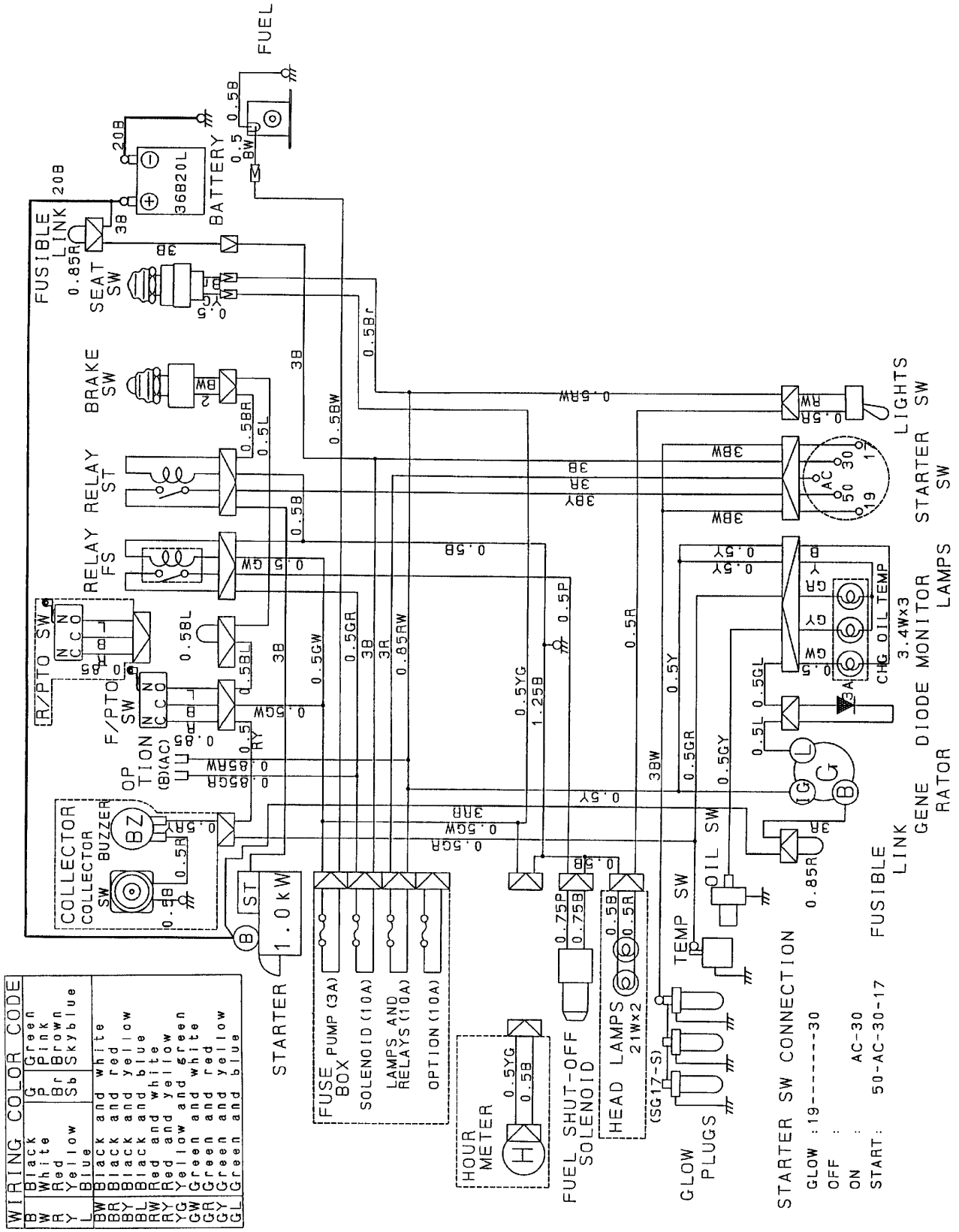

Numerical Index

Part Code	Fig.	Key	Part Code	Fig.	Key	Part Code	Fig.	Key
6211-110-018-20	1	1	6209-587-001-00	15	4	6211-292-001-20	29	11
1373-121-001-00	10	41	6209-600-002-00	7	2	6211-310-006-20	10	1
	27	5	6209-600-004-00	10	24-A	6211-310-006-30	10	1-A
3625-540-004-00	10	21	6209-605-004-00	1	3	6211-311-005-10	10	35
3747-172-012-00	21	31	6209-605-004-10	1	3-A	6211-311-005-20	10	35-A
3748-172-007-00	28	8	6209-610-001-00	5	3	6211-311-005-30	10	35-B
3817-401-001-00	10	12	6209-610-001-10	5	3-A	6211-312-001-20	10	27
	10	40	6209-610-002-10	10	4	6211-312-001-30	10	27-A
	12	19	6209-610-008-00	5	7-A		29	14
	20	14	6209-610-009-00	5	4-A	6211-312-002-20	10	36
	20	19	6209-623-001-00	7	3	6211-312-002-30	10	36-A
	21	14	6209-625-001-00	5	14		29	15
	21	19		29	10	6211-340-001-30	8	1
6209-000-002-00	12	18	6209-625-002-00	10	5	6211-340-002-30	9	1
6209-000-003-00	1	7		29	12	6211-342-001-30	8	2
6209-000-004-10	5	2	6209-625-012-00	5	14-A		9	2
6209-000-013-00	18	7		29	10-A	6211-361-019-10	7	1
6209-000-043-00	18	10-A	6209-630-002-10	28	6	6211-510-002-00	5	10
6209-000-044-00	1	7-A		29	21	6211-511-003-00	5	11
6209-030-041-00	22	4	6209-730-005-00	13	3-A	6211-511-004-00	5	12
6209-030-043-00	24	16		24	10-A	6211-540-002-00	6	1
6209-044-001-00	24	25	6209-730-006-00	18	4-A	6211-560-002-00	6	3
6209-046-015-00	18	7-A	6209-740-001-00	10	26	6211-599-001-10	5	13
6209-050-001-00	10	32	6209-749-001-10	5	15		6	2
6209-050-002-00	10	33	6209-749-001-20	5	15-A		6	4
6209-056-001-00	24	7	6209-788-001-00	5	27	6211-751-001-10	2	2
6209-300-002-00	20	17	6209-920-002-00	10	20	6211-760-003-10	5	29
	21	17		19	14-A	6211-777-007-30	11	1
6209-300-014-00	1	8-A		29	13	6212-111-015-00	14	1
6209-360-010-00	25	2	6209-940-004-00	12	14	6212-111-015-10	14	1-A
6209-360-028-10	2	6	6211-110-061-10	1	1-A	6212-111-080-10	15	1
6209-409-001-00	10	18	6211-110-061-20	1	1-B	6212-114-015-00	16	1
6209-409-003-00	12	17	6211-141-018-10	1	6	6212-114-015-10	16	1-A
6209-440-003-00	14	7-A		29	3	6212-114-080-10	17	1
6209-490-002-00	2	4	6211-170-006-10	2	1	6212-116-015-00	16	3
6209-490-002-10	2	4-A	6211-173-004-00	2	3	6212-116-015-10	16	3-A
6209-500-003-00	10	16		29	4	6212-116-080-10	17	3
	10	25	6211-210-021-10	5	1	6212-121-008-00	14	2
	29	22	6211-210-021-20	5	1-A	6212-121-008-10	14	2-A
6209-572-002-00	2	5-A	6211-258-001-00	5	8	6212-121-008-20	14	2-B
	29	5-A		29	8		15	2
6209-572-003-00	2	5-B	6211-258-002-00	5	9	6212-124-008-00	16	2
	29	5-B		29	9	6212-124-008-10	16	2-A
6209-580-002-10	24	28	6211-291-001-10	5	23		17	2
6209-587-001-00	14	4	6211-292-001-20	5	24	6212-126-008-00	16	4

Numerical Index

Part Code	Fig.	Key	Part Code	Fig.	Key	Part Code	Fig.	Key
6212-126-008-10	16	4-A	6212-552-001-20	12	2-B	6213-319-001-00	10	2
	17	4	6212-552-014-00	12	2-C	6213-610-005-30	20	1
6212-211-001-10	14	3	6212-561-001-00	12	3	6213-610-005-40	21	1
	15	3	6212-561-001-10	12	3-A	6213-611-003-20	20	2
6212-230-003-00	14	5	6212-563-001-00	12	4		21	2
6212-230-003-10	14	5-A	6212-565-001-00	12	5	6213-612-004-00	20	9
	15	5	6212-569-002-00	1	4		21	9
6212-235-001-00	14	6		29	2	6213-613-002-10	20	8
6212-235-001-10	14	6-A	6212-571-001-10	12	6		21	8
6212-235-005-00	14	6-B	6212-571-003-00	12	6-A	6213-614-003-10	20	12
	15	6	6212-571-006-00	12	6-B		21	12
6212-261-006-00	14	8	6212-575-001-00	12	7		29	17
6212-271-006-00	14	8-A	6212-600-003-00	12	8	6213-614-006-10	20	16
	15	7	6212-600-003-10	12	8-A		21	16
6212-271-016-00	15	7-A	6212-611-004-10	12	9		29	18
6212-274-016-00	6	5	6212-616-002-00	12	16	6213-619-002-00	20	11
6212-276-016-00	6	6	6212-620-002-10	12	10		21	11
6212-310-010-00	18	1	6212-620-002-20	12	10-A	6213-619-003-00	20	10
6212-310-010-10	18	1-A	6212-626-002-10	12	11		21	10
6212-310-010-20	18	1-B	6212-628-004-00	12	12	6213-619-005-00	20	15
6212-310-010-30	18	1-C	6212-628-005-00	12	13		21	15
6212-310-010-50	18	1-D	6213-100-003-20	19	1	6213-621-003-00	20	6
6212-330-013-30	18	5	6213-100-003-30	19	1-A		21	6
6212-333-001-00	18	6	6213-111-001-20	19	2	6213-622-002-10	20	5
6212-333-003-00	18	6-A	6213-111-001-30	19	2-A		21	5
6212-371-014-20	18	8	6213-119-001-00	19	6	6213-631-002-00	20	3
6212-379-001-00	18	9	6213-120-003-00	19	3		21	3
6212-511-004-00	13	1	6213-120-003-20	19	3-A	6213-631-005-00	20	4
6212-521-002-00	18	3	6213-125-001-00	19	4		21	4
6212-521-008-00	18	3-A	6213-129-003-00	19	5-A	6213-641-004-00	22	2
6212-522-003-00	13	2	6213-129-005-00	5	17	6213-641-004-10	22	2-A
6212-522-010-00	13	2-A	6213-129-006-00	5	16	6213-642-002-00	20	7
6212-523-003-00	13	6	6213-140-004-10	19	8		21	7
6212-523-023-00	13	6-A	6213-140-004-20	19	8-A	6213-660-006-00	22	1
6212-524-002-00	24	9	6213-149-001-00	19	10	6213-669-002-00	22	3
6212-524-002-10	24	9-A	6213-160-002-00	10	28	6213-671-012-00	22	5
6212-524-002-20	24	9-B	6213-160-002-10	10	28-A	6213-674-004-10	27	3
6212-531-005-10	5	6	6213-160-002-20	10	28-B	6213-674-004-20	27	3-A
6212-535-001-00	13	4	6213-161-001-00	10	29	6213-711-003-20	20	28
6212-535-002-00	24	13	6213-161-001-10	10	29-A		21	28
6212-551-001-00	12	1	6213-161-001-20	10	29-B	6213-716-001-40	20	22
6212-551-001-10	12	1-A	6213-164-001-00	10	30		21	22
6212-551-028-00	12	1-B	6213-240-002-00	19	15	6213-716-001-50	21	22-A
6212-552-001-00	12	2	6213-240-002-10	19	15-A	6213-721-001-00	5	22
6212-552-001-10	12	2-A	6213-311-003-10	19	12	6213-721-003-00	20	23

Numerical Index

Part Code	Fig.	Key	Part Code	Fig.	Key	Part Code	Fig.	Key
6213-721-003-00	21	23	6215-345-047-00	32	5	6215-549-003-00	24	22
6213-729-001-00	20	20	6215-345-048-00	30	9	6215-549-007-00	24	30
6213-729-013-10	21	20		31	8	6215-549-007-10	24	30-A
6213-743-002-10	20	24		32	6	6215-549-008-00	24	34
	21	24	6215-345-049-00	30	10	6215-549-008-10	24	34-A
	29	19		31	9	6215-549-021-00	24	29
6214-111-014-00	3	1		32	7	6215-549-021-10	24	29-A
6214-115-002-20	3	2	6215-345-050-00	30	11	6215-549-029-00	26	2
	29	6		31	10	6215-600-057-00	24	1
6214-141-015-00	4	1		32	8	6215-600-057-10	24	1-A
6214-145-006-10	4	2	6215-345-051-00	30	12	6215-611-003-00	33	1
	29	7		31	11	6215-612-003-00	33	34
6215-300-005-00	23	1		32	9	6215-619-012-00	33	35
6215-300-030-00	23	1-A	6215-345-052-00	30	13	6215-619-013-00	33	37
6215-300-037-00	23	1-B		31	12	6215-619-014-00	33	38
6215-311-005-00	30	1		32	10	6215-619-015-00	33	39
	31	18	6215-345-053-00	30	14	6215-619-016-00	33	40
	32	16		31	13	6215-621-004-10	24	8
6215-315-002-00	23	2		32	11	6215-621-004-20	24	8-A
6215-330-007-00	30	2	6215-355-003-00	30	18	6215-622-002-00	33	12
6215-330-021-00	31	1	6215-359-003-00	30	17	6215-629-017-00	33	13
6215-330-022-00	32	1		31	16	6215-629-019-00	33	14
6215-332-002-00	30	16		32	17	6215-629-020-00	33	18
	31	15	6215-359-004-00	30	19	6215-629-021-00	33	19
6215-332-006-00	32	15		31	17	6215-629-022-00	33	20
6215-339-002-00	30	15		32	18	6215-629-023-00	33	21
	31	14	6215-410-035-10	23	3	6215-629-024-00	33	22
6215-339-004-00	32	14	6215-410-036-10	23	4	6215-629-025-00	33	23
6215-342-002-00	30	3	6215-411-079-10	25	2-A	6215-629-026-00	33	24
	31	2	6215-411-111-00	23	3-A	6215-629-027-00	33	25
	32	13	6215-411-112-00	23	4-A	6215-629-028-00	33	26
6215-343-002-00	30	4	6215-412-001-20	25	1	6215-629-029-00	33	27
	31	3	6215-520-001-00	24	15	6215-629-030-00	33	28
	32	12	6215-526-001-10	24	17	6215-629-031-00	33	29
6215-345-044-00	30	5	6215-526-004-00	24	17-A	6215-629-032-00	33	30
	31	4	6215-531-005-00	24	23	6215-629-033-00	33	31
	32	2	6215-541-001-00	24	18	6215-629-034-00	33	32
6215-345-045-00	30	6	6215-541-001-10	24	18-A	6215-631-004-00	33	2
	31	5	6215-541-002-10	26	1	6215-634-002-00	33	15
	32	3	6215-541-003-10	24	24	6215-635-002-00	33	8
6215-345-046-00	30	7	6215-542-001-10	10	22	6215-635-003-00	33	36
	31	6	6215-542-002-00	24	20	6215-635-008-00	33	36-A
	32	4	6215-543-003-20	24	19	6215-637-003-00	33	33
6215-345-047-00	30	8	6215-546-001-00	10	17	6215-639-006-00	33	16
	31	7	6215-549-001-10	5	26	6215-639-007-00	33	17

Numerical Index

Part Code	Fig.	Key	Part Code	Fig.	Key	Part Code	Fig.	Key
6215-641-002-00	33	3	6281-229-022-00	35	6	6904-110-818-00	5	19
6215-643-003-00	33	4	6281-229-023-00	35	7	6904-110-840-00	5	18
6215-644-003-00	33	6	6281-229-024-00	35	8	6908-000-716-00	13	3
6215-649-003-00	33	5	6281-229-025-00	35	9		24	10
6215-649-004-00	33	7	6281-229-025-10	35	9-A	6908-000-750-00	18	4
6215-649-004-10	33	7-A	6281-229-026-00	35	10	6908-160-408-00	19	5
6215-649-005-00	33	9	6281-229-027-00	35	11	6908-161-018-00	18	2
6215-649-006-00	33	10	6281-229-028-00	35	12	6909-110-406-00	5	28
6215-649-006-10	33	10-A	6281-229-031-00	35	4		10	34
6215-649-007-00	33	11	6281-270-001-00	27	2		24	31
6219-732-003-00	28	4	6281-270-001-10	27	2-A	6909-110-408-00	34	23
6219-752-011-00	24	2	6281-270-001-20	27	2-B	6909-110-410-00	27	7
6219-752-012-00	24	3	6281-410-002-20	28	3	6909-111-406-00	24	26
6219-752-013-00	24	4	6281-410-010-00	28	3-A	6909-111-508-00	34	20
6219-752-014-00	24	5	6281-410-023-00	28	3-B	6909-150-508-00	34	22
6219-752-015-00	24	6	6281-910-001-00	28	5	6909-202-308-00	10	24
6219-752-036-00	24	3-A	6281-920-001-00	28	9	6909-572-008-00	2	5
6219-752-037-00	24	4-A	6281-971-001-10	28	1		29	5
6219-752-038-00	24	5-A	6287-810-006-20	29	1	6909-830-212-00	1	8
6219-752-039-00	24	6-A	6294-453-002-00	5	20-A	6909-902-299-00	5	21
6281-100-003-00	27	8	6509-360-912-10	25	3	6909-906-105-10	19	13
6281-100-003-10	27	8-A	6509-605-019-10	5	5	6909-920-843-00	19	14
6281-111-002-00	34	1		10	3	6911-129-006-00	1	2
6281-115-004-00	34	11	6513-770-022-10	20	27	6911-129-083-00	5	7
6281-116-002-00	34	2		21	27	6911-219-195-00	5	4
6281-118-001-00	34	9	6515-419-014-00	25	4	J061-210-015-00	20	21
6281-121-003-00	34	3	6581-117-007-00	34	10		21	21
6281-124-001-00	34	6	6581-123-011-00	34	12		21	21-B
6281-129-006-00	34	17	6581-129-092-00	34	15	J062-062-067-00	25	6
6281-129-007-00	34	7	6581-129-096-00	34	16	J062-076-082-00	25	5
6281-129-008-00	34	18	6581-129-099-00	34	13	J062-138-148-00	21	21-A
6281-129-009-00	34	19	6581-129-100-00	34	14	V211-560-802-50	4	3
6281-129-010-00	34	4	6582-450-014-00	28	2	V230-360-601-00	7	4
6281-129-011-00	34	5	6894-240-902-00	14	7	V230-360-601-20	5	25
6281-129-019-00	34	21	6894-453-344-00	5	20		28	7
6281-151-004-00	34	8	6901-066-645-00	18	10	V231-360-801-60	10	13
6281-151-004-10	34	8-A	6901-910-612-00	13	5		19	11
6281-200-007-00	27	1		24	14	V231-360-802-00	3	3
6281-211-004-00	35	2	6901-910-625-00	19	7		20	18
6281-213-008-00	35	1	6901-910-816-00	8	4		20	25
6281-213-016-10	35	1-A		9	4		21	18
6281-214-006-00	35	13	6901-911-020-00	8	3		21	25
6281-222-007-00	35	3		9	3		27	4
6281-222-010-10	35	3-A	6901-911-025-00	27	9	V231-360-802-50	10	39
6281-229-021-00	35	5	6902-050-816-00	10	37		20	30

Numerical Index

Part Code	Fig.	Key	Part Code	Fig. Key	Part Code	Fig. Key
V231-360-802-50	21	30				
V231-360-803-00	10	15				
V231-360-803-50	10	11				
V231-360-804-00	10	10				
	10	38				
V231-360-804-50	10	14				
	20	13				
	21	13				
V231-360-805-00	10	9				
V231-360-805-50	10	8				
V231-360-807-50	10	7				
	20	26				
	21	26				
V231-360-808-50	10	6				
V233-361-002-00	11	2				
V233-361-006-00	27	6				
V341-120-008-00	10	19				
V401-160-006-00	24	33				
V411-260-006-00	24	32				
V523-101-001-80	18	2-A				
V600-110-600-40	24	12				
V600-110-620-30	24	11				
V682-200-000-60	1	5				
V704-140-016-00	12	15				
V705-140-012-00	10	31				
V710-140-004-00	10	23				
	24	21				
	26	3				
V720-101-900-80	24	27				
V720-102-401-50	19	9				
	29	16				
V723-102-005-50	20	29				
	21	29				
	29	20				

Numerical Index

Part Code	Fig.	Key	Part Code	Fig.	Key	Part Code	Fig.	Key
6211-110-018-20	1	1	6209-587-001-00	14	4	6211-292-001-20	28	11
1373-121-001-00	9	41	6209-600-002-00	7	2	6211-310-006-20	9	1
	26	4	6209-600-004-00	9	24-A	6211-310-006-30	9	1-A
3625-540-004-00	9	21	6209-605-004-00	1	3	6211-311-005-10	9	35
3747-172-012-00	20	31	6209-605-004-10	1	3-A	6211-311-005-20	9	35-A
3748-172-007-00	27	8	6209-610-001-00	5	3	6211-311-005-30	9	35-B
3817-401-001-00	9	12	6209-610-001-10	5	3-A	6211-312-001-20	9	27
	9	40	6209-610-002-10	9	4	6211-312-001-30	9	27-A
	11	19	6209-610-008-00	5	7-A		28	14
	19	14	6209-610-009-00	5	4-A	6211-312-002-20	9	36
	19	19	6209-623-001-00	7	3	6211-312-002-30	9	36-A
	20	14	6209-625-001-00	5	14		28	15
	20	19		28	10	6211-340-002-20	8	1
6209-000-002-00	11	18	6209-625-002-00	9	5	6211-340-002-30	8	1-A
6209-000-003-00	1	7		28	12	6211-342-001-30	8	2
6209-000-004-10	5	2	6209-625-012-00	5	14-A	6211-361-019-10	7	1
6209-000-013-00	17	7		28	10-A	6211-510-002-00	5	10
6209-000-043-00	17	10-A	6209-630-002-10	27	6	6211-511-003-00	5	11
6209-000-044-00	1	7-A		28	21	6211-511-004-00	5	12
6209-030-041-00	21	4	6209-730-005-00	12	3-A	6211-540-002-00	6	1
6209-030-043-00	23	16		23	10-A	6211-560-002-00	6	3
6209-044-001-00	23	25	6209-730-006-00	17	4-A	6211-599-001-10	5	13
6209-046-015-00	17	7-A	6209-740-001-00	9	26		6	2
6209-050-001-00	9	32	6209-749-001-10	5	15		6	4
6209-050-002-00	9	33	6209-749-001-20	5	15-A	6211-751-001-10	2	2
6209-056-001-00	23	7	6209-788-001-00	5	27	6211-760-012-20	5	29
6209-300-002-00	19	17	6209-920-002-00	9	20	6211-777-007-20	10	1
	20	17		18	14-A	6211-777-007-30	10	1-A
6209-300-014-00	1	8-A		28	13	6212-111-015-00	13	1
6209-360-010-00	24	2	6209-940-004-00	11	14	6212-111-015-10	13	1-A
6209-360-028-10	2	6	6211-110-061-10	1	1-A	6212-111-080-10	14	1
6209-409-001-00	9	18	6211-110-061-20	1	1-B	6212-114-015-00	15	1
6209-409-003-00	11	17	6211-141-018-10	1	6	6212-114-015-10	15	1-A
6209-440-003-00	13	7-A		28	3	6212-114-080-10	16	1
6209-490-002-00	2	4	6211-170-006-10	2	1	6212-116-015-00	15	3
6209-490-002-10	2	4-A	6211-173-004-00	2	3	6212-116-015-10	15	3-A
6209-500-003-00	9	16		28	4	6212-116-080-10	16	3
	9	25	6211-210-021-10	5	1	6212-121-008-00	13	2
	28	22	6211-210-021-20	5	1-A	6212-121-008-10	13	2-A
6209-572-002-00	2	5-A	6211-258-001-00	5	8	6212-121-008-20	13	2-B
	28	5-A		28	8		14	2
6209-572-003-00	2	5-B	6211-258-002-00	5	9	6212-124-008-00	15	2
	28	5-B		28	9	6212-124-008-10	15	2-A
6209-580-002-10	23	28	6211-291-001-10	5	23		16	2
6209-587-001-00	13	4	6211-292-001-20	5	24	6212-126-008-00	15	4

Numerical Index

Part Code	Fig.	Key	Part Code	Fig.	Key	Part Code	Fig.	Key
6212-126-008-10	15	4-A	6212-552-001-20	11	2-B	6213-319-001-00	9	2
	16	4	6212-552-014-00	11	2-C	6213-610-005-30	19	1
6212-211-001-10	13	3	6212-561-001-00	11	3	6213-610-005-40	20	1
	14	3	6212-561-001-10	11	3-A	6213-611-003-20	19	2
6212-230-003-00	13	5	6212-563-001-00	11	4		20	2
6212-230-003-10	13	5-A	6212-565-001-00	11	5	6213-612-004-00	19	9
	14	5	6212-569-002-00	1	4		20	9
6212-235-001-00	13	6		28	2	6213-613-002-10	19	8
6212-235-001-10	13	6-A	6212-571-001-10	11	6		20	8
6212-235-005-00	13	6-B	6212-571-003-00	11	6-A	6213-614-003-10	19	12
	14	6	6212-571-006-00	11	6-B		20	12
6212-261-006-00	13	8	6212-575-001-00	11	7		28	17
6212-271-006-00	13	8-A	6212-600-003-00	11	8	6213-614-006-10	19	16
	14	7	6212-600-003-10	11	8-A		20	16
6212-271-016-00	14	7-A	6212-611-004-10	11	9		28	18
6212-274-016-00	6	5	6212-616-002-00	11	16	6213-619-002-00	19	11
6212-276-016-00	6	6	6212-620-002-10	11	10		20	11
6212-310-010-00	17	1	6212-620-002-20	11	10-A	6213-619-003-00	19	10
6212-310-010-10	17	1-A	6212-626-002-10	11	11		20	10
6212-310-010-20	17	1-B	6212-628-004-00	11	12	6213-619-005-00	19	15
6212-310-010-30	17	1-C	6212-628-005-00	11	13		20	15
6212-310-010-50	17	1-D	6213-100-003-20	18	1	6213-621-003-00	19	6
6212-330-013-30	17	5	6213-100-003-30	18	1-A		20	6
6212-333-001-00	17	6	6213-111-001-20	18	2	6213-622-002-10	19	5
6212-333-003-00	17	6-A	6213-111-001-30	18	2-A		20	5
6212-371-014-20	17	8	6213-119-001-00	18	6	6213-631-002-00	19	3
6212-379-001-00	17	9	6213-120-003-00	18	3		20	3
6212-511-004-00	12	1	6213-120-003-20	18	3-A	6213-631-005-00	19	4
6212-521-002-00	17	3	6213-125-001-00	18	4		20	4
6212-521-008-00	17	3-A	6213-129-003-00	18	5-A	6213-641-004-00	21	2
6212-522-003-00	12	2	6213-129-005-00	5	17	6213-641-004-10	21	2-A
6212-522-010-00	12	2-A	6213-129-006-00	5	16	6213-642-002-00	19	7
6212-523-003-00	12	6	6213-140-004-10	18	8		20	7
6212-523-023-00	12	6-A	6213-140-004-20	18	8-A	6213-660-006-00	21	1
6212-524-002-00	23	9	6213-149-001-00	18	10	6213-669-002-00	21	3
6212-524-002-10	23	9-A	6213-160-002-00	9	28	6213-671-003-00	21	5
6212-524-002-20	23	9-B	6213-160-002-10	9	28-A	6213-674-006-10	26	2
6212-531-005-10	5	6	6213-160-002-20	9	28-B	6213-674-006-20	26	2-A
6212-535-001-00	12	4	6213-161-001-00	9	29	6213-711-003-20	19	28
6212-535-002-00	23	13	6213-161-001-10	9	29-A		20	28
6212-551-001-00	11	1	6213-161-001-20	9	29-B	6213-716-001-40	19	22
6212-551-001-10	11	1-A	6213-164-001-00	9	30		20	22
6212-551-028-00	11	1-B	6213-240-002-00	18	15	6213-716-001-50	20	22-A
6212-552-001-00	11	2	6213-240-002-10	18	15-A	6213-721-001-00	5	22
6212-552-001-10	11	2-A	6213-311-003-10	18	12	6213-721-003-00	19	23

Numerical Index

Part Code	Fig.	Key	Part Code	Fig.	Key	Part Code	Fig.	Key
6213-721-003-00	20	23	6215-345-047-00	31	5	6215-549-003-00	23	22
6213-729-001-00	19	20	6215-345-048-00	29	9	6215-549-007-00	23	30
6213-729-013-10	20	20		30	8	6215-549-007-10	23	30-A
6213-743-002-10	19	24		31	6	6215-549-008-00	23	34
	20	24	6215-345-049-00	29	10	6215-549-008-10	23	34-A
	28	19		30	9	6215-549-021-00	23	29
6214-111-014-00	3	1		31	7	6215-549-021-10	23	29-A
6214-115-002-20	3	2	6215-345-050-00	29	11	6215-549-029-00	25	2
	28	6		30	10	6215-600-057-00	23	1
6214-141-015-00	4	1		31	8	6215-600-057-10	23	1-A
6214-145-006-10	4	2	6215-345-051-00	29	12	6215-611-003-00	32	1
	28	7		30	11	6215-612-003-00	32	34
6215-300-005-00	22	1		31	9	6215-619-012-00	32	35
6215-300-030-00	22	1-A	6215-345-052-00	29	13	6215-619-013-00	32	37
6215-300-037-00	22	1-B		30	12	6215-619-014-00	32	38
6215-311-005-00	29	1		31	10	6215-619-015-00	32	39
	30	18	6215-345-053-00	29	14	6215-619-016-00	32	40
	31	16		30	13	6215-621-004-10	23	8
6215-315-002-00	22	2		31	11	6215-621-004-20	23	8-A
6215-330-007-00	29	2	6215-355-003-00	29	18	6215-622-002-00	32	12
6215-330-021-00	30	1	6215-359-003-00	29	17	6215-629-017-00	32	13
6215-330-022-00	31	1		30	16	6215-629-019-00	32	14
6215-332-002-00	29	16		31	17	6215-629-020-00	32	18
	30	15	6215-359-004-00	29	19	6215-629-021-00	32	19
6215-332-006-00	31	15		30	17	6215-629-022-00	32	20
6215-339-002-00	29	15		31	18	6215-629-023-00	32	21
	30	14	6215-410-035-10	22	3	6215-629-024-00	32	22
6215-339-004-00	31	14	6215-410-036-10	22	4	6215-629-025-00	32	23
6215-342-002-00	29	3	6215-411-079-10	24	2-A	6215-629-026-00	32	24
	30	2	6215-411-111-00	22	3-A	6215-629-027-00	32	25
	31	13	6215-411-112-00	22	4-A	6215-629-028-00	32	26
6215-343-002-00	29	4	6215-412-001-20	24	1	6215-629-029-00	32	27
	30	3	6215-520-001-00	23	15	6215-629-030-00	32	28
	31	12	6215-526-001-10	23	17	6215-629-031-00	32	29
6215-345-044-00	29	5	6215-526-004-00	23	17-A	6215-629-032-00	32	30
	30	4	6215-531-005-00	23	23	6215-629-033-00	32	31
	31	2	6215-541-001-00	23	18	6215-629-034-00	32	32
6215-345-045-00	29	6	6215-541-001-10	23	18-A	6215-631-004-00	32	2
	30	5	6215-541-002-10	25	1	6215-634-002-00	32	15
	31	3	6215-541-003-10	23	24	6215-635-002-00	32	8
6215-345-046-00	29	7	6215-542-001-10	9	22	6215-635-003-00	32	36
	30	6	6215-542-002-00	23	20	6215-635-008-00	32	36-A
	31	4	6215-543-003-20	23	19	6215-637-003-00	32	33
6215-345-047-00	29	8	6215-546-001-00	9	17	6215-639-006-00	32	16
	30	7	6215-549-001-10	5	26	6215-639-007-00	32	17

Numerical Index

Part Code	Fig.	Key	Part Code	Fig.	Key	Part Code	Fig.	Key
6215-641-002-00	32	3	6281-214-004-00	35	13	6281-229-018-00	35	25
6215-643-003-00	32	4	6281-215-001-00	34	17	6281-229-029-00	34	14
6215-644-003-00	32	6		35	17	6281-229-032-00	34	6
6215-649-003-00	32	5	6281-216-001-00	34	18	6281-229-033-00	34	11-A
6215-649-004-00	32	7		35	18	6281-271-002-00	34	26
6215-649-004-10	32	7-A	6281-217-001-00	34	16		35	26
6215-649-005-00	32	9		35	16	6281-410-002-20	27	3
6215-649-006-00	32	10	6281-217-002-00	34	16-A	6281-410-010-00	27	3-A
6215-649-006-10	32	10-A	6281-221-001-00	34	4	6281-410-023-00	27	3-B
6215-649-007-00	32	11		35	4	6281-910-001-00	27	5
6219-732-003-00	27	4	6281-221-007-00	34	4-A	6281-920-001-00	27	9
6219-752-011-00	23	2	6281-222-004-00	34	1	6281-971-001-10	27	1
6219-752-012-00	23	3		35	1	6287-810-006-20	28	1
6219-752-013-00	23	4	6281-229-002-00	34	2	6294-453-002-00	5	20-A
6219-752-014-00	23	5		35	2	6509-360-912-10	24	3
6219-752-015-00	23	6	6281-229-003-00	34	3	6509-605-019-10	5	5
6219-752-036-00	23	3-A		35	3		9	3
6219-752-037-00	23	4-A	6281-229-004-00	34	5-A	6513-770-022-10	19	27
6219-752-038-00	23	5-A		35	6		20	27
6219-752-039-00	23	6-A	6281-229-005-00	34	5	6515-419-014-00	24	4
6281-100-003-00	26	7		35	5	6581-117-007-00	33	10
6281-100-003-10	26	7-A	6281-229-006-00	34	8	6581-123-011-00	33	12
6281-111-002-00	33	1		35	8	6581-129-092-00	33	15
6281-115-004-00	33	11	6281-229-007-00	34	9	6581-129-096-00	33	16
6281-116-002-00	33	2		35	9	6581-129-099-00	33	13
6281-118-001-00	33	9	6281-229-008-00	34	10	6581-129-100-00	33	14
6281-121-003-00	33	3		35	11	6582-450-014-00	27	2
6281-124-001-00	33	6	6281-229-009-00	34	11	6894-240-902-00	13	7
6281-129-006-00	33	17		35	10	6894-453-344-00	5	20
6281-129-007-00	33	7	6281-229-010-00	35	14	6901-066-645-00	17	10
6281-129-008-00	33	18	6281-229-011-00	34	15	6901-910-612-00	12	5
6281-129-009-00	33	19		35	15		23	14
6281-129-010-00	33	4	6281-229-012-00	34	19	6901-910-625-00	18	7
6281-129-011-00	33	5		35	19	6901-910-816-00	8	4
6281-129-019-00	33	21	6281-229-013-00	34	20	6901-911-020-00	8	3
6281-151-004-00	33	8		35	20	6901-911-025-00	26	8
6281-151-004-10	33	8-A	6281-229-014-00	34	21	6902-050-816-00	9	37
6281-200-005-00	26	1-A		35	21	6904-110-818-00	5	19
6281-200-016-00	26	1	6281-229-015-00	34	22	6904-110-840-00	5	18
6281-213-003-00	35	7		35	22	6908-000-716-00	12	3
6281-213-006-00	34	7	6281-229-016-00	34	23		23	10
6281-213-018-00	34	7-A		35	23	6908-000-750-00	17	4
6281-214-003-00	34	12	6281-229-017-00	34	24	6908-160-408-00	18	5
	35	12		35	24	6908-161-018-00	17	2
6281-214-004-00	34	13	6281-229-018-00	34	25	6909-110-406-00	5	28

Numerical Index

Part Code	Fig.	Key	Part Code	Fig.	Key	Part Code	Fig.	Key
6909-110-406-00	9	34	V231-360-805-00	9	9			
	23	31	V231-360-805-50	9	8			
6909-110-408-00	33	23	V231-360-807-50	9	7			
6909-110-410-00	26	6		19	26			
6909-111-406-00	23	26		20	26			
6909-111-508-00	33	20	V231-360-808-50	9	6			
6909-150-508-00	33	22	V233-361-002-00	10	2			
6909-202-308-00	9	24	V233-361-007-00	26	5			
6909-572-008-00	2	5	V341-120-008-00	9	19			
	28	5	V401-160-006-00	23	33			
6909-830-212-00	1	8	V411-260-006-00	23	32			
6909-902-299-00	5	21	V523-101-001-80	17	2-A			
6909-906-105-10	18	13	V600-110-600-40	23	12			
6909-920-843-00	18	14	V600-110-620-30	23	11			
6911-129-006-00	1	2	V682-200-000-60	1	5			
6911-129-083-00	5	7	V704-140-016-00	11	15			
6911-219-195-00	5	4	V705-140-012-00	9	31			
J061-210-015-00	19	21	V710-140-004-00	9	23			
	20	21		23	21			
	20	21-B		25	3			
J062-062-067-00	24	6	V720-101-900-80	23	27			
J062-076-082-00	24	5	V720-102-401-50	18	9			
J062-138-148-00	20	21-A		28	16			
V211-560-802-50	4	3	V723-102-005-50	19	29			
V230-360-601-00	7	4		20	29			
V230-360-601-20	5	25		28	20			
	27	7						
V231-360-801-60	9	13						
	18	11						
V231-360-802-00	3	3						
	19	18						
	19	25						
	20	18						
	20	25						
	26	3						
V231-360-802-50	9	39						
	19	30						
	20	30						
V231-360-803-00	9	15						
V231-360-803-50	9	11						
V231-360-804-00	9	10						
	9	38						
V231-360-804-50	9	14						
	19	13						
	20	13						

Numerical Index

Part Code	Fig.	Key	Part Code	Fig.	Key	Part Code	Fig.	Key
1323-220-012-00	17	10	1560-104-010-40	3	16	1593-103-054-00	4	2
1337-401-006-00	18	15	1560-132-007-30	18	14	1593-103-500-10	4	1
	47	47	1560-664-250-00	37	13	1593-104-001-40	4	12
1376-121-001-00	23	23		38	19	1593-104-004-00	4	13
1376-606-005-00	34	16	1560-664-252-00	37	14	1593-104-500-00	4	6
1386-241-002-00	19	4		38	20	1593-104-502-00	4	7
	26	4	1560-664-253-00	37	15	1593-105-213-10	5	10
	46	4		38	21	1593-112-002-50	6	5
1415-120-006-00	15	4	1564-512-001-00	24	2		7	4
	18	16	1564-654-213-00	49	4	1593-112-003-20	6	8
1415-125-021-00	47	49	1575-623-009-00	37	2		7	7
1416-209-005-00	9	18		38	2	1593-112-051-30	6	4
1416-600-057-00	32	9	1575-623-010-00	37	3		7	3
	33	9		38	3	1593-112-200-10	6	1
1416-600-057-10	32	9-A	1581-621-290-00	37	11	1593-112-222-00	6	9
	33	9-A		38	17		7	8
1424-101-203-00	3	17	1588-105-210-00	5	5	1593-112-510-30	6	3
1424-101-204-00	3	18	1593-101-003-20	1	6		7	2
1425-621-004-00	3	9		2	6	1593-112-520-10	6	12
	4	4	1593-101-009-10	1	12		7	11
1427-130-260-00	21	18		2	12	1593-117-001-40	8	3
1427-601-003-00	20	4	1593-101-011-10	1	13	1593-117-003-10	8	6
1427-621-002-10	6	2		2	13	1593-117-200-20	8	1
1427-621-012-00	24	7	1593-101-012-00	1	14	1593-117-510-20	8	2
	32	2		2	14	1593-122-051-00	9	1
	33	2		14	49	1593-203-058-20	11	2
	36	12	1593-101-210-40	2	1	1593-304-008-00	16	3
1427-934-013-00	41	5	1593-101-210-50	2	1-A	1593-304-051-20	16	1
1427-941-016-00	42	5	1593-101-220-40	2	2	1593-304-053-10	16	6
1432-242-004-00	28	13	1593-101-220-50	1	2	1593-304-054-10	16	4
1435-201-220-00	13	6		2	2-A	1593-304-055-10	16	7
1444-122-002-00	18	12	1593-102-001-10	3	10	1593-304-057-10	16	8
1444-601-015-00	36	15	1593-102-002-10	3	11	1593-307-051-20	16	12
1444-621-008-00	34	18	1593-102-003-20	3	14		16	16
1444-621-311-00	36	6	1593-102-004-20	3	15	1593-307-052-10	16	13
1444-621-312-00	36	7	1593-102-005-30	3	6		16	17
1488-611-001-00	34	9	1593-102-006-50	3	21	1593-307-053-10	16	14
1524-122-001-00	18	6	1593-102-009-10	3	23		16	18
1527-604-002-00	30	18	1593-102-011-00	3	7	1593-310-054-20	17	6
	30	23	1593-102-012-00	3	22	1593-310-520-20	17	4
	31	18	1593-102-500-10	3	1	1593-310-540-00	17	9
	31	23	1593-102-502-00	3	2	1593-312-056-20	18	18
	35	17	1593-102-503-00	3	3		18	27
1544-104-204-00	4	9	1593-102-504-00	3	4	1593-317-201-00	19	2
1544-104-205-00	4	10	1593-102-505-00	3	5	1593-317-210-00	19	1

Numerical Index

Part Code	Fig.	Key	Part Code	Fig.	Key	Part Code	Fig.	Key
1593-332-051-30	20	9	1593-406-500-30	24	1	1593-601-067-30	30	3
1593-332-052-10	20	7	1593-407-002-00	25	6		31	3
1593-332-053-00	20	8	1593-407-004-40	25	3	1593-601-069-00	24	3
1593-332-520-30	20	1	1593-407-006-00	25	7	1593-601-071-00	30	4
1593-333-500-30	20	12	1593-407-007-20	25	14		31	4
1593-334-052-00	21	3	1593-407-051-70	25	1	1593-601-072-00	30	5
1593-334-054-30	21	2	1593-407-200-60	25	5		30	12
1593-334-055-00	21	4	1593-407-510-50	25	10		31	5
1593-334-056-50	21	1	1593-407-520-40	25	15		31	12
1593-334-300-20	21	11	1593-407-530-40	25	17	1593-601-073-00	30	33
1593-334-300-30	21	11-A	1593-411-001-10	26	6		30	33-A
1593-334-300-40	21	11-B	1593-411-052-20	26	7		31	33
1593-334-310-20	21	14	1593-411-053-20	21	18-A	1593-601-074-00	31	32
1593-335-058-00	21	20		26	8	1593-601-300-00	30	25
1593-335-500-50	21	16	1593-411-201-00	26	1		31	25
1593-335-500-60	21	16-A	1593-411-610-10	26	2	1593-601-500-51	31	1
1593-341-008-00	47	73	1593-553-003-20	27	7	1593-601-500-52	30	1
1593-341-009-00	47	74	1593-553-007-20	27	12	1593-601-524-10	30	26
1593-341-012-10	47	75	1593-553-280-00	27	6		31	26
1593-342-001-00	47	51	1593-553-280-10	27	6-A	1593-601-525-10	30	27
	48	2	1593-553-550-10	27	11		31	27
1593-342-200-00	48	1	1593-553-670-30	27	2	1593-606-006-10	32	5
1593-401-007-20	22	2	1593-555-011-00	29	1		33	5
1593-401-071-50	22	3	1593-555-012-00	29	2		35	14
1593-402-051-10	22	10	1593-555-013-00	29	3	1593-611-001-00	34	13
1593-402-210-00	22	9	1593-601-002-40	30	14	1593-611-011-20	34	2
1593-402-510-40	22	13	1593-601-002-41	31	14	1593-611-011-30	34	2-A
1593-403-001-10	23	11	1593-601-009-00	30	10	1593-611-013-00	34	10
1593-403-003-10	23	10		31	10	1593-611-014-00	34	15
1593-403-004-10	23	3	1593-601-011-10	31	16	1593-611-058-00	34	12
1593-403-005-00	23	27	1593-601-012-00	31	20	1593-611-200-51	34	8
1593-403-007-20	23	21	1593-601-013-10	31	21	1593-611-200-52	34	8
1593-403-009-00	23	4	1593-601-014-00	30	35	1593-612-004-00	35	1
1593-403-052-30	23	14		31	35	1593-612-005-00	35	2
1593-403-056-40	23	15	1593-601-015-00	30	13	1593-612-220-10	35	6
1593-403-058-30	23	25		31	13	1593-612-230-00	35	9
1593-403-500-80	23	1	1593-601-054-00	30	38	1593-616-004-20	32	3
1593-403-510-80	23	2		31	38		33	3
1593-403-530-60	23	18	1593-601-061-40	30	37		35	11
1593-406-004-00	24	10		31	37	1593-621-005-00	36	9
1593-406-005-10	24	9	1593-601-062-20	30	2	1593-621-250-10	36	4
1593-406-006-00	24	13		31	2	1593-621-252-00	36	5
1593-406-008-00	24	5	1593-601-064-20	30	30	1593-621-510-30	36	2
1593-406-240-10	24	12		31	30	1593-622-004-00	49	11
1593-406-250-00	24	8	1593-601-065-10	24	4	1593-622-211-10	36	13

Numerical Index

Part Code	Fig.	Key	Part Code	Fig.	Key	Part Code	Fig.	Key
1593-622-240-00	49	3	1600-112-232-00	7	14	1608-205-207-00	12	21
1593-622-250-00	49	2	1600-505-007-00	8	9	1608-205-208-00	12	22
1593-622-270-00	49	5	1600-902-023-00	40	5	1608-205-209-00	12	23
1593-622-272-00	49	7	1608-105-001-40	5	14	1608-205-211-00	12	24
1593-622-273-00	49	8	1608-105-003-30	5	21	1608-205-212-00	12	25
1593-622-274-00	49	9	1608-105-211-00	5	24	1608-205-213-00	12	26
1593-622-275-00	49	10	1608-105-221-00	5	8	1608-205-214-00	12	27
1593-622-280-00	49	1	1608-105-222-10	5	9	1608-205-215-00	12	28
1593-623-001-00	6	16	1608-105-223-00	5	11	1608-205-216-00	12	29
	7	17		5	15	1608-205-217-00	12	30
	37	7	1608-105-230-00	5	2	1608-205-218-00	12	31
	38	13	1608-105-240-20	5	18	1608-205-219-00	12	32
1593-623-002-00	37	6	1608-122-002-10	9	15	1608-205-221-00	12	33
	38	12	1608-122-003-00	9	5	1608-205-222-00	12	34
1593-623-003-00	37	8	1608-122-004-00	9	2	1608-205-223-00	12	35
	38	14	1608-122-200-50	9	6	1608-205-224-00	12	36
1593-623-272-00	34	4	1608-122-200-60	9	6-A	1608-205-225-00	12	37
1593-623-273-00	34	5	1608-122-206-00	9	7-A	1608-205-226-00	12	38
1593-623-280-00	34	3	1608-122-206-10	9	7-B	1608-205-227-00	12	59
1593-623-503-00	37	4	1608-122-207-00	9	8-A	1608-205-228-00	12	60
	38	4	1608-122-210-20	9	7	1608-205-229-00	12	61
1593-623-504-00	37	5	1608-122-220-20	9	8	1608-205-231-00	12	62
	38	6	1608-122-230-10	9	17	1608-205-232-00	12	64
1593-623-520-00	37	16	1608-201-001-40	10	1	1608-205-233-00	12	66
	38	22	1608-201-002-30	10	8	1608-205-234-00	12	39
	47	29	1608-201-002-40	10	8-A	1608-205-235-00	12	40
1593-623-610-00	38	7	1608-201-004-20	10	13	1608-205-236-00	12	41
1593-630-210-00	49	14	1608-201-005-10	10	17	1608-205-237-00	12	42
1593-630-211-00	49	15		10	17-A	1608-205-238-00	12	43
1593-630-230-00	49	13	1608-201-006-20	10	27	1608-205-239-00	12	44
1593-901-015-00	39	9	1608-201-008-10	10	30	1608-205-241-00	12	45
1593-901-016-00	39	1	1608-201-011-20	10	36	1608-205-242-00	12	46
1593-901-017-00	39	2	1608-201-013-00	10	28	1608-205-243-00	12	47
1593-901-019-00	39	4	1608-201-200-20	10	25	1608-205-244-00	12	48
1593-904-001-00	40	1	1608-203-002-30	11	4	1608-205-245-00	12	49
1593-904-012-00	40	3	1608-203-003-20	11	8	1608-205-246-00	12	50
1593-905-001-00	41	1	1608-203-200-00	11	1	1608-205-247-00	12	51
1593-905-012-00	41	3	1608-203-210-00	11	11	1608-205-260-00	12	2
1593-906-001-00	42	1	1608-205-200-10	12	1	1608-205-263-00	12	3
1593-906-012-00	42	3	1608-205-201-00	12	15	1608-205-264-00	12	4
1600-112-231-00	6	14	1608-205-202-00	12	16	1608-205-265-00	12	5
	7	13	1608-205-203-00	12	17	1608-205-266-00	12	6
1600-112-232-00	6	10	1608-205-204-00	12	18	1608-205-267-00	12	7
	6	15	1608-205-205-00	12	19	1608-205-268-00	12	8
	7	9	1608-205-206-10	12	20	1608-205-269-00	12	9

Numerical Index

Part Code	Fig.	Key	Part Code	Fig.	Key	Part Code	Fig.	Key
1608-205-280-00	12	10	1608-310-200-10	17	1	1608-601-001-10	30	16-A
1608-205-283-00	12	11	1608-310-210-00	17	7	1608-601-002-00	30	21
1608-205-284-00	12	12	1608-312-003-40	18	11	1608-601-002-10	30	21-A
	12	58	1608-312-005-00	18	4	1608-601-003-00	30	20
1608-205-285-00	12	13	1608-312-006-20	18	19	1608-606-200-41	32	1
	12	63	1608-312-007-00	18	8	1608-606-200-42	33	1
1608-205-290-00	12	57	1608-312-200-40	18	1	1608-616-001-10	35	15
1608-206-001-00	13	4	1608-312-210-20	18	5	1608-616-002-20	35	16
1608-206-002-00	13	26	1608-312-220-00	18	17	1608-616-200-31	35	10
1608-206-004-00	13	30	1608-313-200-10	18	23	1608-616-200-32	35	10
1608-206-005-00	13	33	1608-341-001-20	47	5	1608-621-200-00	36	1
1608-206-200-30	13	1	1608-341-003-20	47	11	1608-623-200-00	37	1
1608-206-210-20	13	10	1608-341-006-10	47	18	1608-623-200-10	37	1-A
1608-206-240-00	13	18	1608-341-008-00	47	23	1608-623-210-00	38	1
1608-206-241-00	13	19	1608-341-012-00	47	58	1608-623-210-10	38	1-A
1608-206-250-00	13	34-A	1608-341-013-00	47	64	1608-901-003-10	39	8
1608-206-260-00	13	35-A	1608-341-014-10	47	65	1608-901-008-00	39	5
1608-207-003-20	14	37	1608-341-015-00	47	66	1608-901-009-00	39	3
1608-207-004-10	14	28	1608-341-016-00	47	68	1608-901-011-00	39	14
	14	38	1608-341-021-10	47	41	1608-901-012-00	39	15
1608-207-006-10	14	53	1608-341-023-00	47	36	1608-904-002-00	40	2
1608-207-007-10	14	54	1608-341-025-10	47	48	1608-904-006-00	40	4
1608-207-008-00	14	60	1608-341-026-00	47	6	1608-905-002-00	41	2
1608-207-009-20	14	61	1608-341-027-00	47	54	1608-905-006-00	41	4
1608-207-011-00	14	7	1608-341-200-00	47	53	1608-906-002-00	42	2
1608-207-012-00	14	17	1608-341-210-30	47	2	1608-906-006-00	42	4
1608-207-014-00	14	44	1608-341-220-20	47	14		43	8
1608-207-200-30	14	1	1608-341-230-20	47	24	1608-930-001-00	45	2
1608-207-210-20	14	6	1608-341-240-30	47	28	1614-922-200-20	50	1
1608-207-220-20	14	12	1608-341-260-30	47	39	1631-101-210-10	1	1
1608-207-230-00	14	16	1608-341-270-00	47	27	1631-401-300-00	22	5
1608-207-240-20	14	24	1608-341-300-40	47	1	1631-401-310-00	22	7
1608-207-250-20	14	32	1608-341-310-30	47	62	1631-611-210-20	34	1
1608-207-260-20	14	42	1608-341-320-10	47	70	1631-901-021-00	39	16
1608-207-270-10	14	45	1608-341-330-00	47	21	1631-910-002-00	44	2
1608-207-280-10	14	21	1608-401-250-00	22	1	1631-910-004-00	44	4
1608-207-290-00	14	48	1608-401-250-20	22	1-A	1631-910-006-00	44	6
1608-207-310-00	14	27	1608-553-200-40	27	1	1631-910-008-00	44	1
1608-208-200-10	15	1	1608-553-210-00	27	4	1631-910-009-00	44	3
1608-304-001-00	16	2	1608-554-001-00	28	11	1636-313-011-10	18	6-A
1608-307-200-20	16	11	1608-554-002-00	28	14	1636-901-009-00	39	7
1608-307-200-30	16	11-A	1608-554-200-10	28	1	1636-901-015-00	39	10
1608-307-210-20	16	15	1608-554-210-10	28	4	1636-901-022-00	39	13
1608-307-210-30	16	15-A	1608-554-600-20	28	7	1640-903-006-00	41	8
1608-310-002-00	17	2	1608-601-001-00	30	16	1640-903-006-10	41	8-A

Numerical Index

Part Code	Fig.	Key	Part Code	Fig.	Key	Part Code	Fig.	Key
1640-903-013-00	41	6	2500-901-027-00	39	6	3737-113-005-00	10	6
1640-903-013-10	41	6-A	2502-407-001-10	20	2	3737-122-001-00	47	16
1640-903-015-00	41	9	2706-501-003-00	35	7	3737-172-009-00	30	34
1640-903-015-10	41	9-A	2706-501-004-00	35	8		31	34
1640-903-015-20	41	9-B	3517-205-007-00	47	25	3737-172-010-00	37	9
1640-903-016-00	41	7	3560-201-015-00	35	4		38	15
1640-903-016-10	41	7-A	3600-201-013-00	18	24		49	12
1640-903-026-00	40	8	3610-631-002-00	30	8	3737-172-011-00	1	5
1640-903-033-00	40	6		31	8		2	5
1640-903-035-00	40	9	3614-261-002-00	36	8		24	18
1640-903-036-00	40	7	3621-702-003-00	23	7	3746-111-011-00	21	8
1640-904-006-00	42	8	3623-820-013-00	22	4	3746-185-014-00	37	10
1640-904-006-10	42	8-A	3625-212-007-00	23	16		38	16
1640-904-013-00	42	6	3626-276-003-00	6	17	3768-185-022-10	13	20
1640-904-013-10	42	6-A		7	18	3805-701-018-00	23	7-A
1640-904-016-10	42	7	3631-221-001-00	1	9	3908-170-020-00	32	6
1640-904-019-00	42	9		2	9		33	6
1640-904-019-10	42	9-A	3631-270-003-00	49	6	4106-105-303-00	8	5
1640-905-006-00	44	8	3631-353-001-10	10	33		20	13
1640-905-013-00	44	5	3631-353-002-10	13	31		47	34
1640-905-015-00	44	9	3631-671-003-00	14	20	4301-210-002-00	30	11
1640-905-016-00	44	7	3642-496-007-10	37	20-A		31	11
1646-116-051-00	8	5-A		38	26-A		36	14
1646-116-051-10	8	5-B		47	30-A	4319-911-001-00	45	1
1674-904-008-00	43	1-A	3643-586-001-00	5	27	6213-200-002-10	5	1
1689-440-230-00	26	2-A	3648-703-001-00	20	5	6219-755-001-00	5	3
1689-502-250-00	13	31-B	3650-261-261-00	38	8	7955-201-026-00	10	24
1701-509-007-00	21	13	3650-262-202-00	38	5	8523-202-241-00	46	1
1705-333-001-00	20	13-A	3650-270-214-00	36	3	8523-202-242-00	46	2
1705-408-350-00	13	17-B	3652-261-202-00	6	13	8592-011-204-00	9	9
1705-902-006-00	43	4		7	12	8595-901-006-00	39	11
1705-902-007-00	43	6	3656-115-001-00	14	15		43	1
1705-902-008-00	43	7	3656-221-001-10	28	8		43	5
1705-904-001-00	43	9	3659-310-004-00	5	26	8595-901-007-00	39	12
1705-904-002-00	43	10	3660-260-210-30	7	1		43	3
1705-904-002-10	43	10-A	3661-212-001-00	15	5	8654-101-230-00	9	9-A
1705-904-004-00	43	11		30	6	8654-101-232-00	9	10
1705-904-011-00	39	7-A		31	6	8654-101-233-00	9	11
	43	2	3664-276-001-00	37	20	J061-114-024-00	10	29
1725-604-052-00	30	31-A		38	26	J061-209-011-00	5	20
2111-101-011-00	10	32		47	30	J061-210-012-00	5	12
2137-223-004-00	10	23	3664-351-006-00	13	17		5	16
2144-117-002-00	34	17	3667-354-220-10	13	34		5	19
2161-439-220-10	13	17-A	3667-354-240-00	13	35		5	22
2171-213-002-00	18	24-A	3728-552-008-00	47	45		5	28

Numerical Index

Part Code	Fig.	Key	Part Code	Fig.	Key	Part Code	Fig.	Key
J061-210-015-00	3	20	V201-260-809-50	10	18-A	V211-260-802-00	13	5
J061-211-013-00	5	13	V201-260-810-00	10	22-A		13	12
	5	17	V201-260-810-50	10	22		14	43
	5	23	V201-460-802-00	9	13		18	20
J061-232-040-00	3	12	V201-460-802-50	9	13-A		47	56
J061-236-044-00	3	13-A	V201-460-804-50	9	3		47	61
J061-238-046-00	3	13	V201-461-003-00	10	34	V211-260-802-50	29	4
J061-247-055-00	4	14	V203-461-002-00	1	3	V211-260-803-00	10	19
J062-081-087-00	5	29		2	3		47	57
J062-104-111-00	10	31		6	19	V211-260-804-00	10	20
K182-002-002-00	13	23		7	20	V211-260-804-50	51	12
K182-032-000-00	13	21	V203-461-002-50	21	21	V211-261-002-00	5	25
K182-032-001-00	13	22	V210-260-601-20	9	16		22	14
K182-032-002-00	13	24		21	19		25	2
K182-032-003-00	13	25		25	4	V211-261-002-50	18	7
K211-004-007-00	51	7		31	36		21	15
K211-012-000-00	13	14		47	7		47	52
K211-012-003-00	51	2	V210-260-601-60	36	10		48	3
K211-012-005-00	51	4		49	16	V211-261-004-50	12	68
K211-012-006-00	51	5	V210-260-602-00	13	13	V211-360-801-60	13	9
K211-012-007-00	51	6		36	11		14	62
K211-012-008-00	51	10	V210-360-601-20	30	36		24	19
K211-012-009-00	51	3		47	22		32	8
K211-012-011-00	51	13	V210-360-601-60	5	6		33	8
K211-012-100-00	51	1		8	4	V211-360-802-00	3	8
P117-501-250-00	13	31-A		21	12		3	19
V111-163-002-00	37	17		30	7		4	11
	38	23		31	7		6	7
	47	31		36	10-A		7	6
V120-266-001-20	51	14	V210-360-602-00	21	12-A		22	6
V120-266-002-50	51	8		21	17		25	16
V120-366-001-60	31	17		24	11	V211-360-802-50	1	15
	31	22		24	17		2	15
	37	12		36	11-A	V211-361-002-00	6	18
	38	18	V210-360-602-50	24	11-A		7	19
V120-376-001-60	30	17	V210-660-602-00	21	17-A	V211-561-001-60	10	38
	30	22	V211-260-801-60	5	4	V211-561-002-00	4	3
V120-376-002-00	30	31		6	11		10	37
	31	31		7	10		47	8
V120-376-002-50	30	32		10	16		47	50
V201-260-803-50	14	4		17	3	V211-561-002-50	24	6
V201-260-805-00	14	50		22	8		27	3
	47	42		30	9		27	5
V201-260-806-00	13	15		31	9	V211-660-802-00	4	5
V201-260-809-50	10	18	V211-260-802-00	10	26	V251-261-004-5D	10	7

Numerical Index

Part Code	Fig.	Key	Part Code	Fig.	Key	Part Code	Fig.	Key
V271-160-602-50	4	8	V360-260-005-00	32	10-A	V401-160-010-00	47	20
V301-260-005-00	32	10		33	10-A	V401-160-012-00	23	29
	33	10	V360-260-006-00	5	7		25	20
V301-260-006-00	1	10		49	17	V401-160-016-00	21	9
	2	10	V361-260-006-00	30	29	V411-260-003-00	37	19
	6	6		31	29		38	25
	7	5	V362-260-008-00	28	12		47	33
	34	6	V363-260-008-00	6	22	V411-260-006-00	8	10
	38	9		13	16		38	10
V304-260-008-00	1	7		17	8	V411-260-008-00	14	22
	2	7		24	20		14	29
	7	15		30	39		14	39
	14	5		31	39		14	51
	14	52		32	7		14	56
	18	13		33	7		18	9
	47	44		47	35		20	10
	47	46	V363-260-010-00	3	24		28	15
V304-260-010-00	3	25		27	8		30	19
	8	7	V401-160-003-00	37	18		30	24
	12	70		38	24		31	19
	14	11		47	32		31	24
	14	31	V401-160-005-00	32	11		32	4
	14	41	V401-160-006-00	1	11		33	4
	14	55		2	11		35	3
V304-260-020-00	27	13-A		14	26		35	12
V304-460-008-00	9	14		14	34		47	37
V304-460-010-00	19	5		18	3		47	43
V304-460-016-00	21	10		34	7	V411-260-010-00	3	26
V305-260-010-00	34	14		38	11		6	21
V305-260-012-00	50	3	V401-160-008-00	1	8		7	22
V305-260-020-00	27	13		2	8		8	8
V328-262-110-00	23	12		7	16		14	8
	23	22		9	4		14	58
	24	14		9	19		15	2
V328-262-112-00	23	8		10	21		18	21
	23	28	V401-160-010-00	1	4		18	25
	25	18		2	4		20	14
V334-260-010-00	23	17		6	20		24	15
V334-460-010-00	47	12		7	21	V411-260-012-00	14	10
	47	19		10	35		14	13
V335-260-012-00	23	26		12	69		14	18
V350-160-004-00	30	28		16	5		25	19
	31	28		19	6		28	5
V350-160-006-00	30	15		21	22	V411-260-014-00	13	27
	31	15		47	13		14	46

Numerical Index

Part Code	Fig.	Key	Part Code	Fig.	Key	Part Code	Fig.	Key
V411-260-014-00	27	9	V580-140-602-50	14	2	V720-102-402-20	13	3
	27	14	V600-110-600-40	25	11	V720-103-502-40	13	7
	28	9		47	63	V720-103-502-60	13	8
V411-260-018-00	23	5		47	71	V720-111-900-80	12	65
V411-260-020-00	14	35	V600-110-600-50	11	7	V720-112-401-10	12	67
	28	2	V600-110-600-70	47	72	V720-112-401-40	13	32
V500-162-501-50	8	11	V600-110-620-40	11	9	V721-103-103-00	11	5
	35	5	V600-110-620-50	11	10	V721-103-104-50	10	15
	47	38	V600-110-620-70	16	10		11	6
V500-162-502-00	23	13	V600-110-630-40	11	13	V721-103-105-50	51	11
	23	24	V600-110-630-50	11	12	V740-130-420-80	10	5
	24	16	V600-140-600-40	25	12		10	12
V500-163-001-50	14	23	V600-150-600-50	21	5	V742-120-420-60	25	9
	14	30	V600-150-620-20	47	9	V744-120-350-70	10	14
	14	40	V600-150-620-30	23	19		47	55
	14	57	V600-150-620-50	26	5	V744-130-420-80	10	4
	18	10	V653-430-403-00	10	2		10	11
	20	11		10	9	V744-135-550-80	47	59
	28	16	V654-418-221-60	47	67	V760-150-000-00	18	2
V500-163-002-00	14	9	V704-140-012-00	47	15		22	11
	14	14	V704-140-015-00	20	3		47	4
	14	19		20	6	V762-150-000-00	14	25
	14	59		47	17		14	33
	15	3		47	40		22	12
	18	22	V704-140-016-00	16	9	V781-160-000-40	47	60
	18	26	V704-140-017-00	17	5	V999-200-003-00	19	3
	28	6	V704-140-020-00	12	54		26	3
	34	11	V704-140-025-00	11	3		46	3
V500-163-002-50	13	28		21	6	W201-261-206-00	50	2
	14	47	V705-140-020-00	9	12			
	20	15	V705-140-030-00	12	14			
	23	9		12	56			
	23	30	V705-140-035-00	47	10			
	25	21	V705-140-040-00	12	53			
	27	10		23	20			
	27	15	V705-140-042-00	10	3			
	28	10		10	10			
	47	26		25	8			
V500-163-003-00	14	36		25	13			
	28	3	V705-140-047-00	21	7			
V500-164-003-00	13	29	V705-140-052-00	12	52			
V560-160-008-00	35	13	V720-101-900-60	51	9			
V580-140-401-00	12	55	V720-102-401-50	47	3			
V580-140-502-50	47	69	V720-102-401-80	13	2			
V580-140-503-20	23	6		13	11			

Alpabetical Index

6003-097-120-10

Description	Fig.	Key	Description	Fig.	Key	Description	Fig.	Key
SYLINDER HEAD ASSY	1	1	BOLT, CONN ROD	14	6	CLIP/HOSE/13.8-14.8	21	21-A
ARM, CONTROL	24	30	BOLT, EYE	33	37	CLIP/HOSE/6.2-6.7	25	6
ARM, FLOATING	24	18	BOLT, JOINT	19	13	CLIP/HOSE/7.6-8.2	25	5
ARM, TENSION	26	1	BOLT, SEMS/M10X20	8	3	COLLAR	35	5
ARM/CONTROL	24	30-A		9	3	CONNECTINGROD ASSY	14	5-A
ARM/FLOATING COMP	24	18-A	BOLT, SEMS/M6X12	13	5		15	5
ARMATURE	34	3		24	14	CONNECTOR, GLOW PLUG	28	4
BALL	1	5	BOLT, SEMS/M8X16	8	4	CONNECTOR, OIL FILTER	10	2
	34	15		9	4	CONNECTOR/FUEL	25	1
BEARING, BALL	34	4	BOLT, SEMS/M8X25 7T	4	3	CONTROLSLEEVE	33	36-A
	34	5	BOLT/CONNECTINGROD	14	6-A	COUPLER	35	10
	35	4		14	6-B	COVER, INJ PUMP	5	23
BEARING, RB/6004	24	12		15	6	COVER/CYLINDER/HEAD	2	1
BEARING, RB/6203	24	11	BOLT/CRANK	18	10-A	CRANKSHAFT ASSY	18	1-A
BEARING, THRUST CRANK	5	13	BOLT/FLANGE	18	7-A		18	1-B
	6	2	BOLT/M10X1.25X82	1	7		18	1-C
	6	4	BOLT/M6	10	32		18	1-D
BEARING/CONN ROD	14	8		10	33	CUP/SEALING/12	5	7-A
BEARING/CONNECTING R	6	5	BOLT/M6X10	24	16	CUP/SEALING/16	10	4
	6	6	BOLT/M6X18	24	7	CUP/SEALING/28	5	3-A
	14	8-A		24	25	CUP/SEALING/36	5	4-A
	15	7	BOLT/WS	19	6	CUTTER, VALVE	12	5
	15	7-A		34	18	CYLINDERBLOCK ASSY	5	1
BEARING/CRANK/LOWER	5	12	BRACKET ROCKER SHAFT	12	12		5	1-A
BEARING/CRANK/UPPER	5	11	BRACKET, ROCKER SHAFT	12	13	CYLINDERHEAD ASSY	1	1-A
BEARING/WATER PUMP	20	3	CAMSHAFT/INJPUMP	24	8-A		1	1-B
	21	3	CAP	25	4	DOWEL	5	20
BEARING/WATERPUMP	20	4		35	13		5	20-A
	21	4	CAP, BLANK/30	10	21	EYE	30	18
BELT/VHM34.5/FAN	22	5	CAP, OIL FILLER	2	2	FAN, COOLING	22	1
BODY/OILPUMP	19	2	CAP, SEALING	1	2	FLANGEBOLT	3	3
	19	2-A		5	3		5	25
BODY/WATERPUMP	20	2		5	4		7	4
	21	2		5	7		10	6
BOLT	1	7-A	CAP/RABBER	34	21		10	7
	5	2	CARTRIDGE, OIL FILTER	19	15		10	8
	10	37	CARTRIDGE/OILFILTER	19	15-A		10	9
	12	18	CLAMP	35	9		10	10
	18	7		35	9-A		10	11
	18	10	CLAMP, 7	28	8		10	13
	19	7	CLAMP, HARNESS D	21	31		10	14
	22	4	CLAMP, STRAINER	19	10		10	15
	27	9	CLAMP/WIRE/10-15	20	21		10	38
	33	39		21	21		10	39
BOLT, ADJUST	5	27		21	21-B		11	2

Alpabetical Index

Description	Fig.	Key
FLANGEBOLT	19	11
	20	13
	20	18
	20	25
	20	26
	20	30
	21	13
	21	18
	21	25
	21	26
	21	30
	27	4
	27	6
	28	7
FLYWEIGHT	24	15
FLYWHEEL	18	5
FRAME/STARTER END	34	11
GASKET	2	5-A
	2	5-B
	3	2
	20	8
	21	8
	28	6
	29	5-A
	29	5-B
	29	6
	29	21
	30	17
	31	16
	32	17
	33	5
	33	38
	33	40
GASKET EXHAUST MANIF	4	2
	29	7
GASKET, CYL HEAD	1	6
	29	3
GASKET, NOZZLE	23	2
GASKET/COVER	5	24
	29	11
GASKET/GEARCASE	10	27
	10	27-A
	29	14
GASKET/HOUSING	20	24
	21	24

Description	Fig.	Key
GASKET/HOUSING	29	19
GASKET/PLATE	10	36
	10	36-A
	29	15
GASKET/SPACER	20	16
	21	16
	29	18
GASKET/WATER PUMP	20	12
	21	12
	29	17
GEAR, CAMSHAFT	13	2
GEAR, CRANK SHAFT	18	3
GEAR, IDLE	13	6
GEAR, INJ PUMP	24	9
GEAR, RING	18	6
GEAR/CAMSHAFT	13	2-A
GEAR/CRANK	18	3-A
GEAR/IDLE ASSY	13	6-A
GEAR/INJECTIONPUMP	24	9-A
	24	9-B
GEAR/OILPUMP ASSY	19	3
	19	3-A
GEARCASE ASSY	10	1
	10	1-A
GENERATOR/12V-8.5A	27	1
GLOWPLUG	28	3-A
	28	3-B
HANGER	11	1
HOLDER ASSY	34	9
HOLDER, DELIVERYVALVE	33	6
HOLDER, NOZZLE ASSY	30	2
HOLDER/NOZZLE ASSY	31	1
	32	1
HOSE, RUBBER	20	20
	25	2
	25	3
HOSE/RABBER	2	6
HOSE/RUBBER	21	20
HOUSING PUMP	33	1
HOUSING/STARTER ASSY	34	7
HOUSING/THERMOSTAT	20	22
	21	22
	21	22-A
INJECTIONNOZZLE ASSY	23	1-A
	23	1-B

Description	Fig.	Key
INJECTIONPUMP ASSY	24	1-A
KEY	13	3
	18	4
	24	10
KEY/07X05X09	13	3-A
	24	10-A
KEY/07X05X43	18	4-A
LEVELGAGE	5	29
LEVER, CONTROL	24	24
LINK/CONTROL	24	19
MANIFOLD ASSY	3	1
MANIFOLD, EXHAUST	4	1
METAL, CRANK	5	10
	6	1
	6	3
NIPPLE	5	21
NOZZLE	30	1
	31	18
	32	16
NOZZLE, INJ. ASSY	23	1
NUT	5	28
	10	34
	12	17
	24	26
	24	31
	30	19
	31	17
	32	18
	34	20
	35	8
NUT, CAP	2	4
NUT, CAP/M 8	10	19
NUT, FLANGE	14	7
NUT, RETAINING	30	16
	31	15
NUT/CAP	2	4-A
NUT/FLANGE	14	7-A
NUT/M08	10	12
	10	40
	12	19
	20	14
	20	19
	21	14
	21	19
NUT/M10	27	7

Alpabetical Index

6003-097-120-10

Description	Fig.	Key
NUT/M8	10	18
	34	23
NUT/NOZZLERETAINING	32	15
OILPUMP ASSY	19	1-A
OILSEAL	5	14-A
	29	10-A
O-RING	20	29
	21	29
	29	20
	33	7
	33	10
ORING	33	7-A
	33	10-A
O-RING/P 8	24	27
O-RING/P15	19	9
	29	16
PACKING	2	5
	10	20
	19	14
	19	14-A
	29	5
	29	13
PAN, OIL COMP	7	1
PIECE, THRUST	24	17
PIN	18	2
	18	2-A
	33	9
	33	13
PIN, ADAPTER	26	2
PIN, CONTROL LINK	24	20
PIN, GROOVE	10	26
PIN, PISTON	14	3
	15	3
PIN, STARTING SPRING	5	26
PIN, TUBE	5	15
PIN/ARM	10	22
PIN/IDLEGEAR	5	6
PIN/STRAIGHT	5	16
	5	17
	19	5
	19	5-A
PIN/TUBE	5	15-A
PINION, STARTER	34	12
PIPE, INJ	23	3
	23	4
PIPE, OIL	19	12
PIPE, PUMP HOUSING	20	23
	21	23
PIPE, WATER DRAIN	5	22
PIPE, WATER OUTLET	20	28
	21	28
PIPE/FUEL	25	2-A
PIPE/INJECTION ASSY	23	3-A
	23	4-A
PIPE/WATER PUMP	20	11
	21	11
PISTON	14	1
	14	1-A
	15	1
PISTON(OV/100)	16	3
PISTON/OV	16	1-A
	16	3-A
	17	1
	17	3
PISTON/OV0.50	16	1
PISTON/RELIEF VALVE	10	29
PISTON/VALVE/RELIEF	10	29-A
	10	29-B
PLATE	33	34
	35	1
PLATE COMP	35	1-A
PLATE(CONTROLLEVER)	24	29-A
PLATE, ADJUST	27	3
PLATE, CONTROL VALVE	24	29
PLATE, FRONT	10	35
PLATE, THRUST	13	4
PLATE, THRUST INJPUMP	24	13
PLATE/ADJUST	27	3-A
PLATE/FRONT	10	35-A
	10	35-B
PLATE/REAR COMP	8	1
	9	1
PLATE/T=1.80	33	18
PLATE/T=1.85	33	19
PLATE/T=1.90	33	20
PLATE/T=1.95	33	21
PLATE/T=2.00	33	22
PLATE/T=2.05	33	23
PLATE/T=2.10	33	24
PLATE/T=2.15	33	25
PLATE/T=2.20	33	26
PLATE/T=2.25	33	27
PLATE/T=2.30	33	28
PLATE/T=2.35	33	29
PLATE/T=2.40	33	30
PLATE/T=2.45	33	31
PLATE/T=2.50	33	32
PLATE/WATER PUMP	20	9
	21	9
PLUG	5	5
	10	3
	10	24
	12	11
PLUG, GLOW	28	3
PLUG/20	7	2
PLUG/PT1/2	1	3
	1	3-A
PLUG/SCREW	10	24-A
PLUNGER ASSY	33	2
POINTER	8	2
	9	2
PULLEY	18	8
	35	3
PULLEY COMP	35	3-A
PULLEY, WATER PUMP	22	2
	22	2-A
PUMP, INJ ASSY	24	1
PUMP, OIL ASSY	19	1
REGULATOR	27	2
	27	2-A
	27	2-B
RELAY, SOLENOID	28	9
REPAIR/ENGINE SET	29	1
RETAINER	34	14
RING SNAP	33	14
RING(PISTON) SET	14	2
RING(PISTON/OV)SET	16	4
RING(PISTON/OV50)SET	16	2
RING, O/G25	7	3
RING, SNAP	14	4
	15	4
RING, SNAP/ 4 E	10	23
	24	21
	26	3
RING, SNAP/12 C	10	31

Alpabetical Index

Description	Fig.	Key
RING, SNAP/16 C	12	15
RING/PISTON SET	14	2-A
	14	2-B
	15	2
RING/PISTON/OV SET	16	2-A
	16	4-A
	17	2
	17	4
RINGGEAR	18	6-A
ROCKERARM	12	9
ROCKERSHAFT ASSY	12	8-A
ROD CONTROL	33	33
ROD, CONNECTING	14	5
ROD, PUSH	12	7
RORA	34	13
ROTOR/OUTER	19	4
ROTOR/WATERPUMP	20	6
	21	6
SCREW	33	11
	33	35
	34	17
	35	11
	35	12
SCREW ADJUST	12	16
SCREW/WATER PUMP	20	10
	21	10
SCREW/WS	34	19
SEAL SET/WATER PUMP	20	5
	21	5
SEAL, BEARING CAP	5	8
	29	8
SEAL, BEARING CAP/7	5	9
	29	9
SEAL, CYL COVER	2	3
	29	4
SEAL, OIL	1	4
	5	14
	10	5
	29	2
	29	10
	29	12
SEAL/WATER PUMPPULLE	20	7
	21	7
SEAT, SPRING	33	16
	33	17
SEAT, VALVE SPRING	12	4
SHAFT, CAM	13	1
SHAFT, CAM/INJ. PUMP	24	8
SHAFT, CRANK	18	1
SHAFT, ROCKER	12	8
SHAFT, ROCKER ARMASSY	12	10
SHAFT/ROCKERARM ASSY	12	10-A
SHIM/0.10	30	5
	31	4
	32	2
SHIM/0.20	30	6
	31	5
	32	3
SHIM/0.30	30	7
	31	6
	32	4
SHIM/0.40	30	8
	31	7
	32	5
SHIM/0.50	30	9
	31	8
	32	6
SHIM/0.52	30	10
	31	9
	32	7
SHIM/0.54	30	11
	31	10
	32	8
SHIM/0.56	30	12
	31	11
	32	9
SHIM/0.58	30	13
	31	12
	32	10
SHIM/0.80	30	14
	31	13
	32	11
SHIM/INJECTION P/0.2	24	3
SHIM/INJECTION P/0.3	24	4
SHIM/INJECTION P/0.4	24	5
SHIM/INJECTION P/0.5	24	6
SHIM/INJECTIONPUMP	24	3-A
	24	4-A
	24	5-A
	24	6-A
SHIM/INJECTTON P/0.1	24	2
SLEEVE, CONTROL	33	36
SLEEVE, FRANGE	33	8
SOLENOID	28	5
SPACER	30	15
	31	14
	32	14
SPACER, FAN/39	22	3
SPACER, WATER PUMP	20	15
	21	15
SPRING	12	14
	34	16
SPRING, BRUSH	34	10
SPRING, DELIVERYVALVE	33	4
SPRING, GOVERNOR	24	23
SPRING, NOZZLE	30	4
	31	3
	32	12
SPRING, PLUNGER	33	15
SPRING, RETURN	24	28
SPRING, SETTING	24	22
SPRING, STARTING	24	34
SPRING/RELIEF VALVE	10	30
SPRING/STARTING	24	34-A
SPRING/VALVE	12	3
	12	3-A
SPRINGSEAT	30	3
	31	2
	32	13
STARTER	35	2
STARTER ASSY	27	8-A
STARTER ASSY	27	8
STARTER KIT	34	2
	34	6
STOPPER, FULL-LOAD	10	17
STRAINER	19	8
STRAINER COMP	19	8-A
STUD	1	8-A
	5	19
	20	17
	21	17
STUD, HEAD COVER	1	8
STUD/M8X40	5	18
SWITCH, THERMETER	28	2
SWITCH/OILPRESSURE	28	1

Alpabetical Index

6003-097-120-10

Description	Fig.	Key	Description	Fig.	Key	Description	Fig.	Key
SWITCH/STARTER ASSY	34	8-A						
SWITCH/STARTER ASSY	34	8						
TAPPET	12	6						
	12	6-A						
	12	6-B						
	33	12						
THERMOSTAT	20	27						
	21	27						
THRUSTPIECE	24	17-A						
VALVE, DELIVERY	33	3						
VALVE, EXHAUST	12	2						
VALVE, INTAKE	12	1						
VALVE/EXHAUST	12	2-A						
	12	2-B						
	12	2-C						
VALVE/INTAKE	12	1-A						
	12	1-B						
VALVE/RELIEF ASSY	10	28						
	10	28-A						
	10	28-B						
WASHER	18	9						
	34	22						
	35	6						
	35	7						
WASHER / M6	24	32						
WASHER, SP/M 6	24	33						
WASHER/08X14X01	10	16						
	10	25						
	29	22						
WASHER/9X22X2	10	41						
	27	5						
WATERPUMP ASSY	20	1						
	21	1						
YOKE/STARTER	34	1						

Alpabetical Index

Description	Fig.	Key
SYLINDER HEAD ASSY	1	1
ARM, CONTROL	23	30
ARM, FLOATING	23	18
ARM, TENSION	25	1
ARM/CONTROL	23	30-A
ARM/FLOATING COMP	23	18-A
ARMATURE	33	3
BALL	1	5
	33	15
BEARING	34	5
	34	11
	35	5
	35	10
BEARING, BALL	33	4
	33	5
BEARING, RB/6004	23	12
BEARING, RB/6203	23	11
BEARING, THRUST CRANK	5	13
	6	2
	6	4
BEARING/BALL	34	6
	34	11-A
BEARING/CONN ROD	13	8
BEARING/CONNECTING R	6	5
	6	6
	13	8-A
	14	7
	14	7-A
BEARING/CRANK/LOWER	5	12
BEARING/CRANK/UPPER	5	11
BEARING/WATER PUMP	19	3
	20	3
BEARING/WATERPUMP	19	4
	20	4
BELT VHM034	21	5
BODY/OILPUMP	18	2
	18	2-A
BODY/WATERPUMP	19	2
	20	2
BOLT	1	7-A
	5	2
	9	37
	11	18
	17	7
	17	10
BOLT	18	7
	21	4
	26	8
	32	39
	34	9
	34	10
	34	19
	34	20
	34	21
	34	22
	34	24
	35	9
	35	11
	35	19
	35	20
	35	21
	35	22
	35	24
BOLT, ADJUST	5	27
BOLT, CONN ROD	13	6
BOLT, EYE	32	37
BOLT, JOINT	18	13
BOLT, SEMS/M10X20	8	3
BOLT, SEMS/M6X12	12	5
	23	14
BOLT, SEMS/M8X16	8	4
BOLT, SEMS/M8X25 7T	4	3
BOLT/CONNECTINGROD	13	6-A
	13	6-B
	14	6
BOLT/CRANK	17	10-A
BOLT/FLANGE	17	7-A
BOLT/M10X1.25X82	1	7
BOLT/M6	9	32
	9	33
BOLT/M6X10	23	16
BOLT/M6X18	23	7
	23	25
BOLT/WS	18	6
	33	18
BRACKET ROCKER SHAFT	11	12
BRACKET, ROCKER SHAFT	11	13
BRUSH	34	17
	35	17
BUSH	34	15
BUSH	35	15
CAMSHAFT/INJPUMP	23	8-A
CAP	24	4
CAP, BLANK/30	9	21
CAP, OIL FILLER	2	2
CAP, SEALING	1	2
	5	3
	5	4
	5	7
CAP/RABBER	33	21
CARTRIDGE, OIL FILTER	18	15
CARTRIDGE/OILFILTER	18	15-A
CLAMP, 7	27	8
CLAMP, HARNESS D	20	31
CLAMP, STRAINER	18	10
CLAMP/WIRE/10-15	19	21
	20	21
	20	21-B
CLIP/HOSE/13.8-14.8	20	21-A
CLIP/HOSE/6.2-6.7	24	6
CLIP/HOSE/7.6-8.2	24	5
COLLOR	34	3
	35	3
CONNECTINGROD ASSY	13	5-A
	14	5
CONNECTOR, GLOW PLUG	27	4
CONNECTOR, OIL FILTER	9	2
CONNECTOR/FUEL	24	1
CONTROLSLEEVE	32	36-A
COVER	34	13
	35	13
COVER, BEARING	34	5-A
	35	6
COVER, INJ PUMP	5	23
COVER/CYLINDER/HEAD	2	1
CRANKSHAFT ASSY	17	1-A
	17	1-B
	17	1-C
	17	1-D
CUP/SEALING/12	5	7-A
CUP/SEALING/16	9	4
CUP/SEALING/28	5	3-A
CUP/SEALING/36	5	4-A
CUTTER, VALVE	11	5
CYLINDERBLOCK ASSY	5	1

Alpabetical Index

6003-097-130-10

Description	Fig.	Key
CYLINDERBLOCK ASSY	5	1-A
CYLINDERHEAD ASSY	1	1-A
	1	1-B
DOWEL	5	20
	5	20-A
EYE	29	18
FAN, COOLING	21	1
FLANGEBOLT	3	3
	5	25
	7	4
	9	6
	9	7
	9	8
	9	9
	9	10
	9	11
	9	13
	9	14
	9	15
	9	38
	9	39
	10	2
	18	11
	19	13
	19	18
	19	25
	19	26
	19	30
	20	13
	20	18
	20	25
	20	26
	20	30
	26	3
	26	5
	27	7
FLYWEIGHT	23	15
FLYWHEEL	17	5
FRAME	34	12
	35	12
FRAME ASSY	34	7
FRAME, DRIVE END ASSY	35	7
FRAME/DRIVEEND ASSY	34	7-A
FRAME/STARTER END	33	11
GASKET	2	5-A
GASKET	2	5-B
	3	2
	19	8
	20	8
	27	6
	28	5-A
	28	5-B
	28	6
	28	21
	29	17
	30	16
	31	17
	32	5
	32	38
	32	40
GASKET EXHAUST MANIF	4	2
	28	7
GASKET, CYL HEAD	1	6
	28	3
GASKET, NOZZLE	22	2
GASKET/COVER	5	24
	28	11
GASKET/GEARCASE	9	27
	9	27-A
	28	14
GASKET/HOUSING	19	24
	20	24
	28	19
GASKET/PLATE	9	36
	9	36-A
	28	15
GASKET/SPACER	19	16
	20	16
	28	18
GASKET/WATER PUMP	19	12
	20	12
	28	17
GEAR, CAMSHAFT	12	2
GEAR, CRANK SHAFT	17	3
GEAR, IDLE	12	6
GEAR, INJ PUMP	23	9
GEAR, RING	17	6
GEAR/CAMSHAFT	12	2-A
GEAR/CRANK	17	3-A
GEAR/IDLE ASSY	12	6-A
GEAR/INJECTIONPUMP	23	9-A
	23	9-B
GEAR/OILPUMP ASSY	18	3
	18	3-A
GEARCASE ASSY	9	1
	9	1-A
GENERATOR ASSY	26	1
GENERATOR ASSY	26	1-A
GLOWPLUG	27	3-A
	27	3-B
HANGER	10	1
	10	1-A
HOLDER ASSY	35	14
HOLDER ASSY	33	9
	34	14
HOLDER, BRUSH ASSY	34	16
	35	16
HOLDER, DELIVERYVALVE	32	6
HOLDER, NOZZLE ASSY	29	2
HOLDER/BRUSH ASSY	34	16-A
HOLDER/NOZZLE ASSY	30	1
	31	1
HOSE, RUBBER	19	20
	24	2
	24	3
HOSE/RABBER	2	6
HOSE/RUBBER	20	20
HOUSING PUMP	32	1
HOUSING/STARTER ASSY	33	7
HOUSING/THERMOSTAT	19	22
	20	22
	20	22-A
INJECTIONNOZZLE ASSY	22	1-A
	22	1-B
INJECTIONPUMP ASSY	23	1-A
KEY	12	3
	17	4
	23	10
KEY/07X05X09	12	3-A
	23	10-A
KEY/07X05X43	17	4-A
LEVELGAGE	5	29
LEVER, CONTROL	23	24
LINK/CONTROL	23	19
MANIFOLD ASSY	3	1

Alpabetical Index

Description	Fig.	Key	Description	Fig.	Key	Description	Fig.	Key
MANIFOLD, EXHAUST	4	1	O-RING	19	29	PIPE/FUEL	24	2-A
METAL, CRANK	5	10		20	29	PIPE/INJECTION ASSY	22	3-A
	6	1		28	20		22	4-A
	6	3		32	7	PIPE/WATER PUMP	19	11
NIPPLE	5	21		32	10		20	11
NOZZLE	29	1	ORING	32	7-A	PISTON	13	1
	30	18		32	10-A		13	1-A
	31	16	O-RING/P 8	23	27		14	1
NOZZLE, INJ. ASSY	22	1	O-RING/P15	18	9	PISTON(OV/100)	15	3
NUT	5	28		28	16	PISTON/OV	15	1-A
	9	34	PACKING	2	5		15	3-A
	11	17		9	20		16	1
	23	26		18	14		16	3
	23	31		18	14-A	PISTON/OV0.50	15	1
	29	19		28	5	PISTON/RELIEF VALVE	9	29
	30	17		28	13	PISTON/VALVE/RELIEF	9	29-A
	31	18	PAN, OIL COMP	7	1		9	29-B
	33	20	PIECE, THRUST	23	17	PLATE	32	34
	34	2	PIN	17	2		34	8
	34	23		17	2-A		35	8
	34	25		32	9	PLATE(CONTROLLEVER)	23	29-A
	35	2		32	13	PLATE, CONTROL VALVE	23	29
	35	23	PIN, ADAPTER	25	2	PLATE, FRONT	9	35
	35	25	PIN, CONTROL LINK	23	20	PLATE, THRUST	12	4
NUT, CAP	2	4	PIN, GROOVE	9	26	PLATE, THRUST INJPUMP	23	13
NUT, CAP/M 8	9	19	PIN, PISTON	13	3	PLATE/ADJUST	26	2
NUT, FLANGE	13	7		14	3		26	2-A
NUT, RETAINING	29	16	PIN, STARTING SPRING	5	26	PLATE/FRONT	9	35-A
	30	15	PIN, TUBE	5	15		9	35-B
NUT/CAP	2	4-A	PIN/ARM	9	22	PLATE/REAR COMP	8	1
NUT/FLANGE	13	7-A	PIN/IDLEGEAR	5	6		8	1-A
NUT/M08	9	12	PIN/STRAIGHT	5	16	PLATE/T=1.80	32	18
	9	40		5	17	PLATE/T=1.85	32	19
	11	19		18	5	PLATE/T=1.90	32	20
	19	14		18	5-A	PLATE/T=1.95	32	21
	19	19	PIN/TUBE	5	15-A	PLATE/T=2.00	32	22
	20	14	PINION, STARTER	33	12	PLATE/T=2.05	32	23
	20	19	PIPE, INJ	22	3	PLATE/T=2.10	32	24
NUT/M10	26	6		22	4	PLATE/T=2.15	32	25
NUT/M8	9	18	PIPE, OIL	18	12	PLATE/T=2.20	32	26
	33	23	PIPE, PUMP HOUSING	19	23	PLATE/T=2.25	32	27
NUT/NOZZLERETAINING	31	15		20	23	PLATE/T=2.30	32	28
OILPUMP ASSY	18	1-A	PIPE, WATER DRAIN	5	22	PLATE/T=2.35	32	29
OILSEAL	5	14-A	PIPE, WATER OUTLET	19	28	PLATE/T=2.40	32	30
	28	10-A		20	28	PLATE/T=2.45	32	31

Alpabetical Index

6003-097-130-10

Description	Fig.	Key
PLATE/T=2.50	32	32
PLATE/WATER PUMP	19	9
	20	9
PLUG	5	5
	9	3
	9	24
	11	11
PLUG,GLOW	27	3
PLUG/20	7	2
PLUG/PT1/2	1	3
	1	3-A
PLUG/SCREW	9	24-A
PLUNGER ASSY	32	2
POINTER	8	2
PULLEY	17	8
	34	1
	35	1
PULLEY,WATER PUMP	21	2
	21	2-A
PUMP,INJ ASSY	23	1
PUMP,OIL ASSY	18	1
REGULATOR ASSY	34	26
	35	26
RELAY,SOLENOID	27	9
REPAIR/ENGINE SET	28	1
RETAINER	33	14
RING SNAP	32	14
RING(PISTON) SET	13	2
RING(PISTON/OV)SET	15	4
RING(PISTON/OV50)SET	15	2
RING,O/G25	7	3
RING,SNAP	13	4
	14	4
RING,SNAP/ 4 E	9	23
	23	21
	25	3
RING,SNAP/12 C	9	31
RING,SNAP/16 C	11	15
RING/PISTON SET	13	2-A
	13	2-B
	14	2
RING/PISTON/OV SET	15	2-A
	15	4-A
	16	2
	16	4

Description	Fig.	Key
RINGGEAR	17	6-A
ROCKERARM	11	9
ROCKERSHAFT ASSY	11	8-A
ROD CONTROL	32	33
ROD,CONNECTING	13	5
ROD,PUSH	11	7
RORA	33	13
ROTOR ASSY	34	4-A
ROTOR ASSY	34	4
	35	4
ROTOR/OUTER	18	4
ROTOR/WATERPUMP	19	6
	20	6
SCREW	32	11
	32	35
	33	17
SCREW ADJUST	11	16
SCREW/WATER PUMP	19	10
	20	10
SCREW/WS	33	19
SEAL SET/WATER PUMP	19	5
	20	5
SEAL,BEARING CAP	5	8
	28	8
SEAL,BEARING CAP/7	5	9
	28	9
SEAL,CYL COVER	2	3
	28	4
SEAL,OIL	1	4
	5	14
	9	5
	28	2
	28	10
	28	12
SEAL/WATER PUMPPULLE	19	7
	20	7
SEAT,SPRING	32	16
	32	17
SEAT,VALVE SPRING	11	4
SHAFT,CAM	12	1
SHAFT,CAM/INJ.PUMP	23	8
SHAFT,CRANK	17	1
SHAFT,ROCKER	11	8
SHAFT,ROCKER ARMASSY	11	10
SHAFT/ROCKERARM ASSY	11	10-A

Description	Fig.	Key
SHIM/0.10	29	5
	30	4
	31	2
SHIM/0.20	29	6
	30	5
	31	3
SHIM/0.30	29	7
	30	6
	31	4
SHIM/0.40	29	8
	30	7
	31	5
SHIM/0.50	29	9
	30	8
	31	6
SHIM/0.52	29	10
	30	9
	31	7
SHIM/0.54	29	11
	30	10
	31	8
SHIM/0.56	29	12
	30	11
	31	9
SHIM/0.58	29	13
	30	12
	31	10
SHIM/0.80	29	14
	30	13
	31	11
SHIM/INJECTION P/0.2	23	3
SHIM/INJECTION P/0.3	23	4
SHIM/INJECTION P/0.4	23	5
SHIM/INJECTION P/0.5	23	6
SHIM/INJECTIONPUMP	23	3-A
	23	4-A
	23	5-A
	23	6-A
SHIM/INJECTTON P/0.1	23	2
SLEEVE,CONTROL	32	36
SLEEVE,FRANGE	32	8
SOLENOID	27	5
SPACER	29	15
	30	14
	31	14

Alpabetical Index

Description	Fig.	Key	Description	Fig.	Key	Description	Fig.	Key
SPACER, FAN/39	21	3	THERMOSTAT	19	27			
SPACER, WATER PUMP	19	15		20	27			
	20	15	THRUSTPIECE	23	17-A			
SPRING	11	14	VALVE, DELIVERY	32	3			
	33	16	VALVE, EXHAUST	11	2			
	34	18	VALVE, INTAKE	11	1			
	35	18	VALVE/EXHAUST	11	2-A			
SPRING, BRUSH	33	10		11	2-B			
SPRING, DELIVERYVALVE	32	4		11	2-C			
SPRING, GOVERNOR	23	23	VALVE/INTAKE	11	1-A			
SPRING, NOZZLE	29	4		11	1-B			
	30	3	VALVE/RELIEF ASSY	9	28			
	31	12		9	28-A			
SPRING, PLUNGER	32	15		9	28-B			
SPRING, RETURN	23	28	WASHER	17	9			
SPRING, SETTING	23	22		33	22			
SPRING, STARTING	23	34	WASHER / M6	23	32			
SPRING/RELIEF VALVE	9	30	WASHER, SP/M 6	23	33			
SPRING/STARTING	23	34-A	WASHER/08X14X01	9	16			
SPRING/VALVE	11	3		9	25			
	11	3-A		28	22			
SPRINGSEAT	29	3	WASHER/9X22X2	9	41			
	30	2		26	4			
	31	13	WATERPUMP ASSY	19	1			
STARTER ASSY	26	7-A		20	1			
STARTER ASSY	26	7	YOKE/STARTER	33	1			
STARTER KIT	33	2						
	33	6						
STOPPER, FULL-LOAD	9	17						
STRAINER	18	8						
STRAINER COMP	18	8-A						
STUD	1	8-A						
	5	19						
	19	17						
	20	17						
STUD, HEAD COVER	1	8						
STUD/M8X40	5	18						
SWITCH, THERMETER	27	2						
SWITCH/OILPRESSURE	27	1						
SWITCH/STARTER ASSY	33	8-A						
SWITCH/STARTER ASSY	33	8						
TAPPET	11	6						
	11	6-A						
	11	6-B						
	32	12						

Alpabetical Index

1608-097-100-10

Description	Fig.	Key	Description	Fig.	Key	Description	Fig.	Key
ADAPTER(90°)ORIFICE	13	18	BEARING,RB/6005	11	7	BOLT,SEMS	47	22
ADAPTER(90°/PUMP)	13	20	BEARING,RB/6005SS	21	5		47	57
ADAPTER(FILTER/B)	13	30	BEARING,RB/6007	47	72	BOLT,SEMS (SP)	13	9
ADAPTER(HIGH PRESS)	13	31	BEARING,RB/6202SS	47	9		14	62
ADAPTER(LOW PRESS)	10	33	BEARING,RB/6203SS	23	19		24	19
ADAPTER(STRAIGHT)	10	23	BEARING,RB/6204	11	9		32	8
ADAPTER/L/G3/8 ASSY	13	31-B	BEARING,RB/6205	11	10		33	8
ARM (40)	47	41	BEARING,RB/6205SS	26	5	BOLT,SEMS (S) M8X16	5	4
ARM(HOOK)	14	48	BEARING,RB/6207	16	10		6	11
ARM(HST/F) COMP	14	24	BEARING,RB/6304	11	13		7	10
ARM(HST/REVERSE)	14	32	BEARING,RB/6305	11	12		10	16
ARM(LIFT)	28	1	BEARING,RB/7004	25	6		17	3
ARM(PEDAL)	18	5	BEARING,RB/7202	25	7		22	8
ARM,PITMAN	23	18	BELT/VB038	21	2		30	9
ARM,TENTION COMP	47	14	BELT/VC-31	47	23		31	9
ARM/BRAKE COMP	17	7	BLACKET/ENGINE/LH	1	1	BOLT/8X20	4	5
	18	1	BOLT	9	18	BOLT/M 8X100	10	22-A
ARM/CONTROL ASSY	28	7	BOLT (S)/M10X45	12	68	BOLT/M 8X105	10	22
ARM/DRAG COMP	25	17	BOLT (S/N6X16)	30	11	BOLT/M 8X20	9	13
ARM/HOOD	30	37		31	11	BOLT/M 8X25	9	13-A
	31	37		36	14	BOLT/M 8X35	14	4
ARM/KNUCKLE/LH COMP	23	1	BOLT(CONNECTER/PF1/2	13	4	BOLT/M 8X50	14	50
ARM/KNUCKLE/RH COMP	23	2	BOLT(S) M10X25	18	7		47	42
ARM/PTO ASSY	20	1		21	15	BOLT/M 8X60	13	15
AXLE/FRONT ASSY	22	9		47	52	BOLT/M 8X95	10	18
BALLBEARING	12	26		48	3		10	18-A
	12	27	BOLT(S) M8X45	51	12	BOLT/M06X28	6	9
BAND	37	8	BOLT(S)7	10	38		7	8
	38	14	BOLT(SP)/M6X16	5	6	BOLT/M06X32	6	14
BAND,HOSE	37	10		8	4		7	13
	38	16		21	12	BOLT/M10X1.25X20	1	3
BAND/202	37	9		30	7		2	3
	38	15		31	7		6	19
	49	12		36	10-A		7	20
BAR/PTO	21	11	BOLT,BATTERY	6	5	BOLT/M10X1.25X25	16	4
	21	11-A		7	4	BOLT/M10X20	4	3
	21	11-B	BOLT,KMOB	34	12		10	37
BATTERY(44B19L) ASSY	7	1	BOLT,SEMS	5	25		47	8
BATTERY/38B20L ASSY	6	1		6	18		47	50
BEARING,NR/TA3030Z	10	2		7	19	BOLT/M10X25	21	21
	10	9		10	19		24	6
BEARING,RB/6004	25	11		10	20		27	3
	47	63		22	14		27	5
	47	71		25	2	BOLT/M10X30	10	34
BEARING,RB/6004S	25	12		30	36	BOLT/M12X60	50	2

Alpabetical Index

Description	Fig.	Key	Description	Fig.	Key	Description	Fig.	Key
BOLT/M6X25	4	8	BRACKET/ENGINE/RH	2	2-A	CLAMP,HARNESS	1	5
BOLT/M8X45	9	3	BREATHER,TANK CAP	35	7		2	5
BOLT/S	9	16	BULB	36	3		24	18
	10	26	BULB,LAMP/12V21W	49	4	CLAMP,MAIN HARNESS	30	34
	13	5	BUSH	12	30		31	34
	13	12	BUSH(12X14X20)	47	54	CLAMP/WIRE/09-11	5	20
	13	13	BUSH,COLUMN	24	9	CLAMP/WIRE/10-12	5	12
	14	43	BUSH/10X12X10	24	2		5	16
	18	20	BUSH/15X17X11	20	2		5	19
	21	19	BUSH/15X17X16	28	8		5	22
	25	4	BUSH/25X28X25	22	10		5	28
	29	4	CABLE	6	12	CLAMP/WIRE/10-15	3	20
	31	36		7	11	CLAMP/WIRE/11-13	5	13
	36	10	CABLE,EARTH	6	8		5	17
	36	11		7	7		5	23
	47	7	CABLE,WIRE	6	17	CLAMP/WIRE/32-40	3	12
	47	56		7	18	CLAMP/WIRE/36-44	3	13-A
	47	61	CABLE/ACCELERATOR	8	1	CLAMP/WIRE/38-46	3	13
	49	16	CABLE/PTO ASSY	20	9	CLAMP/WIRE/47-55	4	14
BOLT/SP	1	15	CAP	3	2	CLAMP/WORM/14-24	10	29
	2	15		36	6	CLEANER,AIR ASSY	4	6
	3	8	CAP,BATTERY	6	2	CLIP(B)	30	18
	3	19	CAP,FUSE BOX	37	4		30	23
	4	11		38	4		31	18
	6	7	CAP,SHAFT(A)COMP	21	18		31	23
	7	6	CAP,TANK	35	6		35	17
	21	12-A	CAP,TIRE VALVE	19	3	CLIP/HOSE/10.4-11.1	10	31
	21	17		26	3	CLIP/HOSE/8.1-8.7	5	29
	21	17-A		46	3	COLLAR	12	25
	22	6	CAP/WHEEL	21	18-A	COLLAR(12X16X12)	14	17
	24	11		26	8	COLLAR(21X35X02)	47	64
	24	11-A	CARTRIDGE ASSY	13	35-A	COLLAR,26X32X14	26	7
	24	17	CARTRIDGE/80 ASSY	13	35	COLLAR,WHEEL THRUST	16	14
	25	16	CASE	12	15		16	18
	36	11-A	CASE(PTO/FRONT)	47	53	COLLAR/17X27X02	51	6
BOLT/STUD/SEAL	10	7	CASE(PTO/RAER)	47	58	COLLAR/18X30X05	47	68
BONDEDSEAL	12	66	CASE,DIFF	16	1	COLLAR/21X25X08	25	14
BOOT	34	4	CASE/STEERING	25	1	COLLAR/25X35X02	11	2
	37	15	CASE/TRANSMISSION LH	10	1	COLLAR/26X32X41	21	4
	38	21	CASE/TRANSMISSION RH	10	8	COLLAR/26X32X53	26	6
BRACKET,ENGINE/LH	2	1	CASE/TRANSMISSION/RH	10	8-A	COLLAR/26X35X03	16	13
BRACKET,ENGINE/RH	2	2	CHARGEPUMP ASSY	12	10		16	17
BRACKET,PTO/F	21	14	CHASSIS COMP	22	1	COLLAR/31X38X06	23	21
BRACKET/ENGINE/LH	2	1-A		22	1-A	COLLAR/31X41X03	16	12
BRACKET/ENGINE/RH	1	2	CLAMP	34	18		16	16

Alpabetical Index

1608-097-100-10

Description	Fig.	Key
COLUMM,STEERING ASSY	24	8
CONNECTOR	3	16
COUPLING	9	1
COVER	12	38
	29	2
	36	5
COVER (BELT)	47	21
COVER(BRAKE)	17	1
COVER,F/PTO COMP	21	16
COVER/44X10	23	3
COVER/BODY	51	10
COVER/COUPLING	9	2
COVER/FRONT/C	30	20
	31	20
COVER/FRONT/LH	30	16
	30	16-A
	31	16
COVER/FRONT/MESH	30	14
	31	14
COVER/FRONT/PTO COMP	21	16-A
COVER/FRONT/RH	30	21
	30	21-A
	31	21
COVER/LOWER ASSY	30	25
	31	25
COVER/REAR	22	3
COVER/SPOOL	51	2
COVER/SWITCH	49	6
CUSHION,PEDAL/RUBBER	1	9
	2	9
CYLINDER ASSY	13	21
CYLINDERBLOCK ASSY	12	2
DIODE/3.0A	38	5
DRIVESCREW	12	41
DRUM,BRAKE	17	4
DUST/SEAL	13	25
ELBOW ASSY	13	31-A
ELEMENT	4	7
FAN(HST)	9	15
FENDER COMP	32	1
	33	1
FILTER ASSY	13	34
FILTER,FUEL	5	1
FILTER,SUCTION(HST)	13	6
FLANGE/CONTROL COMP	25	15

Description	Fig.	Key
FLANGEYOKE ASSY	9	7-A
	9	7-B
FUSE/32V03A	37	2
	38	2
FUSE/32V10A	37	3
	38	3
GASKET	12	62
	35	8
GASKET,MUFFLER	4	2
GAUGE,FUEL	35	9
GEAR(HELICAL/T72)	25	10
GEAR(T12-40)	11	11
GEAR(T16)	47	65
GEAR,BEVEL/12	16	6
GEAR,BEVEL/T12-45SET	11	1
GEAR/SPUR 15	11	8
GEAR/T40	16	2
GREASENIPPLE	9	10
GRIP,B	28	13
GRIP,BRAKE	18	24
GRIP/04X12X50	18	24-A
GRIP/PTO	20	13-A
GRIP/THROTTLE	8	5-A
	8	5-B
GROMMET	6	16
	7	17
	24	7
	32	2
	33	2
	36	12
	37	7
	38	13
GROMMET/10X18X50	21	13
GROMMET/10X30X5	32	3
	33	3
	35	11
GROMMET/150	37	6
	38	12
GUIDE/LH ENGINE	1	12
	2	12
GUIDE/RH ENGINE	1	13
	2	13
HANGER,SUPPORT	30	8
	31	8
HARNESS/GENERATOR	38	7

Description	Fig.	Key
HARNESS/MAIN ASSY	37	1
	37	1-A
HARNESS/MAIN/S ASSY	38	1
	38	1-A
HITCH/REAR SET	48	1
HOLDER(FUEL FILTER)	5	3
HOLDER,BATTERY	6	4
	7	3
HOLDER/JE/9-9	3	9
	4	4
HOLDER/SWITCH	34	2
	34	2-A
HOOD/A COMP	30	1
	31	1
HOOD/B	30	35
	31	35
HOOK,RADIATOR PANEL	3	23
HOSE 1300	5	8
HOSE ASSY	13	17
HOSE(620)	13	17-A
HOSE,RADIATOR/LW	3	11
HOSE,RADIATOR/UP	3	10
HOSE,VINYL	3	5
HOSE/06X10X365	5	18
HOSE/06X12X115	5	21
HOSE/07X13X120	5	26
HOSE/1970	5	9
HOSE/210	3	15
HOSE/225	5	14
HOSE/270	3	14
HOSE/320	10	30
HOSE/360	10	27
HOSE/AIR CLEANER	4	12
HOSE/HYDRAULIC/350	13	33
HOSE/HYDRO/610 ASSY	13	17-B
HST ASSY	12	1
HUB,PTO FRONT	22	13
HUB,SEAL/INPUT	11	4
HUB,STEERING COLUMN	24	10
INSULATOR	1	6
	2	6
INSULATOR/10X30X03	35	2
INSULATOR/22	22	2
INSULATOR/HOOD	30	13
	31	13

Alpabetical Index

Description	Fig.	Key
JOINT UNIVERSAL ASSY	9	6
JOINT, BALL	23	27
JOINT, BALL/LH	23	10
JOINT, BALL/RH	23	11
JOINT, CAP LING	9	17
JOINT/HST/F COMP	9	7
JOINT/HST/R COMP	9	8
JOINT/UNIVERSAL ASSY	9	6-A
JOINTT-TYPE	5	27
JOURNAL KIT	9	9
JOURNALCROSSE ASSY	9	9-A
KEY ASSY	36	8
KNOB	8	5
	20	13
	47	34
KNOB, SET/12	22	4
LABEL (LIFT)	39	8
LABEL(FUSE/D)	40	4
LABEL(FUSE/E)	42	4
	43	8
LABEL(FUSE/F)	41	4
LABEL, CAUTION/D	40	1
LABEL, CAUTION/E	42	1
LABEL, CAUTION/F	41	1
LABEL, FUEL/D	40	5
LABEL/BATTERY	43	10
	43	10-A
LABEL/CAUTION	43	11
LABEL/CAUTION/BATTER	39	13
LABEL/CAUTION/I	44	2
LABEL/CE	39	6
LABEL/D/BATTERY	40	7
	41	7
	42	7
LABEL/D/BATTERY/F	41	7-A
LABEL/D/BATTERY/T	44	7
LABEL/D/STARTER	40	9
	41	9
	42	9
	42	9-A
LABEL/D/STARTER/F	41	9-A
	41	9-B
LABEL/D/STARTER/T	44	9
LABEL/FUEL	43	9
LABEL/FUEL/I	44	4
LABEL/FUSE/I	44	6
LABEL/MAINTENANCE	39	9
LABEL/NOISE/LPA/90	39	7
LABEL/NOISE/LWA/105	39	7-A
	43	2
LABEL/OPERATION/D	40	2
LABEL/OPERATION/E	42	2
LABEL/OPERATION/F	41	2
LABEL/OPERATION/I	44	1
LABEL/PARKING	39	16
LABEL/PARKING/D	40	3
LABEL/PARKING/E	42	3
LABEL/PARKING/F	41	3
LABEL/PARKING/I	44	3
LABEL/PTO	47	75
LABEL/SW/HEAD LAMP	49	11
LABEL/W/FAN	40	8
	41	8
	42	8
	42	8-A
	43	4
LABEL/W/FAN/F	41	8-A
LABEL/W/FAN/T	44	8
LABEL/W/RADIATOR	40	6
	41	6
	42	6
	42	6-A
	43	7
LABEL/W/RADIATOR/F	41	6-A
LABEL/W/RADIATOR/T	44	5
LABEL/W/STARTER	43	6
LABEL/WARNING/BELT	39	11
	43	1
	43	1-A
	43	5
LABEL/WARNING/HOT	39	12
	43	3
LABEL/WARNING/SLOPE	39	10
LAMP, HEAD ASSY	49	2
LAMP, MONITOR	36	2
LAMP/HEAD SET	49	1
LEAD	49	3
LENS	36	13
LEVER (PTO)	47	24
LEVER(HST LIFT)	28	11
LEVER, AXLE	8	2
LEVER, PTO	20	12
LEVER/UNLOAD COMP	15	1
LIFT/270 COMP	27	1
LINING/13X50X3	8	9
LINING/50	15	5
	30	6
	31	6
LINK COMP	27	6
	27	6-A
LINK, FUSIBLE	6	13
	7	12
	38	8
LINK/A	27	11
LOCK(NEUTRAL)	14	12
MARK, FUEL	42	5
MARK, FUEL/FR	41	5
MAT (LH)	35	15
MAT/RH	35	16
METAL, BRAKE	10	13
METAL, LIFTARM	27	2
METAL, LIFTARM/R COMP	27	4
METAL/PTO	47	5
METER, HOUR ASSY	49	14
METER/HOUR SET	49	13
MUFFLER	4	1
NEEDLE(GAGE)	47	67
NEEDLEBEARING	12	28
NET, LOWER COVER/LH	30	26
	31	26
NET, LOWER COVER/RH	30	27
	31	27
NET/100X388	30	10
	31	10
NIPPLE, GREASE	18	2
	22	11
	47	4
NIPPLE, GREASE/B-M6F	14	25
	14	33
	22	12
NUT	1	7
	2	7
	3	25
	7	15
	8	7

Alpabetical Index

1608-097-100-10

Description	Fig.	Key	Description	Fig.	Key	Description	Fig.	Key
NUT	12	70	NUT/M12X1.25	23	8	O-RING/P8	12	65
	14	5		23	28	ORNAMENT/153	39	3
	14	11		25	18	ORNAMENT/153/NEO	39	14
	14	31	NUT/M16	21	10	ORNAMENT/F	39	4
	14	41	NUT/M20	27	13	ORNAMENT/HYDRO	39	5
	14	52		27	13-A	ORNAMENT/ISEKI/NEO	39	15
	14	55	NUT/M5	32	10	ORNAMENT/LH	39	1
	18	13		32	10-A	ORNAMENT/RH	39	2
	23	12		33	10	PACKING	3	18
	23	22		33	10-A		4	9
	23	26	NUT/M6	5	7	PAD	18	6
	24	14		49	17	PAD (HST)	14	44
	30	29	NUT/M8	9	14	PAD,STEERING WHEEL	24	13
	31	29		18	14	PAD/BRAKE	18	6-A
	34	5		34	17	PANEL/INSTRUMEN SET	36	1
	37	14	NUT/WASHER	6	22	PANEL/INSTRUMENT	36	9
	38	20		13	16	PANEL/RADIATOR	3	21
	47	44		17	8	PEDAL (HST)	14	42
	47	46		24	20	PIN	12	5
NUT,RING/M28X1.0	36	7		28	12		12	11
NUT,SPEED/P4	30	28		30	39		12	29
	31	28		31	39		12	42
NUT,SPEED/P6	30	15		32	7	PIN (10X18)	16	3
	31	15		33	7	PIN (10X70)	14	60
NUT/A/M12	49	7		47	35	PIN (14X54)	13	26
NUT/B/M12	49	10	OIL/FILTER ASSY	13	34-A	PIN (18X52)	47	66
NUT/M 6	1	10	OILSEAL	12	59	PIN(NEUTRAL)	14	6
	2	10		12	60	PIN,DIFF PINION	16	8
	6	6	ORIFICE	12	46	PIN,KNOCK	10	6
	7	5	ORIFICEBOLT/2.2	13	19	PIN,PTO	47	74
	34	6	O-RING	12	13	PIN,SNAP/8	32	6
	38	9		12	63		33	6
NUT/M06	6	10		12	64	PIN,SPLIT/2.5X15	8	11
	6	15	O-RING/G30	11	5		35	5
	7	9	O-RING/G45	10	15		47	38
	7	14		11	6	PIN,SPLIT/2.5X20	23	13
NUT/M10	3	24	O-RING/G55	51	11		23	24
	19	5	O-RING/P 6	51	9		24	16
	23	16	O-RING/P14	13	32	PIN,SPLIT/3 X15	14	23
	23	17	O-RING/P15	47	3		14	30
	27	8	O-RING/P18	13	2		14	40
	34	14		13	11		14	57
NUT/M10 7T P=1.25	47	12	O-RING/P22	13	3		18	10
	47	19	O-RING/P24	13	7		20	11
NUT/M12	50	3	O-RING/P26	13	8		28	16

Alpabetical Index

Description	Fig.	Key	Description	Fig.	Key	Description	Fig.	Key
PIN, SPLIT/3 X20	14	9	PLATE(L/22X100)	14	28	PTO/REAR SET	47	1
	14	14		14	38	PULLEY(VC135)	47	18
	14	19	PLATE(L/32X178)	14	54	PULLEY, TENSION	47	16
	14	59	PLATE(PARKING) COMP	18	23	PULLEY, V/2B105	21	20
	15	3	PLATE(RETURN)	47	48	PULLEY/FT80X47	20	5
	18	22	PLATE(UX27X71)	17	2	PULLEY/VC100	47	11
	18	26	PLATE, AXLE	8	3	PULLY/V2B173	21	1
	28	6	PLATE, BATTERY	6	3	PUMP, FUEL	5	5
	34	11		7	2	RADIATOR ASSY	3	1
PIN, SPLIT/3 X25	13	28	PLATE, FILLER COMP	10	25	REFLECTOR ASSY	32	9-A
	14	47	PLATE, I/22X240	29	3		33	9-A
	20	15	PLATE, I/22X475	29	1	REFLECTOR ASSY	32	9
	23	9	PLATE, I/25X486	28	4		33	9
	23	30	PLATE, LOCK	18	19	RELAY/4P	37	11
	25	21	PLATE, STEERING	25	3		38	17
	27	10	PLATE, STOPPER	9	5	RETAINERHOLDER	12	4
	27	15	PLATE, SWITCH	37	20-A	RETAINERPLATE	12	3
	28	10		38	26-A	RIM, WHEEL	19	1
	47	26		47	30-A	RIM, WHEEL FRONT	26	2
PIN, SPLIT/3X30	14	36	PLATE, TRANON	14	1	RIM/WHEEL COMP	26	2-A
	28	3	PLATE/170X215	47	51	RING, CIRCLIP	47	10
PIN, SPLIT/4 X30	13	29		48	2	RING, PTO	47	73
PIN, SPRING/5 X25 W	47	69	PLATE/CASE	10	36	RING, SNAP	51	3
PIN, SPRING/5 X32 W	23	6	PLATE/FUELPUMP	5	24	RING, SNAP/12 C	47	15
PIN, SPRING/6 X25 W	14	2	PLATE/I/19X85 COMP	5	2	RING, SNAP/15 C	20	3
PIN/08X26	28	14	PLATE/IRX13X35	37	20		20	6
PIN/10X382	34	10		38	26		47	17
PIN/15X108	27	7		47	30		47	40
PIN/15X32	27	12	PLATE/L/15X55	49	15	RING, SNAP/16 C	16	9
PIN/15X47	17	6	PLSTE(I/22X134)COMP	14	21	RING, SNAP/17 C	17	5
PIN/8X36	32	5	PLUG	3	17	RING, SNAP/20 C	9	12
	33	5		12	31	RING, SNAP/20C	12	54
	35	14		12	40	RING, SNAP/25 C	11	3
PIN/SNAP	35	13		12	43		21	6
PIN/SPRING	12	55		12	45	RING, SNAP/30 C	12	14
PINION, BEVEL/11	16	7		12	49		12	56
PIPE/BOOST	13	10	PLUG, DRAIN (1/4)	10	24	RING, SNAP/40 C	12	53
PIPE/SUCTION	13	1	PLUG, OIL	10	32		23	20
PISTON	13	22	PLUG/SCREW	47	60	RING, SNAP/42 C	10	3
PLATE	12	51	PORTBLOCK	12	16		10	10
	51	13	POST/STEERING ASSY	24	1		25	8
PLATE(BRAKE LOCK)	18	17	PROTECTOR	5	10		25	13
PLATE(HOOK) COMP	14	16		5	11	RING, SNAP/47 C	21	7
PLATE(I/20X122)	14	61		5	15	RING, SNAP/52 C	12	52
PLATE(L/16X101)	47	6	PROTECTOR, FRONT	3	4	RING/O	12	67

Alpabetical Index

1608-097-100-10

Description	Fig.	Key
ROD PACKING	13	24
ROD(HST/F)COMP	14	27
ROD(HST/REVERSE)	14	37
ROD(M10X85)	14	53
ROD(NEUTRAL)	14	7
ROD(REAR PTO)	47	36
ROD/D=8.90-8.94	23	14
ROD/DRAG	23	25
ROD/M08X140	18	8
ROD/M08X250	18	11
ROD/TIE/M10X193	23	15
RUBBER,CUSHION (A)	34	9
SCREW	31	17
	31	22
	37	12
	38	18
SCREW M3X20	37	17
	38	23
	47	31
SCREW SEMS M6X12	51	14
SCREW,SEMS	51	8
SCREW/M6X25	31	32
SCREW/M8X11	30	38
	31	38
SCREW/SP	30	17
	30	22
	30	31
	30	32
	31	31
SCREW/SP/M06X20	30	31-A
SEAL (10X05X130)	3	22
SEAL (10X05X27)	3	7
SEAL (10X10X340)	3	6
SEAL(20X10X130)	30	4
	31	4
SEAL,CLEANER	4	13
SEAL,OIL	10	5
	10	12
	12	12
	12	58
	12	61
SEAL,OIL/TC20357	10	14
	47	55
SEAL,OIL/TC30428	10	4
	10	11
SEAL,OIL/TC35558	47	59
SEAL,OIL/TC4,14247	51	7
SEAL,OIL/VC20426	25	9
SEAL/15X20X120	24	3
SEAL/15X20X170	30	30
	31	30
SEAL/20X10X690	30	2
	31	2
SEAL/20X15X530	24	4
SEAL/30X30X50	24	5
SEALKIT	12	57
SEAT ASSY	34	1
SEATSWITCH ASSY	34	3
SHAFT COMP	47	39
SHAFT(HOOK)	14	45
SHAFT(PTO) COMP	47	70
SHAFT,JOINT/PTO	47	2
SHAFT/M	12	21
SHAFT/P	12	20
SHAFT/PTO/INPUT	47	62
SHAFT/PTO/MID	21	3
SHAFT/STEERING COMP	25	5
SHAFT/WHEEL/LH COMP	16	11
	16	11-A
SHAFT/WHEEL/RH COMP	16	15
	16	15-A
SHAFTYOKE ASSY	9	8-A
SHIM(BRAKE METAL)	10	17
	10	17-A
SHOE/BRAKE/NON ASBES	17	9
SHORT COUPLER/REAR/P	37	5
	38	6
SHRUOD,FAN	3	3
SLANTBOARD/P	12	17
SNAPRING	12	9
SOCKET-HEADBOLT	12	39
SPANNER/L-TYPE	45	1
SPRING	12	6
	12	35
	12	36
	12	47
	12	50
	18	15
	47	47
SPRING(HC135)	10	28
SPRING(HE085)	14	15
SPRING(HT035)	18	4
SPRING,BRAKE SHOE	17	10
SPRING,DISK	8	6
SPRING,ROD COVER	14	20
SPRING,TENSION/46	47	49
SPRING,TENSION/86	15	4
	18	16
SPRING/D=6	34	15
SPRING/HC042	51	5
SPRING/HE014	20	7
SPRING/HE083	20	8
SPRING/HT013	18	18
	18	27
SPRINGHOLDER	12	7
	12	48
SPRINGPIN	12	37
STAY,FENDER/LH	22	5
STAY,FENDER/RH	22	7
STAY/LEVER ASSY	47	27
STAY/LEVER COMP	47	28
STAY/SEAT COMP	34	8
	34	8
STEELBALL	12	32
STEP COMP	35	10
	35	10
STOPPER	1	14
	2	14
	14	49
STOPPER,PISTON	13	23
STOPPER/SPRING	51	4
SURCLIP/HOLE	9	11
SWITCH(STARTER) ASSY	36	4
SWITCH,HEAD LAMP	49	5
SWITCH,MERIT	37	16
	38	22
	47	29
SWITCH/PUSH SET	37	13
	38	19
TANK,FUEL	35	1
THRUST	23	4
THRUST PLATE	12	22
TIRE,TURF/16-8	26	1
TIRE,TURF/23-12	19	2
TIRE/23-12	46	1

Alpabetical Index

Description	Fig.	Key
TRIGGER, TENSION	47	45
TRIM/1X06X570	30	3
	31	3
TRIM/1X6X360	30	5
	30	12
	31	5
	31	12
TRUNNIONPIN	12	23
	12	24
TUBE/23-12	46	2
TURNBUCKLE/M8	18	12
UNLOADINGVALVE	12	33
VALVE	4	10
	12	44
VALVE SET	51	1
VALVE RELIEF	12	34
VALVE, COUNTROL	13	14
VALVE/RIM	19	4
	26	4
	46	4
VALVEPLATE	12	18
	12	19
WASHER	12	8
	21	8
	47	25
	49	9
WASHER / M6	8	10
	38	10
WASHER /M12	14	10
	14	13
	14	18
	25	19
	28	5
WASHER(13X34X05)	23	7-A
WASHER, BINDING SHAFT	35	4
WASHER, PL/M 8	14	22
	14	29
	14	39
	14	51
	14	56
	18	9
	20	10
	28	15
	30	19
	30	24
WASHER, PL/M 8	31	19
	31	24
	32	4
	33	4
	35	3
	35	12
	47	37
	47	43
WASHER, PL/M14	13	27
	14	46
	27	9
	27	14
	28	9
WASHER, PL/M18	23	5
WASHER, PULLEY	23	7
WASHER, SP/M 3	37	18
	38	24
	47	32
WASHER, SP/M 5	32	11
WASHER, SP/M 6	1	11
	2	11
	14	26
	14	34
	18	3
	34	7
	38	11
WASHER, SP/M 8	1	8
	2	8
	7	16
	9	4
	9	19
	10	21
WASHER, SP/M10	1	4
	2	4
	6	20
	7	21
	10	35
	12	69
	16	5
	19	6
	21	22
	47	13
	47	20
WASHER, SP/M12	23	29
	25	20
WASHER, SP/M16	21	9
WASHER/06X16X01	30	33
	30	33-A
	31	33
WASHER/11X22X3	23	23
WASHER/11X35X02	34	13
WASHER/13X18X01	49	8
WASHER/15X24X2	20	4
WASHER/6X14X3	36	15
WASHER/9X32X2	34	16
WASHER/M10	3	26
	6	21
	7	22
	8	8
	14	8
	14	58
	15	2
	18	21
	18	25
	20	14
	24	15
WASHER/M20	14	35
	28	2
WASHER/M3	37	19
	38	25
	47	33
WEIGHT/15 SET	50	1
WHEEL, STEERING ASSY	24	12
WRENCH/BOX/10X12	45	2