Directions for use of Parts Catalogue

1. Applicable model of machines

All component and option parts used for SMM54 Mower are listed in this parts catalogue.

NOTES: SMM54-SFH240E4F・・・・・ FOR SFH240

2. Explanation for head paragraph

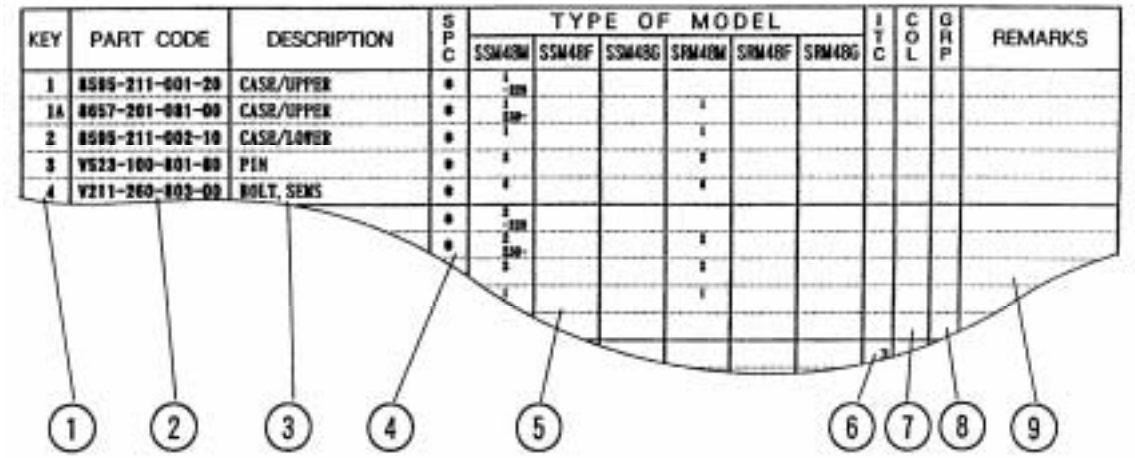

① KEY shows the location of parts diagramed in the illustration.

② Parts numbers begin with `V´ and `W´ are standard parts of the market.

③ `LH´ and `RH´ on the parts name are described against the moving direction of the machine or are described on the condition how to install parts on the machines.

④ SPC : The following symbol classifies parts to be used for machines.

`*´ means standard parts.

`T´ shows that the parts can be installed as optional parts.

`R´ shows that the parts can be used as applicable parts to replace originally equipped parts.

⑤ Upper column : QTY shows the number of parts to be used for one unit of machine.

`M´ is indicated for parts supplied by a meter long.

`l´ is indicated for parts supplied by liter.

`AR´ is indicated for parts need to be adjusted or regulated.

Lower column : serial number

—229 means serial number up to 229.

230— means serial number 230 and after.

⑥ ITC : Interchangeability

`1´…OLD ← NEW

New parts can be used in place of the old parts.

`2´…OLD → NEW

Old parts can be used in place of the new parts.

`3´…OLD →← NEW

Old parts and new parts can not be replaced each other.

⑦ COL : Color code

Color is signified with color code number for colored parts.

Please see the color list shown in the next page.

⑧ GRP : Parts shown in this column can be replaced by SET parts.

Example : Parts marked Ⓐ can be replaced by parts marked Ⓑ, and Ⓓ for Ⓒ, so the rest follow in the same alphabetical order.

⑨ Remarks

＊Other maker's part code number is shown in this column.

＊When Fig. No. is shown in the Remark column of SET parts or ASSY parts, each of their component parts are listed in said Fig. No.

3. Color :

The following colors are used color parts.

COLOR CODE	COLOR	SPRAY TYPE PARTS CODE	PAINTS 4K DRUM PARTS CODE	PAINTS 16K DRUM PARTS CODE
4 L	NEO BLUE	1300-985-001-10	1300-985-003-00	————
7 F	MIRROR BLACK	1300-954-001-10	1300-954-003-00	1300-954-004-00

NOTE : Color code is signified only for the parts assigned by the maker as color parts.

4. Serial Numbers :

For chassies serial number is shown on the LABEL.

Please see

5. Parts Order

1) Parts numbers listed in the parts catalogue are all registered in “ISEKI on-line computer”.
2) When you order parts, please make sure of correct numbers.
3) When substitute parts is available, the part number ordered will be automatically turned to a new part number.
4) Please be sure to use “ISEKI GENUINE PARTS”.
   Any other similar parts other than ISEKI parts when used may cause a trouble that makes us unable to repair or guarantee the warrant.

*** Structure Table of Model ***

MODEL FIG.	SMM54SFH240F ME4F										
1	*										
2	*										
3	*										
4	*										
5	*										
6	*										
7	*										
8	*										
9	*										
10	*										
11	*										
12	R										
13	R										
14	*										

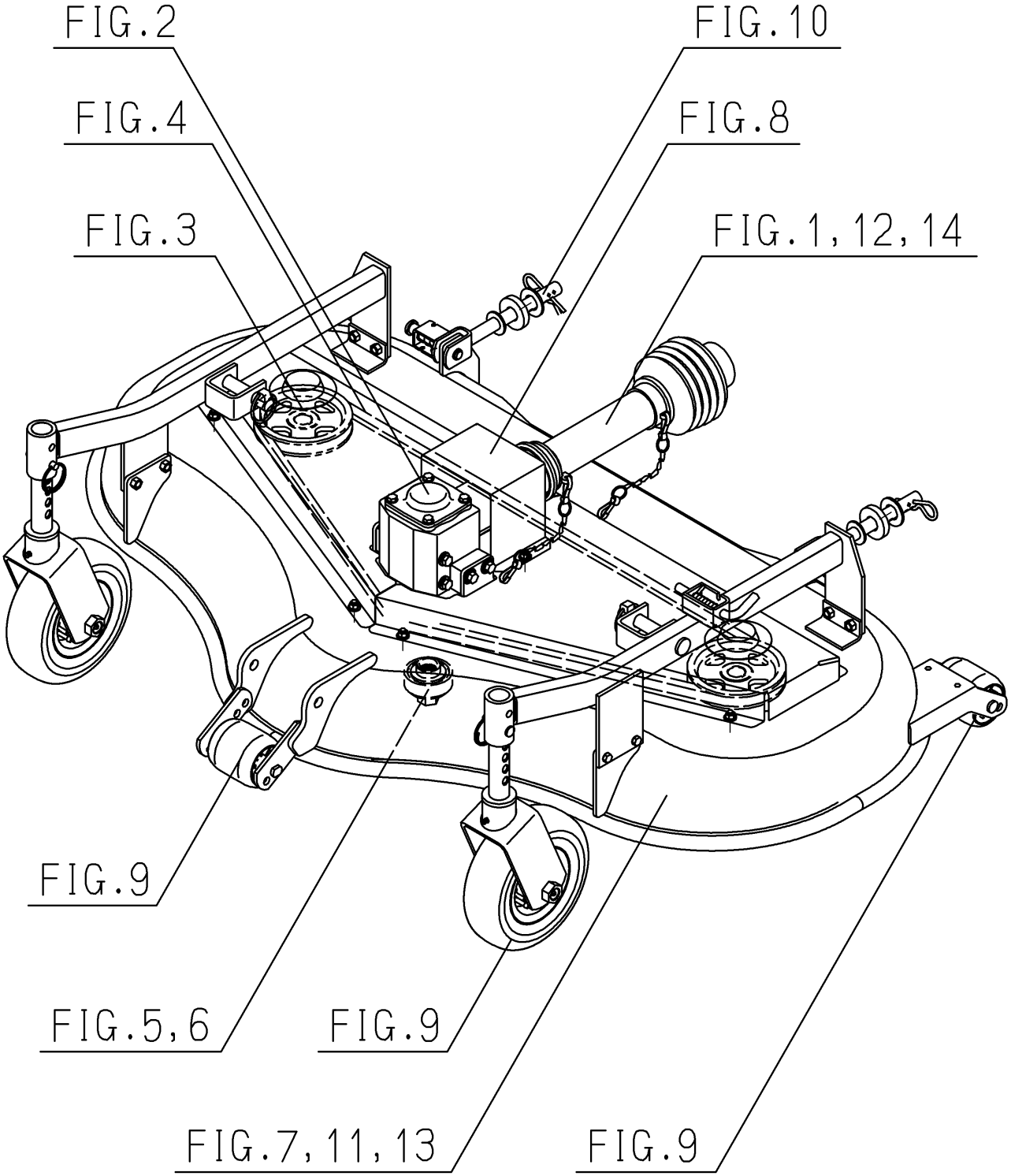
FIG.2
FIG.10
FIG.4
FIG.8
FIG.3
FIG.1,12,14
FIG.9
FIG.5,6
FIG.9
FIG.7,11,13
FIG.9

Contents

SMM54

JOINT(UNIVERSAL)SYSTEM ..... Fig. 1
CASE(BEVEL)SYSTEM ..... Fig. 2
PULLEY SYSTEM ..... Fig. 3
BELT SYSTEM ..... Fig. 4
METAL SYSTEM ..... Fig. 5
SETTING PARTS(BLADE)SYSTEM ..... Fig. 6
DECK(MOWER)SYSTEM ..... Fig. 7
COVER(BELT)SYSTEM ..... Fig. 8
WHEEL(GAUGE)SYSTEM ..... Fig. 9
LINK(LIFT)SYSTEM ..... Fig. 10
LABEL ..... Fig. 11

OPTIONAL PARTS

CASE(BEVEL/28-17)ASSY (REPAIR) ..... Fig. 12
F(SFH)SET (REPAIR) ..... Fig. 13

COMPONENT PARTS

COMPONENT PARTS
FOR 8658-101-650-00 ON Fig.1 ..... Fig. 14

FIG. 1 JOINT(UNIVERSAL)SYSTEM

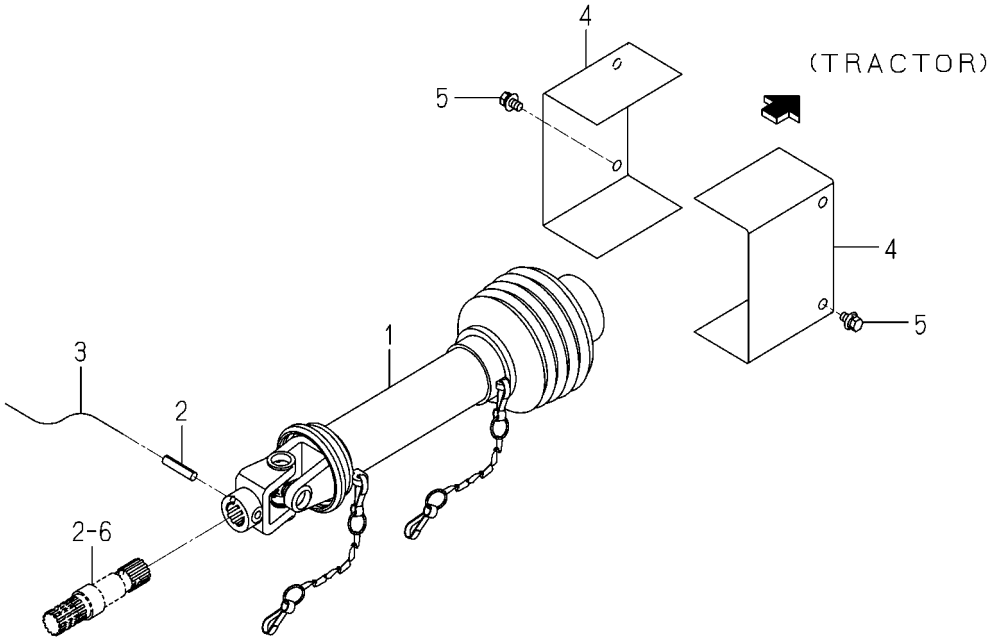

8658-101E-0100

KEY	PART CODE	DESCRIPTION	SPC	TYPE OF MODEL SMM54	SFH240F	ITC	COL	GRP	REMARKS
1	8658-101-650-00	JOINT/UNIVERSAL SET	*	1					FIG 014
2	V580-140-804-00	PIN,SPRING/8 X40 W	*	1					
3		WIRE	*	1					
4	8658-101-065-00	COVER/JOINT	*	2					
5	V211-360-801-60	BOLT,SEMS (SP)	*	4					

FIG. 2 CASE(BEVEL)SYSTEM

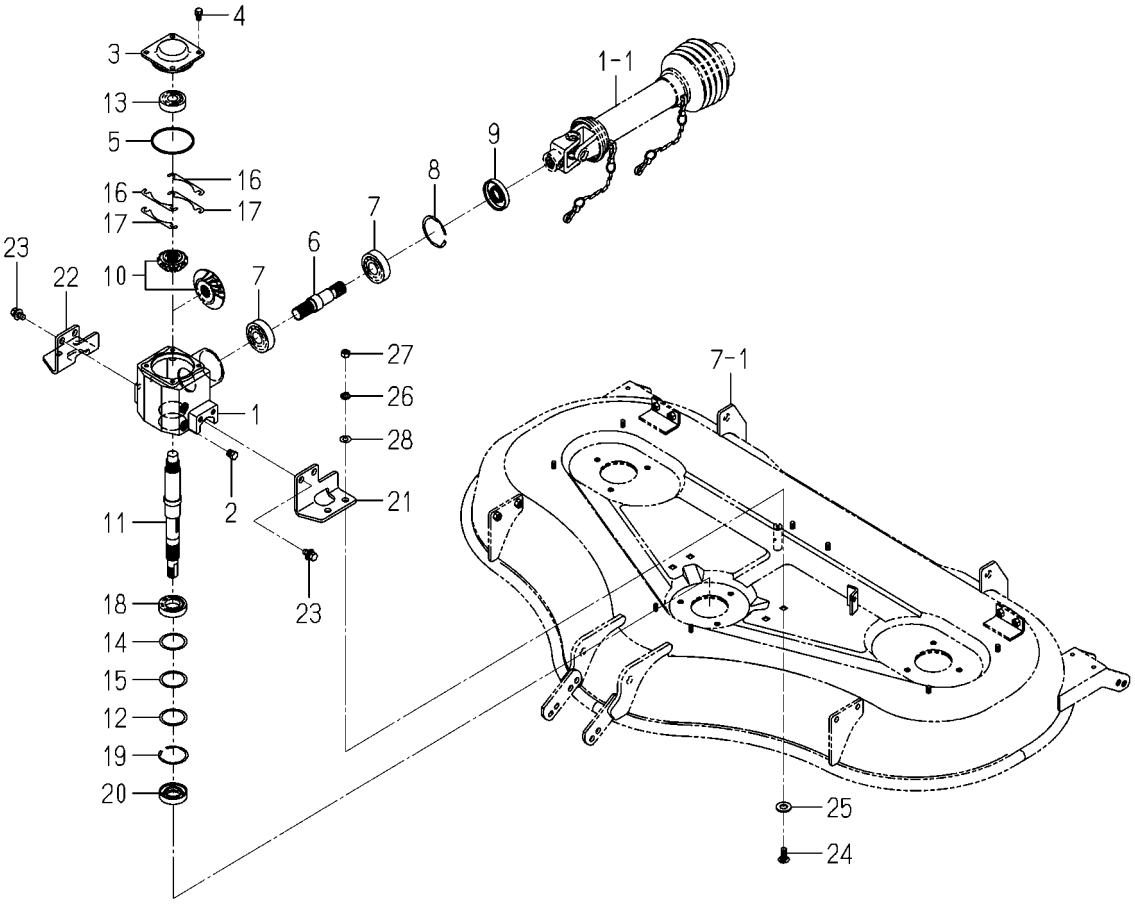

8658-201H-0100

KEY	PART CODE	DESCRIPTION	SPC	TYPE OF MODEL SMM54	SFH240F	ITC	COL	GRP	REMARKS
1	8595-201-011-00	CASE/BEVEL	*	1					
2	7955-201-026-00	PLUG,DRAIN (1/4)	*	2					
3	8595-201-012-00	COVER/CASE	*	1					
4	V211-260-801-60	BOLT,SEMS (S) M8X16	*	4					
5	V721-103-108-00	O-RING/G80	*	1					
6	8595-201-013-00	SHAFT/INPUT	*	1					
7	1594-218-001-00	BEARING/BALL 6305SH2	*	2					
8	V707-140-062-00	RING/SNAP	*	1					
9	8595-201-025-00	SEAL/OIL	*	1					
10	8595-201-410-00	GEAR/BEVEL/28-1 SET	*	1					
11	8658-201-031-00	SHAFT/OUTPUT	*	1					
12	8595-201-015-00	WASHER/45X55X01	*	1					
13	1560-214-003-00	BEARING/BALL/6304SH2	*	1					
14	8595-201-016-00	SHIM/0.1	*	1					
15	8595-201-017-00	SHIM/0.2	*	1					
16	8595-201-021-00	SHIM/0.1	*	1					
17	8595-201-022-00	SHIM/0.2	*	1					
18	V600-110-600-60	BEARING,RB 6006	*	1					
19	V707-140-055-00	RING/SNAP	*	1					
20	V744-130-551-20	SEAL,OIL/TC305512	*	1					
21	8658-201-042-01	BRACKET/CASE/LH	*	1			4L		
22	8658-201-043-01	BRACKET/CASE/RH	*	1			4L		
23	V211-661-002-00	BOLT/M10X20	*	4					
24	8597-301-002-00	BLOT/M10X25	*	4					
25	V411-260-014-00	WASHER,PL/M14	*	4					
26	V401-160-010-00	WASHER,SP/M10	*	4					
27	V304-260-010-00	NUT	*	4					
28	V411-260-010-00	WASHER/M10	*	4					

FIG. 3 PULLEY SYSTEM

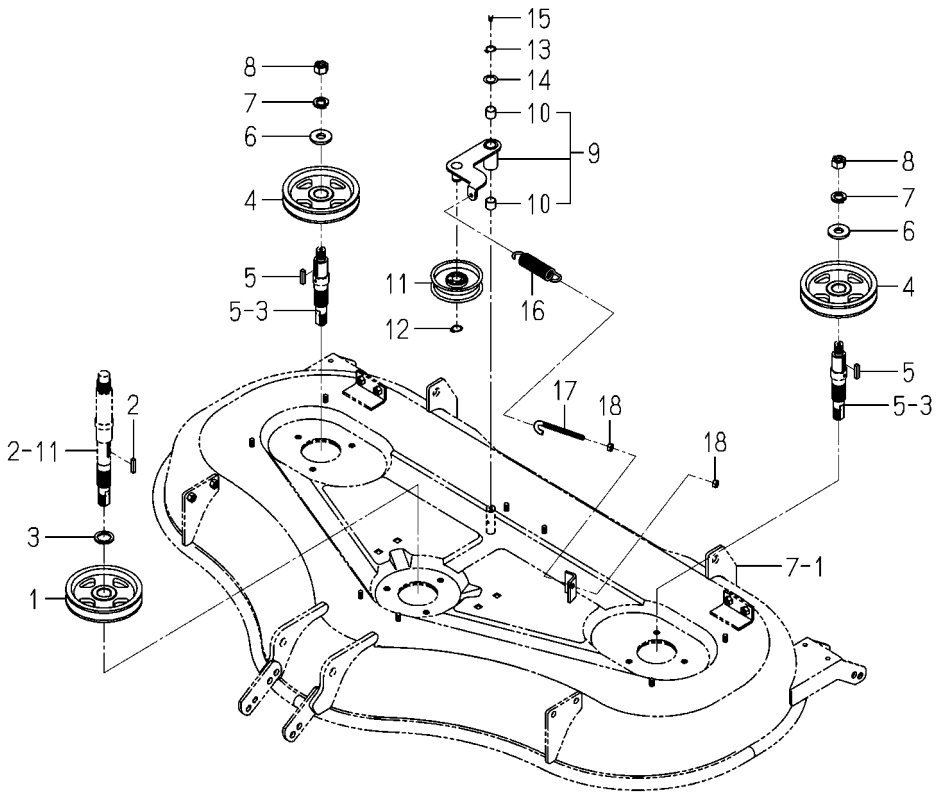

8658-202 -0100

KEY	PART CODE	DESCRIPTION	SPC	TYPE OF MODEL SMM54	SFH240F	ITC	COL	GRP	REMARKS
1	8657-202-003-20	PULLEY/VB137	*	1					
2	8654-202-016-00	KEY/06X06X28	*	1					
3	1434-211-004-00	COLLAR/26X36X3	*	1					
4	8657-202-003-20	PULLEY/VB137	*	2					
5	8654-202-016-00	KEY/06X06X28	*	2					
6	3746-111-011-00	WASHER	*	2					
7	V401-160-016-00	WASHER,SP/M16	*	2					
8	V304-460-016-00	NUT/M16	*	2					
9	8658-202-200-00	ARM/TENSION ASSY	*	1					
10	8597-202-501-00	BUSH/16X18X15	*	2					
11	8593-014-200-10	PULLEY COMP	*	1					
12	V704-140-017-00	RING,SNAP/17 C	*	1					
13	V704-140-016-00	RING,SNAP/16 C	*	1					
14	3621-211-003-00	WASHER	*	1					
15	V760-150-000-00	NIPPLE,GREASE	*	1					
16	3737-341-006-00	SPRING,CHAIN TENSION	*	1					
17	3737-341-007-00	ROD,CHAIN TENSION	*	1					
18	V304-260-008-00	NUT	*	2					

FIG. 4 BELT SYSTEM

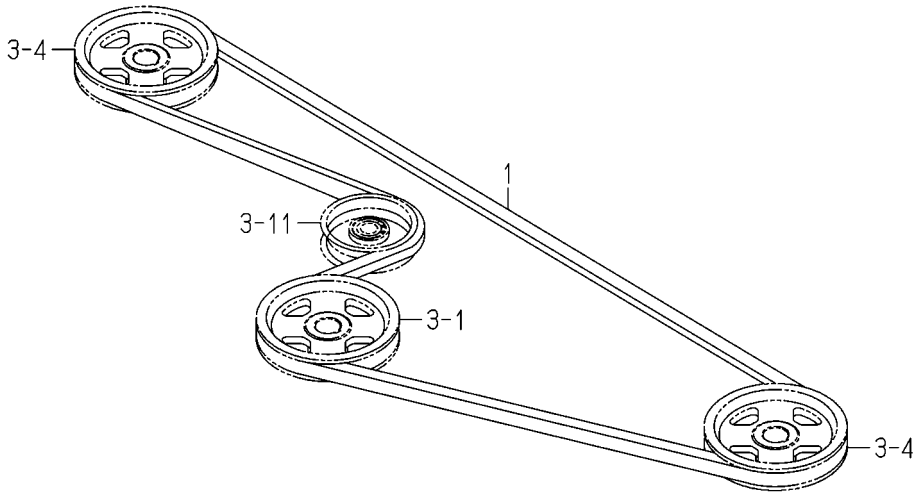

8657-203 -0100

KEY	PART CODE	DESCRIPTION	SPC	TYPE OF MODEL SMM54	SFH240F	ITC	COL	GRP	REMARKS
1	8657-203-001-00	BELT/VB101	*	1					

FIG. 5 METAL SYSTEM

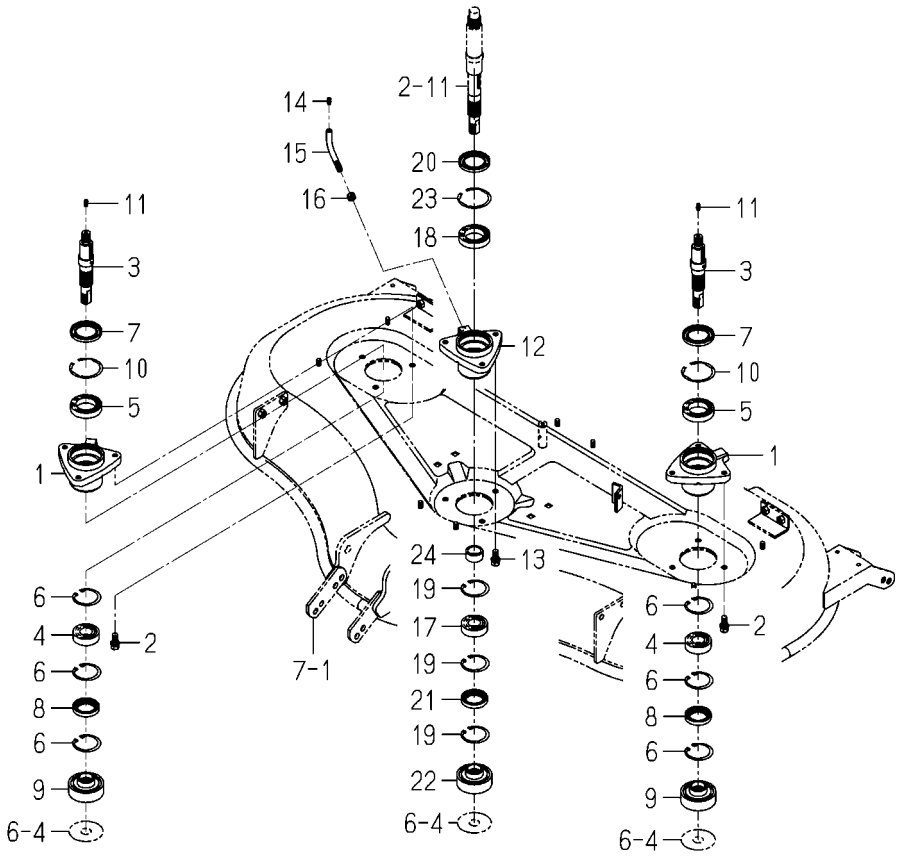

8658-301 -0100

KEY	PART CODE	DESCRIPTION	SPC	TYPE OF MODEL SMM54 SFH240F		ITC	COL	GRP	REMARKS
1	8657-301-004-00	METAL/SIDE	*	2					
2	V211-261-002-50	BOLT(S) M10X25	*	6					
3	8654-301-081-10	SHAFT/SIDE	*	2					
4	1594-221-001-00	BEARING/BALL 6205SH2	*	2					
5	V600-110-690-80	BEARING	*	2					
6	V705-140-052-00	RING,SNAP/52 C	*	6					
7	8654-301-004-00	SEAL/OIL	*	2					
8	V744-135-520-80	SEAL,OIL/TC35528	*	2					
9	8658-301-001-00	COLLAR/BRADE	*	2					
10	V707-140-062-00	RING/SNAP	*	2					
11	V760-150-000-00	NIPPLE,GREASE	*	2					
12	8657-301-005-00	METAL/CENTER	*	1					
13	V211-261-002-50	BOLT(S) M10X25	*	3					
14	V760-150-000-00	NIPPLE,GREASE	*	1					
15	8657-301-009-00	PIPE/GREASE	*	1					
16	V304-260-010-00	NUT	*	1					
17	1594-221-001-00	BEARING/BALL 6205SH2	*	1					
18	V600-110-690-80	BEARING	*	1					
19	V705-140-052-00	RING,SNAP/52 C	*	3					
20	8654-301-004-00	SEAL/OIL	*	1					
21	V744-135-520-80	SEAL,OIL/TC35528	*	1					
22	8658-301-001-00	COLLAR/BRADE	*	1					
23	V707-140-062-00	RING/SNAP	*	1					
24	8657-301-008-00	COLLER/26X34X15	*	1					

FIG. 6 SETTING PARTS(BLADE)SYSTEM

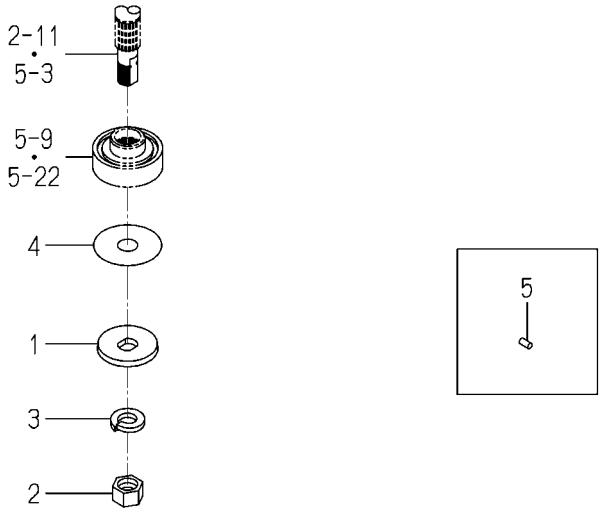

8658-306 -0100

KEY	PART CODE	DESCRIPTION	SPC	TYPE OF MODEL SMM54	SFH240F	ITC	COL	GRP	REMARKS
1	8595-306-005-10	WASHER/20X60X06	*	3					
2	8595-306-007-00	NUT/M20X1.5	*	3					
3	V401-160-020-00	WASHER,SP/M20	*	3					
4	8595-306-006-00	SHIM/1.2	*	3					
5	8658-306-003-00	PIN/PARALLEL	*	6					

FIG. 7 DECK(MOWER)SYSTEM

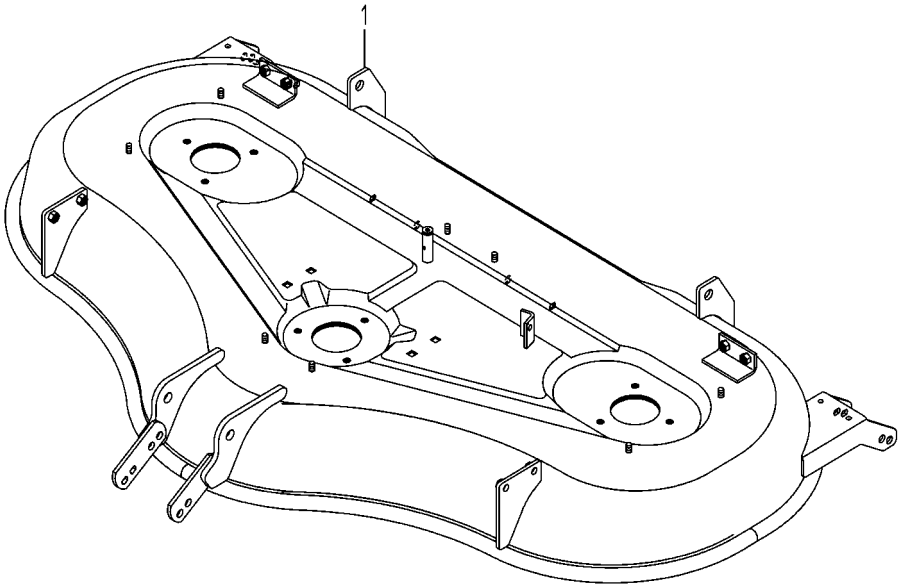

8658-402H-0100

KEY	PART CODE	DESCRIPTION	SPC	TYPE OF MODEL SMM54 SFH240F		ITC	COL	GRP	REMARKS
1	8658-402-610-00	DECK/MOWER/54/SFH	*	1			4L		

FIG. 8 COVER(BELT)SYSTEM

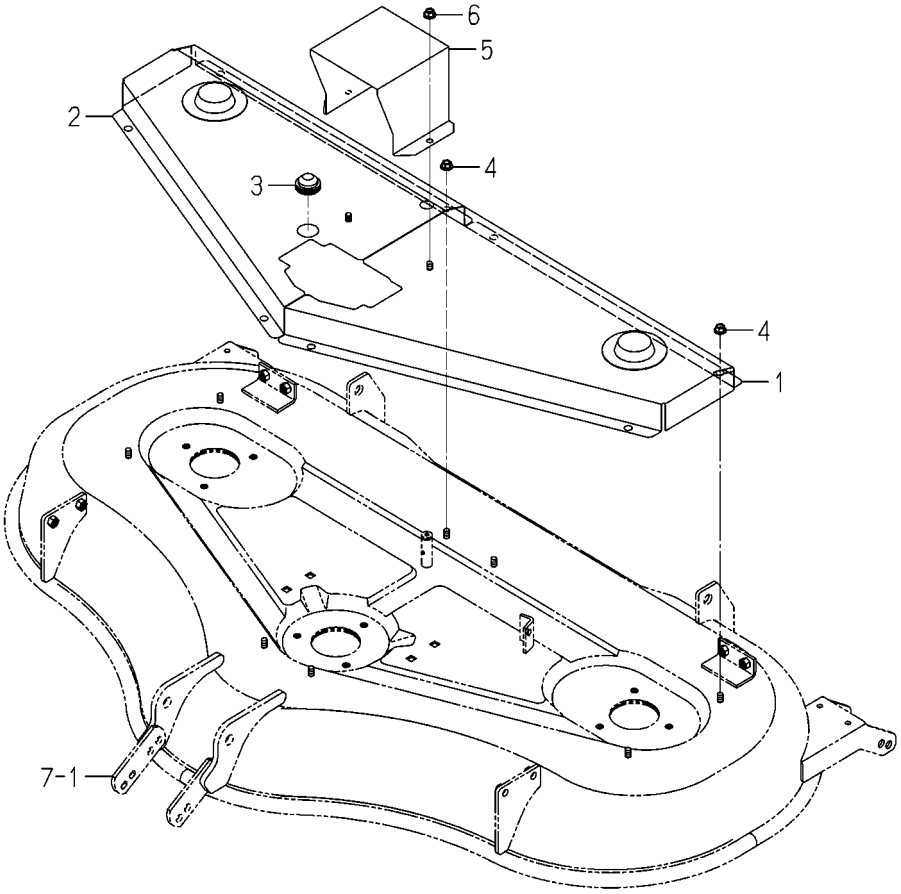

8658-407J-0100

KEY	PART CODE	DESCRIPTION	SPC	TYPE OF MODEL SMM54	SFH240F	ITC	COL	GRP	REMARKS
1	8658-407-650-00	COVER/B/L/SFH/F COMP	*	1			4L		
2	8658-407-660-00	COVER/B/R/SFH/F COMP	*	1			4L		
3	2149-602-012-00	CAP/32	*	1					
4	V362-260-008-00	NUT/WASHER	*	8					
5	8658-407-065-10	COVER/UNIVERSAL	*	1			4L		
6	V362-260-008-00	NUT/WASHER	*	2					

FIG. 9 WHEEL(GAUGE)SYSTEM

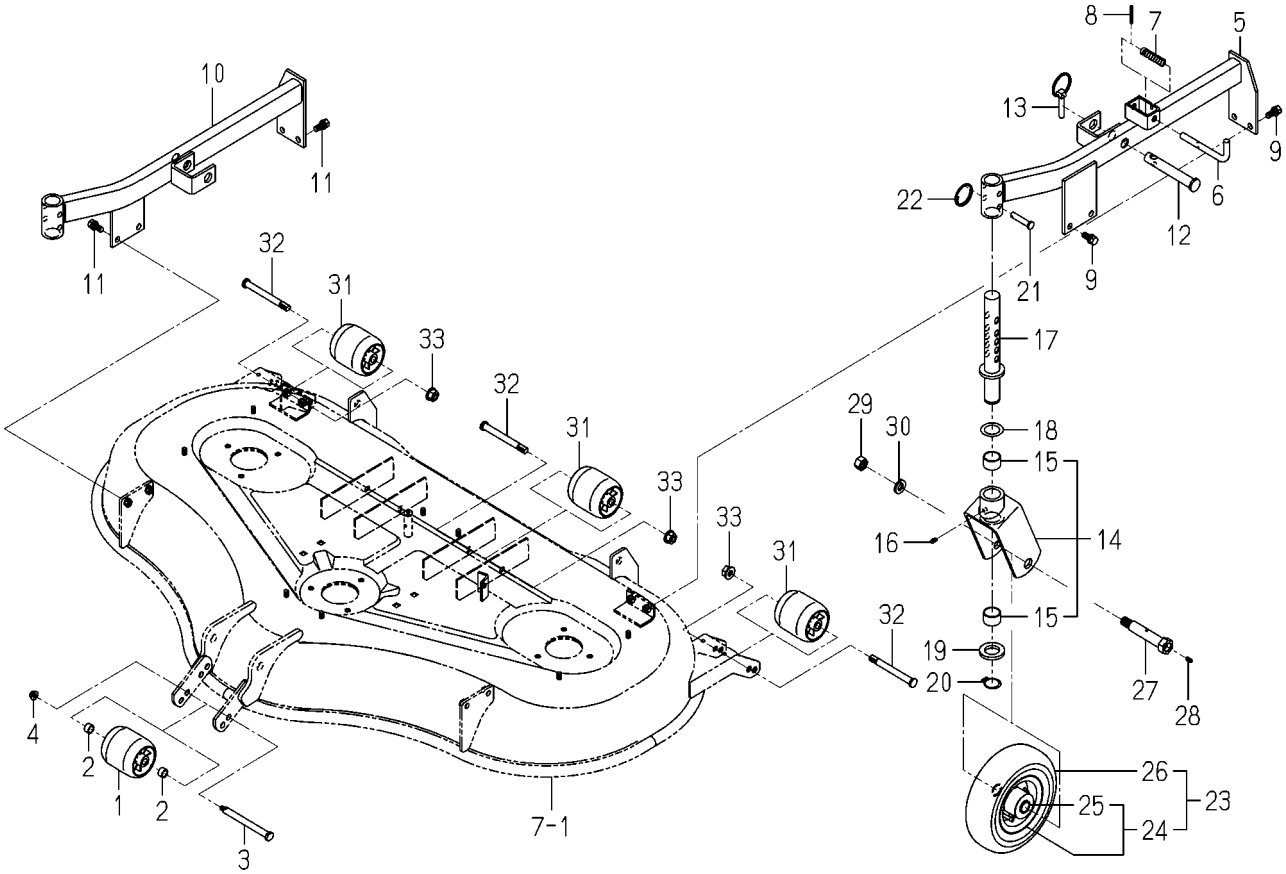

8658-501E-0100

KEY	PART CODE	DESCRIPTION	SPC	TYPE OF MODEL SMM54 SFH240F		ITC	COL	GRP	REMARKS
1	8595-501-001-20	WHEEL/GAUGE/FRONT	*	1					
2	3664-416-072-00	WASHER/13X17X10	*	2					
3	8654-501-041-00	PIN/12X133	*	1					
4	V362-260-008-00	NUT/WASHER	*	1					
5	8658-501-610-00	ARM/GAUGE/LH COMP	*	1			4L		
6	8654-501-042-00	STOPPER/MOWER	*	1					
7	8654-501-043-00	SPRING/HC058	*	1					
8	V580-140-404-00	PIN,SPRING/4X40	*	1					
9	V211-261-002-50	BOLT(S) M10X25	*	4					
10	8658-501-620-00	ARM/GAUGE/RH COMP	*	1			4L		
11	V211-261-002-50	BOLT(S) M10X25	*	4					
12	8595-510-004-00	PIN/19X135	*	2					
13	1673-525-002-30	LINKPIN	*	2					
14	8595-501-310-01	FORK/WHEEL ASSY	*	2			4L		
15	8654-501-201-00	BUSH/30X34X20	*	4					
16	V760-150-000-00	NIPPLE,GREASE	*	2					
17	8595-501-280-01	PIN/GAUGE COMP	*	2			4L		
18	1427-432-005-00	COLLAR,THRUST	*	2					
19	3670-701-010-00	WASHER/30X50X05	*	2					
20	V704-140-030-00	RING,SNAP/30 C	*	2					
21	2144-106-005-00	PIN/10X53	*	2					
22	8654-501-006-10	SPRING/CLIP	*	2					
23	8595-501-320-10	WHEEL/GAUGE ASSY	*	2					
24	8595-501-350-10	WHELL ASSY	*	2					
25	8595-501-351-10	RBB	*	4					
26	8595-501-360-10	TIRE/8X3.00-4 ASSY	*	2					
27	8595-501-007-00	PIN/20X112	*	2					
28	V760-150-000-00	NIPPLE,GREASE	*	2					
29	V304-460-016-00	NUT/M16	*	2					
30	V401-160-016-00	WASHER,SP/M16	*	2					

FIG. 9 WHEEL(GAUGE)SYSTEM

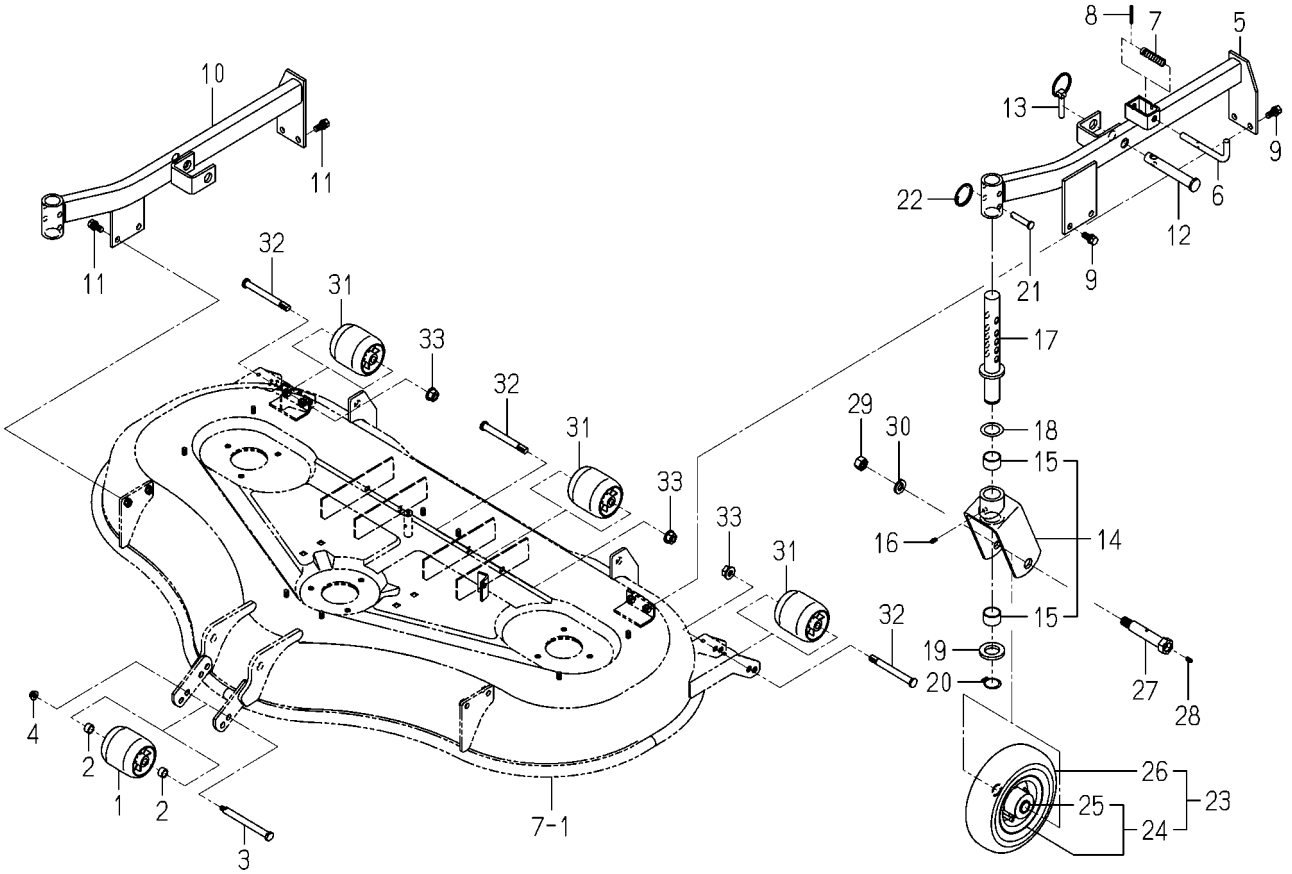

8658-501E-0100

KEY	PART CODE	DESCRIPTION	SPC	TYPE OF MODEL SMM54 SFH240F		ITC	COL	GRP	REMARKS
31	8595-501-001-20	WHEEL/GAUGE/FRONT	*	4					
32	8595-505-051-30	PIN/12X117	*	4					
33	V360-260-012-00	NUT/WASHER	*	4					

FIG. 10 LINK(LIFT)SYSTEM

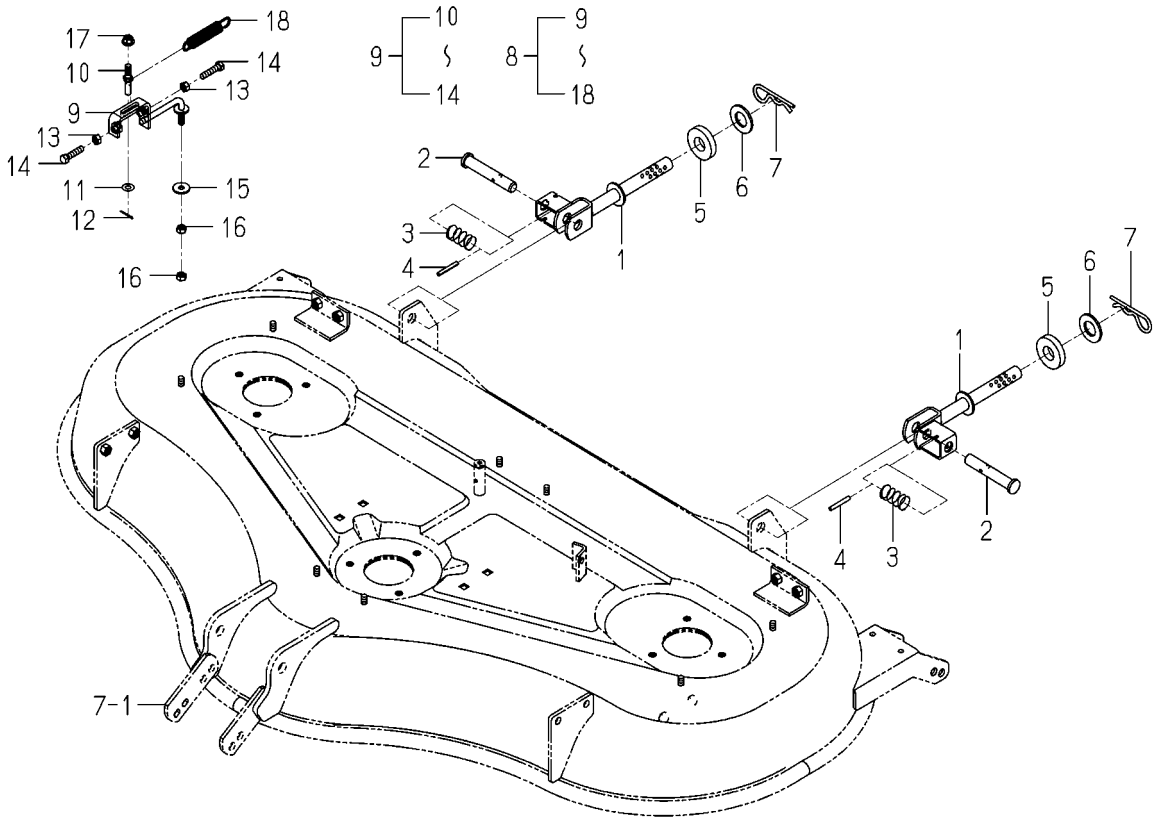

8658-510 -0100

KEY	PART CODE	DESCRIPTION	SPC	TYPE OF MODEL SMM54 SFH240F		ITC	COL	GRP	REMARKS
1	8658-510-610-00	PIN/LIFT COMP	*	2					
2	8595-608-082-10	PIN/16X96	*	2					
3	1560-601-028-00	SPRING/HC042	*	2					
4	V580-140-504-00	PIN,SPRING/5 X40 W	*	2					
5	8654-510-002-00	SPACER	*	4					
6	V411-260-022-00	WASHER,PL/M22	*	2					
7	1444-514-005-10	PIN,HAIR (19)	*	2					
8	8658-510-630-00	ROD/UPSTOP SET	*	1					
9	8658-510-640-00	ROD/UPSTOP ASSY	*	1					
10	1771-313-052-00	PIN/08X50	*	1					
11	V411-260-008-00	WASHER,PL/M 8	*	1					
12	V500-162-502-00	PIN,SPLIT/2.5X20	*	1					
13	V304-260-008-00	NUT	*	2					
14	V201-260-803-50	BOLT/M 8X35	*	2					
15	3560-201-015-00	WASHER,BINDING SHAFT	*	1					
16	V304-260-008-00	NUT	*	2					
17	V362-260-008-00	NUT/WASHER	*	1					
18	1105-106-001-00	SPRING/HC094	*	1					

FIG. 11 LABEL

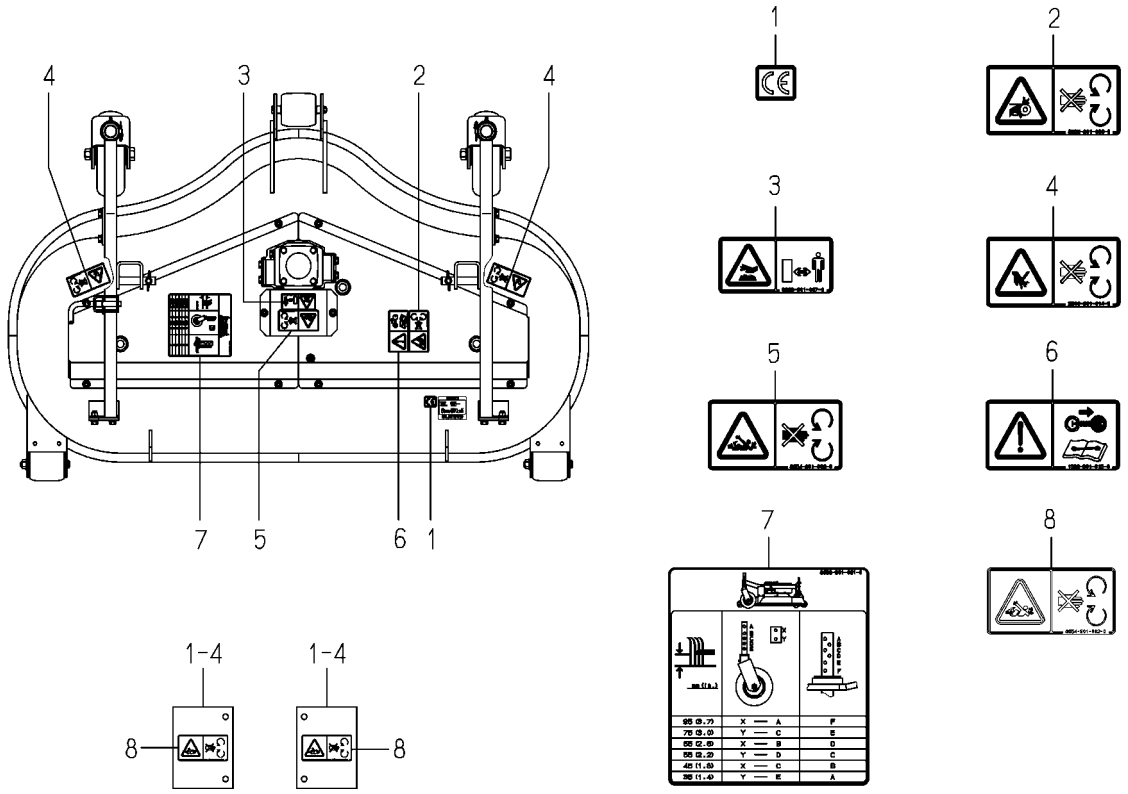

8658-901J-0100

KEY	PART CODE	DESCRIPTION	SPC	TYPE OF MODEL SMM54	SFH240F	ITC	COL	GRP	REMARKS
1	2500-901-027-00	LABEL/CE	*	1					
2	8595-901-006-00	LABEL/WARNING/BELT	*	1					
3	8595-901-007-00	LABEL/WARNING/HOT	*	1					
4	2500-901-014-30	LABEL/DANGER	*	2					
5	8654-901-002-00	LABEL/PTO	*	1					
6	1593-901-015-00	LABEL/MAINTENANCE	*	1					
7	8658-901-061-00	LABEL/CUTTING	*	1					
8	8654-901-002-00	LABEL/PTO	*	2					

FIG. 12 CASE(BEVEL/28-17)ASSY (REPAIR)

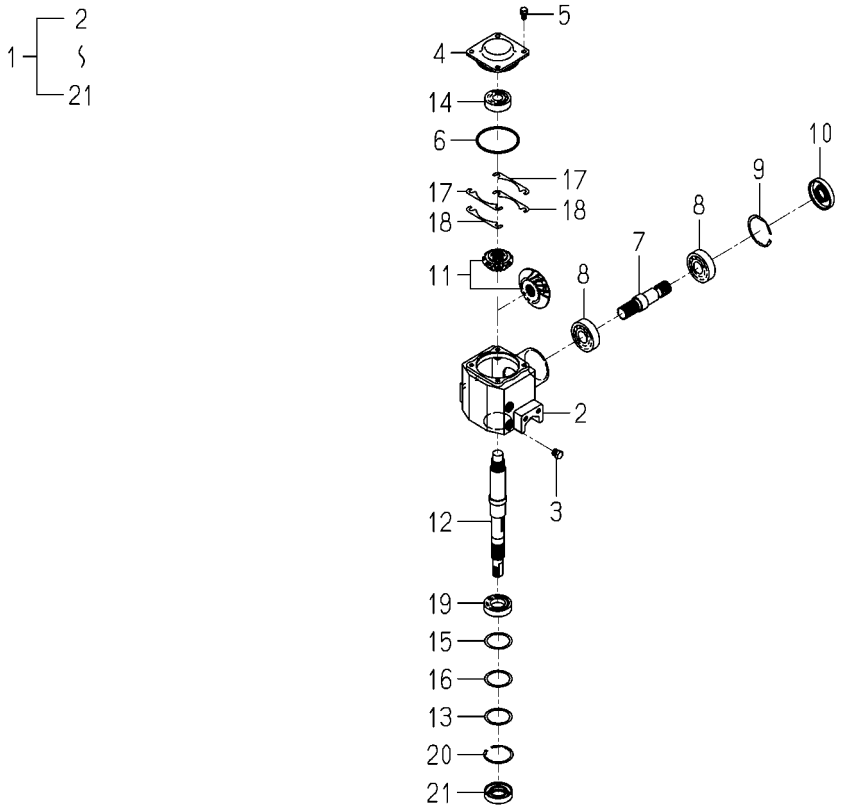

8658-201Y-0100

KEY	PART CODE	DESCRIPTION	SPC	TYPE OF MODEL SMM54	TYPE OF MODEL SFH240F	ITC	COL	GRP	REMARKS
1	8658-201-660-00	CASE/BEVEL/28-1 ASSY	R	1					
2	8595-201-011-00	CASE/BEVEL	R	1					
3	7955-201-026-00	PLUG,DRAIN (1/4)	R	2					
4	8595-201-012-00	COVER/CASE	R	1					
5	V211-260-801-60	BOLT,SEMS (S) M8X16	R	4					
6	V721-103-108-00	O-RING/G80	R	1					
7	8595-201-013-00	SHAFT/INPUT	R	1					
8	1594-218-001-00	BEARING/BALL 6305SH2	R	2					
9	V707-140-062-00	RING/SNAP	R	1					
10	8595-201-025-00	SEAL/OIL	R	1					
11	8595-201-410-00	GEAR/BEVEL/28-1 SET	R	1					
12	8658-201-031-00	SHAFT/OUTPUT	R	1					
13	8595-201-015-00	WASHER/45X55X01	R	1					
14	1560-214-003-00	BEARING/BALL/6304SH2	R	1					
15	8595-201-016-00	SHIM/0.1	R	2					
16	8595-201-017-00	SHIM/0.2	R	1					
17	8595-201-021-00	SHIM/0.1	R	4					
18	8595-201-022-00	SHIM/0.2	R	2					
19	V600-110-600-60	BEARING,RB 6006	R	1					
20	V707-140-055-00	RING/SNAP	R	1					
21	V744-130-551-20	SEAL,OIL/TC305512	R	1					

FIG. 13 F(SFH)SET (REPAIR)

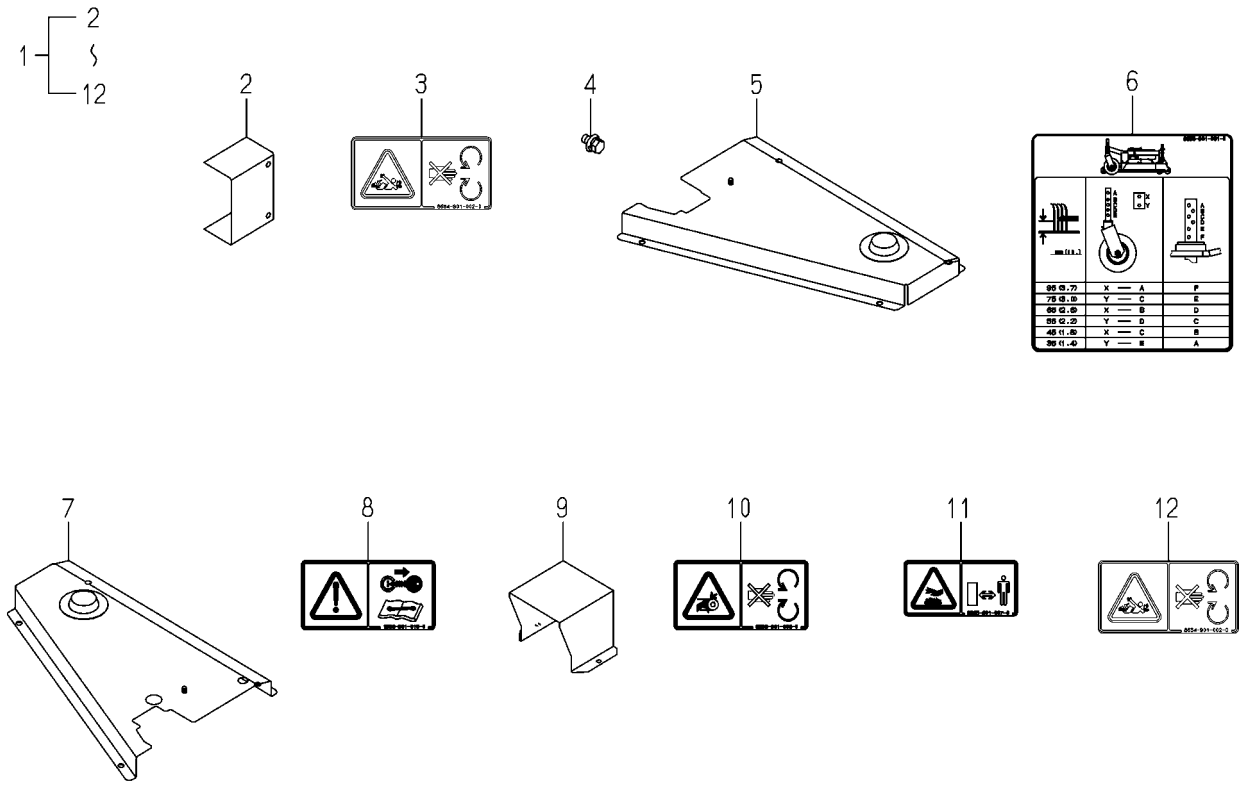

8658-950A-0100

KEY	PART CODE	DESCRIPTION	SPC	TYPE OF MODEL SMM54	SFH240F	ITC	COL	GRP	REMARKS
1	8658-950-600-00	F/SFH SET	R	1					
2	8658-101-065-00	COVER/JOINT	R	2					
3	8654-901-002-00	LABEL/PTO	R	2					
4	V211-360-801-60	BOLT,SEMS (SP)	R	4					
5	8658-407-650-00	COVER/B/L/SFH/F COMP	R	1			4L		
6	8658-901-061-00	LABEL/CUTTING	R	1					
7	8658-407-660-00	COVER/B/R/SFH/F COMP	R	1			4L		
8	1593-901-015-00	LABEL/MAINTENANCE	R	1					
9	8658-407-065-10	COVER/UNIVERSAL	R	1			4L		
10	8595-901-006-00	LABEL/WARNING/BELT	R	1					
11	8595-901-007-00	LABEL/WARNING/HOT	R	1					
12	8654-901-002-00	LABEL/PTO	R	1					

FIG. 14 COMPONENT PARTS FOR 8658-101-650-00 ON Fig.1

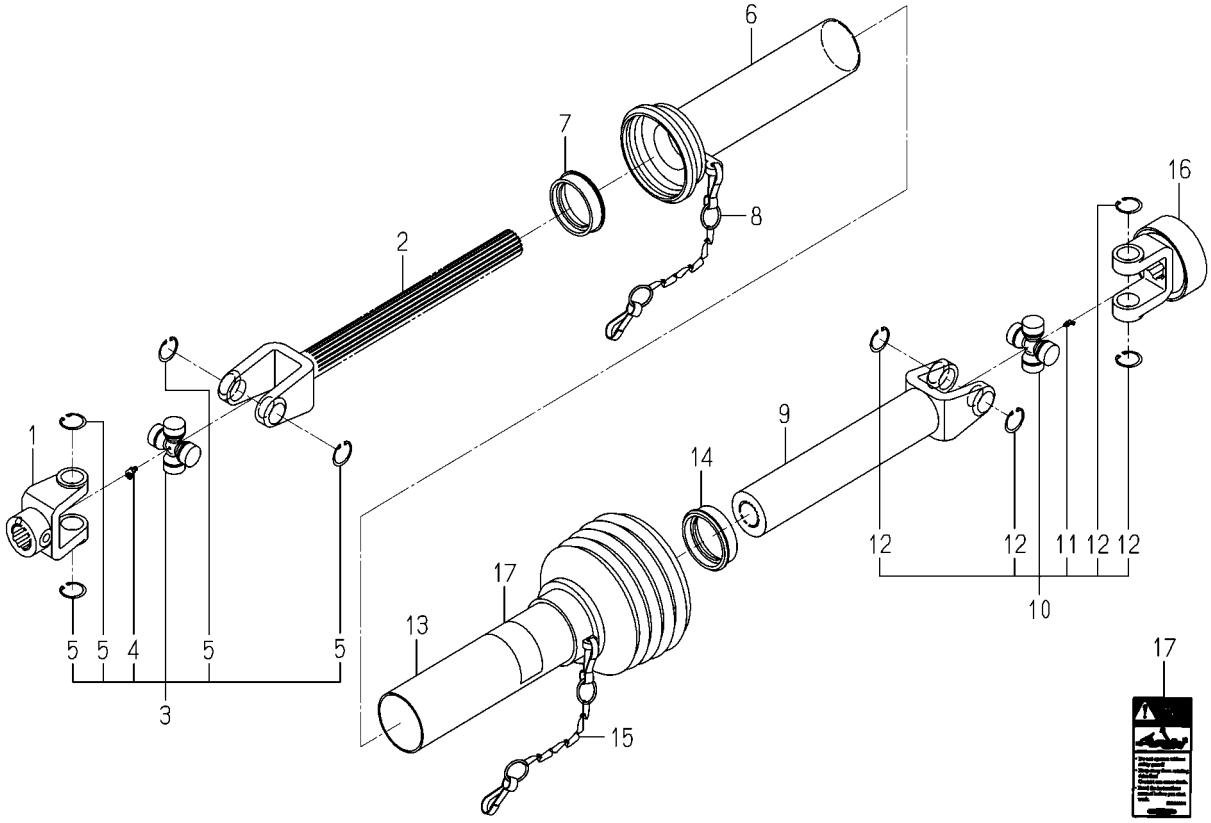

8658-101-650-0C

KEY	PART CODE	DESCRIPTION	SPC	TYPE OF MODEL SMM54	SFH240F	ITC	COL	GRP	REMARKS
1	8654-101-221-00	FITTINGYOKE	*	1					
2	8658-101-661-00	SHAFTYOKE	*	1					
3	8654-101-230-00	JOURNALCROSSE ASSY	*	1					
4	8654-101-232-00	GREASENIPPLE	*	1					
5	8654-101-233-00	SURCLIP/HOLE	*	4					
6	8658-101-662-00	SAFETYGUARD/IN	*	1					
7	7821-102-008-00	RING/SLIDE	*	1					
8	7821-102-220-00	CHAIN ASSY	*	1					
9	8658-101-671-00	SLEEVEYOKE	*	1					
10	8654-101-230-00	JOURNALCROSSE ASSY	*	1					
11	8654-101-232-00	GREASENIPPLE	*	1					
12	8654-101-233-00	SURCLIP/HOLE	*	4					
13	8658-101-672-00	SAFETYGUARD/OUT	*	1					
14	7821-102-008-00	RING/SLIDE	*	1					
15	7821-102-220-00	CHAIN ASSY	*	1					
16	8658-101-673-00	QSYOKE ASSY	*	1					
17	8658-101-674-00	LABEL/DANGER/JOINT/G	*	1					

Numerical Index

Part Code	Fig.	Key	Part Code	Fig.	Key	Part Code	Fig.	Key
1105-106-001-00	10	18	8595-201-021-00	2	16	8654-501-201-00	9	15
1427-432-005-00	9	18		12	17	8654-510-002-00	10	5
1434-211-004-00	3	3	8595-201-022-00	2	17	8654-901-002-00	11	5
1444-514-005-10	10	7		12	18		11	8
1560-214-003-00	2	13	8595-201-025-00	2	9		13	3
	12	14		12	10		13	12
1560-601-028-00	10	3	8595-201-410-00	2	10	8657-202-003-20	3	1
1593-901-015-00	11	6		12	11		3	4
	13	8	8595-306-005-10	6	1	8657-203-001-00	4	1
1594-218-001-00	2	7	8595-306-006-00	6	4	8657-301-004-00	5	1
	12	8	8595-306-007-00	6	2	8657-301-005-00	5	12
1594-221-001-00	5	4	8595-501-001-20	9	1	8657-301-008-00	5	24
	5	17		9	31	8657-301-009-00	5	15
1673-525-002-30	9	13	8595-501-007-00	9	27	8658-101-065-00	1	4
1771-313-052-00	10	10	8595-501-280-01	9	17		13	2
2144-106-005-00	9	21	8595-501-310-01	9	14	8658-101-650-00	1	1
2149-602-012-00	8	3	8595-501-320-10	9	23	8658-101-661-00	14	2
2500-901-014-30	11	4	8595-501-350-10	9	24	8658-101-662-00	14	6
2500-901-027-00	11	1	8595-501-351-10	9	25	8658-101-671-00	14	9
3560-201-015-00	10	15	8595-501-360-10	9	26	8658-101-672-00	14	13
3621-211-003-00	3	14	8595-505-051-30	9	32	8658-101-673-00	14	16
3664-416-072-00	9	2	8595-510-004-00	9	12	8658-101-674-00	14	17
3670-701-010-00	9	19	8595-608-082-10	10	2	8658-201-031-00	2	11
3737-341-006-00	3	16	8595-901-006-00	11	2		12	12
3737-341-007-00	3	17		13	10	8658-201-042-01	2	21
3746-111-011-00	3	6	8595-901-007-00	11	3	8658-201-043-01	2	22
7821-102-008-00	14	7		13	11	8658-201-660-00	12	1
	14	14	8597-202-501-00	3	10	8658-202-200-00	3	9
7821-102-220-00	14	8	8597-301-002-00	2	24	8658-301-001-00	5	9
	14	15	8654-101-221-00	14	1		5	22
7955-201-026-00	2	2	8654-101-230-00	14	3	8658-306-003-00	6	5
	12	3		14	10	8658-402-610-00	7	1
8593-014-200-10	3	11	8654-101-232-00	14	4	8658-407-065-10	8	5
8595-201-011-00	2	1		14	11		13	9
	12	2	8654-101-233-00	14	5	8658-407-650-00	8	1
8595-201-012-00	2	3		14	12		13	5
	12	4	8654-202-016-00	3	2	8658-407-660-00	8	2
8595-201-013-00	2	6		3	5		13	7
	12	7	8654-301-004-00	5	7	8658-501-610-00	9	5
8595-201-015-00	2	12		5	20	8658-501-620-00	9	10
	12	13	8654-301-081-10	5	3	8658-510-610-00	10	1
8595-201-016-00	2	14	8654-501-006-10	9	22	8658-510-630-00	10	8
	12	15	8654-501-041-00	9	3	8658-510-640-00	10	9
8595-201-017-00	2	15	8654-501-042-00	9	6	8658-901-061-00	11	7
	12	16	8654-501-043-00	9	7		13	6

Numerical Index

8658-097-200-00

Part Code	Fig.	Key	Part Code	Fig.	Key	Part Code	Fig.	Key
8658-950-600-00	13	1	V707-140-055-00	12	20			
V201-260-803-50	10	14	V707-140-062-00	2	8			
V211-260-801-60	2	4		5	10			
	12	5		5	23			
V211-261-002-50	5	2		12	9			
	5	13	V721-103-108-00	2	5			
	9	9		12	6			
	9	11	V744-130-551-20	2	20			
V211-360-801-60	1	5		12	21			
	13	4	V744-135-520-80	5	8			
V211-661-002-00	2	23		5	21			
V304-260-008-00	3	18	V760-150-000-00	3	15			
	10	13		5	11			
	10	16		5	14			
V304-260-010-00	2	27		9	16			
	5	16		9	28			
V304-460-016-00	3	8						
	9	29						
V360-260-012-00	9	33						
V362-260-008-00	8	4						
	8	6						
	9	4						
	10	17						
V401-160-010-00	2	26						
V401-160-016-00	3	7						
	9	30						
V401-160-020-00	6	3						
V411-260-008-00	10	11						
V411-260-010-00	2	28						
V411-260-014-00	2	25						
V411-260-022-00	10	6						
V500-162-502-00	10	12						
V580-140-404-00	9	8						
V580-140-504-00	10	4						
V580-140-804-00	1	2						
V600-110-600-60	2	18						
	12	19						
V600-110-690-80	5	5						
	5	18						
V704-140-016-00	3	13						
V704-140-017-00	3	12						
V704-140-030-00	9	20						
V705-140-052-00	5	6						
	5	19						
V707-140-055-00	2	19						

Alpabetical Index

Description	Fig.	Key
ARM/GAUGE/LH COMP	9	5
ARM/GAUGE/RH COMP	9	10
ARM/TENSION ASSY	3	9
BEARING	5	5
	5	18
BEARING,RB 6006	2	18
	12	19
BEARING/BALL 6205SH2	5	4
	5	17
BEARING/BALL 6305SH2	2	7
	12	8
BEARING/BALL/6304SH2	2	13
	12	14
BELT/VB101	4	1
BLOT/M10X25	2	24
BOLT(S) M10X25	5	2
	5	13
	9	9
	9	11
BOLT,SEMS (SP)	1	5
	13	4
BOLT,SEMS (S) M8X16	2	4
	12	5
BOLT/M 8X35	10	14
BOLT/M10X20	2	23
BRACKET/CASE/LH	2	21
BRACKET/CASE/RH	2	22
BUSH/16X18X15	3	10
BUSH/30X34X20	9	15
CAP/32	8	3
CASE/BEVEL	2	1
	12	2
CASE/BEVEL/28-1 ASSY	12	1
CHAIN ASSY	14	8
	14	15
COLLAR,THRUST	9	18
COLLAR/26X36X3	3	3
COLLAR/BRADE	5	9
	5	22
COLLER/26X34X15	5	24
COVER/B/L/SFH/F COMP	8	1
	13	5
COVER/B/R/SFH/F COMP	8	2
	13	7
COVER/CASE	2	3
COVER/CASE	12	4
COVER/JOINT	1	4
	13	2
COVER/UNIVERSAL	8	5
	13	9
DECK/MOWER/54/SFH	7	1
F/SFH SET	13	1
FITTINGYOKE	14	1
FORK/WHEEL ASSY	9	14
GEAR/BEVEL/28-1 SET	2	10
	12	11
GREASENIPPLE	14	4
	14	11
JOINT/UNIVERSAL SET	1	1
JOURNALCROSSE ASSY	14	3
	14	10
KEY/06X06X28	3	2
	3	5
LABEL/CE	11	1
LABEL/CUTTING	11	7
	13	6
LABEL/DANGER	11	4
LABEL/DANGER/JOINT/G	14	17
LABEL/MAINTENANCE	11	6
	13	8
LABEL/PTO	11	5
	11	8
	13	3
	13	12
LABEL/WARNING/BELT	11	2
	13	10
LABEL/WARNING/HOT	11	3
	13	11
LINKPIN	9	13
METAL/CENTER	5	12
METAL/SIDE	5	1
NIPPLE,GREASE	3	15
	5	11
	5	14
	9	16
	9	28
NUT	2	27
	3	18
	5	16
	10	13
NUT	10	16
NUT/M16	3	8
	9	29
NUT/M20X1.5	6	2
NUT/WASHER	8	4
	8	6
	9	4
	9	33
	10	17
O-RING/G80	2	5
	12	6
PIN,HAIR (19)	10	7
PIN,SPLIT/2.5X20	10	12
PIN,SPRING/4X40	9	8
PIN,SPRING/5 X40 W	10	4
PIN,SPRING/8 X40 W	1	2
PIN/08X50	10	10
PIN/10X53	9	21
PIN/12X117	9	32
PIN/12X133	9	3
PIN/16X96	10	2
PIN/19X135	9	12
PIN/20X112	9	27
PIN/GAUGE COMP	9	17
PIN/LIFT COMP	10	1
PIN/PARALLEL	6	5
PIPE/GREASE	5	15
PLUG,DRAIN (1/4)	2	2
	12	3
PULLEY COMP	3	11
PULLEY/VB137	3	1
	3	4
QSYOKE ASSY	14	16
RBB	9	25
RING,SNAP/16 C	3	13
RING,SNAP/17 C	3	12
RING,SNAP/30 C	9	20
RING,SNAP/52 C	5	6
	5	19
RING/SLIDE	14	7
	14	14
RING/SNAP	2	8
	2	19
	5	10
	5	23

Alpabetical Index

8658-097-200-00

Description	Fig.	Key
RING/SNAP	12	9
	12	20
ROD,CHAIN TENSION	3	17
ROD/UPSTOP ASSY	10	9
ROD/UPSTOP SET	10	8
SAFETYGUARD/IN	14	6
SAFETYGUARD/OUT	14	13
SEAL,OIL/TC305512	2	20
	12	21
SEAL,OIL/TC35528	5	8
	5	21
SEAL/OIL	2	9
	5	7
	5	20
	12	10
SHAFT/INPUT	2	6
	12	7
SHAFT/OUTPUT	2	11
	12	12
SHAFT/SIDE	5	3
SHAFTYOKE	14	2
SHIM/0.1	2	14
	2	16
	12	15
	12	17
SHIM/0.2	2	15
	2	17
	12	16
	12	18
SHIM/1.2	6	4
SLEEVEYOKE	14	9
SPACER	10	5
SPRING,CHAIN TENSION	3	16
SPRING/CLIP	9	22
SPRING/HC042	10	3
SPRING/HC058	9	7
SPRING/HC094	10	18
STOPPER/MOWER	9	6
SURCLIP/HOLE	14	5
	14	12
TIRE/8X3.00-4 ASSY	9	26
WASHER	3	6
	3	14
WASHER,BINDING SHAFT	10	15
WASHER,PL/M 8	10	11
WASHER,PL/M14	2	25
WASHER,PL/M22	10	6
WASHER,SP/M10	2	26
WASHER,SP/M16	3	7
	9	30
WASHER,SP/M20	6	3
WASHER/13X17X10	9	2
WASHER/20X60X06	6	1
WASHER/30X50X05	9	19
WASHER/45X55X01	2	12
	12	13
WASHER/M10	2	28
WHEEL/GAUGE ASSY	9	23
WHEEL/GAUGE/FRONT	9	1
	9	31
WHELL ASSY	9	24