Directions for use of Parts Catalogue

1. Applicable model of machines

All component and option parts used for SFH220/SFH240 riding mower are listed in this parts catalogue.

1) MODEL TYPE

H····· HST

F····· FOUR WHEEL DRIVE

T····· TWO WHEEL DRIVE

B····· BLOWER CASE

G····· WITH EXTRA SPECIFICATIONS FOR LOCAL HOMOLOGATION

W····· WEIGHT

2) AREA CODE

E42F2·· FRANCE

E42C··· OTHER COUNTRY

2. Explanation for head paragraph

KEY	PART CODE	DESCRIPTION	SPC	TYPE OF MODEL						ITC	COL	GRP	REMARKS
				SSM48M	SSM48F	SSM48G	SRM48M	SRM48F	SRM48G				
1	8595-211-001-20	CASE/UPPER	*	1 -229									
1A	8657-201-081-00	CASE/UPPER	*	1 230-			1						
2	8595-211-002-10	CASE/LOWER	*	1			1						
3	V523-100-801-80	PIN	*	2			2						
4	V211-260-803-00	BOLT, SEMS	*	6			6						
			*	2 -229									
			*	2 230-			2						
				2			2						
				1			1						
										3			

① ② ③ ④ ⑤ ⑥ ⑦ ⑧ ⑨

① KEY shows the location of parts diagramed in the illustration.

② Parts numbers begin with `V´ and `W´ are standard parts of the market.

③ `LH´ and `RH´ on the parts name are described against the moving direction of the machine or are described on the condition how to install

parts on the machines.

④ SPC : The following symbol classifies parts to be used for machines.

`＊´ means standard parts.

`T´ shows that the parts can be installed as optional parts.

`R´ shows that the parts can be used as applicable parts to replace originally equipped parts.

⑤ Upper column : QTY shows the number of parts to be used for one unit of machine.

`M´ is indicated for parts supplied by a meter long.

`l´ is indicated for parts supplied by liter.

`AR´ is indicated for parts need to be adjusted or regulated.

Lower column : serial number

－229 means serial number up to 229.

230－ means serial number 230 and after.

⑥ ITC : Interchangeability

`1´…OLD ← NEW

New parts can be used in place of the old parts.

`2´…OLD → NEW

Old parts can be used in place of the new parts.

`3´…OLD →← NEW

Old parts and new parts can not be replaced each other.

⑦ COL : Color code

Color is signified with color code number for colored parts.

Please see the color list shown in the next page.

⑧ GRP : Parts shown in this column can be replaced by SET parts.

Example : Parts marked Ⓐ can be replaced by parts marked Ⓑ, and Ⓓ for Ⓒ, so the rest follow in the same alphabetical order.

⑨ Remarks

＊Other maker's part code number is shown in this column.

＊When Fig. No. is shown in the Remark column of SET parts or ASSY parts, each of their component parts are listed in said Fig. No.

3. Color :

The following colors are used color parts.

COLOR CODE	COLOR	SPRAY TYPE PARTS CODE	PAINTS 4K DRUM PARTS CODE	PAINTS 16K DRUM PARTS CODE
4 L	NEO BLUE	1300-985-001-10	1300-985-003-00	――――――
6 G	SUMMER WHITE	1300-958-001-10	1300-958-003-00	1300-958-004-00
7 F	MIRROR BLACK	1300-954-001-10	1300-954-003-00	1300-954-004-00

NOTE : Color code is signified only for the parts assigned by the maker as color parts.

4. Serial Numbers :

1) For engines serial number is stamped on CYLINDER BLOCK ASSY.
   Please see Fig. No. 5－1.
2) For chassies serial number is shown on the LABEL.
   Please see

5. Parts Order

1) Parts numbers listed in the parts catalogue are all registered in “ISEKI on-line computer”.
2) When you order parts, please make sure of correct numbers.
3) When substitute parts is available, the part number ordered will be automatically turned to a new part number.
4) Please be sure to use “ISEKI GENUINE PARTS”.
   Any other similar parts other than ISEKI parts when used may cause a trouble that makes us unable to repair or guarantee the warrant.

*** Structure Table of Model ***

MODEL / FIG.	SFH20T	GWE42CF2	GWE42C	SFH20F	BE42C	BGE42C	BGE42F2	GWE42C	GWE42F2	WE42C								
101	*	*	*		*	*	*	*	*	*								
102	*	*	*		*	*	*	*	*	*								
103	*	*	*		*	*	*	*	*	*								
104	*	*	*		*	*	*	*	*	*								
105	*	*	*		*	*	*	*	*	*								
106	*	*	*		*	*	*	*	*	*								
107	*	*	*		*	*	*	*	*	*								
108	*	*	*		*	*	*	*	*	*								
109	*	*	*		*	*	*	*	*	*								
110	*	*	*		*	*	*	*	*	*								
201	*	*	*		*	*	*	*	*	*								
202	*	*	*		*	*	*	*	*	*								
203	*	*	*		*	*	*	*	*	*								
204					*	*	*	*	*	*								
205	*	*	*															
206				*	*					*								
207	*	*				*	*	*	*									
208	*	*	*		*	*	*	*	*	*								
209	*	*	*		*	*	*	*	*	*								
210	*	*	*		*	*	*	*	*	*								
211	*	*	*		*	*	*	*	*	*								
212	*	*	*		*	*	*	*	*	*								
213					*	*	*											
214	*	*	*		*	*	*	*	*	*								
215	*	*	*						*	*								
216					*	*	*											
217							*											
218	*	*	*		*	*	*	*	*	*								
219	*	*	*		*	*	*	*	*	*								
220					*	*	*											
221	*	*	*		*	*	*	*	*	*								
222					*	*	*											
301	*	*	*		*	*	*	*	*	*								
302				*	*					*								
303	*	*				*	*	*	*									
304				*	*					*								
305	*	*				*	*	*	*									
306	*	*				*	*	*	*									
307				*	*					*								
308	*	*				*	*	*	*									
309				*	*					*								
310	*	*				*	*	*	*									
311				*	*					*								
312	*	*	*		*	*	*	*	*	*								
401	*	*	*		*	*	*	*	*	*								

*** Structure Table of Model ***

MODEL / FIG.	SFH20T	GWE42CF2	GWE440C	SFH2	BE424C	BEG24CF2	BEG244	GWE222	GWE422CF2	WE42C							
402		*	*	*	*	*	*	*	*	*							
403		*	*	*	*	*	*	*	*	*							
404		*	*	*	*	*	*	*	*	*							
405					*	*	*	*	*	*							
406		*	*	*													
407					*	*	*	*	*	*							
408		*	*	*													
409							*										
410			*						*								
411					*	*	*	*	*	*							
412					*	*	*	*	*	*							
413					*	*	*	*	*	*							
414					*	*	*	*	*	*							
415		*	*	*													
416					*	*	*	*	*	*							
417		*	*	*													
418					*	*	*	*	*	*							
419		*	*	*	*	*	*	*	*	*							
420					*	*	*	*	*	*							
421		*	*	*													
501		*	*	*	*	*	*	*	*	*							
502		*	*	*	*	*	*	*	*	*							
503					*	*	*										
504		*	*	*				*	*	*							
505		*	*	*	*	*	*	*	*	*							
506		*	*	*	*	*	*	*	*	*							
507					*	*	*										
508		*	*	*				*	*	*							
509		*	*	*	*	*	*	*	*	*							
510		*	*	*	*	*	*	*	*	*							
601		*	*	*	*	*	*	*	*	*							
602					*	*	*	*	*	*							
603		*	*	*													
604					*	*	*										
605		*	*	*				*	*	*							
606		*	*	*	*	*	*	*	*	*							
607		*	*	*	*	*	*	*	*	*							
608				*	*					*							
609		*	*			*	*	*	*								
610				*	*					*							
611		*	*			*	*	*	*								
612		*		*	*	*		*		*							
613			*				*		*								
614					*	*	*										
615		*	*	*				*	*	*							

*** Structure Table of Model ***

MODEL / FIG.	SFH20T	GWE42CF2	GWE42C	SFH20F	BE42C	BGE42CF2	BGE42	GWE42CF	GWE42F2	WE42C								
616						*	*	*	*	*								
801						*	*	*										
901						*	*	*	*	*								
902		*	*	*														
903						*												
904				*														
905							*	*										
906		*	*															
907										*								
908									*	*								
909						*	*	*										
910		*	*	*														
911									*	*	*							
912		*	*	*		T	T	T	*	*	*							
P01		R	R	R		R	R	R	R	R	R							
P02		T	T	T		T	T	T	T	T	T							
P03						T	T	T										
P04						T	T	T										
P05		T	T	T		T	T	T	T	T	T							
S01		*	*	*		*	*	*	*	*	*							
S02		*	*	*		*	*	*	*	*	*							
S03		*	*	*		*	*	*	*	*	*							
S04						*	*	*	*	*	*							
S05		*	*	*		*	*	*	*	*	*							

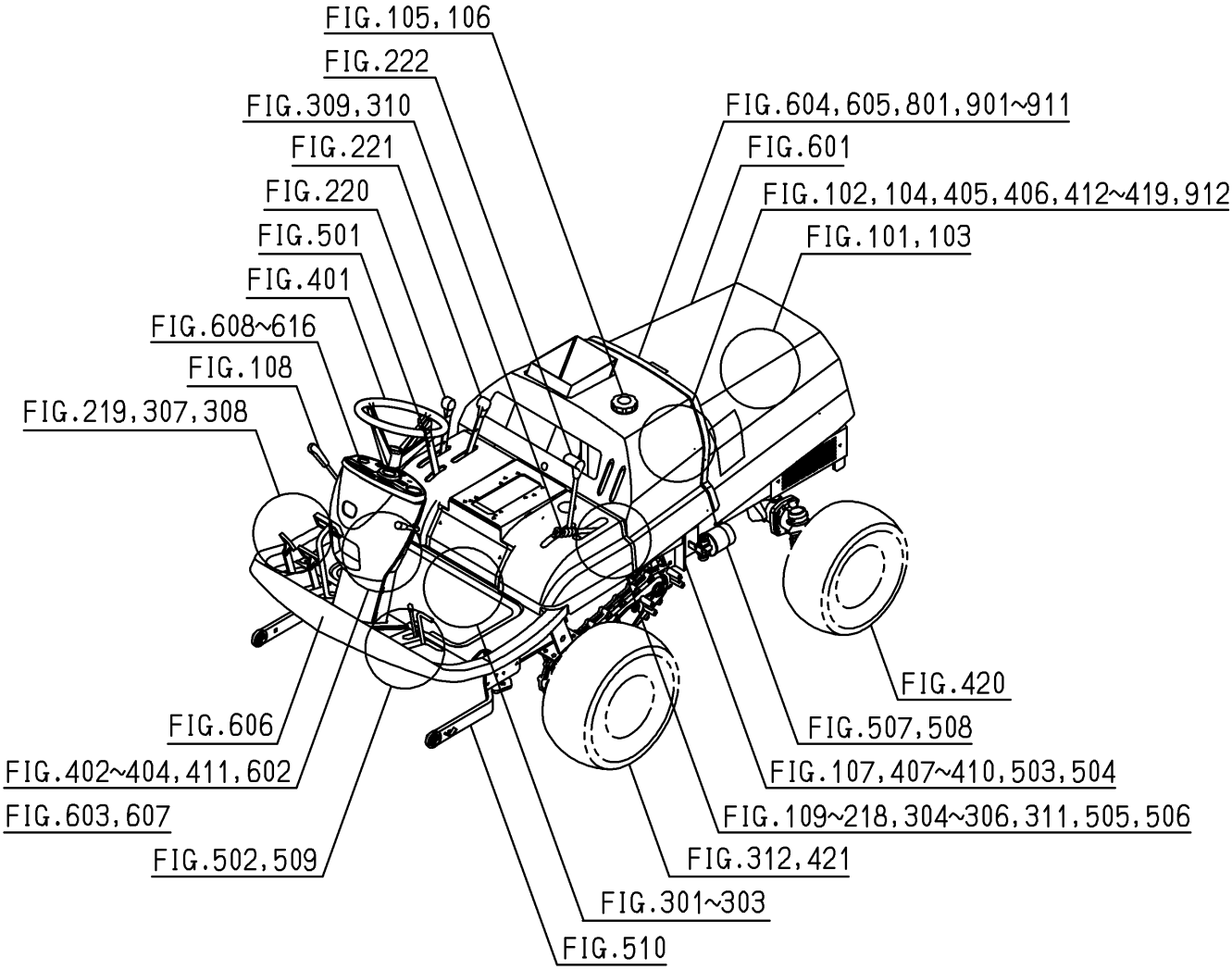
FIG.105,106
FIG.222
FIG.309,310
FIG.221
FIG.220
FIG.501
FIG.401
FIG.608~616
FIG.108
FIG.219,307,308
FIG.604,605,801,901~911
FIG.601
FIG.102,104,405,406,412~419,912
FIG.101,103
FIG.420
FIG.507,508
FIG.107,407~410,503,504
FIG.109~218,304~306,311,505,506
FIG.312,421
FIG.301~303
FIG.510
FIG.606
FIG.402~404,411,602
FIG.603,607
FIG.502,509

Contents

SFH220T,240F

ENGINE(E3112VG04)

CYLINDER HEAD····· Fig.101
CYLINDER HEAD COVER····· Fig.102
INLET MANIFOLD····· Fig.103
EXHAUST MANIFOLD····· Fig.104
CYLINDER BLOCK····· Fig.201
OIL PAN····· Fig.202
REAR PLATE····· Fig.203
TIMING GEAR CASE····· Fig.204
HANGER····· Fig.205
VALVE····· Fig.301
CAM SHAFT····· Fig.302
PISTON····· Fig.303
CRANK SHAFT····· Fig.304
OIL PUMP····· Fig.401
WATER PUMP····· Fig.402
COOLING FAN····· Fig.403
INJECTION NOZZLE····· Fig.501
INJECTION PUMP····· Fig.502
FUEL PIPE····· Fig.503
ADAPTER····· Fig.504
ELECTRIC (1)····· Fig.801
ELECTRIC (2)····· Fig.802
SHORT BLOCK ENGIASSY····· Fig.P01
BEARING/UNDER SIZE (OPTION)····· Fig.P02

PISTON/OVER SIZE (OPTION)……Fig.P03
REPAIR PARTS (OPTION)……Fig.P04
COMPONENT PARTS
FOR 6215-300-036-10 ON Fig.501……Fig.S01
COMPONENT PARTS
FOR 6215-600-103-10 ON Fig.502……Fig.S02
COMPONENT PARTS
FOR 6281-200-005-00 ON Fig.801……Fig.S03

Contents

CHASSIS

BRACKET(ENGINE)SYSTEM····· Fig.101
RADIATOR SYSTEM(1/2)(2/2)····· Fig.102
MUFFLER SYSTEM····· Fig.103
CLEANER(AIR)SYSTEM····· Fig.104
PIPING(FUEL)SYSTEM····· Fig.105
TANK(FUEL)SYSTEM····· Fig.106
BATTERY SYSTEM····· Fig.107
LEVER(ACCELERATOR)SYSTEM····· Fig.108
CABLE(ACCELERATOR)SYSTEM····· Fig.109
SHAFT(INPUT)SYSTEM····· Fig.110
CASE(TRANSMISSION)SYSTEM····· Fig.201
METAL(HST)SYSTEM····· Fig.202
GEAR(INPUT)SYSTEM····· Fig.203
HST SYSTEM(SFH240F)····· Fig.204
HST SYSTEM(SFH220T)····· Fig.205
GEAR(DRIVE)SYSTEM(EXCEPT G TYPE)····· Fig.206
GEAR(DRIVE)SYSTEM(G TYPE)····· Fig.207
CASE(DIFFERENTIAL)SYSTEM····· Fig.208
DIFF-LOCK SYSTEM····· Fig.209
PEDAL(DIFF-LOCK)SYSTEM····· Fig.210
LEVER(UNLOAD/HST)SYSTEM····· Fig.211
METAL(PTO)SYSTEM····· Fig.212
DRIVE(PTO/SIDE)SYSTEM(B TYPE)(1/2)(2/2)····· Fig.213
DRIVE(PTO/BLOWER)SYSTEM····· Fig.214
COVER(PTO/MID)SYSTEM(EXCEPT B TYPE)····· Fig.215
COVER(PTO/SIDE)SYSTEM(B TYPE)····· Fig.216
COVER(PTO/SIDE)SYSTEM(B-F2 TYPE)····· Fig.217

LINK(HST)SYSTEM……Fig.218
PEDAL(HST)SYSTEM……Fig.219
LEVER(PTO/MOWER)SYSTEM(B TYPE)……Fig.220
LEVER(PTO/BLOWER)SYSTEM……Fig.221
AUTO CRUISE SYSTEM(B TYPE)……Fig.222
HOUSING(AXLE/FRONT)SYSTEM……Fig.301
SHAFT(WHEEL/FRONT)SYSTEM
(EXCEPT G TYPE)……Fig.302
SHAFT(WHEEL/FRONT)SYSTEM(G TYPE)……Fig.303
BRAKE SYSTEM(EXCEPT G TYPE)……Fig.304
COVER(BRAKE)SYSTEM(G TYPE)……Fig.305
BRAKE SYSTEM(G TYPE)……Fig.306
PEDAL(BRAKE)SYSTEM(EXCEPT G TYPE)……Fig.307
PEDAL(BRAKE)SYSTEM(G TYPE)……Fig.308
BRAKE(PARKING)SYSTEM
(EXCEPT G TYPE)……Fig.309
BRAKE(PARKING)SYSTEM(G TYPE)……Fig.310
COVER(BRAKE)SYSTEM(EXCEPT G TYPE)……Fig.311
WHEEL(FRONT)SYSTEM……Fig.312
WHEEL(STEERING)SYSTEM……Fig.401
LEVER(TILT)SYSTEM……Fig.402
COLUMN(STEERING)SYSTEM……Fig.403
CONTROLLER(STEERING)SYSTEM……Fig.404
CYLINDER(STEERING)SYSTEM(SFH240F)……Fig.405
CYLINDER(STEERING)SYSTEM(SFH220T)……Fig.406
FRAME SYSTEM(SFH240F)……Fig.407
FRAME SYSTEM(SFH220T)……Fig.408
GUARD SYSTEM(BG-F2 TYPE)……Fig.409
GUARD SYSTEM(G-F2 TYPE)……Fig.410
LEVER(4WD)SYSTEM(SFH240F)……Fig.411
AUTO 4WD SYSTEM(SFH240F)……Fig.412
CASE(BEVEL)SYSTEM(SFH240F)……Fig.413
HOUSING(AXLE/REAR)SYSTEM(SFH240F)……Fig.414

HOUSING(AXLE/REAR)SYSTEM(SFH220T)..... Fig.415
CASE(GEAR/FINAL)SYSTEM(SFH240F)..... Fig.416
SPINDLE(KNUCKLE)SYSTEM(SFH220T)..... Fig.417
SHAFT(DRIVE/FINAL)SYSTEM(SFH240F)..... Fig.418
ROD(TIE)SYSTEM..... Fig.419
WHEEL(REAR)SYSTEM(SFH240F)..... Fig.420
WHEEL(REAR)SYSTEM(SFH220T)..... Fig.421
CONTROL SYSTEM(1/2)(2/2)..... Fig.501
CYLINDER(LIFT)SYSTEM..... Fig.502
CABLE(UP STOP)SYSTEM(B TYPE)..... Fig.503
CABLE(UP STOP)SYSTEM(EXCEPT B TYPE)..... Fig.504
PIPING(PUMP)SYSTEM..... Fig.505
PIPING(CONTROL)SYSTEM..... Fig.506
PIPING(HST)SYSTEM(B TYPE)..... Fig.507
PIPING(HST)SYSTEM(EXCEPT B TYPE)..... Fig.508
LINK(LIFT)SYSTEM..... Fig.509
LINK(LOWER)SYSTEM..... Fig.510
HOOD SYSTEM..... Fig.601
COVER(STEERING)SYSTEM(SFH240F)..... Fig.602
COVER(STEERING)SYSTEM(SFH220T)..... Fig.603
FENDER SYSTEM(B TYPE)..... Fig.604
FENDER SYSTEM(EXCEPT B TYPE)..... Fig.605
FLOOR SYSTEM..... Fig.606
LIGHT SYSTEM..... Fig.607
PANEL SYSTEM(EXCEPT G TYPE)..... Fig.608
PANEL SYSTEM(G TYPE)..... Fig.609
HARNESS(MAIN)SYSTEM(EXCEPT G TYPE)..... Fig.610
HARNESS(MAIN)SYSTEM(G TYPE)..... Fig.611
CONNECTOR(HARNESS/HOOD)SYSTEM
(EXCEPT F2 TYPE)..... Fig.612
SENSOR(HOOD)SYSTEM(F2 TYPE)..... Fig.613
SENSOR(LEVER/PTO/SIDE)SYSTEM(B TYPE)..... Fig.614
CONNECTOR(HARNESS/PTO/SIDE)SYSTEM
(EXCEPT B TYPE)..... Fig.615

SENSOR(4WD)SYSTEM(SFH240F)····· Fig.616
BLOWER SYSTEM(B TYPE)····· Fig.801
ORNAMENT(SFH240F)····· Fig.901
ORNAMENT(SFH220T)····· Fig.902
LABEL(CONTROL)(SFH240F-BE42C TYPE)····· Fig.903
LABEL(CONTROL)(SFH220T-WE42C TYPE)····· Fig.904
LABEL(CONTROL)(SFH240F-BG TYPE)····· Fig.905
LABEL(CONTROL)(SFH220T-GW TYPE)····· Fig.906
LABEL(CONTROL)(SFH240F-WE42C TYPE)····· Fig.907
LABEL(CONTROL)(SFH240F-GW TYPE)····· Fig.908
LABEL(CAUTION)(SFH240F-B TYPE)····· Fig.909
LABEL(CAUTION)(SFH220T)····· Fig.910
LABEL(CAUTION)
(EXCEPT SFH240F-B TYPE)····· Fig.911
WEIGHT(REAR)SYSTEM(W TYPE)
(EXCEPT W TYPE:OPTION)····· Fig.912

OPTIONAL PARTS

CAP(OIL)SET(OPTION)····· Fig.P01
BUMPER SET(OPTION)····· Fig.P02
FRAME(LOWER)SET(OPTION)····· Fig.P03
FRAME(UPPER)SET(OPTION)····· Fig.P04
WEIGHT(15)SET(OPTION)····· Fig.P05

COMPONENT PARTS

COMPONENT PARTS
FOR K135-023-000-00 ON Fig.505····· Fig.S01
COMPONENT PARTS
FOR K510-012-000-10 ON Fig.204,205(1/2)(2/2)····· Fig.S02
COMPONENT PARTS
FOR 1672-105-210-00 ON Fig.105····· Fig.S03

COMPONENT PARTS
FOR 1720-221-210-00 ON Fig.412 ····· Fig.S04
COMPONENT PARTS
FOR 1725-219-210-10 ON Fig.214 ····· Fig.S05

WIRING DIAGRAM

WIRING DIAGRAM(1/2)
WIRING DIAGRAM(2/2)
WIRING DIAGRAM
WIRING DIAGRAM(G TYPE)(1/2)
WIRING DIAGRAM(G TYPE)(2/2)
WIRING DIAGRAM(EXCEPT G TYPE)(1/2)
WIRING DIAGRAM(EXCEPT G TYPE)(2/2)

E N G I N E

E3112VG04···SFH220T,240F

6004-095-441-00

FIG.101 CYLINDER HEAD

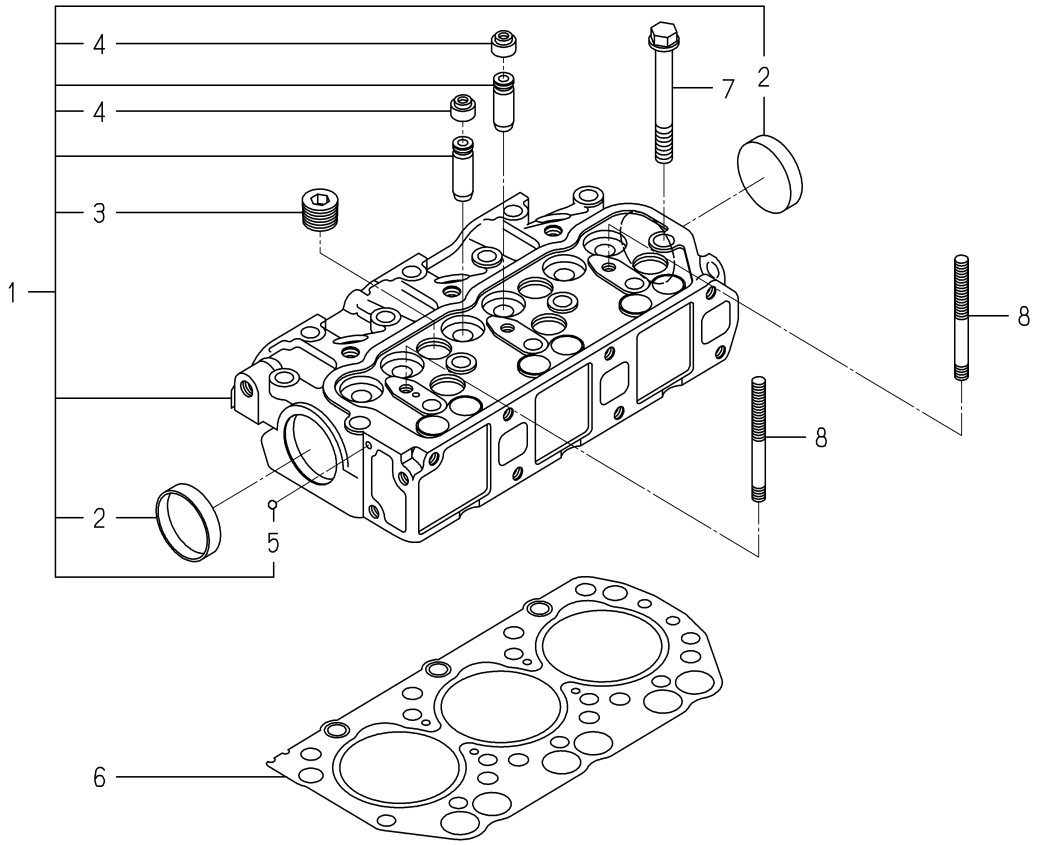

6004-101I-0100,6004-101I-0200

KEY	PART CODE	DESCRIPTION	SPC	TYPE OF MODEL E3112 VG04		ITC	COL	GRP	REMARKS
1	- - - - - -	BLANK	*						- - - - - -
1	- - - - - -	BLANK	*						- - - - - -
1	- - - - - -	BLANK	*						- - - - - -
1	6211-110-057-30	CYLINDERHEAD ASSY	*	1					
2	6911-129-006-00	CAP,SEALING	*	2					
3	6209-605-004-10	PLUG/PT1/2	*	5					
4	6212-569-002-00	SEAL,OIL	*	6					
5	V682-200-000-60	BALL	*	1					
6	6211-141-029-20	GASKET/CYLINDERHEAD	*	1					
7	- - - - - -	BLANK	*						- - - - - -
7	6209-000-044-00	BOLT	*	14					
8	6209-300-014-00	STUD	*	2					

FIG.102 CYLINDER HEAD COVER

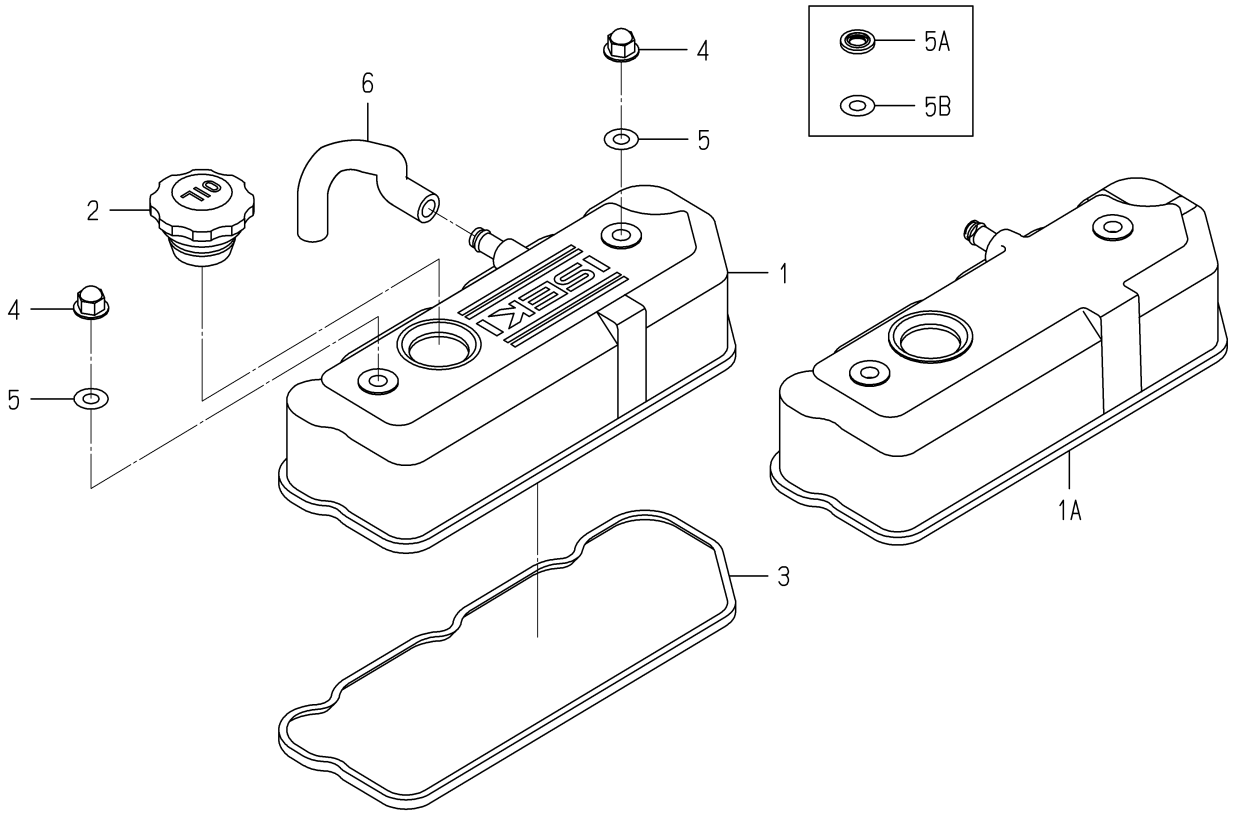

6003-110 -0100

KEY	PART CODE	DESCRIPTION	SPC	TYPE OF MODEL E3112 VG04		ITC	COL	GRP	REMARKS
1	- - - - - -	BLANK	*						- - - - - -
1A	6211-170-004-20	COVER/CYLINDER HEAD	*	1					
2	6211-751-001-10	CAP,OIL FILLER	*	1					
3	6211-173-003-00	SEAL,CYL.HEAD COVER	*	1					
4	- - - - - -	BLANK	*						- - - - - -
4	6209-490-002-10	NUT/CAP	*	2					
5	- - - - - -	BLANK	*						- - - - - -
5A	- - - - - -	BLANK	*						- - - - - -
5B	6209-572-003-00	GASKET	*	2					
6	- - - - - -	BLANK	*						- - - - - -
6	6209-360-028-20	HOSE/RUBBER	*	1					

FIG.103 INLET MANIFOLD

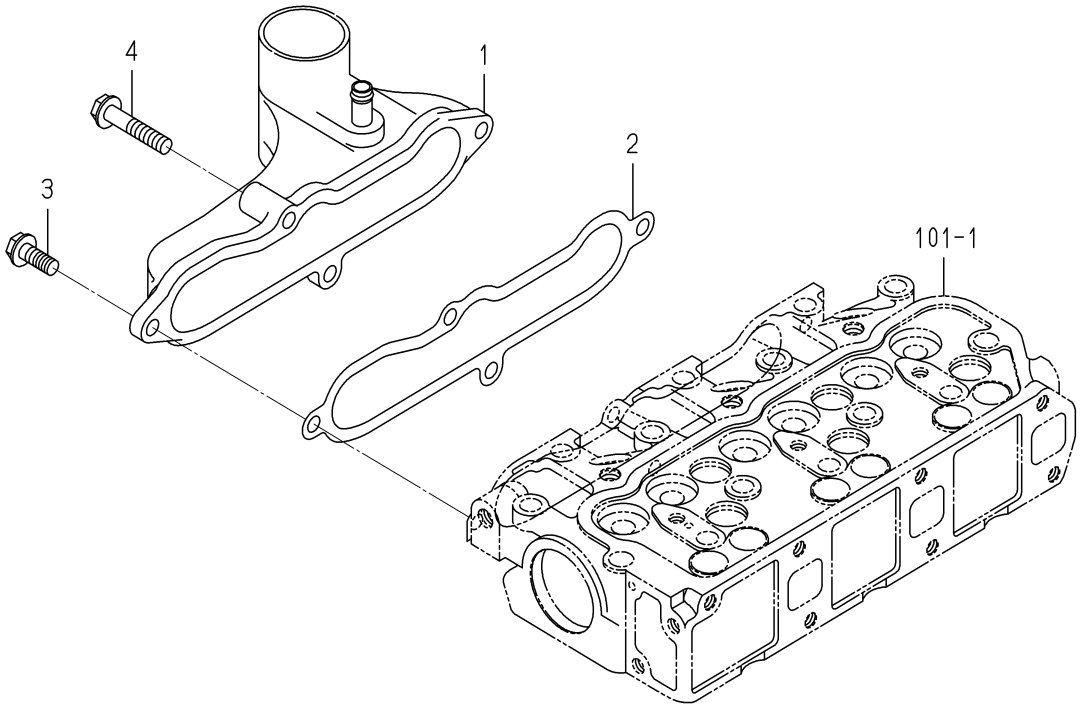

6003-120B-0100

KEY	PART CODE	DESCRIPTION	SPC	TYPE OF MODEL E3112 VG04		ITC	COL	GRP	REMARKS
1	6214-111-011-20	MANIFOLD(INLET) ASSY	*	1					
2	6214-115-001-20	GASKET,INLET MANIFOL	*	1					
3	- - - - - -	BLANK	*						- - - - - -
3	- - - - - -	BLANK	*						- - - - - -
3	V231-360-802-00	FLANGEBOLT	*	3					
4	- - - - - -	BLANK	*						- - - - - -
4	- - - - - -	BLANK	*						- - - - - -
4	V231-360-804-00	FLANGEBOLT	*	1					

FIG.104 EXHAUST MANIFOLD

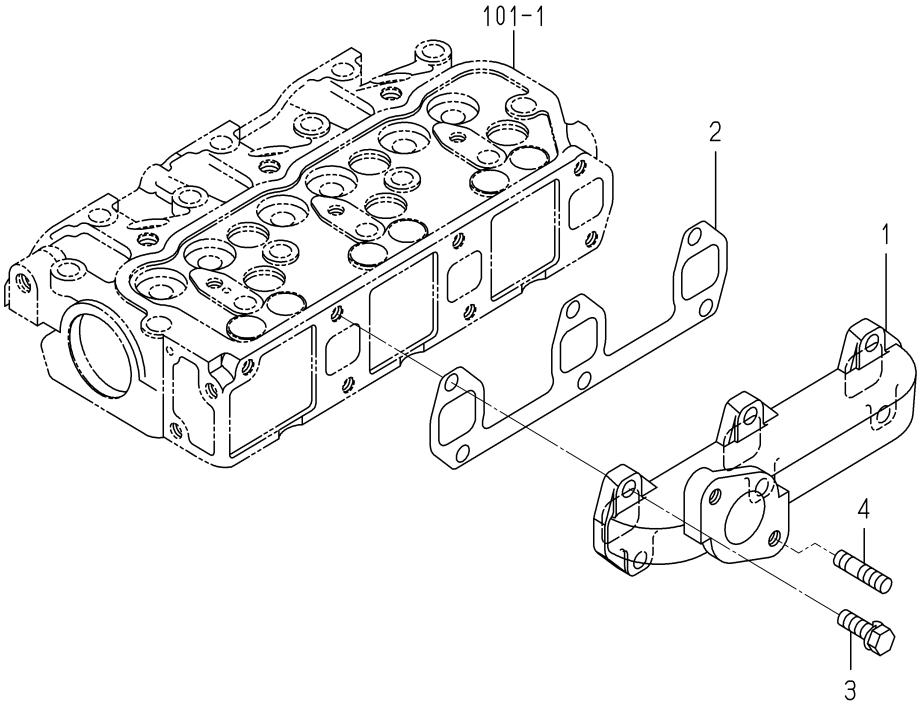

6003-140 -0100

KEY	PART CODE	DESCRIPTION	SPC	TYPE OF MODEL E3112 VG04		ITC	COL	GRP	REMARKS
1	6214-141-008-20	MANIFOLD/EXHAUST	*	1					
2	6214-145-001-30	GASKET,EXH.MANIFOLD	*	1					
3	V211-560-802-50	BOLT,SEMS/M8X25 7T	*	6					
4	6904-110-822-00	STUD	*	2					

FIG.201 CYLINDER BLOCK

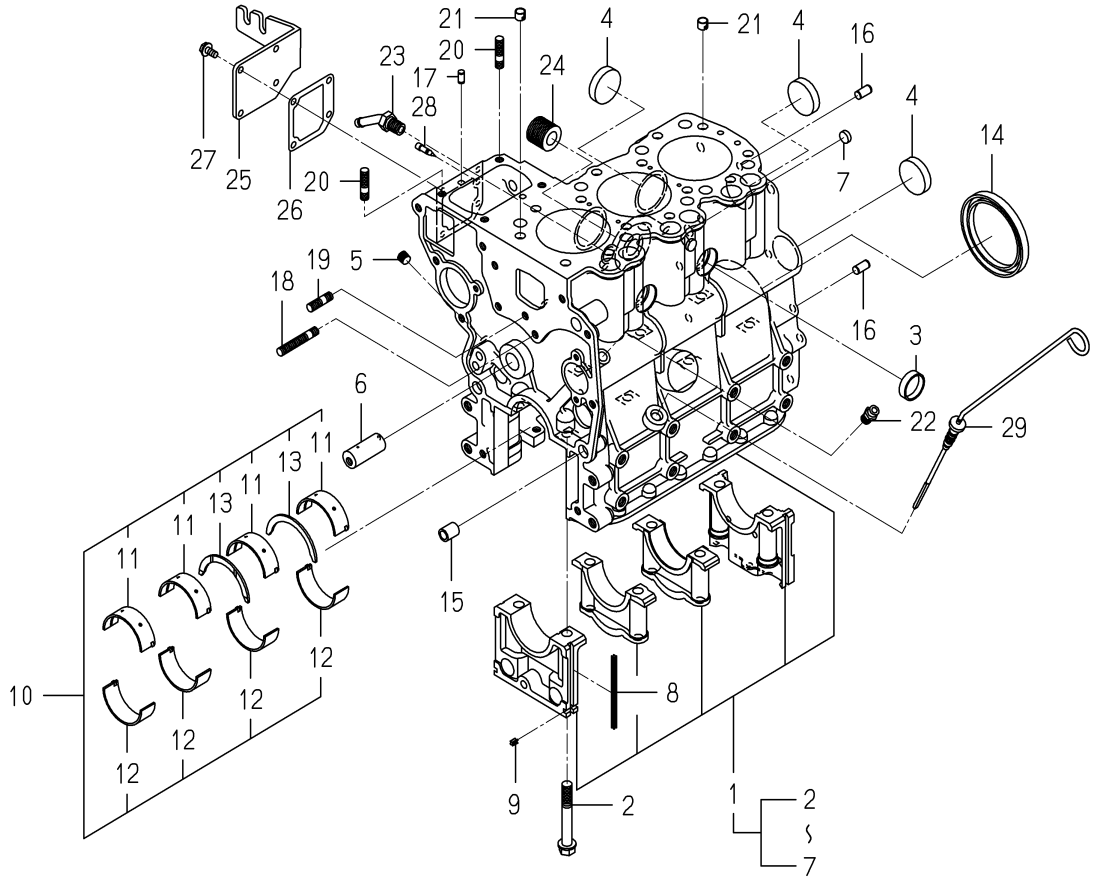

6004-202Q-0100

KEY	PART CODE	DESCRIPTION	SPC	TYPE OF MODEL E3112 VG04		ITC	COL	GRP	REMARKS
1	- - - - - -	BLANK	*						- - - - - -
1	6211-210-037-40	CYLINDERBLOCK ASSY	*	1					
2	6209-000-004-10	BOLT	*	8					
3	6209-610-001-10	CUP/SEALING/28	*	2					
4	6209-610-009-00	CUP/SEALING/36	*	4					
5	- - - - - -	BLANK	*						- - - - - -
5	6209-605-007-00	PLUG/PT1/8	*	3					
6	6212-531-005-10	PIN/IDLEGEAR	*	1					
7	6209-610-008-00	CUP/SEALING/12	*	2					
8	6211-258-001-00	SEAL,BEARING CAP	*	4					
9	6211-258-002-00	SEAL,BEARING CAP/7	*	2					
10	6211-510-001-00	METAL,CRANK SET	*	1					
11	6211-511-003-00	BEARING/CRANK/UPPER	*	4					
12	6211-511-004-00	BEARING/CRANK/LOWER	*	4					
13	6211-599-001-10	BEARING,THRUST CRANK	*	2					
14	- - - - - -	BLANK	*						- - - - - -
14	6209-625-001-00	SEAL,OIL	*	1					
15	6209-749-001-20	PIN/TUBE	*	2					
16	6213-129-006-00	PIN/STRAIGHT	*	2					
17	6209-740-005-00	PIN	*	2					
18	6904-110-840-00	STUD/M8X40	*	1					
19	6904-110-818-00	STUD	*	1					
20	6904-110-822-00	STUD	*	2					
21	6294-453-002-00	DOWEL	*	2					
22	6909-902-299-00	NIPPLE	*	1					
23	6213-721-007-00	PIPE/WATERDRAIN	*	1					
24	6213-319-001-00	CONNECTOR,OIL FILTER	*	1					
25	6211-291-015-20	COVER/INJECTIONPUMP	*	1					
26	6211-292-001-20	GASKET/COVER	*	1					
27	V230-360-601-20	FLANGEBOLT	*	4					

FIG.201 CYLINDER BLOCK

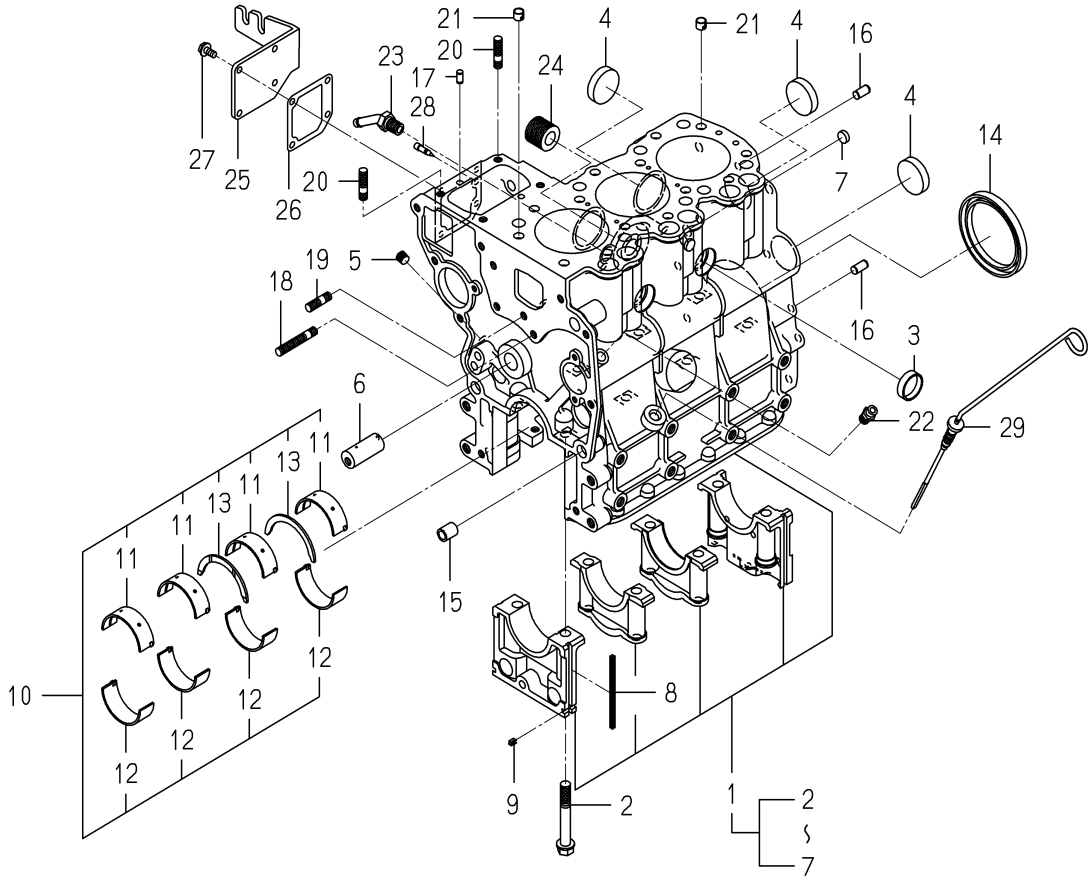

6004-202Q-0100

KEY	PART CODE	DESCRIPTION	SPC	TYPE OF MODEL E3112 VG04		ITC	COL	GRP	REMARKS
28	6215-549-013-00	PIN	*	1					
29	- - - - - -	BLANK	*						- - - - - -
29	6211-760-022-10	LEVELGAGE	*	1					

FIG.202 OIL PAN

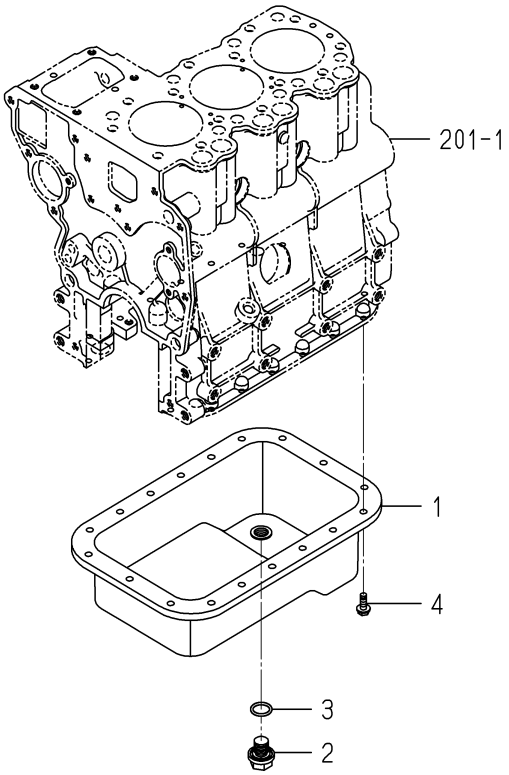

6004-210F-0100

KEY	PART CODE	DESCRIPTION	SPC	TYPE OF MODEL E3112 VG04		ITC	COL	GRP	REMARKS
1	6211-361-069-00	OILPAN COMP	*	1					
2	- - - - - -	BLANK	*						- - - - - -
2	3805-355-002-20	PLUG/M14X1.5	*	1					
3	V720-102-401-80	O-RING/P18	*	1					
4	- - - - - -	BLANK	*						- - - - - -
4	V230-360-601-00	FLANGEBOLT	*	18					

FIG.203 REAR PLATE

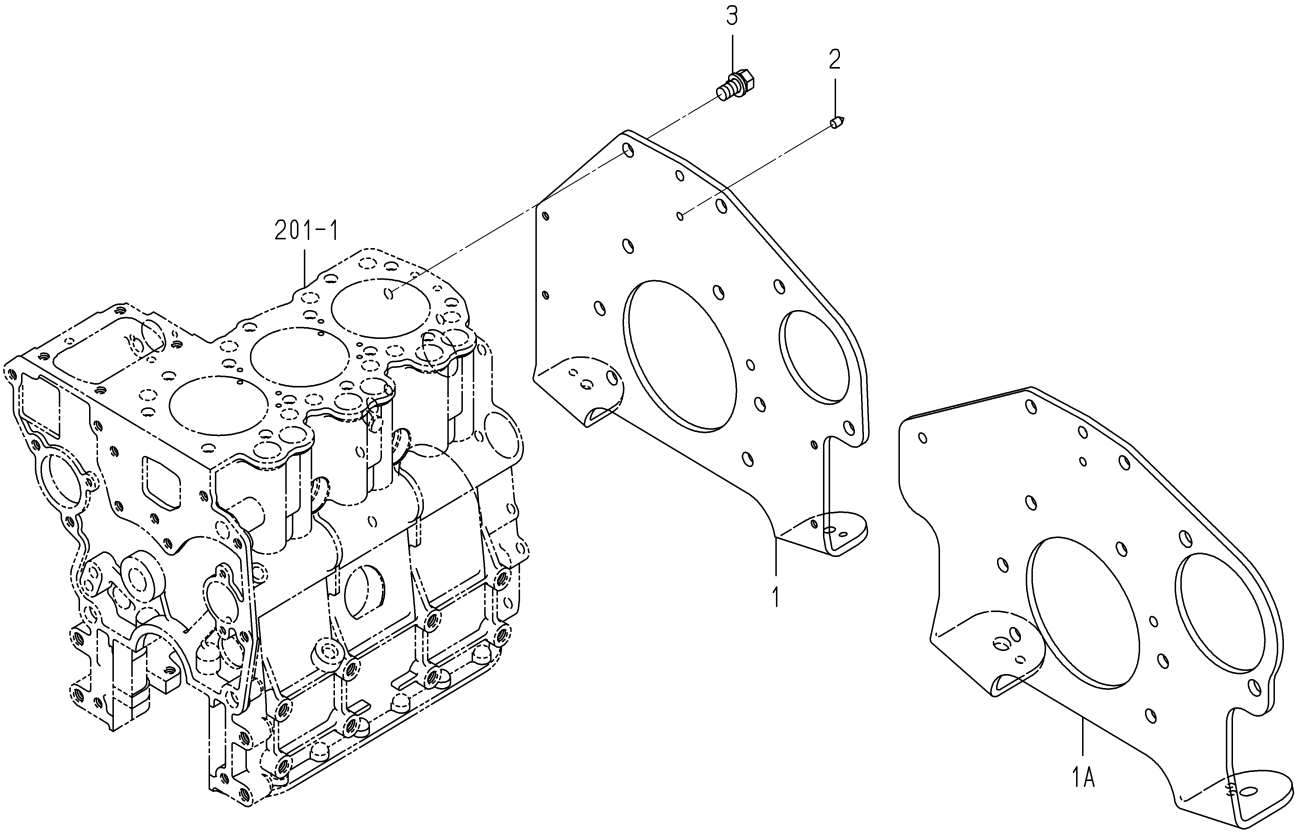

6004-220Q-0100

KEY	PART CODE	DESCRIPTION	SPC	TYPE OF MODEL E3112 VG04		ITC	COL	GRP	REMARKS
1	- - - - - -	BLANK	*						- - - - - -
1A	6211-341-085-00	PLATE/REAR	*	1					
2	- - - - - -	BLANK	*						- - - - - -
2	6211-342-003-10	POINTER	*	1					
3	6901-911-020-00	BOLT,SEMS/M10X20	*	8					

FIG.204 TIMING GEAR CASE

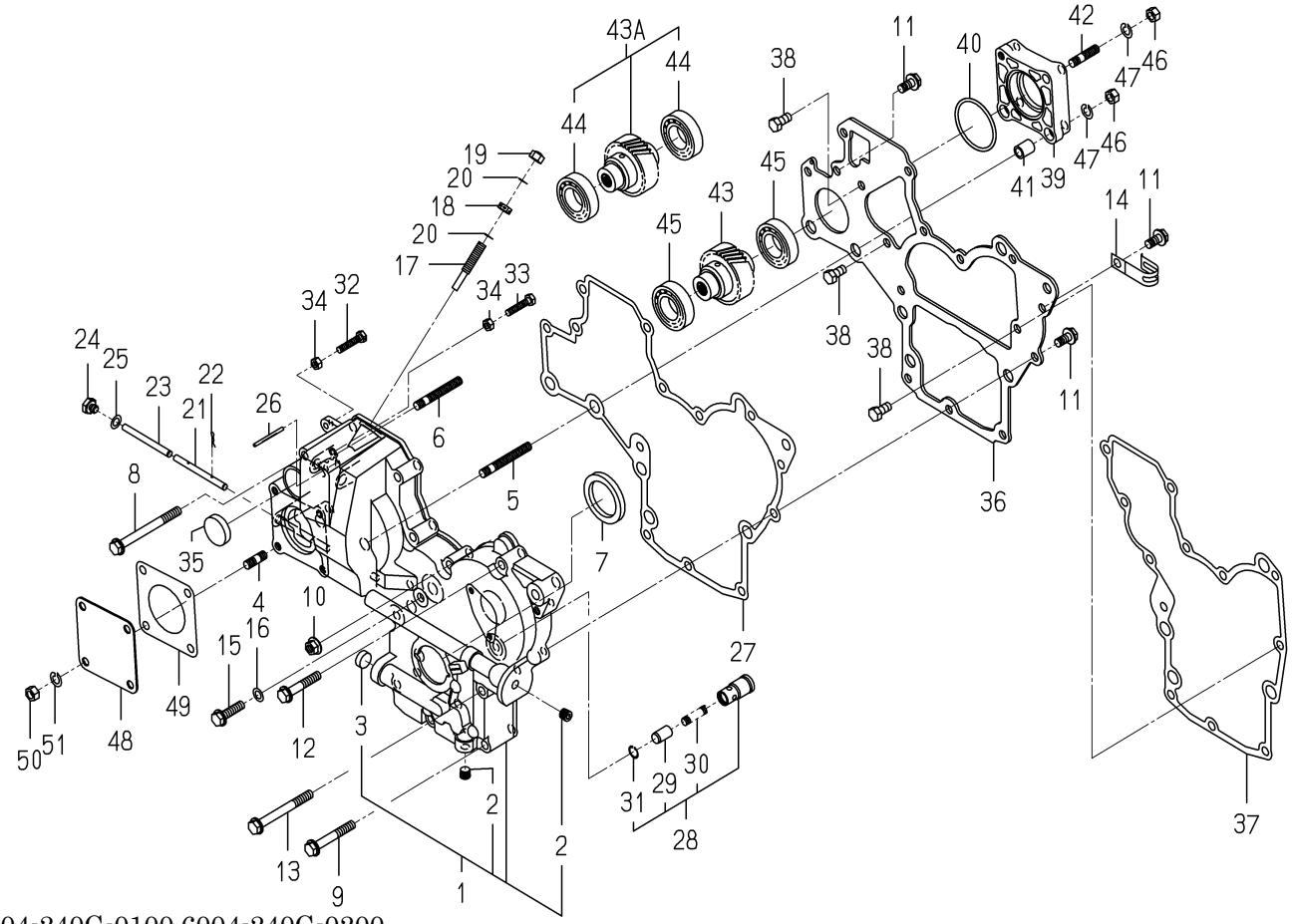

6004-240G-0100,6004-240G-0200

KEY	PART CODE	DESCRIPTION	SPC	TYPE OF MODEL E3112 VG04		ITC	COL	GRP	REMARKS
1	- - - - - -	BLANK	*						- - - - - -
1	6211-310-025-40	GEARCASE ASSY	*	1					
2	- - - - - -	BLANK	*						- - - - - -
2	6209-605-007-00	PLUG/PT1/8	*	2					
3	- - - - - -	BLANK	*						- - - - - -
3	6209-610-007-00	CUP/SEALING/16	*	1					
4	6904-110-814-00	STUD	*	4					
5	6904-110-855-00	STUD	*	2					
6	6904-110-850-00	STUD	*	1					
7	6209-625-002-00	SEAL,OIL	*	1					
8	V231-360-808-50	FLANGEBOLT	*	1					
9	V231-360-805-50	FLANGEBOLT	*	2					
10	3817-401-001-00	NUT/M08	*	1					
11	V231-360-801-60	FLANGEBOLT	*	3					
12	V231-360-804-50	FLANGEBOLT	*	5					
13	V231-360-807-50	FLANGEBOLT	*	1					
14	1425-621-004-00	HOLDER/JE/9-9	*	1					
15	V231-360-803-00	FLANGEBOLT	*	1					
16	6209-500-003-00	WASHER/08X14X01	*	1					
17	6215-546-003-10	STOPPER/FULLLOAD	*	1					
18	6209-409-001-00	NUT/M8	*	1					
19	V341-120-008-00	NUT,CAP/M 8	*	1					
20	6209-920-002-00	PACKING	*	2					
21	6215-542-004-20	PIN/ARM	*	1					
22	P117-303-003-00	PIN/SNAP	*	2					
23	6215-542-005-10	PIN	*	1					
24	6209-600-004-00	PLUG/SCREW	*	1					
25	6209-500-003-00	WASHER/08X14X01	*	1					
26	6209-740-001-00	PIN,GROOVE	*	1					
27	6211-312-003-20	GASKET/GEARCASE	*	1					

FIG.204 TIMING GEAR CASE

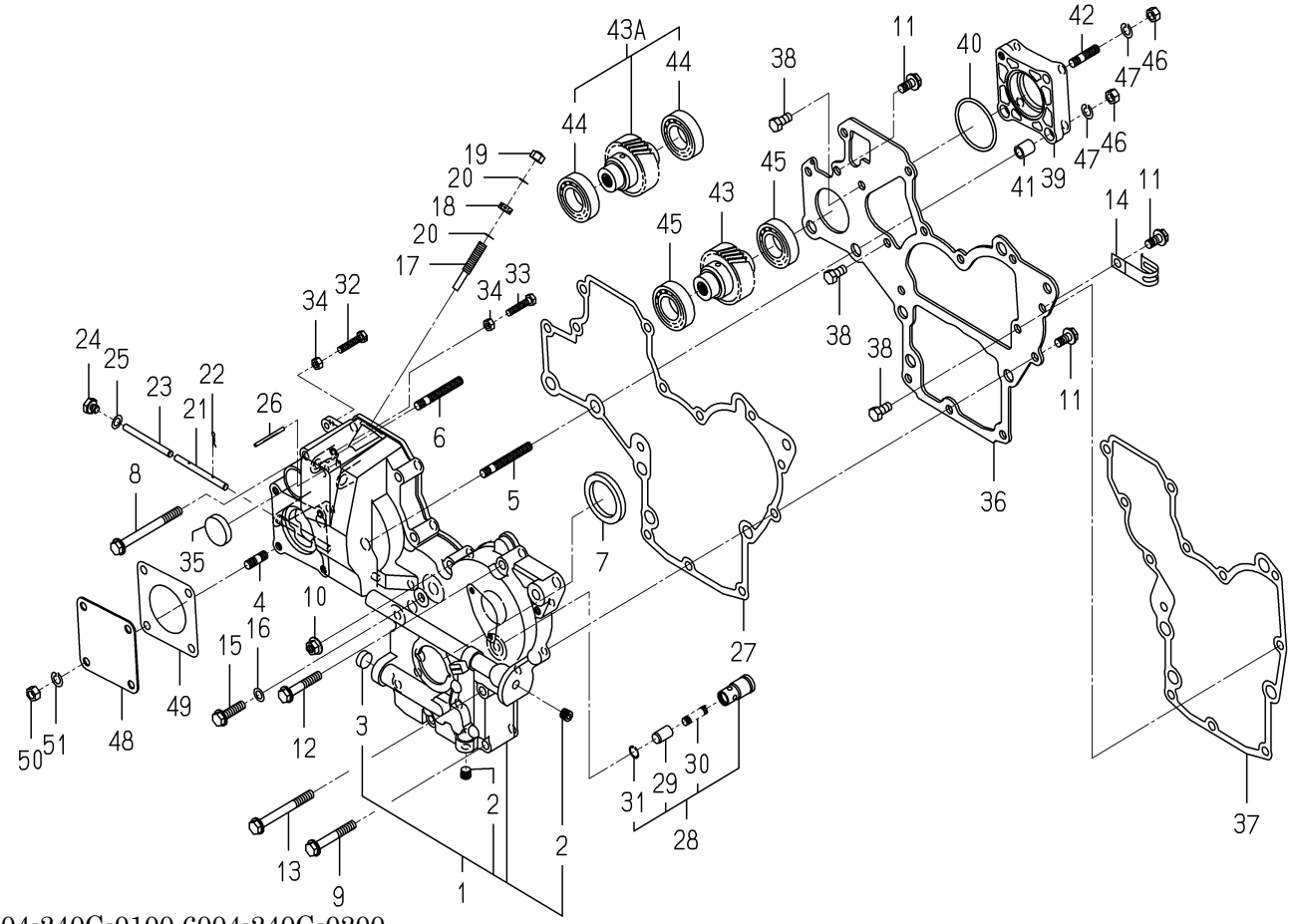

6004-240G-0100,6004-240G-0200

KEY	PART CODE	DESCRIPTION	SPC	TYPE OF MODEL E3112 VG04		ITC	COL	GRP	REMARKS
28	6213-160-002-20	VALVE/RELIEF ASSY	*	1					
29	6213-161-001-20	PISTON/VALVE/RELIEF	*	1					
30	6213-164-001-00	SPRING/RELIEF VALVE	*	1					
31	V705-140-012-00	RING,SNAP/12 C	*	1					
32	6209-050-001-00	BOLT/M6	*	1					
33	6209-050-002-00	BOLT/M6	*	1					
34	V301-260-006-00	NUT/M6	*	2					
35	3625-540-004-00	CAP,BLANK/30	*	1					
36	6211-311-007-40	PLATE/FRONT	*	1					
37	6211-312-004-20	GASKET/PLATE	*	1					
38	6902-050-816-00	BOLT	*	3					
39	6211-319-003-00	SPACER	*	1					
40	V723-102-005-00	O-RING 1A S50	*	1					
41	6209-749-001-20	PIN/TUBE	*	2					
42	6904-110-822-00	STUD	*	1					
43	- - - - - -	BLANK	*						- - - - - -
43A	6212-530-005-30	SHAFT/HYDRAULIC ASSY	*	1					
44	V600-110-600-50	BEARING,RB/6005	*	2					
45	- - - - - -	BLANK	*						- - - - - -
46	V304-260-008-00	NUT	*	4					
47	V401-160-008-00	WASHER,SP/M 8	*	4					
48	- - - - - -	BLANK	*						- - - - - -
48	6211-321-022-00	COVER/HYDRAULIC	*	1					
49	6211-322-002-00	GASKET/COVER	*	1					
50	V304-260-008-00	NUT	*	4					
51	V401-160-008-00	WASHER,SP/M 8	*	4					

FIG.205 HANGER

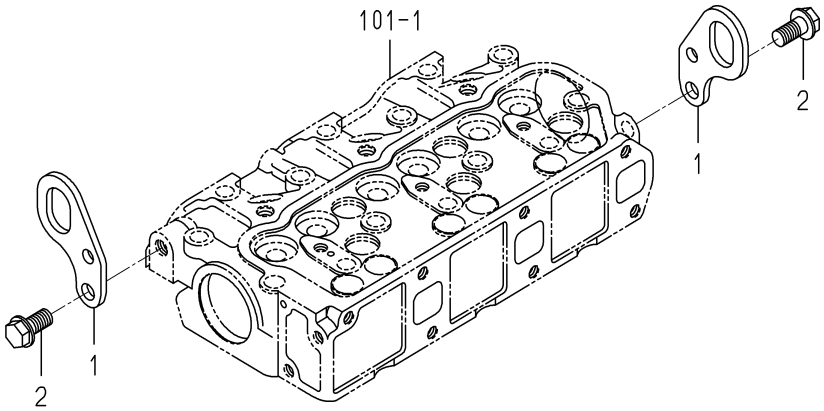

6003-290 -0100

KEY	PART CODE	DESCRIPTION	SPC	TYPE OF MODEL E3112 VG04		ITC	COL	GRP	REMARKS
1	6211-777-007-30	HANGER	*	2					
1	- - - - - -	BLANK	*						- - - - - -
2	- - - - - -	BLANK	*						- - - - - -
2	V233-361-002-00	FLANGEBOLT	*	2					
2	- - - - - -	BLANK	*						- - - - - -

FIG.301 VALVE

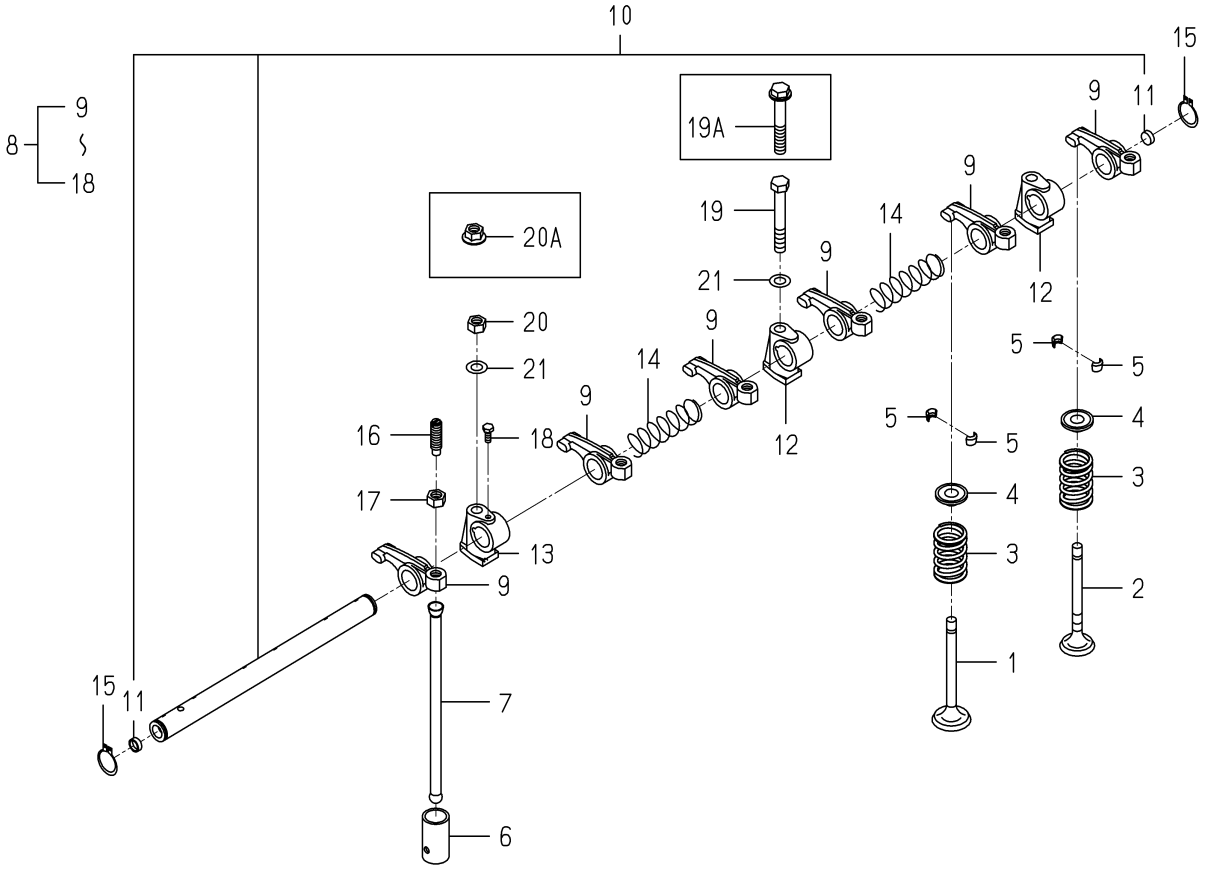

6004-301 -0100

KEY	PART CODE	DESCRIPTION	SPC	TYPE OF MODEL E3112 VG04		ITC	COL	GRP	REMARKS
1	- - - - - -	BLANK	*						- - - - - -
1	- - - - - -	BLANK	*						- - - - - -
1	- - - - - -	BLANK	*						- - - - - -
1	- - - - - -	BLANK	*						- - - - - -
1	6212-551-028-00	VALVE/INTAKE	*	3					
2	- - - - - -	BLANK	*						- - - - - -
2	- - - - - -	BLANK	*						- - - - - -
2	- - - - - -	BLANK	*						- - - - - -
2	- - - - - -	BLANK	*						- - - - - -
2	6212-552-014-00	VALVE/EXHAUST	*	3					
3	- - - - - -	BLANK	*						- - - - - -
3	6212-561-001-10	SPRING/VALVE	*	6					
4	6212-563-001-00	SEAT,VALVE SPRING	*	6					
5	6212-565-001-00	CUTTER,VALVE	*	12					
6	- - - - - -	BLANK	*						- - - - - -
6	6212-571-006-00	TAPPET	*	6					
7	6212-575-002-00	ROD,PUSH	*	6					
8	6212-600-002-10	ROCKERSHAFT ASSY	*	1					
9	6212-611-004-10	ROCKERARM	*	6					
10	6212-620-001-20	SHAFT/ROCKERARM ASSY	*	1					
11	6212-626-002-10	PLUG	*	2					
12	6212-628-004-00	BRACKET ROCKER SHAFT	*	2					
13	6212-628-005-00	BRACKET,ROCKER SHAFT	*	1					
14	6209-940-004-00	SPRING	*	2					
15	V704-140-016-00	RING,SNAP/16 C	*	2					
16	6212-616-002-00	SCREW ADJUST	*	6					
17	6209-409-003-00	NUT	*	6					
18	6209-000-002-00	BOLT	*	1					
19	- - - - - -	BLANK	*						- - - - - -
19A	- - - - - -	BLANK	*						- - - - - -

FIG.301 VALVE

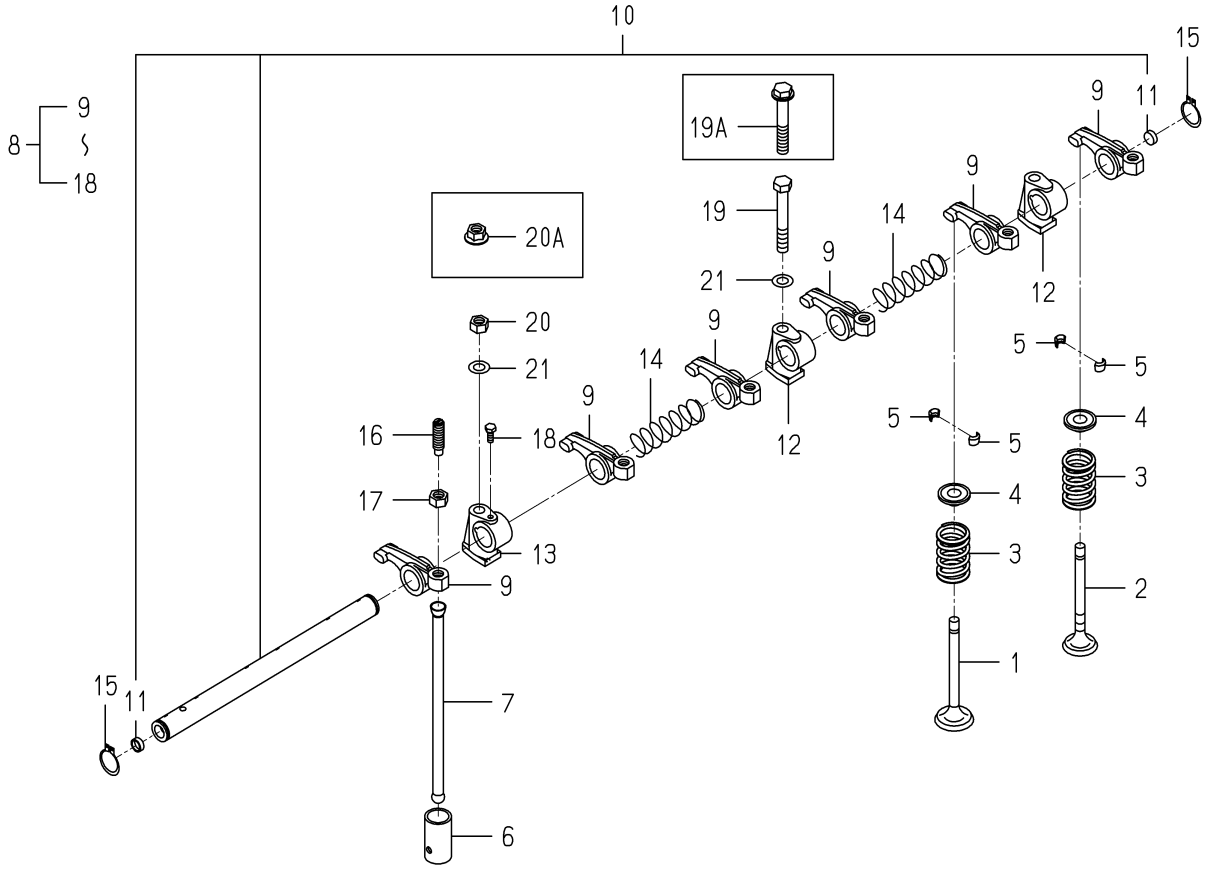

6004-301 -0100

KEY	PART CODE	DESCRIPTION	SPC	TYPE OF MODEL E3112 VG04		ITC	COL	GRP	REMARKS
19A	V231-360-805-00	FLANGEBOLT	*	1					
20	- - - - - -	BLANK	*						- - - - - -
20A	3817-401-001-00	NUT/M08	*	2					
21	- - - - - -	BLANK	*						- - - - - -
21	- - - - - -	BLANK	*						- - - - - -

FIG.302 CAM SHAFT

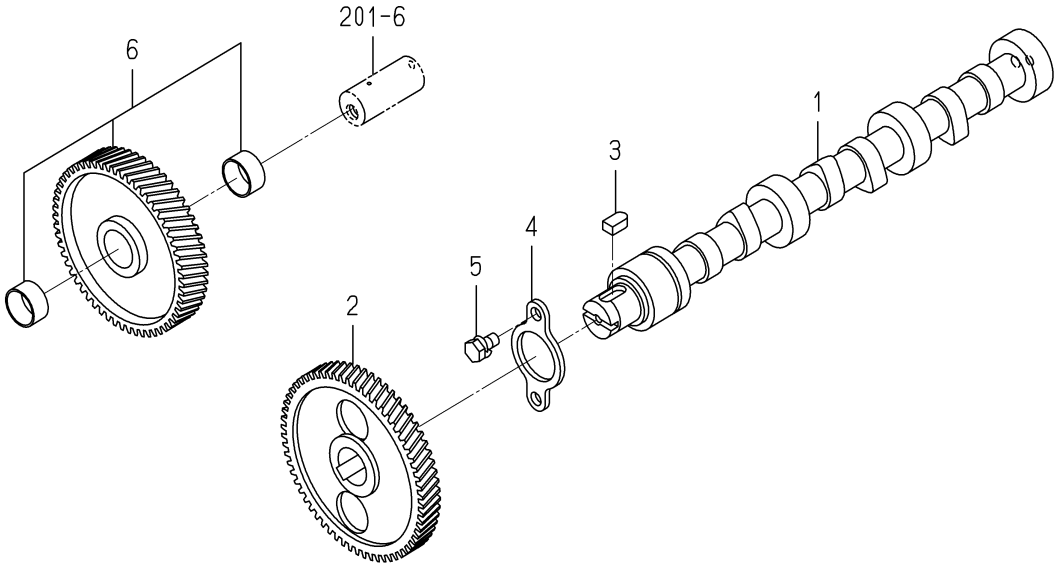

6003-310 -0100

KEY	PART CODE	DESCRIPTION	SPC	TYPE OF MODEL E3112 VG04		ITC	COL	GRP	REMARKS
1	6212-511-002-00	SHAFT,CAM	*	1					
2	- - - - - -	BLANK	*						- - - - - -
2	6212-522-010-00	GEAR/CAMSHAFT	*	1					
3	- - - - - -	BLANK	*						- - - - - -
3	6209-730-005-00	KEY/07X05X09	*	1					
4	6212-535-001-00	PLATE,THRUST	*	1					
5	6901-910-612-00	BOLT,SEMS/M6X12	*	2					
6	- - - - - -	BLANK	*						- - - - - -
6	- - - - - -	BLANK	*						- - - - - -
6	6212-523-023-00	GEAR/IDLE ASSY	*	1					

FIG.303 PISTON

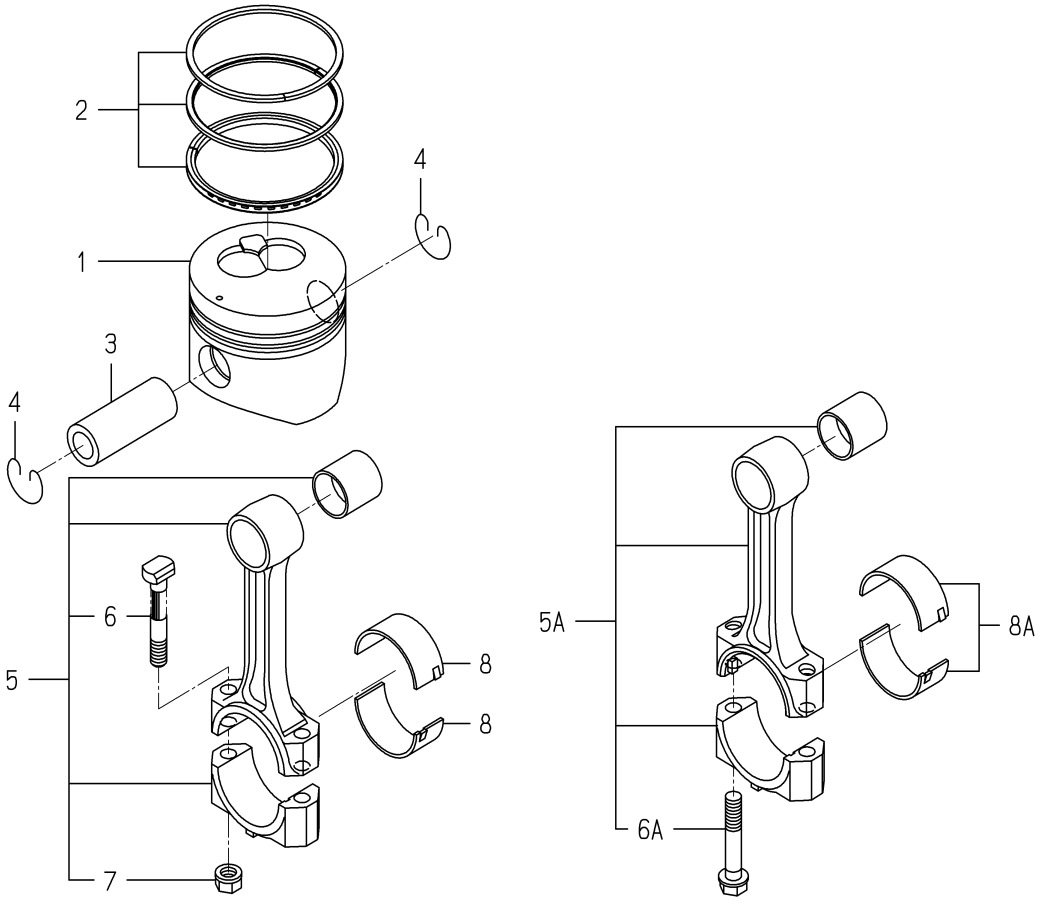

6004-340I-0100

KEY	PART CODE	DESCRIPTION	SPC	TYPE OF MODEL E3112 VG04		ITC	COL	GRP	REMARKS
1	- - - - - -	BLANK	*						- - - - - -
1	- - - - - -	BLANK	*						- - - - - -
1	- - - - - -	BLANK	*						- - - - - -
1	6212-111-094-20	PISTON	*	3					
2	6212-121-014-20	RING/PISTON SET	*	3					
3	6212-211-001-10	PIN,PISTON	*	3					
4	6209-587-001-00	RING,SNAP	*	6					
5	- - - - - -	BLANK	*						- - - - - -
5A	6212-230-004-10	CONNECTINGROD ASSY	*	3					
6	- - - - - -	BLANK	*						- - - - - -
6A	6212-235-005-00	BOLT/CONNECTINGROD	*	6					
7	- - - - - -	BLANK	*						- - - - - -
8	- - - - - -	BLANK	*						- - - - - -
8A	- - - - - -	BLANK	*						- - - - - -
8A	6212-271-016-00	BEARING/CONNECTING R	*	3					

FIG.304 CRANK SHAFT

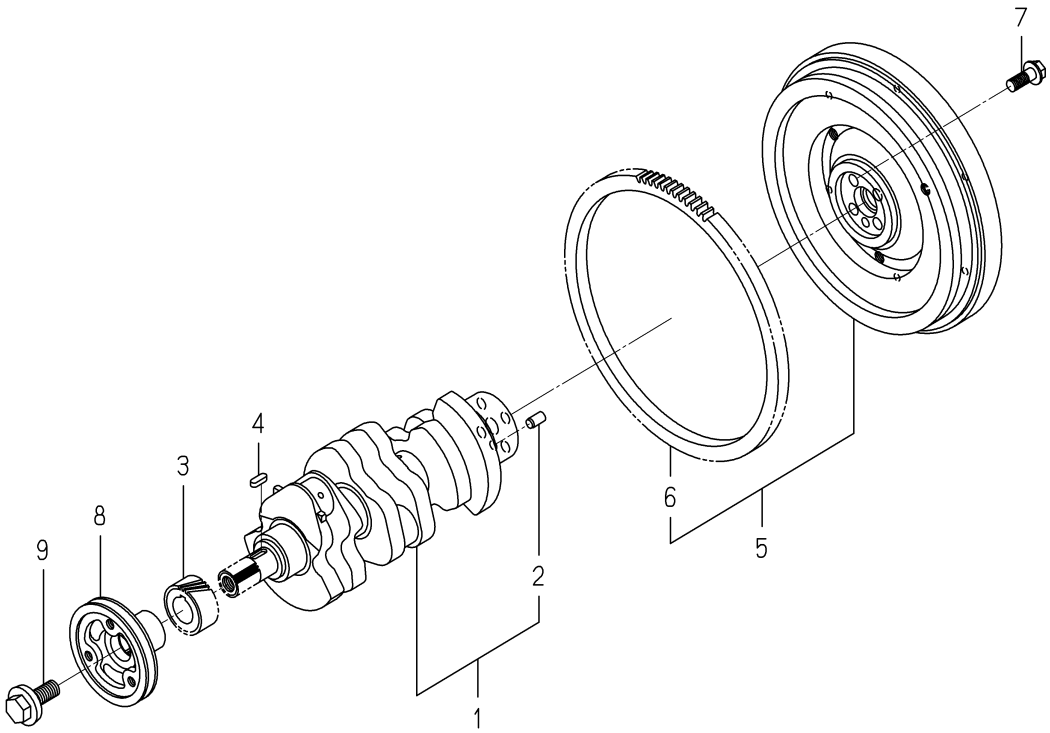

6004-350X-0100

KEY	PART CODE	DESCRIPTION	SPC	TYPE OF MODEL E3112 VG04		ITC	COL	GRP	REMARKS
1	6212-310-019-40	CRANKSHAFT ASSY	*	1					
2	V523-101-001-80	PIN	*	1					
3	6212-521-008-00	GEAR/CRANK	*	1					
4	6209-730-002-00	KEY/07X05X20	*	1					
5	6212-330-048-00	FLYWHEEL ASSY	*	1					
6	6212-333-002-00	RINGGEAR	*	1					
7	6209-046-015-00	BOLT/FLANGE	*	4					
8	6212-371-052-00	PULLEY/CRANK	*	1					
9	6209-000-043-00	BOLT/CRANK	*	1					

FIG.401 OIL PUMP

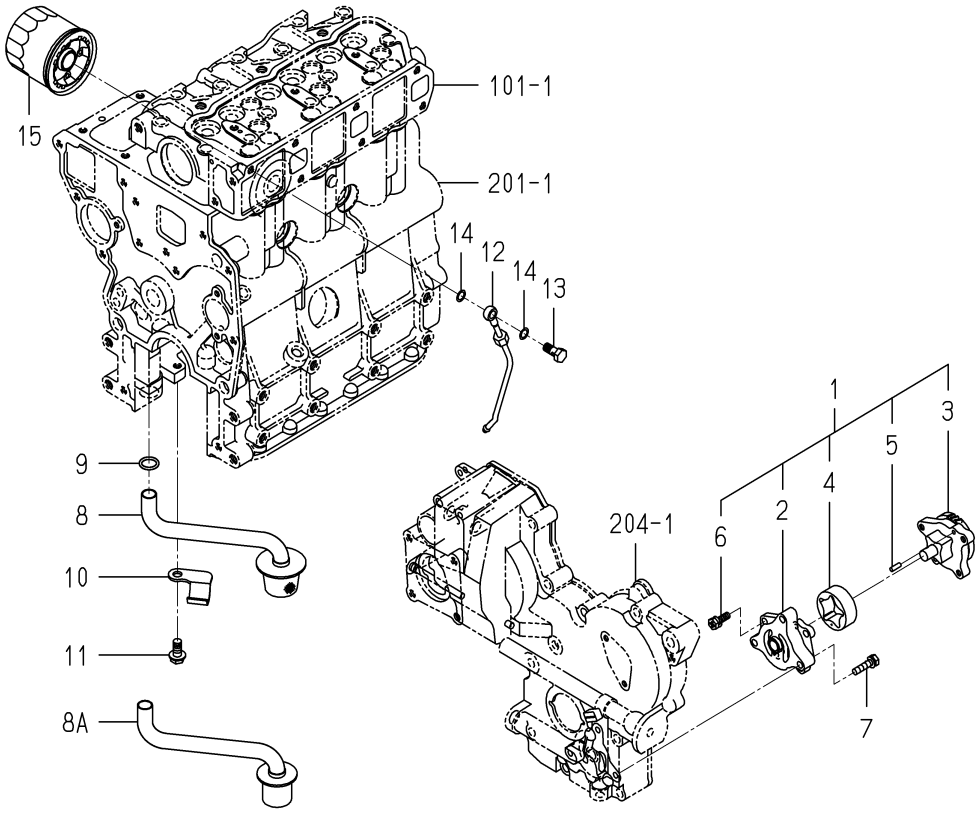

6004-401C-0100

KEY	PART CODE	DESCRIPTION	SPC	TYPE OF MODEL E3112 VG04		ITC	COL	GRP	REMARKS
1	6213-100-003-30	OILPUMP ASSY	*	1					
2	6213-111-001-30	BODY/OILPUMP	*	1					
3	6213-120-003-20	GEAR/OILPUMP ASSY	*	1					
4	6213-125-001-00	ROTOR/OUTER	*	1					
5	6213-129-003-00	PIN/STRAIGHT	*	2					
6	6213-119-001-00	BOLT/WS	*	3					
7	6901-910-625-00	BOLT	*	3					
8	- - - - - -	BLANK	*						- - - - - -
8A	6213-140-035-00	STRAINER	*	1					
9	V720-102-401-50	O-RING/P15	*	1					
10	6213-149-002-00	CLAMP,STRAINER	*	1					
11	- - - - - -	BLANK	*						- - - - - -
11	V231-360-801-60	FLANGEBOLT	*	1					
12	6213-311-006-00	PIPE,OIL	*	1					
13	6909-906-105-10	BOLT,JOINT	*	1					
14	6209-920-002-00	PACKING	*	2					
15	6213-240-002-10	CARTRIDGE/OILFILTER	*	1					

FIG.402 WATER PUMP

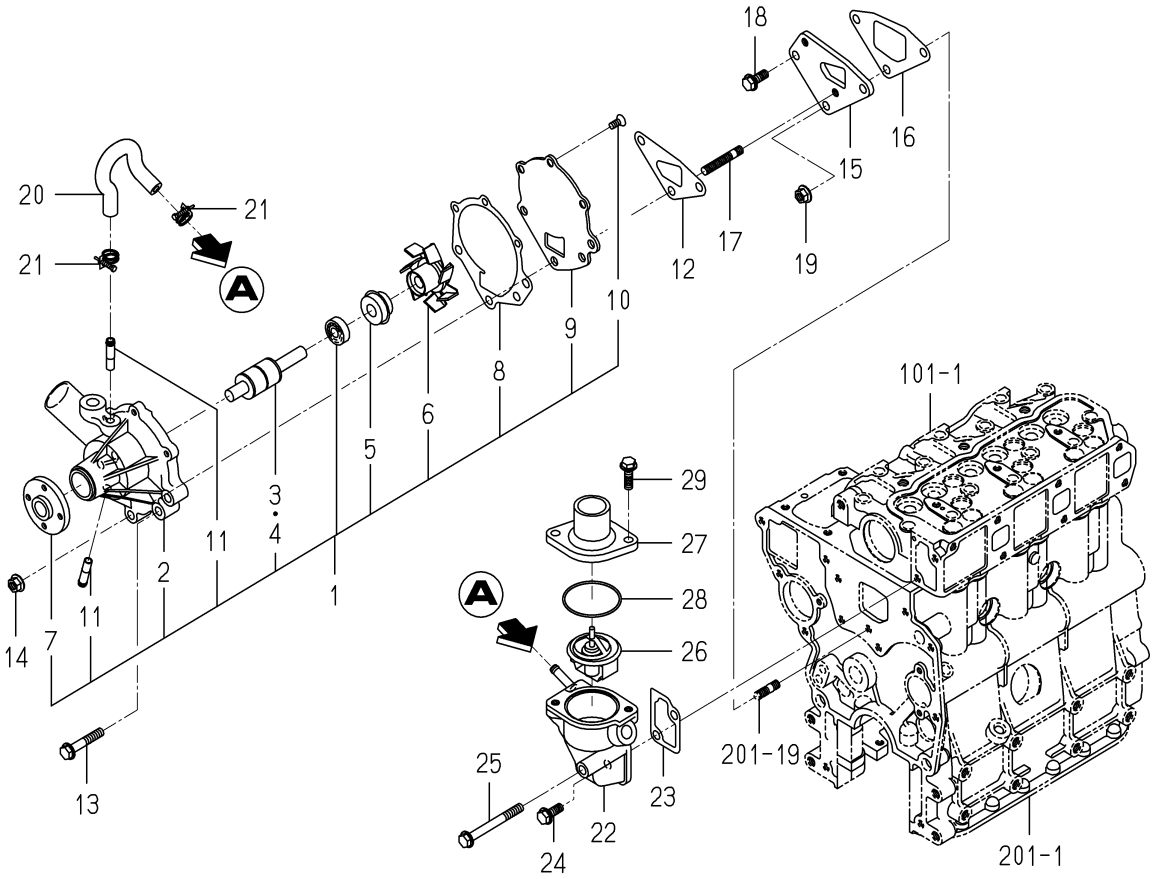

6004-420 -0100

KEY	PART CODE	DESCRIPTION	SPC	TYPE OF MODEL E3112 VG04		ITC	COL	GRP	REMARKS
1	6213-610-005-40	WATERPUMP ASSY	*	1					
2	6213-611-003-20	BODY/WATERPUMP	*	1					
3	6213-631-002-00	BEARING/WATER PUMP	*	1					
4	6213-631-005-00	BEARING/WATERPUMP	*	1					
5	6213-622-002-10	SEAL SET/WATER PUMP	*	1					
6	6213-621-003-00	ROTOR/WATERPUMP	*	1					
7	6213-642-002-00	SEAL/WATER PUMPPULLE	*	1					
8	6213-613-002-10	GASKET	*	1					
9	6213-612-004-00	PLATE/WATER PUMP	*	1					
10	6213-619-003-00	SCREW/WATER PUMP	*	3					
11	6213-619-002-00	PIPE/WATER PUMP	*	2					
12	6213-614-003-10	GASKET/WATER PUMP	*	1					
13	- - - - - -	BLANK	*						- - - - - -
13	- - - - - -	BLANK	*						- - - - - -
13	V231-360-804-50	FLANGEBOLT	*	1					
14	3817-401-001-00	NUT/M08	*	2					
15	6213-619-001-00	SPACER,PUMP.WATER	*	1					
16	6213-614-004-10	GASKET,SPACER	*	1					
17	6904-110-840-00	STUD/M8X40	*	2					
18	- - - - - -	BLANK	*						- - - - - -
18	- - - - - -	BLANK	*						- - - - - -
18	V231-360-802-00	FLANGEBOLT	*	1					
19	3817-401-001-00	NUT/M08	*	1					
20	6213-729-013-10	HOSE/RUBBER	*	1					
21	J061-210-015-00	CLAMP/WIRE/10-15	*	2					
22	6213-716-001-50	HOUSING/THERMOSTAT	*	1					
23	6213-743-002-10	GASKET/HOUSING	*	1					
24	- - - - - -	BLANK	*						- - - - - -
24	V231-360-802-00	FLANGEBOLT	*	1					
25	- - - - - -	BLANK	*						- - - - - -

FIG.402 WATER PUMP

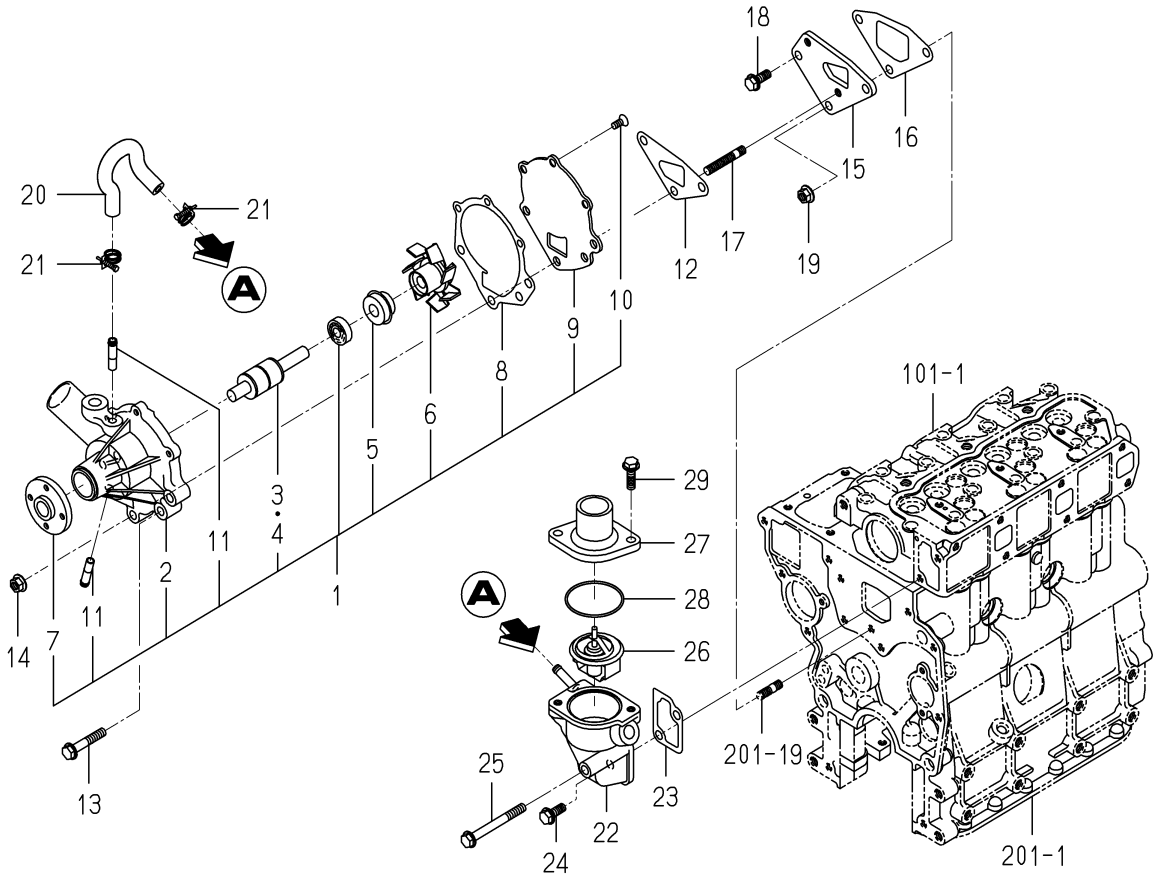

6004-420 -0100

KEY	PART CODE	DESCRIPTION	SPC	TYPE OF MODEL E3112 VG04		ITC	COL	GRP	REMARKS
25	V231-360-807-50	FLANGEBOLT	*	1					
26	6513-770-022-10	THERMOSTAT	*	1					
27	6213-711-003-20	PIPE,WATER OUTLET	*	1					
28	V723-102-005-50	O-RING	*	1					
29	- - - - - -	BLANK	*						- - - - - -
29	V231-360-802-50	FLANGEBOLT	*	2					

FIG.403 COOLING FAN

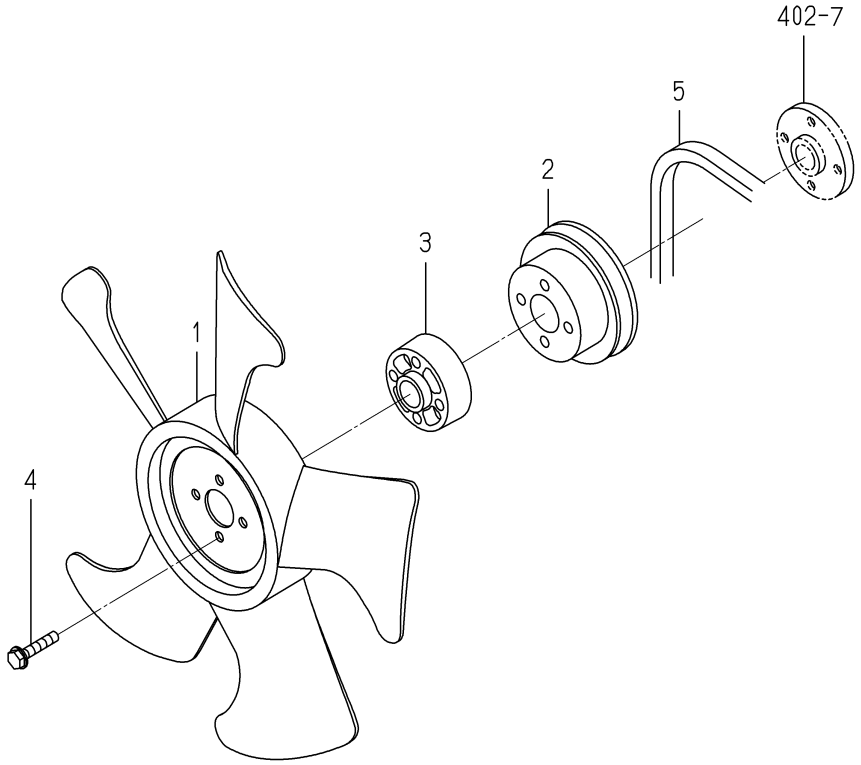

6004-480P-0100

KEY	PART CODE	DESCRIPTION	SPC	TYPE OF MODEL E3112 VG04		ITC	COL	GRP	REMARKS
1	6213-660-023-00	FAN/COOLING	*	1					
2	- - - - - -	BLANK	*						- - - - - -
2	6213-641-002-10	PULLEY,WATER PUMP	*	1					
3	6213-669-003-00	SPACER/FUN/19	*	1					
4	- - - - - -	BLANK	*						- - - - - -
4	- - - - - -	BLANK	*						- - - - - -
4	V230-360-603-00	FLANGEBOLT	*	4					
5	- - - - - -	BLANK	*						- - - - - -
5	6213-671-027-00	BELT/VCOGHM34.0	*	1					

FIG.501 INJECTION NOZZLE

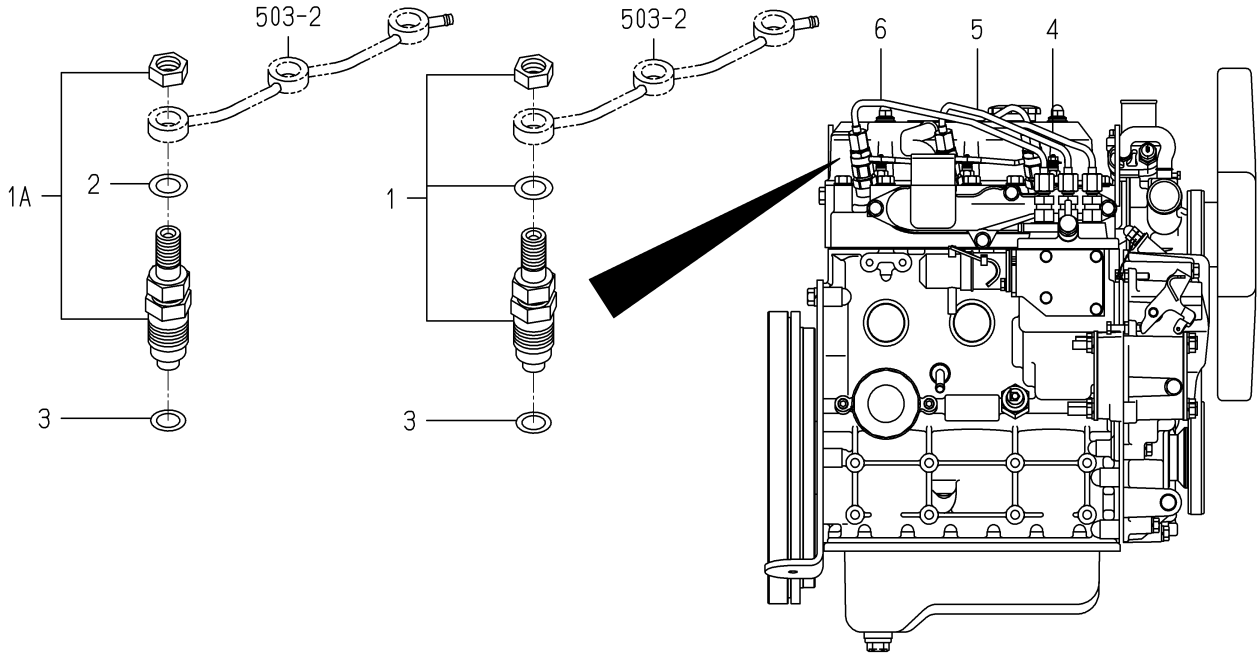

6004-501C-0100

KEY	PART CODE	DESCRIPTION	SPC	TYPE OF MODEL E3112 VG04		ITC	COL	GRP	REMARKS
1	- - - - - -	BLANK	*						- - - - - -
1A	6215-300-036-10	INJECTIONNOZZLE ASSY	*	3					FIG S01
2	- - - - - -	BLANK	*						- - - - - -
2	6215-359-001-00	WASHER	*	3					
3	6215-315-002-00	GASKET,NOZZLE	*	3					
4	- - - - - -	BLANK	*						- - - - - -
4	- - - - - -	BLANK	*						- - - - - -
4	6215-411-126-10	PIPE/INJECTION ASSY	*	1					
5	- - - - - -	BLANK	*						- - - - - -
5	6215-411-127-00	PIPE/INJECTION ASSY	*	1					
6	- - - - - -	BLANK	*						- - - - - -
6	6215-411-128-00	PIPE/INJECTION ASSY	*	1					

FIG.502 INJECTION PUMP

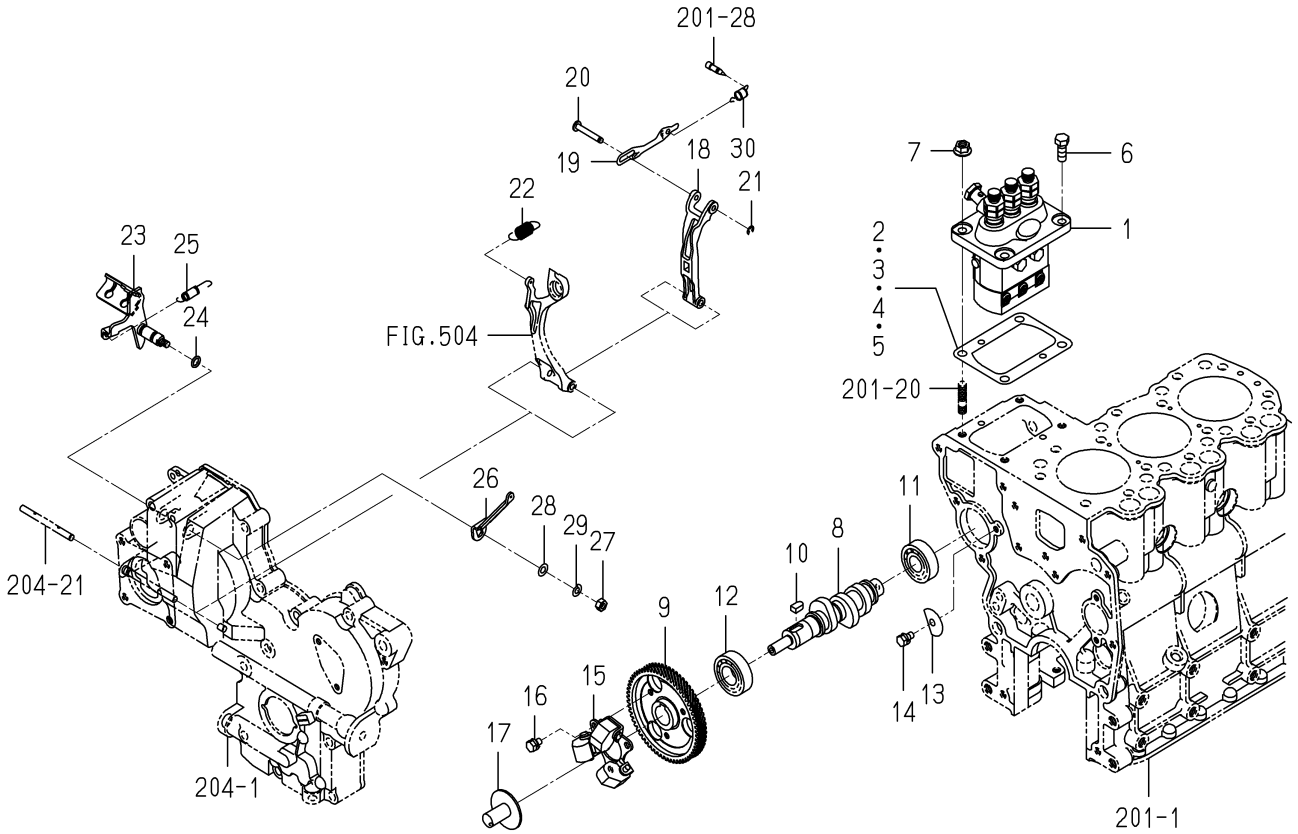

6004-511D-0100

KEY	PART CODE	DESCRIPTION	SPC	TYPE OF MODEL E3112 VG04		ITC	COL	GRP	REMARKS
1	6215-600-103-10	INJECTIONPUMP ASSY	*	1					FIG S02
2	6219-752-045-00	SHIM/INJECTIONPUMP	*	1					
3	6219-752-044-00	SHIM/INJECTIONPUMP	*	1					
4	6219-752-046-00	SHIM/INJECTIONPUMP	*	1					
5	6219-752-047-00	SHIM/INJECTIONPUMP	*	1					
6	V201-360-802-00	BOLT/M8X20	*	2					
7	3817-401-001-00	NUT/M08	*	2					
8	6215-621-016-20	CAMSHAFT/INJECTION P	*	1					
9	6212-524-002-20	GEAR/INJECTIONPUMP	*	1					
10	6209-730-005-00	KEY/07X05X09	*	1					
11	V600-110-620-30	BEARING,RB/6203	*	1					
12	V600-110-600-40	BEARING,RB/6004	*	1					
13	6212-535-002-00	PLATE,THRUST INJPUMP	*	1					
14	6901-910-612-00	BOLT,SEMS/M6X12	*	1					
15	6215-520-001-00	FLYWEIGHT	*	1					
16	6209-030-043-00	BOLT/M6X10	*	3					
17	6215-526-004-00	THRUSTPIECE	*	1					
18	6215-541-001-10	ARM/FLOATING COMP	*	1					
19	6215-543-002-10	RINK/CONTROL	*	1					
20	6215-542-006-00	PIN,CONTROL	*	1					
21	V710-140-004-00	RING,SNAP/ 4 E	*	1					
22	6215-531-023-00	SPRINNG/GOVERNOR	*	1					
23	------	BLANK	*						------
23	6215-541-024-40	LEVER/CONTROL COMP	*	1					
24	V720-101-900-80	O-RING/P 8	*	1					
25	6209-580-002-10	SPRING,RETURN	*	1					
26	6215-549-007-10	ARM/CONTROL	*	1					
27	V301-260-006-00	NUT/M6	*	1					
28	V411-260-006-00	WASHER / M6	*	1					
29	V401-160-006-00	WASHER,SP/M 6	*	1					

FIG.502 INJECTION PUMP

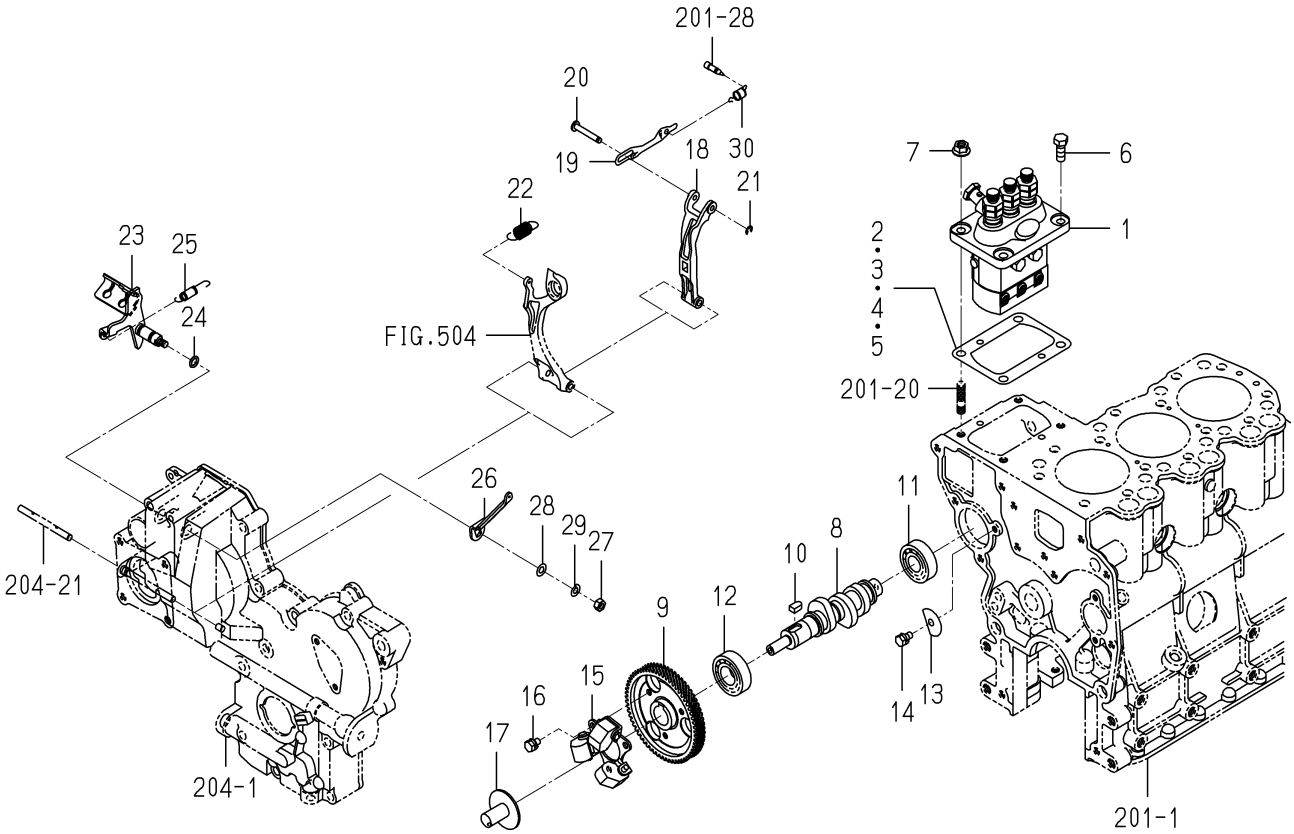

6004-511D-0100

KEY	PART CODE	DESCRIPTION	SPC	TYPE OF MODEL E3112 VG04		ITC	COL	GRP	REMARKS
30	6215-549-012-00	SPRING,STARTING	*	1					

FIG.503 FUEL PIPE

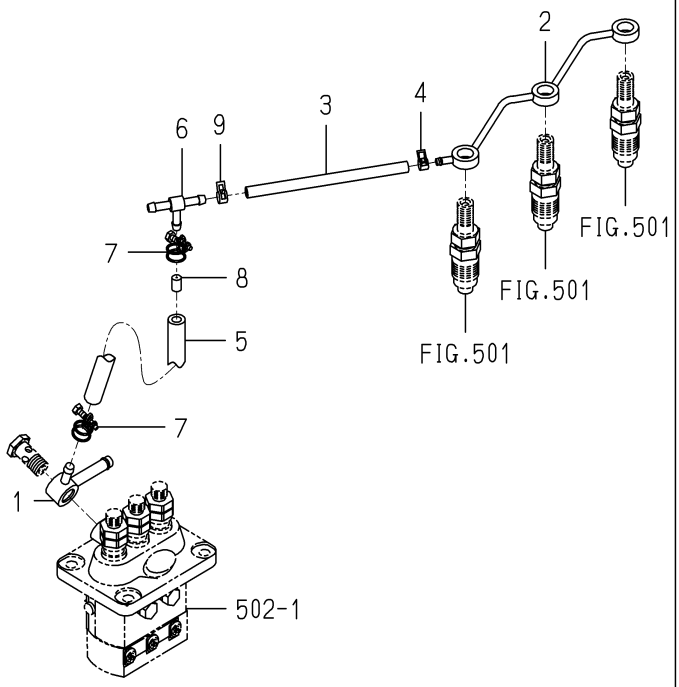

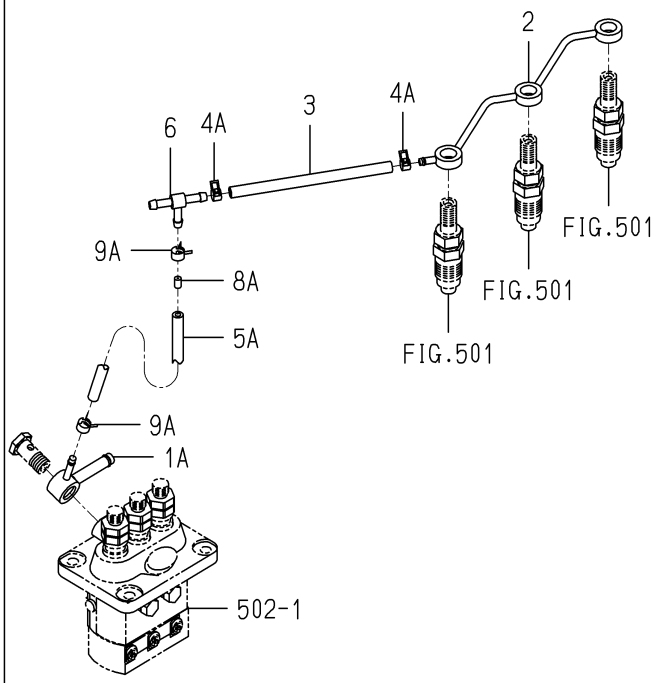

6004-550I-0100

KEY	PART CODE	DESCRIPTION	SPC	TYPE OF MODEL E3112 VG04		ITC	COL	GRP	REMARKS
1	- - - - - -	BLANK	*						- - - - - -
1A	6215-412-004-00	CONNECTOR/FUEL	*	1					
2	6215-411-125-00	PIPE/FUEL	*	1					
3	6209-360-005-00	HOSE,RUBBER	*	1					
4	- - - - - -	BLANK	*						- - - - - -
4A	J062-076-082-00	CLIP/HOSE/7.6-8.2	*	2					
5	- - - - - -	BLANK	*						- - - - - -
5A	6209-360-120-00	HOSE/RUBBER/70	*	1					
6	3632-360-036-00	JOINTT-TYPE 2	*	1					
7	- - - - - -	BLANK	*						- - - - - -
8	- - - - - -	BLANK	*						- - - - - -
8A	3640-586-004-00	RESISTANCE/1.0	*	1					
9	- - - - - -	BLANK	*						- - - - - -
9A	J062-087-093-00	CLIP/HOSE/8.7-9.3	*	2					

FIG.504 ADAPTER

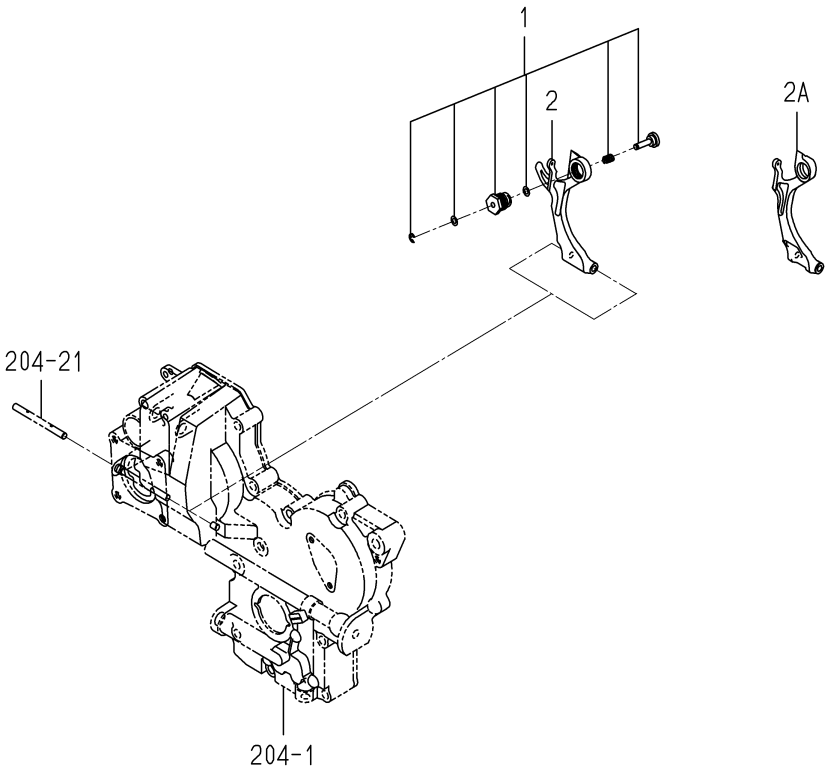

6005-560 -0100

KEY	PART CODE	DESCRIPTION	SPC	TYPE OF MODEL E3112 VG04		ITC	COL	GRP	REMARKS
1	6215-548-029-00	ADAPTER/255X065 ASSY	*	1					
2	- - - - - -	BLANK	*						- - - - - -
2A	6215-541-016-40	ARM/TENSION	*	1					

FIG.801 ELECTRIC (1)

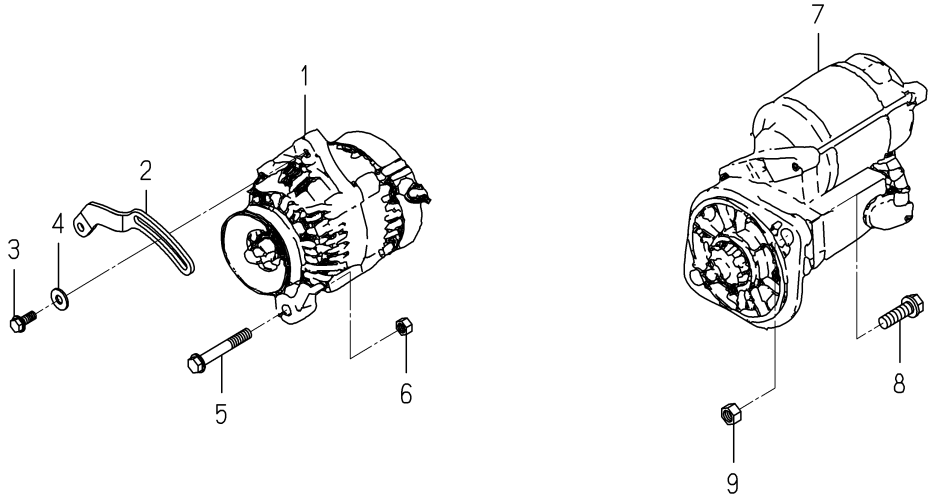

6004-801F-0100,6004-801F-0200

KEY	PART CODE	DESCRIPTION	SPC	TYPE OF MODEL E3112 VG04		ITC	COL	GRP	REMARKS
1	6281-200-005-00	GENERATOR ASSY	*	1					FIG S03
2	6213-674-006-20	PLATE/ADJUST	*	1					
3	V231-360-802-00	FLANGEBOLT	*	1					
4	1373-121-001-00	WASHER/9X22X2	*	1					
5	V233-361-007-00	FLANGEBOLT	*	1					
6	V334-260-010-00	NUT/M10	*	1					
7	6281-100-011-20	STARTER ASSY	*	1					
8	6901-931-240-00	BOLT	*	2					
9	V304-260-012-00	NUT/M12	*	2					

FIG.802 ELECTRIC (2)

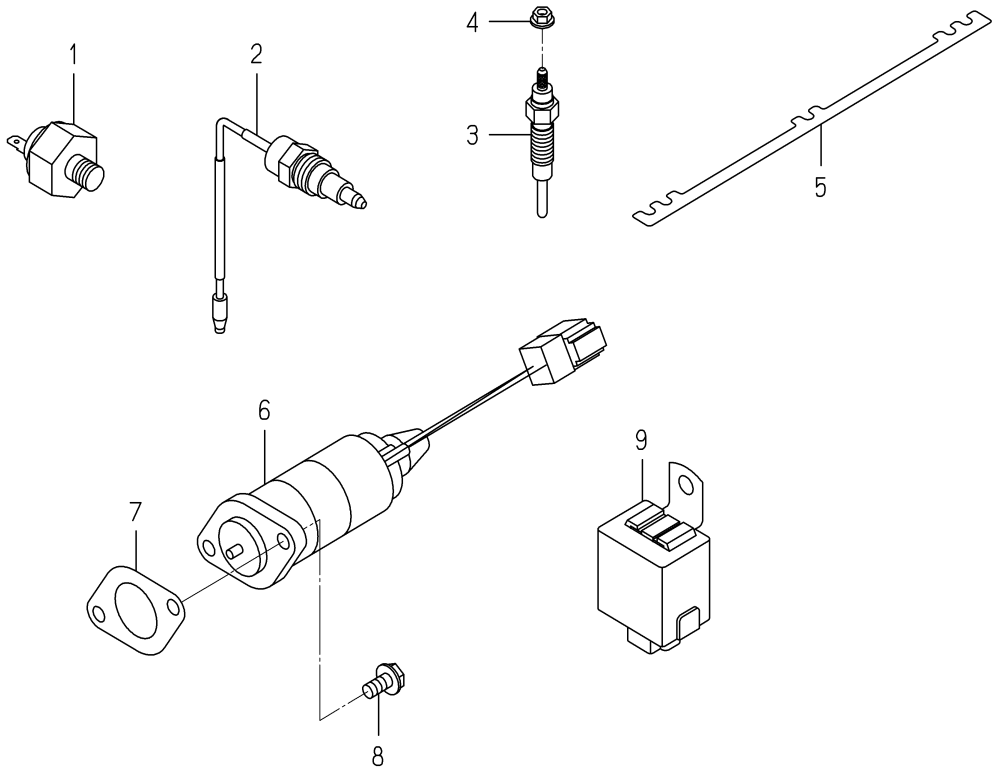

6004-820W-0100,6004-820W-0200

KEY	PART CODE	DESCRIPTION	SPC	TYPE OF MODEL E3112 VG04		ITC	COL	GRP	REMARKS
1	6281-971-001-10	SWITCH/OILPRESSURE	*	1					
2	6282-450-002-00	SWITCH/OVERHEAT	*	1					
3	6281-410-023-10	GLOWPLUG	*	3					
4	6209-440-005-00	NUT/FLANGE	*	3					
5	6219-732-017-00	CONNECTOR/GLOWPLUG	*	1					
6	6281-910-014-00	SOLENOID	*	1					
7	6209-630-002-10	GASKET	*	1					
8	V230-360-601-60	FLANGEBOLT	*	2					
9	6281-920-001-00	RELAY,SOLENOID	*	1					

FIG.P01 SHORT BLOCK ENGIASSY

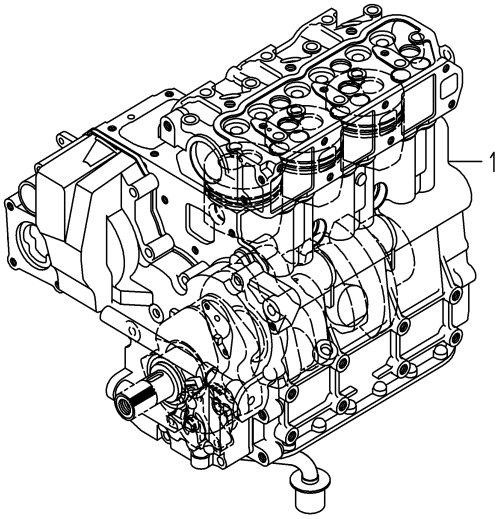

6004-012I-0100

KEY	PART CODE	DESCRIPTION	SPC	TYPE OF MODEL E3112 VG04		ITC	COL	GRP	REMARKS
1	6004-010-065-00	SHORTBLOCKENGIN ASSY	T	1					

FIG.P02 BEARING/UNDER SIZE (OPTION)

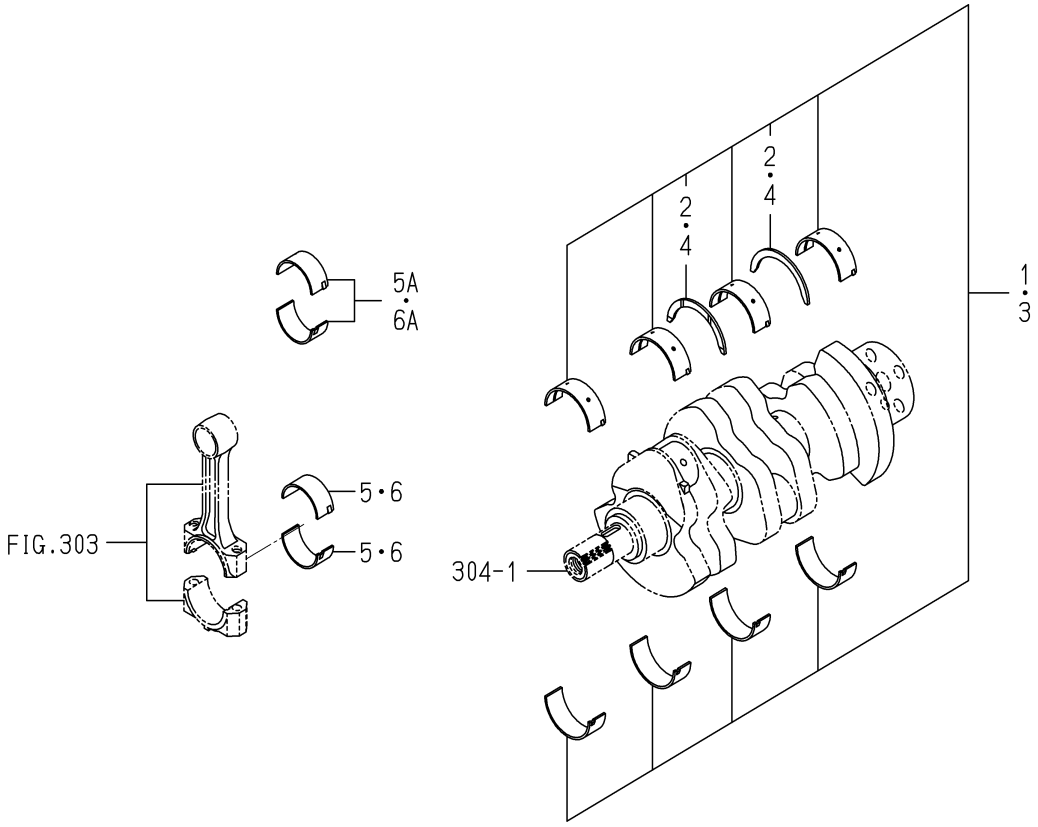

6003-209 -0100

KEY	PART CODE	DESCRIPTION	SPC	TYPE OF MODEL E3112 VG04		ITC	COL	GRP	REMARKS
1	6211-540-001-00	METAL,CRANK SET 050	T	1					
2	6211-599-001-10	BEARING,THRUST CRANK	T	2					
3	6211-560-001-00	METAL,CRANK SET 100	T	1					
4	6211-599-001-10	BEARING,THRUST CRANK	T	2					
5	- - - - - -	BLANK	T						- - - - - -
5A	- - - - - -	BLANK	T						- - - - - -
5A	6212-274-016-00	BEARING/CONNECTING R	T	3					
6	- - - - - -	BLANK	T						- - - - - -
6A	- - - - - -	BLANK	T						- - - - - -
6A	6212-276-016-00	BEARING/CONNECTING R	T	3					

FIG.P03 PISTON/OVER SIZE (OPTION)

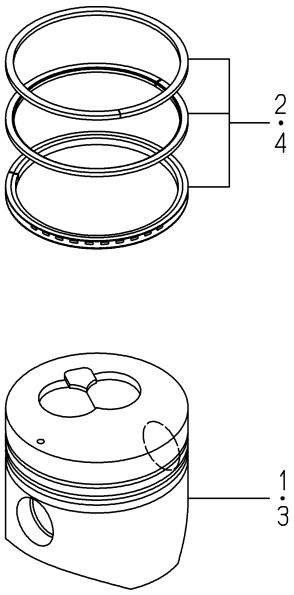

6004-349I-0100

KEY	PART CODE	DESCRIPTION	SPC	TYPE OF MODEL E3112 VG04		ITC	COL	GRP	REMARKS
1	- - - - - -	BLANK	T						- - - - - -
1	- - - - - -	BLANK	T						- - - - - -
1	- - - - - -	BLANK	T						- - - - - -
1	6212-114-094-20	PISTON(OV) 78.7	T	3					
2	6212-124-014-10	RING/PISTON/OV SET	T	3					
3	- - - - - -	BLANK	T						- - - - - -
3	- - - - - -	BLANK	T						- - - - - -
3	- - - - - -	BLANK	T						- - - - - -
3	6212-116-094-20	PISTON(OV) 79.2	T	3					
4	6212-126-014-10	RING/PISTON/OV SET	T	3					

FIG.P04 REPAIR PARTS (OPTION)

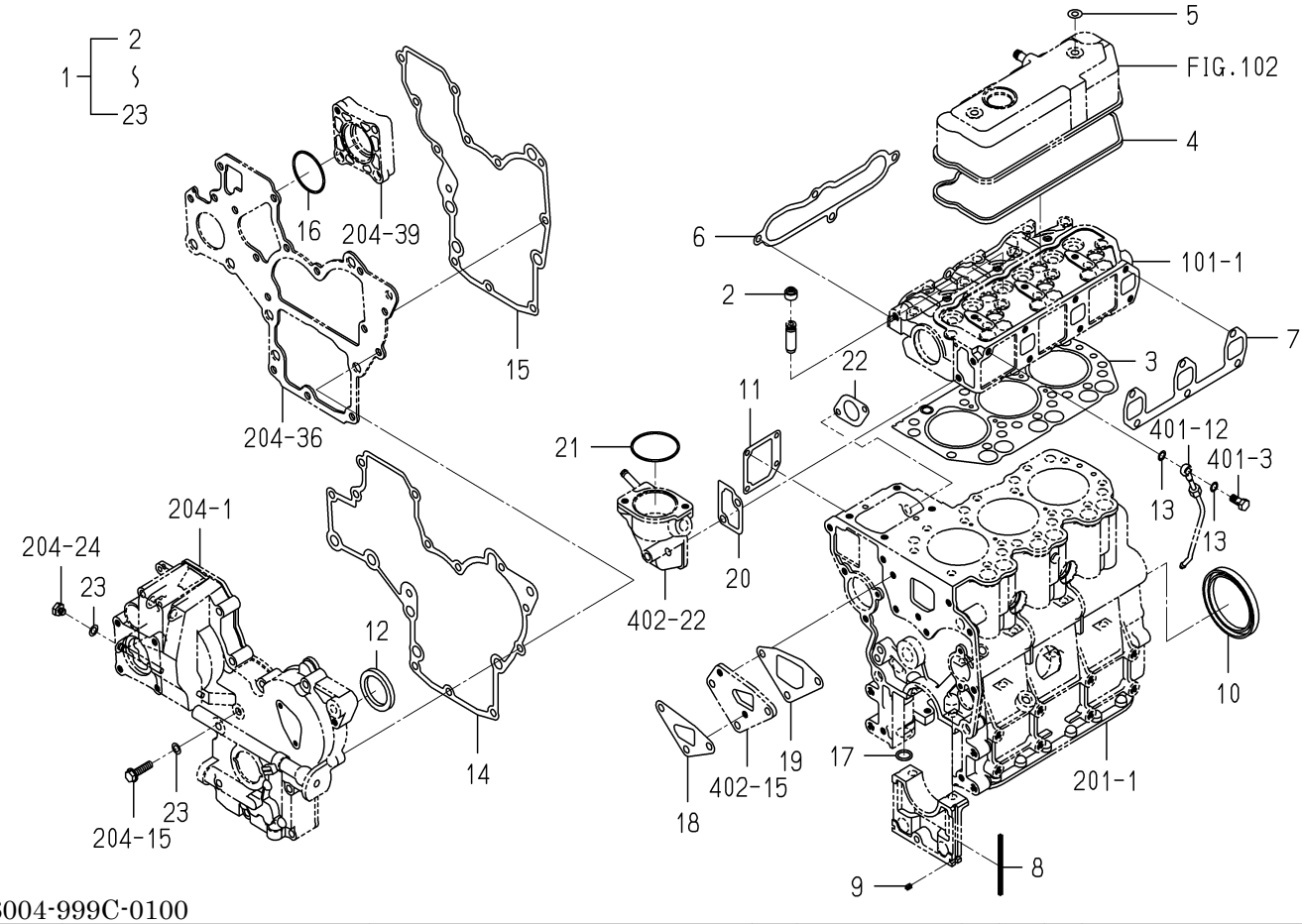

6004-999C-0100

KEY	PART CODE	DESCRIPTION	SPC	TYPE OF MODEL E3112 VG04		ITC	COL	GRP	REMARKS
1	6287-810-015-20	REPAIR/ENGINE SET	T	1					
2	6212-569-002-00	SEAL,OIL	T	6					
3	6211-141-029-20	GASKET/CYLINDERHEAD	T	1					
4	6211-173-003-00	SEAL,CYL.HEAD COVER	T	1					
5	6209-572-003-00	GASKET	T	2					
6	6214-115-001-20	GASKET,INLET MANIFOL	T	1					
7	6214-145-001-30	GASKET,EXH.MANIFOLD	T	1					
8	6211-258-001-00	SEAL,BEARING CAP	T	4					
9	6211-258-002-00	SEAL,BEARING CAP/7	T	2					
10	- - - - - -	BLANK	T						- - - - - -
10	6209-625-001-00	SEAL,OIL	T	1					
11	6211-292-001-20	GASKET/COVER	T	1					
12	6209-625-002-00	SEAL,OIL	T	1					
13	6209-920-002-00	PACKING	T	2					
14	6211-312-003-20	GASKET/GEARCASE	T	1					
15	6211-312-004-20	GASKET/PLATE	T	1					
16	V723-102-005-00	O-RING 1A S50	T	1					
17	V720-102-401-50	O-RING/P15	T	1					
18	6213-614-003-10	GASKET/WATER PUMP	T	1					
19	6213-614-004-10	GASKET,SPACER	T	1					
20	6213-743-002-10	GASKET/HOUSING	T	1					
21	V723-102-005-50	O-RING	T	1					
22	6209-630-002-10	GASKET	T	1					
23	6209-500-003-00	WASHER/08X14X01	T	2					

FIG.S01 COMPONENT PARTS FOR 6215-300-036-10 ON Fig.501

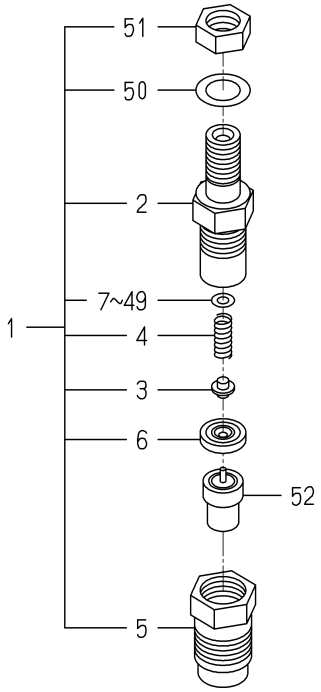

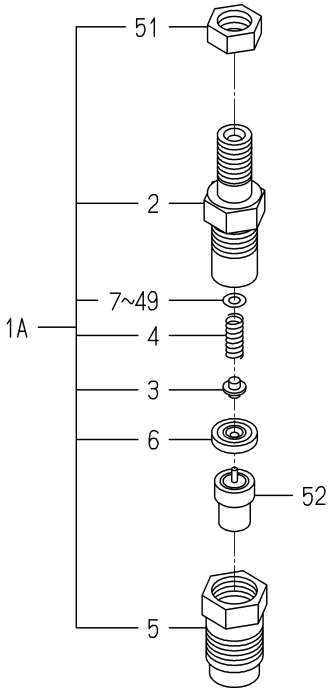

6215-300-036-1B

KEY	PART CODE	DESCRIPTION	SPC	TYPE OF MODEL E3112 VG04		ITC	COL	GRP	REMARKS
1	- - - - - -	BLANK	*						- - - - - -
1A	6215-330-024-10	HOLDER/NOZZLE ASSY	*	3					
2	6215-331-008-00	BODY/NOZZLE HOLDER	*	3					
3	6215-342-001-00	PIN,NOZZLE HOLDER	*	3					
4	6215-343-001-00	WASHER	*	3					
5	6215-332-013-00	NUT/NOZZLERETAINING	*	3					
6	6215-339-001-00	PIECE,DISTANCE	*	3					
7	6215-345-001-00	WASHER/0.9	*	3					
8	6215-345-002-00	WASHER/0.925	*	3					
9	6215-345-003-00	WASHER/0.95	*	3					
10	6215-345-004-00	WASHER/0.975	*	3					
11	6215-345-005-00	WASHER/1.0	*	3					
12	6215-345-006-00	WASHER/1.025	*	3					
13	6215-345-007-00	WASHER/1.05	*	3					
14	6215-345-008-00	WASHER/1.075	*	3					
15	6215-345-009-00	WASHER/1.1	*	3					
16	6215-345-010-00	WASHER/1.125	*	3					
17	6215-345-011-00	WASHER/1.15	*	3					
18	6215-345-012-00	WASHER/1.175	*	3					
19	6215-345-013-00	WASHER/1.2	*	3					
20	6215-345-014-00	WASHER/1.225	*	3					
21	6215-345-015-00	WASHER/1.25	*	3					
22	6215-345-016-00	WASHER/1.275	*	3					
23	6215-345-017-00	WASHER/1.3	*	3					
24	6215-345-018-00	WASHER/1.325	*	3					
25	6215-345-019-00	WASHER/1.35	*	3					
26	6215-345-020-00	WASHER/1.375	*	3					
27	6215-345-021-00	WASHER/1.4	*	3					
28	6215-345-022-00	WASHER/1.425	*	3					
29	6215-345-023-00	WASHER/1.45	*	3					

FIG.S01 COMPONENT PARTS FOR 6215-300-036-10 ON Fig.501

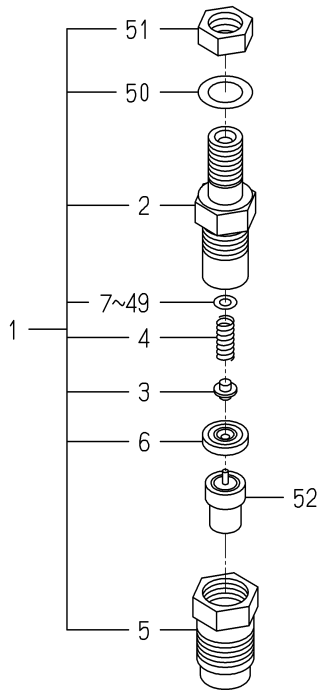

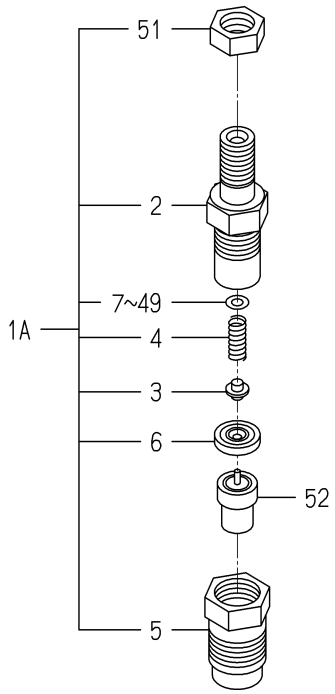

6215-300-036-1B

KEY	PART CODE	DESCRIPTION	SPC	TYPE OF MODEL E3112 VG04		ITC	COL	GRP	REMARKS
30	6215-345-024-00	WASHER/1.475	*	3					
31	6215-345-025-00	WASHER/1.5	*	3					
32	6215-345-026-00	WASHER/1.525	*	3					
33	6215-345-027-00	WASHER/1.55	*	3					
34	6215-345-028-00	WASHER/1.575	*	3					
35	6215-345-029-00	WASHER/1.6	*	3					
36	6215-345-030-00	WASHER/1.625	*	3					
37	6215-345-031-00	WASHER/1.65	*	3					
38	6215-345-032-00	WASHER/1.675	*	3					
39	6215-345-033-00	WASHER/1.7	*	3					
40	6215-345-034-00	WASHER/1.725	*	3					
41	6215-345-035-00	WASHER/1.75	*	3					
42	6215-345-036-00	WASHER/1.775	*	3					
43	6215-345-037-00	WASHER/1.8	*	3					
44	6215-345-038-00	WASHER/1.825	*	3					
45	6215-345-039-00	WASHER/1.85	*	3					
46	6215-345-040-00	WASHER/1.875	*	3					
47	6215-345-041-00	WASHER/1.9	*	3					
48	6215-345-042-00	WASHER/1.925	*	3					
49	6215-345-043-00	WASHER/1.95	*	3					
50	------	BLANK	*						------
51	6215-359-002-00	NUT	*	3					
52	6215-311-027-00	NOZZLE ASSY	*	3					

FIG.S02 COMPONENT PARTS FOR 6215-600-103-10 ON Fig.502

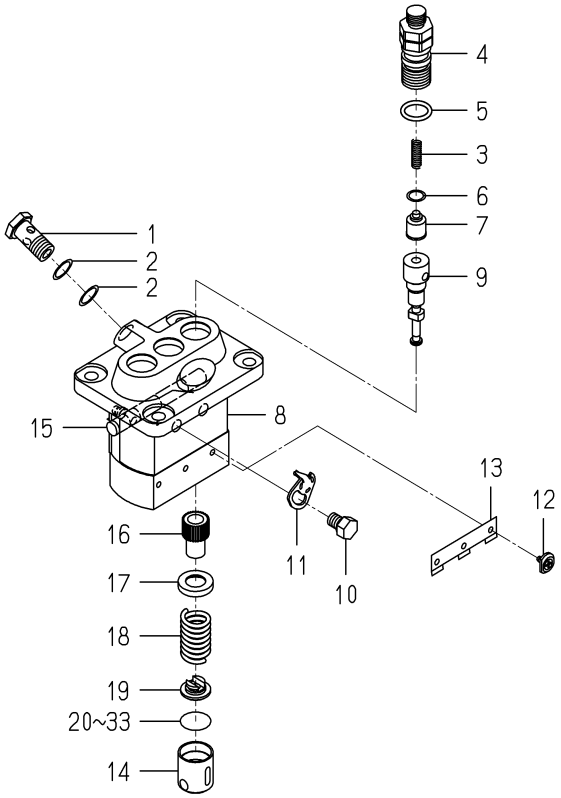

6215-600-103-1F

KEY	PART CODE	DESCRIPTION	SPC	TYPE OF MODEL E3112 VG04		ITC	COL	GRP	REMARKS
1	6215-619-009-00	SCREW/HOLLOW	*	1					
2	6215-619-010-00	WASHER/AIR BLEEDER	*	2					
3	6215-643-006-00	SPRING/DELIVERYVALVE	*	3					
4	6215-644-007-00	HOLDER/DELIVERYVALVE	*	3					
5	- - - - - -	BLANK	*						- - - - - -
5	6215-649-019-00	ORING	*	3					
6	6215-649-002-00	GASKET/DELIVERYVALVE	*	3					
7	6215-641-006-00	VALVE ASSY	*	3					
8	- - - - - -	BLANK	*						- - - - - -
8	6215-611-017-00	HOUSING ASSY	*	1					
9	- - - - - -	BLANK	*						- - - - - -
9	6215-631-019-00	ELEMENT ASSY	*	3					
10	6215-619-022-00	BOLT/WASHERHEAD	*	2					
11	6215-612-001-00	PLATE/ADJUSTING	*	2					
12	6215-629-001-00	PIN/INJECTIONPUMP	*	3					
13	6215-629-002-00	PLATE	*	1					
14	6215-622-001-00	TAPPET/INJECTIO ASSY	*	3					
15	6215-637-001-00	RACK/CONTROL ASSY	*	1					
16	6215-635-001-00	SLEEVE/PLUNGER	*	3					
17	6215-639-004-00	SEAT/SPRING/UPPER	*	3					
18	6215-634-001-00	SPRING/PUMPPLUNGER	*	3					
19	6215-639-005-00	SEAT/SPRING/LOWER	*	3					
20	6215-629-003-00	PLATE/TAPPET/AD 0.6	*	1					
21	6215-629-004-00	PLATE/TAPPET/AD 0.7	*	1					
22	6215-629-005-00	PLATE/TAPPET/AD 0.8	*	1					
23	6215-629-006-00	PLATE/TAPPET/AD 0.9	*	1					
24	6215-629-007-00	PLATE/TAPPET/AD 1.0	*	1					
25	6215-629-008-00	PLATE/TAPPET/AD 0.2	*	1					
26	6215-629-009-00	PLATE/TAPPET/AD 0.3	*	1					
27	6215-629-010-00	PLATE/TAPPET/AD 0.4	*	1					

FIG.S02 COMPONENT PARTS FOR 6215-600-103-10 ON Fig.502

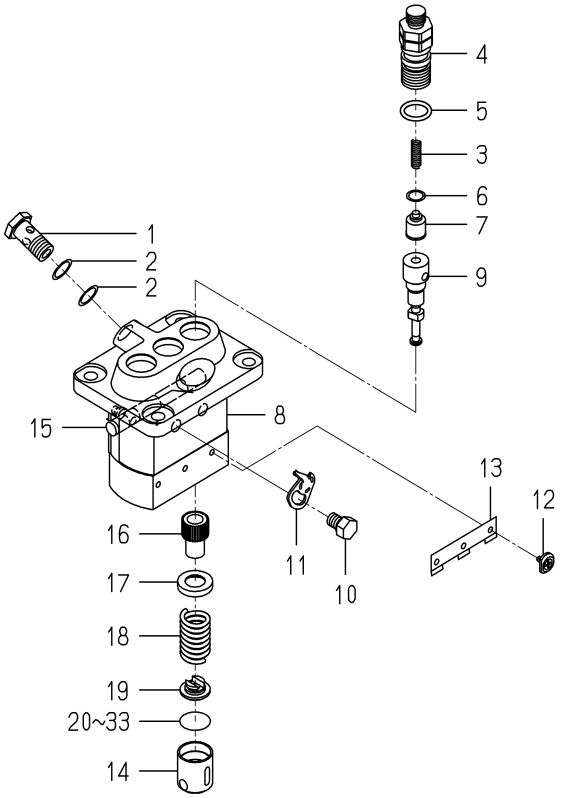

6215-600-103-1F

KEY	PART CODE	DESCRIPTION	SPC	TYPE OF MODEL E3112 VG04		ITC	COL	GRP	REMARKS
28	6215-629-011-00	PLATE/TAPPET/AD 0.5	*	1					
29	6215-629-012-00	PLATE/TAPPET/AD 0.25	*	1					
30	6215-629-013-00	PLATE/TAPPET/AD 0.35	*	1					
31	6215-629-014-00	PLATE/TAPPET/AD 0.45	*	1					
32	6215-629-015-00	PLATE/TAPPET/AD 0.55	*	1					
33	6215-629-016-00	PLATE/TAPPET/AD 0.65	*	1					

FIG.S03 COMPONENT PARTS FOR 6281-200-005-00 ON Fig.801

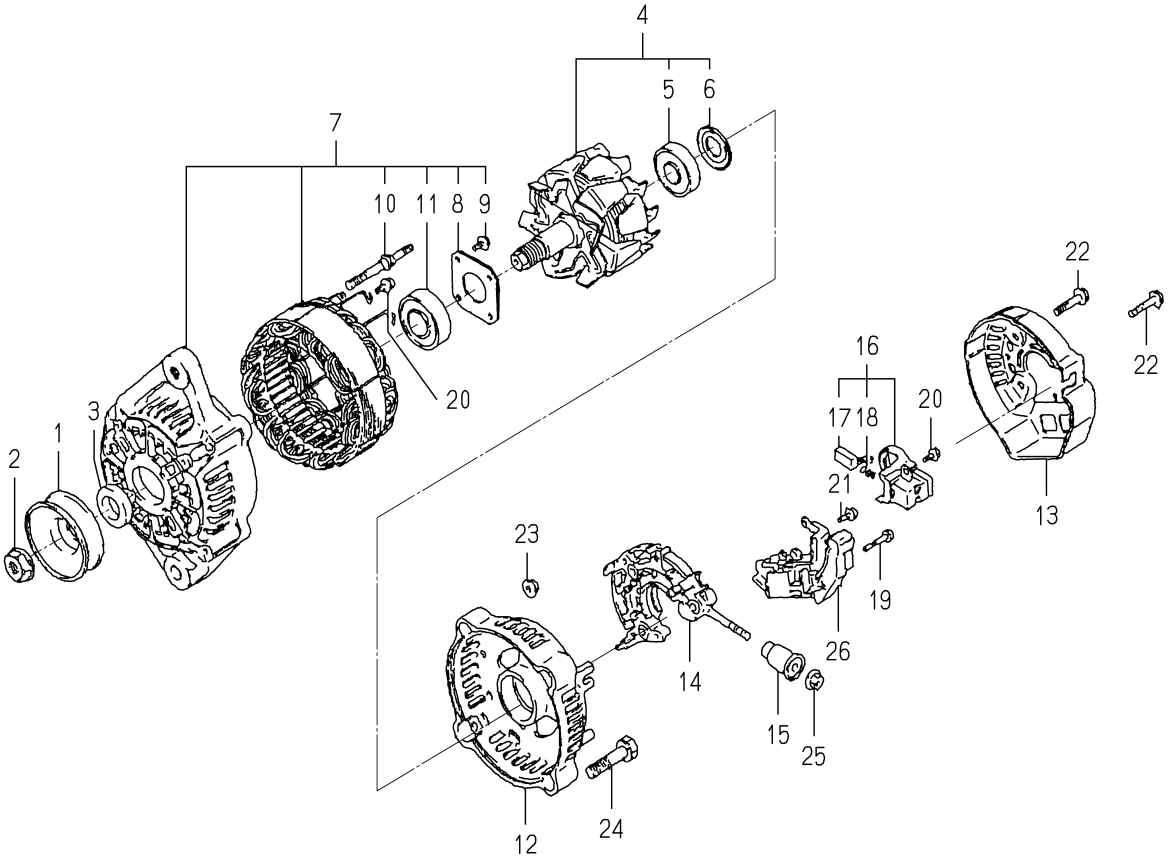

6281-200-005-0B

KEY	PART CODE	DESCRIPTION	SPC	TYPE OF MODEL E3112 VG04		ITC	COL	GRP	REMARKS
1	6281-222-004-00	PULLEY	*	1					
2	6281-229-002-00	NUT	*	1					
3	6281-229-003-00	COLLOR	*	1					
4	6281-221-007-00	ROTOR ASSY	*	1					
5	6281-229-004-00	COVER,BEARING	*	1					
6	6281-229-032-00	BEARING/BALL	*	1					
7	6281-213-018-00	FRAME/DRIVEEND ASSY	*	1					
8	6281-229-006-00	PLATE	*	1					
9	6281-229-007-00	BOLT	*	4					
10	6281-229-008-00	BOLT	*	2					
11	6281-229-033-00	BEARING/BALL	*	1					
12	6281-214-003-00	FRAME	*	1					
13	6281-214-004-00	COVER	*	1					
14	6281-229-029-00	HOLDER ASSY	*	1					
15	6281-229-011-00	BUSH	*	1					
16	6281-217-002-00	HOLDER/BRUSH ASSY	*	1					
17	6281-215-001-00	BRUSH	*	2					
18	6281-216-001-00	SPRING	*	2					
19	6281-229-012-00	BOLT	*	2					
20	6281-229-013-00	BOLT	*	6					
21	6281-229-014-00	BOLT	*	1					
22	6281-229-015-00	BOLT	*	3					
23	6281-229-016-00	NUT	*	2					
24	6281-229-017-00	BOLT	*	2					
25	6281-229-018-00	NUT	*	1					
26	6281-271-002-00	REGULATOR ASSY	*	1					

C H A S S I S

FIG.101 BRACKET(ENGINE)SYSTEM

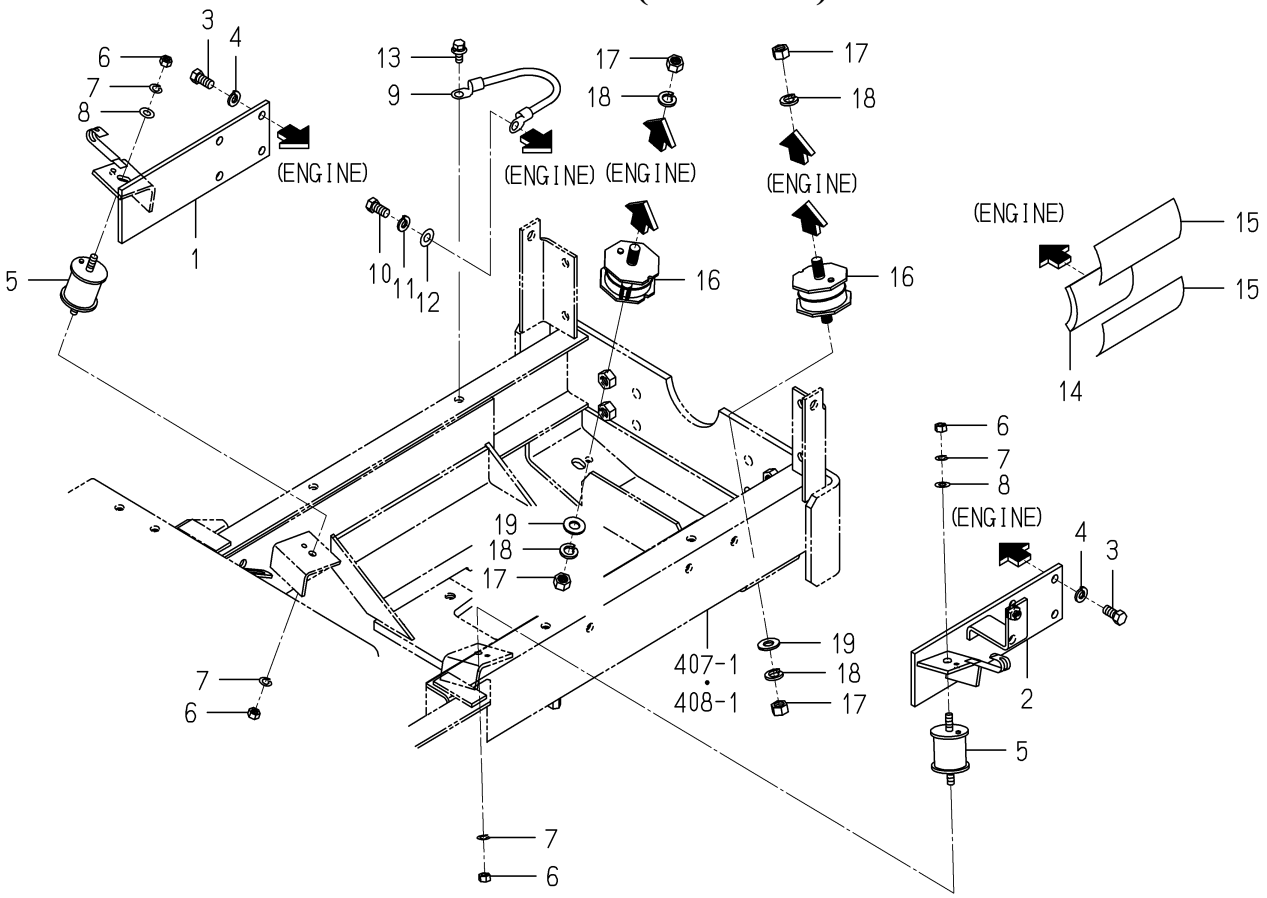

1771-101 -0100

KEY	PART CODE	DESCRIPTION	SPC	TYPE OF MODEL SFH220T	SFH240F	ITC	COL	GRP	REMARKS
1	1725-101-200-00	BRACKET/MOUNT/L COMP	*	1	1				
2	1771-101-210-00	BRACKET/MOUNT/L COMP	*	1	1				
3	V203-461-002-00	BOLT/M10X1.25X20	*	8	8				
4	V401-160-010-00	WASHER,SP/M10	*	8	8				
5	- - - - - -	BLANK	*						- - - - - -
5	1593-101-003-20	INSULATOR	*	2	2				
6	- - - - - -	BLANK	*						- - - - - -
6	V304-460-008-00	NUT/M8	*	4	4				
7	- - - - - -	BLANK	*						- - - - - -
7	V401-160-008-00	WASHER,SP/M 8	*	4	4				
8	- - - - - -	BLANK	*						- - - - - -
8	V411-260-008-00	WASHER,PL/M 8	*	2	2				
9	3623-263-001-00	WIRE,LEAD	*	1	1				
10	V203-461-002-00	BOLT/M10X1.25X20	*	1	1				
11	V401-160-010-00	WASHER,SP/M10	*	1	1				
12	V411-260-010-00	WASHER/M10	*	1	1				
13	V211-360-802-00	BOLT/SP	*	1	1				
14	1689-101-004-00	INSULATOR/STARTER	*	1	1				
15	1689-101-005-10	TAPE/ALUMINIUM/135	*	2	2				
16	3656-302-009-10	INSULATOR/MOUNT/34	*	2	2				
17	V304-260-012-00	NUT/M12	*	4	4				
18	V401-160-012-00	WASHER,SP/M12	*	4	4				
19	V411-260-012-00	WASHER /M12	*	2	2				

FIG.102 RADIATOR SYSTEM(1/2)

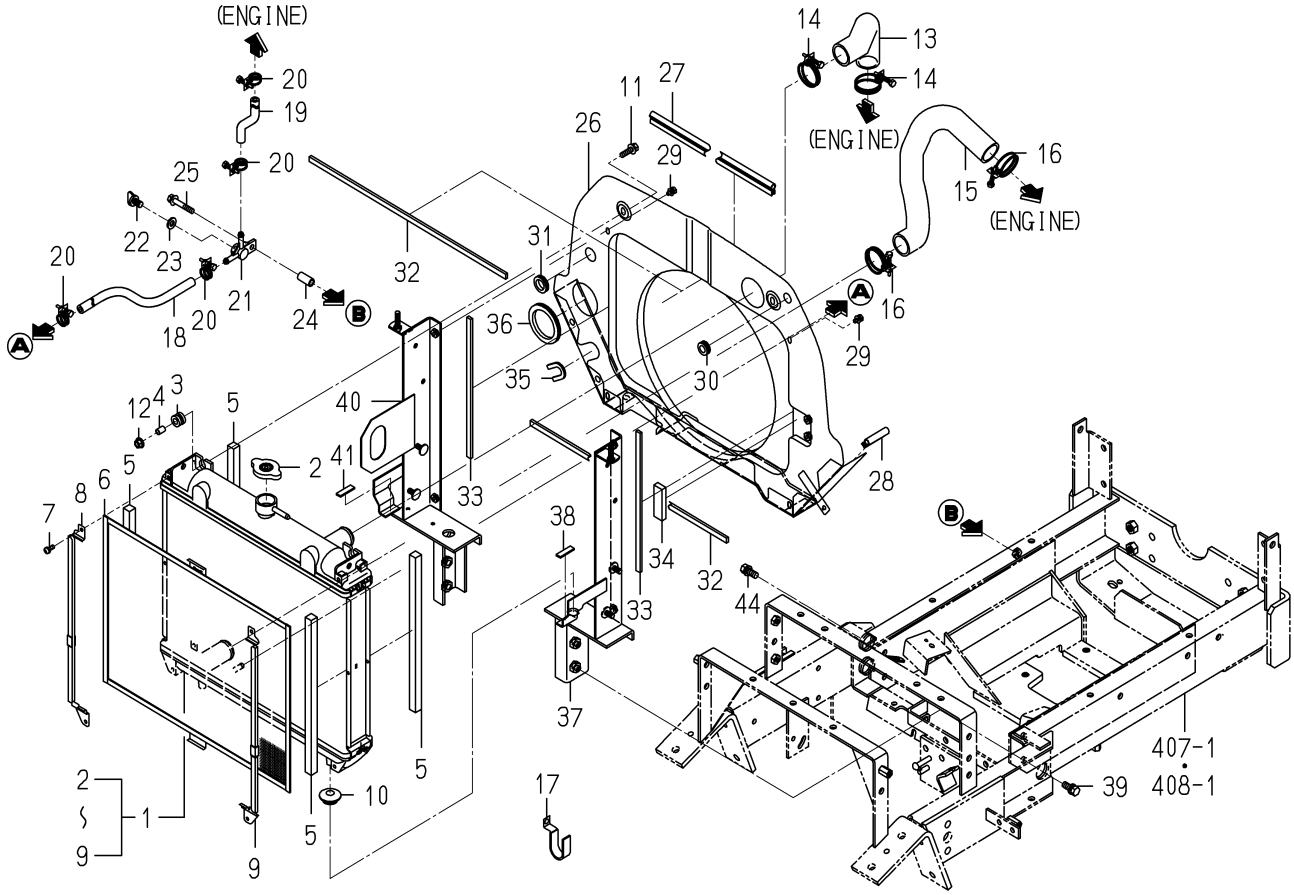

1771-102A-0100

KEY	PART CODE	DESCRIPTION	SPC	TYPE OF MODEL SFH220T	SFH240F	ITC	COL	GRP	REMARKS
1	1689-102-300-00	RADIATOR ASSY	*	1	1				
2	1650-102-202-10	CAP	*	1	1				
3	1719-102-202-00	MOUNTRUBBER	*	2	2				
4	1719-102-203-00	COLLER	*	2	2				
5	1689-102-304-00	INSULATOR/SIDE	*	4	4				
6	1689-102-305-00	NET/RADIATOR	*	1	1				
7	1703-102-203-00	SCREW/P	*	4	4				
8	1689-102-306-00	GUIDE/NET/LH	*	1	1				
9	1689-102-307-00	GUIDE/NET/RH	*	1	1				
10	1421-603-004-00	BUSH,LEVER	*	2	2				
11	V211-360-803-00	BOLT/SP	*	2	2				
12	V362-260-008-00	NUT/WASHER	*	2	2				
13	1771-102-001-00	HOSE/RADIATOR/INLET	*	1	1				
14	J061-236-044-00	CLAMP/WIRE/36-44	*	2	2				
15	1771-102-002-00	HOSE/RADIATOR/LOWER	*	1	1				
16	J061-236-044-00	CLAMP/WIRE/36-44	*	2	2				
17	1617-102-007-00	CLAMP	*	1	1				
18	1488-102-001-00	HOSE,DRAIN	*	1	1				
19	1614-102-003-00	HOSE/205	*	1	1				
20	J061-210-015-00	CLAMP/WIRE/10-15	*	4	4				
21	1560-104-010-40	CONNECTOR	*	1	1				
22	1424-101-203-00	PLUG	*	1	1				
23	1424-101-204-00	PACKING	*	1	1				
24	1636-102-012-00	COLLAR/09X13X28	*	1	1				
25	V211-660-805-00	BOLT/SP	*	1	1				
26	1771-102-350-00	SHROUD COMP	*	1	1				
27	1689-102-013-00	INSULATOR/1130	*	1	1				
28	1673-780-011-00	TRIM/50	*	2	2				
29	V210-360-601-20	BOLT,SEMS	*	4	4				
30	2139-505-002-00	GROMMET	*	1	1				

FIG.102 RADIATOR SYSTEM(2/2)

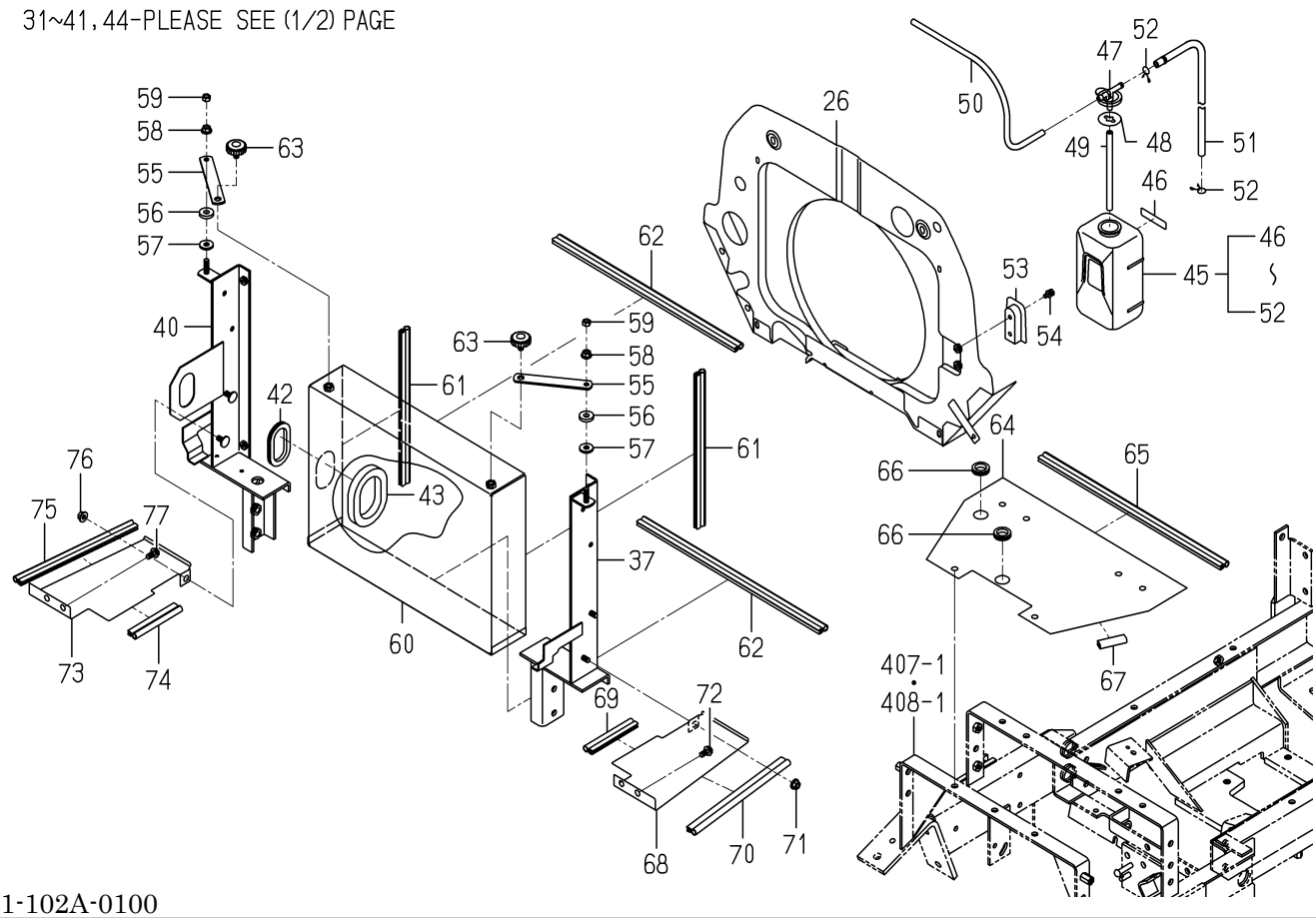

1771-102A-0100

KEY	PART CODE	DESCRIPTION	SPC	TYPE OF MODEL SFH220T	SFH240F	ITC	COL	GRP	REMARKS
31	4130-705-002-00	GROMMET/20	*	1	1				
32	1689-102-026-00	INSULATOR/490	*	2	2				
33	1689-102-027-00	INSULATOR/300	*	2	2				
34	1689-102-028-00	INSULATOR/20X65	*	1	1				
35	1689-102-012-00	TRIM/110	*	1	1				
36	1724-102-012-00	TRIM/188	*	1	1				
37	1771-102-360-00	FRAME/RADIATOR/LH	*	1	1				
38	1771-102-025-00	INSULATOR/10X35X03	*	1	1				
39	V211-561-002-50	BOLT/M10X25	*	2	2				
40	1771-102-370-00	FRAME/RADIATOR/RH	*	1	1				
41	1771-102-025-00	INSULATOR/10X35X03	*	1	1				
42	1724-102-012-00	TRIM/188	*	1	1				
43	1752-102-005-00	INSULATOR/15X15X280	*	1	1				
44	V211-561-002-50	BOLT/M10X25	*	2	2				
45	1689-102-350-00	RESERVETANK ASSY	*	1	1				
46	6221-408-007-00	PLATE/CAUTION	*	1	1				
47	6221-408-008-00	CAP	*	1	1				
48	6221-408-009-00	PACKING	*	1	1				
49	6221-408-010-00	HOSE/RUBBER	*	1	1				
50	6221-408-011-00	PIPE	*	1	1				
51	1689-102-361-00	HOSE/LUBBER	*	1	1				
52	6221-408-013-00	CLAMP	*	2	2				
53	6221-408-003-00	BRACKET/RESERVETANK	*	1	1				
54	V230-360-601-20	FLANGEBOLT	*	2	2				
55	1771-102-021-00	PLATE/IR/22X140	*	2	2				
56	1423-616-004-00	CUSHION/RUBBER/10X25	*	2	2				
57	4101-102-038-00	WASHER/24X9X3.2	*	2	2				
58	V362-260-008-00	NUT/WASHER	*	2	2				
59	V304-260-008-00	NUT	*	2	2				
60	1771-102-380-00	NET/FRONT COMP	*	1	1				

FIG.102 RADIATOR SYSTEM(2/2)

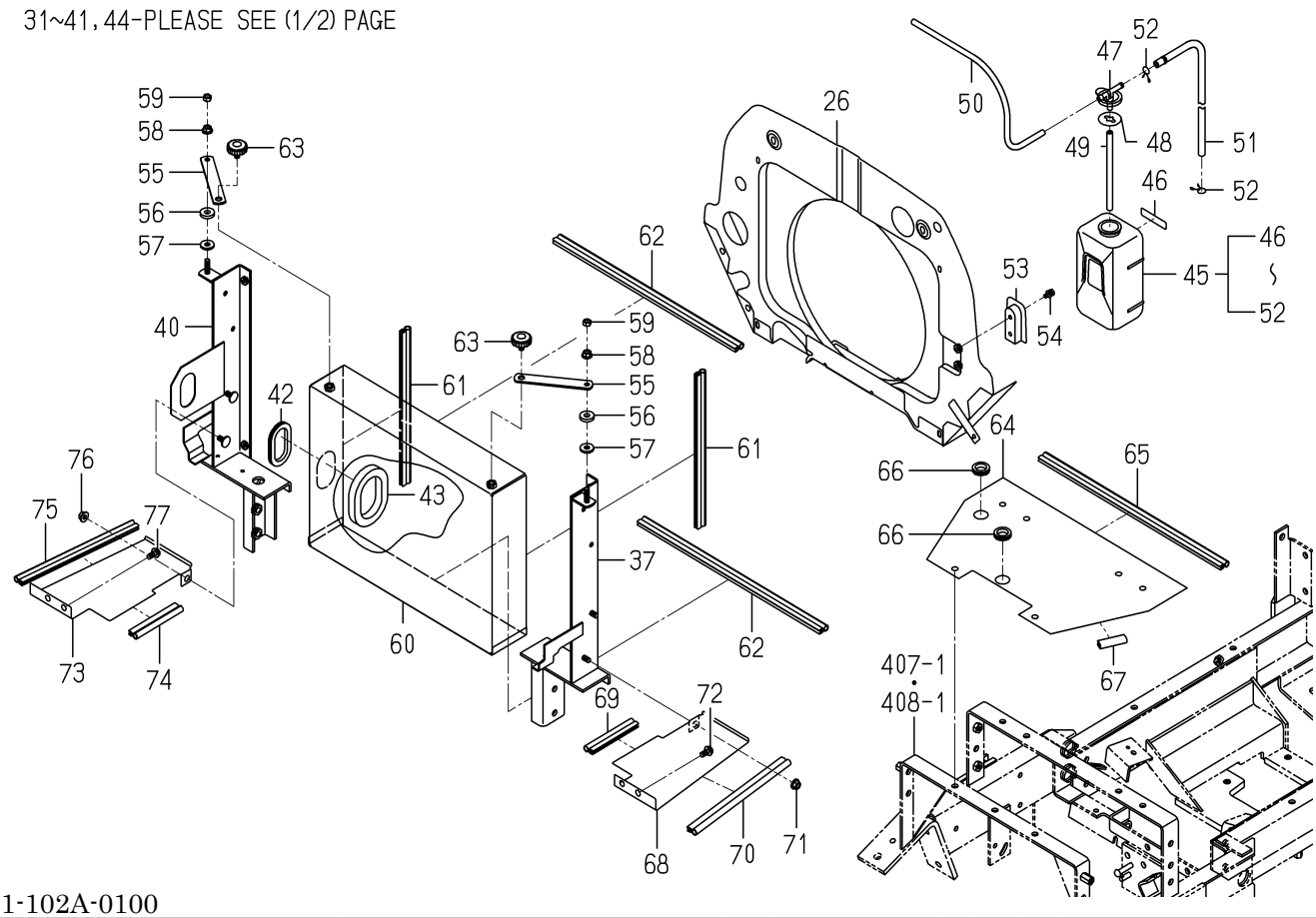

1771-102A-0100

KEY	PART CODE	DESCRIPTION	SPC	TYPE OF MODEL SFH220T	TYPE OF MODEL SFH240F	ITC	COL	GRP	REMARKS
61	1636-631-014-00	TRIM/320	*	2	2				
62	1689-102-025-00	INSULATOR/455	*	2	2				
63	3623-820-013-10	BOLT/KNOB/M08X12	*	2	2				
64	1771-102-022-00	PLATE/FRONT	*	1	1				
65	1689-102-025-00	INSULATOR/455	*	1	1				
66	4130-705-002-00	GROMMET/20	*	2	2				
67	3827-203-001-00	PAD/50	*	1	1				
68	1771-102-023-00	PLATE/SIDE/LH	*	1	1				
69	1704-112-001-00	INSULATOR/115	*	1	1				
70	1771-102-006-00	INSULATOR/265	*	1	1				
71	V362-260-008-00	NUT/WASHER	*	1	1				
72	V231-360-801-60	FLANGEBOLT	*	2	2				
73	1771-102-024-00	PLATE/SIDE/RH	*	1	1				
74	1704-112-001-00	INSULATOR/115	*	1	1				
75	1771-102-006-00	INSULATOR/265	*	1	1				
76	V362-260-008-00	NUT/WASHER	*	1	1				
77	V231-360-801-60	FLANGEBOLT	*	2	2				

FIG.103 MUFFLER SYSTEM

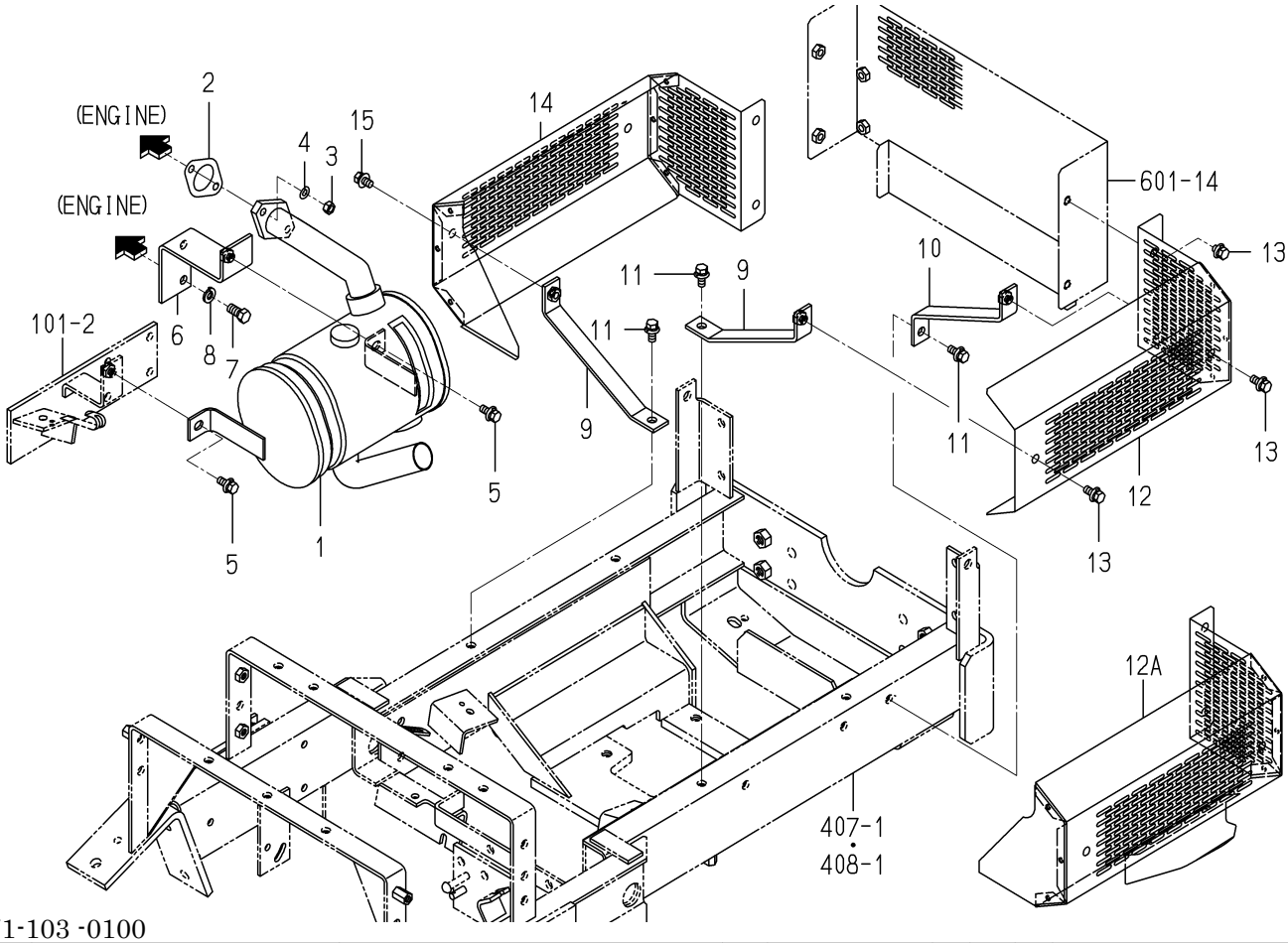

1771-103 -0100

KEY	PART CODE	DESCRIPTION	SPC	TYPE OF MODEL SFH220T	SFH240F	ITC	COL	GRP	REMARKS
1	- - - - - -	BLANK	*						- - - - - -
1	1771-103-210-10	MUFFLER COMP	*	1	1				
2	1689-103-004-00	GASKET/MUFFLER	*	1	1				
3	V304-700-008-00	NUT	*	2	2				
4	V401-700-008-00	WASHER/LOCK	*	2	2				
5	V211-660-802-00	BOLT/8X20	*	2	2				
6	1771-103-220-00	STAY/MUFFLER COMP	*	1	1				
7	V203-461-002-00	BOLT/M10X1.25X20	*	2	2				
8	V401-160-010-00	WASHER,SP/M10	*	2	2				
9	1771-103-230-00	PLATE/FRONT COMP	*	2	2				
10	1771-103-240-00	PLATE/REAR COMP	*	2	2				
11	- - - - - -	BLANK	*						- - - - - -
11	V211-360-802-00	BOLT/SP	*	4	4				
12	- - - - - -	BLANK	*						- - - - - -
12	- - - - - -	BLANK	*						- - - - - -
12A	1771-103-250-20	COVER/SIDE/LH COMP	*	2	2				
13	- - - - - -	BLANK	*						- - - - - -
13	- - - - - -	BLANK	*						- - - - - -
13	- - - - - -	BLANK	*						- - - - - -
13	V211-360-801-60	BOLT,SEMS (SP)	*	4	4				
14	1771-103-260-00	COVER/SIDE/RH COMP	*	1	1				
15	V211-360-801-60	BOLT,SEMS (SP)	*	4	4				

FIG.104 CLEANER(AIR)SYSTEM

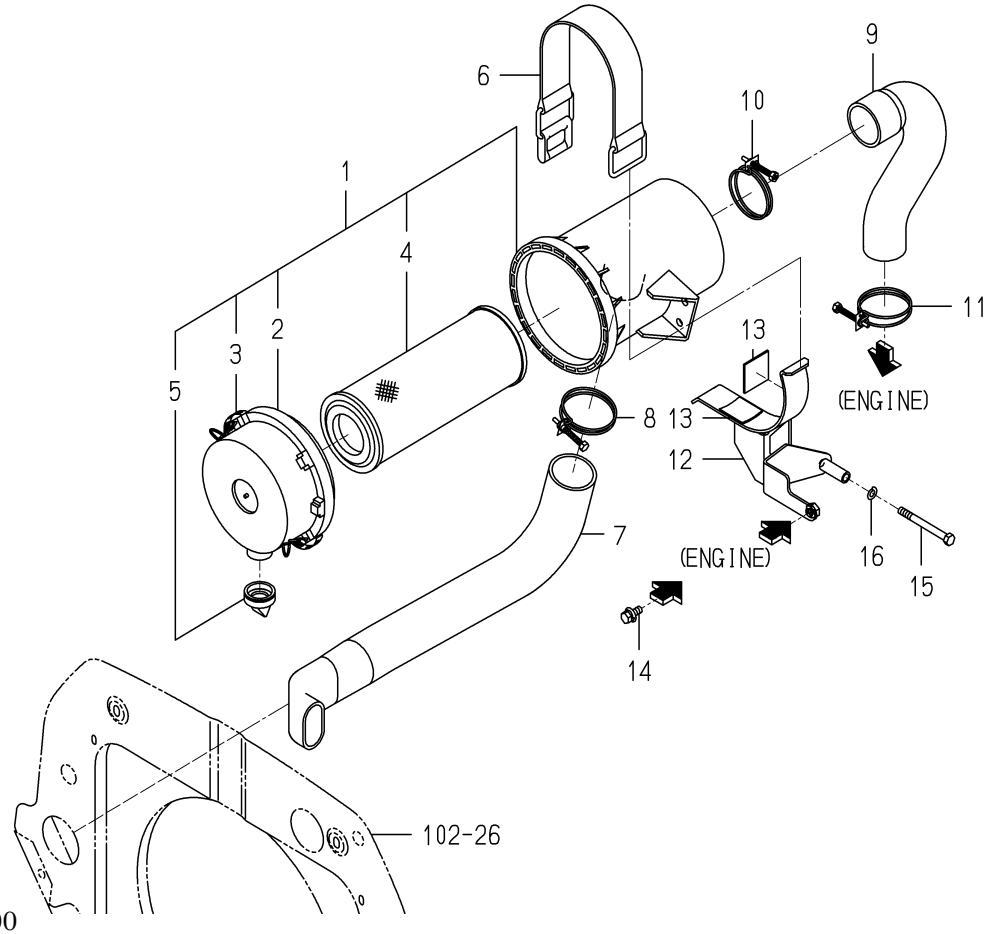

1771-104A-0100

KEY	PART CODE	DESCRIPTION	SPC	TYPE OF MODEL SFH220T	SFH240F	ITC	COL	GRP	REMARKS
1	1650-104-200-10	CLEANER/AIR ASSY	*	1	1				
2	1650-104-210-00	COVER ASSY	*	1	1				
3	1650-104-201-00	CLIP	*	2	2				
4	1650-104-203-10	ELEMENT ASSY	*	1	1				
5	1544-104-205-00	VALVE	*	1	1				
6	1614-104-001-10	BAND/CLEANER	*	1	1				
7	1771-104-021-00	HOSE/CLEANER/INLET	*	1	1				
8	J061-252-063-00	CLAMP/WIRE/52-63	*	1	1				
9	1771-104-002-00	HOSE/CLEANER/OUTLET	*	1	1				
10	J061-252-063-00	CLAMP/WIRE/52-63	*	1	1				
11	J061-247-055-00	CLAMP/WIRE/47-55	*	1	1				
12	1771-104-210-20	BRACKET/CLEANER COMP	*	1	1				
13	1427-111-229-00	CUSHION,RUBBER	*	2	2				
14	V211-360-802-00	BOLT/SP	*	1	1				
15	V201-260-808-00	BOLT/M 8X80	*	1	1				
16	V401-160-008-00	WASHER,SP/M 8	*	1	1				

FIG.105 PIPING(FUEL)SYSTEM

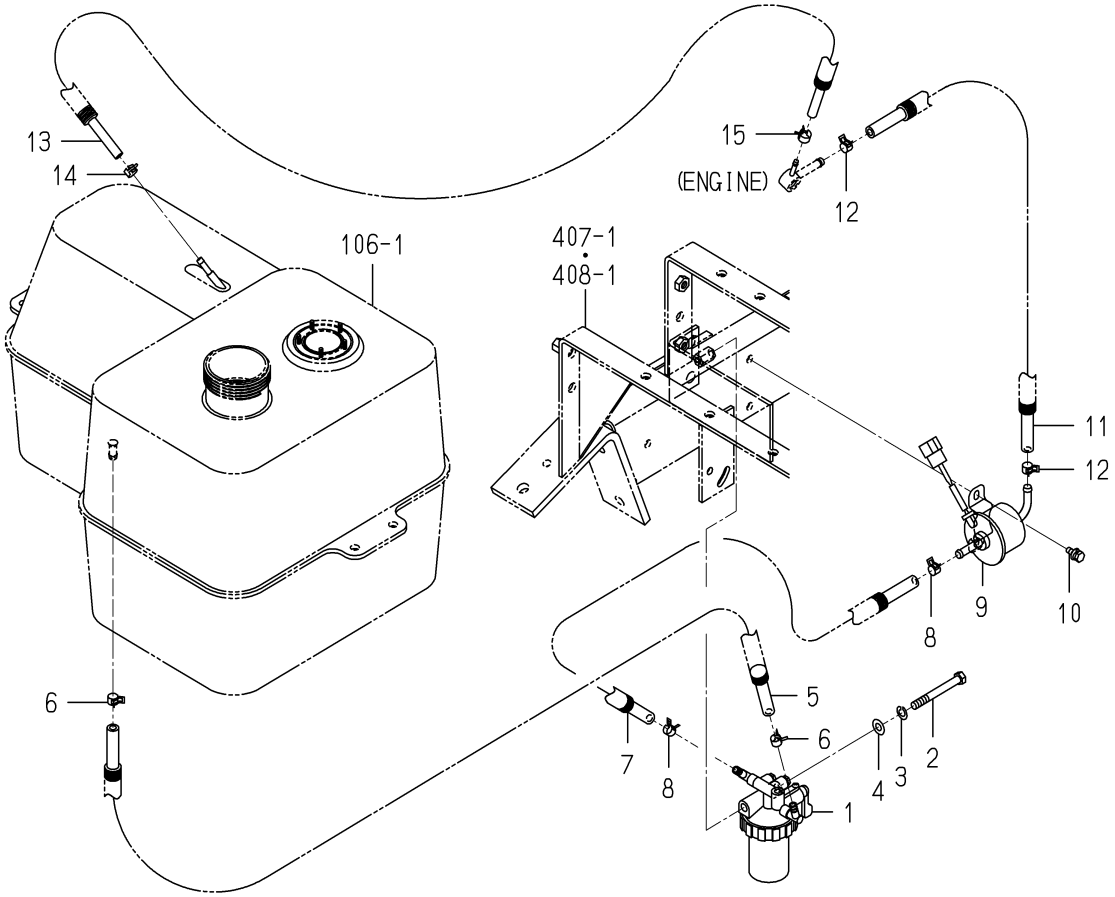

1771-105A-0100

KEY	PART CODE	DESCRIPTION	SPC	TYPE OF MODEL SFH220T	SFH240F	ITC	COL	GRP	REMARKS
1	1672-105-210-00	FILTER/FUEL ASSY	*	1	1				FIG S03
2	V201-260-806-50	BOLT/M 8X65	*	1	1				
3	V401-160-008-00	WASHER,SP/M 8	*	1	1				
4	V411-260-008-00	WASHER,PL/M 8	*	1	1				
5	1771-105-001-00	HOSE/08X13X600	*	1	1				
6	1650-111-034-00	CLIP/HOSE/11-13	*	2	2				
7	1771-105-002-00	HOSE/08X13X435	*	1	1				
8	1650-111-034-00	CLIP/HOSE/11-13	*	2	2				
9	1703-105-210-00	PUMP/FUEL ASSY	*	1	1				
10	V210-360-601-60	BOLT(SP)/M6X16	*	2	2				
11	1771-105-003-00	HOSE/08X13X720	*	1	1				
12	1650-111-034-00	CLIP/HOSE/11-13	*	2	2				
13	1725-111-230-10	HOSE/06X10X850 ASSY	*	1	1				
14	J062-104-111-00	CLIP/HOSE/10.4-11.1	*	1	1				
15	J062-119-126-00	CLIP/HOSE/11.9-12.6	*	1	1				

FIG.106 TANK(FUEL)SYSTEM

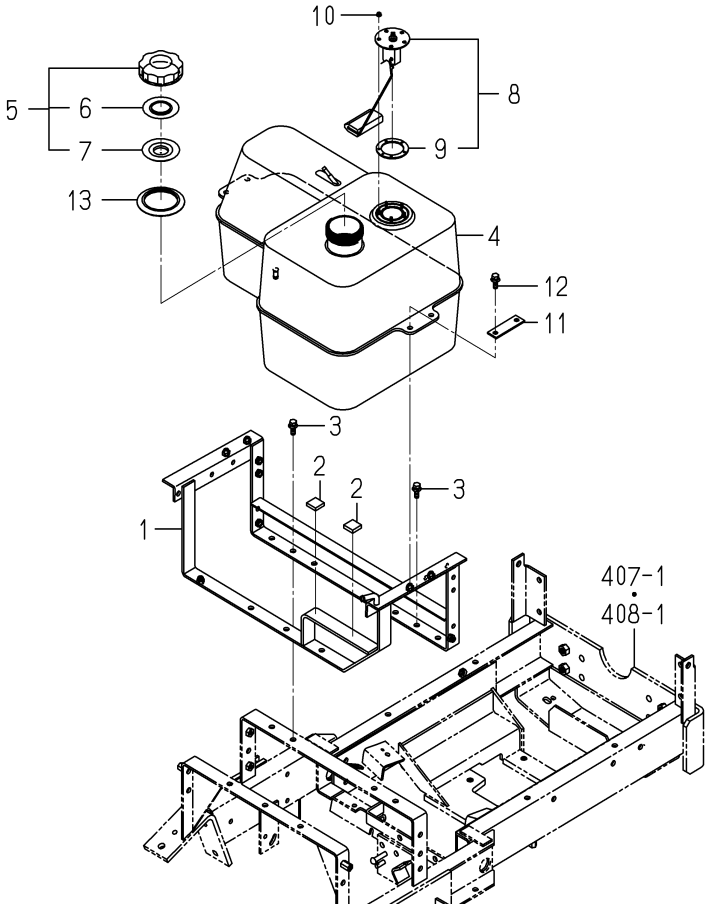

1771-111A-0100

KEY	PART CODE	DESCRIPTION	SPC	TYPE OF MODEL SFH220T	SFH240F	ITC	COL	GRP	REMARKS
1	1771-111-250-00	FRAME/TANK COMP	*	1	1				
2	2157-301-003-00	RUBBER/PLATE	*	4	4				
3	V211-360-802-50	BOLT/SP	*	6	6				
4	1771-111-021-00	TANK/FUEL	*	1	1				
5	1729-111-280-10	CAP/TANK/NONLEA ASSY	*	1	1				
6	1729-111-283-00	PLATE	*	1	1				
7	1729-111-284-00	PACKING	*	1	1				
8	3676-310-210-00	GAUGE/FUEL ASSY	*	1	1				
9	1416-621-037-00	PACKING/RUBBER	*	1	1				
10	1617-730-005-00	NUT/WASHER	*	5	5				
11	3668-842-203-00	PLATE(I/25X80)	*	2	2				
12	V211-360-802-50	BOLT/SP	*	4	4				
13	1560-111-003-20	COVER	*	1	1				

FIG.107 BATTERY SYSTEM

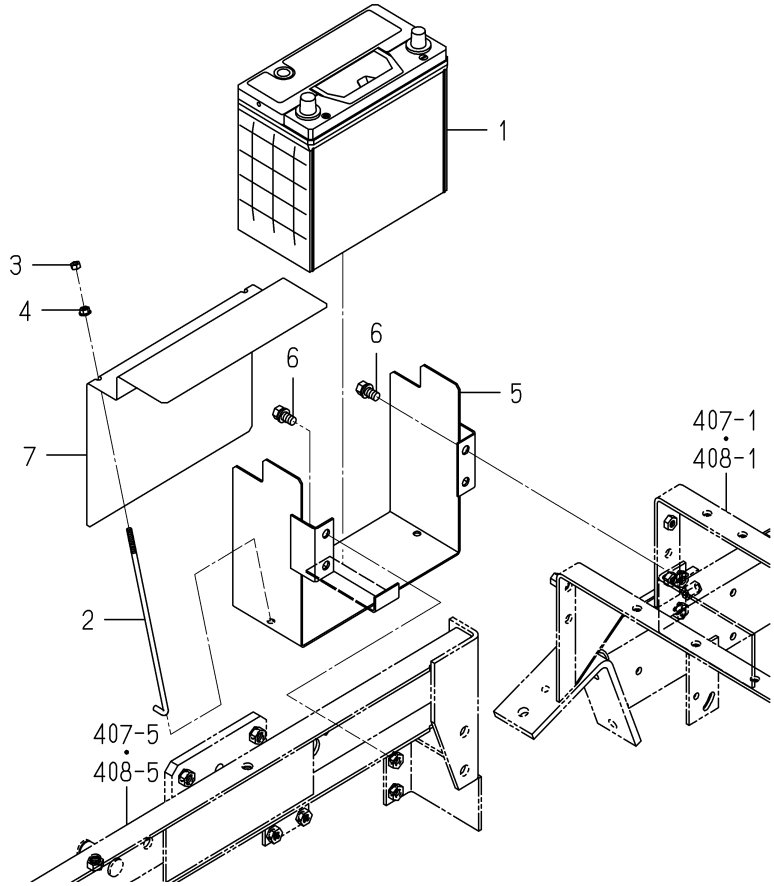

1771-112 -0100

KEY	PART CODE	DESCRIPTION	SPC	TYPE OF MODEL SFH220T	TYPE OF MODEL SFH240F	ITC	COL	GRP	REMARKS
1	1684-112-300-20	BATTERY/55B24R/ ASSY	*	1	1				
2	1675-112-002-00	BOLT/BATTERY	*	2	2				
3	V301-260-006-00	NUT/M6	*	2	2				
4	V360-260-006-00	NUT/M6	*	2	2				
5	1771-112-200-00	BASE/BATTERY COMP	*	1	1				
6	V211-261-002-00	BOLT,SEMS	*	4	4				
7	1771-112-001-00	COVER/BATTERY	*	1	1				

FIG.108 LEVER(ACCELERATOR)SYSTEM

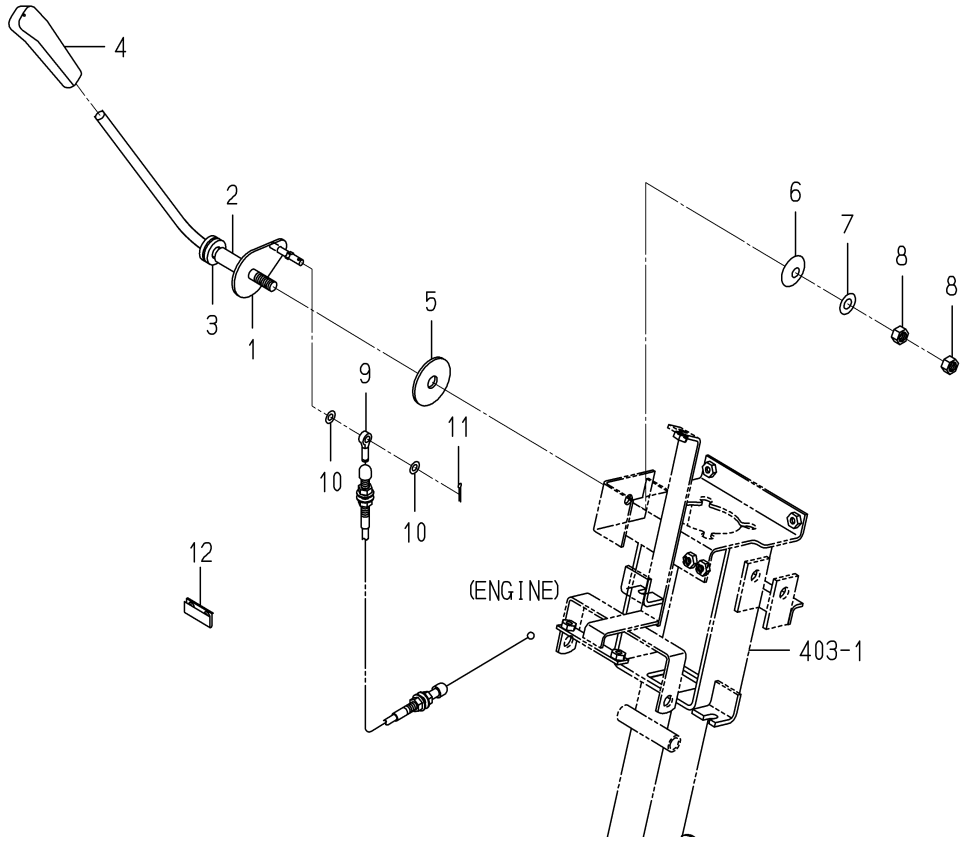

1771-117 -0100

KEY	PART CODE	DESCRIPTION	SPC	TYPE OF MODEL SFH220T	SFH240F	ITC	COL	GRP	REMARKS
1	- - - - - -	BLANK	*						- - - - - -
1	1770-117-210-10	LEVER/ACCELERATOR	*	1	1				
2	1770-117-001-00	HOSE/042	*	1	1				
3	1414-606-002-00	GROMMET/12X19	*	1	1				
4	1646-116-051-10	GRIP/THROTTLE	*	1	1				
5	- - - - - -	BLANK	*						- - - - - -
5	1600-505-007-10	LINING/13X50X03	*	1	1				
6	1593-117-003-10	SPRING,DISK	*	1	1				
7	V411-260-010-00	WASHER/M10	*	1	1				
8	V304-260-010-00	NUT	*	2	2				
9	1771-117-210-00	CABLE/ACCELERATOR	*	1	1				
10	V411-260-006-00	WASHER / M6	*	2	2				
11	V500-162-501-50	PIN,SPLIT/2.5X15	*	1	1				
12	1675-116-001-00	HOLDER	*	1	1				

FIG.109 CABLE(ACCELERATOR)SYSTEM

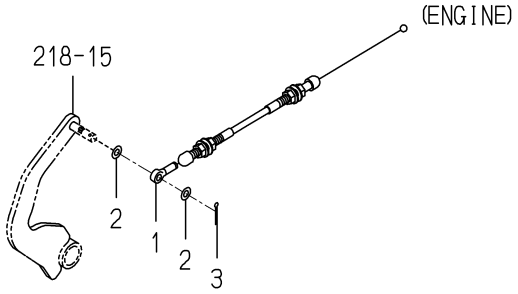

1771-118 -0100

KEY	PART CODE	DESCRIPTION	SPC	TYPE OF MODEL		ITC	COL	GRP	REMARKS
				SFH220T	SFH240F				
1	1771-118-200-00	CABLE/ACCELERATOR/AU	*	1	1				
2	V411-260-008-00	WASHER,PL/M 8	*	2	2				
3	V500-162-502-00	PIN,SPLIT/2.5X20	*	1	1				

FIG.110 SHAFT(INPUT)SYSTEM

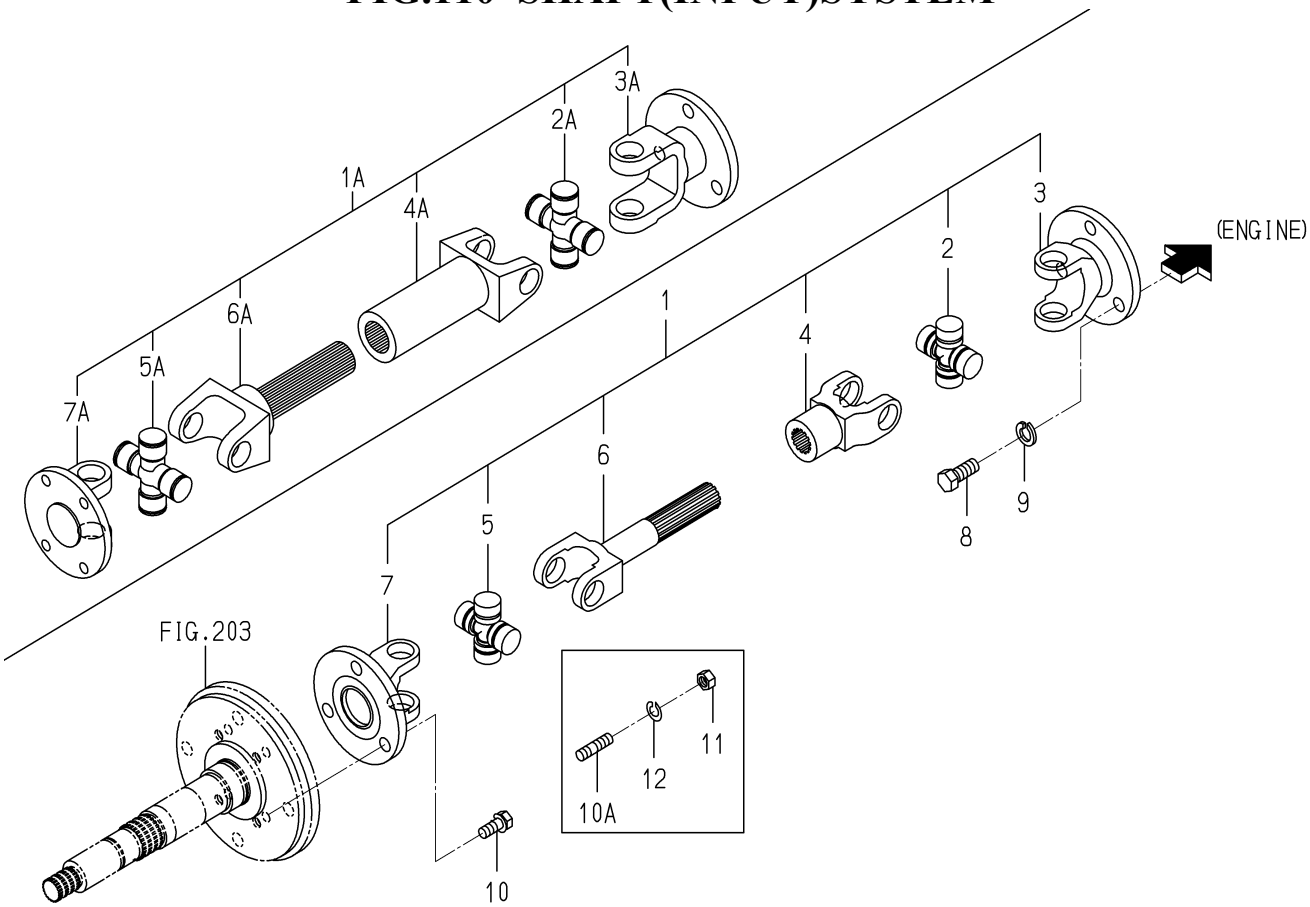

1771-120 -0100

KEY	PART CODE	DESCRIPTION	SPC	TYPE OF MODEL SFH220T	SFH240F	ITC	COL	GRP	REMARKS
1	- - - - - -	BLANK	*						- - - - - -
1A	1771-120-210-20	SHAFT/INPUT SET	*	1	1				
2	- - - - - -	BLANK	*						- - - - - -
2A	- - - - - -	BLANK	*						- - - - - -
2A	1771-120-231-20	U.J ASSY	*	1	1				
3	- - - - - -	BLANK	*						- - - - - -
3A	- - - - - -	BLANK	*						- - - - - -
3A	1771-120-232-00	FLANGE/YOKE	*	1	1				
4	- - - - - -	BLANK	*						- - - - - -
4A	- - - - - -	BLANK	*						- - - - - -
4A	1771-120-233-00	SLEEVE/YOKE	*	1	1				
5	- - - - - -	BLANK	*						- - - - - -
5A	- - - - - -	BLANK	*						- - - - - -
5A	1771-120-231-20	U.J ASSY	*	1	1				
6	- - - - - -	BLANK	*						- - - - - -
6A	- - - - - -	BLANK	*						- - - - - -
6A	1771-120-241-20	SHAFT/YOKE	*	1	1				
7	- - - - - -	BLANK	*						- - - - - -
7A	- - - - - -	BLANK	*						- - - - - -
7A	1771-120-242-00	FLANGE/YOKE	*	1	1				
8	- - - - - -	BLANK	*						- - - - - -
8	V203-361-002-50	BOLT	*	3	3				
9	- - - - - -	BLANK	*						- - - - - -
9	V401-160-010-00	WASHER,SP/M10	*	3	3				
10	- - - - - -	BLANK	*						- - - - - -
10A	V251-340-802-00	BOLT/STUD	*	4	4				
11	V304-460-008-00	NUT/M8	*	4	4				
12	V401-160-008-00	WASHER,SP/M 8	*	4	4				

FIG.201 CASE(TRANSMISSION)SYSTEM

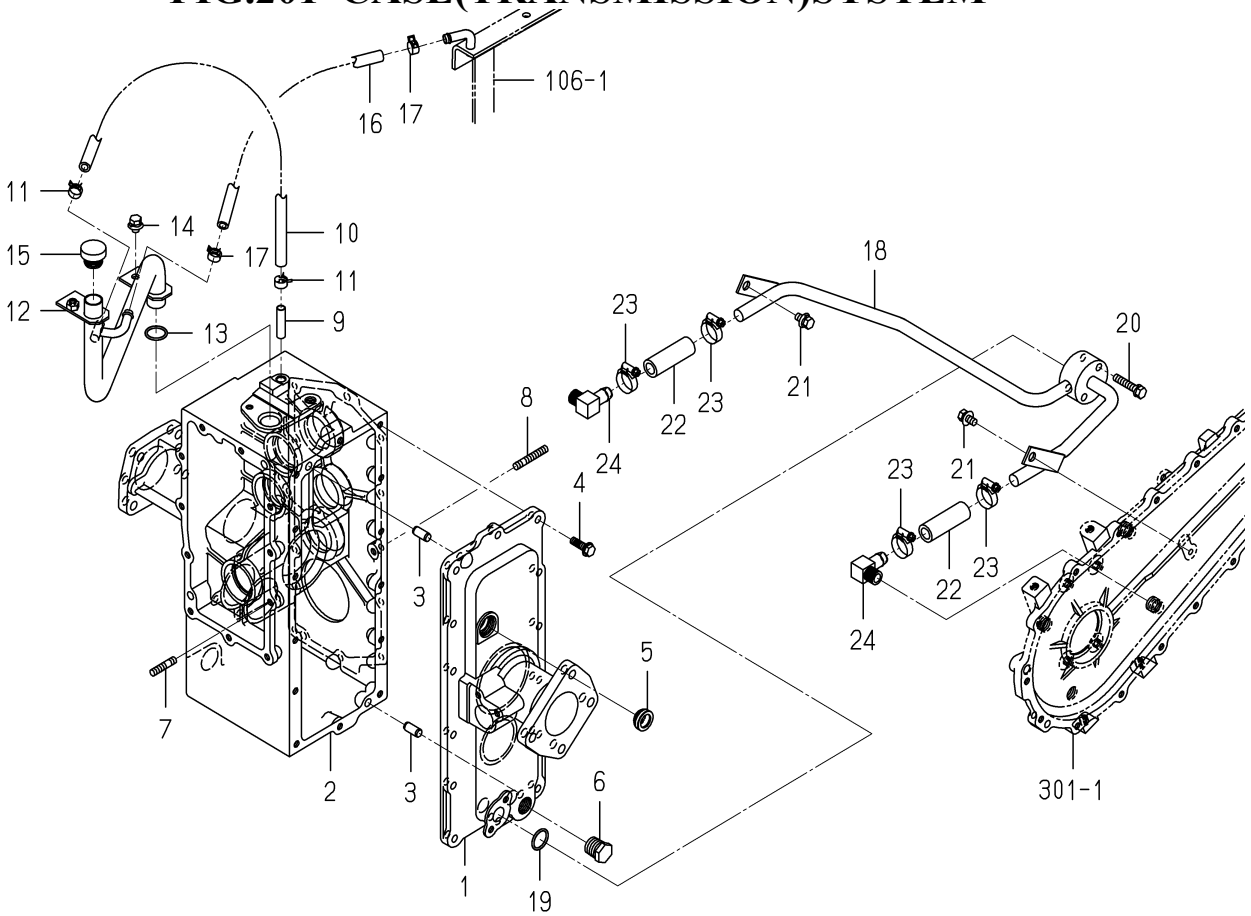

1771-201A-0100

KEY	PART CODE	DESCRIPTION	SPC	TYPE OF MODEL SFH220T	TYPE OF MODEL SFH240F	ITC	COL	GRP	REMARKS
1	1771-201-021-00	CASE/TRANSMISSION/LH	*	1	1				
2	1771-201-002-20	CASE/TRANSMISSION/RH	*	1	1				
3	V523-101-002-20	PIN	*	2	2				
4	V231-360-802-50	FLANGEBOLT	*	14	14				
5	1690-241-003-00	GAUGE/LEBEL	*	1	1				
6	V782-160-000-8T	PLUG/SCREW/SEAL	*	1	1				
7	V251-340-802-5D	BOLT/STUD/SEAL	*	1	1				
8	V251-340-804-0D	BOLT/STUD/SEAL	*	1	1				
9	1544-120-008-10	PIPE,BREATHER	*	1	1				
10	1771-201-008-10	HOSE/08X13X480	*	1	1				
11	J062-138-148-00	CLIP/HOSE/13.8-14.8	*	2	2				
12	1771-201-210-10	PIPE/FILLER COMP	*	1	1				
13	V720-102-402-20	O-RING/P22	*	1	1				
14	V211-360-801-60	BOLT,SEMS (SP)	*	2	2				
15	2157-201-004-10	PLUG,OIL	*	1	1				
16	1771-201-009-00	HOSE/08X13X350	*	1	1				
17	J062-138-148-00	CLIP/HOSE/13.8-14.8	*	2	2				
18	1771-201-220-00	PIPE COMP	*	1	1				
19	V720-112-402-00	O-RING/P20	*	1	1				
20	V211-260-804-00	BOLT,SEMS	*	2	2				
21	V211-360-801-60	BOLT,SEMS (SP)	*	2	2				
22	1752-508-003-00	HOSE/COOLER/2ND	*	2	2				
23	J061-116-025-00	CLAMP/WORM/16-25	*	4	4				
24	3626-370-005-00	ADAPTER 90ß/3/8	*	2	2				

FIG.202 METAL(HST)SYSTEM

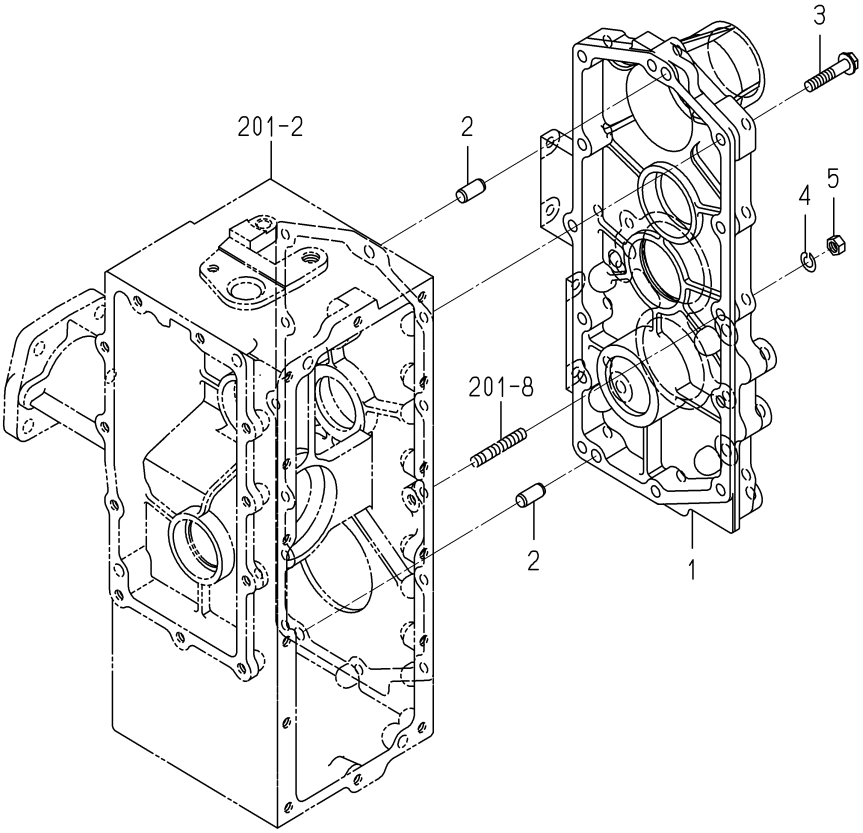

1771-203 -0100

KEY	PART CODE	DESCRIPTION	SPC	TYPE OF MODEL SFH220T	TYPE OF MODEL SFH240F	ITC	COL	GRP	REMARKS
1	1771-203-002-00	METAL/HST	*	1	1				
2	V523-101-002-20	PIN	*	2	2				
3	V231-360-804-00	FLANGEBOLT	*	12	12				
4	V401-160-008-00	WASHER,SP/M 8	*	1	1				
5	V304-460-008-00	NUT/M8	*	1	1				

FIG.203 GEAR(INPUT)SYSTEM

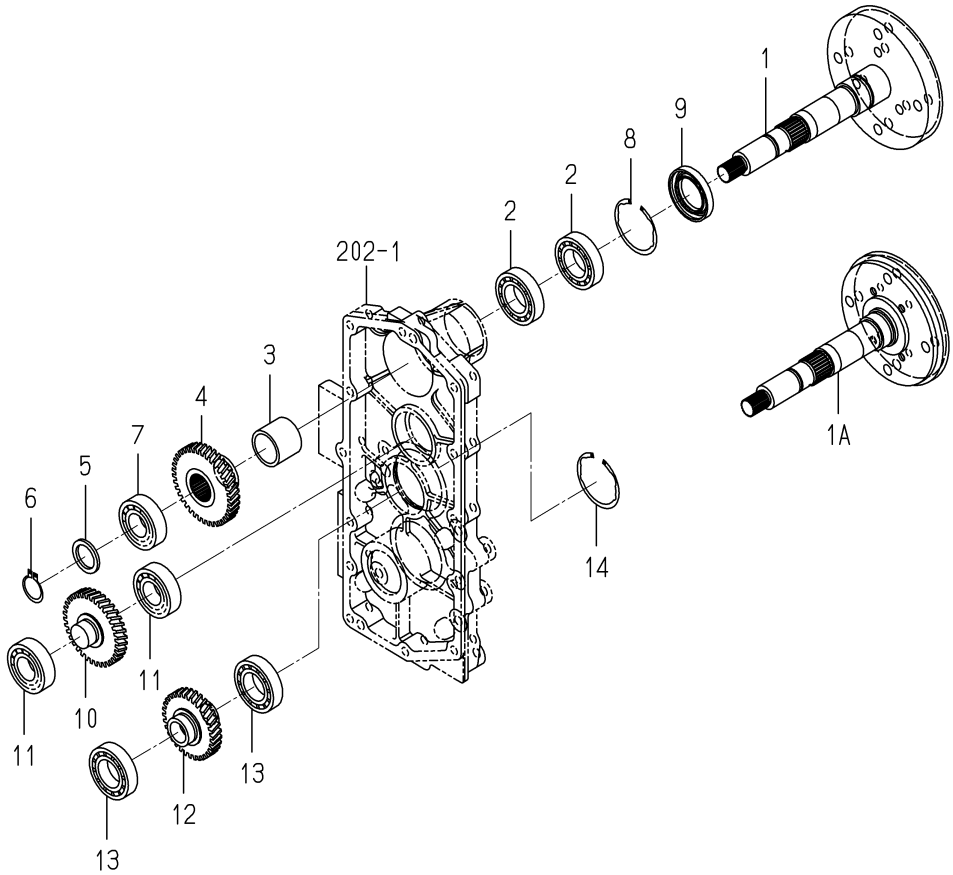

1771-204 -0100

KEY	PART CODE	DESCRIPTION	SPC	TYPE OF MODEL SFH220T	SFH240F	ITC	COL	GRP	REMARKS
1	- - - - - -	BLANK	*						- - - - - -
1A	- - - - - -	BLANK	*						- - - - - -
1A	- - - - - -	BLANK	*						- - - - - -
1A	1771-204-210-40	SHAFT/INPUT COMP	*	1	1				
2	V600-410-600-60	BEARING/BALL	*	2	2				
3	1771-204-004-00	COLLAR/31X38X32	*	1	1				
4	- - - - - -	BLANK	*						- - - - - -
4	1771-204-005-10	GEAR/HELICAL/38	*	1	1				
5	1593-307-052-10	COLLAR/26X35X03	*	1	1				
6	V704-140-025-00	RING,SNAP/25 C	*	1	1				
7	V600-410-620-50	BEARING/BALL	*	1	1				
8	V707-140-055-00	RING/SNAP	*	1	1				
9	V744-135-550-80	SEAL,OIL/TC35558	*	1	1				
10	- - - - - -	BLANK	*						- - - - - -
10	1771-204-006-10	GEAR/HERICAL/35	*	1	1				
11	V600-410-620-50	BEARING/BALL	*	2	2				
12	- - - - - -	BLANK	*						- - - - - -
12	1771-204-007-10	GEAR/HERICAL/32	*	1	1				
13	V600-410-600-60	BEARING/BALL	*	2	2				
14	V707-140-055-00	RING/SNAP	*	1	1				

FIG.204 HST SYSTEM(SFH240F)

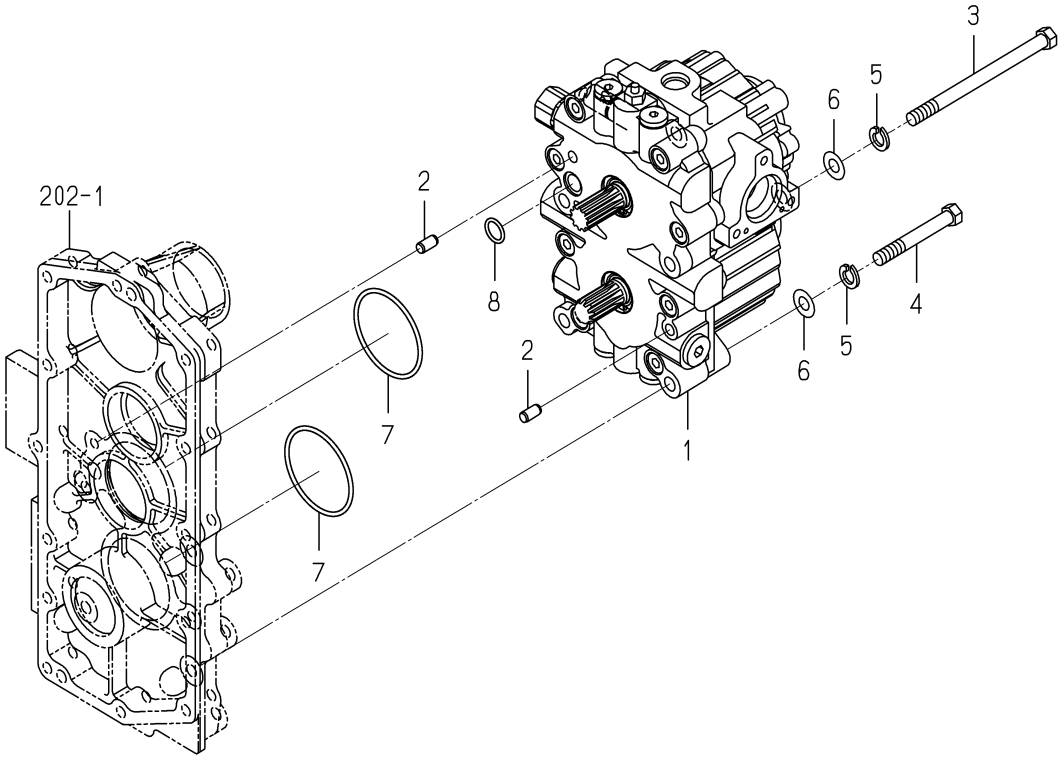

1771-212 -0100

KEY	PART CODE	DESCRIPTION	SPC	TYPE OF MODEL SFH220T	TYPE OF MODEL SFH240F	ITC	COL	GRP	REMARKS
1	- - - - - -	BLANK	*						- - - - - -
1	K510-012-000-10	HST/SF/21 ASSY	*		1				FIG S02
2	V523-100-801-60	PIN	*		2				
3	V201-361-014-00	BOLT	*		2				
4	V201-361-007-50	BOLT	*		2				
5	V401-160-010-00	WASHER,SP/M10	*		4				
6	V411-260-010-00	WASHER/M10	*		4				
7	V721-103-106-00	O-RING/G60	*		2				
8	V720-112-401-50	RING/O	*		1				

FIG.205 HST SYSTEM(SFH220T)

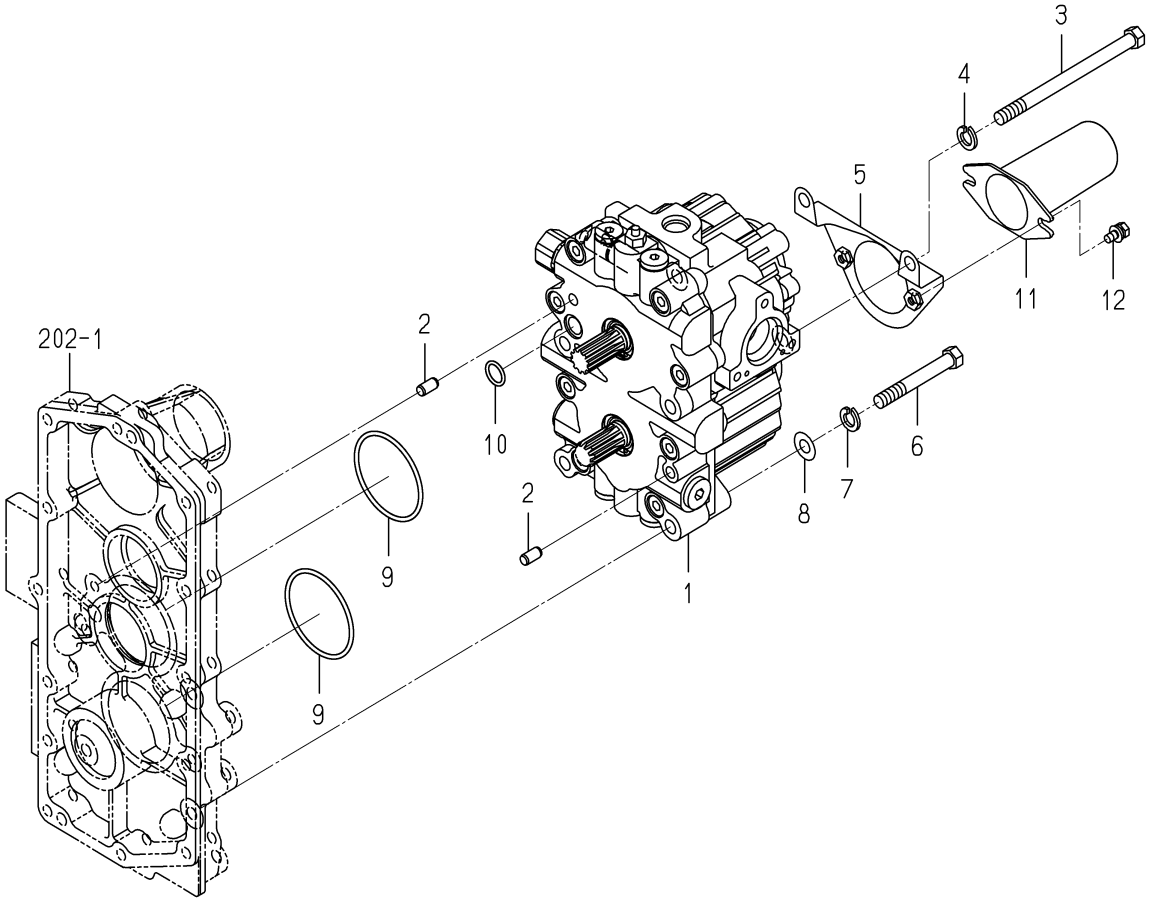

1771-212A-0100

KEY	PART CODE	DESCRIPTION	SPC	TYPE OF MODEL SFH220T	TYPE OF MODEL SFH240F	ITC	COL	GRP	REMARKS
1	K510-012-000-10	HST/SF/21 ASSY	*	1					FIG S02
2	V523-100-801-60	PIN	*	2					
3	V201-361-014-00	BOLT	*	2					
4	V401-160-010-00	WASHER,SP/M10	*	2					
5	1771-212-510-00	STAY/COVER COMP	*	1					
6	V201-361-007-50	BOLT	*	2					
7	V401-160-010-00	WASHER,SP/M10	*	2					
8	V411-260-010-00	WASHER/M10	*	2					
9	V721-103-106-00	O-RING/G60	*	2					
10	V720-112-401-50	RING/O	*	1					
11	1444-314-009-10	CAP,PTO SHAFT	*	1					
12	V210-360-601-60	BOLT(SP)/M6X16	*	2					

FIG.206 GEAR(DRIVE)SYSTEM(EXCEPT G TYPE)

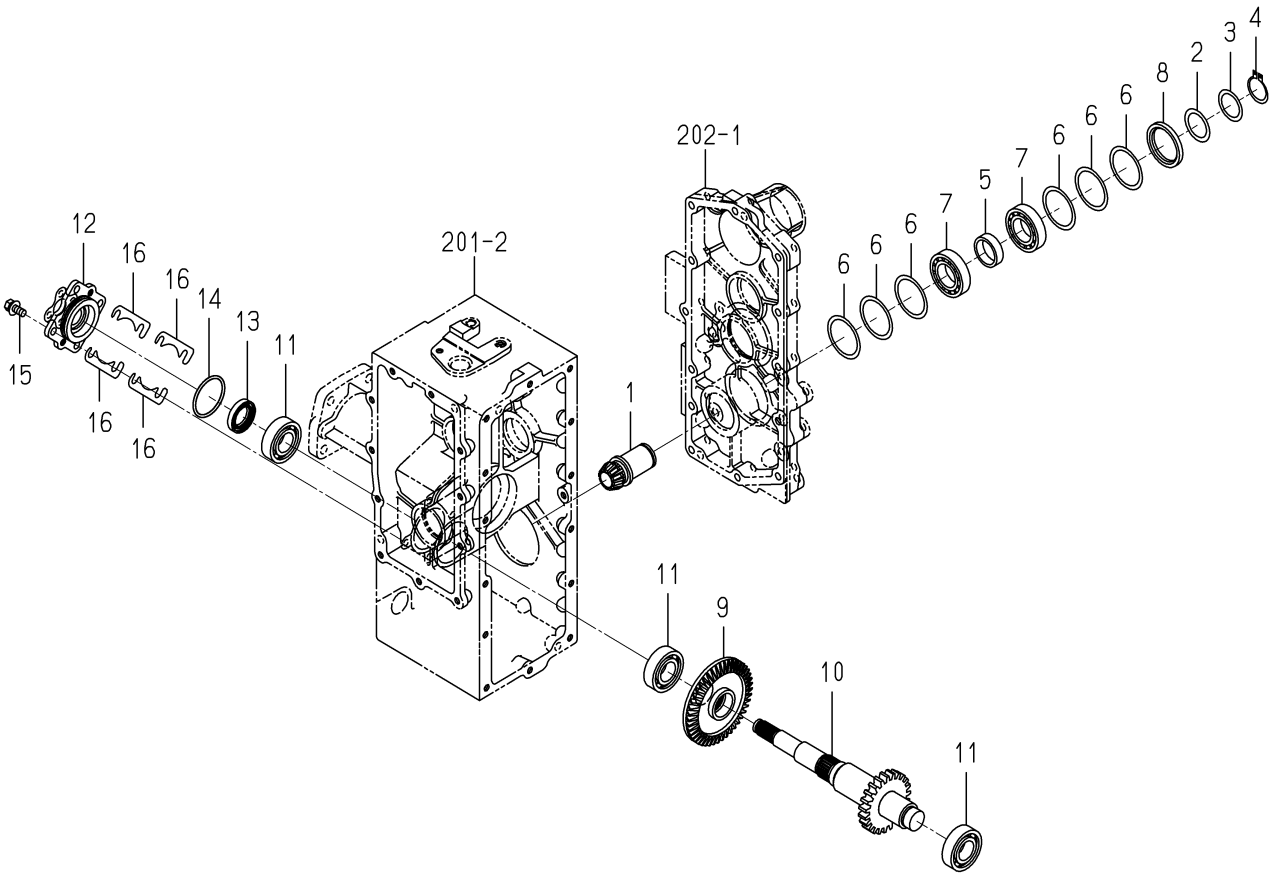

1771-213 -0100

KEY	PART CODE	DESCRIPTION	SPC	TYPE OF MODEL SFH220T	SFH240F	ITC	COL	GRP	REMARKS
1	- - - - - -	BLANK	*						- - - - - -
1	1728-203-210-20	GEAR/INPUT/12 COMP	*	1	1				
2	1480-207-011-00	WASHER/31X42X1	*	1	1				
3	- - - - - -	BLANK	*						- - - - - -
3	3817-116-005-00	SHIM	*	1	1				
4	V704-140-030-00	RING,SNAP/30 C	*	1	1				
5	1689-201-003-10	COLLAR/31X38X11	*	1	1				
6	8595-201-017-00	SHIM/0.2	*	6	6				
7	V600-410-600-60	BEARING/BALL	*	2	2				
8	1728-203-001-00	HUB/HST	*	1	1				
9	- - - - - -	BLANK	*						- - - - - -
9	1771-213-001-10	GEAR/BEVEL/45	*	1	1				
10	- - - - - -	BLANK	*						- - - - - -
10	1771-213-220-10	GEAR/SPUR/23 COMP	*	1	1				
11	V600-410-620-50	BEARING/BALL	*	3	3				
12	1689-202-002-00	METAL/BRAKE	*	1	1				
13	V744-125-400-70	SEAL,OIL/TC25407	*	1	1				
14	V721-103-105-00	O-RING/G50	*	1	1				
15	V211-260-802-00	BOLT/S	*	4	4				
16	1728-203-004-00	SHIM/0.2	*	4	4				

FIG.207 GEAR(DRIVE)SYSTEM(G TYPE)

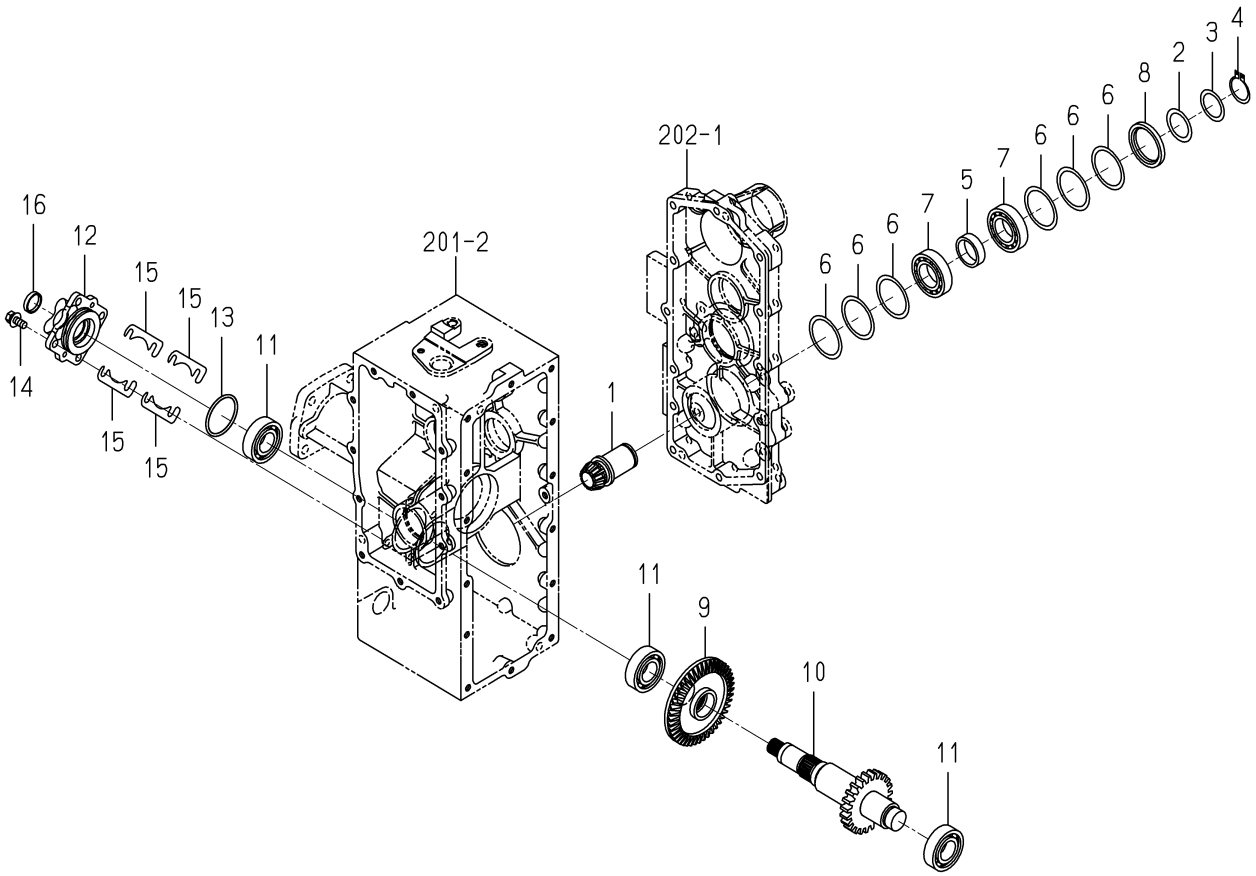

1771-213B-0100

KEY	PART CODE	DESCRIPTION	SPC	TYPE OF MODEL SFH220T	SFH240F	ITC	COL	GRP	REMARKS
1	- - - - - -	BLANK	*						- - - - - -
1	1728-203-210-20	GEAR/INPUT/12 COMP	*	1	1				
2	1480-207-011-00	WASHER/31X42X1	*	1	1				
3	- - - - - -	BLANK	*						- - - - - -
3	3817-116-005-00	SHIM	*	1	1				
4	V704-140-030-00	RING,SNAP/30 C	*	1	1				
5	1689-201-003-10	COLLAR/31X38X11	*	1	1				
6	8595-201-017-00	SHIM/0.2	*	6	6				
7	V600-410-600-60	BEARING/BALL	*	2	2				
8	1728-203-001-00	HUB/HST	*	1	1				
9	- - - - - -	BLANK	*						- - - - - -
9	1771-213-001-10	GEAR/BEVEL/45	*	1	1				
10	- - - - - -	BLANK	*						- - - - - -
10	1771-213-510-10	GEAR/SPUR/23/G COMP	*	1	1				
11	V600-410-620-50	BEARING/BALL	*	3	3				
12	1728-203-051-00	METAL/G	*	1	1				
13	V721-103-105-00	O-RING/G50	*	1	1				
14	V211-260-802-00	BOLT/S	*	4	4				
15	1728-203-004-00	SHIM/0.2	*	4	4				
16	1614-241-004-00	PLUG/SEAL/25	*	1	1				

FIG.208 CASE(DIFFERENTIAL)SYSTEM

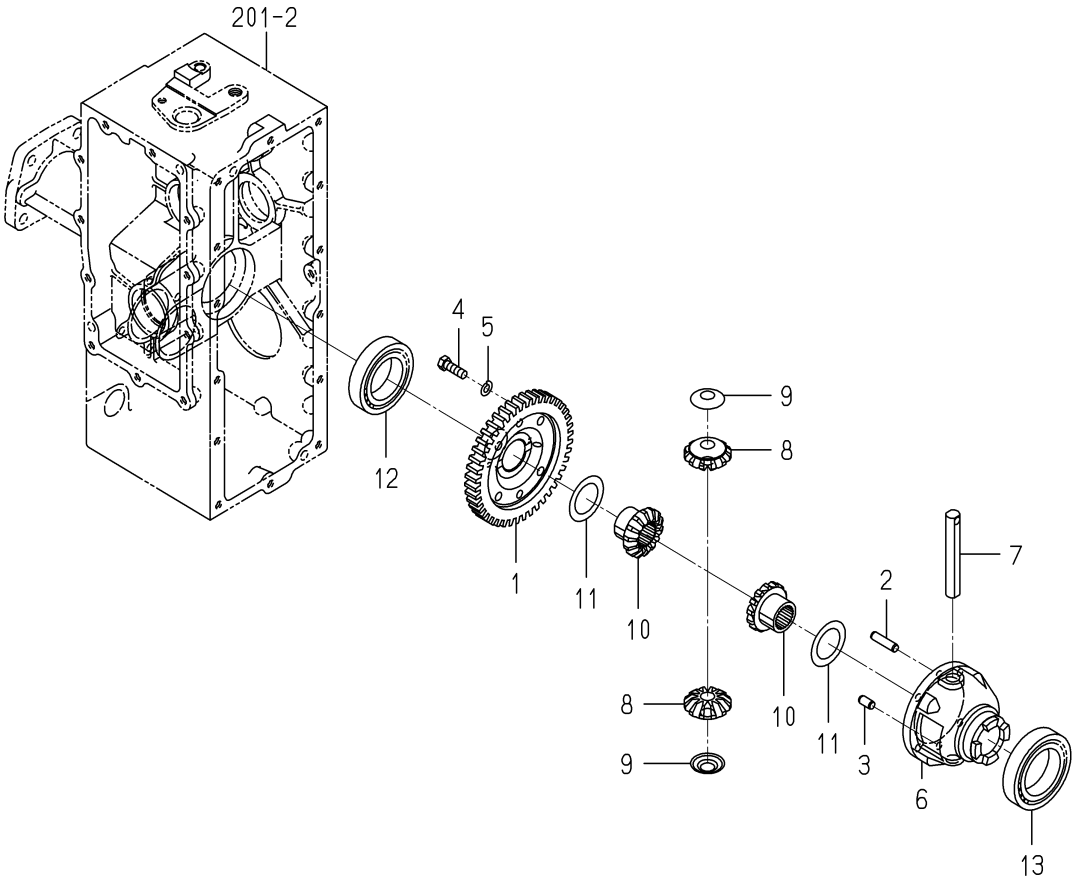

1771-214 -0100

KEY	PART CODE	DESCRIPTION	SPC	TYPE OF MODEL SFH220T	SFH240F	ITC	COL	GRP	REMARKS
1	- - - - - -	BLANK	*						- - - - - -
1	1771-214-001-10	GEAR/SPUR/44	*	1	1				
2	1672-301-002-00	PIN	*	1	1				
3	V523-100-801-60	PIN	*	1	1				
4	1544-304-006-10	BOLT/M8X25	*	4	4				
5	V401-160-008-00	WASHER,SP/M 8	*	4	4				
6	1427-301-002-20	CASE,DIFF	*	1	1				
7	1444-411-006-00	SHAFT,DIFF. PINION	*	1	1				
8	1672-301-003-00	PINION/BEVEL/12	*	2	2				
9	1427-301-005-00	COLLAR,PINION THRUST	*	2	2				
10	1672-301-004-00	GEAR/BEVEL/14	*	2	2				
11	1427-301-007-00	COLLAR,THRUST	*	2	2				
12	V600-110-600-90	BEARING,RB/6009	*	1	1				
13	V600-110-601-00	BEARING,RB/6010	*	1	1				

FIG.209 DIFF-LOCK SYSTEM

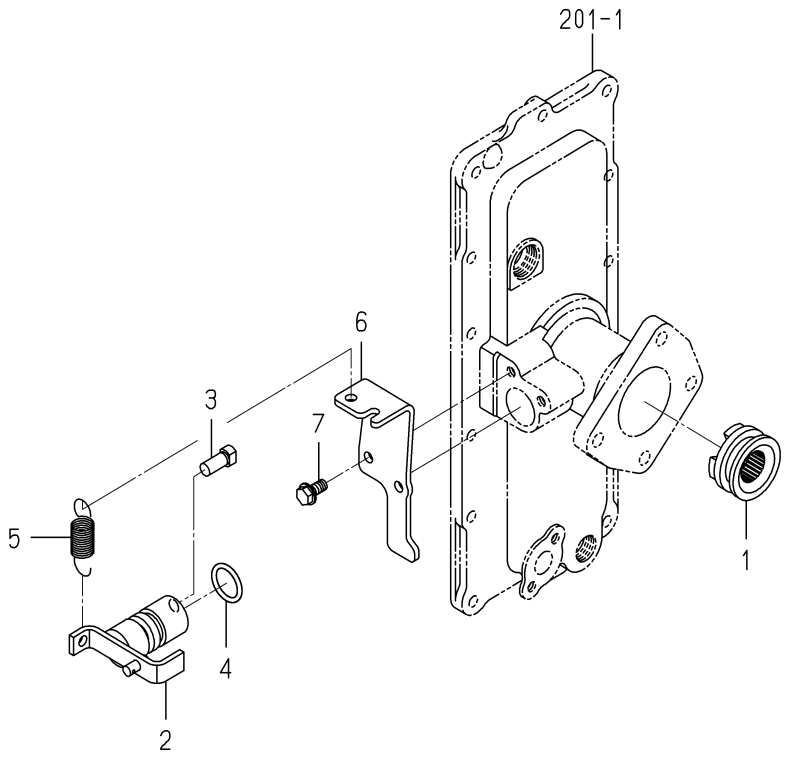

1771-215 -0100

KEY	PART CODE	DESCRIPTION	SPC	TYPE OF MODEL SFH220T	SFH240F	ITC	COL	GRP	REMARKS
1	1728-204-002-00	CLUTCH/DIFFLOCK	*	1	1				
2	1771-215-210-00	ARM/DIFF COMP	*	1	1				
3	1689-205-005-10	PIN/10X21	*	1	1				
4	V720-103-502-40	O-RING/P24	*	1	1				
5	3656-565-006-00	SPRING/HE066	*	1	1				
6	1771-215-001-00	STAY/DEFFCABLE	*	1	1				
7	V231-360-801-60	FLANGEBOLT	*	2	2				

FIG.210 PEDAL(DIFF-LOCK)SYSTEM

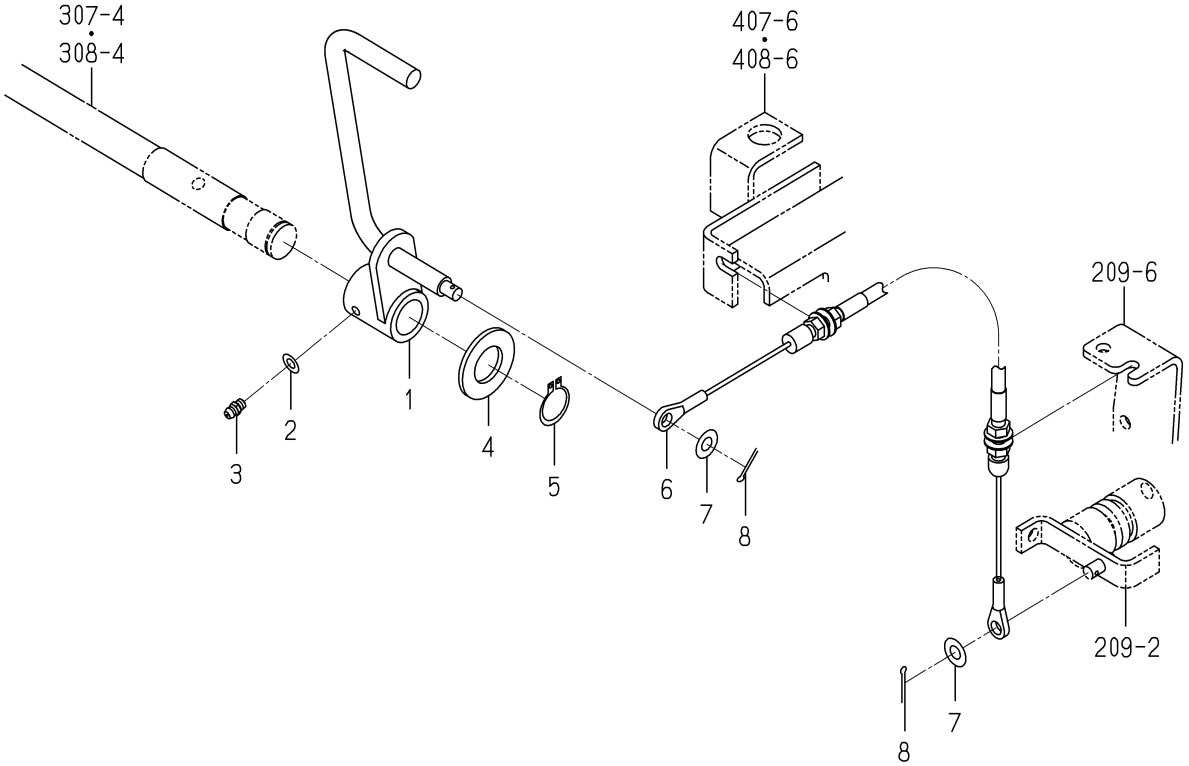

1771-216 -0100

KEY	PART CODE	DESCRIPTION	SPC	TYPE OF MODEL SFH220T	SFH240F	ITC	COL	GRP	REMARKS
1	1771-216-210-00	PEDAL/DIFF COMP	*	1	1				
2	V411-260-006-00	WASHER / M6	*	1	1				
3	V760-150-000-00	NIPPLE,GREASE	*	1	1				
4	V411-260-022-00	WASHER,PL/M22	*	1	1				
5	V704-140-022-00	RING,SNAP/22 C	*	1	1				
6	1771-216-220-00	CABLE/DIFF ASSY	*	1	1				
7	V411-260-008-00	WASHER,PL/M 8	*	2	2				
8	V500-162-502-00	PIN,SPLIT/2.5X20	*	2	2				

FIG.211 LEVER(UNLOAD/HST)SYSTEM

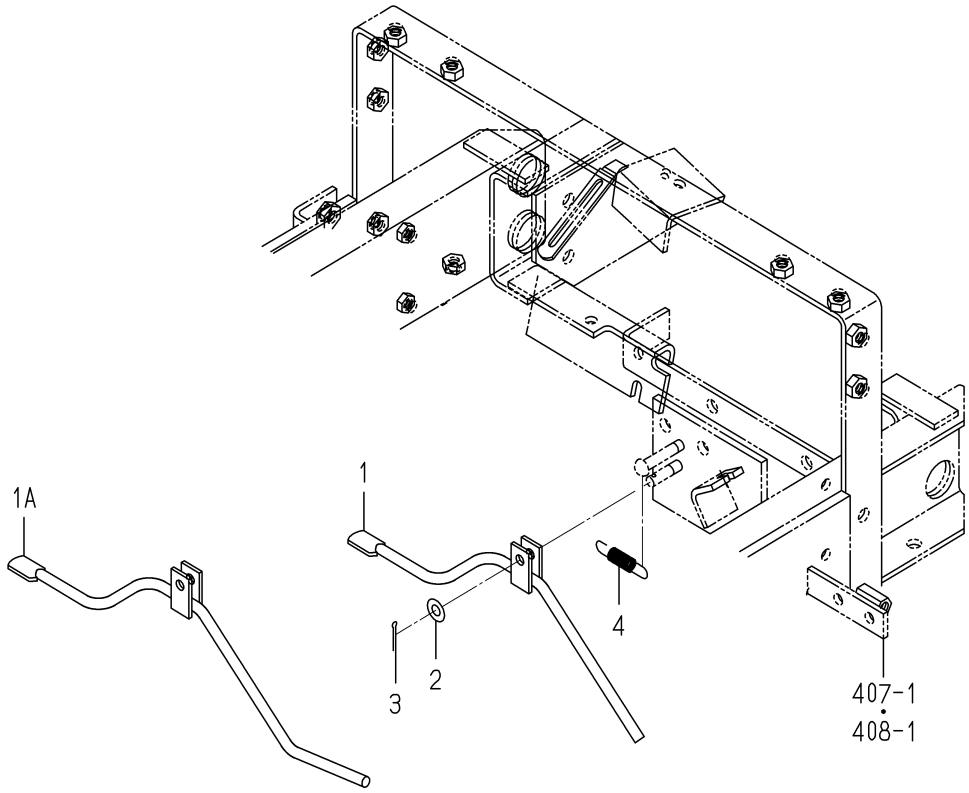

1771-218 -0100

KEY	PART CODE	DESCRIPTION	SPC	TYPE OF MODEL SFH220T	SFH240F	ITC	COL	GRP	REMARKS
1	- - - - - -	BLANK	*						- - - - - -
1A	1771-218-210-10	LEVER/UNLOAD COMP	*	1	1				
2	V411-260-008-00	WASHER,PL/M 8	*	1	1				
3	V500-162-502-00	PIN,SPLIT/2.5X20	*	1	1				
4	1414-312-002-00	SPRING,TENSION/53	*	1	1				

FIG.212 METAL(PTO)SYSTEM

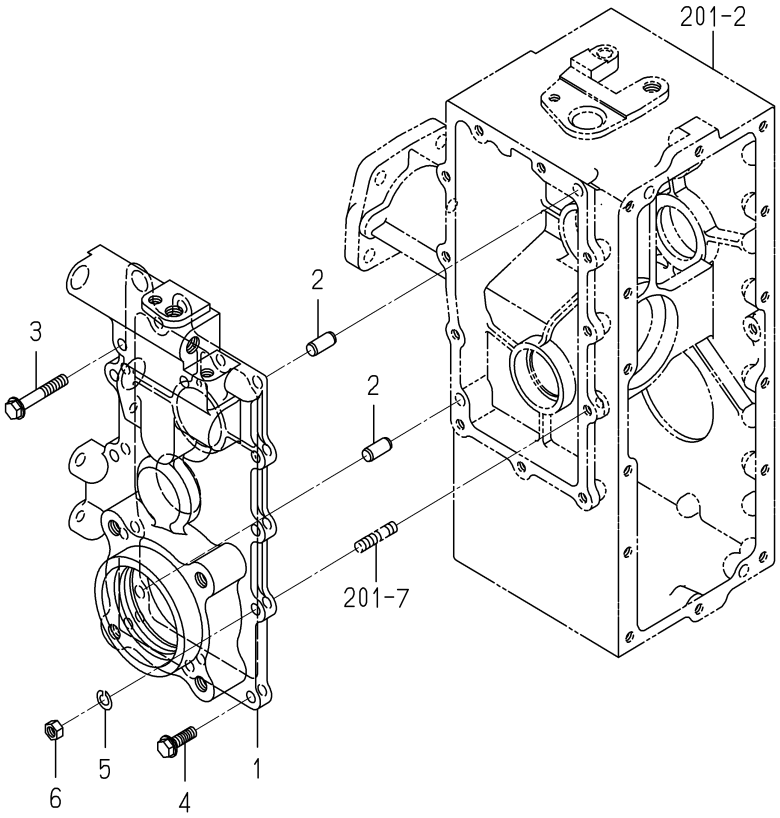

1771-241 -0100

KEY	PART CODE	DESCRIPTION	SPC	TYPE OF MODEL SFH220T	TYPE OF MODEL SFH240F	ITC	COL	GRP	REMARKS
1	1771-241-001-00	METAL/PTO	*	1	1				
2	V523-101-002-20	PIN	*	2	2				
3	V231-360-805-00	FLANGEBOLT	*	2	2				
4	V231-360-802-50	FLANGEBOLT	*	8	8				
5	V401-160-008-00	WASHER,SP/M 8	*	1	1				
6	V304-460-008-00	NUT/M8	*	1	1				

FIG.213 DRIVE(PTO/SIDE)SYSTEM(B TYPE)(1/2)

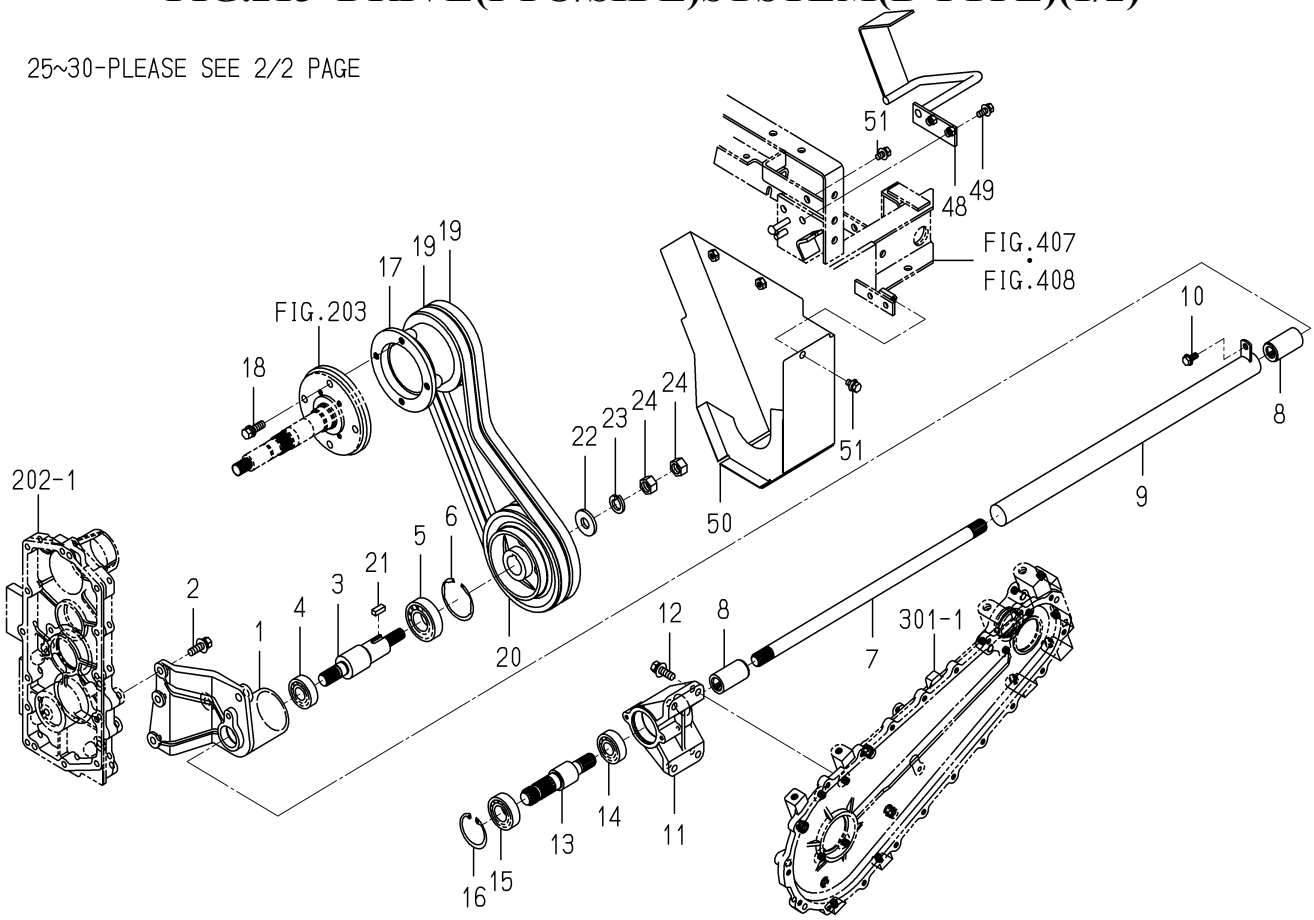

1771-244A-0100

KEY	PART CODE	DESCRIPTION	SPC	TYPE OF MODEL SFH220T	TYPE OF MODEL SFH240F	ITC	COL	GRP	REMARKS
1	1771-244-009-00	METAL/PTO/A	*		1				
2	V211-661-003-00	BOLT/SP	*		3				
3	1771-244-006-00	SHAFT/PULLEY	*		1				
4	V600-450-620-40	BEARING/BALL	*		1				
5	V600-150-620-60	BEARING,RB/6206SS	*		1				
6	V707-140-062-00	RING/SNAP	*		1				
7	1771-244-007-00	SHAFT/484	*		1				
8	1602-321-004-00	COUPLING/18X30X55	*		2				
9	1771-244-230-00	TUBE/540 COMP	*		1				
10	V231-360-801-60	FLANGEBOLT	*		1				
11	1771-244-011-00	METAL/PTO/B	*		1				
12	V211-661-003-00	BOLT/SP	*		4				
13	1771-244-008-00	SHAFT/PTO	*		1				
14	V600-450-620-40	BEARING/BALL	*		1				
15	V600-450-620-50	BEARING/BALL	*		1				
16	V705-140-052-00	RING,SNAP/52 C	*		1				
17	1771-244-004-20	PULLEY/V2B118	*		1				
18	V211-561-003-00	BOLT/M10X30	*		4				
19	3836-303-051-00	BELT/VB044	*		2				
20	1728-334-007-00	PULLEY/V2B155	*		1				
21	3670-520-001-00	KEY/08X07X20	*		1				
22	3746-111-011-00	WASHER	*		1				
23	V401-160-016-00	WASHER,SP/M16	*		1				
24	V304-260-016-00	NUT/M16	*		2				
25	1728-334-005-00	PIN/TENSION	*		1				
26	V401-160-012-00	WASHER,SP/M12	*		1				
27	V411-260-012-00	WASHER /M12	*		1				
28	1771-244-250-10	ARM/PTO ASSY	*		1				
29	2502-407-001-10	BUSH/15X17X11	*		2				
30	3648-703-001-00	PULLEY/FT80X47	*		1				

FIG.213 DRIVE(PTO/SIDE)SYSTEM(B TYPE)(2/2)

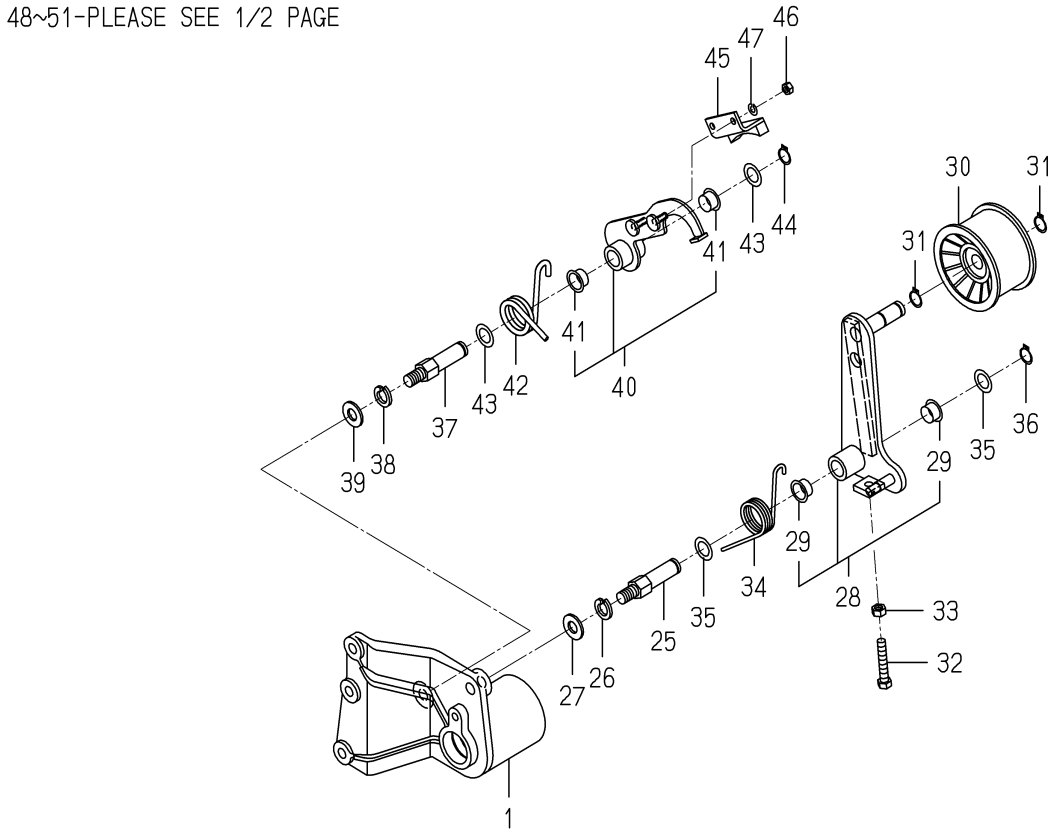

1771-244A-0100

KEY	PART CODE	DESCRIPTION	SPC	TYPE OF MODEL SFH220T	TYPE OF MODEL SFH240F	ITC	COL	GRP	REMARKS
31	V704-140-015-00	RING,SNAP/15 C	*		2				
32	V201-360-804-50	BOLT/M8X45/7T	*		1				
33	V304-260-008-00	NUT	*		1				
34	1771-244-012-00	SPRING/HT032	*		1				
35	3517-205-007-00	WASHER	*		2				
36	V704-140-015-00	RING,SNAP/15 C	*		1				
37	1728-334-005-00	PIN/TENSION	*		1				
38	V401-160-012-00	WASHER,SP/M12	*		1				
39	V411-260-012-00	WASHER /M12	*		1				
40	1771-244-270-00	ARM/PTOBRAKE ASSY	*		1				
41	2502-407-001-10	BUSH/15X17X11	*		2				
42	1771-244-013-00	SPRING/HT033	*		1				
43	3517-205-007-00	WASHER	*		2				
44	V704-140-015-00	RING,SNAP/15 C	*		1				
45	1728-334-280-00	LINING/PTOBRAKE COMP	*		1				
46	V301-260-006-00	NUT/M6	*		2				
47	V401-160-006-00	WASHER,SP/M 6	*		2				
48	1771-244-240-30	GUIDE/BELT/UPPE COMP	*		1				
49	V211-360-802-00	BOLT/SP	*		2				
50	1771-244-290-10	COVER/BELT COMP	*		1				
51	V211-360-801-60	BOLT,SEMS (SP)	*		3				

FIG.214 DRIVE(PTO/BLOWER)SYSTEM

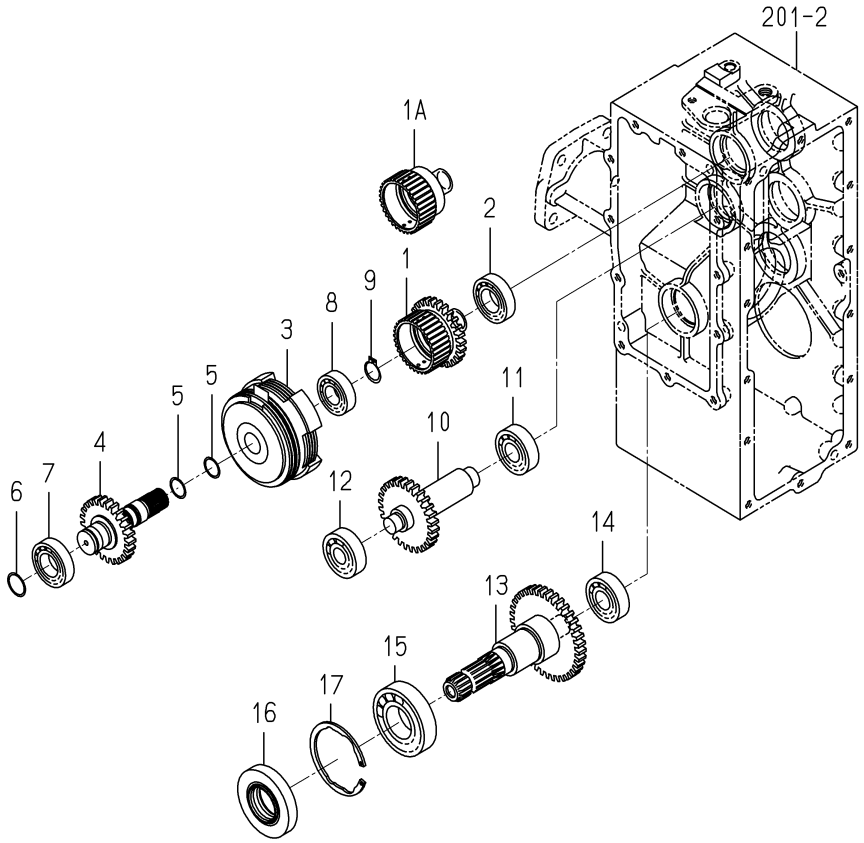

1771-245 -0100

KEY	PART CODE	DESCRIPTION	SPC	TYPE OF MODEL SFH220T	SFH240F	ITC	COL	GRP	REMARKS
1	- - - - - -	BLANK	*						- - - - - -
1A	1771-245-004-00	COUPLING/PTO	*	1	1				
2	V600-410-600-50	BEARING/BALL	*	1	1				
3	1725-219-210-10	CLUTCH/PTO ASSY	*	1	1				FIG S05
4	1771-245-290-00	GEAR/SPUR/25 COMP	*	1	1				
5	1688-211-057-00	RING/22	*	2	2				
6	1575-261-018-00	RING/25	*	1	1				
7	V600-410-600-50	BEARING/BALL	*	1	1				
8	V600-111-600-40	BEARING	*	1	1				
9	V704-140-020-00	RING,SNAP/20C	*	1	1				
10	1771-245-270-00	GEAR/SPUR/28 COMP	*	1	1				
11	V600-410-620-40	BEARING/BALL	*	1	1				
12	V600-110-630-30	BEARING,RB/6303	*	1	1				
13	1771-245-280-00	GEAR/SPUR/37 COMP	*	1	1				
14	V600-410-620-40	BEARING/BALL	*	1	1				
15	V600-410-620-70	BEARING/BALL	*	1	1				
16	1632-273-200-00	SEAL,OIL	*	1	1				
17	V707-140-072-00	RING/SNAP	*	1	1				

FIG.215 COVER(PTO/MID)SYSTEM(EXCEPT B TYPE)

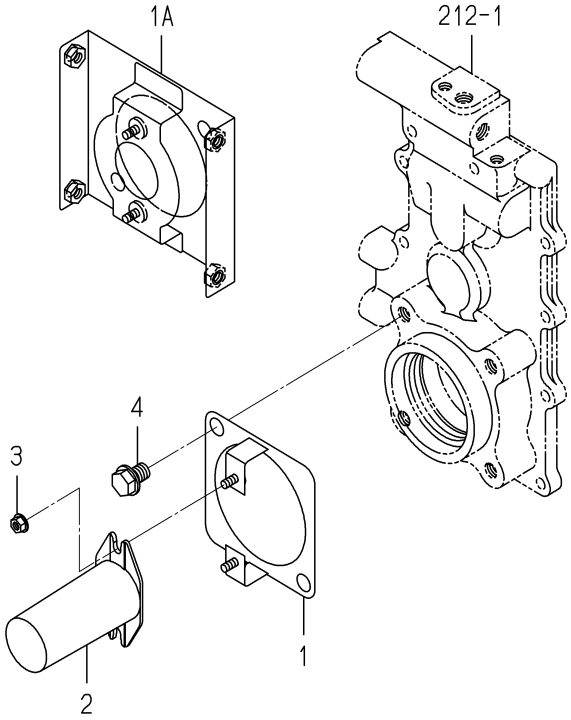

1771-246 -0100

KEY	PART CODE	DESCRIPTION	SPC	TYPE OF MODEL SFH220T	SFH240F	ITC	COL	GRP	REMARKS
1	- - - - - -	BLANK	*						- - - - - -
1A	1771-246-210-10	STAY/COVER COMP	*	1	1				
2	1444-314-009-10	CAP,PTO SHAFT	*	1	1				
3	V360-260-006-00	NUT/M6	*	2	2				
4	- - - - - -	BLANK	*						- - - - - -
4	V231-361-201-60	FLANGEBOLT	*	2	2				

FIG.216 COVER(PTO/SIDE)SYSTEM(B TYPE)

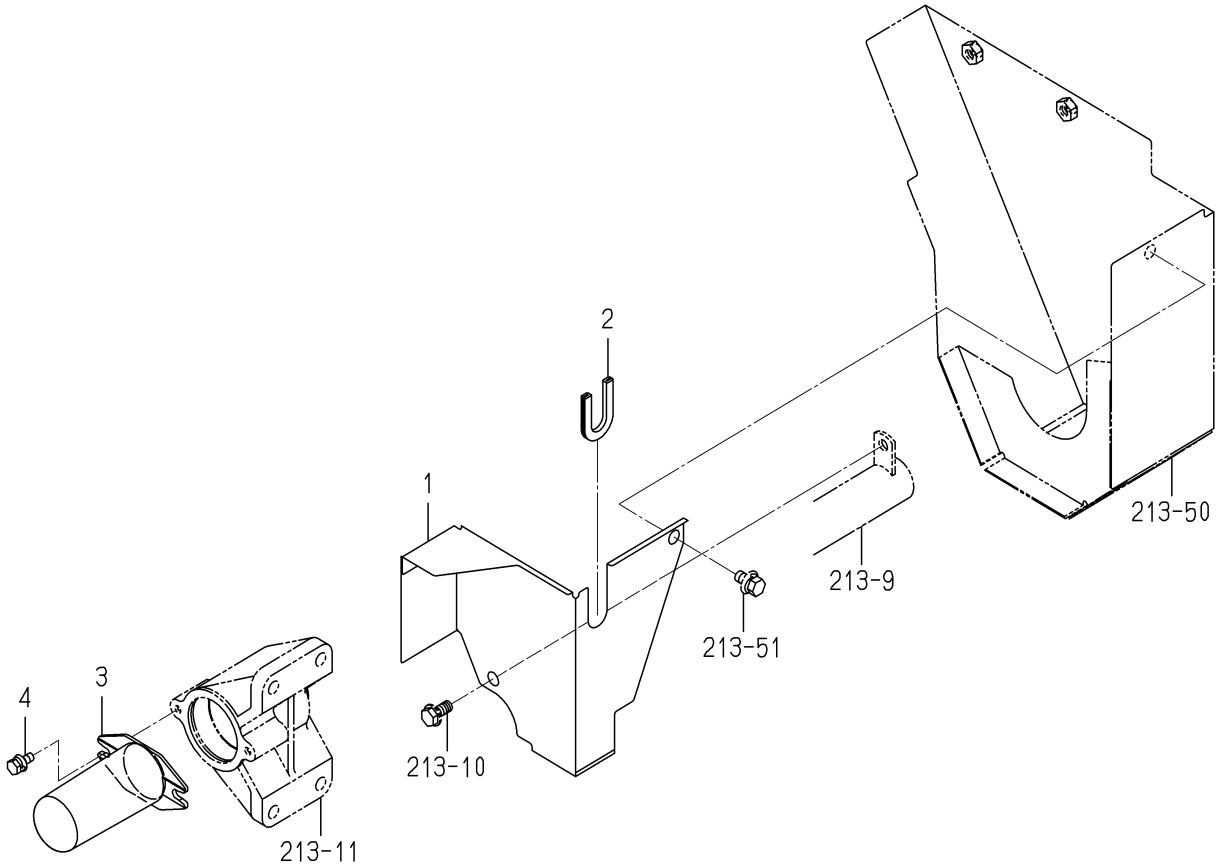

1771-246B-0100

KEY	PART CODE	DESCRIPTION	SPC	TYPE OF MODEL SFH220T	TYPE OF MODEL SFH240F	ITC	COL	GRP	REMARKS
1	1771-246-051-00	COVER	*		1				
2	1636-631-006-00	TRIM/95	*		1				
3	1444-314-009-10	CAP,PTO SHAFT	*		1				
4	V210-360-601-60	BOLT(SP)/M6X16	*		2				

FIG.217 COVER(PTO/SIDE)SYSTEM(B-F2 TYPE)

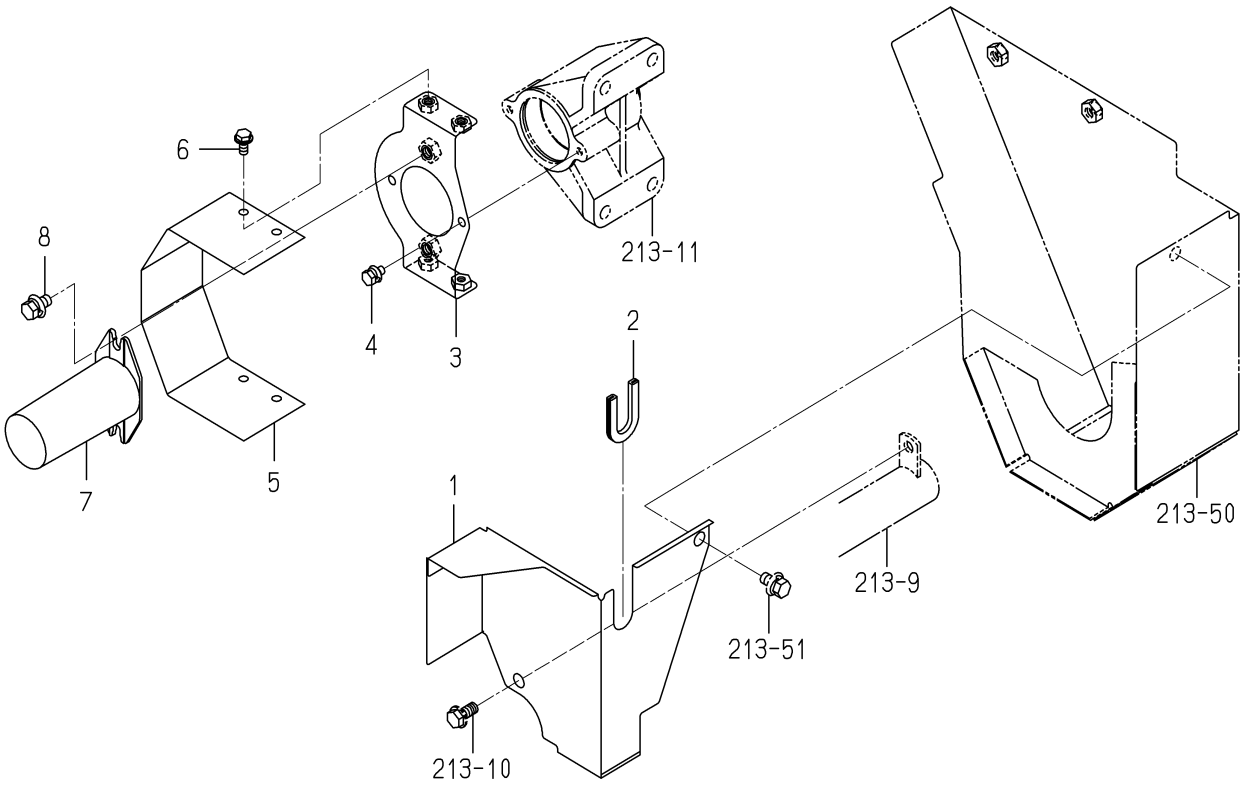

1771-246C-0100

KEY	PART CODE	DESCRIPTION	SPC	TYPE OF MODEL SFH220T	TYPE OF MODEL SFH240F	ITC	COL	GRP	REMARKS
1	1771-246-051-00	COVER	*		1				
2	1636-631-006-00	TRIM/95	*		1				
3	1771-246-510-00	STAY/COVER/SIDE PTO	*		1				
4	V210-360-601-20	BOLT,SEMS	*		2				
5	1771-246-052-00	COVER/SIDEPTO	*		1				
6	V230-360-601-20	FLANGEBOLT	*		4				
7	1444-314-009-10	CAP,PTO SHAFT	*		1				
8	V211-360-801-60	BOLT,SEMS (SP)	*		2				

FIG.218 LINK(HST)SYSTEM

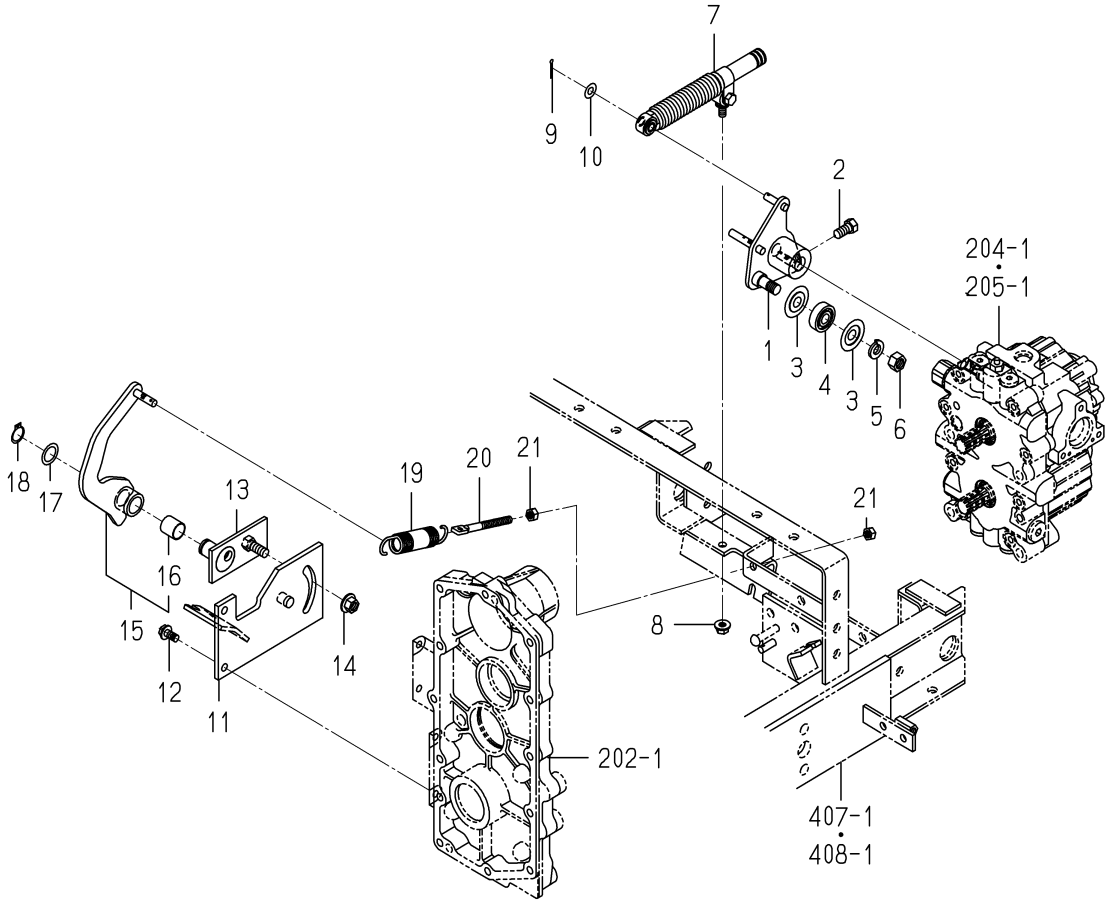

1771-271A-0100

KEY	PART CODE	DESCRIPTION	SPC	TYPE OF MODEL SFH220T	SFH240F	ITC	COL	GRP	REMARKS
1	1771-271-310-00	ARM/TRUNNION COMP	*	1	1				
2	1646-226-053-00	BOLT/SM/M10X23	*	1	1				
3	1689-271-006-00	WASHER/38X12X2	*	2	2				
4	V600-350-620-10	BEARING/BALL	*	1	1				
5	V401-160-012-00	WASHER,SP/M12	*	1	1				
6	V305-260-012-00	NUT/M12	*	1	1				
7	1646-640-580-00	DAMPER/OIL ASSY	*	1	1				
8	V362-260-008-00	NUT/WASHER	*	1	1				
9	V500-162-502-00	PIN,SPLIT/2.5X20	*	1	1				
10	V411-260-008-00	WASHER,PL/M 8	*	1	1				
11	1771-271-260-20	BRACKET/NEUTRAL COMP	*	1	1				
12	V211-560-802-00	BOLT/M8X20	*	2	2				
13	1771-271-220-00	LEVER/ADJUST COMP	*	1	1				
14	V363-260-010-00	NUT/M10	*	1	1				
15	1771-271-230-10	ARM/MEUTRAL ASSY	*	1	1				
16	2504-135-008-00	BUSH(18X20X20)	*	1	1				
17	2144-419-022-00	WASHER/18X26X02	*	1	1				
18	V704-140-018-00	RING,SNAP/18 C	*	1	1				
19	2500-210-016-00	SPRING/HE108	*	1	1				
20	1725-272-005-00	ROD/M08X85	*	1	1				
21	V304-260-008-00	NUT	*	2	2				

FIG.219 PEDAL(HST)SYSTEM

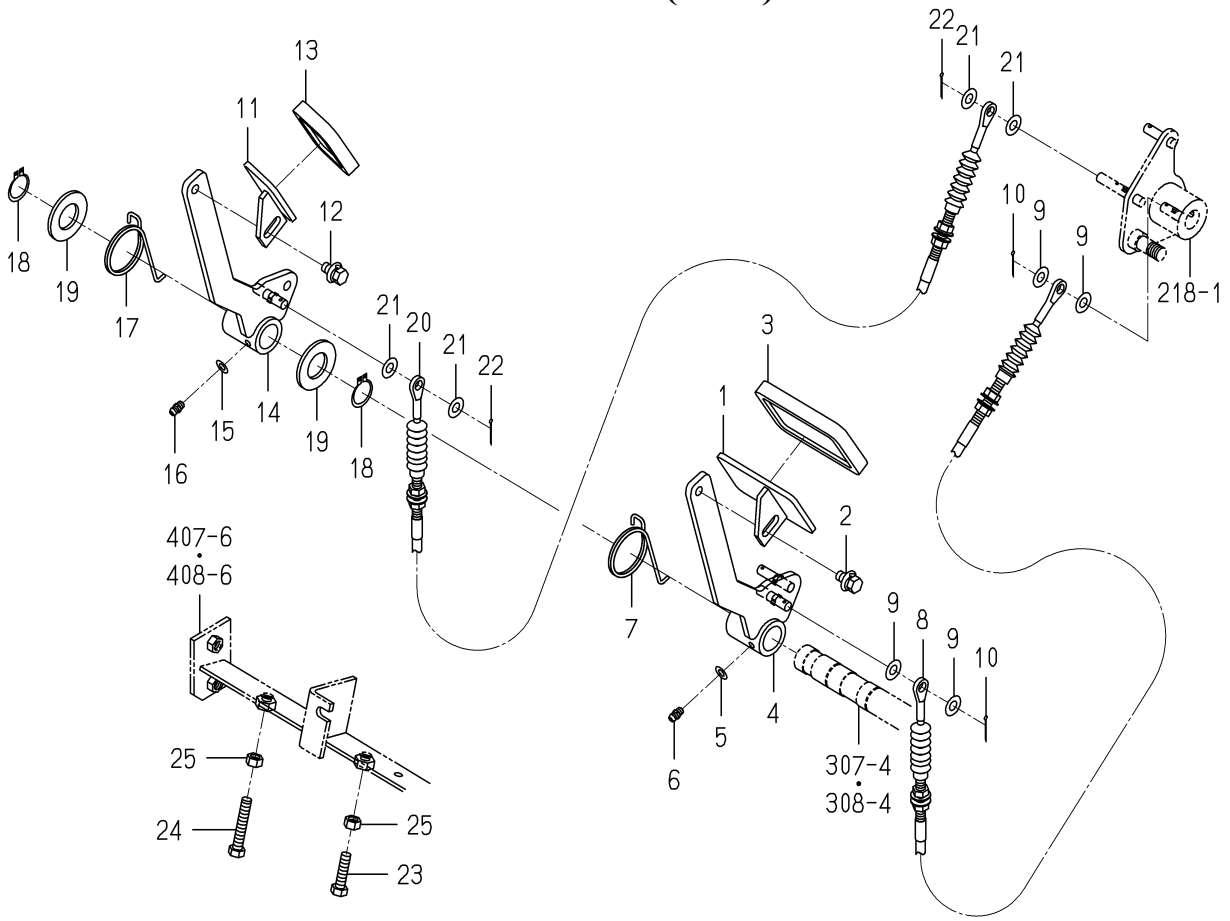

1771-272A-0100

KEY	PART CODE	DESCRIPTION	SPC	TYPE OF MODEL SFH220T	SFH240F	ITC	COL	GRP	REMARKS
1	1689-272-260-00	PEDAL/HST/F COMP	*	1	1				
2	V211-660-801-60	BOLT/M8X16	*	1	1				
3	1608-207-014-00	PAD (HST)	*	1	1				
4	1771-272-210-10	ARM/HST/F COMP	*	1	1				
5	V411-260-006-00	WASHER / M6	*	1	1				
6	V760-150-000-00	NIPPLE,GREASE	*	1	1				
7	1771-272-001-00	SPRING/HT042	*	1	1				
8	1771-272-230-10	CABLE/HST/F ASSY	*	1	1				
9	V411-260-008-00	WASHER,PL/M 8	*	4	4				
10	V500-162-502-00	PIN,SPLIT/2.5X20	*	2	2				
11	1689-272-240-00	PEDAL/HST/RH COMP	*	1	1				
12	V211-660-801-60	BOLT/M8X16	*	1	1				
13	1620-272-051-00	PAD	*	1	1				
14	1771-272-220-10	ARM/HST/R COMP	*	1	1				
15	V411-260-006-00	WASHER / M6	*	1	1				
16	V760-150-000-00	NIPPLE,GREASE	*	1	1				
17	1771-272-001-00	SPRING/HT042	*	1	1				
18	V704-140-022-00	RING,SNAP/22 C	*	2	2				
19	V411-260-022-00	WASHER,PL/M22	*	2	2				
20	1771-272-240-10	CABLE/HST/R ASSY	*	1	1				
21	V411-260-008-00	WASHER,PL/M 8	*	4	4				
22	V500-162-502-00	PIN,SPLIT/2.5X20	*	2	2				
23	V201-360-803-00	BOLT/M8X30	*	1	1				
24	V201-360-804-50	BOLT/M8X45/7T	*	1	1				
25	V304-460-008-00	NUT/M8	*	2	2				

FIG.220 LEVER(PTO/MOWER)SYSTEM(B TYPE)

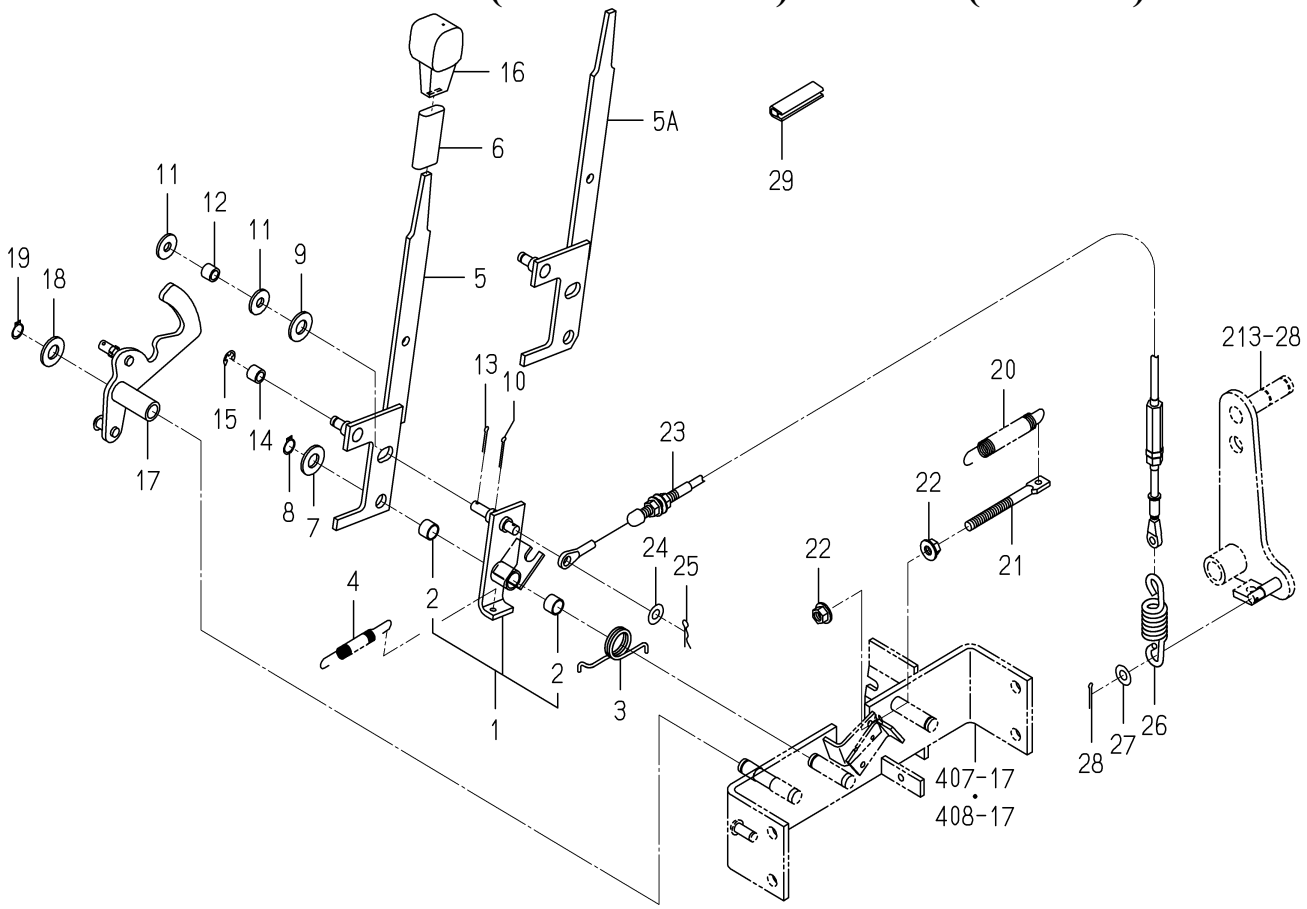

1771-273 -0100

KEY	PART CODE	DESCRIPTION	SPC	TYPE OF MODEL SFH220T	SFH240F	ITC	COL	GRP	REMARKS
1	- - - - - -	BLANK	*						- - - - - -
1	- - - - - -	BLANK	*						- - - - - -
1	1771-273-210-20	ARM/PTO/MOWER ASSY	*		1				
2	3656-115-002-00	BUSH/12X14X10	*		2				
3	1771-273-001-00	SPRING/HT024	*		1				
4	1415-120-006-00	SPRING,TENSION/86	*		1				
5	- - - - - -	BLANK	*						- - - - - -
5A	- - - - - -	BLANK	*						- - - - - -
5A	1771-273-230-20	LEVER/PTO/MOWER COMP	*		1				
6	1675-262-002-00	INSULATOR/LEVER/SUB	*		1				
7	V411-260-012-00	WASHER /M12	*		1				
8	V704-140-012-00	RING,SNAP/12 C	*		1				
9	V411-260-012-00	WASHER /M12	*		1				
10	- - - - - -	BLANK	*						- - - - - -
10	V500-162-502-00	PIN,SPLIT/2.5X20	*		1				
11	1373-121-001-00	WASHER/9X22X2	*		2				
12	1703-505-005-00	COLLAR/08X12X10	*		1				
13	V500-162-502-00	PIN,SPLIT/2.5X20	*		1				
14	1703-505-005-00	COLLAR/08X12X10	*		1				
15	V710-140-006-00	RING,SNAP/ 6 E	*		1				
16	1688-265-001-00	GRIP/MID/PTO	*		1				
17	1771-273-240-00	CAM/LOCK/PTO COMP	*		1				
18	V411-260-012-00	WASHER /M12	*		1				
19	V704-140-012-00	RING,SNAP/12 C	*		1				
20	1650-135-002-00	SPRING/HE095	*		1				
21	1725-272-005-00	ROD/M08X85	*		1				
22	V362-260-008-00	NUT/WASHER	*		2				
23	1771-273-250-00	CABLE/PTO ASSY	*		1				
24	V411-260-008-00	WASHER,PL/M 8	*		1				
25	- - - - - -	BLANK	*						- - - - - -

FIG.220 LEVER(PTO/MOWER)SYSTEM(B TYPE)

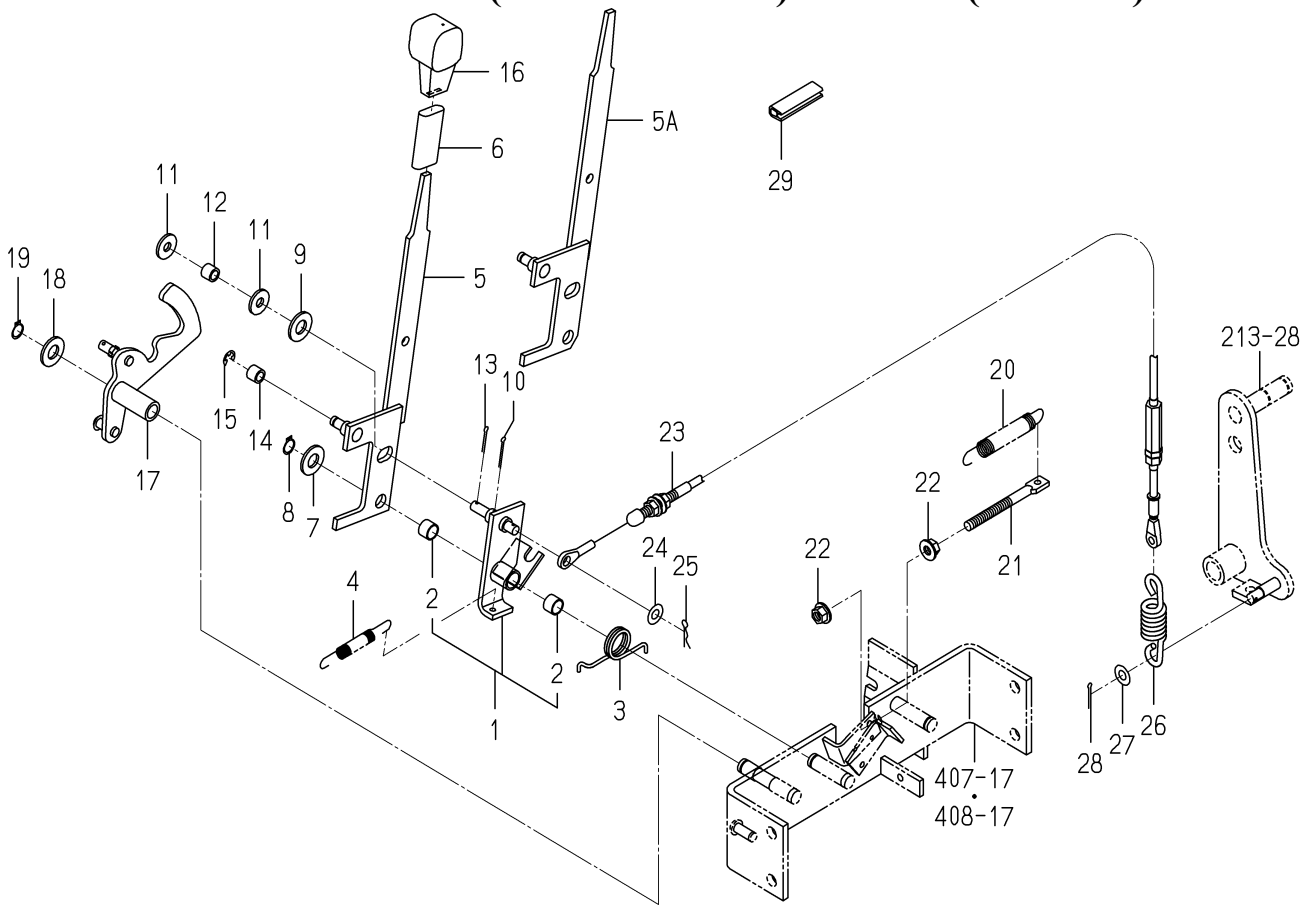

1771-273 -0100

KEY	PART CODE	DESCRIPTION	SPC	TYPE OF MODEL SFH220T	TYPE OF MODEL SFH240F	ITC	COL	GRP	REMARKS
25	V560-160-008-00	PIN/SNAP	*		1				
26	2150-810-004-00	SPRING/HE072	*		1				
27	V411-260-008-00	WASHER,PL/M 8	*		1				
28	V500-162-502-00	PIN,SPLIT/2.5X20	*		1				
29	3827-203-001-00	PAD/50	*		1				

FIG.221 LEVER(PTO/BLOWER)SYSTEM

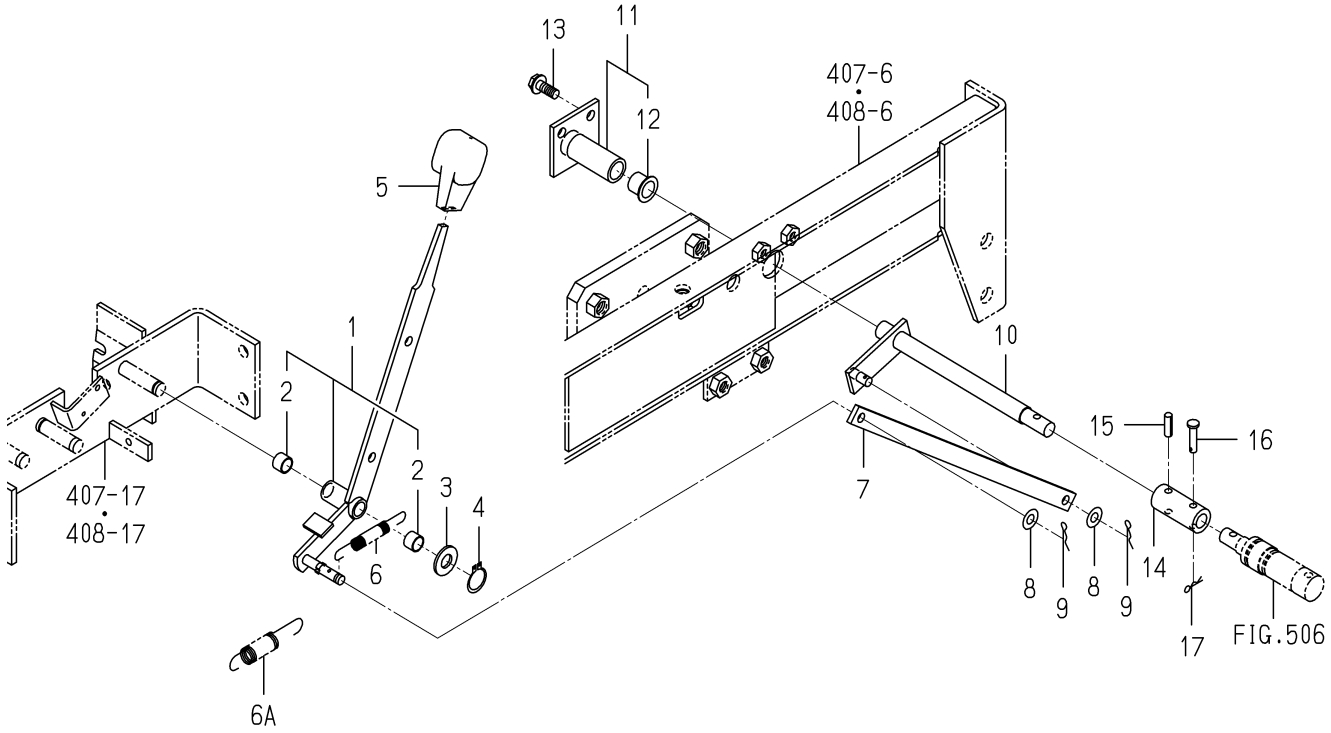

1771-274 -0100

KEY	PART CODE	DESCRIPTION	SPC	TYPE OF MODEL SFH220T	SFH240F	ITC	COL	GRP	REMARKS
1	1771-274-210-00	LEVER/BLOWER ASSY	*	1	1				
2	3656-115-002-00	BUSH/12X14X10	*	2	2				
3	V411-260-012-00	WASHER /M12	*	1	1				
4	V704-140-012-00	RING,SNAP/12 C	*	1	1				
5	1688-265-001-00	GRIP/MID/PTO	*	1	1				
6	- - - - - -	BLANK	*						- - - - - -
6A	1593-332-053-00	SPRING/HE086	*	1	1				
7	1771-274-001-00	PLATE/I/16X343	*	1	1				
8	V411-260-008-00	WASHER,PL/M 8	*	2	2				
9	V560-160-008-00	PIN/SNAP	*	2	2				
10	1771-274-230-00	ARM/VALVE COMP	*	1	1				
11	- - - - - -	BLANK	*						- - - - - -
11	1771-274-240-10	HUB ASSY	*	1	1				
12	3656-221-001-10	BUSH/15X17X16	*	1	1				
13	V231-360-802-00	FLANGEBOLT	*	2	2				
14	1725-505-001-00	HUB/13X22X50	*	1	1				
15	V580-140-602-20	PIN,SPRING/6 X22 W	*	1	1				
16	1725-505-002-00	PIN/06X26	*	1	1				
17	V560-160-006-00	PIN/SNAP	*	1	1				

FIG.222 AUTO CRUISE SYSTEM(B TYPE)

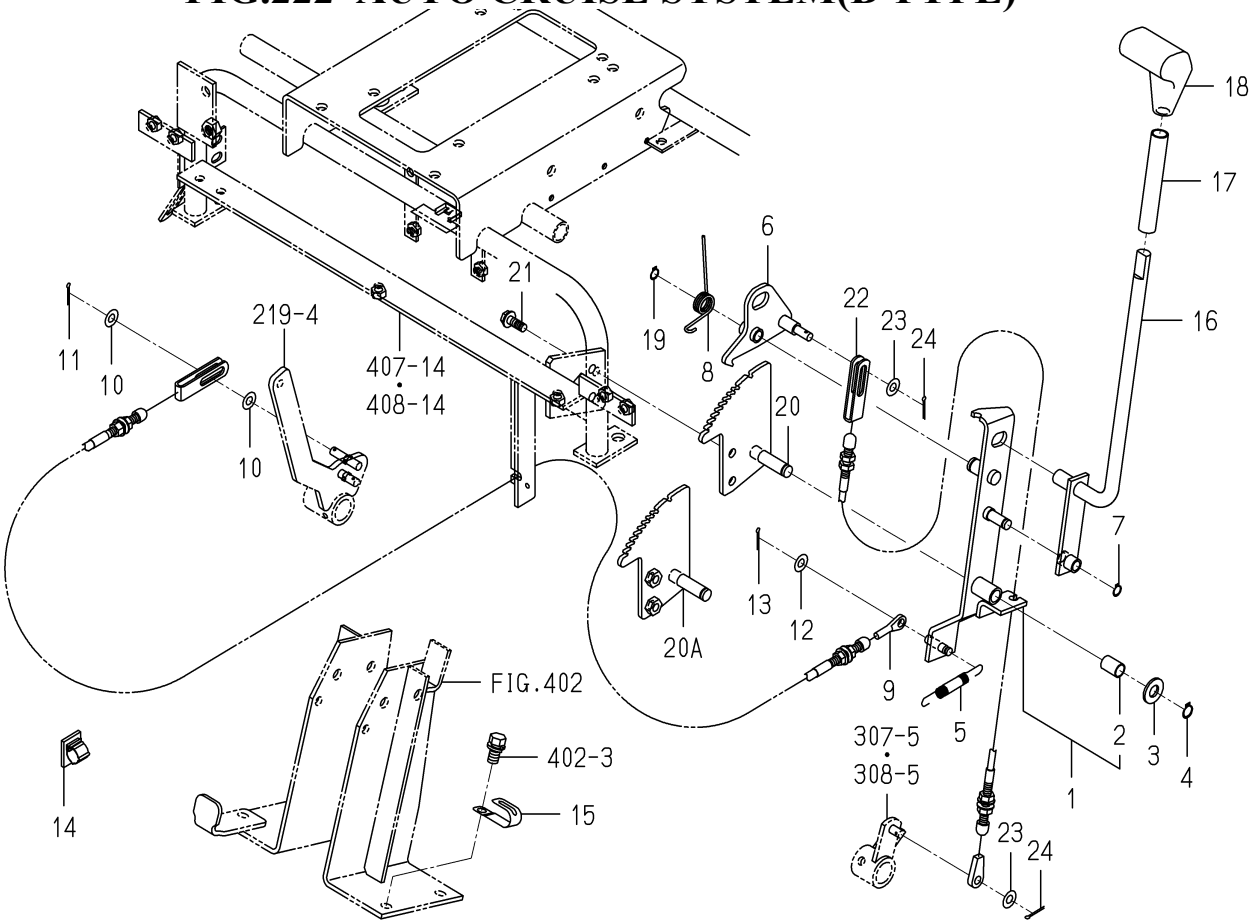

1771-275 -0100

KEY	PART CODE	DESCRIPTION	SPC	TYPE OF MODEL SFH220T	SFH240F	ITC	COL	GRP	REMARKS
1	1770-274-210-10	ARM/CRUISE ASSY	*		1				
2	3650-440-014-00	BUSH/12X14X20	*		1				
3	V411-260-012-00	WASHER /M12	*		1				
4	V704-140-012-00	RING,SNAP/12 C	*		1				
5	1415-120-006-00	SPRING,TENSION/86	*		1				
6	- - - - - -	BLANK	*						- - - - - -
6	1770-274-230-10	PLATE/HOOK COMP	*		1				
7	V704-140-010-00	RING,SNAP/10 C	*		1				
8	1770-274-001-10	SPRING/HT018	*		1				
9	1771-275-280-00	CABLE/CRUISE ASSY	*		1				
10	V411-260-008-00	WASHER,PL/M 8	*		2				
11	V500-162-502-00	PIN,SPLIT/2.5X20	*		1				
12	V411-260-008-00	WASHER,PL/M 8	*		1				
13	V500-162-502-00	PIN,SPLIT/2.5X20	*		1				
14	1650-652-014-00	CLAMP	*		1				
15	3737-172-011-00	CLAMP,HARNESS	*		1				
16	1771-275-220-00	LEVER/CRUISE COMP	*		1				
17	1614-261-006-00	TUBE/14X17X90	*		1				
18	1716-261-001-00	GRIP/MAIN	*		1				
19	V704-140-010-00	RING,SNAP/10 C	*		1				
20	- - - - - -	BLANK	*						- - - - - -
20A	1770-274-250-10	HOOK/CRUISE COMP	*		1				
21	V231-360-802-00	FLANGEBOLT	*		2				
22	1771-275-290-00	CABLE/RELEASE ASSY	*		1				
23	V411-260-008-00	WASHER,PL/M 8	*		2				
24	V500-162-502-00	PIN,SPLIT/2.5X20	*		2				

FIG.301 HOUSING(AXLE/FRONT)SYSTEM

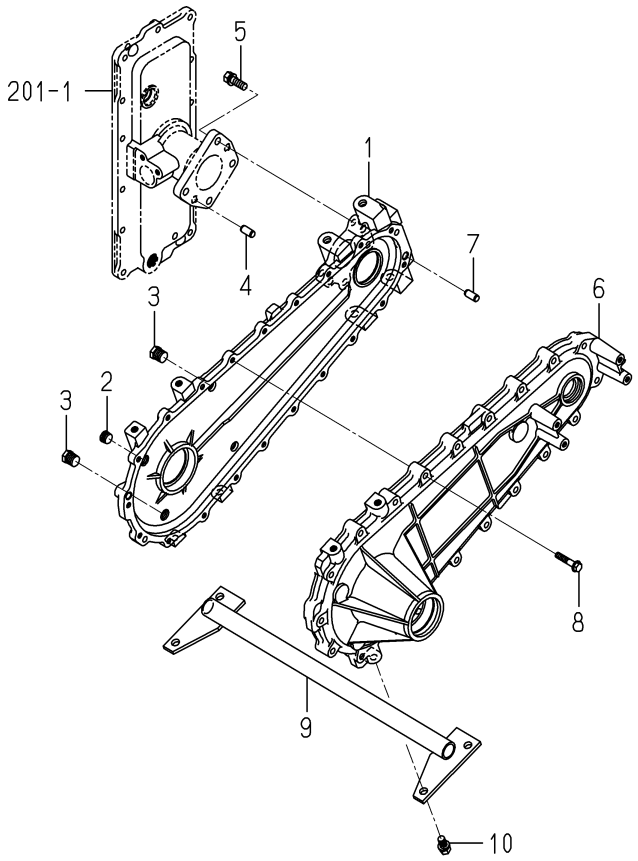

1771-306A-0100

KEY	PART CODE	DESCRIPTION	SPC	TYPE OF MODEL SFH220T	TYPE OF MODEL SFH240F	ITC	COL	GRP	REMARKS
1	1771-306-021-00	CASE/CHAIN/A	*	2	2				
2	V780-140-000-6B	PLUG/SCREW/SEAL	*	2	2				
3	V782-160-000-6B	PLUG/SCREW/SEAL	*	4	4				
4	V523-101-002-20	PIN	*	4	4				
5	V211-561-003-00	BOLT/M10X30	*	8	8				
6	1771-306-022-00	CASE/CHAIN/B	*	2	2				
7	V523-101-002-20	PIN	*	4	4				
8	V231-360-804-00	FLANGEBOLT	*	40	40				
9	1771-306-230-00	STAY/CASE COMP	*	1	1				
10	V211-561-002-00	BOLT/M10X20	*	4	4				

FIG.302 SHAFT(WHEEL/FRONT)SYSTEM (EXCEPT G TYPE)

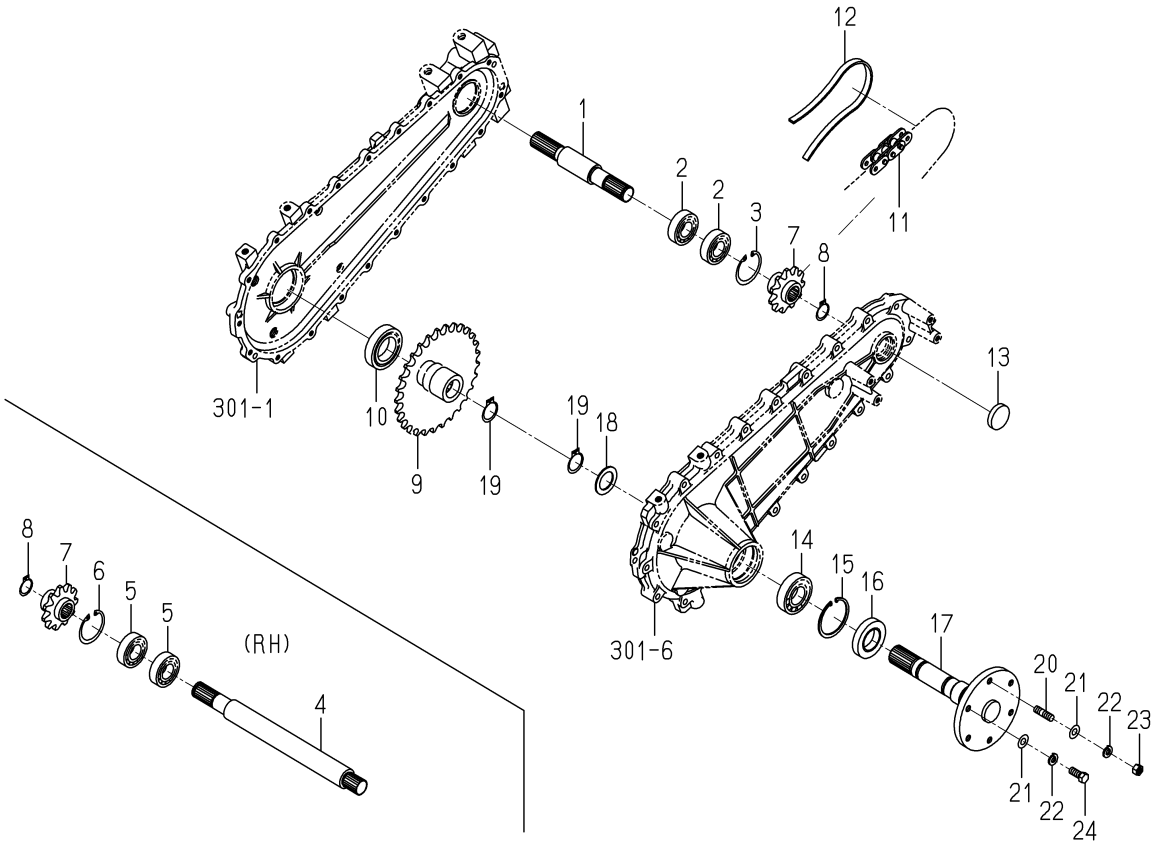

1771-307A-0100

KEY	PART CODE	DESCRIPTION	SPC	TYPE OF MODEL SFH220T	TYPE OF MODEL SFH240F	ITC	COL	GRP	REMARKS
1	1771-307-021-00	SHAFT/DIFF/LH	*	1	1				
2	V600-410-620-50	BEARING/BALL	*	2	2				
3	V705-140-052-00	RING,SNAP/52 C	*	1	1				
4	1771-307-022-00	SHAFT/DIFF/RH	*	1	1				
5	V600-410-620-50	BEARING/BALL	*	2	2				
6	V705-140-052-00	RING,SNAP/52 C	*	1	1				
7	1728-307-024-00	SPROCKET/11	*	2	2				
8	V704-140-025-00	RING,SNAP/25 C	*	2	2				
9	1728-307-025-00	SPROCKET/29	*	2	2				
10	V600-410-600-80	BEARING/BALL	*	2	2				
11	1771-307-007-00	CHAIN/ROLLER60X066	*	2	2				
12	1728-307-026-10	GUIDE/CHAIN	*	2	2				
13	2194-201-005-00	PLUG/40X8	*	2	2				
14	V600-410-620-60	BEARING/BALL	*	2	2				
15	1710-241-053-00	RING/SNAP/R62	*	2	2				
16	7827-205-010-00	SEAL/OIL	*	2	2				
17	1771-307-210-00	SHAFT/WHEEL/FRONT	*	2	2				
18	1560-208-018-40	WASHER/30X46X2	*	2	2				
19	V704-140-030-00	RING,SNAP/30 C	*	4	4				
20	V251-341-002-00	BOLT/M10X20	*	4	4				
21	V411-260-010-00	WASHER/M10	*	12	12				
22	V401-160-010-00	WASHER,SP/M10	*	12	12				
23	V304-460-010-00	NUT/M10	*	4	4				
24	V201-361-002-50	BOLT/M10X25	*	8	8				

FIG.303 SHAFT(WHEEL/FRONT)SYSTEM(G TYPE)

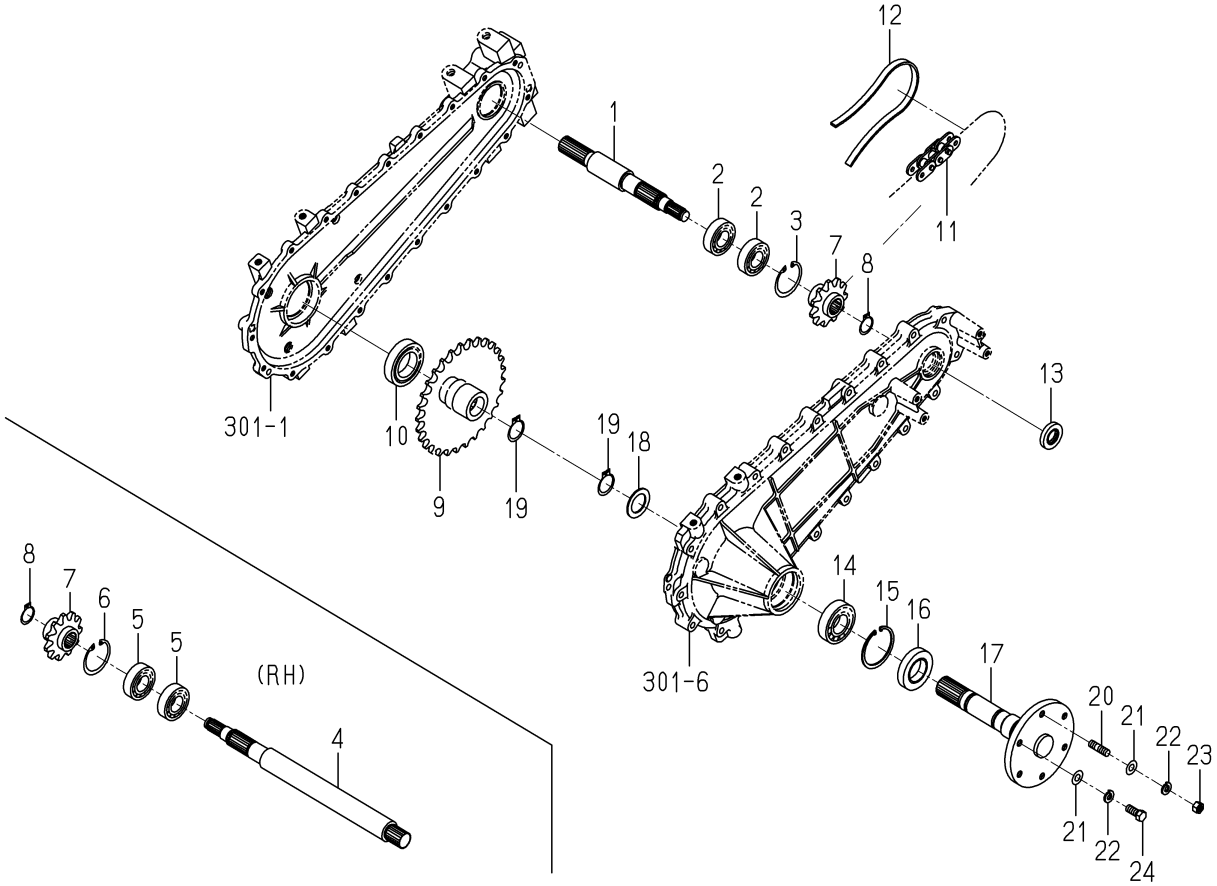

1771-307C-0100

KEY	PART CODE	DESCRIPTION	SPC	TYPE OF MODEL SFH220T	TYPE OF MODEL SFH240F	ITC	COL	GRP	REMARKS
1	1771-307-061-00	SHAFT/DIFF/LH/G	*	1	1				
2	V600-410-620-50	BEARING/BALL	*	2	2				
3	V705-140-052-00	RING,SNAP/52 C	*	1	1				
4	1771-307-062-00	SHAFT/DIFF/RH/G	*	1	1				
5	V600-410-620-50	BEARING/BALL	*	2	2				
6	V705-140-052-00	RING,SNAP/52 C	*	1	1				
7	1728-307-024-00	SPROCKET/11	*	2	2				
8	V704-140-025-00	RING,SNAP/25 C	*	2	2				
9	1728-307-025-00	SPROCKET/29	*	2	2				
10	V600-410-600-80	BEARING/BALL	*	2	2				
11	1771-307-007-00	CHAIN/ROLLER60X066	*	2	2				
12	1728-307-026-10	GUIDE/CHAIN	*	2	2				
13	V744-120-400-80	SEAL,OIL/TC20408	*	2	2				
14	V600-410-620-60	BEARING/BALL	*	2	2				
15	1710-241-053-00	RING/SNAP/R62	*	2	2				
16	7827-205-010-00	SEAL/OIL	*	2	2				
17	1771-307-210-00	SHAFT/WHEEL/FRONT	*	2	2				
18	1560-208-018-40	WASHER/30X46X2	*	2	2				
19	V704-140-030-00	RING,SNAP/30 C	*	4	4				
20	V251-341-002-00	BOLT/M10X20	*	4	4				
21	V411-260-010-00	WASHER/M10	*	12	12				
22	V401-160-010-00	WASHER,SP/M10	*	12	12				
23	V304-460-010-00	NUT/M10	*	4	4				
24	V201-361-002-50	BOLT/M10X25	*	8	8				

FIG.304 BRAKE SYSTEM(EXCEPT G TYPE)

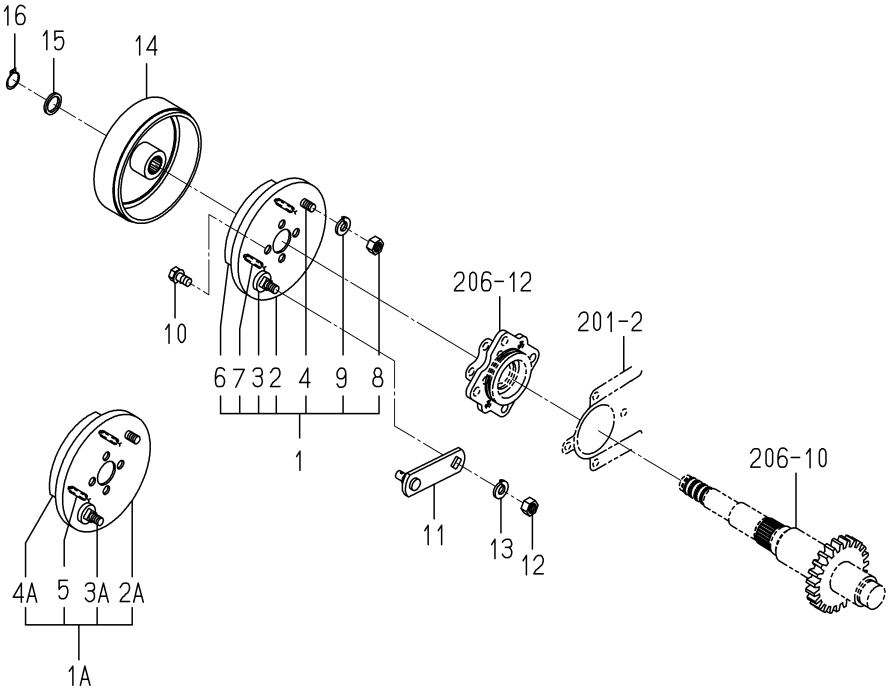

1728-310 -0100

KEY	PART CODE	DESCRIPTION	SPC	TYPE OF MODEL SFH220T	SFH240F	ITC	COL	GRP	REMARKS
1	- - - - - -	BLANK	*						- - - - - -
1A	1728-310-210-00	BRAKE/110 ASSY	*	1	1				
2	- - - - - -	BLANK	*						- - - - - -
2A	1728-310-211-00	BACKPLATE	*	1	1				
3	- - - - - -	BLANK	*						- - - - - -
3A	1728-310-212-00	SHAFT/CAM	*	1	1				
4	- - - - - -	BLANK	*						- - - - - -
4A	1728-310-213-00	LINING	*	2	2				
5	1728-310-214-00	SPRING/HE036	*	2	2				
6	- - - - - -	BLANK	*						- - - - - -
7	- - - - - -	BLANK	*						- - - - - -
8	- - - - - -	BLANK	*						- - - - - -
9	- - - - - -	BLANK	*						- - - - - -
10	V211-260-801-60	BOLT,SEMS (S) M8X16	*	4	4				
11	1728-310-200-00	ARM/BRAKE COMP	*	1	1				
12	- - - - - -	BLANK	*						- - - - - -
12	V304-260-010-00	NUT	*	1	1				
13	V401-160-010-00	WASHER,SP/M10	*	1	1				
14	1689-202-004-00	DRUM/BRAKE	*	1	1				
15	V411-260-016-00	WASHER / M16	*	1	1				
16	V704-140-016-00	RING,SNAP/16 C	*	1	1				

FIG.305 COVER(BRAKE)SYSTEM(G TYPE)

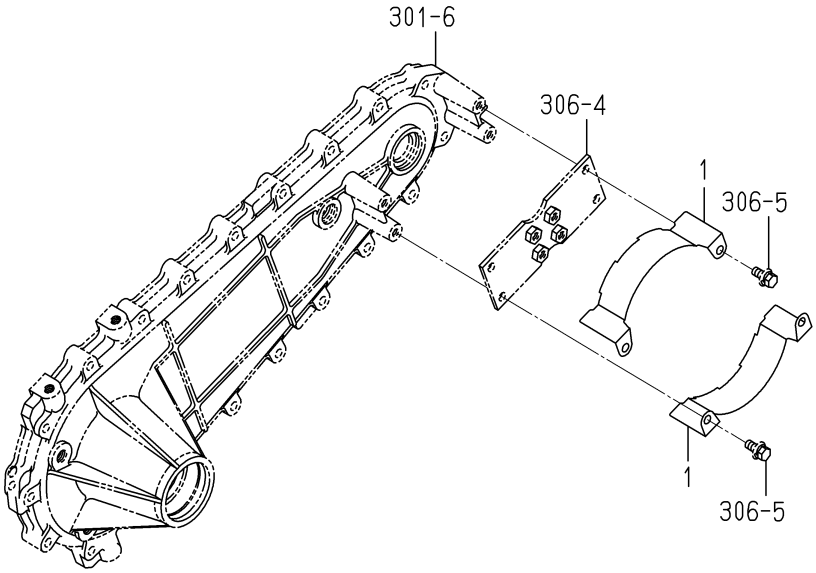

1728-310B-0100

KEY	PART CODE	DESCRIPTION	SPC	TYPE OF MODEL		ITC	COL	GRP	REMARKS
				SFH220T	SFH240F				
1	1728-310-053-10	COVER/BRAKE	*	4	4				

FIG.306 BRAKE SYSTEM(G TYPE)

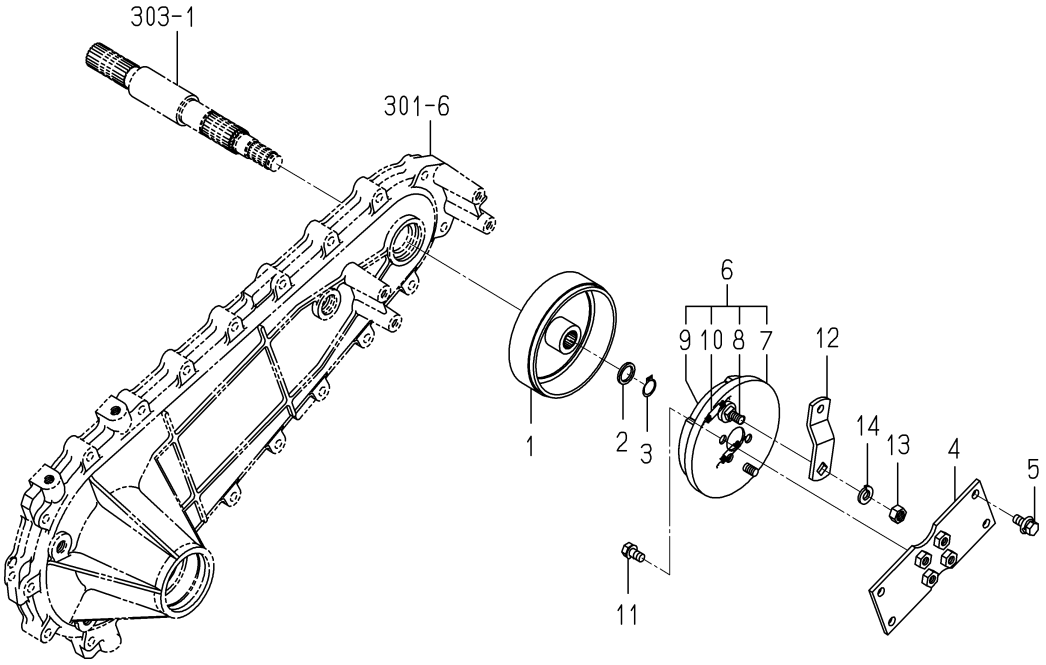

1771-310B-0100

KEY	PART CODE	DESCRIPTION	SPC	TYPE OF MODEL SFH220T	TYPE OF MODEL SFH240F	ITC	COL	GRP	REMARKS
1	1689-202-004-00	DRUM/BRAKE	*	2	2				
2	1728-310-052-00	WASHER/17X22X03	*	2	2				
3	V704-140-016-00	RING,SNAP/16 C	*	2	2				
4	1728-310-510-10	STAY/BRAKE/LH COMP	*	2	2				
5	V211-360-802-00	BOLT/SP	*	8	8				
6	1728-310-210-00	BRAKE/110 ASSY	*	2	2				
7	1728-310-211-00	BACKPLATE	*	2	2				
8	1728-310-212-00	SHAFT/CAM	*	2	2				
9	1728-310-213-00	LINING	*	4	4				
10	1728-310-214-00	SPRING/HE036	*	4	4				
11	V211-260-801-60	BOLT,SEMS (S) M8X16	*	8	8				
12	1771-310-051-00	ARM/BRAKE	*	2	2				
13	V304-260-010-00	NUT	*	2	2				
14	V401-160-010-00	WASHER,SP/M10	*	2	2				

FIG.307 PEDAL(BRAKE)SYSTEM(EXCEPT G TYPE)

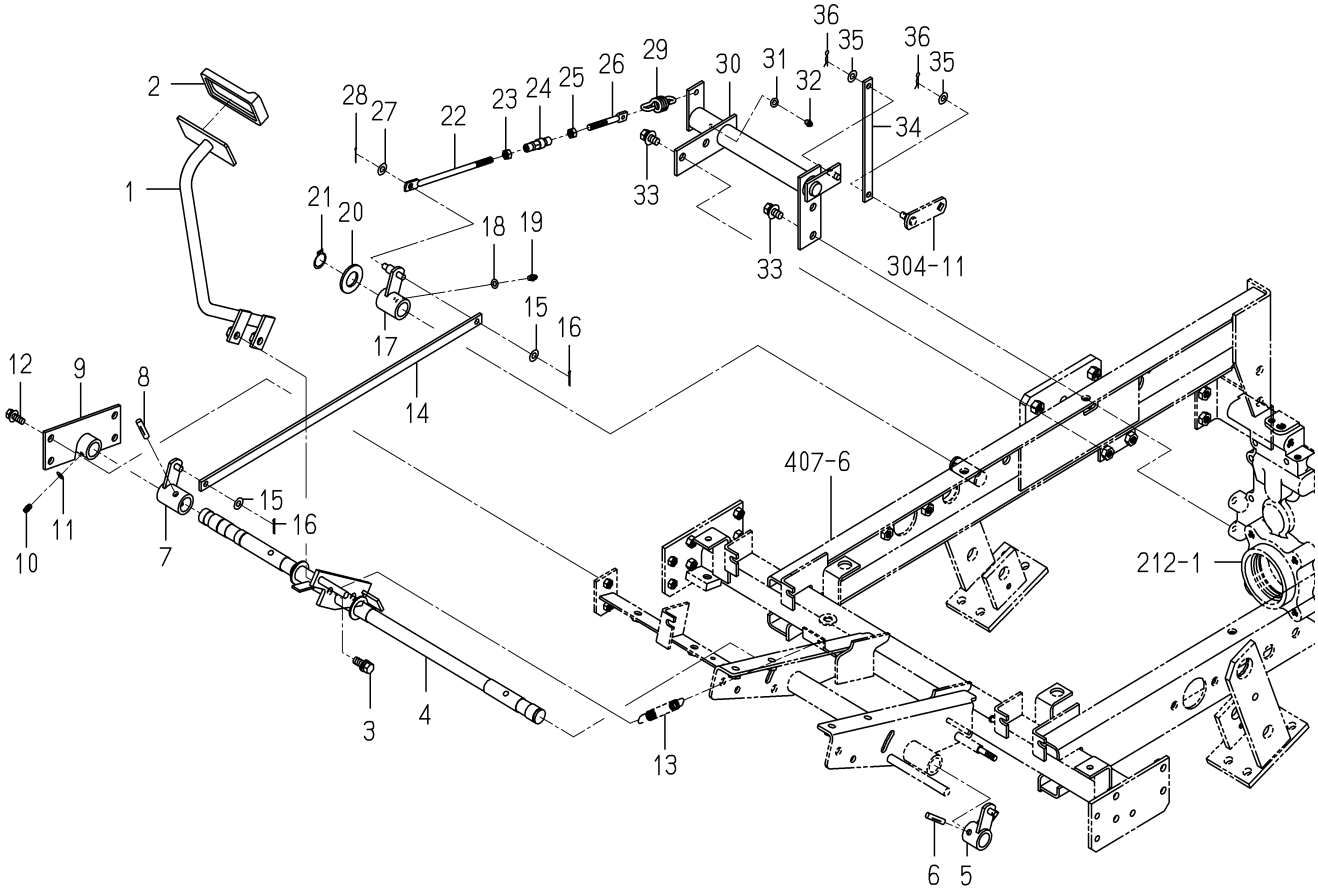

1771-312A-0100

KEY	PART CODE	DESCRIPTION	SPC	TYPE OF MODEL SFH220T	SFH240F	ITC	COL	GRP	REMARKS
1	1771-312-210-00	PEDAL/BRAKE COMP	*	1	1				
2	1524-122-001-00	PAD	*	1	1				
3	V211-261-002-50	BOLT(S) M10X25	*	2	2				
4	1771-312-220-00	SHAFT/BRAKE COMP	*	1	1				
5	1771-312-230-00	ARM/BRAKE/LH COMP	*	1	1				
6	V530-160-803-20	PIN	*	1	1				
7	1771-312-240-00	ARM/BRAKE/RH COMP	*	1	1				
8	V530-160-803-20	PIN	*	1	1				
9	1771-312-260-00	HUB COMP	*	1	1				
10	V760-150-000-00	NIPPLE,GREASE	*	1	1				
11	V411-260-006-00	WASHER / M6	*	1	1				
12	V211-360-802-00	BOLT/SP	*	4	4				
13	1650-135-002-00	SPRING/HE095	*	1	1				
14	1771-312-001-00	PLATE/I/16X595	*	1	1				
15	V411-260-008-00	WASHER,PL/M 8	*	2	2				
16	V500-162-502-00	PIN,SPLIT/2.5X20	*	2	2				
17	1771-312-270-00	ARM/BRAKE COMP	*	1	1				
18	V411-260-006-00	WASHER / M6	*	1	1				
19	V760-150-000-00	NIPPLE,GREASE	*	1	1				
20	V411-260-022-00	WASHER,PL/M22	*	1	1				
21	V704-140-022-00	RING,SNAP/22 C	*	1	1				
22	1771-312-002-00	ROD/M08X175	*	1	1				
23	V304-260-008-00	NUT	*	1	1				
24	1444-122-002-00	TURNBUCKLE/M8	*	1	1				
25	1560-132-007-30	NUT/M8	*	1	1				
26	3104-210-004-10	ROD/M08X72/LH	*	1	1				
27	V411-260-008-00	WASHER,PL/M 8	*	1	1				
28	V500-162-002-00	PIN,SPLIT/2 X20	*	1	1				
29	2144-519-009-10	SPRING/HE060	*	1	1				
30	1771-312-250-00	ARM/COUNTER COMP	*	1	1				

FIG.307 PEDAL(BRAKE)SYSTEM(EXCEPT G TYPE)

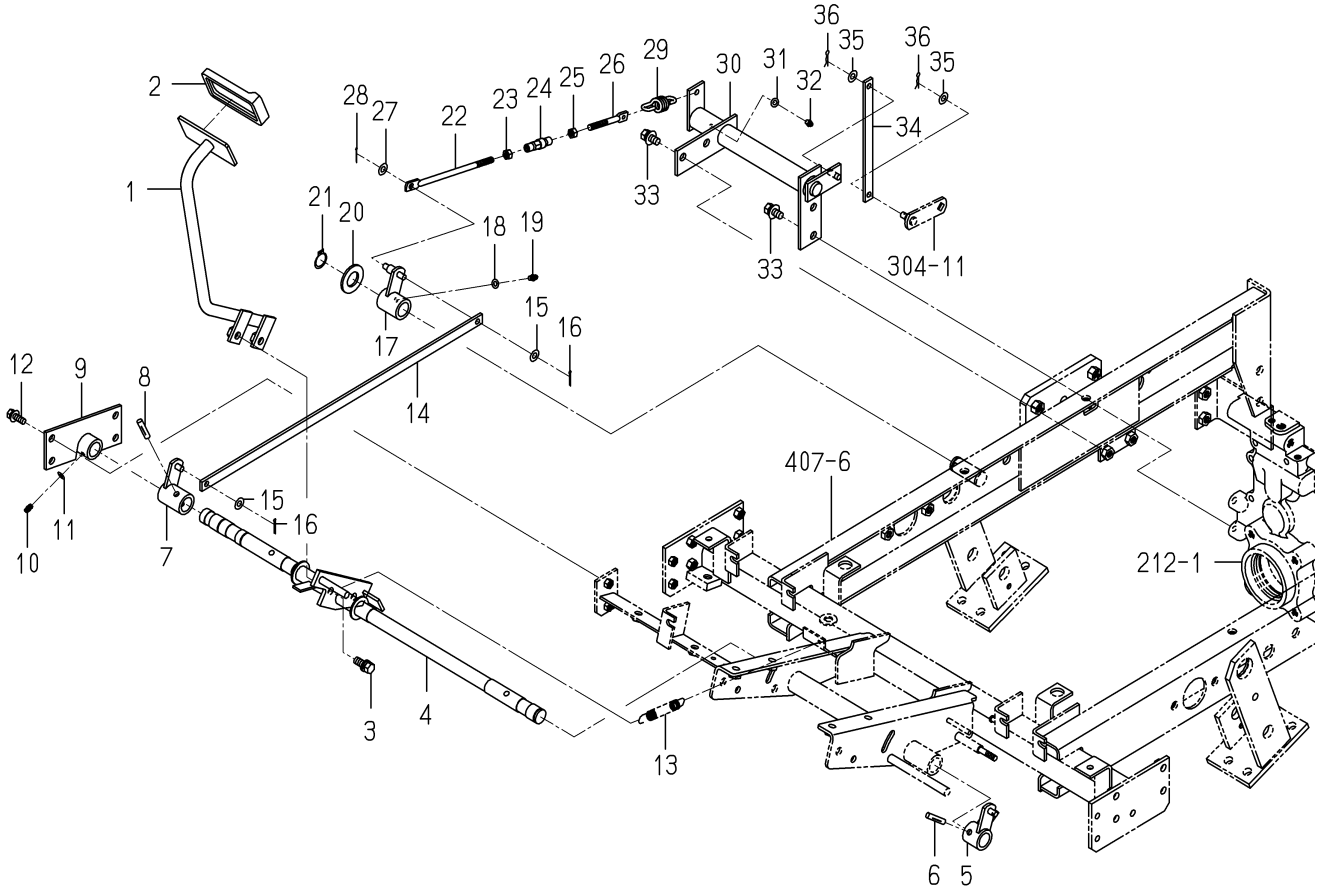

1771-312A-0100

KEY	PART CODE	DESCRIPTION	SPC	TYPE OF MODEL SFH220T	TYPE OF MODEL SFH240F	ITC	COL	GRP	REMARKS
31	V411-260-006-00	WASHER / M6	*	1	1				
32	V760-150-000-00	NIPPLE,GREASE	*	1	1				
33	V211-661-002-00	BOLT/M10X20	*	4	4				
34	1771-312-003-00	PLATE/I/16X216	*	1	1				
35	V411-260-008-00	WASHER,PL/M 8	*	2	2				
36	V560-160-008-00	PIN/SNAP	*	2	2				

FIG.308 PEDAL(BRAKE)SYSTEM(G TYPE)

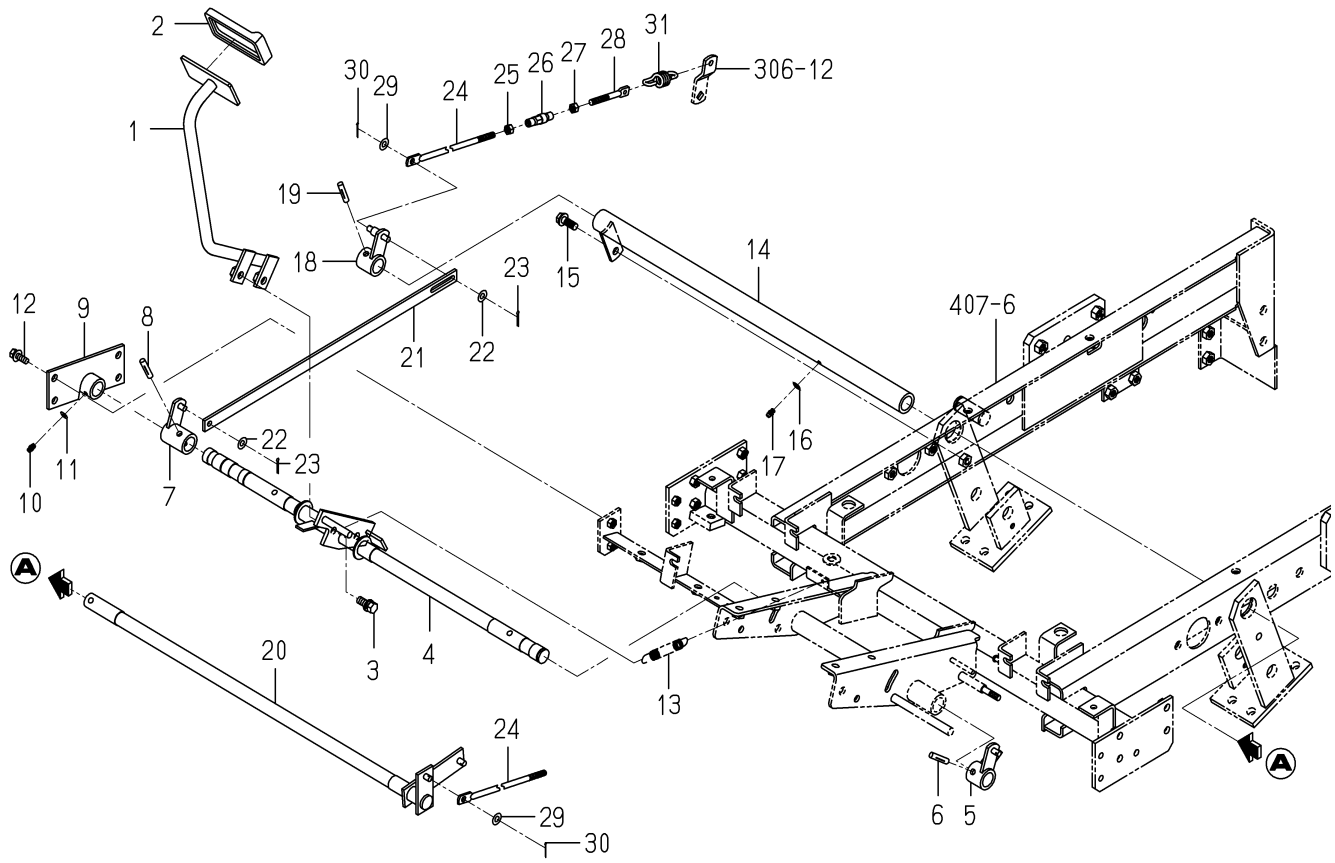

1771-312C-0100

KEY	PART CODE	DESCRIPTION	SPC	TYPE OF MODEL SFH220T	SFH240F	ITC	COL	GRP	REMARKS
1	1771-312-210-00	PEDAL/BRAKE COMP	*	1	1				
2	1524-122-001-00	PAD	*	1	1				
3	V211-261-002-50	BOLT(S) M10X25	*	2	2				
4	1771-312-220-00	SHAFT/BRAKE COMP	*	1	1				
5	1771-312-230-00	ARM/BRAKE/LH COMP	*	1	1				
6	V530-160-803-20	PIN	*	1	1				
7	1771-312-240-00	ARM/BRAKE/RH COMP	*	1	1				
8	V530-160-803-20	PIN	*	1	1				
9	1771-312-260-00	HUB COMP	*	1	1				
10	V760-150-000-00	NIPPLE,GREASE	*	1	1				
11	V411-260-006-00	WASHER / M6	*	1	1				
12	V211-360-802-00	BOLT/SP	*	4	4				
13	1650-135-002-00	SPRING/HE095	*	1	1				
14	1771-312-520-00	HUB/BRAKE/G COMP	*	1	1				
15	V231-361-002-50	FLANGEBOLT	*	1	1				
16	V411-260-006-00	WASHER / M6	*	1	1				
17	V760-150-000-00	NIPPLE,GREASE	*	1	1				
18	1771-312-530-10	ARM/COUNTER/G COMP	*	1	1				
19	V530-160-803-20	PIN	*	1	1				
20	1771-312-540-00	SHAFT/COUNTER/G COMP	*	1	1				
21	1771-312-051-00	PLATE/I/19X534	*	1	1				
22	V411-260-008-00	WASHER,PL/M 8	*	2	2				
23	V500-162-502-00	PIN,SPLIT/2.5X20	*	2	2				
24	1771-312-052-00	ROD/M08X350	*	2	2				
25	V304-260-008-00	NUT	*	2	2				
26	1444-122-002-00	TURNBUCKLE/M8	*	2	2				
27	1560-132-007-30	NUT/M8	*	2	2				
28	3104-210-004-10	ROD/M08X72/LH	*	2	2				
29	V411-260-008-00	WASHER,PL/M 8	*	2	2				
30	V500-162-002-00	PIN,SPLIT/2 X20	*	2	2				

FIG.308 PEDAL(BRAKE)SYSTEM(G TYPE)

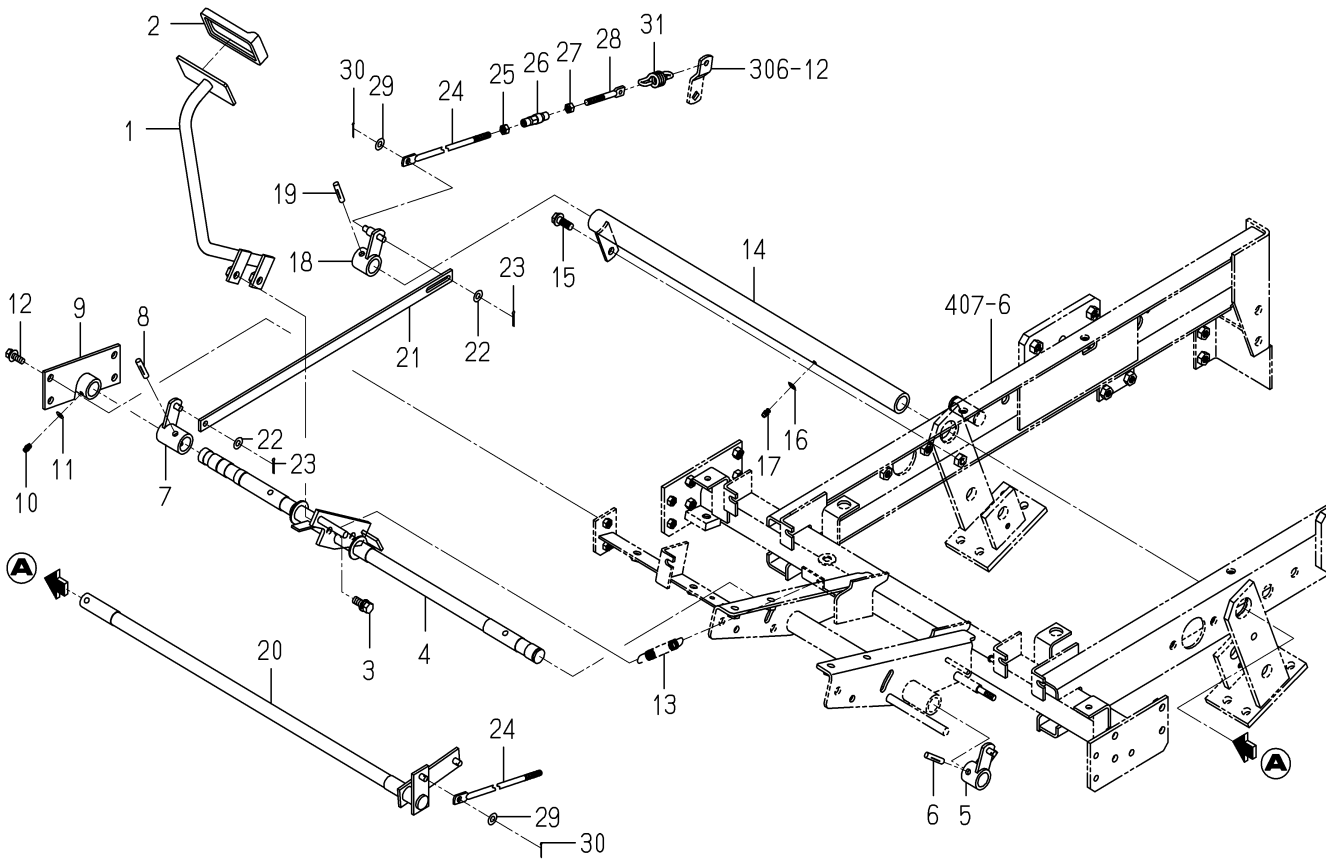

1771-312C-0100

KEY	PART CODE	DESCRIPTION	SPC	TYPE OF MODEL SFH220T	TYPE OF MODEL SFH240F	ITC	COL	GRP	REMARKS
31	2144-519-009-10	SPRING/HE060	*	2	2				

FIG.309 BRAKE(PARKING)SYSTEM (EXCEPT G TYPE)

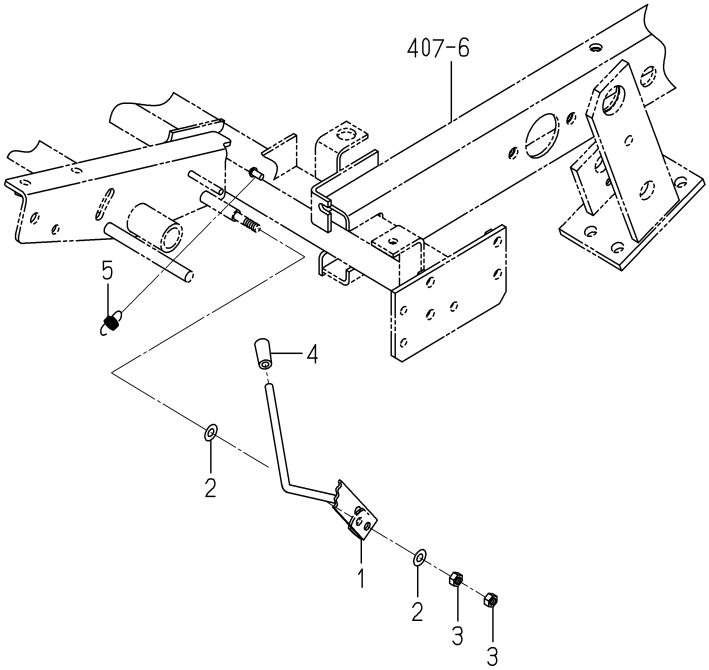

1771-313 -0100

KEY	PART CODE	DESCRIPTION	SPC	TYPE OF MODEL SFH220T	SFH240F	ITC	COL	GRP	REMARKS
1	- - - - - -	BLANK	*						- - - - - -
1	1771-313-210-10	LEVER/PARKING COMP	*	1	1				
2	V411-260-008-00	WASHER,PL/M 8	*	2	2				
3	V304-260-008-00	NUT	*	2	2				
4	1742-313-001-10	GRIP/07X34/OR	*	1	1				
5	1432-120-004-00	SPRING,TENSION/31	*	1	1				

FIG.310 BRAKE(PARKING)SYSTEM(G TYPE)

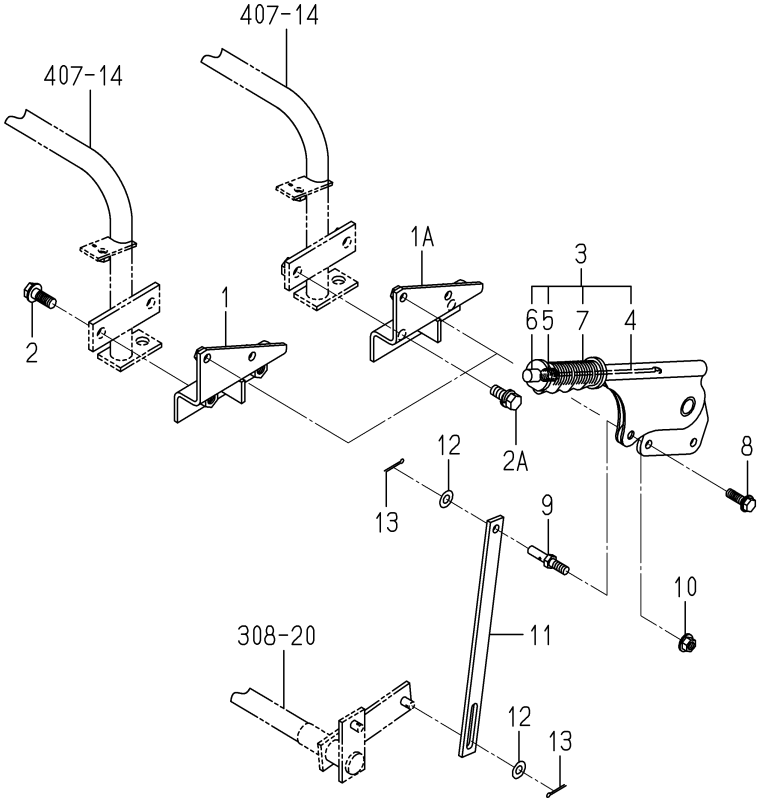

1771-313B-0100

KEY	PART CODE	DESCRIPTION	SPC	TYPE OF MODEL SFH220T	SFH240F	ITC	COL	GRP	REMARKS
1	- - - - - -	BLANK	*						- - - - - -
1A	1771-313-510-10	BRACKET/PARKING COMP	*	1	1				
2	- - - - - -	BLANK	*						- - - - - -
2A	V211-561-002-50	BOLT/M10X25	*	2	2				
3	1740-313-300-00	LEVER/PARKING ASSY	*	1	1				
4	1442-313-202-00	ROD	*	1	1				
5	1444-328-273-00	SPRING	*	1	1				
6	1444-328-272-00	BUTTON	*	1	1				
7	1740-313-301-00	GRIP/ORANGE	*	1	1				
8	V231-360-802-50	FLANGEBOLT	*	2	2				
9	1771-313-052-00	PIN/08X50	*	1	1				
10	V362-260-008-00	NUT/WASHER	*	1	1				
11	1771-313-051-00	PLATE/I/19X260	*	1	1				
12	V411-260-008-00	WASHER,PL/M 8	*	2	2				
13	V500-162-502-00	PIN,SPLIT/2.5X20	*	2	2				

FIG.311 COVER(BRAKE)SYSTEM(EXCEPT G TYPE)

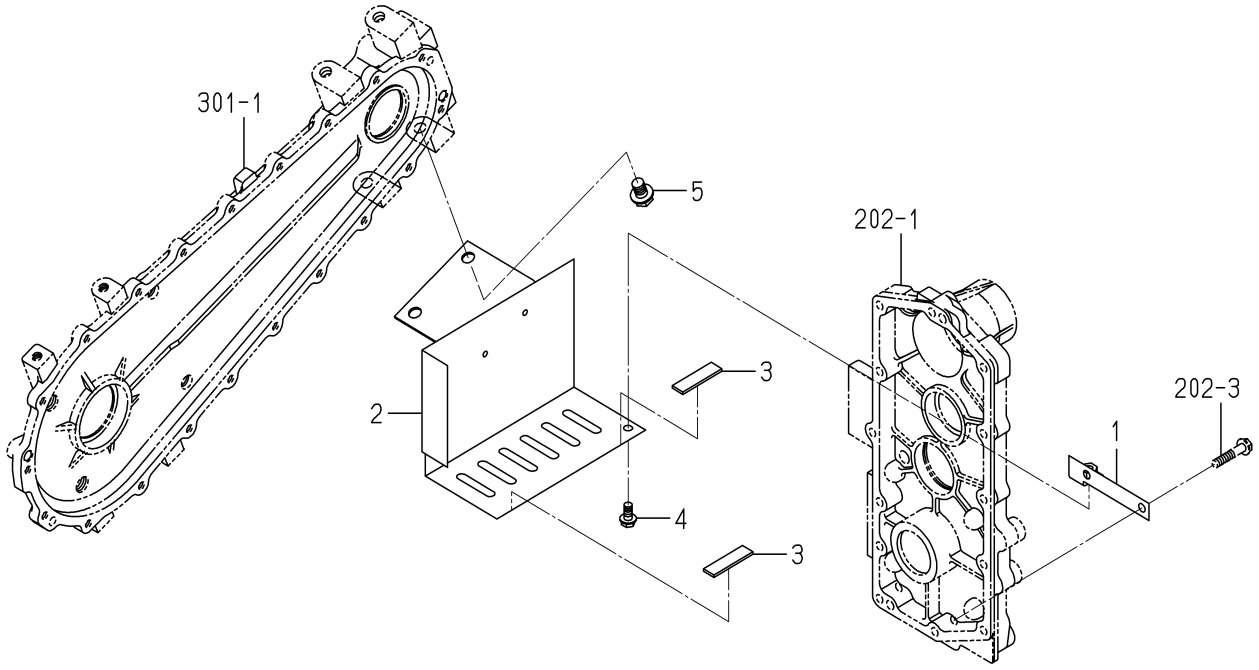

1771-314 -0100

KEY	PART CODE	DESCRIPTION	SPC	TYPE OF MODEL SFH220T	TYPE OF MODEL SFH240F	ITC	COL	GRP	REMARKS
1	1771-314-210-00	STAY/COVER COMP	*	1	1				
2	1771-314-220-00	COVER/BRAKE COMP	*	1	1				
3	1752-606-004-00	INSULATOR/15X55X03	*	2	2				
4	V231-360-801-60	FLANGEBOLT	*	1	1				
5	V231-361-201-60	FLANGEBOLT	*	2	2				

FIG.312 WHEEL(FRONT)SYSTEM

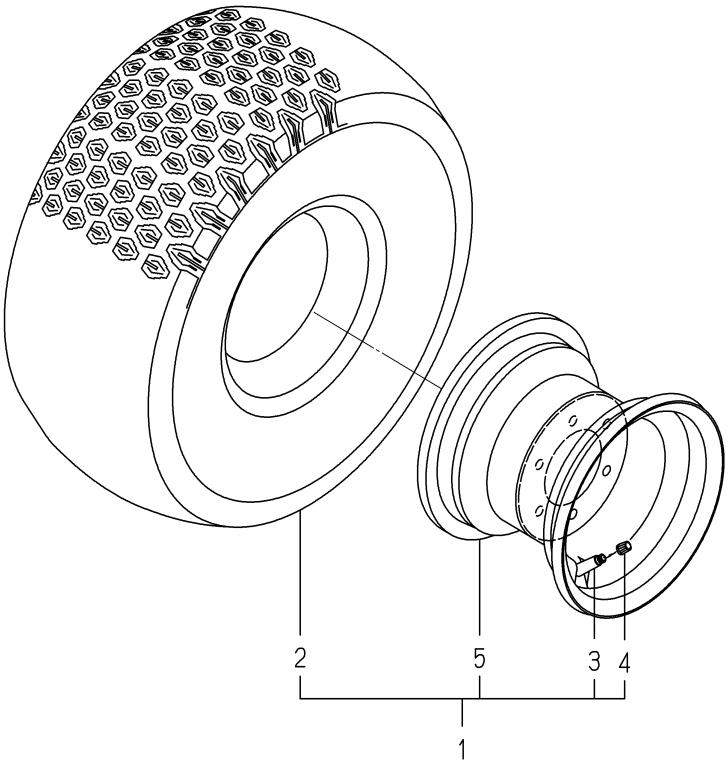

1771-317 -0100

KEY	PART CODE	DESCRIPTION	SPC	TYPE OF MODEL SFH220T	TYPE OF MODEL SFH240F	ITC	COL	GRP	REMARKS
1	1689-230-200-10	WHEEL/FRONT ASSY	*	2	2		6G		
2	1689-230-211-00	TIRE/TURF/20-8	*	2	2				
3	1386-241-002-00	VALVE/RIM	*	2	2				
4	V999-200-003-00	CAP,TIRE VALVE	*	2	2				
5	1689-230-220-10	RIM/WHEEL COMP	*	2	2		6G		

FIG.401 WHEEL(STEERING)SYSTEM

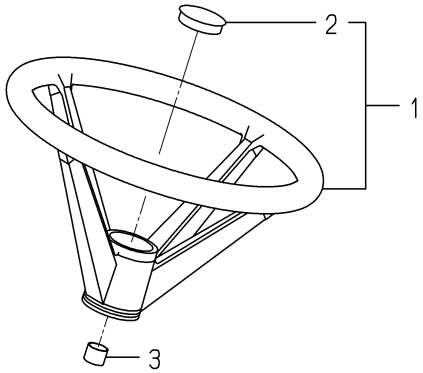

1739-401 -0100

KEY	PART CODE	DESCRIPTION	SPC	TYPE OF MODEL		ITC	COL	GRP	REMARKS
				SFH220T	SFH240F				
1	1739-401-200-00	WHEEL/STEERING ASSY	*	1	1				
2	1739-401-202-00	CAP/STEERING	*	1	1				
3	- - - - - -	BLANK	*						- - - - - -

FIG.402 LEVER(TILT)SYSTEM

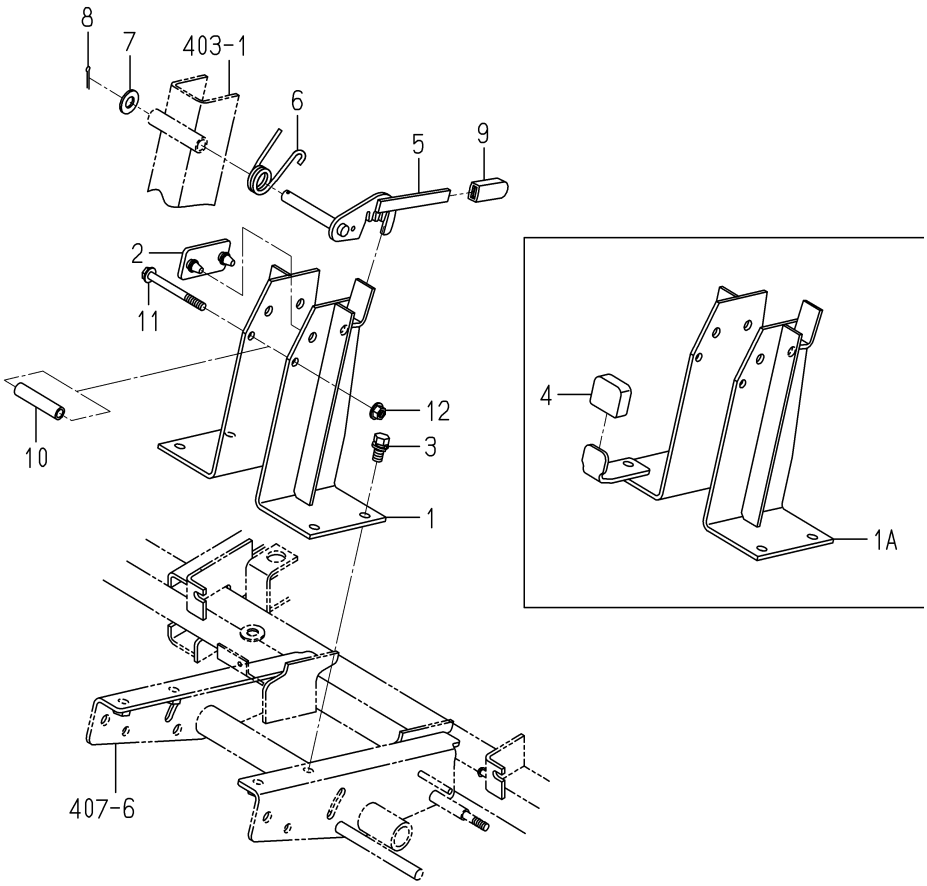

1771-404 -0100

KEY	PART CODE	DESCRIPTION	SPC	TYPE OF MODEL SFH220T	SFH240F	ITC	COL	GRP	REMARKS
1	- - - - - -	BLANK	*						- - - - - -
1A	1771-404-220-10	STAY/TILT COMP	*	1	1				
2	3737-132-001-00	CUSHION,CARRIER	*	2	2				
3	- - - - - -	BLANK	*						- - - - - -
3	V211-561-002-50	BOLT/M10X25	*	4	4				
4	1593-101-012-00	STOPPER	*	1	1				
5	1771-404-210-00	LEVER/TILT COMP	*	1	1				
6	1770-403-003-00	SPRING/HT024	*	1	1				
7	V411-260-012-00	WASHER /M12	*	1	1				
8	V500-163-002-00	PIN,SPLIT/3 X20	*	1	1				
9	3600-201-013-00	GRIP,BRAKE	*	1	1				
10	1771-404-001-00	COLLAR/09X14X62	*	1	1				
11	V231-360-808-00	FLANGEBOLT	*	1	1				
12	V362-260-008-00	NUT/WASHER	*	1	1				

FIG.403 COLUMN(STEERING)SYSTEM

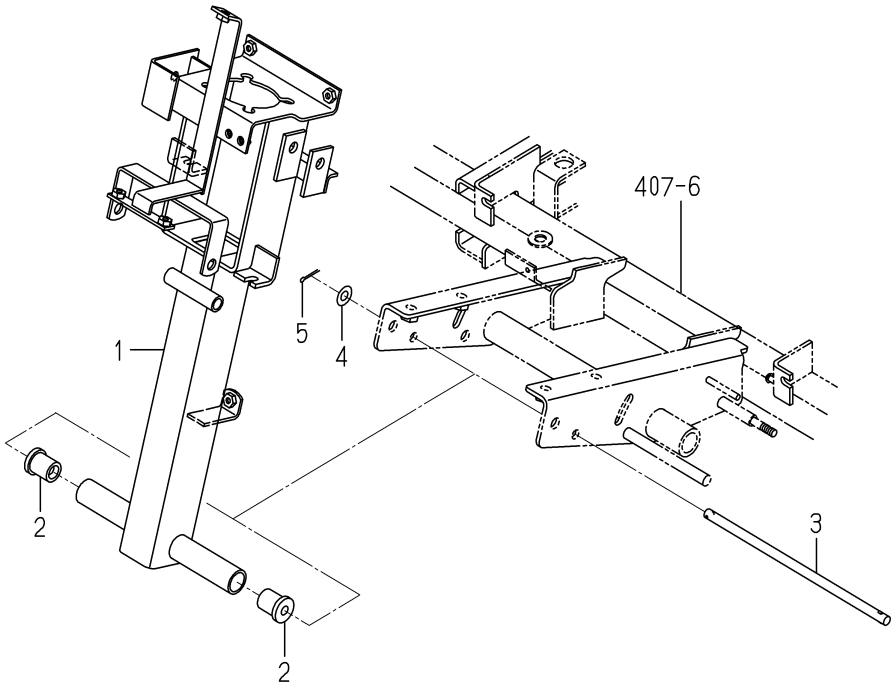

1771-405 -0100

KEY	PART CODE	DESCRIPTION	SPC	TYPE OF MODEL SFH220T	TYPE OF MODEL SFH240F	ITC	COL	GRP	REMARKS
1	- - - - - -	BLANK	*						- - - - - -
1	1771-405-230-10	COLUMN/STEERING COMP	*	1	1				
2	1421-611-004-00	CUSHION/RUBBER	*	2	2				
3	1771-405-001-00	PIN/10X260	*	1	1				
4	V411-260-010-00	WASHER/M10	*	1	1				
5	V500-163-002-00	PIN,SPLIT/3 X20	*	1	1				

FIG.404 CONTROLLER(STEERING)SYSTEM

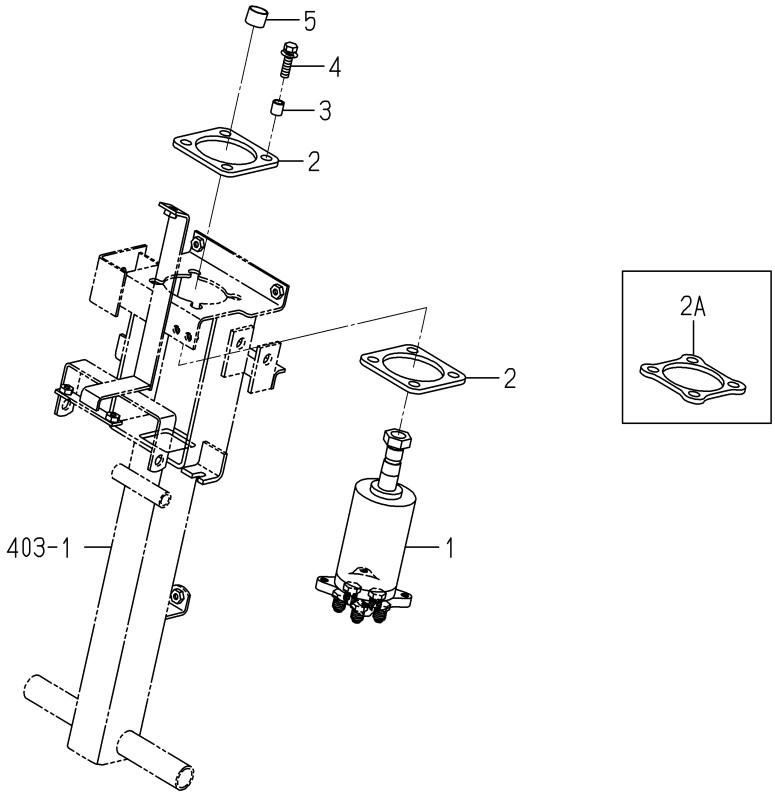

1771-407 -0100

KEY	PART CODE	DESCRIPTION	SPC	TYPE OF MODEL		ITC	COL	GRP	REMARKS
				SFH220T	SFH240F				
1	1771-407-200-00	CONTROLLER/STEERING	*	1	1				
2	- - - - - -	BLANK	*						- - - - - -
2A	1771-407-001-10	PAD/PS	*	2	2				
3	1725-407-001-00	COLLAR/08X12X13	*	4	4				
4	V211-660-803-00	BOLT/SP	*	4	4				
5	1739-401-001-00	INSULATOR/15	*	1	1				

FIG.405 CYLINDER(STEERING)SYSTEM(SFH240F)

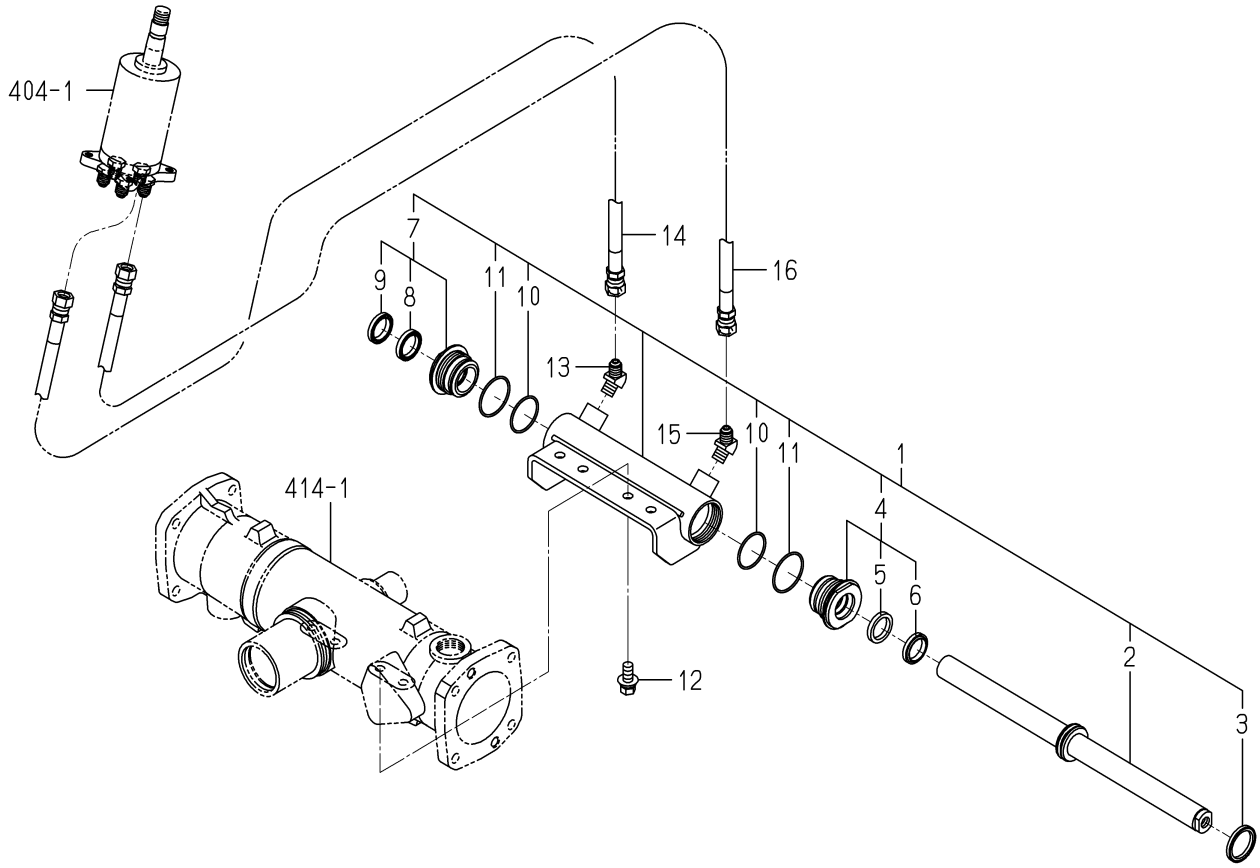

1771-408 -0100

KEY	PART CODE	DESCRIPTION	SPC	TYPE OF MODEL SFH220T	TYPE OF MODEL SFH240F	ITC	COL	GRP	REMARKS
1	- - - - - -	BLANK	*						- - - - - -
1	- - - - - -	BLANK	*						- - - - - -
1	1771-408-200-20	CYLINDER/4WD ASSY	*		1				
2	K167-005-200-10	ROD/PISTON	*		1				
3	K167-005-001-10	PACKING/PISTON	*		1				
4	- - - - - -	BLANK	*						- - - - - -
4	K167-005-300-10	COVER/ROD/A SET	*		1				
5	K182-034-002-00	ROD PACKING	*		1				
6	K182-034-003-00	DUST SEAL	*		1				
7	- - - - - -	BLANK	*						- - - - - -
7	K167-005-310-10	COVER/ROD/B SET	*		1				
8	K182-034-002-00	ROD PACKING	*		1				
9	K182-034-003-00	DUST SEAL	*		1				
10	V723-112-003-80	RING/O	*		2				
11	V723-102-004-20	O-RING	*		2				
12	V211-661-002-50	BOLT 7T(SP)	*		4				
13	1725-403-003-00	ADAPTER/45ß	*		1				
14	1771-408-250-00	HOSE/HYDOR/2750 ASSY	*		1				
15	1725-403-003-00	ADAPTER/45ß	*		1				
16	- - - - - -	BLANK	*						- - - - - -
16	1771-408-260-10	HOSE/HYDOR/2900 ASSY	*		1				

FIG.406 CYLINDER(STEERING)SYSTEM(SFH220T)

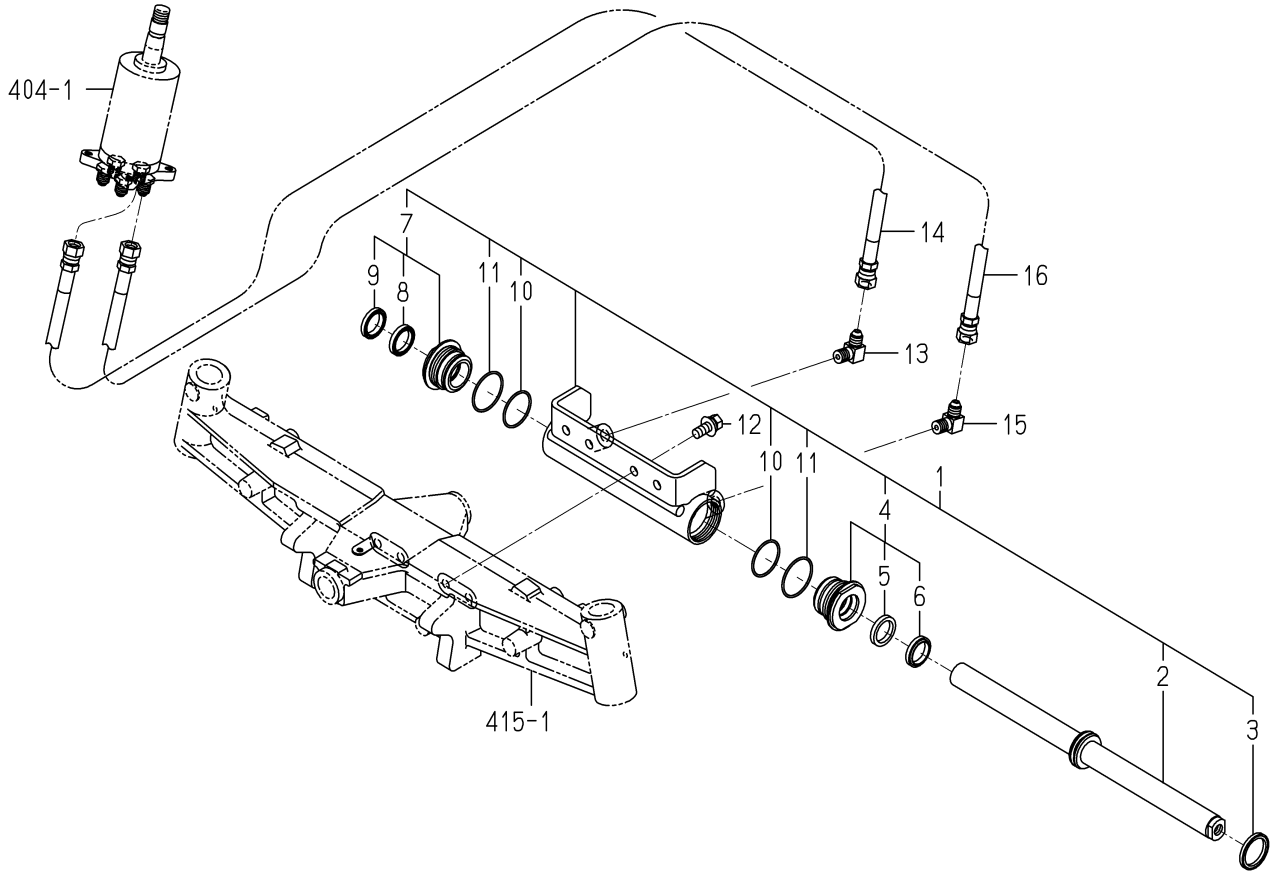

1771-408A-0100

KEY	PART CODE	DESCRIPTION	SPC	TYPE OF MODEL SFH220T	SFH240F	ITC	COL	GRP	REMARKS
1	- - - - - -	BLANK	*						- - - - - -
1	- - - - - -	BLANK	*						- - - - - -
1	- - - - - -	BLANK	*						- - - - - -
1	1771-408-500-40	CYLINDER/2WD ASSY	*	1					
2	K167-005-200-10	ROD/PISTON	*	1					
3	K167-005-001-10	PACKING/PISTON	*	1					
4	- - - - - -	BLANK	*						- - - - - -
4	K167-005-300-10	COVER/ROD/A SET	*	1					
5	K182-034-002-00	ROD PACKING	*	1					
6	K182-034-003-00	DUST SEAL	*	1					
7	- - - - - -	BLANK	*						- - - - - -
7	K167-005-310-10	COVER/ROD/B SET	*	1					
8	K182-034-002-00	ROD PACKING	*	1					
9	K182-034-003-00	DUST SEAL	*	1					
10	V723-112-003-80	RING/O	*	2					
11	V723-102-004-20	O-RING	*	2					
12	V211-661-002-50	BOLT 7T(SP)	*	4					
13	1728-408-001-00	ADAPTER/L/G1/4XR1/4	*	1					
14	1771-408-250-00	HOSE/HYDOR/2750 ASSY	*	1					
15	1728-408-001-00	ADAPTER/L/G1/4XR1/4	*	1					
16	- - - - - -	BLANK	*						- - - - - -
16	1771-408-260-10	HOSE/HYDOR/2900 ASSY	*	1					

FIG.407 FRAME SYSTEM(SFH240F)

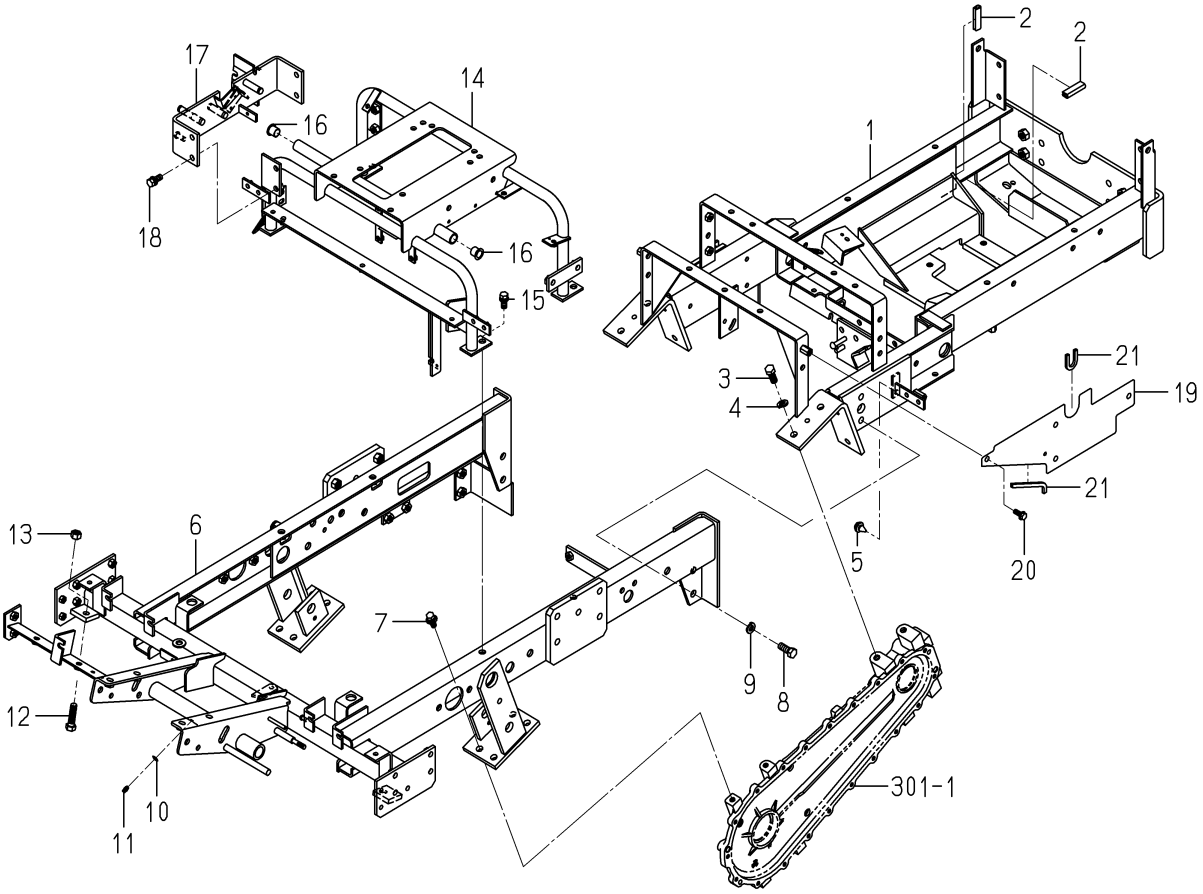

1771-410B-0100

KEY	PART CODE	DESCRIPTION	SPC	TYPE OF MODEL SFH220T	TYPE OF MODEL SFH240F	ITC	COL	GRP	REMARKS
1	1771-410-360-00	FRAME/REAR/4WD/ COMP	*		1				
2	3827-203-001-00	PAD/50	*		2				
3	V201-361-203-00	BOLT/M12X30	*		6				
4	V401-160-012-00	WASHER,SP/M12	*		6				
5	1432-616-002-00	RUBBER,CUSHION	*		1				
6	1771-410-410-30	FRAME/FRONT COMP	*		1				
7	V211-661-002-50	BOLT 7T(SP)	*		8				
8	V201-361-203-00	BOLT/M12X30	*		4				
9	V401-160-012-00	WASHER,SP/M12	*		4				
10	V411-260-006-00	WASHER / M6	*		1				
11	V760-150-000-00	NIPPLE,GREASE	*		1				
12	V201-361-204-50	BOLT/M12X45	*		2				
13	V304-460-012-00	NUT/M12	*		2				
14	1771-410-370-00	FRAME/SEAT/C COMP	*		1				
15	V211-561-002-50	BOLT/M10X25	*		4				
16	3656-221-001-10	BUSH/15X17X16	*		2				
17	1771-410-340-30	BRACKET/LEVER COMP	*		1				
18	V211-561-002-50	BOLT/M10X25	*		3				
19	1771-410-021-00	COVER/SIDE	*		2				
20	V231-360-802-00	FLANGEBOLT	*		6				
21	1636-631-007-00	TRIM/85	*		4				

FIG.408 FRAME SYSTEM(SFH220T)

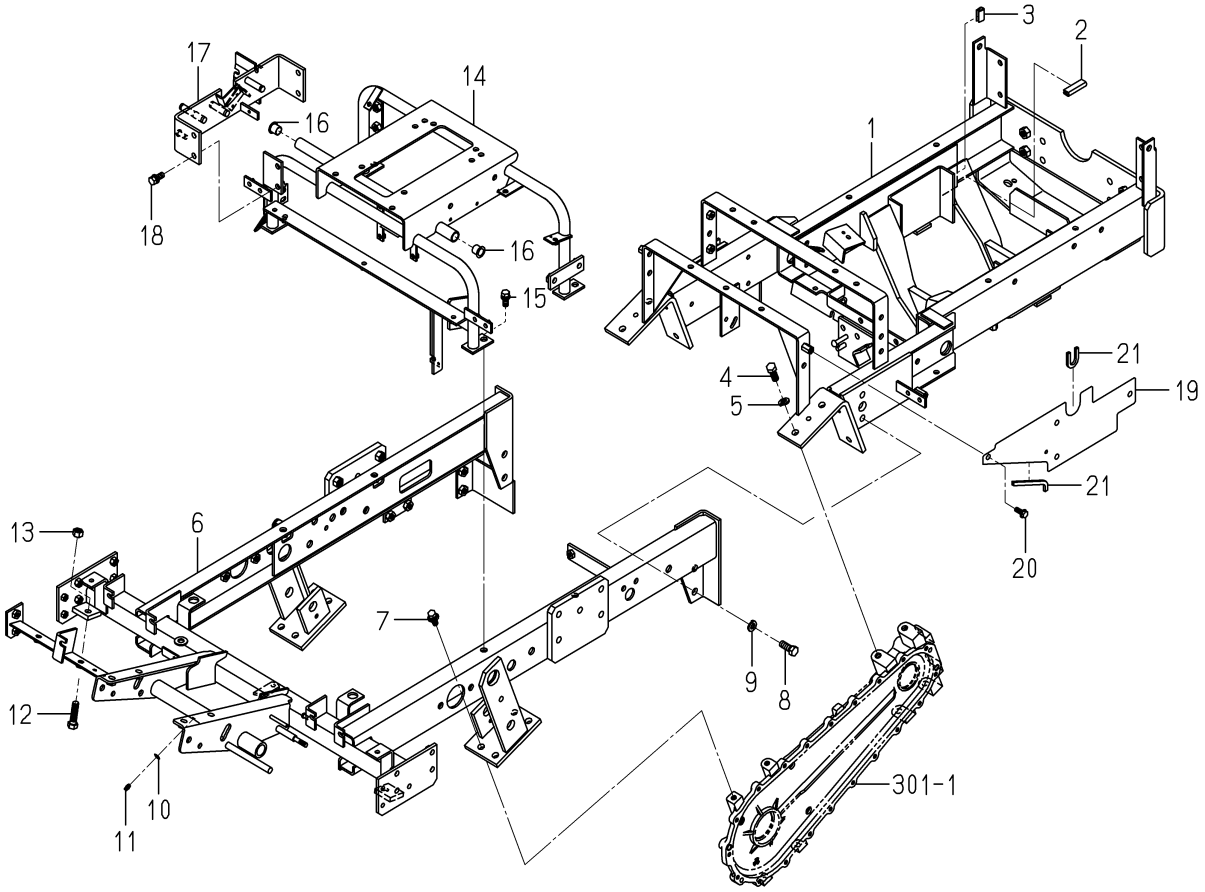

1771-410C-0100

KEY	PART CODE	DESCRIPTION	SPC	TYPE OF MODEL SFH220T	SFH240F	ITC	COL	GRP	REMARKS
1	1771-410-520-00	FRAME/REAR/2WD/ COMP	*	1					
2	3827-203-001-00	PAD/50	*	1					
3	3805-371-007-00	PAD/25	*	1					
4	V201-361-203-00	BOLT/M12X30	*	6					
5	V401-160-012-00	WASHER,SP/M12	*	6					
6	1771-410-410-30	FRAME/FRONT COMP	*	1					
7	V211-661-002-50	BOLT 7T(SP)	*	8					
8	V201-361-203-00	BOLT/M12X30	*	4					
9	V401-160-012-00	WASHER,SP/M12	*	4					
10	V411-260-006-00	WASHER / M6	*	1					
11	V760-150-000-00	NIPPLE,GREASE	*	1					
12	V201-361-204-50	BOLT/M12X45	*	2					
13	V304-460-012-00	NUT/M12	*	2					
14	1771-410-370-00	FRAME/SEAT/C COMP	*	1					
15	V211-561-002-50	BOLT/M10X25	*	4					
16	3656-221-001-10	BUSH/15X17X16	*	2					
17	1771-410-340-30	BRACKET/LEVER COMP	*	1					
18	V211-561-002-50	BOLT/M10X25	*	3					
19	1771-410-021-00	COVER/SIDE	*	2					
20	V231-360-802-00	FLANGEBOLT	*	6					
21	1636-631-007-00	TRIM/85	*	4					

FIG.409 GUARD SYSTEM(BG-F2 TYPE)

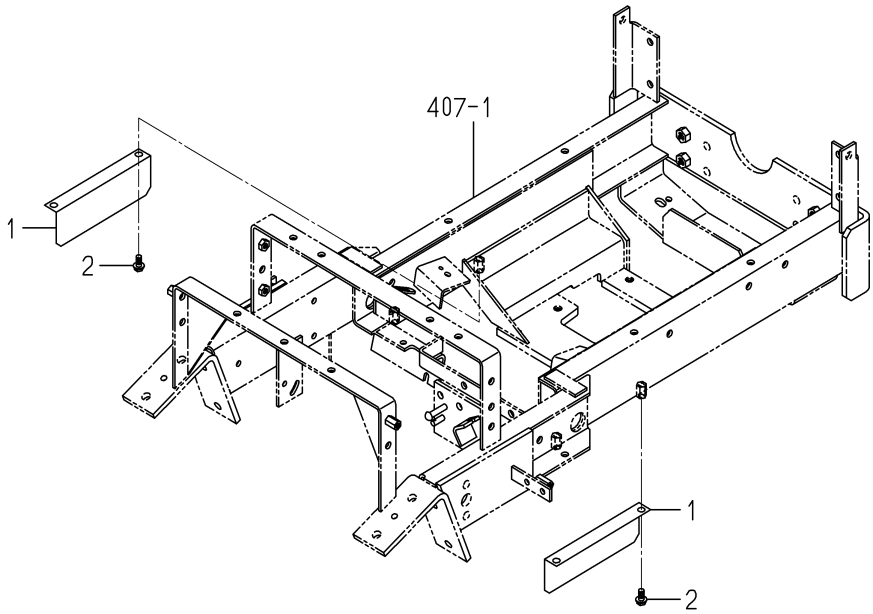

1771-411 -0100

KEY	PART CODE	DESCRIPTION	SPC	TYPE OF MODEL		ITC	COL	GRP	REMARKS
				SFH220T	SFH240F				
1	1771-411-001-00	PLATE/GUARD	*		2				
2	V231-360-801-60	FLANGEBOLT	*		4				

FIG.410 GUARD SYSTEM(G-F2 TYPE)

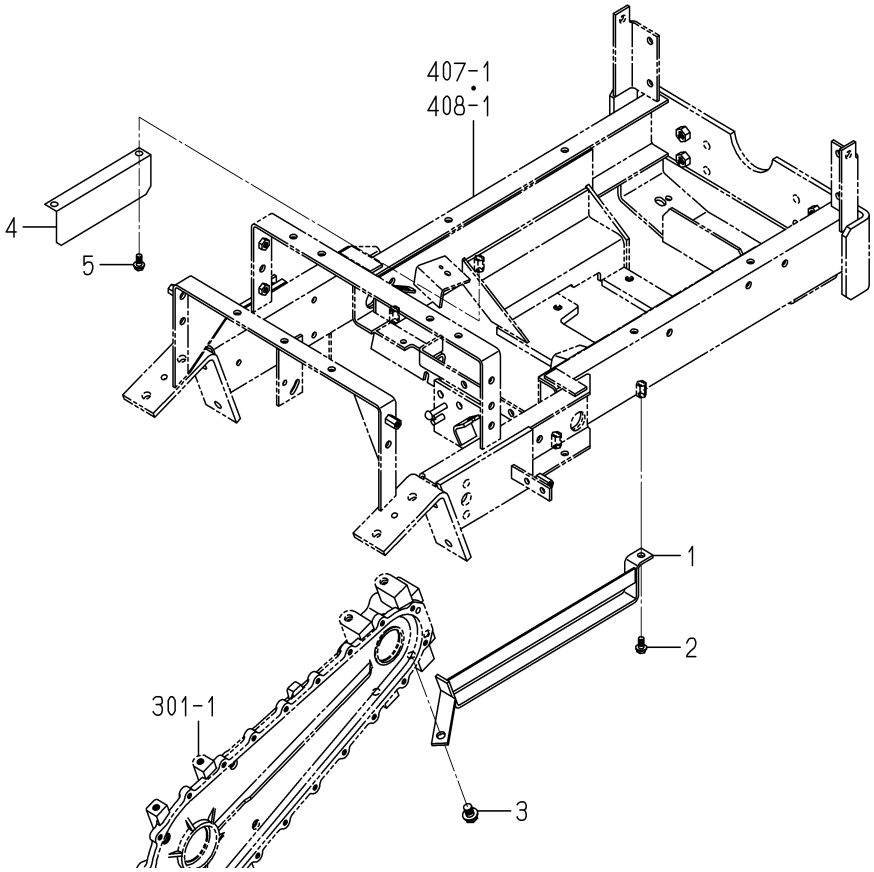

1771-411A-0100

KEY	PART CODE	DESCRIPTION	SPC	TYPE OF MODEL SFH220T	TYPE OF MODEL SFH240F	ITC	COL	GRP	REMARKS
1	1771-411-510-00	GUARD/LH COMP	*	1	1				
2	V231-360-801-60	FLANGEBOLT	*	1	1				
3	V231-361-201-60	FLANGEBOLT	*	1	1				
4	1771-411-001-00	PLATE/GUARD	*	1	1				
5	V231-360-801-60	FLANGEBOLT	*	2	2				

FIG.411 LEVER(4WD)SYSTEM(SFH240F)

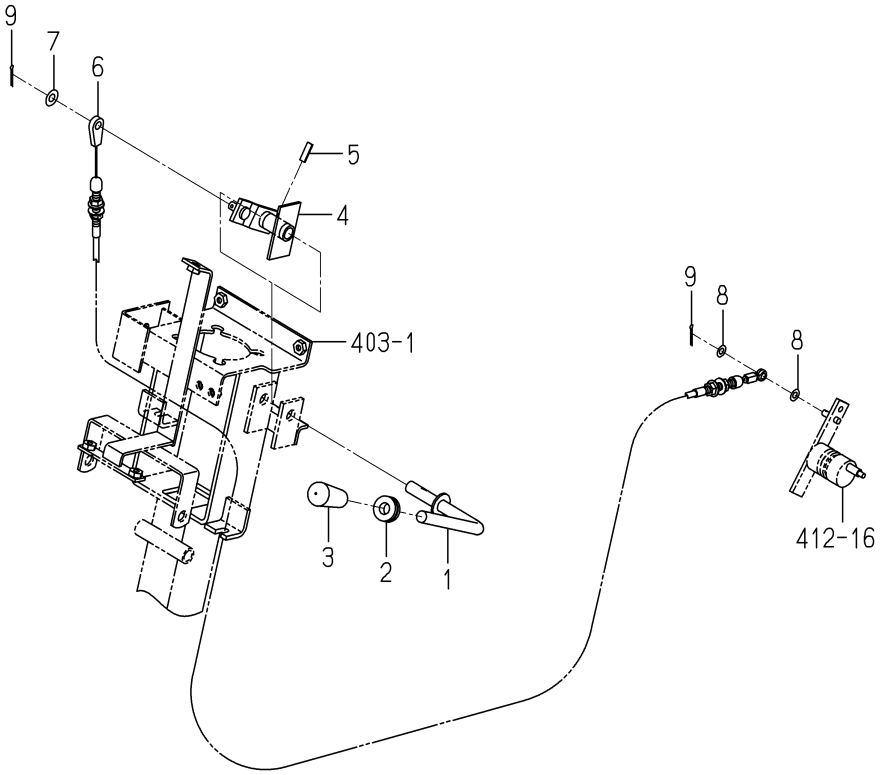

1771-430 -0100

KEY	PART CODE	DESCRIPTION	SPC	TYPE OF MODEL SFH220T	TYPE OF MODEL SFH240F	ITC	COL	GRP	REMARKS
1	1770-225-210-00	LEVER/4WD COMP	*		1				
2	1414-606-002-00	GROMMET/12X19	*		1				
3	1636-271-011-00	GRIP/12X60	*		1				
4	1770-225-230-00	ARM/4WD COMP	*		1				
5	V580-140-602-00	PIN,SPRING	*		1				
6	1771-430-210-00	CABLE/4WD/LOCK ASSY	*		1				
7	V411-260-008-00	WASHER,PL/M 8	*		1				
8	V411-260-006-00	WASHER / M6	*		2				
9	- - - - - -	BLANK	*						- - - - - -
9	V500-162-501-50	PIN,SPLIT/2.5X15	*		2				

FIG.412 AUTO 4WD SYSTEM(SFH240F)

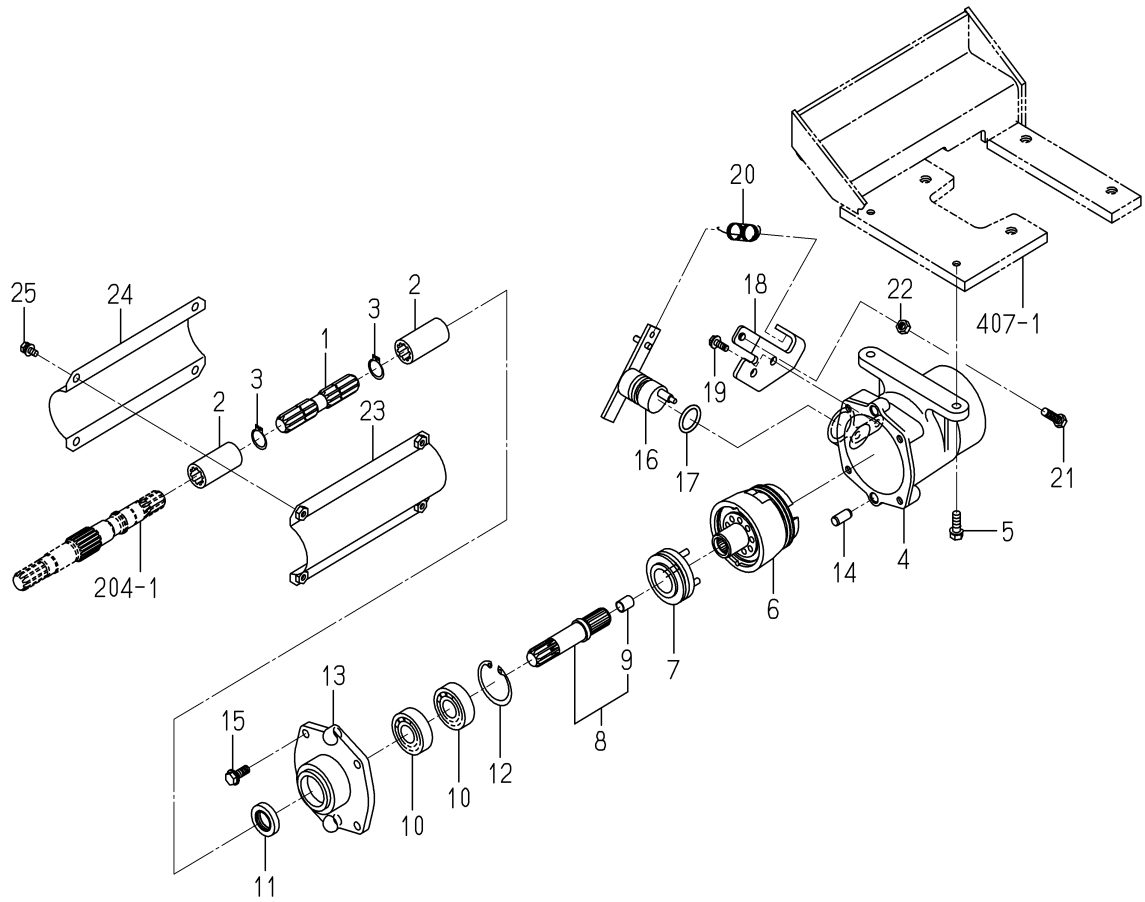

1771-431 -0100

KEY	PART CODE	DESCRIPTION	SPC	TYPE OF MODEL SFH220T	SFH240F	ITC	COL	GRP	REMARKS
1	- - - - - -	BLANK	*						- - - - - -
1	- - - - - -	BLANK	*						- - - - - -
1	1771-431-001-20	SHAFT/4WD	*		1				
2	1673-431-001-10	COUPRING/16X27X55	*		2				
3	V704-140-020-00	RING,SNAP/20C	*		2				
4	1771-431-002-00	CASE/4WD	*		1				
5	V211-260-802-50	BOLT/S	*		2				
6	1720-221-210-00	CLUTCH ASSY	*		1				FIG S04
7	1720-221-230-00	SLEEVE ASSY	*		1				
8	- - - - - -	BLANK	*						- - - - - -
8	1771-431-210-10	SHAFT/INPUT ASSY	*		1				
9	1614-223-221-00	BUSH/10X12X15	*		1				
10	V600-410-620-40	BEARING/BALL	*		2				
11	V744-120-350-70	SEAL,OIL/TC20357	*		1				
12	V705-140-047-00	RING,SNAP/47 C	*		1				
13	1689-432-003-00	METAL/4WD	*		1				
14	V523-101-002-20	PIN	*		2				
15	V231-360-802-00	FLANGEBOLT	*		4				
16	1771-431-230-00	ARM/4WD COMP	*		1				
17	V720-103-502-40	O-RING/P24	*		1				
18	1771-431-003-00	PLATE/STOPPER	*		1				
19	V231-360-801-60	FLANGEBOLT	*		2				
20	1560-531-020-00	SPRING/HE068	*		1				
21	V201-360-803-00	BOLT/M8X30	*		1				
22	V304-260-008-00	NUT	*		1				
23	1771-431-220-00	COVER/SHAFT COMP	*		1				
24	1771-431-004-00	COVER/SHAFT	*		1				
25	V210-360-601-60	BOLT(SP)/M6X16	*		4				

FIG.413 CASE(BEVEL)SYSTEM(SFH240F)

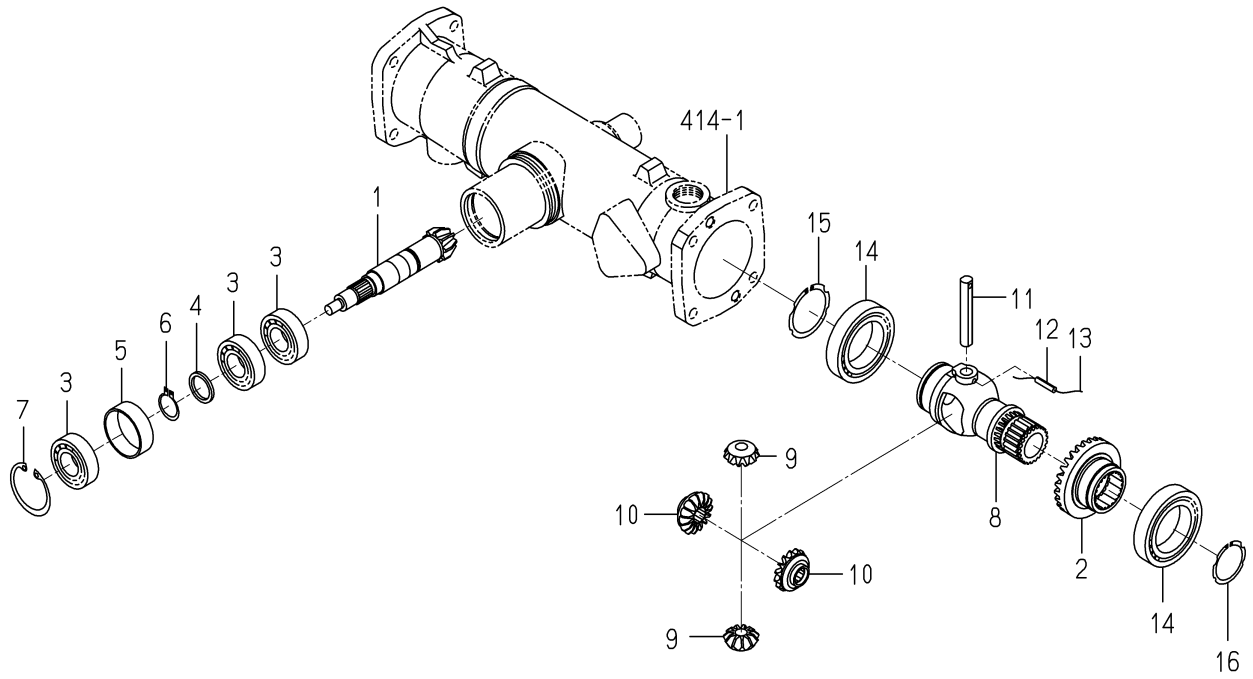

1771-432 -0100

KEY	PART CODE	DESCRIPTION	SPC	TYPE OF MODEL SFH220T	TYPE OF MODEL SFH240F	ITC	COL	GRP	REMARKS
1	1771-432-001-00	PINION/BEVEL/09	*		1				
2	1771-432-002-00	GEAR/BEVEL/28	*		1				
3	V600-410-620-50	BEARING/BALL	*		3				
4	1507-216-004-10	COLLAR/25X32X3	*		1				
5	1650-432-001-00	COLLAR/48X52X17	*		1				
6	V704-140-025-00	RING,SNAP/25 C	*		1				
7	V705-140-052-00	RING,SNAP/52 C	*		1				
8	- - - - - -	BLANK	*						- - - - - -
8	1703-432-001-10	CASE/DIFF	*		1				
9	- - - - - -	BLANK	*						- - - - - -
9	1703-432-009-10	PINION/BEVEL/11	*		2				
10	- - - - - -	BLANK	*						- - - - - -
10	1703-432-011-10	GEAR/BEVEL/15	*		2				
11	1614-432-006-00	PIN/12X75	*		1				
12	V580-140-502-50	PIN,SPRING/5 X25 W	*		1				
13		WIRE	*		1				
14	V600-110-601-00	BEARING,RB/6010	*		2				
15	V706-140-050-00	RING/SNAP	*		1				
16	V706-140-040-00	RING/SNAP	*		1				

FIG.414 HOUSING(AXLE/REAR)SYSTEM(SFH240F)

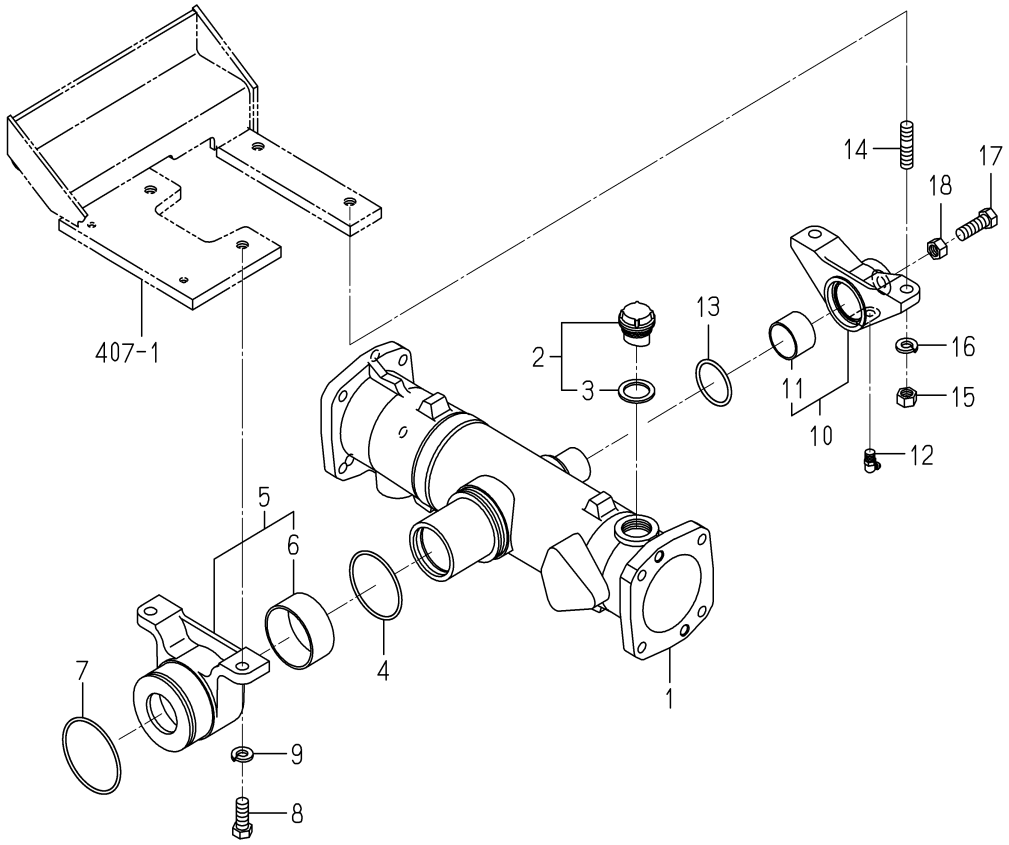

1771-433 -0100

KEY	PART CODE	DESCRIPTION	SPC	TYPE OF MODEL SFH220T	TYPE OF MODEL SFH240F	ITC	COL	GRP	REMARKS
1	1771-433-001-00	HOUSING/AXLE	*		1				
2	1518-432-250-10	CAP,OIL	*		1				
3	1518-306-203-10	PACKING	*		1				
4	V721-103-107-00	O-RING/G70	*		1				
5	- - - - - -	BLANK	*						- - - - - -
5	1689-434-210-20	METAL/PIVOT/FRONT	*		1				
6	1614-433-212-00	BUSH/62X67X30	*		1				
7	V721-103-107-50	O-RING/G75	*		1				
8	V201-361-203-00	BOLT/M12X30	*		2				
9	V401-160-012-00	WASHER,SP/M12	*		2				
10	- - - - - -	BLANK	*						- - - - - -
10	1771-433-200-10	METAL/PIVOT/REA ASSY	*		1				
11	1564-434-222-10	BUSH/35X39X26	*		1				
12	V763-150-000-00	NIPPLE,GREASE/PT1/8	*		1				
13	V720-103-504-20	RING/O	*		1				
14	V251-341-203-00	BOLT/STUD	*		2				
15	V304-460-012-00	NUT/M12	*		2				
16	V401-160-012-00	WASHER,SP/M12	*		2				
17	V201-261-203-50	BOLT/M12X35	*		1				
18	V304-260-012-00	NUT/M12	*		1				

FIG.415 HOUSING(AXLE/REAR)SYSTEM(SFH220T)

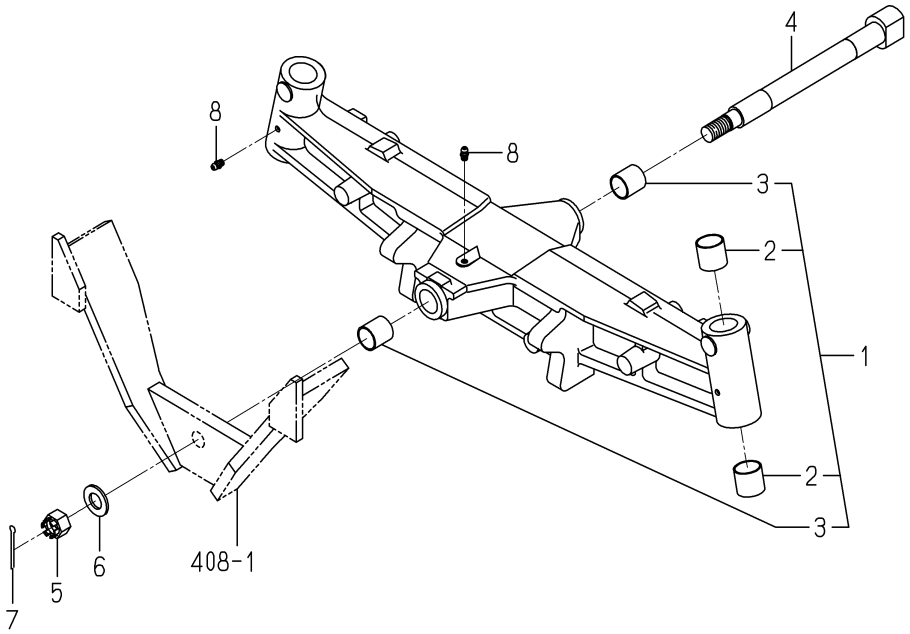

1771-433A-0100

KEY	PART CODE	DESCRIPTION	SPC	TYPE OF MODEL SFH220T	SFH240F	ITC	COL	GRP	REMARKS
1	1771-433-500-10	HOUSING/AXLE/2W ASSY	*	1					
2	1593-402-051-10	BUSH/25X28X25	*	4					
3	1725-433-202-00	BUSH/22X25X25	*	2					
4	1725-433-001-10	PIN/PIVOT	*	1					
5	V327-261-216-00	NUT,CASTTLE/M16X1.5	*	1					
6	V411-260-016-00	WASHER / M16	*	1					
7	V500-164-004-00	PIN,SPLIT/4 X40	*	1					
8	V760-150-000-00	NIPPLE,GREASE	*	3					

FIG.416 CASE(GEAR/FINAL)SYSTEM(SFH240F)

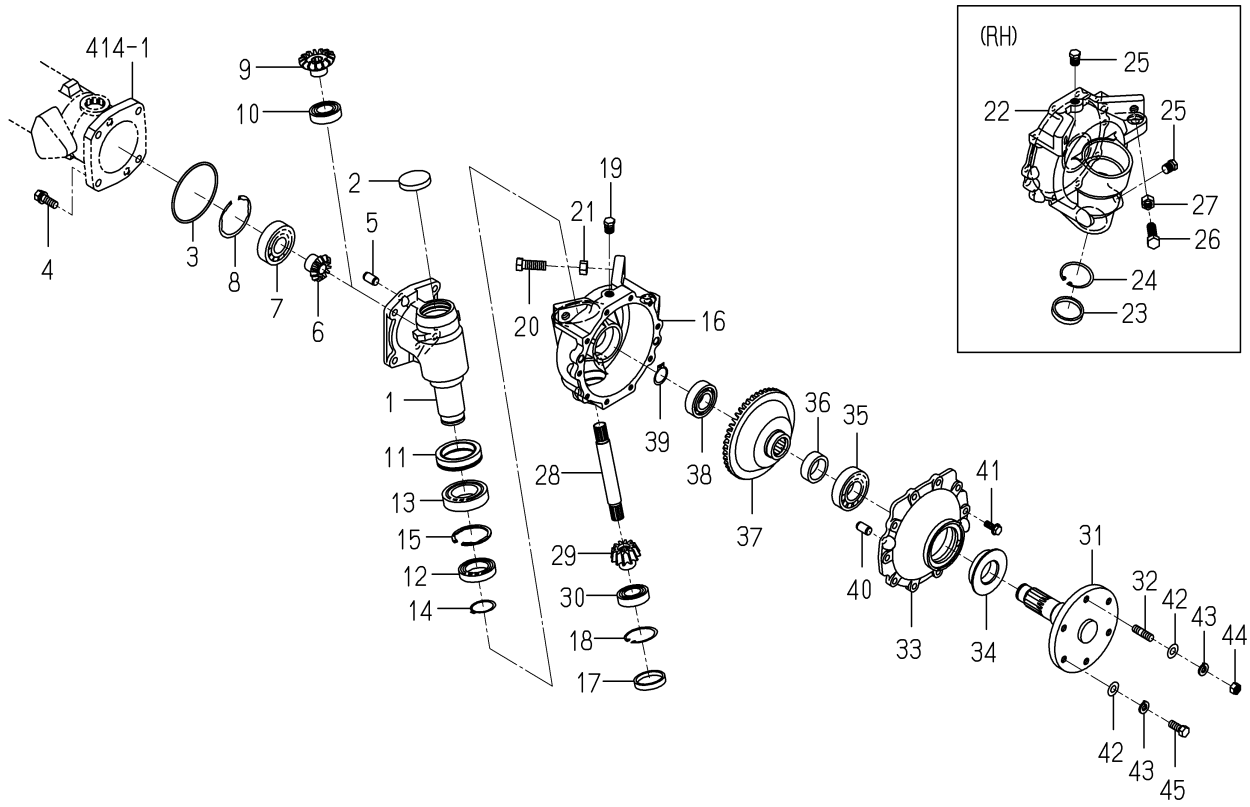

1771-434 -0100

KEY	PART CODE	DESCRIPTION	SPC	TYPE OF MODEL SFH220T	TYPE OF MODEL SFH240F	ITC	COL	GRP	REMARKS
1	- - - - - -	BLANK	*						- - - - - -
1	1672-434-009-10	CASE/FINAL	*		2				
2	1564-201-003-00	CAP/SEAL/47	*		2				
3	V721-103-109-00	O-RING/G90	*		2				
4	V211-561-003-00	BOLT/M10X30	*		8				
5	V523-101-002-40	PIN	*		4				
6	- - - - - -	BLANK	*						- - - - - -
6	1703-434-003-10	GEAR/BEVEL/11	*		2				
7	V600-410-630-50	BEARING/BALL	*		2				
8	V707-140-062-00	RING/SNAP	*		2				
9	- - - - - -	BLANK	*						- - - - - -
9	1703-434-004-10	GEAR/BEVEL/15	*		2				
10	V600-410-600-50	BEARING/BALL	*		2				
11	1685-434-001-00	SEAL/OIL ASSY	*		2				
12	V600-110-690-70	BEARING	*		2				
13	V600-410-600-80	BEARING/BALL	*		2				
14	V704-140-035-00	RING,SNAP/35 C	*		2				
15	V707-140-055-00	RING/SNAP	*		2				
16	- - - - - -	BLANK	*						- - - - - -
16	1771-434-003-10	CASE/FINAL/LH	*		1				
17	1564-201-003-00	CAP/SEAL/47	*		1				
18	V705-140-047-00	RING,SNAP/47 C	*		1				
19	V782-160-000-4B	PLUG/SCREW/SEAL	*		2				
20	V201-361-203-50	BOLT/M12X35	*		2				
21	V304-460-012-00	NUT/M12	*		2				
22	- - - - - -	BLANK	*						- - - - - -
22	1771-434-004-10	CASE/FINAL/RH	*		1				
23	1564-201-003-00	CAP/SEAL/47	*		1				
24	V705-140-047-00	RING,SNAP/47 C	*		1				
25	V782-160-000-4B	PLUG/SCREW/SEAL	*		2				

FIG.416 CASE(GEAR/FINAL)SYSTEM(SFH240F)

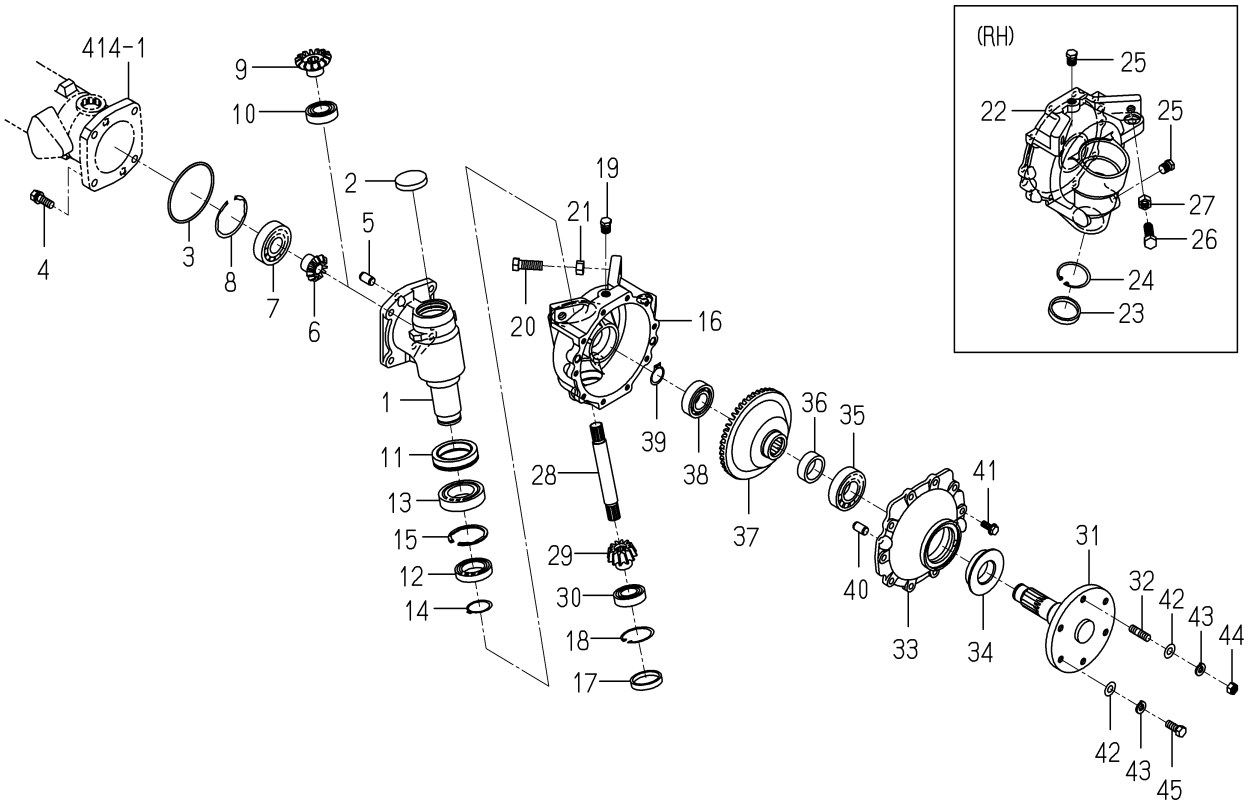

1771-434 -0100

KEY	PART CODE	DESCRIPTION	SPC	TYPE OF MODEL SFH220T	TYPE OF MODEL SFH240F	ITC	COL	GRP	REMARKS
26	V201-361-203-50	BOLT/M12X35	*		2				
27	V304-460-012-00	NUT/M12	*		2				
28	1612-434-006-00	SHAFT	*		2				
29	1672-434-007-00	GEAR/BEVEL/12	*		2				
30	V600-410-600-50	BEARING/BALL	*		2				
31	1771-434-210-00	SHAFT/WHEEL/REA COMP	*		2				
32	V251-341-002-00	BOLT/M10X20	*		4				
33	1612-434-009-00	COVER/WHEEL	*		2				
34	1491-434-017-00	SEAL/QLNY35571116	*		2				
35	V600-410-620-60	BEARING/BALL	*		2				
36	1771-434-005-00	COLLER/32X43X15	*		2				
37	1672-434-008-10	GEAR/BEVEL/47	*		2				
38	V600-410-620-50	BEARING/BALL	*		2				
39	V704-140-025-00	RING,SNAP/25 C	*		2				
40	V523-101-002-40	PIN	*		4				
41	V231-360-802-00	FLANGEBOLT	*		20				
42	V411-260-010-00	WASHER/M10	*		12				
43	V401-160-010-00	WASHER,SP/M10	*		12				
44	V304-460-010-00	NUT/M10	*		4				
45	V201-361-002-50	BOLT/M10X25	*		8				

FIG.417 SPINDLE(KNUCKLE)SYSTEM(SFH220T)

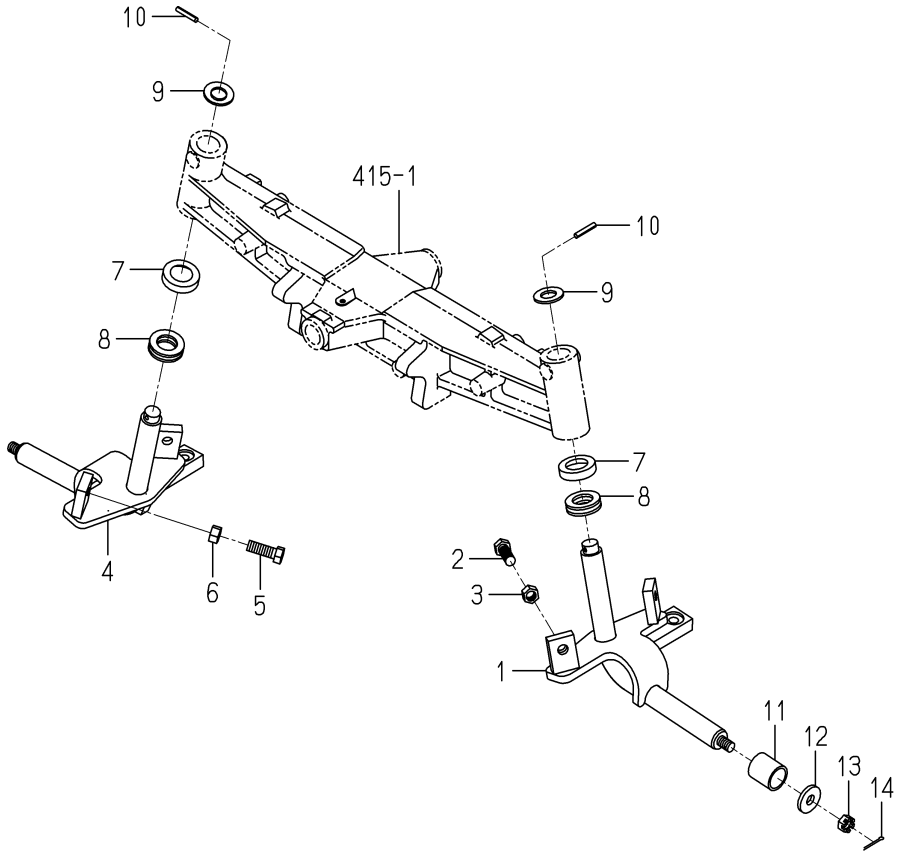

1771-434A-0100

KEY	PART CODE	DESCRIPTION	SPC	TYPE OF MODEL SFH220T	SFH240F	ITC	COL	GRP	REMARKS
1	1771-434-510-00	SPINDLE/KNUCKLE/LH	*	1					
2	V201-361-203-50	BOLT/M12X35	*	2					
3	V304-460-012-00	NUT/M12	*	2					
4	1771-434-520-00	SPINDLE/KNUCKLE/RH	*	1					
5	V201-361-203-50	BOLT/M12X35	*	2					
6	V304-460-012-00	NUT/M12	*	2					
7	1593-403-004-10	COVER/44X10	*	2					
8	1593-403-009-00	THRUST	*	2					
9	V411-260-018-00	WASHER,PL/M18	*	2					
10	V580-140-503-20	PIN,SPRING/5 X32 W	*	2					
11	1705-441-002-00	COLLAR/26X32X34	*	2					
12	3621-702-003-00	WASHER,PULLEY	*	2					
13	V328-262-112-00	NUT/M12X1.25	*	2					
14	V500-163-002-50	PIN,SPLIT/3 X25	*	2					

FIG.418 SHAFT(DRIVE/FINAL)SYSTEM(SFH240F)

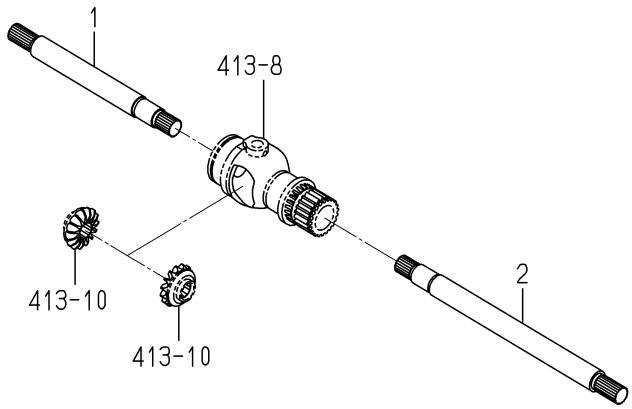

1703-435 -0100

KEY	PART CODE	DESCRIPTION	SPC	TYPE OF MODEL		ITC	COL	GRP	REMARKS
				SFH220T	SFH240F				
1	- - - - - -	BLANK	*						- - - - - -
1	1703-435-001-10	SHAFT	*		1				
2	- - - - - -	BLANK	*						- - - - - -
2	1703-435-002-10	SHAFT	*		1				

FIG.419 ROD(TIE)SYSTEM

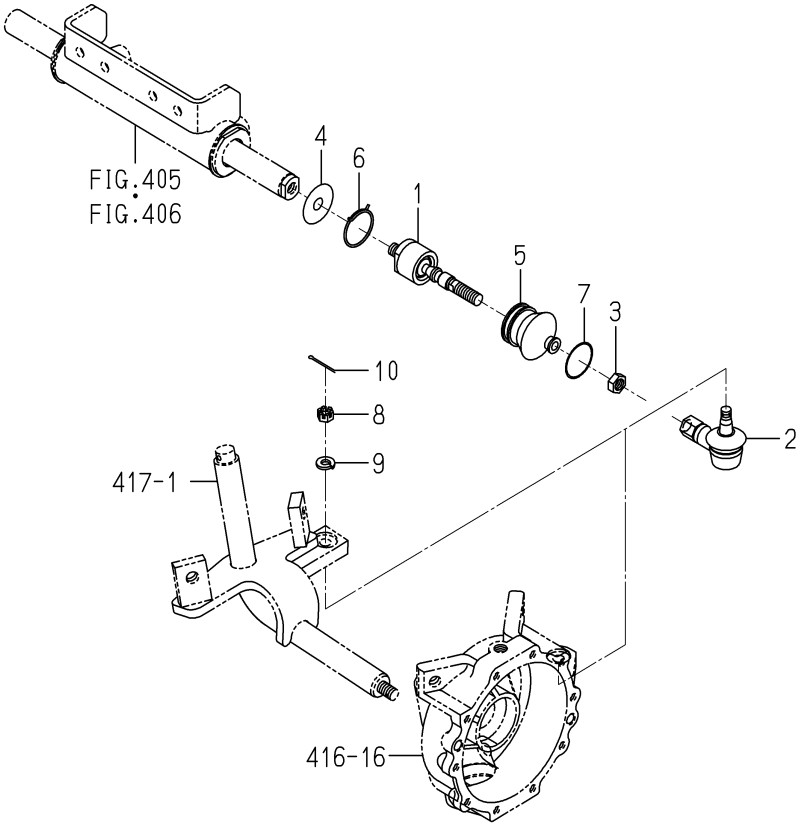

1771-436 -0100

KEY	PART CODE	DESCRIPTION	SPC	TYPE OF MODEL SFH220T	SFH240F	ITC	COL	GRP	REMARKS
1	1739-436-310-00	RODEND/A ASSY	*	2	2				
2	1725-436-320-00	RODEND/B ASSY	*	2	2				
3	V335-260-012-00	NUT	*	2	2				
4	1725-436-001-00	WASHER/13X42X01	*	2	2				
5	1725-436-002-00	COVER/DUST	*	2	2				
6	1725-436-003-00	CLAMP	*	2	2				
7	1725-436-005-00	SPRING/BOOT	*	2	2				
8	V327-262-110-00	NUT/M10X1.25	*	2	2				
9	V401-160-010-00	WASHER,SP/M10	*	2	2				
10	- - - - - -	BLANK	*						- - - - - -
10	V500-162-502-00	PIN,SPLIT/2.5X20	*	2	2				

FIG.420 WHEEL(REAR)SYSTEM(SFH240F)

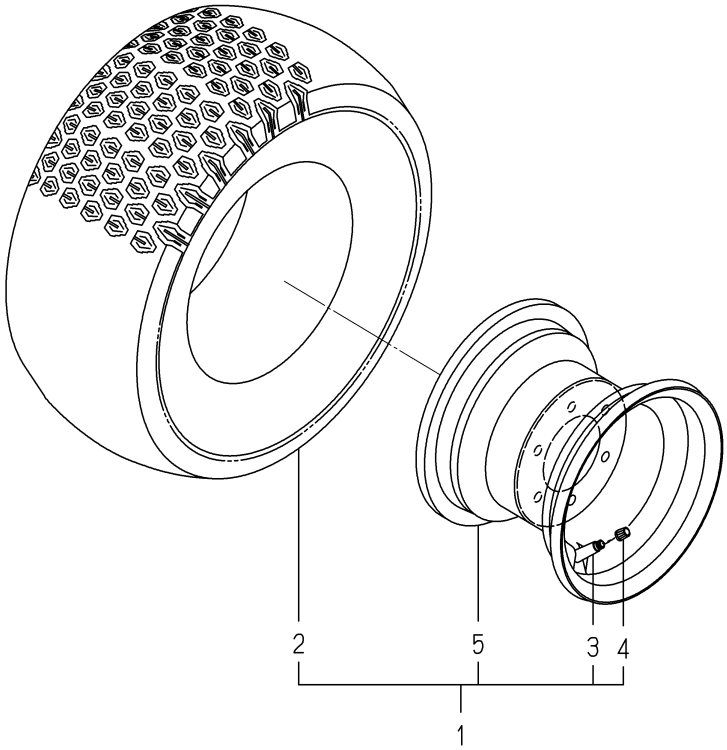

1771-441 -0100

KEY	PART CODE	DESCRIPTION	SPC	TYPE OF MODEL SFH220T	TYPE OF MODEL SFH240F	ITC	COL	GRP	REMARKS
1	1771-441-210-00	TIRE/210/60D-8 ASSY	*		2		6G		
2	1705-441-201-00	TIRE/210/60D-8	*		2				
3	1386-241-002-00	VALVE/RIM	*		2				
4	V999-200-003-00	CAP,TIRE VALVE	*		2				
5	1689-230-220-10	RIM/WHEEL COMP	*		2		6G		

FIG.421 WHEEL(REAR)SYSTEM(SFH220T)

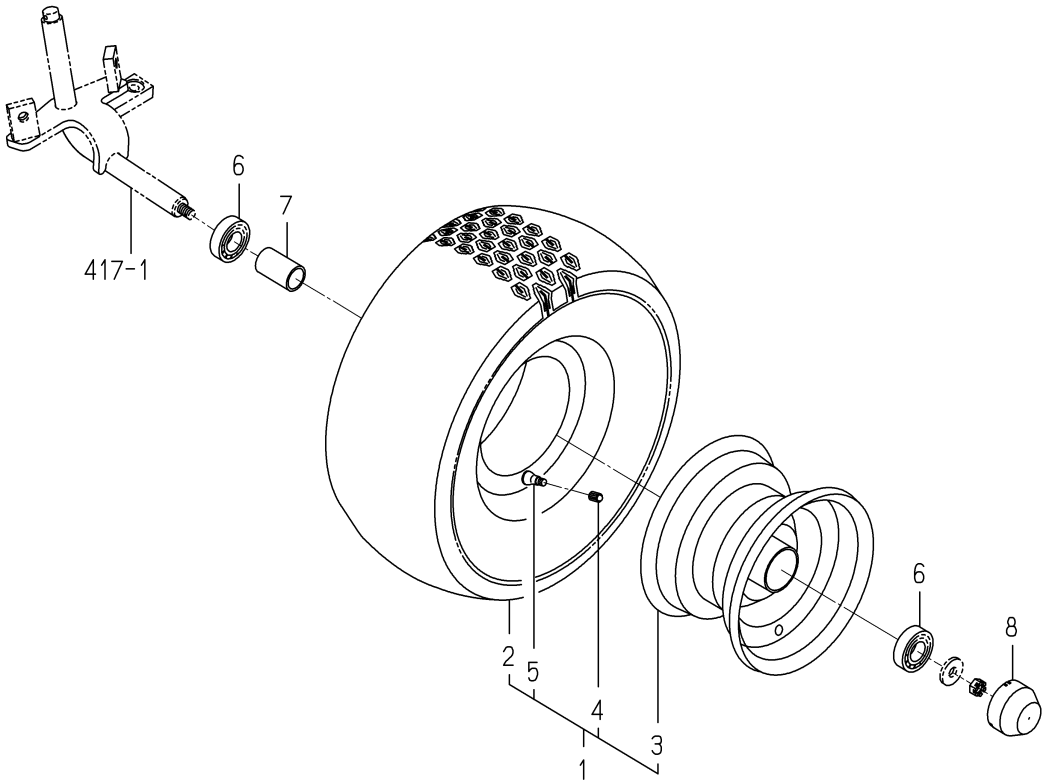

1728-441A-0100

KEY	PART CODE	DESCRIPTION	SPC	TYPE OF MODEL SFH220T	TYPE OF MODEL SFH240F	ITC	COL	GRP	REMARKS
1	1705-441-200-00	TIRE/210/60D-8 ASSY	*	2			6G		
2	1705-441-201-00	TIRE/210/60D-8	*	2					
3	1705-441-210-00	RIM/WHEEL/FRONT COMP	*	2			6G		
4	V999-200-003-00	CAP,TIRE VALVE	*	2					
5	1386-241-002-00	VALVE/RIM	*	2					
6	- - - - - -	BLANK	*						- - - - - -
6	V600-450-620-50	BEARING/BALL	*	4					
7	1593-411-001-10	COLLAR/26X32X53	*	2					
8	1593-411-053-20	CAP/WHEEL	*	2					

FIG.501 CONTROL SYSTEM(1/2)

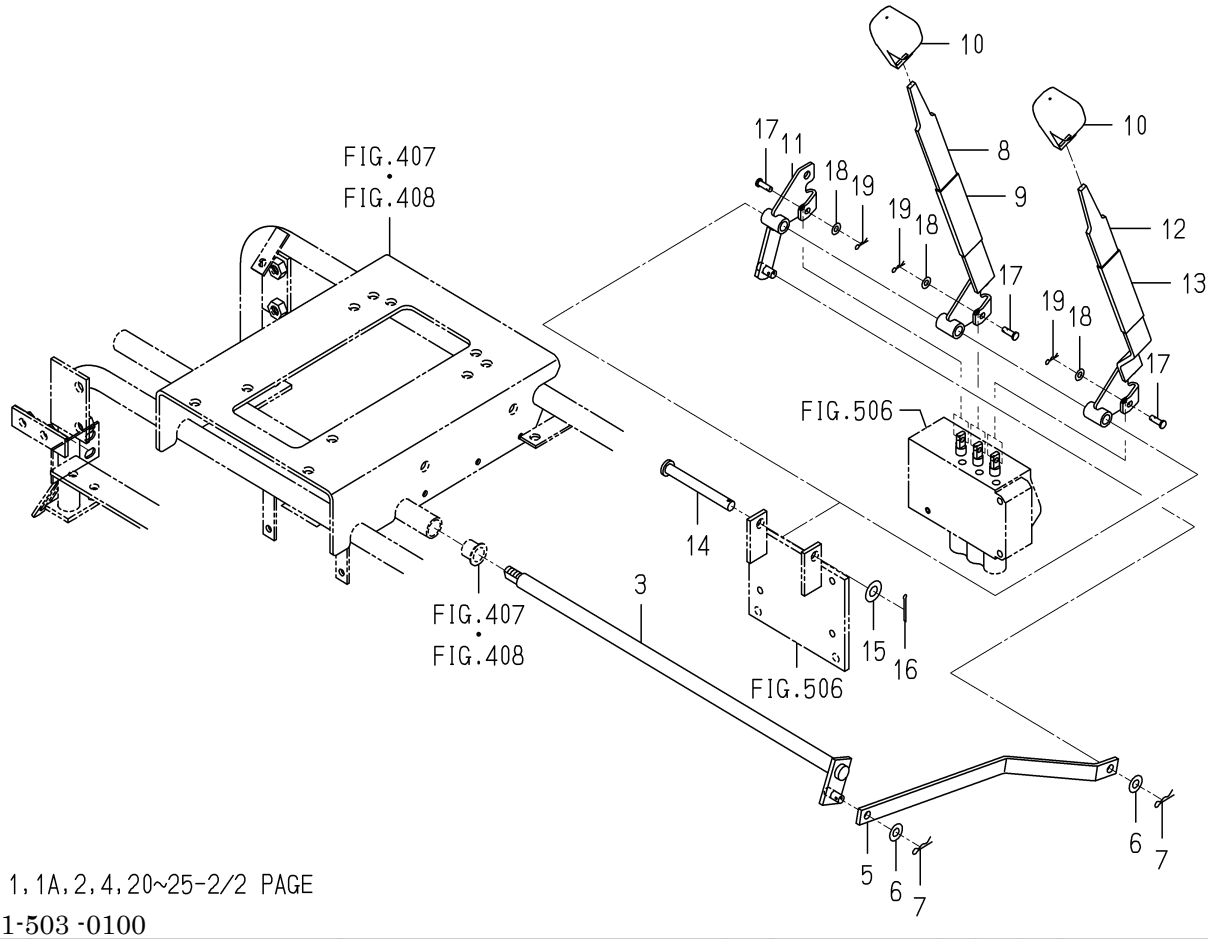

1,1A,2,4,20~25-2/2 PAGE

1771-503 -0100

KEY	PART CODE	DESCRIPTION	SPC	TYPE OF MODEL SFH220T	SFH240F	ITC	COL	GRP	REMARKS
1	- - - - - -	BLANK	*						- - - - - -
1A	1771-503-210-10	LEVER/LIFT COMP	*	1	1				
2	V360-260-012-00	NUT/WASHER	*	1	1				
3	1771-503-220-00	ARM/LEVER COMP	*	1	1				
4	1614-262-003-00	GRIP/SUB	*	1	1				
5	- - - - - -	BLANK	*						- - - - - -
5	1771-503-001-10	PLATE/Z/16X309	*	1	1				
6	V411-260-008-00	WASHER,PL/M 8	*	2	2				
7	V560-160-008-00	PIN/SNAP	*	2	2				
8	1771-503-250-00	LEVER/DUMP COMP	*	1	1				
9	1758-505-002-00	INSULATOR/LEVER/SUB	*	1	1				
10	1614-262-003-00	GRIP/SUB	*	2	2				
11	1771-503-230-00	ARM/SPOOL COMP	*	1	1				
12	1771-503-260-00	LEVER/LIFT COMP	*	1	1				
13	1758-505-002-00	INSULATOR/LEVER/SUB	*	1	1				
14	3816-424-005-00	PIN/10X85	*	1	1				
15	V411-260-010-00	WASHER/M10	*	1	1				
16	V500-162-502-50	PIN,SPLIT/2.5X25	*	1	1				
17	1771-503-003-00	PIN/05X17	*	3	3				
18	V411-260-005-00	WASHER	*	3	3				
19	V560-160-005-00	PIN/SNAP	*	3	3				
20	- - - - - -	BLANK	*						- - - - - -
20A	1771-503-280-00	STOPPER COMP	*	1	1				
21	- - - - - -	BLANK	*						- - - - - -
21A	1729-602-004-10	SPRING	*	1	1				
22	- - - - - -	BLANK	*						- - - - - -
22A	W296-134-007-00	RIVET,BLIND	*	2	2				
23	V361-260-006-00	NUT	*	2	2				
24	- - - - - -	BLANK	*						- - - - - -
25	- - - - - -	BLANK	*						- - - - - -

FIG.501 CONTROL SYSTEM(2/2)

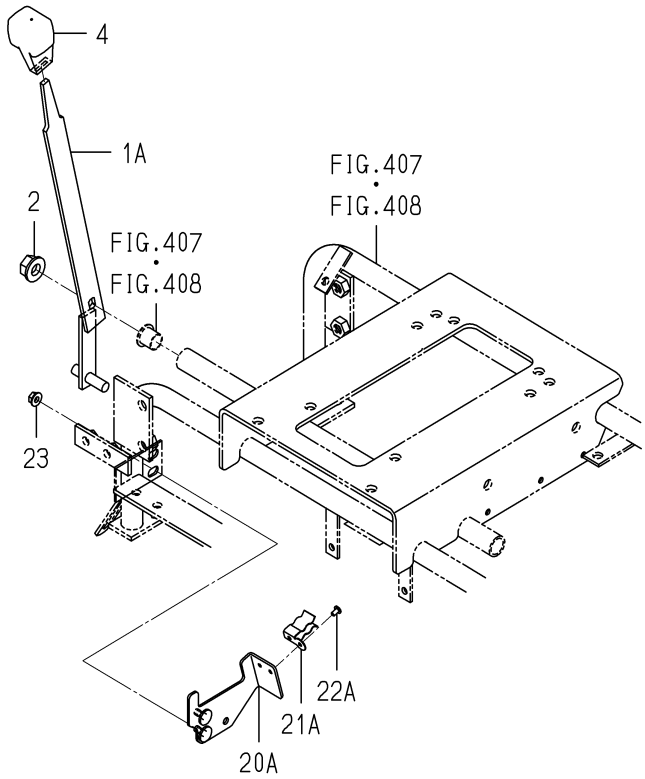

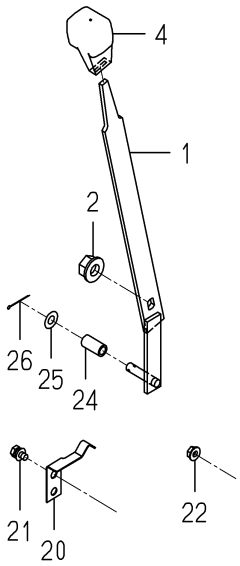

1771-503 -0100

KEY	PART CODE	DESCRIPTION	SPC	TYPE OF MODEL SFH220T	SFH240F	ITC	COL	GRP	REMARKS
26	- - - - - -	BLANK	*						- - - - - -

FIG.502 CYLINDER(LIFT)SYSTEM

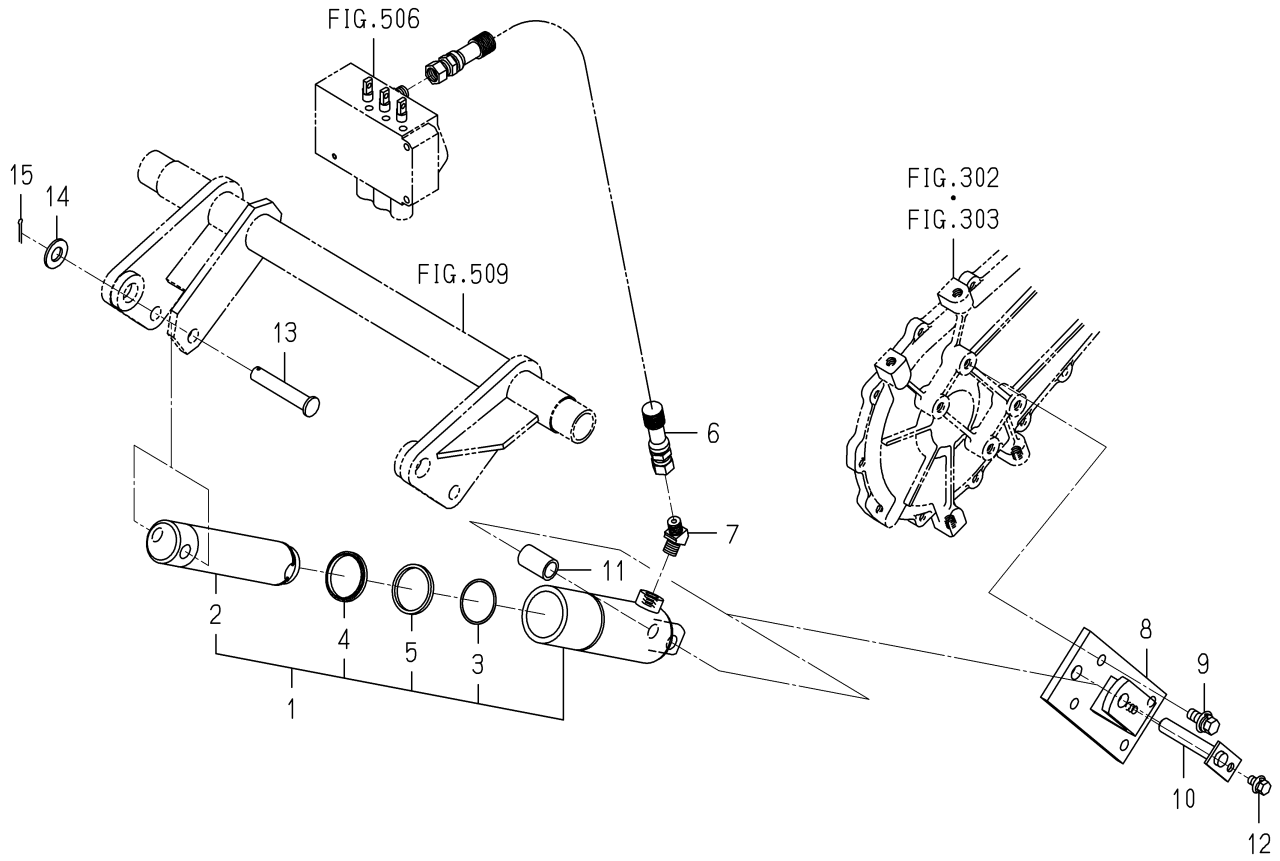

1771-504 -0100

KEY	PART CODE	DESCRIPTION	SPC	TYPE OF MODEL SFH220T	SFH240F	ITC	COL	GRP	REMARKS
1	1771-504-210-00	CYLINDER ASSY	*	1	1				
2	K182-012-001-00	PISTON	*	1	1				
3	K182-007-002-00	PISTON STOPPER	*	1	1				
4	V793-142-480-60	DUST SEAL SER42	*	1	1				
5	V724-124-304-20	PACKING PS-42	*	1	1				
6	1740-407-220-10	HOSE/1200 ASSY	*	1	1				
7	3631-350-201-10	ADAPTER/45ß	*	1	1				
8	1771-504-230-00	STAY/CYLINDER COMP	*	1	1				
9	V211-561-002-50	BOLT/M10X25	*	4	4				
10	1771-504-240-00	PIN/14X77 COMP	*	1	1				
11	1594-611-202-00	COLLAR/16X22X35	*	1	1				
12	V211-660-801-60	BOLT/M8X16	*	1	1				
13	1689-502-001-00	PIN/14X80	*	1	1				
14	V411-260-014-00	WASHER,PL/M14	*	1	1				
15	- - - - - -	BLANK	*						- - - - - -
15	V500-163-002-50	PIN,SPLIT/3 X25	*	1	1				

FIG.503 CABLE(UP STOP)SYSTEM(B TYPE)

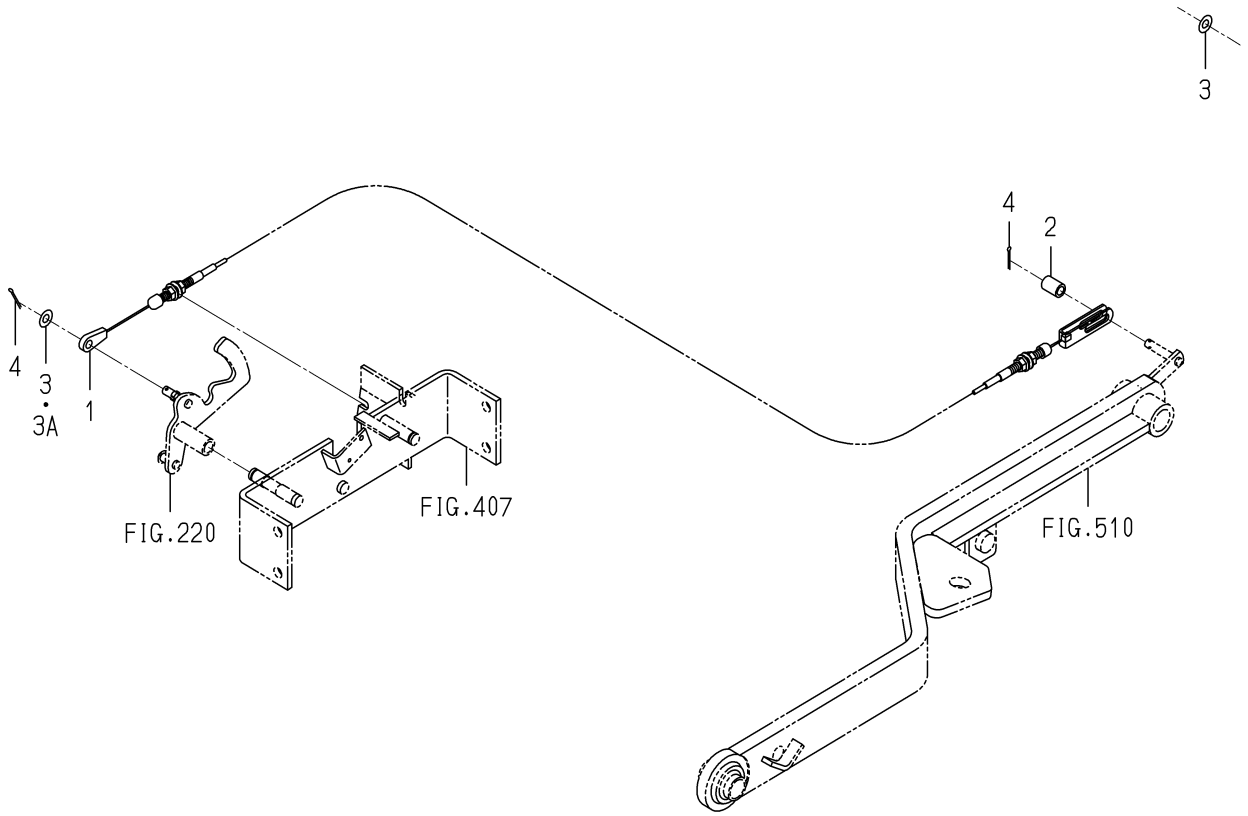

1771-506 -0100

KEY	PART CODE	DESCRIPTION	SPC	TYPE OF MODEL SFH220T	SFH240F	ITC	COL	GRP	REMARKS
1	1771-506-210-00	CABLE/UPSTOP ASSY	*		1				
2	1771-506-003-00	COLLAR/09X14X20	*		1				
3	- - - - - -	BLANK	*						- - - - - -
3A	V411-260-008-00	WASHER,PL/M 8	*		1				
4	V500-162-502-00	PIN,SPLIT/2.5X20	*		2				

FIG.504 CABLE(UP STOP)SYSTEM(EXCEPT B TYPE)

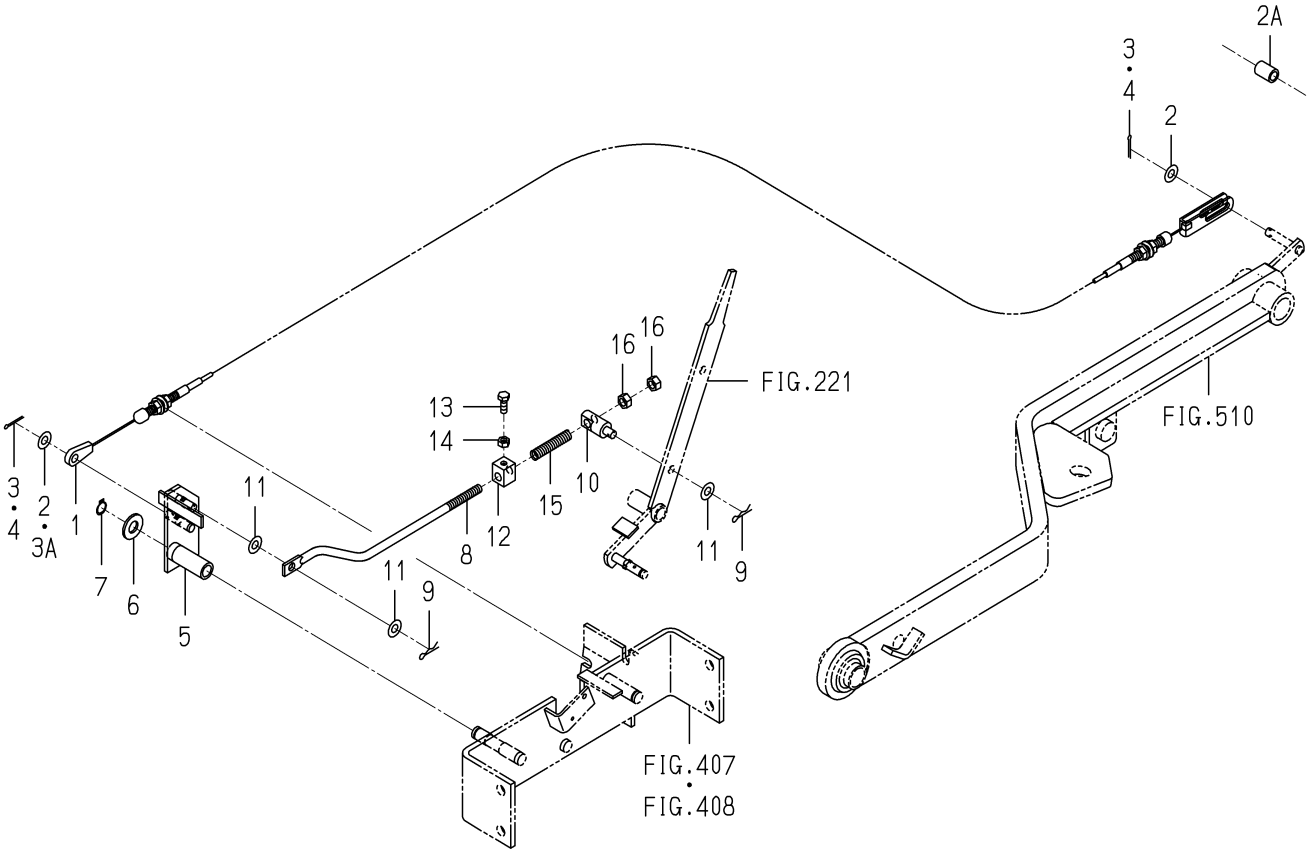

1771-506A-0100

KEY	PART CODE	DESCRIPTION	SPC	TYPE OF MODEL SFH220T	SFH240F	ITC	COL	GRP	REMARKS
1	1771-506-210-00	CABLE/UPSTOP ASSY	*	1	1				
2	- - - - - -	BLANK	*						- - - - - -
2A	1771-506-003-00	COLLAR/09X14X20	*	1	1				
3	- - - - - -	BLANK	*						- - - - - -
3A	V411-260-008-00	WASHER,PL/M 8	*	1	1				
4	V500-162-502-00	PIN,SPLIT/2.5X20	*	2	2				
5	1771-506-510-00	PLATE/STOP/PTO COMP	*	1	1				
6	V411-260-012-00	WASHER /M12	*	1	1				
7	V704-140-012-00	RING,SNAP/12 C	*	1	1				
8	1771-506-051-00	ROD/M08X225	*	1	1				
9	V560-160-008-00	PIN/SNAP	*	2	2				
10	1771-506-052-00	PIN/16X40	*	1	1				
11	V411-260-008-00	WASHER,PL/M 8	*	3	3				
12	1725-505-006-00	STAY/STOPPER	*	1	1				
13	V200-360-601-60	BOLT/M6X16	*	1	1				
14	V301-260-006-00	NUT/M6	*	1	1				
15	1725-505-007-00	SPRING/HC050	*	1	1				
16	V304-260-008-00	NUT	*	2	2				

FIG.505 PIPING(PUMP)SYSTEM

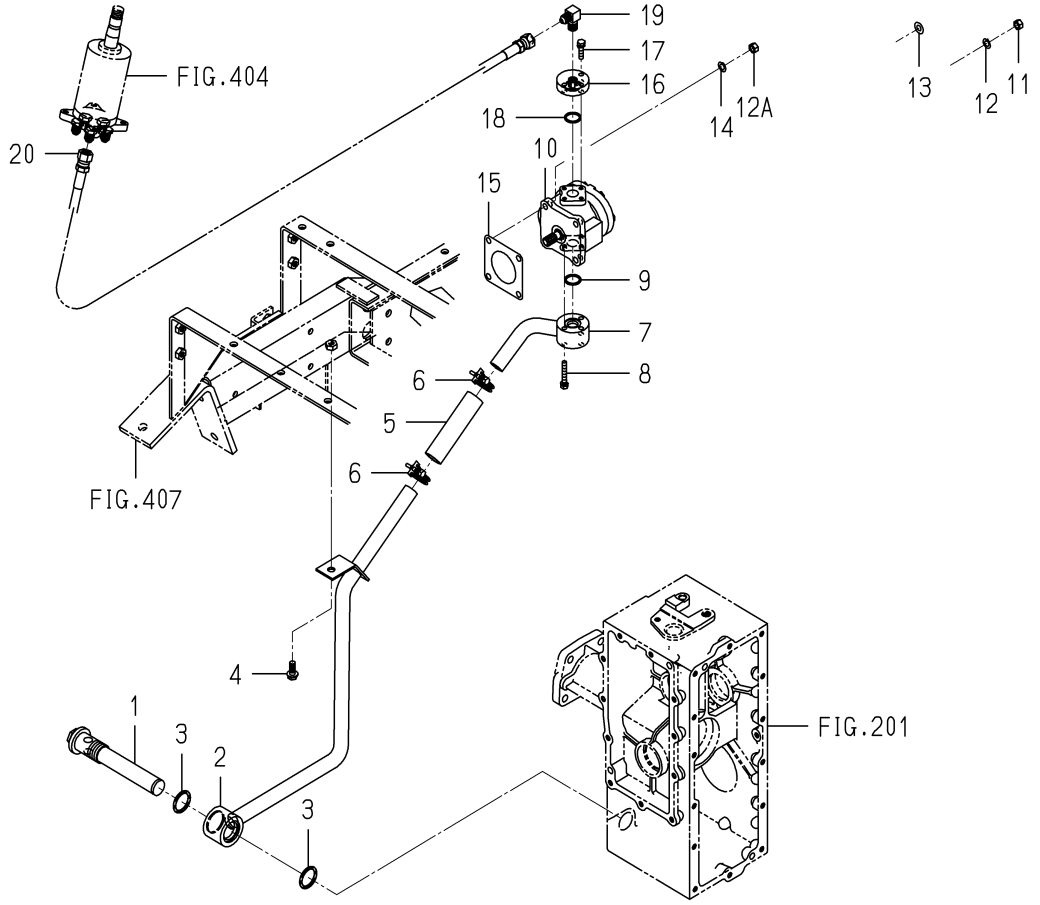

1771-508 -0100

KEY	PART CODE	DESCRIPTION	SPC	TYPE OF MODEL SFH220T	SFH240F	ITC	COL	GRP	REMARKS
1	1738-508-210-00	FILTER/SUCTION COMP	*	1	1				
2	- - - - - -	BLANK	*						- - - - - -
2	1771-508-210-10	PIPE/SUCTION/F COMP	*	1	1				
3	V720-113-502-80	RING/O	*	2	2				
4	- - - - - -	BLANK	*						- - - - - -
4	V231-360-801-60	FLANGEBOLT	*	1	1				
5	1771-508-002-10	HOSE/110	*	1	1				
6	J061-224-032-00	CLAMP/WIRE/24-32	*	2	2				
7	- - - - - -	BLANK	*						- - - - - -
7	1771-508-220-20	PIPE/SUCTION/R COMP	*	1	1				
8	V210-260-604-00	BOLT/S	*	3	3				
9	V720-112-402-00	O-RING/P20	*	1	1				
10	K135-023-000-00	PUMP GEAR ASSY	*	1	1				FIG S01
11	- - - - - -	BLANK	*						- - - - - -
12	- - - - - -	BLANK	*						- - - - - -
12A	V304-260-008-00	NUT	*	4	4				
13	- - - - - -	BLANK	*						- - - - - -
14	V401-160-008-00	WASHER,SP/M 8	*	4	4				
15	1404-503-006-00	PACKING,OIL PUMP	*	1	1				
16	1771-508-001-00	FLANGE/PUMP	*	1	1				
17	V210-560-602-50	BOLT/S	*	3	3				
18	V720-112-402-00	O-RING/P20	*	1	1				
19	1728-408-001-00	ADAPTER/L/G1/4XR1/4	*	1	1				
20	- - - - - -	BLANK	*						- - - - - -
20	1771-508-230-10	HOSE/HYDRO/2400 ASSY	*	1	1				

FIG.506 PIPING(CONTROL)SYSTEM

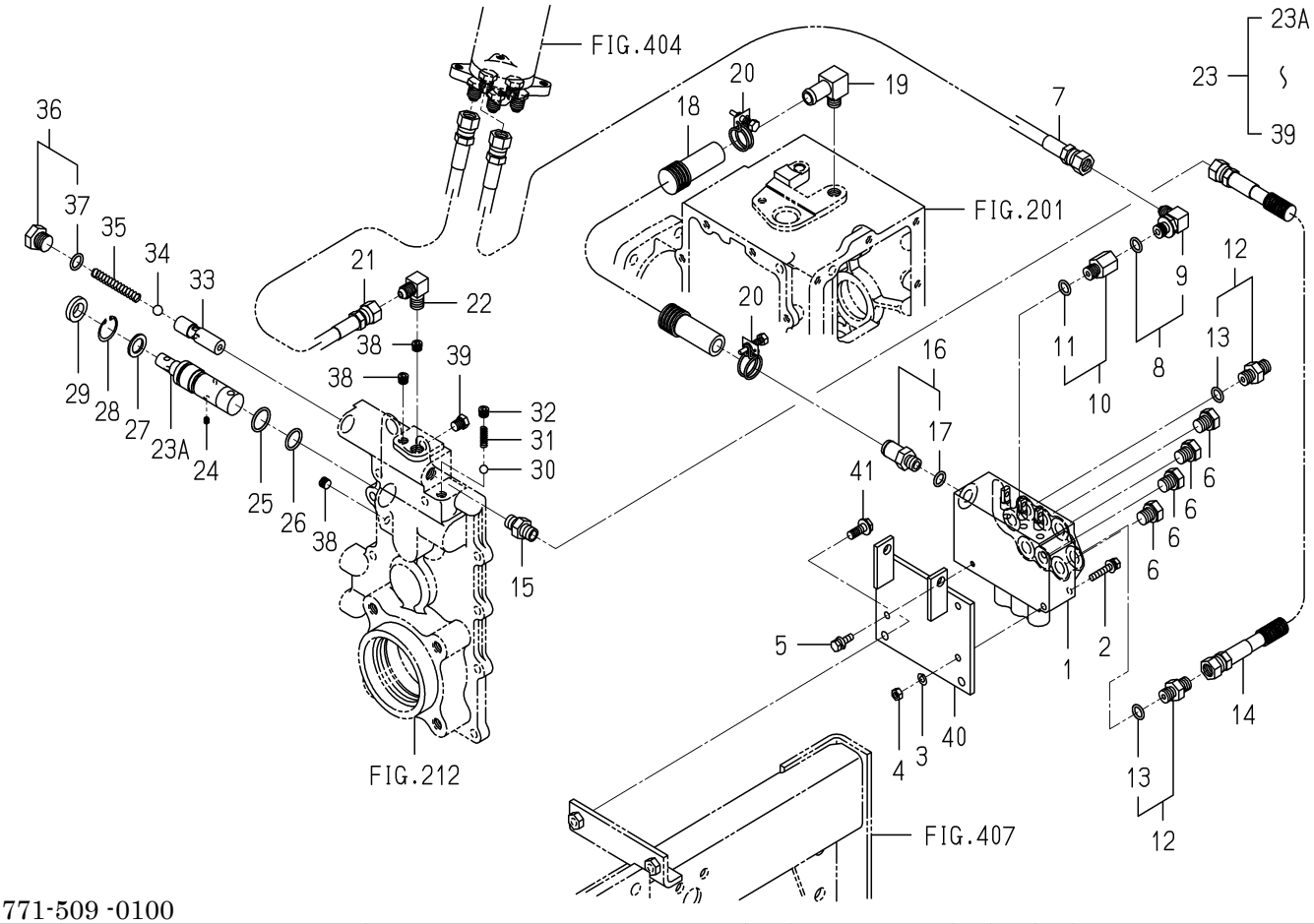

1771-509 -0100

KEY	PART CODE	DESCRIPTION	SPC	TYPE OF MODEL SFH220T	SFH240F	ITC	COL	GRP	REMARKS
1	1728-508-270-00	VALVE/1S-2D ASSY	*	1	1				
2	- - - - - -	BLANK	*						- - - - - -
2	V210-360-603-50	BOLT/SP	*	2	2				
3	V401-160-006-00	WASHER,SP/M 6	*	2	2				
4	V301-260-006-00	NUT/M6	*	2	2				
5	- - - - - -	BLANK	*						- - - - - -
5	V210-360-602-00	BOLT/SP	*	1	1				
6	P118-702-033-00	PLUG	*	4	4				
7	- - - - - -	BLANK	*						- - - - - -
7	1771-509-270-10	HOSE/HYDRO/1700 ASSY	*	1	1				
8	1725-508-310-00	ADAPTER/L/G1/4 ASSY	*	1	1				
9	V720-112-401-10	RING/O	*	1	1				
10	1740-407-520-00	ADAPTER/G1/4 ASSY	*	1	1				
11	V720-112-401-10	RING/O	*	1	1				
12	8664-555-250-00	ADAPTER/G1/4 ASSY	*	2	2				
13	V720-112-401-10	RING/O	*	2	2				
14	1771-509-310-00	HOSE/HYDOR/500 ASSY	*	1	1				
15	3676-352-001-00	ADAPTOR/STRAIGHT	*	1	1				
16	1771-509-290-00	ADAPTER/G1/4 ASSY	*	1	1				
17	V720-112-401-10	RING/O	*	1	1				
18	- - - - - -	BLANK	*						- - - - - -
18	1771-509-001-10	HOSE/280	*	1	1				
19	8561-501-010-00	ADAPTER/90/LOW PRESS	*	1	1				
20	J061-220-024-00	CLAMP/WIRE/20-24	*	2	2				
21	- - - - - -	BLANK	*						- - - - - -
21	1771-509-280-10	HOSE/HYDRO/1500 ASSY	*	1	1				
22	1728-408-001-00	ADAPTER/L/G1/4XR1/4	*	1	1				
23	- - - - - -	BLANK	*						- - - - - -
23A	1771-509-232-10	VALVE/PTO	*	1	1				
24	V783-160-600-70	ORIFICESETS/M6X0.7	*	1	1				

FIG.506 PIPING(CONTROL)SYSTEM

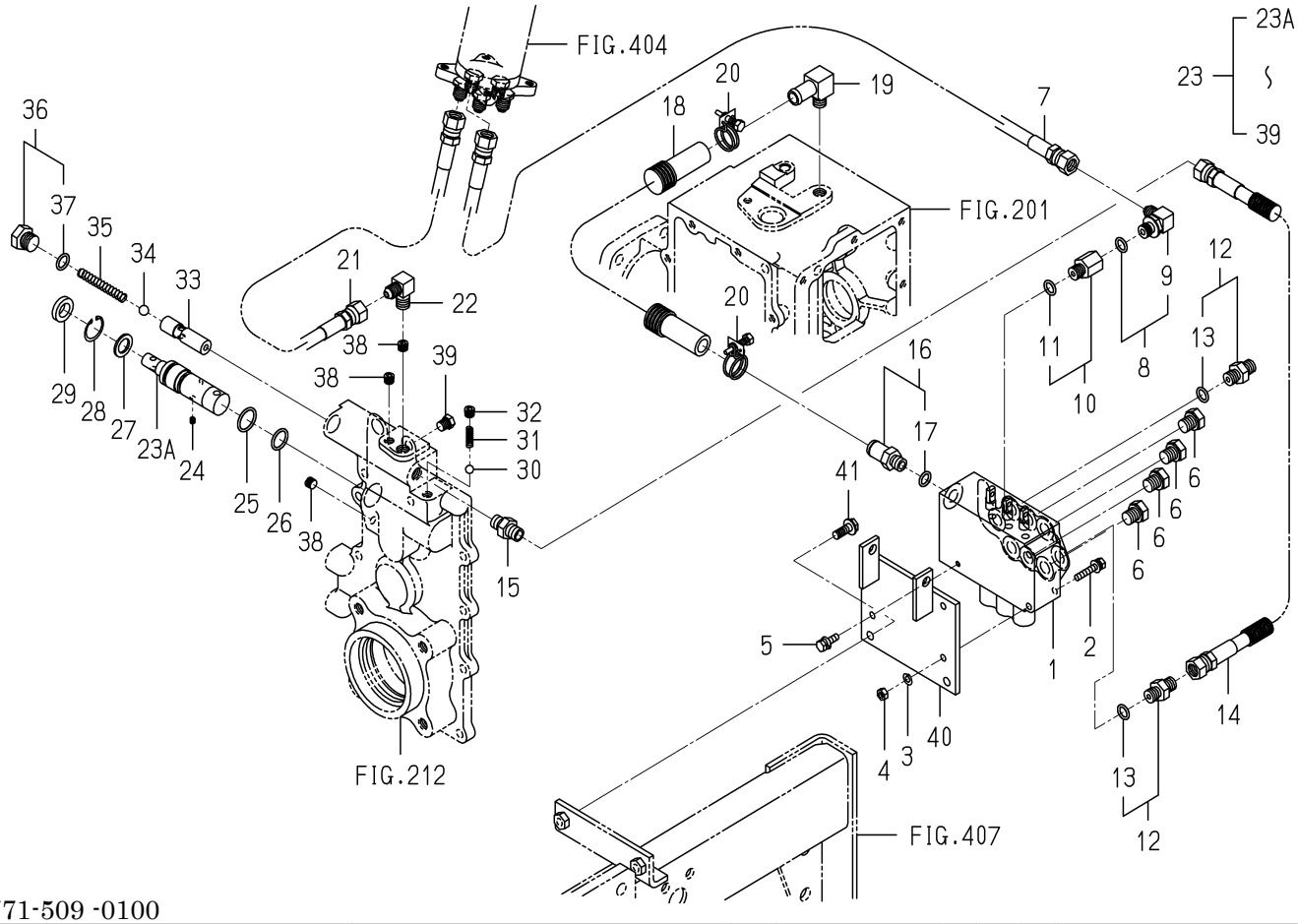

1771-509 -0100

KEY	PART CODE	DESCRIPTION	SPC	TYPE OF MODEL SFH220T	SFH240F	ITC	COL	GRP	REMARKS
25	V720-112-402-10	RING/O	*	1	1				
26	V720-112-401-80	O-RING/P18	*	1	1				
27	1725-509-252-00	PLATE/STOPPER	*	1	1				
28	V705-140-025-00	RING,SNAP/25 C	*	1	1				
29	1725-508-253-00	SEAL/DUST	*	1	1				
30	V682-200-001-00	BALL	*	1	1				
31	1650-253-003-00	SPRING/HC022	*	1	1				
32	V780-140-000-20	PLUG/SCREW	*	1	1				
33	1725-509-231-10	BODY	*	1	1				
34	V682-200-001-20	BALL	*	1	1				
35	1725-509-232-00	SPRING/HC062	*	1	1				
36	1725-203-210-00	PLUG/G3/8 ASSY	*	1	1				
37	V720-112-401-40	O-RING/P14	*	1	1				
38	V780-140-000-20	PLUG/SCREW	*	3	3				
39	V782-160-000-20	PLUG/SCREW	*	1	1				
40	1771-509-220-00	BRACKET/VALVE COMP	*	1	1				
41	V231-360-802-00	FLANGEBOLT	*	2	2				

FIG.507 PIPING(HST)SYSTEM(B TYPE)

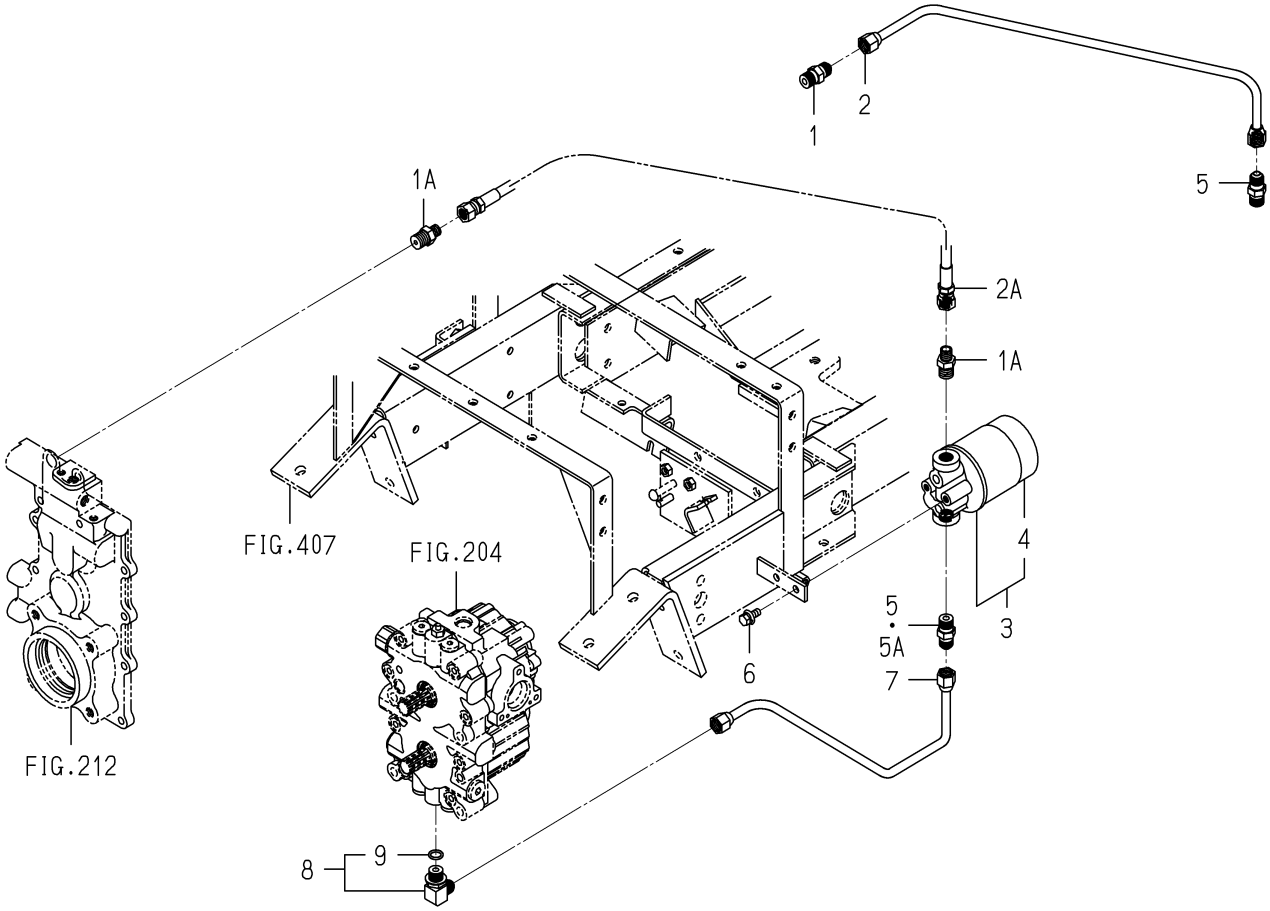

1771-510 -0100

KEY	PART CODE	DESCRIPTION	SPC	TYPE OF MODEL SFH220T	TYPE OF MODEL SFH240F	ITC	COL	GRP	REMARKS
1	- - - - - -	BLANK	*						- - - - - -
1A	1771-510-001-00	ADAPTER/R3/8XG1/4	*		2				
2	- - - - - -	BLANK	*						- - - - - -
2A	1742-407-200-10	HOSE/700 ASSY	*		1				
3	1771-510-250-00	FILTER/OIL ASSY	*		1				
4	1771-510-251-00	FILTER/OIL ASSY	*		1				
5	- - - - - -	BLANK	*						- - - - - -
5A	2186-409-037-00	ADPTER/R3/8XM16	*		1				
6	- - - - - -	BLANK	*						- - - - - -
6	V211-260-801-60	BOLT,SEMS (S) M8X16	*		2				
7	1771-510-220-00	PIPE/CHARGE COMP	*		1				
8	3805-354-280-00	ADAPTOR/G3/8XM16ASSY	*		1				
9	V720-112-401-40	O-RING/P14	*		1				

FIG.508 PIPING(HST)SYSTEM(EXCEPT B TYPE)

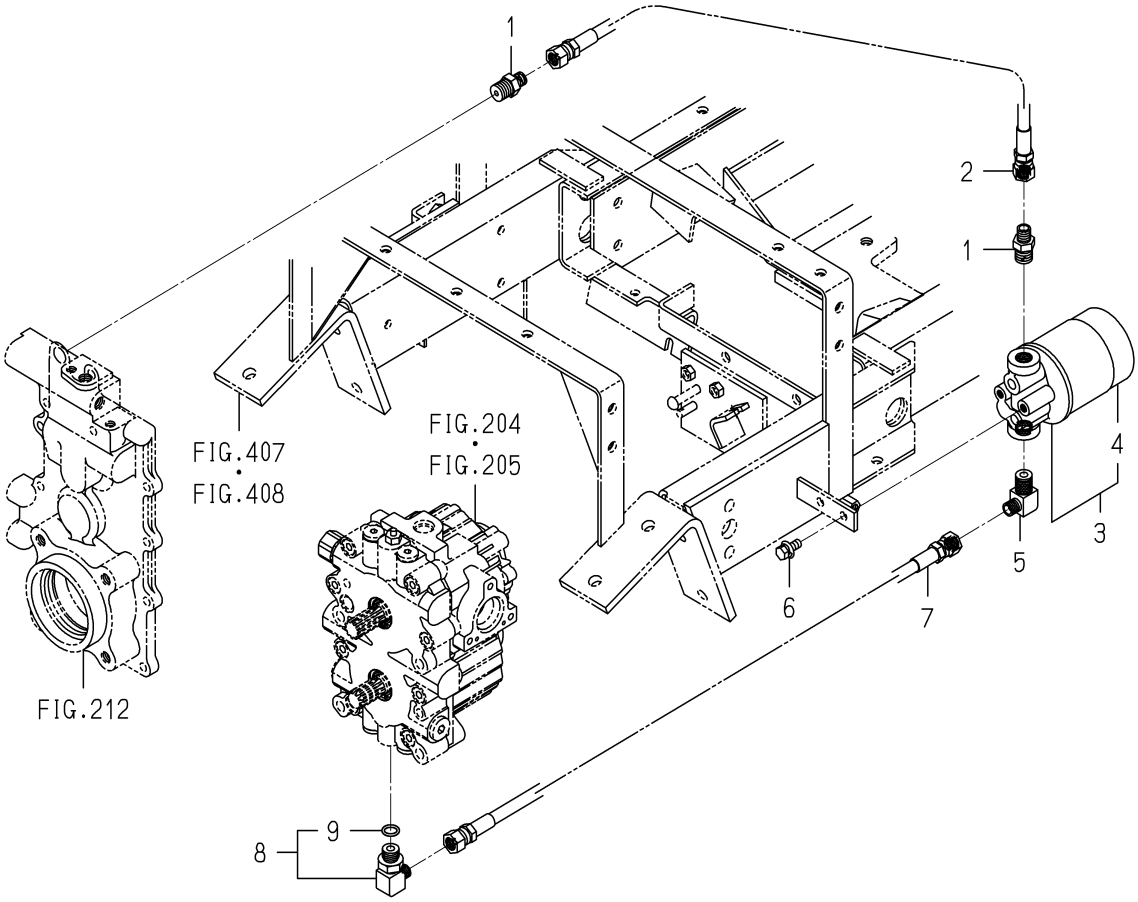

1771-510A-0100

KEY	PART CODE	DESCRIPTION	SPC	TYPE OF MODEL SFH220T	TYPE OF MODEL SFH240F	ITC	COL	GRP	REMARKS
1	1771-510-001-00	ADAPTER/R3/8XG1/4	*	2	2				
2	1742-407-200-10	HOSE/700 ASSY	*	1	1				
3	1771-510-250-00	FILTER/OIL ASSY	*	1	1				
4	1771-510-251-00	FILTER/OIL ASSY	*	1	1				
5	3814-371-004-00	ADAPTER(3/8X1/4)	*	1	1				
6	V211-260-801-60	BOLT,SEMS (S) M8X16	*	2	2				
7	1742-407-200-10	HOSE/700 ASSY	*	1	1				
8	P103-521-006-10	ELBOW/90ß ASSY	*	1	1				
9	V720-112-401-40	O-RING/P14	*	1	1				

FIG.509 LINK(LIFT)SYSTEM

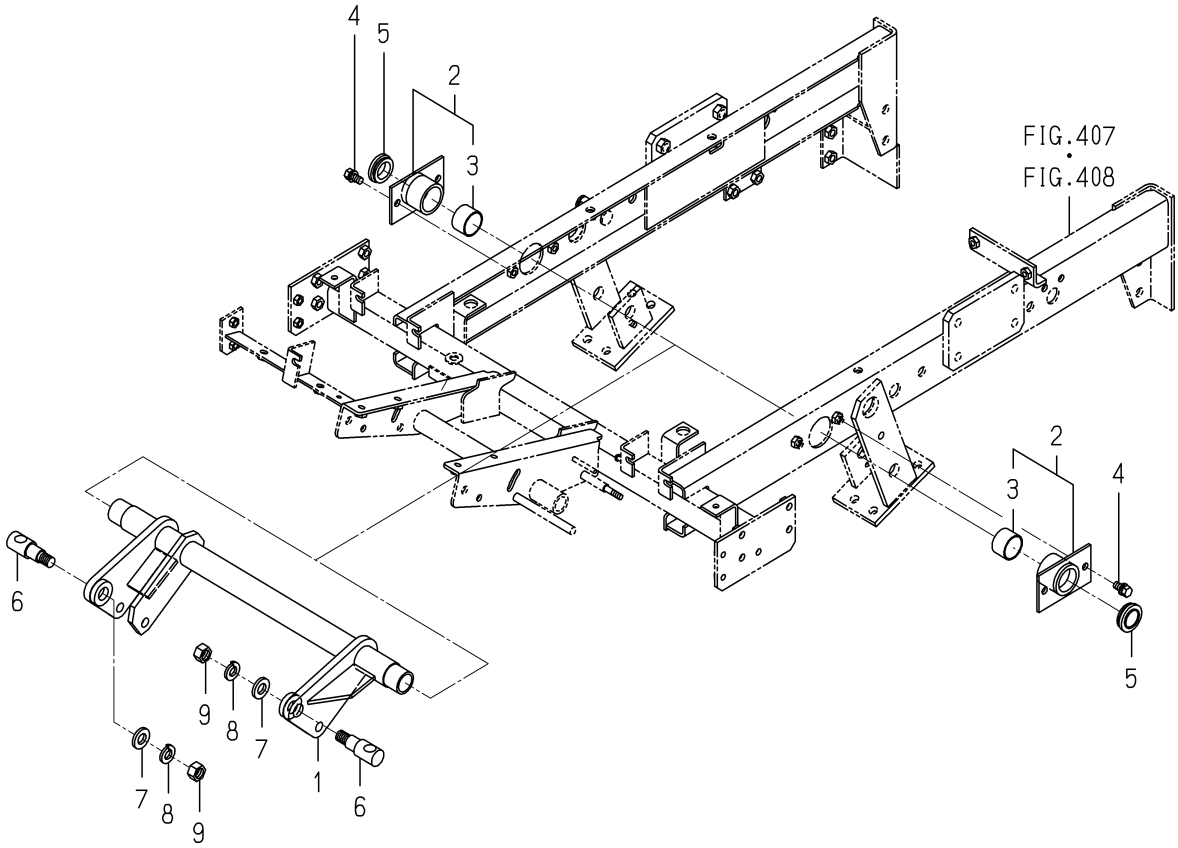

1771-553 -0100

KEY	PART CODE	DESCRIPTION	SPC	TYPE OF MODEL SFH220T	SFH240F	ITC	COL	GRP	REMARKS
1	1771-553-210-00	ARM/LIFT COMP	*	1	1				
2	1771-553-220-00	HUB/LIFT ASSY	*	2	2				
3	8561-610-039-10	BUSH/35X39X25	*	2	2				
4	- - - - - -	BLANK	*						- - - - - -
4	V211-561-002-50	BOLT/M10X25	*	4	4				
5	3805-113-003-00	GROMMET/27X34X03	*	2	2				
6	1689-501-002-00	BOLT/M16	*	2	2				
7	1771-553-003-00	WASHER/17X35X05	*	2	2				
8	V401-160-016-00	WASHER,SP/M16	*	2	2				
9	V304-460-016-00	NUT/M16	*	2	2				

FIG.510 LINK(LOWER)SYSTEM

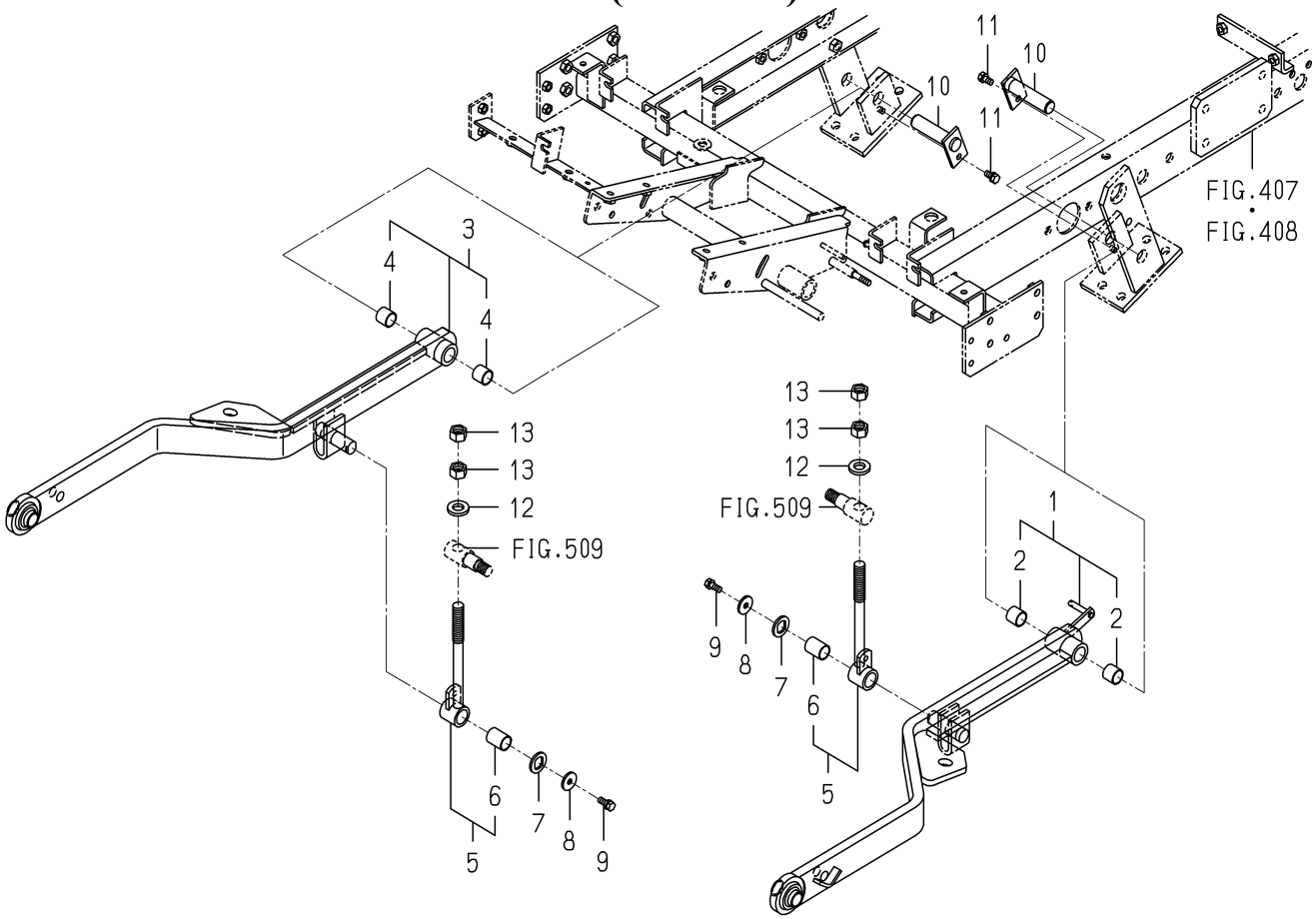

1771-554 -0100

KEY	PART CODE	DESCRIPTION	SPC	TYPE OF MODEL SFH220T	SFH240F	ITC	COL	GRP	REMARKS
1	1771-554-210-00	ARM/LH ASSY	*	1	1				
2	8650-203-001-10	BUSH/20X23X20	*	2	2				
3	1771-554-230-00	ARM/RH ASSY	*	1	1				
4	8650-203-001-10	BUSH/20X23X20	*	2	2				
5	1771-554-250-00	ROD/LIFT ASSY	*	2	2				
6	8595-510-391-00	BUSH/20X23X30	*	2	2				
7	8654-510-047-00	WASHER/20X32X03	*	2	2				
8	1324-205-002-00	WASHER,FOLLOWER	*	2	2				
9	V211-260-802-00	BOLT/S	*	2	2				
10	1771-554-270-00	PIN/20X78 COMP	*	2	2				
11	- - - - - -	BLANK	*						- - - - - -
11	V211-660-801-60	BOLT/M8X16	*	2	2				
12	1771-553-003-00	WASHER/17X35X05	*	2	2				
13	V304-460-016-00	NUT/M16	*	4	4				

FIG.601 HOOD SYSTEM

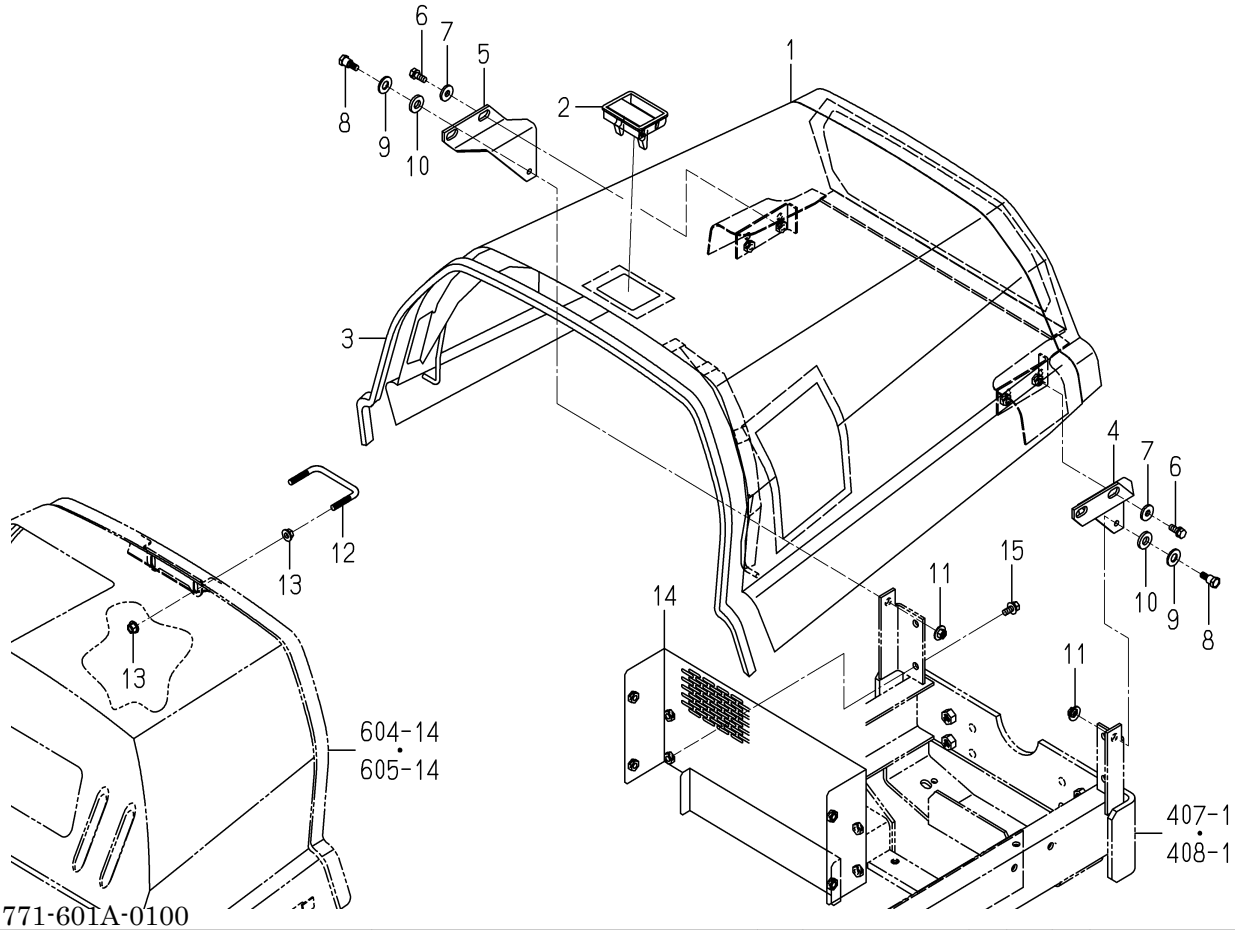

1771-601A-0100

KEY	PART CODE	DESCRIPTION	SPC	TYPE OF MODEL SFH220T	SFH240F	ITC	COL	GRP	REMARKS
1	1771-601-200-20	HOOD/ENGINE COMP	*	1	1		4L		
2	3821-841-290-00	HANDLE	*	1	1				
3	1771-606-005-10	INSULATOR/15X1300	*	1	1				
4	1771-601-003-10	PLATE/LH	*	1	1				
5	1771-601-004-10	PLATE/RH	*	1	1				
6	V211-260-802-00	BOLT/S	*	4	4				
7	4101-102-038-00	WASHER/24X9X3.2	*	4	4				
8	1689-621-008-10	BOLT	*	2	2				
9	V411-260-012-00	WASHER /M12	*	2	2				
10	1689-621-007-00	WASHER/12X26X04	*	2	2				
11	2502-601-005-00	NUT/CONICALWASHER	*	2	2				
12	1771-601-021-00	BAR/LOCK	*	1	1				
13	V362-260-008-00	NUT/WASHER	*	4	4				
14	1771-601-310-10	COVER/REAR COMP	*	1	1		7F		
15	V211-360-802-00	BOLT/SP	*	4	4				

FIG.602 COVER(STEERING)SYSTEM(SFH240F)

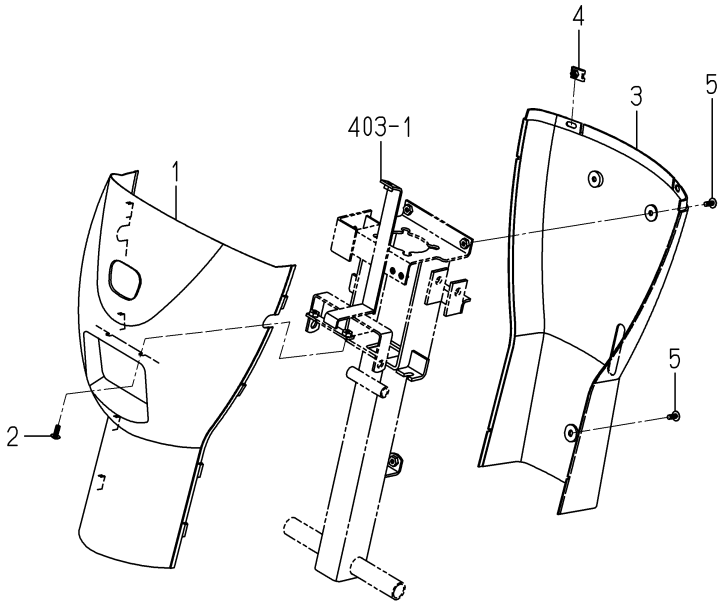

1770-603 -0100

KEY	PART CODE	DESCRIPTION	SPC	TYPE OF MODEL SFH220T	TYPE OF MODEL SFH240F	ITC	COL	GRP	REMARKS
1	1770-603-001-00	POST/F	*		1				
2	1729-705-009-00	SCREW/TRUSS/M06X16	*		2				
3	1770-603-002-00	POST/R	*		1				
4	1560-603-003-00	NUT/M6	*		2				
5	1729-705-009-00	SCREW/TRUSS/M06X16	*		3				

FIG.603 COVER(STEERING)SYSTEM(SFH220T)

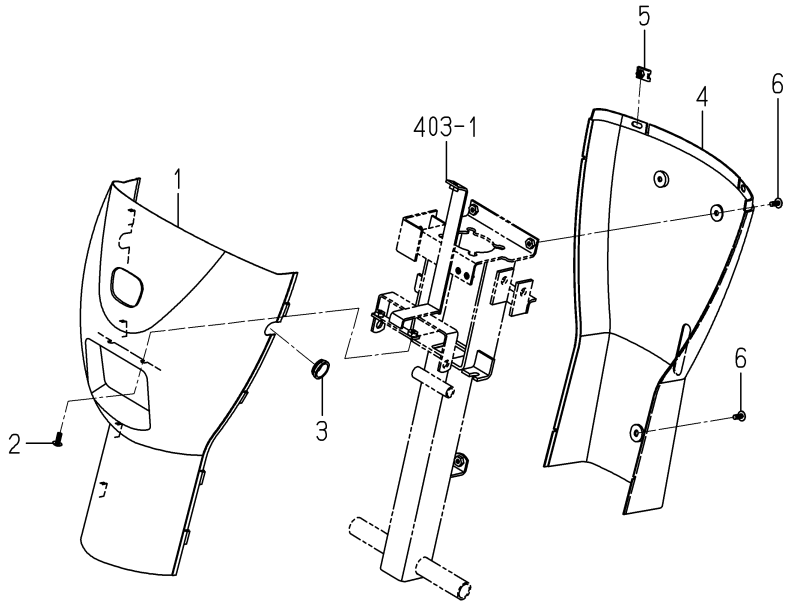

1771-603A-0100

KEY	PART CODE	DESCRIPTION	SPC	TYPE OF MODEL		ITC	COL	GRP	REMARKS
				SFH220T	SFH240F				
1	1770-603-001-00	POST/F	*	1					
2	1729-705-009-00	SCREW/TRUSS/M06X16	*	2					
3	1771-603-001-00	CAP/22	*	1					
4	1770-603-002-00	POST/R	*	1					
5	1560-603-003-00	NUT/M6	*	2					
6	1729-705-009-00	SCREW/TRUSS/M06X16	*	3					

FIG.604 FENDER SYSTEM(B TYPE)

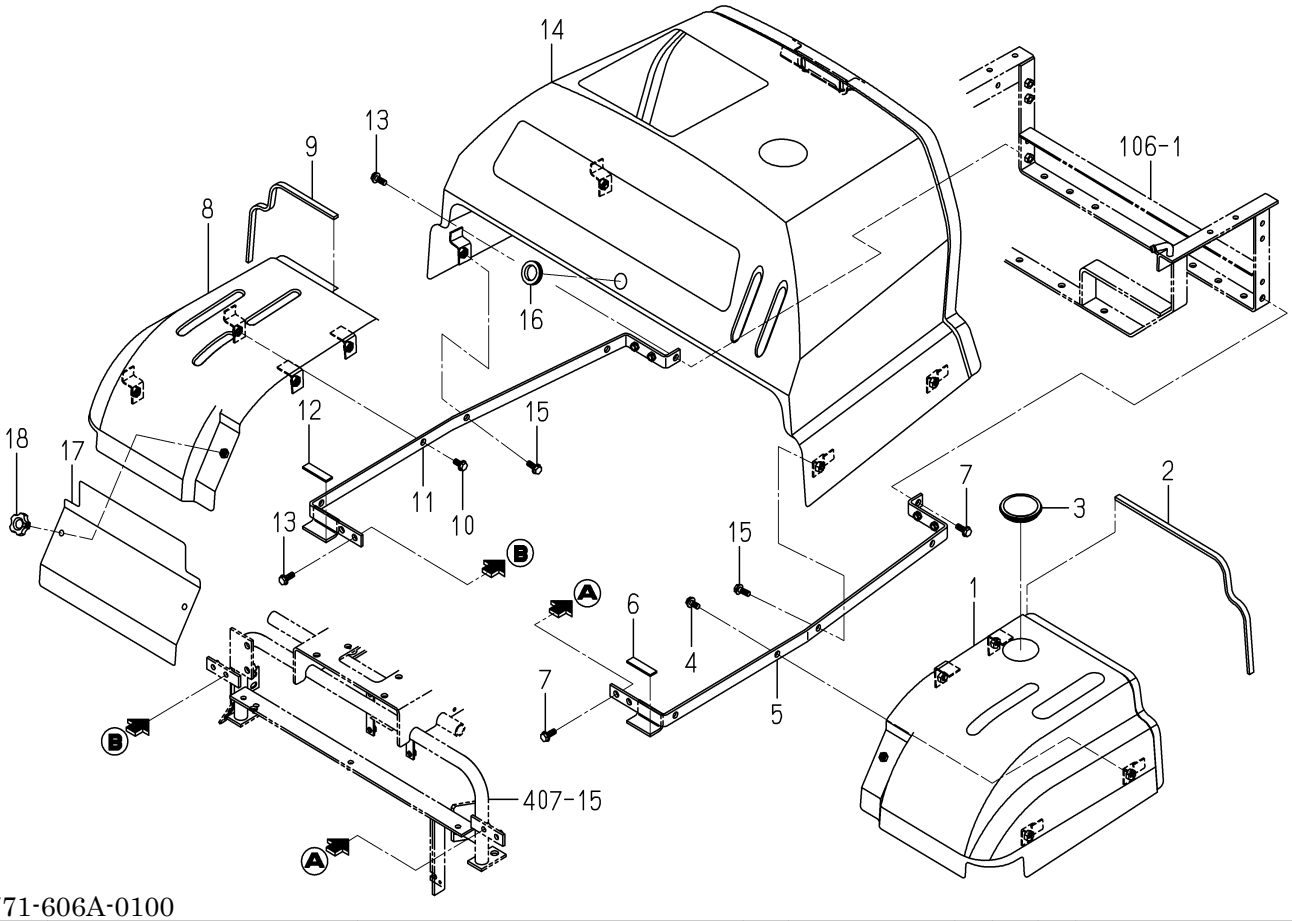

1771-606A-0100

KEY	PART CODE	DESCRIPTION	SPC	TYPE OF MODEL SFH220T	TYPE OF MODEL SFH240F	ITC	COL	GRP	REMARKS
1	1771-606-210-00	FENDER/LH COMP	*		1		4L		
2	1771-606-006-00	INSULATOR/10X460	*		1				
3	2151-221-002-10	PLUG/59	*		1				
4	V231-360-801-60	FLANGEBOLT	*		4				
5	1771-606-320-00	FRAME/FENDER/LH COMP	*		1				
6	1752-606-004-00	INSULATOR/15X55X03	*		1				
7	V231-360-802-00	FLANGEBOLT	*		3				
8	1771-606-220-00	FENDER/RH COMP	*		1		4L		
9	1771-606-007-00	INSULATOR/10X350	*		1				
10	V231-360-801-60	FLANGEBOLT	*		4				
11	1771-606-330-00	FRAME/FENDER/RH COMP	*		1				
12	1752-606-004-00	INSULATOR/15X55X03	*		1				
13	V231-360-802-00	FLANGEBOLT	*		3				
14	1771-606-310-00	FENDER/REAR/B COMP	*		1		4L		
15	V231-360-801-60	FLANGEBOLT	*		4				
16	3650-432-014-00	GROMMET/(16X25X2)	*		1				
17	1771-606-003-10	COVER/FRONT	*		1		4L		
18	1102-611-006-10	KNOB/SET/M06X15	*		2				

FIG.605 FENDER SYSTEM(EXCEPT B TYPE)

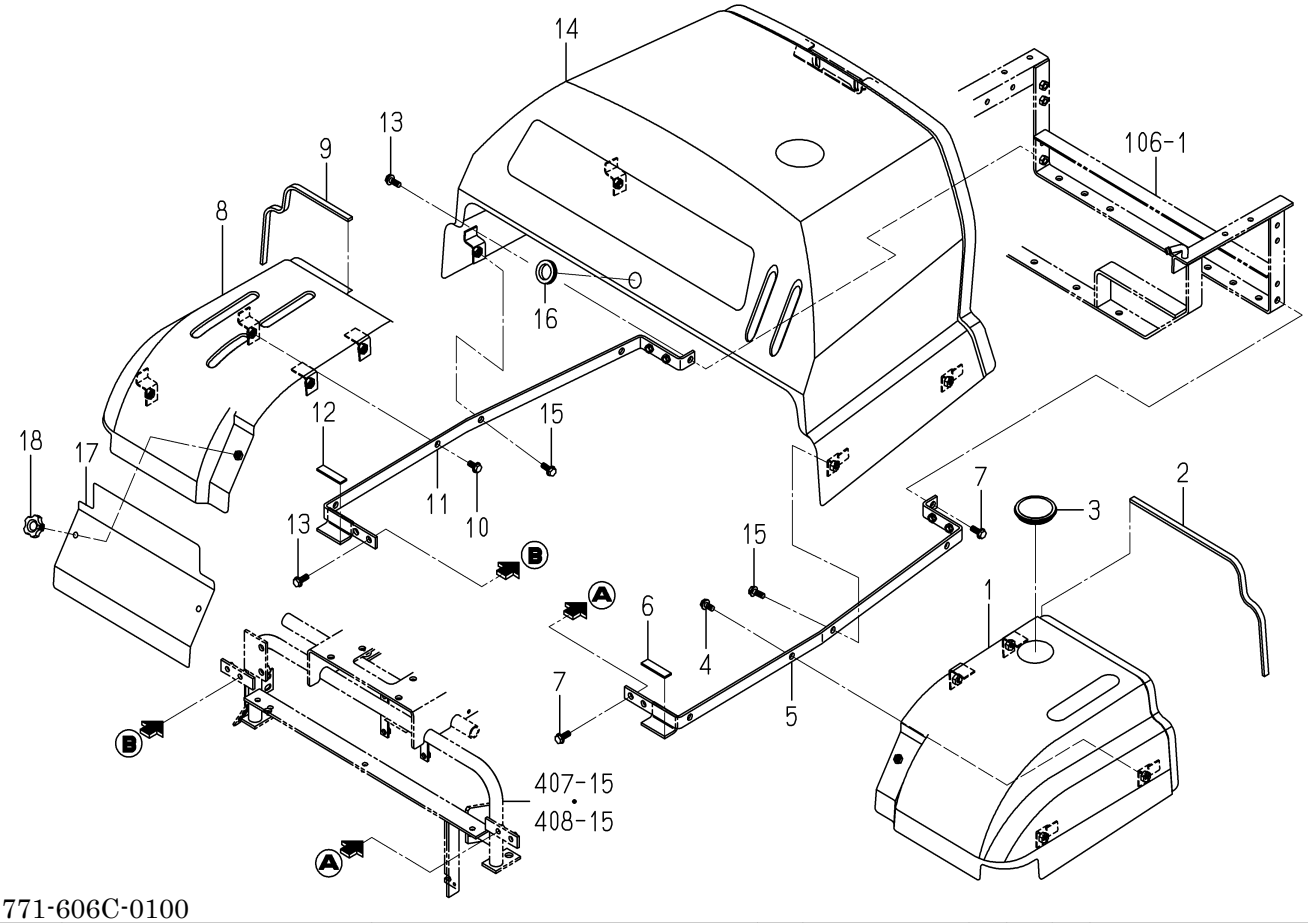

1771-606C-0100

KEY	PART CODE	DESCRIPTION	SPC	TYPE OF MODEL SFH220T	TYPE OF MODEL SFH240F	ITC	COL	GRP	REMARKS
1	1771-606-500-00	FENDER/LH/2WD COMP	*	1	1		4L		
2	1771-606-006-00	INSULATOR/10X460	*	1	1				
3	2151-221-002-10	PLUG/59	*	1	1				
4	V231-360-801-60	FLANGEBOLT	*	4	4				
5	1771-606-320-00	FRAME/FENDER/LH COMP	*	1	1				
6	1752-606-004-00	INSULATOR/15X55X03	*	1	1				
7	V231-360-802-00	FLANGEBOLT	*	3	3				
8	1771-606-220-00	FENDER/RH COMP	*	1	1		4L		
9	1771-606-007-00	INSULATOR/10X350	*	1	1				
10	V231-360-801-60	FLANGEBOLT	*	4	4				
11	1771-606-330-00	FRAME/FENDER/RH COMP	*	1	1				
12	1752-606-004-00	INSULATOR/15X55X03	*	1	1				
13	V231-360-802-00	FLANGEBOLT	*	3	3				
14	1771-606-610-00	FENDER/REAR COMP	*	1	1		4L		
15	V231-360-801-60	FLANGEBOLT	*	4	4				
16	3650-432-014-00	GROMMET/(16X25X2)	*	1	1				
17	1771-606-003-10	COVER/FRONT	*	1	1		4L		
18	1102-611-006-10	KNOB/SET/M06X15	*	2	2				

FIG.606 FLOOR SYSTEM

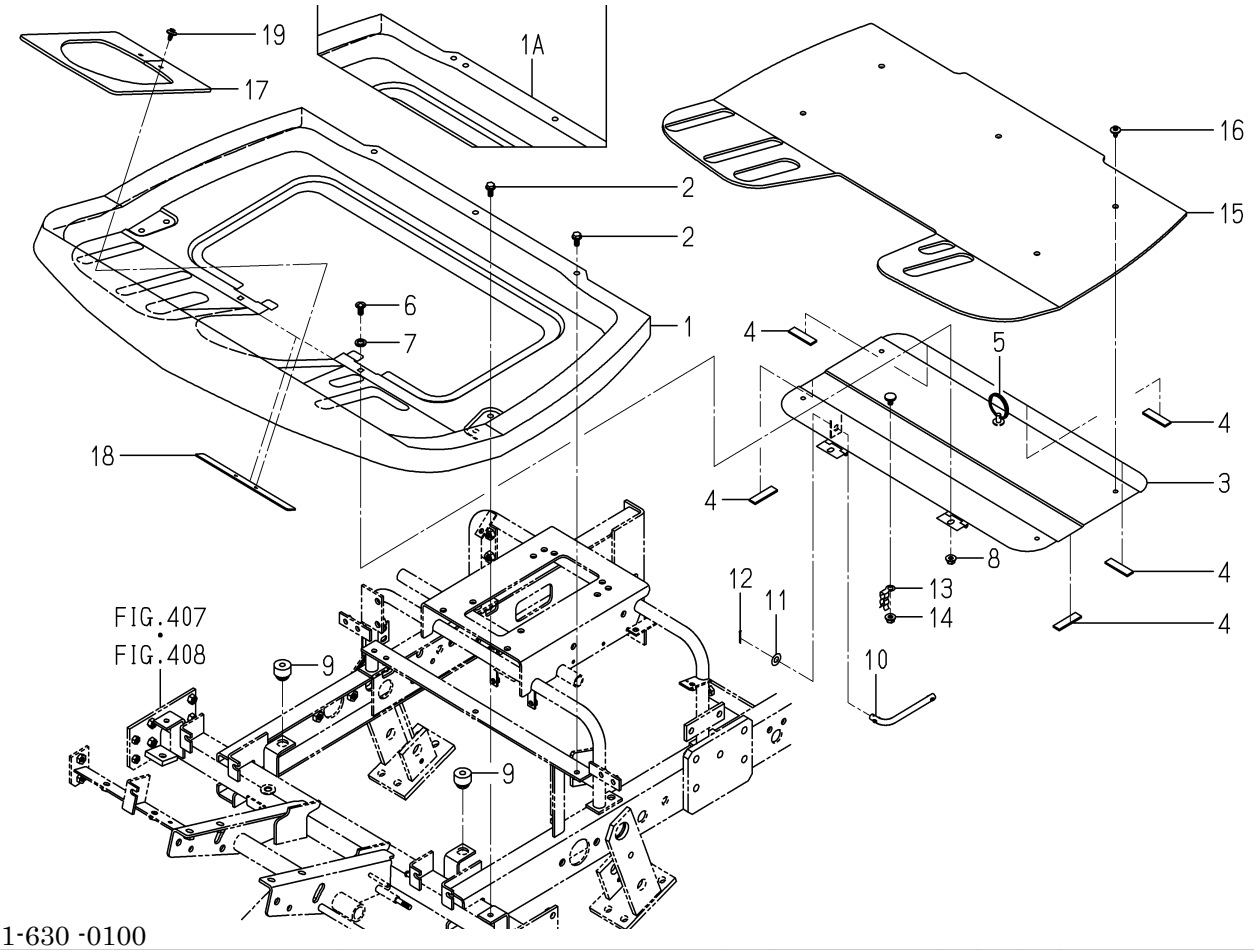

1771-630 -0100

KEY	PART CODE	DESCRIPTION	SPC	TYPE OF MODEL SFH220T	SFH240F	ITC	COL	GRP	REMARKS
1	- - - - - -	BLANK	*						- - - - - -
1A	1771-630-005-10	FLOOR	*	1	1		4L		
2	V231-360-801-60	FLANGEBOLT	*	5	5				
3	1771-630-220-00	PLATE/FLOOR COMP	*	1	1		4L		
4	1752-606-004-00	INSULATOR/15X55X03	*	5	5				
5	8654-501-006-10	SPRING/CLIP	*	1	1				
6	7866-405-016-00	CUP HEAD SQUARE NECK	*	2	2				
7	2130-725-006-00	WASHER	*	2	2				
8	V362-260-008-00	NUT/WASHER	*	2	2				
9	1593-616-004-20	GROMMET/10X30X5	*	2	2				
10	1771-630-007-00	HOOK/STEP	*	1	1				
11	V411-260-010-00	WASHER/M10	*	1	1				
12	V500-162-502-00	PIN,SPLIT/2.5X20	*	1	1				
13	3610-631-002-00	HANGER,SUPPORT	*	1	1				
14	V362-260-008-00	NUT/WASHER	*	1	1				
15	1771-630-001-00	MAT/STEP	*	1	1				
16	1636-611-011-00	RIVET/SCREW ASSY	*	4	4				
17	1770-611-009-10	MAT/STERRING	*	1	1				
18	1770-611-012-00	SHEET/STERRING	*	1	1				
19	1636-611-011-00	RIVET/SCREW ASSY	*	2	2				

FIG.607 LIGHT SYSTEM

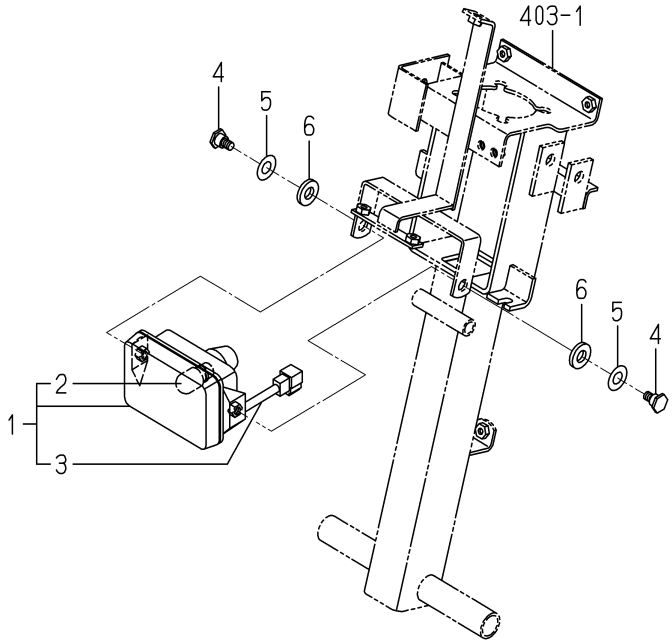

1770-650 -0100

KEY	PART CODE	DESCRIPTION	SPC	TYPE OF MODEL SFH220T	SFH240F	ITC	COL	GRP	REMARKS
1	1637-650-200-00	LAMP/HEAD ASSY	*	1	1				
2	1444-621-251-00	BULB/12V25/25W	*	1	1				
3	1637-650-202-00	HARNESS COMP	*	1	1				
4	3652-603-003-00	PIN,BLOW OUT PROTECT	*	2	2				
5	3610-440-018-00	WASHER	*	2	2				
6	1689-621-007-00	WASHER/12X26X04	*	2	2				

FIG.608 PANEL SYSTEM(EXCEPT G TYPE)

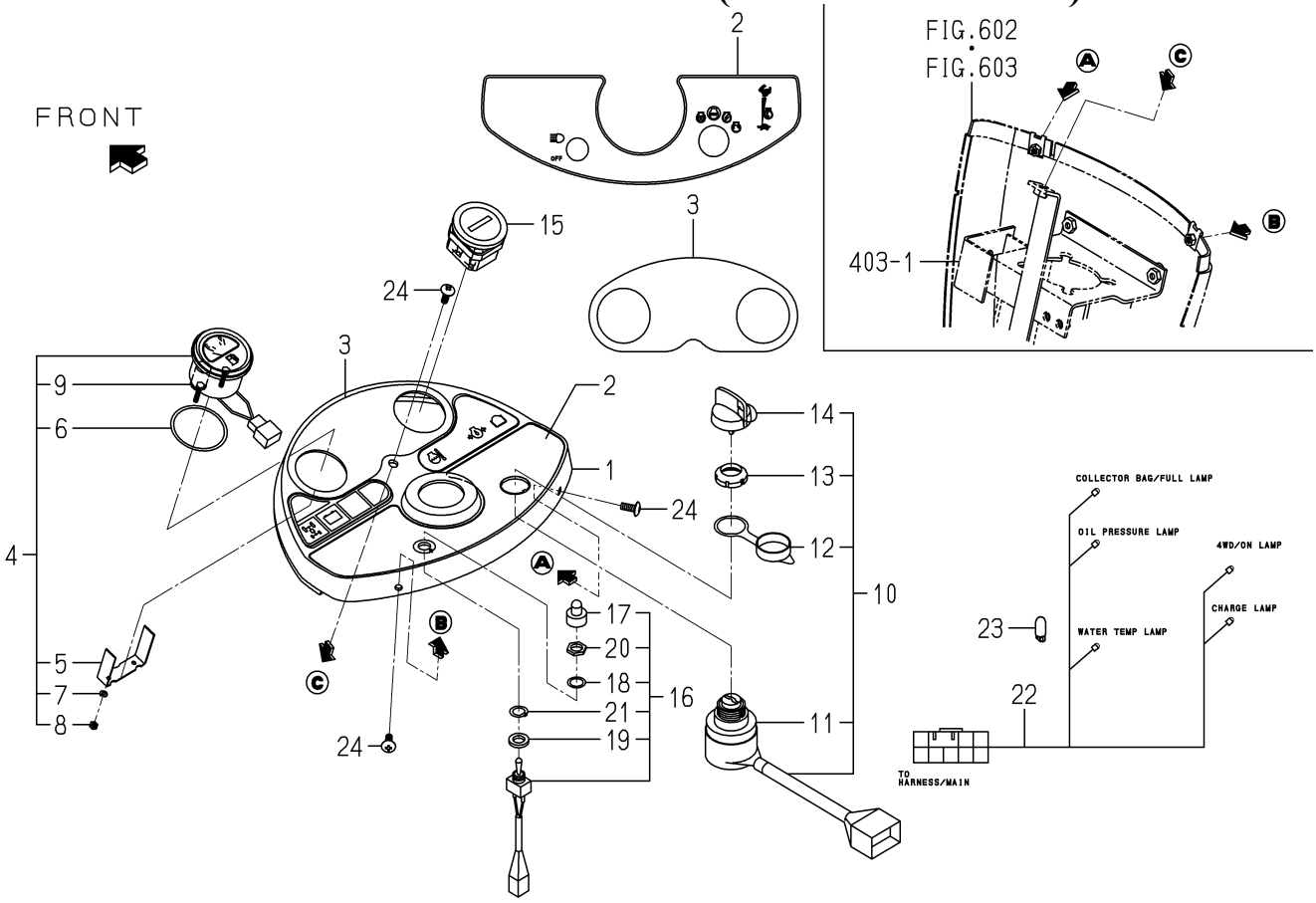

1771-670 -0100

KEY	PART CODE	DESCRIPTION	SPC	TYPE OF MODEL SFH220T	SFH240F	ITC	COL	GRP	REMARKS
1	1771-670-210-00	PANEL/SWITCH COMP	*	1	1				
2	1771-670-201-00	LABEL/SWITCH	*	1	1				
3	1771-670-202-00	LABEL/METER	*	1	1				
4	1703-670-320-00	METER/FUEL ASSY	*	1	1				
5	1703-670-322-00	HOLDER	*	1	1				
6	1703-670-323-00	INSULATOR	*	1	1				
7	1703-670-324-00	WASHER	*	2	2				
8	1703-670-325-00	NUT	*	2	2				
9	1703-670-326-00	PLUG	*	1	1				
10	1593-621-250-10	SWITCH(STARTER) ASSY	*	1	1				
11	1593-621-252-00	COVER	*	1	1				
12	1444-621-311-00	CAP	*	1	1				
13	1444-621-312-00	NUT,RING/M28X1.0	*	1	1				
14	3614-261-002-00	KEY ASSY	*	1	1				
15	1689-613-260-00	METER/HOUR ASSY	*	1	1				
16	1725-670-230-00	SWITCH/TOGGLE ASSY	*	1	1				
17	2186-536-255-00	COVER/SWITCH	*	1	1				
18	1725-670-233-00	PACKING	*	1	1				
19	1725-670-232-00	WASHER	*	1	1				
20	2186-536-254-00	NUT(M12X1.0)	*	1	1				
21	2186-536-253-00	RING(M12X18X1)	*	1	1				
22	1771-690-220-00	HARNESS/PANEL ASSY	*	1	1				
23	3650-270-214-00	BULB	*	5	5				
24	1729-705-009-00	SCREW/TRUSS/M06X16	*	3	3				

FIG.609 PANEL SYSTEM(G TYPE)

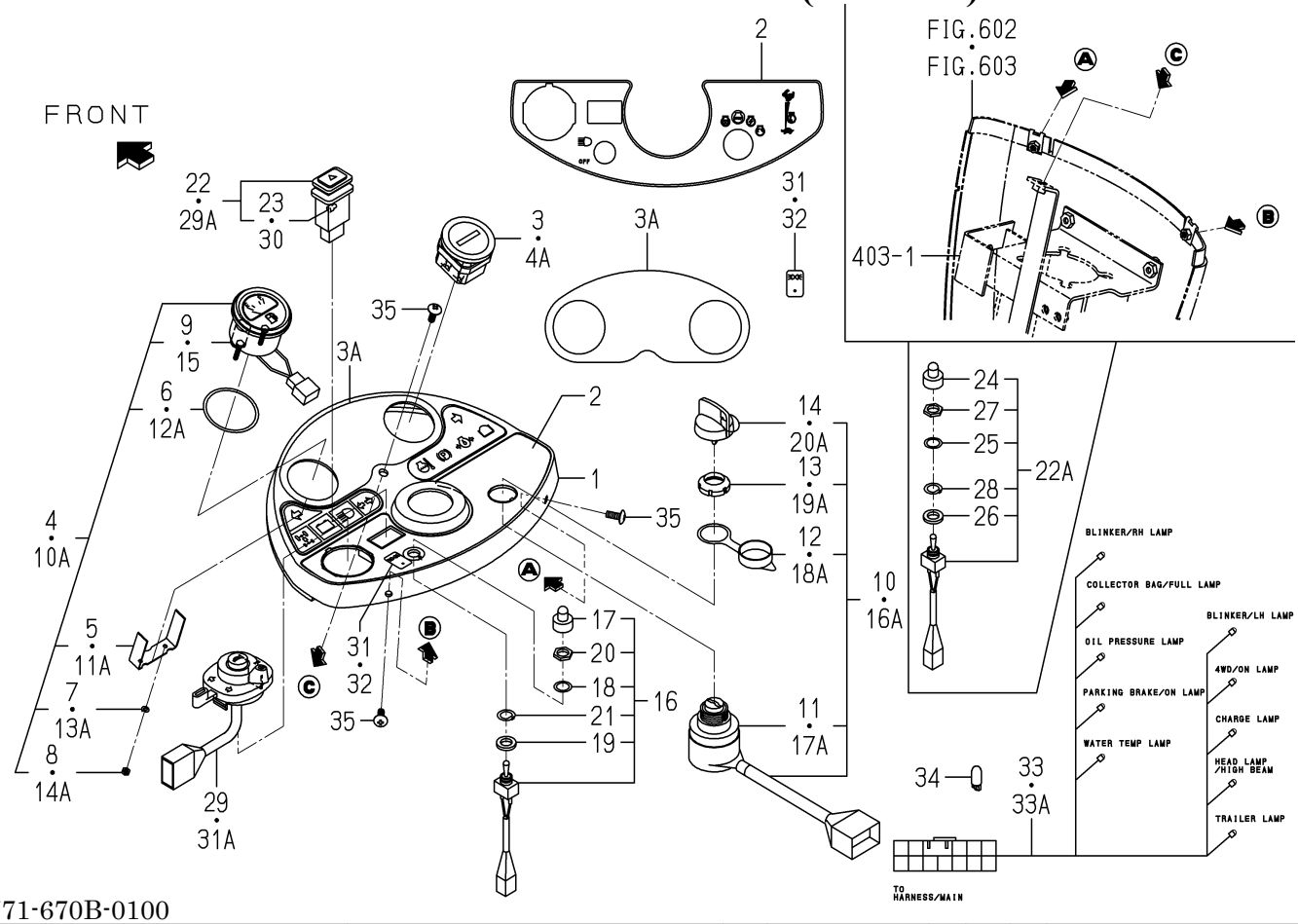

1771-670B-0100

KEY	PART CODE	DESCRIPTION	SPC	TYPE OF MODEL SFH220T	SFH240F	ITC	COL	GRP	REMARKS
1	1771-670-510-00	PANEL/SWITCH/G COMP	*	1	1				
2	1771-670-501-00	LABEL/SWITCH/G	*	1	1				
3	- - - - - -	BLANK	*						- - - - - -
3A	1771-670-202-00	LABEL/METER	*	1	1				
4	- - - - - -	BLANK	*						- - - - - -
4A	1689-613-260-00	METER/HOUR ASSY	*	1	1				
5	- - - - - -	BLANK	*						- - - - - -
6	- - - - - -	BLANK	*						- - - - - -
7	- - - - - -	BLANK	*						- - - - - -
8	- - - - - -	BLANK	*						- - - - - -
9	- - - - - -	BLANK	*						- - - - - -
10	- - - - - -	BLANK	*						- - - - - -
10A	1703-670-320-00	METER/FUEL ASSY	*	1	1				
11	- - - - - -	BLANK	*						- - - - - -
11A	- - - - - -	BLANK	*						- - - - - -
12	- - - - - -	BLANK	*						- - - - - -
12A	- - - - - -	BLANK	*						- - - - - -
13	- - - - - -	BLANK	*						- - - - - -
13A	- - - - - -	BLANK	*						- - - - - -
14	- - - - - -	BLANK	*						- - - - - -
14A	- - - - - -	BLANK	*						- - - - - -
15	- - - - - -	BLANK	*						- - - - - -
16	- - - - - -	BLANK	*						- - - - - -
16A	1593-621-250-10	SWITCH(STARTER) ASSY	*	1	1				
17	- - - - - -	BLANK	*						- - - - - -
17A	- - - - - -	BLANK	*						- - - - - -
18	- - - - - -	BLANK	*						- - - - - -
18A	- - - - - -	BLANK	*						- - - - - -
19	- - - - - -	BLANK	*						- - - - - -
19A	- - - - - -	BLANK	*						- - - - - -

FIG.609 PANEL SYSTEM(G TYPE)

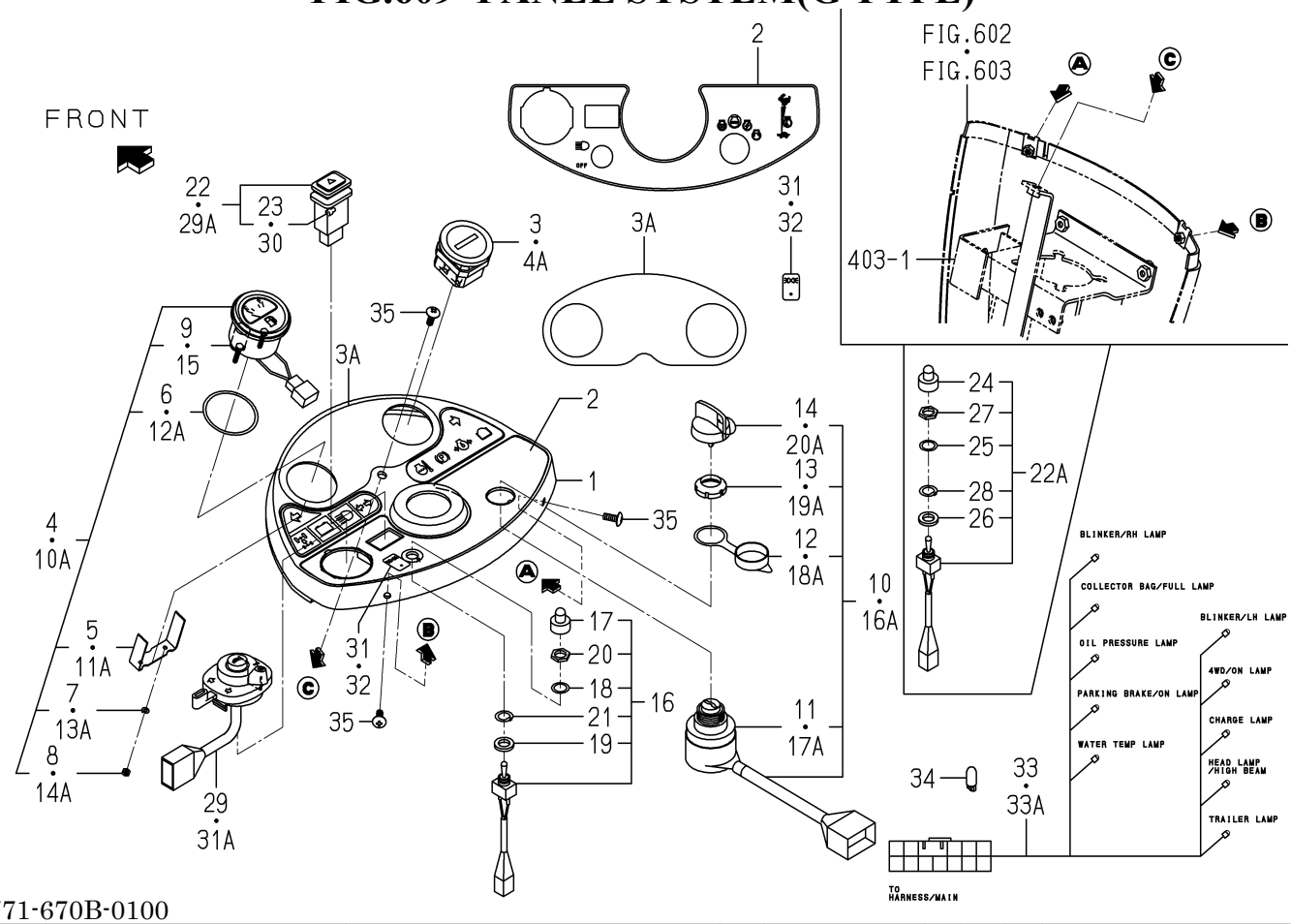

1771-670B-0100

KEY	PART CODE	DESCRIPTION	SPC	TYPE OF MODEL SFH220T	SFH240F	ITC	COL	GRP	REMARKS
20	- - - - - -	BLANK	*						- - - - - -
20A	- - - - - -	BLANK	*						- - - - - -
21	- - - - - -	BLANK	*						- - - - - -
22	- - - - - -	BLANK	*						- - - - - -
22A	1725-670-230-00	SWITCH/TOGGLE ASSY	*	1	1				
23	- - - - - -	BLANK	*						- - - - - -
24	- - - - - -	BLANK	*						- - - - - -
25	- - - - - -	BLANK	*						- - - - - -
26	- - - - - -	BLANK	*						- - - - - -
27	- - - - - -	BLANK	*						- - - - - -
28	- - - - - -	BLANK	*						- - - - - -
29	- - - - - -	BLANK	*						- - - - - -
29A	1740-680-550-00	SWITCH/HAZARD ASSY	*	1	1				
30	- - - - - -	BLANK	*						- - - - - -
31	- - - - - -	BLANK	*						- - - - - -
31A	- - - - - -	BLANK	*						- - - - - -
31A	1739-670-220-20	SWITCH/COMBINATION/E	*	1	1				
32	1770-621-052-00	LABEL/POSITION	*	1	1				
33	- - - - - -	BLANK	*						- - - - - -
33A	1771-690-510-10	HARNESS/PANEL/G ASSY	*	1	1				
34	3650-270-214-00	BULB	*	10	10				
35	1729-705-009-00	SCREW/TRUSS/M06X16	*	3	3				

FIG.610 HARNESS(MAIN)SYSTEM(EXCEPT G TYPE)

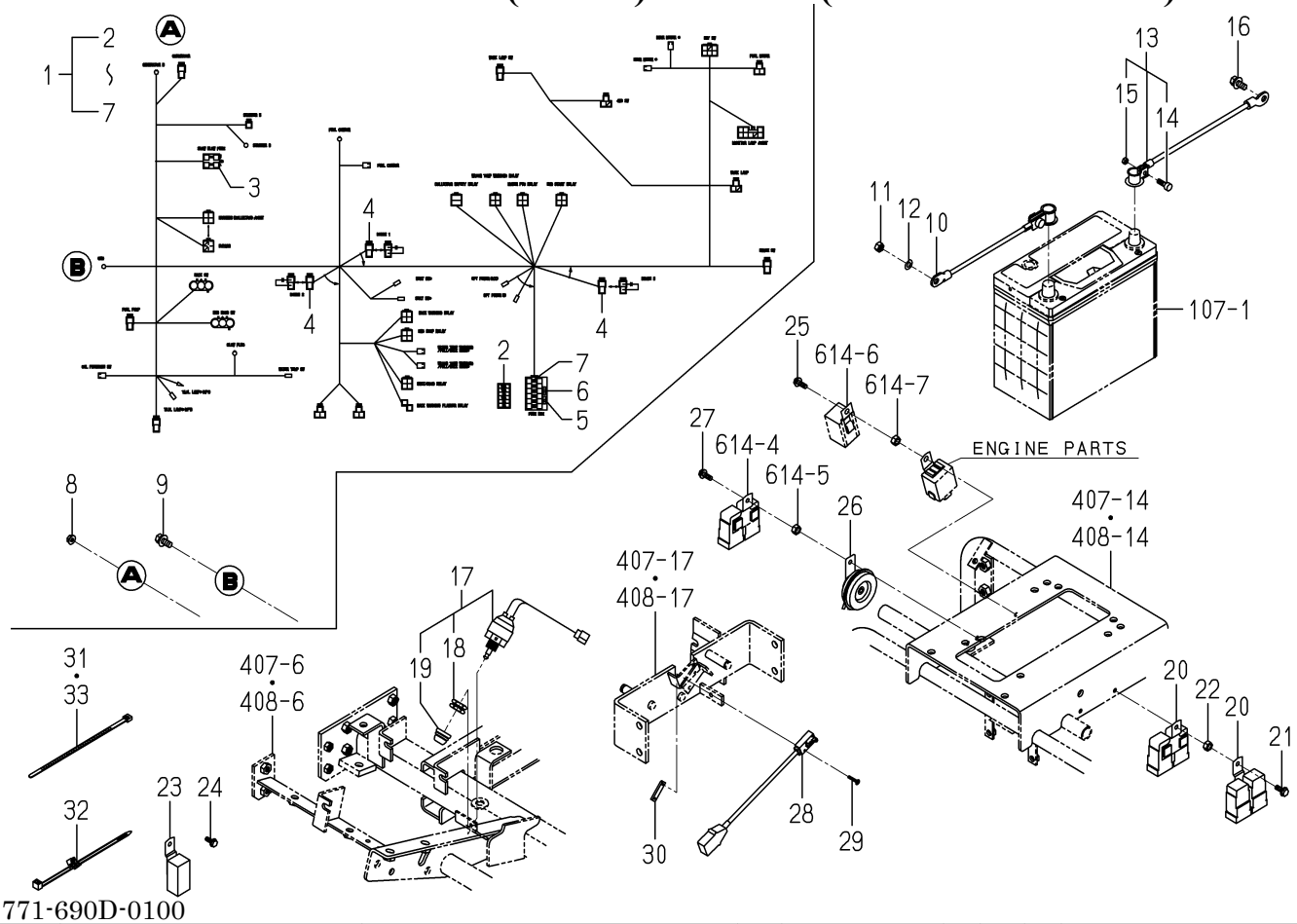

1771-690D-0100

KEY	PART CODE	DESCRIPTION	SPC	TYPE OF MODEL SFH220T	TYPE OF MODEL SFH240F	ITC	COL	GRP	REMARKS
1	1771-690-300-00	HARNESS/MAIN ASSY	*	1	1				
2	1771-690-302-00	LABEL/FUSE	*	1	1				
3	1650-650-222-00	FUSE/SLOWBLOW	*	2	2				
4	1773-652-212-00	DIODE/3A	*	3	3				
5	3824-247-202-00	FUSE/BLADE/32V05A	*	4	4				
6	3821-262-202-00	FUSE/BLADE/32V10A	*	3	3				
7	3821-262-204-00	FUSE/BLADE/32V20A	*	1	1				
8	V360-260-006-00	NUT/M6	*	1	1				
9	V211-360-802-00	BOLT/SP	*	1	1				
10	1771-690-210-10	CABLE/BATTERY ASSY	*	1	1				
11	V304-260-008-00	NUT	*	1	1				
12	V401-160-008-00	WASHER,SP/M 8	*	1	1				
13	1773-650-220-00	CABLE/EARTH ASSY	*	1	1				
14	1725-112-212-00	BOLT	*	1	1				
15	1725-112-213-00	NUT	*	1	1				
16	V211-360-802-00	BOLT/SP	*	1	1				
17	1560-664-250-00	SWITCH/PUSH SET	*	1	1				
18	1560-664-252-00	NUT	*	1	1				
19	1560-664-253-00	BOOT	*	1	1				
20	1690-658-360-10	RELAY/4P-2 ASSY	*	2	2				
21	V230-360-601-60	FLANGEBOLT	*	1	1				
22	V304-260-008-00	NUT	*	1	1				
23	1690-658-380-10	RELAY/4P ASSY	*	1	1				
24	V230-360-601-60	FLANGEBOLT	*	1	1				
25	V230-360-601-60	FLANGEBOLT	*	1	1				
26	1690-650-320-00	HORN ASSY	*	1	1				
27	V230-360-601-60	FLANGEBOLT	*	2	2				
28	1593-623-520-00	SWITCH,MERIT	*	1	1				
29	1614-129-003-00	SCREW/M03X20	*	2	2				
30	3642-496-007-10	PLATE,SWITCH	*	1	1				

FIG.610 HARNESS(MAIN)SYSTEM(EXCEPT G TYPE)

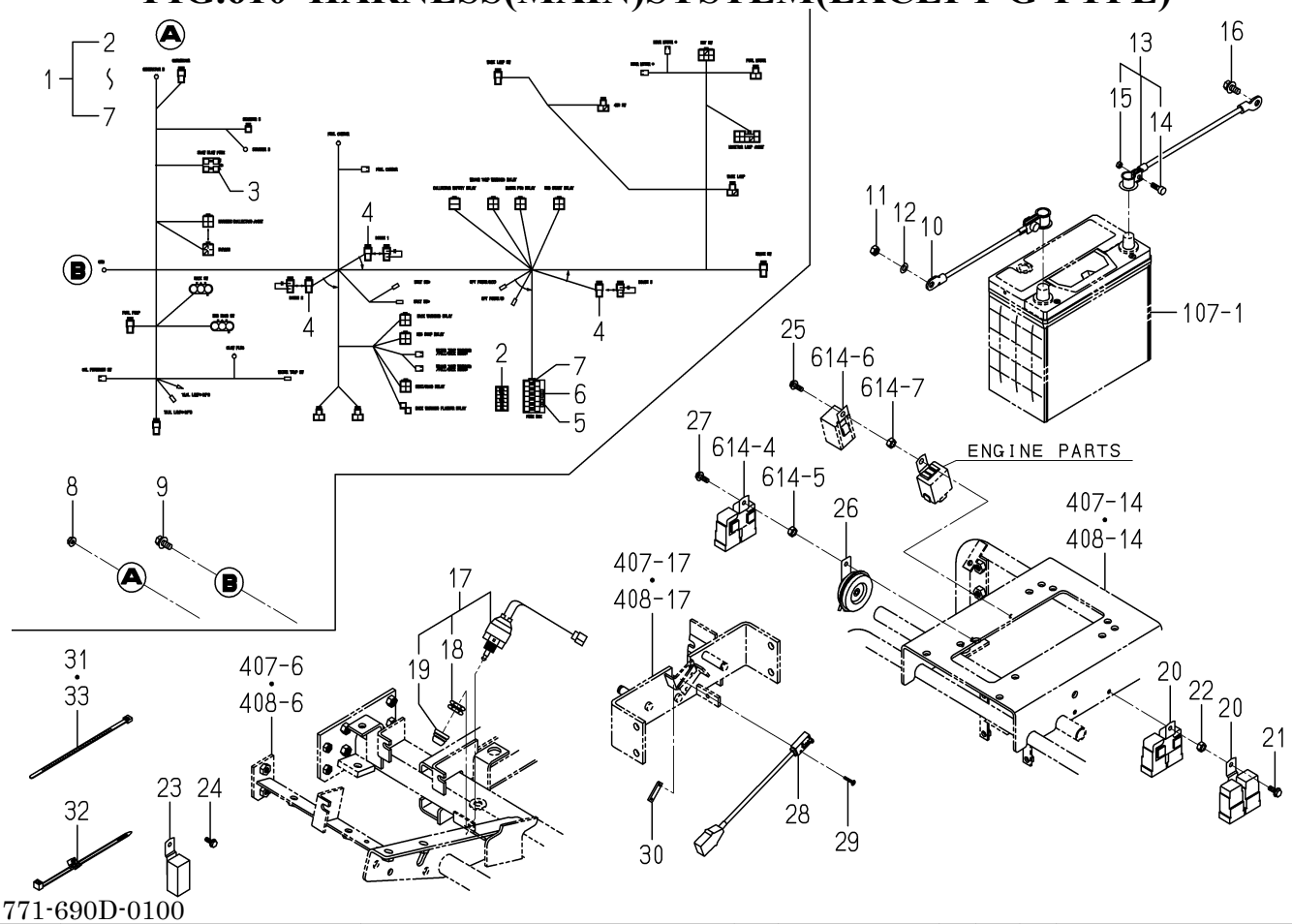

1771-690D-0100

KEY	PART CODE	DESCRIPTION	SPC	TYPE OF MODEL SFH220T	TYPE OF MODEL SFH240F	ITC	COL	GRP	REMARKS
31	1342-402-006-00	BAND/WIRE/250	*	10	10				
32	1376-402-003-00	BAND,WIRE/140	*	12	12				
33	1560-666-004-00	BAND	*	1	1				

FIG.611 HARNESS(MAIN)SYSTEM(G TYPE)

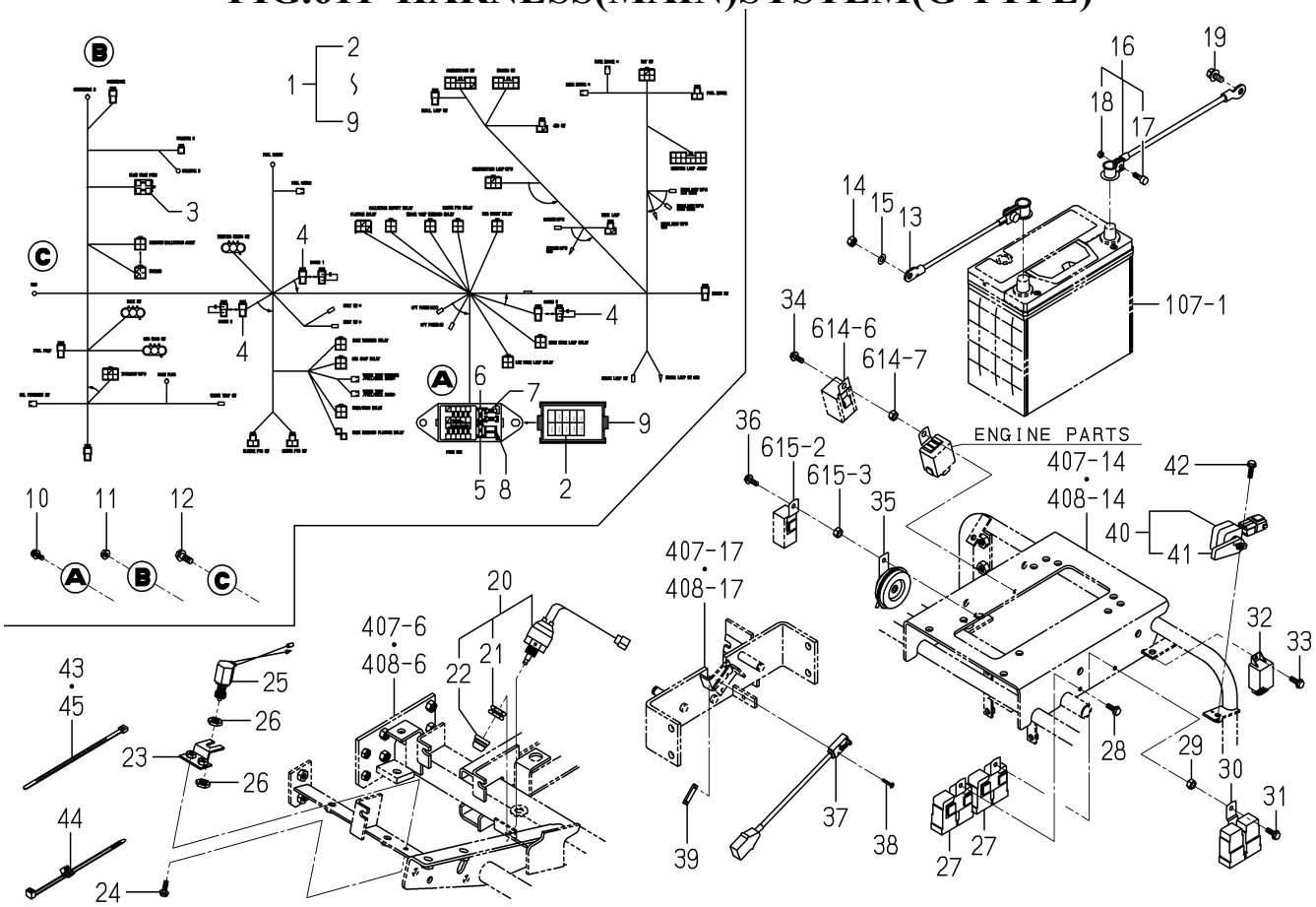

1771-690E-0100

KEY	PART CODE	DESCRIPTION	SPC	TYPE OF MODEL SFH220T	TYPE OF MODEL SFH240F	ITC	COL	GRP	REMARKS
1	1771-690-700-00	HARNESS/MAIN/G ASSY	*	1	1				
2	1771-690-702-00	LABEL/FUSE	*	1	1				
3	1650-650-222-00	FUSE/SLOWBLOW	*	2	2				
4	1773-652-212-00	DIODE/3A	*	3	3				
5	3824-247-202-00	FUSE/BLADE/32V05A	*	4	4				
6	3821-262-202-00	FUSE/BLADE/32V10A	*	4	4				
7	3821-262-204-00	FUSE/BLADE/32V20A	*	5	5				
8	3827-270-002-00	TOOL/FUSE	*	1	1				
9	1773-652-213-00	COVER/FUSEBOX	*	1	1				
10	V230-360-601-60	FLANGEBOLT	*	2	2				
11	V360-260-006-00	NUT/M6	*	1	1				
12	V231-360-802-00	FLANGEBOLT	*	1	1				
13	1771-690-210-10	CABLE/BATTERY ASSY	*	1	1				
14	V304-260-008-00	NUT	*	1	1				
15	V401-160-008-00	WASHER,SP/M 8	*	1	1				
16	1773-650-220-00	CABLE/EARTH ASSY	*	1	1				
17	1725-112-212-00	BOLT	*	1	1				
18	1725-112-213-00	NUT	*	1	1				
19	V211-360-802-00	BOLT/SP	*	1	1				
20	1560-664-250-00	SWITCH/PUSH SET	*	1	1				
21	1560-664-252-00	NUT	*	1	1				
22	1560-664-253-00	BOOT	*	1	1				
23	1771-690-520-00	STAY/SWITCH COMP	*	1	1				
24	V230-360-601-60	FLANGEBOLT	*	2	2				
25	1518-621-320-00	SWITCH,STOP	*	1	1				
26	1432-621-006-10	NUT,LOCK	*	2	2				
27	1690-658-360-10	RELAY/4P-2 ASSY	*	2	2				
28	V230-360-601-60	FLANGEBOLT	*	1	1				
29	V304-260-008-00	NUT	*	1	1				
30	1690-658-360-10	RELAY/4P-2 ASSY	*	1	1				

FIG.611 HARNESS(MAIN)SYSTEM(G TYPE)

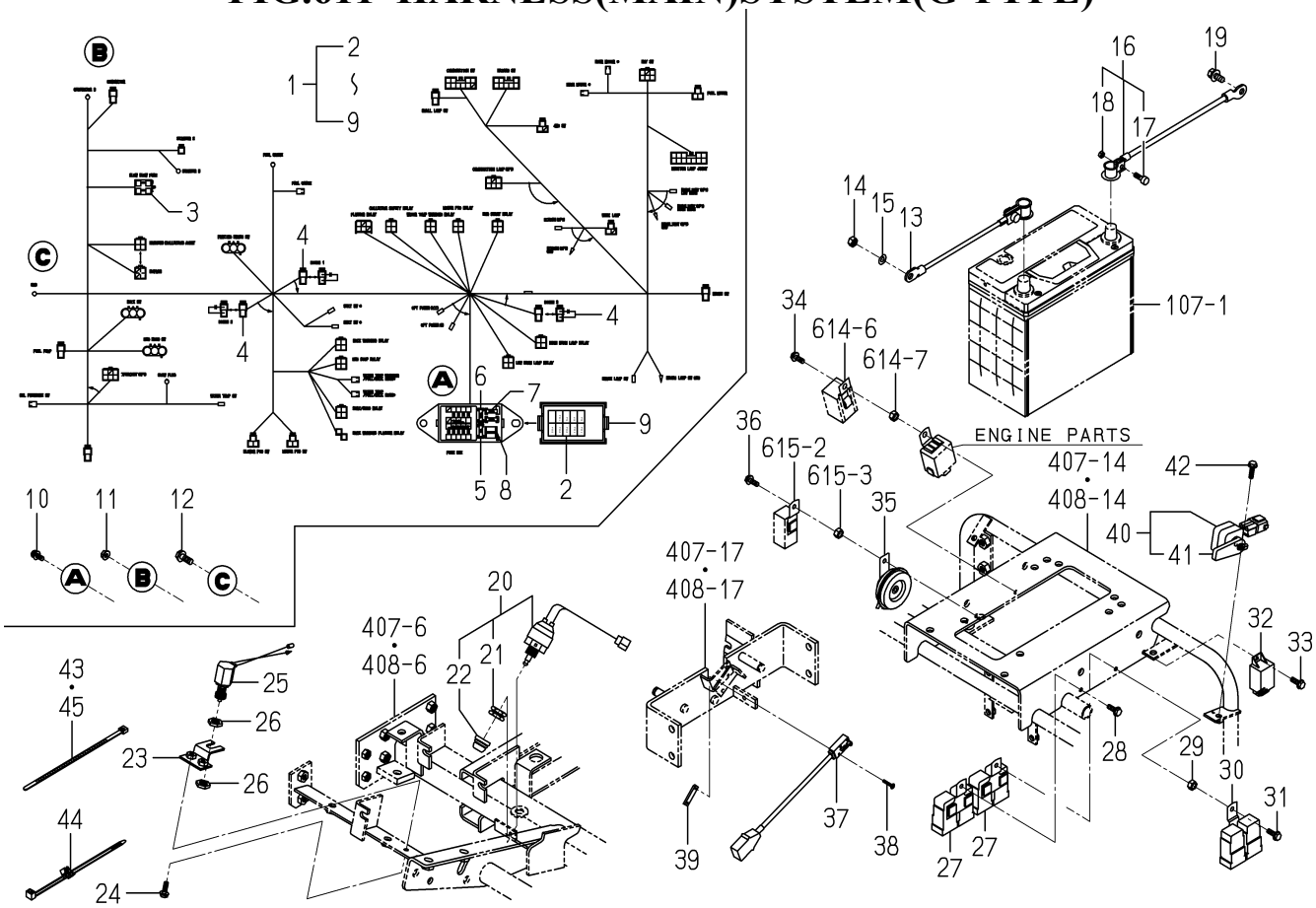

1771-690E-0100

KEY	PART CODE	DESCRIPTION	SPC	TYPE OF MODEL SFH220T	SFH240F	ITC	COL	GRP	REMARKS
31	V230-360-601-60	FLANGEBOLT	*	1	1				
32	1739-681-220-10	RELAY/FLASHER/EEC	*	1	1				
33	V230-360-601-60	FLANGEBOLT	*	1	1				
34	V230-360-601-60	FLANGEBOLT	*	1	1				
35	1690-650-320-00	HORN ASSY	*	1	1				
36	V230-360-601-60	FLANGEBOLT	*	2	2				
37	1593-623-520-00	SWITCH,MERIT	*	1	1				
38	1614-129-003-00	SCREW/M03X20	*	2	2				
39	3642-496-007-10	PLATE,SWITCH	*	1	1				
40	1716-680-330-00	SWITCH/LEVER ASSY	*	1	1				
41	1716-680-222-00	ARM	*	1	1				
42	V230-360-602-00	FLANGEBOLT	*	1	1				
43	1342-402-006-00	BAND/WIRE/250	*	10	10				
44	1376-402-003-00	BAND,WIRE/140	*	12	12				
45	1560-666-004-00	BAND	*	1	1				

FIG.612 CONNECTOR(HARNESS/HOOD)SYSTEM (EXCEPT F2 TYPE)

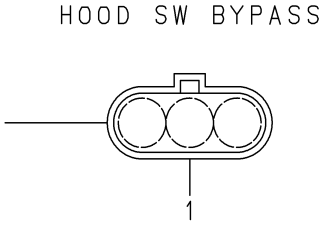

1771-691 -0100

KEY	PART CODE	DESCRIPTION	SPC	TYPE OF MODEL		ITC	COL	GRP	REMARKS
				SFH220T	SFH240F				
1	1752-690-530-10	CONNECTOR/JOINT ASSY	*	1	1				

FIG.613 SENSOR(HOOD)SYSTEM(F2 TYPE)

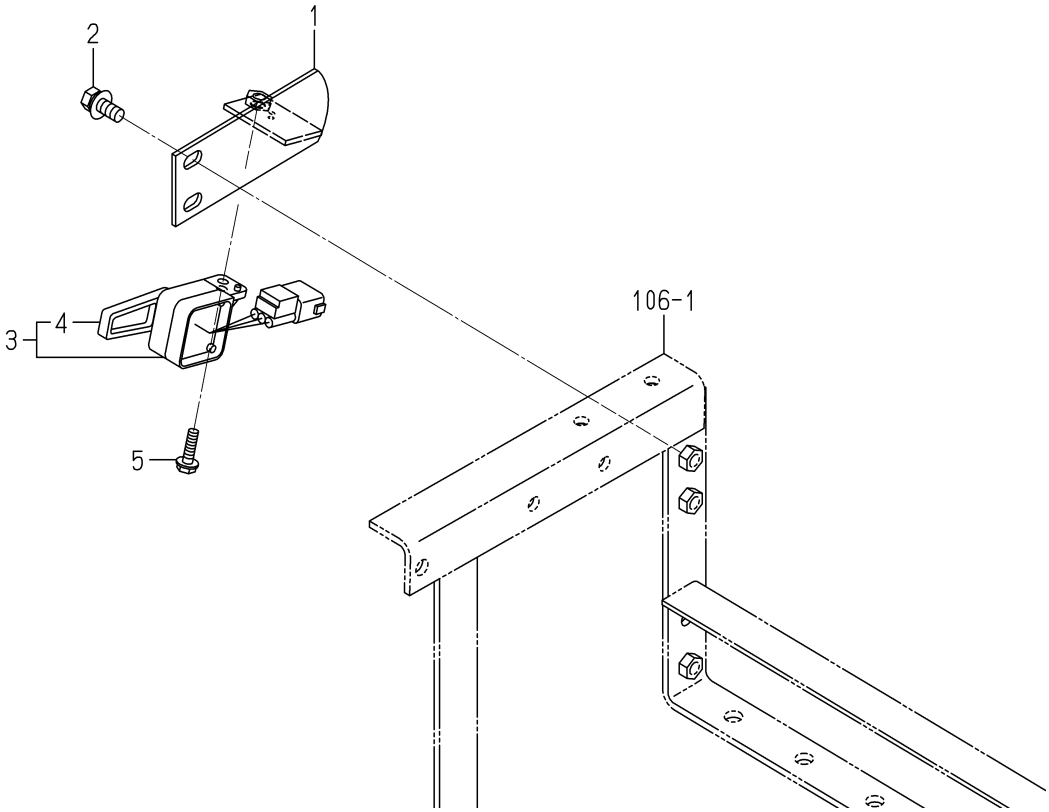

1771-691A-0100

KEY	PART CODE	DESCRIPTION	SPC	TYPE OF MODEL SFH220T	TYPE OF MODEL SFH240F	ITC	COL	GRP	REMARKS
1	1771-691-540-00	STAY/SWITCH COMP	*	1	1				
2	V211-360-802-00	BOLT/SP	*	2	2				
3	1716-680-330-00	SWITCH/LEVER ASSY	*	1	1				
4	1716-680-222-00	ARM	*	1	1				
5	V230-360-602-00	FLANGEBOLT	*	1	1				

FIG.614 SENSOR(LEVER/PTO/SIDE)SYSTEM(B TYPE)

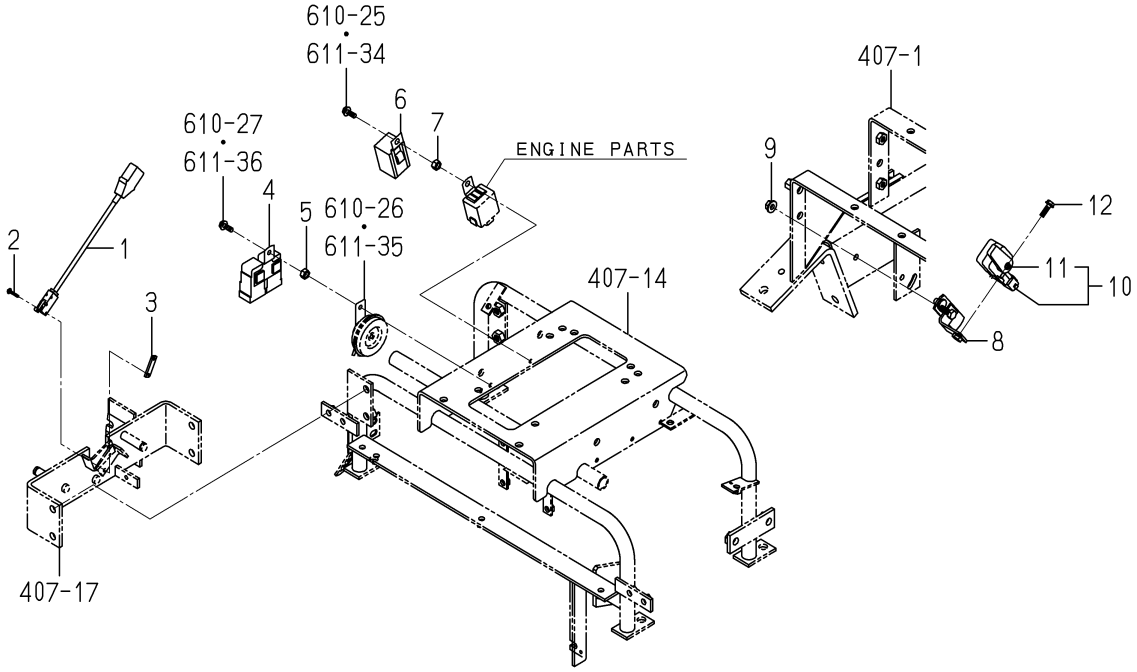

1771-692 -0100

KEY	PART CODE	DESCRIPTION	SPC	TYPE OF MODEL SFH220T	TYPE OF MODEL SFH240F	ITC	COL	GRP	REMARKS
1	1593-623-520-00	SWITCH,MERIT	*		1				
2	1614-129-003-00	SCREW/M03X20	*		2				
3	3642-496-007-10	PLATE,SWITCH	*		1				
4	1690-658-360-10	RELAY/4P-2 ASSY	*		1				
5	V304-260-008-00	NUT	*		1				
6	1650-652-390-00	RELAY/FLASHER ASSY	*		1				
7	V304-260-008-00	NUT	*		1				
8	1771-692-210-00	STAY/SWITCH/BAC COMP	*		1				
9	V363-260-008-00	NUT/WASHER	*		2				
10	1716-680-330-00	SWITCH/LEVER ASSY	*		1				
11	1716-680-222-00	ARM	*		1				
12	V230-360-602-00	FLANGEBOLT	*		1				

FIG.615 CONNECTOR(HARNESS/PTO/SIDE)SYSTEM (EXCEPT B TYPE)

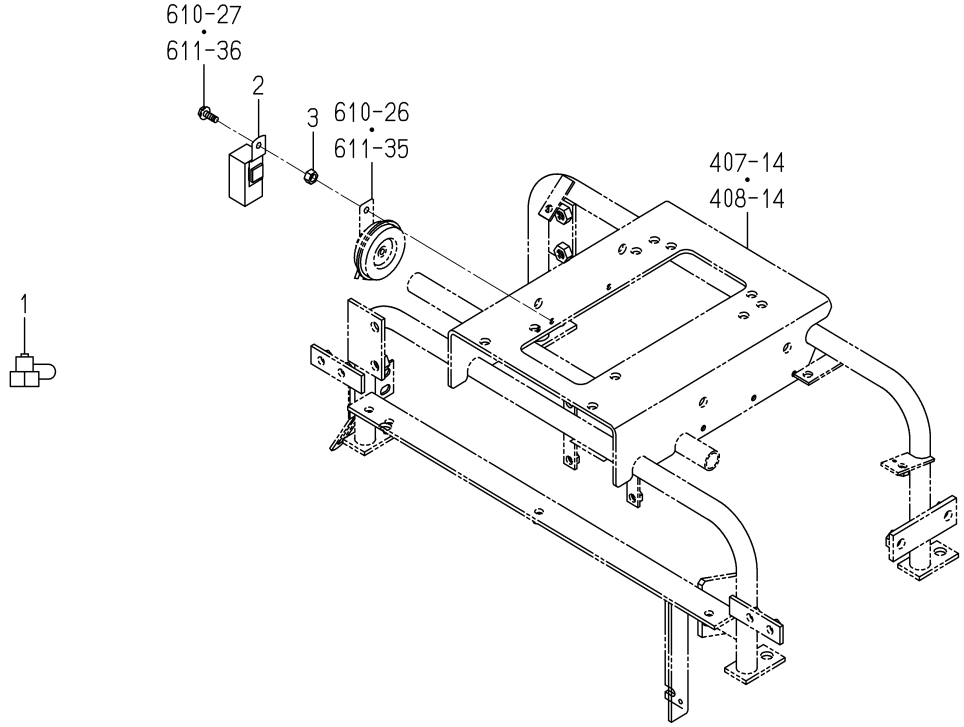

1771-692A-0100

KEY	PART CODE	DESCRIPTION	SPC	TYPE OF MODEL SFH220T	TYPE OF MODEL SFH240F	ITC	COL	GRP	REMARKS
1	1594-312-005-00	CONNECTER	*	1	1				
2	1690-658-380-10	RELAY/4P ASSY	*	1	1				
3	V304-260-008-00	NUT	*	1	1				

FIG.616 SENSOR(4WD)SYSTEM(SFH240F)

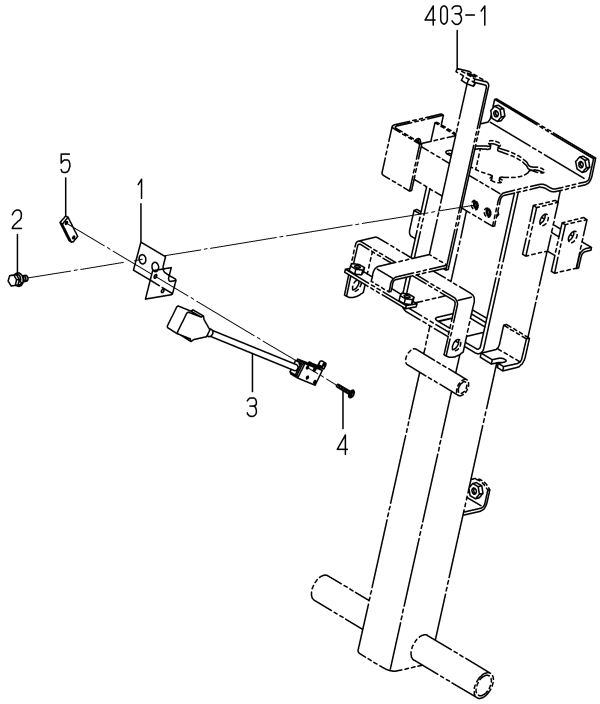

1771-693 -0100

KEY	PART CODE	DESCRIPTION	SPC	TYPE OF MODEL SFH220T	TYPE OF MODEL SFH240F	ITC	COL	GRP	REMARKS
1	1770-623-001-00	STAY/SWITCH	*		1				
2	V210-360-601-60	BOLT(SP)/M6X16	*		2				
3	1593-623-520-00	SWITCH,MERIT	*		1				
4	1614-129-003-00	SCREW/M03X20	*		2				
5	3642-496-007-10	PLATE,SWITCH	*		1				

FIG.801 BLOWER SYSTEM(B TYPE)

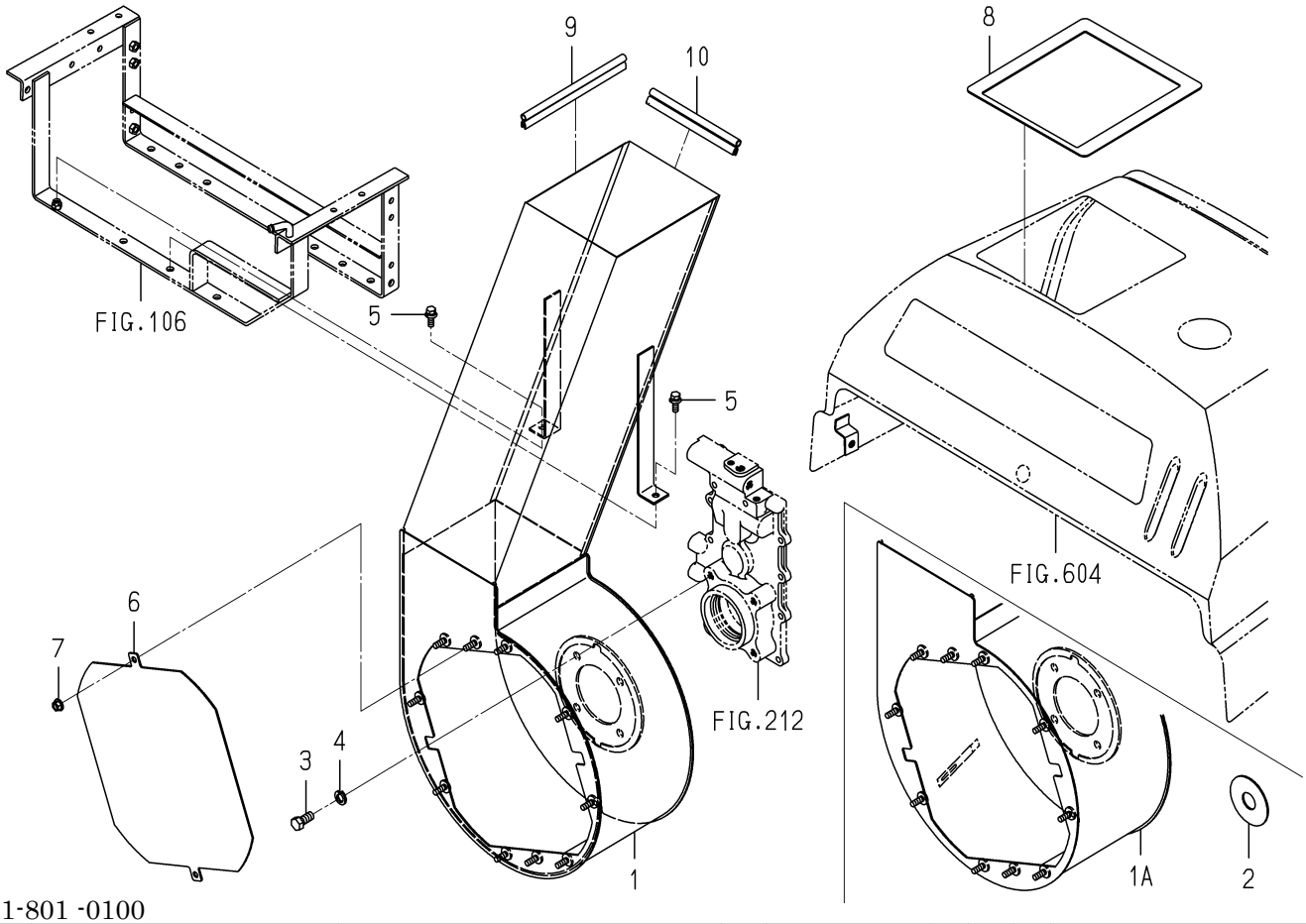

1771-801 -0100

KEY	PART CODE	DESCRIPTION	SPC	TYPE OF MODEL SFH220T	SFH240F	ITC	COL	GRP	REMARKS
1	- - - - - -	BLANK	*						- - - - - -
1A	1771-801-210-20	CASE/BLOWER COMP	*		1		7F		
2	- - - - - -	BLANK	*						- - - - - -
3	V201-361-202-50	BOLT/M12X25	*		4				
4	V401-160-012-00	WASHER,SP/M12	*		4				
5	- - - - - -	BLANK	*						- - - - - -
5	V211-360-802-50	BOLT/SP	*		2				
6	1771-801-009-00	COVER/SHAFT	*		1		7F		
7	V362-260-008-00	NUT/WASHER	*		2				
8	1771-801-005-00	COVER/FENDER	*		1				
9	1771-801-007-00	PROTECTOR/215	*		2				
10	1771-801-008-00	PROTECTOR/185	*		2				

FIG.901 ORNAMENT(SFH240F)

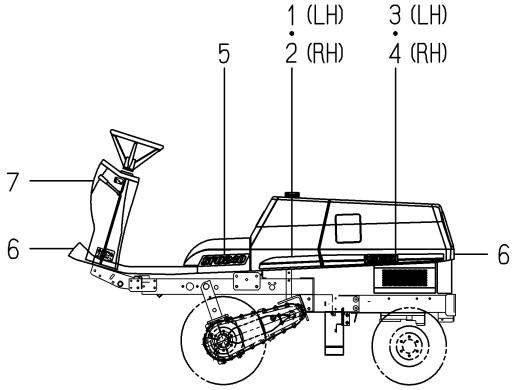

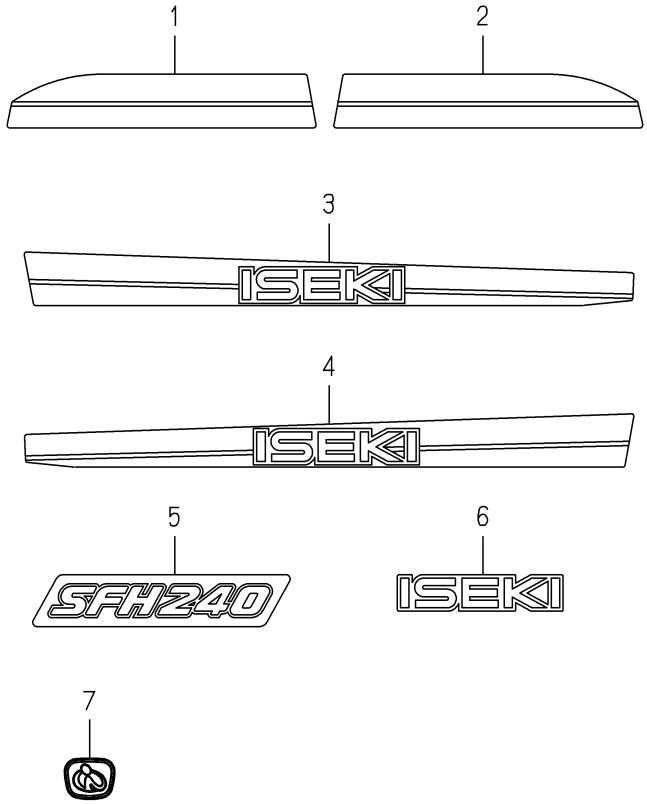

1771-901 -0100

KEY	PART CODE	DESCRIPTION	SPC	TYPE OF MODEL SFH220T	TYPE OF MODEL SFH240F	ITC	COL	GRP	REMARKS
1	1771-901-001-00	MOLDING/FRONT/LH	*		1				
2	1771-901-002-00	MOLDING/FRONT/RH	*		1				
3	1770-901-003-00	ORNAMENT/REAR/LH	*		1				
4	1770-901-004-00	ORNAMENT/REAR/RH	*		1				
5	1771-901-005-00	ORNAMENT/240	*		2				
6	1716-901-016-00	ORNAMENT/ISEKI	*		2				
7	1118-901-002-00	ORNAMENT/I	*		1				

FIG.902 ORNAMENT(SFH220T)

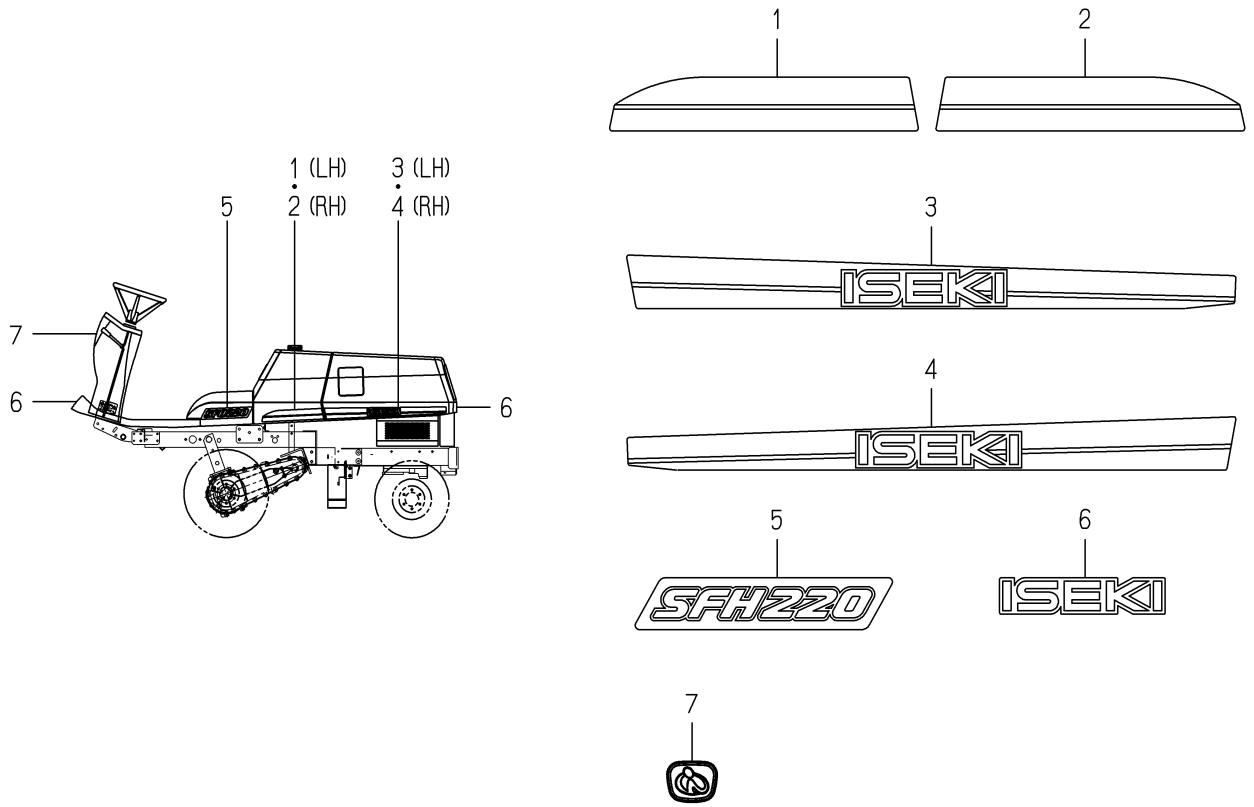

1771-901A-0100

KEY	PART CODE	DESCRIPTION	SPC	TYPE OF MODEL SFH220T	SFH240F	ITC	COL	GRP	REMARKS
1	1771-901-001-00	MOLDING/FRONT/LH	*	1					
2	1771-901-002-00	MOLDING/FRONT/RH	*	1					
3	1770-901-003-00	ORNAMENT/REAR/LH	*	1					
4	1770-901-004-00	ORNAMENT/REAR/RH	*	1					
5	1771-901-055-00	ORNAMENT/220	*	2					
6	1716-901-016-00	ORNAMENT/ISEKI	*	2					
7	1118-901-002-00	ORNAMENT/I	*	1					

FIG.903 LABEL(CONTROL)(SFH240F-BE42C TYPE)

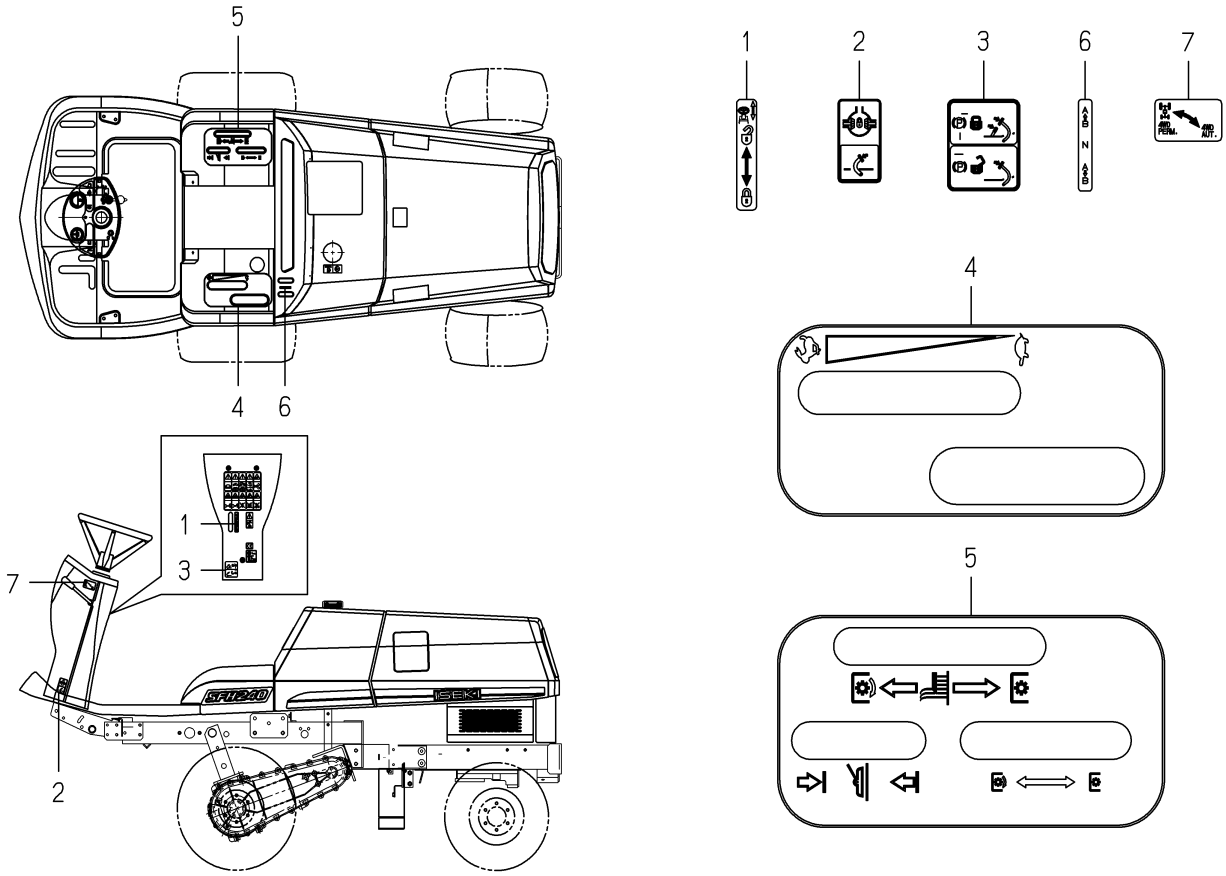

1771-902 -0100

KEY	PART CODE	DESCRIPTION	SPC	TYPE OF MODEL SFH220T	TYPE OF MODEL SFH240F	ITC	COL	GRP	REMARKS
1	1636-901-018-00	LABEL/CONTROL/TILT	*		1				
2	1689-903-004-00	LABEL/DIFF	*		1				
3	1689-903-008-00	LABEL/PARKING	*		1				
4	1771-902-001-00	LABEL/CONTROL/LH	*		1				
5	1771-902-002-00	LABEL/CONTROL/RH	*		1				
6	1739-530-008-00	LABEL/CONTROL/SUBCON	*		1				
7	1689-904-002-00	LABEL/CONTROL/2WD-4W	*		1				

FIG.904 LABEL(CONTROL)(SFH220T-WE42C TYPE)

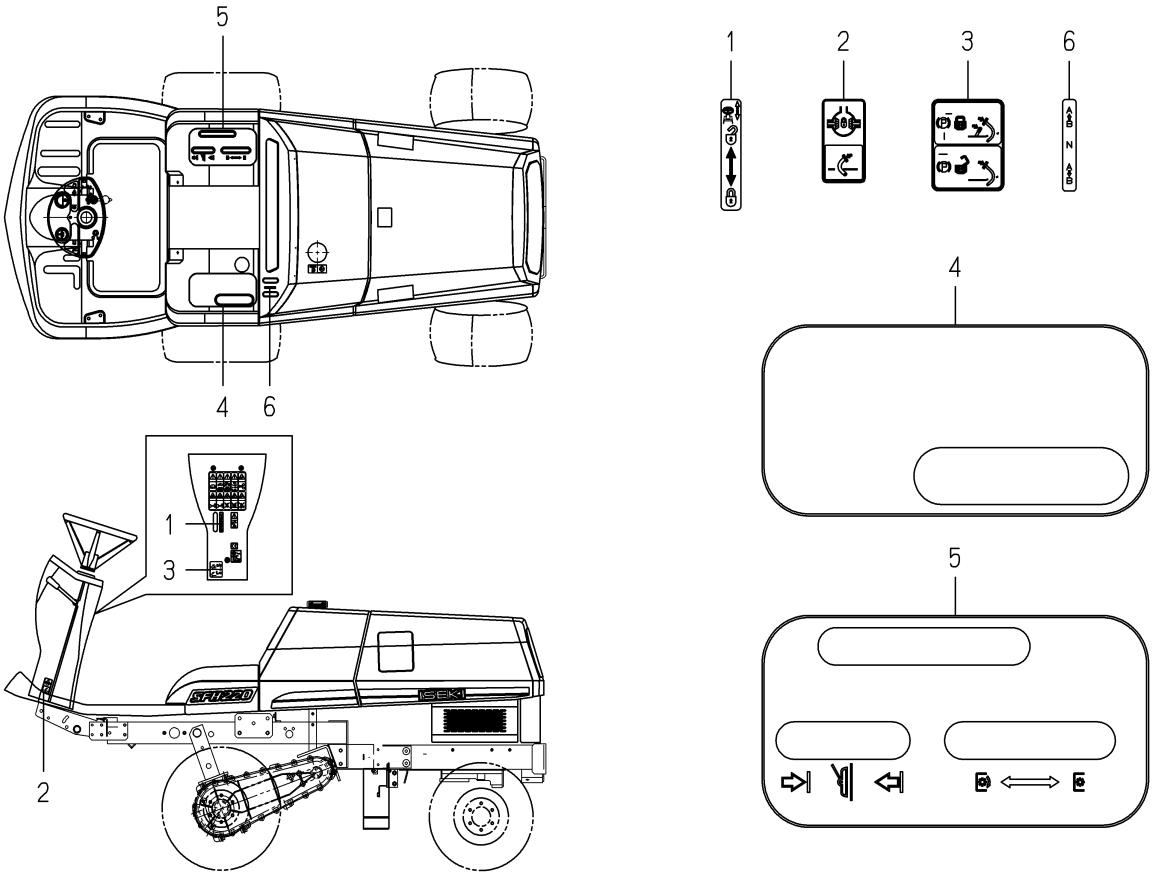

1771-902A-0100

KEY	PART CODE	DESCRIPTION	SPC	TYPE OF MODEL SFH220T	TYPE OF MODEL SFH240F	ITC	COL	GRP	REMARKS
1	1636-901-018-00	LABEL/CONTROL/TILT	*	1					
2	1689-903-004-00	LABEL/DIFF	*	1					
3	1689-903-008-00	LABEL/PARKING	*	1					
4	1771-902-051-00	LABEL/CONTROL/LH/220	*	1					
5	1771-902-052-00	LABEL/CONTROL/RH/220	*	1					
6	1739-530-008-00	LABEL/CONTROL/SUBCON	*	1					

FIG.905 LABEL(CONTROL)(SFH240F-BG TYPE)

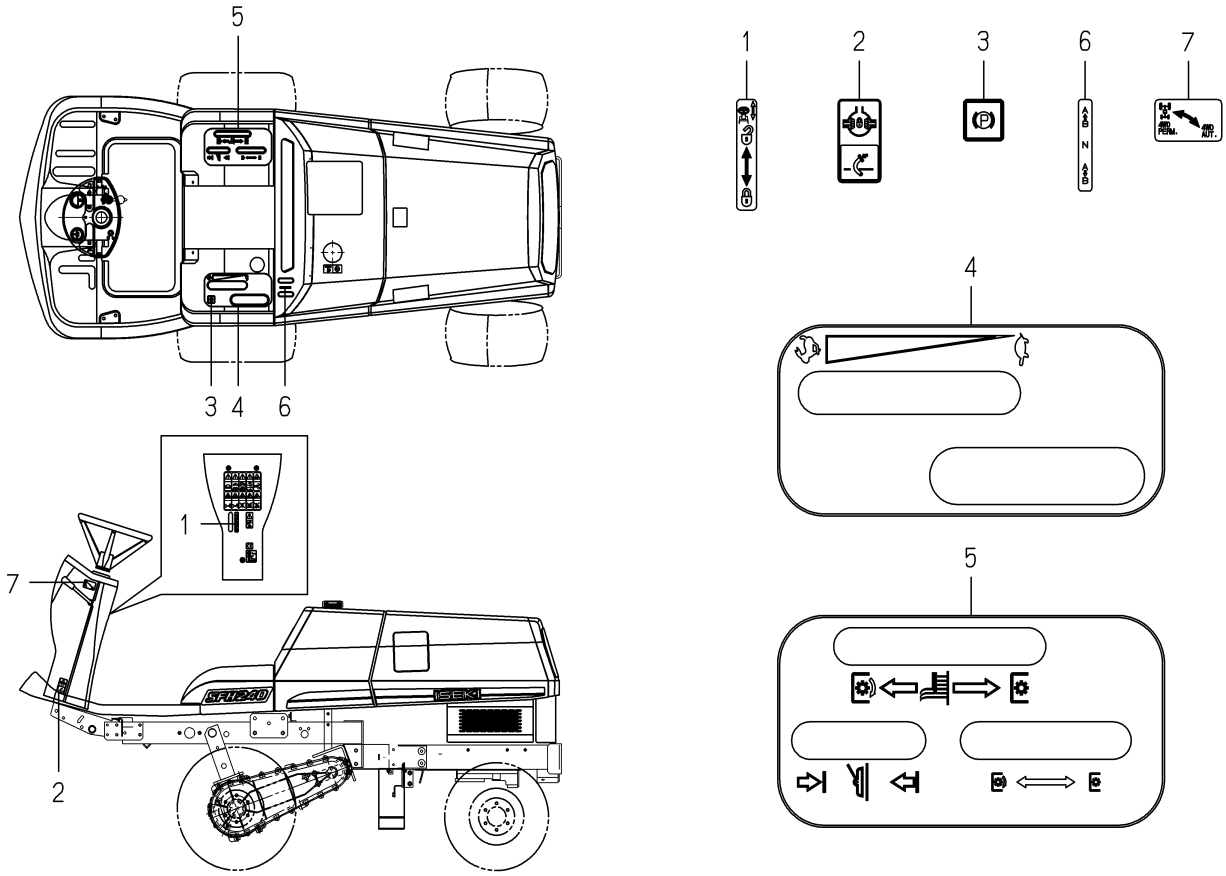

1771-902B-0100

KEY	PART CODE	DESCRIPTION	SPC	TYPE OF MODEL SFH220T	TYPE OF MODEL SFH240F	ITC	COL	GRP	REMARKS
1	1636-901-018-00	LABEL/CONTROL/TILT	*		1				
2	1689-903-004-00	LABEL/DIFF	*		1				
3	1770-902-051-00	LABEL/PARKING	*		1				
4	1771-902-001-00	LABEL/CONTROL/LH	*		1				
5	1771-902-002-00	LABEL/CONTROL/RH	*		1				
6	1739-530-008-00	LABEL/CONTROL/SUBCON	*		1				
7	1689-904-002-00	LABEL/CONTROL/2WD-4W	*		1				

FIG.906 LABEL(CONTROL)(SFH220T-GW TYPE)

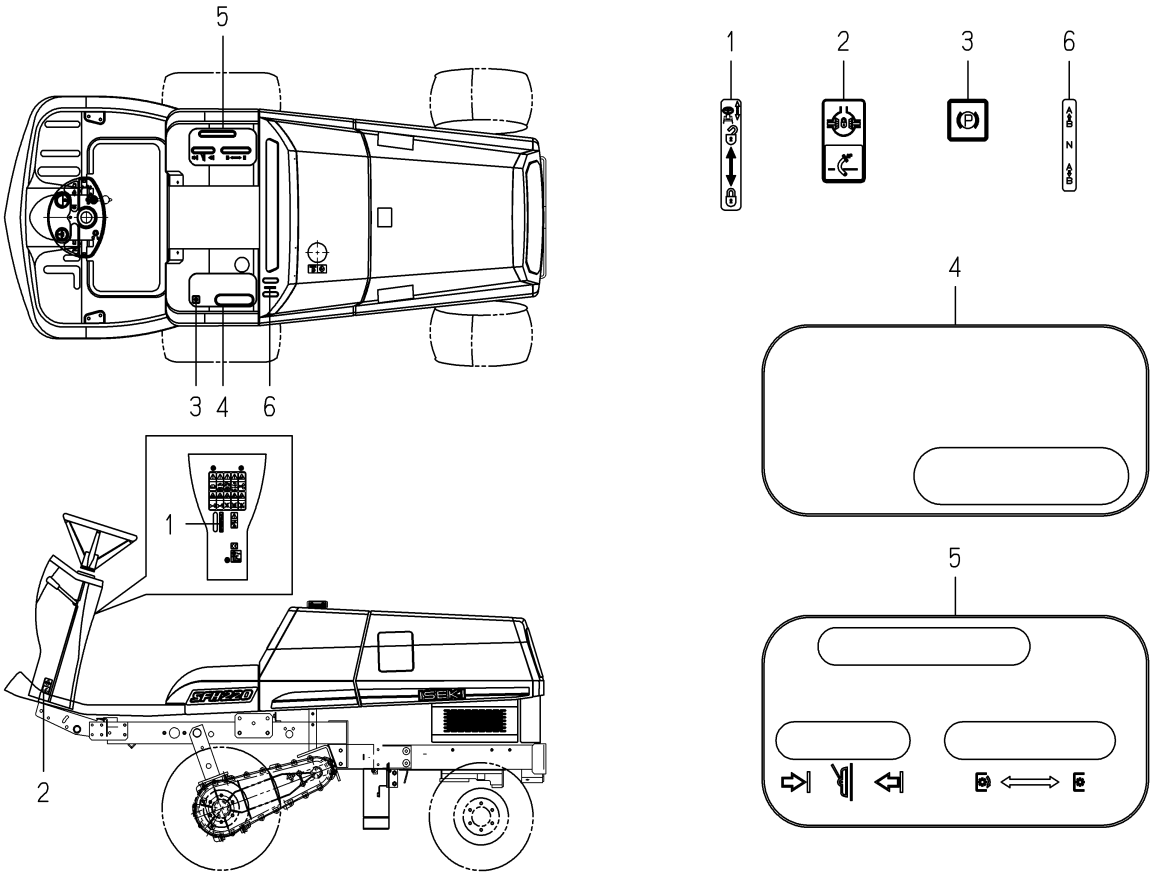

1771-902C-0100

KEY	PART CODE	DESCRIPTION	SPC	TYPE OF MODEL SFH220T	TYPE OF MODEL SFH240F	ITC	COL	GRP	REMARKS
1	1636-901-018-00	LABEL/CONTROL/TILT	*	1					
2	1689-903-004-00	LABEL/DIFF	*	1					
3	1770-902-051-00	LABEL/PARKING	*	1					
4	1771-902-051-00	LABEL/CONTROL/LH/220	*	1					
5	1771-902-052-00	LABEL/CONTROL/RH/220	*	1					
6	1739-530-008-00	LABEL/CONTROL/SUBCON	*	1					

FIG.907 LABEL(CONTROL)(SFH240F-WE42C TYPE)

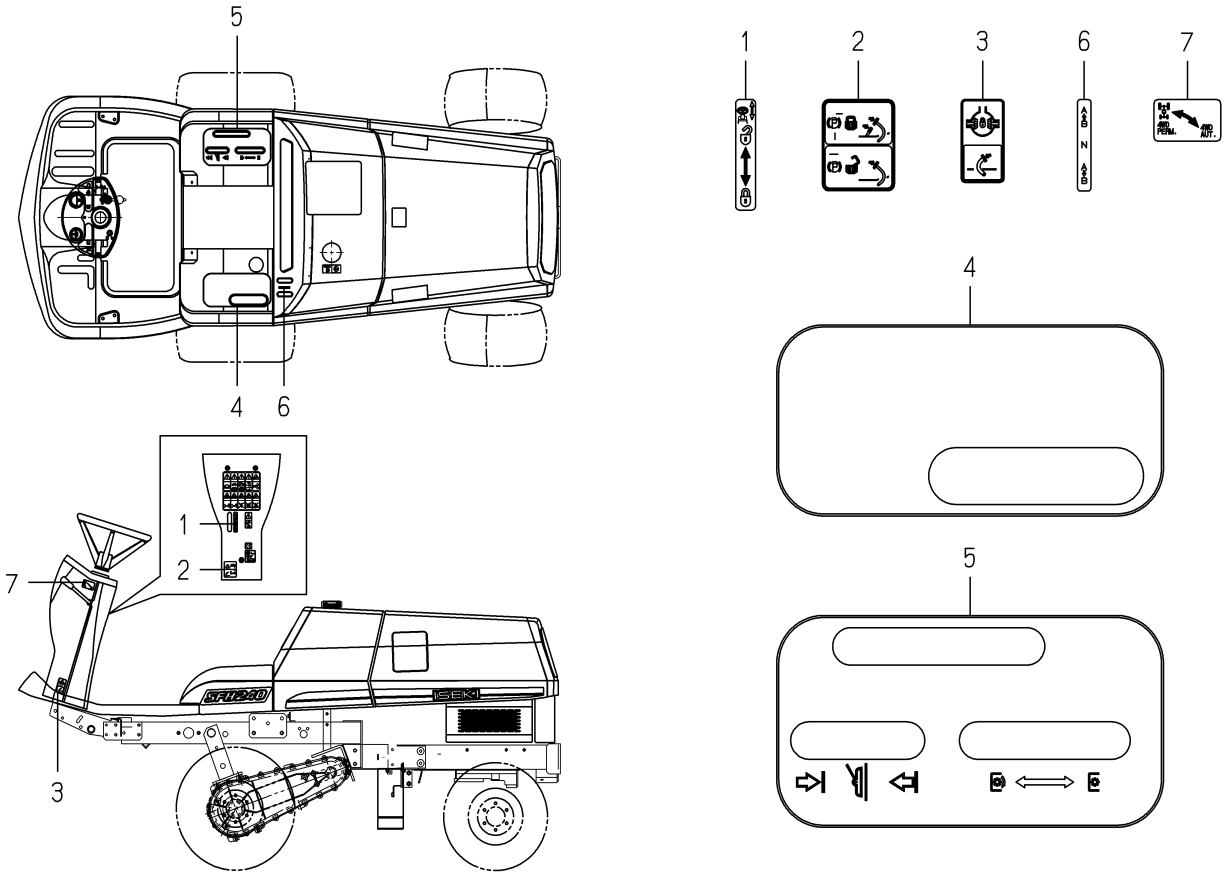

1771-902D-0100

KEY	PART CODE	DESCRIPTION	SPC	TYPE OF MODEL SFH220T	TYPE OF MODEL SFH240F	ITC	COL	GRP	REMARKS
1	1636-901-018-00	LABEL/CONTROL/TILT	*		1				
2	1689-903-008-00	LABEL/PARKING	*		1				
3	1689-903-004-00	LABEL/DIFF	*		1				
4	1771-902-051-00	LABEL/CONTROL/LH/220	*		1				
5	1771-902-052-00	LABEL/CONTROL/RH/220	*		1				
6	1739-530-008-00	LABEL/CONTROL/SUBCON	*		1				
7	1689-904-002-00	LABEL/CONTROL/2WD-4W	*		1				

FIG.908 LABEL(CONTROL)(SFH240F-GW TYPE)

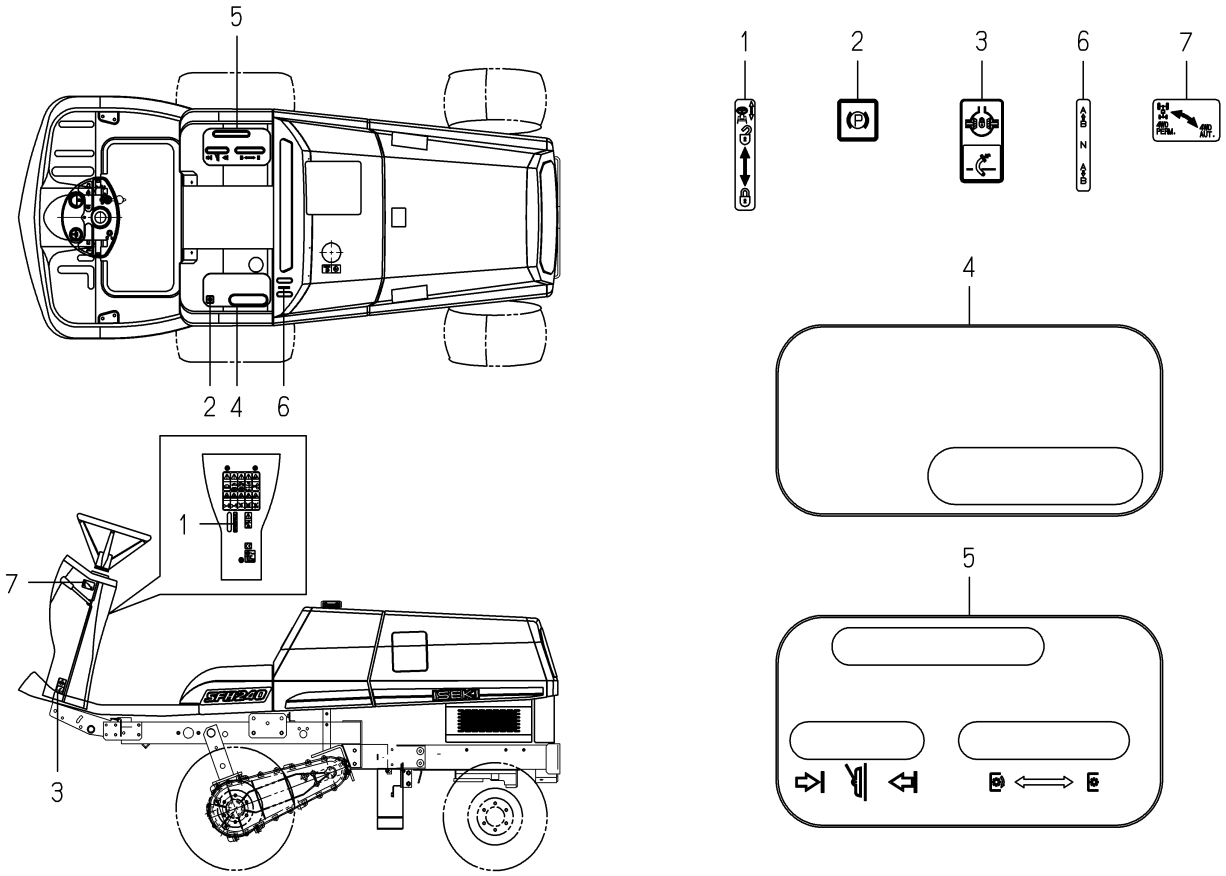

1771-902E-0100

KEY	PART CODE	DESCRIPTION	SPC	TYPE OF MODEL SFH220T	TYPE OF MODEL SFH240F	ITC	COL	GRP	REMARKS
1	1636-901-018-00	LABEL/CONTROL/TILT	*		1				
2	1770-902-051-00	LABEL/PARKING	*		1				
3	1689-903-004-00	LABEL/DIFF	*		1				
4	1771-902-051-00	LABEL/CONTROL/LH/220	*		1				
5	1771-902-052-00	LABEL/CONTROL/RH/220	*		1				
6	1739-530-008-00	LABEL/CONTROL/SUBCON	*		1				
7	1689-904-002-00	LABEL/CONTROL/2WD-4W	*		1				

FIG.909 LABEL(CAUTION)(SFH240F-B TYPE)

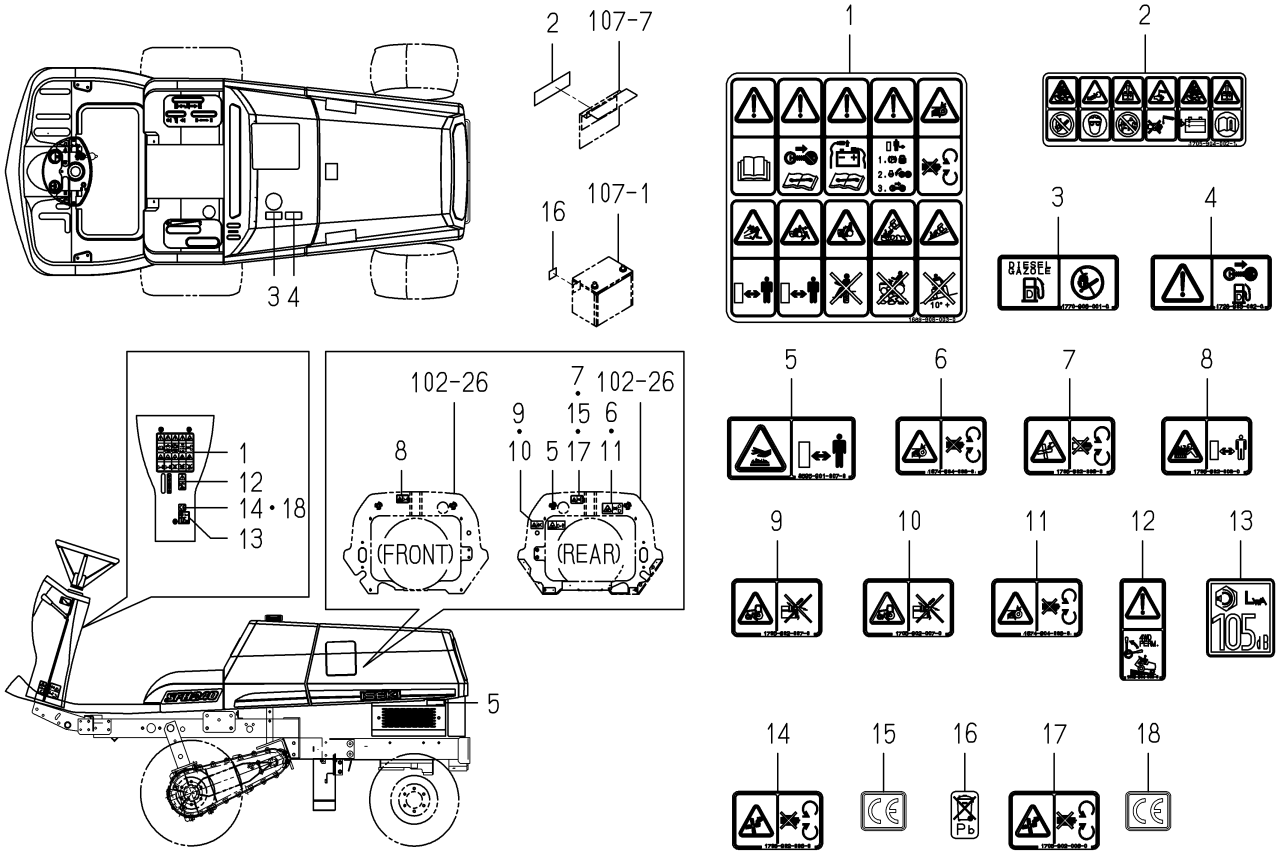

1771-906 -0100

KEY	PART CODE	DESCRIPTION	SPC	TYPE OF MODEL SFH220T	TYPE OF MODEL SFH240F	ITC	COL	GRP	REMARKS
1	- - - - - -	BLANK	*						- - - - - -
1	1689-906-003-00	LABEL/CAUTION	*		1				
2	- - - - - -	BLANK	*						- - - - - -
2	1705-904-002-10	LABEL/BATTERY	*		1				
3	- - - - - -	BLANK	*						- - - - - -
3	1770-906-001-00	LABEL/FUEL	*		1				
4	1728-903-002-00	LABEL/WARNING/FUEL	*		1				
5	- - - - - -	BLANK	*						- - - - - -
5	8595-901-007-00	LABEL/WARNING/HOT	*		2				
6	- - - - - -	BLANK	*						- - - - - -
6	1674-904-008-00	LABEL/WARNING/BELT	*		1				
7	- - - - - -	BLANK	*						- - - - - -
7	1705-902-006-00	LABEL/W/FAN	*		1				
8	- - - - - -	BLANK	*						- - - - - -
8	1705-902-008-00	LABEL/W/RADIATOR	*		1				
9	1705-902-007-00	LABEL/W/STARTER	*		1				
10	- - - - - -	BLANK	*						- - - - - -
10	- - - - - -	BLANK	*						- - - - - -
11	1674-904-008-00	LABEL/WARNING/BELT	*		1				
12	- - - - - -	BLANK	*						- - - - - -
12	1689-904-003-00	LABEL/WARNING/2WD-4W	*		1				
13	- - - - - -	BLANK	*						- - - - - -
13	1705-904-011-00	LABEL/NOISE/LWA/105	*		1				
14	1705-902-006-00	LABEL/W/FAN	*		1				
15	- - - - - -	BLANK	*						- - - - - -
16	1728-903-003-00	LABEL/BATTERY	*		1				
17	- - - - - -	BLANK	*						- - - - - -
18	2500-901-027-00	LABEL/CE	*		1				

FIG.910 LABEL(CAUTION)(SFH220T)

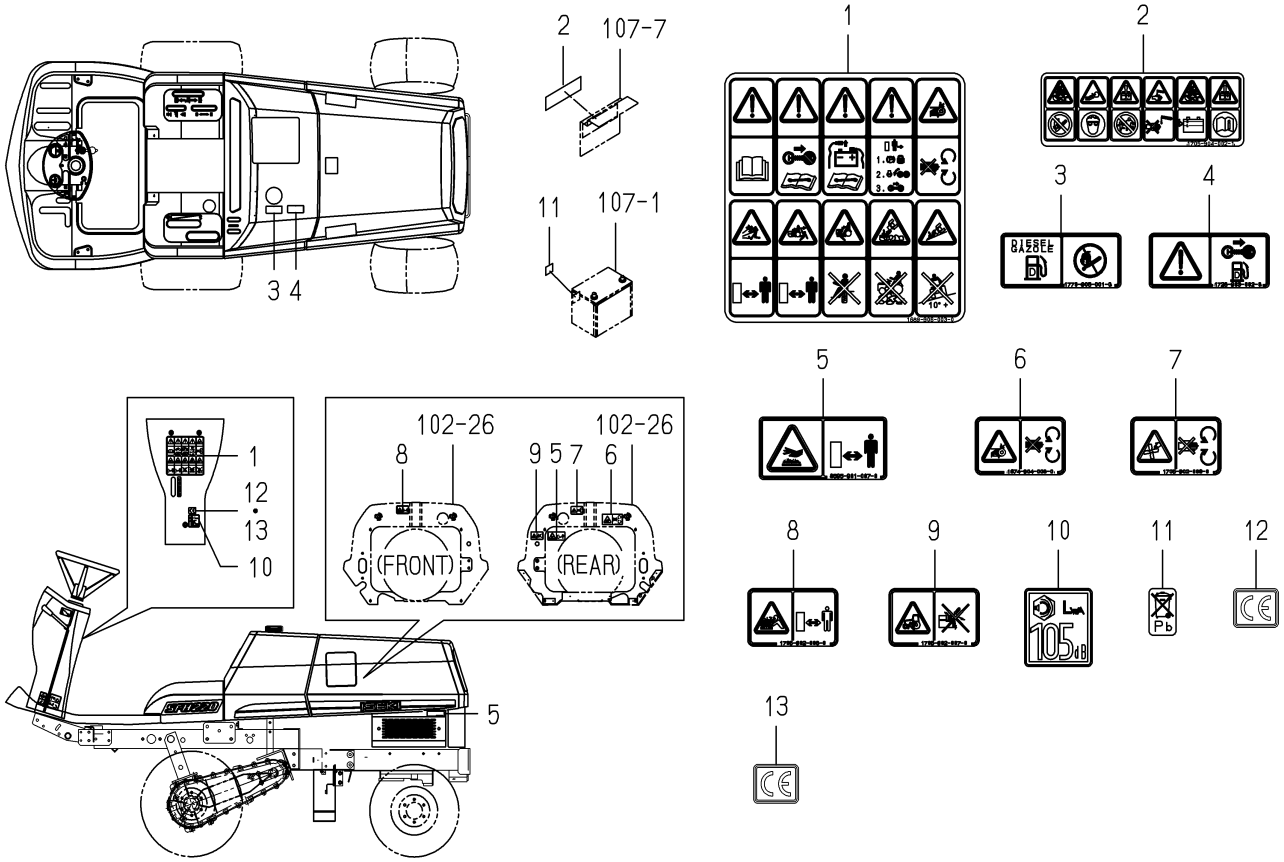

1771-906A-0100

KEY	PART CODE	DESCRIPTION	SPC	TYPE OF MODEL SFH220T	TYPE OF MODEL SFH240F	ITC	COL	GRP	REMARKS
1	- - - - - -	BLANK	*						- - - - - -
1	1689-906-003-00	LABEL/CAUTION	*	1					
2	- - - - - -	BLANK	*						- - - - - -
2	1705-904-002-10	LABEL/BATTERY	*	1					
3	- - - - - -	BLANK	*						- - - - - -
3	1770-906-001-00	LABEL/FUEL	*	1					
4	1728-903-002-00	LABEL/WARNING/FUEL	*	1					
5	- - - - - -	BLANK	*						- - - - - -
5	8595-901-007-00	LABEL/WARNING/HOT	*	2					
6	- - - - - -	BLANK	*						- - - - - -
6	1674-904-008-00	LABEL/WARNING/BELT	*	1					
7	- - - - - -	BLANK	*						- - - - - -
7	1705-902-006-00	LABEL/W/FAN	*	1					
8	- - - - - -	BLANK	*						- - - - - -
8	1705-902-008-00	LABEL/W/RADIATOR	*	1					
9	- - - - - -	BLANK	*						- - - - - -
9	1705-902-007-00	LABEL/W/STARTER	*	1					
10	- - - - - -	BLANK	*						- - - - - -
10	1705-904-011-00	LABEL/NOISE/LWA/105	*	1					
11	1728-903-003-00	LABEL/BATTERY	*	1					
12	- - - - - -	BLANK	*						- - - - - -
13	2500-901-027-00	LABEL/CE	*	1					

FIG.911 LABEL(CAUTION) (EXCEPT SFH240F-B TYPE)

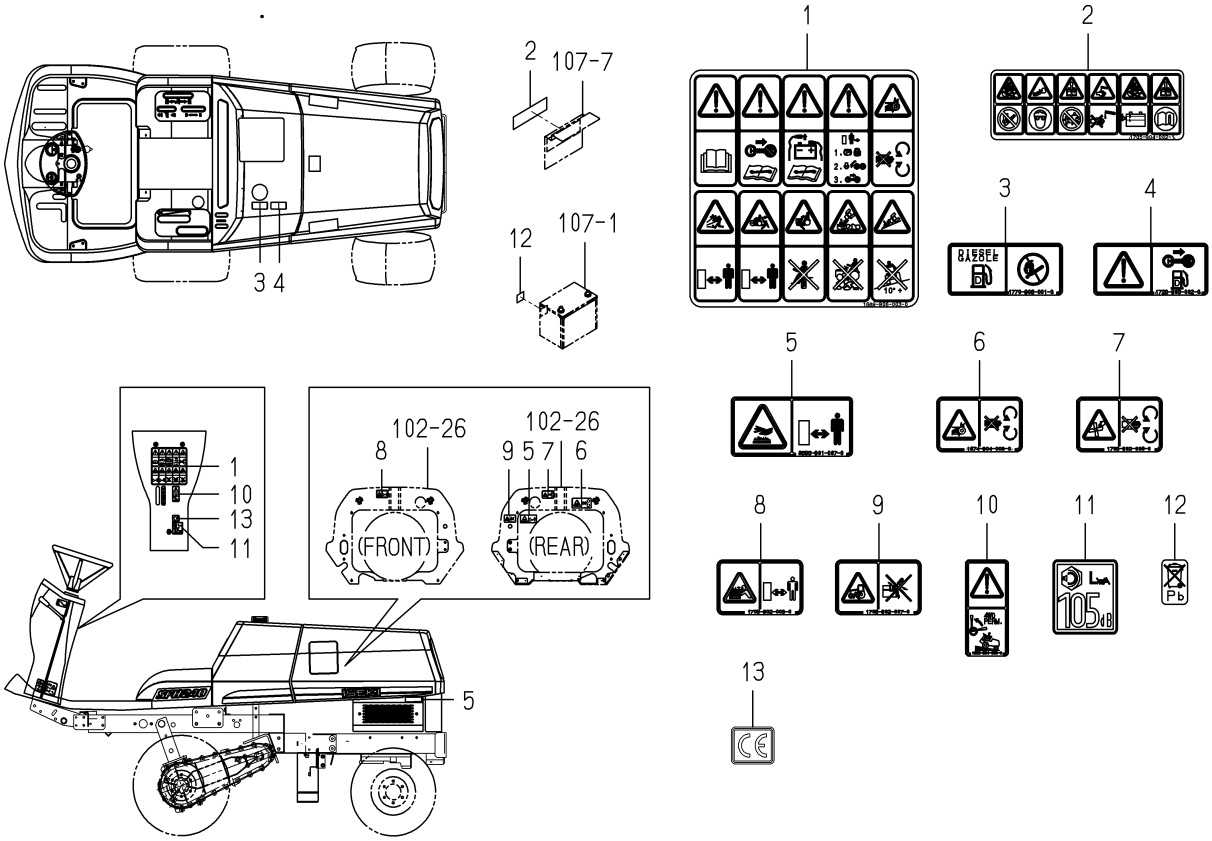

1771-906B-0100

KEY	PART CODE	DESCRIPTION	SPC	TYPE OF MODEL SFH220T	TYPE OF MODEL SFH240F	ITC	COL	GRP	REMARKS
1	1689-906-003-00	LABEL/CAUTION	*		1				
2	1705-904-002-10	LABEL/BATTERY	*		1				
3	1770-906-001-00	LABEL/FUEL	*		1				
4	1728-903-002-00	LABEL/WARNING/FUEL	*		1				
5	8595-901-007-00	LABEL/WARNING/HOT	*		2				
6	1674-904-008-00	LABEL/WARNING/BELT	*		1				
7	1705-902-006-00	LABEL/W/FAN	*		1				
8	1705-902-008-00	LABEL/W/RADIATOR	*		1				
9	1705-902-007-00	LABEL/W/STARTER	*		1				
10	1689-904-003-00	LABEL/WARNING/2WD-4W	*		1				
11	1705-904-011-00	LABEL/NOISE/LWA/105	*		1				
12	1728-903-003-00	LABEL/BATTERY	*		1				
13	2500-901-027-00	LABEL/CE	*		1				

FIG.912 WEIGHT(REAR)SYSTEM(W TYPE) (EXCEPT W TYPE:OPTION)

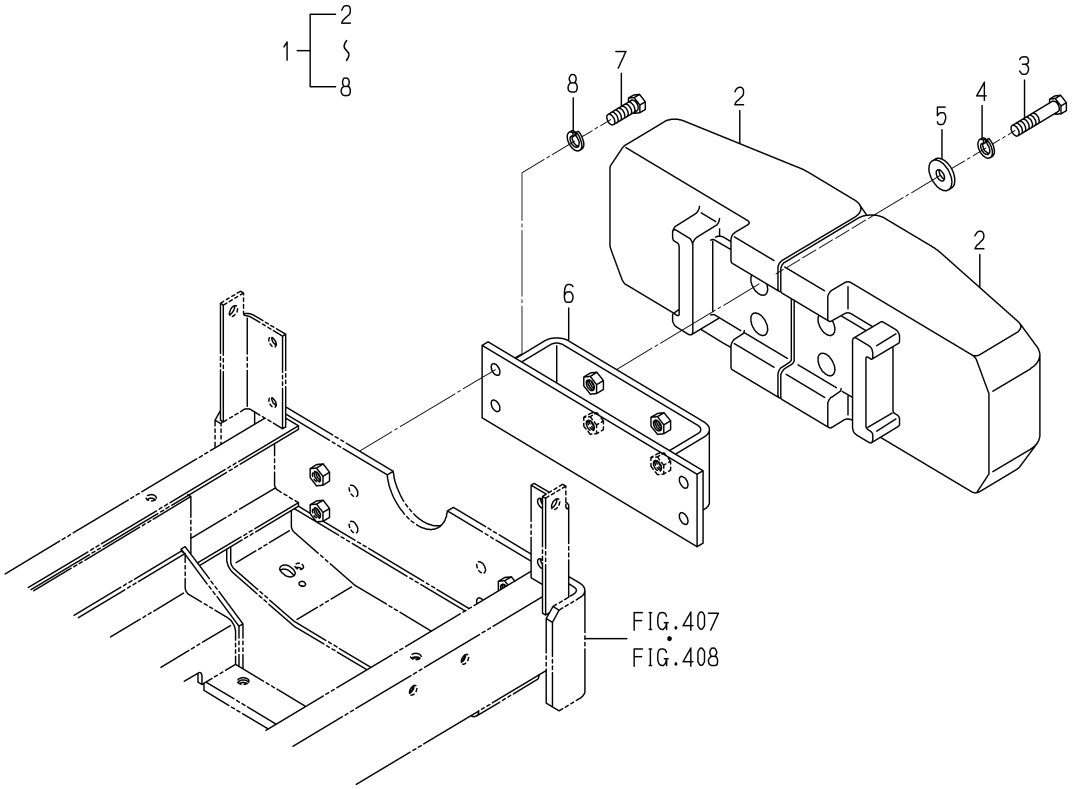

1771-923 -0100

KEY	PART CODE	DESCRIPTION	SPC	TYPE OF MODEL SFH220T	SFH240F	ITC	COL	GRP	REMARKS
1	- - - - - -	BLANK	*						- - - - - -
1	1771-923-200-10	WEIGHT/REAR SET	*	1	1				
2	1636-436-002-00	WEIGHT/40	*	2	2				
3	V201-361-206-00	BOLT	*	4	4				
4	V401-160-012-00	WASHER,SP/M12	*	4	4				
5	3621-702-003-00	WASHER,PULLEY	*	4	4				
6	1771-923-210-00	BRACKET/WEIGHT COMP	*	1	1				
7	- - - - - -	BLANK	*						- - - - - -
7	V201-361-203-50	BOLT/M12X35	*	4	4				
8	V401-160-012-00	WASHER,SP/M12	*	4	4				

FIG.P01 CAP(OIL)SET(OPTION)

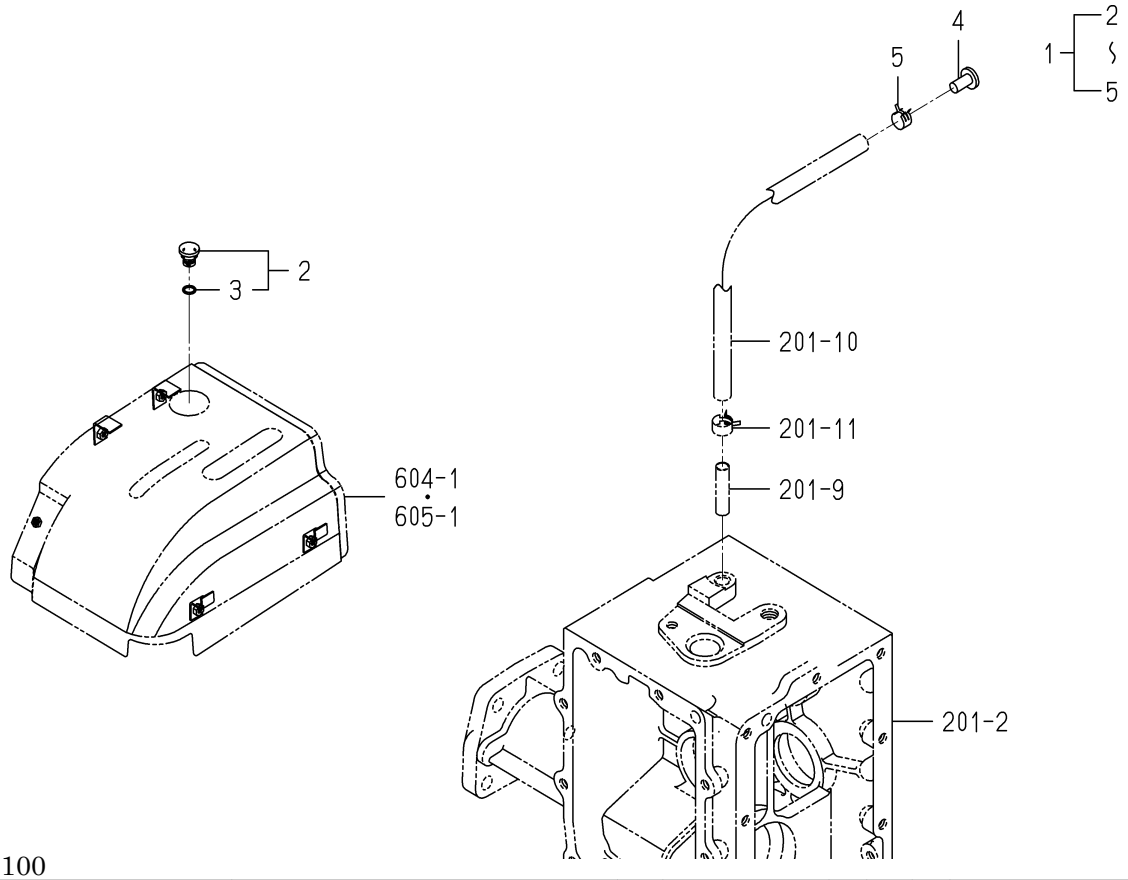

1771-201Z-0100

KEY	PART CODE	DESCRIPTION	SPC	TYPE OF MODEL SFH220T	TYPE OF MODEL SFH240F	ITC	COL	GRP	REMARKS
1	1771-201-910-00	CAP/OIL SET	R	1	1				
2	1771-201-920-00	CAP/OIL ASSY	R	1	1				
3	V720-112-401-50	RING/O	R	1	1				
4	1771-201-091-00	PIN/08X16	R	1	1				
5	J062-119-126-00	CLIP/HOSE/11.9-12.6	R	1	1				

FIG.P02 BUMPER SET(OPTION)

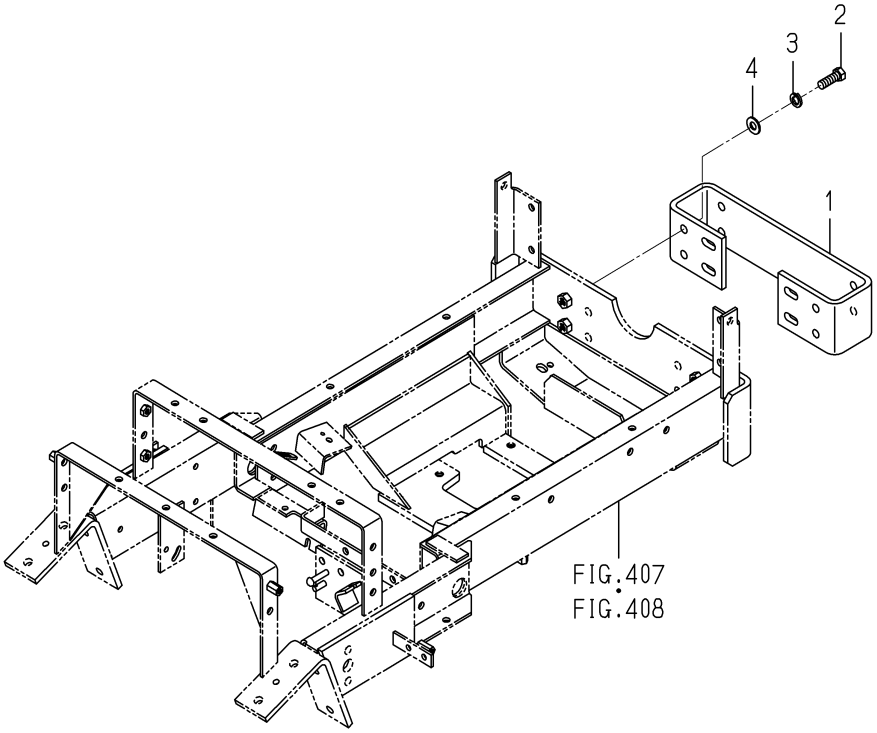

1728-410B-0100

KEY	PART CODE	DESCRIPTION	SPC	TYPE OF MODEL SFH220T	TYPE OF MODEL SFH240F	ITC	COL	GRP	REMARKS
1	1620-410-001-10	PLATE/BUMPER	T	1	1				
2	V201-361-203-50	BOLT/M12X35	T	4	4				
3	V401-160-012-00	WASHER,SP/M12	T	4	4				
4	V411-260-012-00	WASHER /M12	T	4	4				

FIG.P03 FRAME(LOWER)SET(OPTION)

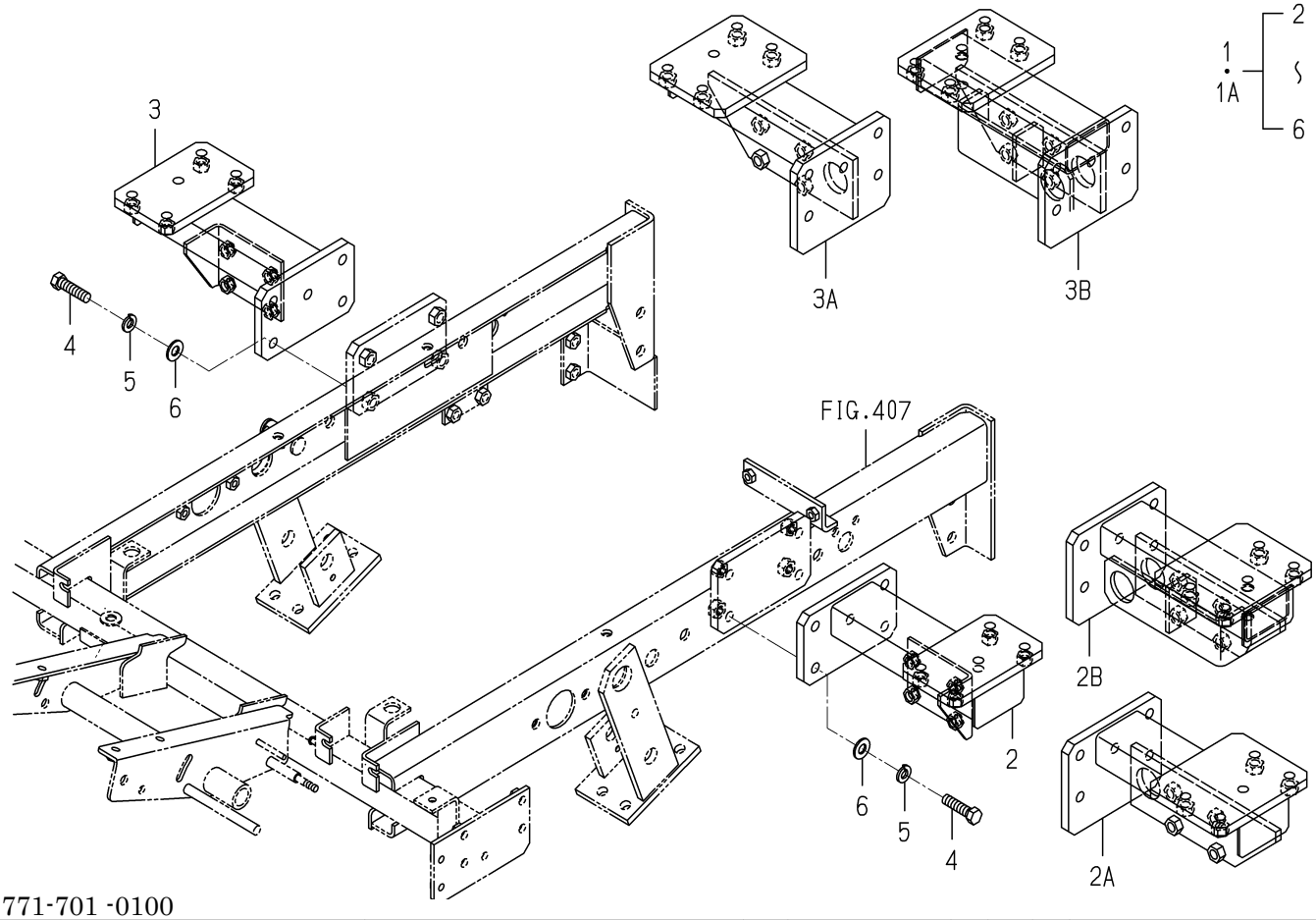

1771-701 -0100

KEY	PART CODE	DESCRIPTION	SPC	TYPE OF MODEL SFH220T	SFH240F	ITC	COL	GRP	REMARKS
1	- - - - - -	BLANK	T						- - - - - -
1A	1771-701-200-10	ERAME/LOWER SET	T		1				
2	- - - - - -	BLANK	T						- - - - - -
2A	- - - - - -	BLANK	T						- - - - - -
2B	1771-701-250-00	FRAME/LOWER/LH COMP	T		1				
3	- - - - - -	BLANK	T						- - - - - -
3A	- - - - - -	BLANK	T						- - - - - -
3B	1771-701-260-00	FRAME/LOWER/RH COMP	T		1				
4	V201-461-204-50	BOLT/M12X45	T		8				
5	V401-160-012-00	WASHER,SP/M12	T		8				
6	V411-260-012-00	WASHER /M12	T		8				

FIG.P04 FRAME(UPPER)SET(OPTION)

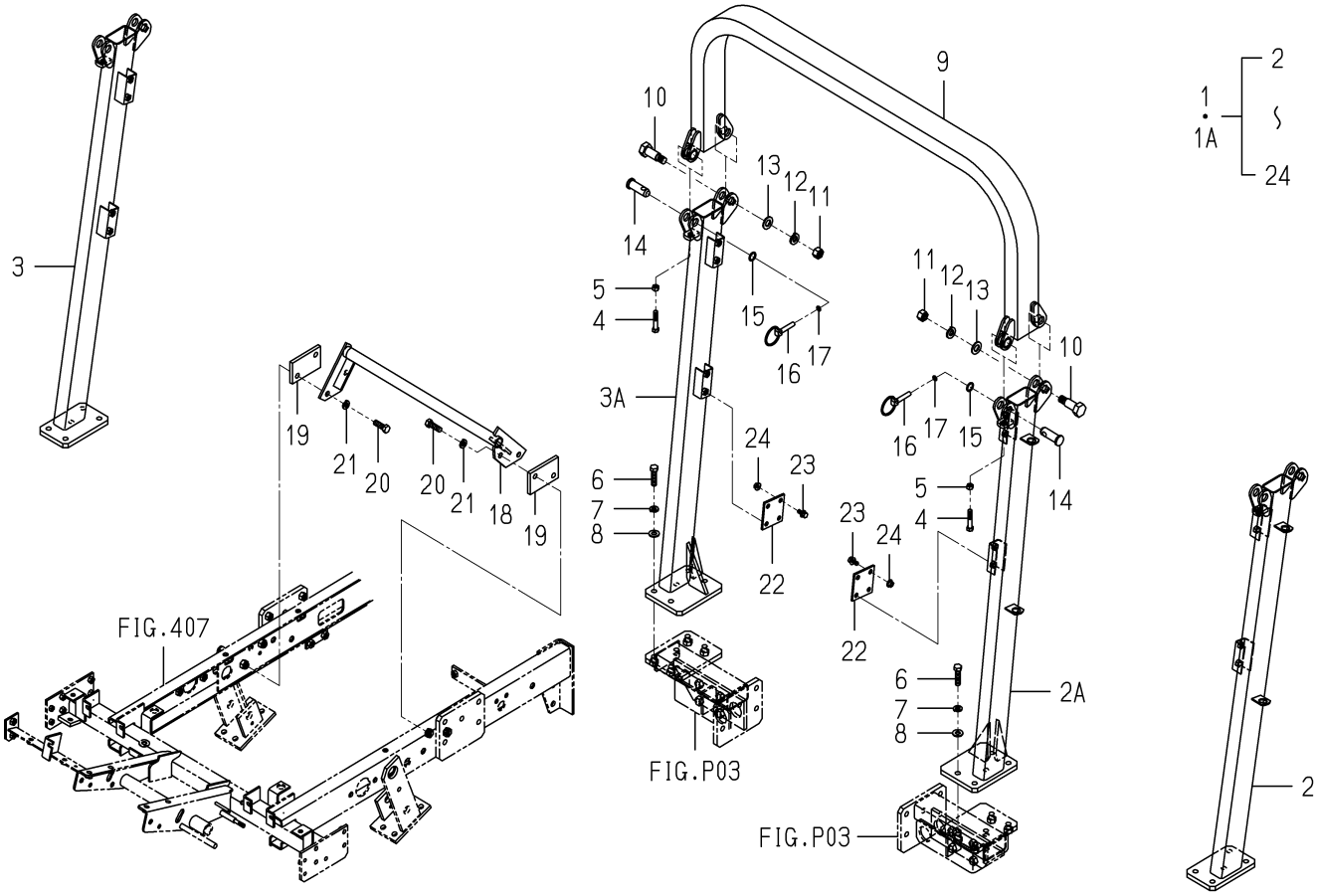

1771-702 -0100

KEY	PART CODE	DESCRIPTION	SPC	TYPE OF MODEL SFH220T	SFH240F	ITC	COL	GRP	REMARKS
1	- - - - - -	BLANK	T						- - - - - -
1A	1771-702-200-10	FRAME/UPPER SET	T		1				
2	- - - - - -	BLANK	T						- - - - - -
2A	1771-701-210-10	FRAME/LH COMP	T		1		7F		
3	- - - - - -	BLANK	T						- - - - - -
3A	1771-701-230-10	FRAME/RH COMP	T		1		7F		
4	V201-261-005-00	BOLT/M10X50	T		2				
5	V304-260-010-00	NUT	T		2				
6	V201-461-204-50	BOLT/M12X45	T		8				
7	V401-160-012-00	WASHER,SP/M12	T		8				
8	V411-260-012-00	WASHER /M12	T		8				
9	1744-702-310-00	FRAME/UPPER COMP	T		1		7F		
10	1640-702-003-00	BOLT/SET/M16X60	T		2				
11	V304-260-016-00	NUT/M16	T		2				
12	V401-160-016-00	WASHER,SP/M16	T		2				
13	V411-260-016-00	WASHER / M16	T		2				
14	1640-702-004-00	PIN/20X58	T		2				
15	V720-112-401-80	O-RING/P18	T		2				
16	- - - - - -	BLANK	T						- - - - - -
16	1673-525-002-30	LINKPIN	T		2				
17	V720-101-900-90	O-RING/P 9	T		2				
18	1771-701-240-00	TUBE/536 COMP	T		1				
19	1771-701-005-00	PLATE/I/62X100	T		2				
20	V201-361-203-50	BOLT/M12X35	T		4				
21	V401-160-012-00	WASHER,SP/M12	T		4				
22	1771-701-006-00	PLATE/I/75X70	T		4				
23	V211-360-802-00	BOLT/SP	T		8				
24	V362-260-008-00	NUT/WASHER	T		8				

FIG.P05 WEIGHT(15)SET(OPTION)

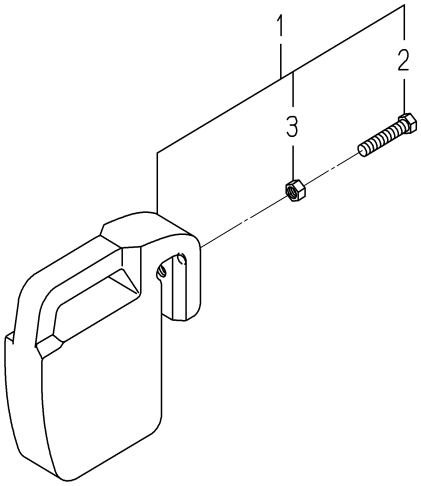

1771-922 -0100

KEY	PART CODE	DESCRIPTION	SPC	TYPE OF MODEL		ITC	COL	GRP	REMARKS
				SFH220T	SFH240F				
1	1614-922-200-20	WEIGHT/15 SET	T	5	5				
2	W201-261-206-00	BOLT/M12X60	T	5	5				
3	V305-260-012-00	NUT/M12	T	5	5				

FIG.S01 COMPONENT PARTS FOR K135-023-000-00 ON Fig.505

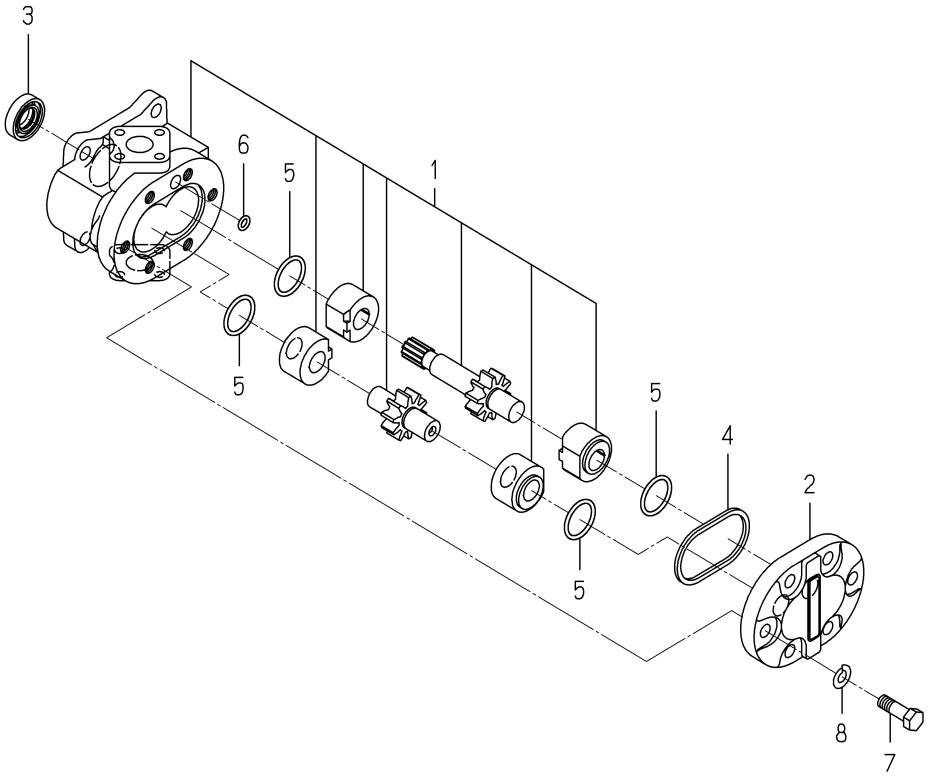

K135-023-000-0C

KEY	PART CODE	DESCRIPTION	SPC	TYPE OF MODEL SFH220T	TYPE OF MODEL SFH240F	ITC	COL	GRP	REMARKS
1	K135-023-100-00	GEAR PUMP SET	*	1	1				
2	K135-017-006-00	COVER,PUMP	*	1	1				
3	V744-114-280-70	SEAL,OIL	*	1	1				
4	V721-113-105-00	O-RING HS90 G50	*	1	1				
5	V720-112-402-20	O-RING/P22	*	4	4				
6	V720-111-900-60	O-RING P6 HS90	*	1	1				
7	K135-002-009-00	BOLT/M8X28 11T	*	6	6				
8	V401-170-008-00	S.W	*	6	6				

FIG.S02 COMPONENT PARTS(1/2)
FOR K510-012-000-10 ON Fig.204,205

14,30-PLEASE SEE 2/2 PAGE

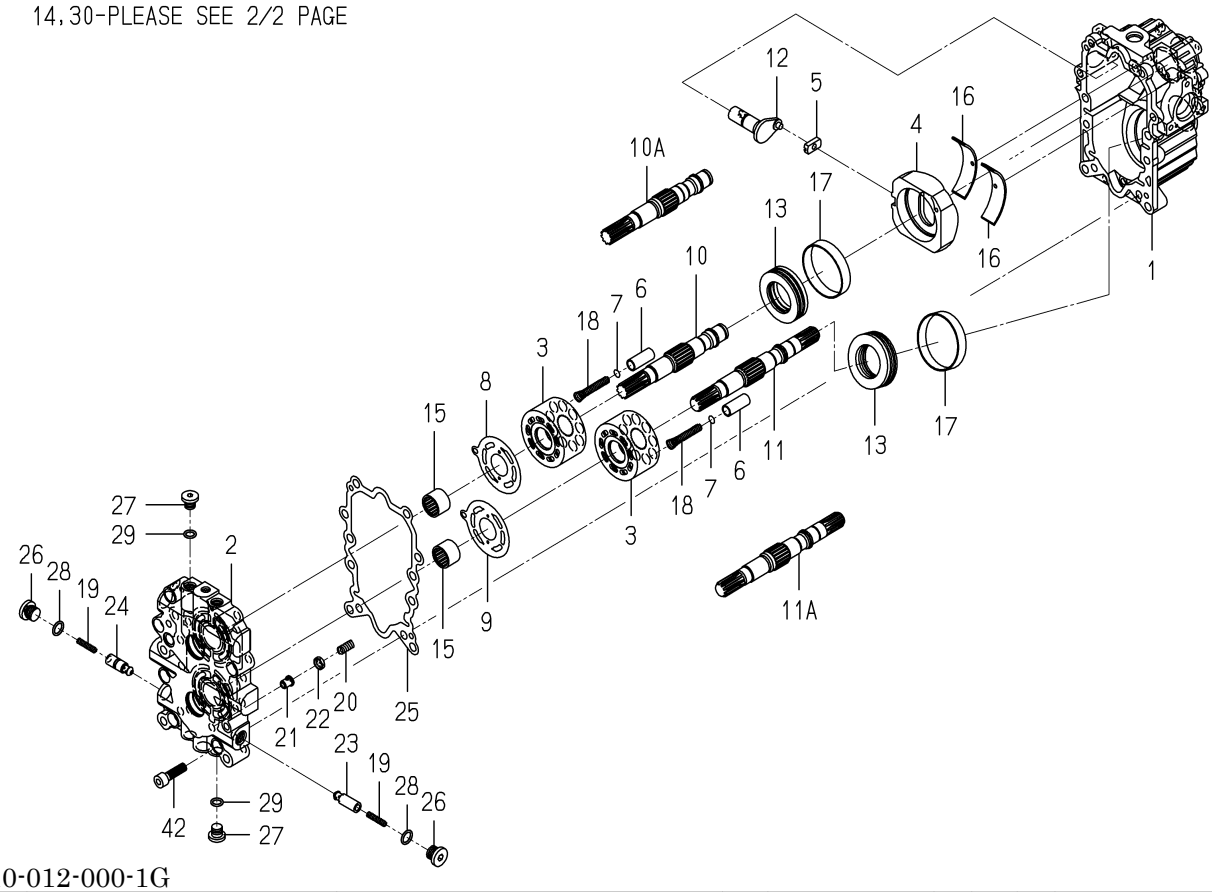

K510-012-000-1G

KEY	PART CODE	DESCRIPTION	SPC	TYPE OF MODEL SFH220T	SFH240F	ITC	COL	GRP	REMARKS
1	K510-004-001-10	CASE	*	1	1				
2	K510-005-004-00	BLOCK/PORT	*	1	1				
3	- - - - - -	BLANK	*						- - - - - -
3	K510-005-005-00	BLOCK/CYLINDER	*		2				
3	K510-005-005-00	BLOCK/CYLINDER	*	2					
4	K510-001-006-10	PLATE/SWASH	*	1	1				
5	K510-001-007-00	METAL/SLIDE	*	1	1				
6	- - - - - -	BLANK	*						- - - - - -
6	K510-006-008-00	PISTON	*		18				
6	K510-006-008-00	PISTON	*	18					
7	K510-001-009-00	SHIM/0.9	*	18	18				
8	K510-001-010-00	PLATE/VALVE/PUMP	*	1	1				
9	K510-001-011-00	PLATE/VALVE/MOTOR	*	1	1				
10	- - - - - -	BLANK	*						- - - - - -
10A	K510-012-012-10	SHAFT/PUMP	*	1	1				
11	- - - - - -	BLANK	*						- - - - - -
11A	K510-012-013-10	SHAFT/MOTOR	*	1	1				
12	K510-001-014-00	ARM/TRANION	*	1	1				
13	K510-001-015-00	BEARING/THRUST	*	2	2				
14	V600-110-620-40	BEARING,RB/6204	*	2	2				
15	K510-001-016-00	NEEDLE	*	2	2				
16	K510-001-017-00	BUSH/95X100X22	*	2	2				
17	K510-001-018-00	BUSH/68X71X14	*	2	2				
18	K510-001-019-00	SPRING/HC053	*	18	18				
19	K510-001-020-00	SPRING/HC030	*	2	2				
20	K510-003-021-00	SPRING/HC021	*	1	1				
21	K510-003-022-00	POPPET/RELIEF	*	1	1				
22	K510-003-037-00	PLATE/SPRING	*	1	1				
23	K510-005-023-00	POPPET/CHECK/0.5	*	1	1				
24	K510-005-024-00	POPPET/CHECK/1.3	*	1	1				

FIG.S02 COMPONENT PARTS(2/2)
FOR K510-012-000-10 ON Fig.204,205

42-PLEASE SEE 1/2 PAGE

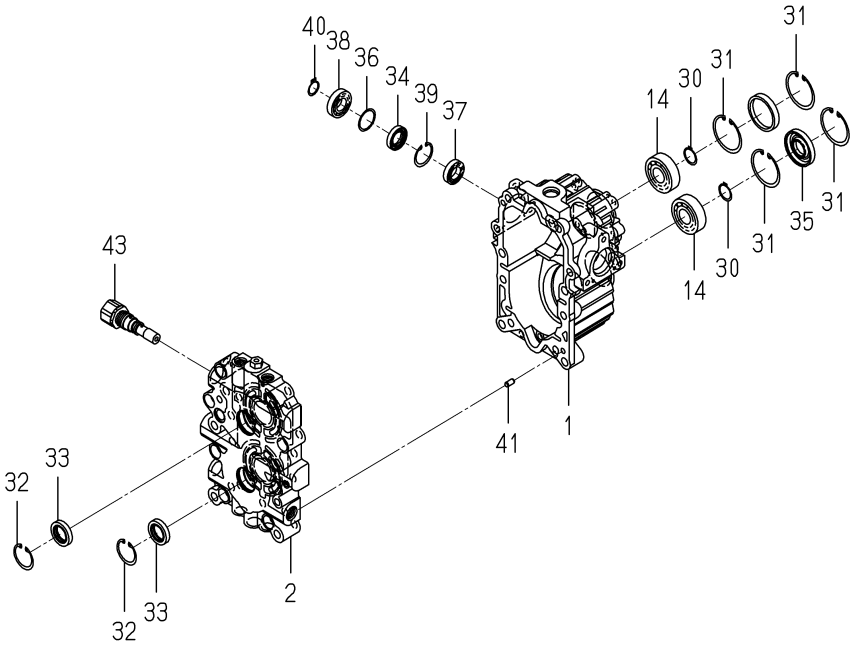

K510-012-000-1G

KEY	PART CODE	DESCRIPTION	SPC	TYPE OF MODEL SFH220T	SFH240F	ITC	COL	GRP	REMARKS
25	K510-001-026-00	GASKET	*	1	1				
26	K510-001-029-00	PLUG(G3/8)	*	2	2				
27	K275-001-003-00	PLUG(PF1/4)	*	4	4				
28	V720-112-401-40	O-RING/P14	*	2	2				
29	V720-112-401-10	RING/O	*	4	4				
30	V704-140-020-00	RING,SNAP/20C	*	2	2				
31	V705-140-047-00	RING,SNAP/47 C	*	4	4				
32	V705-140-032-00	RING,SNAP/32 C	*	2	2				
33	K510-001-039-00	OILSEAL	*	2	2				
34	K510-001-031-00	SEAL/OIL	*	1	1				
35	V744-120-470-70	SEAL/OIL	*	1	1				
36	K510-001-034-00	WASHER/25X30X1	*	1	1				
37	V600-110-690-30	BEARING	*	1	1				
38	V600-150-600-30	BEARING,RB/6003SS	*	1	1				
39	V705-140-030-00	RING,SNAP/30 C	*	1	1				
40	V704-140-017-00	RING,SNAP/17 C	*	1	1				
41	K510-001-036-00	PIN,ST	*	4	4				
42	V220-541-003-50	SCREW/SOCKET	*	8	8				
43	K510-003-100-00	VALVE/RELIEF SET	*	1	1				
44	K510-003-301-00	SPOOL	*	1	1				
45	K510-003-302-00	PLUG/M10X1	*	1	1				
46	K510-003-303-00	SPRING/HC023	*	1	1				
47	K510-003-304-00	O-RING	*	1	1				
48	V720-101-900-80	O-RING/P 8	*	1	1				
49	V780-140-000-1T	PLUG/SCREW/SEAL	*	1	1				
50	1421-201-002-00	SEAL/47	*	1	1				

FIG.S03 COMPONENT PARTS FOR 1672-105-210-00 ON Fig.105

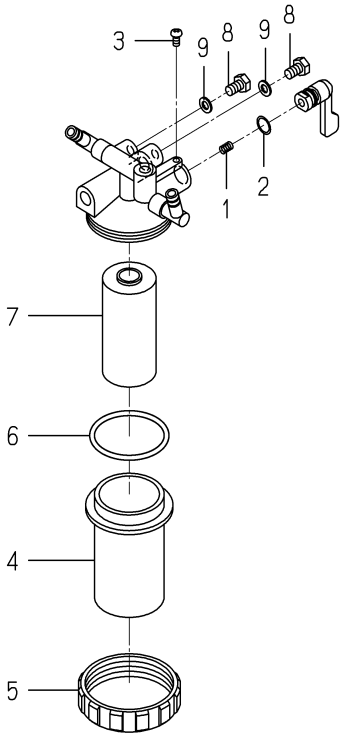

1672-105-210-0D

KEY	PART CODE	DESCRIPTION	SPC	TYPE OF MODEL		ITC	COL	GRP	REMARKS
				SFH220T	SFH240F				
1	1415-102-007-00	SPRING,VALVE	*	1	1				
2	V720-102-401-00	O-RING/P10A	*	1	1				
3	1415-102-008-00	VIS	*	1	1				
4	1440-103-201-00	CAP	*	1	1				
5	1444-102-204-00	NUT,RING	*	1	1				
6	V720-103-504-40	O-RING/P44	*	1	1				
7	1672-105-211-00	ELEMENT	*	1	1				
8	1572-102-003-00	BOLT/M06X08/APSET	*	2	2				
9	1415-102-013-00	PACKING	*	2	2				

FIG.S04 COMPONENT PARTS FOR 1720-221-210-00 ON Fig.412

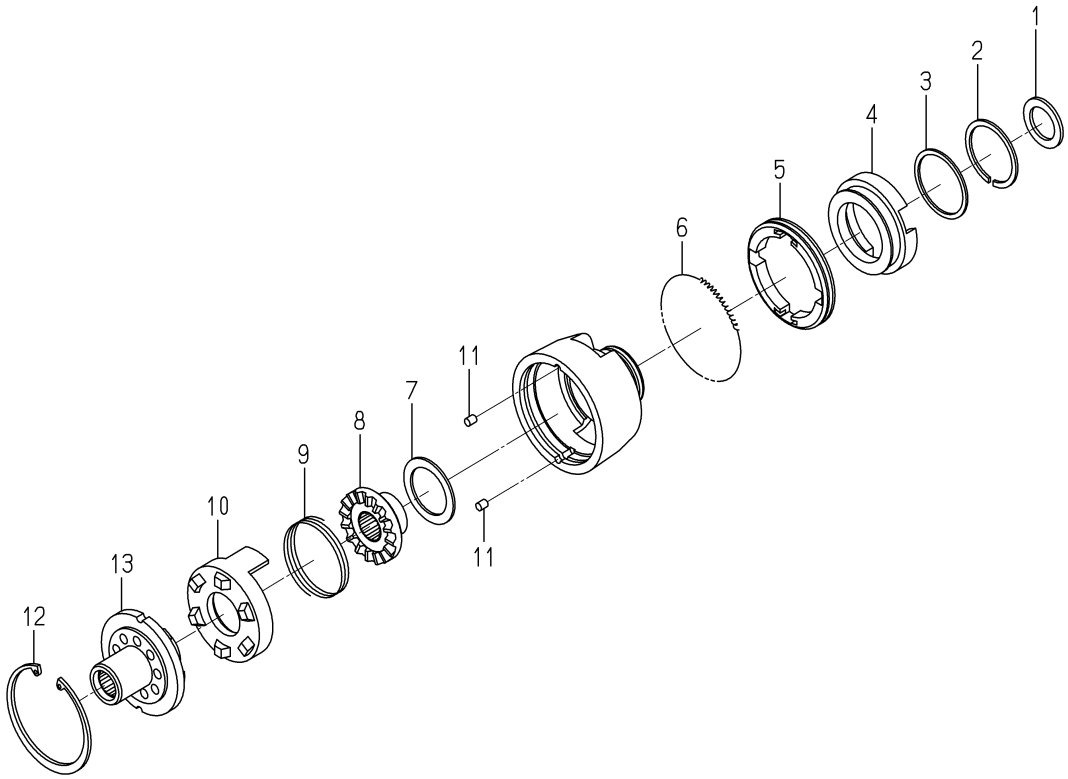

1720-221-210-0

KEY	PART CODE	DESCRIPTION	SPC	TYPE OF MODEL SFH220T	TYPE OF MODEL SFH240F	ITC	COL	GRP	REMARKS
1	1720-221-211-00	WASHER	*		1				
2	1720-221-212-00	RING/SNAP/A	*		1				
3	1720-221-213-00	WASHER/A	*		1				
4	1720-221-214-00	RING/BRAKE	*		1				
5	1720-221-215-00	SHOE/BRAKE	*		4				
6	1720-221-216-00	SPRING	*		1				
7	1720-221-217-00	BUSH	*		1				
8	1720-221-218-00	CAM/DRIVEN	*		1				
9	1720-221-219-00	SPRING/A	*		1				
10	1720-221-221-00	CAM/CENTER	*		1				
11	1720-221-222-00	PIN/STRAIGHT	*		2				
12	1720-221-224-00	RING/SNAP/B	*		1				
13	1720-221-225-00	CAM/DRAIVE	*		1				

FIG.S05 COMPONENT PARTS FOR 1725-219-210-10 ON Fig.214

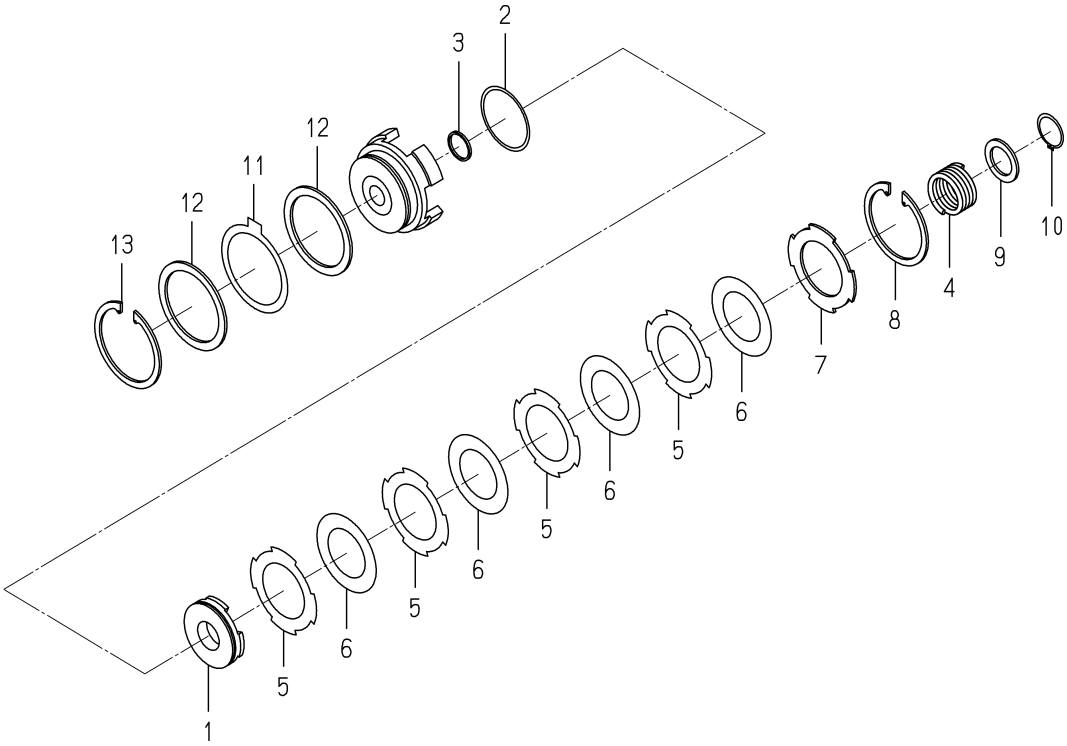

1725-219-210-1D

KEY	PART CODE	DESCRIPTION	SPC	TYPE OF MODEL SFH220T	TYPE OF MODEL SFH240F	ITC	COL	GRP	REMARKS
1	- - - - - -	BLANK	*						- - - - - -
1	1725-219-212-10	PISTON	*	1	1				
2	1725-219-213-00	RING/72	*	1	1				
3	1688-211-504-00	SEALRING/32	*	1	1				
4	1688-211-505-00	SPRING	*	1	1				
5	- - - - - -	BLANK	*						- - - - - -
5	1725-219-214-00	PLATE/SEPARATER	*	4	4				
6	- - - - - -	BLANK	*						- - - - - -
6	1725-219-215-00	PLATE/DISK	*	4	4				
7	- - - - - -	BLANK	*						- - - - - -
7	1725-219-216-00	PLATE/BACK	*	1	1				
8	1688-211-506-00	SNAPRING	*	1	1				
9	1688-211-507-00	WASHER	*	1	1				
10	1688-211-508-00	SNAPRING/32	*	1	1				
11	1688-211-509-00	DISK/BRAKE	*	1	1				
12	- - - - - -	BLANK	*						- - - - - -
12	1725-219-217-00	PRESSURE/BRAKE	*	2	2				
13	1688-211-522-00	SNAPRING/85	*	1	1				

WIRING DIAGRAM(1/2)

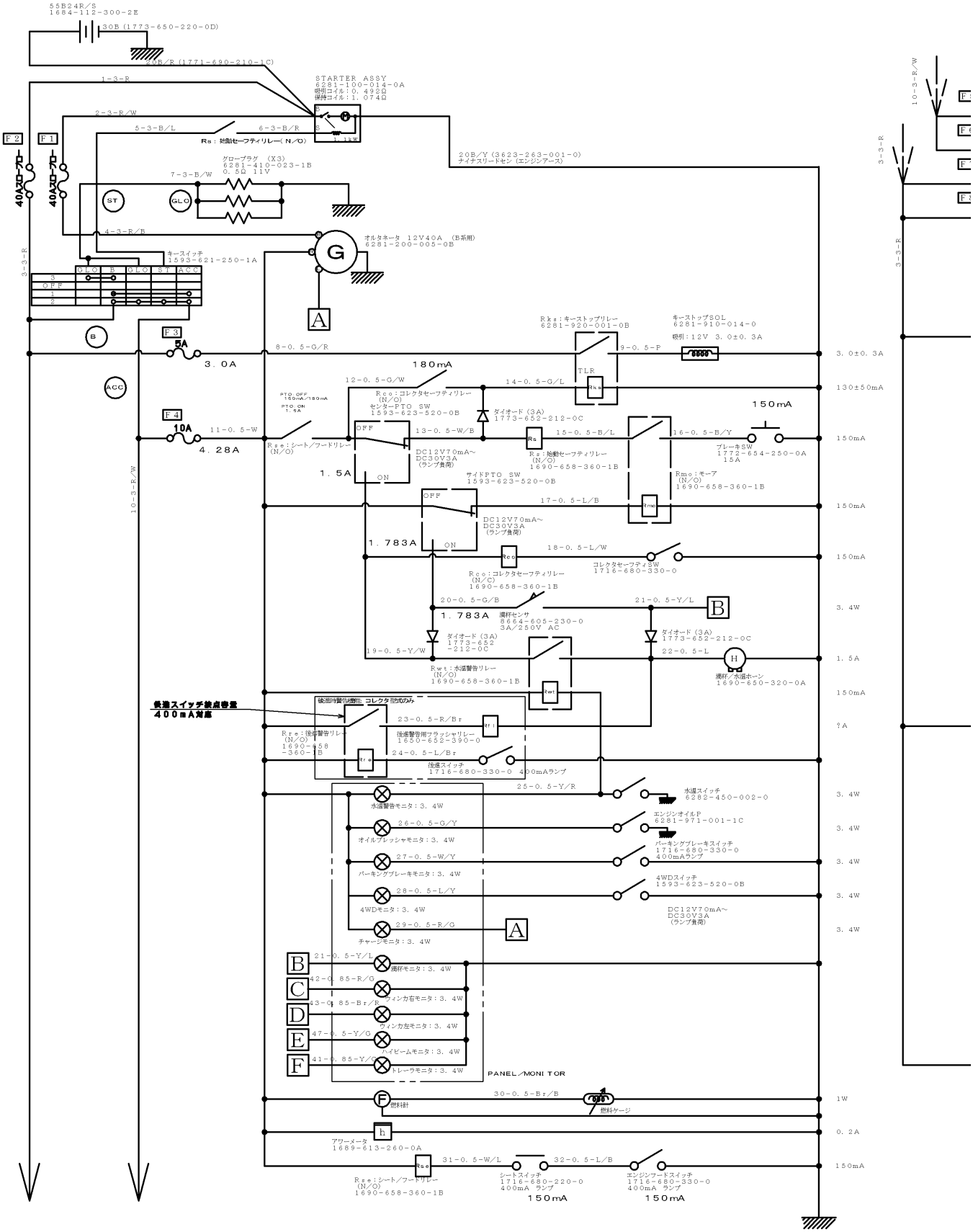

WIRING DIAGRAM(2/2)

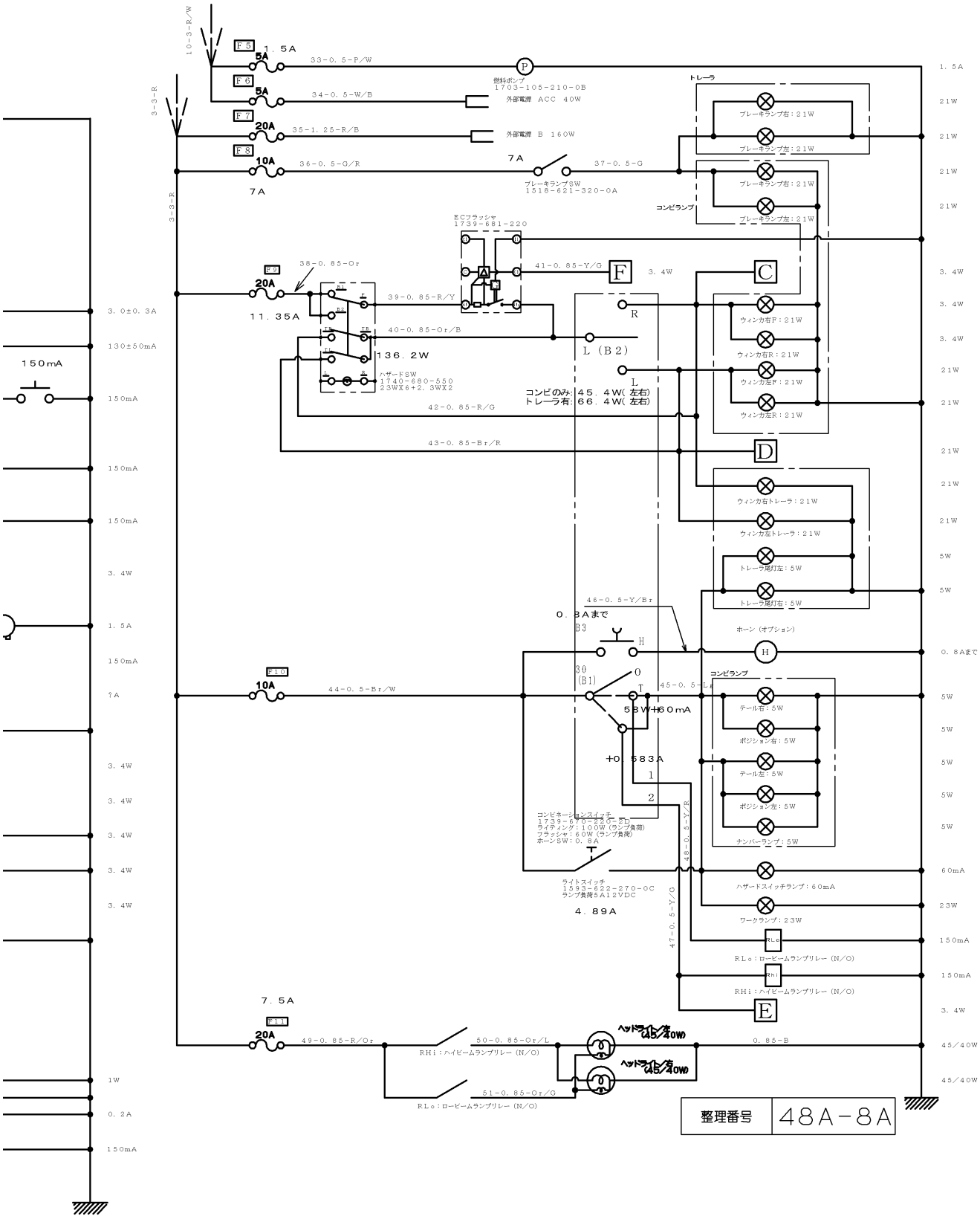

WIRING DIAGRAM

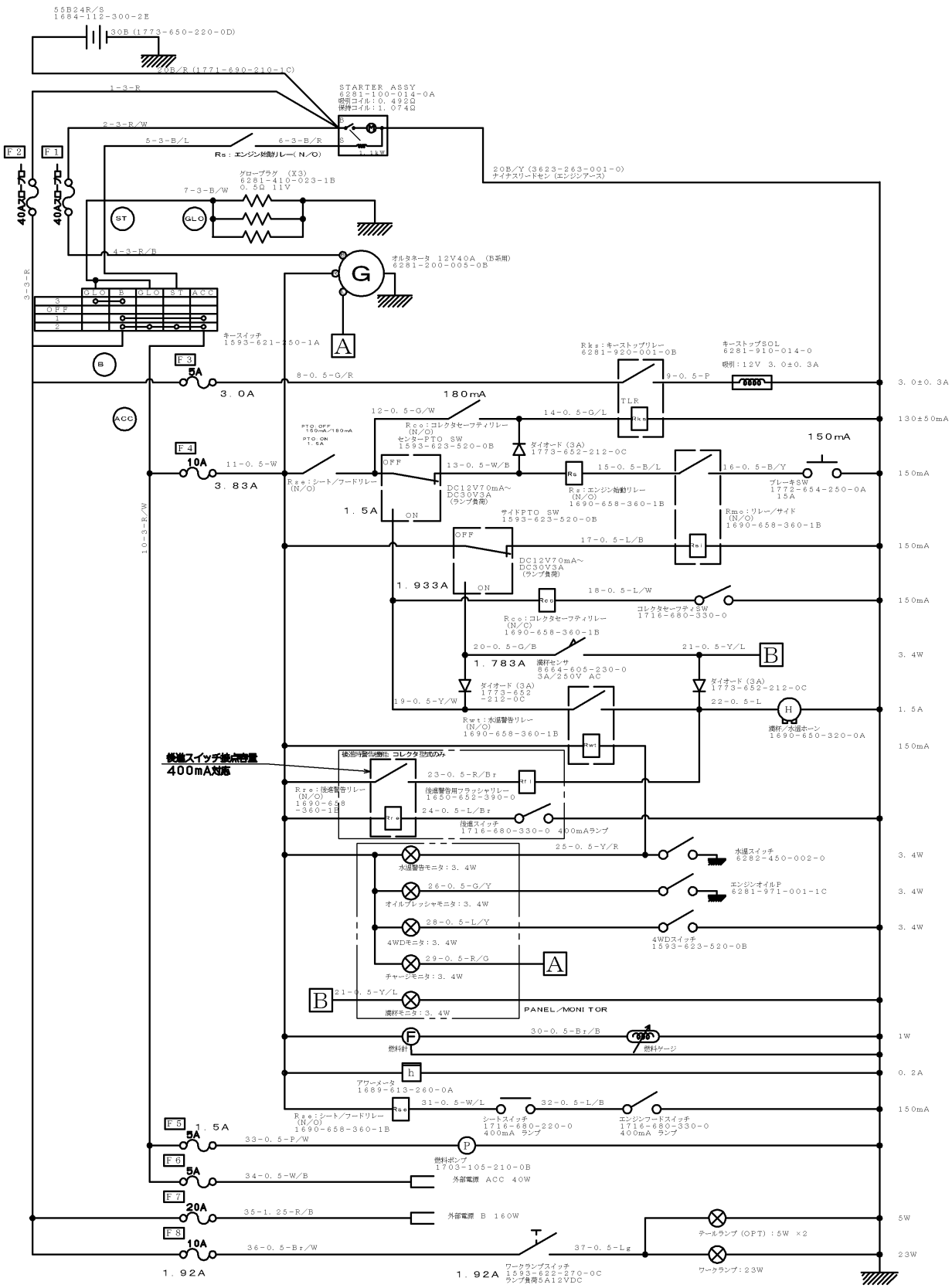

WIRING DIAGRAM(G TYPE)(1/2)

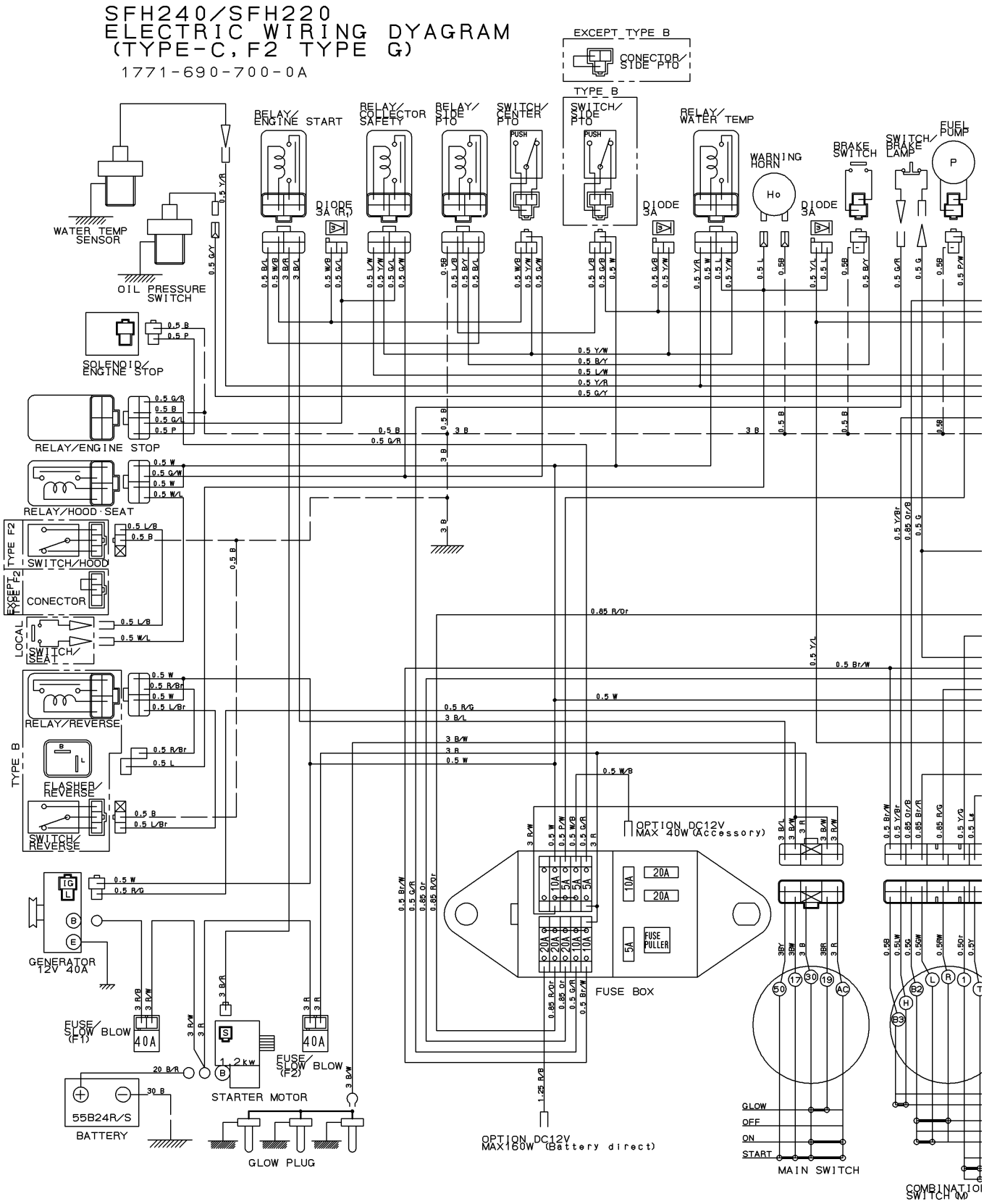

WIRING DIAGRAM(G TYPE)(2/2)

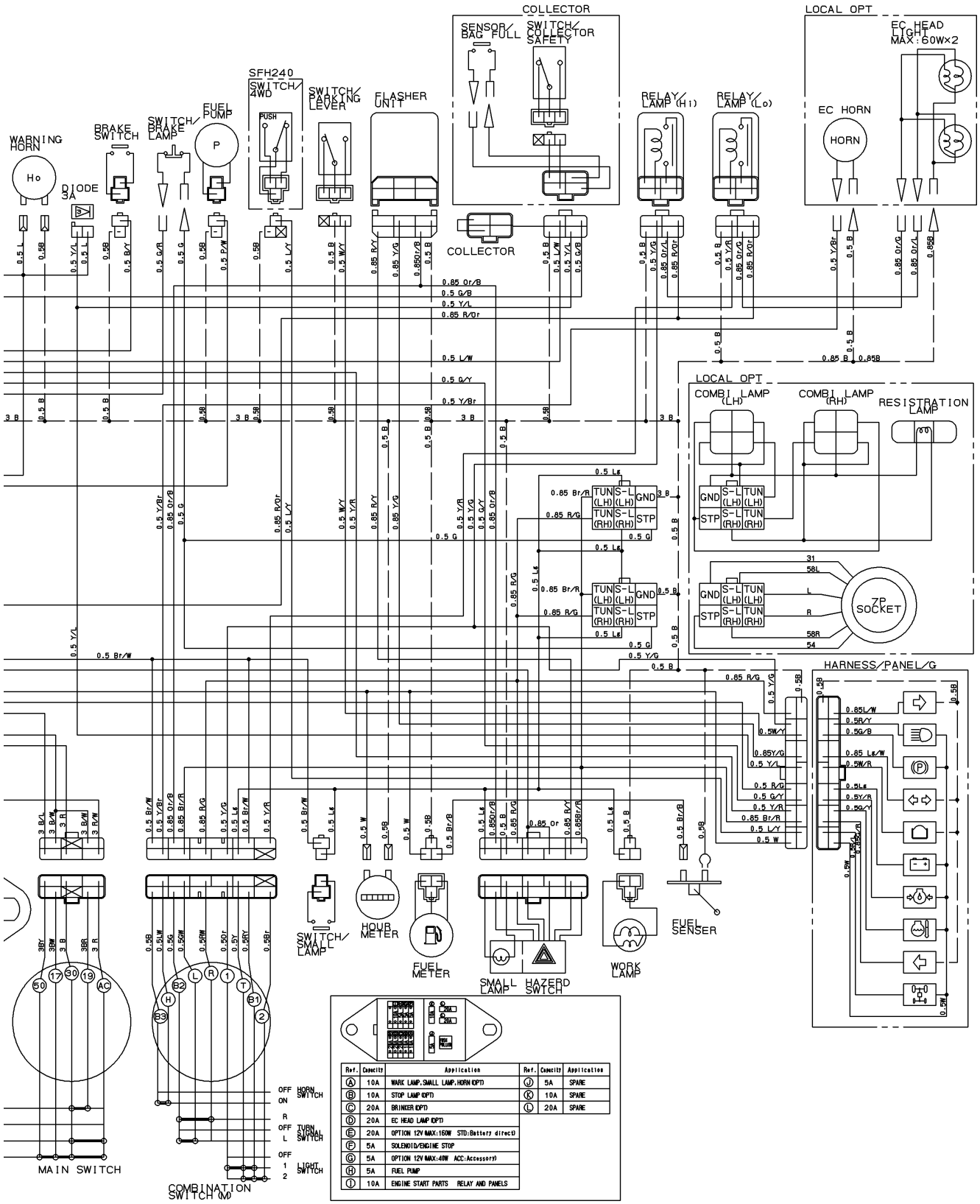

Ref.	Capacity	Application	Ref.	Capacity	Application
Ⓐ	10A	WARK LAMP.SMALL LAMP.HORN (OPT)	Ⓙ	5A	SPARE
Ⓑ	10A	STOP LAMP (OPT)	Ⓚ	10A	SPARE
Ⓒ	20A	BRINKER (OPT)	Ⓛ	20A	SPARE
Ⓓ	20A	EC HEAD LAMP (OPT)			
Ⓔ	20A	OPTION 12V MAX:160W STD:Battery direct)			
Ⓕ	5A	SOLENOID/ENGINE STOP			
Ⓖ	5A	OPTION 12V MAX:40W ACC:Accessory)			
Ⓗ	5A	FUEL PUMP			
Ⓘ	10A	ENGINE START PARTS RELAY AND PANELS			

WIRING DIAGRAM(EXCEPT G TYPE)(1/2)

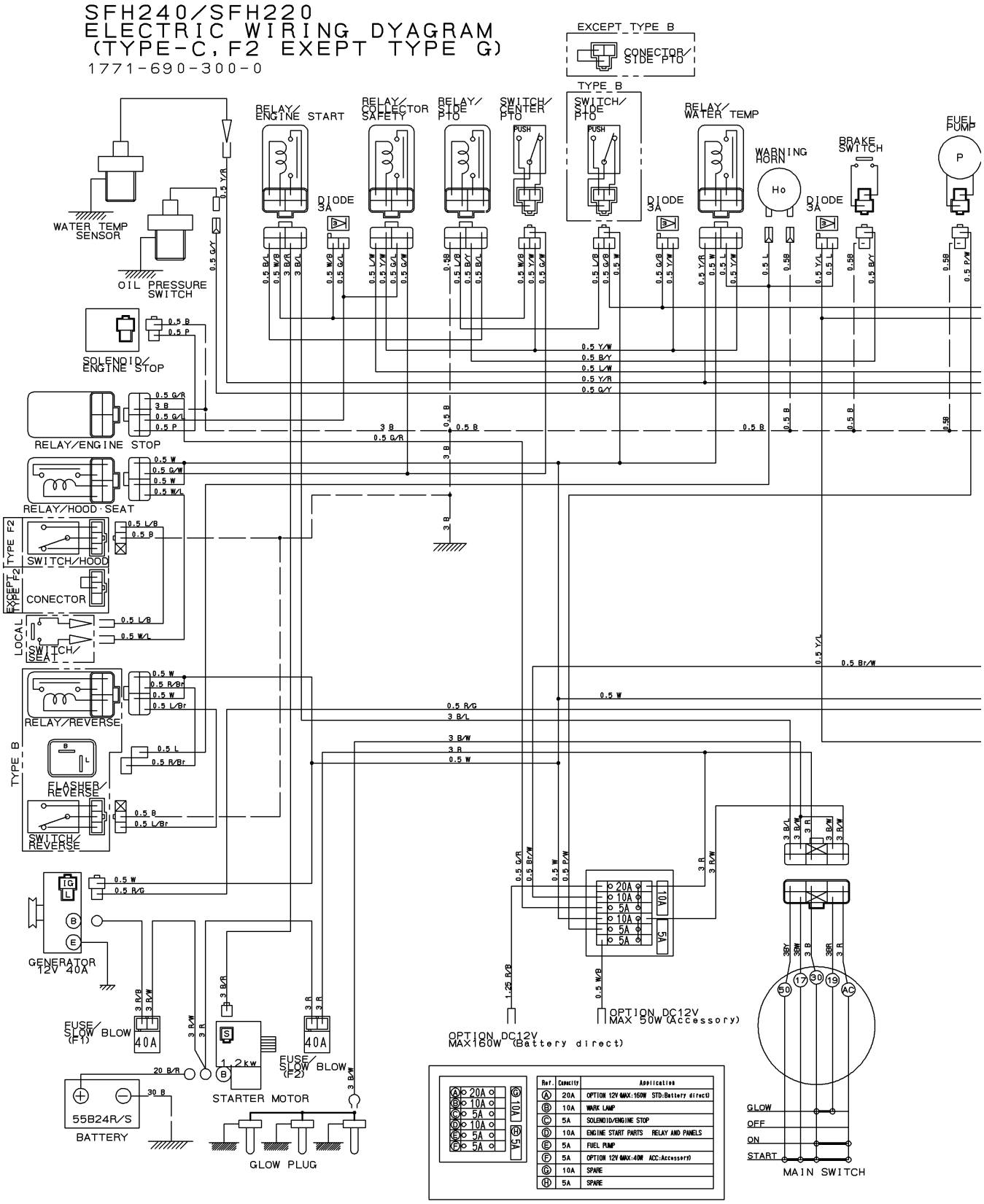

WIRING DIAGRAM(EXCEPT G TYPE)(2/2)

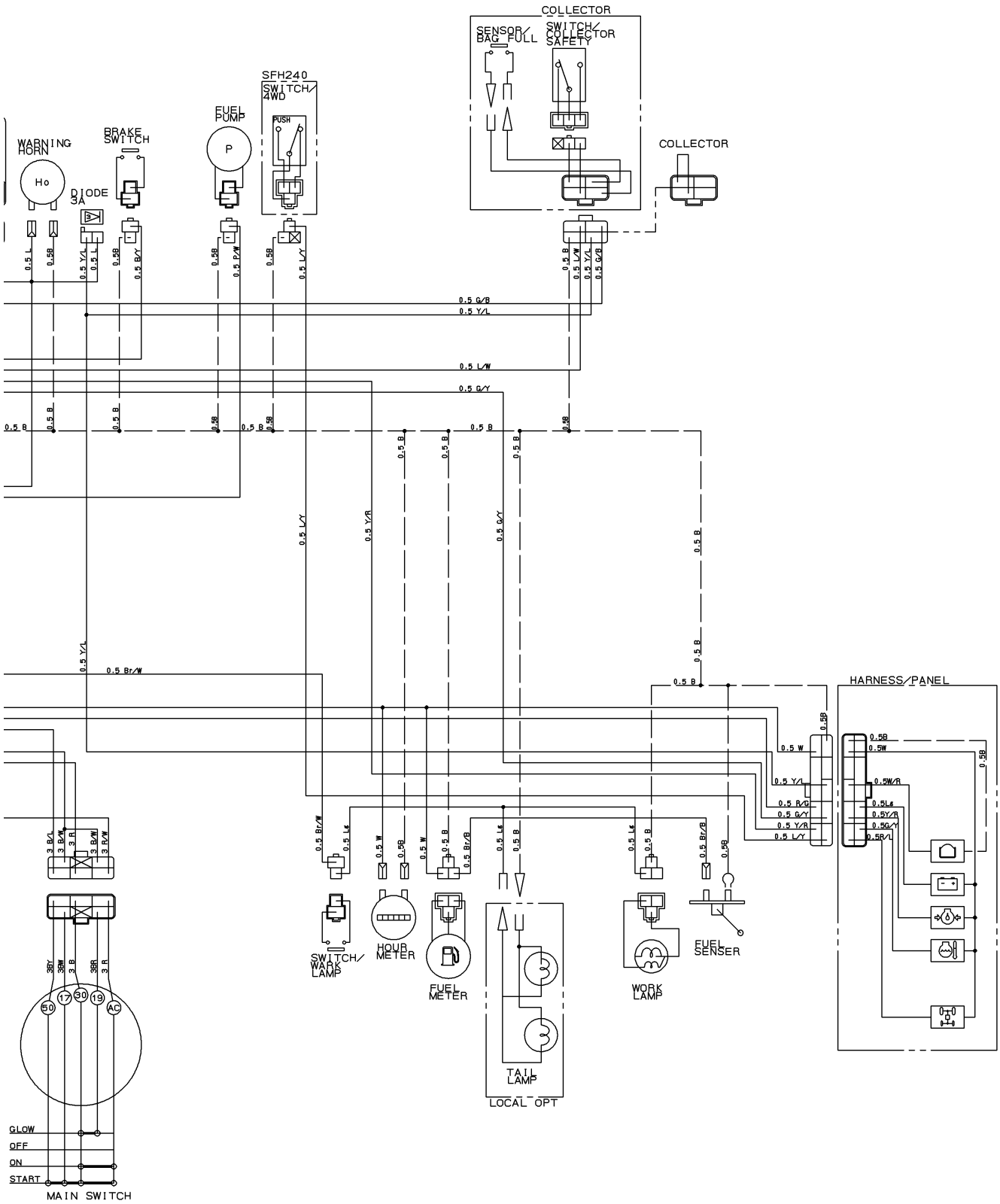

Numerical Index

6004-095-441-00

Part Code	Fig.	Key	Part Code	Fig.	Key	Part Code	Fig.	Key
1373-121-001-00	801	4	6209-625-002-00	204	7	6211-560-001-00	P02	3
1425-621-004-00	204	14		P04	12	6211-599-001-10	201	13
3625-540-004-00	204	35	6209-630-002-10	802	7		P02	2
3632-360-036-00	503	6		P04	22		P02	4
3640-586-004-00	503	8-A	6209-730-002-00	304	4	6211-751-001-10	102	2
3805-355-002-20	202	2	6209-730-005-00	302	3	6211-760-022-10	201	29
3817-401-001-00	204	10		502	10	6211-777-007-30	205	1
	301	20-A	6209-740-001-00	204	26	6212-111-094-20	303	1
	402	14	6209-740-005-00	201	17	6212-114-094-20	P03	1
	402	19	6209-749-001-20	201	15	6212-116-094-20	P03	3
	502	7		204	41	6212-121-014-20	303	2
6004-010-065-00	P01	1	6209-920-002-00	204	20	6212-124-014-10	P03	2
6209-000-002-00	301	18		401	14	6212-126-014-10	P03	4
6209-000-004-10	201	2		P04	13	6212-211-001-10	303	3
6209-000-043-00	304	9	6209-940-004-00	301	14	6212-230-004-10	303	5-A
6209-000-044-00	101	7	6211-110-057-30	101	1	6212-235-005-00	303	6-A
6209-030-043-00	502	16	6211-141-029-20	101	6	6212-271-016-00	303	8-A
6209-046-015-00	304	7		P04	3	6212-274-016-00	P02	5-A
6209-050-001-00	204	32	6211-170-004-20	102	1-A	6212-276-016-00	P02	6-A
6209-050-002-00	204	33	6211-173-003-00	102	3	6212-310-019-40	304	1
6209-300-014-00	101	8		P04	4	6212-330-048-00	304	5
6209-360-005-00	503	3	6211-210-037-40	201	1	6212-333-002-00	304	6
6209-360-028-20	102	6	6211-258-001-00	201	8	6212-371-052-00	304	8
6209-360-120-00	503	5-A		P04	8	6212-511-002-00	302	1
6209-409-001-00	204	18	6211-258-002-00	201	9	6212-521-008-00	304	3
6209-409-003-00	301	17		P04	9	6212-522-010-00	302	2
6209-440-005-00	802	4	6211-291-015-20	201	25	6212-523-023-00	302	6
6209-490-002-10	102	4	6211-292-001-20	201	26	6212-524-002-20	502	9
6209-500-003-00	204	16		P04	11	6212-530-005-30	204	43-A
	204	25	6211-310-025-40	204	1	6212-531-005-10	201	6
	P04	23	6211-311-007-40	204	36	6212-535-001-00	302	4
6209-572-003-00	102	5-B	6211-312-003-20	204	27	6212-535-002-00	502	13
	P04	5		P04	14	6212-551-028-00	301	1
6209-580-002-10	502	25	6211-312-004-20	204	37	6212-552-014-00	301	2
6209-587-001-00	303	4		P04	15	6212-561-001-10	301	3
6209-600-004-00	204	24	6211-319-003-00	204	39	6212-563-001-00	301	4
6209-605-004-10	101	3	6211-321-022-00	204	48	6212-565-001-00	301	5
6209-605-007-00	201	5	6211-322-002-00	204	49	6212-569-002-00	101	4
	204	2	6211-341-085-00	203	1-A		P04	2
6209-610-001-10	201	3	6211-342-003-10	203	2	6212-571-006-00	301	6
6209-610-007-00	204	3	6211-361-069-00	202	1	6212-575-002-00	301	7
6209-610-008-00	201	7	6211-510-001-00	201	10	6212-600-002-10	301	8
6209-610-009-00	201	4	6211-511-003-00	201	11	6212-611-004-10	301	9
6209-625-001-00	201	14	6211-511-004-00	201	12	6212-616-002-00	301	16
	P04	10	6211-540-001-00	P02	1	6212-620-001-20	301	10

Numerical Index

Part Code	Fig.	Key	Part Code	Fig.	Key	Part Code	Fig.	Key
6212-626-002-10	301	11	6214-111-011-20	103	1	6215-345-031-00	S01	37
6212-628-004-00	301	12	6214-115-001-20	103	2	6215-345-032-00	S01	38
6212-628-005-00	301	13		P04	6	6215-345-033-00	S01	39
6213-100-003-30	401	1	6214-141-008-20	104	1	6215-345-034-00	S01	40
6213-111-001-30	401	2	6214-145-001-30	104	2	6215-345-035-00	S01	41
6213-119-001-00	401	6		P04	7	6215-345-036-00	S01	42
6213-120-003-20	401	3	6215-300-036-10	501	1-A	6215-345-037-00	S01	43
6213-125-001-00	401	4	6215-311-027-00	S01	52	6215-345-038-00	S01	44
6213-129-003-00	401	5	6215-315-002-00	501	3	6215-345-039-00	S01	45
6213-129-006-00	201	16	6215-330-024-10	S01	1-A	6215-345-040-00	S01	46
6213-140-035-00	401	8-A	6215-331-008-00	S01	2	6215-345-041-00	S01	47
6213-149-002-00	401	10	6215-332-013-00	S01	5	6215-345-042-00	S01	48
6213-160-002-20	204	28	6215-339-001-00	S01	6	6215-345-043-00	S01	49
6213-161-001-20	204	29	6215-342-001-00	S01	3	6215-359-001-00	501	2
6213-164-001-00	204	30	6215-343-001-00	S01	4	6215-359-002-00	S01	51
6213-240-002-10	401	15	6215-345-001-00	S01	7	6215-411-125-00	503	2
6213-311-006-00	401	12	6215-345-002-00	S01	8	6215-411-126-10	501	4
6213-319-001-00	201	24	6215-345-003-00	S01	9	6215-411-127-00	501	5
6213-610-005-40	402	1	6215-345-004-00	S01	10	6215-411-128-00	501	6
6213-611-003-20	402	2	6215-345-005-00	S01	11	6215-412-004-00	503	1-A
6213-612-004-00	402	9	6215-345-006-00	S01	12	6215-520-001-00	502	15
6213-613-002-10	402	8	6215-345-007-00	S01	13	6215-526-004-00	502	17
6213-614-003-10	402	12	6215-345-008-00	S01	14	6215-531-023-00	502	22
	P04	18	6215-345-009-00	S01	15	6215-541-001-10	502	18
6213-614-004-10	402	16	6215-345-010-00	S01	16	6215-541-016-40	504	2-A
	P04	19	6215-345-011-00	S01	17	6215-541-024-40	502	23
6213-619-001-00	402	15	6215-345-012-00	S01	18	6215-542-004-20	204	21
6213-619-002-00	402	11	6215-345-013-00	S01	19	6215-542-005-10	204	23
6213-619-003-00	402	10	6215-345-014-00	S01	20	6215-542-006-00	502	20
6213-621-003-00	402	6	6215-345-015-00	S01	21	6215-543-002-10	502	19
6213-622-002-10	402	5	6215-345-016-00	S01	22	6215-546-003-10	204	17
6213-631-002-00	402	3	6215-345-017-00	S01	23	6215-548-029-00	504	1
6213-631-005-00	402	4	6215-345-018-00	S01	24	6215-549-007-10	502	26
6213-641-002-10	403	2	6215-345-019-00	S01	25	6215-549-012-00	502	30
6213-642-002-00	402	7	6215-345-020-00	S01	26	6215-549-013-00	201	28
6213-660-023-00	403	1	6215-345-021-00	S01	27	6215-600-103-10	502	1
6213-669-003-00	403	3	6215-345-022-00	S01	28	6215-611-017-00	S02	8
6213-671-027-00	403	5	6215-345-023-00	S01	29	6215-612-001-00	S02	11
6213-674-006-20	801	2	6215-345-024-00	S01	30	6215-619-009-00	S02	1
6213-711-003-20	402	27	6215-345-025-00	S01	31	6215-619-010-00	S02	2
6213-716-001-50	402	22	6215-345-026-00	S01	32	6215-619-022-00	S02	10
6213-721-007-00	201	23	6215-345-027-00	S01	33	6215-621-016-20	502	8
6213-729-013-10	402	20	6215-345-028-00	S01	34	6215-622-001-00	S02	14
6213-743-002-10	402	23	6215-345-029-00	S01	35	6215-629-001-00	S02	12
	P04	20	6215-345-030-00	S01	36	6215-629-002-00	S02	13

Numerical Index

Part Code	Fig.	Key	Part Code	Fig.	Key	Part Code	Fig.	Key
6215-629-003-00	S02	20	6281-229-008-00	S03	10	V230-360-601-00	202	4
6215-629-004-00	S02	21	6281-229-011-00	S03	15	V230-360-601-20	201	27
6215-629-005-00	S02	22	6281-229-012-00	S03	19	V230-360-601-60	802	8
6215-629-006-00	S02	23	6281-229-013-00	S03	20	V230-360-603-00	403	4
6215-629-007-00	S02	24	6281-229-014-00	S03	21	V231-360-801-60	204	11
6215-629-008-00	S02	25	6281-229-015-00	S03	22		401	11
6215-629-009-00	S02	26	6281-229-016-00	S03	23	V231-360-802-00	103	3
6215-629-010-00	S02	27	6281-229-017-00	S03	24		402	18
6215-629-011-00	S02	28	6281-229-018-00	S03	25		402	24
6215-629-012-00	S02	29	6281-229-029-00	S03	14		801	3
6215-629-013-00	S02	30	6281-229-032-00	S03	6	V231-360-802-50	402	29
6215-629-014-00	S02	31	6281-229-033-00	S03	11	V231-360-803-00	204	15
6215-629-015-00	S02	32	6281-271-002-00	S03	26	V231-360-804-00	103	4
6215-629-016-00	S02	33	6281-410-023-10	802	3	V231-360-804-50	204	12
6215-631-019-00	S02	9	6281-910-014-00	802	6		402	13
6215-634-001-00	S02	18	6281-920-001-00	802	9	V231-360-805-00	301	19-A
6215-635-001-00	S02	16	6281-971-001-10	802	1	V231-360-805-50	204	9
6215-637-001-00	S02	15	6282-450-002-00	802	2	V231-360-807-50	204	13
6215-639-004-00	S02	17	6287-810-015-20	P04	1		402	25
6215-639-005-00	S02	19	6294-453-002-00	201	21	V231-360-808-50	204	8
6215-641-006-00	S02	7	6513-770-022-10	402	26	V233-361-002-00	205	2
6215-643-006-00	S02	3	6901-910-612-00	302	5	V233-361-007-00	801	5
6215-644-007-00	S02	4		502	14	V301-260-006-00	204	34
6215-649-002-00	S02	6	6901-910-625-00	401	7		502	27
6215-649-019-00	S02	5	6901-911-020-00	203	3	V304-260-008-00	204	46
6219-732-017-00	802	5	6901-931-240-00	801	8		204	50
6219-752-044-00	502	3	6902-050-816-00	204	38	V304-260-012-00	801	9
6219-752-045-00	502	2	6904-110-814-00	204	4	V334-260-010-00	801	6
6219-752-046-00	502	4	6904-110-818-00	201	19	V341-120-008-00	204	19
6219-752-047-00	502	5	6904-110-822-00	104	4	V401-160-006-00	502	29
6281-100-011-20	801	7		201	20	V401-160-008-00	204	47
6281-200-005-00	801	1		204	42		204	51
6281-213-018-00	S03	7	6904-110-840-00	201	18	V411-260-006-00	502	28
6281-214-003-00	S03	12		402	17	V523-101-001-80	304	2
6281-214-004-00	S03	13	6904-110-850-00	204	6	V600-110-600-40	502	12
6281-215-001-00	S03	17	6904-110-855-00	204	5	V600-110-600-50	204	44
6281-216-001-00	S03	18	6909-902-299-00	201	22	V600-110-620-30	502	11
6281-217-002-00	S03	16	6909-906-105-10	401	13	V682-200-000-60	101	5
6281-221-007-00	S03	4	6911-129-006-00	101	2	V704-140-016-00	301	15
6281-222-004-00	S03	1	J061-210-015-00	402	21	V705-140-012-00	204	31
6281-229-002-00	S03	2	J062-076-082-00	503	4-A	V710-140-004-00	502	21
6281-229-003-00	S03	3	J062-087-093-00	503	9-A	V720-101-900-80	502	24
6281-229-004-00	S03	5	P117-303-003-00	204	22	V720-102-401-50	401	9
6281-229-006-00	S03	8	V201-360-802-00	502	6		P04	17
6281-229-007-00	S03	9	V211-560-802-50	104	3	V720-102-401-80	202	3

Numerical Index

6004-095-441-00

Part Code	Fig. Key	Part Code	Fig. Key	Part Code	Fig. Key
V723-102-005-00	204 40				
	P04 16				
V723-102-005-50	402 28				
	P04 21				

Numerical Index

Part Code	Fig.	Key	Part Code	Fig.	Key	Part Code	Fig.	Key
1102-611-006-10	604	18	1444-328-272-00	310	6	1593-307-052-10	203	5
	605	18	1444-328-273-00	310	5	1593-332-053-00	221	6-A
1118-901-002-00	901	7	1444-411-006-00	208	7	1593-402-051-10	415	2
	902	7	1444-621-251-00	607	2	1593-403-004-10	417	7
1324-205-002-00	510	8	1444-621-311-00	608	12	1593-403-009-00	417	8
1342-402-006-00	610	31	1444-621-312-00	608	13	1593-411-001-10	421	7
	611	43	1480-207-011-00	206	2	1593-411-053-20	421	8
1373-121-001-00	220	11		207	2	1593-616-004-20	606	9
1376-402-003-00	610	32	1488-102-001-00	102	18	1593-621-250-10	608	10
	611	44	1491-434-017-00	416	34		609	16-A
1386-241-002-00	312	3	1507-216-004-10	413	4	1593-621-252-00	608	11
	420	3	1518-306-203-10	414	3	1593-623-520-00	610	28
	421	5	1518-432-250-10	414	2		611	37
1404-503-006-00	505	15	1518-621-320-00	611	25		614	1
1414-312-002-00	211	4	1524-122-001-00	307	2		616	3
1414-606-002-00	108	3		308	2	1594-312-005-00	615	1
	411	2	1544-104-205-00	104	5	1594-611-202-00	502	11
1415-102-007-00	S03	1	1544-120-008-10	201	9	1600-505-007-10	108	5
1415-102-008-00	S03	3	1544-304-006-10	208	4	1602-321-004-00	213	8
1415-102-013-00	S03	9	1560-104-010-40	102	21	1608-207-014-00	219	3
1415-120-006-00	220	4	1560-111-003-20	106	13	1612-434-006-00	416	28
	222	5	1560-132-007-30	307	25	1612-434-009-00	416	33
1416-621-037-00	106	9		308	27	1614-102-003-00	102	19
1421-201-002-00	S02	50	1560-208-018-40	302	18	1614-104-001-10	104	6
1421-603-004-00	102	10		303	18	1614-129-003-00	610	29
1421-611-004-00	403	2	1560-531-020-00	412	20		611	38
1423-616-004-00	102	56	1560-603-003-00	602	4		614	2
1424-101-203-00	102	22		603	5		616	4
1424-101-204-00	102	23	1560-664-250-00	610	17	1614-223-221-00	412	9
1427-111-229-00	104	13		611	20	1614-241-004-00	207	16
1427-301-002-20	208	6	1560-664-252-00	610	18	1614-261-006-00	222	17
1427-301-005-00	208	9		611	21	1614-262-003-00	501	4
1427-301-007-00	208	11	1560-664-253-00	610	19		501	10
1432-120-004-00	309	5		611	22	1614-432-006-00	413	11
1432-616-002-00	407	5	1560-666-004-00	610	33	1614-433-212-00	414	6
1432-621-006-10	611	26		611	45	1614-922-200-20	P05	1
1440-103-201-00	S03	4	1564-201-003-00	416	2	1617-102-007-00	102	17
1442-313-202-00	310	4		416	17	1617-730-005-00	106	10
1444-102-204-00	S03	5		416	23	1620-272-051-00	219	13
1444-122-002-00	307	24	1564-434-222-10	414	11	1620-410-001-10	P02	1
	308	26	1572-102-003-00	S03	8	1632-273-200-00	214	16
1444-314-009-10	205	11	1575-261-018-00	214	6	1636-102-012-00	102	24
	215	2	1593-101-003-20	101	5	1636-271-011-00	411	3
	216	3	1593-101-012-00	402	4	1636-436-002-00	912	2
	217	7	1593-117-003-10	108	6	1636-611-011-00	606	16

Numerical Index

Part Code	Fig.	Key	Part Code	Fig.	Key	Part Code	Fig.	Key
1636-611-011-00	606	19	1673-525-002-30	P04	16	1689-230-211-00	312	2
1636-631-006-00	216	2	1673-780-011-00	102	28	1689-230-220-10	312	5
	217	2	1674-904-008-00	909	6		420	5
1636-631-007-00	407	21		909	11	1689-271-006-00	218	3
	408	21		910	6	1689-272-240-00	219	11
1636-631-014-00	102	61		911	6	1689-272-260-00	219	1
1636-901-018-00	903	1	1675-112-002-00	107	2	1689-432-003-00	412	13
	904	1	1675-116-001-00	108	12	1689-434-210-20	414	5
	905	1	1675-262-002-00	220	6	1689-501-002-00	509	6
	906	1	1684-112-300-20	107	1	1689-502-001-00	502	13
	907	1	1685-434-001-00	416	11	1689-613-260-00	608	15
	908	1	1688-211-057-00	214	5		609	4-A
1637-650-200-00	607	1	1688-211-504-00	S05	3	1689-621-007-00	601	10
1637-650-202-00	607	3	1688-211-505-00	S05	4		607	6
1640-702-003-00	P04	10	1688-211-506-00	S05	8	1689-621-008-10	601	8
1640-702-004-00	P04	14	1688-211-507-00	S05	9	1689-903-004-00	903	2
1646-116-051-10	108	4	1688-211-508-00	S05	10		904	2
1646-226-053-00	218	2	1688-211-509-00	S05	11		905	2
1646-640-580-00	218	7	1688-211-522-00	S05	13		906	2
1650-102-202-10	102	2	1688-265-001-00	220	16		907	3
1650-104-200-10	104	1		221	5		908	3
1650-104-201-00	104	3	1689-101-004-00	101	14	1689-903-008-00	903	3
1650-104-203-10	104	4	1689-101-005-10	101	15		904	3
1650-104-210-00	104	2	1689-102-012-00	102	35		907	2
1650-111-034-00	105	6	1689-102-013-00	102	27	1689-904-002-00	903	7
	105	8	1689-102-025-00	102	62		905	7
	105	12		102	65		907	7
1650-135-002-00	220	20	1689-102-026-00	102	32		908	7
	307	13	1689-102-027-00	102	33	1689-904-003-00	909	12
	308	13	1689-102-028-00	102	34		911	10
1650-253-003-00	506	31	1689-102-300-00	102	1	1689-906-003-00	909	1
1650-432-001-00	413	5	1689-102-304-00	102	5		910	1
1650-650-222-00	610	3	1689-102-305-00	102	6		911	1
	611	3	1689-102-306-00	102	8	1690-241-003-00	201	5
1650-652-014-00	222	14	1689-102-307-00	102	9	1690-650-320-00	610	26
1650-652-390-00	614	6	1689-102-350-00	102	45		611	35
1672-105-210-00	105	1	1689-102-361-00	102	51	1690-658-360-10	610	20
1672-105-211-00	S03	7	1689-103-004-00	103	2		611	27
1672-301-002-00	208	2	1689-201-003-10	206	5		611	30
1672-301-003-00	208	8		207	5		614	4
1672-301-004-00	208	10	1689-202-002-00	206	12	1690-658-380-10	610	23
1672-434-007-00	416	29	1689-202-004-00	304	14		615	2
1672-434-008-10	416	37		306	1	1703-102-203-00	102	7
1672-434-009-10	416	1	1689-205-005-10	209	3	1703-105-210-00	105	9
1673-431-001-10	412	2	1689-230-200-10	312	1	1703-432-001-10	413	8

Numerical Index

Part Code	Fig.	Key	Part Code	Fig.	Key	Part Code	Fig.	Key
1703-432-009-10	413	9	1716-680-330-00	613	3	1725-436-002-00	419	5
1703-432-011-10	413	10		614	10	1725-436-003-00	419	6
1703-434-003-10	416	6	1716-901-016-00	901	6	1725-436-005-00	419	7
1703-434-004-10	416	9		902	6	1725-436-320-00	419	2
1703-435-001-10	418	1	1719-102-202-00	102	3	1725-505-001-00	221	14
1703-435-002-10	418	2	1719-102-203-00	102	4	1725-505-002-00	221	16
1703-505-005-00	220	12	1720-221-210-00	412	6	1725-505-006-00	504	12
	220	14	1720-221-211-00	S04	1	1725-505-007-00	504	15
1703-670-320-00	608	4	1720-221-212-00	S04	2	1725-508-253-00	506	29
	609	10-A	1720-221-213-00	S04	3	1725-508-310-00	506	8
1703-670-322-00	608	5	1720-221-214-00	S04	4	1725-509-231-10	506	33
1703-670-323-00	608	6	1720-221-215-00	S04	5	1725-509-232-00	506	35
1703-670-324-00	608	7	1720-221-216-00	S04	6	1725-509-252-00	506	27
1703-670-325-00	608	8	1720-221-217-00	S04	7	1725-670-230-00	608	16
1703-670-326-00	608	9	1720-221-218-00	S04	8		609	22-A
1704-112-001-00	102	69	1720-221-219-00	S04	9	1725-670-232-00	608	19
	102	74	1720-221-221-00	S04	10	1725-670-233-00	608	18
1705-441-002-00	417	11	1720-221-222-00	S04	11	1728-203-001-00	206	8
1705-441-200-00	421	1	1720-221-224-00	S04	12		207	8
1705-441-201-00	420	2	1720-221-225-00	S04	13	1728-203-004-00	206	16
	421	2	1720-221-230-00	412	7		207	15
1705-441-210-00	421	3	1724-102-012-00	102	36	1728-203-051-00	207	12
1705-902-006-00	909	7		102	42	1728-203-210-20	206	1
	909	14	1725-101-200-00	101	1		207	1
	910	7	1725-111-230-10	105	13	1728-204-002-00	209	1
	911	7	1725-112-212-00	610	14	1728-307-024-00	302	7
1705-902-007-00	909	9		611	17		303	7
	910	9	1725-112-213-00	610	15	1728-307-025-00	302	9
	911	9		611	18		303	9
1705-902-008-00	909	8	1725-203-210-00	506	36	1728-307-026-10	302	12
	910	8	1725-219-210-10	214	3		303	12
	911	8	1725-219-212-10	S05	1	1728-310-052-00	306	2
1705-904-002-10	909	2	1725-219-213-00	S05	2	1728-310-053-10	305	1
	910	2	1725-219-214-00	S05	5	1728-310-200-00	304	11
	911	2	1725-219-215-00	S05	6	1728-310-210-00	304	1-A
1705-904-011-00	909	13	1725-219-216-00	S05	7		306	6
	910	10	1725-219-217-00	S05	12	1728-310-211-00	304	2-A
	911	11	1725-272-005-00	218	20		306	7
1710-241-053-00	302	15		220	21	1728-310-212-00	304	3-A
	303	15	1725-403-003-00	405	13		306	8
1716-261-001-00	222	18		405	15	1728-310-213-00	304	4-A
1716-680-222-00	611	41	1725-407-001-00	404	3		306	9
	613	4	1725-433-001-10	415	4	1728-310-214-00	304	5
	614	11	1725-433-202-00	415	3		306	10
1716-680-330-00	611	40	1725-436-001-00	419	4	1728-310-510-10	306	4

Part Code	Fig.	Key	Part Code	Fig.	Key	Part Code	Fig.	Key
1728-334-005-00	213	25	1742-407-200-10	508	2	1771-102-006-00	102	75
	213	37		508	7	1771-102-021-00	102	55
1728-334-007-00	213	20	1744-702-310-00	P04	9	1771-102-022-00	102	64
1728-334-280-00	213	45	1752-102-005-00	102	43	1771-102-023-00	102	68
1728-408-001-00	406	13	1752-508-003-00	201	22	1771-102-024-00	102	73
	406	15	1752-606-004-00	311	3	1771-102-025-00	102	38
	505	19		604	6		102	41
	506	22		604	12	1771-102-350-00	102	26
1728-508-270-00	506	1		605	6	1771-102-360-00	102	37
1728-903-002-00	909	4		605	12	1771-102-370-00	102	40
	910	4		606	4	1771-102-380-00	102	60
	911	4	1752-690-530-10	612	1	1771-103-210-10	103	1
1728-903-003-00	909	16	1758-505-002-00	501	9	1771-103-220-00	103	6
	910	11		501	13	1771-103-230-00	103	9
	911	12	1770-117-001-00	108	2	1771-103-240-00	103	10
1729-111-280-10	106	5	1770-117-210-10	108	1	1771-103-250-20	103	12-A
1729-111-283-00	106	6	1770-225-210-00	411	1	1771-103-260-00	103	14
1729-111-284-00	106	7	1770-225-230-00	411	4	1771-104-002-00	104	9
1729-602-004-10	501	21-A	1770-274-001-10	222	8	1771-104-021-00	104	7
1729-705-009-00	602	2	1770-274-210-10	222	1	1771-104-210-20	104	12
	602	5	1770-274-230-10	222	6	1771-105-001-00	105	5
	603	2	1770-274-250-10	222	20-A	1771-105-002-00	105	7
	603	6	1770-403-003-00	402	6	1771-105-003-00	105	11
	608	24	1770-603-001-00	602	1	1771-111-021-00	106	4
	609	35		603	1	1771-111-250-00	106	1
1738-508-210-00	505	1	1770-603-002-00	602	3	1771-112-001-00	107	7
1739-401-001-00	404	5		603	4	1771-112-200-00	107	5
1739-401-200-00	401	1	1770-611-009-10	606	17	1771-117-210-00	108	9
1739-401-202-00	401	2	1770-611-012-00	606	18	1771-118-200-00	109	1
1739-436-310-00	419	1	1770-621-052-00	609	32	1771-120-210-20	110	1-A
1739-530-008-00	903	6	1770-623-001-00	616	1	1771-120-231-20	110	2-A
	904	6	1770-901-003-00	901	3		110	5-A
	905	6		902	3	1771-120-232-00	110	3-A
	906	6	1770-901-004-00	901	4	1771-120-233-00	110	4-A
	907	6		902	4	1771-120-241-20	110	6-A
	908	6	1770-902-051-00	905	3	1771-120-242-00	110	7-A
1739-670-220-20	609	31-A		906	3	1771-201-002-20	201	2
1739-681-220-10	611	32		908	2	1771-201-008-10	201	10
1740-313-300-00	310	3	1770-906-001-00	909	3	1771-201-009-00	201	16
1740-313-301-00	310	7		910	3	1771-201-021-00	201	1
1740-407-220-10	502	6		911	3	1771-201-091-00	P01	4
1740-407-520-00	506	10	1771-101-210-00	101	2	1771-201-210-10	201	12
1740-680-550-00	609	29-A	1771-102-001-00	102	13	1771-201-220-00	201	18
1742-313-001-10	309	4	1771-102-002-00	102	15	1771-201-910-00	P01	1
1742-407-200-10	507	2-A	1771-102-006-00	102	70	1771-201-920-00	P01	2

Numerical Index

Part Code	Fig.	Key	Part Code	Fig.	Key	Part Code	Fig.	Key
1771-203-002-00	202	1	1771-272-001-00	219	17	1771-312-270-00	307	17
1771-204-004-00	203	3	1771-272-210-10	219	4	1771-312-520-00	308	14
1771-204-005-10	203	4	1771-272-220-10	219	14	1771-312-530-10	308	18
1771-204-006-10	203	10	1771-272-230-10	219	8	1771-312-540-00	308	20
1771-204-007-10	203	12	1771-272-240-10	219	20	1771-313-051-00	310	11
1771-204-210-40	203	1-A	1771-273-001-00	220	3	1771-313-052-00	310	9
1771-212-510-00	205	5	1771-273-210-20	220	1	1771-313-210-10	309	1
1771-213-001-10	206	9	1771-273-230-20	220	5-A	1771-313-510-10	310	1-A
	207	9	1771-273-240-00	220	17	1771-314-210-00	311	1
1771-213-220-10	206	10	1771-273-250-00	220	23	1771-314-220-00	311	2
1771-213-510-10	207	10	1771-274-001-00	221	7	1771-404-001-00	402	10
1771-214-001-10	208	1	1771-274-210-00	221	1	1771-404-210-00	402	5
1771-215-001-00	209	6	1771-274-230-00	221	10	1771-404-220-10	402	1-A
1771-215-210-00	209	2	1771-274-240-10	221	11	1771-405-001-00	403	3
1771-216-210-00	210	1	1771-275-220-00	222	16	1771-405-230-10	403	1
1771-216-220-00	210	6	1771-275-280-00	222	9	1771-407-001-10	404	2-A
1771-218-210-10	211	1-A	1771-275-290-00	222	22	1771-407-200-00	404	1
1771-241-001-00	212	1	1771-306-021-00	301	1	1771-408-200-20	405	1
1771-244-004-20	213	17	1771-306-022-00	301	6	1771-408-250-00	405	14
1771-244-006-00	213	3	1771-306-230-00	301	9		406	14
1771-244-007-00	213	7	1771-307-007-00	302	11	1771-408-260-10	405	16
1771-244-008-00	213	13		303	11		406	16
1771-244-009-00	213	1	1771-307-021-00	302	1	1771-408-500-40	406	1
1771-244-011-00	213	11	1771-307-022-00	302	4	1771-410-021-00	407	19
1771-244-012-00	213	34	1771-307-061-00	303	1		408	19
1771-244-013-00	213	42	1771-307-062-00	303	4	1771-410-340-30	407	17
1771-244-230-00	213	9	1771-307-210-00	302	17		408	17
1771-244-240-30	213	48		303	17	1771-410-360-00	407	1
1771-244-250-10	213	28	1771-310-051-00	306	12	1771-410-370-00	407	14
1771-244-270-00	213	40	1771-312-001-00	307	14		408	14
1771-244-290-10	213	50	1771-312-002-00	307	22	1771-410-410-30	407	6
1771-245-004-00	214	1-A	1771-312-003-00	307	34		408	6
1771-245-270-00	214	10	1771-312-051-00	308	21	1771-410-520-00	408	1
1771-245-280-00	214	13	1771-312-052-00	308	24	1771-411-001-00	409	1
1771-245-290-00	214	4	1771-312-210-00	307	1		410	4
1771-246-051-00	216	1		308	1	1771-411-510-00	410	1
	217	1	1771-312-220-00	307	4	1771-430-210-00	411	6
1771-246-052-00	217	5		308	4	1771-431-001-20	412	1
1771-246-210-10	215	1-A	1771-312-230-00	307	5	1771-431-002-00	412	4
1771-246-510-00	217	3		308	5	1771-431-003-00	412	18
1771-271-220-00	218	13	1771-312-240-00	307	7	1771-431-004-00	412	24
1771-271-230-10	218	15		308	7	1771-431-210-10	412	8
1771-271-260-20	218	11	1771-312-250-00	307	30	1771-431-220-00	412	23
1771-271-310-00	218	1	1771-312-260-00	307	9	1771-431-230-00	412	16
1771-272-001-00	219	7		308	9	1771-432-001-00	413	1

Numerical Index

Part Code	Fig.	Key	Part Code	Fig.	Key	Part Code	Fig.	Key
1771-432-002-00	413	2	1771-510-250-00	508	3	1771-690-210-10	611	13
1771-433-001-00	414	1	1771-510-251-00	507	4	1771-690-220-00	608	22
1771-433-200-10	414	10		508	4	1771-690-300-00	610	1
1771-433-500-10	415	1	1771-553-003-00	509	7	1771-690-302-00	610	2
1771-434-003-10	416	16		510	12	1771-690-510-10	609	33-A
1771-434-004-10	416	22	1771-553-210-00	509	1	1771-690-520-00	611	23
1771-434-005-00	416	36	1771-553-220-00	509	2	1771-690-700-00	611	1
1771-434-210-00	416	31	1771-554-210-00	510	1	1771-690-702-00	611	2
1771-434-510-00	417	1	1771-554-230-00	510	3	1771-691-540-00	613	1
1771-434-520-00	417	4	1771-554-250-00	510	5	1771-692-210-00	614	8
1771-441-210-00	420	1	1771-554-270-00	510	10	1771-701-005-00	P04	19
1771-503-001-10	501	5	1771-601-003-10	601	4	1771-701-006-00	P04	22
1771-503-003-00	501	17	1771-601-004-10	601	5	1771-701-200-10	P03	1-A
1771-503-210-10	501	1-A	1771-601-021-00	601	12	1771-701-210-10	P04	2-A
1771-503-220-00	501	3	1771-601-200-20	601	1	1771-701-230-10	P04	3-A
1771-503-230-00	501	11	1771-601-310-10	601	14	1771-701-240-00	P04	18
1771-503-250-00	501	8	1771-603-001-00	603	3	1771-701-250-00	P03	2-B
1771-503-260-00	501	12	1771-606-003-10	604	17	1771-701-260-00	P03	3-B
1771-503-280-00	501	20-A		605	17	1771-702-200-10	P04	1-A
1771-504-210-00	502	1	1771-606-005-10	601	3	1771-801-005-00	801	8
1771-504-230-00	502	8	1771-606-006-00	604	2	1771-801-007-00	801	9
1771-504-240-00	502	10		605	2	1771-801-008-00	801	10
1771-506-003-00	503	2	1771-606-007-00	604	9	1771-801-009-00	801	6
	504	2-A		605	9	1771-801-210-20	801	1-A
1771-506-051-00	504	8	1771-606-210-00	604	1	1771-901-001-00	901	1
1771-506-052-00	504	10	1771-606-220-00	604	8		902	1
1771-506-210-00	503	1		605	8	1771-901-002-00	901	2
	504	1	1771-606-310-00	604	14		902	2
1771-506-510-00	504	5	1771-606-320-00	604	5	1771-901-005-00	901	5
1771-508-001-00	505	16		605	5	1771-901-055-00	902	5
1771-508-002-10	505	5	1771-606-330-00	604	11	1771-902-001-00	903	4
1771-508-210-10	505	2		605	11		905	4
1771-508-220-20	505	7	1771-606-500-00	605	1	1771-902-002-00	903	5
1771-508-230-10	505	20	1771-606-610-00	605	14		905	5
1771-509-001-10	506	18	1771-630-001-00	606	15	1771-902-051-00	904	4
1771-509-220-00	506	40	1771-630-005-10	606	1-A		906	4
1771-509-232-10	506	23-A	1771-630-007-00	606	10		907	4
1771-509-270-10	506	7	1771-630-220-00	606	3		908	4
1771-509-280-10	506	21	1771-670-201-00	608	2	1771-902-052-00	904	5
1771-509-290-00	506	16	1771-670-202-00	608	3		906	5
1771-509-310-00	506	14		609	3-A		907	5
1771-510-001-00	507	1-A	1771-670-210-00	608	1		908	5
	508	1	1771-670-501-00	609	2	1771-923-200-10	912	1
1771-510-220-00	507	7	1771-670-510-00	609	1	1771-923-210-00	912	6
1771-510-250-00	507	3	1771-690-210-10	610	10	1773-650-220-00	610	13

Numerical Index

Part Code	Fig.	Key
1773-650-220-00	611	16
1773-652-212-00	610	4
	611	4
1773-652-213-00	611	9
2130-725-006-00	606	7
2139-505-002-00	102	30
2144-419-022-00	218	17
2144-519-009-10	307	29
	308	31
2150-810-004-00	220	26
2151-221-002-10	604	3
	605	3
2157-201-004-10	201	15
2157-301-003-00	106	2
2186-409-037-00	507	5-A
2186-536-253-00	608	21
2186-536-254-00	608	20
2186-536-255-00	608	17
2194-201-005-00	302	13
2500-210-016-00	218	19
2500-901-027-00	909	18
	910	13
	911	13
2502-407-001-10	213	29
	213	41
2502-601-005-00	601	11
2504-135-008-00	218	16
3104-210-004-10	307	26
	308	28
3517-205-007-00	213	35
	213	43
3600-201-013-00	402	9
3610-440-018-00	607	5
3610-631-002-00	606	13
3614-261-002-00	608	14
3621-702-003-00	417	12
	912	5
3623-263-001-00	101	9
3623-820-013-10	102	63
3626-370-005-00	201	24
3631-350-201-10	502	7
3642-496-007-10	610	30
	611	39
	614	3
	616	5
3648-703-001-00	213	30
3650-270-214-00	608	23
	609	34
3650-432-014-00	604	16
	605	16
3650-440-014-00	222	2
3652-603-003-00	607	4
3656-115-002-00	220	2
	221	2
3656-221-001-10	221	12
	407	16
	408	16
3656-302-009-10	101	16
3656-565-006-00	209	5
3668-842-203-00	106	11
3670-520-001-00	213	21
3676-310-210-00	106	8
3676-352-001-00	506	15
3737-132-001-00	402	2
3737-172-011-00	222	15
3746-111-011-00	213	22
3805-113-003-00	509	5
3805-354-280-00	507	8
3805-371-007-00	408	3
3814-371-004-00	508	5
3816-424-005-00	501	14
3817-116-005-00	206	3
	207	3
3821-262-202-00	610	6
	611	6
3821-262-204-00	610	7
	611	7
3821-841-290-00	601	2
3824-247-202-00	610	5
	611	5
3827-203-001-00	102	67
	220	29
	407	2
	408	2
3827-270-002-00	611	8
3836-303-051-00	213	19
4101-102-038-00	102	57
	601	7
4130-705-002-00	102	31
	102	66
6221-408-003-00	102	53
6221-408-007-00	102	46
6221-408-008-00	102	47
6221-408-009-00	102	48
6221-408-010-00	102	49
6221-408-011-00	102	50
6221-408-013-00	102	52
7827-205-010-00	302	16
	303	16
7866-405-016-00	606	6
8561-501-010-00	506	19
8561-610-039-10	509	3
8595-201-017-00	206	6
	207	6
8595-510-391-00	510	6
8595-901-007-00	909	5
	910	5
	911	5
8650-203-001-10	510	2
	510	4
8654-501-006-10	606	5
8654-510-047-00	510	7
8664-555-250-00	506	12
J061-116-025-00	201	23
J061-210-015-00	102	20
J061-220-024-00	506	20
J061-224-032-00	505	6
J061-236-044-00	102	14
	102	16
J061-247-055-00	104	11
J061-252-063-00	104	8
	104	10
J062-104-111-00	105	14
J062-119-126-00	105	15
	P01	5
J062-138-148-00	201	11
	201	17
K135-002-009-00	S01	7
K135-017-006-00	S01	2
K135-023-000-00	505	10
K135-023-100-00	S01	1
K167-005-001-10	405	3
	406	3
K167-005-200-10	405	2
	406	2

Numerical Index

Part Code	Fig.	Key
K167-005-300-10	405	4
	406	4
K167-005-310-10	405	7
	406	7
K182-007-002-00	502	3
K182-012-001-00	502	2
K182-034-002-00	405	5
	405	8
	406	5
	406	8
K182-034-003-00	405	6
	405	9
	406	6
	406	9
K275-001-003-00	S02	27
K510-001-006-10	S02	4
K510-001-007-00	S02	5
K510-001-009-00	S02	7
K510-001-010-00	S02	8
K510-001-011-00	S02	9
K510-001-014-00	S02	12
K510-001-015-00	S02	13
K510-001-016-00	S02	15
K510-001-017-00	S02	16
K510-001-018-00	S02	17
K510-001-019-00	S02	18
K510-001-020-00	S02	19
K510-001-026-00	S02	25
K510-001-029-00	S02	26
K510-001-031-00	S02	34
K510-001-034-00	S02	36
K510-001-036-00	S02	41
K510-001-039-00	S02	33
K510-003-021-00	S02	20
K510-003-022-00	S02	21
K510-003-037-00	S02	22
K510-003-100-00	S02	43
K510-003-301-00	S02	44
K510-003-302-00	S02	45
K510-003-303-00	S02	46
K510-003-304-00	S02	47
K510-004-001-10	S02	1
K510-005-004-00	S02	2
K510-005-005-00	S02	3
	S02	3

Part Code	Fig.	Key
K510-005-023-00	S02	23
K510-005-024-00	S02	24
K510-006-008-00	S02	6
	S02	6
K510-012-000-10	204	1
	205	1
K510-012-012-10	S02	10-A
K510-012-013-10	S02	11-A
P103-521-006-10	508	8
P118-702-033-00	506	6
V200-360-601-60	504	13
V201-260-806-50	105	2
V201-260-808-00	104	15
V201-261-005-00	P04	4
V201-261-203-50	414	17
V201-360-803-00	219	23
	412	21
V201-360-804-50	213	32
	219	24
V201-361-002-50	302	24
	303	24
	416	45
V201-361-007-50	204	4
	205	6
V201-361-014-00	204	3
	205	3
V201-361-202-50	801	3
V201-361-203-00	407	3
	407	8
	408	4
	408	8
	414	8
V201-361-203-50	416	20
	416	26
	417	2
	417	5
	912	7
	P02	2
	P04	20
V201-361-204-50	407	12
	408	12
V201-361-206-00	912	3
V201-461-204-50	P03	4
	P04	6
V203-361-002-50	110	8

Part Code	Fig.	Key
V203-461-002-00	101	3
	101	10
	103	7
V210-260-604-00	505	8
V210-360-601-20	102	29
	217	4
V210-360-601-60	105	10
	205	12
	216	4
	412	25
	616	2
V210-360-602-00	506	5
V210-360-603-50	506	2
V210-560-602-50	505	17
V211-260-801-60	304	10
	306	11
	507	6
	508	6
V211-260-802-00	206	15
	207	14
	510	9
	601	6
V211-260-802-50	412	5
V211-260-804-00	201	20
V211-261-002-00	107	6
V211-261-002-50	307	3
	308	3
V211-360-801-60	103	13
	103	15
	201	14
	201	21
	213	51
	217	8
V211-360-802-00	101	13
	103	11
	104	14
	213	49
	306	5
	307	12
	308	12
	601	15
	610	9
	610	16
	611	19
	613	2

Numerical Index

Part Code	Fig.	Key
V211-360-802-00	P04	23
V211-360-802-50	106	3
	106	12
	801	5
V211-360-803-00	102	11
V211-560-802-00	218	12
V211-561-002-00	301	10
V211-561-002-50	102	39
	102	44
	310	2-A
	402	3
	407	15
	407	18
	408	15
	408	18
	502	9
	509	4
V211-561-003-00	213	18
	301	5
	416	4
V211-660-801-60	219	2
	219	12
	502	12
	510	11
V211-660-802-00	103	5
V211-660-803-00	404	4
V211-660-805-00	102	25
V211-661-002-00	307	33
V211-661-002-50	405	12
	406	12
	407	7
	408	7
V211-661-003-00	213	2
	213	12
V220-541-003-50	S02	42
V230-360-601-20	102	54
	217	6
V230-360-601-60	610	21
	610	24
	610	25
	610	27
	611	10
	611	24
	611	28
	611	31

Part Code	Fig.	Key
V230-360-601-60	611	33
	611	34
	611	36
V230-360-602-00	611	42
	613	5
	614	12
V231-360-801-60	102	72
	102	77
	209	7
	213	10
	311	4
	409	2
	410	2
	410	5
	412	19
	505	4
	604	4
	604	10
	604	15
	605	4
	605	10
	605	15
	606	2
V231-360-802-00	221	13
	222	21
	407	20
	408	20
	412	15
	416	41
	506	41
	604	7
	604	13
	605	7
	605	13
	611	12
V231-360-802-50	201	4
	212	4
	310	8
V231-360-804-00	202	3
	301	8
V231-360-805-00	212	3
V231-360-808-00	402	11
V231-361-002-50	308	15
V231-361-201-60	215	4
	311	5

Part Code	Fig.	Key
V231-361-201-60	410	3
V251-340-802-00	110	10-A
V251-340-802-5D	201	7
V251-340-804-0D	201	8
V251-341-002-00	302	20
	303	20
	416	32
V251-341-203-00	414	14
V301-260-006-00	107	3
	213	46
	504	14
	506	4
V304-260-008-00	102	59
	213	33
	218	21
	307	23
	308	25
	309	3
	412	22
	504	16
	505	12-A
	610	11
	610	22
	611	14
	611	29
	614	5
	614	7
	615	3
V304-260-010-00	108	8
	304	12
	306	13
	P04	5
V304-260-012-00	101	17
	414	18
V304-260-016-00	213	24
	P04	11
V304-460-008-00	101	6
	110	11
	202	5
	212	6
	219	25
V304-460-010-00	302	23
	303	23
	416	44
V304-460-012-00	407	13

Numerical Index

Part Code	Fig.	Key
V304-460-012-00	408	13
	414	15
	416	21
	416	27
	417	3
	417	6
V304-460-016-00	509	9
	510	13
V304-700-008-00	103	3
V305-260-012-00	218	6
	P05	3
V327-261-216-00	415	5
V327-262-110-00	419	8
V328-262-112-00	417	13
V335-260-012-00	419	3
V360-260-006-00	107	4
	215	3
	610	8
	611	11
V360-260-012-00	501	2
V361-260-006-00	501	23
V362-260-008-00	102	12
	102	58
	102	71
	102	76
	218	8
	220	22
	310	10
	402	12
	601	13
	606	8
	606	14
	801	7
	P04	24
V363-260-008-00	614	9
V363-260-010-00	218	14
V401-160-006-00	213	47
	506	3
V401-160-008-00	101	7
	104	16
	105	3
	110	12
	202	4
	208	5
	212	5

Part Code	Fig.	Key
V401-160-008-00	505	14
	610	12
	611	15
V401-160-010-00	101	4
	101	11
	103	8
	110	9
	204	5
	205	4
	205	7
	302	22
	303	22
	304	13
	306	14
	416	43
	419	9
V401-160-012-00	101	18
	213	26
	213	38
	218	5
	407	4
	407	9
	408	5
	408	9
	414	9
	414	16
	801	4
	912	4
	912	8
	P02	3
	P03	5
	P04	7
	P04	21
V401-160-016-00	213	23
	509	8
	P04	12
V401-170-008-00	S01	8
V401-700-008-00	103	4
V411-260-005-00	501	18
V411-260-006-00	108	10
	210	2
	219	5
	219	15
	307	11
	307	18

Part Code	Fig.	Key
V411-260-006-00	307	31
	308	11
	308	16
	407	10
	408	10
	411	8
V411-260-008-00	101	8
	105	4
	109	2
	210	7
	211	2
	218	10
	219	9
	219	21
	220	24
	220	27
	221	8
	222	10
	222	12
	222	23
	307	15
	307	27
	307	35
	308	22
	308	29
	309	2
	310	12
	411	7
	501	6
	503	3-A
	504	3-A
	504	11
V411-260-010-00	101	12
	108	7
	204	6
	205	8
	302	21
	303	21
	403	4
	416	42
	501	15
	606	11
V411-260-012-00	101	19
	213	27
	213	39

Numerical Index

Part Code	Fig.	Key
V411-260-012-00	220	7
	220	9
	220	18
	221	3
	222	3
	402	7
	504	6
	601	9
	P02	4
	P03	6
	P04	8
V411-260-014-00	502	14
V411-260-016-00	304	15
	415	6
	P04	13
V411-260-018-00	417	9
V411-260-022-00	210	4
	219	19
	307	20
V500-162-002-00	307	28
	308	30
V500-162-501-50	108	11
	411	9
V500-162-502-00	109	3
	210	8
	211	3
	218	9
	219	10
	219	22
	220	10
	220	13
	220	28
	222	11
	222	13
	222	24
	307	16
	308	23
	310	13
	419	10
	503	4
	504	4
	606	12
V500-162-502-50	501	16
V500-163-002-00	402	8
	403	5
V500-163-002-50	417	14
	502	15
V500-164-004-00	415	7
V523-100-801-60	204	2
	205	2
	208	3
V523-101-002-20	201	3
	202	2
	212	2
	301	4
	301	7
	412	14
V523-101-002-40	416	5
	416	40
V530-160-803-20	307	6
	307	8
	308	6
	308	8
	308	19
V560-160-005-00	501	19
V560-160-006-00	221	17
V560-160-008-00	220	25
	221	9
	307	36
	501	7
	504	9
V580-140-502-50	413	12
V580-140-503-20	417	10
V580-140-602-00	411	5
V580-140-602-20	221	15
V600-110-600-90	208	12
V600-110-601-00	208	13
	413	14
V600-110-620-40	S02	14
V600-110-630-30	214	12
V600-110-690-30	S02	37
V600-110-690-70	416	12
V600-111-600-40	214	8
V600-150-600-30	S02	38
V600-150-620-60	213	5
V600-350-620-10	218	4
V600-410-600-50	214	2
	214	7
	416	10
	416	30
V600-410-600-60	203	2
	203	13
	206	7
	207	7
V600-410-600-80	302	10
	303	10
	416	13
V600-410-620-40	214	11
	214	14
	412	10
V600-410-620-50	203	7
	203	11
	206	11
	207	11
	302	2
	302	5
	303	2
	303	5
	413	3
	416	38
V600-410-620-60	302	14
	303	14
	416	35
V600-410-620-70	214	15
V600-410-630-50	416	7
V600-450-620-40	213	4
	213	14
V600-450-620-50	213	15
	421	6
V682-200-001-00	506	30
V682-200-001-20	506	34
V704-140-010-00	222	7
	222	19
V704-140-012-00	220	8
	220	19
	221	4
	222	4
	504	7
V704-140-015-00	213	31
	213	36
	213	44
V704-140-016-00	304	16
	306	3
V704-140-017-00	S02	40
V704-140-018-00	218	18

Numerical Index

Part Code	Fig.	Key
V704-140-020-00	214	9
	412	3
	S02	30
V704-140-022-00	210	5
	219	18
	307	21
V704-140-025-00	203	6
	302	8
	303	8
	413	6
	416	39
V704-140-030-00	206	4
	207	4
	302	19
	303	19
V704-140-035-00	416	14
V705-140-025-00	506	28
V705-140-030-00	S02	39
V705-140-032-00	S02	32
V705-140-047-00	412	12
	416	18
	416	24
	S02	31
V705-140-052-00	213	16
	302	3
	302	6
	303	3
	303	6
	413	7
V706-140-040-00	413	16
V706-140-050-00	413	15
V707-140-055-00	203	8
	203	14
	416	15
V707-140-062-00	213	6
	416	8
V707-140-072-00	214	17
V710-140-006-00	220	15
V720-101-900-80	S02	48
V720-101-900-90	P04	17
V720-102-401-00	S03	2
V720-102-402-20	201	13
V720-103-502-40	209	4
	412	17
V720-103-504-20	414	13
V720-103-504-40	S03	6
V720-111-900-60	S01	6
V720-112-401-10	506	9
	506	11
	506	13
	506	17
	S02	29
V720-112-401-40	506	37
	507	9
	508	9
	S02	28
V720-112-401-50	204	8
	205	10
	P01	3
V720-112-401-80	506	26
	P04	15
V720-112-402-00	201	19
	505	9
	505	18
V720-112-402-10	506	25
V720-112-402-20	S01	5
V720-113-502-80	505	3
V721-103-105-00	206	14
	207	13
V721-103-106-00	204	7
	205	9
V721-103-107-00	414	4
V721-103-107-50	414	7
V721-103-109-00	416	3
V721-113-105-00	S01	4
V723-102-004-20	405	11
	406	11
V723-112-003-80	405	10
	406	10
V724-124-304-20	502	5
V744-114-280-70	S01	3
V744-120-350-70	412	11
V744-120-400-80	303	13
V744-120-470-70	S02	35
V744-125-400-70	206	13
V744-135-550-80	203	9
V760-150-000-00	210	3
	219	6
	219	16
	307	10
V760-150-000-00	307	19
	307	32
	308	10
	308	17
	407	11
	408	11
	415	8
V763-150-000-00	414	12
V780-140-000-1T	S02	49
V780-140-000-20	506	32
	506	38
V780-140-000-6B	301	2
V782-160-000-20	506	39
V782-160-000-4B	416	19
	416	25
V782-160-000-6B	301	3
V782-160-000-8T	201	6
V783-160-600-70	506	24
V793-142-480-60	502	4
V999-200-003-00	312	4
	420	4
	421	4
W201-261-206-00	P05	2
W296-134-007-00	501	22-A

Alpabetical Index

6004-095-441-00

Description	Fig.	Key
ADAPTER/255X065 ASSY	504	1
ARM/CONTROL	502	26
ARM/FLOATING COMP	502	18
ARM/TENSION	504	2-A
BALL	101	5
BEARING,RB/6004	502	12
BEARING,RB/6005	204	44
BEARING,RB/6203	502	11
BEARING,THRUST CRANK	201	13
	P02	2
	P02	4
BEARING/BALL	S03	6
	S03	11
BEARING/CONNECTING R	303	8-A
	P02	5-A
	P02	6-A
BEARING/CRANK/LOWER	201	12
BEARING/CRANK/UPPER	201	11
BEARING/WATER PUMP	402	3
BEARING/WATERPUMP	402	4
BELT/VCOGHM34.0	403	5
BODY/NOZZLE HOLDER	S01	2
BODY/OILPUMP	401	2
BODY/WATERPUMP	402	2
BOLT	101	7
	201	2
	204	38
	301	18
	401	7
	801	8
	S03	9
	S03	10
	S03	19
	S03	20
	S03	21
	S03	22
	S03	24
BOLT,JOINT	401	13
BOLT,SEMS/M10X20	203	3
BOLT,SEMS/M6X12	302	5
	502	14
BOLT,SEMS/M8X25 7T	104	3
BOLT/CONNECTINGROD	303	6-A
BOLT/CRANK	304	9
BOLT/FLANGE	304	7
BOLT/M6	204	32
	204	33
BOLT/M6X10	502	16
BOLT/M8X20	502	6
BOLT/WASHERHEAD	S02	10
BOLT/WS	401	6
BRACKET ROCKER SHAFT	301	12
BRACKET,ROCKER SHAFT	301	13
BRUSH	S03	17
BUSH	S03	15
CAMSHAFT/INJECTION P	502	8
CAP,BLANK/30	204	35
CAP,OIL FILLER	102	2
CAP,SEALING	101	2
CARTRIDGE/OILFILTER	401	15
CLAMP,STRAINER	401	10
CLAMP/WIRE/10-15	402	21
CLIP/HOSE/7.6-8.2	503	4-A
CLIP/HOSE/8.7-9.3	503	9-A
COLLOR	S03	3
CONNECTINGROD ASSY	303	5-A
CONNECTOR,OIL FILTER	201	24
CONNECTOR/FUEL	503	1-A
CONNECTOR/GLOWPLUG	802	5
COVER	S03	13
COVER,BEARING	S03	5
COVER/CYLINDER HEAD	102	1-A
COVER/HYDRAULIC	204	48
COVER/INJECTIONPUMP	201	25
CRANKSHAFT ASSY	304	1
CUP/SEALING/12	201	7
CUP/SEALING/16	204	3
CUP/SEALING/28	201	3
CUP/SEALING/36	201	4
CUTTER,VALVE	301	5
CYLINDERBLOCK ASSY	201	1
CYLINDERHEAD ASSY	101	1
DOWEL	201	21
ELEMENT ASSY	S02	9
FAN/COOLING	403	1
FLANGEBOLT	103	3
	103	4
	201	27
	202	4
	204	8
FLANGEBOLT	204	9
	204	11
	204	12
	204	13
	204	15
	205	2
	301	19-A
	401	11
	402	13
	402	18
	402	24
	402	25
	402	29
	403	4
	801	3
	801	5
	802	8
FLYWEIGHT	502	15
FLYWHEEL ASSY	304	5
FRAME	S03	12
FRAME/DRIVEEND ASSY	S03	7
GASKET	102	5-B
	402	8
	802	7
	P04	5
	P04	22
GASKET,EXH.MANIFOLD	104	2
	P04	7
GASKET,INLET MANIFOL	103	2
	P04	6
GASKET,NOZZLE	501	3
GASKET,SPACER	402	16
	P04	19
GASKET/COVER	201	26
	204	49
	P04	11
GASKET/CYLINDERHEAD	101	6
	P04	3
GASKET/DELIVERYVALVE	S02	6
GASKET/GEARCASE	204	27
	P04	14
GASKET/HOUSING	402	23
	P04	20
GASKET/PLATE	204	37
	P04	15

Alpabetical Index

Description	Fig.	Key
GASKET/WATER PUMP	402	12
	P04	18
GEAR/CAMSHAFT	302	2
GEAR/CRANK	304	3
GEAR/IDLE ASSY	302	6
GEAR/INJECTIONPUMP	502	9
GEAR/OILPUMP ASSY	401	3
GEARCASE ASSY	204	1
GENERATOR ASSY	801	1
GLOWPLUG	802	3
HANGER	205	1
HOLDER ASSY	S03	14
HOLDER/BRUSH ASSY	S03	16
HOLDER/DELIVERYVALVE	S02	4
HOLDER/JE/9-9	204	14
HOLDER/NOZZLE ASSY	S01	1-A
HOSE, RUBBER	503	3
HOSE/RUBBER	102	6
	402	20
HOSE/RUBBER/70	503	5-A
HOUSING ASSY	S02	8
HOUSING/THERMOSTAT	402	22
INJECTIONNOZZLE ASSY	501	1-A
INJECTIONPUMP ASSY	502	1
JOINTT-TYPE 2	503	6
KEY/07X05X09	302	3
	502	10
KEY/07X05X20	304	4
LEVELGAGE	201	29
LEVER/CONTROL COMP	502	23
MANIFOLD(INLET) ASSY	103	1
MANIFOLD/EXHAUST	104	1
METAL, CRANK SET	201	10
METAL, CRANK SET 050	P02	1
METAL, CRANK SET 100	P02	3
NIPPLE	201	22
NOZZLE ASSY	S01	52
NUT	204	46
	204	50
	301	17
	S01	51
	S03	2
	S03	23
	S03	25
NUT, CAP/M 8	204	19
NUT/CAP	102	4
NUT/FLANGE	802	4
NUT/M08	204	10
	301	20-A
	402	14
	402	19
	502	7
NUT/M10	801	6
NUT/M12	801	9
NUT/M6	204	34
	502	27
NUT/M8	204	18
NUT/NOZZLERETAINING	S01	5
OILPAN COMP	202	1
OILPUMP ASSY	401	1
O-RING	402	28
	P04	21
ORING	S02	5
O-RING 1A S50	204	40
	P04	16
O-RING/P 8	502	24
O-RING/P15	401	9
	P04	17
O-RING/P18	202	3
PACKING	204	20
	401	14
	P04	13
PIECE, DISTANCE	S01	6
PIN	201	17
	201	28
	204	23
	304	2
PIN, CONTROL	502	20
PIN, GROOVE	204	26
PIN, NOZZLE HOLDER	S01	3
PIN, PISTON	303	3
PIN/ARM	204	21
PIN/IDLEGEAR	201	6
PIN/INJECTIONPUMP	S02	12
PIN/SNAP	204	22
PIN/STRAIGHT	201	16
	401	5
PIN/TUBE	201	15
	204	41
PIPE, OIL	401	12
PIPE, WATER OUTLET	402	27
PIPE/FUEL	503	2
PIPE/INJECTION ASSY	501	4
	501	5
	501	6
PIPE/WATER PUMP	402	11
PIPE/WATERDRAIN	201	23
PISTON	303	1
PISTON(OV) 78.7	P03	1
PISTON(OV) 79.2	P03	3
PISTON/VALVE/RELIEF	204	29
PLATE	S02	13
	S03	8
PLATE, THRUST	302	4
PLATE, THRUST INJPUMP	502	13
PLATE/ADJUST	801	2
PLATE/ADJUSTING	S02	11
PLATE/FRONT	204	36
PLATE/REAR	203	1-A
PLATE/TAPPET/AD 0.2	S02	25
PLATE/TAPPET/AD 0.25	S02	29
PLATE/TAPPET/AD 0.3	S02	26
PLATE/TAPPET/AD 0.35	S02	30
PLATE/TAPPET/AD 0.4	S02	27
PLATE/TAPPET/AD 0.45	S02	31
PLATE/TAPPET/AD 0.5	S02	28
PLATE/TAPPET/AD 0.55	S02	32
PLATE/TAPPET/AD 0.6	S02	20
PLATE/TAPPET/AD 0.65	S02	33
PLATE/TAPPET/AD 0.7	S02	21
PLATE/TAPPET/AD 0.8	S02	22
PLATE/TAPPET/AD 0.9	S02	23
PLATE/TAPPET/AD 1.0	S02	24
PLATE/WATER PUMP	402	9
PLUG	301	11
PLUG/M14X1.5	202	2
PLUG/PT1/2	101	3
PLUG/PT1/8	201	5
	204	2
PLUG/SCREW	204	24
POINTER	203	2
PULLEY	S03	1
PULLEY, WATER PUMP	403	2
PULLEY/CRANK	304	8
RACK/CONTROL ASSY	S02	15

Alpabetical Index

6004-095-441-00

Description	Fig.	Key
REGULATOR ASSY	S03	26
RELAY, SOLENOID	802	9
REPAIR/ENGINE SET	P04	1
RESISTANCE/1.0	503	8-A
RING, SNAP	303	4
RING, SNAP/ 4 E	502	21
RING, SNAP/12 C	204	31
RING, SNAP/16 C	301	15
RING/PISTON SET	303	2
RING/PISTON/OV SET	P03	2
	P03	4
RINGGEAR	304	6
RINK/CONTROL	502	19
ROCKERARM	301	9
ROCKERSHAFT ASSY	301	8
ROD, PUSH	301	7
ROTOR ASSY	S03	4
ROTOR/OUTER	401	4
ROTOR/WATERPUMP	402	6
SCREW ADJUST	301	16
SCREW/HOLLOW	S02	1
SCREW/WATER PUMP	402	10
SEAL SET/WATER PUMP	402	5
SEAL, BEARING CAP	201	8
	P04	8
SEAL, BEARING CAP/7	201	9
	P04	9
SEAL, CYL. HEAD COVER	102	3
	P04	4
SEAL, OIL	101	4
	201	14
	204	7
	P04	2
	P04	10
	P04	12
SEAL/WATER PUMPPULLE	402	7
SEAT, VALVE SPRING	301	4
SEAT/SPRING/LOWER	S02	19
SEAT/SPRING/UPPER	S02	17
SHAFT, CAM	302	1
SHAFT/HYDRAULIC ASSY	204	43-A
SHAFT/ROCKERARM ASSY	301	10
SHIM/INJECTIONPUMP	502	2
	502	3
	502	4
SHIM/INJECTIONPUMP	502	5
SHORTBLOCKENGIN ASSY	P01	1
SLEEVE/PLUNGER	S02	16
SOLENOID	802	6
SPACER	204	39
SPACER, PUMP. WATER	402	15
SPACER/FUN/19	403	3
SPRING	301	14
	S03	18
SPRING, RETURN	502	25
SPRING, STARTING	502	30
SPRING/DELIVERYVALVE	S02	3
SPRING/PUMPPLUNGER	S02	18
SPRING/RELIEF VALVE	204	30
SPRING/VALVE	301	3
SPRINNG/GOVERNOR	502	22
STARTER ASSY	801	7
STOPPER/FULLLOAD	204	17
STRAINER	401	8-A
STUD	101	8
	104	4
	201	19
	201	20
	204	4
	204	5
	204	6
	204	42
STUD/M8X40	201	18
	402	17
SWITCH/OILPRESSURE	802	1
SWITCH/OVERHEAT	802	2
TAPPET	301	6
TAPPET/INJECTIO ASSY	S02	14
THERMOSTAT	402	26
THRUSTPIECE	502	17
VALVE ASSY	S02	7
VALVE/EXHAUST	301	2
VALVE/INTAKE	301	1
VALVE/RELIEF ASSY	204	28
WASHER	501	2
	S01	4
WASHER / M6	502	28
WASHER, SP/M 6	502	29
WASHER, SP/M 8	204	47
	204	51
WASHER/0.9	S01	7
WASHER/0.925	S01	8
WASHER/0.95	S01	9
WASHER/0.975	S01	10
WASHER/08X14X01	204	16
	204	25
	P04	23
WASHER/1.0	S01	11
WASHER/1.025	S01	12
WASHER/1.05	S01	13
WASHER/1.075	S01	14
WASHER/1.1	S01	15
WASHER/1.125	S01	16
WASHER/1.15	S01	17
WASHER/1.175	S01	18
WASHER/1.2	S01	19
WASHER/1.225	S01	20
WASHER/1.25	S01	21
WASHER/1.275	S01	22
WASHER/1.3	S01	23
WASHER/1.325	S01	24
WASHER/1.35	S01	25
WASHER/1.375	S01	26
WASHER/1.4	S01	27
WASHER/1.425	S01	28
WASHER/1.45	S01	29
WASHER/1.475	S01	30
WASHER/1.5	S01	31
WASHER/1.525	S01	32
WASHER/1.55	S01	33
WASHER/1.575	S01	34
WASHER/1.6	S01	35
WASHER/1.625	S01	36
WASHER/1.65	S01	37
WASHER/1.675	S01	38
WASHER/1.7	S01	39
WASHER/1.725	S01	40
WASHER/1.75	S01	41
WASHER/1.775	S01	42
WASHER/1.8	S01	43
WASHER/1.825	S01	44
WASHER/1.85	S01	45
WASHER/1.875	S01	46
WASHER/1.9	S01	47
WASHER/1.925	S01	48

Alpabetical Index

Description	Fig. Key	Description	Fig. Key	Description	Fig. Key
WASHER/1.95	S01 49				
WASHER/9X22X2	801 4				
WASHER/AIR BLEEDER	S02 2				
WATERPUMP ASSY	402 1				

Alpabetical Index

1771-095-300-00

Description	Fig.	Key
ADAPTER 90Ø/3/8	201	24
ADAPTER(3/8X1/4)	508	5
ADAPTER/45Ø	405	13
	405	15
	502	7
ADAPTER/90/LOW PRESS	506	19
ADAPTER/G1/4 ASSY	506	10
	506	12
	506	16
ADAPTER/L/G1/4 ASSY	506	8
ADAPTER/L/G1/4XR1/4	406	13
	406	15
	505	19
	506	22
ADAPTER/R3/8XG1/4	507	1-A
	508	1
ADAPTOR/G3/8XM16ASSY	507	8
ADAPTOR/STRAIGHT	506	15
ADPTER/R3/8XM16	507	5-A
ARM	611	41
	613	4
	614	11
ARM/4WD COMP	411	4
	412	16
ARM/BRAKE	306	12
ARM/BRAKE COMP	304	11
	307	17
ARM/BRAKE/LH COMP	307	5
	308	5
ARM/BRAKE/RH COMP	307	7
	308	7
ARM/COUNTER COMP	307	30
ARM/COUNTER/G COMP	308	18
ARM/CRUISE ASSY	222	1
ARM/DIFF COMP	209	2
ARM/HST/F COMP	219	4
ARM/HST/R COMP	219	14
ARM/LEVER COMP	501	3
ARM/LH ASSY	510	1
ARM/LIFT COMP	509	1
ARM/MEUTRAL ASSY	218	15
ARM/PTO ASSY	213	28
ARM/PTO/MOWER ASSY	220	1
ARM/PTOBRAKE ASSY	213	40
ARM/RH ASSY	510	3
ARM/SPOOL COMP	501	11
ARM/TRANION	S02	12
ARM/TRUNNION COMP	218	1
ARM/VALVE COMP	221	10
BACKPLATE	304	2-A
	306	7
BALL	506	30
	506	34
BAND	610	33
	611	45
BAND,WIRE/140	610	32
	611	44
BAND/CLEANER	104	6
BAND/WIRE/250	610	31
	611	43
BAR/LOCK	601	12
BASE/BATTERY COMP	107	5
BATTERY/55B24R/ ASSY	107	1
BEARING	214	8
	416	12
	S02	37
BEARING,RB/6003SS	S02	38
BEARING,RB/6009	208	12
BEARING,RB/6010	208	13
	413	14
BEARING,RB/6204	S02	14
BEARING,RB/6206SS	213	5
BEARING,RB/6303	214	12
BEARING/BALL	203	2
	203	7
	203	11
	203	13
	206	7
	206	11
	207	7
	207	11
	213	4
	213	14
	213	15
	214	2
	214	7
	214	11
	214	14
	214	15
	218	4
BEARING/BALL	302	2
	302	5
	302	10
	302	14
	303	2
	303	5
	303	10
	303	14
	412	10
	413	3
	416	7
	416	10
	416	13
	416	30
	416	35
	416	38
	421	6
BEARING/THRUST	S02	13
BELT/VB044	213	19
BLOCK/CYLINDER	S02	3
	S02	3
BLOCK/PORT	S02	2
BODY	506	33
BOLT	110	8
	204	3
	204	4
	205	3
	205	6
	601	8
	610	14
	611	17
	912	3
BOLT 7T(SP)	405	12
	406	12
	407	7
	408	7
BOLT(S) M10X25	307	3
	308	3
BOLT(SP)/M6X16	105	10
	205	12
	216	4
	412	25
	616	2
BOLT,SEMS	102	29
	107	6

Alpabetical Index

Description	Fig.	Key
BOLT, SEMS	201	20
	217	4
BOLT, SEMS (SP)	103	13
	103	15
	201	14
	201	21
	213	51
	217	8
BOLT, SEMS (S) M8X16	304	10
	306	11
	507	6
	508	6
BOLT/8X20	103	5
BOLT/BATTERY	107	2
BOLT/KNOB/M08X12	102	63
BOLT/M 8X65	105	2
BOLT/M 8X80	104	15
BOLT/M06X08/APSET	S03	8
BOLT/M10X1.25X20	101	3
	101	10
	103	7
BOLT/M10X20	301	10
	302	20
	303	20
	307	33
	416	32
BOLT/M10X25	102	39
	102	44
	302	24
	303	24
	310	2-A
	402	3
	407	15
	407	18
	408	15
	408	18
	416	45
	502	9
	509	4
BOLT/M10X30	213	18
	301	5
	416	4
BOLT/M10X50	P04	4
BOLT/M12X25	801	3
BOLT/M12X30	407	3
BOLT/M12X30	407	8
	408	4
	408	8
	414	8
BOLT/M12X35	414	17
	416	20
	416	26
	417	2
	417	5
	912	7
	P02	2
	P04	20
BOLT/M12X45	407	12
	408	12
	P03	4
	P04	6
BOLT/M12X60	P05	2
BOLT/M16	509	6
BOLT/M6X16	504	13
BOLT/M8X16	219	2
	219	12
	502	12
	510	11
BOLT/M8X20	218	12
BOLT/M8X25	208	4
BOLT/M8X28 11T	S01	7
BOLT/M8X30	219	23
	412	21
BOLT/M8X45/7T	213	32
	219	24
BOLT/S	206	15
	207	14
	412	5
	505	8
	505	17
	510	9
	601	6
BOLT/SET/M16X60	P04	10
BOLT/SM/M10X23	218	2
BOLT/SP	101	13
	102	11
	102	25
	103	11
	104	14
	106	3
BOLT/SP	106	12
	213	2
	213	12
	213	49
	306	5
	307	12
	308	12
	404	4
	506	2
	506	5
	601	15
	610	9
	610	16
	611	19
	613	2
	801	5
	P04	23
BOLT/STUD	110	10-A
	414	14
BOLT/STUD/SEAL	201	7
	201	8
BOOT	610	19
	611	22
BRACKET/CLEANER COMP	104	12
BRACKET/LEVER COMP	407	17
	408	17
BRACKET/MOUNT/L COMP	101	1
	101	2
BRACKET/NEUTRAL COMP	218	11
BRACKET/PARKING COMP	310	1-A
BRACKET/RESERVETANK	102	53
BRACKET/VALVE COMP	506	40
BRACKET/WEIGHT COMP	912	6
BRAKE/110 ASSY	304	1-A
	306	6
BULB	608	23
	609	34
BULB/12V25/25W	607	2
BUSH	S04	7
BUSH(18X20X20)	218	16
BUSH, LEVER	102	10
BUSH/10X12X15	412	9
BUSH/12X14X10	220	2
	221	2
BUSH/12X14X20	222	2

Alpabetical Index

Description	Fig.	Key
BUSH/15X17X11	213	29
	213	41
BUSH/15X17X16	221	12
	407	16
	408	16
BUSH/20X23X20	510	2
	510	4
BUSH/20X23X30	510	6
BUSH/22X25X25	415	3
BUSH/25X28X25	415	2
BUSH/35X39X25	509	3
BUSH/35X39X26	414	11
BUSH/62X67X30	414	6
BUSH/68X71X14	S02	17
BUSH/95X100X22	S02	16
BUTTON	310	6
CABLE/4WD/LOCK ASSY	411	6
CABLE/ACCELERATOR	108	9
CABLE/ACCELERATOR/AU	109	1
CABLE/BATTERY ASSY	610	10
	611	13
CABLE/CRUISE ASSY	222	9
CABLE/DIFF ASSY	210	6
CABLE/EARTH ASSY	610	13
	611	16
CABLE/HST/F ASSY	219	8
CABLE/HST/R ASSY	219	20
CABLE/PTO ASSY	220	23
CABLE/RELEASE ASSY	222	22
CABLE/UPSTOP ASSY	503	1
	504	1
CAM/CENTER	S04	10
CAM/DRAIVE	S04	13
CAM/DRIVEN	S04	8
CAM/LOCK/PTO COMP	220	17
CAP	102	2
	102	47
	608	12
	S03	4
CAP,OIL	414	2
CAP,PTO SHAFT	205	11
	215	2
	216	3
	217	7
CAP,TIRE VALVE	312	4

Description	Fig.	Key
CAP,TIRE VALVE	420	4
	421	4
CAP/22	603	3
CAP/OIL ASSY	P01	2
CAP/OIL SET	P01	1
CAP/SEAL/47	416	2
	416	17
	416	23
CAP/STEERING	401	2
CAP/TANK/NONLEA ASSY	106	5
CAP/WHEEL	421	8
CASE	S02	1
CASE,DIFF	208	6
CASE/4WD	412	4
CASE/BLOWER COMP	801	1-A
CASE/CHAIN/A	301	1
CASE/CHAIN/B	301	6
CASE/DIFF	413	8
CASE/FINAL	416	1
CASE/FINAL/LH	416	16
CASE/FINAL/RH	416	22
CASE/TRANSMISSION/LH	201	1
CASE/TRANSMISSION/RH	201	2
CHAIN/ROLLER60X066	302	11
	303	11
CLAMP	102	17
	102	52
	222	14
	419	6
CLAMP,HARNESS	222	15
CLAMP/WIRE/10-15	102	20
CLAMP/WIRE/20-24	506	20
CLAMP/WIRE/24-32	505	6
CLAMP/WIRE/36-44	102	14
	102	16
CLAMP/WIRE/47-55	104	11
CLAMP/WIRE/52-63	104	8
	104	10
CLAMP/WORM/16-25	201	23
CLEANER/AIR ASSY	104	1
CLIP	104	3
CLIP/HOSE/10.4-11.1	105	14
CLIP/HOSE/11.9-12.6	105	15
	P01	5
CLIP/HOSE/11-13	105	6

Description	Fig.	Key
CLIP/HOSE/11-13	105	8
	105	12
CLIP/HOSE/13.8-14.8	201	11
	201	17
CLUTCH ASSY	412	6
CLUTCH/DIFFLOCK	209	1
CLUTCH/PTO ASSY	214	3
COLLAR,PINION THRUST	208	9
COLLAR,THRUST	208	11
COLLAR/08X12X10	220	12
	220	14
COLLAR/08X12X13	404	3
COLLAR/09X13X28	102	24
COLLAR/09X14X20	503	2
	504	2-A
COLLAR/09X14X62	402	10
COLLAR/16X22X35	502	11
COLLAR/25X32X3	413	4
COLLAR/26X32X34	417	11
COLLAR/26X32X53	421	7
COLLAR/26X35X03	203	5
COLLAR/31X38X11	206	5
	207	5
COLLAR/31X38X32	203	3
COLLAR/48X52X17	413	5
COLLER	102	4
COLLER/32X43X15	416	36
COLUMN/STEERING COMP	403	1
CONNECTER	615	1
CONNECTOR	102	21
CONNECTOR/JOINT ASSY	612	1
CONTROLLER/STEERING	404	1
COUPLING/18X30X55	213	8
COUPLING/PTO	214	1-A
COUPRING/16X27X55	412	2
COVER	106	13
	216	1
	217	1
	608	11
COVER ASSY	104	2
COVER,PUMP	S01	2
COVER/44X10	417	7
COVER/BATTERY	107	7
COVER/BELT COMP	213	50
COVER/BRAKE	305	1

Alpabetical Index

Description	Fig.	Key
COVER/BRAKE COMP	311	2
COVER/DUST	419	5
COVER/FENDER	801	8
COVER/FRONT	604	17
	605	17
COVER/FUSEBOX	611	9
COVER/REAR COMP	601	14
COVER/ROD/A SET	405	4
	406	4
COVER/ROD/B SET	405	7
	406	7
COVER/SHAFT	412	24
	801	6
COVER/SHAFT COMP	412	23
COVER/SIDE	407	19
	408	19
COVER/SIDE/LH COMP	103	12-A
COVER/SIDE/RH COMP	103	14
COVER/SIDEPTO	217	5
COVER/SWITCH	608	17
COVER/WHEEL	416	33
CUP HEAD SQUARE NECK	606	6
CUSHION, CARRIER	402	2
CUSHION, RUBBER	104	13
CUSHION/RUBBER	403	2
CUSHION/RUBBER/10X25	102	56
CYLINDER ASSY	502	1
CYLINDER/2WD ASSY	406	1
CYLINDER/4WD ASSY	405	1
DAMPER/OIL ASSY	218	7
DIODE/3A	610	4
	611	4
DISK/BRAKE	S05	11
DRUM/BRAKE	304	14
	306	1
DUST SEAL	405	6
	405	9
	406	6
	406	9
DUST SEAL SER42	502	4
ELBOW/90Ø ASSY	508	8
ELEMENT	S03	7
ELEMENT ASSY	104	4
ERAME/LOWER SET	P03	1-A
FENDER/LH COMP	604	1

Description	Fig.	Key
FENDER/LH/2WD COMP	605	1
FENDER/REAR COMP	605	14
FENDER/REAR/B COMP	604	14
FENDER/RH COMP	604	8
	605	8
FILTER/FUEL ASSY	105	1
FILTER/OIL ASSY	507	3
	507	4
	508	3
	508	4
FILTER/SUCTION COMP	505	1
FLANGE/PUMP	505	16
FLANGE/YOKE	110	3-A
	110	7-A
FLANGEBOLT	102	54
	102	72
	102	77
	201	4
	202	3
	209	7
	212	3
	212	4
	213	10
	215	4
	217	6
	221	13
	222	21
	301	8
	308	15
	310	8
	311	4
	311	5
	402	11
	407	20
	408	20
	409	2
	410	2
	410	3
	410	5
	412	15
	412	19
	416	41
	505	4
	506	41
	604	4

Description	Fig.	Key
FLANGEBOLT	604	7
	604	10
	604	13
	604	15
	605	4
	605	7
	605	10
	605	13
	605	15
	606	2
	610	21
	610	24
	610	25
	610	27
	611	10
	611	12
	611	24
	611	28
	611	31
	611	33
	611	34
	611	36
	611	42
	613	5
	614	12
FLOOR	606	1-A
FRAME/FENDER/LH COMP	604	5
	605	5
FRAME/FENDER/RH COMP	604	11
	605	11
FRAME/FRONT COMP	407	6
	408	6
FRAME/LH COMP	P04	2-A
FRAME/LOWER/LH COMP	P03	2-B
FRAME/LOWER/RH COMP	P03	3-B
FRAME/RADIATOR/LH	102	37
FRAME/RADIATOR/RH	102	40
FRAME/REAR/2WD/ COMP	408	1
FRAME/REAR/4WD/ COMP	407	1
FRAME/RH COMP	P04	3-A
FRAME/SEAT/C COMP	407	14
	408	14
FRAME/TANK COMP	106	1
FRAME/UPPER COMP	P04	9
FRAME/UPPER SET	P04	1-A

Alpabetical Index

1771-095-300-00

Description	Fig.	Key
FUSE/BLADE/32V05A	610	5
	611	5
FUSE/BLADE/32V10A	610	6
	611	6
FUSE/BLADE/32V20A	610	7
	611	7
FUSE/SLOWBLOW	610	3
	611	3
GASKET	S02	25
GASKET/MUFFLER	103	2
GAUGE/FUEL ASSY	106	8
GAUGE/LEBEL	201	5
GEAR PUMP SET	S01	1
GEAR/BEVEL/11	416	6
GEAR/BEVEL/12	416	29
GEAR/BEVEL/14	208	10
GEAR/BEVEL/15	413	10
	416	9
GEAR/BEVEL/28	413	2
GEAR/BEVEL/45	206	9
	207	9
GEAR/BEVEL/47	416	37
GEAR/HELICAL/38	203	4
GEAR/HERICAL/32	203	12
GEAR/HERICAL/35	203	10
GEAR/INPUT/12 COMP	206	1
	207	1
GEAR/SPUR/23 COMP	206	10
GEAR/SPUR/23/G COMP	207	10
GEAR/SPUR/25 COMP	214	4
GEAR/SPUR/28 COMP	214	10
GEAR/SPUR/37 COMP	214	13
GEAR/SPUR/44	208	1
GRIP,BRAKE	402	9
GRIP/07X34/OR	309	4
GRIP/12X60	411	3
GRIP/MAIN	222	18
GRIP/MID/PTO	220	16
	221	5
GRIP/ORANGE	310	7
GRIP/SUB	501	4
	501	10
GRIP/THROTTLE	108	4
GROMMET	102	30
GROMMET/(16X25X2)	604	16

Description	Fig.	Key
GROMMET/(16X25X2)	605	16
GROMMET/10X30X5	606	9
GROMMET/12X19	108	3
	411	2
GROMMET/20	102	31
	102	66
GROMMET/27X34X03	509	5
GUARD/LH COMP	410	1
GUIDE/BELT/UPPE COMP	213	48
GUIDE/CHAIN	302	12
	303	12
GUIDE/NET/LH	102	8
GUIDE/NET/RH	102	9
HANDLE	601	2
HANGER,SUPPORT	606	13
HARNESS COMP	607	3
HARNESS/MAIN ASSY	610	1
HARNESS/MAIN/G ASSY	611	1
HARNESS/PANEL ASSY	608	22
HARNESS/PANEL/G ASSY	609	33-A
HOLDER	108	12
	608	5
HOOD/ENGINE COMP	601	1
HOOK/CRUISE COMP	222	20-A
HOOK/STEP	606	10
HORN ASSY	610	26
	611	35
HOSE,DRAIN	102	18
HOSE/042	108	2
HOSE/06X10X850 ASSY	105	13
HOSE/08X13X350	201	16
HOSE/08X13X435	105	7
HOSE/08X13X480	201	10
HOSE/08X13X600	105	5
HOSE/08X13X720	105	11
HOSE/110	505	5
HOSE/1200 ASSY	502	6
HOSE/205	102	19
HOSE/280	506	18
HOSE/700 ASSY	507	2-A
	508	2
	508	7
HOSE/CLEANER/INLET	104	7
HOSE/CLEANER/OUTLET	104	9
HOSE/COOLER/2ND	201	22

Description	Fig.	Key
HOSE/HYDOR/2750 ASSY	405	14
	406	14
HOSE/HYDOR/2900 ASSY	405	16
	406	16
HOSE/HYDOR/500 ASSY	506	14
HOSE/HYDRO/1500 ASSY	506	21
HOSE/HYDRO/1700 ASSY	506	7
HOSE/HYDRO/2400 ASSY	505	20
HOSE/LUBBER	102	51
HOSE/RADIATOR/INLET	102	13
HOSE/RADIATOR/LOWER	102	15
HOSE/RUBBER	102	49
HOUSING/AXLE	414	1
HOUSING/AXLE/2W ASSY	415	1
HST/SF/21 ASSY	204	1
	205	1
HUB ASSY	221	11
HUB COMP	307	9
	308	9
HUB/13X22X50	221	14
HUB/BRAKE/G COMP	308	14
HUB/HST	206	8
	207	8
HUB/LIFT ASSY	509	2
INSULATOR	101	5
	608	6
INSULATOR/10X350	604	9
	605	9
INSULATOR/10X35X03	102	38
	102	41
INSULATOR/10X460	604	2
	605	2
INSULATOR/1130	102	27
INSULATOR/115	102	69
	102	74
INSULATOR/15	404	5
INSULATOR/15X1300	601	3
INSULATOR/15X15X280	102	43
INSULATOR/15X55X03	311	3
	604	6
	604	12
	605	6
	605	12
	606	4
INSULATOR/20X65	102	34

Alpabetical Index

Description	Fig.	Key
INSULATOR/265	102	70
	102	75
INSULATOR/300	102	33
INSULATOR/455	102	62
	102	65
INSULATOR/490	102	32
INSULATOR/LEVER/SUB	220	6
	501	9
	501	13
INSULATOR/MOUNT/34	101	16
INSULATOR/SIDE	102	5
INSULATOR/STARTER	101	14
KEY ASSY	608	14
KEY/08X07X20	213	21
KNOB/SET/M06X15	604	18
	605	18
LABEL/BATTERY	909	2
	909	16
	910	2
	910	11
	911	2
	911	12
LABEL/CAUTION	909	1
	910	1
	911	1
LABEL/CE	909	18
	910	13
	911	13
LABEL/CONTROL/2WD-4W	903	7
	905	7
	907	7
	908	7
LABEL/CONTROL/LH	903	4
	905	4
LABEL/CONTROL/LH/220	904	4
	906	4
	907	4
	908	4
LABEL/CONTROL/RH	903	5
	905	5
LABEL/CONTROL/RH/220	904	5
	906	5
	907	5
	908	5
LABEL/CONTROL/SUBCON	903	6
LABEL/CONTROL/SUBCON	904	6
	905	6
	906	6
	907	6
	908	6
LABEL/CONTROL/TILT	903	1
	904	1
	905	1
	906	1
	907	1
	908	1
LABEL/DIFF	903	2
	904	2
	905	2
	906	2
	907	3
	908	3
LABEL/FUEL	909	3
	910	3
	911	3
LABEL/FUSE	610	2
	611	2
LABEL/METER	608	3
	609	3-A
LABEL/NOISE/LWA/105	909	13
	910	10
	911	11
LABEL/PARKING	903	3
	904	3
	905	3
	906	3
	907	2
	908	2
LABEL/POSITION	609	32
LABEL/SWITCH	608	2
LABEL/SWITCH/G	609	2
LABEL/W/FAN	909	7
	909	14
	910	7
	911	7
LABEL/W/RADIATOR	909	8
	910	8
	911	8
LABEL/W/STARTER	909	9
	910	9
LABEL/W/STARTER	911	9
LABEL/WARNING/2WD-4W	909	12
	911	10
LABEL/WARNING/BELT	909	6
	909	11
	910	6
	911	6
LABEL/WARNING/FUEL	909	4
	910	4
	911	4
LABEL/WARNING/HOT	909	5
	910	5
	911	5
LAMP/HEAD ASSY	607	1
LEVER/4WD COMP	411	1
LEVER/ACCELERATOR	108	1
LEVER/ADJUST COMP	218	13
LEVER/BLOWER ASSY	221	1
LEVER/CRUISE COMP	222	16
LEVER/DUMP COMP	501	8
LEVER/LIFT COMP	501	1-A
	501	12
LEVER/PARKING ASSY	310	3
LEVER/PARKING COMP	309	1
LEVER/PTO/MOWER COMP	220	5-A
LEVER/TILT COMP	402	5
LEVER/UNLOAD COMP	211	1-A
LINING	304	4-A
	306	9
LINING/13X50X03	108	5
LINING/PTOBRAKE COMP	213	45
LINKPIN	P04	16
MAT/STEP	606	15
MAT/STERRING	606	17
METAL/4WD	412	13
METAL/BRAKE	206	12
METAL/G	207	12
METAL/HST	202	1
METAL/PIVOT/FRONT	414	5
METAL/PIVOT/REA ASSY	414	10
METAL/PTO	212	1
METAL/PTO/A	213	1
METAL/PTO/B	213	11
METAL/SLIDE	S02	5
METER/FUEL ASSY	608	4

Alpabetical Index

Description	Fig.	Key
METER/FUEL ASSY	609	10-A
METER/HOUR ASSY	608	15
	609	4-A
MOLDING/FRONT/LH	901	1
	902	1
MOLDING/FRONT/RH	901	2
	902	2
MOUNTRUBBER	102	3
MUFFLER COMP	103	1
NEEDLE	S02	15
NET/FRONT COMP	102	60
NET/RADIATOR	102	6
NIPPLE,GREASE	210	3
	219	6
	219	16
	307	10
	307	19
	307	32
	308	10
	308	17
	407	11
	408	11
	415	8
NIPPLE,GREASE/PT1/8	414	12
NUT	102	59
	103	3
	108	8
	213	33
	218	21
	304	12
	306	13
	307	23
	308	25
	309	3
	412	22
	419	3
	501	23
	504	16
	505	12-A
	608	8
	610	11
	610	15
	610	18
	610	22
	611	14

Description	Fig.	Key
NUT	611	18
	611	21
	611	29
	614	5
	614	7
	615	3
	P04	5
NUT(M12X1.0)	608	20
NUT,CASTTLE/M16X1.5	415	5
NUT,LOCK	611	26
NUT,RING	S03	5
NUT,RING/M28X1.0	608	13
NUT/CONICALWASHER	601	11
NUT/M10	218	14
	302	23
	303	23
	416	44
NUT/M10X1.25	419	8
NUT/M12	101	17
	218	6
	407	13
	408	13
	414	15
	414	18
	416	21
	416	27
	417	3
	417	6
	P05	3
NUT/M12X1.25	417	13
NUT/M16	213	24
	509	9
	510	13
	P04	11
NUT/M6	107	3
	107	4
	213	46
	215	3
	504	14
	506	4
	602	4
	603	5
	610	8
	611	11
NUT/M8	101	6

Description	Fig.	Key
NUT/M8	110	11
	202	5
	212	6
	219	25
	307	25
	308	27
NUT/WASHER	102	12
	102	58
	102	71
	102	76
	106	10
	218	8
	220	22
	310	10
	402	12
	501	2
	601	13
	606	8
	606	14
	614	9
	801	7
	P04	24
OILSEAL	S02	33
ORIFICESETS/M6X0.7	506	24
O-RING	405	11
	406	11
	S02	47
O-RING HS90 G50	S01	4
O-RING P6 HS90	S01	6
O-RING/G50	206	14
	207	13
O-RING/G60	204	7
	205	9
O-RING/G70	414	4
O-RING/G75	414	7
O-RING/G90	416	3
O-RING/P 8	S02	48
O-RING/P 9	P04	17
O-RING/P10A	S03	2
O-RING/P14	506	37
	507	9
	508	9
	S02	28
O-RING/P18	506	26
	P04	15

Alpabetical Index

Description	Fig.	Key
O-RING/P20	201	19
	505	9
	505	18
O-RING/P22	201	13
	S01	5
O-RING/P24	209	4
	412	17
O-RING/P44	S03	6
ORNAMENT/220	902	5
ORNAMENT/240	901	5
ORNAMENT/I	901	7
	902	7
ORNAMENT/ISEKI	901	6
	902	6
ORNAMENT/REAR/LH	901	3
	902	3
ORNAMENT/REAR/RH	901	4
	902	4
PACKING	102	23
	102	48
	106	7
	414	3
	608	18
	S03	9
PACKING PS-42	502	5
PACKING,OIL PUMP	505	15
PACKING/PISTON	405	3
	406	3
PACKING/RUBBER	106	9
PAD	219	13
	307	2
	308	2
PAD (HST)	219	3
PAD/25	408	3
PAD/50	102	67
	220	29
	407	2
	408	2
PAD/PS	404	2-A
PANEL/SWITCH COMP	608	1
PANEL/SWITCH/G COMP	609	1
PEDAL/BRAKE COMP	307	1
	308	1
PEDAL/DIFF COMP	210	1
PEDAL/HST/F COMP	219	1
PEDAL/HST/RH COMP	219	11
PIN	201	3
	202	2
	204	2
	205	2
	208	2
	208	3
	212	2
	301	4
	301	7
	307	6
	307	8
	308	6
	308	8
	308	19
	412	14
	416	5
	416	40
PIN,BLOW OUT PROTECT	607	4
PIN,SPLIT/2 X20	307	28
	308	30
PIN,SPLIT/2.5X15	108	11
	411	9
PIN,SPLIT/2.5X20	109	3
	210	8
	211	3
	218	9
	219	10
	219	22
	220	10
	220	13
	220	28
	222	11
	222	13
	222	24
	307	16
	308	23
	310	13
	419	10
	503	4
	504	4
	606	12
PIN,SPLIT/2.5X25	501	16
PIN,SPLIT/3 X20	402	8
	403	5
PIN,SPLIT/3 X25	417	14
	502	15
PIN,SPLIT/4 X40	415	7
PIN,SPRING	411	5
PIN,SPRING/5 X25 W	413	12
PIN,SPRING/5 X32 W	417	10
PIN,SPRING/6 X22 W	221	15
PIN,ST	S02	41
PIN/05X17	501	17
PIN/06X26	221	16
PIN/08X16	P01	4
PIN/08X50	310	9
PIN/10X21	209	3
PIN/10X260	403	3
PIN/10X85	501	14
PIN/12X75	413	11
PIN/14X77 COMP	502	10
PIN/14X80	502	13
PIN/16X40	504	10
PIN/20X58	P04	14
PIN/20X78 COMP	510	10
PIN/PIVOT	415	4
PIN/SNAP	220	25
	221	9
	221	17
	307	36
	501	7
	501	19
	504	9
PIN/STRAIGHT	S04	11
PIN/TENSION	213	25
	213	37
PINION/BEVEL/09	413	1
PINION/BEVEL/11	413	9
PINION/BEVEL/12	208	8
PIPE	102	50
PIPE COMP	201	18
PIPE,BREATHER	201	9
PIPE/CHARGE COMP	507	7
PIPE/FILLER COMP	201	12
PIPE/SUCTION/F COMP	505	2
PIPE/SUCTION/R COMP	505	7
PISTON	502	2
	S02	6
	S02	6

Alpabetical Index

1771-095-300-00

Description	Fig.	Key
PISTON	S05	1
PISTON STOPPER	502	3
PLATE	106	6
PLATE(I/25X80)	106	11
PLATE,SWITCH	610	30
	611	39
	614	3
	616	5
PLATE/BACK	S05	7
PLATE/BUMPER	P02	1
PLATE/CAUTION	102	46
PLATE/DISK	S05	6
PLATE/FLOOR COMP	606	3
PLATE/FRONT	102	64
PLATE/FRONT COMP	103	9
PLATE/GUARD	409	1
	410	4
PLATE/HOOK COMP	222	6
PLATE/I/16X216	307	34
PLATE/I/16X343	221	7
PLATE/I/16X595	307	14
PLATE/I/19X260	310	11
PLATE/I/19X534	308	21
PLATE/I/62X100	P04	19
PLATE/I/75X70	P04	22
PLATE/IR/22X140	102	55
PLATE/LH	601	4
PLATE/REAR COMP	103	10
PLATE/RH	601	5
PLATE/SEPARATER	S05	5
PLATE/SIDE/LH	102	68
PLATE/SIDE/RH	102	73
PLATE/SPRING	S02	22
PLATE/STOP/PTO COMP	504	5
PLATE/STOPPER	412	18
	506	27
PLATE/SWASH	S02	4
PLATE/VALVE/MOTOR	S02	9
PLATE/VALVE/PUMP	S02	8
PLATE/Z/16X309	501	5
PLUG	102	22
	506	6
	608	9
PLUG(G3/8)	S02	26
PLUG(PF1/4)	S02	27
PLUG,OIL	201	15
PLUG/40X8	302	13
PLUG/59	604	3
	605	3
PLUG/G3/8 ASSY	506	36
PLUG/M10X1	S02	45
PLUG/SCREW	506	32
	506	38
	506	39
PLUG/SCREW/SEAL	201	6
	301	2
	301	3
	416	19
	416	25
	S02	49
PLUG/SEAL/25	207	16
POPPET/CHECK/0.5	S02	23
POPPET/CHECK/1.3	S02	24
POPPET/RELIEF	S02	21
POST/F	602	1
	603	1
POST/R	602	3
	603	4
PRESSURE/BRAKE	S05	12
PROTECTOR/185	801	10
PROTECTOR/215	801	9
PULLEY/FT80X47	213	30
PULLEY/V2B118	213	17
PULLEY/V2B155	213	20
PUMP GEAR ASSY	505	10
PUMP/FUEL ASSY	105	9
RADIATOR ASSY	102	1
RELAY/4P ASSY	610	23
	615	2
RELAY/4P-2 ASSY	610	20
	611	27
	611	30
	614	4
RELAY/FLASHER ASSY	614	6
RELAY/FLASHER/EEC	611	32
RESERVETANK ASSY	102	45
RIM/WHEEL COMP	312	5
	420	5
RIM/WHEEL/FRONT COMP	421	3
RING(M12X18X1)	608	21
RING,SNAP/ 6 E	220	15
RING,SNAP/10 C	222	7
	222	19
RING,SNAP/12 C	220	8
	220	19
	221	4
	222	4
	504	7
RING,SNAP/15 C	213	31
	213	36
	213	44
RING,SNAP/16 C	304	16
	306	3
RING,SNAP/17 C	S02	40
RING,SNAP/18 C	218	18
RING,SNAP/20C	214	9
	412	3
	S02	30
RING,SNAP/22 C	210	5
	219	18
	307	21
RING,SNAP/25 C	203	6
	302	8
	303	8
	413	6
	416	39
	506	28
RING,SNAP/30 C	206	4
	207	4
	302	19
	303	19
	S02	39
RING,SNAP/32 C	S02	32
RING,SNAP/35 C	416	14
RING,SNAP/47 C	412	12
	416	18
	416	24
	S02	31
RING,SNAP/52 C	213	16
	302	3
	302	6
	303	3
	303	6
	413	7
RING/22	214	5

Alpabetical Index

Description	Fig.	Key
RING/25	214	6
RING/72	S05	2
RING/BRAKE	S04	4
RING/O	204	8
	205	10
	405	10
	406	10
	414	13
	505	3
	506	9
	506	11
	506	13
	506	17
	506	25
	P01	3
	S02	29
RING/SNAP	203	8
	203	14
	213	6
	214	17
	413	15
	413	16
	416	8
	416	15
RING/SNAP/A	S04	2
RING/SNAP/B	S04	12
RING/SNAP/R62	302	15
	303	15
RIVET, BLIND	501	22-A
RIVET/SCREW ASSY	606	16
	606	19
ROD	310	4
ROD PACKING	405	5
	405	8
	406	5
	406	8
ROD/LIFT ASSY	510	5
ROD/M08X175	307	22
ROD/M08X225	504	8
ROD/M08X350	308	24
ROD/M08X72/LH	307	26
	308	28
ROD/M08X85	218	20
	220	21
ROD/PISTON	405	2

Description	Fig.	Key
ROD/PISTON	406	2
RODEND/A ASSY	419	1
RODEND/B ASSY	419	2
RUBBER, CUSHION	407	5
RUBBER/PLATE	106	2
S.W	S01	8
SCREW/M03X20	610	29
	611	38
	614	2
	616	4
SCREW/P	102	7
SCREW/SOCKET	S02	42
SCREW/TRUSS/M06X16	602	2
	602	5
	603	2
	603	6
	608	24
	609	35
SEAL, OIL	214	16
	S01	3
SEAL, OIL/TC20357	412	11
SEAL, OIL/TC20408	303	13
SEAL, OIL/TC25407	206	13
SEAL, OIL/TC35558	203	9
SEAL/47	S02	50
SEAL/DUST	506	29
SEAL/OIL	302	16
	303	16
	S02	34
	S02	35
SEAL/OIL ASSY	416	11
SEAL/QLNY35571116	416	34
SEALRING/32	S05	3
SHAFT	416	28
	418	1
	418	2
SHAFT, DIFF. PINION	208	7
SHAFT/484	213	7
SHAFT/4WD	412	1
SHAFT/BRAKE COMP	307	4
	308	4
SHAFT/CAM	304	3-A
	306	8
SHAFT/COUNTER/G COMP	308	20
SHAFT/DIFF/LH	302	1

Description	Fig.	Key
SHAFT/DIFF/LH/G	303	1
SHAFT/DIFF/RH	302	4
SHAFT/DIFF/RH/G	303	4
SHAFT/INPUT ASSY	412	8
SHAFT/INPUT COMP	203	1-A
SHAFT/INPUT SET	110	1-A
SHAFT/MOTOR	S02	11-A
SHAFT/PTO	213	13
SHAFT/PULLEY	213	3
SHAFT/PUMP	S02	10-A
SHAFT/WHEEL/FRONT	302	17
	303	17
SHAFT/WHEEL/REA COMP	416	31
SHAFT/YOKE	110	6-A
SHEET/STERRING	606	18
SHIM	206	3
	207	3
SHIM/0.2	206	6
	206	16
	207	6
	207	15
SHIM/0.9	S02	7
SHOE/BRAKE	S04	5
SHROUD COMP	102	26
SLEEVE ASSY	412	7
SLEEVE/YOKE	110	4-A
SNAPRING	S05	8
SNAPRING/32	S05	10
SNAPRING/85	S05	13
SPINDLE/KNUCKLE/LH	417	1
SPINDLE/KNUCKLE/RH	417	4
SPOOL	S02	44
SPRING	310	5
	501	21-A
	S04	6
	S05	4
SPRING, DISK	108	6
SPRING, TENSION/31	309	5
SPRING, TENSION/53	211	4
SPRING, TENSION/86	220	4
	222	5
SPRING, VALVE	S03	1
SPRING/A	S04	9
SPRING/BOOT	419	7
SPRING/CLIP	606	5

Alpabetical Index

1771-095-300-00

Description	Fig.	Key
SPRING/HC021	S02	20
SPRING/HC022	506	31
SPRING/HC023	S02	46
SPRING/HC030	S02	19
SPRING/HC050	504	15
SPRING/HC053	S02	18
SPRING/HC062	506	35
SPRING/HE036	304	5
	306	10
SPRING/HE060	307	29
	308	31
SPRING/HE066	209	5
SPRING/HE068	412	20
SPRING/HE072	220	26
SPRING/HE086	221	6-A
SPRING/HE095	220	20
	307	13
	308	13
SPRING/HE108	218	19
SPRING/HT018	222	8
SPRING/HT024	220	3
	402	6
SPRING/HT032	213	34
SPRING/HT033	213	42
SPRING/HT042	219	7
	219	17
SPROCKET/11	302	7
	303	7
SPROCKET/29	302	9
	303	9
STAY/BRAKE/LH COMP	306	4
STAY/CASE COMP	301	9
STAY/COVER COMP	205	5
	215	1-A
	311	1
STAY/COVER/SIDE PTO	217	3
STAY/CYLINDER COMP	502	8
STAY/DEFFCABLE	209	6
STAY/MUFFLER COMP	103	6
STAY/STOPPER	504	12
STAY/SWITCH	616	1
STAY/SWITCH COMP	611	23
	613	1
STAY/SWITCH/BAC COMP	614	8
STAY/TILT COMP	402	1-A
STOPPER	402	4
STOPPER COMP	501	20-A
SWITCH(STARTER) ASSY	608	10
	609	16-A
SWITCH,MERIT	610	28
	611	37
	614	1
	616	3
SWITCH,STOP	611	25
SWITCH/COMBINATION/E	609	31-A
SWITCH/HAZARD ASSY	609	29-A
SWITCH/LEVER ASSY	611	40
	613	3
	614	10
SWITCH/PUSH SET	610	17
	611	20
SWITCH/TOGGLE ASSY	608	16
	609	22-A
TANK/FUEL	106	4
TAPE/ALUMINIUM/135	101	15
THRUST	417	8
TIRE/210/60D-8	420	2
	421	2
TIRE/210/60D-8 ASSY	420	1
	421	1
TIRE/TURF/20-8	312	2
TOOL/FUSE	611	8
TRIM/110	102	35
TRIM/188	102	36
	102	42
TRIM/320	102	61
TRIM/50	102	28
TRIM/85	407	21
	408	21
TRIM/95	216	2
	217	2
TUBE/14X17X90	222	17
TUBE/536 COMP	P04	18
TUBE/540 COMP	213	9
TURNBUCKLE/M8	307	24
	308	26
U.J ASSY	110	2-A
	110	5-A
VALVE	104	5
VALVE/1S-2D ASSY	506	1
VALVE/PTO	506	23-A
VALVE/RELIEF SET	S02	43
VALVE/RIM	312	3
	420	3
	421	5
VIS	S03	3
WASHER	213	22
	213	35
	213	43
	501	18
	606	7
	607	5
	608	7
	608	19
	S04	1
	S05	9
WASHER / M16	304	15
	415	6
	P04	13
WASHER / M6	108	10
	210	2
	219	5
	219	15
	307	11
	307	18
	307	31
	308	11
	308	16
	407	10
	408	10
	411	8
WASHER /M12	101	19
	213	27
	213	39
	220	7
	220	9
	220	18
	221	3
	222	3
	402	7
	504	6
	601	9
	P02	4
	P03	6
	P04	8

Description	Fig.	Key
WASHER, FOLLOWER	510	8
WASHER, PL/M 8	101	8
	105	4
	109	2
	210	7
	211	2
	218	10
	219	9
	219	21
	220	24
	220	27
	221	8
	222	10
	222	12
	222	23
	307	15
	307	27
	307	35
	308	22
	308	29
	309	2
	310	12
	411	7
	501	6
	503	3-A
	504	3-A
	504	11
WASHER, PL/M14	502	14
WASHER, PL/M18	417	9
WASHER, PL/M22	210	4
	219	19
	307	20
WASHER, PULLEY	417	12
	912	5
WASHER, SP/M 6	213	47
	506	3
WASHER, SP/M 8	101	7
	104	16
	105	3
	110	12
	202	4
	208	5
	212	5
	505	14
	610	12

Description	Fig.	Key
WASHER, SP/M 8	611	15
WASHER, SP/M10	101	4
	101	11
	103	8
	110	9
	204	5
	205	4
	205	7
	302	22
	303	22
	304	13
	306	14
	416	43
	419	9
WASHER, SP/M12	101	18
	213	26
	213	38
	218	5
	407	4
	407	9
	408	5
	408	9
	414	9
	414	16
	801	4
	912	4
	912	8
	P02	3
	P03	5
	P04	7
	P04	21
WASHER, SP/M16	213	23
	509	8
	P04	12
WASHER/12X26X04	601	10
	607	6
WASHER/13X42X01	419	4
WASHER/17X22X03	306	2
WASHER/17X35X05	509	7
	510	12
WASHER/18X26X02	218	17
WASHER/20X32X03	510	7
WASHER/24X9X3.2	102	57
	601	7
WASHER/25X30X1	S02	36

Description	Fig.	Key
WASHER/30X46X2	302	18
	303	18
WASHER/31X42X1	206	2
	207	2
WASHER/38X12X2	218	3
WASHER/9X22X2	220	11
WASHER/A	S04	3
WASHER/LOCK	103	4
WASHER/M10	101	12
	108	7
	204	6
	205	8
	302	21
	303	21
	403	4
	416	42
	501	15
	606	11
WEIGHT/15 SET	P05	1
WEIGHT/40	912	2
WEIGHT/REAR SET	912	1
WHEEL/FRONT ASSY	312	1
WHEEL/STEERING ASSY	401	1
WIRE, LEAD	101	9