Directions for use of Parts Catalogue

1. Applicable model of machines

All component and option parts used for SCMA48, SCMA54 Mower and SBC550F Collector are listed in this parts catalogue.

NOTES:	SCMA48-SFH240E4····	FOR SFH220, 240
	SCMA54-SFH240E4····	FOR SFH220, 240
	SBC550F-HE4·····	FOR SFH220, 240
	SBC550F-LE4·····	FOR SFH220, 240

2. Explanation for head paragraph

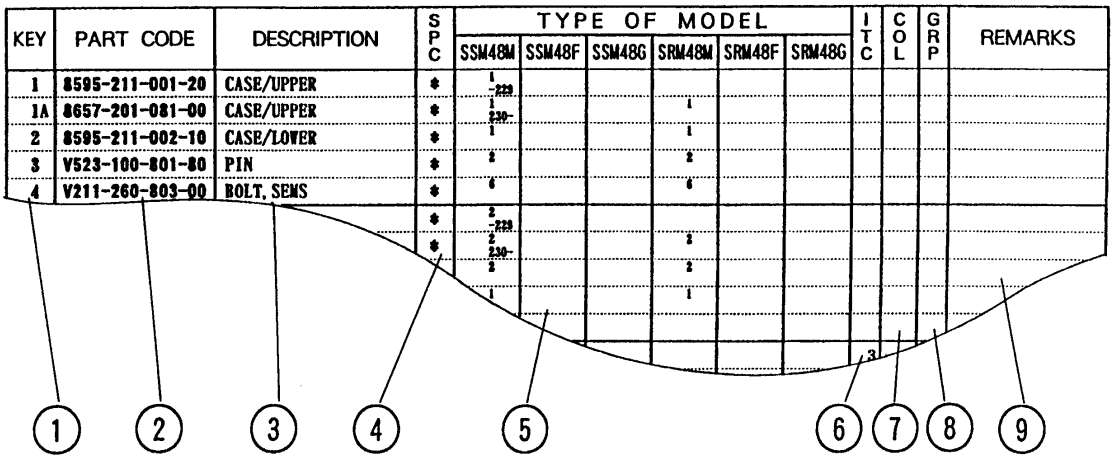

KEY	PART CODE	DESCRIPTION	SPC	TYPE OF MODEL						ITC	COL	GRP	REMARKS
				SSM48M	SSM48F	SSM48G	SRM48M	SRM48F	SRM48G				
1	8595-211-001-20	CASE/UPPER	*	1 -223									
1A	8657-201-081-00	CASE/UPPER	*	1 230-			1						
2	8595-211-002-10	CASE/LOWER	*	1			1						
3	V523-100-801-80	PIN	*	2			2						
4	V211-260-803-00	BOLT, SEMS	*	6			6						
			*	2 -223									
			*	2 230-			2						
				2			2						
				1			1						
										3			

① ② ③ ④ ⑤ ⑥ ⑦ ⑧ ⑨

① KEY shows the location of parts diagramed in the illustration.

② Parts numbers begin with `V´ and `W´ are standard parts of the market.

③ `LH´ and `RH´ on the parts name are described against the moving direction of the machine or are described on the condition how to install parts on the machines.

④ SPC : The following symbol classifies parts to be used for machines.

`*´ means standard parts.

`T´ shows that the parts can be installed as optional parts.

`R´ shows that the parts can be used as applicable parts to replace

originally equipped parts.

⑤ Upper column : QTY shows the number of parts to be used for one unit of machine.

`M´ is indicated for parts supplied by a meter long.

`l´ is indicated for parts supplied by liter.

`AR´ is indicated for parts need to be adjusted or regulated.

Lower column : serial number

—229 means serial number up to 229.

230— means serial number 230 and after.

⑥ ITC : Interchangeability

`1´…OLD ← NEW

New parts can be used in place of the old parts.

`2´…OLD → NEW

Old parts can be used in place of the new parts.

`3´…OLD →← NEW

Old parts and new parts can not be replaced each other.

⑦ COL : Color code

Color is signified with color code number for colored parts.

Please see the color list shown in the next page.

⑧ GRP : Parts shown in this column can be replaced by SET parts.

Example : Parts marked Ⓐ can be replaced by parts marked Ⓑ, and Ⓓ for Ⓒ, so the rest follow in the same alphabetical order.

⑨ Remarks

＊Other maker's part code number is shown in this column.

＊When Fig. No. is shown in the Remark column of SET parts or ASSY parts, each of their component parts are listed in said Fig. No.

3. Color :

The following colors are used color parts.

COLOR CODE	COLOR	SPRAY TYPE CODE NUMBER	PAINTS 4K DRUM	PAINTS 16K DRUM
4 L	NEO BLUE	1300-985-001-10	1300-985-003-00	————
7 F	MIRROR BLACK	1300-954-001-10	1300-954-003-00	1300-954-004-00

NOTE : Color code is signified only for the parts assigned by the maker as color parts.

4. Serial Numbers :

For chassies serial number is shown on the LABEL.

Please see

5. Parts Order

1) Parts numbers listed in the parts catalogue are all registered in "ISEKI on-line computer".
2) When you order parts, please make sure of correct numbers.
3) When substitute parts is available, the part number ordered will be automatically turned to a new part number.
4) Please be sure to use "ISEKI GENUINE PARTS".
   Any other similar parts other than ISEKI parts when used may cause a trouble that makes us unable to repair or guarantee the warrant.

*** Structure Table of Model ***

MODEL / FIG.	SCMA408SFH	SCM240E4SFH										
1	*	*										
2	*											
3		*										
4	*	*										
5	*											
6		*										
7	*											
8		*										
9	*											
10		*										
11	*											
12		*										
13	*	*										
14	*	*										
15	*	*										

*** Structure Table of Model ***

MODEL / FIG.	SBC550F	CHE44L									
1		*									
2	*										
3	*	*									
4	*	*									
5		*									
6	*	*									
7	*										
8		*									
9	*										
10		*									
11	*										
12	*	*									
13	*	*									
14	*	*									
15	*	*									
16	*	*									
17		*									
18	*										

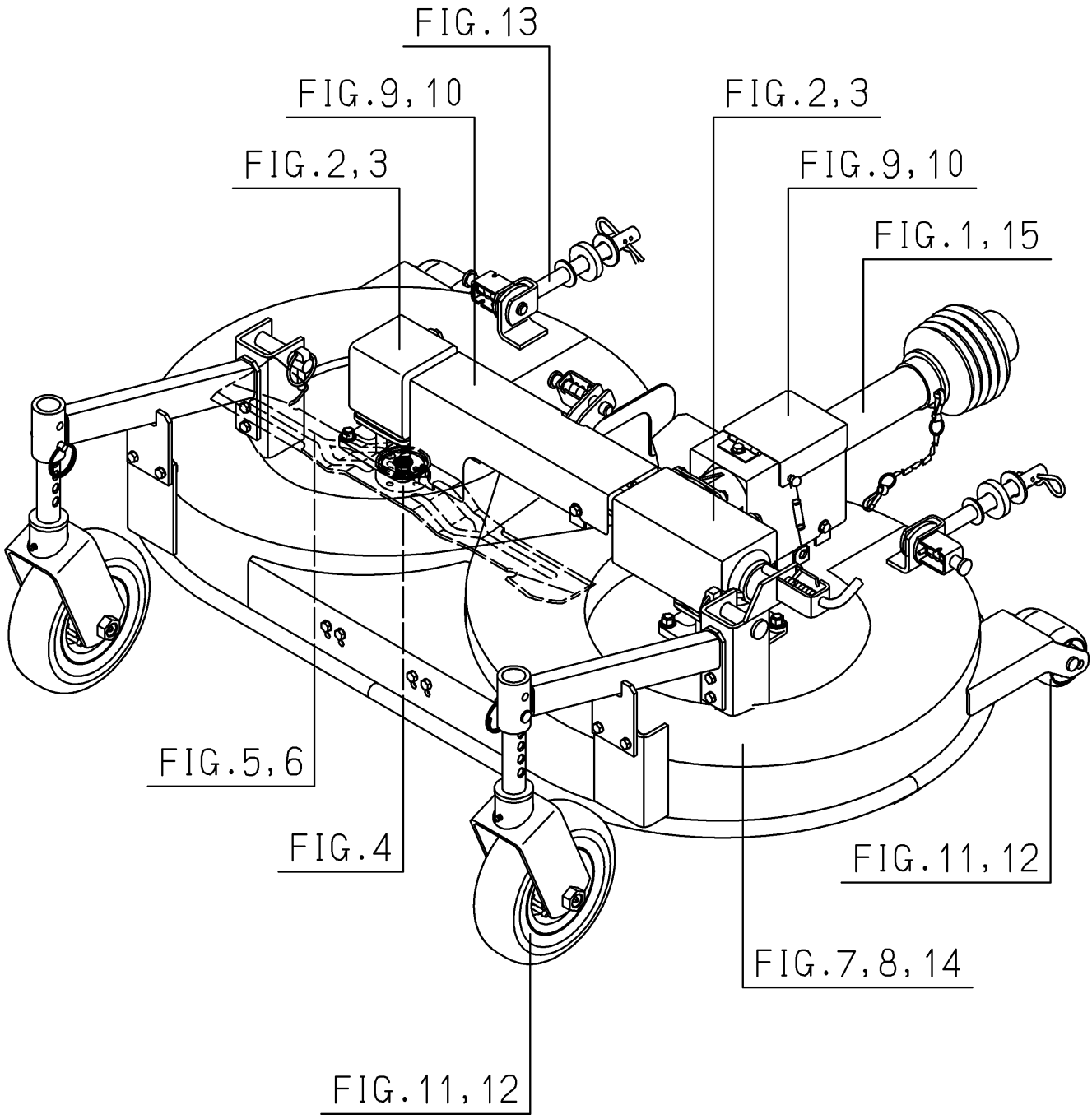
FIG.13
FIG.9,10
FIG.2,3
FIG.2,3
FIG.9,10
FIG.1,15
FIG.5,6
FIG.4
FIG.11,12
FIG.7,8,14
FIG.11,12

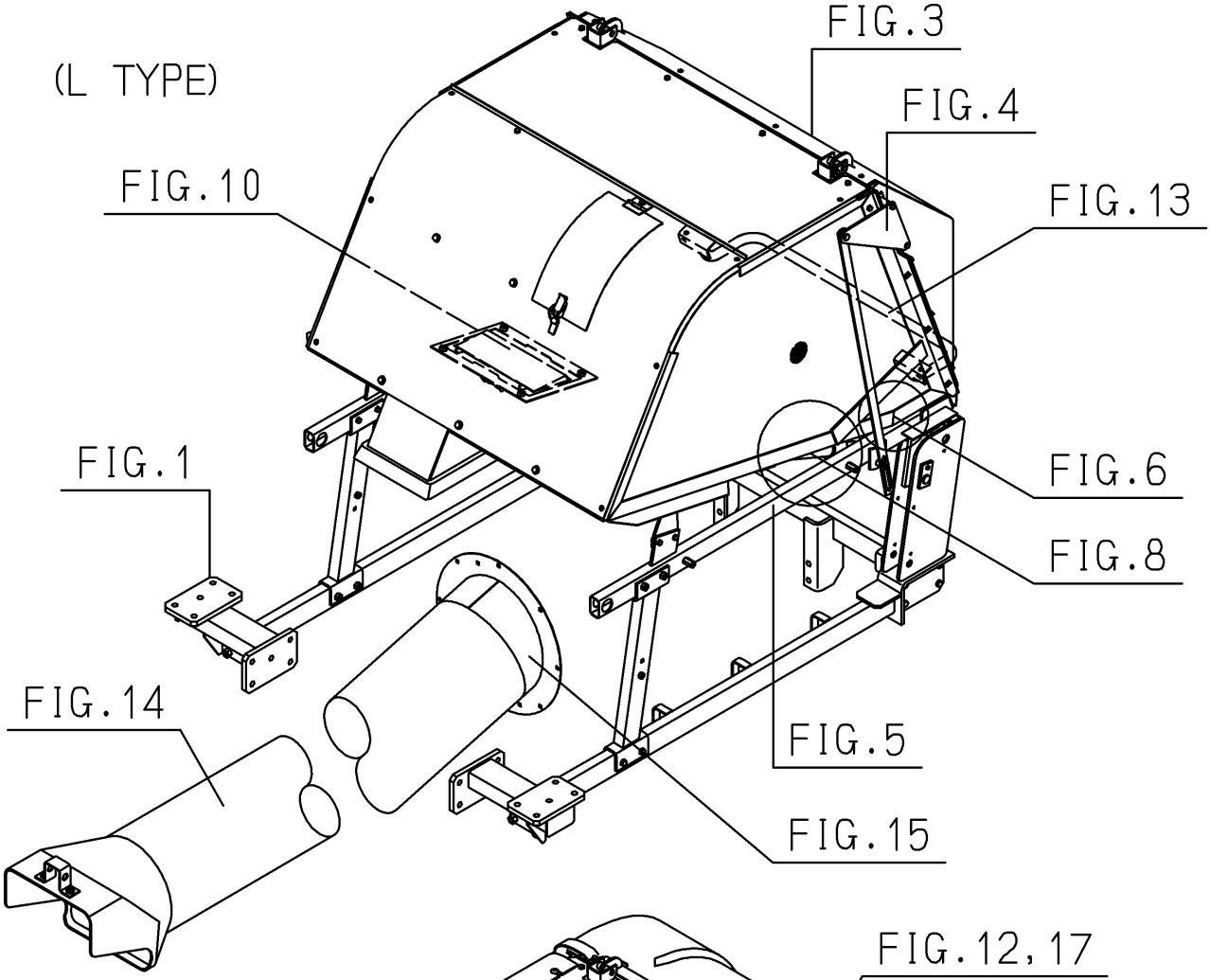
(L TYPE)
FIG.3
FIG.4
FIG.10
FIG.13
FIG.1
FIG.6
FIG.8
FIG.14
FIG.5
FIG.15

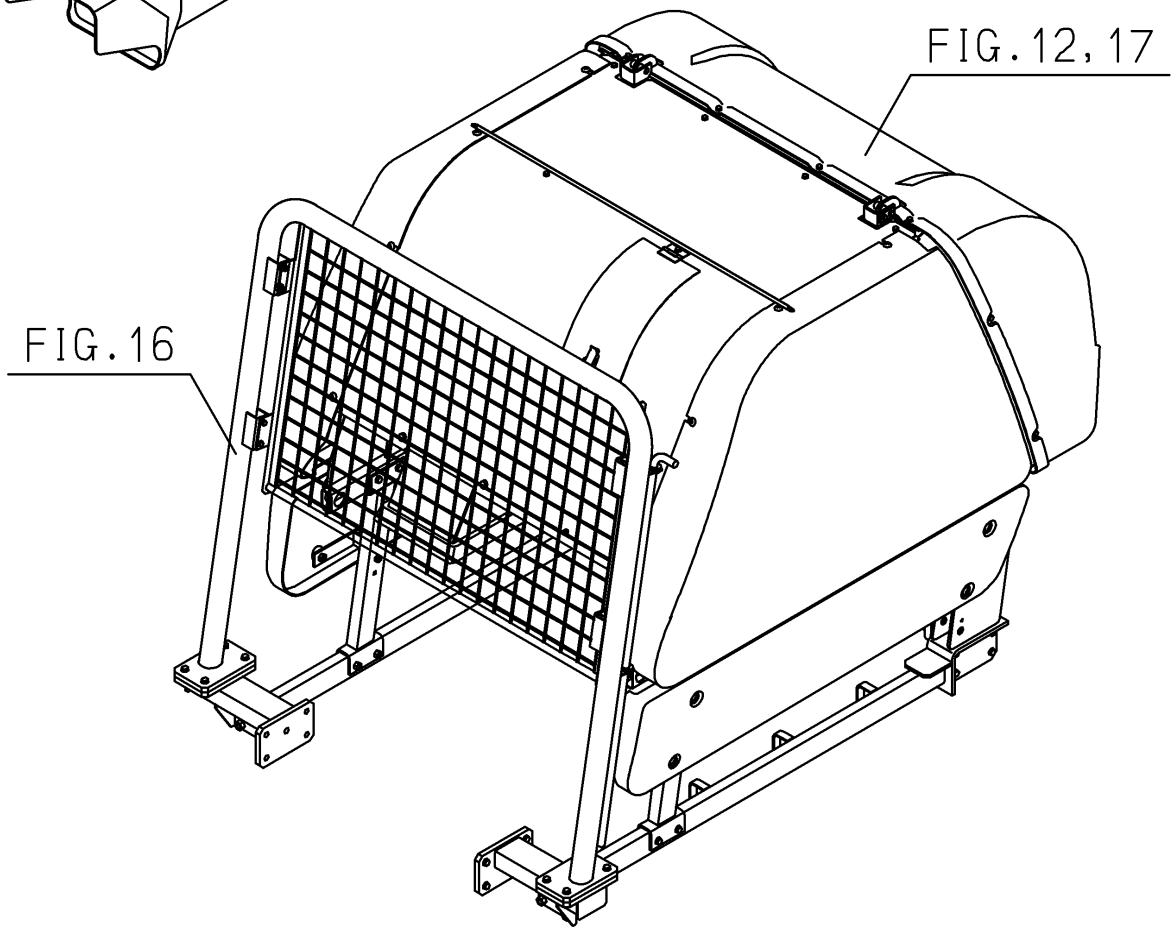
FIG.12,17
FIG.16

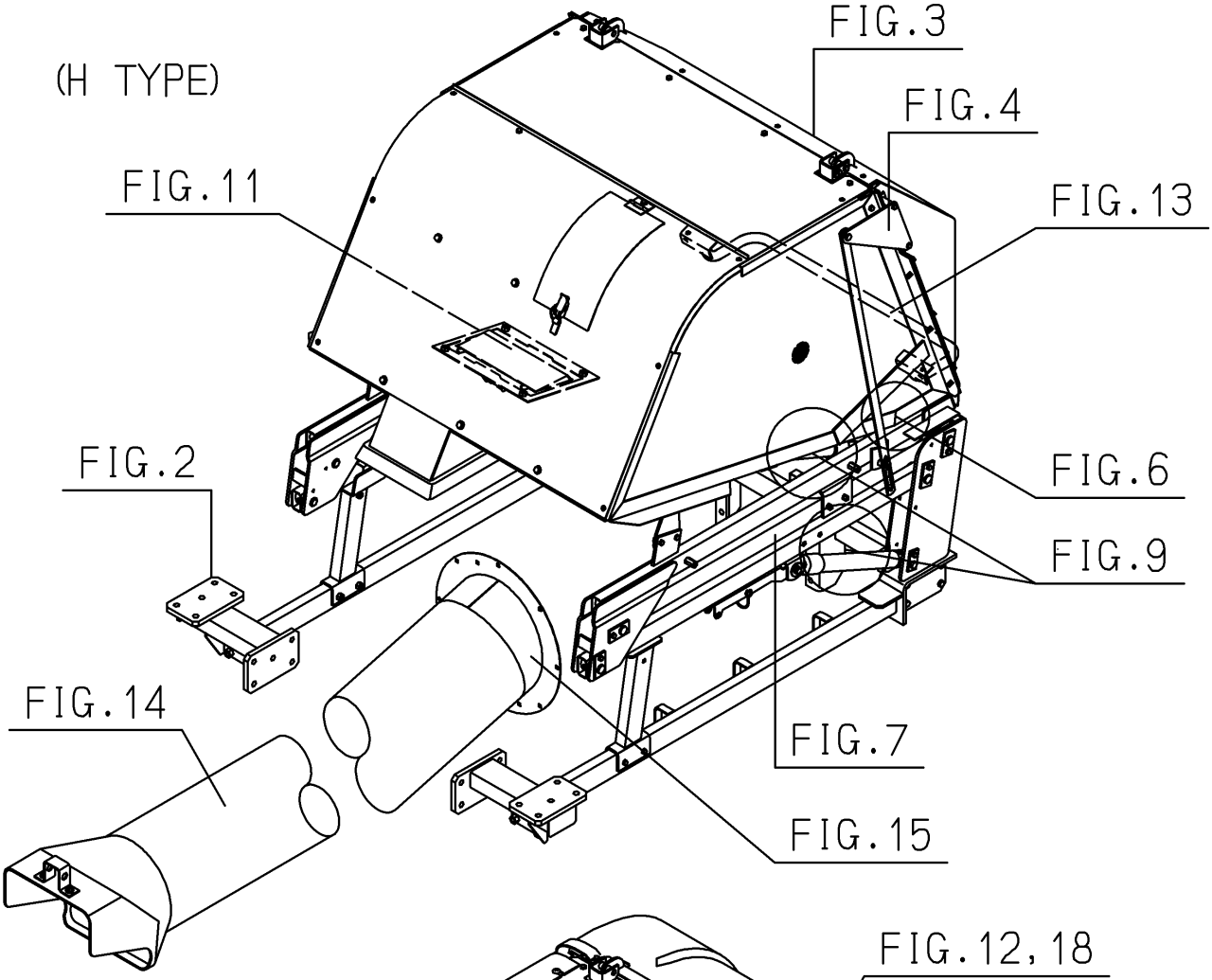
(H TYPE)
FIG.3
FIG.4
FIG.11
FIG.13
FIG.2
FIG.6
FIG.9
FIG.14
FIG.7
FIG.15

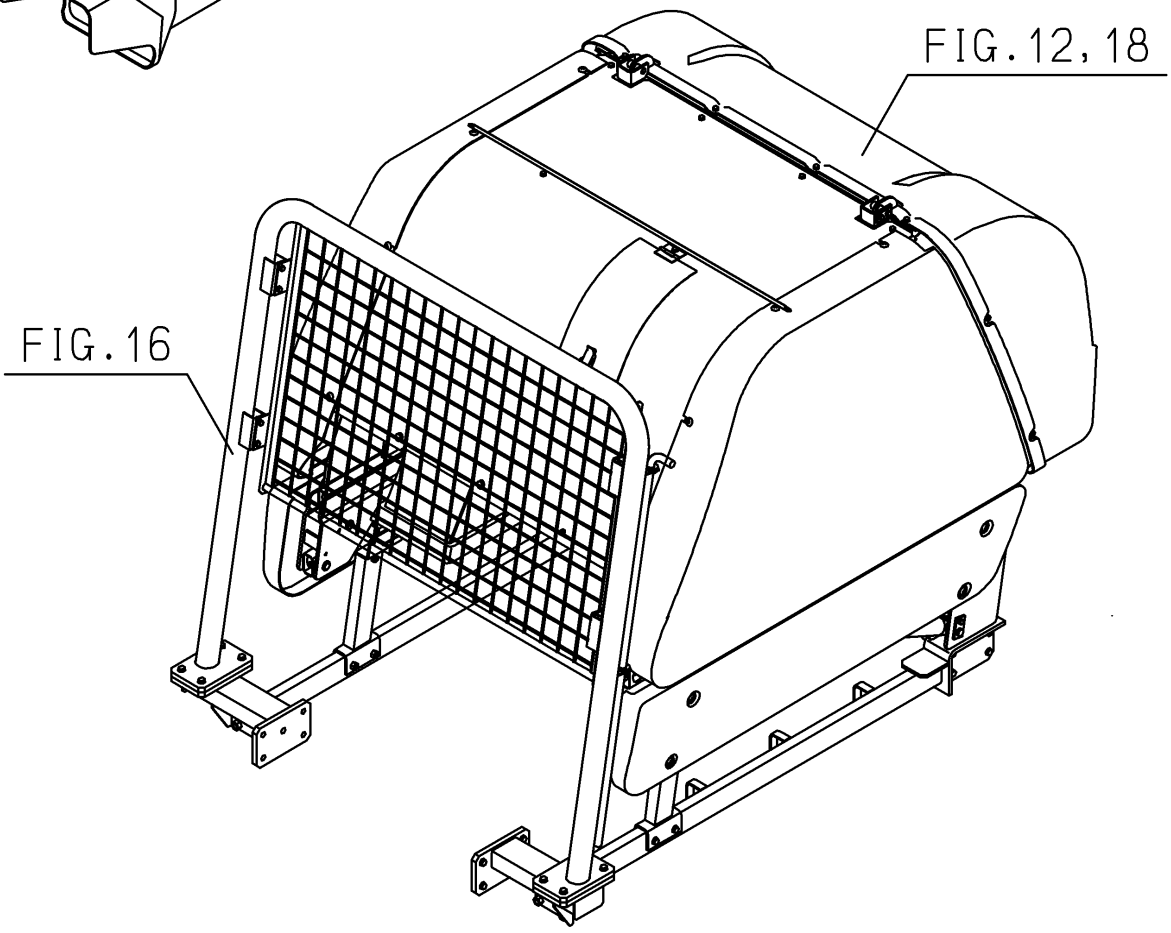
FIG.12,18
FIG.16

Contents

SCMA48,54

UNIVERSAL JOINT SYSTEM····· Fig. 1
BEVEL CASE SYSTEM (SCMA48)····· Fig. 2
BEVEL CASE SYSTEM (SCMA54)····· Fig. 3
COLLAR (BLADE) SYSTE····· Fig. 4
BLADE SYSTEM (SCMA48)····· Fig. 5
BLADE SYSTEM (SCMA54)····· Fig. 6
MOWER DECK SYSTEM (SCMA48)····· Fig. 7
MOWER DECK SYSTEM (SCMA54)····· Fig. 8
COVER SYSTEM (SCMA48)····· Fig. 9
COVER SYSTEM (SCMA54)····· Fig. 10
GAUGE WHEEL SYSTEM (SCMA48)····· Fig. 11
GAUGE WHEEL SYSTEM (SCMA54)····· Fig. 12
LIFT LINK SYSTEM····· Fig. 13
LABEL····· Fig. 14

COMPONENT PARTS

COMPONENT PARTS
FOR 8667-101-310-00 ON Fig.1····· Fig. 15

Contents

SBC550F

FRAME SYSTEM (L TYPE)····· Fig. 1
FRAME SYSTEM (H TYPE)····· Fig. 2
CONTAINER SYSTEM····· Fig. 3
DOOR OPEN SYSTEM····· Fig. 4
LINK SYSTEM (L TYPE)····· Fig. 5
HOOK SYSTEM····· Fig. 6
LINK SYSTEM (H TYPE)····· Fig. 7
CYLINDER SYSTEM (L TYPE)····· Fig. 8
CYLINDER SYSTEM (H TYPE)(1/2)(2/2)····· Fig. 9
SENSOR SYSTEM (L TYPE)····· Fig. 10
SENSOR SYSTEM (H TYPE)····· Fig. 11
COVER SYSTEM····· Fig. 12
BUMPER SYSTEM····· Fig. 13
SHOOTER SYSTEM····· Fig. 14
BLOWER SYSTEM····· Fig. 15
GUARD SYSTEM····· Fig. 16
LABEL (L TYPE)····· Fig. 17
LABEL (H TYPE)····· Fig. 18

MOWER

SCMA48SFH

SCMA54SFH

8667-097-100-00

FIG. 1 UNIVERSAL JOINT SYSTEM

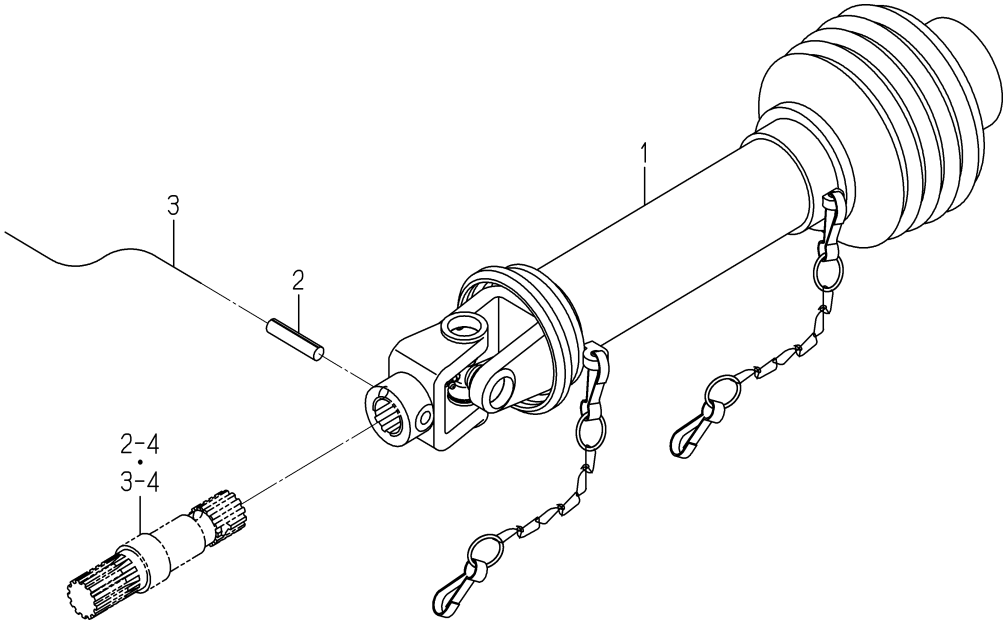

8667-101 -0100

KEY	PART CODE	DESCRIPTION	SPC	TYPE OF MODEL SCMA48 SFH	TYPE OF MODEL SCMA54 SFH	ITC	COL	GRP	REMARKS
1	8667-101-310-00	JOINT/UNIVERSAL SET	*	1	1				FIG 015
2	V580-140-804-00	PIN,SPRING/8 X40 W	*	1	1				
3		WIRE	*	1	1				

FIG. 2 BEVEL CASE SYSTEM (SCMA48)

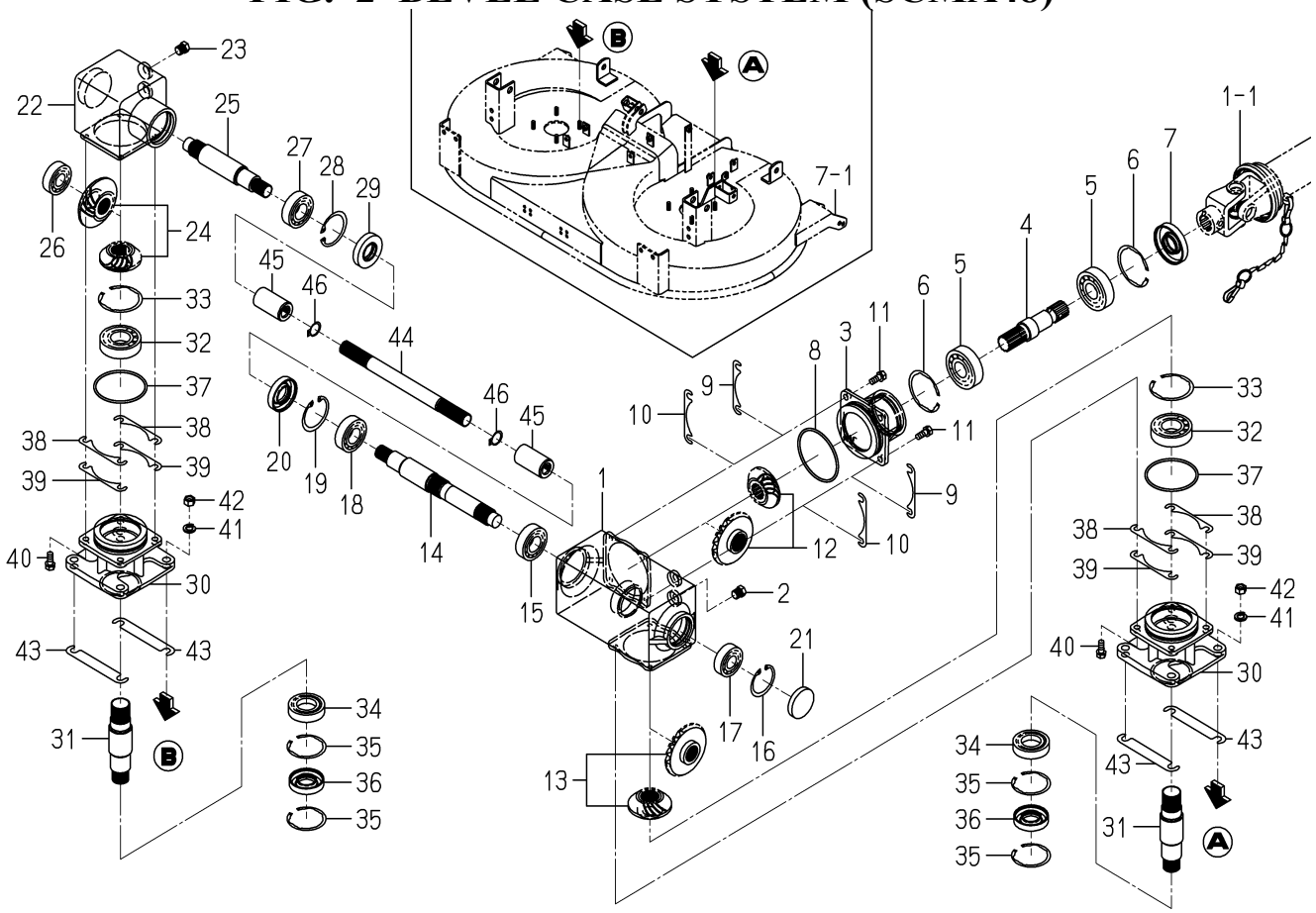

8667-201 -0100

KEY	PART CODE	DESCRIPTION	SPC	TYPE OF MODEL SCMA48 SFH	SCMA54 SFH	ITC	COL	GRP	REMARKS
1	8667-201-001-00	CASE/BEVEL	*	1					
2	7955-201-026-00	PLUG,DRAIN (1/4)	*	2					
3	8667-201-002-00	METAL/INPUT	*	1					
4	8595-201-013-00	SHAFT/INPUT	*	1					
5	1729-214-049-00	BEARING/BALL	*	2					
6	V707-140-062-00	RING/SNAP	*	2					
7	8595-201-025-00	SEAL/OIL	*	1					
8	V721-103-108-00	O-RING/G80	*	1					
9	8595-201-021-00	SHIM/0.1	*	4					
10	8595-201-022-00	SHIM/0.2	*	2					
11	V211-260-802-00	BOLT/S	*	4					
12	8667-201-210-00	GEAR/BEVEL/21-2 SET	*	1					
13	8667-201-220-00	GEAR/BEVEL/25-2 SET	*	1					
14	8667-201-003-00	SHAFT/LH	*	1					
15	V600-110-620-50	BEARING,RB/6205	*	1					
16	V705-140-047-00	RING,SNAP/47 C	*	1					
17	V600-110-620-40	BEARING,RB/6204	*	1					
18	V600-110-620-50	BEARING,RB/6205	*	1					
19	V705-140-052-00	RING,SNAP/52 C	*	1					
20	V744-125-521-00	SEAL,OIL/TC255210	*	1					
21	1564-201-003-00	CAP/SEAL/47	*	1					
22	8663-202-062-11	CASE/BEVEL/RH	*	1			4L		
23	7955-201-026-00	PLUG,DRAIN (1/4)	*	2					
24	8667-201-230-00	GEAR/BEVEL/25-2 SET	*	1					
25	8667-201-005-00	SHAFT/RH	*	1					
26	V600-110-620-40	BEARING,RB/6204	*	1					
27	V600-110-620-50	BEARING,RB/6205	*	1					
28	V705-140-052-00	RING,SNAP/52 C	*	1					
29	V744-125-521-00	SEAL,OIL/TC255210	*	1					
30	8667-201-006-00	METAL/BLADE	*	2					

FIG. 2 BEVEL CASE SYSTEM (SCMA48)

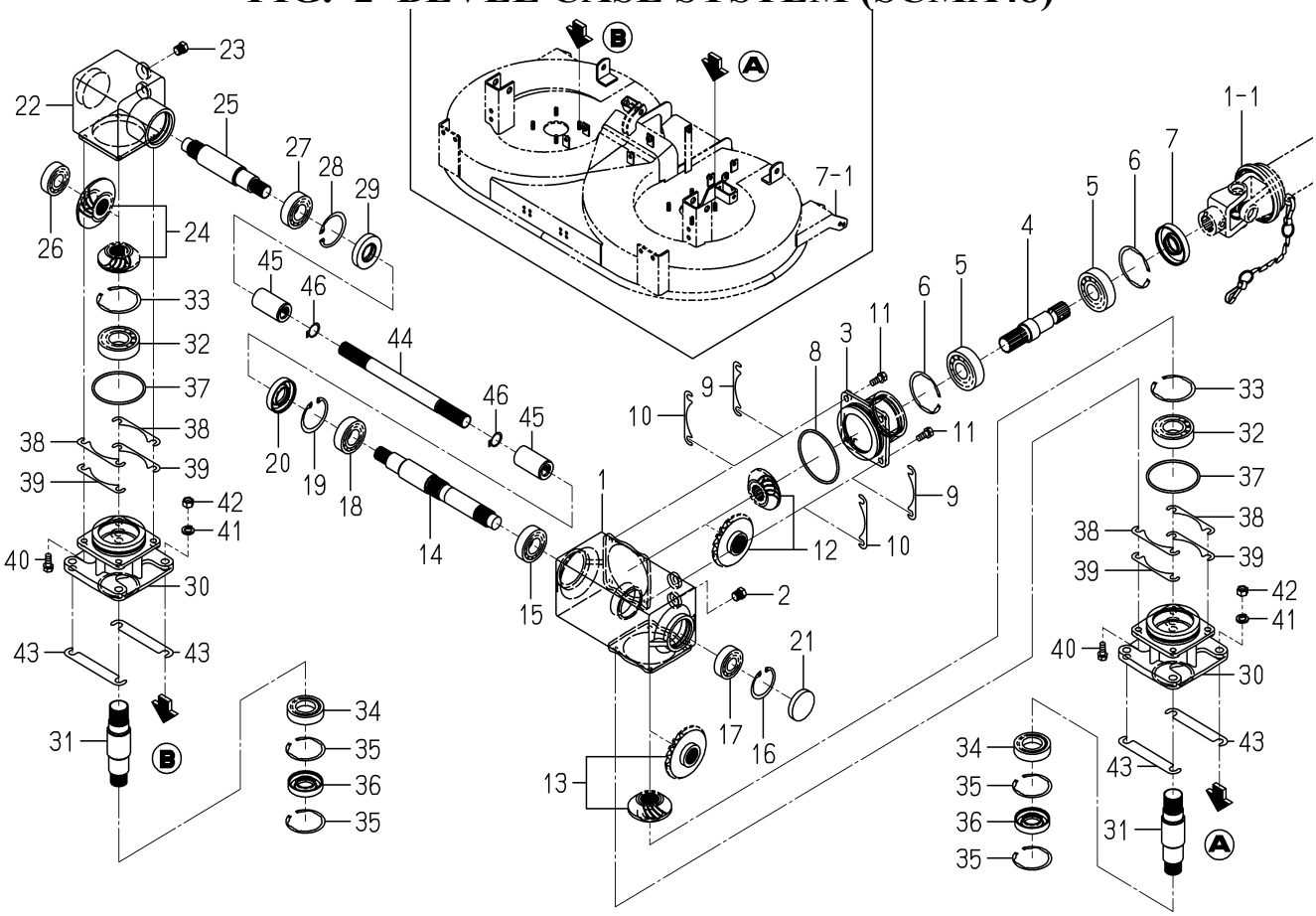

8667-201 -0100

KEY	PART CODE	DESCRIPTION	SPC	TYPE OF MODEL SCMA48 SFH	SCMA54 SFH	ITC	COL	GRP	REMARKS
31	8667-201-007-00	SHAFT/BLADE	*	2					
32	V600-110-620-60	BEARING,RB/6206	*	2					
33	V707-140-062-00	RING/SNAP	*	2					
34	V600-110-600-60	BEARING,RB 6006	*	2					
35	V707-140-055-00	RING/SNAP	*	4					
36	V744-130-551-20	SEAL,OIL/TC305512	*	2					
37	V721-103-107-50	O-RING/G75	*	2					
38	8595-201-021-00	SHIM/0.1	*	8					
39	8595-201-022-00	SHIM/0.2	*	4					
40	V211-260-802-00	BOLT/S	*	8					
41	V401-160-010-00	WASHER,SP/M10	*	8					
42	V304-260-010-00	NUT	*	8					
43	8667-201-009-00	SHIM/0.2	*	2					
44	8667-201-008-00	SHAFT/JOINT	*	1					
45	1602-321-004-00	COUPLING/18X30X55	*	2					
46	V704-140-020-00	RING,SNAP/20C	*	2					

FIG. 3 BEVEL CASE SYSTEM (SCMA54)

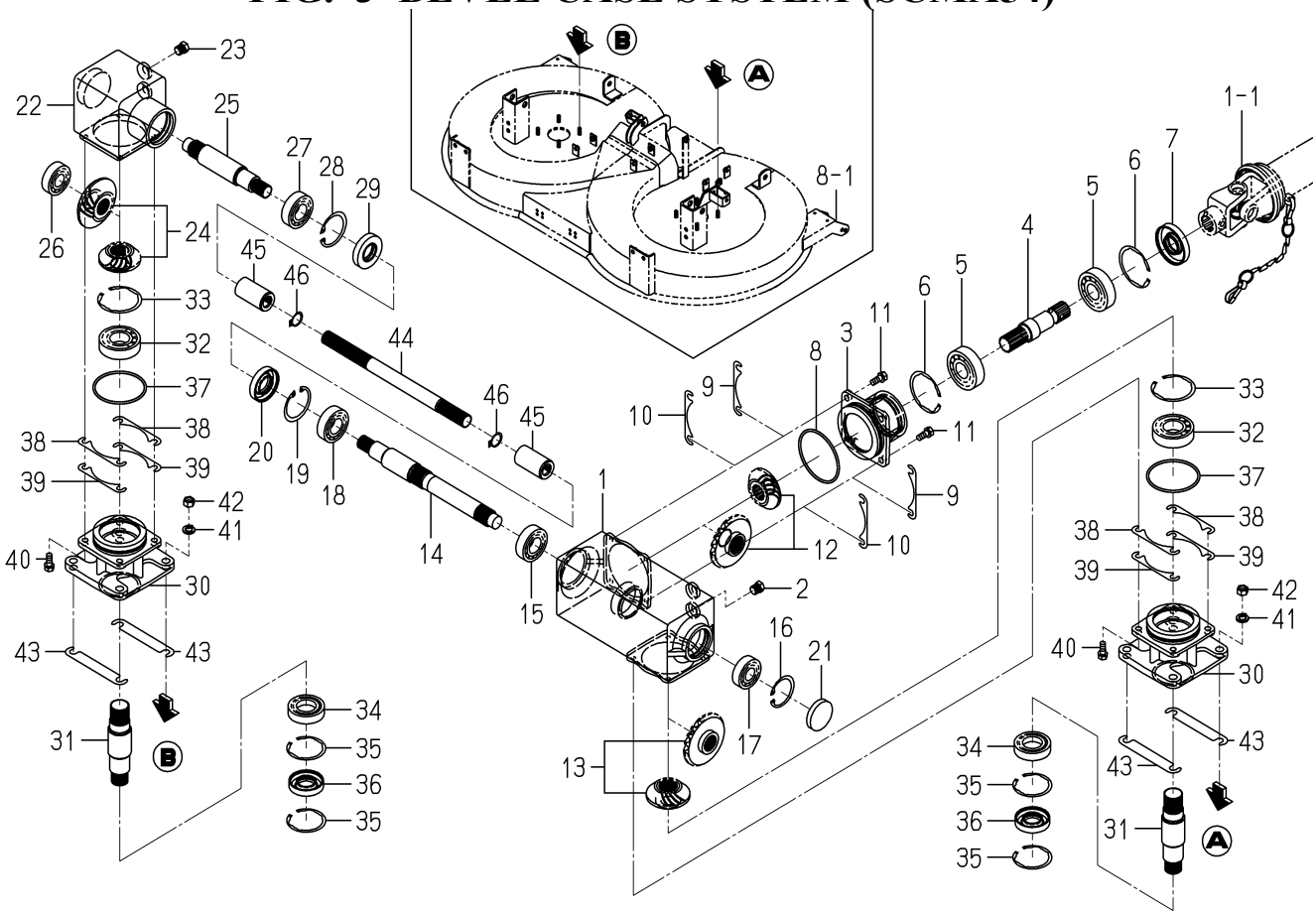

8668-201 -0100

KEY	PART CODE	DESCRIPTION	SPC	TYPE OF MODEL SCMA48 SFH	SCMA54 SFH	ITC	COL	GRP	REMARKS
1	8668-201-001-00	CASE/BEVEL	*		1				
2	7955-201-026-00	PLUG,DRAIN (1/4)	*		2				
3	8667-201-002-00	METAL/INPUT	*		1				
4	8595-201-013-00	SHAFT/INPUT	*		1				
5	1729-214-049-00	BEARING/BALL	*		2				
6	V707-140-062-00	RING/SNAP	*		2				
7	8595-201-025-00	SEAL/OIL	*		1				
8	V721-103-108-00	O-RING/G80	*		1				
9	8595-201-021-00	SHIM/0.1	*		4				
10	8595-201-022-00	SHIM/0.2	*		2				
11	V211-260-802-00	BOLT/S	*		4				
12	8668-201-210-00	GEAR/BEVEL/19-2 SET	*		1				
13	8667-201-220-00	GEAR/BEVEL/25-2 SET	*		1				
14	8668-201-002-00	SHAFT/LH	*		1				
15	V600-110-620-50	BEARING,RB/6205	*		1				
16	V705-140-047-00	RING,SNAP/47 C	*		1				
17	V600-110-620-40	BEARING,RB/6204	*		1				
18	V600-110-620-50	BEARING,RB/6205	*		1				
19	V705-140-052-00	RING,SNAP/52 C	*		1				
20	V744-125-521-00	SEAL,OIL/TC255210	*		1				
21	1564-201-003-00	CAP/SEAL/47	*		1				
22	8663-202-062-11	CASE/BEVEL/RH	*		1		4L		
23	7955-201-026-00	PLUG,DRAIN (1/4)	*		2				
24	8667-201-230-00	GEAR/BEVEL/25-2 SET	*		1				
25	8667-201-005-00	SHAFT/RH	*		1				
26	V600-110-620-40	BEARING,RB/6204	*		1				
27	V600-110-620-50	BEARING,RB/6205	*		1				
28	V705-140-052-00	RING,SNAP/52 C	*		1				
29	V744-125-521-00	SEAL,OIL/TC255210	*		1				
30	8667-201-006-00	METAL/BLADE	*		2				

FIG. 3 BEVEL CASE SYSTEM (SCMA54)

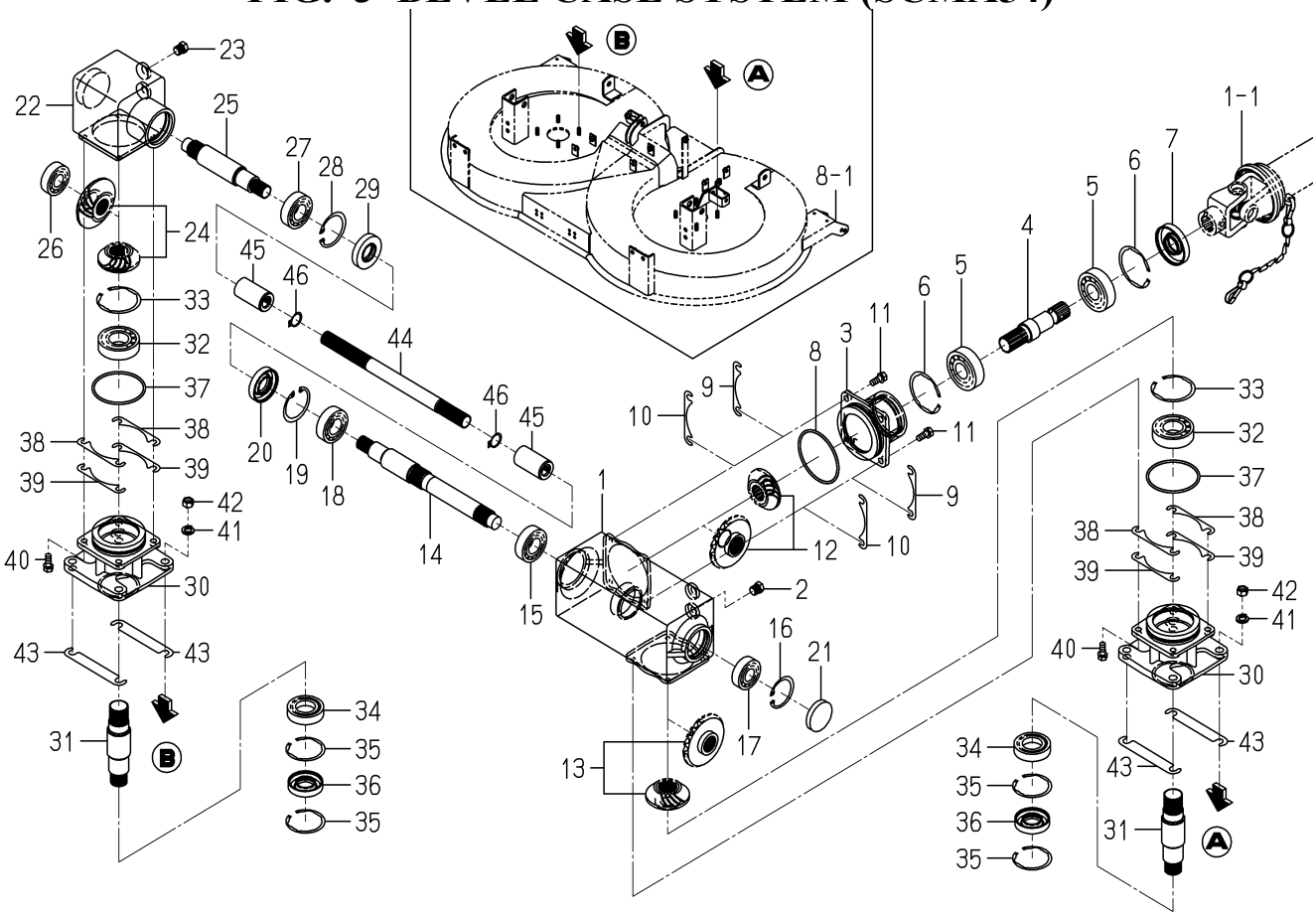

8668-201 -0100

KEY	PART CODE	DESCRIPTION	SPC	TYPE OF MODEL SCMA48 SFH	TYPE OF MODEL SCMA54 SFH	ITC	COL	GRP	REMARKS
31	8667-201-007-00	SHAFT/BLADE	*		2				
32	V600-110-620-60	BEARING,RB/6206	*		2				
33	V707-140-062-00	RING/SNAP	*		2				
34	V600-110-600-60	BEARING,RB 6006	*		2				
35	V707-140-055-00	RING/SNAP	*		4				
36	V744-130-551-20	SEAL,OIL/TC305512	*		2				
37	V721-103-107-50	O-RING/G75	*		2				
38	8595-201-021-00	SHIM/0.1	*		8				
39	8595-201-022-00	SHIM/0.2	*		4				
40	V211-260-802-00	BOLT/S	*		8				
41	V401-160-010-00	WASHER,SP/M10	*		8				
42	V304-260-010-00	NUT	*		8				
43	8667-201-009-00	SHIM/0.2	*		2				
44	8668-201-004-00	SHAFT/JOINT	*		1				
45	1602-321-004-00	COUPLING/18X30X55	*		2				
46	V704-140-020-00	RING,SNAP/20C	*		2				

FIG. 4 COLLAR (BLADE) SYSTE

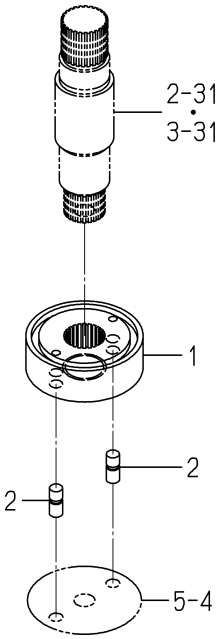

8667-301 -0100

KEY	PART CODE	DESCRIPTION	SPC	TYPE OF MODEL SCMA48 SFH	SCMA54 SFH	ITC	COL	GRP	REMARKS
1	8667-301-001-00	COLLAR/BLADE	*	2	2				
2	8663-301-004-00	PIN/08X18	*	4	4				

FIG. 5 BLADE SYSTEM (SCMA48)

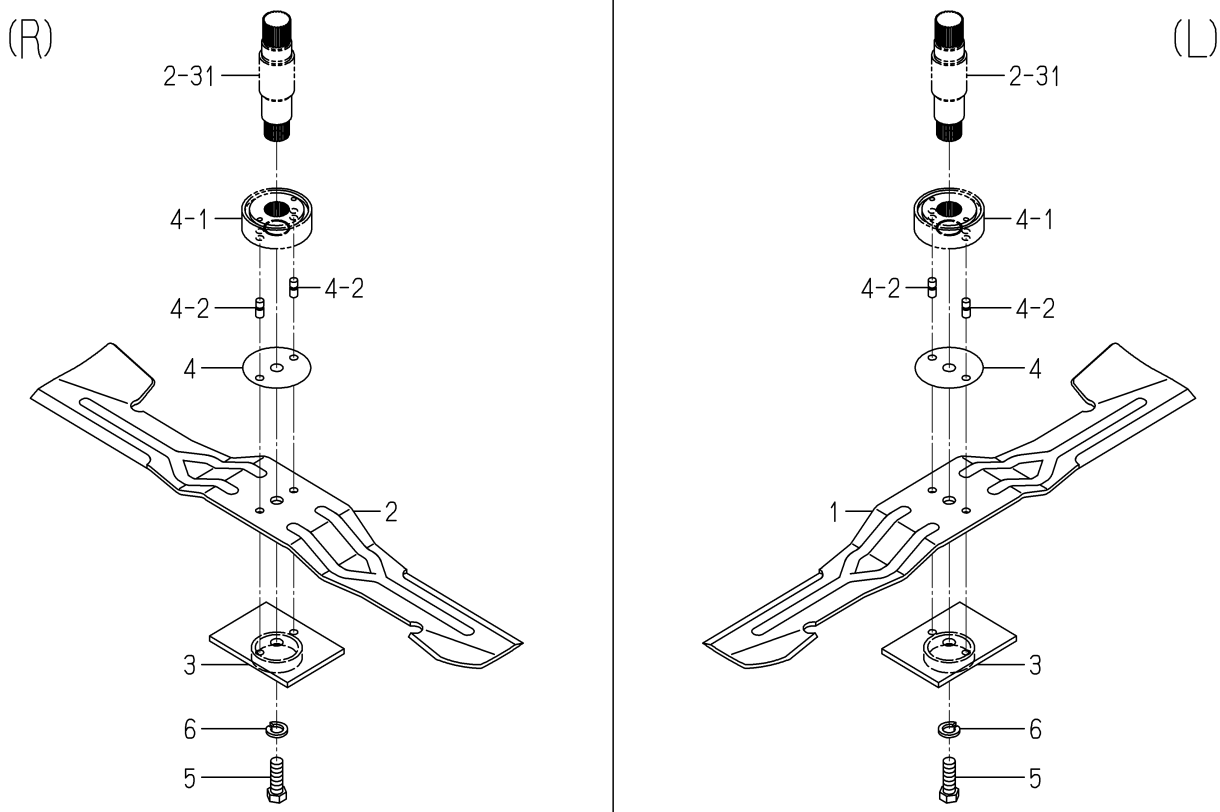

8667-306 -0100

KEY	PART CODE	DESCRIPTION	SPC	TYPE OF MODEL SCMA48 SFH	TYPE OF MODEL SCMA54 SFH	ITC	COL	GRP	REMARKS
1	8667-306-001-00	BLADE/60X640/A	*	1					
2	8667-306-002-00	BLADE/60X640/B	*	1					
3	8663-306-210-10	PLATE/I/80X110 COMP	*	2					
4	8663-306-004-00	SHIM/1.2	*	2					
5	V203-361-203-50	BOLT	*	2					
6	V401-160-012-00	WASHER,SP/M12	*	2					

FIG. 6 BLADE SYSTEM (SCMA54)

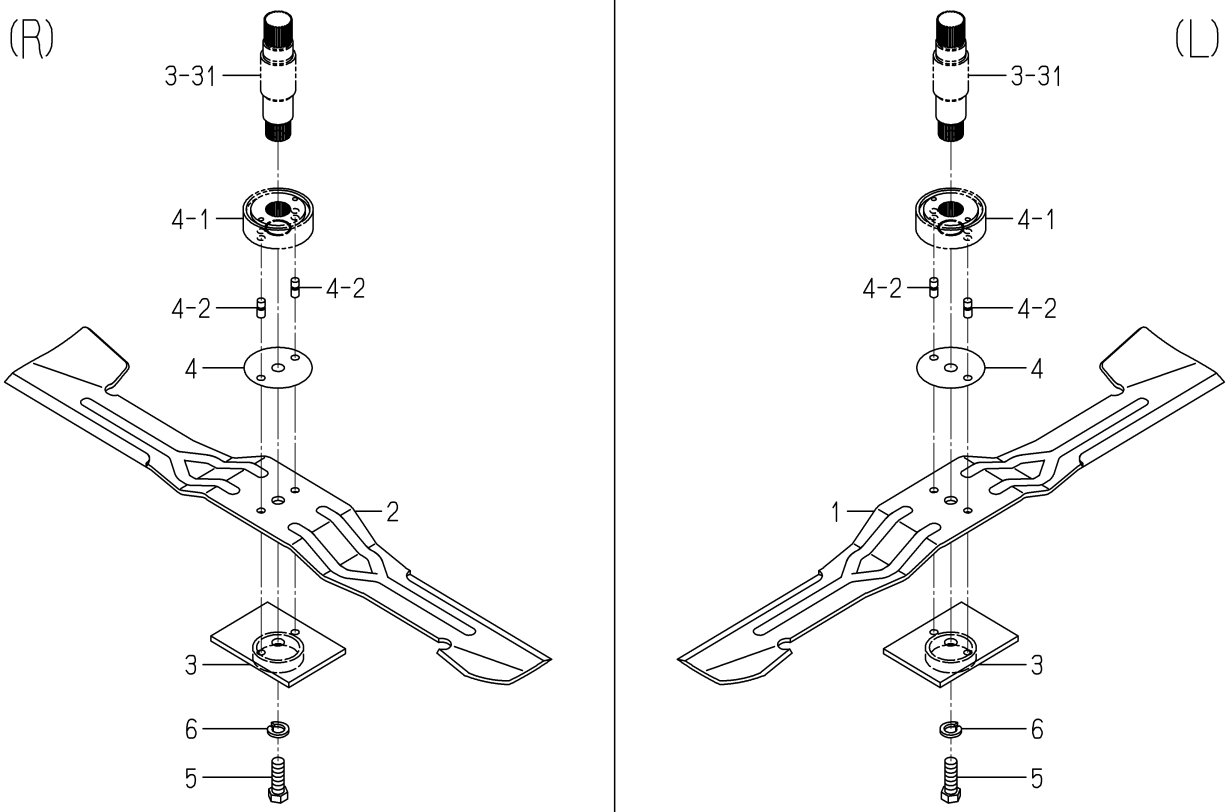

8668-306 -0100

KEY	PART CODE	DESCRIPTION	SPC	TYPE OF MODEL SCMA48 SFH	TYPE OF MODEL SCMA54 SFH	ITC	COL	GRP	REMARKS
1	8668-306-001-00	BLADE/60X716/A	*		1				
2	8668-306-002-00	BLADE/60X716/B	*		1				
3	8663-306-210-10	PLATE/I/80X110 COMP	*		2				
4	8663-306-004-00	SHIM/1.2	*		2				
5	V203-361-203-50	BOLT	*		2				
6	V401-160-012-00	WASHER,SP/M12	*		2				

FIG. 7 MOWER DECK SYSTEM (SCMA48)

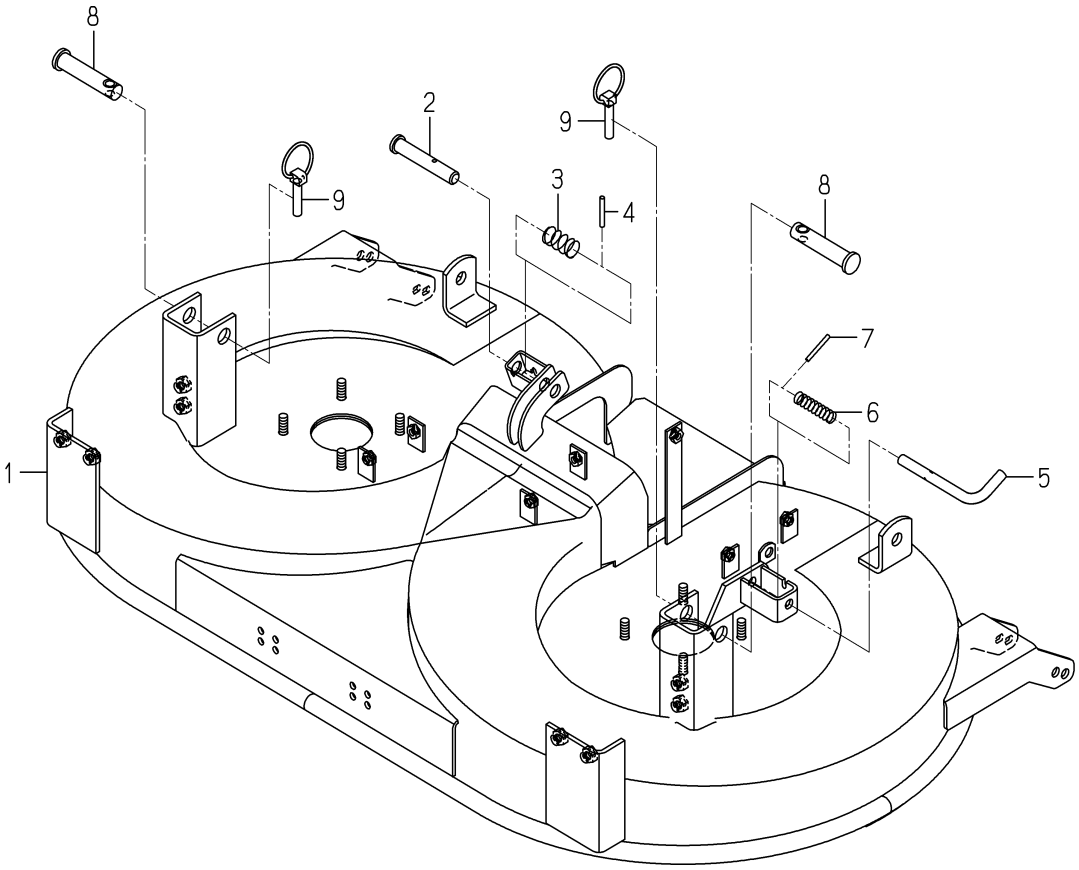

8667-402 -0100

KEY	PART CODE	DESCRIPTION	SPC	TYPE OF MODEL SCMA48 SFH	TYPE OF MODEL SCMA54 SFH	ITC	COL	GRP	REMARKS
1	8667-402-210-10	DECK/MOWER/48 COMP	*	1			4L		
2	8595-608-082-00	PIN/16X96	*	1					
3	1560-601-028-00	SPRING/HC042	*	1					
4	V580-140-504-00	PIN,SPRING/5 X40 W	*	1					
5	8654-501-042-00	STOPPER/MOWER	*	1					
6	8654-501-043-00	SPRING/HC058	*	1					
7	V580-140-404-00	PIN,SPRING/4X40	*	1					
8	8654-510-001-00	PIN/19X92	*	2					
9	1673-525-002-20	LINKPIN	*	2					

FIG. 8 MOWER DECK SYSTEM (SCMA54)

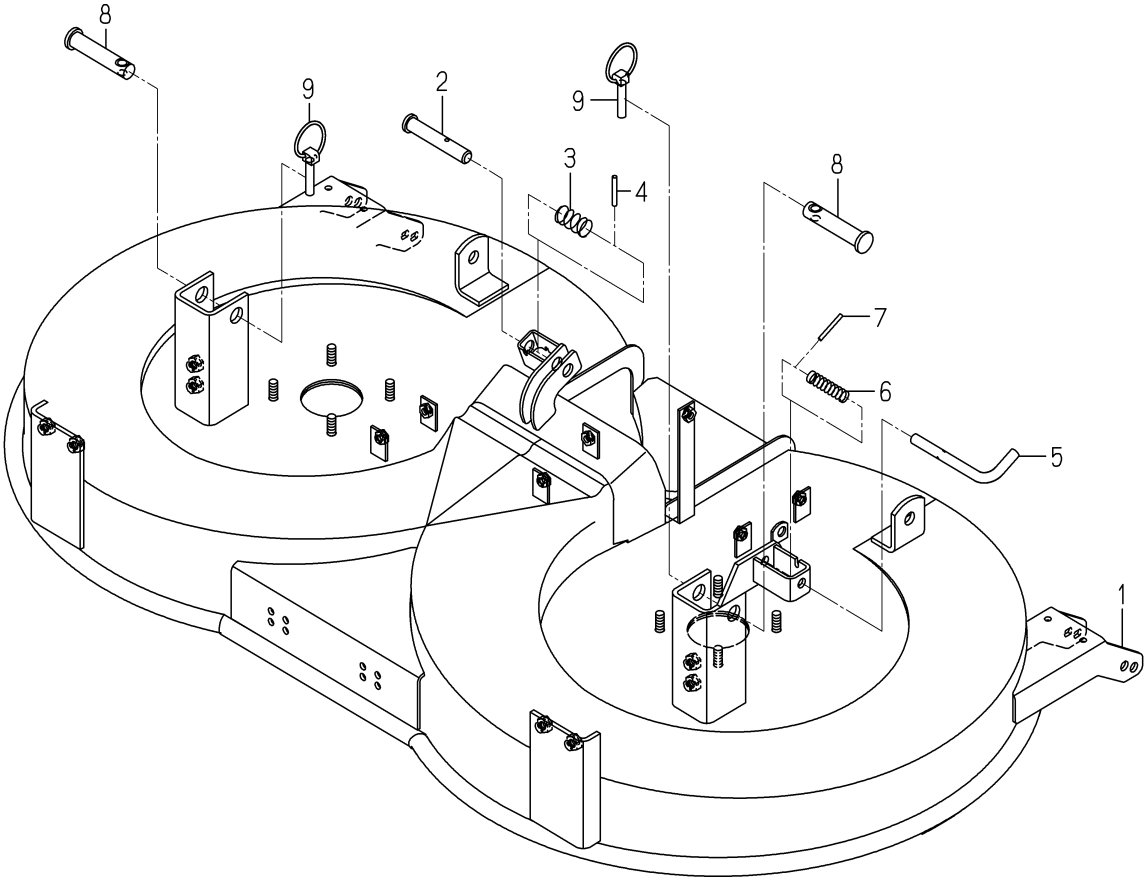

8668-402 -0100

KEY	PART CODE	DESCRIPTION	SPC	TYPE OF MODEL SCMA48 SFH	TYPE OF MODEL SCMA54 SFH	ITC	COL	GRP	REMARKS
1	8668-402-210-10	DECK/MOWER/54 COMP	*		1		4L		
2	8595-608-082-00	PIN/16X96	*		1				
3	1560-601-028-00	SPRING/HC042	*		1				
4	V580-140-504-00	PIN,SPRING/5 X40 W	*		1				
5	8654-501-042-00	STOPPER/MOWER	*		1				
6	8654-501-043-00	SPRING/HC058	*		1				
7	V580-140-404-00	PIN,SPRING/4X40	*		1				
8	8654-510-001-00	PIN/19X92	*		2				
9	1673-525-002-20	LINKPIN	*		2				

FIG. 9 COVER SYSTEM (SCMA48)

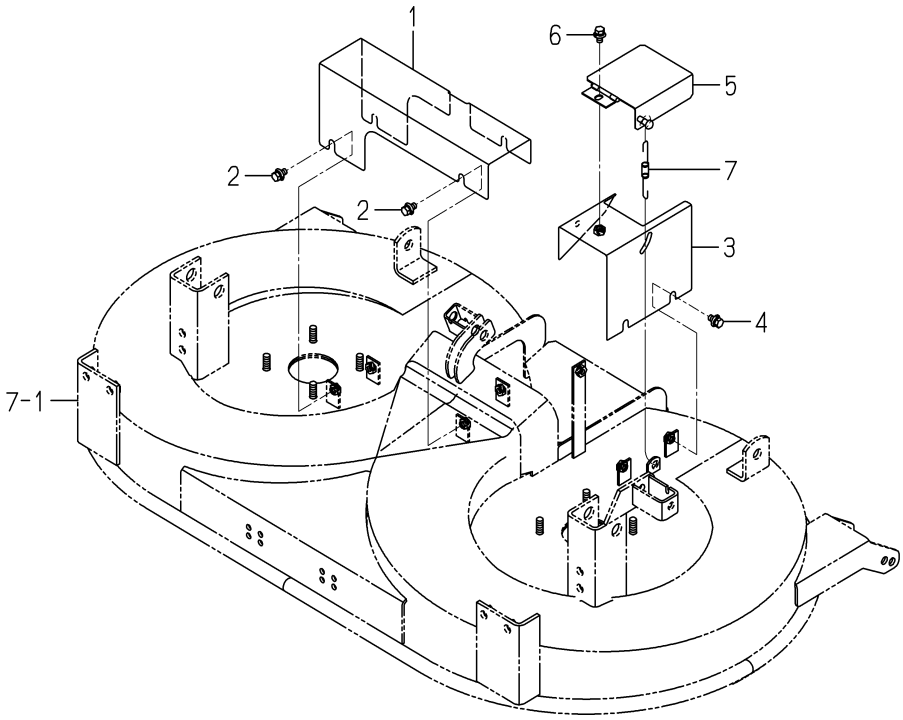

8667-407 -0100

KEY	PART CODE	DESCRIPTION	SPC	TYPE OF MODEL SCMA48 SFH	TYPE OF MODEL SCMA54 SFH	ITC	COL	GRP	REMARKS
1	8667-407-001-00	COVER/SHAFT	*	1			4L		
2	V211-360-801-60	BOLT,SEMS (SP)	*	4					
3	8667-407-230-00	COVER/JOINT COMP	*	1			4L		
4	V211-360-801-60	BOLT,SEMS (SP)	*	3					
5	8667-407-240-00	COVER/YOKE COMP	*	1			4L		
6	V211-360-801-60	BOLT,SEMS (SP)	*	1					
7	1386-624-004-00	SPRING HE100	*	1					

FIG. 10 COVER SYSTEM (SCMA54)

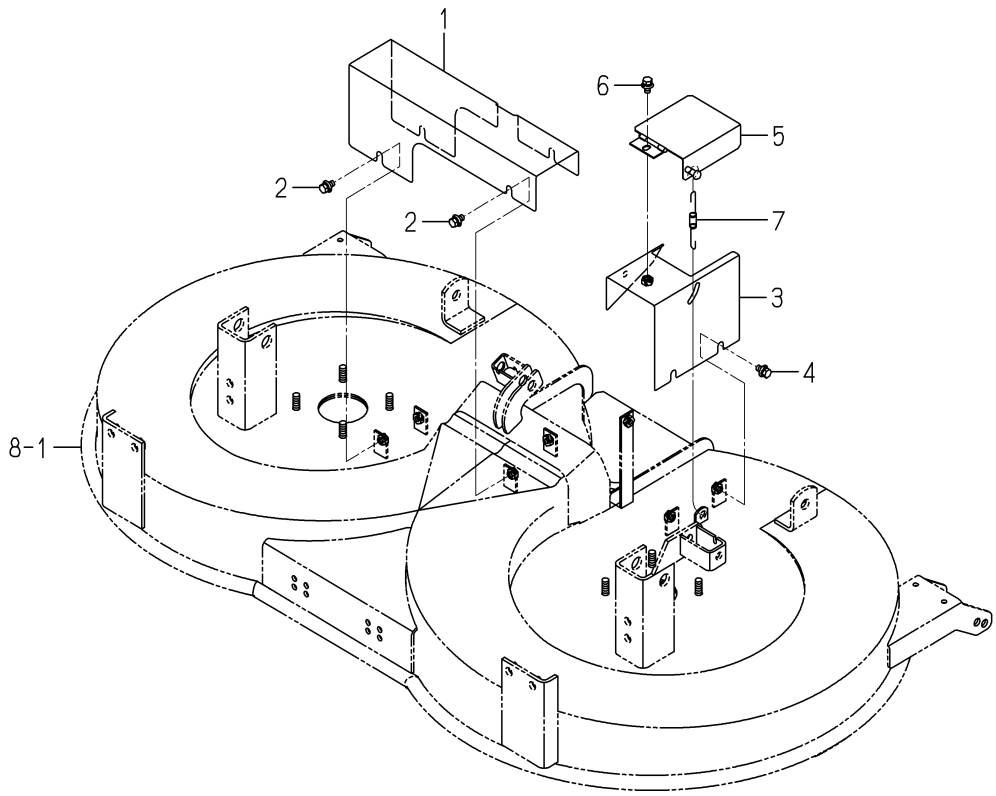

8668-407 -0100

KEY	PART CODE	DESCRIPTION	SPC	TYPE OF MODEL SCMA48 SFH	TYPE OF MODEL SCMA54 SFH	ITC	COL	GRP	REMARKS
1	8668-407-001-00	COVER/SHAFT	*		1		4L		
2	V211-360-801-60	BOLT,SEMS (SP)	*		4				
3	8667-407-230-00	COVER/JOINT COMP	*		1		4L		
4	V211-360-801-60	BOLT,SEMS (SP)	*		3				
5	8667-407-240-00	COVER/YOKE COMP	*		1		4L		
6	V211-360-801-60	BOLT,SEMS (SP)	*		1				
7	1386-624-004-00	SPRING HE100	*		1				

FIG. 11 GAUGE WHEEL SYSTEM (SCMA48)

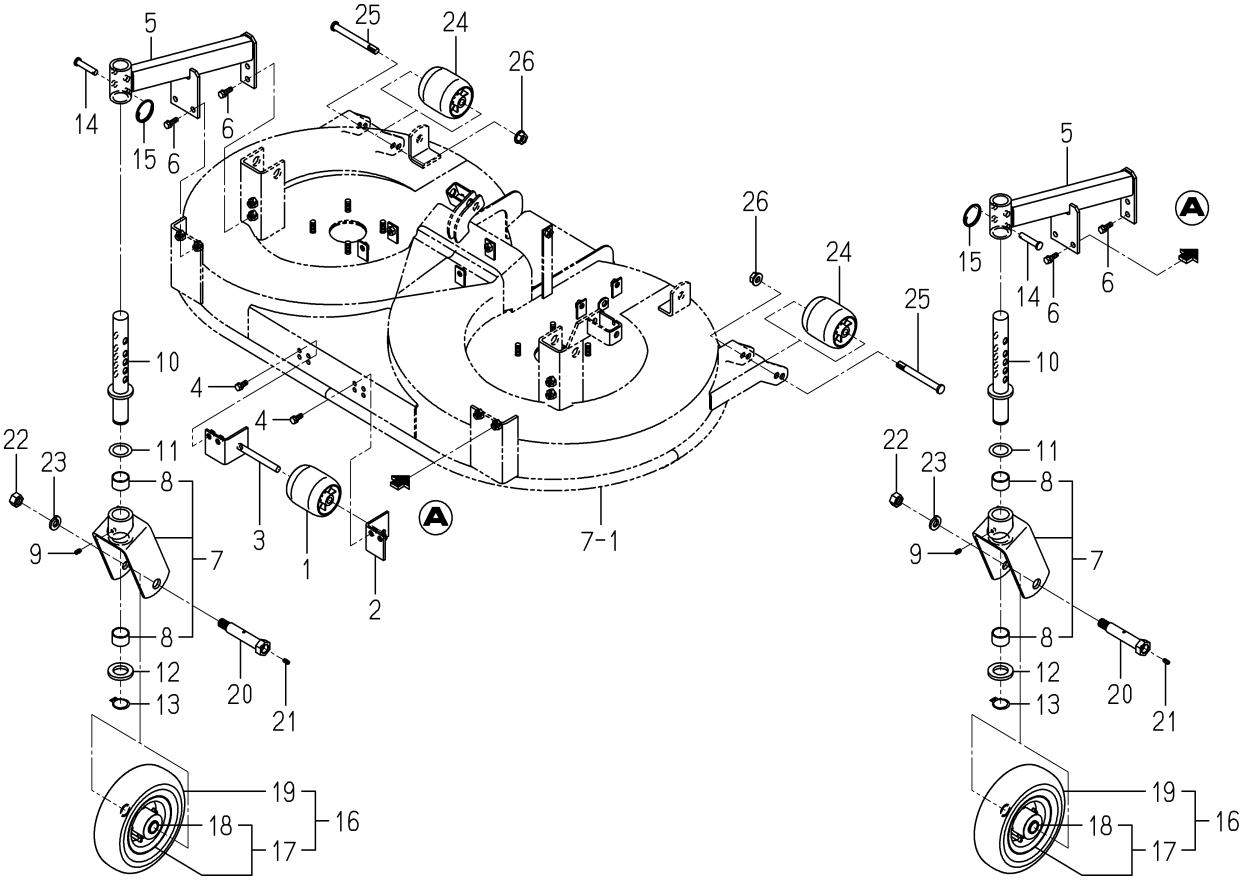

8667-501 -0100

KEY	PART CODE	DESCRIPTION	SPC	TYPE OF MODEL SCMA48 SFH	SCMA54 SFH	ITC	COL	GRP	REMARKS
1	8595-501-001-20	WHEEL/GAUGE/FRONT	*	1					
2	8663-501-510-00	STAY/GAUGE/LH COMP	*	1					
3	8663-501-520-00	STAY/GAUGE/RH COMP	*	1					
4	V211-260-802-00	BOLT/S	*	4					
5	8667-501-210-00	ARM/GAUGE COMP	*	2			4L		
6	V211-261-002-50	BOLT(S) M10X25	*	8					
7	8595-501-310-01	FORK/WHEEL ASSY	*	2			4L		
8	8654-501-201-00	BUSH/30X34X20	*	4					
9	V760-150-000-00	NIPPLE,GREASE	*	2					
10	8595-501-280-01	PIN/GAUGE COMP	*	2			4L		
11	1427-432-005-00	COLLAR,THRUST	*	2					
12	3670-701-010-00	WASHER/30X50X05	*	2					
13	V704-140-030-00	RING,SNAP/30 C	*	2					
14	2144-106-005-00	PIN/10X53	*	2					
15	8654-501-006-10	SPRING/CLIP	*	2					
16	8595-501-320-10	WHEEL/GAUGE ASSY	*	2					
17	8595-501-350-10	WHELL ASSY	*	2					
18	8595-501-351-10	RBB	*	4					
19	8595-501-360-10	TIRE/8X3.00-4 ASSY	*	2					
20	8595-501-007-00	PIN/20X112	*	2					
21	V760-150-000-00	NIPPLE,GREASE	*	2					
22	V304-460-016-00	NUT/M16	*	2					
23	V401-160-016-00	WASHER,SP/M16	*	2					
24	8595-501-001-20	WHEEL/GAUGE/FRONT	*	2					
25	8595-505-051-30	PIN/12X117	*	2					
26	V360-260-012-00	NUT/WASHER	*	2					

FIG. 12 GAUGE WHEEL SYSTEM (SCMA54)

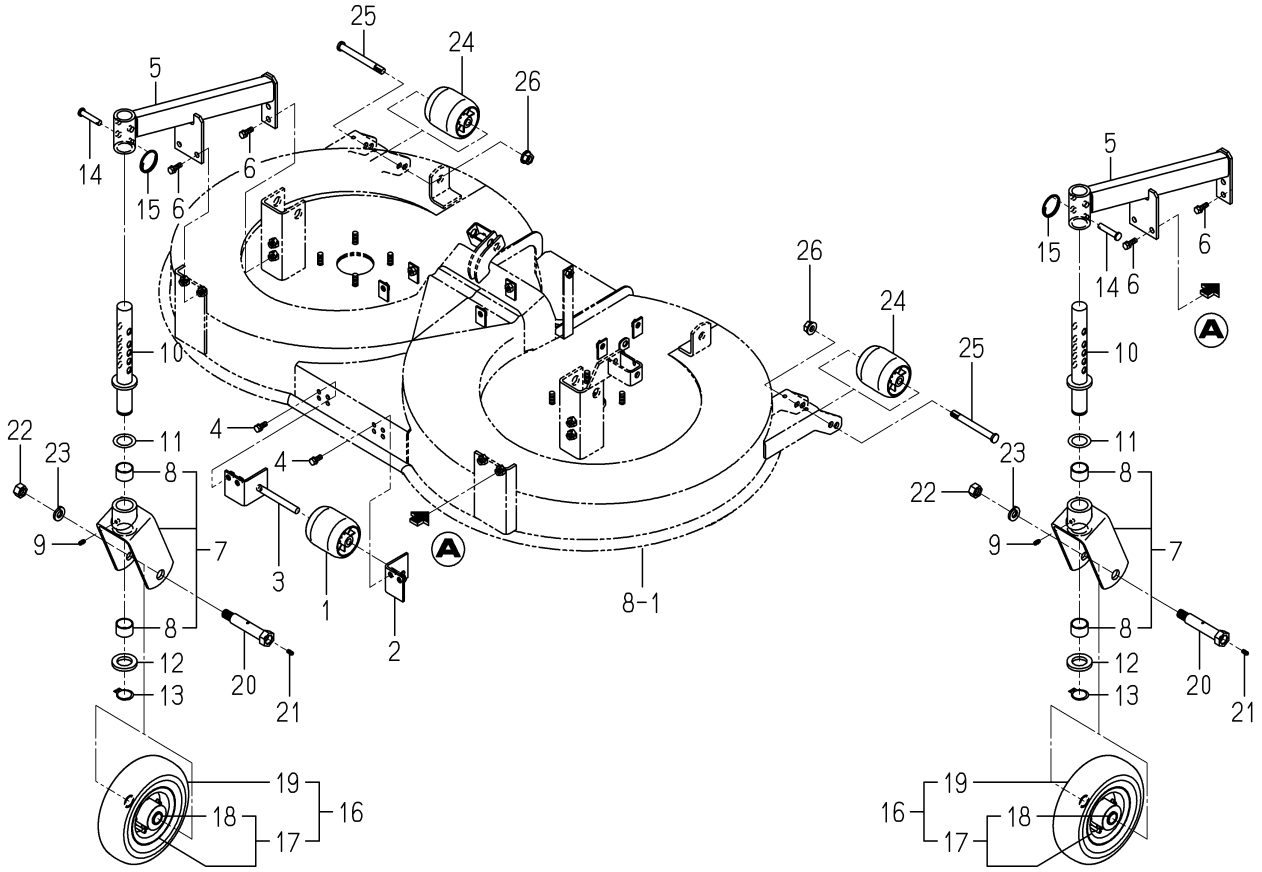

8668-501 -0100

KEY	PART CODE	DESCRIPTION	SPC	TYPE OF MODEL SCMA48 SFH	TYPE OF MODEL SCMA54 SFH	ITC	COL	GRP	REMARKS
1	8595-501-001-20	WHEEL/GAUGE/FRONT	*		1				
2	8663-501-510-00	STAY/GAUGE/LH COMP	*		1				
3	8663-501-520-00	STAY/GAUGE/RH COMP	*		1				
4	V211-260-802-00	BOLT/S	*		4				
5	8668-501-210-00	ARM/GAUGE COMP	*		2		4L		
6	V211-261-002-50	BOLT(S) M10X25	*		8				
7	8595-501-310-01	FORK/WHEEL ASSY	*		2		4L		
8	8654-501-201-00	BUSH/30X34X20	*		4				
9	V760-150-000-00	NIPPLE,GREASE	*		2				
10	8595-501-280-01	PIN/GAUGE COMP	*		2		4L		
11	1427-432-005-00	COLLAR,THRUST	*		2				
12	3670-701-010-00	WASHER/30X50X05	*		2				
13	V704-140-030-00	RING,SNAP/30 C	*		2				
14	2144-106-005-00	PIN/10X53	*		2				
15	8654-501-006-10	SPRING/CLIP	*		2				
16	8595-501-320-10	WHEEL/GAUGE ASSY	*		2				
17	8595-501-350-10	WHELL ASSY	*		2				
18	8595-501-351-10	RBB	*		4				
19	8595-501-360-10	TIRE/8X3.00-4 ASSY	*		2				
20	8595-501-007-00	PIN/20X112	*		2				
21	V760-150-000-00	NIPPLE,GREASE	*		2				
22	V304-460-016-00	NUT/M16	*		2				
23	V401-160-016-00	WASHER,SP/M16	*		2				
24	8595-501-001-20	WHEEL/GAUGE/FRONT	*		2				
25	8595-505-051-30	PIN/12X117	*		2				
26	V360-260-012-00	NUT/WASHER	*		2				

FIG. 13 LIFT LINK SYSTEM

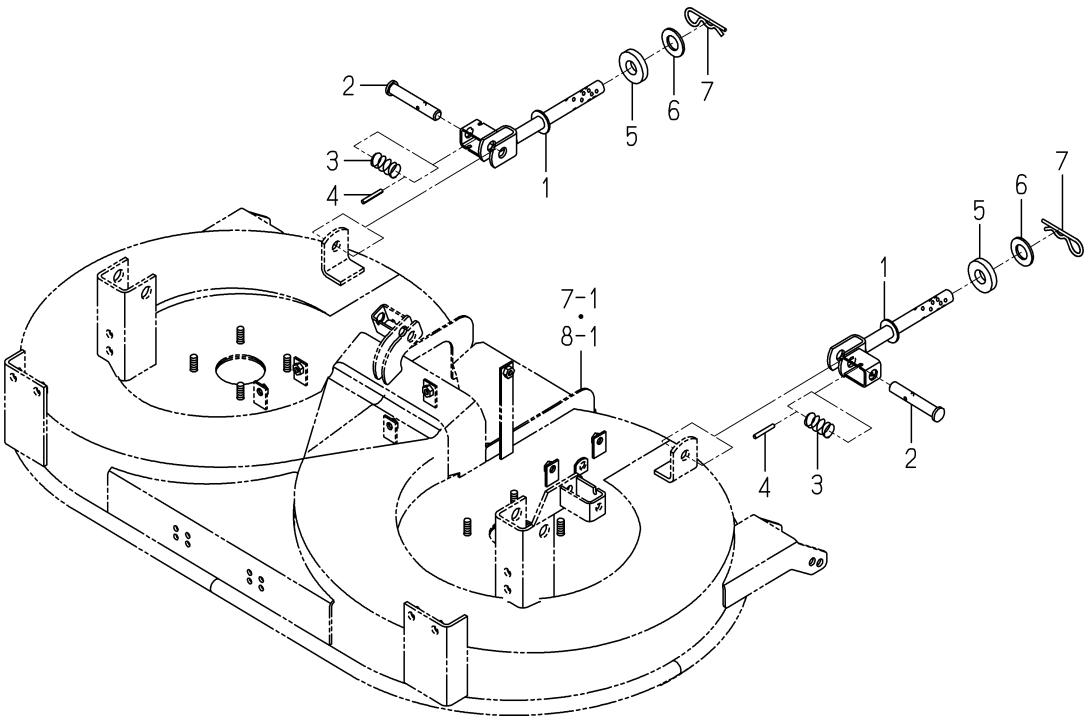

8667-510 -0100

KEY	PART CODE	DESCRIPTION	SPC	TYPE OF MODEL SCMA48 SFH	TYPE OF MODEL SCMA54 SFH	ITC	COL	GRP	REMARKS
1	8667-510-280-00	PIN/LIFT COMP	*	2	2				
2	8595-608-082-00	PIN/16X96	*	2	2				
3	1560-601-028-00	SPRING/HC042	*	2	2				
4	V580-140-504-00	PIN,SPRING/5 X40 W	*	2	2				
5	8654-510-002-00	SPACER	*	2	2				
6	V411-260-022-00	WASHER,PL/M22	*	2	2				
7	1444-514-005-10	PIN,HAIR (19)	*	2	2				

FIG. 14 LABEL

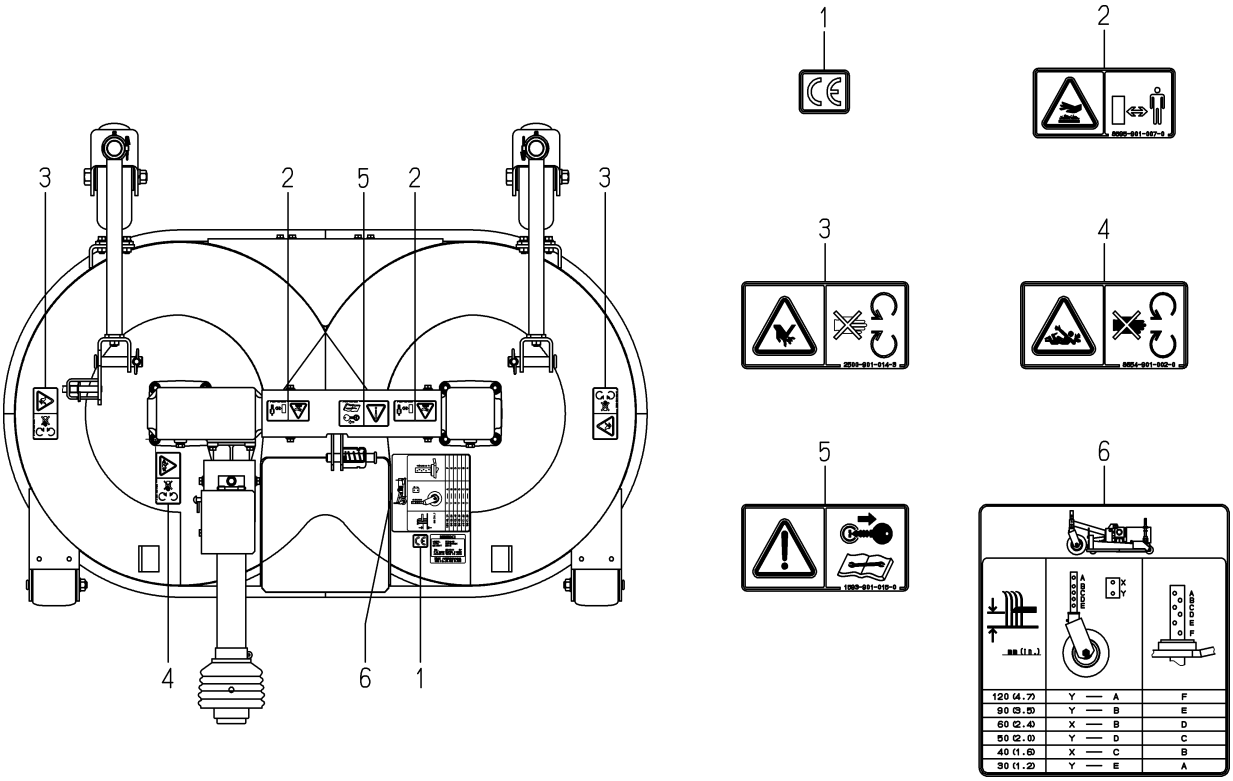

8667-901 -0100

KEY	PART CODE	DESCRIPTION	SPC	TYPE OF MODEL SCMA48 SFH	SCMA54 SFH	ITC	COL	GRP	REMARKS
1	2500-901-027-00	LABEL/CE	*	1	1				
2	8595-901-007-00	LABEL/WARNING/HOT	*	2	2				
3	2500-901-014-30	LABEL/DANGER	*	2	2				
4	8654-901-002-00	LABEL/PTO	*	1	1				
5	1593-901-015-00	LABEL/MAINTENANCE	*	1	1				
6	8667-901-001-00	LABEL/GAUGEWHEEL	*	1	1				

FIG. 15 COMPONENT PARTS FOR 8667-101-310-00 ON Fig.1

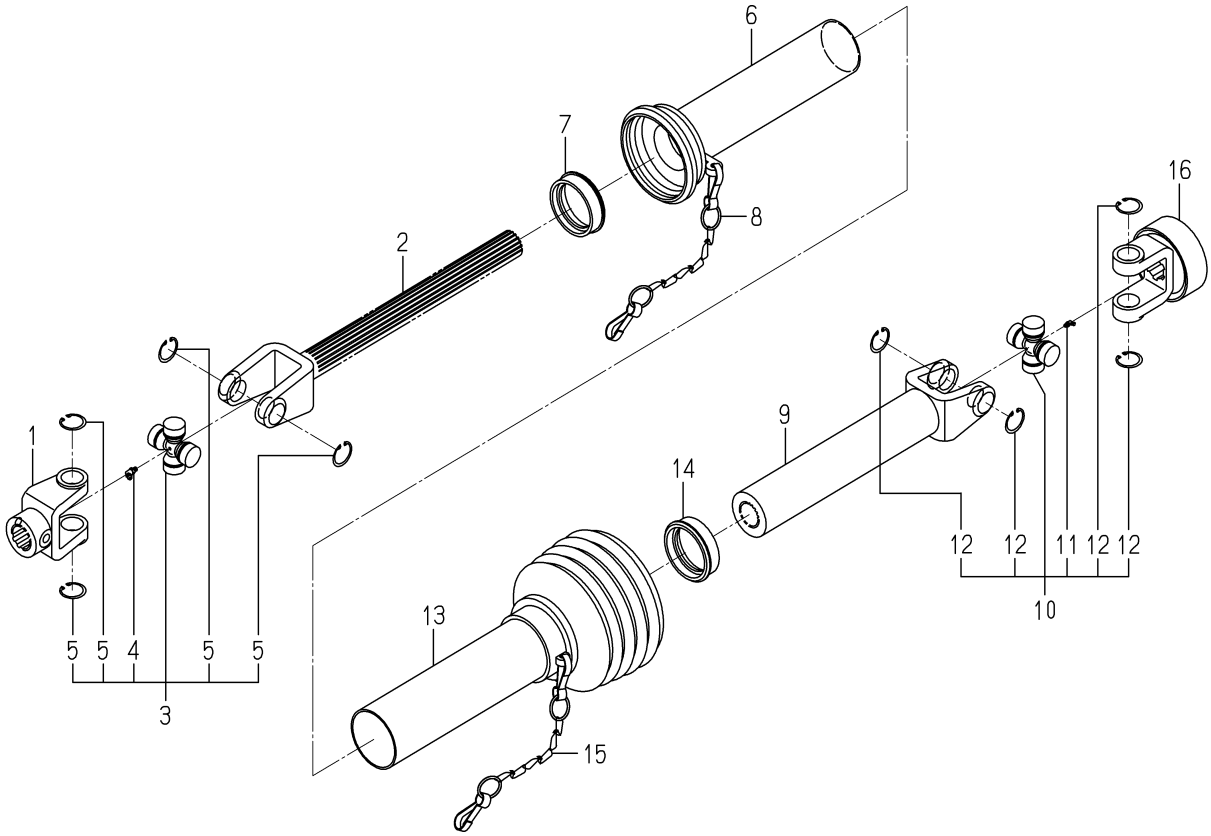

8667-101-310-0

KEY	PART CODE	DESCRIPTION	SPC	TYPE OF MODEL SCMA48 SFH	TYPE OF MODEL SCMA54 SFH	ITC	COL	GRP	REMARKS
1	8654-101-221-00	FITTINGYOKE	*	1	1				
2	8667-101-321-00	SHAFTYOKE	*	1	1				
3	8654-101-230-00	JOURNALCROSSE ASSY	*	1	1				
4	8654-101-232-00	GREASENIPPLE	*	1	1				
5	8654-101-233-00	SURCLIP/HOLE	*	4	4				
6	8667-101-322-00	SAFETYGUARD/IN	*	1	1				
7	7821-102-008-00	RING/SLIDE	*	1	1				
8	7821-102-220-00	CHAIN ASSY	*	1	1				
9	8667-101-331-00	SLEEVEYOKE	*	1	1				
10	8654-101-230-00	JOURNALCROSSE ASSY	*	1	1				
11	8654-101-232-00	GREASENIPPLE	*	1	1				
12	8654-101-233-00	SURCLIP/HOLE	*	4	4				
13	8667-101-332-00	SAFETYGUARD/OUT	*	1	1				
14	7821-102-008-00	RING/SLIDE	*	1	1				
15	7821-102-220-00	CHAIN ASSY	*	1	1				
16	8657-101-501-00	AS YOKE ASSY	*	1	1				

COLLECTOR

SBC550F

8669-097-100-00

FIG. 1 FRAME SYSTEM (L TYPE)

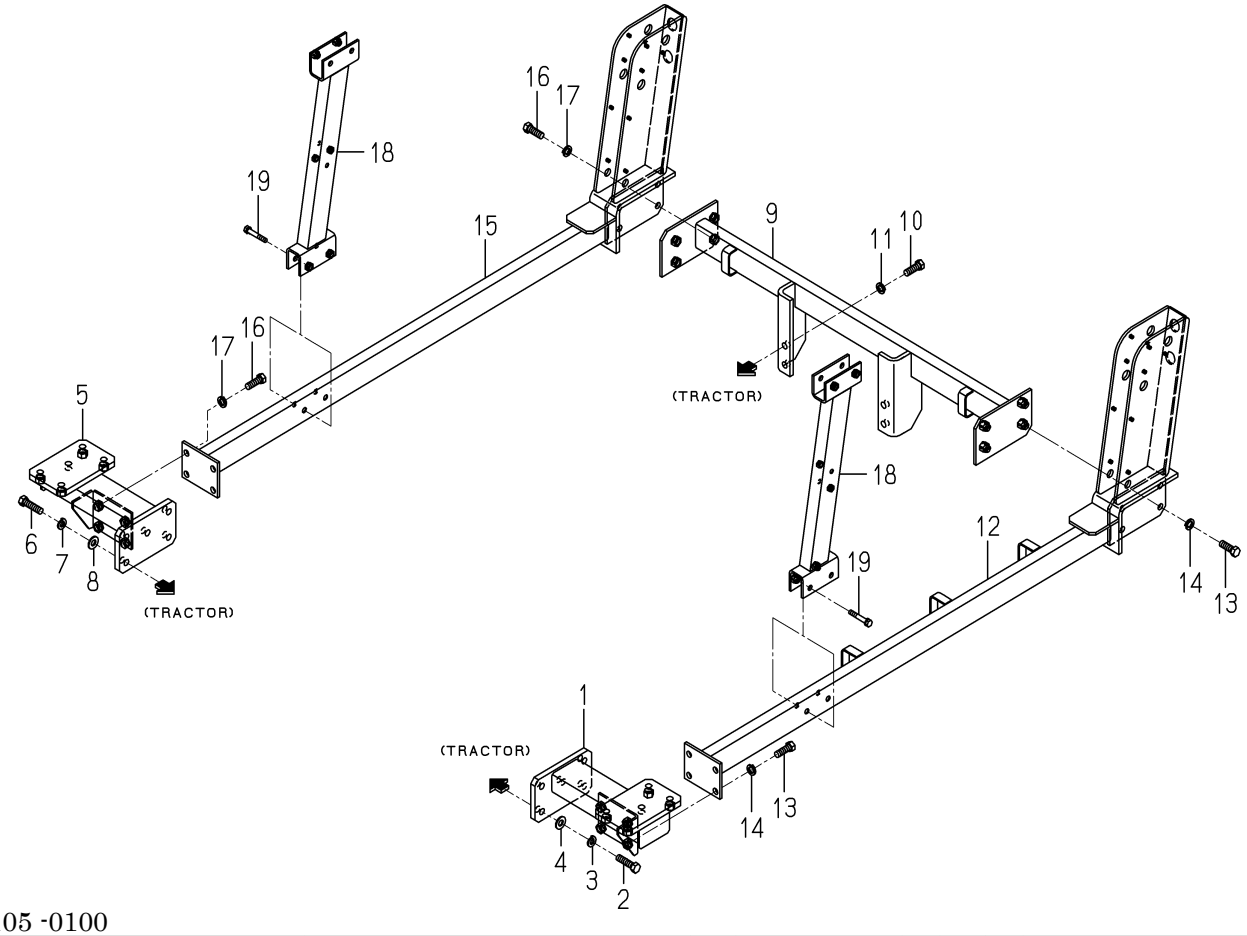

8669-105 -0100

KEY	PART CODE	DESCRIPTION	SPC	TYPE OF MODEL SBC550F		ITC	COL	GRP	REMARKS
1	8669-105-210-00	FRAME/LOWER/LH COMP	*	1					
2	V201-461-204-50	BOLT/M12X45	*	4					
3	V401-160-012-00	WASHER,SP/M12	*	4					
4	V411-260-012-00	WASHER	*	4					
5	8669-105-220-00	FRAME/LOWER/RH COMP	*	1					
6	V201-461-204-50	BOLT/M12X45	*	4					
7	V401-160-012-00	WASHER,SP/M12	*	4					
8	V411-260-012-00	WASHER	*	4					
9	8669-105-230-00	FRAME/REAR COMP	*	1					
10	V201-361-203-50	BOLT/M12X35	*	4					
11	V401-160-012-00	WASHER,SP/M12	*	4					
12	8669-105-240-00	FRAME/SIDE/LH COMP	*	1					
13	V201-361-203-50	BOLT/M12X35	*	8					
14	V401-160-012-00	WASHER,SP/M12	*	8					
15	8669-105-250-00	FRAME/SIDE/RH COMP	*	1					
16	V201-361-203-50	BOLT/M12X35	*	8					
17	V401-160-012-00	WASHER,SP/M12	*	8					
18	8669-105-260-00	FRAME/LINK COMP	*	2					
19	V211-261-005-00	BOLT/S	*	4					

FIG. 2 FRAME SYSTEM (H TYPE)

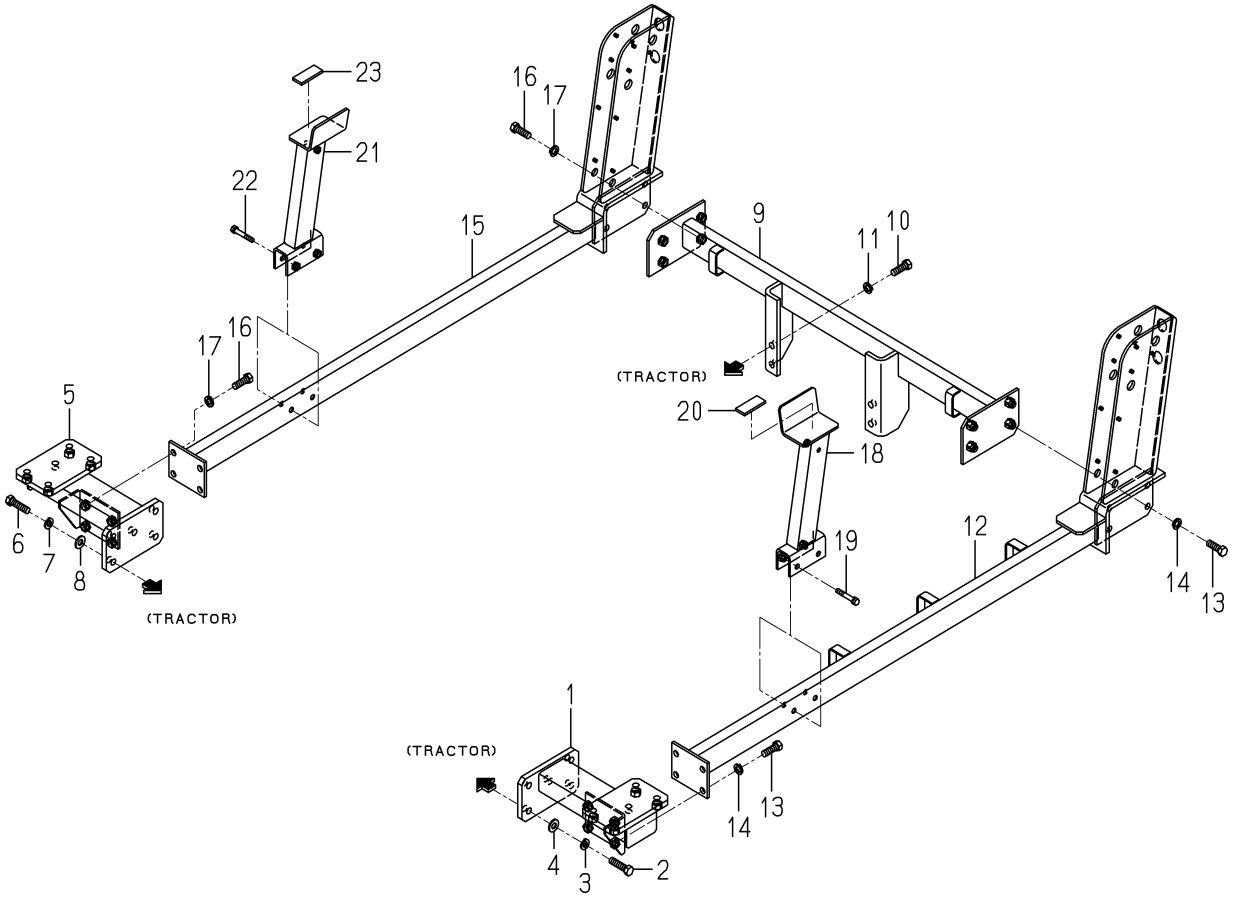

8669-155 -0100

KEY	PART CODE	DESCRIPTION	SPC	TYPE OF MODEL SBC550F		ITC	COL	GRP	REMARKS
1	8669-105-210-00	FRAME/LOWER/LH COMP	*	1					
2	V201-461-204-50	BOLT/M12X45	*	4					
3	V401-160-012-00	WASHER,SP/M12	*	4					
4	8669-105-220-00	FRAME/LOWER/RH COMP	*	1					
5	V201-461-204-50	BOLT/M12X45	*	4					
6	V401-160-012-00	WASHER,SP/M12	*	4					
7	V411-260-012-00	WASHER	*	4					
8	8669-105-230-00	FRAME/REAR COMP	*	1					
9	V201-361-203-50	BOLT/M12X35	*	4					
10	V401-160-012-00	WASHER,SP/M12	*	4					
11	V411-260-012-00	WASHER	*	4					
12	8669-105-240-00	FRAME/SIDE/LH COMP	*	1					
13	V201-361-203-50	BOLT/M12X35	*	8					
14	V401-160-012-00	WASHER,SP/M12	*	8					
15	8669-105-250-00	FRAME/SIDE/RH COMP	*	1					
16	V201-361-203-50	BOLT/M12X35	*	8					
17	V401-160-012-00	WASHER,SP/M12	*	8					
18	8669-155-210-00	FRAME/STOPPER/L COMP	*	1					
19	V211-261-005-00	BOLT/S	*	2					
20	1725-111-003-00	INSULATOR/25X60	*	2					
21	8669-155-220-00	FRAME/STOPPER/R COMP	*	1					
22	V211-261-005-00	BOLT/S	*	2					
23	1725-111-003-00	INSULATOR/25X60	*	2					

FIG. 3 CONTAINER SYSTEM

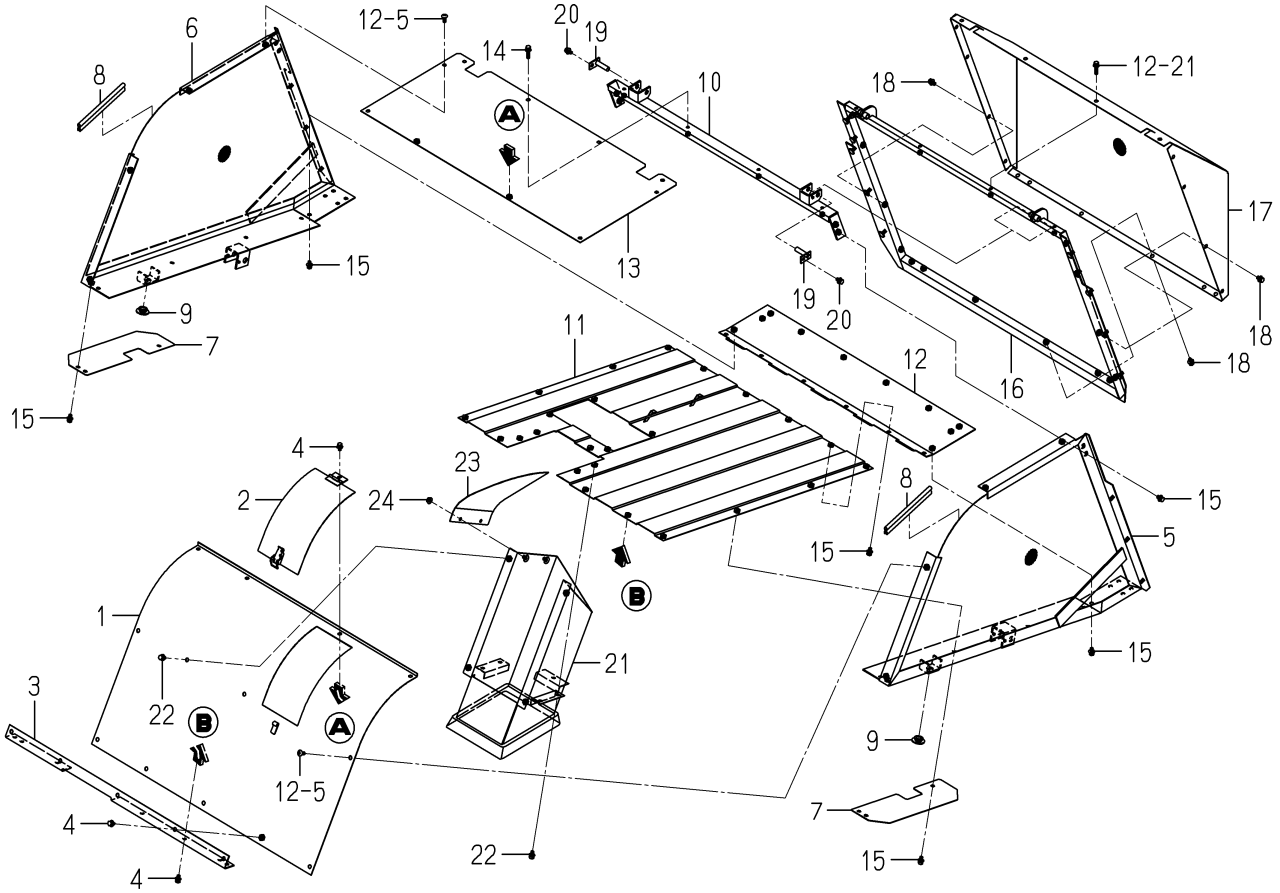

8669-305 -0100

KEY	PART CODE	DESCRIPTION	SPC	TYPE OF MODEL SBC550F		ITC	COL	GRP	REMARKS
1	8669-305-210-00	CONTAINER/FRONT COMP	*	1			4L		
2	8669-305-350-00	PLATE/COVER COMP	*	1			4L		
3	8669-305-001-00	PLATE/FRONT	*	1					
4	V211-360-801-60	BOLT,SEMS (SP)	*	10					
5	8669-305-220-10	FRAME/CONTAINER/LH	*	1			4L		
6	8669-305-240-10	FRAME/CONTAINER/RH	*	1			4L		
7	8669-305-002-10	PLATE/UNDER	*	2					
8	8669-305-003-00	PROTECTOR/245	*	2					
9	1421-603-004-00	BUSH,LEVER	*	2					
10	8669-305-260-00	FRAME/CONTAINER/REAR	*	1					
11	8669-305-270-10	FRAME/CONTAINER/LOWE	*	1			4L		
12	8669-305-280-00	PLATE/CONTAINER/LOWE	*	1			4L		
13	8669-305-340-00	CONTAINER/COVER/UPPE	*	1			4L		
14	V211-360-803-50	BOLT/SP	*	4					
15	V211-360-801-60	BOLT,SEMS (SP)	*	16					
16	8669-305-290-10	FRAME/CONTAINER/DOOR	*	1					
17	8669-305-310-00	CONTAINER/DOOR/COVER	*	1			4L		
18	V211-360-801-60	BOLT,SEMS (SP)	*	8					
19	8669-305-320-00	PIN/12X40 COMP	*	2					
20	V211-360-801-60	BOLT,SEMS (SP)	*	2					
21	8669-305-330-10	INTAKE/CONTAINE COMP	*	1					
22	V211-360-801-60	BOLT,SEMS (SP)	*	9					
23	8669-305-004-00	INTAKE/CONTAINER/COV	*	1					
24	V362-260-008-00	NUT/WASHER	*	2					

FIG. 4 DOOR OPEN SYSTEM

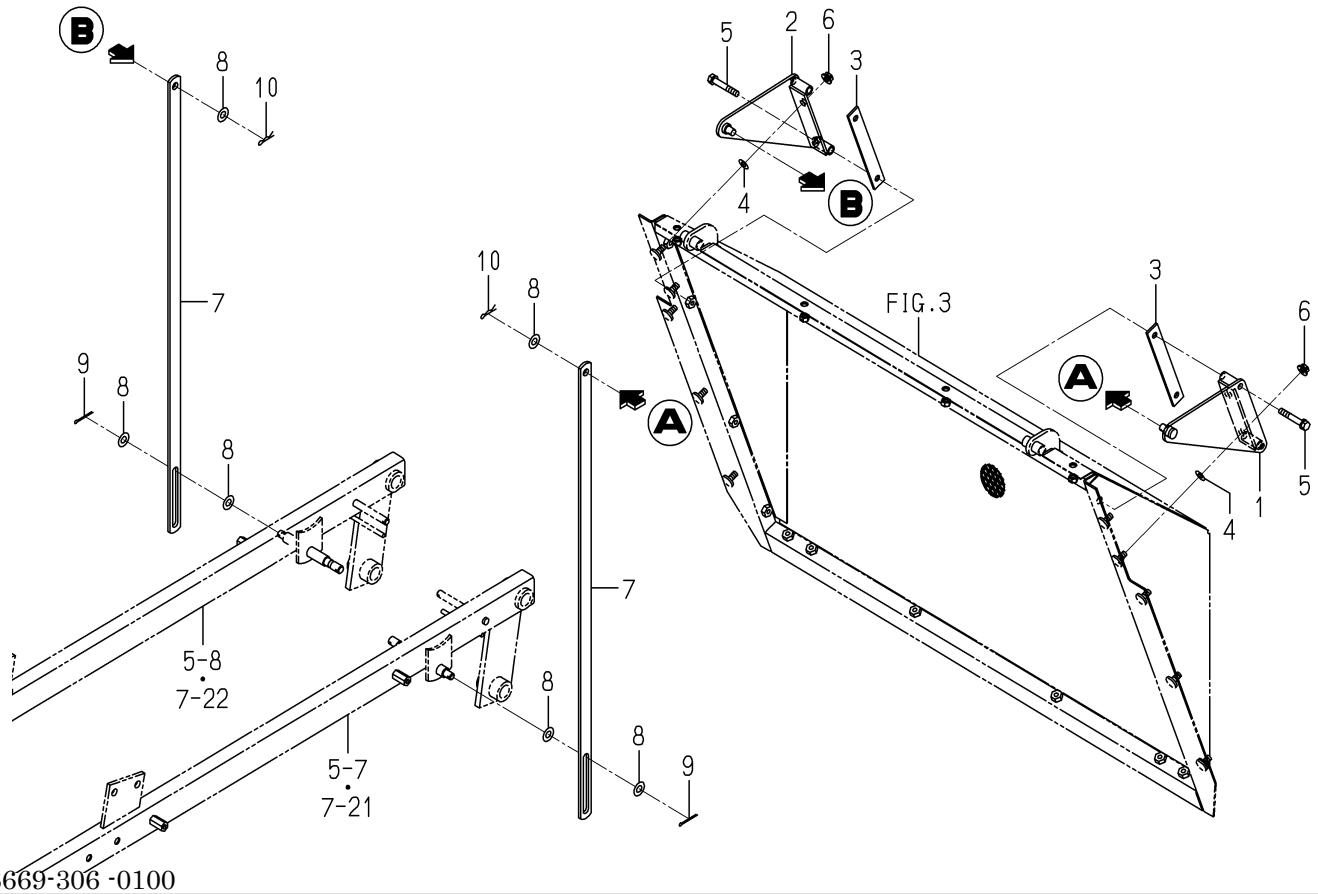

8669-306 -0100

KEY	PART CODE	DESCRIPTION	SPC	TYPE OF MODEL SBC550F		ITC	COL	GRP	REMARKS
1	8669-306-210-10	PLATE/LH COMP	*	1					
2	8669-306-220-10	PLATE/RH COMP	*	1					
3	8669-306-002-00	PLATE/I/22X167	*	2					
4	V411-260-008-00	WASHER,PL/M 8	*	4					
5	V211-260-805-00	BOLT/M8X50	*	4					
6	V362-260-008-00	NUT/WASHER	*	4					
7	8669-306-001-10	PLATE/I/22X804	*	2					
8	V411-260-010-00	WASHER/M10	*	6					
9	V500-163-003-00	PIN,SPLIT/3X30	*	2					
10	V560-160-010-00	PIN/SNAP	*	2					

FIG. 5 LINK SYSTEM (L TYPE)

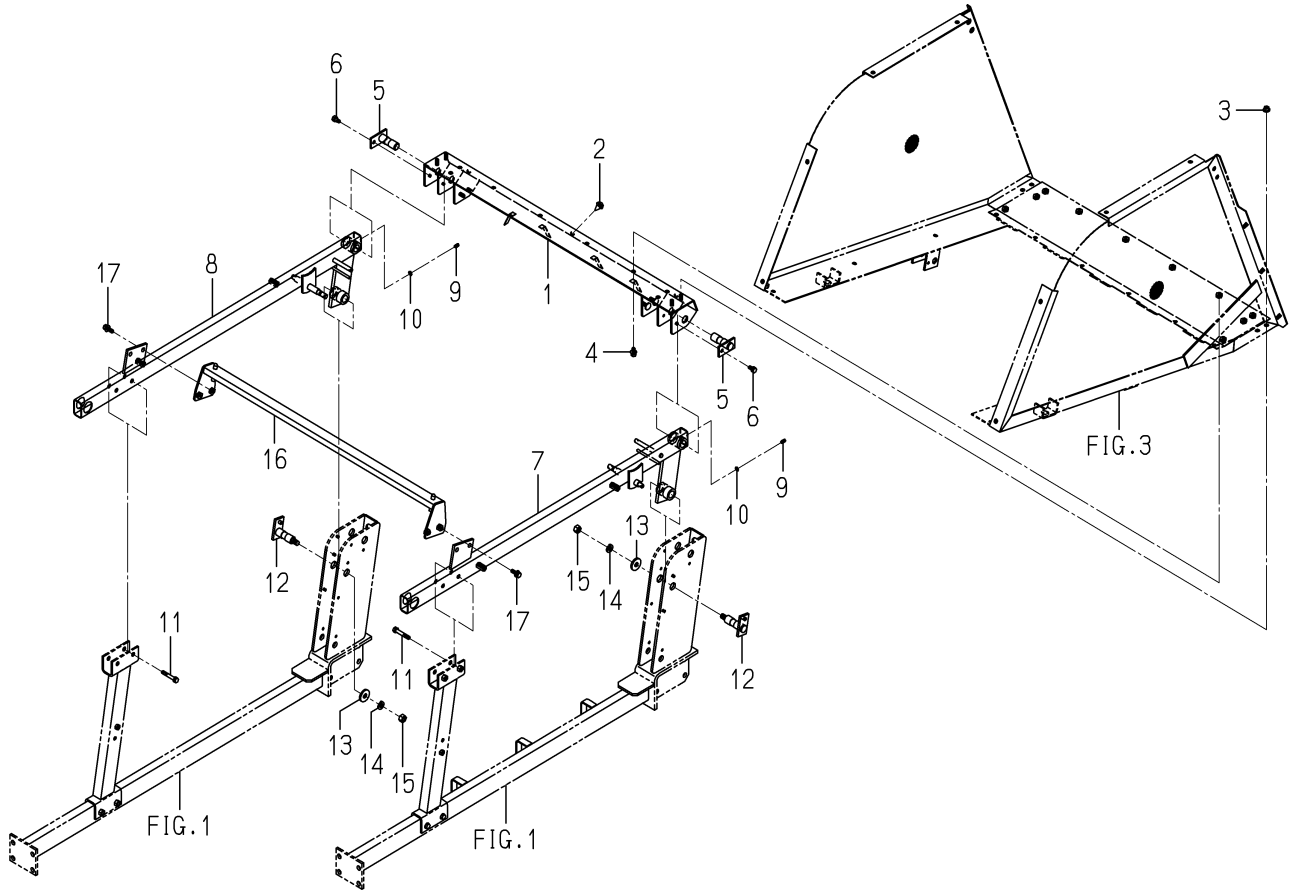

8669-405 -0100

KEY	PART CODE	DESCRIPTION	SPC	TYPE OF MODEL SBC550F		ITC	COL	GRP	REMARKS
1	8669-405-210-10	CONTAINER/REAR/LOWER	*	1					
2	1432-616-002-00	RUBBER,CUSHION	*	3					
3	V362-260-008-00	NUT/WASHER	*	4					
4	V211-360-801-60	BOLT,SEMS (SP)	*	8					
5	8669-405-220-00	PIN/20X60 COMP	*	2					
6	V211-560-801-60	BOLT,SEMS	*	2					
7	8669-405-230-10	LINK/LH COMP	*	1					
8	8669-405-240-10	LINK/RH COMP	*	1					
9	V760-150-000-00	NIPPLE,GREASE	*	2					
10	V401-160-006-00	WASHER,SP/M 6	*	2					
11	V211-261-005-00	BOLT/S	*	4					
12	8669-405-260-00	PIN/20X56 COMP	*	2					
13	3621-702-003-00	WASHER,PULLEY	*	2					
14	V401-160-012-00	WASHER,SP/M12	*	2					
15	V304-260-012-00	NUT/M12	*	2					
16	8669-405-250-00	TUBE/885 COMP	*	1					
17	V211-360-802-50	BOLT/SP	*	4					

FIG. 6 HOOK SYSTEM

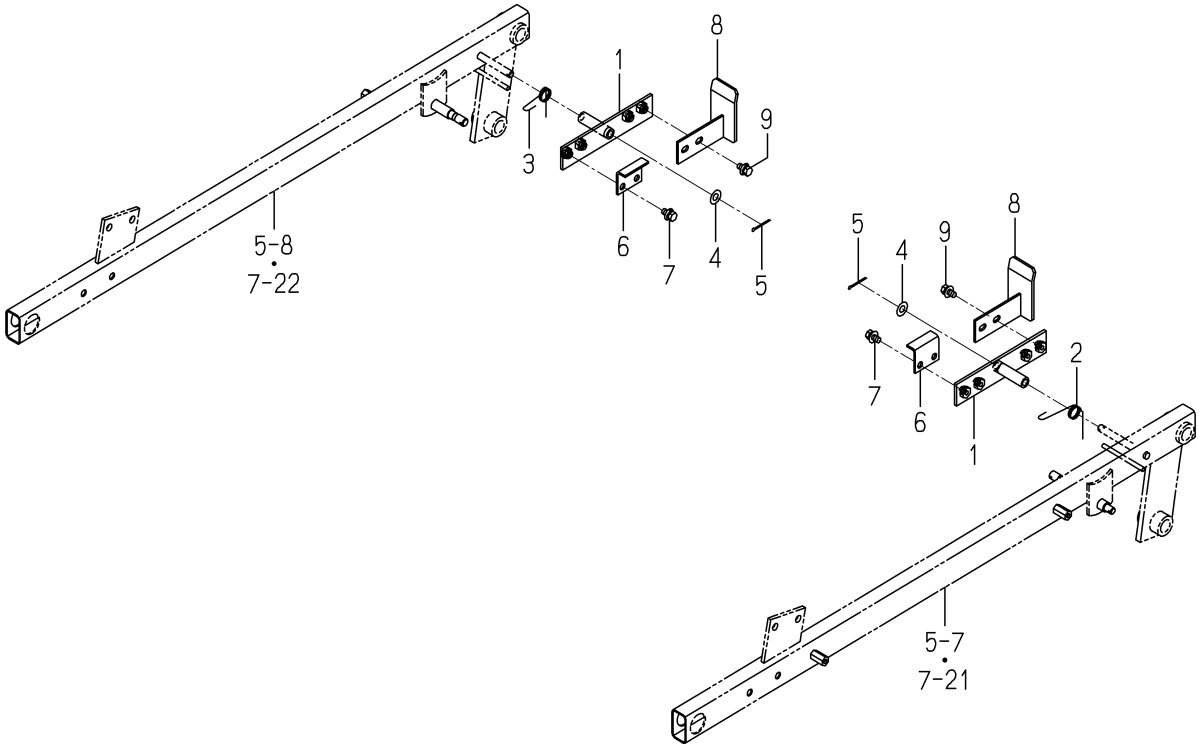

8669-406 -0100

KEY	PART CODE	DESCRIPTION	SPC	TYPE OF MODEL SBC550F		ITC	COL	GRP	REMARKS
1	8669-406-210-10	PLATE/HOOK COMP	*	2					
2	8669-406-001-00	SPRING/HT020/LH	*	1					
3	8669-406-002-00	SPRING/HT020/RH	*	1					
4	V411-260-010-00	WASHER/M10	*	2					
5	V500-163-003-00	PIN,SPLIT/3X30	*	2					
6	8669-406-003-10	PLATE/L/50X39	*	2					
7	V211-360-801-60	BOLT,SEMS (SP)	*	4					
8	8669-406-220-00	HOOK COMP	*	2					
9	V211-360-801-60	BOLT,SEMS (SP)	*	4					

FIG. 7 LINK SYSTEM (H TYPE)

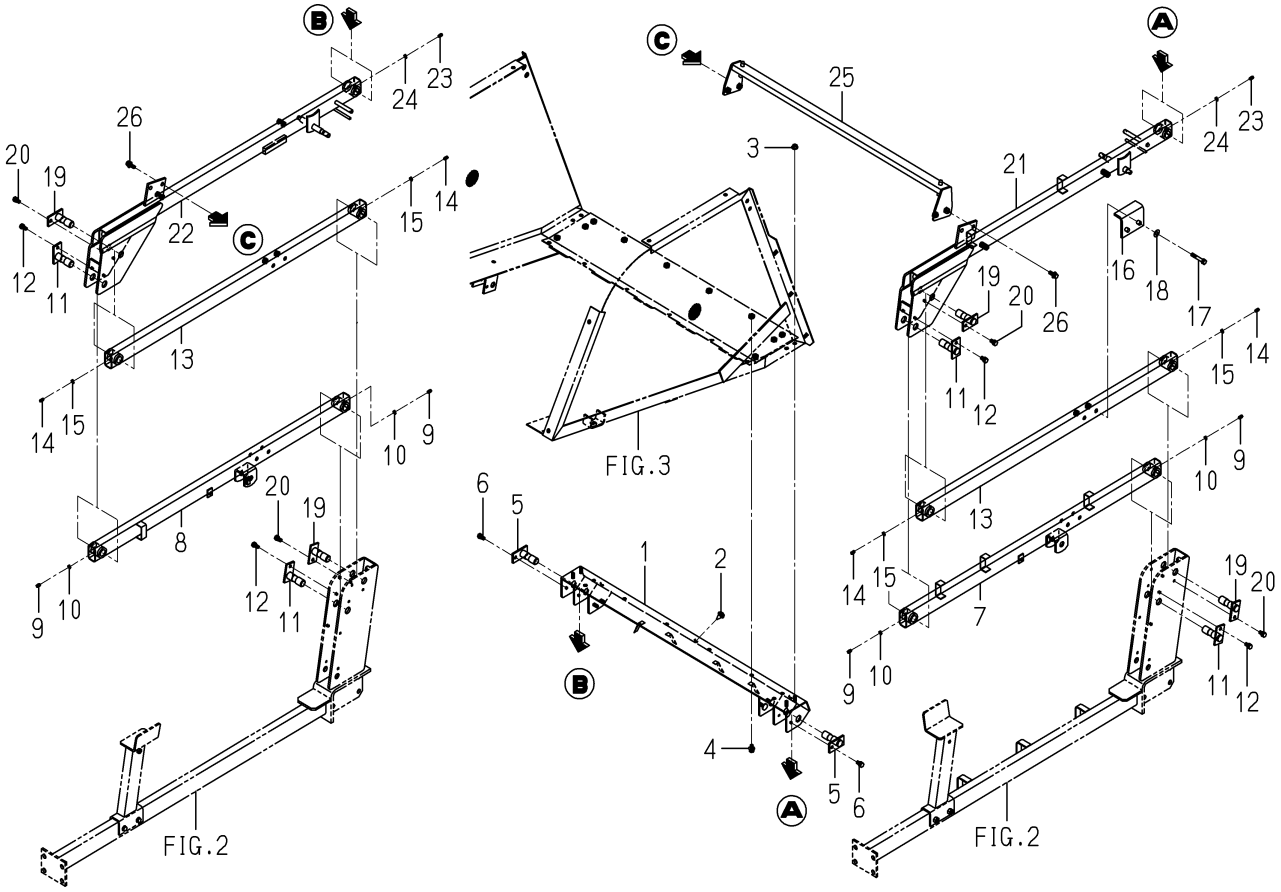

8669-455 -0100

KEY	PART CODE	DESCRIPTION	SPC	TYPE OF MODEL SBC550F		ITC	COL	GRP	REMARKS
1	8669-405-210-10	CONTAINER/REAR/LOWER	*	1					
2	1432-616-002-00	RUBBER,CUSHION	*	3					
3	V362-260-008-00	NUT/WASHER	*	4					
4	V211-360-801-60	BOLT,SEMS (SP)	*	8					
5	8669-405-220-00	PIN/20X60 COMP	*	2					
6	V211-560-801-60	BOLT,SEMS	*	2					
7	8669-455-210-00	LINK/A/LH COMP	*	1					
8	8669-455-220-00	LINK/A/RH COMP	*	1					
9	V760-150-000-00	NIPPLE,GREASE	*	4					
10	V401-160-006-00	WASHER,SP/M 6	*	4					
11	8669-405-220-00	PIN/20X60 COMP	*	4					
12	V211-560-801-60	BOLT,SEMS	*	4					
13	8669-455-230-10	LINK/B COMP	*	2					
14	V760-150-000-00	NIPPLE,GREASE	*	4					
15	V401-160-006-00	WASHER,SP/M 6	*	4					
16	8669-455-001-00	PLATE/STOPPER	*	1					
17	V211-261-005-00	BOLT/S	*	2					
18	V411-260-010-00	WASHER/M10	*	2					
19	8669-405-220-00	PIN/20X60 COMP	*	4					
20	V211-560-801-60	BOLT,SEMS	*	4					
21	8669-455-250-10	LINK/C/LH COMP	*	1					
22	8669-455-260-10	LINK/C/RH COMP	*	1					
23	V760-150-000-00	NIPPLE,GREASE	*	2					
24	V401-160-006-00	WASHER,SP/M 6	*	2					
25	8669-405-250-00	TUBE/885 COMP	*	1					
26	V211-360-802-50	BOLT/SP	*	4					

FIG. 8 CYLINDER SYSTEM (L TYPE)

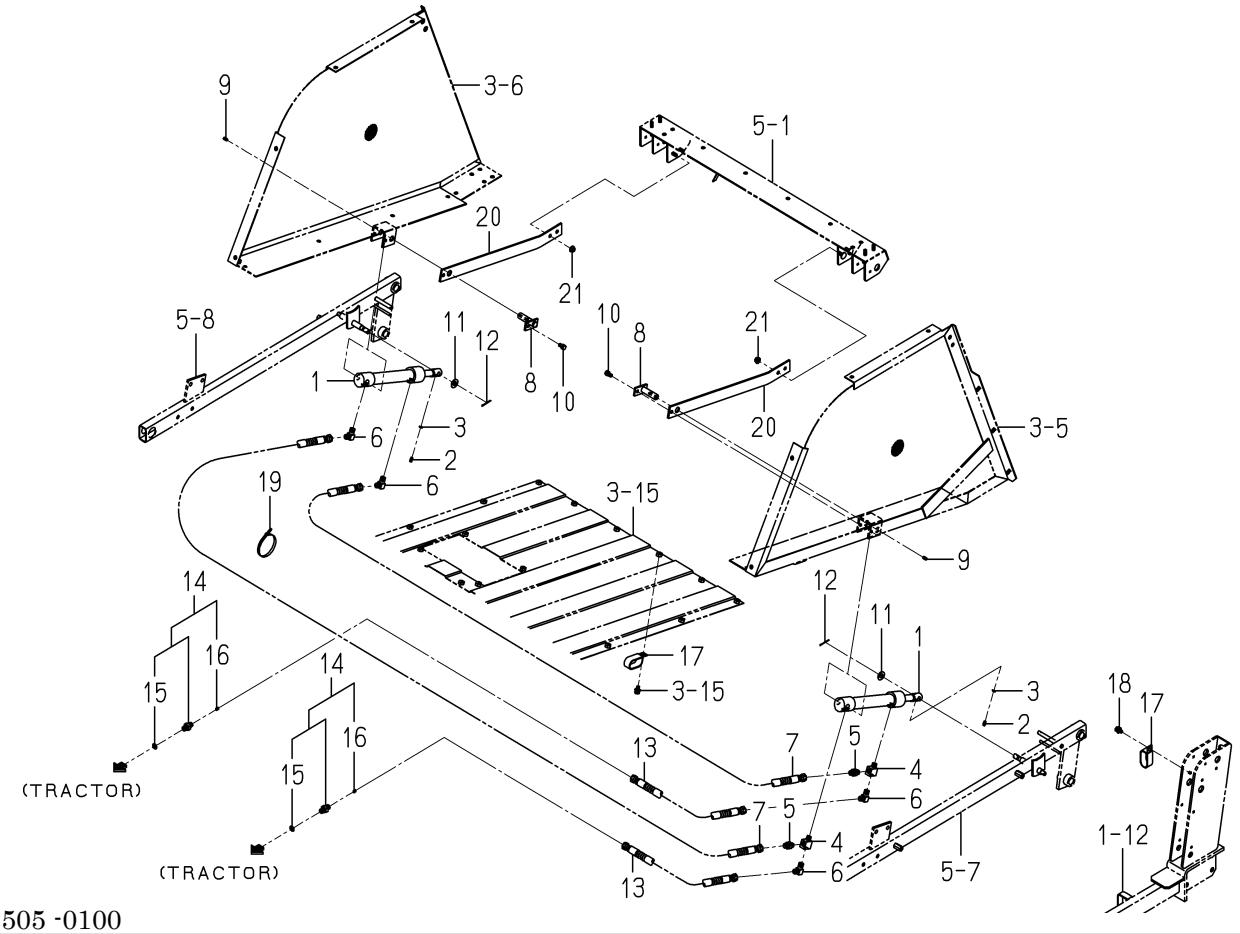

8669-505 -0100

KEY	PART CODE	DESCRIPTION	SPC	TYPE OF MODEL SBC550F		ITC	COL	GRP	REMARKS
1	K185-078-000-10	CYLINDER ASSY	*	2					
2	V760-150-000-00	NIPPLE,GREASE	*	2					
3	V401-160-006-00	WASHER,SP/M 6	*	2					
4	3824-361-001-00	ADAPTER/RC1/4	*	2					
5	3676-352-001-00	ADAPTOR/STRAIGHT	*	2					
6	3768-185-022-10	ADAPTER(90ß/PUMP)	*	4					
7	1705-408-320-00	HOSE/HYDRO/1000 ASSY	*	2					
8	8669-505-210-10	PIN/16X58 COMP	*	2					
9	V760-150-000-00	NIPPLE,GREASE	*	2					
10	V211-560-801-60	BOLT,SEMS	*	2					
11	V411-260-012-00	WASHER /M12	*	2					
12	V500-163-003-00	PIN,SPLIT/3X30	*	2					
13	8664-555-340-00	HOSE/HYDRO/2700 ASSY	*	2					
14	8664-555-270-00	ADAPTER/ORIFICE ASSY	*	2					
15	V720-112-401-10	RING/O	*	2					
16	K211-004-014-00	SCREW,ORIFICE	*	2					
17	3650-261-001-00	CLAMP/25X50	*	3					
18	V211-360-801-60	BOLT,SEMS (SP)	*	3					
19	1342-402-006-00	BAND,WIRE/250	*	10					
20	8669-505-003-00	PLATE/SUPPORT	*	2					
21	V362-260-008-00	NUT/WASHER	*	4					

FIG. 9 CYLINDER SYSTEM (H TYPE)(1/2)

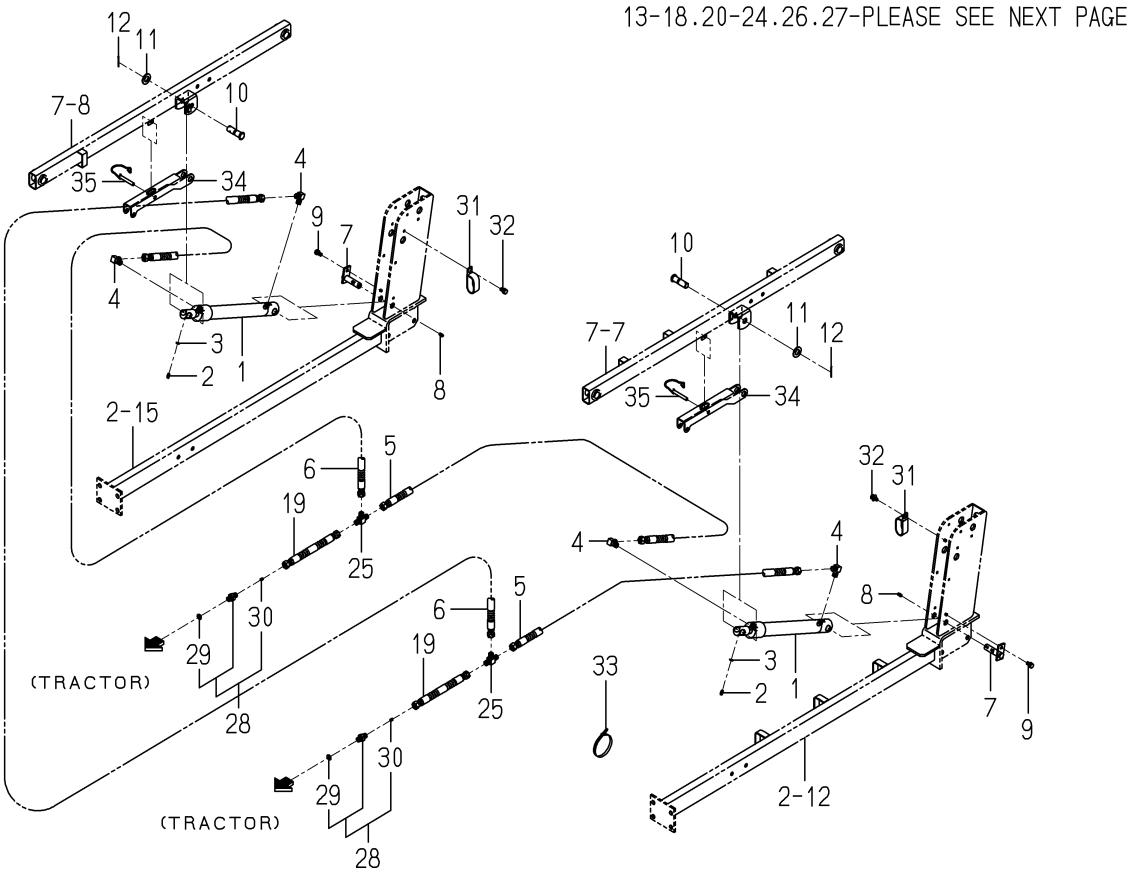

8669-555 -0100

KEY	PART CODE	DESCRIPTION	SPC	TYPE OF MODEL SBC550F		ITC	COL	GRP	REMARKS
1	8669-555-200-00	CYLINDER ASSY	*	2					
2	V760-150-000-00	NIPPLE,GREASE	*	2					
3	V401-160-006-00	WASHER,SP/M 6	*	2					
4	3768-185-022-10	ADAPTER(90ß/PUMP)	*	4					
5	1705-408-320-00	HOSE/HYDRO/1000 ASSY	*	2					
6	3824-382-310-20	HOSE 2000	*	2					
7	8669-505-210-10	PIN/16X58 COMP	*	2					
8	V760-150-000-00	NIPPLE,GREASE	*	2					
9	V211-560-801-60	BOLT,SEMS	*	2					
10	8669-555-001-00	PIN/16X53	*	2					
11	V411-260-016-00	WASHER / M16	*	4					
12	V500-163-003-00	PIN,SPLIT/3X30	*	4					
13	K185-078-000-10	CYLINDER ASSY	*	2					
14	V760-150-000-00	NIPPLE,GREASE	*	2					
15	V401-160-006-00	WASHER,SP/M 6	*	2					
16	3824-361-001-00	ADAPTER/RC1/4	*	2					
17	3676-352-001-00	ADAPTOR/STRAIGHT	*	2					
18	3768-185-022-10	ADAPTER(90ß/PUMP)	*	4					
19	1705-408-320-00	HOSE/HYDRO/1000 ASSY	*	2					
20	8669-505-210-10	PIN/16X58 COMP	*	2					
21	V760-150-000-00	NIPPLE,GREASE	*	2					
22	V211-560-801-60	BOLT,SEMS	*	2					
23	V411-260-012-00	WASHER /M12	*	2					
24	V500-163-003-00	PIN,SPLIT/3X30	*	2					
25	8664-555-003-00	ADAPTER/T	*	2					
26	1705-408-320-00	HOSE/HYDRO/1000 ASSY	*	2					
27	8669-555-220-00	HOSE/HYDOR/4500 ASSY	*	2					
28	8664-555-270-00	ADAPTER/ORIFICE ASSY	*	4					
29	V720-112-401-10	RING/O	*	4					
30	K211-004-014-00	SCREW,ORIFICE	*	4					

FIG. 9 CYLINDER SYSTEM (H TYPE)(2/2)

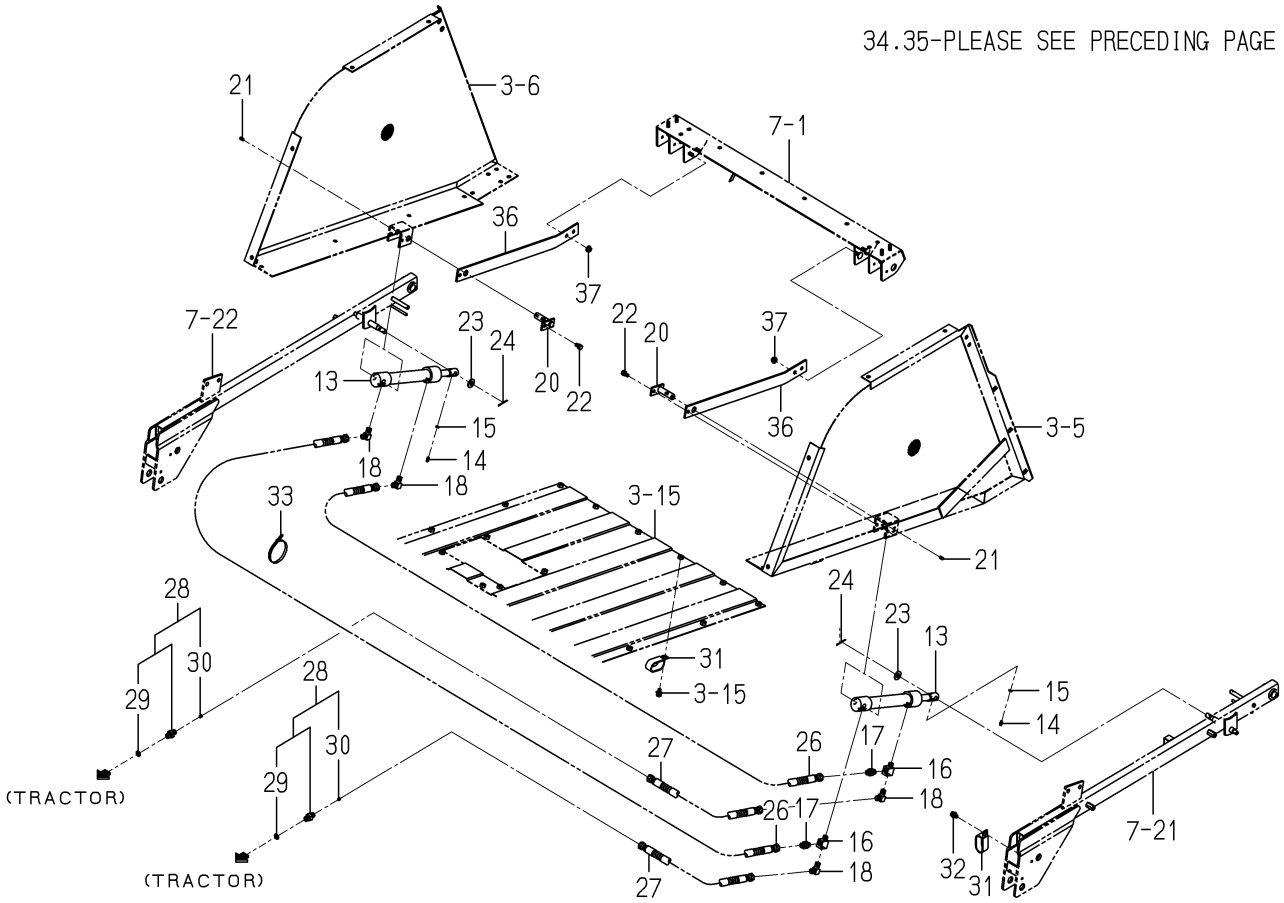

8669-555 -0100

KEY	PART CODE	DESCRIPTION	SPC	TYPE OF MODEL SBC550F		ITC	COL	GRP	REMARKS
31	3650-261-001-00	CLAMP/25X50	*	5					
32	V211-360-801-60	BOLT,SEMS (SP)	*	5					
33	1342-402-006-00	BAND,WIRE/250	*	25					
34	8669-555-002-00	PLATE/LINKROCK	*	2					
35	8663-501-240-00	PIN/08X60 COMP	*	2					
36	8669-505-003-00	PLATE/SUPPORT	*	2					
37	V362-260-008-00	NUT/WASHER	*	4					

FIG. 10 SENSOR SYSTEM (L TYPE)

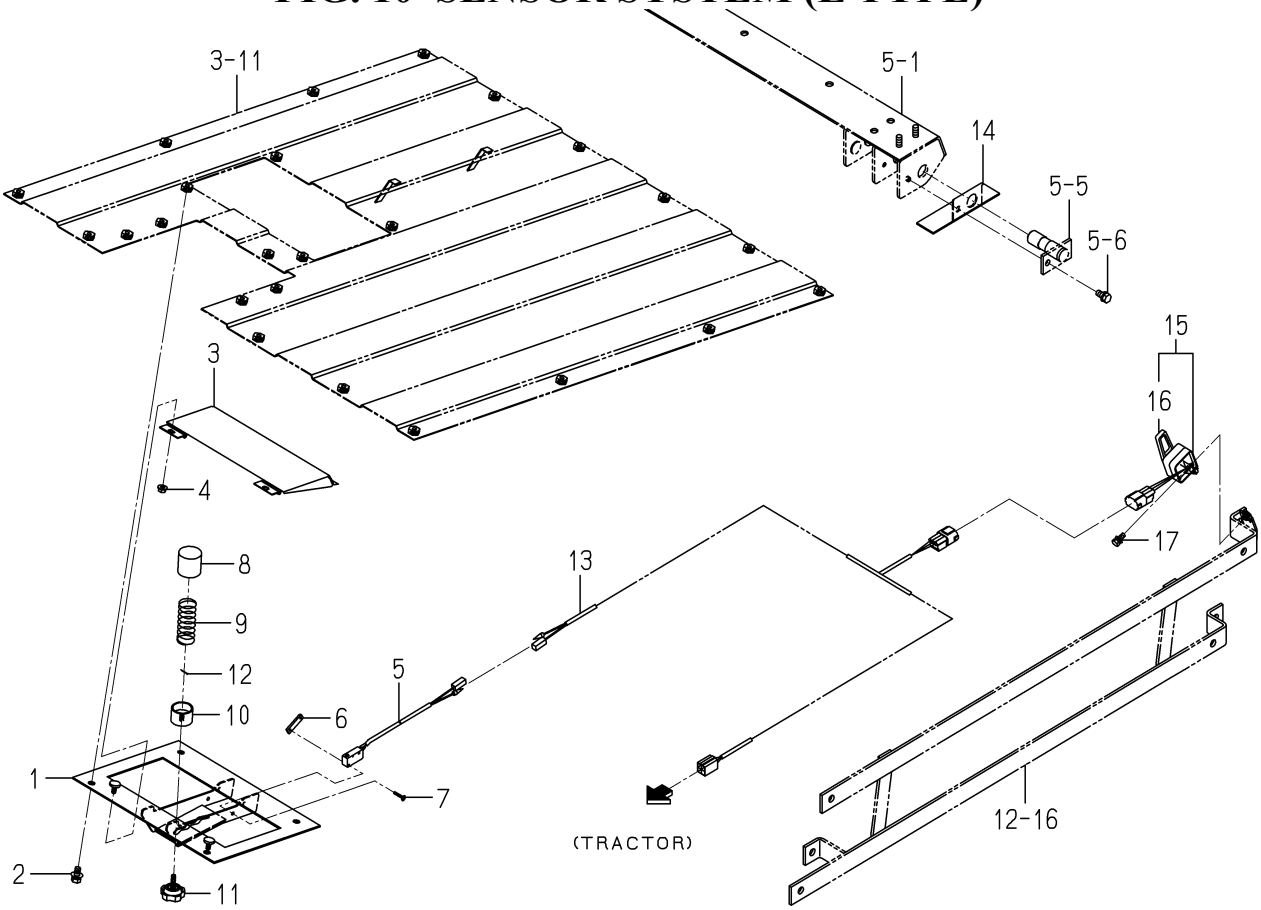

8669-605 -0100

KEY	PART CODE	DESCRIPTION	SPC	TYPE OF MODEL SBC550F		ITC	COL	GRP	REMARKS
1	8669-605-210-00	PLATE/SENSOR COMP	*	1					
2	V211-360-801-60	BOLT,SEMS (SP)	*	4					
3	8664-605-210-21	PLATE/SENSOR	*	1			4L		
4	V360-260-006-00	NUT/M6	*	2					
5	8664-605-230-00	SWITCH ASSY	*	1					
6	3642-496-007-10	PLATE,SWITCH	*	1					
7	1614-129-003-00	SCREW/M03X20	*	2					
8	8664-605-002-10	CUP/SPRING	*	1					
9	8669-605-001-00	SPRING/HC064	*	1					
10	8664-605-004-00	NUT/ADJUST	*	1					
11	8664-605-005-00	BOLT/KNOB/M06X20	*	1					
12	V500-161-601-00	PIN,SPLIT/1.6X10	*	1					
13	8669-605-220-00	HARNESS/COLLECTOR/L	*	1					
14	8669-605-002-00	PLATE/SWITCH	*	1					
15	1716-680-330-00	SWITCH/LEVER ASSY	*	1					
16	1716-680-222-00	ARM	*	1					
17	V210-360-601-60	BOLT(SP)/M6X16	*	1					

FIG. 11 SENSOR SYSTEM (H TYPE)

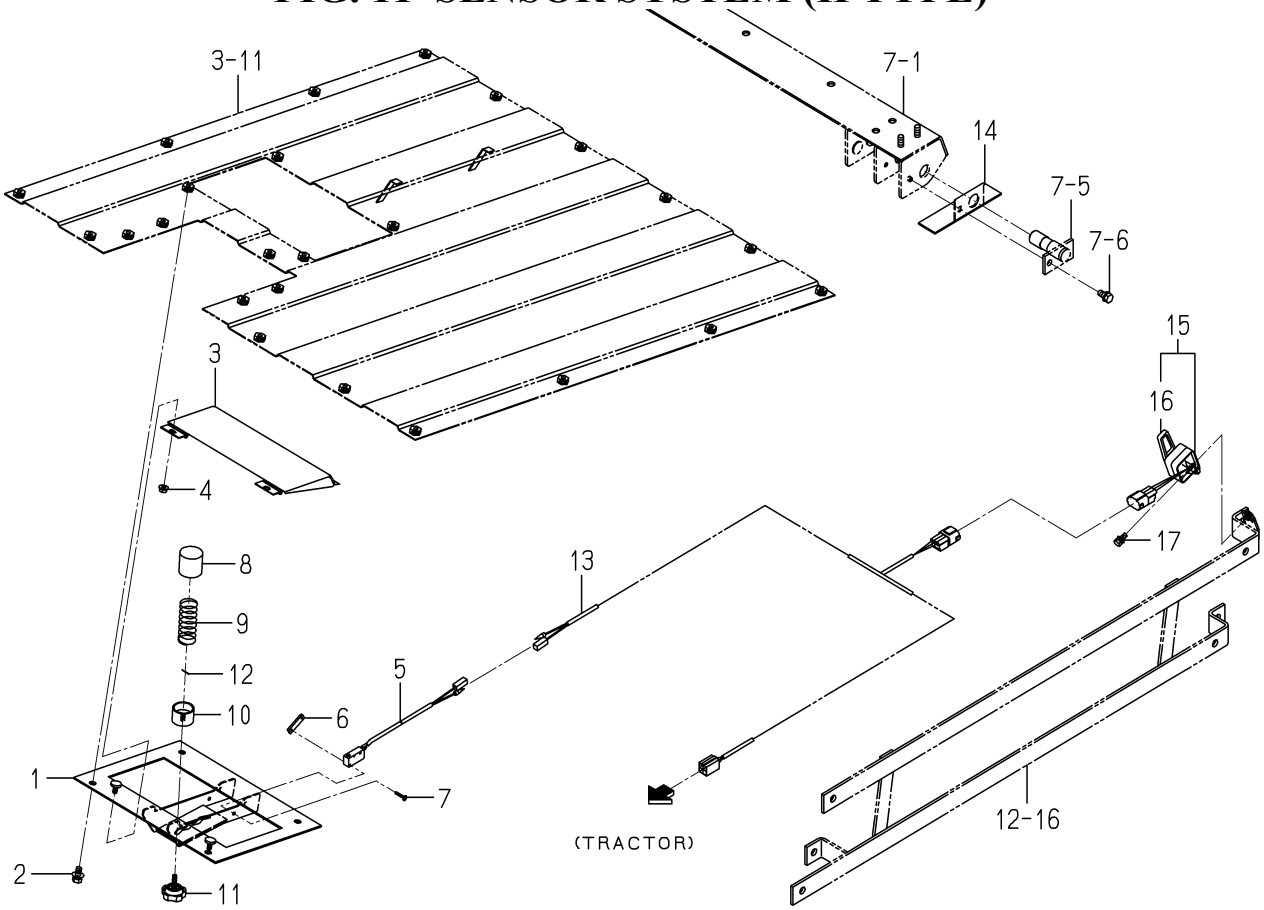

8669-655 -0100

KEY	PART CODE	DESCRIPTION	SPC	TYPE OF MODEL SBC550F		ITC	COL	GRP	REMARKS
1	8669-605-210-00	PLATE/SENSOR COMP	*	1					
2	V211-360-801-60	BOLT,SEMS (SP)	*	4					
3	8664-605-210-21	PLATE/SENSOR	*	1			4L		
4	V360-260-006-00	NUT/M6	*	2					
5	8664-605-230-00	SWITCH ASSY	*	1					
6	3642-496-007-10	PLATE,SWITCH	*	1					
7	1614-129-003-00	SCREW/M03X20	*	2					
8	8664-605-002-10	CUP/SPRING	*	1					
9	8669-605-001-00	SPRING/HC064	*	1					
10	8664-605-004-00	NUT/ADJUST	*	1					
11	8664-605-005-00	BOLT/KNOB/M06X20	*	1					
12	V500-161-601-00	PIN,SPLIT/1.6X10	*	1					
13	8669-655-220-00	HARNESS/COLLECTOR/H	*	1					
14	8669-605-002-00	PLATE/SWITCH	*	1					
15	1716-680-330-00	SWITCH/LEVER ASSY	*	1					
16	1716-680-222-00	ARM	*	1					
17	V210-360-601-60	BOLT(SP)/M6X16	*	1					

FIG. 12 COVER SYSTEM

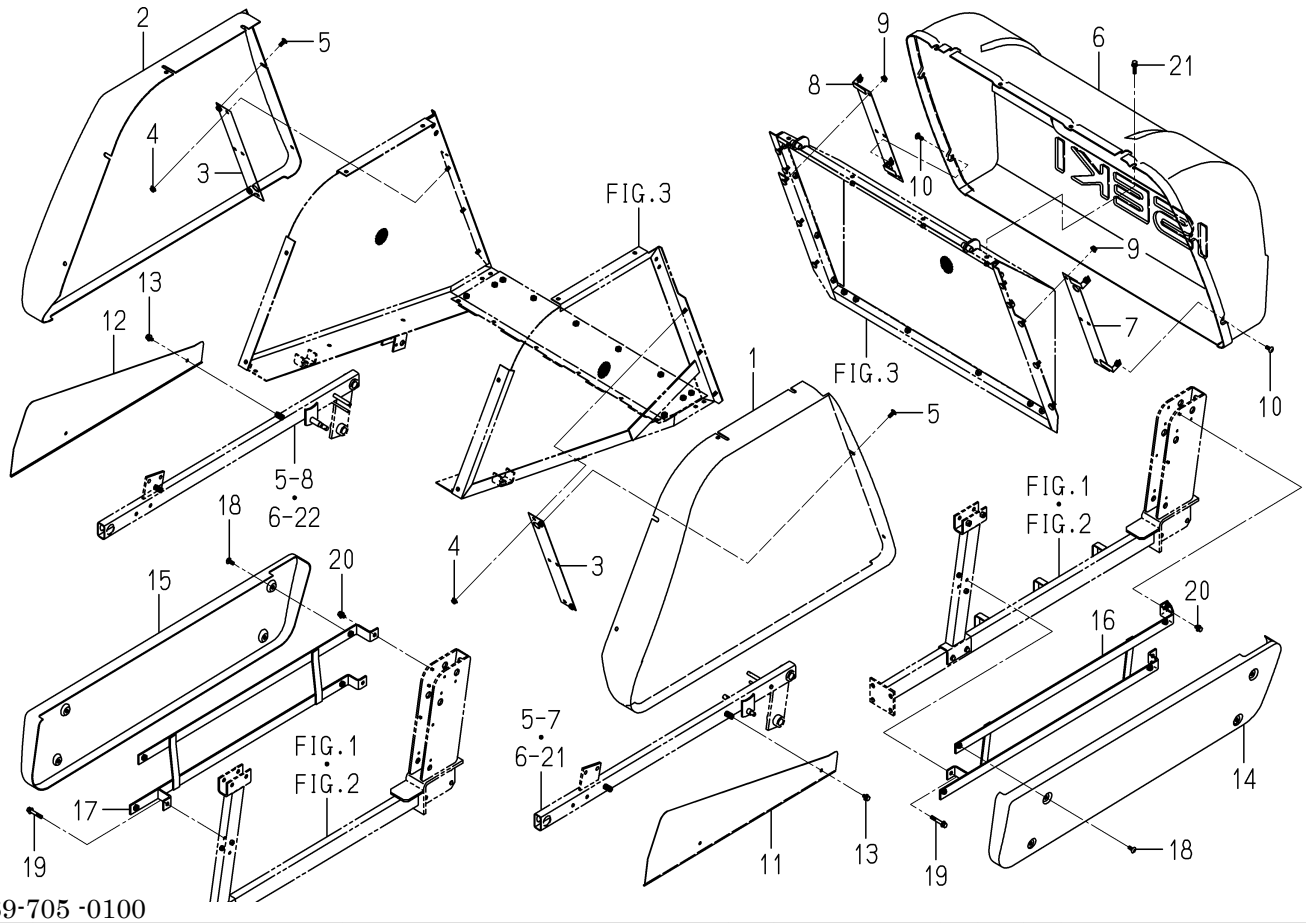

8669-705 -0100

KEY	PART CODE	DESCRIPTION	SPC	TYPE OF MODEL SBC550F		ITC	COL	GRP	REMARKS
1	8669-705-001-00	COVER/CONTAINER/LH	*	1					
2	8669-705-002-00	COVER/CONTAINER/RH	*	1					
3	8669-705-210-00	PLATE/COVER/F COMP	*	2					
4	V362-260-008-00	NUT/WASHER	*	6					
5	3653-206-004-10	SCREW/8X20	*	12					
6	8669-705-003-00	COVER/CONTAINER/REAR	*	1					
7	8669-705-220-00	PLATE/COVER/R/L COMP	*	1					
8	8669-705-230-00	PLATE/COVER/R/R COMP	*	1					
9	V362-260-008-00	NUT/WASHER	*	6					
10	3653-206-004-10	SCREW/8X20	*	4					
11	8669-705-005-00	COVER/LINK/A/LH	*	1			4L		
12	8669-705-006-00	COVER/LINK/A/RH	*	1			4L		
13	V211-360-801-60	BOLT,SEMS (SP)	*	4					
14	8669-705-007-00	COVER/LINK/B/LH	*	1					
15	8669-705-008-00	COVER/LINK/B/RH	*	1					
16	8669-705-240-00	STAY/COVER/LH COMP	*	1					
17	8669-705-250-00	STAY/COVER/RH COMP	*	1					
18	3653-206-004-10	SCREW/8X20	*	8					
19	V211-360-805-00	BOLT,SEMS (SP)	*	2					
20	V211-360-801-60	BOLT,SEMS (SP)	*	4					
21	V211-360-803-50	BOLT/SP	*	4					

FIG. 13 BUMPER SYSTEM

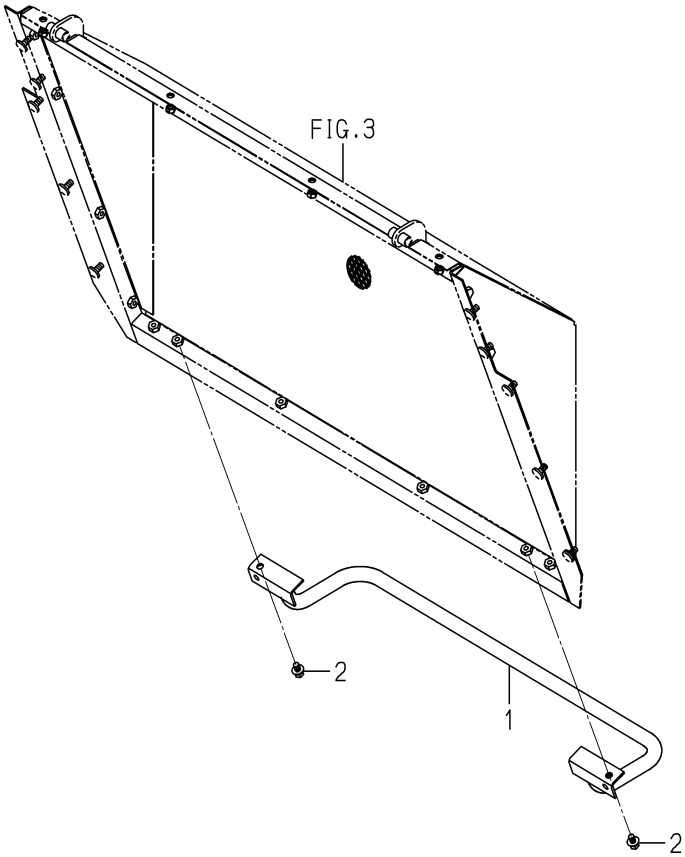

8669-706 -0100

KEY	PART CODE	DESCRIPTION	SPC	TYPE OF MODEL SBC550F		ITC	COL	GRP	REMARKS
1	8669-706-210-00	BUMPER COMP	*	1					
2	V211-360-801-60	BOLT,SEMS (SP)	*	2					

FIG. 14 SHOOTER SYSTEM

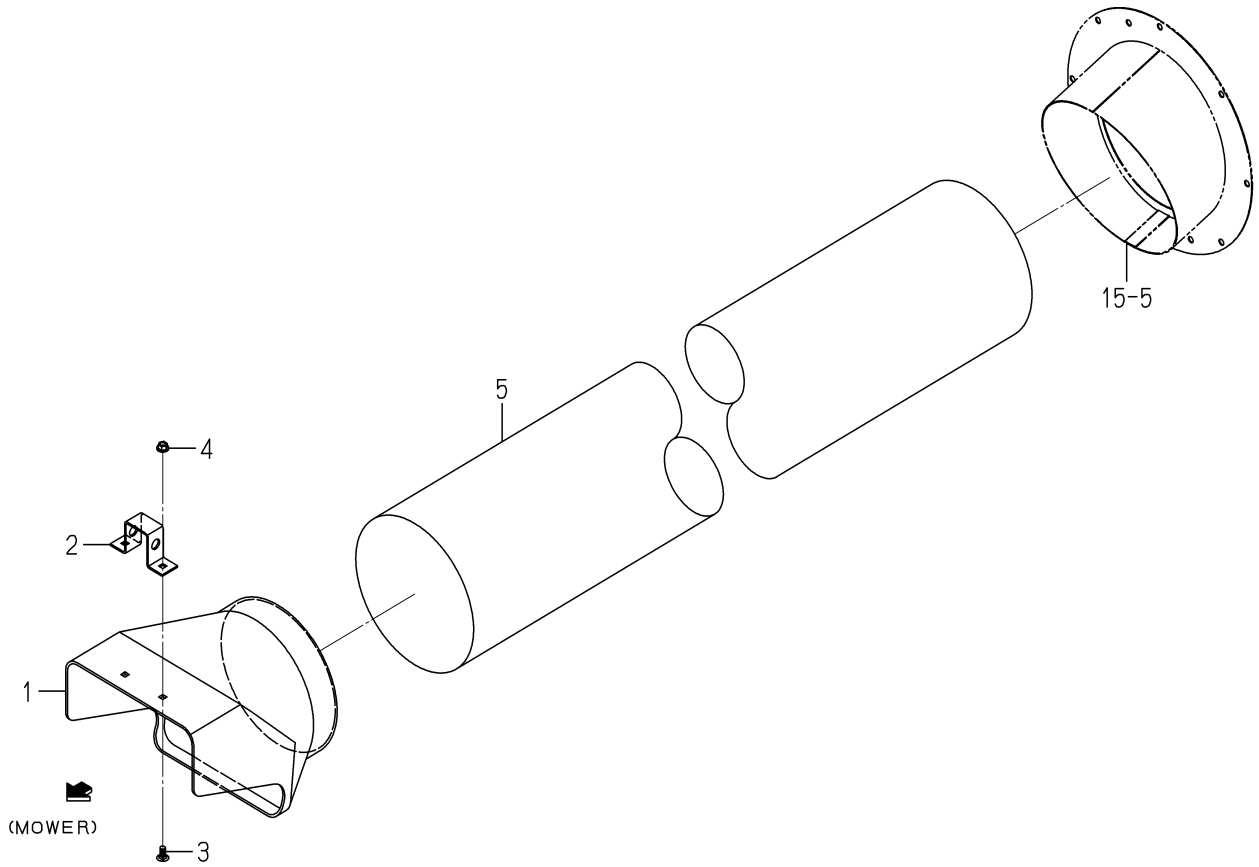

8669-855 -0100

KEY	PART CODE	DESCRIPTION	SPC	TYPE OF MODEL SBC550F		ITC	COL	GRP	REMARKS
1	8669-855-001-00	CHUTER/MOWER	*	1					
2	8669-855-002-00	HANDLE	*	1					
3	7866-405-016-00	CUP HEAD SQUARE NECK	*	2					
4	V362-260-008-00	NUT/WASHER	*	2					
5	8669-855-003-00	HOSE/MOWER/CHUTER	*	1					

FIG. 15 BLOWER SYSTEM

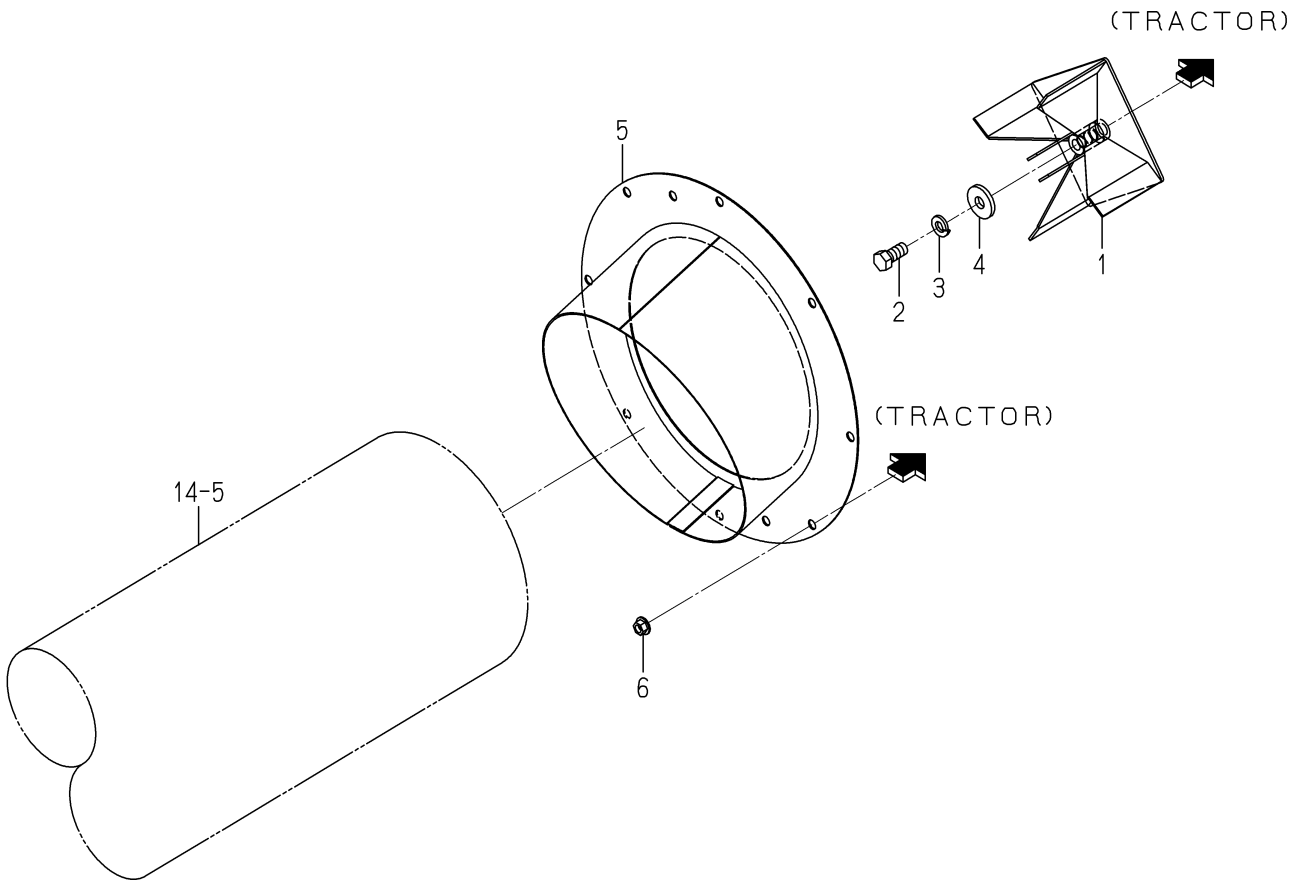

8669-865 -0100

KEY	PART CODE	DESCRIPTION	SPC	TYPE OF MODEL SBC550F		ITC	COL	GRP	REMARKS
1	8669-865-210-00	FAN/BLOWER COMP	*	1					
2	V203-361-202-50	BOLT/M12X25 7T	*	1					
3	V401-160-012-00	WASHER,SP/M12	*	1					
4	3621-702-003-00	WASHER,PULLEY	*	1					
5	8669-865-250-00	INTAKE/BLOWER COMP	*	1					
6	V362-260-008-00	NUT/WASHER	*	8					

FIG. 16 GUARD SYSTEM

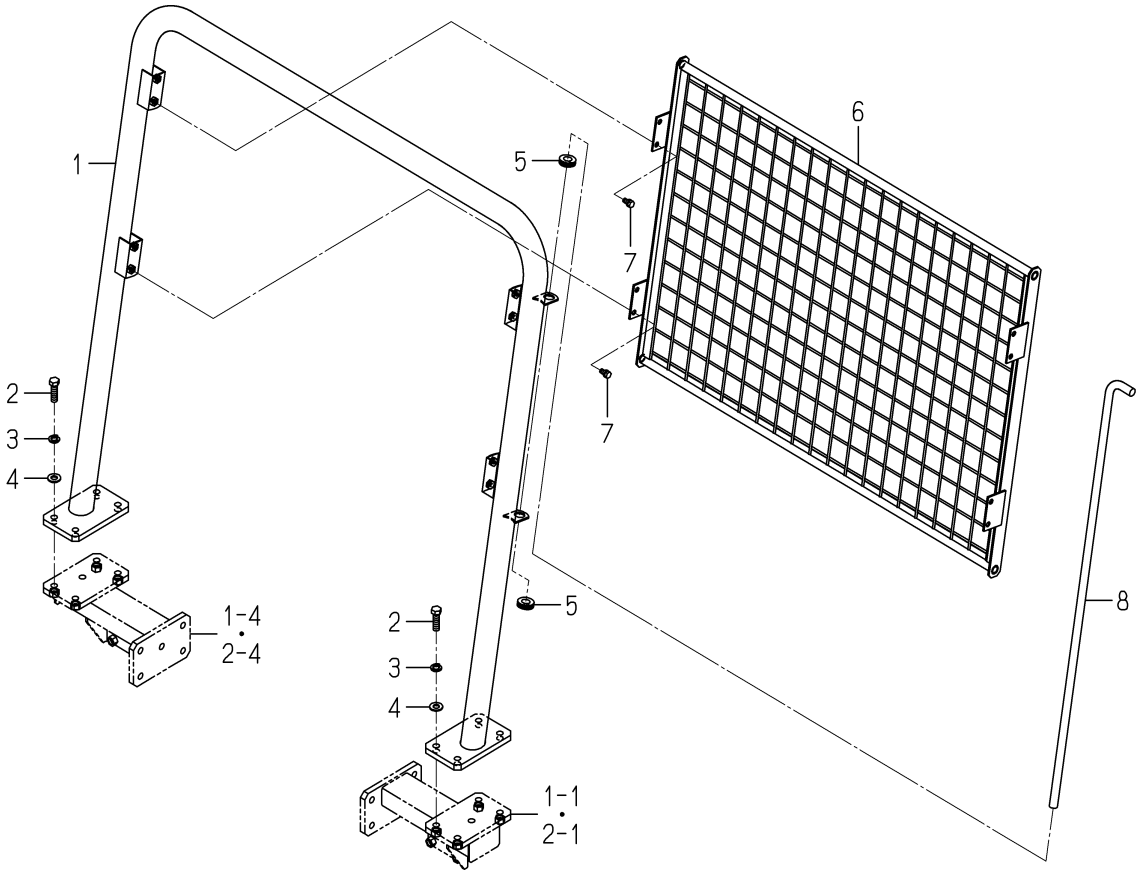

8669-866 -0100

KEY	PART CODE	DESCRIPTION	SPC	TYPE OF MODEL SBC550F		ITC	COL	GRP	REMARKS
1	8669-866-210-00	FRAME/GUARD COMP	*	1					
2	V201-261-204-00	BOLT/M12X40	*	8					
3	V401-160-012-00	WASHER,SP/M12	*	8					
4	V411-260-012-00	WASHER /M12	*	8					
5	1575-616-005-00	GROMMET/17X21X3	*	2					
6	8669-866-240-00	GUARD/OPERATOR COMP	*	1					
7	V211-360-801-60	BOLT,SEMS (SP)	*	8					
8	8664-105-001-00	BAR	*	1					

FIG. 17 LABEL (L TYPE)

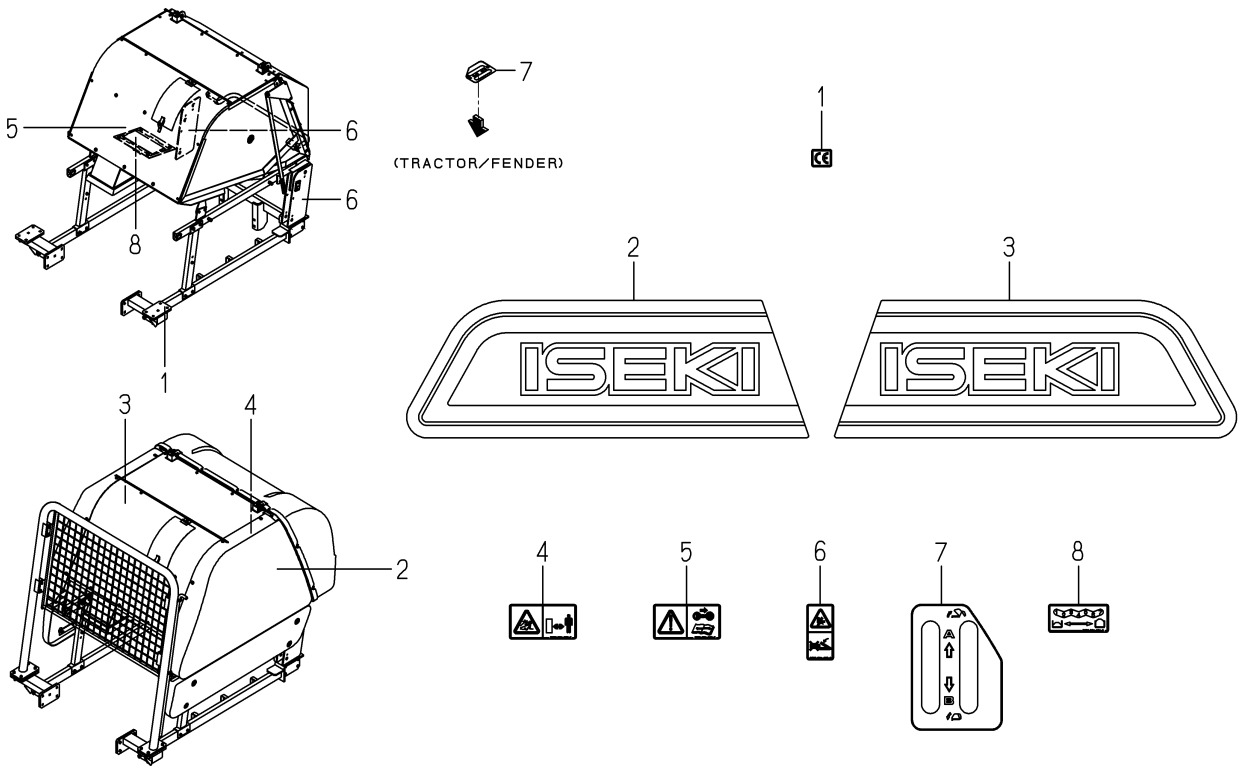

8669-905 -0100

KEY	PART CODE	DESCRIPTION	SPC	TYPE OF MODEL SBC550F		ITC	COL	GRP	REMARKS
1	2500-901-027-00	LABEL/CE	*	1					
2	8669-905-001-00	ORNAMENT/ISEKI/COLLE	*	1					
3	8669-905-002-00	ORNAMENT/ISEKI/COLLE	*	1					
4	8595-901-005-00	LABEL/DANGER/DISCHAR	*	1					
5	1593-901-015-00	LABEL/MAINTENANCE	*	1					
6	8664-905-003-00	LABEL/CAUTION	*	2					
7	8669-905-005-00	LABEL/COLLECT/LIFT/L	*	1					
8	8664-905-005-00	LABEL/SENSOR	*	1					

FIG. 18 LABEL (H TYPE)

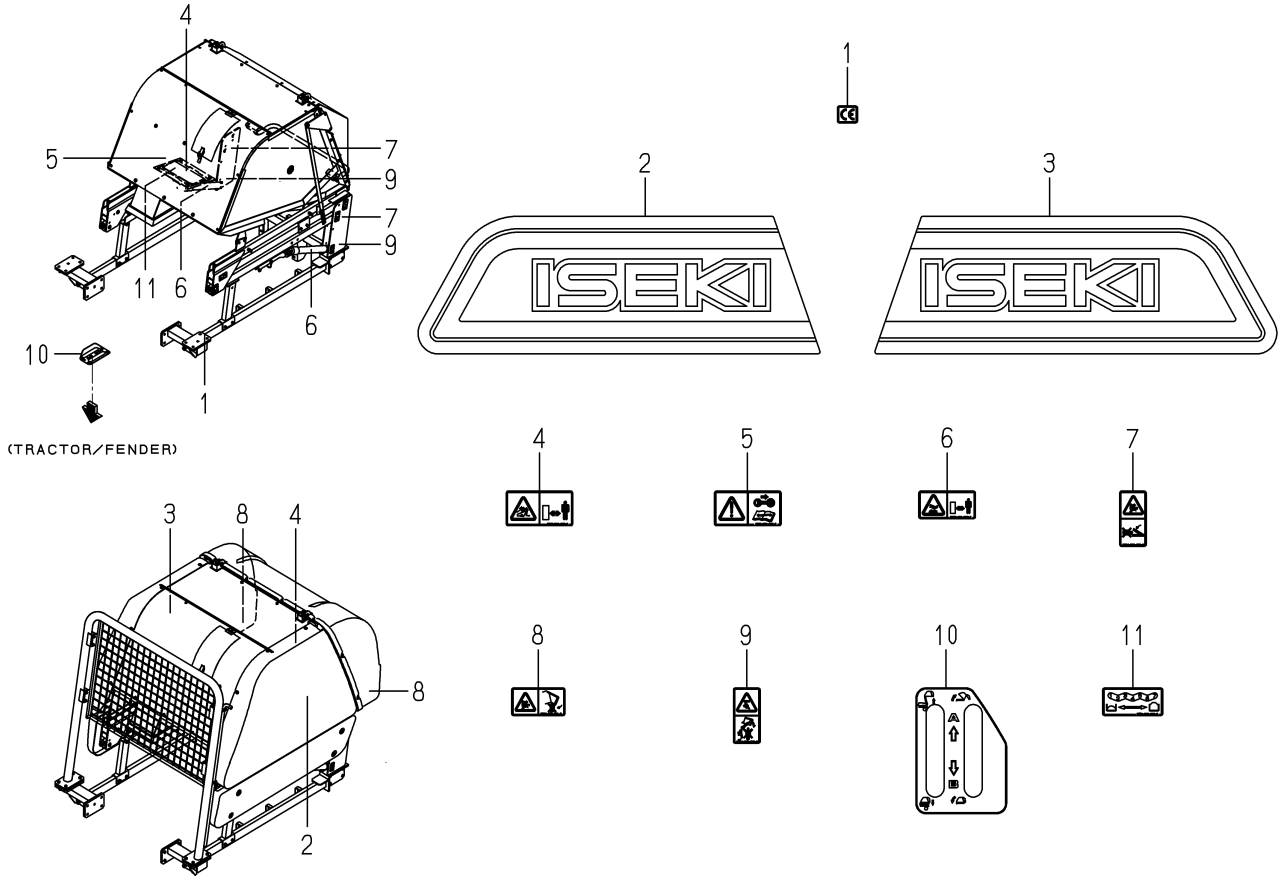

8669-955 -0100

KEY	PART CODE	DESCRIPTION	SPC	TYPE OF MODEL SBC550F		ITC	COL	GRP	REMARKS
1	2500-901-027-00	LABEL/CE	*	1					
2	8669-905-001-00	ORNAMENT/ISEKI/COLLE	*	1					
3	8669-905-002-00	ORNAMENT/ISEKI/COLLE	*	1					
4	8595-901-005-00	LABEL/DANGER/DISCHAR	*	2					
5	1593-901-015-00	LABEL/MAINTENANCE	*	1					
6	8595-901-007-00	LABEL/WARNING/HOT	*	2					
7	8664-905-003-00	LABEL/CAUTION	*	2					
8	8664-955-001-00	LABEL/CAUTION/D	*	2					
9	8664-955-002-00	LABEL/CAUTION/L	*	2					
10	8669-955-005-00	LABEL/COLLECT/LIFT/H	*	1					
11	8664-905-005-00	LABEL/SENSOR	*	1					

Numerical Index

Part Code	Fig.	Key	Part Code	Fig.	Key	Part Code	Fig.	Key
1386-624-004-00	9	7	8595-501-001-20	12	1	8663-306-004-00	5	4
	10	7		12	24		6	4
1427-432-005-00	11	11	8595-501-007-00	11	20	8663-306-210-10	5	3
	12	11		12	20		6	3
1444-514-005-10	13	7	8595-501-280-01	11	10	8663-501-510-00	11	2
1560-601-028-00	7	3		12	10		12	2
	8	3	8595-501-310-01	11	7	8663-501-520-00	11	3
	13	3		12	7		12	3
1564-201-003-00	2	21	8595-501-320-10	11	16	8667-101-310-00	1	1
	3	21		12	16	8667-101-321-00	15	2
1593-901-015-00	14	5	8595-501-350-10	11	17	8667-101-322-00	15	6
1602-321-004-00	2	45		12	17	8667-101-331-00	15	9
	3	45	8595-501-351-10	11	18	8667-101-332-00	15	13
1673-525-002-20	7	9		12	18	8667-201-001-00	2	1
	8	9	8595-501-360-10	11	19	8667-201-002-00	2	3
1729-214-049-00	2	5		12	19		3	3
	3	5	8595-505-051-30	11	25	8667-201-003-00	2	14
2144-106-005-00	11	14		12	25	8667-201-005-00	2	25
	12	14	8595-608-082-00	7	2		3	25
2500-901-014-30	14	3		8	2	8667-201-006-00	2	30
2500-901-027-00	14	1		13	2		3	30
3670-701-010-00	11	12	8595-901-007-00	14	2	8667-201-007-00	2	31
	12	12	8654-101-221-00	15	1		3	31
7821-102-008-00	15	7	8654-101-230-00	15	3	8667-201-008-00	2	44
	15	14		15	10	8667-201-009-00	2	43
7821-102-220-00	15	8	8654-101-232-00	15	4		3	43
	15	15		15	11	8667-201-210-00	2	12
7955-201-026-00	2	2	8654-101-233-00	15	5	8667-201-220-00	2	13
	2	23		15	12		3	13
	3	2	8654-501-006-10	11	15	8667-201-230-00	2	24
	3	23		12	15		3	24
8595-201-013-00	2	4	8654-501-042-00	7	5	8667-301-001-00	4	1
	3	4		8	5	8667-306-001-00	5	1
8595-201-021-00	2	9	8654-501-043-00	7	6	8667-306-002-00	5	2
	2	38		8	6	8667-402-210-10	7	1
	3	9	8654-501-201-00	11	8	8667-407-001-00	9	1
	3	38		12	8	8667-407-230-00	9	3
8595-201-022-00	2	10	8654-510-001-00	7	8		10	3
	2	39		8	8	8667-407-240-00	9	5
	3	10	8654-510-002-00	13	5		10	5
	3	39	8654-901-002-00	14	4	8667-501-210-00	11	5
8595-201-025-00	2	7	8657-101-501-00	15	16	8667-510-280-00	13	1
	3	7	8663-202-062-11	2	22	8667-901-001-00	14	6
8595-501-001-20	11	1		3	22	8668-201-001-00	3	1
	11	24	8663-301-004-00	4	2	8668-201-002-00	3	14

Numerical Index

8667-097-100-00

Part Code	Fig.	Key	Part Code	Fig.	Key	Part Code	Fig.	Key
8668-201-004-00	3	44	V600-110-620-40	2	26			
8668-201-210-00	3	12		3	17			
8668-306-001-00	6	1		3	26			
8668-306-002-00	6	2	V600-110-620-50	2	15			
8668-402-210-10	8	1		2	18			
8668-407-001-00	10	1		2	27			
8668-501-210-00	12	5		3	15			
V203-361-203-50	5	5		3	18			
	6	5		3	27			
V211-260-802-00	2	11	V600-110-620-60	2	32			
	2	40		3	32			
	3	11	V704-140-020-00	2	46			
	3	40		3	46			
	11	4	V704-140-030-00	11	13			
	12	4		12	13			
V211-261-002-50	11	6	V705-140-047-00	2	16			
	12	6		3	16			
V211-360-801-60	9	2	V705-140-052-00	2	19			
	9	4		2	28			
	9	6		3	19			
	10	2		3	28			
	10	4	V707-140-055-00	2	35			
	10	6		3	35			
V304-260-010-00	2	42	V707-140-062-00	2	6			
	3	42		2	33			
V304-460-016-00	11	22		3	6			
	12	22		3	33			
V360-260-012-00	11	26	V721-103-107-50	2	37			
	12	26		3	37			
V401-160-010-00	2	41	V721-103-108-00	2	8			
	3	41		3	8			
V401-160-012-00	5	6	V744-125-521-00	2	20			
	6	6		2	29			
V401-160-016-00	11	23		3	20			
	12	23		3	29			
V411-260-022-00	13	6	V744-130-551-20	2	36			
V580-140-404-00	7	7		3	36			
	8	7	V760-150-000-00	11	9			
V580-140-504-00	7	4		11	21			
	8	4		12	9			
	13	4		12	21			
V580-140-804-00	1	2						
V600-110-600-60	2	34						
	3	34						
V600-110-620-40	2	17						

Numerical Index

Part Code	Fig.	Key	Part Code	Fig.	Key	Part Code	Fig.	Key
1342-402-006-00	8	19	8664-555-003-00	9	25	8669-305-320-00	3	19
	9	33	8664-555-270-00	8	14	8669-305-330-10	3	21
1421-603-004-00	3	9		9	28	8669-305-340-00	3	13
1432-616-002-00	5	2	8664-555-340-00	8	13	8669-305-350-00	3	2
	7	2	8664-605-002-10	10	8	8669-306-001-10	4	7
1575-616-005-00	16	5		11	8	8669-306-002-00	4	3
1593-901-015-00	17	5	8664-605-004-00	10	10	8669-306-210-10	4	1
	18	5		11	10	8669-306-220-10	4	2
1614-129-003-00	10	7	8664-605-005-00	10	11	8669-405-210-10	5	1
	11	7		11	11		7	1
1705-408-320-00	8	7	8664-605-210-21	10	3	8669-405-220-00	5	5
	9	5		11	3		7	5
	9	19	8664-605-230-00	10	5		7	11
	9	26		11	5		7	19
1716-680-222-00	10	16	8664-905-003-00	17	6	8669-405-230-10	5	7
	11	16		18	7	8669-405-240-10	5	8
1716-680-330-00	10	15	8664-905-005-00	17	8	8669-405-250-00	5	16
	11	15		18	11		7	25
1725-111-003-00	2	20	8664-955-001-00	18	8	8669-405-260-00	5	12
	2	23	8664-955-002-00	18	9	8669-406-001-00	6	2
2500-901-027-00	17	1	8669-105-210-00	1	1	8669-406-002-00	6	3
	18	1		2	1	8669-406-003-10	6	6
3621-702-003-00	5	13	8669-105-220-00	1	5	8669-406-210-10	6	1
	15	4		2	4	8669-406-220-00	6	8
3642-496-007-10	10	6	8669-105-230-00	1	9	8669-455-001-00	7	16
	11	6		2	8	8669-455-210-00	7	7
3650-261-001-00	8	17	8669-105-240-00	1	12	8669-455-220-00	7	8
	9	31		2	12	8669-455-230-10	7	13
3653-206-004-10	12	5	8669-105-250-00	1	15	8669-455-250-10	7	21
	12	10		2	15	8669-455-260-10	7	22
	12	18	8669-105-260-00	1	18	8669-505-003-00	8	20
3676-352-001-00	8	5	8669-155-210-00	2	18		9	36
	9	17	8669-155-220-00	2	21	8669-505-210-10	8	8
3768-185-022-10	8	6	8669-305-001-00	3	3		9	7
	9	4	8669-305-002-10	3	7		9	20
	9	18	8669-305-003-00	3	8	8669-555-001-00	9	10
3824-361-001-00	8	4	8669-305-004-00	3	23	8669-555-002-00	9	34
	9	16	8669-305-210-00	3	1	8669-555-200-00	9	1
3824-382-310-20	9	6	8669-305-220-10	3	5	8669-555-220-00	9	27
7866-405-016-00	14	3	8669-305-240-10	3	6	8669-605-001-00	10	9
8595-901-005-00	17	4	8669-305-260-00	3	10		11	9
	18	4	8669-305-270-10	3	11	8669-605-002-00	10	14
8595-901-007-00	18	6	8669-305-280-00	3	12		11	14
8663-501-240-00	9	35	8669-305-290-10	3	16	8669-605-210-00	10	1
8664-105-001-00	16	8	8669-305-310-00	3	17		11	1

Numerical Index

Part Code	Fig.	Key	Part Code	Fig.	Key	Part Code	Fig.	Key
8669-605-220-00	10	13	V210-360-601-60	11	17	V362-260-008-00	12	4
8669-655-220-00	11	13	V211-260-805-00	4	5		12	9
8669-705-001-00	12	1	V211-261-005-00	1	19		14	4
8669-705-002-00	12	2		2	19		15	6
8669-705-003-00	12	6		2	22	V401-160-006-00	5	10
8669-705-005-00	12	11		5	11		7	10
8669-705-006-00	12	12		7	17		7	15
8669-705-007-00	12	14	V211-360-801-60	3	4		7	24
8669-705-008-00	12	15		3	15		8	3
8669-705-210-00	12	3		3	18		9	3
8669-705-220-00	12	7		3	20		9	15
8669-705-230-00	12	8		3	22	V401-160-012-00	1	3
8669-705-240-00	12	16		5	4		1	7
8669-705-250-00	12	17		6	7		1	11
8669-706-210-00	13	1		6	9		1	14
8669-855-001-00	14	1		7	4		1	17
8669-855-002-00	14	2		8	18		2	3
8669-855-003-00	14	5		9	32		2	6
8669-865-210-00	15	1		10	2		2	10
8669-865-250-00	15	5		11	2		2	14
8669-866-210-00	16	1		12	13		2	17
8669-866-240-00	16	6		12	20		5	14
8669-905-001-00	17	2		13	2		15	3
	18	2		16	7		16	3
8669-905-002-00	17	3	V211-360-802-50	5	17	V411-260-008-00	4	4
	18	3		7	26	V411-260-010-00	4	8
8669-905-005-00	17	7	V211-360-803-50	3	14		6	4
8669-955-005-00	18	10		12	21		7	18
K185-078-000-10	8	1	V211-360-805-00	12	19	V411-260-012-00	1	4
	9	13	V211-560-801-60	5	6		1	8
K211-004-014-00	8	16		7	6		2	7
	9	30		7	12		2	11
V201-261-204-00	16	2		7	20		8	11
V201-361-203-50	1	10		8	10		9	23
	1	13		9	9		16	4
	1	16		9	22	V411-260-016-00	9	11
	2	9	V304-260-012-00	5	15	V500-161-601-00	10	12
	2	13	V360-260-006-00	10	4		11	12
	2	16		11	4	V500-163-003-00	4	9
V201-461-204-50	1	2	V362-260-008-00	3	24		6	5
	1	6		4	6		8	12
	2	2		5	3		9	12
	2	5		7	3		9	24
V203-361-202-50	15	2		8	21	V560-160-010-00	4	10
V210-360-601-60	10	17		9	37	V720-112-401-10	8	15

Numerical Index

8669-097-100-00

Part Code	Fig.	Key	Part Code	Fig.	Key	Part Code	Fig.	Key
V720-112-401-10	9	29						
V760-150-000-00	5	9						
	7	9						
	7	14						
	7	23						
	8	2						
	8	9						
	9	2						
	9	8						
	9	14						
	9	21						

Alpabetical Index

8667-097-100-00

Description	Fig.	Key
ARM/GAUGE COMP	11	5
	12	5
AS YOKE ASSY	15	16
BEARING, RB 6006	2	34
	3	34
BEARING, RB/6204	2	17
	2	26
	3	17
	3	26
BEARING, RB/6205	2	15
	2	18
	2	27
	3	15
	3	18
	3	27
BEARING, RB/6206	2	32
	3	32
BEARING/BALL	2	5
	3	5
BLADE/60X640/A	5	1
BLADE/60X640/B	5	2
BLADE/60X716/A	6	1
BLADE/60X716/B	6	2
BOLT	5	5
	6	5
BOLT(S) M10X25	11	6
	12	6
BOLT, SEMS (SP)	9	2
	9	4
	9	6
	10	2
	10	4
	10	6
BOLT/S	2	11
	2	40
	3	11
	3	40
	11	4
	12	4
BUSH/30X34X20	11	8
	12	8
CAP/SEAL/47	2	21
	3	21
CASE/BEVEL	2	1
	3	1
CASE/BEVEL/RH	2	22
	3	22
CHAIN ASSY	15	8
	15	15
COLLAR, THRUST	11	11
	12	11
COLLAR/BLADE	4	1
COUPLING/18X30X55	2	45
	3	45
COVER/JOINT COMP	9	3
	10	3
COVER/SHAFT	9	1
	10	1
COVER/YOKE COMP	9	5
	10	5
DECK/MOWER/48 COMP	7	1
DECK/MOWER/54 COMP	8	1
FITTINGYOKE	15	1
FORK/WHEEL ASSY	11	7
	12	7
GEAR/BEVEL/19-2 SET	3	12
GEAR/BEVEL/21-2 SET	2	12
GEAR/BEVEL/25-2 SET	2	13
	2	24
	3	13
	3	24
GREASENIPPLE	15	4
	15	11
JOINT/UNIVERSAL SET	1	1
JOURNALCROSSE ASSY	15	3
	15	10
LABEL/CE	14	1
LABEL/DANGER	14	3
LABEL/GAUGEWHEEL	14	6
LABEL/MAINTENANCE	14	5
LABEL/PTO	14	4
LABEL/WARNING/HOT	14	2
LINKPIN	7	9
	8	9
METAL/BLADE	2	30
	3	30
METAL/INPUT	2	3
	3	3
NIPPLE, GREASE	11	9
	11	21
NIPPLE, GREASE	12	9
	12	21
NUT	2	42
	3	42
NUT/M16	11	22
	12	22
NUT/WASHER	11	26
	12	26
O-RING/G75	2	37
	3	37
O-RING/G80	2	8
	3	8
PIN, HAIR (19)	13	7
PIN, SPRING/4X40	7	7
	8	7
PIN, SPRING/5 X40 W	7	4
	8	4
	13	4
PIN, SPRING/8 X40 W	1	2
PIN/08X18	4	2
PIN/10X53	11	14
	12	14
PIN/12X117	11	25
	12	25
PIN/16X96	7	2
	8	2
	13	2
PIN/19X92	7	8
	8	8
PIN/20X112	11	20
	12	20
PIN/GAUGE COMP	11	10
	12	10
PIN/LIFT COMP	13	1
PLATE/I/80X110 COMP	5	3
	6	3
PLUG, DRAIN (1/4)	2	2
	2	23
	3	2
	3	23
RBB	11	18
	12	18
RING, SNAP/20C	2	46
	3	46
RING, SNAP/30 C	11	13

Alpabetical Index

8667-097-100-00

Description	Fig.	Key
RING, SNAP/30 C	12	13
RING, SNAP/47 C	2	16
	3	16
RING, SNAP/52 C	2	19
	2	28
	3	19
	3	28
RING/SLIDE	15	7
	15	14
RING/SNAP	2	6
	2	33
	2	35
	3	6
	3	33
	3	35
SAFETYGUARD/IN	15	6
SAFETYGUARD/OUT	15	13
SEAL, OIL/TC255210	2	20
	2	29
	3	20
	3	29
SEAL, OIL/TC305512	2	36
	3	36
SEAL/OIL	2	7
	3	7
SHAFT/BLADE	2	31
	3	31
SHAFT/INPUT	2	4
	3	4
SHAFT/JOINT	2	44
	3	44
SHAFT/LH	2	14
	3	14
SHAFT/RH	2	25
	3	25
SHAFTYOKE	15	2
SHIM/0.1	2	9
	2	38
	3	9
	3	38
SHIM/0.2	2	10
	2	39
	2	43
	3	10
	3	39
SHIM/0.2	3	43
SHIM/1.2	5	4
	6	4
SLEEVEYOKE	15	9
SPACER	13	5
SPRING HE100	9	7
	10	7
SPRING/CLIP	11	15
	12	15
SPRING/HC042	7	3
	8	3
	13	3
SPRING/HC058	7	6
	8	6
STAY/GAUGE/LH COMP	11	2
	12	2
STAY/GAUGE/RH COMP	11	3
	12	3
STOPPER/MOWER	7	5
	8	5
SURCLIP/HOLE	15	5
	15	12
TIRE/8X3.00-4 ASSY	11	19
	12	19
WASHER, PL/M22	13	6
WASHER, SP/M10	2	41
	3	41
WASHER, SP/M12	5	6
	6	6
WASHER, SP/M16	11	23
	12	23
WASHER/30X50X05	11	12
	12	12
WHEEL/GAUGE ASSY	11	16
	12	16
WHEEL/GAUGE/FRONT	11	1
	11	24
	12	1
	12	24
WHELL ASSY	11	17
	12	17

Alpabetical Index

8669-097-100-00

Description	Fig.	Key
ADAPTER(90°/PUMP)	8	6
	9	4
	9	18
ADAPTER/ORIFICE ASSY	8	14
	9	28
ADAPTER/RC1/4	8	4
	9	16
ADAPTER/T	9	25
ADAPTOR/STRAIGHT	8	5
	9	17
ARM	10	16
	11	16
BAND,WIRE/250	8	19
	9	33
BAR	16	8
BOLT(SP)/M6X16	10	17
	11	17
BOLT,SEMS	5	6
	7	6
	7	12
	7	20
	8	10
	9	9
	9	22
BOLT,SEMS (SP)	3	4
	3	15
	3	18
	3	20
	3	22
	5	4
	6	7
	6	9
	7	4
	8	18
	9	32
	10	2
	11	2
	12	13
	12	19
	12	20
	13	2
	16	7
BOLT/KNOB/M06X20	10	11
	11	11
BOLT/M12X25 7T	15	2

Description	Fig.	Key
BOLT/M12X35	1	10
	1	13
	1	16
	2	9
	2	13
	2	16
BOLT/M12X40	16	2
BOLT/M12X45	1	2
	1	6
	2	2
	2	5
BOLT/M8X50	4	5
BOLT/S	1	19
	2	19
	2	22
	5	11
	7	17
BOLT/SP	3	14
	5	17
	7	26
	12	21
BUMPER COMP	13	1
BUSH,LEVER	3	9
CHUTER/MOWER	14	1
CLAMP/25X50	8	17
	9	31
CONTAINER/COVER/UPPE	3	13
CONTAINER/DOOR/COVER	3	17
CONTAINER/FRONT COMP	3	1
CONTAINER/REAR/LOWER	5	1
	7	1
COVER/CONTAINER/LH	12	1
COVER/CONTAINER/REAR	12	6
COVER/CONTAINER/RH	12	2
COVER/LINK/A/LH	12	11
COVER/LINK/A/RH	12	12
COVER/LINK/B/LH	12	14
COVER/LINK/B/RH	12	15
CUP HEAD SQUARE NECK	14	3
CUP/SPRING	10	8
	11	8
CYLINDER ASSY	8	1
	9	1
	9	13
FAN/BLOWER COMP	15	1

Description	Fig.	Key
FRAME/CONTAINER/DOOR	3	16
FRAME/CONTAINER/LH	3	5
FRAME/CONTAINER/LOWE	3	11
FRAME/CONTAINER/REAR	3	10
FRAME/CONTAINER/RH	3	6
FRAME/GUARD COMP	16	1
FRAME/LINK COMP	1	18
FRAME/LOWER/LH COMP	1	1
	2	1
FRAME/LOWER/RH COMP	1	5
	2	4
FRAME/REAR COMP	1	9
	2	8
FRAME/SIDE/LH COMP	1	12
	2	12
FRAME/SIDE/RH COMP	1	15
	2	15
FRAME/STOPPER/L COMP	2	18
FRAME/STOPPER/R COMP	2	21
GROMMET/17X21X3	16	5
GUARD/OPERATOR COMP	16	6
HANDLE	14	2
HARNESS/COLLECTOR/H	11	13
HARNESS/COLLECTOR/L	10	13
HOOK COMP	6	8
HOSE 2000	9	6
HOSE/HYDOR/4500 ASSY	9	27
HOSE/HYDRO/1000 ASSY	8	7
	9	5
	9	19
	9	26
HOSE/HYDRO/2700 ASSY	8	13
HOSE/MOWER/CHUTER	14	5
INSULATOR/25X60	2	20
	2	23
INTAKE/BLOWER COMP	15	5
INTAKE/CONTAINE COMP	3	21
INTAKE/CONTAINER/COV	3	23
LABEL/CAUTION	17	6
	18	7
LABEL/CAUTION/D	18	8
LABEL/CAUTION/L	18	9
LABEL/CE	17	1
	18	1
LABEL/COLLECT/LIFT/H	18	10

Alpabetical Index

8669-097-100-00

Description	Fig.	Key
LABEL/COLLECT/LIFT/L	17	7
LABEL/DANGER/DISCHAR	17	4
	18	4
LABEL/MAINTENANCE	17	5
	18	5
LABEL/SENSOR	17	8
	18	11
LABEL/WARNING/HOT	18	6
LINK/A/LH COMP	7	7
LINK/A/RH COMP	7	8
LINK/B COMP	7	13
LINK/C/LH COMP	7	21
LINK/C/RH COMP	7	22
LINK/LH COMP	5	7
LINK/RH COMP	5	8
NIPPLE, GREASE	5	9
	7	9
	7	14
	7	23
	8	2
	8	9
	9	2
	9	8
	9	14
	9	21
NUT/ADJUST	10	10
	11	10
NUT/M12	5	15
NUT/M6	10	4
	11	4
NUT/WASHER	3	24
	4	6
	5	3
	7	3
	8	21
	9	37
	12	4
	12	9
	14	4
	15	6
ORNAMENT/ISEKI/COLLE	17	2
	17	3
	18	2
	18	3
PIN, SPLIT/1.6X10	10	12

Description	Fig.	Key
PIN, SPLIT/1.6X10	11	12
PIN, SPLIT/3X30	4	9
	6	5
	8	12
	9	12
	9	24
PIN/08X60 COMP	9	35
PIN/12X40 COMP	3	19
PIN/16X53	9	10
PIN/16X58 COMP	8	8
	9	7
	9	20
PIN/20X56 COMP	5	12
PIN/20X60 COMP	5	5
	7	5
	7	11
	7	19
PIN/SNAP	4	10
PLATE, SWITCH	10	6
	11	6
PLATE/CONTAINER/LOWE	3	12
PLATE/COVER COMP	3	2
PLATE/COVER/F COMP	12	3
PLATE/COVER/R/L COMP	12	7
PLATE/COVER/R/R COMP	12	8
PLATE/FRONT	3	3
PLATE/HOOK COMP	6	1
PLATE/I/22X167	4	3
PLATE/I/22X804	4	7
PLATE/L/50X39	6	6
PLATE/LH COMP	4	1
PLATE/LINKROCK	9	34
PLATE/RH COMP	4	2
PLATE/SENSOR	10	3
	11	3
PLATE/SENSOR COMP	10	1
	11	1
PLATE/STOPPER	7	16
PLATE/SUPPORT	8	20
	9	36
PLATE/SWITCH	10	14
	11	14
PLATE/UNDER	3	7
PROTECTOR/245	3	8
RING/O	8	15

Description	Fig.	Key
RING/O	9	29
RUBBER, CUSHION	5	2
	7	2
SCREW, ORIFICE	8	16
	9	30
SCREW/8X20	12	5
	12	10
	12	18
SCREW/M03X20	10	7
	11	7
SPRING/HC064	10	9
	11	9
SPRING/HT020/LH	6	2
SPRING/HT020/RH	6	3
STAY/COVER/LH COMP	12	16
STAY/COVER/RH COMP	12	17
SWITCH ASSY	10	5
	11	5
SWITCH/LEVER ASSY	10	15
	11	15
TUBE/885 COMP	5	16
	7	25
WASHER	1	4
	1	8
	2	7
	2	11
WASHER / M16	9	11
WASHER /M12	8	11
	9	23
	16	4
WASHER, PL/M 8	4	4
WASHER, PULLEY	5	13
	15	4
WASHER, SP/M 6	5	10
	7	10
	7	15
	7	24
	8	3
	9	3
	9	15
WASHER, SP/M12	1	3
	1	7
	1	11
	1	14
	1	17

Alpabetical Index

8669-097-100-00

Description	Fig.	Key	Description	Fig.	Key	Description	Fig.	Key
WASHER, SP/M12	2	3						
	2	6						
	2	10						
	2	14						
	2	17						
	5	14						
	15	3						
	16	3						
WASHER/M10	4	8						
	6	4						
	7	18						