FIG. 17 SHAFT(PTO/SIDE)SYSTEM

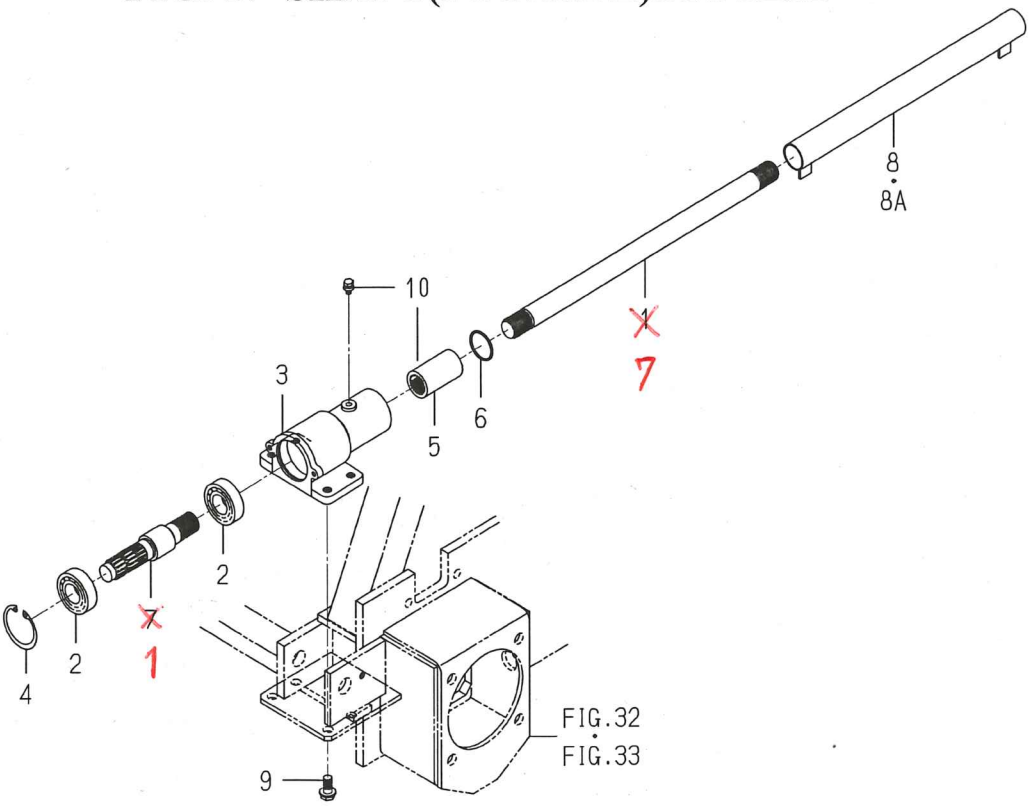

1809-244 -0100

KEY	PART CODE	DESCRIPTION	SPC	TYPE OF MODEL SF438FH	TYPE OF MODEL SF450FH	ITC	COL	GRP	REMARKS
1	1809-244-002-00	SHAFT/PTO/SIDE	*	1	1				
2	1729-202-015-00	BEARING/BALL	*	2	2				
3	1809-244-003-00	METAL/PTO/SIDE	*	1	1				
4	V705-140-052-00	RING,SNAP/52 C	*	1	1				
5	1729-218-002-00	COUPLING/23X34X60	*	1	1				
6	V723-102-003-40	O-RING/1A,S34	*	1	1				
7	1809-244-001-00	SHAFT/JOINT	*	1	1				
8	1809-244-210-00	TUBE/382 COMP	*	1 -101	1 -429				
8A	1809-244-210-10	TUBE/382 COMP	*	1 102-4	1 430-4	1			
9	V231-361-002-00	FLANGEBOLT/M10X20	*						
10	V210-360-601-20	BOLT,SP/M6X12	*	1	1				