Directions for use of Parts Catalogue

1. Applicable model of machines

All component and option parts used for SSM60,72 Mower are listed in this parts catalogue.

NOTES: SSM60-SF370E4F・・・・・ FOR SF310,370
SSM72-SF370E4F・・・・・ FOR SF310,370

2. Explanation for head paragraph

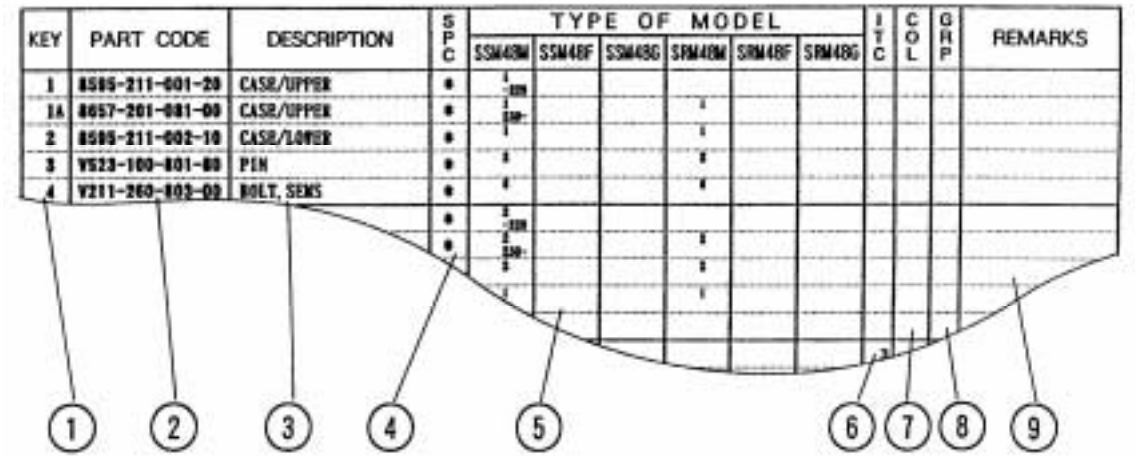

① KEY shows the location of parts diagramed in the illustration.

② Parts numbers begin with `V´ and `W´ are standard parts of the market.

③ `LH´ and `RH´ on the parts name are described against the moving direction of the machine or are described on the condition how to install parts on the machines.

④ SPC : The following symbol classifies parts to be used for machines.
`*´ means standard parts.
`T´ shows that the parts can be installed as optional parts.
`R´ shows that the parts can be used as applicable parts to replace originally equipped parts.

⑤ Upper column : QTY shows the number of parts to be used for one unit of machine.

`M´ is indicated for parts supplied by a meter long.

`l´ is indicated for parts supplied by liter.

`AR´ is indicated for parts need to be adjusted or regulated.

Lower column : serial number

—229 means serial number up to 229.

230— means serial number 230 and after.

⑥ ITC : Interchangeability

`1´…OLD ← NEW

New parts can be used in place of the old parts.

`2´…OLD → NEW

Old parts can be used in place of the new parts.

`3´…OLD →← NEW

Old parts and new parts can not be replaced each other.

⑦ COL : Color code

Color is signified with color code number for colored parts.

Please see the color list shown in the next page.

⑧ GRP : Parts shown in this column can be replaced by SET parts.

Example : Parts marked Ⓐ can be replaced by parts marked Ⓑ, and Ⓓ for Ⓒ, so the rest follow in the same alphabetical order.

⑨ Remarks

＊Other maker's part code number is shown in this column.

＊When Fig. No. is shown in the Remark column of SET parts or ASSY parts, each of their component parts are listed in said Fig. No.

3. Color :

The following colors are used color parts.

COLOR CODE	COLOR	SPRAY TYPE PARTS CODE	PAINTS 4K DRUM PARTS CODE	PAINTS 16K DRUM PARTS CODE
4 L	NEO BLUE	1300-985-001-10	1300-985-003-00	————
6 G	SUMMER WHITE	1300-958-001-10	1300-958-003-00	1300-958-004-00

NOTE : Color code is signified only for the parts assigned by the maker as color parts.

4. Serial Numbers :

For chassies serial number is shown on the LABEL.

Please see

5. Parts Order

1) Parts numbers listed in the parts catalogue are all registered in “ISEKI on-line computer”.
2) When you order parts, please make sure of correct numbers.
3) When substitute parts is available, the part number ordered will be automatically turned to a new part number.
4) Please be sure to use “ISEKI GENUINE PARTS”.
   Any other similar parts other than ISEKI parts when used may cause a trouble that makes us unable to repair or guarantee the warrant.

*** Structure Table of Model ***

MODEL / FIG.	SSM60FS37 0F	SSME47 2FS37 0F										
1	*	*										
2	*											
3		*										
4	*											
5		*										
6	*	*										
7	*	*										
8	*											
9		*										
10		*										
11	*											
12		*										
13	*											
14		*										
15	*											
16	*											
17		*										
18	*											
19		*										
20	*	*										
21	R	R										
22	R	R										
23		R										
24	R											
25		R										
26	R	R										

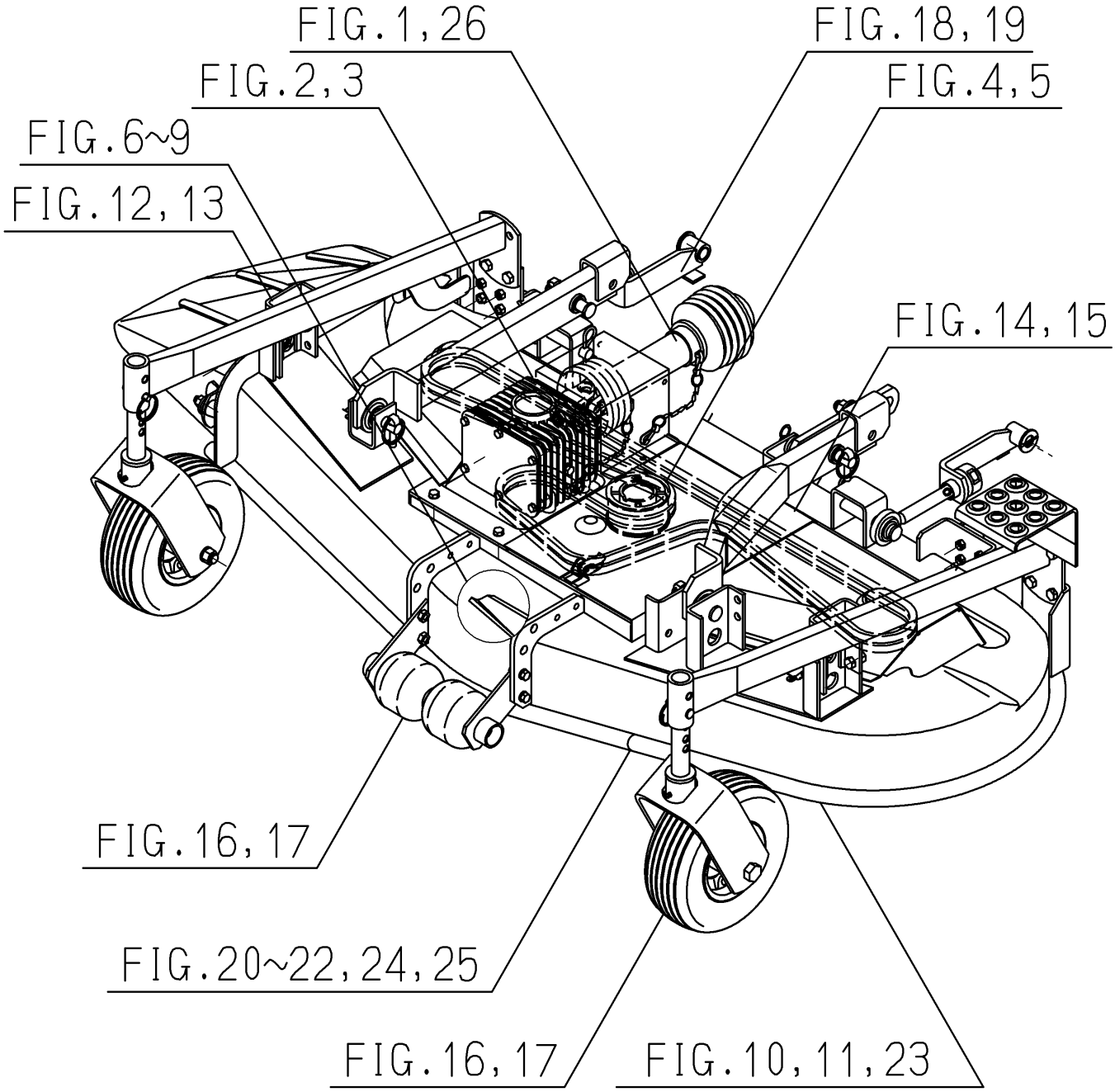
FIG.1,26
FIG.18,19
FIG.2,3
FIG.4,5
FIG.6~9
FIG.12,13
FIG.14,15
FIG.16,17
FIG.20~22,24,25
FIG.16,17
FIG.10,11,23

Contents

SSM60,72

JOINT(UNIVERSAL)SYSTEM ····· Fig. 1
CASE(BEVEL)SYSTEM(SSM60) ····· Fig. 2
CASE(BEVEL)SYSTEM(SSM72) ····· Fig. 3
PULLEY SYSTEM(SSM60) ····· Fig. 4
PULLEY SYSTEM(SSM72) ····· Fig. 5
TENSION(BELT)SYSTEM ····· Fig. 6
METAL SYSTEM ····· Fig. 7
BLADE SYSTEM(SSM60) ····· Fig. 8
BLADE SYSTEM(SSM72) ····· Fig. 9
DECK(MOWER)SYSTEM(SSM72) ····· Fig. 10
DECK(MOWER)SYSTEM(SSM60) ····· Fig. 11
COVER(DISCHARGE)SYSTEM(SSM72) ····· Fig. 12
COVER(DISCHARGE)SYSTEM(SSM60) ····· Fig. 13
COVER(BELT)SYSTEM(SSM72) ····· Fig. 14
COVER(BELT)SYSTEM(SSM60) ····· Fig. 15
WHEEL(GAUGE)SYSTEM(SSM60) ····· Fig. 16
WHEEL(GAUGE)SYSTEM(SSM72) ····· Fig. 17
LINK(LIFT)SYSTEM(SSM60) ····· Fig. 18
LINK(LIFT)SYSTEM(SSM72) ····· Fig. 19
LABEL ····· Fig. 20

OPTIONAL PARTS

SHIM SET(REPAIR) ····· Fig. 21
CASE(BEVEL)ASSY(REPAIR) ····· Fig. 22
DECK(MOWER/72/ICT)COMP(REPAIR) ····· Fig. 23
SAFETY(SF370)SET(SSM60)(REPAIR) ····· Fig. 24

SAFETY(SF370)SET(SSM72)(REPAIR)····· Fig. 25

COMPONENT PARTS

COMPONENT PARTS
FOR 8654-101-300-00 ON Fig.1·····Fig. 26

FIG. 1 JOINT(UNIVERSAL)SYSTEM

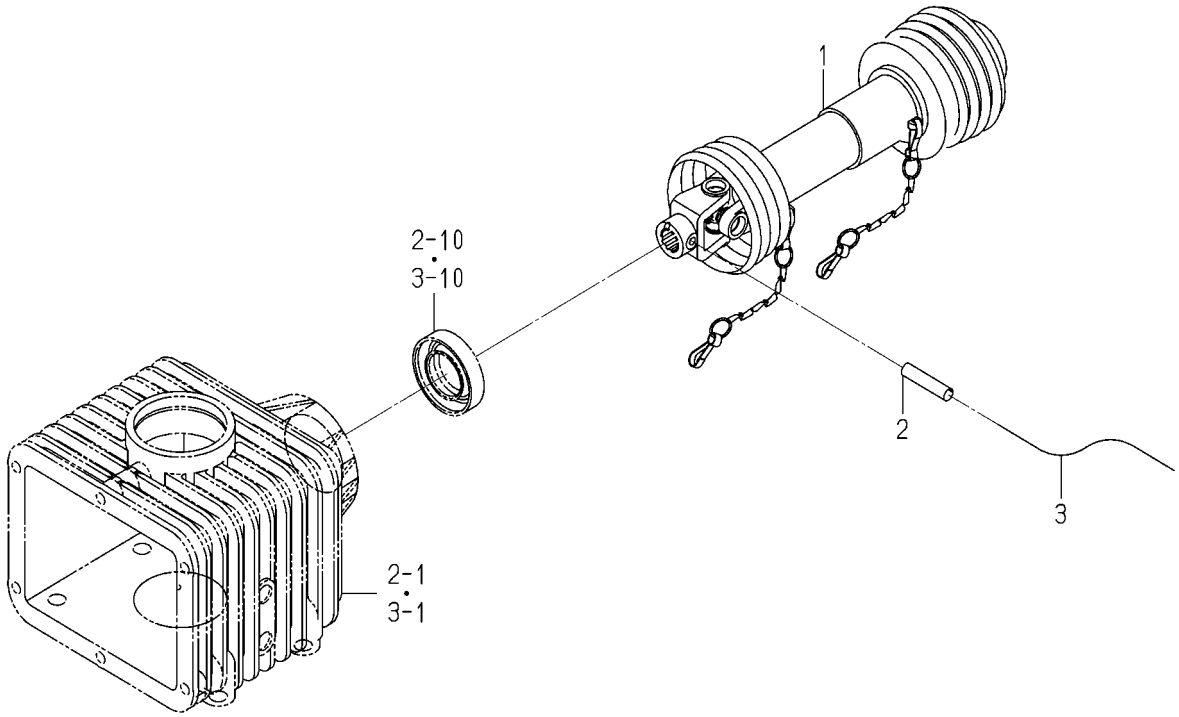

8654-101O-0100

KEY	PART CODE	DESCRIPTION	SPC	TYPE OF MODEL SSM60 SF370F	TYPE OF MODEL SSM72 SF370F	ITC	COL	GRP	REMARKS
1	8654-101-300-00	JOINT/UNIVERSAL SET	*	1	1				FIG 026
2	V580-140-804-00	PIN,SPRING/8 X40 W	*	1	1				
3		WIRE	*	1	1				

FIG. 2 CASE(BEVEL)SYSTEM(SSM60)

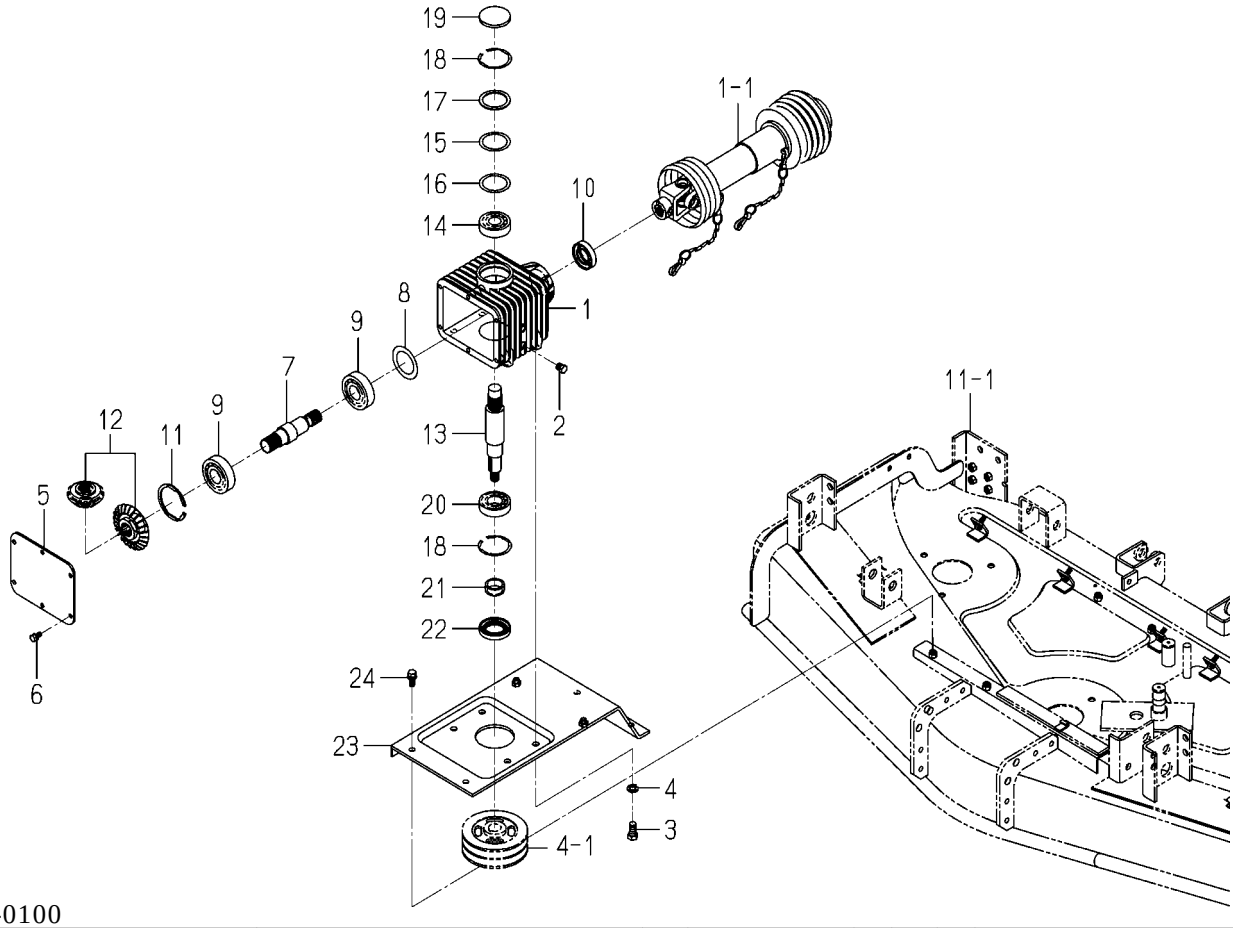

8654-201 -0100

KEY	PART CODE	DESCRIPTION	SPC	TYPE OF MODEL SSM60 SF370F	TYPE OF MODEL SSM72 SF370F	ITC	COL	GRP	REMARKS
1	8654-201-001-20	CASE/BEVEL	*	1					
2	7955-201-026-00	PLUG,DRAIN (1/4)	*	2					
3	V201-361-202-50	BOLT/M12X25	*	4					
4	V401-160-012-00	WASHER,SP/M12	*	4					
5	8654-201-011-00	COVER/CASE	*	1					
6	V211-560-801-60	BOLT,SEMS	*	6					
7	8654-201-002-00	SHAFT/INPUT	*	1					
8	8654-201-015-00	COLLAR/48X70X01	*	1					
9	7932-201-002-00	BEARING,RB/6306SH2	*	2					
10	V744-130-551-20	SEAL,OIL/TC305512	*	1					
11	V707-140-072-00	RING/SNAP	*	1					
12	8654-201-210-00	GEAR/BEVEL/24-1 SET	*	1					
13	8654-201-003-00	SHAFT/OUTPUT	*	1					
14	1594-218-001-00	BEARING/BALL 6305SH2	*	1					
15	8654-201-008-00	SHIM/0.1	*	1					
16	8654-201-009-00	SHIM/0.2	*	1					
17	8654-201-007-00	COLLAR/49X62X02	*	1					
18	V707-140-062-00	RING/SNAP	*	2					
19	3640-547-007-00	PLUG,CAP/62X6	*	1					
20	V600-110-620-60	BEARING,RB/6206	*	1					
21	1614-244-002-00	SLEEVE	*	1					
22	1614-244-005-00	SEAL/OIL	*	1					
23	8654-201-220-10	STAY/GEARCASE COMP	*	1					
24	V211-561-002-50	BOLT/M10X25	*	4					

FIG. 3 CASE(BEVEL)SYSTEM(SSM72)

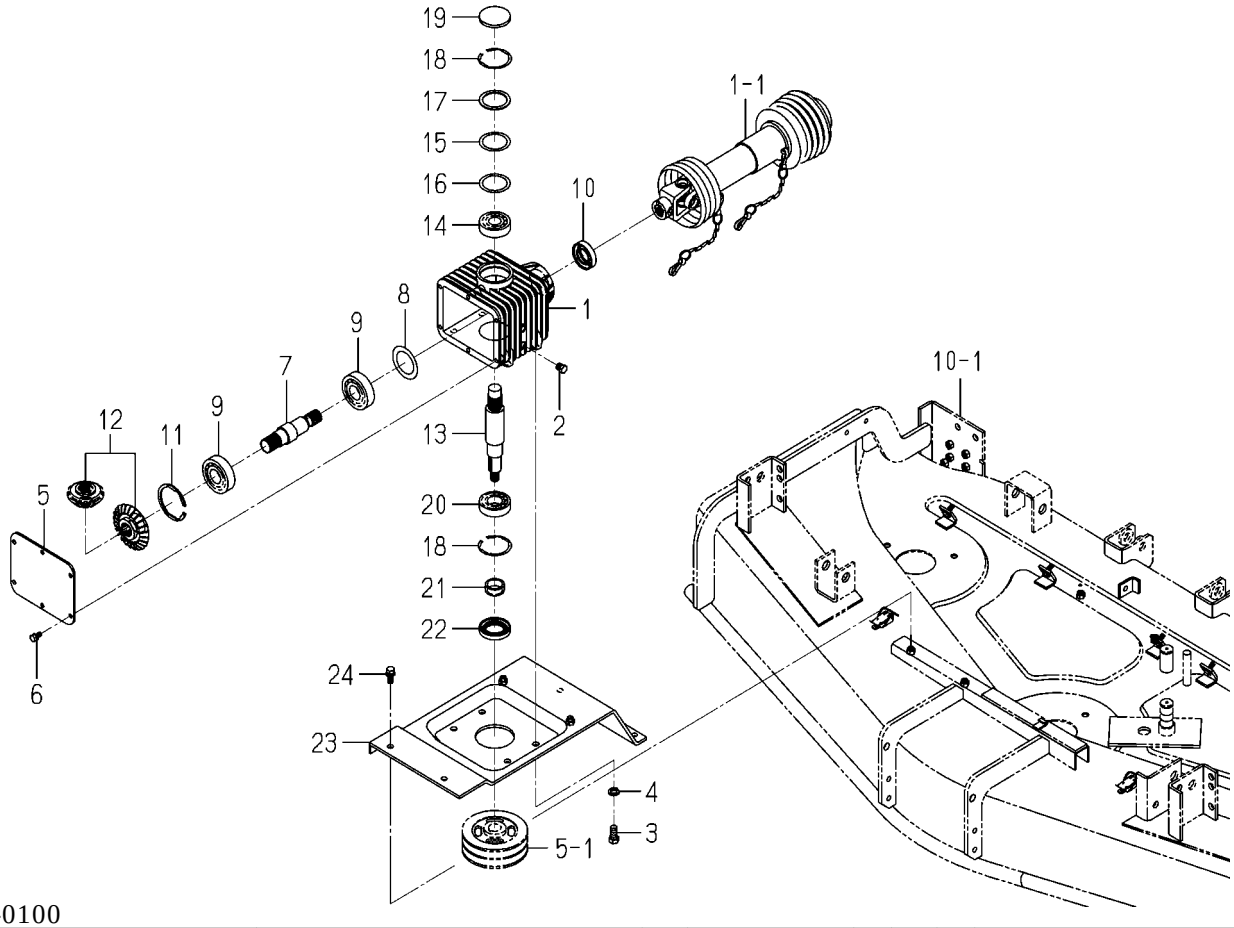

8655-201 -0100

KEY	PART CODE	DESCRIPTION	SPC	TYPE OF MODEL SSM60 SF370F	TYPE OF MODEL SSM72 SF370F	ITC	COL	GRP	REMARKS
1	8654-201-001-20	CASE/BEVEL	*		1				
2	7955-201-026-00	PLUG,DRAIN (1/4)	*		2				
3	V201-361-202-50	BOLT/M12X25	*		4				
4	V401-160-012-00	WASHER,SP/M12	*		4				
5	8654-201-011-00	COVER/CASE	*		1				
6	V211-560-801-60	BOLT,SEMS	*		6				
7	8654-201-002-00	SHAFT/INPUT	*		1				
8	8654-201-015-00	COLLAR/48X70X01	*		1				
9	7932-201-002-00	BEARING,RB/6306SH2	*		2				
10	V744-130-551-20	SEAL,OIL/TC305512	*		1				
11	V707-140-072-00	RING/SNAP	*		1				
12	8654-201-210-00	GEAR/BEVEL/24-1 SET	*		1				
13	8654-201-003-00	SHAFT/OUTPUT	*		1				
14	1594-218-001-00	BEARING/BALL 6305SH2	*		1				
15	8654-201-008-00	SHIM/0.1	*		1				
16	8654-201-009-00	SHIM/0.2	*		1				
17	8654-201-007-00	COLLAR/49X62X02	*		1				
18	V707-140-062-00	RING/SNAP	*		2				
19	3640-547-007-00	PLUG,CAP/62X6	*		1				
20	V600-110-620-60	BEARING,RB/6206	*		1				
21	1614-244-002-00	SLEEVE	*		1				
22	1614-244-005-00	SEAL/OIL	*		1				
23	8655-201-220-10	STAY/GEARCASE COMP	*		1				
24	V211-561-002-50	BOLT/M10X25	*		4				

FIG. 4 PULLEY SYSTEM(SSM60)

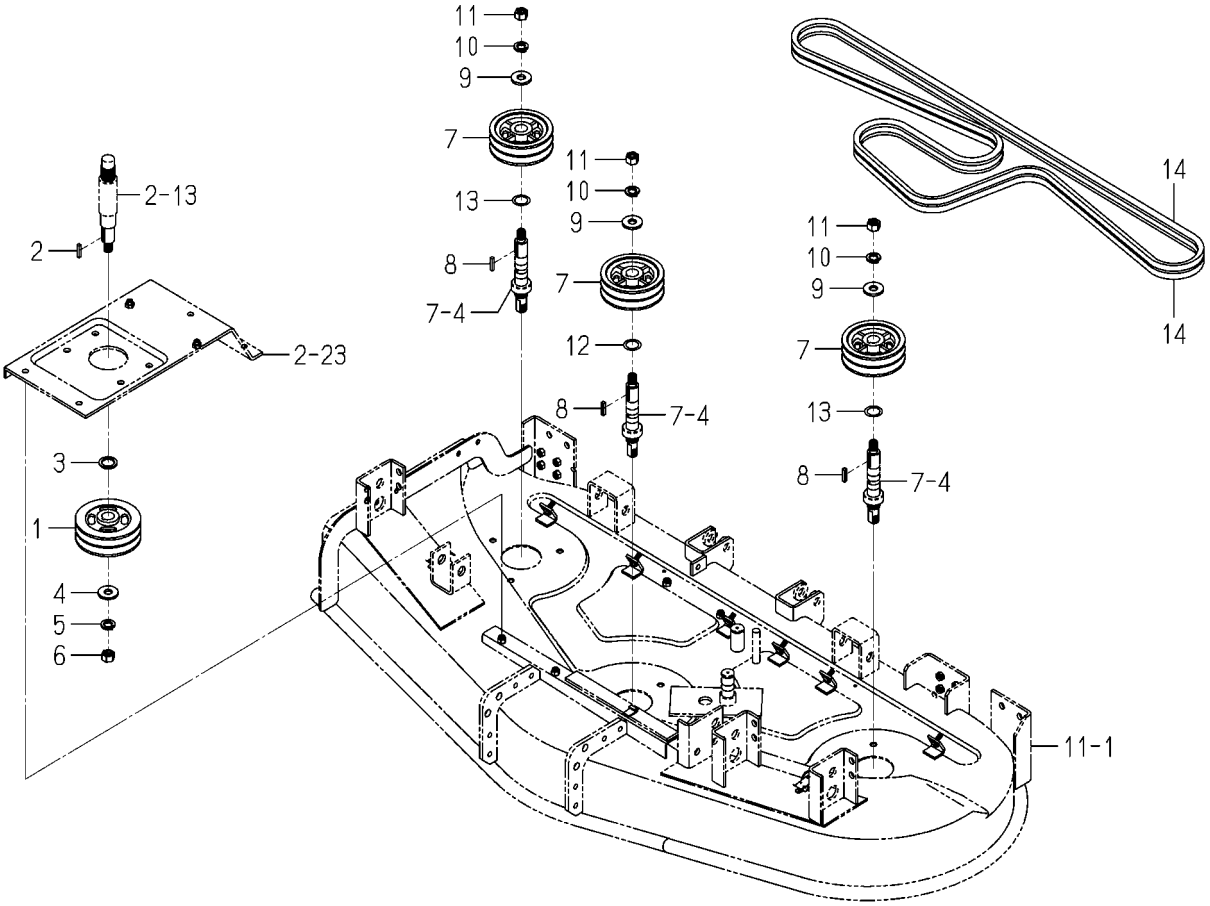

8654-202 -0100

KEY	PART CODE	DESCRIPTION	SPC	TYPE OF MODEL SSM60 SF370F	TYPE OF MODEL SSM72 SF370F	ITC	COL	GRP	REMARKS
1	8654-202-001-10	PULLEY/V2B125	*	1					
2	8654-202-016-00	KEY/06X06X28	*	1					
3	1434-211-004-00	COLLAR/26X36X3	*	1					
4	3746-111-011-00	WASHER	*	1					
5	V401-160-016-00	WASHER,SP/M16	*	1					
6	V304-460-016-00	NUT/M16	*	1					
7	8654-202-002-20	PULLEY/V2B120	*	3					
8	8654-202-016-00	KEY/06X06X28	*	3					
9	3746-111-011-00	WASHER	*	3					
10	V401-160-016-00	WASHER,SP/M16	*	3					
11	V304-460-016-00	NUT/M16	*	3					
12	8654-202-003-10	SHIM/0.5	*	1					
13	8654-202-004-10	SHIM/1.0	*	2					
14	8654-202-013-00	BELT/VB125	*	2					

FIG. 5 PULLEY SYSTEM(SSM72)

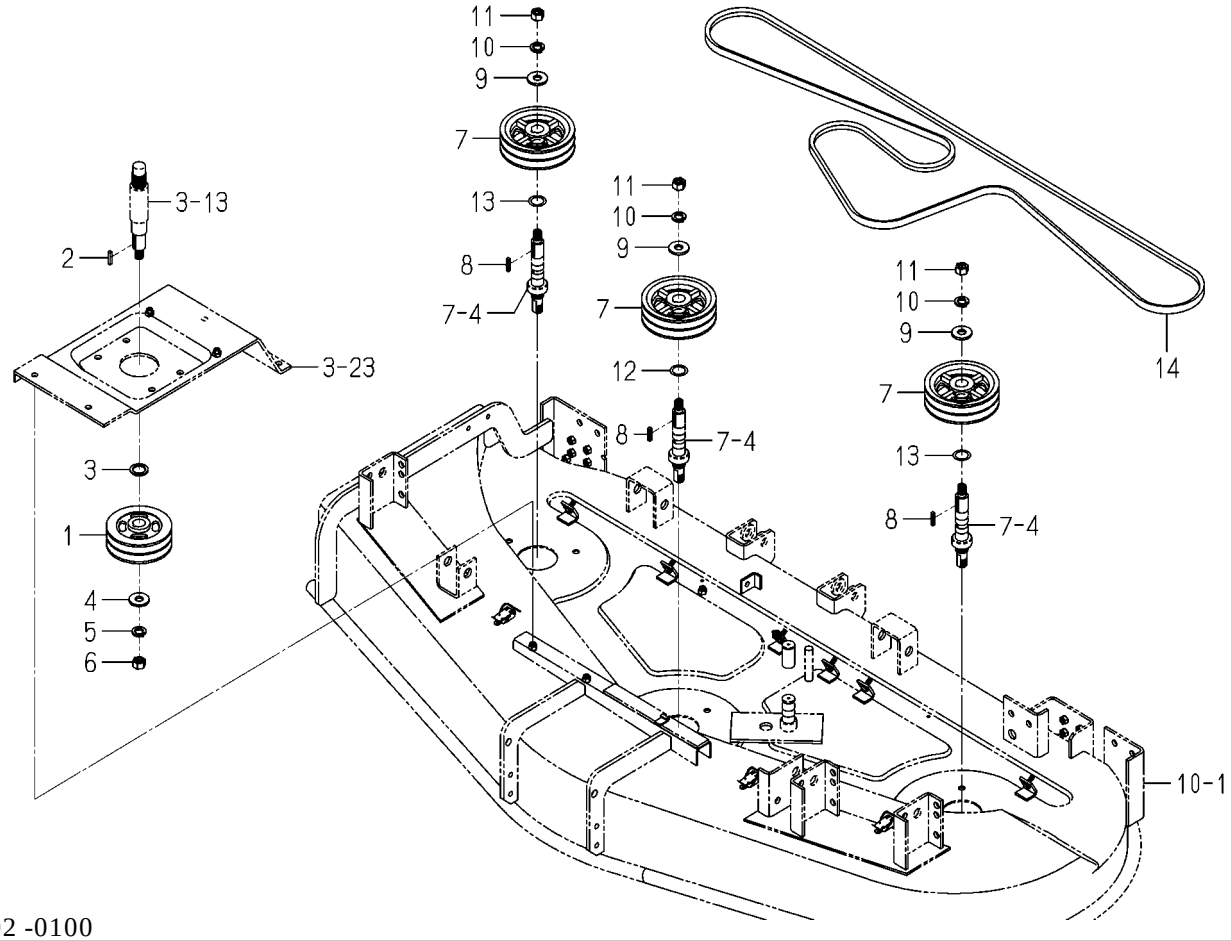

8655-202 -0100

KEY	PART CODE	DESCRIPTION	SPC	TYPE OF MODEL SSM60 SF370F	TYPE OF MODEL SSM72 SF370F	ITC	COL	GRP	REMARKS
1	8654-202-001-10	PULLEY/V2B125	*		1				
2	8654-202-016-00	KEY/06X06X28	*		1				
3	1434-211-004-00	COLLAR/26X36X3	*		1				
4	3746-111-011-00	WASHER	*		1				
5	V401-160-016-00	WASHER,SP/M16	*		1				
6	V304-460-016-00	NUT/M16	*		1				
7	8655-202-001-20	PULLEY/V2B143	*		3				
8	8654-202-016-00	KEY/06X06X28	*		3				
9	3746-111-011-00	WASHER	*		3				
10	V401-160-016-00	WASHER,SP/M16	*		3				
11	V304-460-016-00	NUT/M16	*		3				
12	8654-202-003-10	SHIM/0.5	*		1				
13	8654-202-004-10	SHIM/1.0	*		2				
14	8655-202-013-00	BELT/VB146	*		2				

FIG. 6 TENSION(BELT)SYSTEM

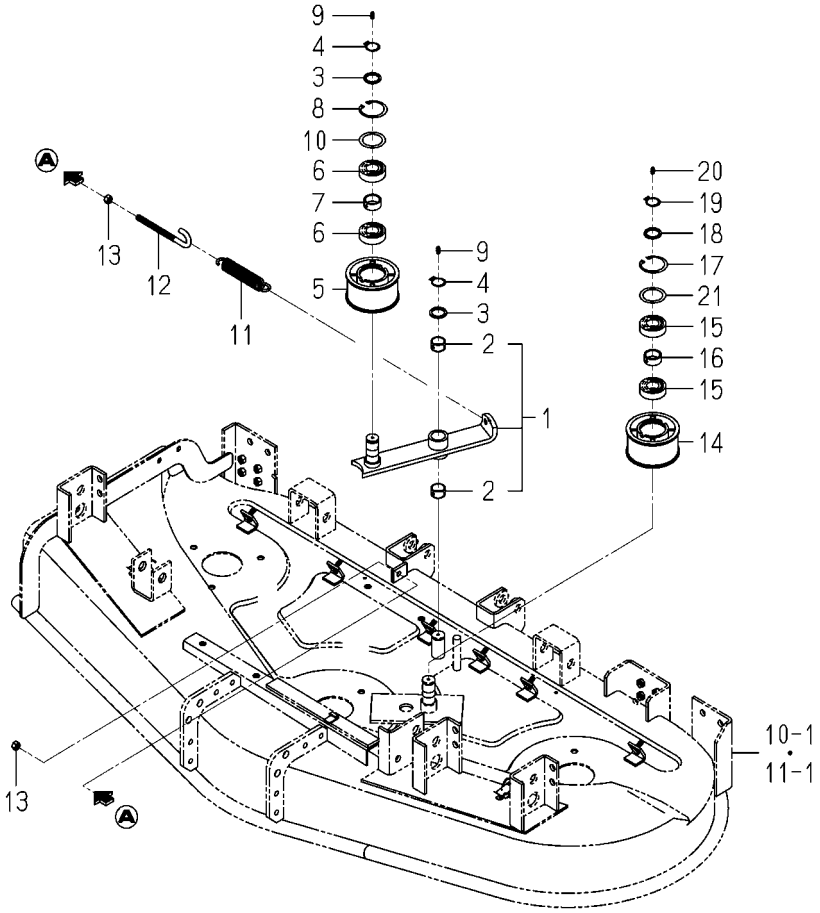

8654-203 -0100

KEY	PART CODE	DESCRIPTION	SPC	TYPE OF MODEL SSM60 SF370F	TYPE OF MODEL SSM72 SF370F	ITC	COL	GRP	REMARKS
1	8654-203-200-20	ARM/TENSION ASSY	*	1	1				
2	8654-203-201-00	BUSH/25X28X15	*	2	2				
3	3666-222-003-00	WASHER/26X34X2	*	2	2				
4	V704-140-025-00	RING,SNAP/25 C	*	2	2				
5	8654-203-002-10	PULLEY/FT100X048	*	1	1				
6	V600-140-620-50	BEARING,RB/6205S	*	2	2				
7	8654-203-001-00	COLLAR/28X34X14	*	1	1				
8	V705-140-052-00	RING,SNAP/52 C	*	1	1				
9	V760-150-000-00	NIPPLE,GREASE	*	2	2				
10	8654-203-006-00	WASHER/39X52X01	*	1	1				
11	8654-203-003-00	SPRING/HE136	*	1	1				
12	8654-203-005-00	ROD/M10X131	*	1	1				
13	V304-460-010-00	NUT/M10	*	2	2				
14	8654-203-002-10	PULLEY/FT100X048	*	1	1				
15	V600-140-620-50	BEARING,RB/6205S	*	2	2				
16	8654-203-001-00	COLLAR/28X34X14	*	1	1				
17	V705-140-052-00	RING,SNAP/52 C	*	1	1				
18	3666-222-003-00	WASHER/26X34X2	*	1	1				
19	V704-140-025-00	RING,SNAP/25 C	*	1	1				
20	V760-150-000-00	NIPPLE,GREASE	*	1	1				
21	8654-203-006-00	WASHER/39X52X01	*	1	1				

FIG. 7 METAL SYSTEM

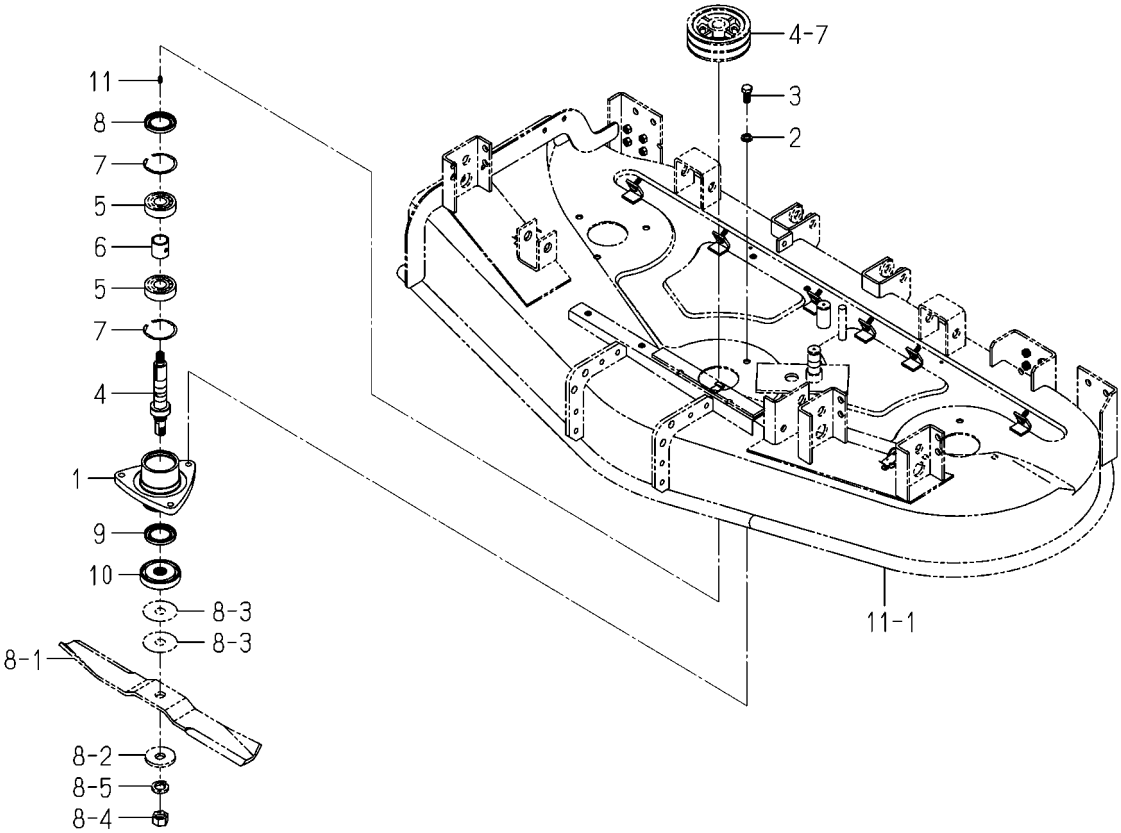

8654-301 -0100

KEY	PART CODE	DESCRIPTION	SPC	TYPE OF MODEL SSM60 SF370F	TYPE OF MODEL SSM72 SF370F	ITC	COL	GRP	REMARKS
1	8654-301-001-10	METAL	*	3	3				
2	V401-160-012-00	WASHER,SP/M12	*	9	9				
3	V201-361-202-50	BOLT/M12X25	*	9	9				
4	8654-301-002-10	SHAFT	*	3	3				
5	V600-110-630-50	BEARING,RB/6305	*	6	6				
6	8654-301-003-00	COLLAR/28X34X32	*	3	3				
7	V707-140-062-00	RING/SNAP	*	6	6				
8	8654-301-004-00	SEAL/OIL	*	3	3				
9	8654-301-006-00	SEAL/OIL	*	3	3				
10	8654-301-005-00	COLLAR/SEAL	*	3	3				
11	V760-150-000-00	NIPPLE,GREASE	*	3	3				

FIG. 8 BLADE SYSTEM(SSM60)

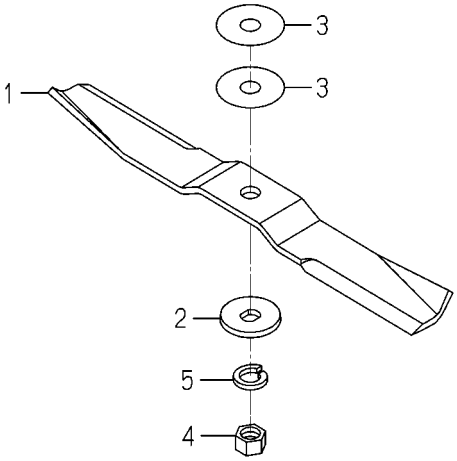

8654-306 -0100

KEY	PART CODE	DESCRIPTION	SPC	TYPE OF MODEL SSM60 SF370F	TYPE OF MODEL SSM72 SF370F	ITC	COL	GRP	REMARKS
1	8654-306-006-10	BLADE/60X528/C	*	3					
2	8595-306-005-10	WASHER/20X60X06	*	3					
3	8595-306-006-00	SHIM/1.2	*	6					
4	8595-306-007-00	NUT/M20X1.5	*	3					
5	V401-160-020-00	WASHER,SP/M20	*	3					

FIG. 9 BLADE SYSTEM(SSM72)

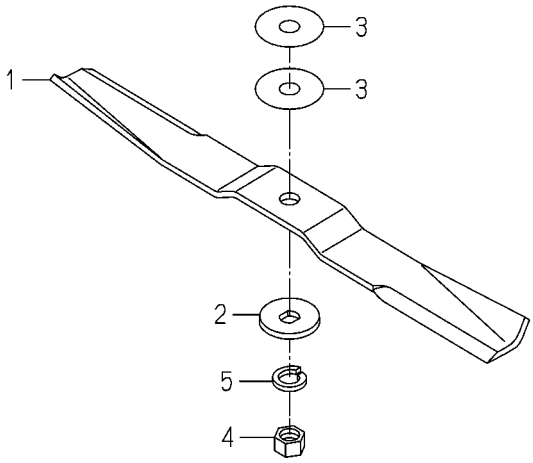

8655-306 -0100

KEY	PART CODE	DESCRIPTION	SPC	TYPE OF MODEL SSM60 SF370F	TYPE OF MODEL SSM72 SF370F	ITC	COL	GRP	REMARKS
1	8655-306-003-10	BLADE/60X630/C	*		3				
2	8595-306-005-10	WASHER/20X60X06	*		3				
3	8595-306-006-00	SHIM/1.2	*		6				
4	8595-306-007-00	NUT/M20X1.5	*		3				
5	V401-160-020-00	WASHER,SP/M20	*		3				

FIG. 10 DECK(MOWER)SYSTEM(SSM72)

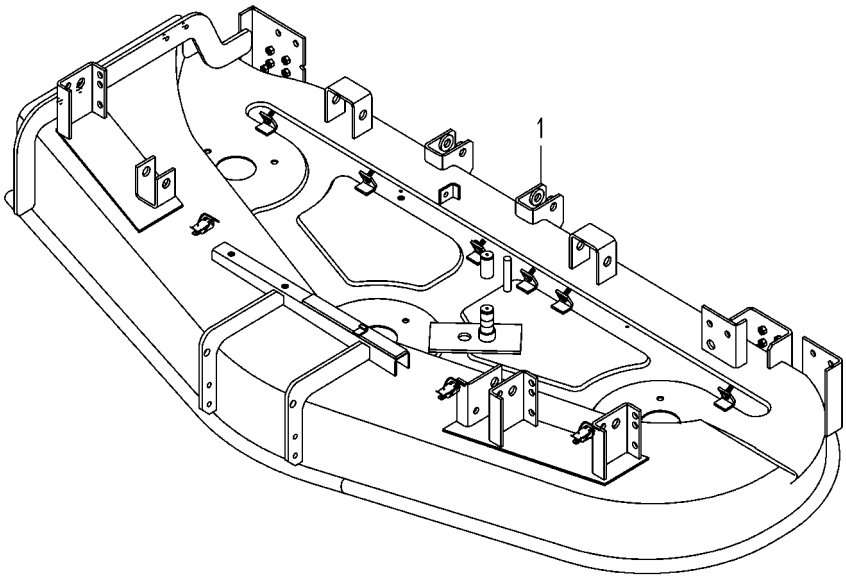

8655-403F-0100

KEY	PART CODE	DESCRIPTION	SPC	TYPE OF MODEL SSM60 SF370F	TYPE OF MODEL SSM72 SF370F	ITC	COL	GRP	REMARKS
1	8655-403-510-10	DECK/MOWER/72/370	*		1		4L		

FIG. 11 DECK(MOWER)SYSTEM(SSM60)

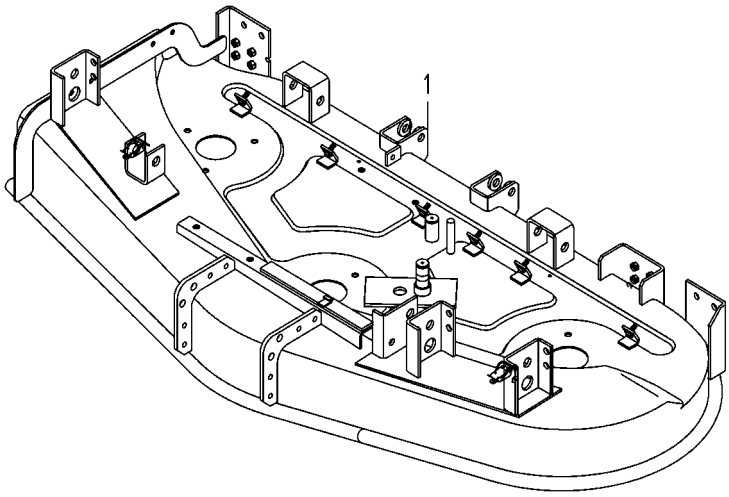

8654-403M-0100

KEY	PART CODE	DESCRIPTION	SPC	TYPE OF MODEL SSM60 SF370F	TYPE OF MODEL SSM72 SF370F	ITC	COL	GRP	REMARKS
1	8654-403-510-10	DECK/MOWER/60/370	*	1			4L		

FIG. 12 COVER(DISCHARGE)SYSTEM(SSM72)

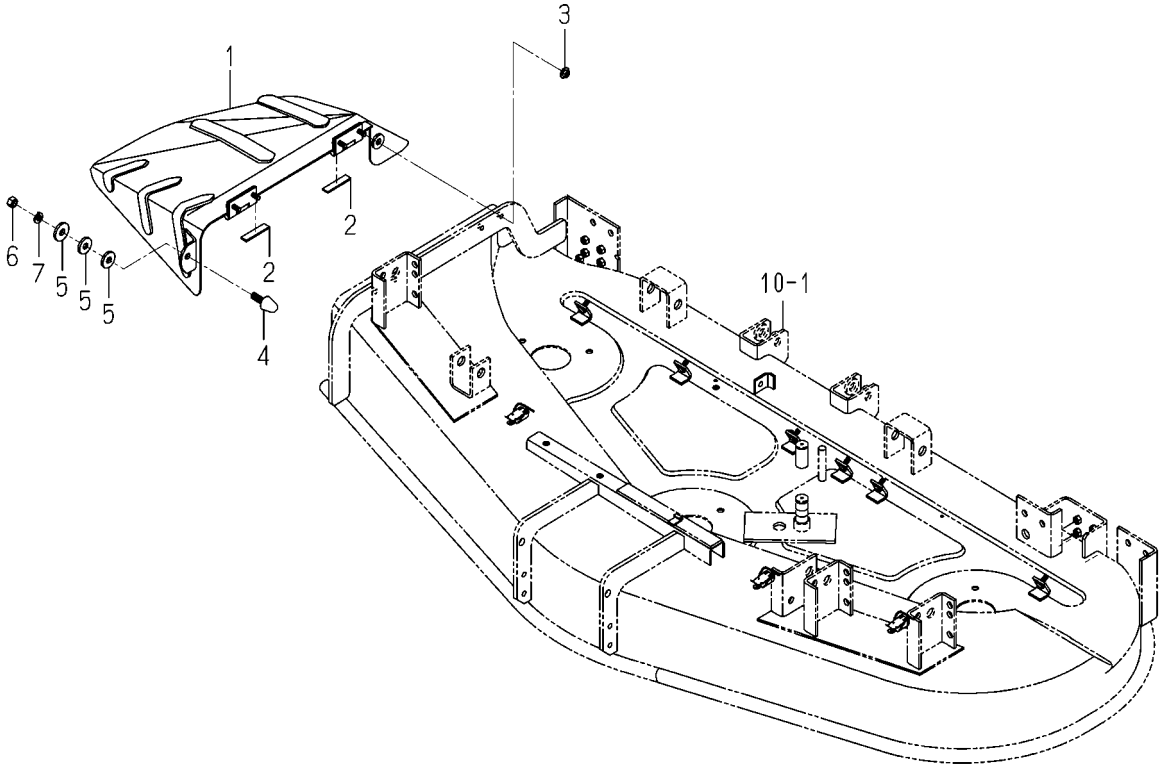

8655-406A-0100

KEY	PART CODE	DESCRIPTION	SPC	TYPE OF MODEL SSM60 SF370F	TYPE OF MODEL SSM72 SF370F	ITC	COL	GRP	REMARKS
1	8655-406-210-21	COVER/DISCHARGE COMP	*		1		4L		
2	P115-810-011-00	PLATE/03X15X65	*		2				
3	V363-260-008-00	NUT/WASHER	*		4				
4	8654-406-001-00	STOPPER/COVER	*		2				
5	3805-701-018-00	WASHER(13X34X05)	*		6				
6	V304-260-012-00	NUT/M12	*		2				
7	V401-160-012-00	WASHER,SP/M12	*		2				

FIG. 13 COVER(DISCHARGE)SYSTEM(SSM60)

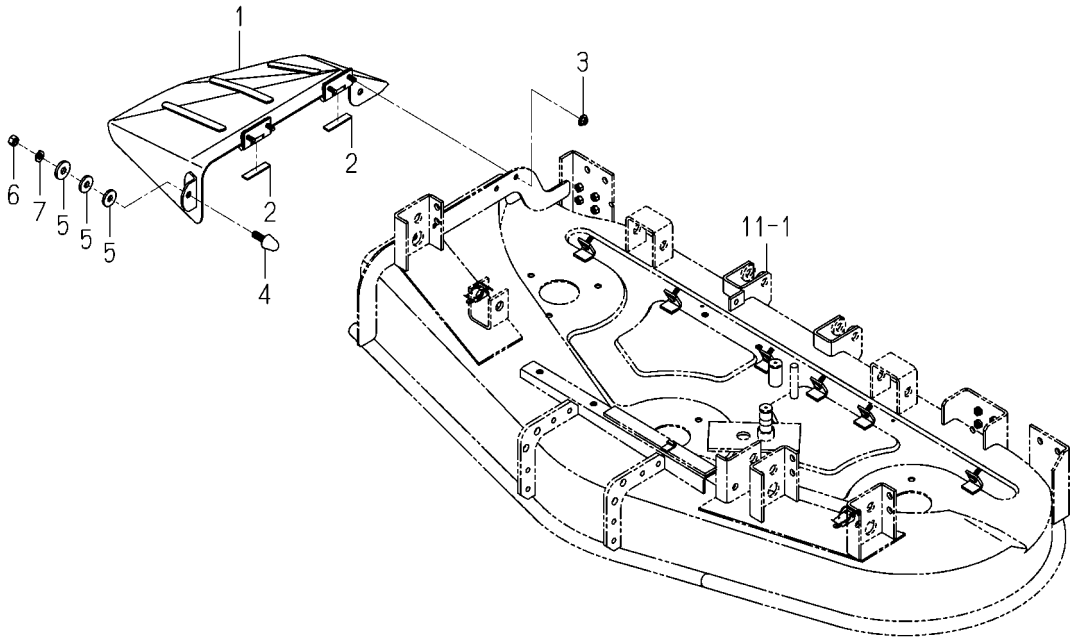

8654-406B-0100

KEY	PART CODE	DESCRIPTION	SPC	TYPE OF MODEL SSM60 SF370F	TYPE OF MODEL SSM72 SF370F	ITC	COL	GRP	REMARKS
1	8654-406-550-01	COVER/DISCHARGE COMP	*	1			4L		
2	P115-810-011-00	PLATE/03X15X65	*	2					
3	V363-260-008-00	NUT/WASHER	*	4					
4	8654-406-001-00	STOPPER/COVER	*	2					
5	3805-701-018-00	WASHER(13X34X05)	*	6					
6	V304-260-012-00	NUT/M12	*	2					
7	V401-160-012-00	WASHER,SP/M12	*	2					

FIG. 14 COVER(BELT)SYSTEM(SSM72)

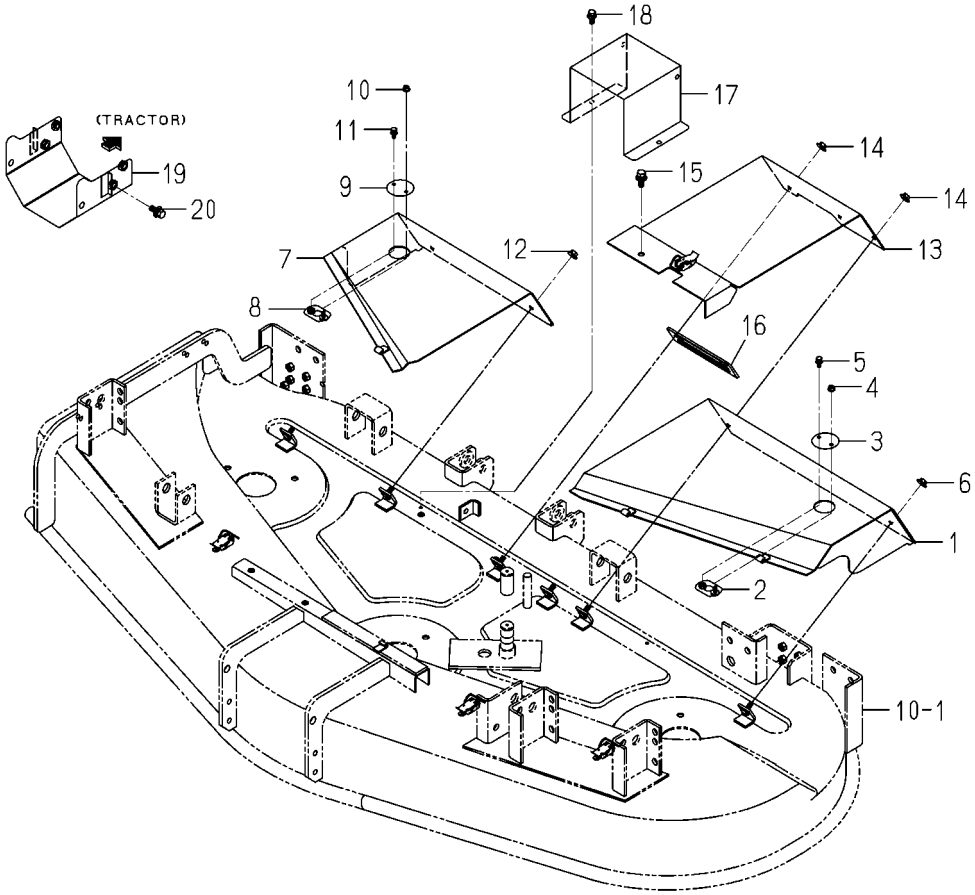

8655-407J-0100

KEY	PART CODE	DESCRIPTION	SPC	TYPE OF MODEL SSM60 SF370F	TYPE OF MODEL SSM72 SF370F	ITC	COL	GRP	REMARKS
1	8655-407-560-00	COVER/BELT/LH COMP	*		1		4L		
2	8654-407-270-10	CAP/LOWER COMP	*		1				
3	8654-407-009-00	CAP/UPPER	*		1				
4	V360-260-006-00	NUT/M6	*		1				
5	V210-360-601-60	BOLT(SP)/M6X16	*		1				
6	V363-260-008-00	NUT/WASHER	*		1				
7	8655-407-570-00	COVER/BELT/RH COMP	*		1		4L		
8	8654-407-270-10	CAP/LOWER COMP	*		1				
9	8654-407-009-00	CAP/UPPER	*		1				
10	V360-260-006-00	NUT/M6	*		1				
11	V210-360-601-60	BOLT(SP)/M6X16	*		1				
12	V363-260-008-00	NUT/WASHER	*		2				
13	8655-407-580-10	COVER/BELT/CENTER	*		1		4L		
14	V363-260-008-00	NUT/WASHER	*		3				
15	V211-361-002-50	BOLT/SP	*		1				
16	8654-407-004-00	COVER/TENSION	*		1				
17	8654-407-021-00	COVER/PTO	*		1				
18	V211-360-802-00	BOLT/SP	*		2				
19	8654-407-250-00	COVER/PTO COMP	*		1				
20	V211-361-002-50	BOLT/SP	*		4				

FIG. 15 COVER(BELT)SYSTEM(SSM60)

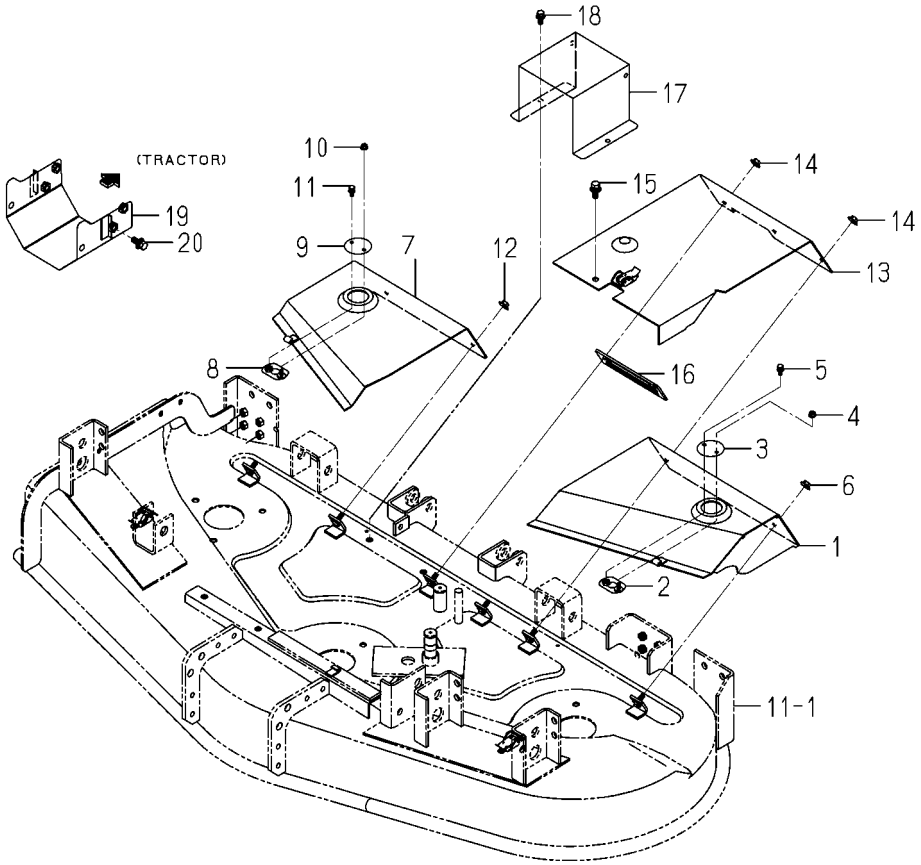

8654-407S-0100

KEY	PART CODE	DESCRIPTION	SPC	TYPE OF MODEL SSM60 SF370F	TYPE OF MODEL SSM72 SF370F	ITC	COL	GRP	REMARKS
1	8654-407-510-00	COVER/BELT/LH COMP	*	1			4L		
2	8654-407-270-10	CAP/LOWER COMP	*	1					
3	8654-407-009-00	CAP/UPPER	*	1					
4	V360-260-006-00	NUT/M6	*	1					
5	V210-360-601-60	BOLT(SP)/M6X16	*	1					
6	V363-260-008-00	NUT/WASHER	*	1					
7	8654-407-520-00	COVER/BELT/RH COMP	*	1			4L		
8	8654-407-270-10	CAP/LOWER COMP	*	1					
9	8654-407-009-00	CAP/UPPER	*	1					
10	V360-260-006-00	NUT/M6	*	1					
11	V210-360-601-60	BOLT(SP)/M6X16	*	1					
12	V363-260-008-00	NUT/WASHER	*	2					
13	8654-407-530-10	COVER/BELT/CENTER	*	1			4L		
14	V363-260-008-00	NUT/WASHER	*	3					
15	V211-361-002-50	BOLT/SP	*	1					
16	8654-407-004-00	COVER/TENSION	*	1					
17	8654-407-021-00	COVER/PTO	*	1					
18	V211-360-802-00	BOLT/SP	*	2					
19	8654-407-250-00	COVER/PTO COMP	*	1					
20	V211-361-002-50	BOLT/SP	*	4					

FIG. 16 WHEEL(GAUGE)SYSTEM(SSM60)

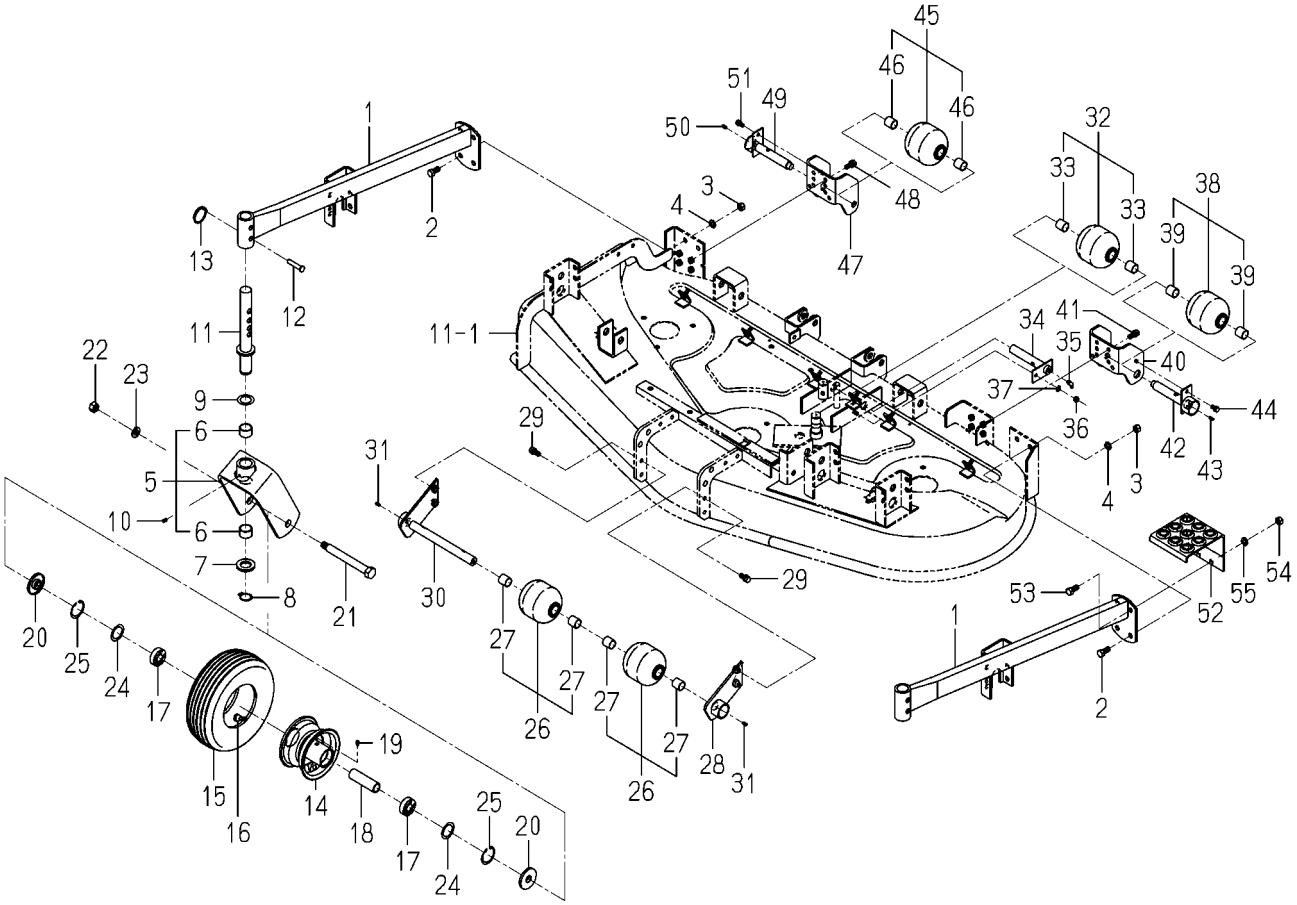

8654-501B-0100

KEY	PART CODE	DESCRIPTION	SPC	TYPE OF MODEL SSM60 SF370F	TYPE OF MODEL SSM72 SF370F	ITC	COL	GRP	REMARKS
1	8654-501-210-01	ARM/GAUGE COMP	*	2			4L		
2	V201-361-202-50	BOLT/M12X25	*	8					
3	V304-460-012-00	NUT/M12	*	8					
4	V401-160-012-00	WASHER,SP/M12	*	8					
5	8654-501-200-01	FORK/WHEEL ASSY	*	2			4L		
6	8654-501-201-00	BUSH/30X34X20	*	4					
7	3670-701-010-00	WASHER/30X50X05	*	2					
8	V704-140-030-00	RING,SNAP/30 C	*	2					
9	1427-432-005-00	COLLAR,THRUST	*	2					
10	V760-150-000-00	NIPPLE,GREASE	*	2					
11	8654-501-240-10	PIN/GAUGE COMP	*	2					
12	2144-106-005-00	PIN/10X53	*	2					
13	8654-501-006-10	SPRING/CLIP	*	2					
14	8654-501-340-20	RIM/GAUGEWHEEL	*	2			6G		
15	8654-501-321-10	TIRE/11X4.00-5	*	2					
16	8654-501-322-00	VALVE	*	2					
17	V600-140-620-40	BEARING,RB/6204RS	*	4					
18	8654-501-005-10	COLLAR/22X27X93	*	2					
19	V763-150-000-00	NIPPLE,GREASE/PT1/8	*	2					
20	8654-501-330-10	COLLAR/SEAL COMP	*	4					
21	8654-501-002-00	PIN/20X175	*	2					
22	V304-460-016-00	NUT/M16	*	2					
23	V401-160-016-00	WASHER,SP/M16	*	2					
24	8654-501-008-00	WASHER/34X47X01	*	4					
25	V705-140-047-00	RING,SNAP/47 C	*	4					
26	8654-501-280-10	ROLLER ASSY	*	2					
27	8654-501-283-00	BUSH/22X25X25	*	4					
28	8654-501-350-00	STAY/ROLLAR/F COMP	*	1					
29	V211-561-002-50	BOLT/M10X25	*	4					
30	8654-501-250-10	PIN/ROLLER/FRON COMP	*	1					

FIG. 16 WHEEL(GAUGE)SYSTEM(SSM60)

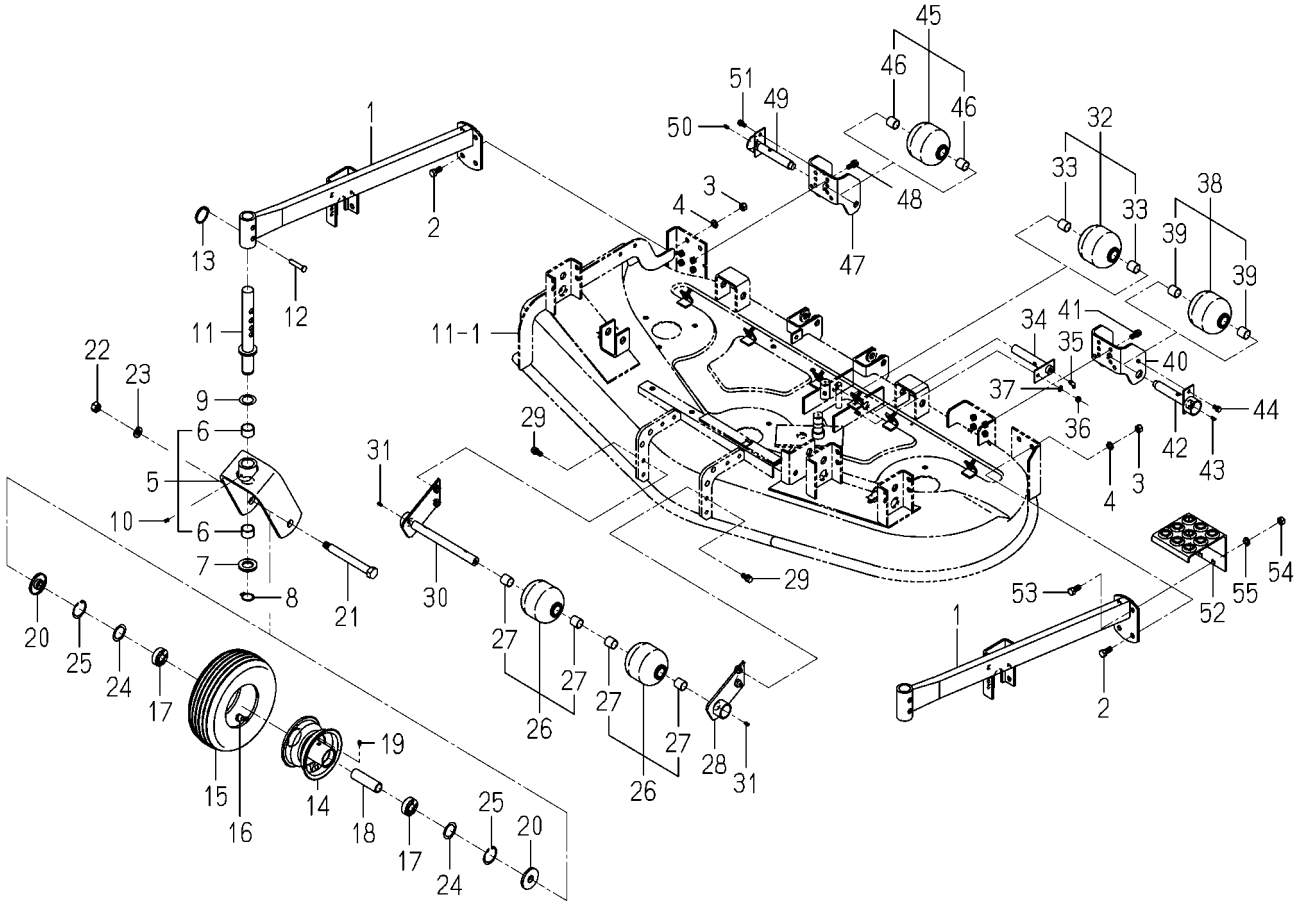

8654-501B-0100

KEY	PART CODE	DESCRIPTION	SPC	TYPE OF MODEL SSM60 SF370F	TYPE OF MODEL SSM72 SF370F	ITC	COL	GRP	REMARKS
31	3673-162-055-00	GREASE NIPPLE	*	2					
32	8654-501-280-10	ROLLER ASSY	*	1					
33	8654-501-283-00	BUSH/22X25X25	*	2					
34	8654-501-290-10	PIN/ROLLER/MID COMP	*	1					
35	V764-150-000-00	NIPPLE,GREASE/1/8	*	1					
36	V304-260-008-00	NUT	*	1					
37	V401-160-008-00	WASHER,SP/M 8	*	1					
38	8654-501-280-10	ROLLER ASSY	*	1					
39	8654-501-283-00	BUSH/22X25X25	*	2					
40	8654-501-004-20	STAY/ROLLER/REAR/LH	*	1					
41	V211-561-002-50	BOLT/M10X25	*	2					
42	8654-501-260-10	PIN/ROLLER/REAR COMP	*	1					
43	3673-162-055-00	GREASE NIPPLE	*	1					
44	V211-560-801-60	BOLT,SEMS	*	1					
45	8654-501-280-10	ROLLER ASSY	*	1					
46	8654-501-283-00	BUSH/22X25X25	*	2					
47	8654-501-007-20	STAY/ROLLER/REAR/RH	*	1					
48	V211-561-002-50	BOLT/M10X25	*	2					
49	8654-501-260-10	PIN/ROLLER/REAR COMP	*	1					
50	3673-162-055-00	GREASE NIPPLE	*	1					
51	V211-560-801-60	BOLT,SEMS	*	1					
52	8654-501-370-01	STEP/MOWER COMP	*	1			4L		
53	V201-361-202-50	BOLT/M12X25	*	2					
54	V304-460-012-00	NUT/M12	*	2					
55	V401-160-012-00	WASHER,SP/M12	*	2					

FIG. 17 WHEEL(GAUGE)SYSTEM(SSM72)

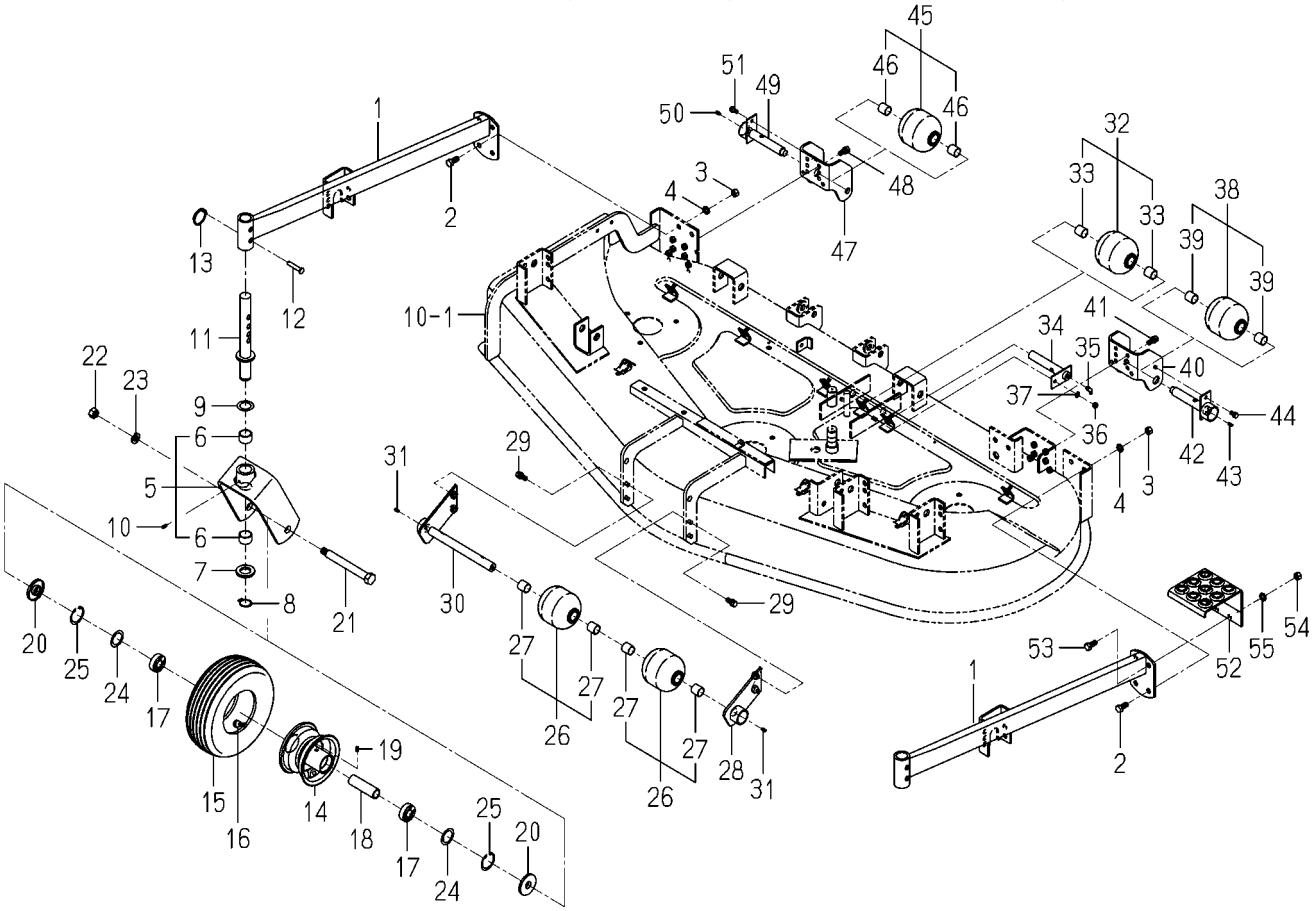

8655-501G-0100

KEY	PART CODE	DESCRIPTION	SPC	TYPE OF MODEL SSM60 SF370F	TYPE OF MODEL SSM72 SF370F	ITC	COL	GRP	REMARKS
1	8655-501-210-11	ARM/GAUGE COMP	*		2		4L		
2	V201-361-202-50	BOLT/M12X25	*		8				
3	V304-460-012-00	NUT/M12	*		8				
4	V401-160-012-00	WASHER,SP/M12	*		8				
5	8654-501-200-01	FORK/WHEEL ASSY	*		2		4L		
6	8654-501-201-00	BUSH/30X34X20	*		4				
7	3670-701-010-00	WASHER/30X50X05	*		2				
8	V704-140-030-00	RING,SNAP/30 C	*		2				
9	1427-432-005-00	COLLAR,THRUST	*		2				
10	V760-150-000-00	NIPPLE,GREASE	*		2				
11	8654-501-240-10	PIN/GAUGE COMP	*		2				
12	2144-106-005-00	PIN/10X53	*		2				
13	8654-501-006-10	SPRING/CLIP	*		2				
14	8654-501-340-20	RIM/GAUGEWHEEL	*		2		6G		
15	8654-501-321-10	TIRE/11X4.00-5	*		2				
16	8654-501-322-00	VALVE	*		2				
17	V600-140-620-40	BEARING,RB/6204RS	*		4				
18	8654-501-005-10	COLLAR/22X27X93	*		2				
19	V763-150-000-00	NIPPLE,GREASE/PT1/8	*		2				
20	8654-501-330-10	COLLAR/SEAL COMP	*		4				
21	8654-501-002-00	PIN/20X175	*		2				
22	V304-460-016-00	NUT/M16	*		2				
23	V401-160-016-00	WASHER,SP/M16	*		2				
24	8654-501-008-00	WASHER/34X47X01	*		4				
25	V705-140-047-00	RING,SNAP/47 C	*		4				
26	8654-501-280-10	ROLLER ASSY	*		2				
27	8654-501-283-00	BUSH/22X25X25	*		4				
28	8654-501-350-00	STAY/ROLLAR/F COMP	*		1				
29	V211-561-002-50	BOLT/M10X25	*		4				
30	8654-501-250-10	PIN/ROLLER/FRON COMP	*		1				

FIG. 17 WHEEL(GAUGE)SYSTEM(SSM72)

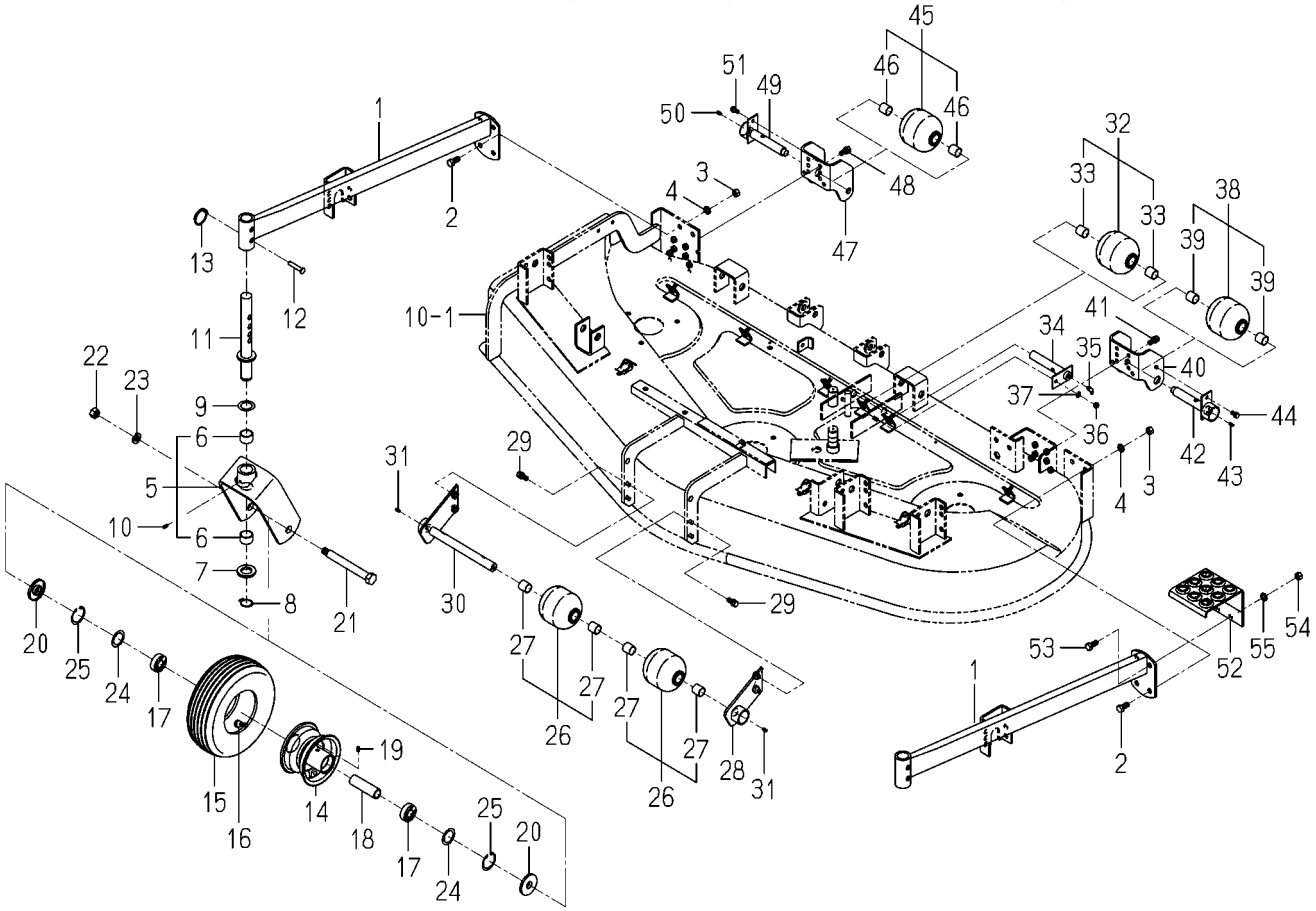

8655-501G-0100

KEY	PART CODE	DESCRIPTION	SPC	TYPE OF MODEL SSM60 SF370F	TYPE OF MODEL SSM72 SF370F	ITC	COL	GRP	REMARKS
31	3673-162-055-00	GREASE NIPPLE	*		2				
32	8654-501-280-10	ROLLER ASSY	*		1				
33	8654-501-283-00	BUSH/22X25X25	*		2				
34	8654-501-290-10	PIN/ROLLER/MID COMP	*		1				
35	V764-150-000-00	NIPPLE,GREASE/1/8	*		1				
36	V304-260-008-00	NUT	*		1				
37	V401-160-008-00	WASHER,SP/M 8	*		1				
38	8654-501-280-10	ROLLER ASSY	*		1				
39	8654-501-283-00	BUSH/22X25X25	*		2				
40	8654-501-004-20	STAY/ROLLER/REAR/LH	*		1				
41	V211-561-002-50	BOLT/M10X25	*		2				
42	8654-501-260-10	PIN/ROLLER/REAR COMP	*		1				
43	3673-162-055-00	GREASE NIPPLE	*		1				
44	V211-560-801-60	BOLT,SEMS	*		1				
45	8654-501-280-10	ROLLER ASSY	*		1				
46	8654-501-283-00	BUSH/22X25X25	*		2				
47	8654-501-007-20	STAY/ROLLER/REAR/RH	*		1				
48	V211-561-002-50	BOLT/M10X25	*		2				
49	8654-501-260-10	PIN/ROLLER/REAR COMP	*		1				
50	3673-162-055-00	GREASE NIPPLE	*		1				
51	V211-560-801-60	BOLT,SEMS	*		1				
52	8654-501-370-01	STEP/MOWER COMP	*		1		4L		
53	V201-361-202-50	BOLT/M12X25	*		2				
54	V304-460-012-00	NUT/M12	*		2				
55	V401-160-012-00	WASHER,SP/M12	*		2				

FIG. 18 LINK(LIFT)SYSTEM(SSM60)

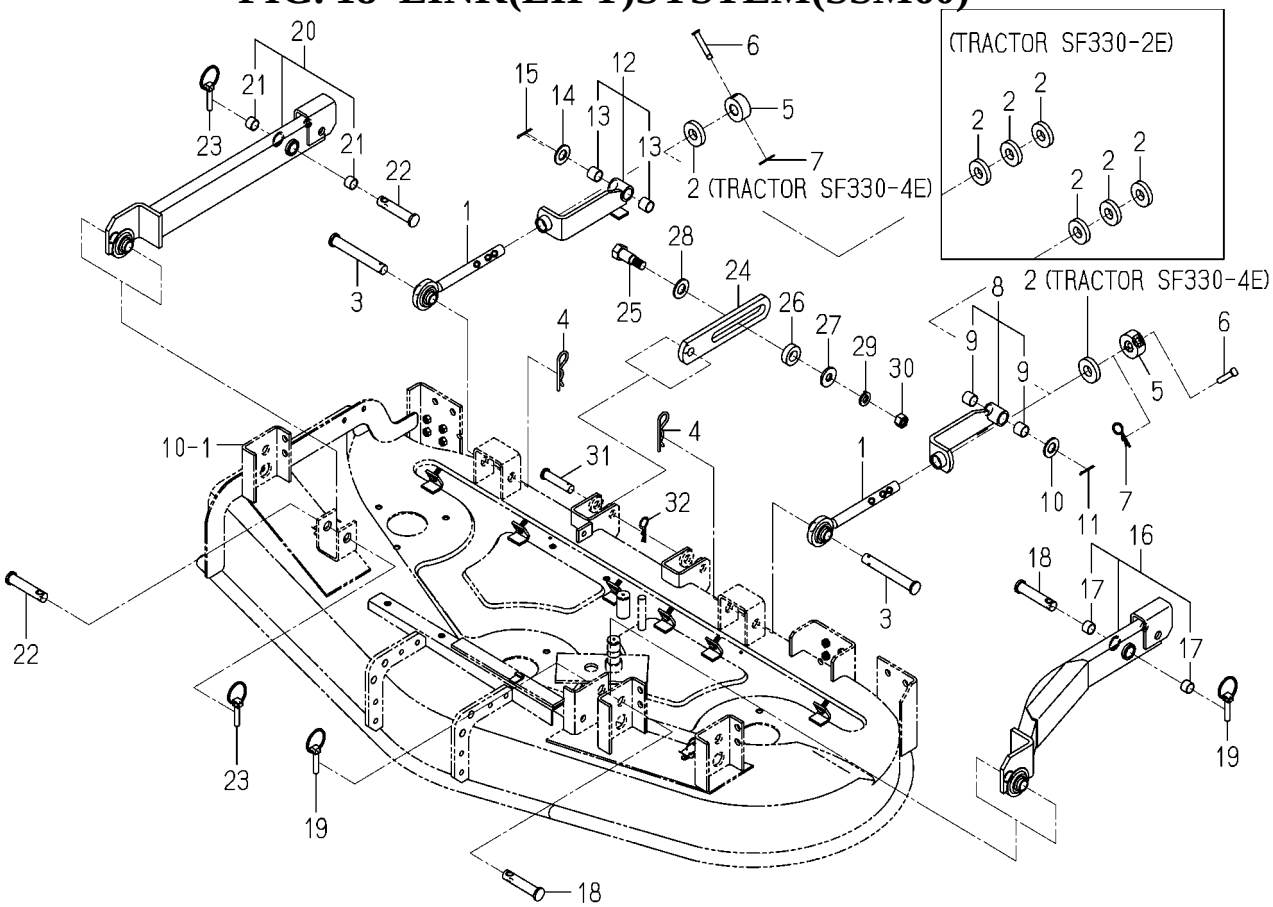

8654-510A-0100

KEY	PART CODE	DESCRIPTION	SPC	TYPE OF MODEL SSM60 SF370F	TYPE OF MODEL SSM72 SF370F	ITC	COL	GRP	REMARKS
1	8654-510-240-10	ROD COMP	*	2					
2	8654-510-002-00	SPACER	*	6					
3	8654-510-007-10	PIN/19X139	*	2					
4	1444-514-005-10	PIN,HAIR (19)	*	2					
5	8654-510-009-10	STAY/ROD	*	2					
6	8654-510-013-00	PIN/10X57	*	2					
7	7957-501-004-00	PIN,HAIR	*	2					
8	8654-510-560-00	PLATE/LIFT/LH ASSY	*	1			4L		
9	8650-203-001-10	BUSH/20X23X20	*	2					
10	V411-260-020-00	WASHER/M20	*	1					
11	V500-164-003-00	PIN,SPLIT/4 X30	*	1					
12	8654-510-580-00	PLATE/LIFT/RH ASSY	*	1			4L		
13	8650-203-001-10	BUSH/20X23X20	*	2					
14	V411-260-020-00	WASHER/M20	*	1					
15	V500-164-003-00	PIN,SPLIT/4 X30	*	1					
16	8654-510-260-21	ARM/LH ASSY	*	1			4L		
17	8654-510-261-00	BUSH/19X22X15	*	2					
18	8654-510-001-00	PIN/19X92	*	2					
19	1673-525-002-30	LINKPIN	*	2					
20	8654-510-270-21	ARM/RH ASSY	*	1			4L		
21	8654-510-261-00	BUSH/19X22X15	*	2					
22	8654-510-001-00	PIN/19X92	*	2					
23	1673-525-002-30	LINKPIN	*	2					
24	8654-510-056-00	ARM/REAR	*	2					
25	8654-510-006-20	BOLT/M16X59	*	2					
26	8654-510-011-00	COLLAR/22X40X13	*	2					
27	8654-510-012-10	WASHER/16X40X05	*	2					
28	V411-260-020-00	WASHER/M20	*	2					
29	V401-160-016-00	WASHER,SP/M16	*	2					
30	V304-460-016-00	NUT/M16	*	2					

FIG. 18 LINK(LIFT)SYSTEM(SSM60)

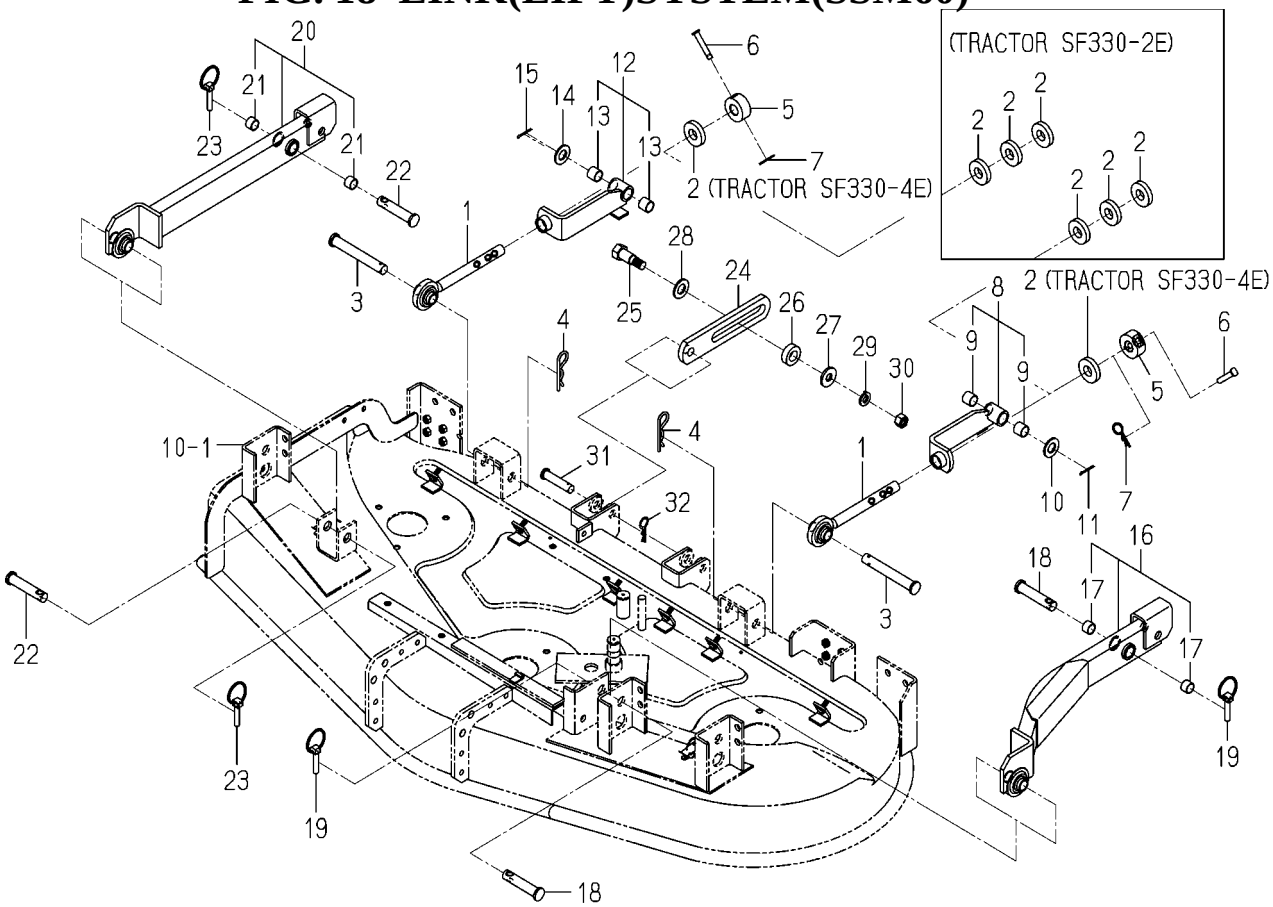

8654-510A-0100

KEY	PART CODE	DESCRIPTION	SPC	TYPE OF MODEL SSM60 SF370F	TYPE OF MODEL SSM72 SF370F	ITC	COL	GRP	REMARKS
31	8654-510-008-10	PIN/16X71	*	2					
32	7957-405-003-00	PIN/HAIR	*	2					

FIG. 19 LINK(LIFT)SYSTEM(SSM72)

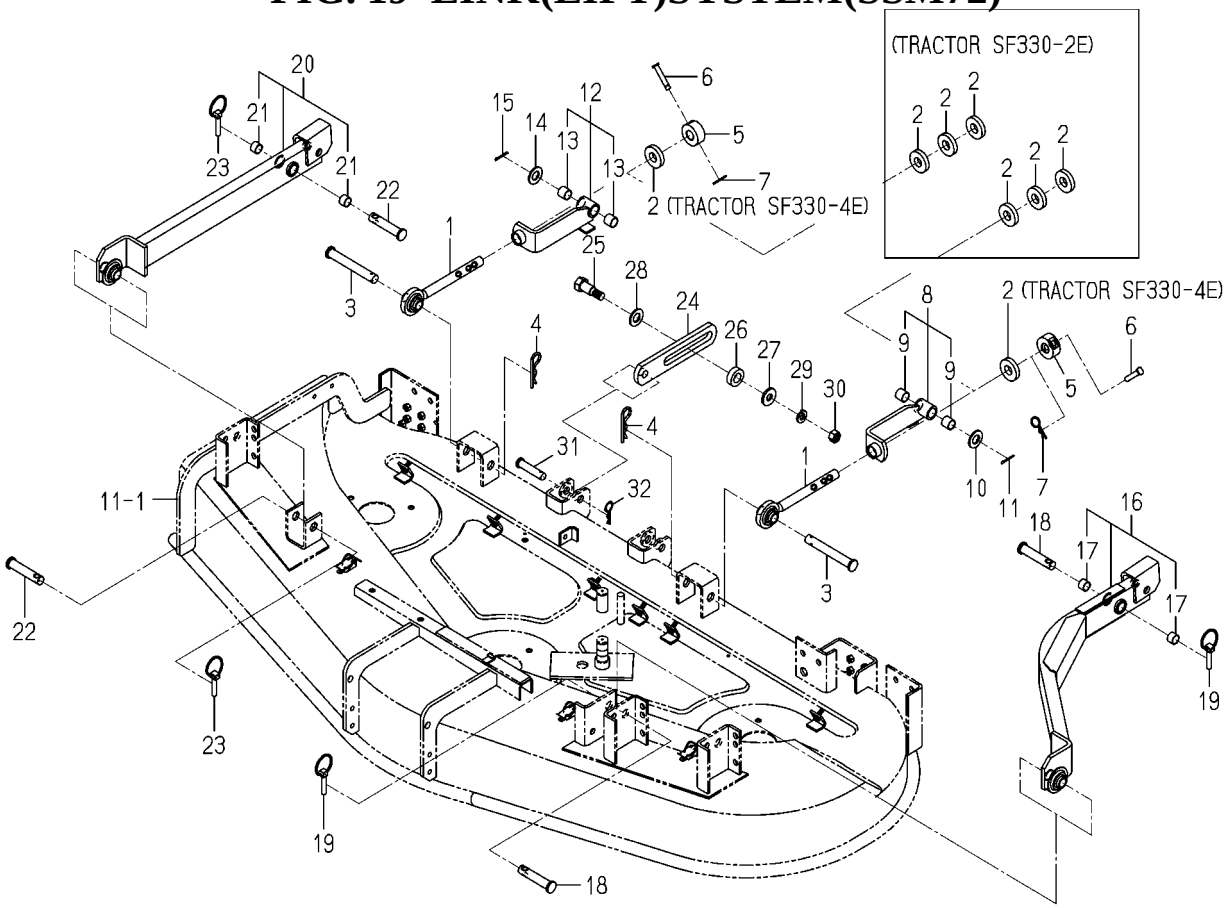

8655-510C-0100

KEY	PART CODE	DESCRIPTION	SPC	TYPE OF MODEL SSM60 SF370F	TYPE OF MODEL SSM72 SF370F	ITC	COL	GRP	REMARKS
1	8654-510-240-10	ROD COMP	*		2				
2	8654-510-002-00	SPACER	*		6				
3	8654-510-007-10	PIN/19X139	*		2				
4	1444-514-005-10	PIN,HAIR (19)	*		2				
5	8654-510-009-10	STAY/ROD	*		2				
6	8654-510-013-00	PIN/10X57	*		2				
7	7957-501-004-00	PIN,HAIR	*		2				
8	8654-510-560-00	PLATE/LIFT/LH ASSY	*		1		4L		
9	8650-203-001-10	BUSH/20X23X20	*		2				
10	V411-260-020-00	WASHER/M20	*		1				
11	V500-164-003-00	PIN,SPLIT/4 X30	*		1				
12	8654-510-580-00	PLATE/LIFT/RH ASSY	*		1		4L		
13	8650-203-001-10	BUSH/20X23X20	*		2				
14	V411-260-020-00	WASHER/M20	*		1				
15	V500-164-003-00	PIN,SPLIT/4 X30	*		1				
16	8655-510-260-11	ARM/LH ASSY	*		1		4L		
17	8654-510-261-00	BUSH/19X22X15	*		2				
18	8654-510-001-00	PIN/19X92	*		2				
19	1673-525-002-30	LINKPIN	*		2				
20	8655-510-270-11	ARM/RH ASSY	*		1		4L		
21	8654-510-261-00	BUSH/19X22X15	*		2				
22	8654-510-001-00	PIN/19X92	*		2				
23	1673-525-002-30	LINKPIN	*		2				
24	8654-510-056-00	ARM/REAR	*		2				
25	8654-510-006-20	BOLT/M16X59	*		2				
26	8654-510-011-00	COLLAR/22X40X13	*		2				
27	8654-510-012-10	WASHER/16X40X05	*		2				
28	V411-260-020-00	WASHER/M20	*		2				
29	V401-160-016-00	WASHER,SP/M16	*		2				
30	V304-460-016-00	NUT/M16	*		2				

FIG. 19 LINK(LIFT)SYSTEM(SSM72)

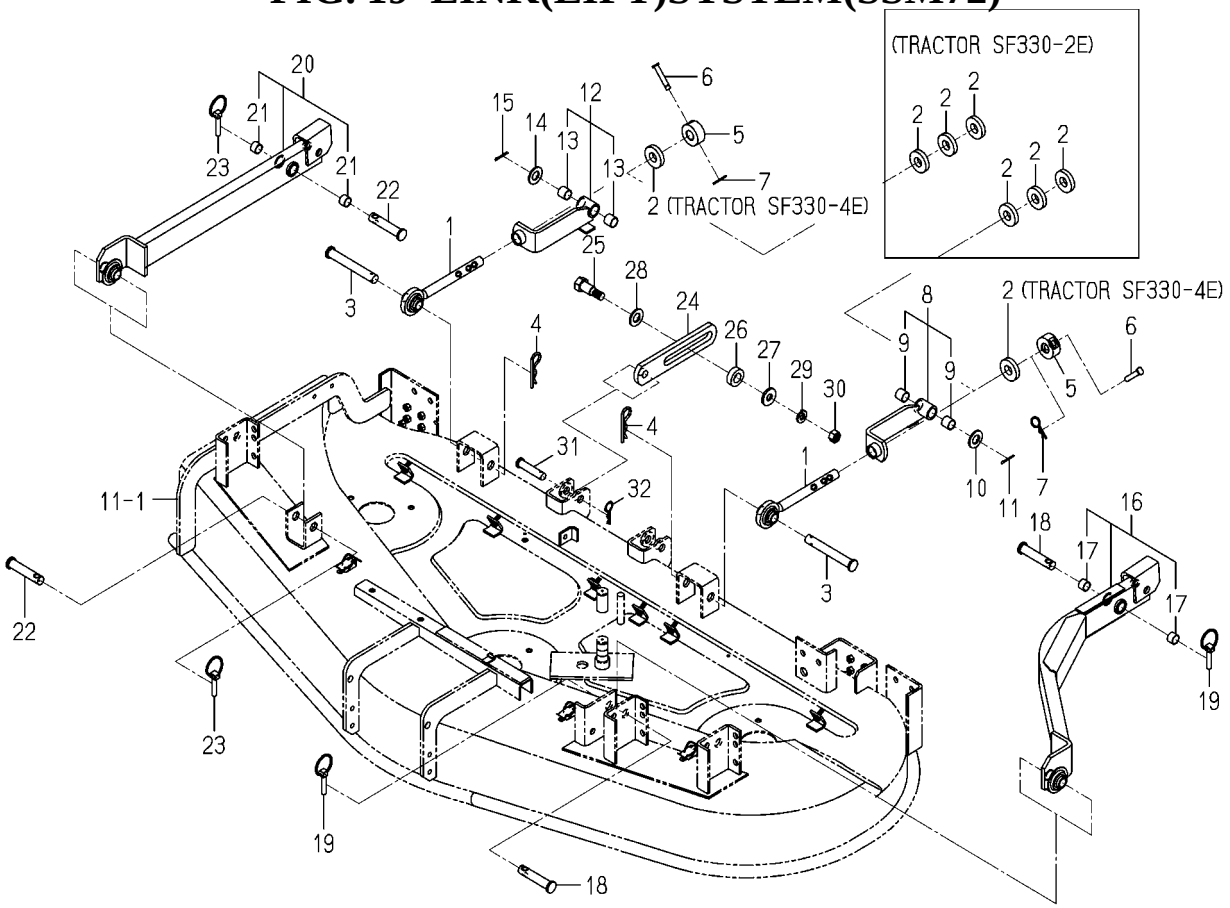

8655-510C-0100

KEY	PART CODE	DESCRIPTION	SPC	TYPE OF MODEL SSM60 SF370F	TYPE OF MODEL SSM72 SF370F	ITC	COL	GRP	REMARKS
31	8654-510-008-10	PIN/16X71	*		2				
32	7957-405-003-00	PIN/HAIR	*		2				

FIG. 20 LABEL

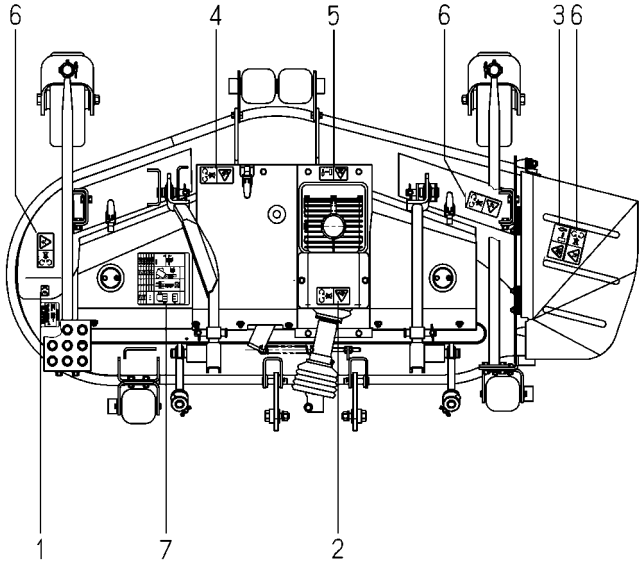

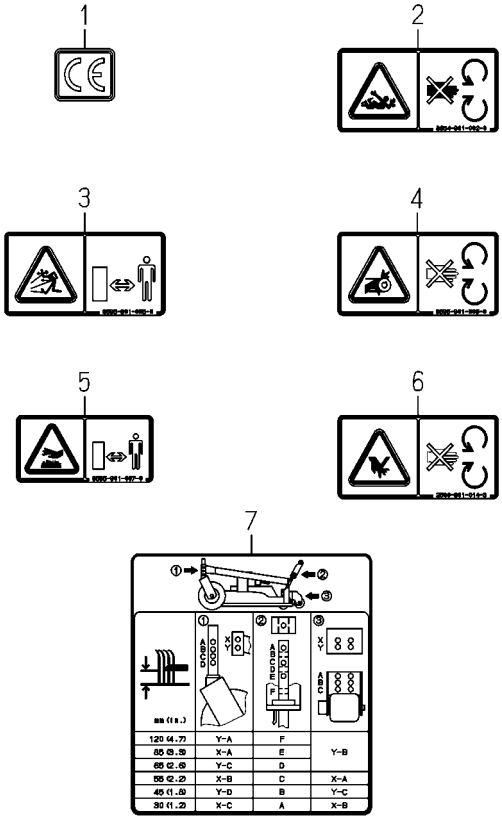

8654-901 -0100

KEY	PART CODE	DESCRIPTION	SPC	TYPE OF MODEL SSM60 SF370F	TYPE OF MODEL SSM72 SF370F	ITC	COL	GRP	REMARKS
1	2500-901-027-00	LABEL/CE	*	1	1				
2	8654-901-002-00	LABEL/PTO	*	1	1				
3	8595-901-005-00	LABEL/DANGER/DISCHAR	*	1	1				
4	8595-901-006-00	LABEL/WARNING/BELT	*	1	1				
5	8595-901-007-00	LABEL/WARNING/HOT	*	1	1				
6	2500-901-014-30	LABEL/DANGER	*	3	3				
7	8654-901-003-00	LABEL/CUTTING	*	1	1				

FIG. 21 SHIM SET(REPAIR)

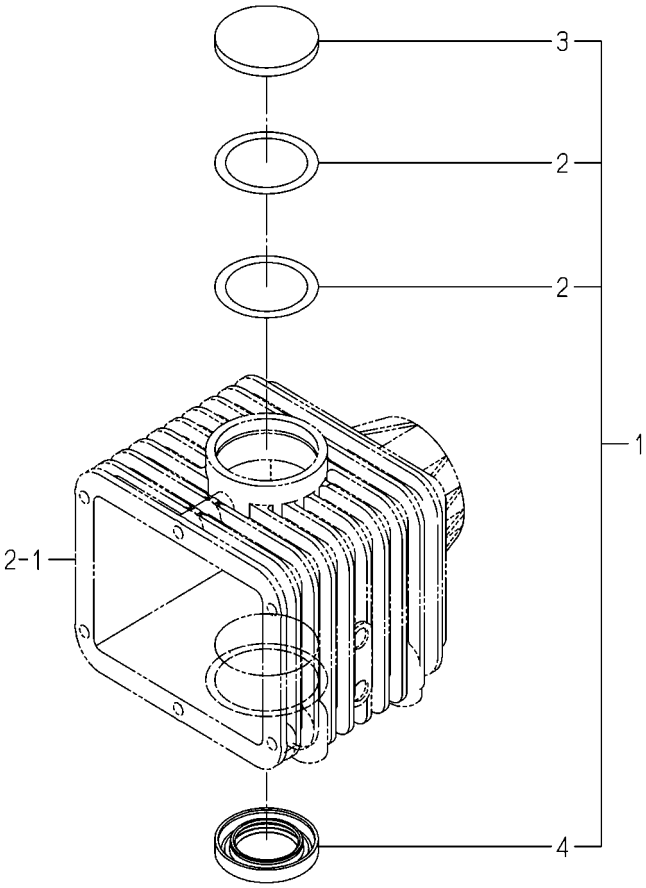

8654-201U-0100

KEY	PART CODE	DESCRIPTION	SPC	TYPE OF MODEL SSM60 SF370F	TYPE OF MODEL SSM72 SF370F	ITC	COL	GRP	REMARKS
1	8654-201-300-00	SHIM SET	R	1	1				
2	8654-201-012-00	SHIM/0.2	R	2	2				
3	3640-547-007-00	PLUG,CAP/62X6	R	1	1				
4	1614-244-005-00	SEAL/OIL	R	1	1				

FIG. 22 CASE(BEVEL)ASSY(REPAIR)

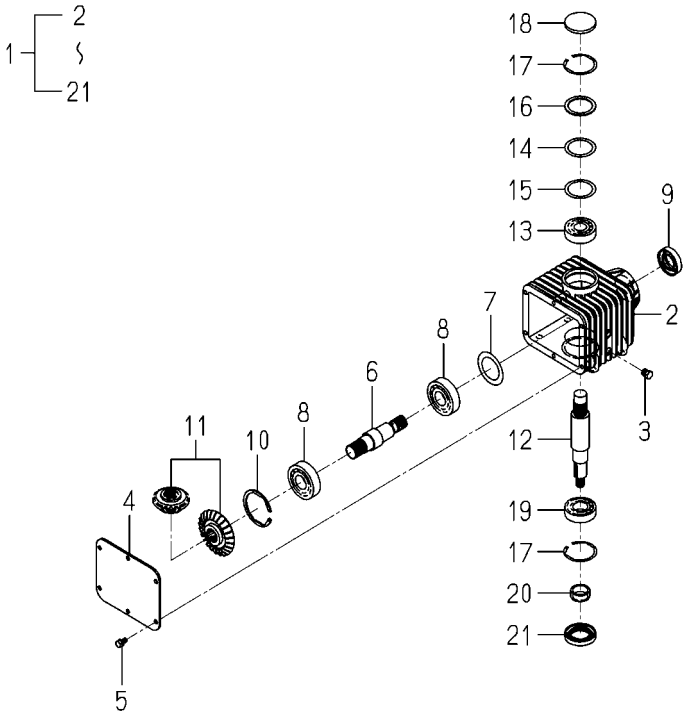

8654-201Z-0100

KEY	PART CODE	DESCRIPTION	SPC	TYPE OF MODEL SSM60 SF370F	TYPE OF MODEL SSM72 SF370F	ITC	COL	GRP	REMARKS
1	8654-201-200-00	CASE/BEVEL ASSY	R	1	1				
2	8654-201-001-20	CASE/BEVEL	R	1	1				
3	7955-201-026-00	PLUG,DRAIN (1/4)	R	2	2				
4	8654-201-011-00	COVER/CASE	R	1	1				
5	V211-560-801-60	BOLT,SEMS	R	6	6				
6	8654-201-002-00	SHAFT/INPUT	R	1	1				
7	8654-201-015-00	COLLAR/48X70X01	R	1	1				
8	7932-201-002-00	BEARING,RB/6306SH2	R	2	2				
9	V744-130-551-20	SEAL,OIL/TC305512	R	1	1				
10	V707-140-072-00	RING/SNAP	R	1	1				
11	8654-201-210-00	GEAR/BEVEL/24-1 SET	R	1	1				
12	8654-201-003-00	SHAFT/OUTPUT	R	1	1				
13	1594-218-001-00	BEARING/BALL 6305SH2	R	1	1				
14	8654-201-008-00	SHIM/0.1	R	1	1				
15	8654-201-009-00	SHIM/0.2	R	1	1				
16	8654-201-007-00	COLLAR/49X62X02	R	1	1				
17	V707-140-062-00	RING/SNAP	R	2	2				
18	3640-547-007-00	PLUG,CAP/62X6	R	1	1				
19	V600-110-620-60	BEARING,RB/6206	R	1	1				
20	1614-244-002-00	SLEEVE	R	1	1				
21	1614-244-005-00	SEAL/OIL	R	1	1				

FIG. 23 DECK(MOWER/72/ICT)COMP(REPAIR)

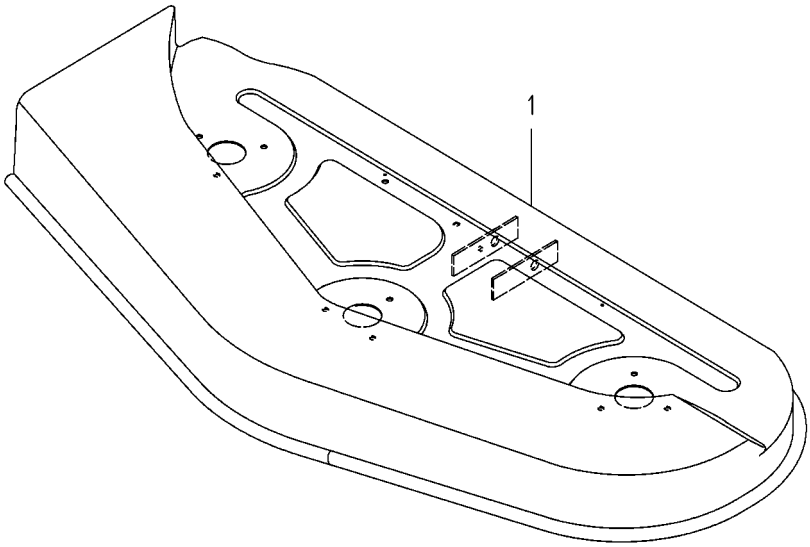

8655-403Y-0100

KEY	PART CODE	DESCRIPTION	SPC	TYPE OF MODEL SSM60 SF370F	TYPE OF MODEL SSM72 SF370F	ITC	COL	GRP	REMARKS
1	8655-403-560-00	DECK/MOWER/72/ICT	R		1				

FIG. 24 SAFETY(SF370)SET(SSM60)(REPAIR)

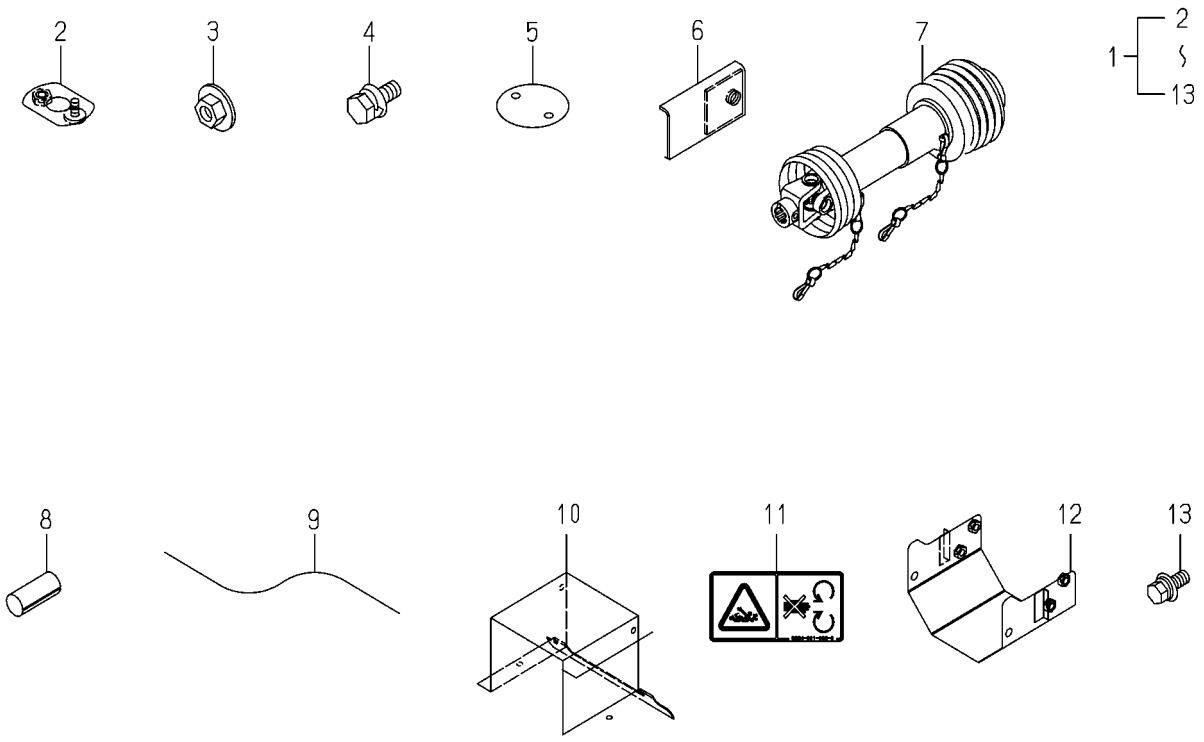

8654-950B-0100

KEY	PART CODE	DESCRIPTION	SPC	TYPE OF MODEL SSM60 SF370F	TYPE OF MODEL SSM72 SF370F	ITC	COL	GRP	REMARKS
1	8654-950-300-30	SAFTY/SF370 SET	R	1					
2	8654-407-270-10	CAP/LOWER COMP	R	2					
3	V361-260-006-00	NUT	R	2					
4	V210-360-601-60	BOLT(SP)/M6X16	R	2					
5	8654-407-009-00	CAP/UPPER	R	2					
6	8654-950-310-00	STOPPER COMP	R	1					
7	8654-101-300-00	JOINT/UNIVERSAL SET	R	1					FIG 026
8	V580-140-804-00	PIN,SPRING/8 X40 W	R	1					
9		WIRE	R	1					
10	8654-950-320-00	COVER/PTO COMP	R	1					
11	8654-901-002-00	LABEL/PTO	R	2					
12	8654-407-250-00	COVER/PTO COMP	R	1					
13	V211-361-002-50	BOLT/SP	R	2					

FIG. 25 SAFETY(SF370)SET(SSM72)(REPAIR)

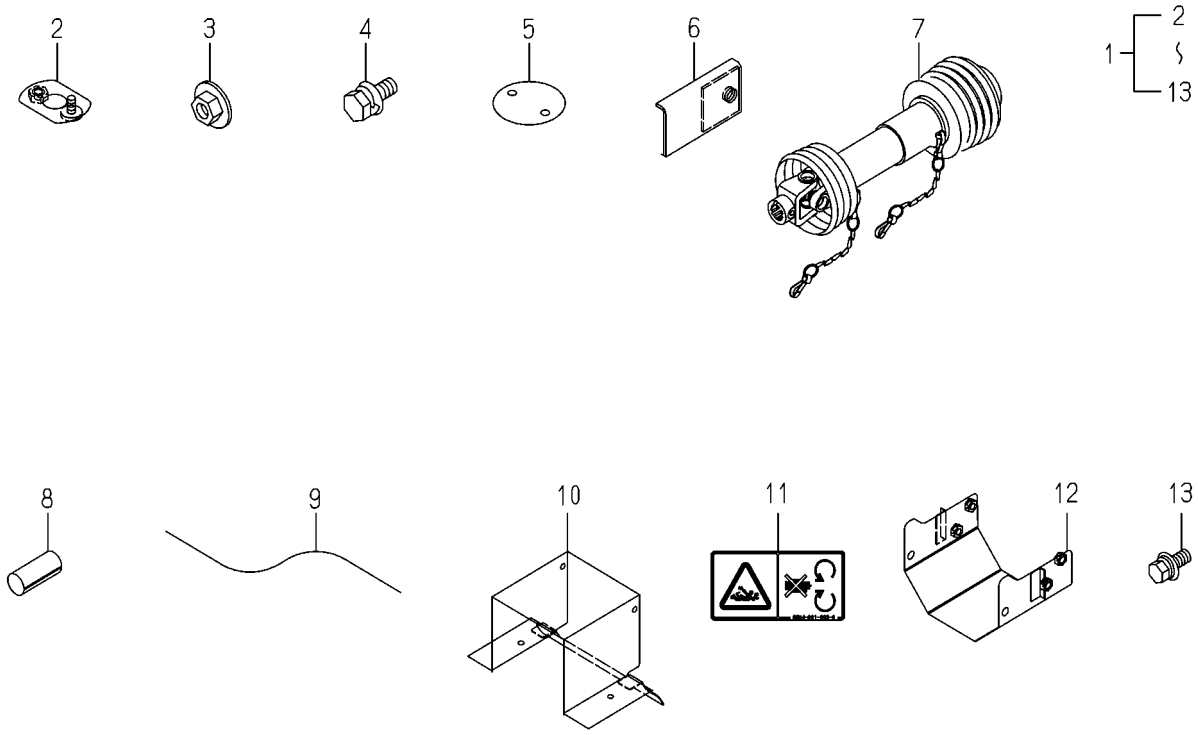

8655-950B-0100

KEY	PART CODE	DESCRIPTION	SPC	TYPE OF MODEL SSM60 SF370F	TYPE OF MODEL SSM72 SF370F	ITC	COL	GRP	REMARKS
1	8655-950-300-30	SAFETY/SF370 SET	R		1				
2	8654-407-270-10	CAP/LOWER COMP	R		2				
3	V361-260-006-00	NUT	R		2				
4	V210-360-601-60	BOLT(SP)/M6X16	R		2				
5	8654-407-009-00	CAP/UPPER	R		2				
6	8654-950-310-00	STOPPER COMP	R		1				
7	8654-101-300-00	JOINT/UNIVERSAL SET	R		1				FIG 026
8	V580-140-804-00	PIN,SPRING/8 X40 W	R		1				
9		WIRE	R		1				
10	8655-950-310-00	COVER/PTO COMP	R		1				
11	8654-901-002-00	LABEL/PTO	R		2				
12	8654-407-250-00	COVER/PTO COMP	R		1				
13	V211-361-002-50	BOLT/SP	R		2				

FIG. 26 COMPONENT PARTS FOR 8654-101-300-00 ON Fig.1

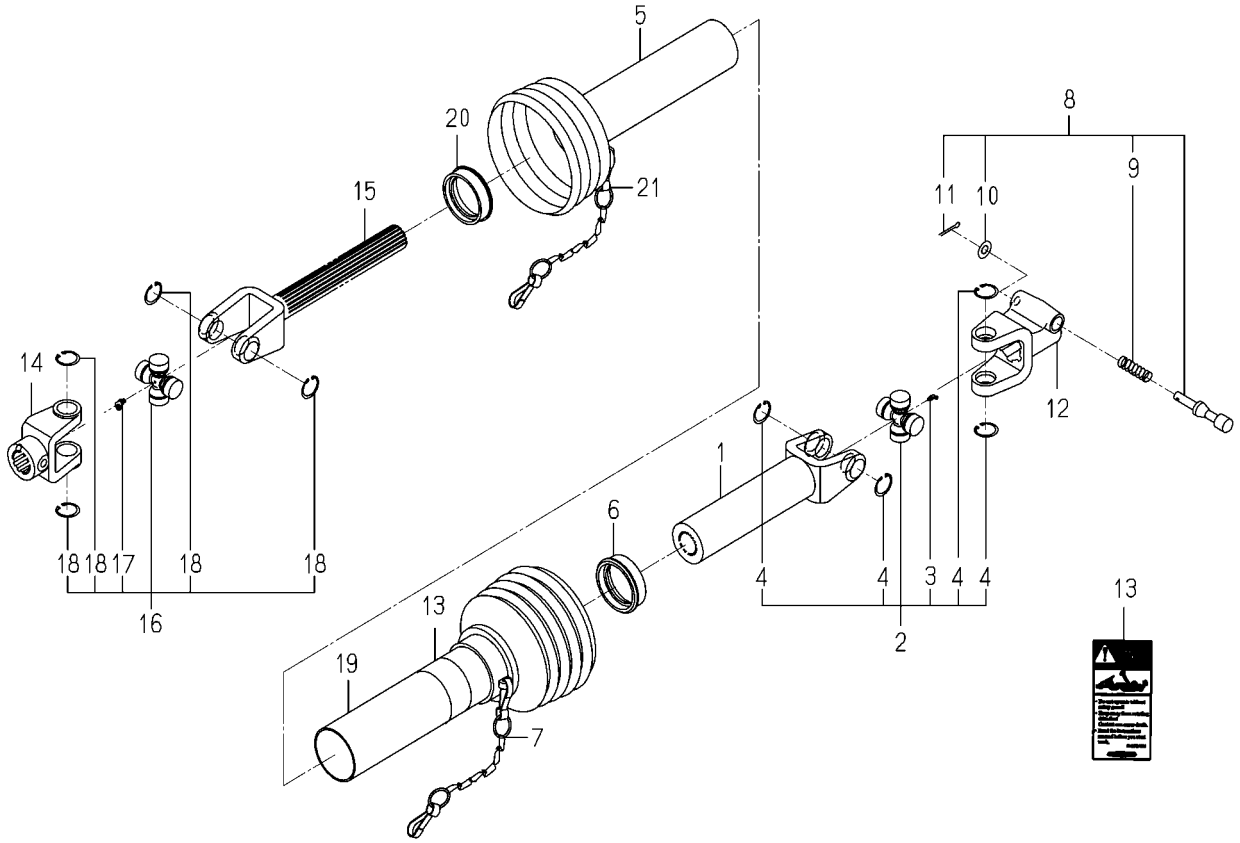

8654-101-300-0A

KEY	PART CODE	DESCRIPTION	SPC	TYPE OF MODEL SSM60 SF370F	TYPE OF MODEL SSM72 SF370F	ITC	COL	GRP	REMARKS
1	8654-101-311-00	SLEEVEYOKE ASSY	*	1	1				
2	8654-101-230-00	JOURNALCROSSE ASSY	*	1	1				
3	8654-101-232-00	GREASENIPPLE	*	1	1				
4	8654-101-233-00	SURCLIP/HOLE	*	4	4				
5	8654-101-312-00	SAFETYGUARD/IN	*	1	1				
6	7821-102-008-00	RING/SLIDE	*	1	1				
7	7821-102-220-00	CHAIN ASSY	*	1	1				
8	7821-102-260-00	PIN/14X75 SET	*	1	1				
9	7821-102-013-00	SPRING	*	1	1				
10	V411-260-008-00	WASHER,PL/M 8	*	1	1				
11	V500-163-002-00	PIN,SPLIT/3 X20	*	1	1				
12	8654-101-211-00	QUICKDISCONNECTYOKE	*	1	1				
13	8658-101-674-00	LABEL/DANGER/JOINT/G	*	1	1				
14	8654-101-221-00	FITTINGYOKE	*	1	1				
15	8654-101-321-00	SHAFTYOKE ASSY	*	1	1				
16	8654-101-230-00	JOURNALCROSSE ASSY	*	1	1				
17	8654-101-232-00	GREASENIPPLE	*	1	1				
18	8654-101-233-00	SURCLIP/HOLE	*	4	4				
19	8654-101-322-00	SAFETYGUARD/OUT	*	1	1				
20	7821-102-008-00	RING/SLIDE	*	1	1				
21	7821-102-220-00	CHAIN ASSY	*	1	1				

Numerical Index

Part Code	Fig.	Key
1427-432-005-00	16	9
	17	9
1434-211-004-00	4	3
	5	3
1444-514-005-10	18	4
	19	4
1594-218-001-00	2	14
	3	14
	22	13
1614-244-002-00	2	21
	3	21
	22	20
1614-244-005-00	2	22
	3	22
	21	4
	22	21
1673-525-002-30	18	19
	18	23
	19	19
	19	23
2144-106-005-00	16	12
	17	12
2500-901-014-30	20	6
2500-901-027-00	20	1
3640-547-007-00	2	19
	3	19
	21	3
	22	18
3666-222-003-00	6	3
	6	18
3670-701-010-00	16	7
	17	7
3673-162-055-00	16	31
	16	43
	16	50
	17	31
	17	43
	17	50
3746-111-011-00	4	4
	4	9
	5	4
	5	9
3805-701-018-00	12	5
	13	5
7821-102-008-00	26	6

Part Code	Fig.	Key
7821-102-008-00	26	20
7821-102-013-00	26	9
7821-102-220-00	26	7
	26	21
7821-102-260-00	26	8
7932-201-002-00	2	9
	3	9
	22	8
7955-201-026-00	2	2
	3	2
	22	3
7957-405-003-00	18	32
	19	32
7957-501-004-00	18	7
	19	7
8595-306-005-10	8	2
	9	2
8595-306-006-00	8	3
	9	3
8595-306-007-00	8	4
	9	4
8595-901-005-00	20	3
8595-901-006-00	20	4
8595-901-007-00	20	5
8650-203-001-10	18	9
	18	13
	19	9
	19	13
8654-101-211-00	26	12
8654-101-221-00	26	14
8654-101-230-00	26	2
	26	16
8654-101-232-00	26	3
	26	17
8654-101-233-00	26	4
	26	18
8654-101-300-00	1	1
	24	7
	25	7
8654-101-311-00	26	1
8654-101-312-00	26	5
8654-101-321-00	26	15
8654-101-322-00	26	19
8654-201-001-20	2	1
	3	1

Part Code	Fig.	Key
8654-201-001-20	22	2
8654-201-002-00	2	7
	3	7
	22	6
8654-201-003-00	2	13
	3	13
	22	12
8654-201-007-00	2	17
	3	17
	22	16
8654-201-008-00	2	15
	3	15
	22	14
8654-201-009-00	2	16
	3	16
	22	15
8654-201-011-00	2	5
	3	5
	22	4
8654-201-012-00	21	2
8654-201-015-00	2	8
	3	8
	22	7
8654-201-200-00	22	1
8654-201-210-00	2	12
	3	12
	22	11
8654-201-220-10	2	23
8654-201-300-00	21	1
8654-202-001-10	4	1
	5	1
8654-202-002-20	4	7
8654-202-003-10	4	12
	5	12
8654-202-004-10	4	13
	5	13
8654-202-013-00	4	14
8654-202-016-00	4	2
	4	8
	5	2
	5	8
8654-203-001-00	6	7
	6	16
8654-203-002-10	6	5
	6	14

Numerical Index

Part Code	Fig.	Key	Part Code	Fig.	Key	Part Code	Fig.	Key
8654-203-003-00	6	11	8654-501-005-10	17	18	8654-501-340-20	17	14
8654-203-005-00	6	12	8654-501-006-10	16	13	8654-501-350-00	16	28
8654-203-006-00	6	10		17	13		17	28
	6	21	8654-501-007-20	16	47	8654-501-370-01	16	52
8654-203-200-20	6	1		17	47		17	52
8654-203-201-00	6	2	8654-501-008-00	16	24	8654-510-001-00	18	18
8654-301-001-10	7	1		17	24		18	22
8654-301-002-10	7	4	8654-501-200-01	16	5		19	18
8654-301-003-00	7	6		17	5		19	22
8654-301-004-00	7	8	8654-501-201-00	16	6	8654-510-002-00	18	2
8654-301-005-00	7	10		17	6		19	2
8654-301-006-00	7	9	8654-501-210-01	16	1	8654-510-006-20	18	25
8654-306-006-10	8	1	8654-501-240-10	16	11		19	25
8654-403-510-10	11	1		17	11	8654-510-007-10	18	3
8654-406-001-00	12	4	8654-501-250-10	16	30		19	3
	13	4		17	30	8654-510-008-10	18	31
8654-406-550-01	13	1	8654-501-260-10	16	42		19	31
8654-407-004-00	14	16		16	49	8654-510-009-10	18	5
	15	16		17	42		19	5
8654-407-009-00	14	3		17	49	8654-510-011-00	18	26
	14	9	8654-501-280-10	16	26		19	26
	15	3		16	32	8654-510-012-10	18	27
	15	9		16	38		19	27
	24	5		16	45	8654-510-013-00	18	6
	25	5		17	26		19	6
8654-407-021-00	14	17		17	32	8654-510-056-00	18	24
	15	17		17	38		19	24
8654-407-250-00	14	19		17	45	8654-510-240-10	18	1
	15	19	8654-501-283-00	16	27		19	1
	24	12		16	33	8654-510-260-21	18	16
	25	12		16	39	8654-510-261-00	18	17
8654-407-270-10	14	2		16	46		18	21
	14	8		17	27		19	17
	15	2		17	33		19	21
	15	8		17	39	8654-510-270-21	18	20
	24	2		17	46	8654-510-560-00	18	8
	25	2	8654-501-290-10	16	34		19	8
8654-407-510-00	15	1		17	34	8654-510-580-00	18	12
8654-407-520-00	15	7	8654-501-321-10	16	15		19	12
8654-407-530-10	15	13		17	15	8654-901-002-00	20	2
8654-501-002-00	16	21	8654-501-322-00	16	16		24	11
	17	21		17	16		25	11
8654-501-004-20	16	40	8654-501-330-10	16	20	8654-901-003-00	20	7
	17	40		17	20	8654-950-300-30	24	1
8654-501-005-10	16	18	8654-501-340-20	16	14	8654-950-310-00	24	6

Numerical Index

Part Code	Fig.	Key
8654-950-310-00	25	6
8654-950-320-00	24	10
8655-201-220-10	3	23
8655-202-001-20	5	7
8655-202-013-00	5	14
8655-306-003-10	9	1
8655-403-510-10	10	1
8655-403-560-00	23	1
8655-406-210-21	12	1
8655-407-560-00	14	1
8655-407-570-00	14	7
8655-407-580-10	14	13
8655-501-210-11	17	1
8655-510-260-11	19	16
8655-510-270-11	19	20
8655-950-300-30	25	1
8655-950-310-00	25	10
8658-101-674-00	26	13
P115-810-011-00	12	2
	13	2
V201-361-202-50	2	3
	3	3
	7	3
	16	2
	16	53
	17	2
	17	53
V210-360-601-60	14	5
	14	11
	15	5
	15	11
	24	4
	25	4
V211-360-802-00	14	18
	15	18
V211-361-002-50	14	15
	14	20
	15	15
	15	20
	24	13
	25	13
V211-560-801-60	2	6
	3	6
	16	44
	16	51
V211-560-801-60	17	44
	17	51
	22	5
V211-561-002-50	2	24
	3	24
	16	29
	16	41
	16	48
	17	29
	17	41
	17	48
V304-260-008-00	16	36
	17	36
V304-260-012-00	12	6
	13	6
V304-460-010-00	6	13
V304-460-012-00	16	3
	16	54
	17	3
	17	54
V304-460-016-00	4	6
	4	11
	5	6
	5	11
	16	22
	17	22
	18	30
	19	30
V360-260-006-00	14	4
	14	10
	15	4
	15	10
V361-260-006-00	24	3
	25	3
V363-260-008-00	12	3
	13	3
	14	6
	14	12
	14	14
	15	6
	15	12
	15	14
V401-160-008-00	16	37
	17	37
V401-160-012-00	2	4
V401-160-012-00	3	4
	7	2
	12	7
	13	7
	16	4
	16	55
	17	4
	17	55
V401-160-016-00	4	5
	4	10
	5	5
	5	10
	16	23
	17	23
	18	29
	19	29
V401-160-020-00	8	5
	9	5
V411-260-008-00	26	10
V411-260-020-00	18	10
	18	14
	18	28
	19	10
	19	14
	19	28
V500-163-002-00	26	11
V500-164-003-00	18	11
	18	15
	19	11
	19	15
V580-140-804-00	1	2
	24	8
	25	8
V600-110-620-60	2	20
	3	20
	22	19
V600-110-630-50	7	5
V600-140-620-40	16	17
	17	17
V600-140-620-50	6	6
	6	15
V704-140-025-00	6	4
	6	19
V704-140-030-00	16	8
	17	8

Numerical Index

8654-097-380-00

Part Code	Fig.	Key	Part Code	Fig.	Key	Part Code	Fig.	Key
V705-140-047-00	16	25						
	17	25						
V705-140-052-00	6	8						
	6	17						
V707-140-062-00	2	18						
	3	18						
	7	7						
	22	17						
V707-140-072-00	2	11						
	3	11						
	22	10						
V744-130-551-20	2	10						
	3	10						
	22	9						
V760-150-000-00	6	9						
	6	20						
	7	11						
	16	10						
	17	10						
V763-150-000-00	16	19						
	17	19						
V764-150-000-00	16	35						
	17	35						

Alpabetical Index

Description	Fig.	Key
ARM/GAUGE COMP	16	1
	17	1
ARM/LH ASSY	18	16
	19	16
ARM/REAR	18	24
	19	24
ARM/RH ASSY	18	20
	19	20
ARM/TENSION ASSY	6	1
BEARING,RB/6204RS	16	17
	17	17
BEARING,RB/6205S	6	6
	6	15
BEARING,RB/6206	2	20
	3	20
	22	19
BEARING,RB/6305	7	5
BEARING,RB/6306SH2	2	9
	3	9
	22	8
BEARING/BALL 6305SH2	2	14
	3	14
	22	13
BELT/VB125	4	14
BELT/VB146	5	14
BLADE/60X528/C	8	1
BLADE/60X630/C	9	1
BOLT(SP)/M6X16	14	5
	14	11
	15	5
	15	11
	24	4
	25	4
BOLT,SEMS	2	6
	3	6
	16	44
	16	51
	17	44
	17	51
	22	5
BOLT/M10X25	2	24
	3	24
	16	29
	16	41
	16	48

Description	Fig.	Key
BOLT/M10X25	17	29
	17	41
	17	48
BOLT/M12X25	2	3
	3	3
	7	3
	16	2
	16	53
	17	2
	17	53
BOLT/M16X59	18	25
	19	25
BOLT/SP	14	15
	14	18
	14	20
	15	15
	15	18
	15	20
	24	13
	25	13
BUSH/19X22X15	18	17
	18	21
	19	17
	19	21
BUSH/20X23X20	18	9
	18	13
	19	9
	19	13
BUSH/22X25X25	16	27
	16	33
	16	39
	16	46
	17	27
	17	33
	17	39
	17	46
BUSH/25X28X15	6	2
BUSH/30X34X20	16	6
	17	6
CAP/LOWER COMP	14	2
	14	8
	15	2
	15	8
	24	2
	25	2

Description	Fig.	Key
CAP/UPPER	14	3
	14	9
	15	3
	15	9
	24	5
	25	5
CASE/BEVEL	2	1
	3	1
	22	2
CASE/BEVEL ASSY	22	1
CHAIN ASSY	26	7
	26	21
COLLAR,THRUST	16	9
	17	9
COLLAR/22X27X93	16	18
	17	18
COLLAR/22X40X13	18	26
	19	26
COLLAR/26X36X3	4	3
	5	3
COLLAR/28X34X14	6	7
	6	16
COLLAR/28X34X32	7	6
COLLAR/48X70X01	2	8
	3	8
	22	7
COLLAR/49X62X02	2	17
	3	17
	22	16
COLLAR/SEAL	7	10
COLLAR/SEAL COMP	16	20
	17	20
COVER/BELT/CENTER	14	13
	15	13
COVER/BELT/LH COMP	14	1
	15	1
COVER/BELT/RH COMP	14	7
	15	7
COVER/CASE	2	5
	3	5
	22	4
COVER/DISCHARGE COMP	12	1
	13	1
COVER/PTO	14	17
	15	17

Alpabetical Index

8654-097-380-00

Description	Fig.	Key
COVER/PTO COMP	14	19
	15	19
	24	10
	24	12
	25	10
	25	12
COVER/TENSION	14	16
	15	16
DECK/MOWER/60/370	11	1
DECK/MOWER/72/370	10	1
DECK/MOWER/72/ICT	23	1
FITTINGYOKE	26	14
FORK/WHEEL ASSY	16	5
	17	5
GEAR/BEVEL/24-1 SET	2	12
	3	12
	22	11
GREASE NIPPLE	16	31
	16	43
	16	50
	17	31
	17	43
	17	50
GREASENIPPLE	26	3
	26	17
JOINT/UNIVERSAL SET	1	1
	24	7
	25	7
JOURNALCROSSE ASSY	26	2
	26	16
KEY/06X06X28	4	2
	4	8
	5	2
	5	8
LABEL/CE	20	1
LABEL/CUTTING	20	7
LABEL/DANGER	20	6
LABEL/DANGER/DISCHAR	20	3
LABEL/DANGER/JOINT/G	26	13
LABEL/PTO	20	2
	24	11
	25	11
LABEL/WARNING/BELT	20	4
LABEL/WARNING/HOT	20	5
LINKPIN	18	19
LINKPIN	18	23
	19	19
	19	23
METAL	7	1
NIPPLE,GREASE	6	9
	6	20
	7	11
	16	10
	17	10
NIPPLE,GREASE/1/8	16	35
	17	35
NIPPLE,GREASE/PT1/8	16	19
	17	19
NUT	16	36
	17	36
	24	3
	25	3
NUT/M10	6	13
NUT/M12	12	6
	13	6
	16	3
	16	54
	17	3
	17	54
NUT/M16	4	6
	4	11
	5	6
	5	11
	16	22
	17	22
	18	30
	19	30
NUT/M20X1.5	8	4
	9	4
NUT/M6	14	4
	14	10
	15	4
	15	10
NUT/WASHER	12	3
	13	3
	14	6
	14	12
	14	14
	15	6
	15	12
NUT/WASHER	15	14
PIN,HAIR	18	7
	19	7
PIN,HAIR (19)	18	4
	19	4
PIN,SPLIT/3 X20	26	11
PIN,SPLIT/4 X30	18	11
	18	15
	19	11
	19	15
PIN,SPRING/8 X40 W	1	2
	24	8
	25	8
PIN/10X53	16	12
	17	12
PIN/10X57	18	6
	19	6
PIN/14X75 SET	26	8
PIN/16X71	18	31
	19	31
PIN/19X139	18	3
	19	3
PIN/19X92	18	18
	18	22
	19	18
	19	22
PIN/20X175	16	21
	17	21
PIN/GAUGE COMP	16	11
	17	11
PIN/HAIR	18	32
	19	32
PIN/ROLLER/FRON COMP	16	30
	17	30
PIN/ROLLER/MID COMP	16	34
	17	34
PIN/ROLLER/REAR COMP	16	42
	16	49
	17	42
	17	49
PLATE/03X15X65	12	2
	13	2
PLATE/LIFT/LH ASSY	18	8
	19	8
PLATE/LIFT/RH ASSY	18	12

Alpabetical Index

Description	Fig.	Key
PLATE/LIFT/RH ASSY	19	12
PLUG,CAP/62X6	2	19
	3	19
	21	3
	22	18
PLUG,DRAIN (1/4)	2	2
	3	2
	22	3
PULLEY/FT100X048	6	5
	6	14
PULLEY/V2B120	4	7
PULLEY/V2B125	4	1
	5	1
PULLEY/V2B143	5	7
QUICKDISCONNECTYOKE	26	12
RIM/GAUGEWHEEL	16	14
	17	14
RING,SNAP/25 C	6	4
	6	19
RING,SNAP/30 C	16	8
	17	8
RING,SNAP/47 C	16	25
	17	25
RING,SNAP/52 C	6	8
	6	17
RING/SLIDE	26	6
	26	20
RING/SNAP	2	11
	2	18
	3	11
	3	18
	7	7
	22	10
	22	17
ROD COMP	18	1
	19	1
ROD/M10X131	6	12
ROLLER ASSY	16	26
	16	32
	16	38
	16	45
	17	26
	17	32
	17	38
	17	45
SAFETY/SF370 SET	25	1
SAFETYGUARD/IN	26	5
SAFETYGUARD/OUT	26	19
SAFTY/SF370 SET	24	1
SEAL,OIL/TC305512	2	10
	3	10
	22	9
SEAL/OIL	2	22
	3	22
	7	8
	7	9
	21	4
	22	21
SHAFT	7	4
SHAFT/INPUT	2	7
	3	7
	22	6
SHAFT/OUTPUT	2	13
	3	13
	22	12
SHAFTYOKE ASSY	26	15
SHIM SET	21	1
SHIM/0.1	2	15
	3	15
	22	14
SHIM/0.2	2	16
	3	16
	21	2
	22	15
SHIM/0.5	4	12
	5	12
SHIM/1.0	4	13
	5	13
SHIM/1.2	8	3
	9	3
SLEEVE	2	21
	3	21
	22	20
SLEEVEYOKE ASSY	26	1
SPACER	18	2
	19	2
SPRING	26	9
SPRING/CLIP	16	13
	17	13
SPRING/HE136	6	11
STAY/GEARCASE COMP	2	23
	3	23
STAY/ROD	18	5
	19	5
STAY/ROLLAR/F COMP	16	28
	17	28
STAY/ROLLER/REAR/LH	16	40
	17	40
STAY/ROLLER/REAR/RH	16	47
	17	47
STEP/MOWER COMP	16	52
	17	52
STOPPER COMP	24	6
	25	6
STOPPER/COVER	12	4
	13	4
SURCLIP/HOLE	26	4
	26	18
TIRE/11X4.00-5	16	15
	17	15
VALVE	16	16
	17	16
WASHER	4	4
	4	9
	5	4
	5	9
WASHER(13X34X05)	12	5
	13	5
WASHER,PL/M 8	26	10
WASHER,SP/M 8	16	37
	17	37
WASHER,SP/M12	2	4
	3	4
	7	2
	12	7
	13	7
	16	4
	16	55
	17	4
	17	55
WASHER,SP/M16	4	5
	4	10
	5	5
	5	10
	16	23

Alpabetical Index

8654-097-380-00

Description	Fig.	Key	Description	Fig.	Key	Description	Fig.	Key
WASHER,SP/M16	17	23						
	18	29						
	19	29						
WASHER,SP/M20	8	5						
	9	5						
WASHER/16X40X05	18	27						
	19	27						
WASHER/20X60X06	8	2						
	9	2						
WASHER/26X34X2	6	3						
	6	18						
WASHER/30X50X05	16	7						
	17	7						
WASHER/34X47X01	16	24						
	17	24						
WASHER/39X52X01	6	10						
	6	21						
WASHER/M20	18	10						
	18	14						
	18	28						
	19	10						
	19	14						
	19	28						