Directions for use of Parts Catalogue

1. Applicable model of machines

All component and option parts used for SSM60-SF330/SSM72-SF330 Mower are listed in this parts catalogue.

NOTES: SSM60-SF330···· FOR SF303,333

SSM72-SF330···· FOR SF303,333

2. Explanation for head paragraph

KEY	PART CODE	DESCRIPTION	SPC	TYPE OF MODEL						ITC	COL	GRP	REMARKS
				SSM48M	SSM48F	SSM48G	SRM48M	SRM48F	SRM48G				
1	8595-211-001-20	CASE/UPPER	*	1 -229									
1A	8657-201-081-00	CASE/UPPER	*	1 230-			1						
2	8595-211-002-10	CASE/LOWER	*	1			1						
3	V523-100-801-80	PIN	*	2			2						
4	V211-260-803-00	BOLT, SEMS	*	6			6						
			*	2 -229									
			*	2 230-			2						
				2			2						
				1			1						

① ② ③ ④ ⑤ ⑥ ⑦ ⑧ ⑨

① KEY shows the location of parts diagramed in the illustration.

② Parts numbers begin with `V´ and `W´ are standard parts of the market.

③ `LH´ and `RH´ on the parts name are described against the moving direction of the machine or are described on the condition how to install parts on the machines.

④ SPC : The following symbol classifies parts to be used for machines.

`*´ means standard parts.

`T´ shows that the parts can be installed as optional parts.

`R´ shows that the parts can be used as applicable parts to replace originally equipped parts.

⑤ Upper column : QTY shows the number of parts to be used for one unit of machine.

`M´ is indicated for parts supplied by a meter long.

`ℓ´ is indicated for parts supplied by liter.

`AR´ is indicated for parts need to be adjusted or regulated.

Lower column : serial number

—229 means serial number up to 229.

230— means serial number 230 and after.

⑥ ITC : Interchangeability

`1´…OLD ← NEW

New parts can be used in place of the old parts.

`2´…OLD → NEW

Old parts can be used in place of the new parts.

`3´…OLD →← NEW

Old parts and new parts can not be replaced each other.

⑦ COL : Color code

Color is signified with color code number for colored parts.

Please see the color list shown in the next page.

⑧ GRP : Parts shown in this column can be replaced by SET parts.

Example : Parts marked Ⓐ can be replaced by parts marked Ⓑ, and Ⓓ for Ⓒ, so the rest follow in the same alphabetical order.

⑨ Remarks

＊ Other maker's part code number is shown in this column.

＊ When Fig. No. is shown in the Remark column of SET parts or ASSY parts, each of their component parts are listed in said Fig. No.

3. Color :

The following colors are used color parts.

COLOR CODE	COLOR	SPRAY TYPE CODE NUMBER	PAINTS 4K DRUM	PAINTS 16K DRUM
4 L	NEO-BLUE	1300-985-001-10	1300-985-003-00	———
6 G	SUMMER WHITE	1300-958-001-10	1300-958-003-00	1300-958-004-00

NOTE : Color code is signified only for the parts assigned by the maker as color parts.

4. Serial Numbers :

For chassies serial number is shown on the LABEL.

Please see

5. Parts Order

1) Parts numbers listed in the parts catalogue are all registered in "ISEKI on-line computer".
2) When you order parts, please make sure of correct numbers.
3) When substitute parts is available, the part number ordered will be automatically turned to a new part number.
4) Please be sure to use "ISEKI GENUINE PARTS".
   Any other similar parts other than ISEKI parts when used may cause a trouble that makes us unable to repair or guarantee the warrant.

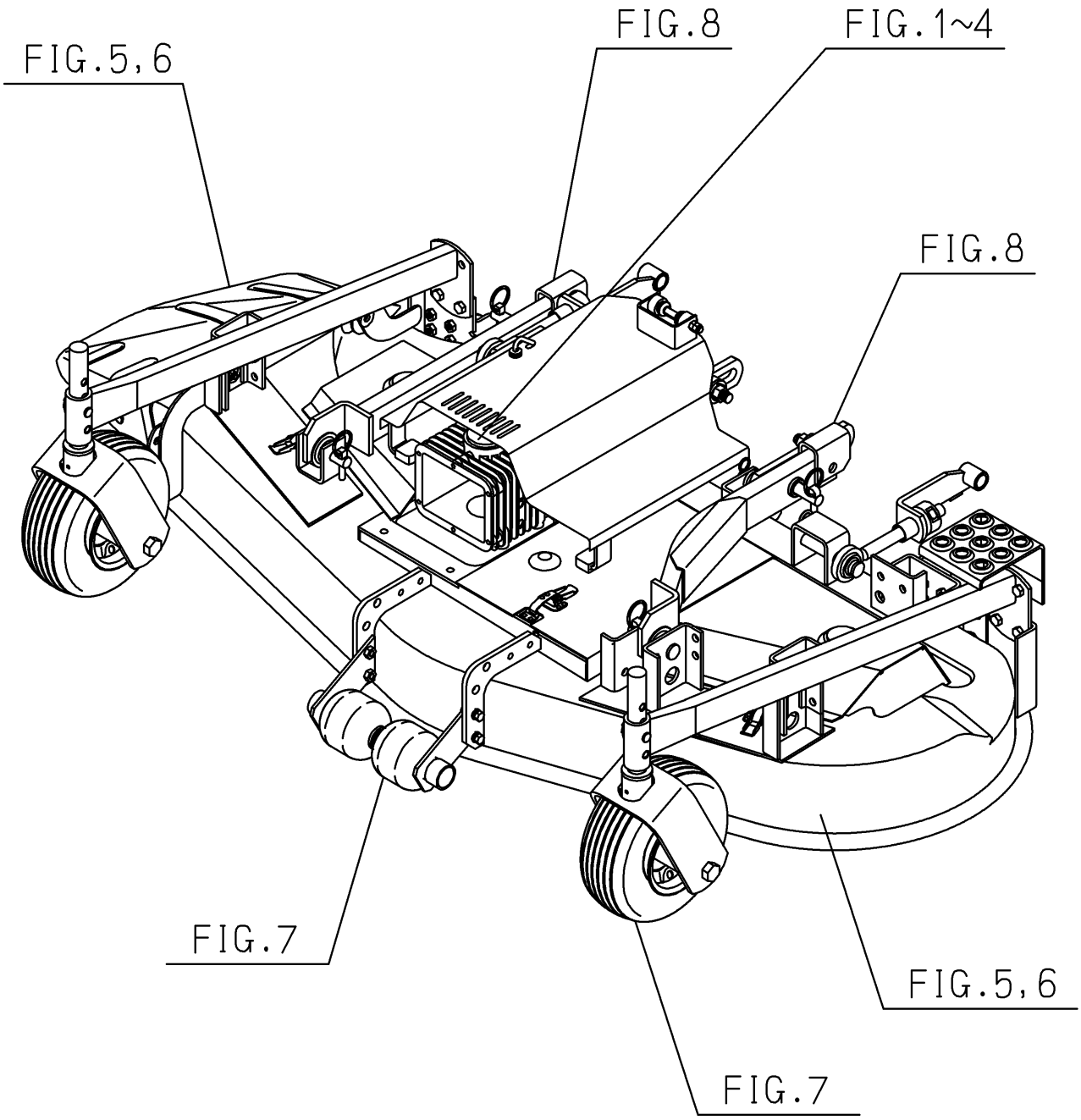
FIG.5,6
FIG.8
FIG.1~4
FIG.8
FIG.7
FIG.5,6
FIG.7

Contents

SSM60-SF330,SSM72-SF330

UNIVERSAL JOINT,BEVEL CASE SYSTEM····· Fig. 1
PULLEY,BELT SYSTEM····· Fig. 2
TENSION (BELT) SYSTEM····· Fig. 3
BLADE (METAL) SYSTEM····· Fig. 4
MOWER DECK,COVER SYSTEM (SSM60)····· Fig. 5
MOWER DECK,COVER SYSTEM (SSM72)····· Fig. 6
WHEEL (GAUGE) SYSTEM····· Fig. 7
LIFT SYSTEM····· Fig. 8
LABEL····· Fig. 9

REPAIR PARTS

CASE (BEVEL) ASSY (REPAIR)····· Fig. 10

COMPONENT PARTS

COMPONENT PARTS
FOR 8654-101-200-00 ON Fig.1····· Fig. 11

FIG. 1 UNIVERSAL JOINT,BEVEL CASE SYSTEM

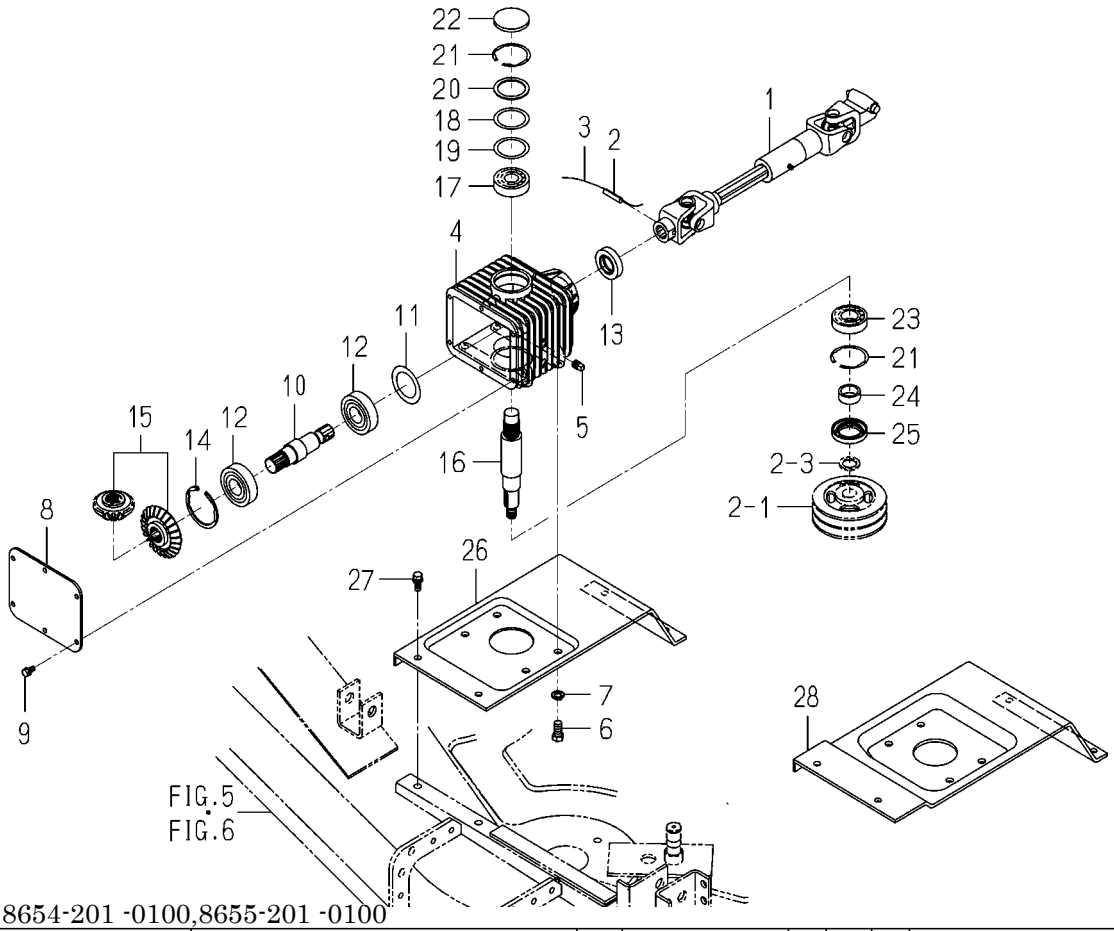

8654-101 -0100,8654-201 -0100,8655-201 -0100

KEY	PART CODE	DESCRIPTION	SPC	TYPE OF MODEL SSM60 SF330	TYPE OF MODEL SSM72 SF330	ITC	COL	GRP	REMARKS
1	8654-101-200-00	JOINT/UNIVERSAL SET	*	1	1				FIG 011
2	V580-140-804-00	PIN,SPRING/8 X40 W	*	1	1				
3		WIRE	*	1	1				
4	8654-201-001-20	CASE/BEVEL	*	1	1				
5	V781-160-000-4B	PLUG/SCREW/SEAL	*	2	2				
6	V201-361-202-50	BOLT/M12X25	*	4	4				
7	V401-160-012-00	WASHER,SP/M12	*	4	4				
8	8654-201-011-00	COVER/CASE	*	1	1				
9	V211-560-801-60	BOLT,SEMS	*	6	6				
10	8654-201-002-00	SHAFT/INPUT	*	1	1				
11	8654-201-015-00	COLLAR/48X70X01	*	1	1				
12	7932-201-002-00	BEARING,RB/6306SH2	*	2	2				
13	V744-130-551-20	SEAL,OIL/TC305512	*	1	1				
14	V707-140-072-00	RING/SNAP	*	1	1				
15	8654-201-210-00	GEAR/BEVEL/24-1 SET	*	1	1				
16	8654-201-003-00	SHAFT/OUTPUT	*	1	1				
17	1594-218-001-00	BEARING/BALL 6305SH2	*	1	1				
18	8654-201-008-00	SHIM/0.1	*	1	1				
19	8654-201-009-00	SHIM/0.2	*	1	1				
20	8654-201-007-00	COLLAR/49X62X02	*	1	1				
21	V707-140-062-00	RING/SNAP	*	2	2				
22	3640-547-007-00	PLUG,CAP/62X6	*	1	1				
23	V600-110-620-60	BEARING,RB/6206	*	1	1				
24	1614-244-002-00	SLEEVE	*	1	1				
25	1614-244-005-00	SEAL/OIL	*	1	1				
26	8654-201-220-00	STAY/GEARCASE COMP	*	1					
27	V211-561-002-50	BOLT/M10X25	*	4	4				
28	8655-201-220-00	STAY/GEARCASE COMP	*		1				

FIG. 2 PULLEY,BELT SYSTEM

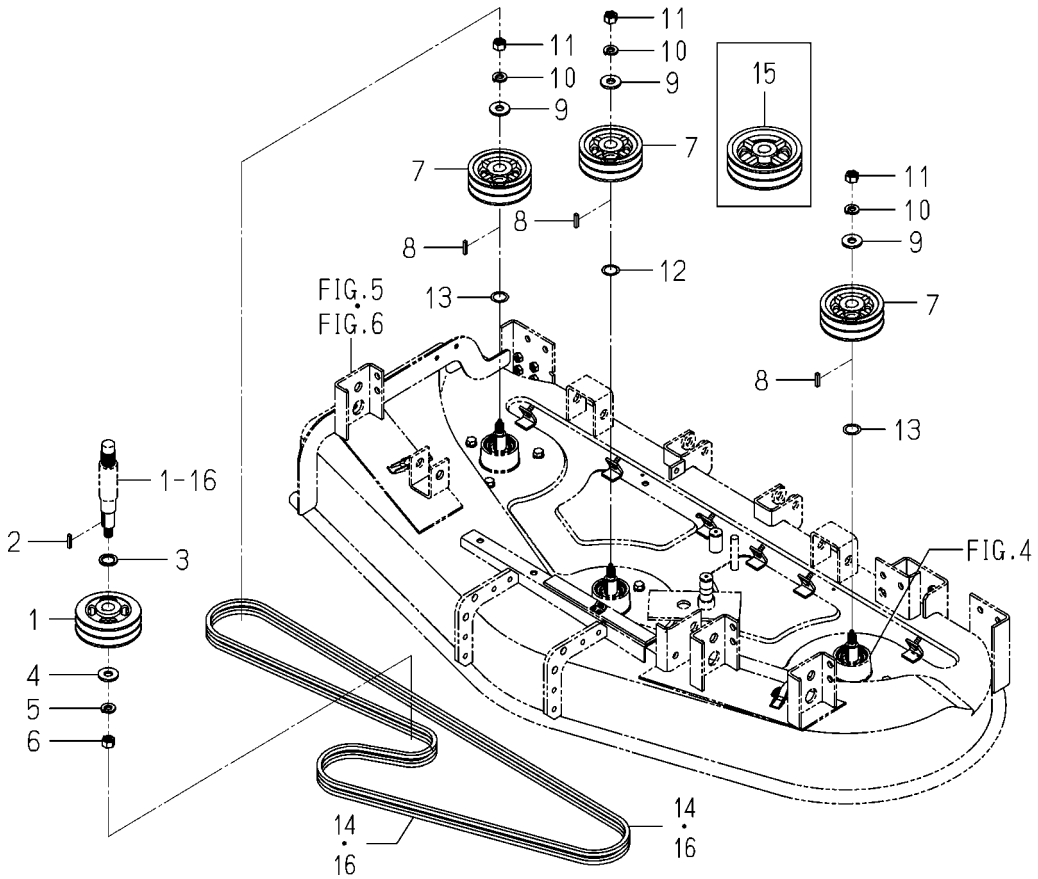

8654-202 -0100,8655-202 -0100

KEY	PART CODE	DESCRIPTION	SPC	TYPE OF MODEL SSM60 SF330	TYPE OF MODEL SSM72 SF330	ITC	COL	GRP	REMARKS
1	8654-202-001-10	PULLEY/V2B125	*	1	1				
2	8654-202-016-00	KEY/06X06X28	*	1	1				
3	1434-211-004-00	COLLAR/26X36X3	*	1	1				
4	3746-111-011-00	WASHER	*	1	1				
5	V401-160-016-00	WASHER,SP/M16	*	1	1				
6	V304-460-016-00	NUT/M16	*	1	1				
7	8654-202-002-20	PULLEY/V2B120	*	3					
8	8654-202-016-00	KEY/06X06X28	*	3	3				
9	3746-111-011-00	WASHER	*	3	3				
10	V401-160-016-00	WASHER,SP/M16	*	3	3				
11	V304-460-016-00	NUT/M16	*	3	3				
12	8654-202-003-10	SHIM/0.5	*	1	1				
13	8654-202-004-10	SHIM/1.0	*	2	2				
14	8654-202-013-00	BELT/VB125	*	2					
15	8655-202-001-20	PULLEY/V2B143	*		3				
16	8655-202-013-00	BELT/VB146	*		2				

FIG. 3 TENSION (BELT) SYSTEM

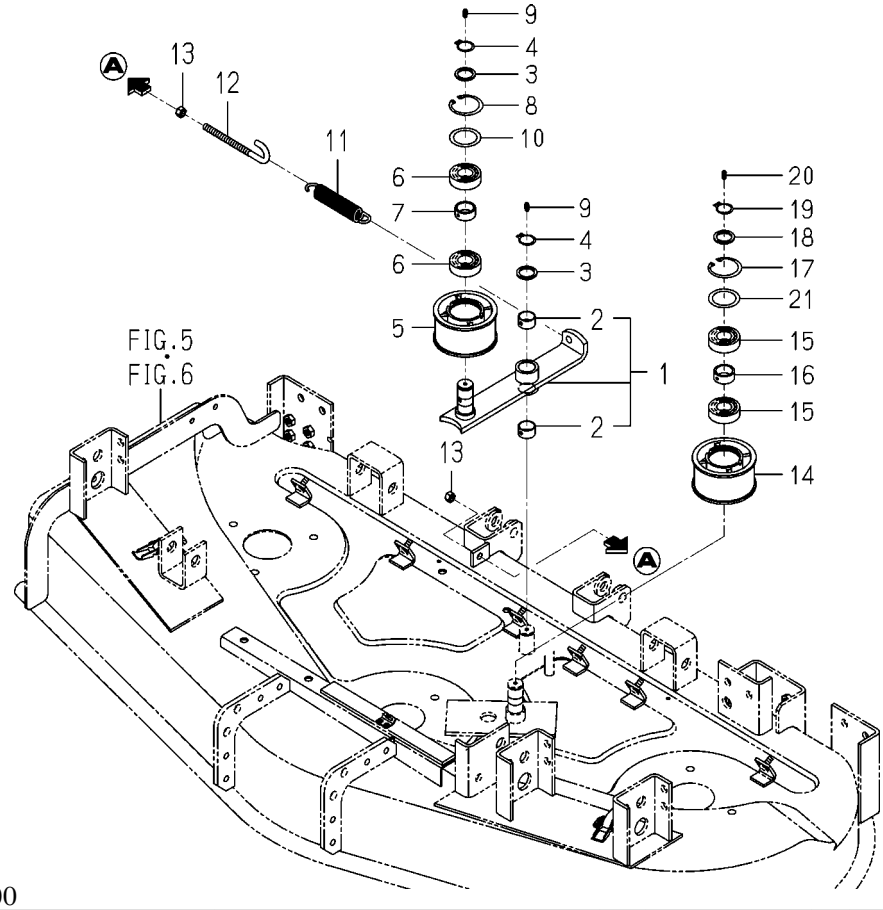

8654-203 -0100

KEY	PART CODE	DESCRIPTION	SPC	TYPE OF MODEL SSM60 SF330	TYPE OF MODEL SSM72 SF330	ITC	COL	GRP	REMARKS
1	8654-203-200-20	ARM/TENSION ASSY	*	1	1				
2	8654-203-201-00	BUSH/25X28X15	*	2	2				
3	3666-222-003-00	WASHER/26X34X2	*	2	2				
4	V704-140-025-00	RING,SNAP/25 C	*	2	2				
5	8654-203-002-10	PULLEY/FT100X048	*	1	1				
6	V600-140-620-50	BEARING,RB/6205S	*	2	2				
7	8654-203-001-00	COLLAR/28X34X14	*	1	1				
8	V705-140-052-00	RING,SNAP/52 C	*	1	1				
9	V760-150-000-00	NIPPLE,GREASE	*	2	2				
10	8654-203-006-00	WASHER/39X52X01	*	1	1				
11	8654-203-003-00	SPRING/HE136	*	1	1				
12	8654-203-005-00	ROD/M10X131	*	1	1				
13	V304-460-010-00	NUT/M10	*	2	2				
14	8654-203-002-10	PULLEY/FT100X048	*	1	1				
15	V600-140-620-50	BEARING,RB/6205S	*	2	2				
16	8654-203-001-00	COLLAR/28X34X14	*	1	1				
17	V705-140-052-00	RING,SNAP/52 C	*	1	1				
18	3666-222-003-00	WASHER/26X34X2	*	1	1				
19	V704-140-025-00	RING,SNAP/25 C	*	1	1				
20	V760-150-000-00	NIPPLE,GREASE	*	1	1				
21	8654-203-006-00	WASHER/39X52X01	*	1	1				

FIG. 4 BLADE (METAL) SYSTEM

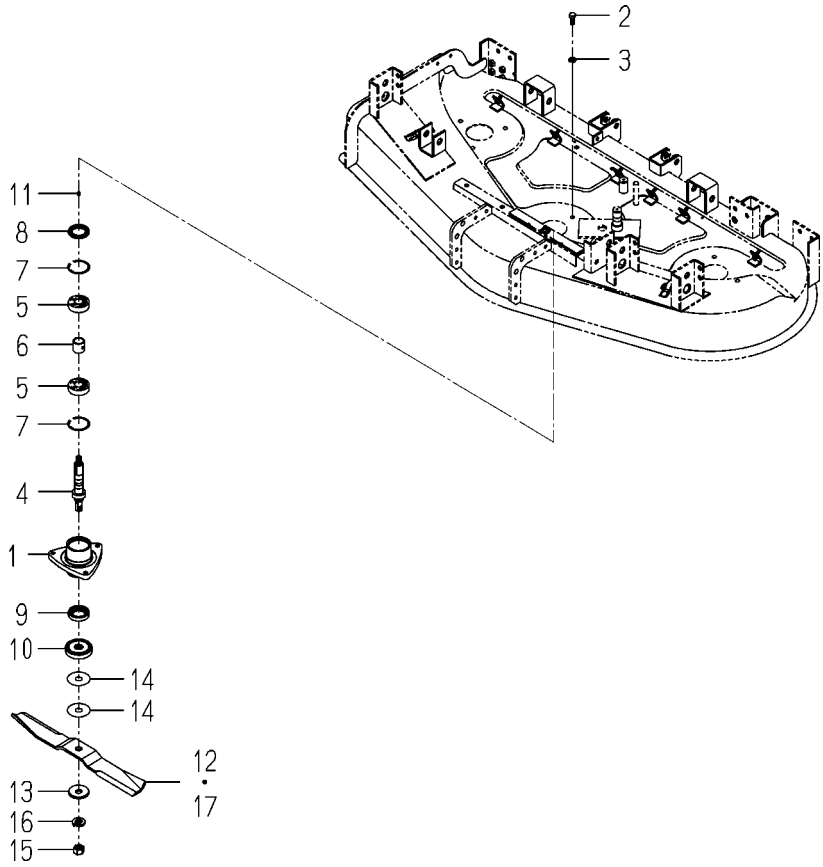

8654-301 -0100,8654-306 -0100,8655-306 -0100

KEY	PART CODE	DESCRIPTION	SPC	TYPE OF MODEL SSM60 SF330	TYPE OF MODEL SSM72 SF330	ITC	COL	GRP	REMARKS
1	8654-301-001-10	METAL	*	3	3				
2	V401-160-012-00	WASHER,SP/M12	*	9	9				
3	V201-361-202-50	BOLT/M12X25	*	9	9				
4	8654-301-002-10	SHAFT	*	3	3				
5	V600-110-630-50	BEARING,RB/6305	*	6	6				
6	8654-301-003-00	COLLAR/28X34X32	*	3	3				
7	V707-140-062-00	RING/SNAP	*	6	6				
8	8654-301-004-00	SEAL/OIL	*	3	3				
9	8654-301-006-00	SEAL/OIL	*	3	3				
10	8654-301-005-00	COLLAR/SEAL	*	3	3				
11	V760-150-000-00	NIPPLE,GREASE	*	3	3				
12	8654-306-006-00	BLADE/60X528/C	*	3					
13	8595-306-005-00	WASHER/20X60X06	*	3	3				
14	8595-306-006-00	SHIM/1.2	*	6	6				
15	8595-306-007-00	NUT/M20X1.5	*	3	3				
16	V401-160-020-00	WASHER,SP/M20	*	3	3				
17	8655-306-003-00	BLADE/60X630/C	*		3				

FIG. 5 MOWER DECK,COVER SYSTEM (SSM60)

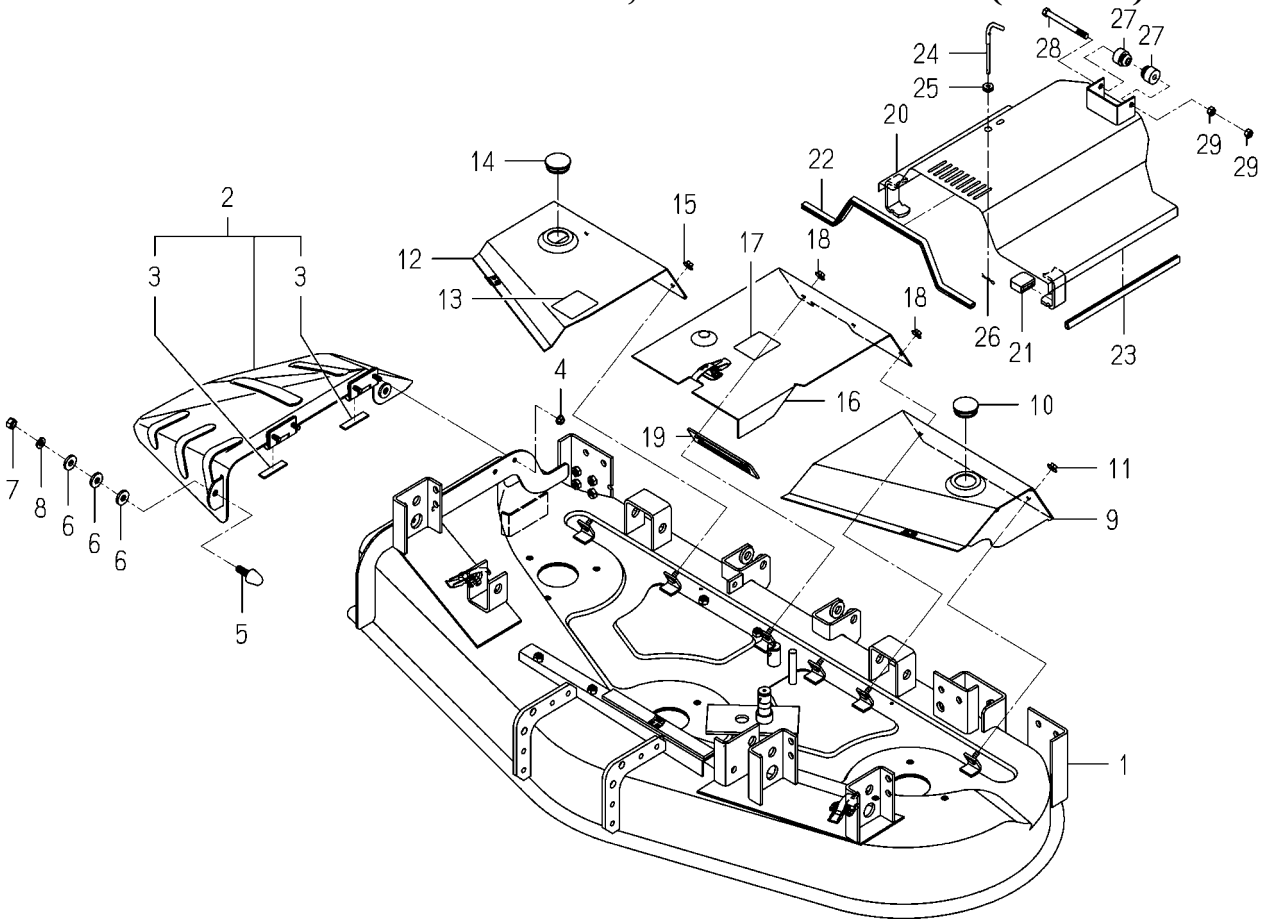

8654-403 -0100,8654-406 -0100,8654-407 -0100

KEY	PART CODE	DESCRIPTION	SPC	TYPE OF MODEL SSM60 SF330	TYPE OF MODEL SSM72 SF330	ITC	COL	GRP	REMARKS
1	8654-403-210-41	DECK/MOWER/60 COMP	*	1			4L		
2	8654-406-210-32	COVER/DISCHARGE COMP	*	1			4L		
3	P115-810-011-00	PLATE/03X15X65	*	2					
4	V363-260-008-00	NUT,LOCK/M8	*	4					
5	8654-406-001-00	STOPPER/COVER	*	2					
6	3670-471-005-00	WASHER/12X30X05	*	6					
7	V304-260-012-00	NUT/M12	*	2					
8	V401-160-012-00	WASHER,SP/M12	*	2					
9	8654-407-210-11	COVER/BELT/LH COMP	*	1			4L		
10	1427-120-001-00	CAP/42	*	1					
11	V363-260-008-00	NUT,LOCK/M8	*	1					
12	8654-407-220-11	COVER/BELT/RH COMP	*	1			4L		
13	8654-407-005-00	LABEL/PROTECTER	*	1					
14	1427-120-001-00	CAP/42	*	1					
15	V363-260-008-00	NUT,LOCK/M8	*	2					
16	8654-407-230-01	COVER/BELT COMP	*	1			4L		
17	8654-407-005-00	LABEL/PROTECTER	*	1					
18	V363-260-008-00	NUT,LOCK/M8	*	3					
19	8654-407-004-00	COVER/TENSION	*	1					
20	8654-407-310-31	COVER/UNIVERSAL COMP	*	1			4L		
21	1593-101-012-00	STOPPER	*	2					
22	8654-407-001-20	TRIM/560	*	1					
23	8654-407-002-10	TRIM/315	*	2					
24	8654-407-006-10	HOOK	*	1					
25	1444-601-005-00	GROMMET 7X14X1	*	1					
26	1301-411-005-00	PIN,HAIR	*	1					
27	1593-616-004-20	GROMMET/10X30X5	*	2					
28	V201-261-011-00	BOLT/M10X110	*	1					
29	V304-260-010-00	NUT	*	2					

FIG. 6 MOWER DECK,COVER SYSTEM (SSM72)

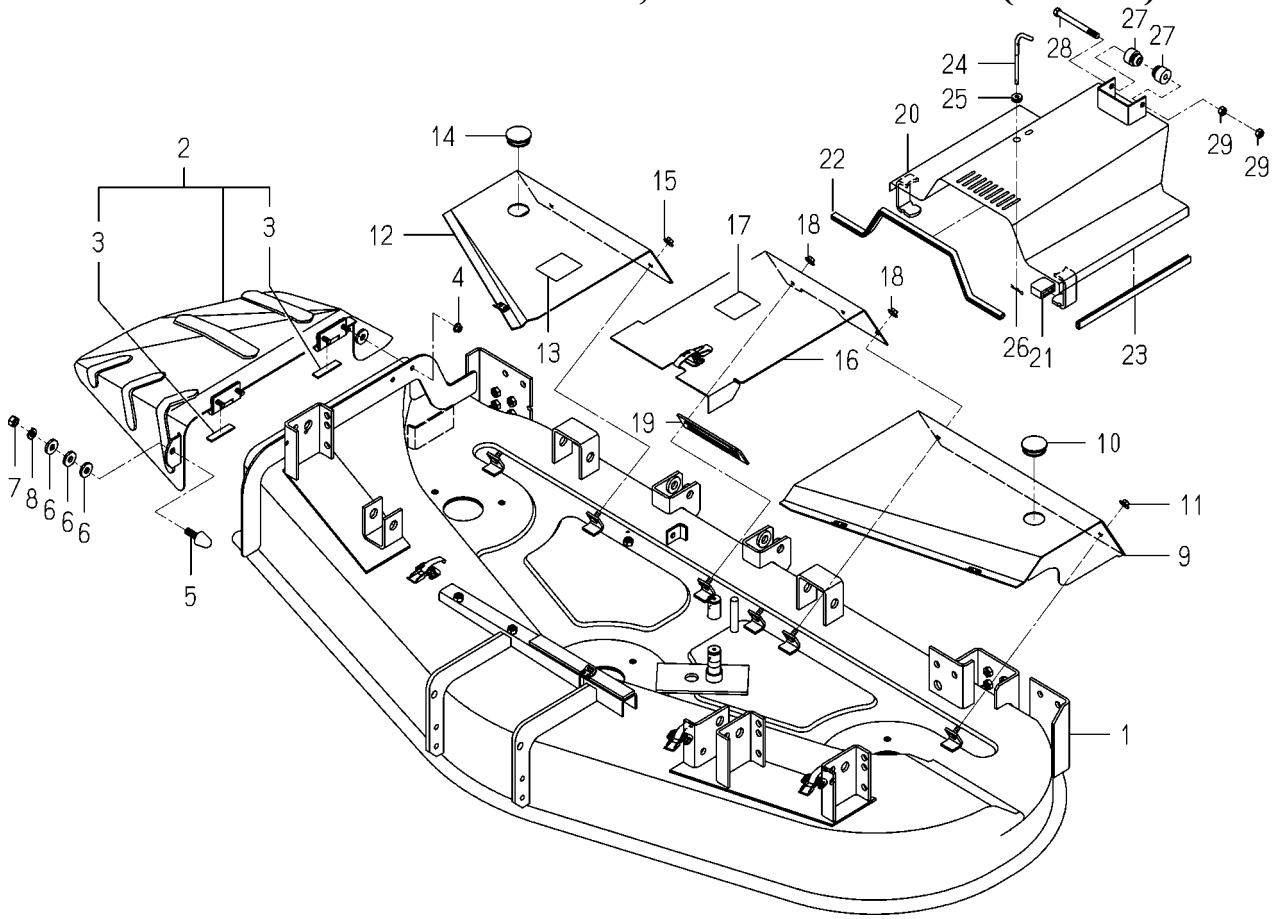

8655-403 -0100,8655-406 -0100,8655-407 -0100

KEY	PART CODE	DESCRIPTION	SPC	TYPE OF MODEL SSM60 SF330	TYPE OF MODEL SSM72 SF330	ITC	COL	GRP	REMARKS
1	8655-403-210-51	DECK/MOWER/72 COMP	*		1		4L		
2	8655-406-210-21	COVER/DISCHARGE COMP	*		1		4L		
3	P115-810-011-00	PLATE/03X15X65	*		2				
4	V363-260-008-00	NUT,LOCK/M8	*		4				
5	8654-406-001-00	STOPPER/COVER	*		2				
6	3670-471-005-00	WASHER/12X30X05	*		6				
7	V304-260-012-00	NUT/M12	*		2				
8	V401-160-012-00	WASHER,SP/M12	*		2				
9	8655-407-210-01	COVER/BELT/LH COMP	*		1		4L		
10	1427-120-001-00	CAP/42	*		1				
11	V363-260-008-00	NUT,LOCK/M8	*		1				
12	8655-407-220-01	COVER/BELT/RH COMP	*		1		4L		
13	8654-407-005-00	LABEL/PROTECTER	*		1				
14	1427-120-001-00	CAP/42	*		1				
15	V363-260-008-00	NUT,LOCK/M8	*		2				
16	8655-407-230-01	COVER/BRLT COMP	*		1		4L		
17	8654-407-005-00	LABEL/PROTECTER	*		1				
18	V363-260-008-00	NUT,LOCK/M8	*		3				
19	8654-407-004-00	COVER/TENSION	*		1				
20	8655-407-310-11	COVER/UNIVERSAL COMP	*		1		4L		
21	1593-101-012-00	STOPPER	*		2				
22	8654-407-001-20	TRIM/560	*		1				
23	8654-407-002-10	TRIM/315	*		2				
24	8654-407-006-10	HOOK	*		1				
25	1444-601-005-00	GROMMET 7X14X1	*		1				
26	1301-411-005-00	PIN,HAIR	*		1				
27	1593-616-004-20	GROMMET/10X30X5	*		2				
28	V201-261-011-00	BOLT/M10X110	*		1				
29	V304-260-010-00	NUT	*		2				

FIG. 7 WHEEL (GAUGE) SYSTEM

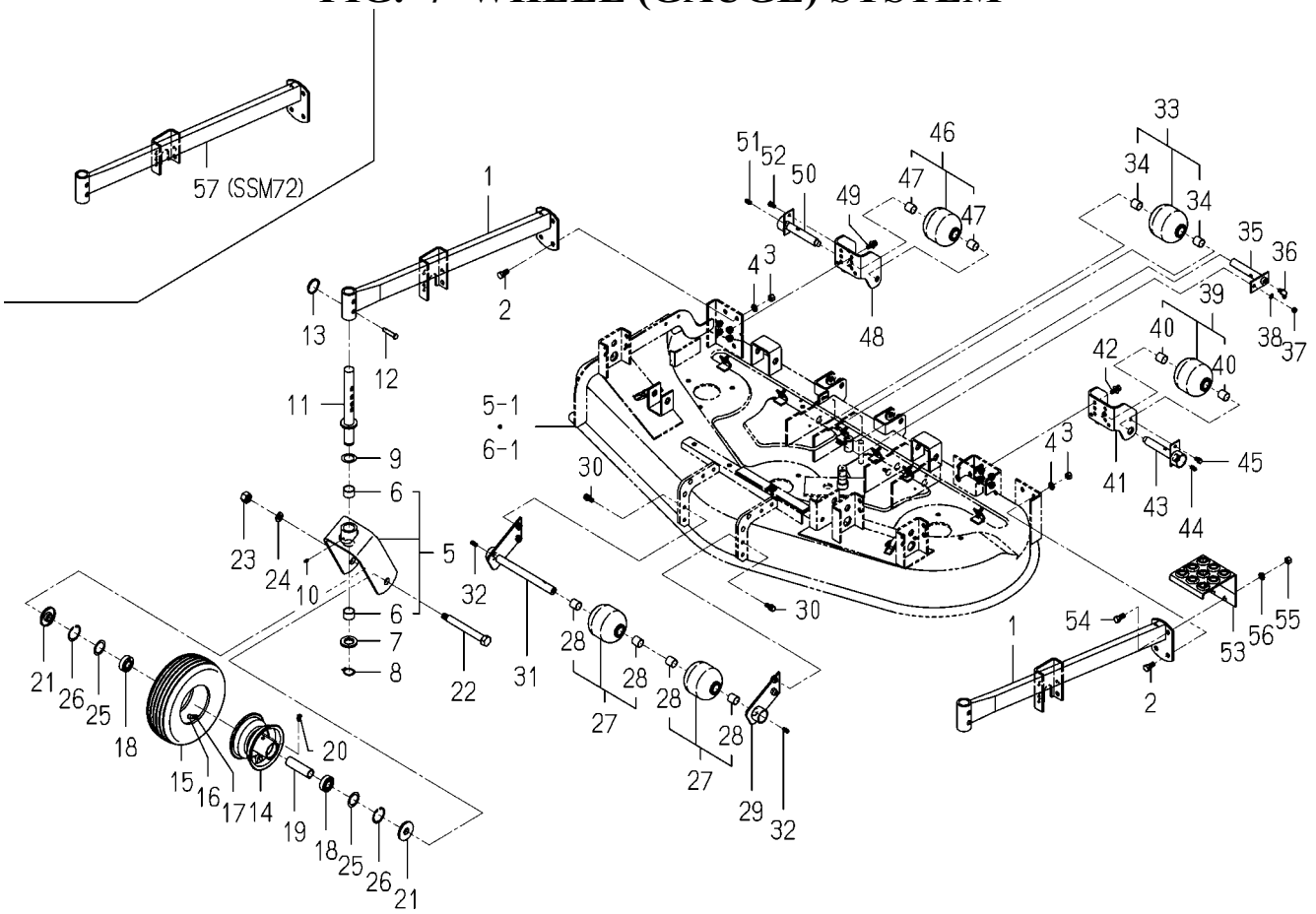

8654-501 -0100,8655-501 -0100

KEY	PART CODE	DESCRIPTION	SPC	TYPE OF MODEL SSM60 SF330	TYPE OF MODEL SSM72 SF330	ITC	COL	GRP	REMARKS
1	8654-501-210-01	ARM/GAUGE COMP	*	2			4L		
2	V201-361-202-50	BOLT/M12X25	*	8	8				
3	V304-460-012-00	NUT/M12	*	8	8				
4	V401-160-012-00	WASHER,SP/M12	*	8	8				
5	8654-501-200-01	FORK/WHEEL ASSY	*	2	2		4L		
6	8654-501-201-00	BUSH/30X34X20	*	4	4				
7	3670-701-010-00	WASHER/30X50X05	*	2	2				
8	V704-140-030-00	RING,SNAP/30 C	*	2	2				
9	1427-432-005-00	COLLAR,THRUST	*	2	2				
10	V760-150-000-00	NIPPLE,GREASE	*	2	2				
11	8654-501-240-10	PIN/GAUGE COMP	*	2	2				
12	2144-106-005-00	PIN/10X53	*	2	2				
13	8654-501-006-10	SPRING/CLIP	*	2	2				
14	8654-501-340-10	RIM/GAUGEWHEEL COMP	*	2	2				
15	8654-501-321-00	TIRE/11X4.00-5	*	2	2				
16	1386-241-002-00	BULB	*	2	2				
17	V999-200-003-00	CAP,TIRE VALVE	*	2	2				
18	V600-140-620-40	BEARING,RB/6204RS	*	4	4				
19	8654-501-005-10	COLLAR/22X27X93	*	2	2				
20	V763-150-000-00	NIPPLE,GREASE/PT1/8	*	2	2				
21	8654-501-330-10	COLLAR/SEAL COMP	*	4	4				
22	8654-501-002-00	PIN/20X175	*	2	2				
23	V304-460-016-00	NUT/M16	*	2	2				
24	V401-160-016-00	WASHER,SP/M16	*	2	2				
25	8654-501-008-00	WASHER/34X47X01	*	4	4				
26	V705-140-047-00	RING,SNAP/47 C	*	4	4				
27	8654-501-280-00	ROLLER ASSY	*	2	2				
28	8654-501-283-00	BUSH/22X25X25	*	4	4				
29	8654-501-350-00	STAY/ROLLAR/F COMP	*	1	1				
30	V211-561-002-50	BOLT/M10X25	*	4	4				

FIG. 7 WHEEL (GAUGE) SYSTEM

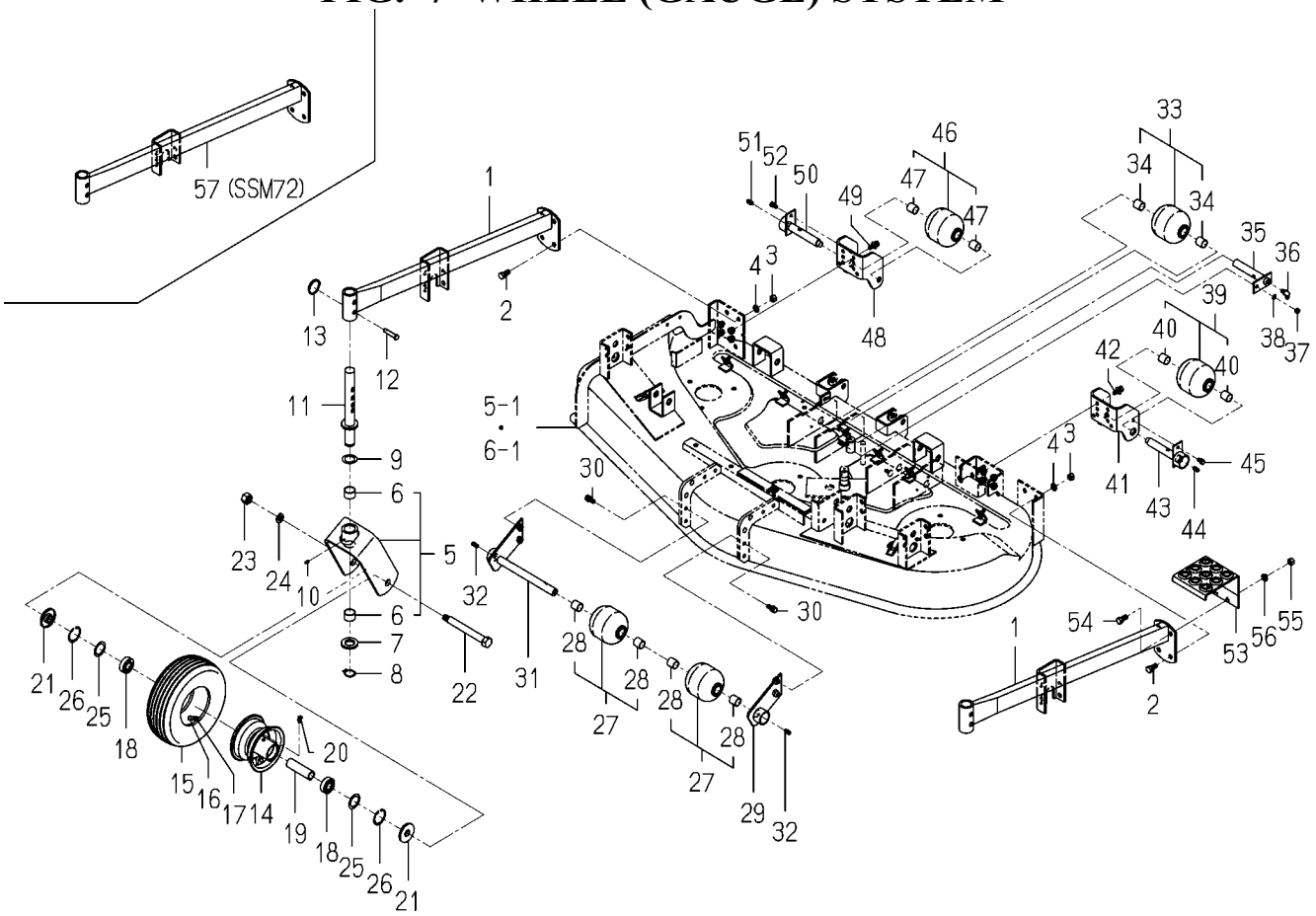

8654-501 -0100,8655-501 -0100

KEY	PART CODE	DESCRIPTION	SPC	TYPE OF MODEL SSM60 SF330	TYPE OF MODEL SSM72 SF330	ITC	COL	GRP	REMARKS
31	8654-501-250-10	PIN/ROLLER/FRON COMP	*	1	1				
32	3673-162-055-00	GREASE NIPPLE	*	2	2				
33	8654-501-280-00	ROLLER ASSY	*	2	2				
34	8654-501-283-00	BUSH/22X25X25	*	4	4				
35	8654-501-290-10	PIN/ROLLER/MID COMP	*	2	2				
36	V764-150-000-00	NIPPLE,GREASE/1/8	*	2	2				
37	V304-260-008-00	NUT/M 8	*	2	2				
38	V401-160-008-00	WASHER,SP/M 8	*	2	2				
39	8654-501-280-00	ROLLER ASSY	*	1	1				
40	8654-501-283-00	BUSH/22X25X25	*	2	2				
41	8654-501-004-20	STAY/ROLLER/REAR/LH	*	1	1				
42	V211-561-002-50	BOLT/M10X25	*	2	2				
43	8654-501-260-10	PIN/ROLLER/REAR COMP	*	1	1				
44	3673-162-055-00	GREASE NIPPLE	*	1	1				
45	V211-560-801-60	BOLT,SEMS	*	1	1				
46	8654-501-280-00	ROLLER ASSY	*	1	1				
47	8654-501-283-00	BUSH/22X25X25	*	2	2				
48	8654-501-007-20	STAY/ROLLER/REAR/RH	*	1	1				
49	V211-561-002-50	BOLT/M10X25	*	2	2				
50	8654-501-260-10	PIN/ROLLER/REAR COMP	*	1	1				
51	3673-162-055-00	GREASE NIPPLE	*	1	1				
52	V211-560-801-60	BOLT,SEMS	*	1	1				
53	8654-501-370-01	STEP/MOWER COMP	*	1	1		4L		
54	V201-361-202-50	BOLT/M12X25	*	2	2				
55	V304-460-012-00	NUT/M12	*	2	2				
56	V401-160-012-00	WASHER,SP/M12	*	2	2				
57	8655-501-210-11	ARM/GAUGE COMP	*		2		4L		

FIG. 8 LIFT SYSTEM

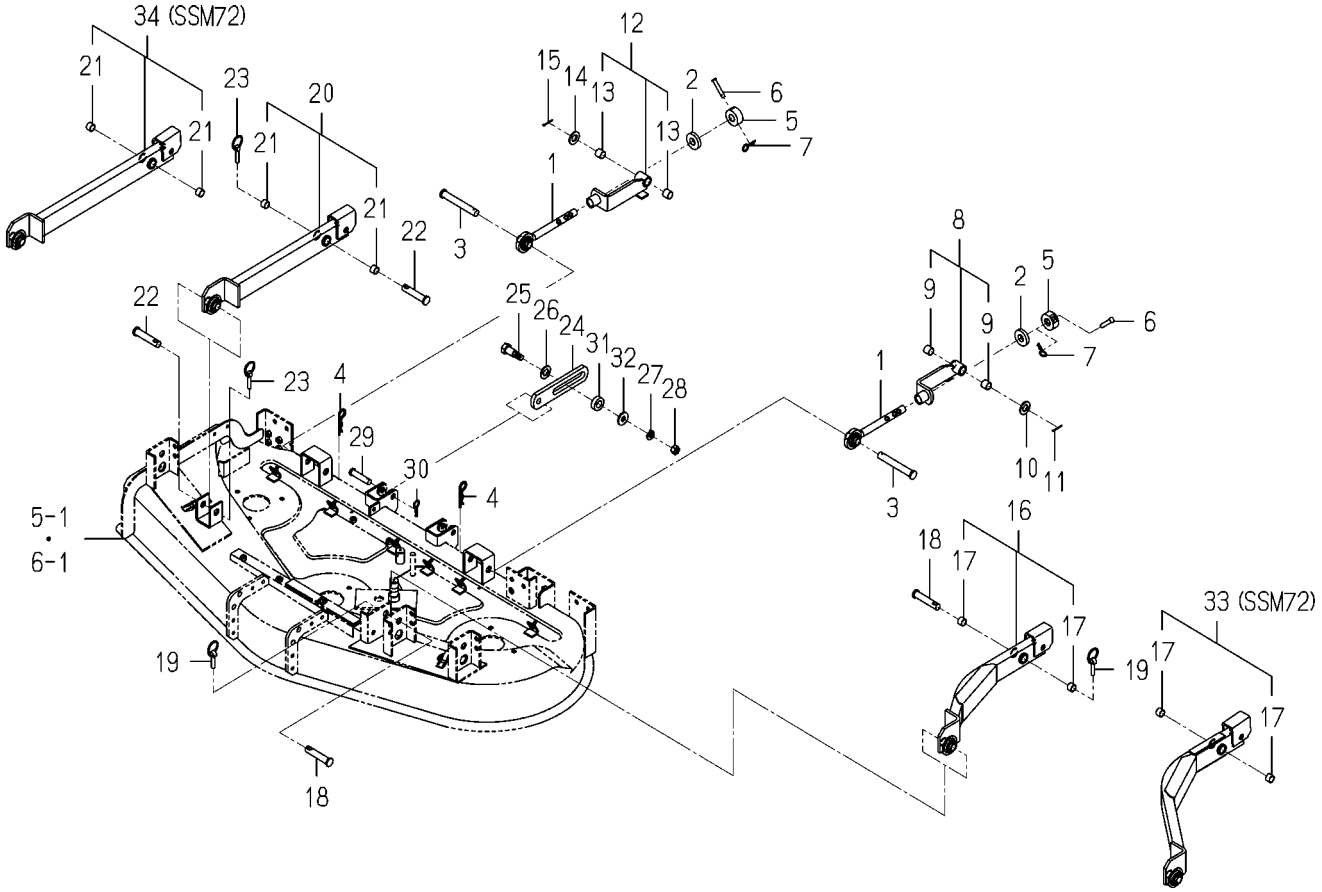

8654-510 -0100,8655-510 -0100

KEY	PART CODE	DESCRIPTION	SPC	TYPE OF MODEL SSM60 SF330	TYPE OF MODEL SSM72 SF330	ITC	COL	GRP	REMARKS
1	8654-510-240-10	ROD COMP	*	2	2				
2	8654-510-002-00	SPACER	*	2	2				
3	8654-510-007-10	PIN/19X139	*	2	2				
4	1444-514-005-10	PIN,HAIR (19)	*	2	2				
5	8654-510-009-10	STAY/ROD	*	2	2				
6	8654-510-013-00	PIN/10X57	*	2	2				
7	7957-501-004-00	PIN,HAIR	*	2	2				
8	8655-510-310-00	PLATE/LIFT/LH ASSY	*	1	1				
9	8650-203-001-10	BUSH/20X23X20	*	2	2				
10	V411-260-020-00	WASHER/M20	*	1	1				
11	V500-164-003-00	PIN,SPLIT/4 X30	*	1	1				
12	8655-510-330-00	PLATE/LIFT/RH ASSY	*	1	1				
13	8650-203-001-10	BUSH/20X23X20	*	2	2				
14	V411-260-020-00	WASHER/M20	*	1	1				
15	V500-164-003-00	PIN,SPLIT/4 X30	*	1	1				
16	8654-510-260-21	ARM/LH ASSY	*	1			4L		
17	8654-510-261-00	BUSH/19X22X15	*	2	2				
18	8654-510-001-00	PIN/19X92	*	2	2				
19	1673-525-002-10	LINKPIN	*	2	2				
20	8654-510-270-21	ARM/RH ASSY	*	1			4L		
21	8654-510-261-00	BUSH/19X22X15	*	2	2				
22	8654-510-001-00	PIN/19X92	*	2	2				
23	1673-525-002-10	LINKPIN	*	2	2				
24	8654-510-005-20	ARM/REAR	*	2	2				
25	8654-510-006-20	BOLT/M16X59	*	2	2				
26	V411-260-020-00	WASHER/M20	*	2	2				
27	V401-160-016-00	WASHER,SP/M16	*	2	2				
28	V304-460-016-00	NUT/M16	*	2	2				
29	8654-510-008-10	PIN/16X71	*	2	2				
30	7957-405-003-00	PIN,HAIR	*	2	2				

FIG. 8 LIFT SYSTEM

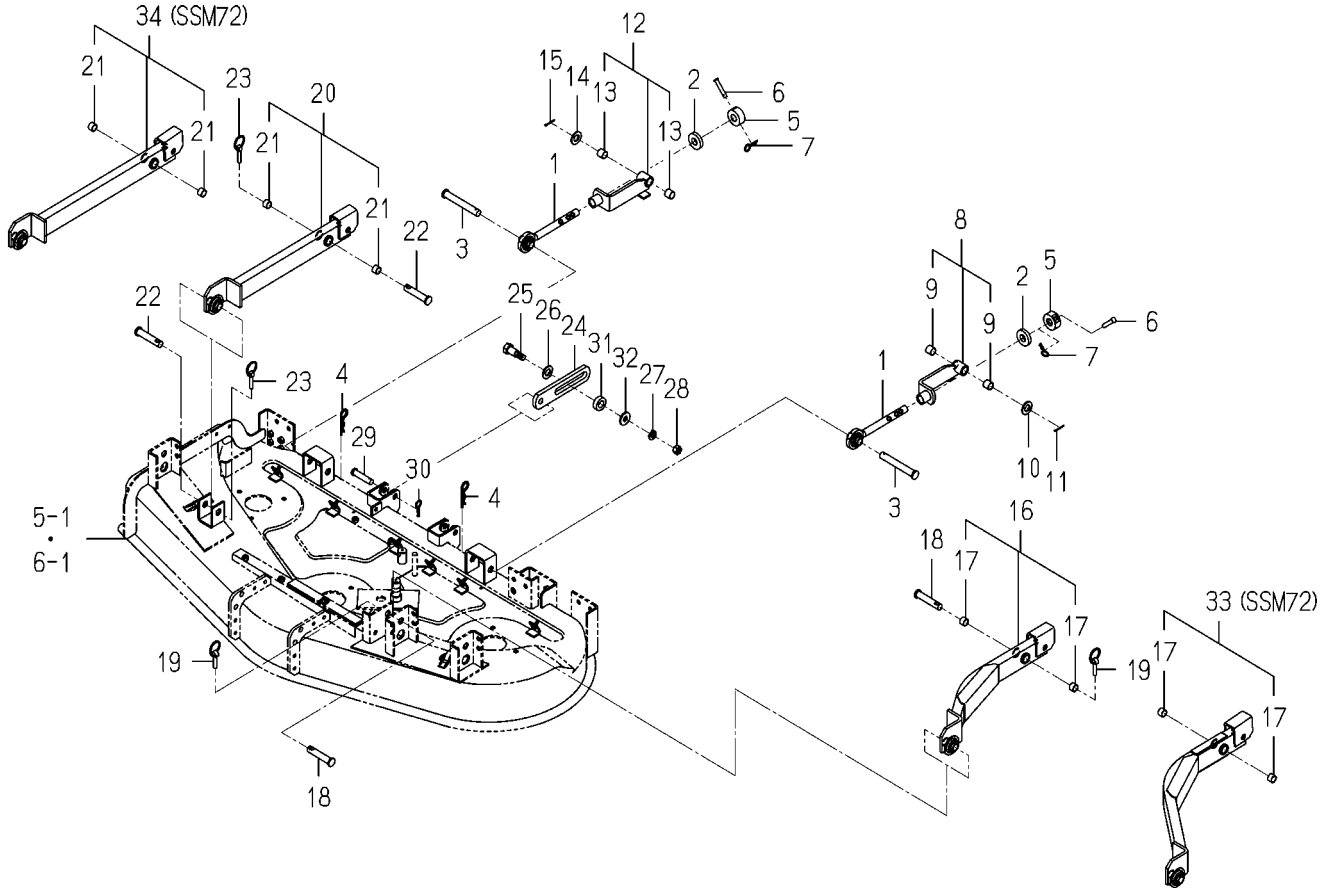

8654-510 -0100,8655-510 -0100

KEY	PART CODE	DESCRIPTION	SPC	TYPE OF MODEL SSM60 SF330	TYPE OF MODEL SSM72 SF330	ITC	COL	GRP	REMARKS
31	8654-510-011-00	COLLAR/22X40X13	*	2	2				
32	8654-510-012-10	WASHER/16X40X05	*	2	2				
33	8655-510-260-11	ARM/LH ASSY	*		1		4L		
34	8655-510-270-11	ARM/RH ASSY	*		1		4L		

FIG. 9 LABEL

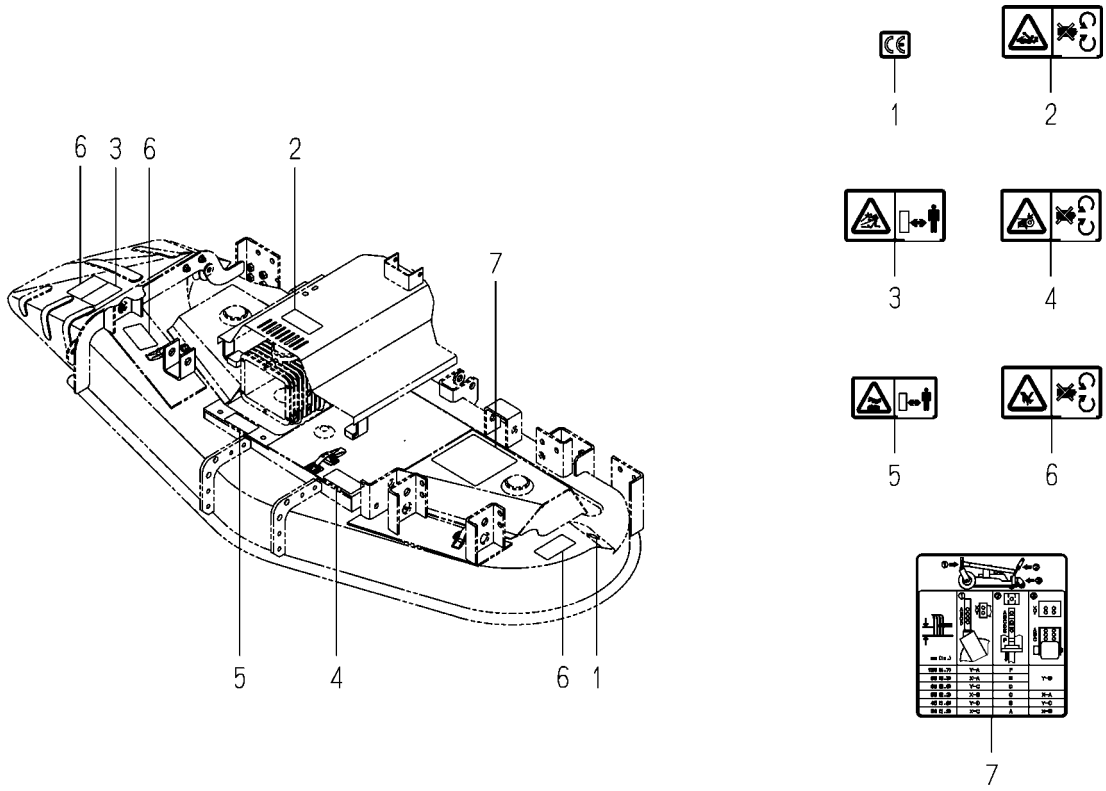

8654-901 -0100

KEY	PART CODE	DESCRIPTION	SPC	TYPE OF MODEL SSM60 SF330	TYPE OF MODEL SSM72 SF330	ITC	COL	GRP	REMARKS
1	2500-901-027-00	LABEL/CE	*	1	1				
2	8654-901-002-00	LABEL/PTO	*	1	1				
3	8595-901-005-00	LABEL/DANGER/DISCHAR	*	1	1				
4	8595-901-006-00	LABEL/WARNING/BELT	*	1	1				
5	8595-901-007-00	LABEL/WARNING/HOT	*	1	1				
6	2500-901-014-30	LABEL/DANGER	*	3	3				
7	8654-901-003-00	LABEL/CUTTING	*	1	1				

FIG. 10 CASE (BEVEL) ASSY (REPAIR)

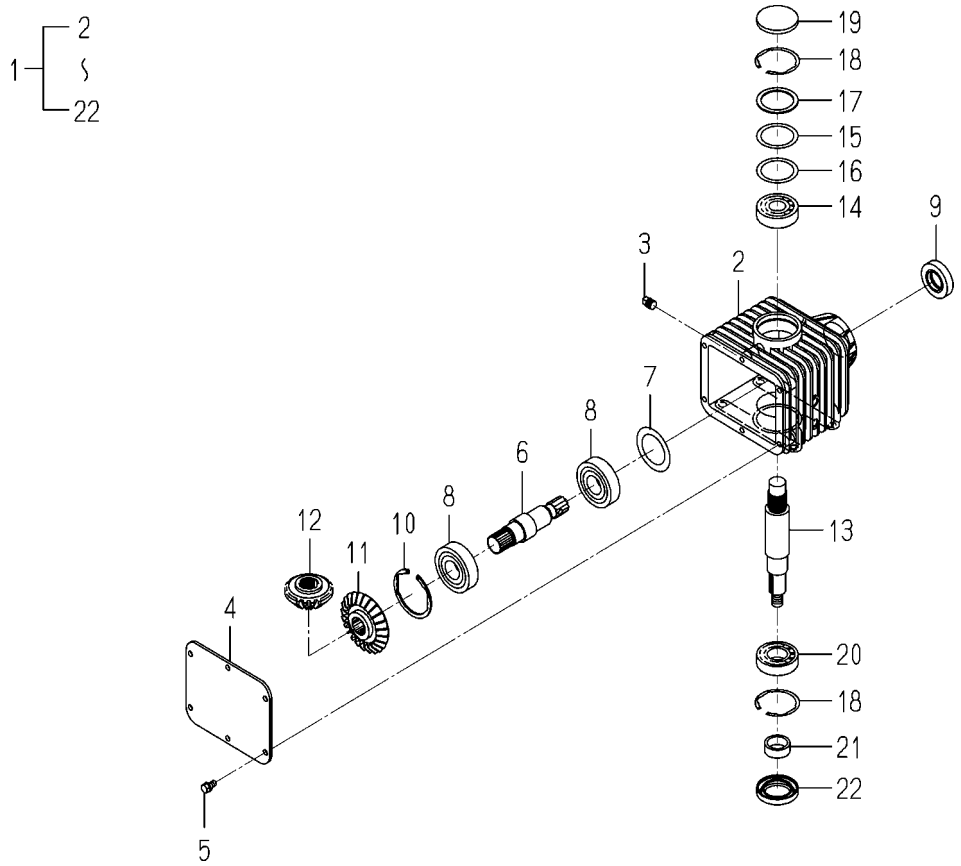

8654-201Z-0100

KEY	PART CODE	DESCRIPTION	SPC	TYPE OF MODEL SSM60 SF330	TYPE OF MODEL SSM72 SF330	ITC	COL	GRP	REMARKS
1	8654-201-200-00	CASE/BEVEL ASSY	R	1	1				
2	8654-201-001-20	CASE/BEVEL	R	1	1				
3	V781-160-000-4B	PLUG/SCREW/SEAL	R	2	2				
4	8654-201-011-00	COVER/CASE	R	1	1				
5	V211-560-801-60	BOLT,SEMS	R	6	6				
6	8654-201-002-00	SHAFT/INPUT	R	1	1				
7	8654-201-015-00	COLLAR/48X70X01	R	1	1				
8	7932-201-002-00	BEARING,RB/6306SH2	R	2	2				
9	V744-130-551-20	SEAL,OIL/TC305512	R	1	1				
10	V707-140-072-00	RING/SNAP	R	1	1				
11	8654-201-004-00	GEAR/BEVEL/24	R	1	1				
12	8654-201-005-00	GEAR/BEVEL/18	R	1	1				
13	8654-201-003-00	SHAFT/OUTPUT	R	1	1				
14	1594-218-001-00	BEARING/BALL 6305SH2	R	1	1				
15	8654-201-008-00	SHIM/0.1	R	1	1				
16	8654-201-009-00	SHIM/0.2	R	1	1				
17	8654-201-007-00	COLLAR/49X62X02	R	1	1				
18	V707-140-062-00	RING/SNAP	R	2	2				
19	3640-547-007-00	PLUG,CAP/62X6	R	1	1				
20	V600-110-620-60	BEARING,RB/6206	R	1	1				
21	1614-244-002-00	SLEEVE	R	1	1				
22	1614-244-005-00	SEAL/OIL	R	1	1				

FIG. 11 COMPONENT PARTS FOR 8654-101-200-00 ON Fig.1

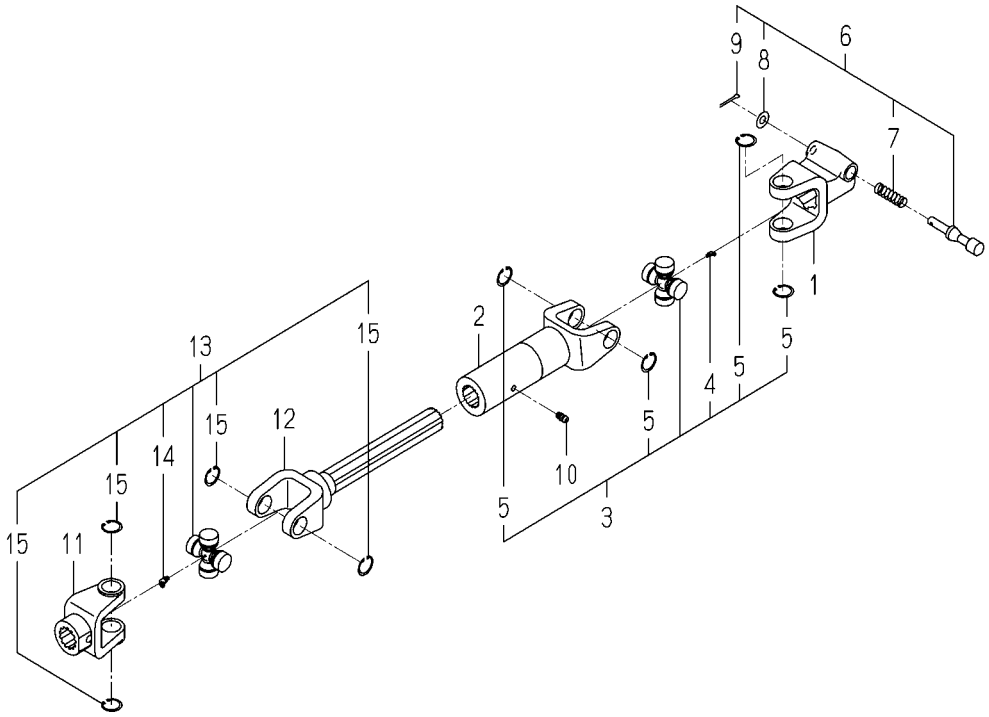

8654-101-200-0C

KEY	PART CODE	DESCRIPTION	SPC	TYPE OF MODEL SSM60 SF330	TYPE OF MODEL SSM72 SF330	ITC	COL	GRP	REMARKS
1	8654-101-211-00	QUICKDISCONNECTYOKE	*	1	1				
2	8654-101-212-00	SLEEVEYOKE ASSY	*	1	1				
3	8654-101-230-00	JOURNALCROSSE ASSY	*	1	1				
4	8654-101-232-00	GREASENIPPLE	*	1	1				
5	8654-101-233-00	SURCLIP/HOLE	*	4	4				
6	7821-102-260-00	PIN/14X75 SET	*	1	1				
7	7821-102-013-00	SPRING	*	1	1				
8	V411-260-008-00	WASHER,PL/M 8	*	1	1				
9	V500-163-002-00	PIN,SPLIT/3 X20	*	1	1				
10	8654-101-213-00	GREASENIPPLE	*	1	1				
11	8654-101-221-00	FITTINGYOKE	*	1	1				
12	8654-101-222-00	SHAFTYOKE ASSY	*	1	1				
13	8654-101-230-00	JOURNALCROSSE ASSY	*	1	1				
14	8654-101-232-00	GREASENIPPLE	*	1	1				
15	8654-101-233-00	SURCLIP/HOLE	*	4	4				

Numerical Index

8654-097-190-00

Part Code	Fig.	Key	Part Code	Fig.	Key	Part Code	Fig.	Key
1301-411-005-00	5	26	8595-306-005-00	4	13	8654-202-013-00	2	14
	6	26	8595-306-006-00	4	14	8654-202-016-00	2	2
1386-241-002-00	7	16	8595-306-007-00	4	15		2	8
1427-120-001-00	5	10	8595-901-005-00	9	3	8654-203-001-00	3	7
	5	14	8595-901-006-00	9	4		3	16
	6	10	8595-901-007-00	9	5	8654-203-002-10	3	5
	6	14	8650-203-001-10	8	9		3	14
1427-432-005-00	7	9		8	13	8654-203-003-00	3	11
1434-211-004-00	2	3	8654-101-200-00	1	1	8654-203-005-00	3	12
1444-514-005-10	8	4	8654-101-211-00	11	1	8654-203-006-00	3	10
1444-601-005-00	5	25	8654-101-212-00	11	2		3	21
	6	25	8654-101-213-00	11	10	8654-203-200-20	3	1
1593-101-012-00	5	21	8654-101-221-00	11	11	8654-203-201-00	3	2
	6	21	8654-101-222-00	11	12	8654-301-001-10	4	1
1593-616-004-20	5	27	8654-101-230-00	11	3	8654-301-002-10	4	4
	6	27		11	13	8654-301-003-00	4	6
1594-218-001-00	1	17	8654-101-232-00	11	4	8654-301-004-00	4	8
	10	14		11	14	8654-301-005-00	4	10
1614-244-002-00	1	24	8654-101-233-00	11	5	8654-301-006-00	4	9
	10	21		11	15	8654-306-006-00	4	12
1614-244-005-00	1	25	8654-201-001-20	1	4	8654-403-210-41	5	1
	10	22		10	2	8654-406-001-00	5	5
1673-525-002-10	8	19	8654-201-002-00	1	10		6	5
	8	23		10	6	8654-406-210-32	5	2
2144-106-005-00	7	12	8654-201-003-00	1	16	8654-407-001-20	5	22
2500-901-014-30	9	6		10	13		6	22
2500-901-027-00	9	1	8654-201-004-00	10	11	8654-407-002-10	5	23
3640-547-007-00	1	22	8654-201-005-00	10	12		6	23
	10	19	8654-201-007-00	1	20	8654-407-004-00	5	19
3666-222-003-00	3	3		10	17		6	19
	3	18	8654-201-008-00	1	18	8654-407-005-00	5	13
3670-471-005-00	5	6		10	15		5	17
	6	6	8654-201-009-00	1	19		6	13
3670-701-010-00	7	7		10	16		6	17
3673-162-055-00	7	32	8654-201-011-00	1	8	8654-407-006-10	5	24
	7	44		10	4		6	24
	7	51	8654-201-015-00	1	11	8654-407-210-11	5	9
3746-111-011-00	2	4		10	7	8654-407-220-11	5	12
	2	9	8654-201-200-00	10	1	8654-407-230-01	5	16
7821-102-013-00	11	7	8654-201-210-00	1	15	8654-407-310-31	5	20
7821-102-260-00	11	6	8654-201-220-00	1	26	8654-501-002-00	7	22
7932-201-002-00	1	12	8654-202-001-10	2	1	8654-501-004-20	7	41
	10	8	8654-202-002-20	2	7	8654-501-005-10	7	19
7957-405-003-00	8	30	8654-202-003-10	2	12	8654-501-006-10	7	13
7957-501-004-00	8	7	8654-202-004-10	2	13	8654-501-007-20	7	48

Numerical Index

Part Code	Fig.	Key	Part Code	Fig.	Key	Part Code	Fig.	Key
8654-501-008-00	7	25	8655-406-210-21	6	2	V363-260-008-00	6	18
8654-501-200-01	7	5	8655-407-210-01	6	9	V401-160-008-00	7	38
8654-501-201-00	7	6	8655-407-220-01	6	12	V401-160-012-00	1	7
8654-501-210-01	7	1	8655-407-230-01	6	16		4	2
8654-501-240-10	7	11	8655-407-310-11	6	20		5	8
8654-501-250-10	7	31	8655-501-210-11	7	57		6	8
8654-501-260-10	7	43	8655-510-260-11	8	33		7	4
	7	50	8655-510-270-11	8	34		7	56
8654-501-280-00	7	27	8655-510-310-00	8	8	V401-160-016-00	2	5
	7	33	8655-510-330-00	8	12		2	10
	7	39	P115-810-011-00	5	3		7	24
	7	46		6	3		8	27
8654-501-283-00	7	28	V201-261-011-00	5	28	V401-160-020-00	4	16
	7	34		6	28	V411-260-008-00	11	8
	7	40	V201-361-202-50	1	6	V411-260-020-00	8	10
	7	47		4	3		8	14
8654-501-290-10	7	35		7	2		8	26
8654-501-321-00	7	15		7	54	V500-163-002-00	11	9
8654-501-330-10	7	21	V211-560-801-60	1	9	V500-164-003-00	8	11
8654-501-340-10	7	14		7	45		8	15
8654-501-350-00	7	29		7	52	V580-140-804-00	1	2
8654-501-370-01	7	53		10	5	V600-110-620-60	1	23
8654-510-001-00	8	18	V211-561-002-50	1	27		10	20
	8	22		7	30	V600-110-630-50	4	5
8654-510-002-00	8	2		7	42	V600-140-620-40	7	18
8654-510-005-20	8	24		7	49	V600-140-620-50	3	6
8654-510-006-20	8	25	V304-260-008-00	7	37		3	15
8654-510-007-10	8	3	V304-260-010-00	5	29	V704-140-025-00	3	4
8654-510-008-10	8	29		6	29		3	19
8654-510-009-10	8	5	V304-260-012-00	5	7	V704-140-030-00	7	8
8654-510-011-00	8	31		6	7	V705-140-047-00	7	26
8654-510-012-10	8	32	V304-460-010-00	3	13	V705-140-052-00	3	8
8654-510-013-00	8	6	V304-460-012-00	7	3		3	17
8654-510-240-10	8	1		7	55	V707-140-062-00	1	21
8654-510-260-21	8	16	V304-460-016-00	2	6		4	7
8654-510-261-00	8	17		2	11		10	18
	8	21		7	23	V707-140-072-00	1	14
8654-510-270-21	8	20		8	28		10	10
8654-901-002-00	9	2	V363-260-008-00	5	4	V744-130-551-20	1	13
8654-901-003-00	9	7		5	11		10	9
8655-201-220-00	1	28		5	15	V760-150-000-00	3	9
8655-202-001-20	2	15		5	18		3	20
8655-202-013-00	2	16		6	4		4	11
8655-306-003-00	4	17		6	11		7	10
8655-403-210-51	6	1		6	15	V763-150-000-00	7	20

Numerical Index

8654-097-190-00

Part Code	Fig.Key		Part Code	Fig.Key	Part Code	Fig.Key
V764-150-000-00	7	36				
V781-160-000-4B	1	5				
	10	3				
V999-200-003-00	7	17				

Alpabetical Index

8654-097-190-00

Description	Fig.	Key
ARM/GAUGE COMP	7	1
ARM/GAUGE COMP	7	57
ARM/LH ASSY	8	16
ARM/LH ASSY	8	33
ARM/REAR	8	24
ARM/RH ASSY	8	20
ARM/RH ASSY	8	34
ARM/TENSION ASSY	3	1
BEARING, RB/6204RS	7	18
BEARING, RB/6205S	3	6
BEARING, RB/6205S	3	15
BEARING, RB/6206	1	23
BEARING, RB/6206	10	20
BEARING, RB/6305	4	5
BEARING, RB/6306SH2	1	12
BEARING, RB/6306SH2	10	8
BEARING/BALL 6305SH2	1	17
BEARING/BALL 6305SH2	10	14
BELT/VB125	2	14
BELT/VB146	2	16
BLADE/60X528/C	4	12
BLADE/60X630/C	4	17
BOLT, SEMS	1	9
BOLT, SEMS	7	45
BOLT, SEMS	7	52
BOLT, SEMS	10	5
BOLT/M10X110	5	28
BOLT/M10X110	6	28
BOLT/M10X25	1	27
BOLT/M10X25	7	30
BOLT/M10X25	7	42
BOLT/M10X25	7	49
BOLT/M12X25	1	6
BOLT/M12X25	4	3
BOLT/M12X25	7	2
BOLT/M12X25	7	54
BOLT/M16X59	8	25
BULB	7	16
BUSH/19X22X15	8	17
BUSH/19X22X15	8	21
BUSH/20X23X20	8	9
BUSH/20X23X20	8	13
BUSH/22X25X25	7	28
BUSH/22X25X25	7	34
BUSH/22X25X25	7	40
BUSH/22X25X25	7	47
BUSH/25X28X15	3	2
BUSH/30X34X20	7	6
CAP, TIRE VALVE	7	17
CAP/42	5	10
CAP/42	5	14
CAP/42	6	10
CAP/42	6	14
CASE/BEVEL	1	4
CASE/BEVEL	10	2
CASE/BEVEL ASSY	10	1
COLLAR, THRUST	7	9
COLLAR/22X27X93	7	19
COLLAR/22X40X13	8	31
COLLAR/26X36X3	2	3
COLLAR/28X34X14	3	7
COLLAR/28X34X14	3	16
COLLAR/28X34X32	4	6
COLLAR/48X70X01	1	11
COLLAR/48X70X01	10	7
COLLAR/49X62X02	1	20
COLLAR/49X62X02	10	17
COLLAR/SEAL	4	10
COLLAR/SEAL COMP	7	21
COVER/BELT COMP	5	16
COVER/BELT/LH COMP	5	9
COVER/BELT/LH COMP	6	9
COVER/BELT/RH COMP	5	12
COVER/BELT/RH COMP	6	12
COVER/BRLT COMP	6	16
COVER/CASE	1	8
COVER/CASE	10	4
COVER/DISCHARGE COMP	5	2
COVER/DISCHARGE COMP	6	2
COVER/TENSION	5	19
COVER/TENSION	6	19
COVER/UNIVERSAL COMP	5	20
COVER/UNIVERSAL COMP	6	20
DECK/MOWER/60 COMP	5	1
DECK/MOWER/72 COMP	6	1
FITTINGYOKE	11	11
FORK/WHEEL ASSY	7	5
GEAR/BEVEL/18	10	12
GEAR/BEVEL/24	10	11
GEAR/BEVEL/24-1 SET	1	15
GREASE NIPPLE	7	32
GREASE NIPPLE	7	44
GREASE NIPPLE	7	51
GREASENIPPLE	11	4
GREASENIPPLE	11	10
GREASENIPPLE	11	14
GROMMET 7X14X1	5	25
GROMMET 7X14X1	6	25
GROMMET/10X30X5	5	27
GROMMET/10X30X5	6	27
HOOK	5	24
HOOK	6	24
JOINT/UNIVERSAL SET	1	1
JOURNALCROSSE ASSY	11	3
JOURNALCROSSE ASSY	11	13
KEY/06X06X28	2	2
KEY/06X06X28	2	8
LABEL/CE	9	1
LABEL/CUTTING	9	7
LABEL/DANGER	9	6
LABEL/DANGER/DISCHAR	9	3
LABEL/PROTECTER	5	13
LABEL/PROTECTER	5	17
LABEL/PROTECTER	6	13
LABEL/PROTECTER	6	17
LABEL/PTO	9	2
LABEL/WARNING/BELT	9	4
LABEL/WARNING/HOT	9	5
LINKPIN	8	19
LINKPIN	8	23
METAL	4	1
NIPPLE, GREASE	3	9
NIPPLE, GREASE	3	20
NIPPLE, GREASE	4	11
NIPPLE, GREASE	7	10
NIPPLE, GREASE/1/8	7	36
NIPPLE, GREASE/PT1/8	7	20
NUT	5	29
NUT	6	29
NUT, LOCK/M8	5	4
NUT, LOCK/M8	5	11
NUT, LOCK/M8	5	15
NUT, LOCK/M8	5	18
NUT, LOCK/M8	6	4
NUT, LOCK/M8	6	11

Alpabetical Index

8654-097-190-00

Description	Fig.	Key
NUT, LOCK/M8	6	15
NUT, LOCK/M8	6	18
NUT/M 8	7	37
NUT/M10	3	13
NUT/M12	5	7
NUT/M12	6	7
NUT/M12	7	3
NUT/M12	7	55
NUT/M16	2	6
NUT/M16	2	11
NUT/M16	7	23
NUT/M16	8	28
NUT/M20X1.5	4	15
PIN, HAIR	5	26
PIN, HAIR	6	26
PIN, HAIR	8	7
PIN, HAIR	8	30
PIN, HAIR (19)	8	4
PIN, SPLIT/3 X20	11	9
PIN, SPLIT/4 X30	8	11
PIN, SPLIT/4 X30	8	15
PIN, SPRING/8 X40 W	1	2
PIN/10X53	7	12
PIN/10X57	8	6
PIN/14X75 SET	11	6
PIN/16X71	8	29
PIN/19X139	8	3
PIN/19X92	8	18
PIN/19X92	8	22
PIN/20X175	7	22
PIN/GAUGE COMP	7	11
PIN/ROLLER/FRON COMP	7	31
PIN/ROLLER/MID COMP	7	35
PIN/ROLLER/REAR COMP	7	43
PIN/ROLLER/REAR COMP	7	50
PLATE/03X15X65	5	3
PLATE/03X15X65	6	3
PLATE/LIFT/LH ASSY	8	8
PLATE/LIFT/RH ASSY	8	12
PLUG, CAP/62X6	1	22
PLUG, CAP/62X6	10	19
PLUG/SCREW/SEAL	1	5
PLUG/SCREW/SEAL	10	3
PULLEY/FT100X048	3	5
PULLEY/FT100X048	3	14
PULLEY/V2B120	2	7
PULLEY/V2B125	2	1
PULLEY/V2B143	2	15
QUICKDISCONNECTYOKE	11	1
RIM/GAUGEWHEEL COMP	7	14
RING, SNAP/25 C	3	4
RING, SNAP/25 C	3	19
RING, SNAP/30 C	7	8
RING, SNAP/47 C	7	26
RING, SNAP/52 C	3	8
RING, SNAP/52 C	3	17
RING/SNAP	1	14
RING/SNAP	1	21
RING/SNAP	4	7
RING/SNAP	10	10
RING/SNAP	10	18
ROD COMP	8	1
ROD/M10X131	3	12
ROLLER ASSY	7	27
ROLLER ASSY	7	33
ROLLER ASSY	7	39
ROLLER ASSY	7	46
SEAL, OIL/TC305512	1	13
SEAL, OIL/TC305512	10	9
SEAL/OIL	1	25
SEAL/OIL	4	8
SEAL/OIL	4	9
SEAL/OIL	10	22
SHAFT	4	4
SHAFT/INPUT	1	10
SHAFT/INPUT	10	6
SHAFT/OUTPUT	1	16
SHAFT/OUTPUT	10	13
SHAFTYOKE ASSY	11	12
SHIM/0.1	1	18
SHIM/0.1	10	15
SHIM/0.2	1	19
SHIM/0.2	10	16
SHIM/0.5	2	12
SHIM/1.0	2	13
SHIM/1.2	4	14
SLEEVE	1	24
SLEEVE	10	21
SLEEVEYOKE ASSY	11	2
SPACER	8	2
SPRING	11	7
SPRING/CLIP	7	13
SPRING/HE136	3	11
STAY/GEARCASE COMP	1	26
STAY/GEARCASE COMP	1	28
STAY/ROD	8	5
STAY/ROLLAR/F COMP	7	29
STAY/ROLLER/REAR/LH	7	41
STAY/ROLLER/REAR/RH	7	48
STEP/MOWER COMP	7	53
STOPPER	5	21
STOPPER	6	21
STOPPER/COVER	5	5
STOPPER/COVER	6	5
SURCLIP/HOLE	11	5
SURCLIP/HOLE	11	15
TIRE/11X4.00-5	7	15
TRIM/315	5	23
TRIM/315	6	23
TRIM/560	5	22
TRIM/560	6	22
WASHER	2	4
WASHER	2	9
WASHER, PL/M 8	11	8
WASHER, SP/M 8	7	38
WASHER, SP/M12	1	7
WASHER, SP/M12	4	2
WASHER, SP/M12	5	8
WASHER, SP/M12	6	8
WASHER, SP/M12	7	4
WASHER, SP/M12	7	56
WASHER, SP/M16	2	5
WASHER, SP/M16	2	10
WASHER, SP/M16	7	24
WASHER, SP/M16	8	27
WASHER, SP/M20	4	16
WASHER/12X30X05	5	6
WASHER/12X30X05	6	6
WASHER/16X40X05	8	32
WASHER/20X60X06	4	13
WASHER/26X34X2	3	3
WASHER/26X34X2	3	18
WASHER/30X50X05	7	7
WASHER/34X47X01	7	25
WASHER/39X52X01	3	10

Alpabetical Index

8654-097-190-00

Description	Fig.Key		Description	Fig.Key	Description	Fig.Key
WASHER/39X52X01	3	21				
WASHER/M20	8	10				
WASHER/M20	8	14				
WASHER/M20	8	26				