Directions for use of Parts Catalogue

1. Applicable model of machines

All component and option parts used for SSM54-FE4M Mower are listed in this parts catalogue.

NOTES: SSM54-FE4M····· FOR SF200,230

2. Explanation for head paragraph

KEY	PART CODE	DESCRIPTION	SPC	TYPE OF MODEL						ITC	COL	GRP	REMARKS
				SSM48M	SSM48F	SSM48G	SRM48M	SRM48F	SRM48G				
1	8595-211-001-20	CASE/UPPER	*	1 -229									
1A	8657-201-081-00	CASE/UPPER	*	1 230-			1						
2	8595-211-002-10	CASE/LOWER	*	1			1						
3	V523-100-801-80	PIN	*	2			2						
4	V211-260-803-00	BOLT, SEMS	*	6			6						
			*	2 -229									
			*	2 230-			2						
				2			2						
				1			1						

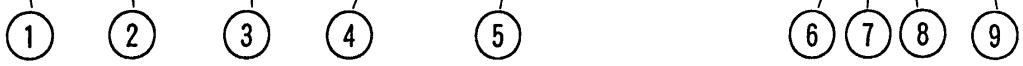

① KEY shows the location of parts diagramed in the illustration.

② Parts numbers begin with `V´ and `W´ are standard parts of the market.

③ `LH´ and `RH´ on the parts name are described against the moving direction of the machine or are described on the condition how to install parts on the machines.

④ SPC : The following symbol classifies parts to be used for machines.

`*´ means standard parts.

`T´ shows that the parts can be installed as optional parts.

`R´ shows that the parts can be used as applicable parts to replace originally equipped parts.

⑤ Upper column : QTY shows the number of parts to be used for one unit of machine.

`M´ is indicated for parts supplied by a meter long.

`l´ is indicated for parts supplied by liter.

`AR´ is indicated for parts need to be adjusted or regulated.

Lower column : serial number

—229 means serial number up to 229.

230— means serial number 230 and after.

⑥ ITC : Interchangeability

`1´…OLD ← NEW

New parts can be used in place of the old parts.

`2´…OLD → NEW

Old parts can be used in place of the new parts.

`3´…OLD →← NEW

Old parts and new parts can not be replaced each other.

⑦ COL : Color code

Color is signified with color code number for colored parts.

Please see the color list shown in the next page.

⑧ GRP : Parts shown in this column can be replaced by SET parts.

Example : Parts marked Ⓐ can be replaced by parts marked Ⓑ, and Ⓓ for Ⓒ, so the rest follow in the same alphabetical order.

⑨ Remarks

＊Other maker's part code number is shown in this column.

＊When Fig. No. is shown in the Remark column of SET parts or ASSY parts, each of their component parts are listed in said Fig. No.

3. Color :

The following colors are used color parts.

COLOR CODE	COLOR	SPRAY TYPE CODE NUMBER	PAINTS 4K DRUM	PAINTS 16K DRUM
4 L	NEO BLUE	1300-985-001-10	1300-985-003-00	————
7 F	MIRROR BLACK	1300-954-001-10	1300-954-003-00	1300-954-004-00

NOTE : Color code is signified only for the parts assigned by the maker as color parts.

4. Serial Numbers :

For chassies serial number is shown on the LABEL.

Please see

5. Parts Order

1) Parts numbers listed in the parts catalogue are all registered in "ISEKI on-line computer".
2) When you order parts, please make sure of correct numbers.
3) When substitute parts is available, the part number ordered will be automatically turned to a new part number.
4) Please be sure to use "ISEKI GENUINE PARTS".
   Any other similar parts other than ISEKI parts when used may cause a trouble that makes us unable to repair or guarantee the warrant.

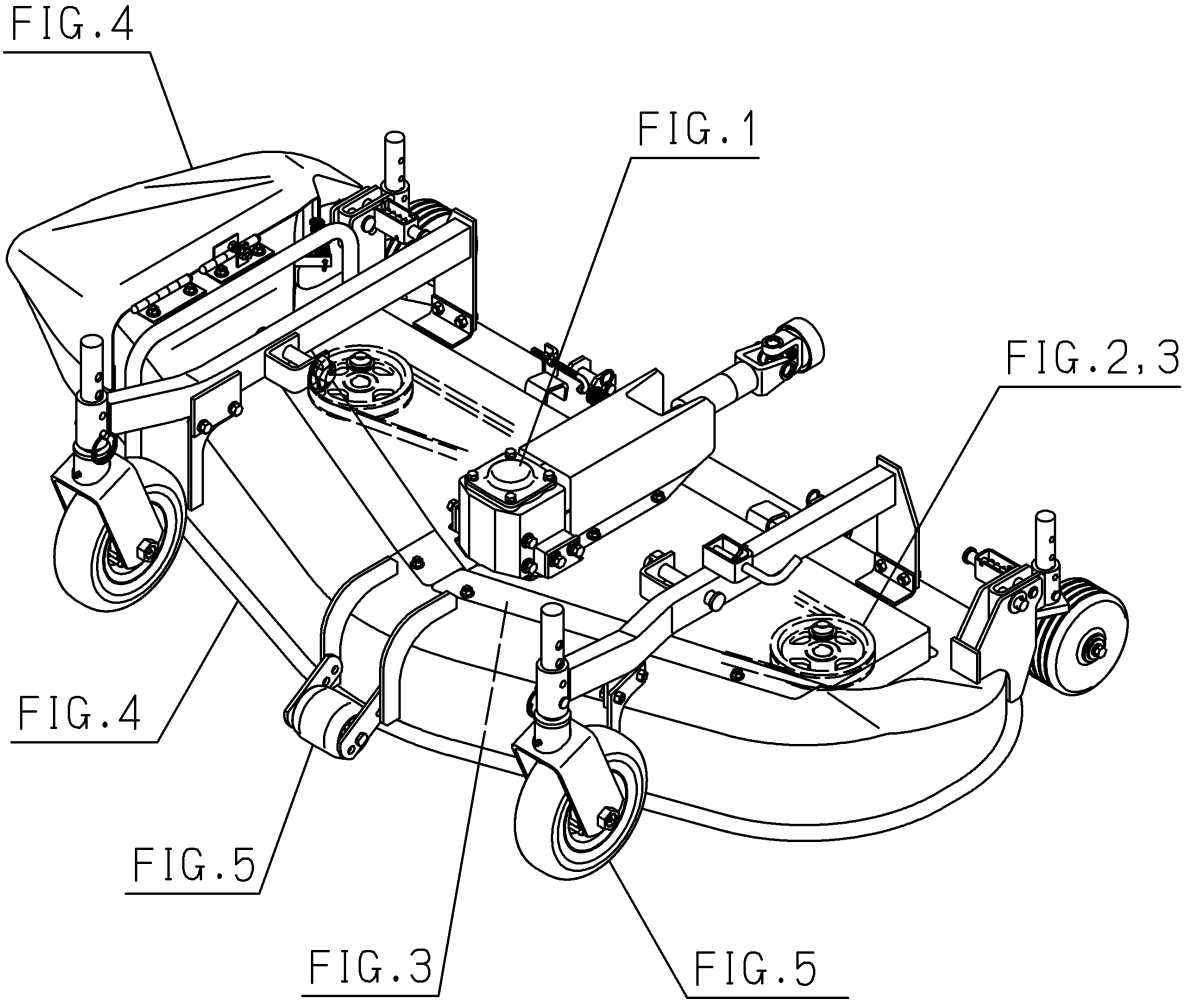
FIG.4
FIG.1
FIG.2,3
FIG.4
FIG.5
FIG.3
FIG.5

Contents

SSM54

UNIVERSAL JOINT,CASE (BEVEL) SYSTEM····· Fig. 1
PULLEY,V BELT SYSTEM····· Fig. 2
METAL,BLADE SYSTEM····· Fig. 3
MOWER DECK,COVER SYSTEM····· Fig. 4
GAUGE WHEEL SYSTEM····· Fig. 5
LIFT SYSTEM····· Fig. 6
LABEL····· Fig. 7

OPTIONAL PARTS

CASE (BEVEL) ASSY (OPTION)····· Fig. 8
GAUGE WHEEL SET (OPTION)····· Fig. 9
NEW TRACTOR + OLD MOWER (OPTION)····· Fig. 10
OLD TRACTOR + NEW MOWER (OPTION)····· Fig. 11

COMPONENT PARTS

COMPONENT PARTS FOR 8595-101-510-00 ON Fig.1····· Fig. 12

FIG. 1 UNIVERSAL JOINT,CASE (BEVEL) SYSTEM

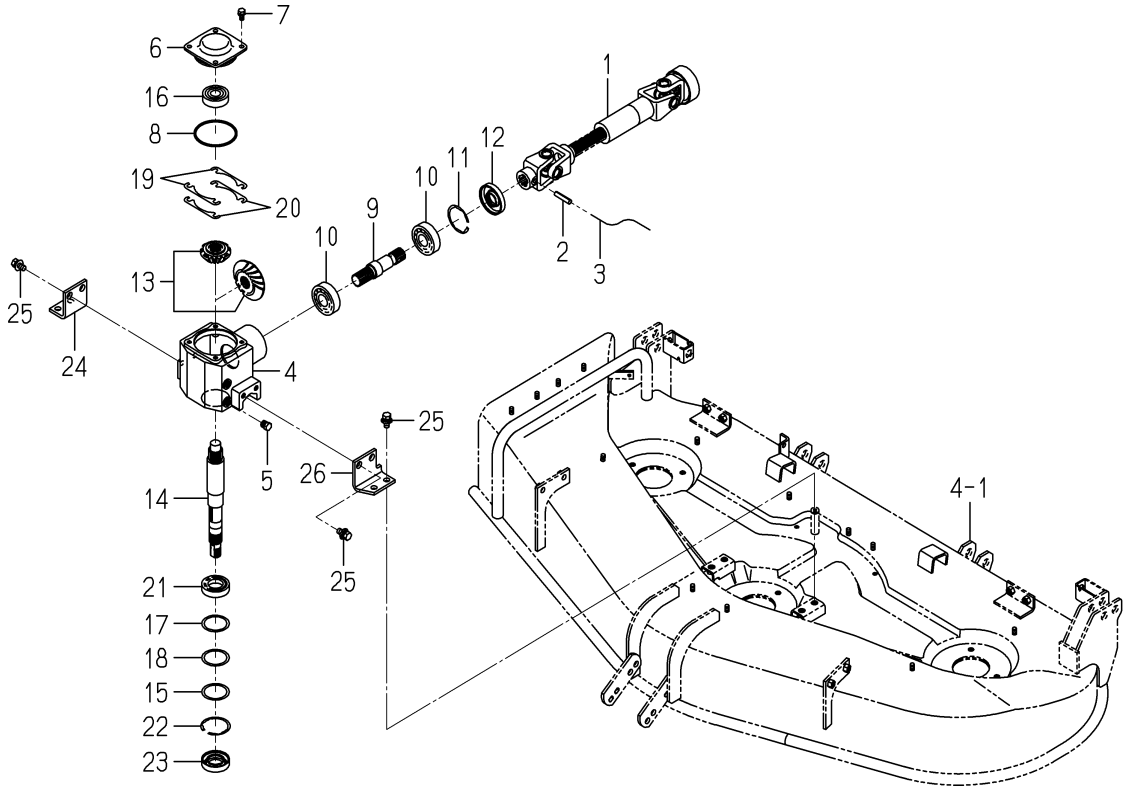

8595-101E-0100,8657-201 -0100

KEY	PART CODE	DESCRIPTION	SPC	TYPE OF MODEL SSM54	TYPE OF MODEL FE4M	ITC	COL	GRP	REMARKS
1	8595-101-510-00	JOINT/UNIVERSAL SET	*	1					FIG 012
2	V580-140-804-00	PIN,SPRING/8 X40 W	*	1					
3		WIRE	*	1					
4	8595-201-011-00	CASE/BEVEL	*	1					
5	7955-201-026-00	PLUG,DRAIN (1/4)	*	2					
6	8595-201-012-00	COVER/CASE	*	1					
7	V211-260-801-60	BOLT,SEMS (S) M8X16	*	4					
8	V721-103-108-00	O-RING/G80	*	1					
9	8595-201-013-00	SHAFT/INPUT	*	1					
10	1594-218-001-00	BEARING/BALL 6305SH2	*	2					
11	V707-140-062-00	RING/SNAP	*	1					
12	8595-201-025-00	SEAL/OIL	*	1					
13	8657-201-230-00	GEAR/BEVEL/24-1 SET	*	1					
14	8595-201-014-20	SHAFT/OUTPUT	*	1					
15	8595-201-015-00	WASHER/45X55X01	*	1					
16	1560-214-003-00	BEARING/BALL/6304SH2	*	1					
17	8595-201-016-00	SHIM/0.1	*	1					
18	8595-201-017-00	SHIM/0.2	*	1					
19	8595-201-021-00	SHIM/0.1	*	1					
20	8595-201-022-00	SHIM/0.2	*	1					
21	V600-110-600-60	BEARING,RB 6006	*	1					
22	V707-140-055-00	RING/SNAP	*	1					
23	V744-130-551-20	SEAL,OIL/TC305512	*	1					
24	8595-201-024-00	PLATE/L/60X65	*	1					
25	V211-661-002-00	BOLT/M10X20	*	8					
26	8595-201-023-00	PLATE/L/75X65	*	1					

FIG. 2 PULLEY,V BELT SYSTEM

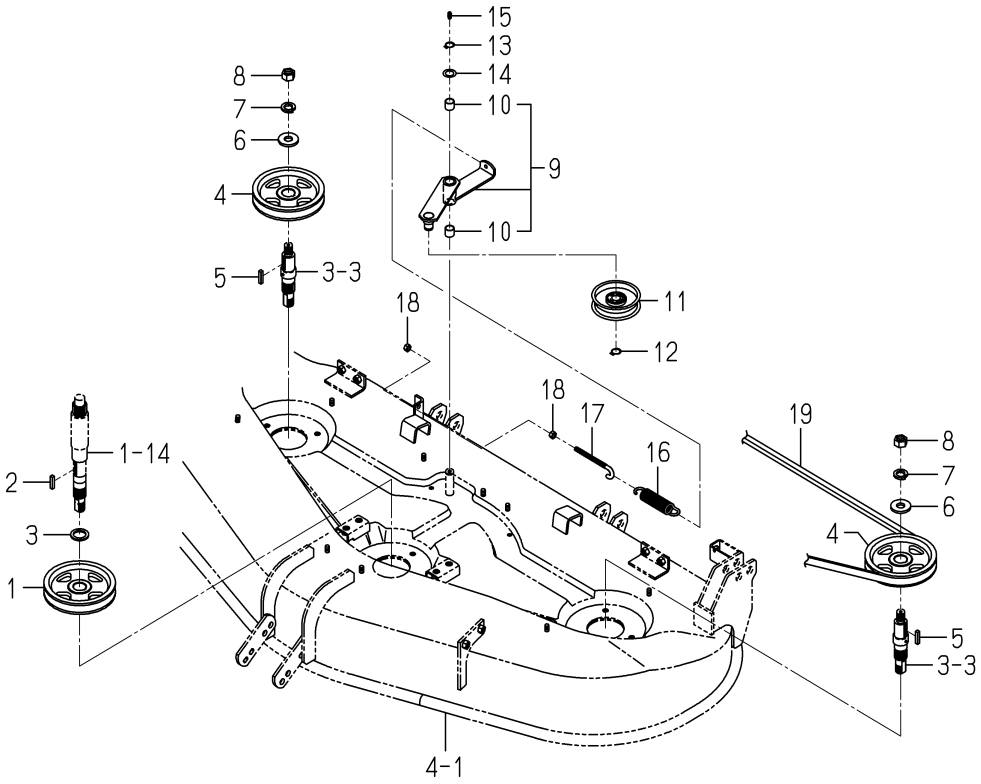

8657-202A-0100,8657-203 -0100

KEY	PART CODE	DESCRIPTION	SPC	TYPE OF MODEL SSM54 FE4M		ITC	COL	GRP	REMARKS
1	8657-202-003-10	PULLEY/VB137	*	1					
2	8654-202-016-00	KEY/06X06X28	*	1					
3	1434-211-004-00	COLLAR/26X36X3	*	1					
4	8657-202-003-10	PULLEY/VB137	*	2					
5	8654-202-016-00	KEY/06X06X28	*	2					
6	3746-111-011-00	WASHER	*	2					
7	V401-160-016-00	WASHER,SP/M16	*	2					
8	V304-460-016-00	NUT/M16	*	2					
9	8657-202-220-10	ARM/TENSION ASSY	*	1					
10	8597-202-501-00	BUSH/16X18X15	*	2					
11	8593-014-200-10	PULLEY COMP	*	1					
12	V704-140-017-00	RING,SNAP/17 C	*	1					
13	V704-140-016-00	RING,SNAP/16 C	*	1					
14	3621-211-003-00	WASHER	*	1					
15	V760-150-000-00	NIPPLE,GREASE	*	1					
16	3737-341-006-00	SPRING,CHAIN TENSION	*	1					
17	3737-341-007-00	ROD,CHAIN TENSION	*	1					
18	V304-260-008-00	NUT	*	2					
19	8657-203-001-00	BELT/VB101	*	1					

FIG. 3 METAL,BLADE SYSTEM

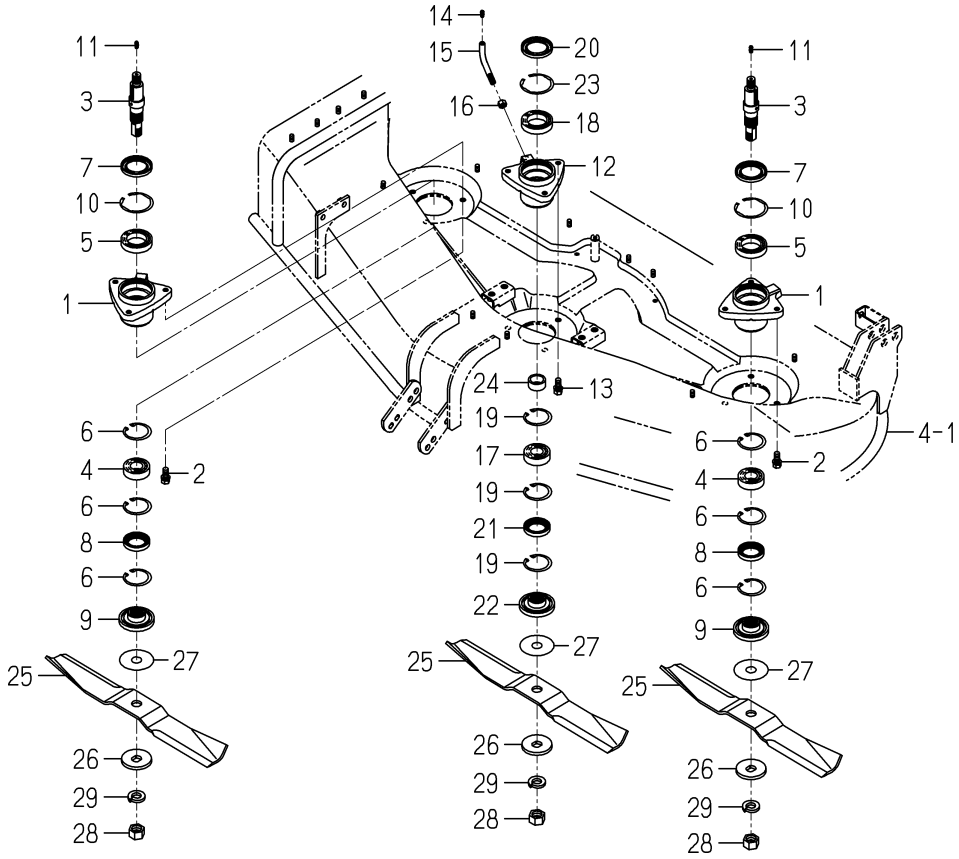

8595-301D-0100,8657-306C-0100

KEY	PART CODE	DESCRIPTION	SPC	TYPE OF MODEL SSM54 FE4M		ITC	COL	GRP	REMARKS
1	8657-301-004-00	METAL/SIDE	*	2					
2	V211-261-002-50	BOLT(S) M10X25	*	6					
3	8595-301-031-00	SHAFT/BRADE	*	2					
4	1594-221-001-00	BEARING/BALL 6205SH2	*	2					
5	V600-110-690-80	BEARING	*	2					
6	V705-140-052-00	RING,SNAP/52 C	*	6					
7	8654-301-004-00	SEAL/OIL	*	2					
8	V744-135-520-80	SEAL,OIL/TC35528	*	2					
9	8657-301-007-00	COLLAR/BRADE	*	2					
10	V707-140-062-00	RING/SNAP	*	2					
11	V760-150-000-00	NIPPLE,GREASE	*	2					
12	8657-301-005-00	METAL/CENTER	*	1					
13	V211-261-002-50	BOLT(S) M10X25	*	3					
14	V760-150-000-00	NIPPLE,GREASE	*	1					
15	8657-301-009-00	PIPE/GREASE	*	1					
16	V304-260-010-00	NUT	*	1					
17	1594-221-001-00	BEARING/BALL 6205SH2	*	1					
18	V600-110-690-80	BEARING	*	1					
19	V705-140-052-00	RING,SNAP/52 C	*	3					
20	8654-301-004-00	SEAL/OIL	*	1					
21	V744-135-520-80	SEAL,OIL/TC35528	*	1					
22	8657-301-007-00	COLLAR/BRADE	*	1					
23	V707-140-062-00	RING/SNAP	*	1					
24	8657-301-008-00	COLLER/26X34X15	*	1					
25	8657-306-005-00	BLADE/60X472/D	*	3					
26	8595-306-005-00	WASHER/20X60X06	*	3					
27	8595-306-006-00	SHIM/1.2	*	3					
28	8595-306-007-00	NUT/M20X1.5	*	3					
29	V401-160-020-00	WASHER,SP/M20	*	3					

FIG. 4 MOWER DECK,COVER SYSTEM

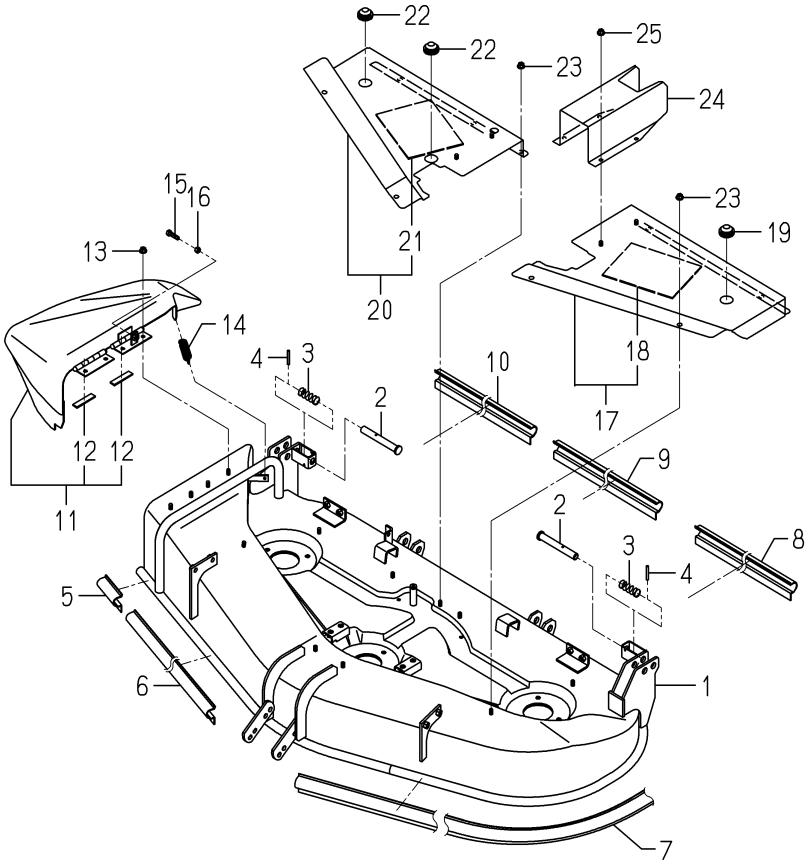

8657-402G-0100,8657-406 -0100,8657-407 -0100

KEY	PART CODE	DESCRIPTION	SPC	TYPE OF MODEL SSM54 FE4M		ITC	COL	GRP	REMARKS
1	8657-402-240-00	DECK/MOWER/54/F COMP	*	1			4L		
2	8654-501-047-00	PIN/16X124	*	2					
3	8654-501-048-00	SPRING/HC056	*	2					
4	V580-140-504-00	PIN,SPRING/5 X40 W	*	2					
5	8657-402-012-00	INSULATOR/90	*	1					
6	8657-402-013-00	INSULATOR/580	*	1					
7	8657-402-014-00	INSULATOR/1030	*	1					
8	8657-402-015-00	INSULATOR/360	*	1					
9	8595-402-015-00	INSULATOR/410	*	1					
10	8657-402-016-00	INSULATOR/330	*	1					
11	8657-406-210-02	COVER/DISCHARGE COMP	*	1			4L		
12	P115-810-011-00	PLATE/03X15X65	*	2					
13	V363-260-008-00	NUT/WASHER	*	4					
14	3768-112-001-00	SPRING,CLUTCH RETURN	*	1					
15	V201-260-803-00	BOLT/M 8X30	*	1					
16	V304-260-008-00	NUT	*	1					
17	8657-407-240-00	COVER/BELT/LH/F ASSY	*	1					
18	8595-407-004-00	INSULATOR/150X200	*	1					
19	2149-602-012-00	CAP/32	*	1					
20	8657-407-230-00	COVER/BELT/RH/F ASSY	*	1			4L		
21	8595-407-004-00	INSULATOR/150X200	*	1					
22	2149-602-012-00	CAP/32	*	2					
23	V362-260-008-00	NUT/WASHER	*	9					
24	8595-407-003-01	COVER/UNIVERSAL	*	1			4L		
25	V362-260-008-00	NUT/WASHER	*	4					

FIG. 5 GAUGE WHEEL SYSTEM

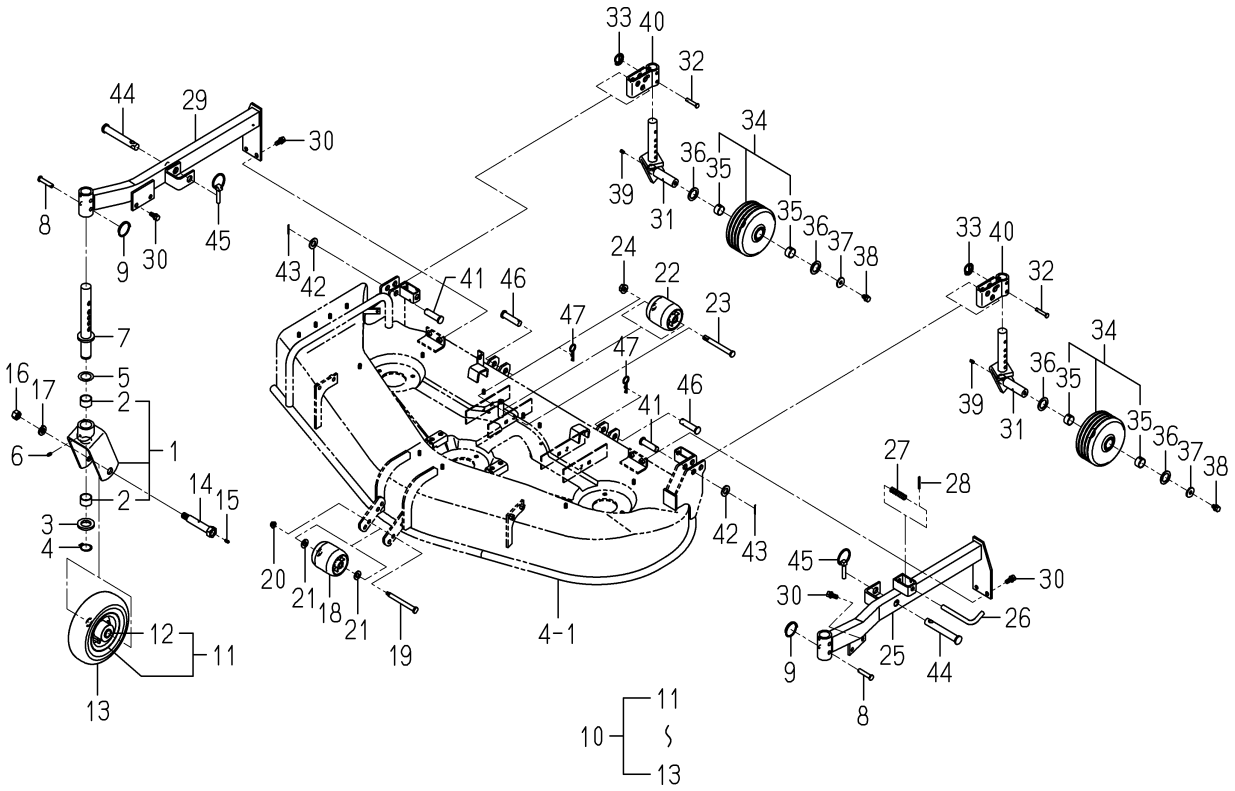

8657-501B-0100

KEY	PART CODE	DESCRIPTION	SPC	TYPE OF MODEL SSM54	TYPE OF MODEL FE4M	ITC	COL	GRP	REMARKS
1	8595-501-310-01	FORK/WHEEL ASSY	*	2			4L		
2	8654-501-201-00	BUSH/30X34X20	*	4					
3	3670-701-010-00	WASHER/30X50X05	*	2					
4	V704-140-030-00	RING,SNAP/30 C	*	2					
5	1427-432-005-00	COLLAR,THRUST	*	2					
6	V760-150-000-00	NIPPLE,GREASE	*	2					
7	8595-501-280-01	PIN/GAUGE COMP	*	2			4L		
8	2144-106-005-00	PIN/10X53	*	2					
9	8654-501-006-10	SPRING/CLIP	*	2					
10	8595-501-320-00	WHEEL/GAUGE ASSY	*	2					
11	8595-501-350-00	WHELL ASSY	*	2					
12	8595-501-351-00	RBB	*	4					
13	8595-501-360-00	TIRE/8X3.00-4 ASSY	*	2					
14	8595-501-007-00	PIN/20X112	*	2					
15	V760-150-000-00	NIPPLE,GREASE	*	2					
16	V304-460-016-00	NUT/M16	*	2					
17	V401-160-016-00	WASHER,SP/M16	*	2					
18	8595-501-001-10	WHEEL/GAUGE/FRONT	*	1					
19	8595-501-006-00	PIN/12X119	*	1					
20	V362-260-008-00	NUT/WASHER	*	1					
21	V411-260-012-00	WASHER /M12	*	2					
22	8595-501-001-10	WHEEL/GAUGE/FRONT	*	2					
23	8595-505-051-30	PIN/12X117	*	2					
24	V360-260-012-00	NUT/WASHER	*	2					
25	8657-501-210-11	ARM/GAUGE/LH COMP	*	1			4L		
26	8654-501-042-00	STOPPER/MOWER	*	1					
27	8654-501-043-00	SPRING/HC058	*	1					
28	V580-140-404-00	PIN,SPRING/4X40	*	1					
29	8657-501-220-01	ARM/GAUGE/RH COMP	*	1			4L		
30	V211-261-002-50	BOLT(S) M10X25	*	8					

FIG. 5 GAUGE WHEEL SYSTEM

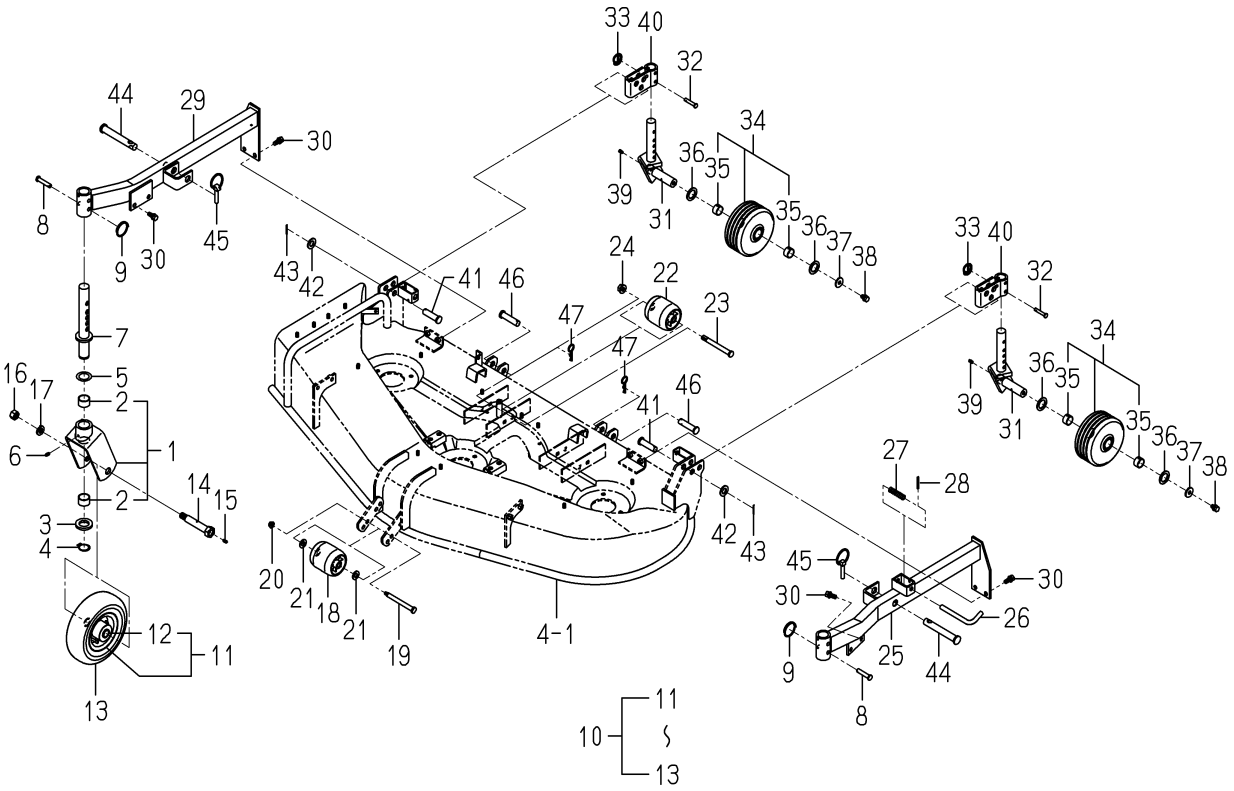

8657-501B-0100

KEY	PART CODE	DESCRIPTION	SPC	TYPE OF MODEL SSM54	TYPE OF MODEL FE4M	ITC	COL	GRP	REMARKS
31	8657-501-250-01	FORK/GAUGE/REAR COMP	*	2			4L		
32	8595-505-002-00	PIN/08X44	*	2					
33	1427-317-003-00	CLIP,PIN	*	2					
34	8654-501-720-00	WHEEL/GAUGE ASSY	*	2					
35	8654-203-201-00	BUSH/25X28X15	*	4					
36	1564-275-007-00	WASHER/27X40X2	*	4					
37	3659-170-003-00	WASHER/11X30X3	*	2					
38	V211-261-001-60	BOLT(S) M10X16	*	2					
39	V760-150-000-00	NIPPLE,GREASE	*	2					
40	8657-501-260-01	HUB/REAR COMP	*	2			4L		
41	3652-376-001-00	PIN/16X53	*	2					
42	V411-260-016-00	WASHER / M16	*	2					
43	V500-163-002-50	PIN,SPLIT/3 X25	*	2					
44	8595-510-004-00	PIN/19X135	*	2					
45	1673-525-002-20	LINKPIN	*	2					
46	8595-608-083-00	PIN/16X65	*	2					
47	7957-405-003-00	PIN,HAIR	*	2					

FIG. 6 LIFT SYSTEM

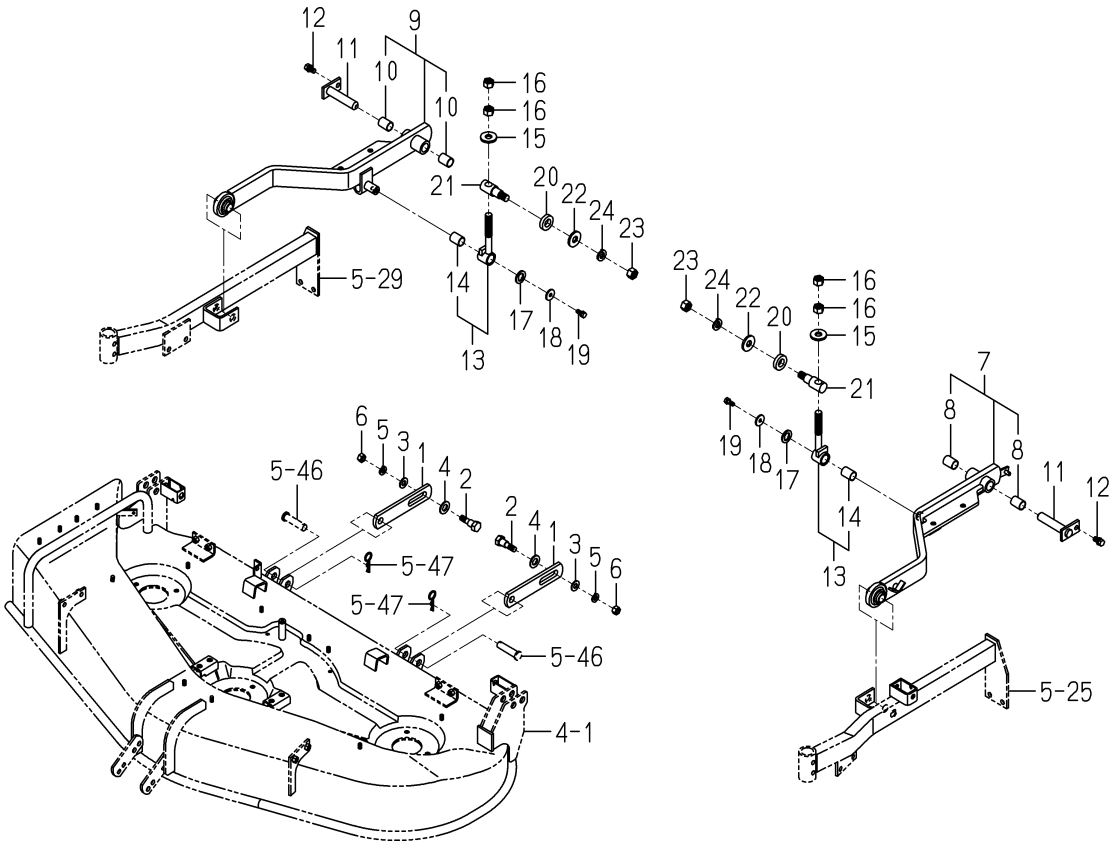

8657-510A-0100

KEY	PART CODE	DESCRIPTION	SPC	TYPE OF MODEL SSM54 FE4M		ITC	COL	GRP	REMARKS
1	8595-510-019-00	HOLDER/MOWER	*	2					
2	8595-510-002-00	BOLT/M12X50	*	2					
3	V411-260-012-00	WASHER /M12	*	4					
4	V411-260-016-00	WASHER / M16	*	2					
5	V401-160-012-00	WASHER,SP/M12	*	2					
6	V304-460-012-00	NUT/M12	*	2					
7	8657-510-250-00	ARM/LH ASSY	*	1					
8	8595-510-391-00	BUSH/20X23X30	*	2					
9	8657-510-270-00	ARM/RH ASSY	*	1					
10	8595-510-391-00	BUSH/20X23X30	*	2					
11	8595-510-370-00	PIN COMP	*	2					
12	V211-561-002-00	BOLT/M10X20	*	2					
13	8654-510-510-00	ROD/LIFT ASSY	*	2					
14	8595-510-391-00	BUSH/20X23X30	*	2					
15	8654-510-012-10	WASHER/16X40X05	*	2					
16	V304-460-016-00	NUT/M16	*	4					
17	8654-510-047-00	WASHER/20X32X03	*	2					
18	1324-205-002-00	WASHER,FOLLOWER	*	2					
19	V211-260-802-00	BOLT/S	*	2					
20	8657-510-003-00	WASHER/20X38X09	*	2					
21	1689-501-002-00	BOLT/M16	*	2					
22	8654-510-012-10	WASHER/16X40X05	*	2					
23	V304-460-016-00	NUT/M16	*	2					
24	V401-160-016-00	WASHER,SP/M16	*	2					

FIG. 7 LABEL

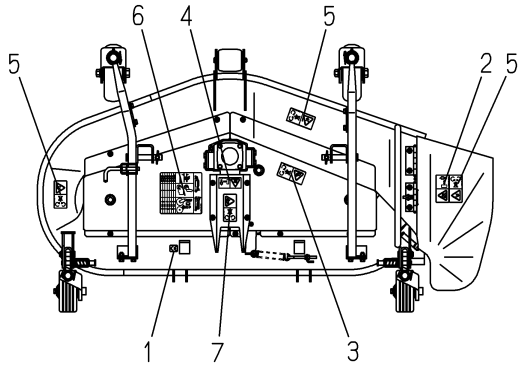

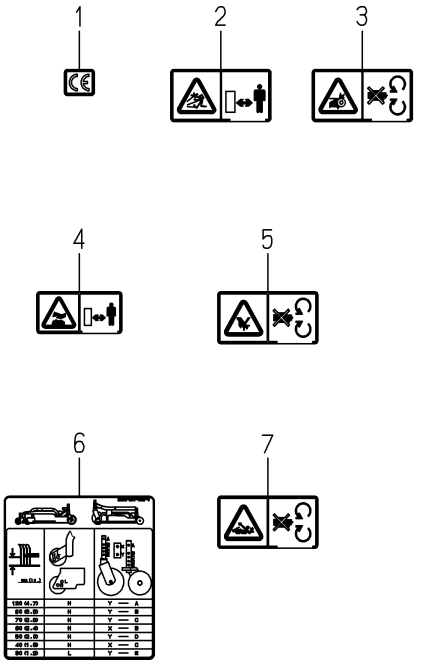

8595-901A-0100

KEY	PART CODE	DESCRIPTION	SPC	TYPE OF MODEL SSM54 FE4M		ITC	COL	GRP	REMARKS
1	2500-901-027-00	LABEL/CE	*	1					
2	8595-901-005-00	LABEL/DANGER/DISCHAR	*	1					
3	8595-901-006-00	LABEL/WARNING/BELT	*	1					
4	8595-901-007-00	LABEL/WARNING/HOT	*	1					
5	2500-901-014-30	LABEL/DANGER	*	3					
6	8595-901-008-10	LABEL/GAUGEWHEEL	*	1					
7	8654-901-002-00	LABEL/PTO	*	1					

FIG. 8 CASE (BEVEL) ASSY (OPTION)

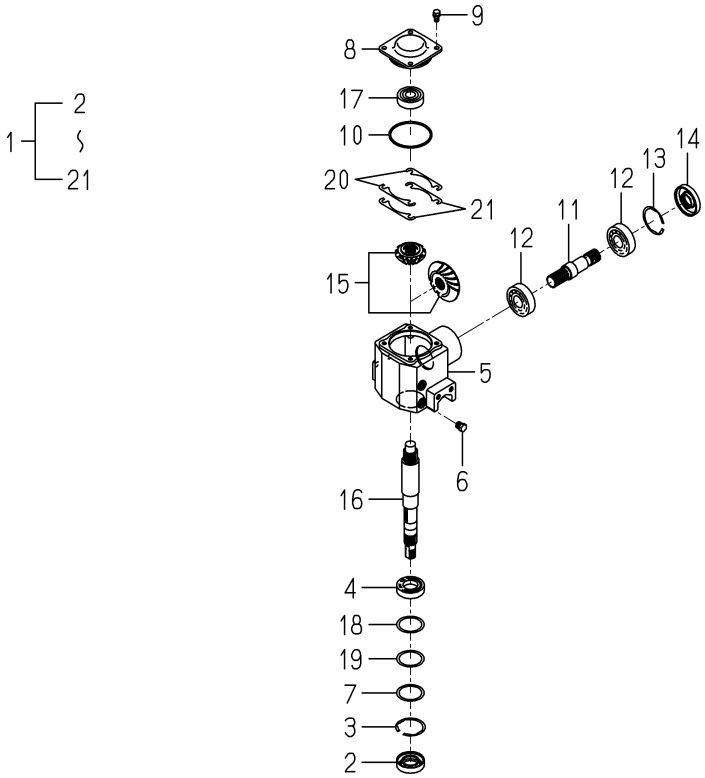

8657-201Z-0100

KEY	PART CODE	DESCRIPTION	SPC	TYPE OF MODEL SSM54 FE4M		ITC	COL	GRP	REMARKS
1	8657-201-240-00	CASE/BEVEL/24-1 ASSY	T	1					
2	V744-130-551-20	SEAL,OIL/TC305512	T	1					
3	V707-140-055-00	RING/SNAP	T	1					
4	V600-110-600-60	BEARING,RB 6006	T	1					
5	8595-201-011-00	CASE/BEVEL	T	1					
6	7955-201-026-00	PLUG,DRAIN (1/4)	T	2					
7	8595-201-015-00	WASHER/45X55X01	T	1					
8	8595-201-012-00	COVER/CASE	T	1					
9	V211-260-801-60	BOLT,SEMS (S) M8X16	T	4					
10	V721-103-108-00	O-RING/G80	T	1					
11	8595-201-013-00	SHAFT/INPUT	T	1					
12	1594-218-001-00	BEARING/BALL 6305SH2	T	2					
13	V707-140-062-00	RING/SNAP	T	1					
14	8595-201-025-00	SEAL/OIL	T	1					
15	8657-201-230-00	GEAR/BEVEL/24-1 SET	T	1					
16	8595-201-014-20	SHAFT/OUTPUT	T	1					
17	1560-214-003-00	BEARING/BALL/6304SH2	T	1					
18	8595-201-016-00	SHIM/0.1	T	1					
19	8595-201-017-00	SHIM/0.2	T	1					
20	8595-201-021-00	SHIM/0.1	T	1					
21	8595-201-022-00	SHIM/0.2	T	1					

FIG. 9 GAUGE WHEEL SET (OPTION)

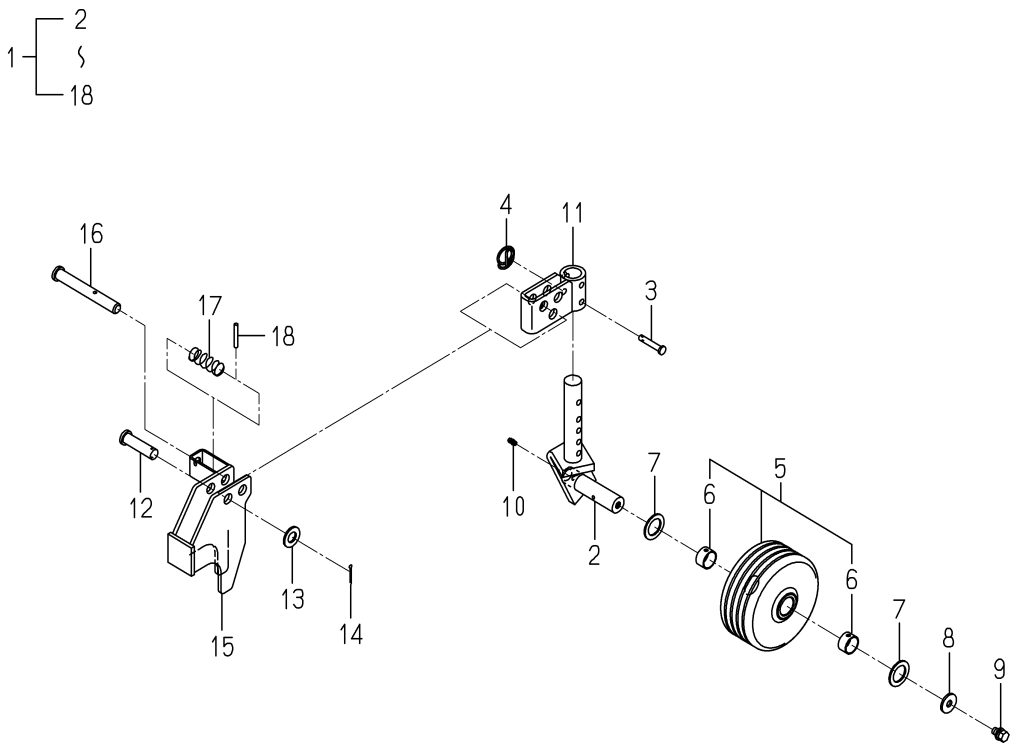

8657-501Z-0100

KEY	PART CODE	DESCRIPTION	SPC	TYPE OF MODEL SSM54	TYPE OF MODEL FE4M	ITC	COL	GRP	REMARKS
1	8657-501-300-00	REAR/WHEEL/LH SET	T	1					
2	8657-501-250-01	FORK/GAUGE/REAR COMP	T	1			4L		
3	8595-505-002-00	PIN/08X44	T	1					
4	1427-317-003-00	CLIP,PIN	T	1					
5	8654-501-720-00	WHEEL/GAUGE ASSY	T	1					
6	8654-203-201-00	BUSH/25X28X15	T	2					
7	1564-275-007-00	WASHER/27X40X2	T	2					
8	3659-170-003-00	WASHER/11X30X3	T	1					
9	V211-261-001-60	BOLT(S) M10X16	T	1					
10	V760-150-000-00	NIPPLE,GREASE	T	1					
11	8657-501-260-01	HUB/REAR COMP	T	1			4L		
12	3652-376-001-00	PIN/16X53	T	1					
13	V411-260-016-00	WASHER / M16	T	1					
14	V500-163-002-50	PIN,SPLIT/3 X25	T	1					
15	8657-501-310-00	REAR/WHEEL/LH COMP	T	1					
16	8654-501-047-00	PIN/16X124	T	1					
17	8654-501-048-00	SPRING/HC056	T	1					
18	V580-140-504-00	PIN,SPRING/5 X40 W	T	1					

FIG. 10 NEW TRACTOR + OLD MOWER (OPTION)

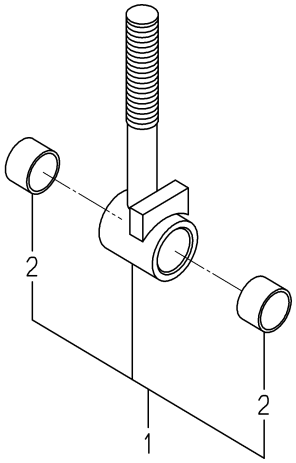

8657-510Y-0100

KEY	PART CODE	DESCRIPTION	SPC	TYPE OF MODEL SSM54 FE4M		ITC	COL	GRP	REMARKS
1	8657-510-300-10	ROD/LIFT ASSY	T	2					
2	8595-510-441-00	BUSH/20X23X15	T	4					

FIG. 11 OLD TRACTOR + NEW MOWER (OPTION)

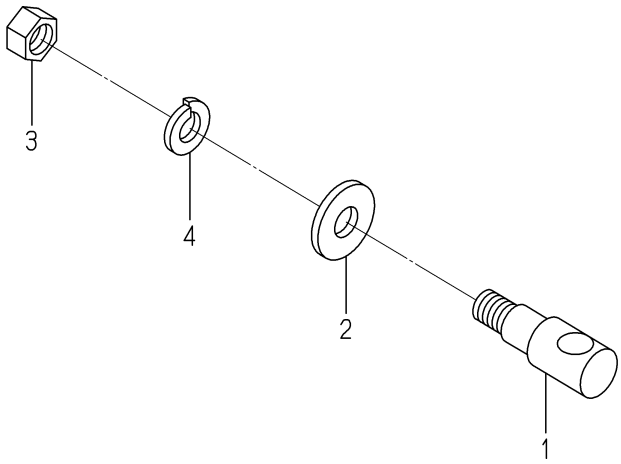

8657-510Z-0100

KEY	PART CODE	DESCRIPTION	SPC	TYPE OF MODEL SSM54 FE4M		ITC	COL	GRP	REMARKS
1	1689-501-002-00	BOLT/M16	T	2					
2	8654-510-012-10	WASHER/16X40X05	T	2					
3	V304-460-016-00	NUT/M16	T	2					
4	V401-160-016-00	WASHER,SP/M16	T	2					

FIG. 12 COMPONENT PARTS FOR 8595-101-510-00 ON Fig.1

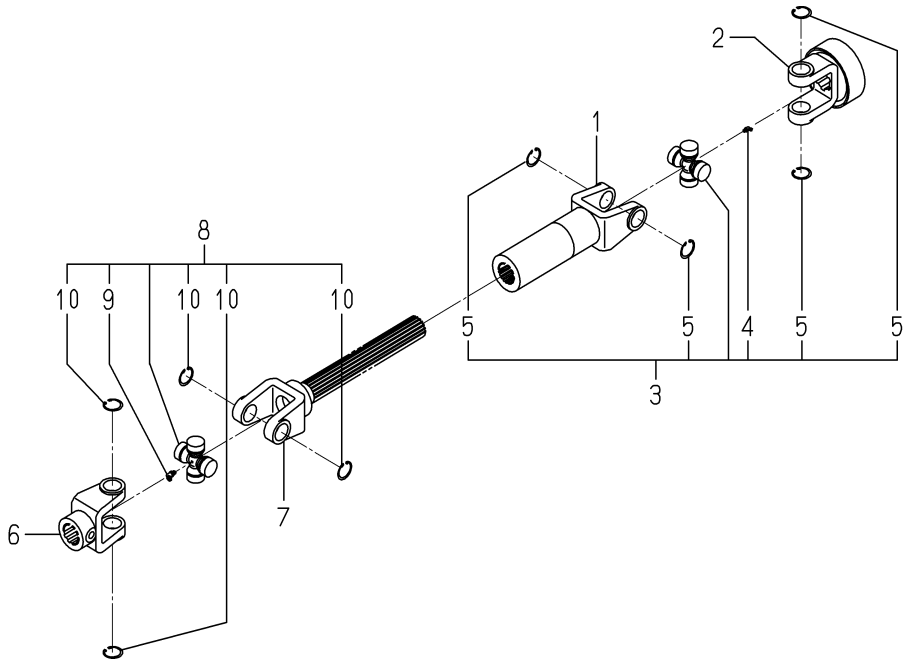

8595-101-510-0F

KEY	PART CODE	DESCRIPTION	SPC	TYPE OF MODEL SSM54 FE4M		ITC	COL	GRP	REMARKS
1	8654-101-212-00	SLEEVEYOKE ASSY	*	1					
2	8595-101-412-00	ASÖ-¸ ASSY	*	1					
3	8654-101-230-00	JOURNALCROSSE ASSY	*	1					
4	8654-101-232-00	GREASENIPPLE	*	1					
5	8654-101-233-00	SURCLIP/HOLE	*	4					
6	8654-101-221-00	FITTINGYOKE	*	1					
7	8654-101-222-00	SHAFTYOKE ASSY	*	1					
8	8654-101-230-00	JOURNALCROSSE ASSY	*	1					
9	8654-101-232-00	GREASENIPPLE	*	1					
10	8654-101-233-00	SURCLIP/HOLE	*	4					

Numerical Index

8657-097-190-00

Part Code	Fig.	Key	Part Code	Fig.	Key	Part Code	Fig.	Key
1324-205-002-00	6	18	8595-201-015-00	1	15	8595-901-006-00	7	3
1427-317-003-00	5	33		8	7	8595-901-007-00	7	4
	9	4	8595-201-016-00	1	17	8595-901-008-10	7	6
1427-432-005-00	5	5		8	18	8597-202-501-00	2	10
1434-211-004-00	2	3	8595-201-017-00	1	18	8654-101-212-00	12	1
1560-214-003-00	1	16		8	19	8654-101-221-00	12	6
	8	17	8595-201-021-00	1	19	8654-101-222-00	12	7
1564-275-007-00	5	36		8	20	8654-101-230-00	12	3
	9	7	8595-201-022-00	1	20		12	8
1594-218-001-00	1	10		8	21	8654-101-232-00	12	4
	8	12	8595-201-023-00	1	26		12	9
1594-221-001-00	3	4	8595-201-024-00	1	24	8654-101-233-00	12	5
	3	17	8595-201-025-00	1	12		12	10
1673-525-002-20	5	45		8	14	8654-202-016-00	2	2
1689-501-002-00	6	21	8595-301-031-00	3	3		2	5
	11	1	8595-306-005-00	3	26	8654-203-201-00	5	35
2144-106-005-00	5	8	8595-306-006-00	3	27		9	6
2149-602-012-00	4	19	8595-306-007-00	3	28	8654-301-004-00	3	7
	4	22	8595-402-015-00	4	9		3	20
2500-901-014-30	7	5	8595-407-003-01	4	24	8654-501-006-10	5	9
2500-901-027-00	7	1	8595-407-004-00	4	18	8654-501-042-00	5	26
3621-211-003-00	2	14		4	21	8654-501-043-00	5	27
3652-376-001-00	5	41	8595-501-001-10	5	18	8654-501-047-00	4	2
	9	12		5	22		9	16
3659-170-003-00	5	37	8595-501-006-00	5	19	8654-501-048-00	4	3
	9	8	8595-501-007-00	5	14		9	17
3670-701-010-00	5	3	8595-501-280-01	5	7	8654-501-201-00	5	2
3737-341-006-00	2	16	8595-501-310-01	5	1	8654-501-720-00	5	34
3737-341-007-00	2	17	8595-501-320-00	5	10		9	5
3746-111-011-00	2	6	8595-501-350-00	5	11	8654-510-012-10	6	15
3768-112-001-00	4	14	8595-501-351-00	5	12		6	22
7955-201-026-00	1	5	8595-501-360-00	5	13		11	2
	8	6	8595-505-002-00	5	32	8654-510-047-00	6	17
7957-405-003-00	5	47		9	3	8654-510-510-00	6	13
8593-014-200-10	2	11	8595-505-051-30	5	23	8654-901-002-00	7	7
8595-101-412-00	12	2	8595-510-002-00	6	2	8657-201-230-00	1	13
8595-101-510-00	1	1	8595-510-004-00	5	44		8	15
8595-201-011-00	1	4	8595-510-019-00	6	1	8657-201-240-00	8	1
	8	5	8595-510-370-00	6	11	8657-202-003-10	2	1
8595-201-012-00	1	6	8595-510-391-00	6	8		2	4
	8	8		6	10	8657-202-220-10	2	9
8595-201-013-00	1	9		6	14	8657-203-001-00	2	19
	8	11	8595-510-441-00	10	2	8657-301-004-00	3	1
8595-201-014-20	1	14	8595-608-083-00	5	46	8657-301-005-00	3	12
	8	16	8595-901-005-00	7	2	8657-301-007-00	3	9

Numerical Index

Part Code	Fig.	Key	Part Code	Fig.	Key	Part Code	Fig.	Key
8657-301-007-00	3	22	V304-460-016-00	11	3	V760-150-000-00	3	11
8657-301-008-00	3	24	V360-260-012-00	5	24		3	14
8657-301-009-00	3	15	V362-260-008-00	4	23		5	6
8657-306-005-00	3	25		4	25		5	15
8657-402-012-00	4	5		5	20		5	39
8657-402-013-00	4	6	V363-260-008-00	4	13		9	10
8657-402-014-00	4	7	V401-160-012-00	6	5			
8657-402-015-00	4	8	V401-160-016-00	2	7			
8657-402-016-00	4	10		5	17			
8657-402-240-00	4	1		6	24			
8657-406-210-02	4	11		11	4			
8657-407-230-00	4	20	V401-160-020-00	3	29			
8657-407-240-00	4	17	V411-260-012-00	5	21			
8657-501-210-11	5	25		6	3			
8657-501-220-01	5	29	V411-260-016-00	5	42			
8657-501-250-01	5	31		6	4			
	9	2		9	13			
8657-501-260-01	5	40	V500-163-002-50	5	43			
	9	11		9	14			
8657-501-300-00	9	1	V580-140-404-00	5	28			
8657-501-310-00	9	15	V580-140-504-00	4	4			
8657-510-003-00	6	20		9	18			
8657-510-250-00	6	7	V580-140-804-00	1	2			
8657-510-270-00	6	9	V600-110-600-60	1	21			
8657-510-300-10	10	1		8	4			
P115-810-011-00	4	12	V600-110-690-80	3	5			
V201-260-803-00	4	15		3	18			
V211-260-801-60	1	7	V704-140-016-00	2	13			
	8	9	V704-140-017-00	2	12			
V211-260-802-00	6	19	V704-140-030-00	5	4			
V211-261-001-60	5	38	V705-140-052-00	3	6			
	9	9		3	19			
V211-261-002-50	3	2	V707-140-055-00	1	22			
	3	13		8	3			
	5	30	V707-140-062-00	1	11			
V211-561-002-00	6	12		3	10			
V211-661-002-00	1	25		3	23			
V304-260-008-00	2	18		8	13			
	4	16	V721-103-108-00	1	8			
V304-260-010-00	3	16		8	10			
V304-460-012-00	6	6	V744-130-551-20	1	23			
V304-460-016-00	2	8		8	2			
	5	16	V744-135-520-80	3	8			
	6	16		3	21			
	6	23	V760-150-000-00	2	15			

Alpabetical Index

8657-097-190-00

Description	Fig.	Key	Description	Fig.	Key	Description	Fig.	Key
ARM/GAUGE/LH COMP	5	25	CLIP,PIN	5	33	LINKPIN	5	45
ARM/GAUGE/RH COMP	5	29		9	4	METAL/CENTER	3	12
ARM/LH ASSY	6	7	COLLAR,THRUST	5	5	METAL/SIDE	3	1
ARM/RH ASSY	6	9	COLLAR/26X36X3	2	3	NIPPLE,GREASE	2	15
ARM/TENSION ASSY	2	9	COLLAR/BRADE	3	9		3	11
ASｺﾞｰﾀ ASSY	12	2		3	22		3	14
BEARING	3	5	COLLER/26X34X15	3	24		5	6
	3	18	COVER/BELT/LH/F ASSY	4	17		5	15
BEARING,RB 6006	1	21	COVER/BELT/RH/F ASSY	4	20		5	39
	8	4	COVER/CASE	1	6		9	10
BEARING/BALL 6205SH2	3	4		8	8	NUT	2	18
	3	17	COVER/DISCHARGE COMP	4	11		3	16
BEARING/BALL 6305SH2	1	10	COVER/UNIVERSAL	4	24		4	16
	8	12	DECK/MOWER/54/F COMP	4	1	NUT/M12	6	6
BEARING/BALL/6304SH2	1	16	FITTINGYOKE	12	6	NUT/M16	2	8
	8	17	FORK/GAUGE/REAR COMP	5	31		5	16
BELT/VB101	2	19		9	2		6	16
BLADE/60X472/D	3	25	FORK/WHEEL ASSY	5	1		6	23
BOLT(S) M10X16	5	38	GEAR/BEVEL/24-1 SET	1	13		11	3
	9	9		8	15	NUT/M20X1.5	3	28
BOLT(S) M10X25	3	2	GREASENIPPLE	12	4	NUT/WASHER	4	13
	3	13		12	9		4	23
	5	30	HOLDER/MOWER	6	1		4	25
BOLT,SEMS (S) M8X16	1	7	HUB/REAR COMP	5	40		5	20
	8	9		9	11		5	24
BOLT/M 8X30	4	15	INSULATOR/1030	4	7	O-RING/G80	1	8
BOLT/M10X20	1	25	INSULATOR/150X200	4	18		8	10
	6	12		4	21	PIN COMP	6	11
BOLT/M12X50	6	2	INSULATOR/330	4	10	PIN,HAIR	5	47
BOLT/M16	6	21	INSULATOR/360	4	8	PIN,SPLIT/3 X25	5	43
	11	1	INSULATOR/410	4	9		9	14
BOLT/S	6	19	INSULATOR/580	4	6	PIN,SPRING/4X40	5	28
BUSH/16X18X15	2	10	INSULATOR/90	4	5	PIN,SPRING/5 X40 W	4	4
BUSH/20X23X15	10	2	JOINT/UNIVERSAL SET	1	1		9	18
BUSH/20X23X30	6	8	JOURNALCROSSE ASSY	12	3	PIN,SPRING/8 X40 W	1	2
	6	10		12	8	PIN/08X44	5	32
	6	14	KEY/06X06X28	2	2		9	3
BUSH/25X28X15	5	35		2	5	PIN/10X53	5	8
	9	6	LABEL/CE	7	1	PIN/12X117	5	23
BUSH/30X34X20	5	2	LABEL/DANGER	7	5	PIN/12X119	5	19
CAP/32	4	19	LABEL/DANGER/DISCHAR	7	2	PIN/16X124	4	2
	4	22	LABEL/GAUGEWHEEL	7	6		9	16
CASE/BEVEL	1	4	LABEL/PTO	7	7	PIN/16X53	5	41
	8	5	LABEL/WARNING/BELT	7	3		9	12
CASE/BEVEL/24-1 ASSY	8	1	LABEL/WARNING/HOT	7	4	PIN/16X65	5	46

Alpabetical Index

Description	Fig.	Key
PIN/19X135	5	44
PIN/20X112	5	14
PIN/GAUGE COMP	5	7
PIPE/GREASE	3	15
PLATE/03X15X65	4	12
PLATE/L/60X65	1	24
PLATE/L/75X65	1	26
PLUG,DRAIN (1/4)	1	5
	8	6
PULLEY COMP	2	11
PULLEY/VB137	2	1
	2	4
RBB	5	12
REAR/WHEEL/LH COMP	9	15
REAR/WHEEL/LH SET	9	1
RING,SNAP/16 C	2	13
RING,SNAP/17 C	2	12
RING,SNAP/30 C	5	4
RING,SNAP/52 C	3	6
	3	19
RING/SNAP	1	11
	1	22
	3	10
	3	23
	8	3
	8	13
ROD,CHAIN TENSION	2	17
ROD/LIFT ASSY	6	13
	10	1
SEAL,OIL/TC305512	1	23
	8	2
SEAL,OIL/TC35528	3	8
	3	21
SEAL/OIL	1	12
	3	7
	3	20
	8	14
SHAFT/BRADE	3	3
SHAFT/INPUT	1	9
	8	11
SHAFT/OUTPUT	1	14
	8	16
SHAFTYOKE ASSY	12	7
SHIM/0.1	1	17
	1	19
SHIM/0.1	8	18
	8	20
SHIM/0.2	1	18
	1	20
	8	19
	8	21
SHIM/1.2	3	27
SLEEVEYOKE ASSY	12	1
SPRING,CHAIN TENSION	2	16
SPRING,CLUTCH RETURN	4	14
SPRING/CLIP	5	9
SPRING/HC056	4	3
	9	17
SPRING/HC058	5	27
STOPPER/MOWER	5	26
SURCLIP/HOLE	12	5
	12	10
TIRE/8X3.00-4 ASSY	5	13
WASHER	2	6
	2	14
WASHER / M16	5	42
	6	4
	9	13
WASHER /M12	5	21
	6	3
WASHER,FOLLOWER	6	18
WASHER,SP/M12	6	5
WASHER,SP/M16	2	7
	5	17
	6	24
	11	4
WASHER,SP/M20	3	29
WASHER/11X30X3	5	37
	9	8
WASHER/16X40X05	6	15
	6	22
	11	2
WASHER/20X32X03	6	17
WASHER/20X38X09	6	20
WASHER/20X60X06	3	26
WASHER/27X40X2	5	36
	9	7
WASHER/30X50X05	5	3
WASHER/45X55X01	1	15
	8	7
WHEEL/GAUGE ASSY	5	10
	5	34
	9	5
WHEEL/GAUGE/FRONT	5	18
	5	22
WHELL ASSY	5	11