Directions for use of Parts Catalogue

1. Applicable model of machines

All component and option parts used for SF200M/SF230M tractors are listed in this parts catalogue.

1) MODEL TYPE

F····· FOUR WHEEL DRIVE

T····· TWO WHEEL DRIVE

H····· HST

U····· POWER STEERING

2) AREA CODE

E42····· EUROPE AND OCEANIA WITH TURF TYPE

2. Explanation for head paragraph

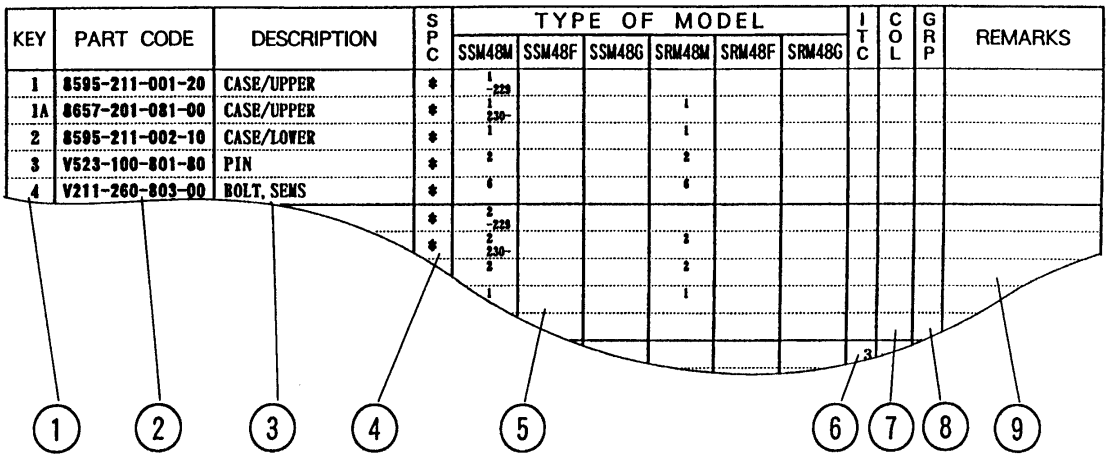

KEY	PART CODE	DESCRIPTION	SPC	TYPE OF MODEL						ITC	COL	GRP	REMARKS
				SSM48M	SSM48F	SSM48G	SRM48M	SRM48F	SRM48G				
1	8595-211-001-20	CASE/UPPER	*	1 (229)									
1A	8657-201-081-00	CASE/UPPER	*	1 (230-)			1						
2	8595-211-002-10	CASE/LOWER	*	1			1						
3	V523-100-801-80	PIN	*	2			2						
4	V211-260-803-00	BOLT, SEMS	*	6			6						
			*	2 (229)									
			*	2 (230-)			2						
				2			2						
				1			1						

① ② ③ ④ ⑤ ⑥ ⑦ ⑧ ⑨

① KEY shows the location of parts diagramed in the illustration.

② Parts numbers begin with `V´ and `W´ are standard parts of the market.

③ `LH´ and `RH´ on the parts name are described against the moving direction of the machine or are described on the condition how to install parts on the machines.

④ SPC : The following symbol classifies parts to be used for machines.

`*´ means standard parts.

`T´ shows that the parts can be installed as optional parts.

`R´ shows that the parts can be used as applicable parts to replace originally

equipped parts.

⑤ Upper column : QTY shows the number of parts to be used for one unit of machine.

`M´ is indicated for parts supplied by a meter long.

`ℓ´ is indicated for parts supplied by liter.

`AR´ is indicated for parts need to be adjusted or regulated.

Lower column : serial number

—229 means serial number up to 229.

230— means serial number 230 and after.

⑥ ITC : Interchangeability

`1´…OLD ← NEW

New parts can be used in place of the old parts.

`2´…OLD → NEW

Old parts can be used in place of the new parts.

`3´…OLD →← NEW

Old parts and new parts can not be replaced each other.

⑦ COL : Color code

Color is signified with color code number for colored parts.

Please see the color list shown in the next page.

⑧ GRP : Parts shown in this column can be replaced by SET parts.

Example : Parts marked ♂ can be replaced by parts marked ♂, and ☿ for ☼, so the rest follow in the same alphabetical order.

⑨ Remarks

＊ Other maker's part code number is shown in this column.

＊ When Fig. No. is shown in the Remark column of SET parts or ASSY parts, each of their component parts are listed in said Fig. No.

3. Color :

The following colors are used color parts.

COLOR CODE	COLOR	SPRAY TYPE CODE NUMBER	PAINTS 4K DRUM	PAINTS 16K DRUM
4 G	CRYSTAL BLUE	1300-957-001-10	1300-957-003-00	1300-957-004-00
6 G	SUMMER WHITE	1300-958-001-10	1300-958-003-00	1300-958-004-00
7 F	MIRROR BLACK	1300-954-001-10	1300-954-003-00	1300-954-004-00

NOTE : Color code is signified only for the parts assigned by the maker as color parts.

4. Serial Numbers :

1) For engines serial number is stamped on CYLINDER BLOCK ASSY.
   Please see Fig. No. 5－1,1A.
2) For chassies serial number is shown on the LABEL.
   Please see

5. Parts Order

1) Parts numbers listed in the parts catalogue are all registered in “ISEKI on-line computer”.
2) When you order parts, please make sure of correct numbers.
3) When substitute parts is available, the part number ordered will be automatically turned to a new part number.
4) Please be sure to use “ISEKI GENUINE PARTS”.
   Any other similar parts other than ISEKI parts when used may cause a trouble that makes us unable to repair or guarantee the warrant.

*** Structure Table of Model ***

MODEL / FIG.	SF200T42M	SF230F42M										
1	*	*										
2	*	*										
3	*	*										
4	*	*										
5	*	*										
6	*	*										
7	*	*										
8	*	*										
9	*	*										
10	*	*										
11	*	*										
12	*	*										
13	*	*										
14	*	*										
15	*											
16	*	*										
17	*	*										
18	*	*										
19	*	*										
20	*	*										
21	*	*										
22	*	*										
23	*	*										
24	*	*										
25	*	*										
26	*	*										
27	*											
28		*										
29		*										
30		*										
31	*											
32		*										
33	*	*										
34	*	*										
35	*											
36	*	*										
37		*										
38	*	*										
39	*	*										
40	*	*										
41	*	*										
42	*	*										
43	*	*										
44	*	*										
45	*	*										

*** Structure Table of Model ***

MODEL / FIG.	SF200T42M	SF230F42M										
46	*	*										
47	T	T										
48	*	*										
49		*										
50	*	*										
51	*	*										
52	*											

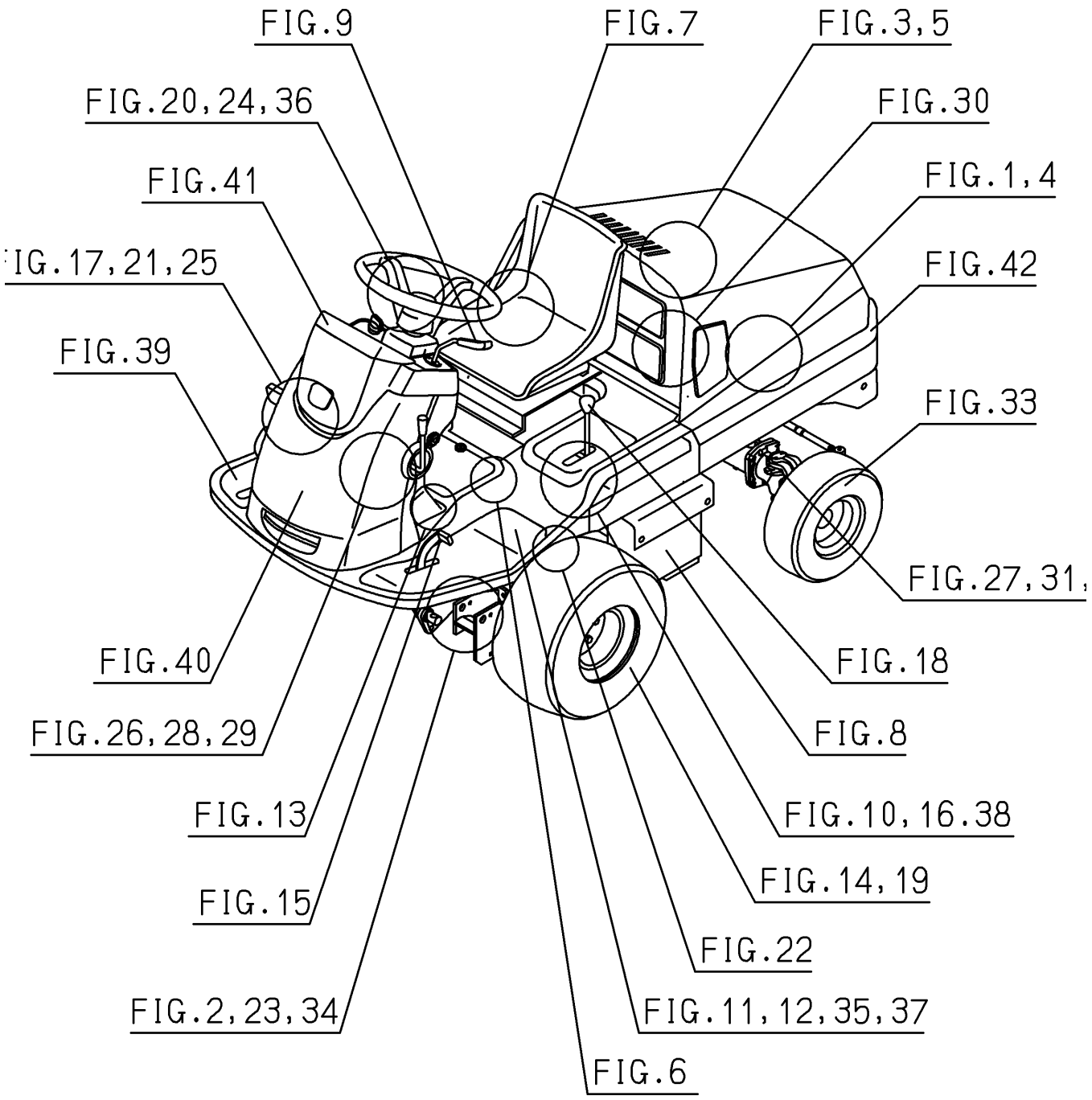
FIG.9
FIG.7
FIG.3,5
FIG.20,24,36
FIG.30
FIG.41
FIG.1,4
IG.17,21,25
FIG.42
FIG.39
FIG.33
FIG.27,31,
FIG.40
FIG.18
FIG.26,28,29
FIG.8
FIG.13
FIG.10,16.38
FIG.14,19
FIG.15
FIG.22
FIG.2,23,34
FIG.11,12,35,37
FIG.6

Contents

SF200TH-42M

ENGINE(E3100-G)

CYLINDER HEAD····· Fig. 1
CYLINDER HEAD COVER····· Fig. 2
INLET MANIFOLD····· Fig. 3
EXHAUST MANIFOLD····· Fig. 4
CYLINDER BLOCK····· Fig. 5
BEARING/UNDER SIZE (OPTION)····· Fig. 6
OIL PAN····· Fig. 7
REAR PLATE····· Fig. 8
TIMING GEAR CASE····· Fig. 9
HANGER····· Fig. 10
VALVE····· Fig. 11
CAM SHAFT····· Fig. 12
PISTON····· Fig. 13
PISTON/OVER SIZE (OPTION)····· Fig. 14
CRANK SHAFT····· Fig. 15
OIL PUMP····· Fig. 16
WATER PUMP····· Fig. 17
COOLING FAN (No.1-194081)····· Fig. 18
COOLING FAN (No.194082-)····· Fig. 19
INJECTION NOZZLE····· Fig. 20
INJECTION PUMP····· Fig. 21
FUEL PIPE····· Fig. 22
ELECTRIC (1)····· Fig. 23
ELECTRIC (2)····· Fig. 24

REPAIR PARTS (OPTION)····· Fig. 25
COMPONENT PARTS FOR 6215-300-035-00
ON Fig.20·····Fig. 26
COMPONENT PARTS FOR 6215-600-052-20
ON Fig.21·····Fig. 27
COMPONENT PARTS FOR 6281-100-011-10,20
ON Fig.23·····Fig. 28
COMPONENT PARTS FOR 6281-200-005-00
ON Fig.23·····Fig. 29

Contents

SF230FH-42M

ENGINE(E3112-G)

CYLINDER HEAD····· Fig. 1
CYLINDER HEAD COVER····· Fig. 2
INLET MANIFOLD····· Fig. 3
EXHAUST MANIFOLD····· Fig. 4
CYLINDER BLOCK····· Fig. 5
BEARING/UNDER SIZE (OPTION)····· Fig. 6
OIL PAN····· Fig. 7
REAR PLATE····· Fig. 8
TIMING GEAR CASE····· Fig. 9
HANGER····· Fig. 10
VALVE····· Fig. 11
CAM SHAFT····· Fig. 12
PISTON····· Fig. 13
PISTON/OVER SIZE (OPTION)····· Fig. 14
CRANK SHAFT····· Fig. 15
OIL PUMP····· Fig. 16
WATER PUMP····· Fig. 17
COOLING FAN (No.1-194081)····· Fig. 18
COOLING FAN (No.194082-)····· Fig. 19
INJECTION NOZZLE····· Fig. 20
INJECTION PUMP····· Fig. 21
FUEL PIPE····· Fig. 22
ELECTRIC (1)····· Fig. 23
ELECTRIC (2)····· Fig. 24

REPAIR PARTS (OPTION)····· Fig. 25
COMPONENT PARTS FOR 6215-300-036-00
ON Fig.20·····Fig. 26
COMPONENT PARTS FOR 6215-600-103-10
ON Fig.21·····Fig. 27
COMPONENT PARTS FOR 6281-100-011-10,20
ON Fig.23·····Fig. 28
COMPONENT PARTS FOR 6281-200-005-00
ON Fig.23·····Fig. 29

Contents

CHASSIS

ENGINE BRACKET SYSTEM····· Fig. 1
COLLECTOR OPTION····· Fig. 2
RADIATOR SYSTEM····· Fig. 3
MUFFLER SYSTEM····· Fig. 4
AIR CLEANER SYSTEM····· Fig. 5
FUEL LINE SYSTEM····· Fig. 6
FUEL TANK SYSTEM····· Fig. 7
BATTERY SYSTEM····· Fig. 8
ACCELERATOR LEVER SYSTEM····· Fig. 9
DRIVE SHAFT SYSTEM····· Fig. 10
TRANSMISSION CASE SYSTEM····· Fig. 11
BRAKE SYSTEM····· Fig. 12
PTO DRIVE SYSTEM····· Fig. 13
WHEEL SFAFT SYSTEM····· Fig. 14
DIFF-LOCK AND DIFF-PEDAL SYSTEM
(SF200)····· Fig. 15
HST UNLOAD SYSTEM····· Fig. 16
BRAKE PEDAL,PARKING BRAKE SYSTEM····· Fig. 17
PTO LEVER SYSTEM····· Fig. 18
FRONT WHEEL SYSTEM····· Fig. 19
HST LINK SYSTEM····· Fig. 20
HST PEDAL SYSTEM····· Fig. 21
HST PIPING SYSTEM····· Fig. 22
CHASSIS SYSTEM····· Fig. 23
STEERING WHEEL
AND STEERING SHAFT SYSTEM····· Fig. 24
TILT LEVER SYSTEM····· Fig. 25

STEERING POST SYSTEM····· Fig. 26
STEERING DRIVE SYSTEM (SF200)····· Fig. 27
STEERING PIPING SYSTEM (SF230)····· Fig. 28
4WD LEVER AND DRIVE SHAFT SYSTEM····· Fig. 29
4WD UNIT CASE SYSTEM (SF230)····· Fig. 30
REAR WHEEL SYSTEM····· Fig. 33
LIFT LINK SYSTEM····· Fig. 34
LIFT PIPING SYSTEM (SF200)····· Fig. 35
LIFT LEVER SYSTEM····· Fig. 36
LIFT PIPING SYSTEM (SF230)····· Fig. 37
UP STOP SYSTEM····· Fig. 38
FENDER SYSTEM····· Fig. 39
POST COVER SYSTEM····· Fig. 40
POST PANEL SYSTEM····· Fig. 41
HOOD SYSTEM····· Fig. 42
HARNESS SYSTEM····· Fig. 43
ORNAMENT····· Fig. 44
LABEL (CONTROL)····· Fig. 45
LABEL (CAUTION)····· Fig. 46

OPTIONAL PARTS

WORKING LAMP SYSTEM (OPTION)····· Fig. 47

COMPONENT PARTS

COMPONENT PARTS FOR K211-042-000-20
ON Fig.35,37····· Fig. 48
COMPONENT PARTS FOR 1614-223-210-00
ON Fig.30····· Fig. 49
COMPONENT PARTS FOR 1689-201-200-00
ON Fig.11····· Fig. 50
COMPONENT PARTS FOR 1689-203-200-00
ON Fig.13····· Fig. 51

COMPONENT PARTS FOR 1689-402-260-00
ON Fig.24·····Fig. 52
WIRING DIAGRAM

E N G I N E

E3100G···SF200TH-42M

6004-097-220-10

FIG. 1 CYLINDER HEAD

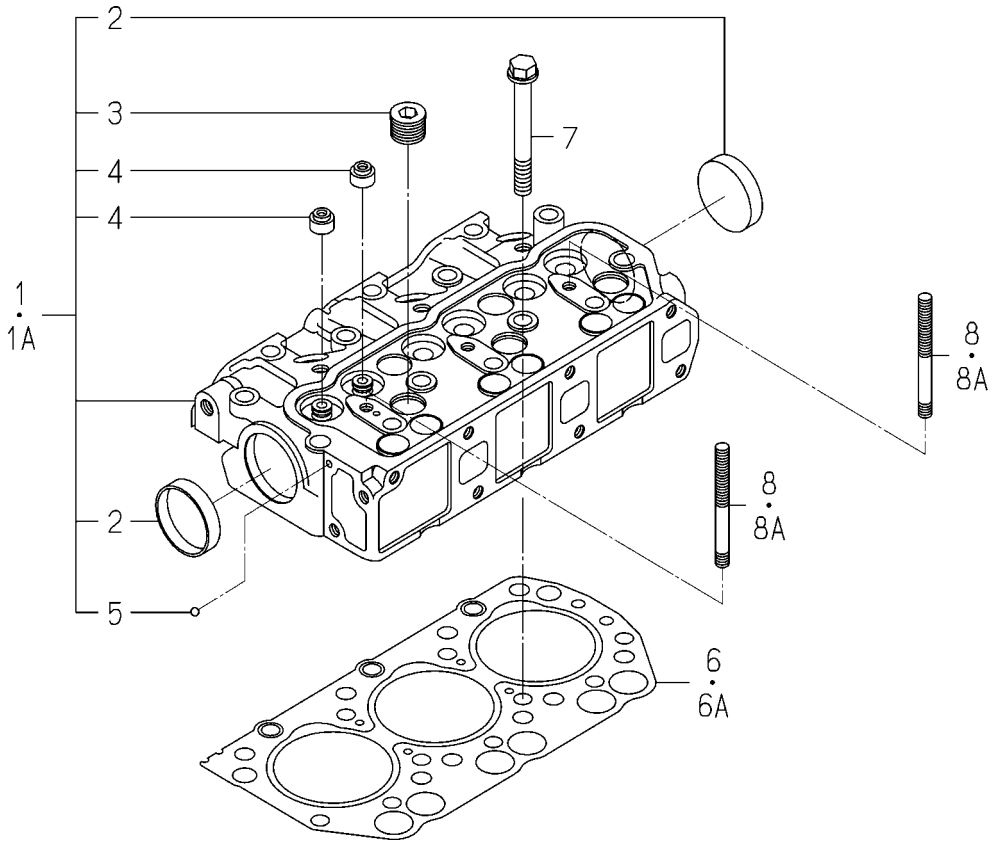

6004-101B-0100,6004-101B-0200

KEY	PART CODE	DESCRIPTION	SPC	TYPE OF MODEL E3100G		ITC	COL	GRP	REMARKS
1	6211-110-014-20	CYLINDERHEAD ASSY	*	1 -154518					
1A	6211-110-068-00	CYLINDERHEAD ASSY	*	1 154519-					
2	6911-129-006-00	CAP,SEALING	*	2					
3	6209-605-004-10	PLUG/PT1/2	*	5					
4	6212-569-002-00	SEAL,OIL	*	6					
5	V682-200-000-60	BALL	*	1					
6	6211-141-008-20	GASKET/CYLINDERHEAD	*	1 -185209					
6A	6211-141-008-30	GASKET/CYLINDERHEAD	*	1 185210-		1			
7	6209-000-003-00	BOLT/M10X1.25X82	*	14					
8	6909-830-212-00	STUD,HEAD COVER	*	2 -171454					
8A	6209-300-014-00	STUD	*	2 171455-					

FIG. 2 CYLINDER HEAD COVER

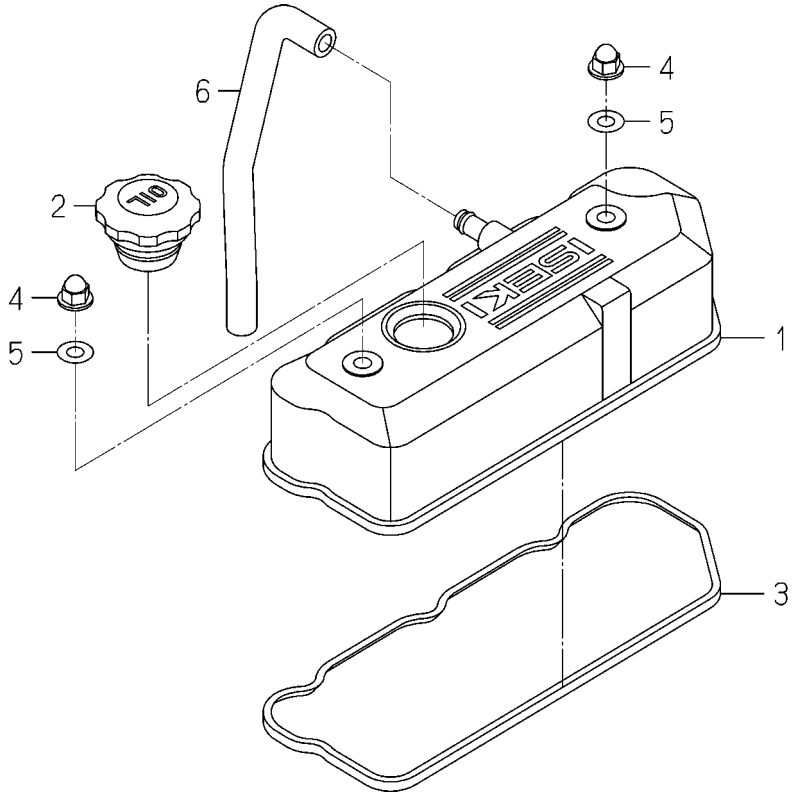

6004-110 -0100

KEY	PART CODE	DESCRIPTION	SPC	TYPE OF MODEL E3100G		ITC	COL	GRP	REMARKS
1	6211-170-004-10	COVER,CYLINDER HEAD	*	1					
2	6211-751-001-10	CAP,OIL FILLER	*	1					
3	6211-173-003-00	SEAL,CYL.HEAD COVER	*	1					
4	6209-490-002-00	NUT,CAP	*	2					
5	6909-572-008-00	PACKING	*	2					
6	6209-360-027-10	HOSE/RUBBER	*	1					

FIG. 3 INLET MANIFOLD

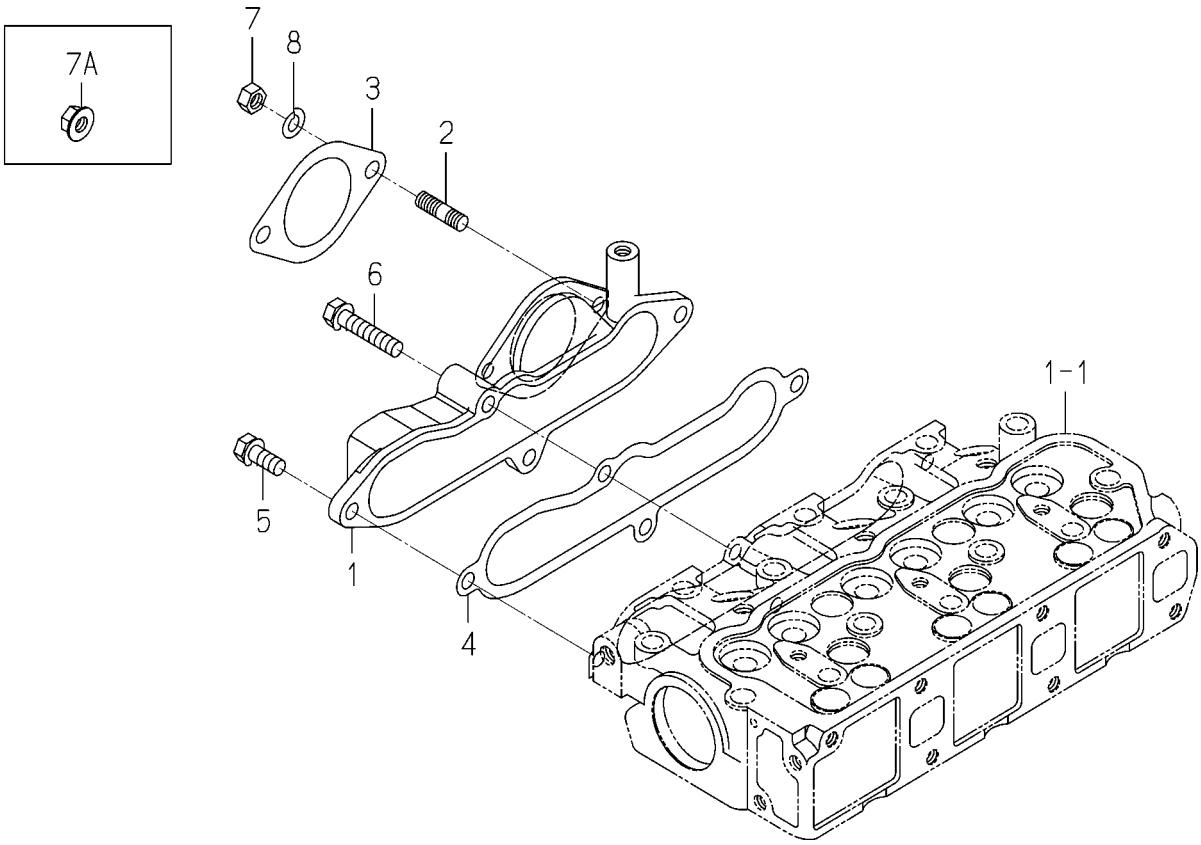

6004-120D-0100

KEY	PART CODE	DESCRIPTION	SPC	TYPE OF MODEL E3100G		ITC	COL	GRP	REMARKS
1	6214-111-009-10	MANIFOLD,INLET	*	1					
2	6904-110-818-00	STUD	*	2					
3	6209-630-005-00	GASKET	*	1					
4	6214-115-001-20	GASKET,INLET MANIFOL	*	1					
5	V211-560-802-00	BOLT/M8X20	*	3					
6	6901-910-840-00	BOLT	*	1					
7	6909-110-508-00	NUT/M8	*	2 -191781					
7A	3817-401-001-00	NUT/M08	*	2 191782-					
8	6909-150-508-00	WASHER	*	2 -191781					

FIG. 4 EXHAUST MANIFOLD

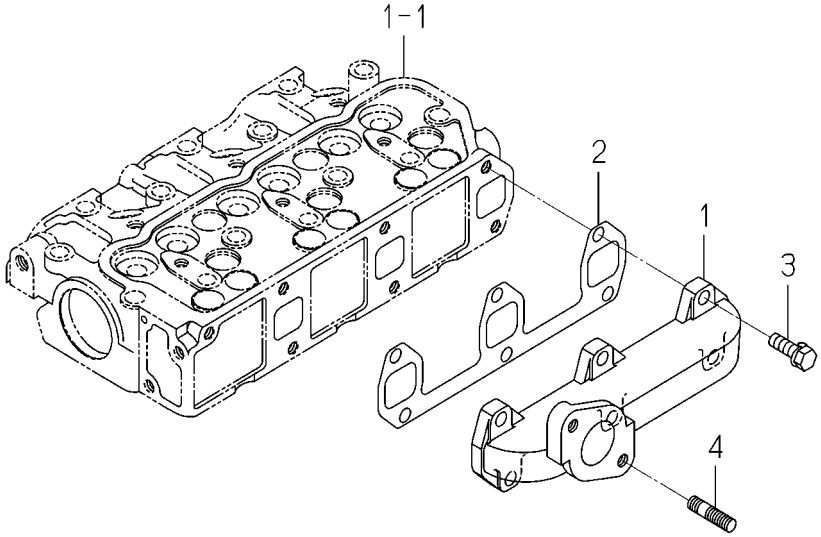

6003-140 -0100

KEY	PART CODE	DESCRIPTION	SPC	TYPE OF MODEL E3100G		ITC	COL	GRP	REMARKS
1	6214-141-008-20	MANIFOLD/EXHAUST	*	1					
2	6214-145-001-30	GASKET,EXH.MANIFOLD	*	1					
3	V211-560-802-50	BOLT,SEMS/M8X25 7T	*	6					
4	6904-110-822-00	STUD	*	2					

FIG. 5 CYLINDER BLOCK

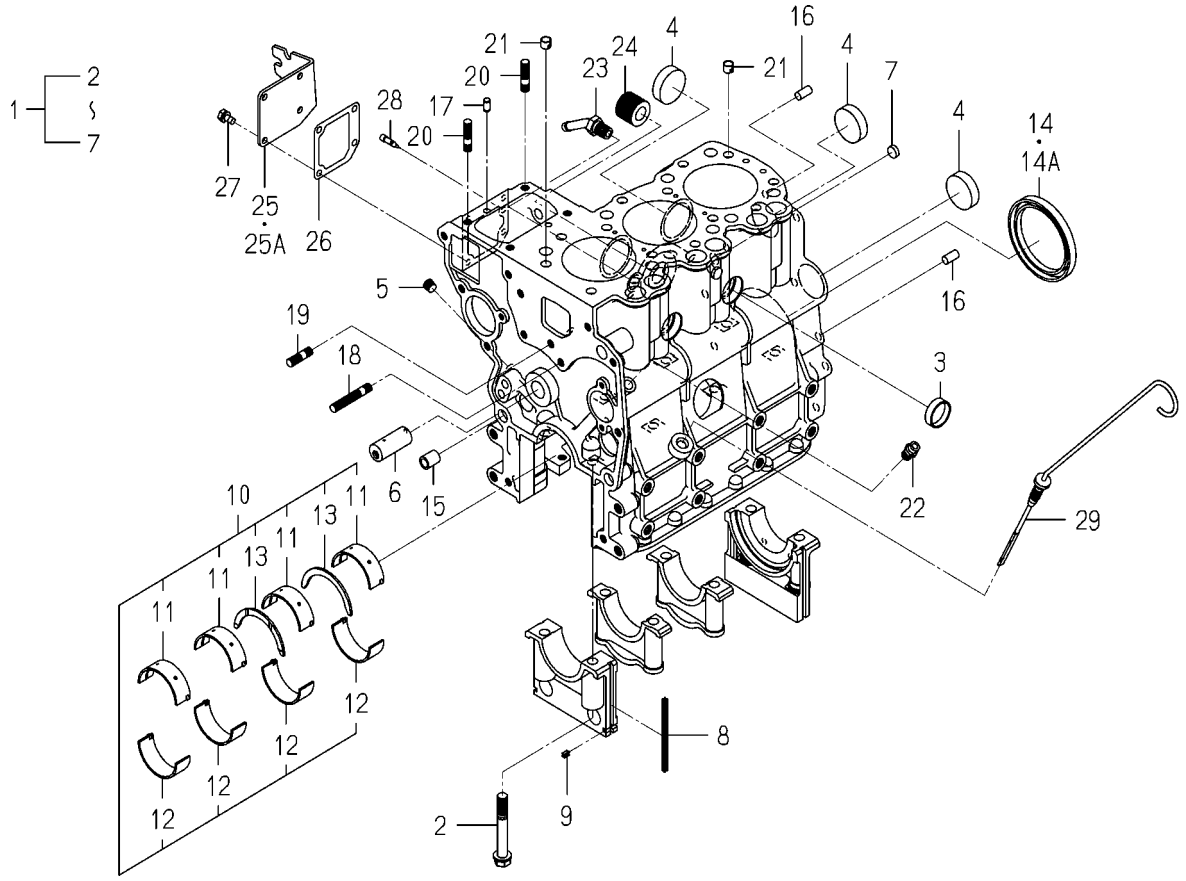

6004-201R-0100

KEY	PART CODE	DESCRIPTION	SPC	TYPE OF MODEL E3100G		ITC	COL	GRP	REMARKS
1	6211-210-046-00	CYLINDERBLOCK ASSY	*	1					
2	6209-000-004-10	BOLT	*	8					
3	6209-610-001-00	CAP,SEALING	*	2					
4	6911-219-195-00	CAP,SEALING	*	4					
5	6509-605-019-10	PLUG	*	3					
6	6212-531-005-10	PIN/IDLEGEAR	*	1					
7	6911-129-083-00	CAP,SEALING	*	2					
8	6211-258-001-00	SEAL,BEARING CAP	*	4					
9	6211-258-002-00	SEAL,BEARING CAP/7	*	2					
10	6211-510-001-00	METAL,CRANK SET	*	1					
11	6211-511-003-00	BEARING/CRANK/UPPER	*	4					
12	6211-511-004-00	BEARING/CRANK/LOWER	*	4					
13	6211-599-001-10	BEARING,THRUST CRANK	*	2					
14	6209-625-001-00	SEAL,OIL	*	1 -187632					
14A	6209-625-012-00	OILSEAL	*	1 187633-					
15	6209-749-001-20	PIN/TUBE	*	2					
16	6908-160-816-00	PIN	*	2					
17	6209-740-005-00	PIN	*	2					
18	6904-110-840-00	STUD/M8X40	*	1					
19	6904-110-818-00	STUD	*	1					
20	6904-110-822-00	STUD	*	2					
21	6294-453-002-00	DOWEL	*	2					
22	6909-902-299-00	NIPPLE	*	1					
23	6213-721-007-00	PIPE/WATERDRAIN	*	1					
24	6213-319-001-00	CONNECTOR,OIL FILTER	*	1					
25	6211-291-013-00	COVER/INJECTIONPUMP	*	1 -179810					
25A	6211-291-013-10	COVER/INJECTIONPUMP	*	1 179811-		1			
26	6211-292-001-20	GASKET/COVER	*	1					
27	6901-910-612-00	BOLT,SEMS/M6X12	*	4					
28	6215-549-013-00	PIN	*	1					

FIG. 5 CYLINDER BLOCK

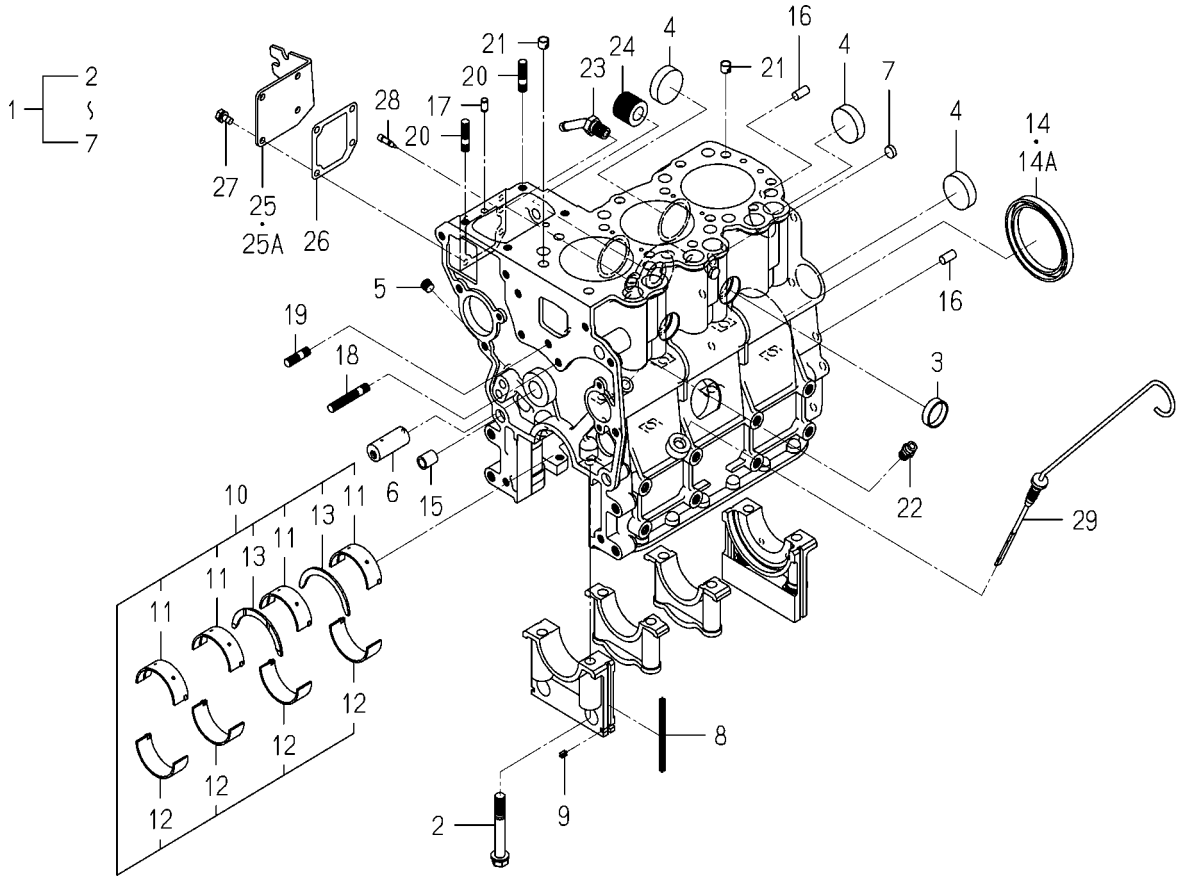

6004-201R-0100

KEY	PART CODE	DESCRIPTION	SPC	TYPE OF MODEL E3100G		ITC	COL	GRP	REMARKS
29	6211-760-022-00	LEVELGAGE	*	1					

FIG. 6 BEARING/UNDER SIZE (OPTION)

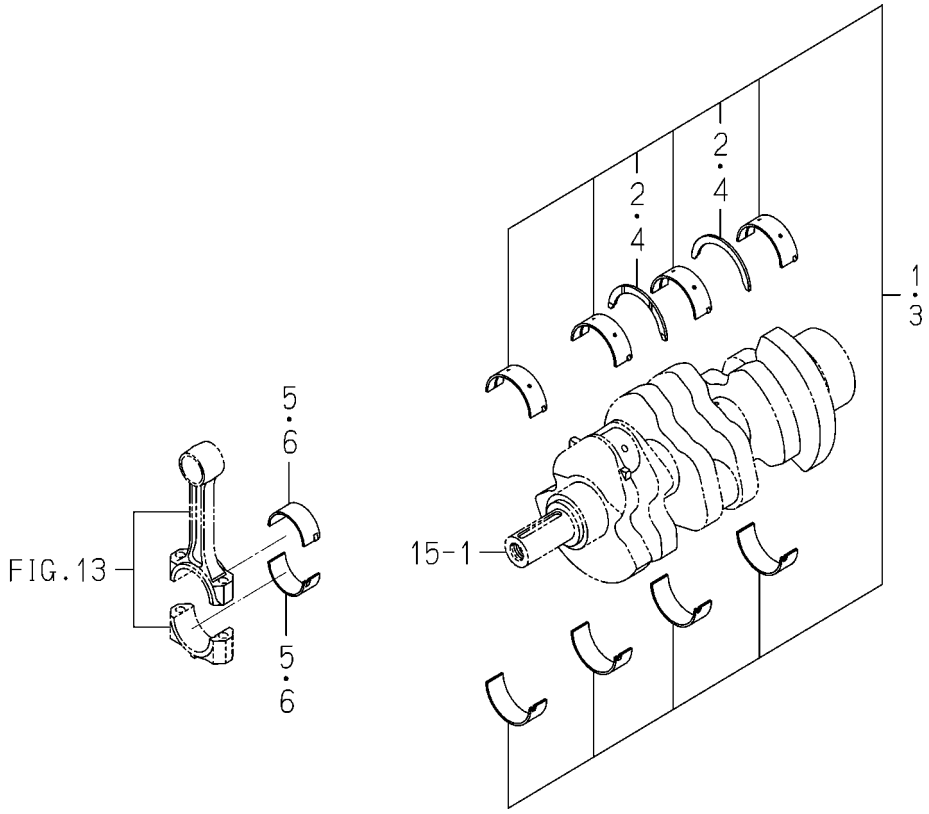

6003-209 -0100

KEY	PART CODE	DESCRIPTION	SPC	TYPE OF MODEL		ITC	COL	GRP	REMARKS
				E3100G					
1	6211-540-001-00	METAL,CRANK SET	T	1					050
2	6211-599-001-10	BEARING,THRUST CRANK	T	2					
3	6211-560-001-00	METAL,CRANK SET	T	1					100
4	6211-599-001-10	BEARING,THRUST CRANK	T	2					
5	6212-264-006-00	BEARING/CONN ROD/UN	T	6					050
6	6212-266-006-00	BEARING/CONN ROD/UN	T	6					100

FIG. 7 OIL PAN

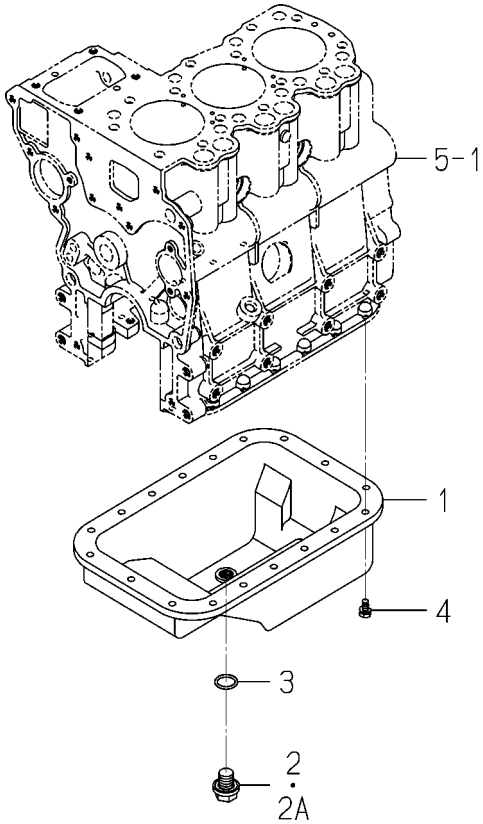

6004-210C-0100

KEY	PART CODE	DESCRIPTION	SPC	TYPE OF MODEL E3100G		ITC	COL	GRP	REMARKS
1	6211-361-033-00	OILPAN COMP	*	1					
2	3625-301-002-00	PLUG(M14X15)	*	1 -165380					
2A	3805-355-002-10	PLUG/M14X1.5	*	1 165381-					
3	V720-102-401-80	O-RING/P18	*	1					
4	6901-910-612-00	BOLT,SEMS/M6X12	*	18					

FIG. 8 REAR PLATE

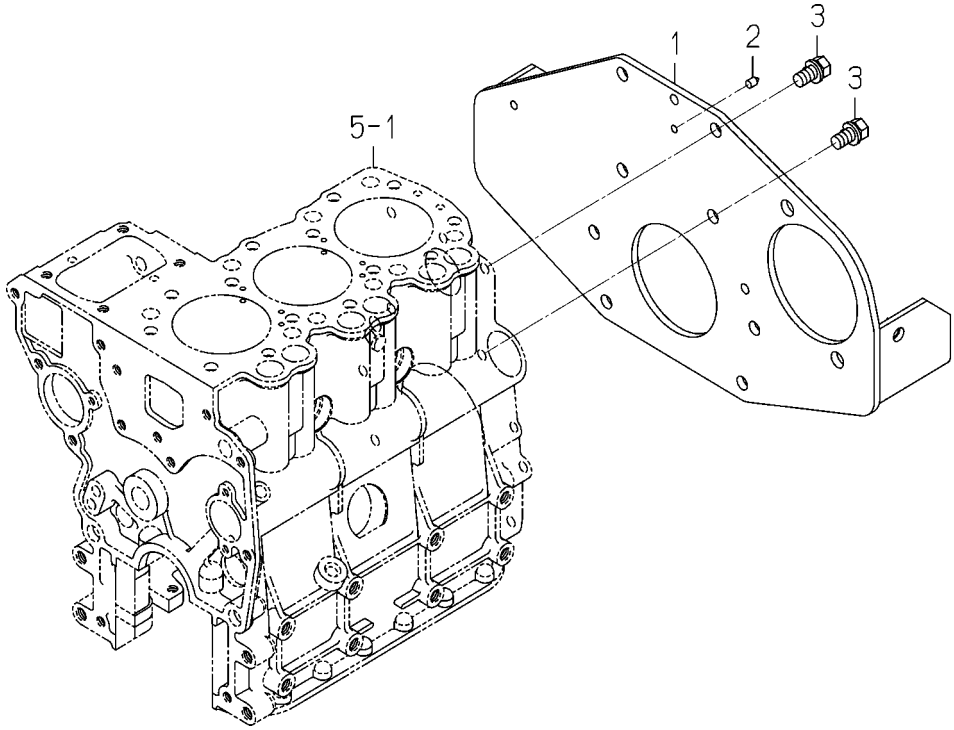

6004-220G-0100

KEY	PART CODE	DESCRIPTION	SPC	TYPE OF MODEL		ITC	COL	GRP	REMARKS
				E3100G					
1	6211-340-004-10	PLATE/REAR COMP	*	1					
2	6211-342-003-10	POINTER	*	1					
3	6901-911-020-00	BOLT,SEMS/M10X20	*	8					

FIG. 9 TIMING GEAR CASE

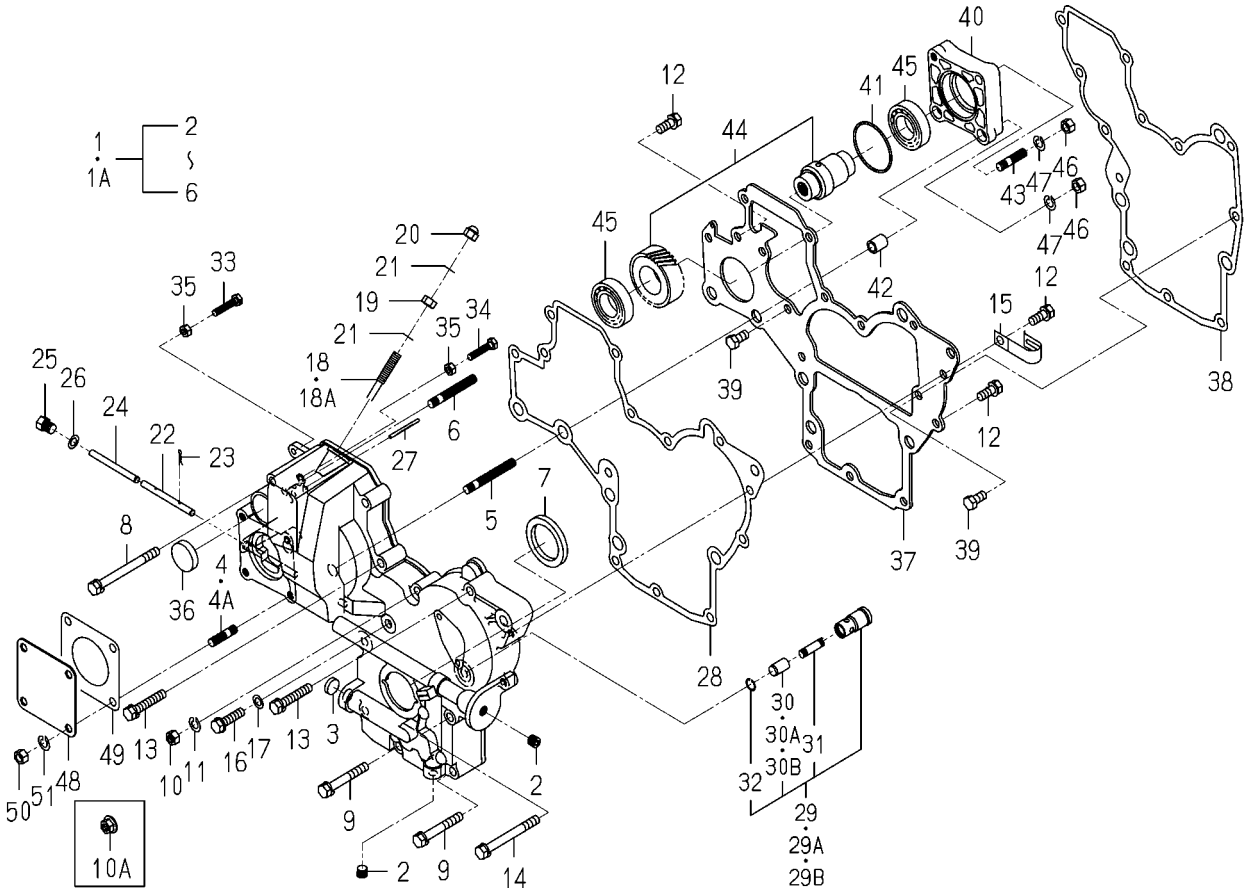

6004-240G-0100,6004-240G-0200

KEY	PART CODE	DESCRIPTION	SPC	TYPE OF MODEL E3100G		ITC	COL	GRP	REMARKS
1	6211-310-025-10	GEARCASE ASSY	*	1 -193880					
1A	6211-310-025-20	GEARCASE ASSY	*	1 193881-		1			
2	6509-605-019-10	PLUG	*	2					
3	6209-610-002-10	CUP/SEALING/16	*	1					
4	6904-110-822-00	STUD	*	4 -193880					
4A	6904-110-814-00	STUD	*	4 193881-					
5	6904-110-855-00	STUD	*	2					
6	6904-110-850-00	STUD	*	1					
7	6209-625-002-00	SEAL,OIL	*	1					
8	6209-030-005-00	BOLT/M8X85	*	1					
9	6509-000-084-00	BOLT/L=55	*	2					
10	6909-110-508-00	NUT/M8	*	1 -191781					
10A	3817-401-001-00	NUT/M08	*	1 191782-					
11	6909-150-508-00	WASHER	*	1 -191781					
12	V211-560-802-00	BOLT/M8X20	*	3					
13	6901-910-845-00	BOLT,SEMS/M8X45	*	5					
14	6209-030-006-00	BOLT/M8X75	*	1					
15	1425-621-004-00	CLAMP,HARNESS	*	1					
16	6209-046-001-00	BOLT/M8X30	*	1					
17	6209-500-003-00	WASHER/08X14X01	*	1					
18	6215-546-003-00	STOPPER/FULLLOAD	*	1 -187576					
18A	6215-546-003-10	STOPPER/FULLLOAD	*	1 187577-		1			
19	6209-409-001-00	NUT/M8	*	1					
20	V341-120-008-00	NUT,CAP/M 8	*	1					
21	6209-920-002-00	PACKING	*	2					
22	6215-542-004-20	PIN/ARM	*	1					
23	P117-303-003-00	PIN/SNAP	*	2					
24	6215-542-005-00	PIN	*	1					
25	6909-202-308-00	PLUG	*	1					
26	6209-500-003-00	WASHER/08X14X01	*	1					

FIG. 9 TIMING GEAR CASE

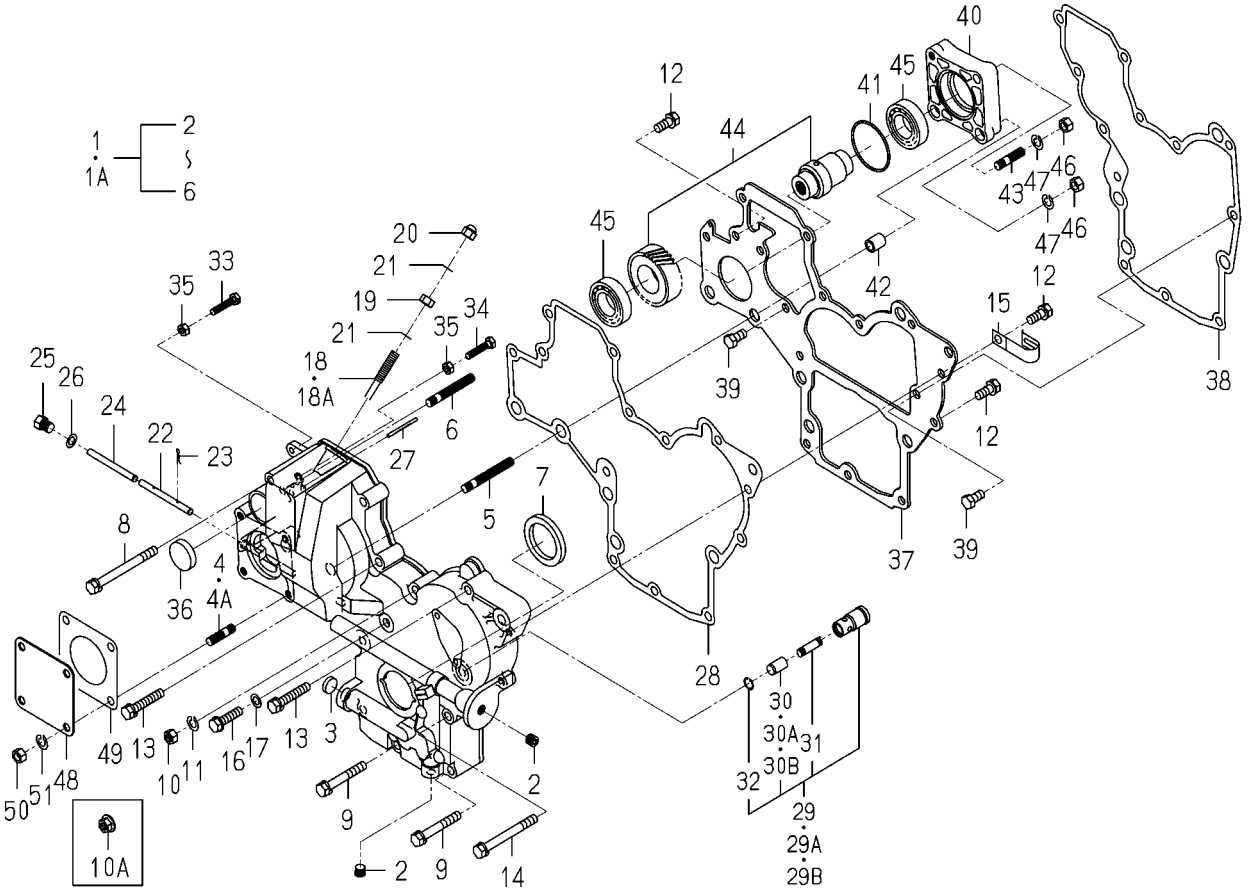

6004-240G-0100,6004-240G-0200

KEY	PART CODE	DESCRIPTION	SPC	TYPE OF MODEL E3100G		ITC	COL	GRP	REMARKS
27	6209-740-001-00	PIN,GROOVE	*	1					
28	6211-312-003-20	GASKET/GEARCASE	*	1					
29	6213-160-002-00	VALVE/RELIEF ASSY	*	1 -160774					
29A	6213-160-002-10	VALVE/RELIEF ASSY	*	1 -162896		1			
29B	6213-160-002-20	VALVE/RELIEF ASSY	*	1 162897-		1			
30	6213-161-001-00	PISTON/RELIEF VALVE	*	1 -160774					
30A	6213-161-001-10	PISTON/VALVE/RELIEF	*	1 -162896		1			
30B	6213-161-001-20	PISTON/VALVE/RELIEF	*	1 162897-		1			
31	6213-164-001-00	SPRING/RELIEF VALVE	*	1					
32	V705-140-012-00	RING,SNAP/12 C	*	1					
33	6209-050-001-00	BOLT/M6	*	1					
34	6209-050-002-00	BOLT/M6	*	1					
35	6909-110-406-00	NUT	*	2					
36	3625-540-004-00	CAP,BLANK/30	*	1					
37	6211-311-007-20	PLATE,FRONT	*	1					
38	6211-312-004-20	GASKET/PLATE	*	1					
39	6902-050-816-00	BOLT	*	3					
40	6211-319-003-00	SPACER	*	1					
41	V723-102-005-00	O-RING 1A S50	*	1					
42	6209-749-001-20	PIN/TUBE	*	2					
43	6904-110-822-00	STUD	*	1					
44	6212-530-005-10	SHAFT/HYDRAULIC ASSY	*	1					
45	V600-110-600-50	BEARING,RB/6005	*	2					
46	6909-110-408-00	NUT/M8	*	4					
47	6909-150-508-00	WASHER	*	4					
48	6511-321-083-00	COVER	*	1					
49	6211-322-002-00	GASKET/COVER	*	1					
50	6909-110-408-00	NUT/M8	*	4					
51	6909-150-508-00	WASHER	*	4					

FIG. 10 HANGER

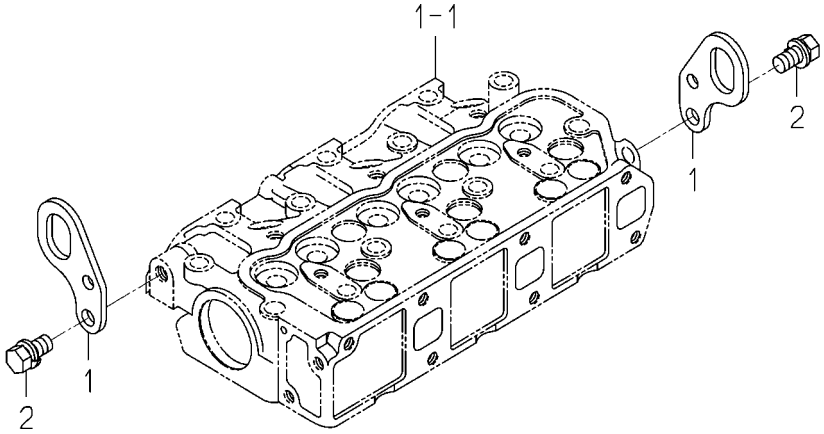

6003-290 -0100

KEY	PART CODE	DESCRIPTION	SPC	TYPE OF MODEL E3100G		ITC	COL	GRP	REMARKS
1	6211-777-007-20	HANGER	*	2					
2	6901-911-020-00	BOLT,SEMS/M10X20	*	2					

FIG. 11 VALVE

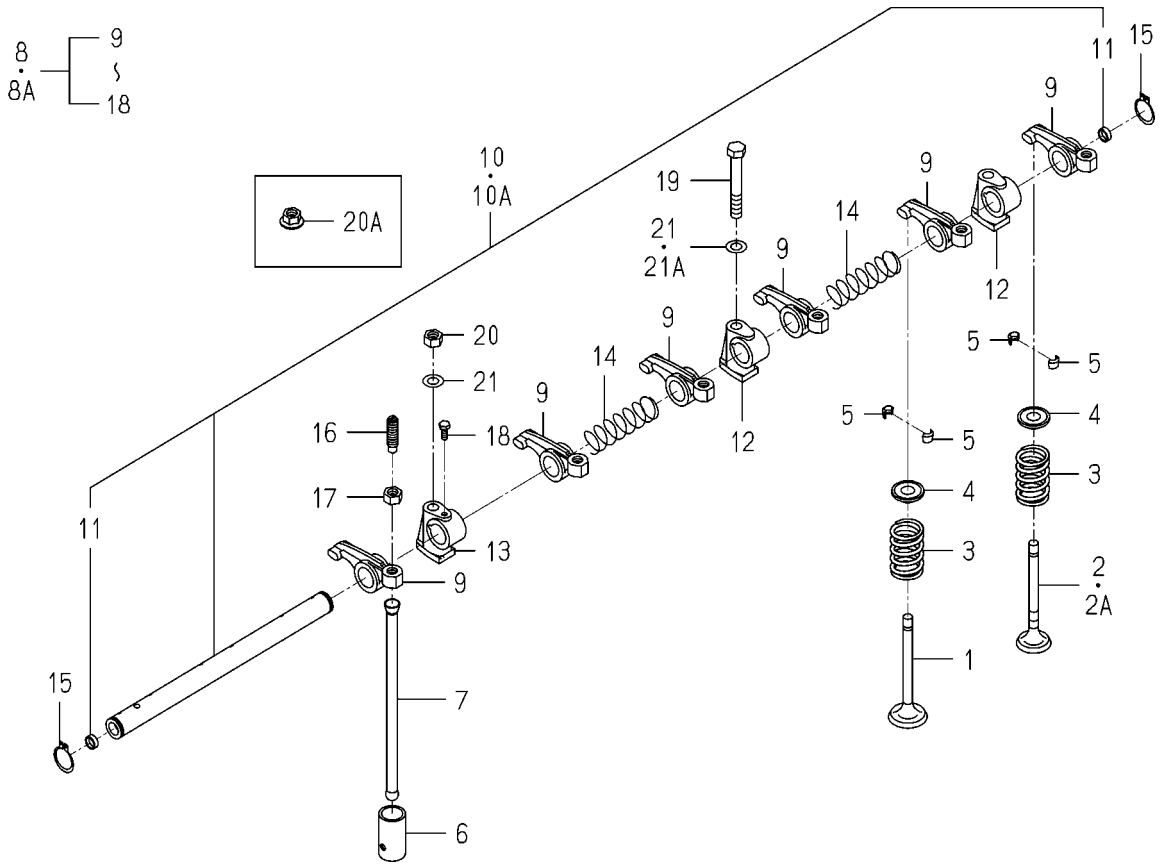

6004-301 -0100

KEY	PART CODE	DESCRIPTION	SPC	TYPE OF MODEL E3100G		ITC	COL	GRP	REMARKS
1	6212-551-001-00	VALVE,INTAKE	*	3					
2	6212-552-001-00	VALVE,EXHAUST	*	3 -162896					
2A	6212-552-001-10	VALVE/EXHAUST	*	3 162897-		1			
3	6212-561-001-00	SPRING,VALVE	*	6					
4	6212-563-001-00	SEAT,VALVE SPRING	*	6					
5	6212-565-001-00	CUTTER,VALVE	*	12					
6	6212-571-003-00	TAPPET	*	6					
7	6212-575-002-00	ROD,PUSH	*	6					
8	6212-600-002-00	SHAFT,ROCKER ASSY	*	1 -186860					
8A	6212-600-002-10	ROCKERSHAFT ASSY	*	1 186861-		1			
9	6212-611-004-10	ROCKERARM	*	6					
10	6212-620-001-10	SHAFT,ROCKER ARMASSY	*	1 -186860					
10A	6212-620-001-20	SHAFT/ROCKERARM ASSY	*	1 186861-		1			
11	6212-626-002-10	PLUG	*	2					
12	6212-628-004-00	BRACKET ROCKER SHAFT	*	2					
13	6212-628-005-00	BRACKET,ROCKER SHAFT	*	1					
14	6209-940-004-00	SPRING	*	2					
15	V704-140-016-00	RING,SNAP/16 C	*	2					
16	6212-616-002-00	SCREW ADJUST	*	6					
17	6209-409-003-00	NUT	*	6					
18	6209-000-002-00	BOLT	*	1					
19	6901-050-850-00	BOLT/M8X45	*	1					
20	6909-110-508-00	NUT/M8	*	2 -191780					
20A	3817-401-001-00	NUT/M08	*	2 191781-					
21	6209-500-005-00	WASHER/08X15.5X1.6	*	3 -191780					
21A	6209-500-005-00	WASHER/08X15.5X1.6	*	1 191781-					

FIG. 12 CAM SHAFT

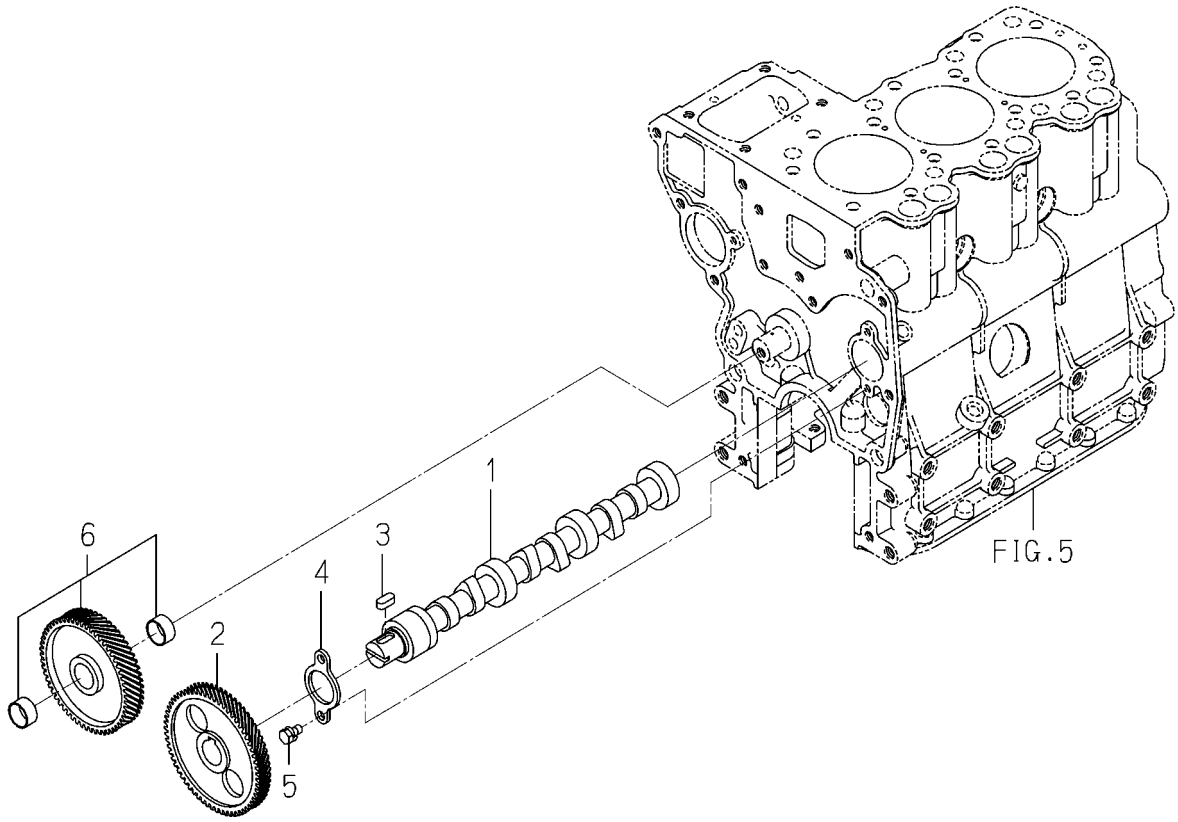

6003-310 -0100

KEY	PART CODE	DESCRIPTION	SPC	TYPE OF MODEL E3100G		ITC	COL	GRP	REMARKS
1	6212-511-002-00	SHAFT,CAM	*	1					
2	6212-522-003-00	GEAR,CAMSHAFT	*	1					
3	6908-000-716-00	KEY	*	1					
4	6212-535-001-00	PLATE,THRUST	*	1					
5	6901-910-612-00	BOLT,SEMS/M6X12	*	2					
6	6212-523-003-00	GEAR,IDLE	*	1					

FIG. 13 PISTON

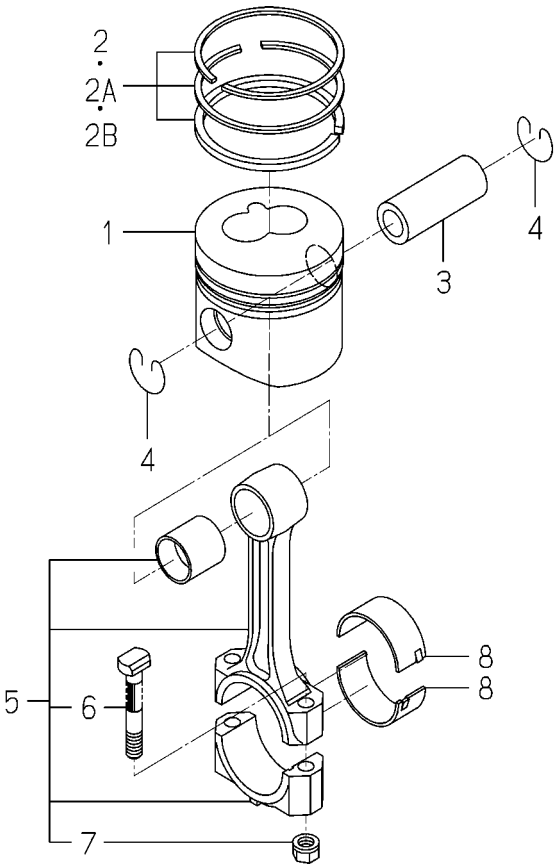

6004-340B-0100

KEY	PART CODE	DESCRIPTION	SPC	TYPE OF MODEL E3100G		ITC	COL	GRP	REMARKS
1	6212-111-013-10	PISTON	*	3					
2	6212-121-008-00	RING(PISTON) SET	*	3 -180837					
2A	6212-121-008-10	RING/PISTON SET	*	3 -189686		1			
2B	6212-121-008-20	RING/PISTON SET	*	3 189687-		1			
3	6212-211-001-10	PIN,PISTON	*	3					
4	6209-587-001-00	RING,SNAP	*	6					
5	6212-230-004-00	ROD,CONN	*	3					
6	6212-235-001-10	BOLT/CONNECTINGROD	*	6					
7	6209-440-003-00	NUT/FLANGE	*	6					
8	6212-261-006-00	BEARING/CONN ROD	*	6					

FIG. 14 PISTON/OVER SIZE (OPTION)

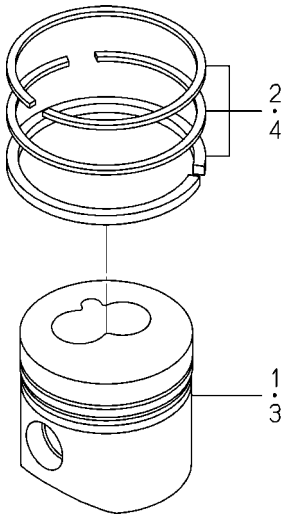

6004-349B-0100

KEY	PART CODE	DESCRIPTION	SPC	TYPE OF MODEL E3100G		ITC	COL	GRP	REMARKS
1	6212-114-013-10	PISTON/OV050	T	3					050
2	6212-124-008-10	RING/PISTON/OV SET	T	3		1			050
3	6212-116-013-10	PISTON/OV100	T	3					100
4	6212-126-008-10	RING/PISTON/OV SET	T	3		1			100

FIG. 15 CRANK SHAFT

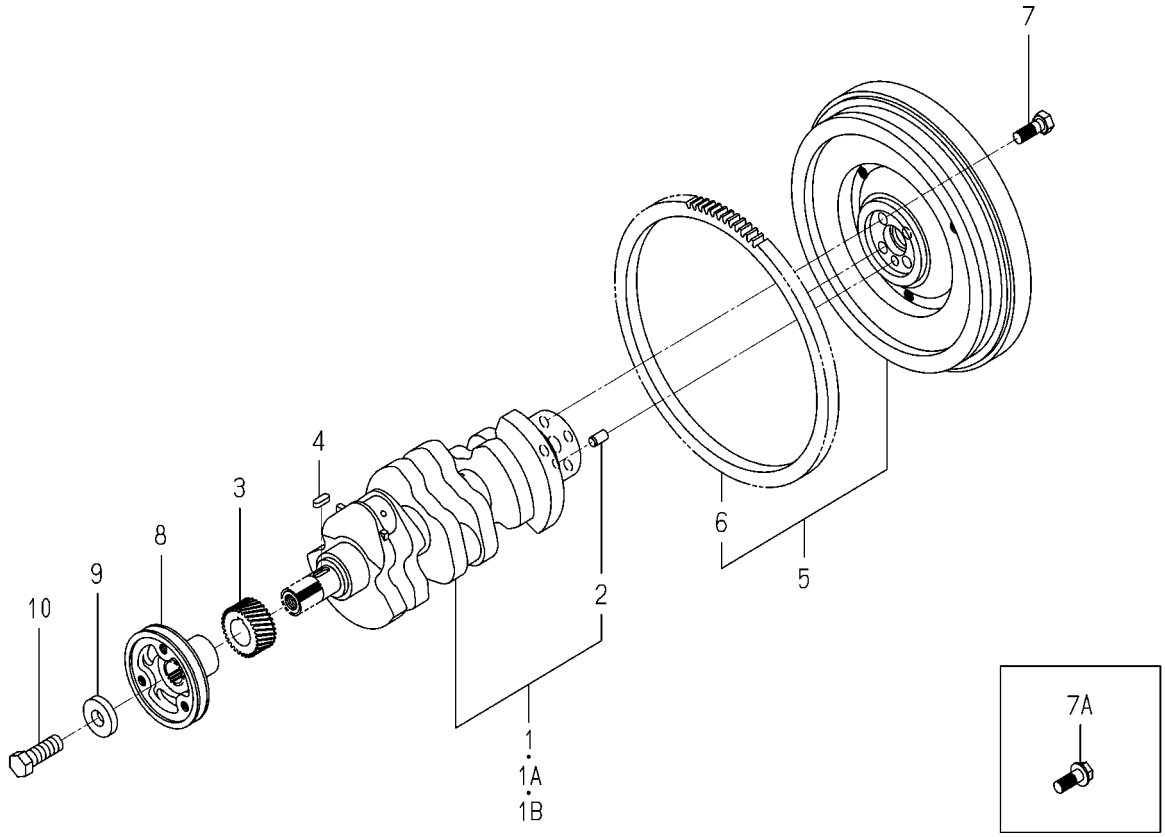

6004-350L-0100

KEY	PART CODE	DESCRIPTION	SPC	TYPE OF MODEL E3100G		ITC	COL	GRP	REMARKS
1	6212-310-019-00	CRANKSHAFT ASSY	*	1 -177285					
1A	6212-310-019-10	CRANKSHAFT ASSY	*	1 -186373		1			
1B	6212-310-019-20	CRANKSHAFT ASSY	*	1 186374-		1			
2	V523-101-001-80	PIN	*	1					
3	6212-521-002-00	GEAR,CRANK SHAFT	*	1					
4	6209-730-002-00	KEY/07X05X20	*	1					
5	6212-330-048-00	FLYWHEEL ASSY	*	1					
6	6212-333-002-00	RINGGEAR	*	1					
7	6209-000-013-00	BOLT	*	4 -194139					
7A	6209-046-015-00	BOLT/FLANGE	*	4 194140-					
8	6212-371-027-00	PULLEY/CRANK	*	1					
9	6212-379-001-00	WASHER	*	1					
10	6901-066-645-00	BOLT	*	1					

FIG. 16 OIL PUMP

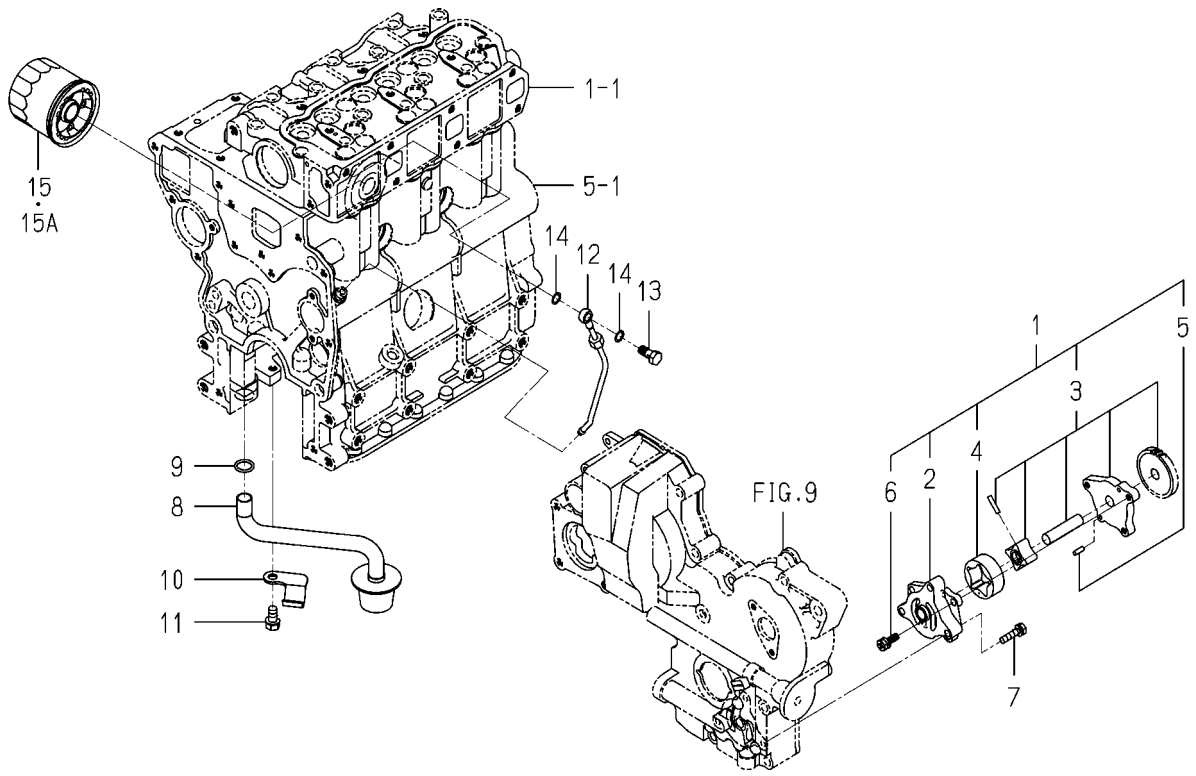

6004-401B-0100

KEY	PART CODE	DESCRIPTION	SPC	TYPE OF MODEL E3100G		ITC	COL	GRP	REMARKS
1	6213-100-003-30	OILPUMP ASSY	*	1					
2	6213-111-001-30	BODY/OILPUMP	*	1					
3	6213-120-003-20	GEAR/OILPUMP ASSY	*	1					
4	6213-125-001-00	ROTOR/OUTER	*	1					
5	6213-129-003-00	PIN/STRAIGHT	*	2					
6	6213-119-001-00	BOLT/WS	*	3					
7	6901-910-625-00	BOLT	*	3					
8	6213-140-008-00	STRAINER	*	1					
9	V720-102-401-50	O-RING/P15	*	1					
10	6213-149-002-00	CLAMP,STRAINER	*	1					
11	6901-910-816-00	BOLT,SEMS/M8X16	*	1					
12	6213-311-006-00	PIPE,OIL	*	1					
13	6909-906-105-10	BOLT,JOINT	*	1					
14	6209-920-002-00	PACKING	*	2					
15	6213-240-002-00	CARTRIDGE,OIL FILTER	*	1 -159738					
15A	6213-240-002-10	CARTRIDGE/OILFILTER	*	1 159739-		1			

FIG. 17 WATER PUMP

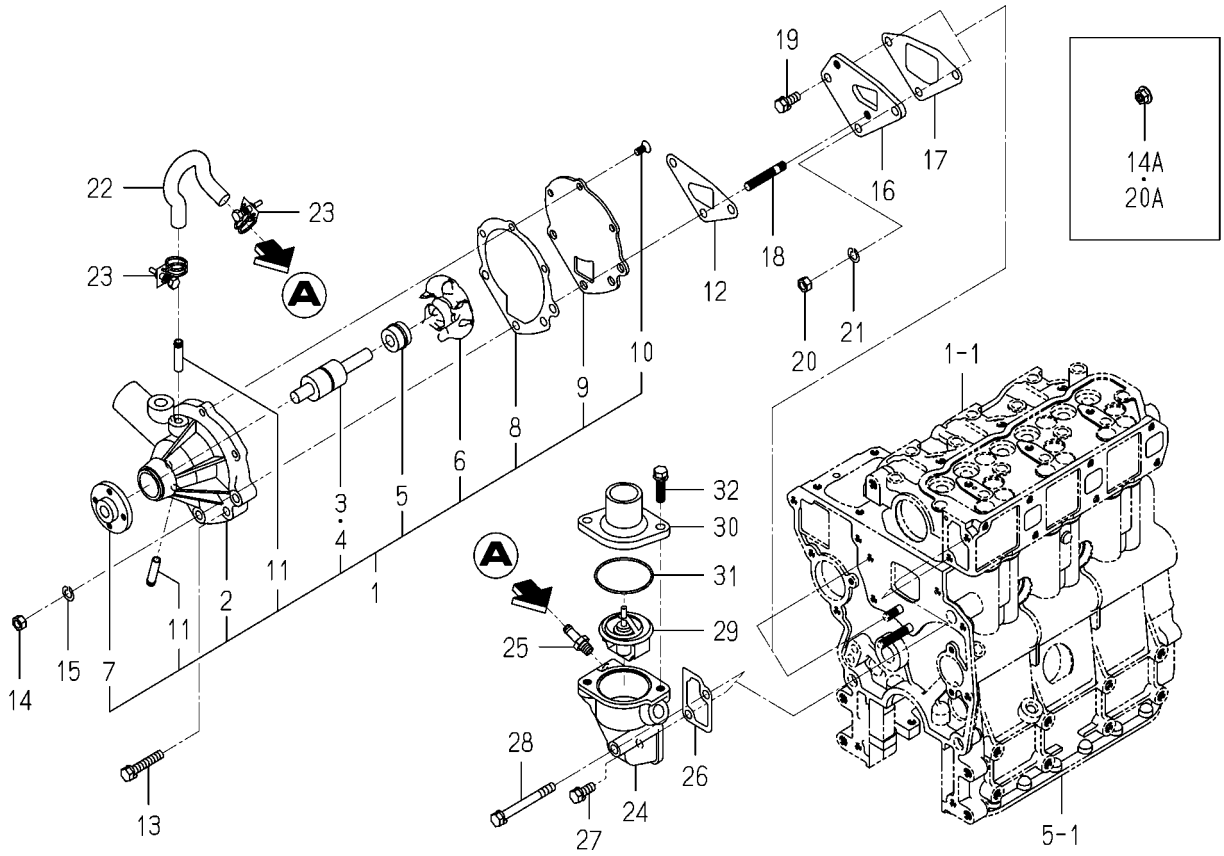

6004-420 -0100

KEY	PART CODE	DESCRIPTION	SPC	TYPE OF MODEL E3100G		ITC	COL	GRP	REMARKS
1	6213-610-005-40	WATERPUMP ASSY	*	1					
2	6213-611-003-20	BODY/WATERPUMP	*	1					
3	6213-631-002-00	BEARING/WATER PUMP	*	1					
4	6213-631-005-00	BEARING/WATERPUMP	*	1					
5	6213-622-002-10	SEAL SET/WATER PUMP	*	1					
6	6213-621-003-00	ROTOR/WATERPUMP	*	1					
7	6213-642-002-00	SEAL/WATER PUMPPULLE	*	1					
8	6213-613-002-10	GASKET	*	1					
9	6213-612-004-00	PLATE/WATER PUMP	*	1					
10	6213-619-003-00	SCREW/WATER PUMP	*	3					
11	6213-619-002-00	PIPE/WATER PUMP	*	2					
12	6213-614-003-10	GASKET/WATER PUMP	*	1					
13	6901-910-845-00	BOLT,SEMS/M8X45	*	1					
14	6909-110-508-00	NUT/M8	*	2 -191780					
14A	3817-401-001-00	NUT/M08	*	2 191781-					
15	6909-150-508-00	WASHER	*	2 -191780					
16	6213-619-001-00	SPACER,PUMP.WATER	*	1					
17	6213-614-004-10	GASKET,SPACER	*	1					
18	6904-110-840-00	STUD/M8X40	*	2					
19	V211-560-802-00	BOLT/M8X20	*	1					
20	6909-110-508-00	NUT/M8	*	1 -191780					
20A	3817-401-001-00	NUT/M08	*	1 191781-					
21	6909-150-508-00	WASHER	*	1 -191780					
22	6213-729-013-10	HOSE/RUBBER	*	1					
23	J061-210-015-00	CLAMP/WIRE/10-15	*	2					
24	6213-716-001-40	HOUSING/THERMOSTAT	*	1					
25	6213-721-003-00	PIPE,PUMP HOUSING	*	1					
26	6213-743-002-10	GASKET/HOUSING	*	1					
27	V211-560-802-00	BOLT/M8X20	*	1					
28	6209-030-006-00	BOLT/M8X75	*	1					

FIG. 17 WATER PUMP

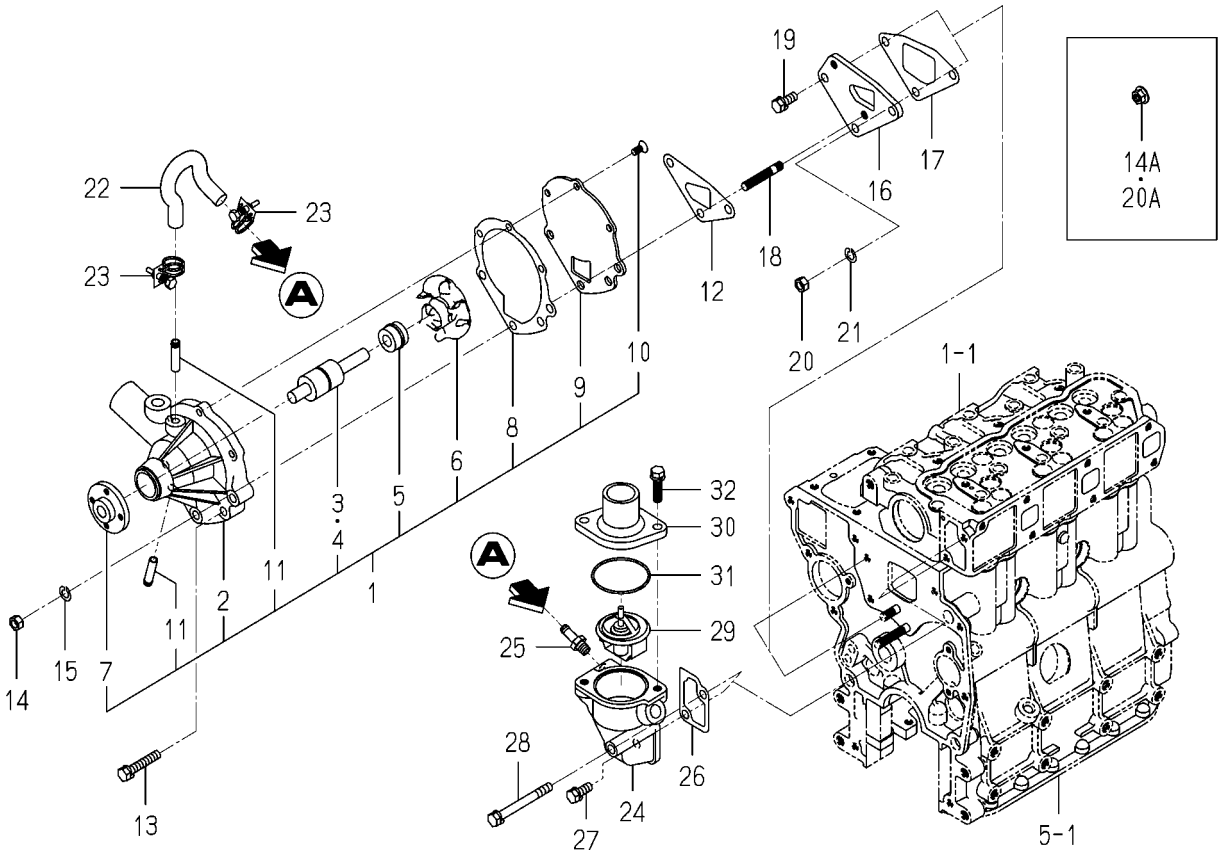

6004-420 -0100

KEY	PART CODE	DESCRIPTION	SPC	TYPE OF MODEL E3100G		ITC	COL	GRP	REMARKS
29	6513-770-022-10	THERMOSTAT	*	1					
30	6213-711-003-20	PIPE,WATER OUTLET	*	1					
31	V723-102-005-50	O-RING	*	1					
32	6901-910-830-00	BOLT	*	2					

FIG. 18 COOLING FAN (No.1-194081)

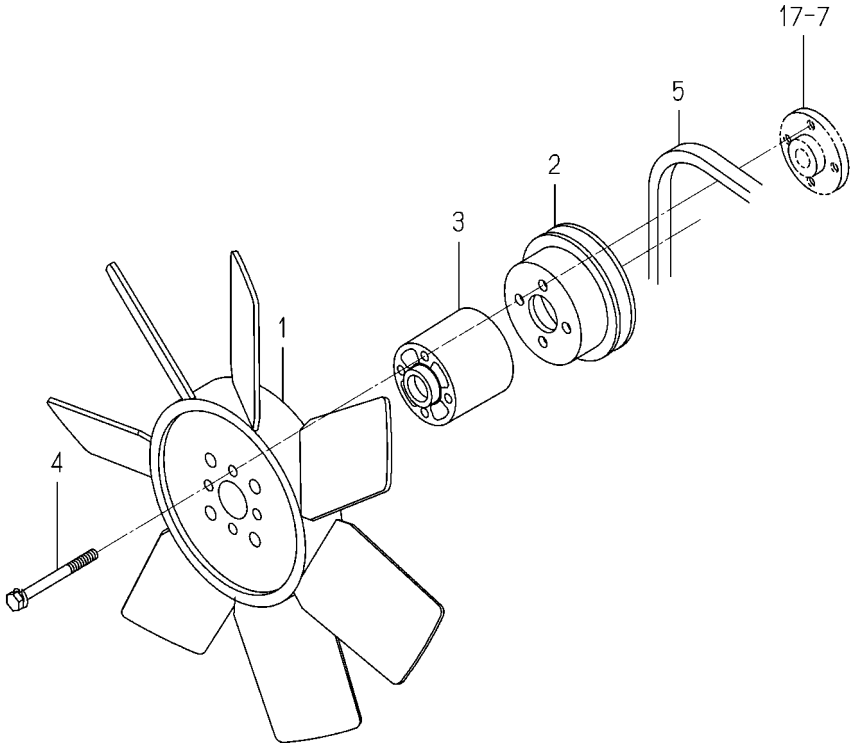

6004-480K-0100

KEY	PART CODE	DESCRIPTION	SPC	TYPE OF MODEL E3100G		ITC	COL	GRP	REMARKS
1	6213-660-004-00	FAN,COOLING	*	1 -194081					
2	6213-641-006-00	PULLEY,WATER PUMP	*	1 -194081					
3	6213-669-008-00	SPACER/FAN/48	*	1 -194081					
4	6209-030-092-00	BOLT/WS	*	4 -194081					
5	6213-671-003-00	BELT VHM034	*	1 -194081					

FIG. 19 COOLING FAN (No.194082-)

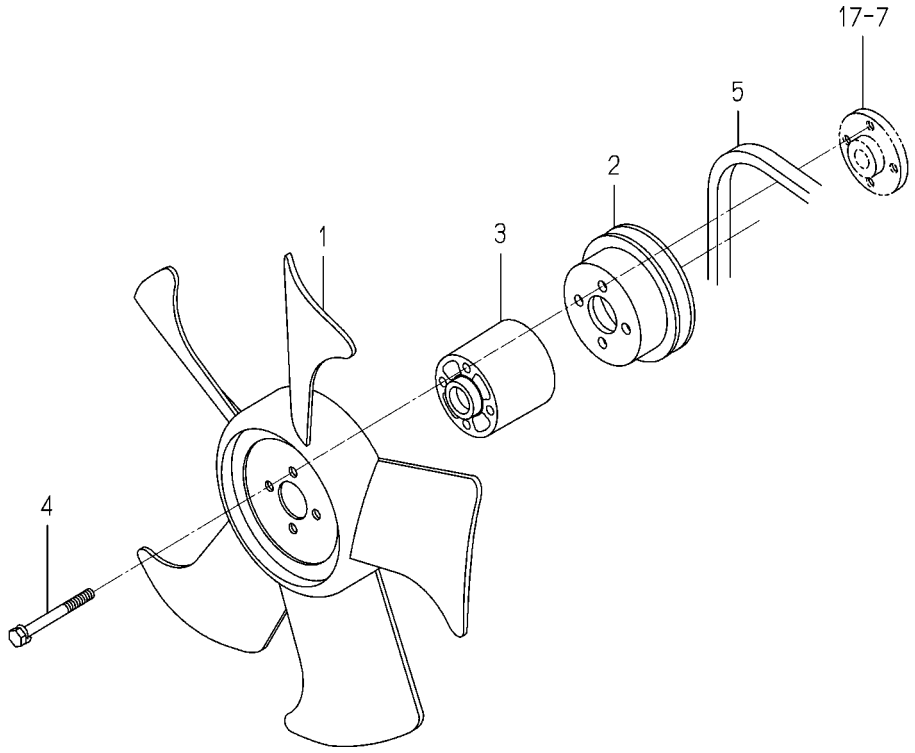

6004-480O-0100

KEY	PART CODE	DESCRIPTION	SPC	TYPE OF MODEL E3100G		ITC	COL	GRP	REMARKS
1	6213-660-022-00	FAN/COOLING	*	1 194082-					
2	6213-641-002-10	PULLEY,WATER PUMP	*	1 194082-					
3	6213-669-008-00	SPACER/FAN/48	*	1 194082-					
4	6209-030-044-00	BOLT/WS	*	4 194082-					
5	6213-671-003-00	BELT VHM034	*	1 194082-					

FIG. 20 INJECTION NOZZLE

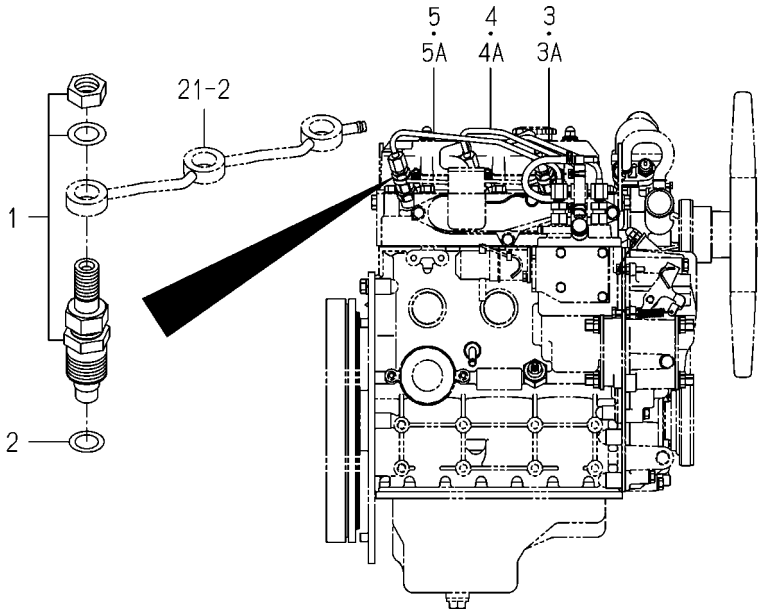

6004-501 -0100

KEY	PART CODE	DESCRIPTION	SPC	TYPE OF MODEL E3100G		ITC	COL	GRP	REMARKS
1	6215-300-035-00	INJECTIONNOZZLE ASSY	*	3					FIG 026
2	6215-315-002-00	GASKET,NOZZLE	*	3					
3	6215-410-006-10	PIPE,INJ	*	1 -154775					
3A	6215-411-103-00	PIPE/INJECTION ASSY	*	1 154776-					
4	6215-410-007-10	PIPE,INJ	*	1 -154775					
4A	6215-411-104-00	PIPE/INJECTION ASSY	*	1 154776-					
5	6215-410-008-10	PIPE,INJ	*	1 -154775					
5A	6215-411-105-00	PIPE/INJECTION ASSY	*	1 154776-					

FIG. 21 INJECTION PUMP

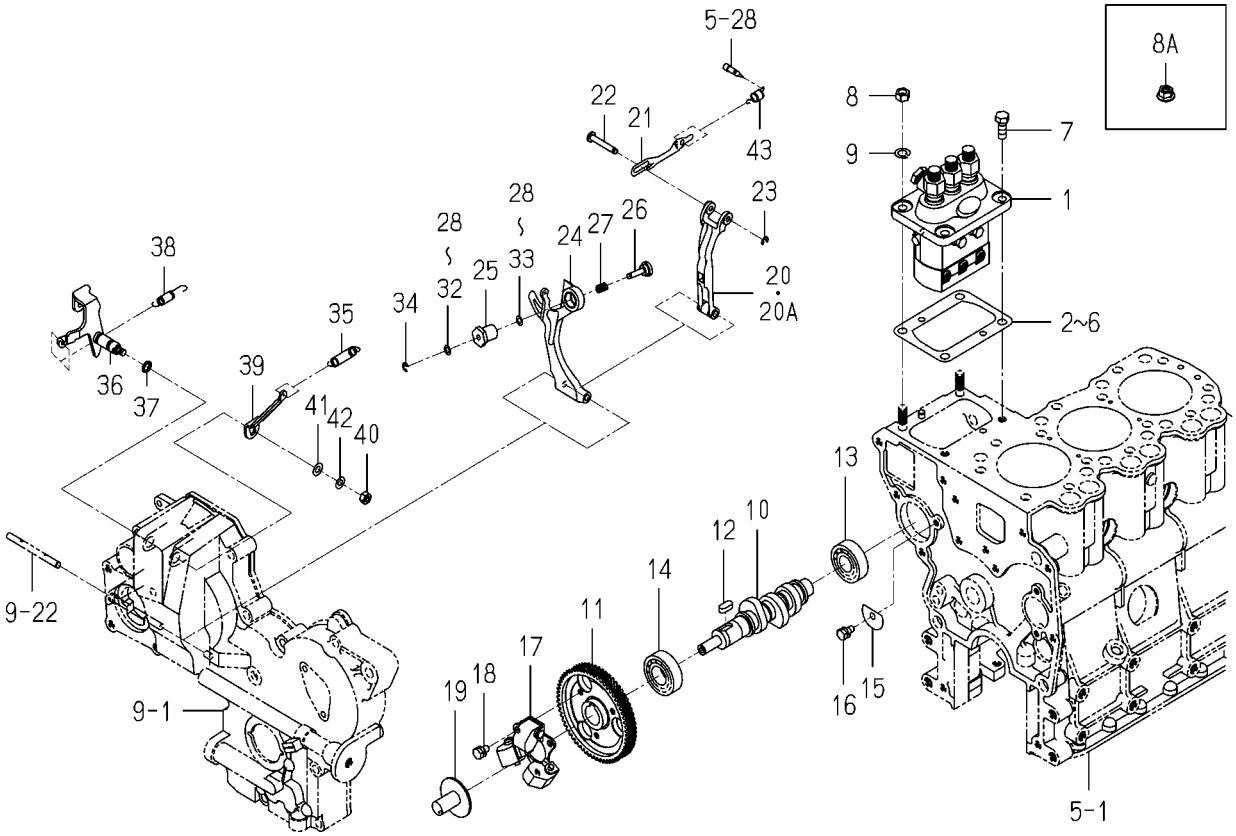

6004-510P-0100

KEY	PART CODE	DESCRIPTION	SPC	TYPE OF MODEL E3100G		ITC	COL	GRP	REMARKS
1	6215-600-052-20	PUMP,INJ	*	1					FIG 027
2	6219-752-006-00	SHIM/INJECTION P/0.3	*	1					
3	6219-752-007-00	SHIM/INJECTION P/0.1	*	1					
4	6219-752-008-00	SHIM/INJECTION P/0.2	*	1					
5	6219-752-009-00	SHIM/INJECTION P/0.4	*	1					
6	6219-752-010-00	SHIM/INJECTION P/0.5	*	1					
7	V201-360-802-00	BOLT/M8X20	*	2					
8	6909-110-508-00	NUT/M8	*	2 -192304					
8A	3817-401-001-00	NUT/M08	*	2 192305-					
9	6909-150-508-00	WASHER	*	2 -192304					
10	6215-621-002-30	SHAFT,CAM/INJ.PUMP	*	1					
11	6212-524-002-00	GEAR,INJ PUMP	*	1					
12	6908-000-716-00	KEY	*	1					
13	V600-110-620-30	BEARING,RB/6203	*	1					
14	V600-110-600-40	BEARING,RB/6004	*	1					
15	6212-535-002-00	PLATE,THRUST INJPUMP	*	1					
16	6901-910-612-00	BOLT,SEMS/M6X12	*	1					
17	6215-520-001-00	FLYWEIGHT	*	1					
18	6209-030-043-00	BOLT/M6X10	*	3					
19	6215-526-001-10	PIECE,THRUST	*	1					
20	6215-541-001-00	ARM,FLOATING	*	1 -156998					
20A	6215-541-001-10	ARM/FLOATING COMP	*	1 156999-		1			
21	6215-543-002-10	RINK/CONTROL	*	1					
22	6215-542-006-00	PIN,CONTROL	*	1					
23	V710-140-004-00	RING,SNAP/ 4 E	*	1					
24	6215-541-016-30	ARM/TENSION	*	1					
25	6215-549-028-10	CASE/ADAPTER	*	1					
26	6215-549-027-10	PIN/ADAPTER	*	1					
27	6215-549-005-10	SPRING ADAPTER	*	1					
28	6215-549-006-00	SHIM,ADAPTER/0.1	*	2 -186679					

FIG. 21 INJECTION PUMP

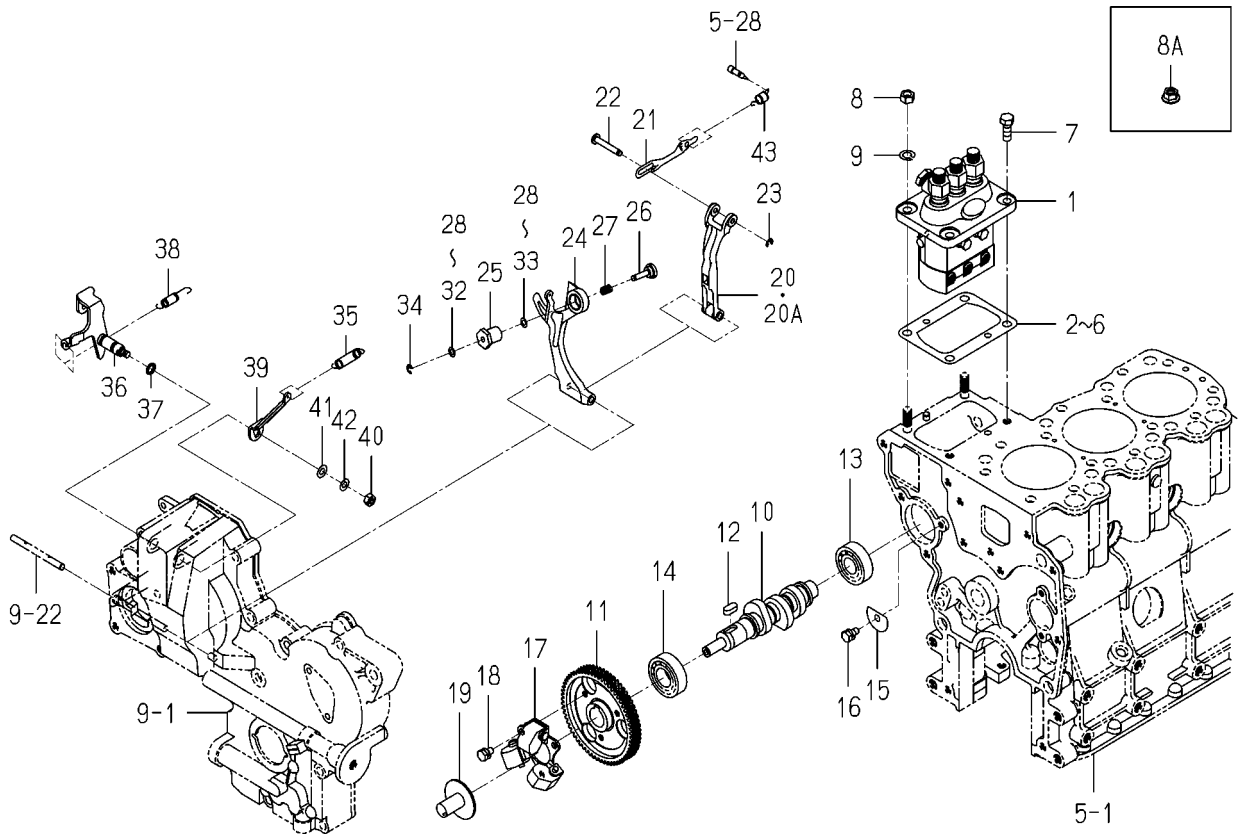

6004-510P-0100

KEY	PART CODE	DESCRIPTION	SPC	TYPE OF MODEL E3100G		ITC	COL	GRP	REMARKS
28A	6215-549-063-00	SHIM/ADAPTER/0.05	*	2					
29	6215-549-006-00	SHIM,ADAPTER/0.1	*	186680-2					
30	6215-549-009-00	SHIM,ADAPTER/0.15	*	186680-2					
31	6215-549-010-00	SHIM,ADAPTER/0.2	*	2					
32	6215-549-023-00	SHIM/ADAPTER/0.5	*	1					
33	6215-549-024-00	SHIM/ADAPTER/1.0	*	1					
34	V710-140-004-00	RING,SNAP/ 4 E	*	1					
35	6215-531-008-00	SPRING/GOVERNOR	*	1					
36	6215-541-022-10	LEVER/CONTROL COMP	*	1					
37	V720-101-900-80	O-RING/P 8	*	1					
38	6209-580-002-10	SPRING,RETURN	*	1					
39	6215-549-007-10	ARM/CONTROL	*	1					
40	6909-110-406-00	NUT	*	1					
41	V411-260-006-00	WASHER / M6	*	1					
42	6909-150-506-00	WASHER,SP/M6	*	1					
43	6215-549-012-00	SPRING,STARTING	*	1					

FIG. 22 FUEL PIPE

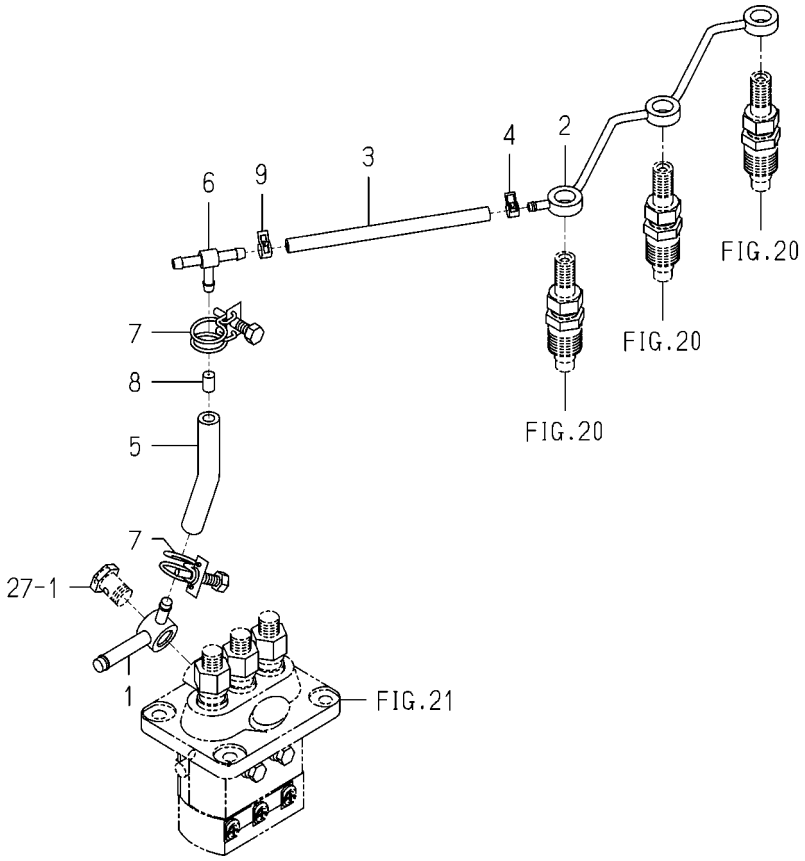

6004-550 -0100

KEY	PART CODE	DESCRIPTION	SPC	TYPE OF MODEL E3100G		ITC	COL	GRP	REMARKS
1	6215-412-002-10	CONNECTOR	*	1					
2	6215-411-074-10	PIPE/FUEL	*	1					
3	6209-360-005-00	HOSE,RUBBER	*	1					
4	J062-076-082-00	CLIP/HOSE/7.6-8.2	*	1					
5	6209-360-021-00	HOSE/RUBBER	*	1					
6	3632-360-036-00	JOINTT-TYPE 2	*	1					
7	J061-210-012-00	CLAMP/WIRE/10-12	*	2					
8	6215-419-001-00	TUBE,ORIFICE	*	1					
9	J062-087-093-00	CLIP/HOSE/8.7-9.3	*	1					

FIG. 23 ELECTRIC (1)

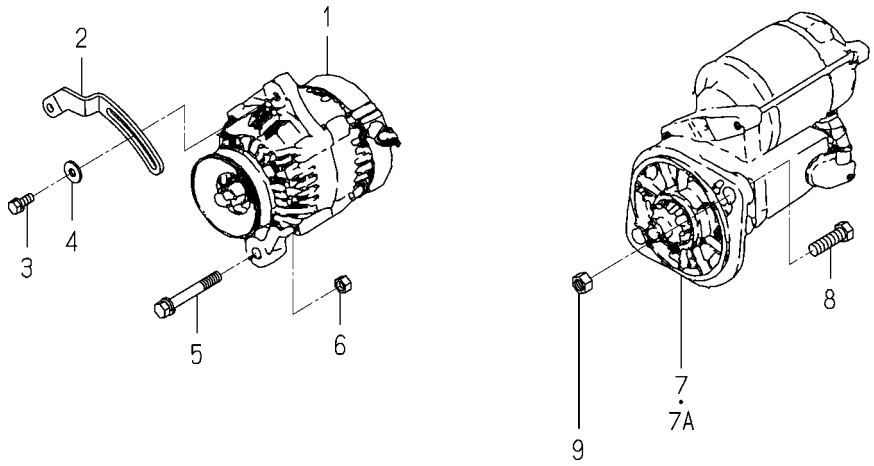

6004-801F-0100,6004-801F-0200

KEY	PART CODE	DESCRIPTION	SPC	TYPE OF MODEL E3100G		ITC	COL	GRP	REMARKS
1	6281-200-005-00	GENERATOR ASSY	*	1					FIG 029
2	6213-674-006-10	PLATE/ADJUST	*	1					
3	V211-560-802-00	BOLT/M8X20	*	1					
4	1373-121-001-00	WASHER/9X22X2	*	1					
5	6209-031-083-00	BOLT/WSP	*	1					
6	6909-110-410-00	NUT/M10	*	1					
7	6281-100-011-10	STARTER ASSY	*	1 -164070					FIG 028
7A	6281-100-011-20	STARTER ASSY	*	1 164071-		1			FIG 028
8	6901-931-240-00	BOLT	*	2					
9	V304-260-012-00	NUT/M12	*	2					

FIG. 24 ELECTRIC (2)

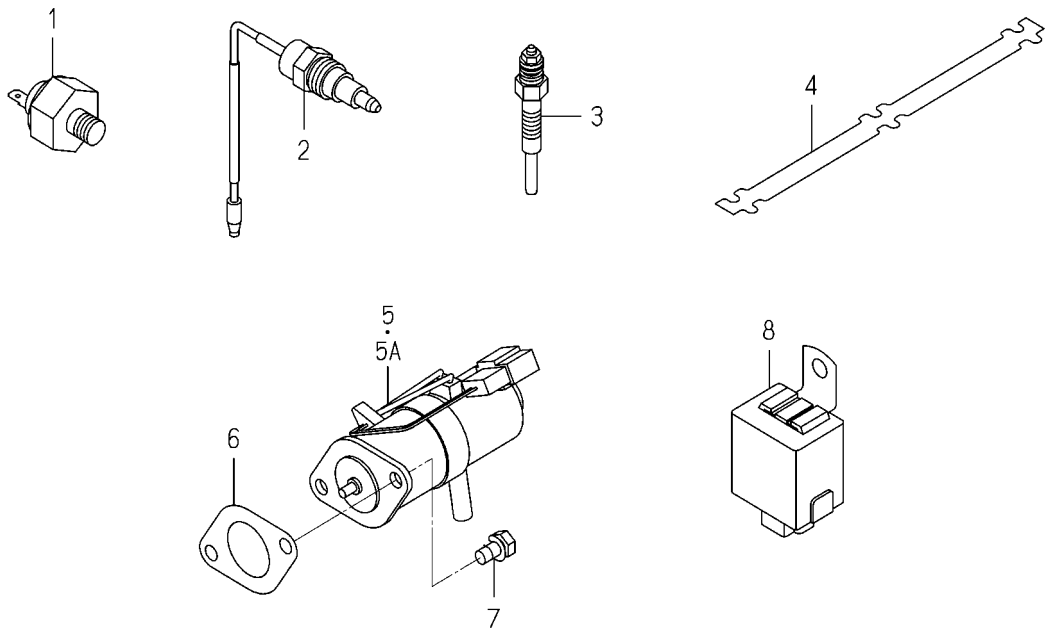

6004-820I-0100,6004-820I-0200

KEY	PART CODE	DESCRIPTION	SPC	TYPE OF MODEL E3100G		ITC	COL	GRP	REMARKS
1	6281-971-001-10	SWITCH/OILPRESSURE	*	1					
2	6282-450-002-00	SWITCH/OVERHEAT	*	1					
3	6281-410-010-00	GLOWPLUG	*	3					
4	6219-732-002-00	CONNECTOR,GLOW PLUG	*	1					
5	6281-910-003-00	SOLENOID	*	1 -154837					
5A	6281-910-003-10	SOLENOID	*	1 154838-		1			
6	6209-630-002-10	GASKET	*	1					
7	6901-910-612-00	BOLT,SEMS/M6X12	*	2					
8	6281-920-001-00	RELAY,SOLENOID	*	1					

FIG. 25 REPAIR PARTS (OPTION)

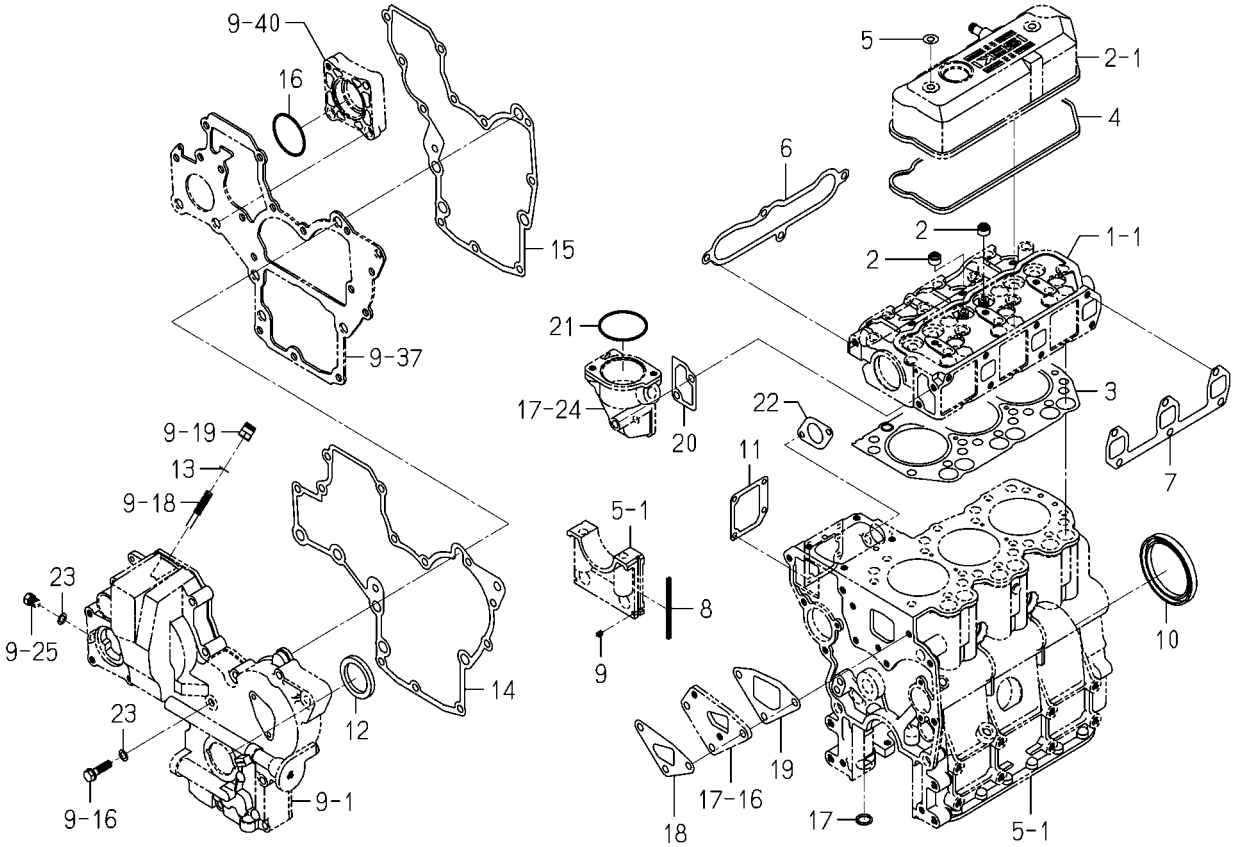

6004-999D-0100

KEY	PART CODE	DESCRIPTION	SPC	TYPE OF MODEL E3100G		ITC	COL	GRP	REMARKS
1	6287-810-016-20	REPAIR/ENGINE SET	T	1		1			
2	6212-569-002-00	SEAL,OIL	T	6					
3	6211-141-008-30	GASKET/CYLINDERHEAD	T	1		1			
4	6211-173-003-00	SEAL,CYL.HEAD COVER	T	1					
5	6909-572-008-00	PACKING	T	2					
6	6214-115-001-20	GASKET,INLET MANIFOL	T	1					
7	6214-145-001-30	GASKET,EXH.MANIFOLD	T	1					
8	6211-258-001-00	SEAL,BEARING CAP	T	4					
9	6211-258-002-00	SEAL,BEARING CAP/7	T	2					
10	6209-625-012-00	OILSEAL	T	1					
11	6211-292-001-20	GASKET/COVER	T	1					
12	6209-625-002-00	SEAL,OIL	T	1					
13	6209-920-002-00	PACKING	T	2					
14	6211-312-003-20	GASKET/GEARCASE	T	1					
15	6211-312-004-20	GASKET/PLATE	T	1					
16	V723-102-005-00	O-RING 1A S50	T	1					
17	V720-102-401-50	O-RING/P15	T	1					
18	6213-614-003-10	GASKET/WATER PUMP	T	1					
19	6213-614-004-10	GASKET,SPACER	T	1					
20	6213-743-002-10	GASKET/HOUSING	T	1					
21	V723-102-005-50	O-RING	T	1					
22	6209-630-002-10	GASKET	T	1					
23	6209-500-003-00	WASHER/08X14X01	T	2					

FIG. 26 COMPONENT PARTS FOR 6215-300-035-00 ON Fig.20

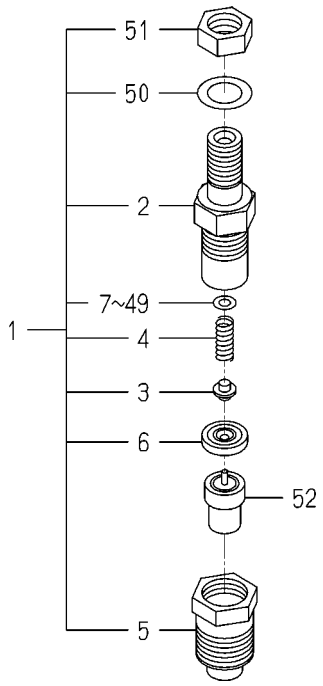

6215-300-035-0

KEY	PART CODE	DESCRIPTION	SPC	TYPE OF MODEL E3100G		ITC	COL	GRP	REMARKS
1	6215-330-023-00	HOLDER/NOZZLE ASSY	*	3					
2	6215-331-007-00	BODY/NOZZLE HOLDER	*	3					
3	6215-342-001-00	PIN,NOZZLE HOLDER	*	3					
4	6215-343-001-00	WASHER	*	3					
5	6215-332-012-00	NUT/NOZZLERETAINING	*	3					
6	6215-339-001-00	PIECE,DISTANCE	*	3					
7	6215-345-001-00	WASHER/0.9	*	3					
8	6215-345-002-00	WASHER/0.925	*	3					
9	6215-345-003-00	WASHER/0.95	*	3					
10	6215-345-004-00	WASHER/0.975	*	3					
11	6215-345-005-00	WASHER/1.0	*	3					
12	6215-345-006-00	WASHER/1.025	*	3					
13	6215-345-007-00	WASHER/1.05	*	3					
14	6215-345-008-00	WASHER/1.075	*	3					
15	6215-345-009-00	WASHER/1.1	*	3					
16	6215-345-010-00	WASHER/1.125	*	3					
17	6215-345-011-00	WASHER/1.15	*	3					
18	6215-345-012-00	WASHER/1.175	*	3					
19	6215-345-013-00	WASHER/1.2	*	3					
20	6215-345-014-00	WASHER/1.225	*	3					
21	6215-345-015-00	WASHER/1.25	*	3					
22	6215-345-016-00	WASHER/1.275	*	3					
23	6215-345-017-00	WASHER/1.3	*	3					
24	6215-345-018-00	WASHER/1.325	*	3					
25	6215-345-019-00	WASHER/1.35	*	3					
26	6215-345-020-00	WASHER/1.375	*	3					
27	6215-345-021-00	WASHER/1.4	*	3					
28	6215-345-022-00	WASHER/1.425	*	3					
29	6215-345-023-00	WASHER/1.45	*	3					
30	6215-345-024-00	WASHER/1.475	*	3					

FIG. 26 COMPONENT PARTS FOR 6215-300-035-00 ON Fig.20

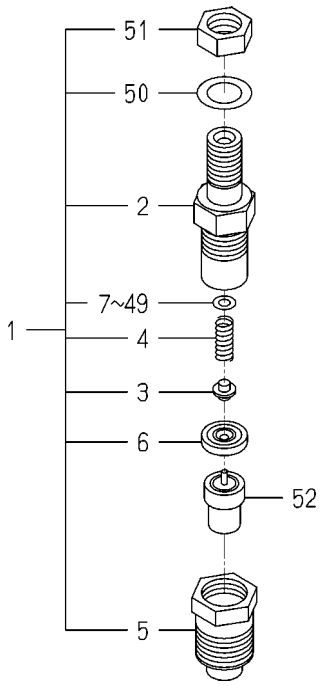

6215-300-035-0

KEY	PART CODE	DESCRIPTION	SPC	TYPE OF MODEL E3100G		ITC	COL	GRP	REMARKS
31	6215-345-025-00	WASHER/1.5	*	3					
32	6215-345-026-00	WASHER/1.525	*	3					
33	6215-345-027-00	WASHER/1.55	*	3					
34	6215-345-028-00	WASHER/1.575	*	3					
35	6215-345-029-00	WASHER/1.6	*	3					
36	6215-345-030-00	WASHER/1.625	*	3					
37	6215-345-031-00	WASHER/1.65	*	3					
38	6215-345-032-00	WASHER/1.675	*	3					
39	6215-345-033-00	WASHER/1.7	*	3					
40	6215-345-034-00	WASHER/1.725	*	3					
41	6215-345-035-00	WASHER/1.75	*	3					
42	6215-345-036-00	WASHER/1.775	*	3					
43	6215-345-037-00	WASHER/1.8	*	3					
44	6215-345-038-00	WASHER/1.825	*	3					
45	6215-345-039-00	WASHER/1.85	*	3					
46	6215-345-040-00	WASHER/1.875	*	3					
47	6215-345-041-00	WASHER/1.9	*	3					
48	6215-345-042-00	WASHER/1.925	*	3					
49	6215-345-043-00	WASHER/1.95	*	3					
50	6215-359-001-00	WASHER	*	3					
51	6215-359-002-00	NUT	*	3					
52	6215-311-019-00	NOZZLE ASSY	*	3					

FIG. 27 COMPONENT PARTS FOR 6215-600-052-20 ON Fig.21

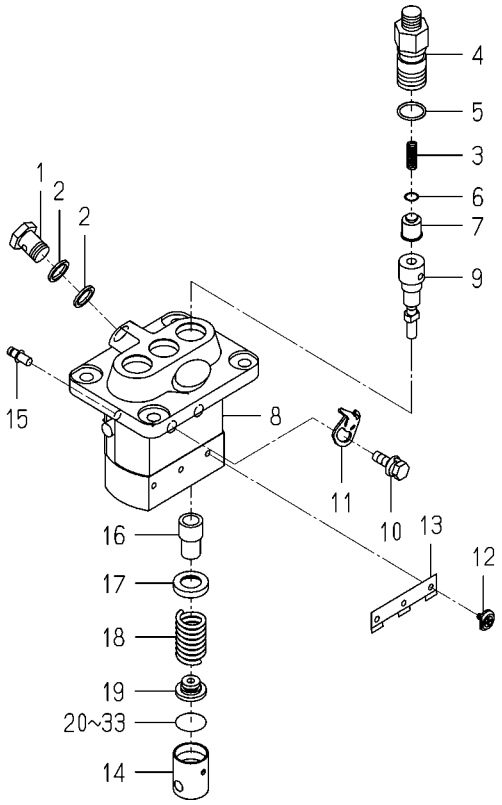

6215-600-052-2J

KEY	PART CODE	DESCRIPTION	SPC	TYPE OF MODEL E3100G		ITC	COL	GRP	REMARKS
1	6215-619-009-00	SCREW/HOLLOW	*	1					
2	6215-619-010-00	WASHER/AIR BLEEDER	*	2					
3	6215-643-001-00	SPRING/DELIVERYVALVE	*	3					
4	6215-644-008-00	HOLDER/DELIVERY VALV	*	3					
5	6215-649-001-00	ORING	*	3					
6	6215-649-002-00	GASKET/DELIVERYVALVE	*	3					
7	6215-641-001-00	VALVE ASSY	*	3					
8	6215-611-001-00	HOUSING ASSY	*	1					
9	6215-631-001-00	ELEMENT ASSY	*	3					
10	6215-619-022-00	BOLT/WASHERHEAD	*	2					
11	6215-612-001-00	PLATE/ADJUSTING	*	2					
12	6215-629-001-00	PIN/INJECTIONPUMP	*	3					
13	6215-629-002-00	PLATE	*	1					
14	6215-622-001-00	TAPPET/INJECTIO ASSY	*	3					
15	6215-637-001-00	RACK/CONTROL ASSY	*	1					
16	6215-635-001-00	SLEEVE/PLUNGER	*	3					
17	6215-639-004-00	SEAT/SPRING/UPPER	*	3					
18	6215-634-001-00	SPRING/PUMPPLUNGER	*	3					
19	6215-639-005-00	SEAT/SPRING/LOWER	*	3					
20	6215-629-003-00	PLATE/TAPPET/AD 0.6	*	1					
21	6215-629-004-00	PLATE/TAPPET/AD 0.7	*	1					
22	6215-629-005-00	PLATE/TAPPET/AD 0.8	*	1					
23	6215-629-006-00	PLATE/TAPPET/AD 0.9	*	1					
24	6215-629-007-00	PLATE/TAPPET/AD 1.0	*	1					
25	6215-629-008-00	PLATE/TAPPET/AD 0.2	*	1					
26	6215-629-009-00	PLATE/TAPPET/AD 0.3	*	1					
27	6215-629-010-00	PLATE/TAPPET/AD 0.4	*	1					
28	6215-629-011-00	PLATE/TAPPET/AD 0.5	*	1					
29	6215-629-012-00	PLATE/TAPPET/AD 0.25	*	1					
30	6215-629-013-00	PLATE/TAPPET/AD 0.35	*	1					

FIG. 27 COMPONENT PARTS FOR 6215-600-052-20 ON Fig.21

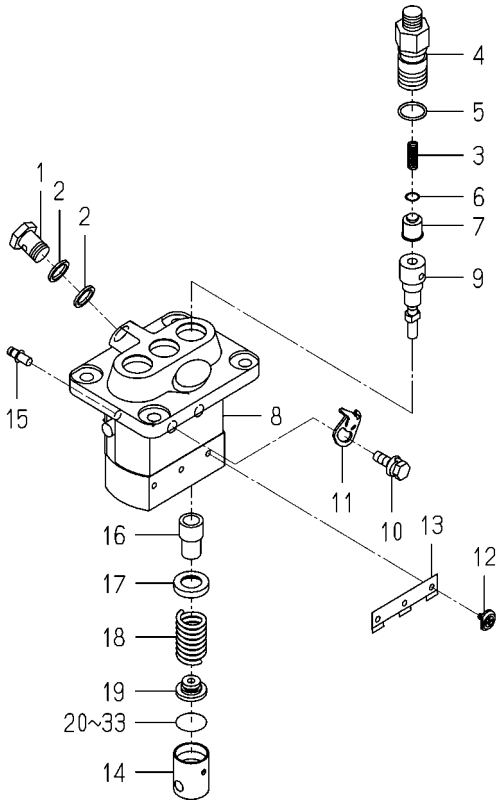

6215-600-052-2J

KEY	PART CODE	DESCRIPTION	SPC	TYPE OF MODEL E3100G		ITC	COL	GRP	REMARKS
31	6215-629-014-00	PLATE/TAPPET/AD 0.45	*	1					
32	6215-629-015-00	PLATE/TAPPET/AD 0.55	*	1					
33	6215-629-016-00	PLATE/TAPPET/AD 0.65	*	1					

FIG. 28 COMPONENT PARTS FOR 6281-100-011-10,20 ON Fig.23

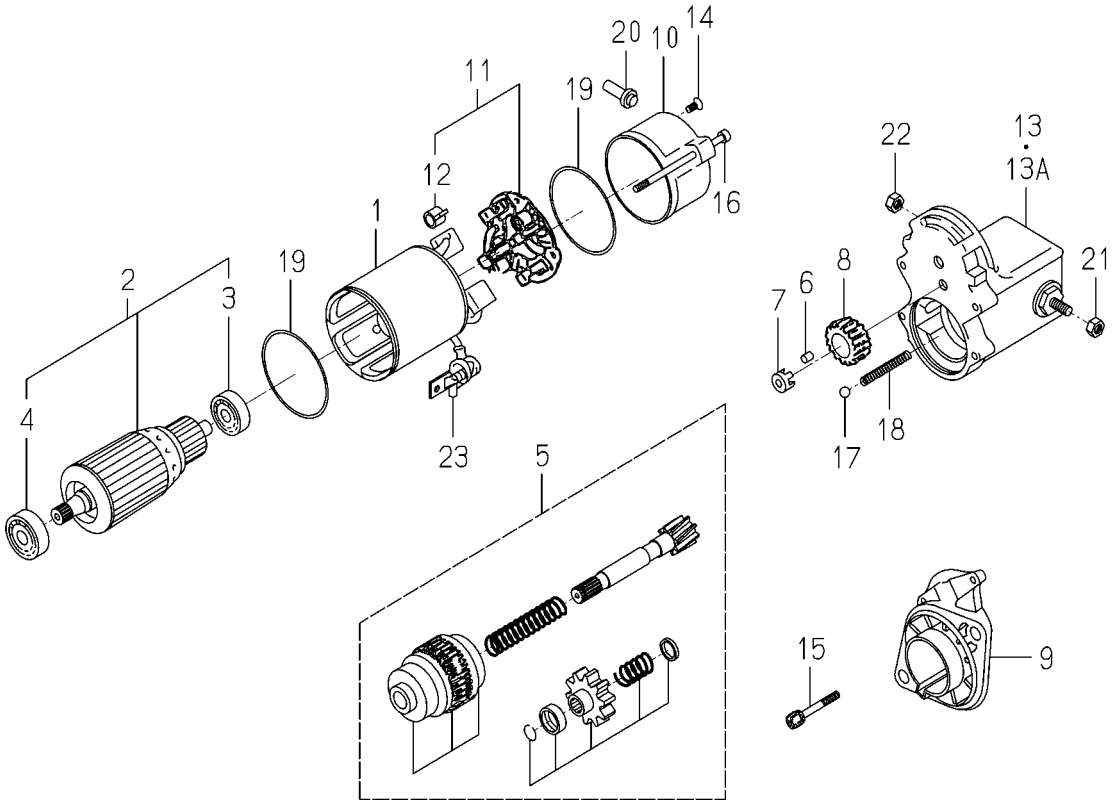

6281-100-011-2E

KEY	PART CODE	DESCRIPTION	SPC	TYPE OF MODEL E3100G		ITC	COL	GRP	REMARKS
1	6281-111-007-00	YOKE/STARTER ASSY	*	1					
2	6281-121-008-00	ARMATURE/STARTE ASSY	*	1					
3	6281-129-038-00	BEARING	*	1					
4	6281-129-039-00	BEARING	*	1					
5	6281-124-007-10	CLUTCH/STARTER ASSY	*	1					
6	6581-129-099-00	RORA	*	5					
7	6281-129-040-00	RETAINER	*	1					
8	6281-123-005-00	PINION/STARTER	*	1					
9	6281-129-041-10	HOUSING/STARTER ASSY	*	1					
10	6281-115-013-00	FRAME/STARTEREND	*	1					
11	6281-116-006-00	HOLDER/STARTER ASSY	*	1					
12	6281-129-056-00	SPRING/BRUSH	*	4					
13	6281-151-018-00	SWITCH/MAGNETIC ASSY	*	1 -164070					
13A	6281-151-015-00	SWITCH/MAGNETIC ASSY	*	1 164071-					
14	6281-129-062-00	SCREW	*	2					
15	6281-129-042-00	BOLT/WS	*	2					
16	6281-129-055-00	BOLT/THROUGH	*	2					
17	6581-129-092-00	BALL	*	1					
18	6281-129-044-00	SPRING/RETURN	*	1					
19	6281-129-003-00	O-RING	*	2					
20	6281-115-016-00	BUSHING/DRAIN	*	1					
21	6909-111-508-00	NUT	*	1					
22	6281-229-041-00	NUT	*	1					
23	6281-115-010-00	COVER	*	1					

FIG. 29 COMPONENT PARTS FOR 6281-200-005-00 ON Fig.23

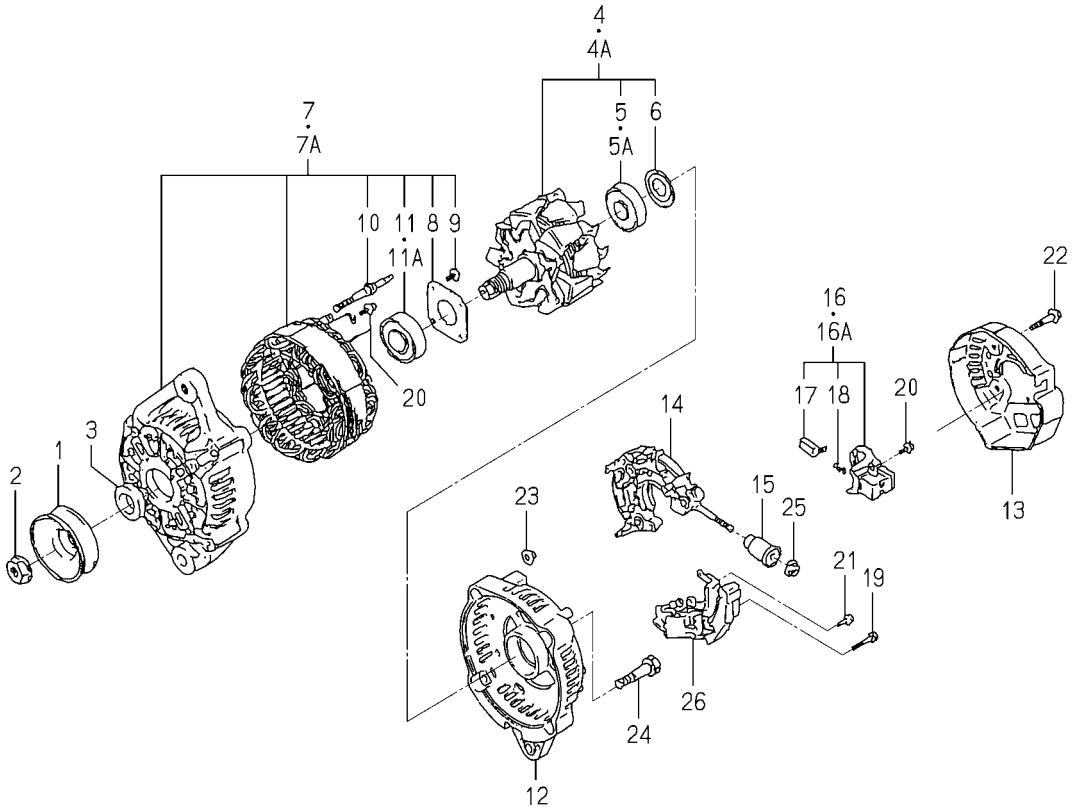

6281-200-005-0B

KEY	PART CODE	DESCRIPTION	SPC	TYPE OF MODEL E3100G		ITC	COL	GRP	REMARKS
1	6281-222-004-00	PULLEY	*	1					
2	6281-229-002-00	NUT	*	1					
3	6281-229-003-00	COLLOR	*	1					
4	6281-221-001-00	ROTOR ASSY	*	1 -186338					
4A	6281-221-007-00	ROTOR ASSY	*	1 186339-					
5	6281-229-005-00	BEARING	*	1 -186338					
5A	6281-229-032-00	BEARING/BALL	*	1 186339-					
6	6281-229-004-00	COVER,BEARING	*	1					
7	6281-213-006-00	FRAME ASSY	*	1 -186338					
7A	6281-213-018-00	FRAME/DRIVEEND ASSY	*	1 186339-					
8	6281-229-006-00	PLATE	*	1					
9	6281-229-007-00	BOLT	*	4					
10	6281-229-008-00	BOLT	*	2					
11	6281-229-009-00	BEARING	*	1 -186338					
11A	6281-229-033-00	BEARING/BALL	*	1 186339-					
12	6281-214-003-00	FRAME	*	1					
13	6281-214-004-00	COVER	*	1					
14	6281-229-029-00	HOLDER ASSY	*	1					
15	6281-229-011-00	BUSH	*	1					
16	6281-217-001-00	HOLDER,BRUSH ASSY	*	1 -186338					
16A	6281-217-002-00	HOLDER/BRUSH ASSY	*	1 186339-					
17	6281-215-001-00	BRUSH	*	2					
18	6281-216-001-00	SPRING	*	2					
19	6281-229-012-00	BOLT	*	2					
20	6281-229-013-00	BOLT	*	6					
21	6281-229-014-00	BOLT	*	1					
22	6281-229-015-00	BOLT	*	3					
23	6281-229-016-00	NUT	*	2					
24	6281-229-017-00	BOLT	*	2					
25	6281-229-018-00	NUT	*	1					

FIG. 29 COMPONENT PARTS FOR 6281-200-005-00

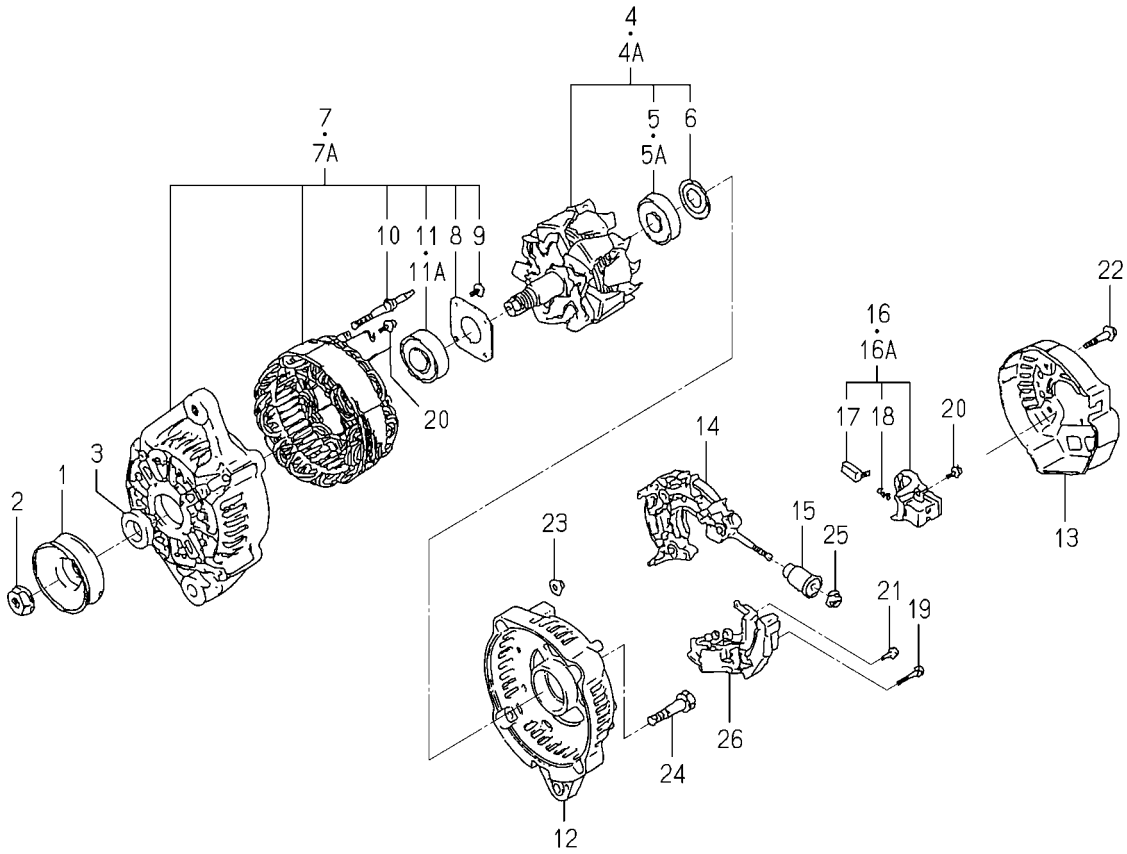

6281-200-005-0B

KEY	PART CODE	DESCRIPTION	SPC	TYPE OF MODEL E3100G		ITC	COL	GRP	REMARKS
26	6281-271-002-00	REGULATOR ASSY	*	1					

E N G I N E

E3112G···SF230FH-42M

6004-097-230-20

FIG. 1 CYLINDER HEAD

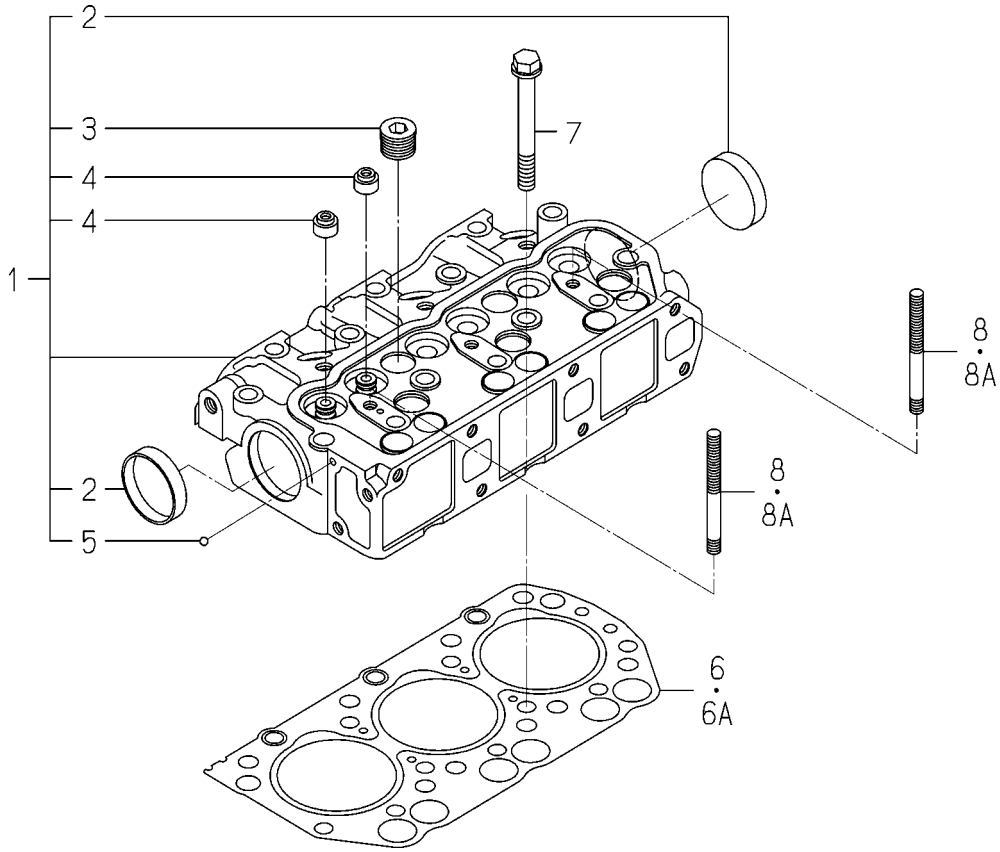

6004-101I-0100,6004-101I-0200

KEY	PART CODE	DESCRIPTION	SPC	TYPE OF MODEL E3112G		ITC	COL	GRP	REMARKS
1	6211-110-057-00	CYLINDERHEAD ASSY	*	1					
2	6911-129-006-00	CAP,SEALING	*	2					
3	6209-605-004-10	PLUG/PT1/2	*	5					
4	6212-569-002-00	SEAL,OIL	*	6					
5	V682-200-000-60	BALL	*	1					
6	6211-141-029-10	GASKET/CYLINDERHEAD	*	1 -185413					
6A	6211-141-029-20	GASKET/CYLINDERHEAD	*	1 185414-		1			
7	6209-000-003-00	BOLT/M10X1.25X82	*	14					
8	6909-830-212-00	STUD,HEAD COVER	*	2 -171391					
8A	6209-300-014-00	STUD	*	2 171392-					

FIG. 2 CYLINDER HEAD COVER

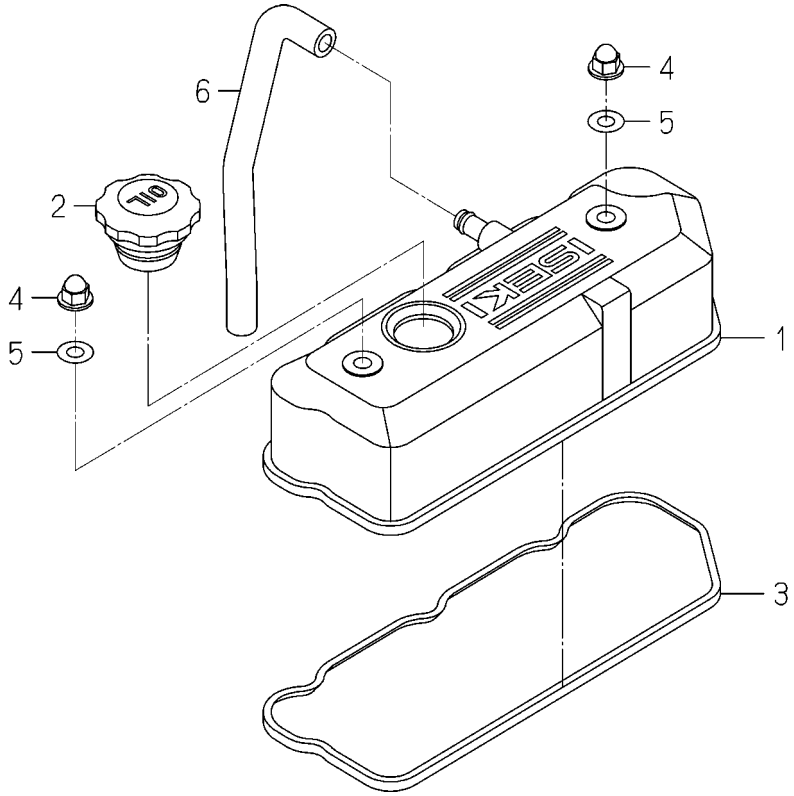

6004-110 -0100

KEY	PART CODE	DESCRIPTION	SPC	TYPE OF MODEL E3112G		ITC	COL	GRP	REMARKS
1	6211-170-004-10	COVER,CYLINDER HEAD	*	1					
2	6211-751-001-10	CAP,OIL FILLER	*	1					
3	6211-173-003-00	SEAL,CYL.HEAD COVER	*	1					
4	6209-490-002-00	NUT,CAP	*	2					
5	6909-572-008-00	PACKING	*	2					
6	6209-360-027-10	HOSE/RUBBER	*	1					

FIG. 3 INLET MANIFOLD

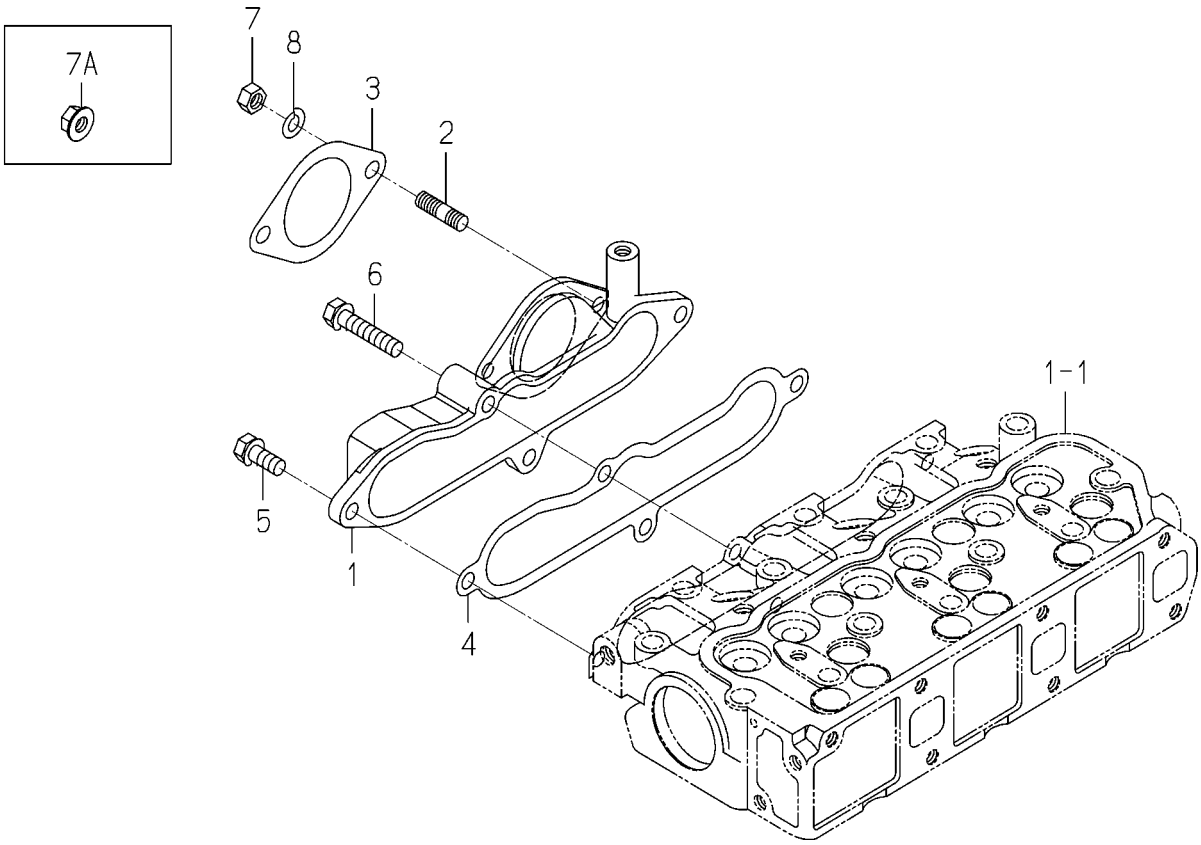

6004-120D-0100

KEY	PART CODE	DESCRIPTION	SPC	TYPE OF MODEL E3112G		ITC	COL	GRP	REMARKS
1	6214-111-009-10	MANIFOLD,INLET	*	1					
2	6904-110-818-00	STUD	*	2					
3	6209-630-005-00	GASKET	*	1					
4	6214-115-001-20	GASKET,INLET MANIFOL	*	1					
5	V211-560-802-00	BOLT/M8X20	*	3					
6	6901-910-840-00	BOLT	*	1					
7	6909-110-508-00	NUT/M8	*	2 -191781					
7A	3817-401-001-00	NUT/M08	*	2 191782-					
8	6909-150-508-00	WASHER	*	2 -191781					

FIG. 4 EXHAUST MANIFOLD

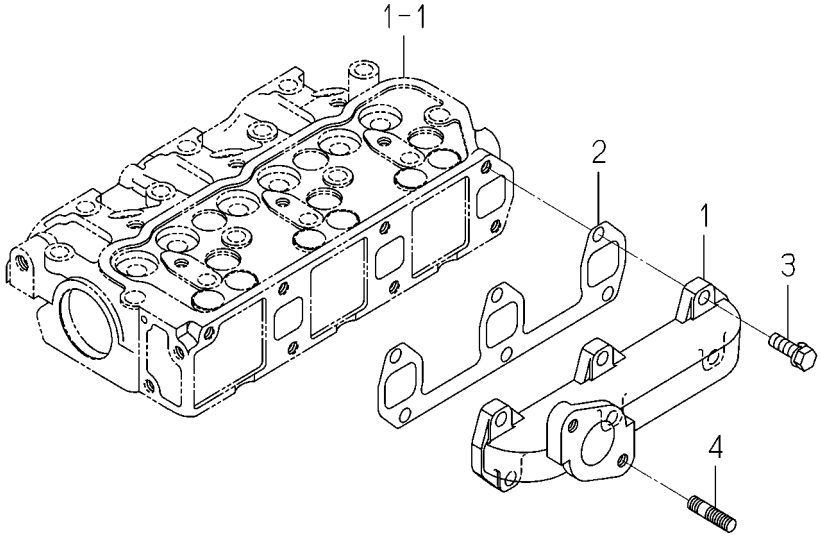

6003-140 -0100

KEY	PART CODE	DESCRIPTION	SPC	TYPE OF MODEL E3112G		ITC	COL	GRP	REMARKS
1	6214-141-008-20	MANIFOLD/EXHAUST	*	1					
2	6214-145-001-30	GASKET,EXH.MANIFOLD	*	1					
3	V211-560-802-50	BOLT,SEMS/M8X25 7T	*	6					
4	6904-110-822-00	STUD	*	2					

FIG. 5 CYLINDER BLOCK

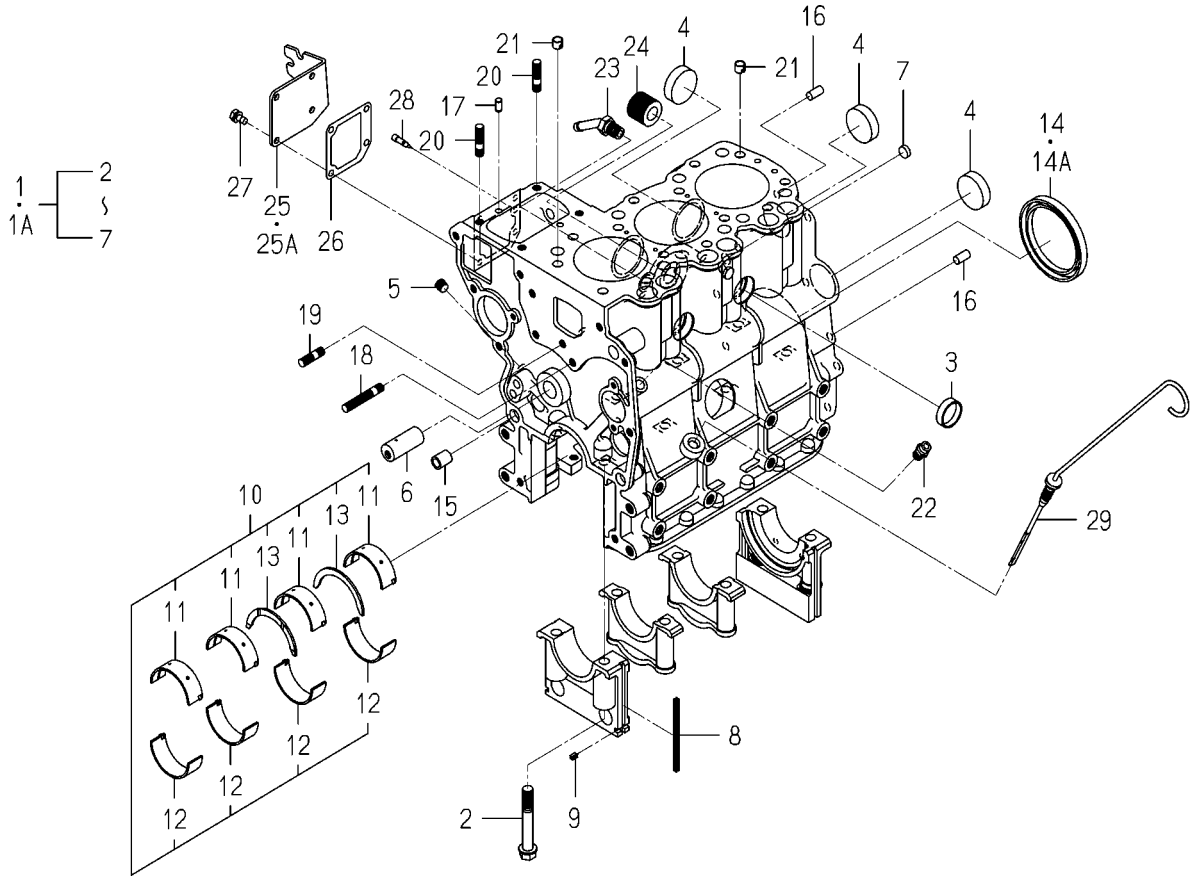

6004-201S-0100

KEY	PART CODE	DESCRIPTION	SPC	TYPE OF MODEL E3112G		ITC	COL	GRP	REMARKS
1	6211-210-037-10	CYLINDERBLOCK ASSY	*	1 -159738					
1A	6211-210-037-20	CYLINDERBLOCK ASSY	*	1 159739-		1			
2	6209-000-004-10	BOLT	*	8					
3	6209-610-001-00	CAP,SEALING	*	2					
4	6911-219-195-00	CAP,SEALING	*	4					
5	6509-605-019-10	PLUG	*	3					
6	6212-531-005-10	PIN/IDLEGEAR	*	1					
7	6911-129-083-00	CAP,SEALING	*	2					
8	6211-258-001-00	SEAL,BEARING CAP	*	4					
9	6211-258-002-00	SEAL,BEARING CAP/7	*	2					
10	6211-510-001-00	METAL,CRANK SET	*	1					
11	6211-511-003-00	BEARING/CRANK/UPPER	*	4					
12	6211-511-004-00	BEARING/CRANK/LOWER	*	4					
13	6211-599-001-10	BEARING,THRUST CRANK	*	2					
14	6209-625-001-00	SEAL,OIL	*	1 -186712					
14A	6209-625-012-00	OILSEAL	*	1 186713-					
15	6209-749-001-20	PIN/TUBE	*	2					
16	6908-160-816-00	PIN	*	2					
17	6209-740-005-00	PIN	*	2					
18	6904-110-840-00	STUD/M8X40	*	1					
19	6904-110-818-00	STUD	*	1					
20	6904-110-822-00	STUD	*	2					
21	6294-453-002-00	DOWEL	*	2					
22	6909-902-299-00	NIPPLE	*	1					
23	6213-721-007-00	PIPE/WATERDRAIN	*	1					
24	6213-319-001-00	CONNECTOR,OIL FILTER	*	1					
25	6211-291-013-00	COVER/INJECTIONPUMP	*	1 -179810					
25A	6211-291-013-10	COVER/INJECTIONPUMP	*	1 179811-		1			
26	6211-292-001-20	GASKET/COVER	*	1					
27	6901-910-612-00	BOLT,SEMS/M6X12	*	4					

FIG. 5 CYLINDER BLOCK

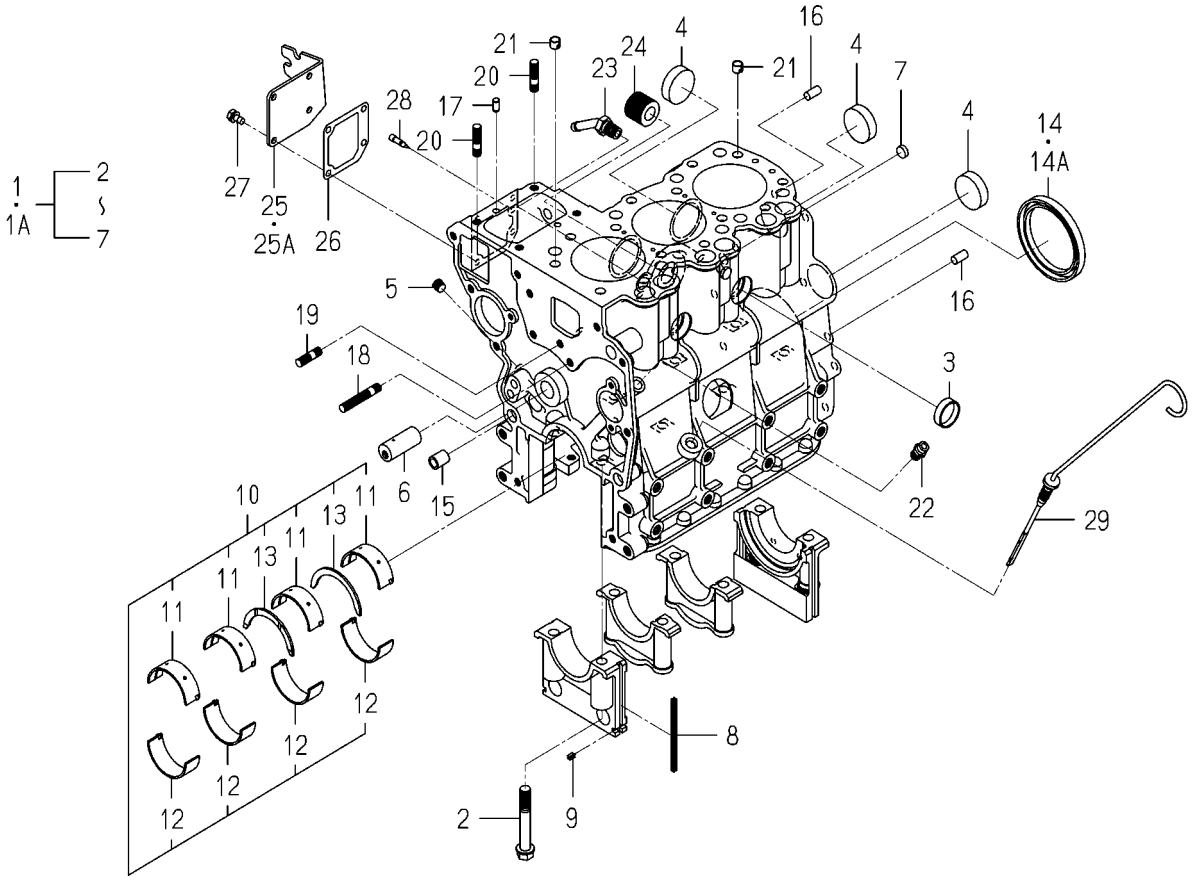

6004-201S-0100

KEY	PART CODE	DESCRIPTION	SPC	TYPE OF MODEL E3112G		ITC	COL	GRP	REMARKS
28	6215-549-013-00	PIN	*	1					
29	6211-760-022-00	LEVELGAGE	*	1					

FIG. 6 BEARING/UNDER SIZE (OPTION)

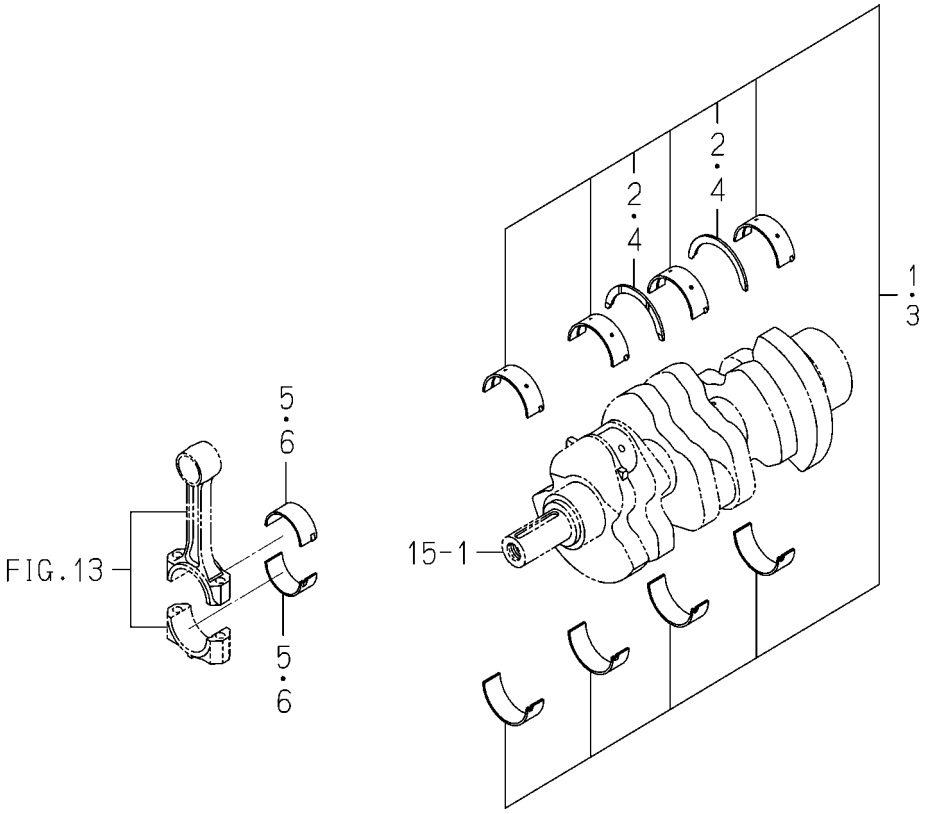

6003-209 -0100

KEY	PART CODE	DESCRIPTION	SPC	TYPE OF MODEL E3112G		ITC	COL	GRP	REMARKS
1	6211-540-001-00	METAL,CRANK SET	T	1					050
2	6211-599-001-10	BEARING,THRUST CRANK	T	2					
3	6211-560-001-00	METAL,CRANK SET	T	1					100
4	6211-599-001-10	BEARING,THRUST CRANK	T	2					
5	6212-264-006-00	BEARING/CONN ROD/UN	T	6					050
6	6212-266-006-00	BEARING/CONN ROD/UN	T	6					100

FIG. 7 OIL PAN

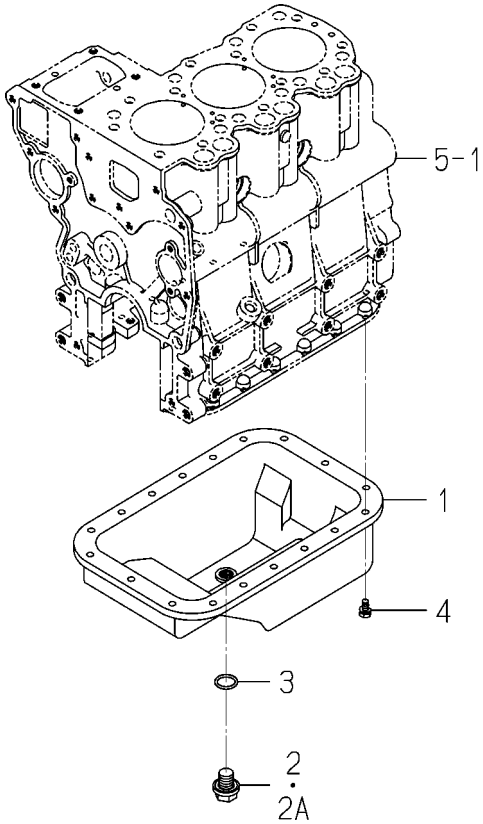

6004-210C-0100

KEY	PART CODE	DESCRIPTION	SPC	TYPE OF MODEL E3112G		ITC	COL	GRP	REMARKS
1	6211-361-033-00	OILPAN COMP	*	1					
2	3625-301-002-00	PLUG(M14X15)	*	1 -165380					
2A	3805-355-002-10	PLUG/M14X1.5	*	1 165381-					
3	V720-102-401-80	O-RING/P18	*	1					
4	6901-910-612-00	BOLT,SEMS/M6X12	*	18					

FIG. 8 REAR PLATE

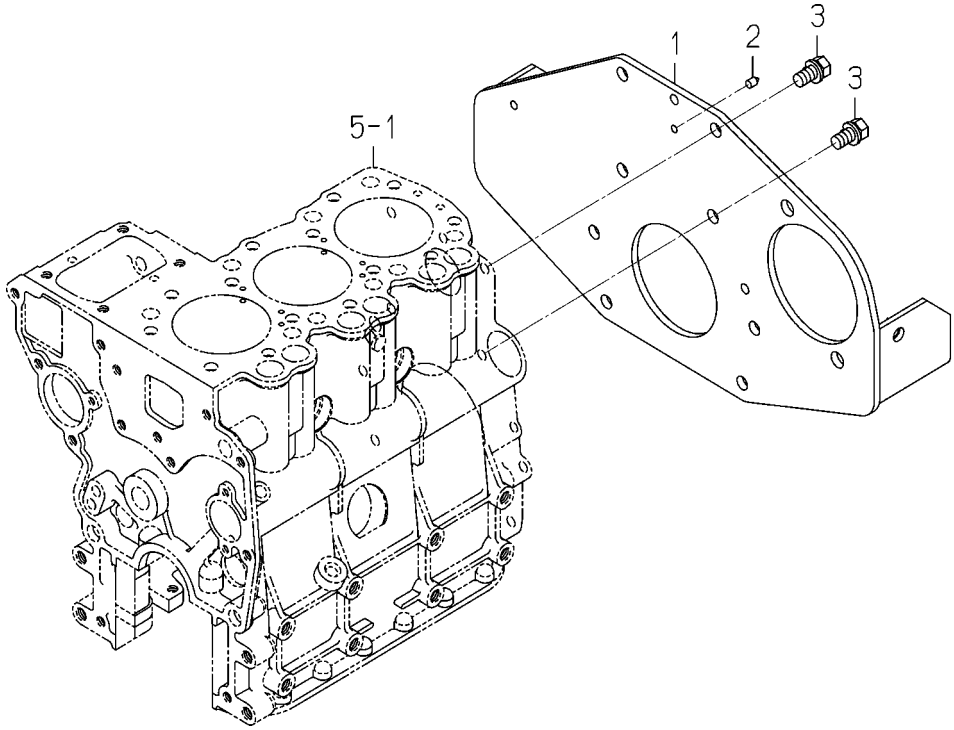

6004-220G-0100

KEY	PART CODE	DESCRIPTION	SPC	TYPE OF MODEL E3112G		ITC	COL	GRP	REMARKS
1	6211-340-004-10	PLATE/REAR COMP	*	1					
2	6211-342-003-10	POINTER	*	1					
3	6901-911-020-00	BOLT,SEMS/M10X20	*	8					

FIG. 9 TIMING GEAR CASE

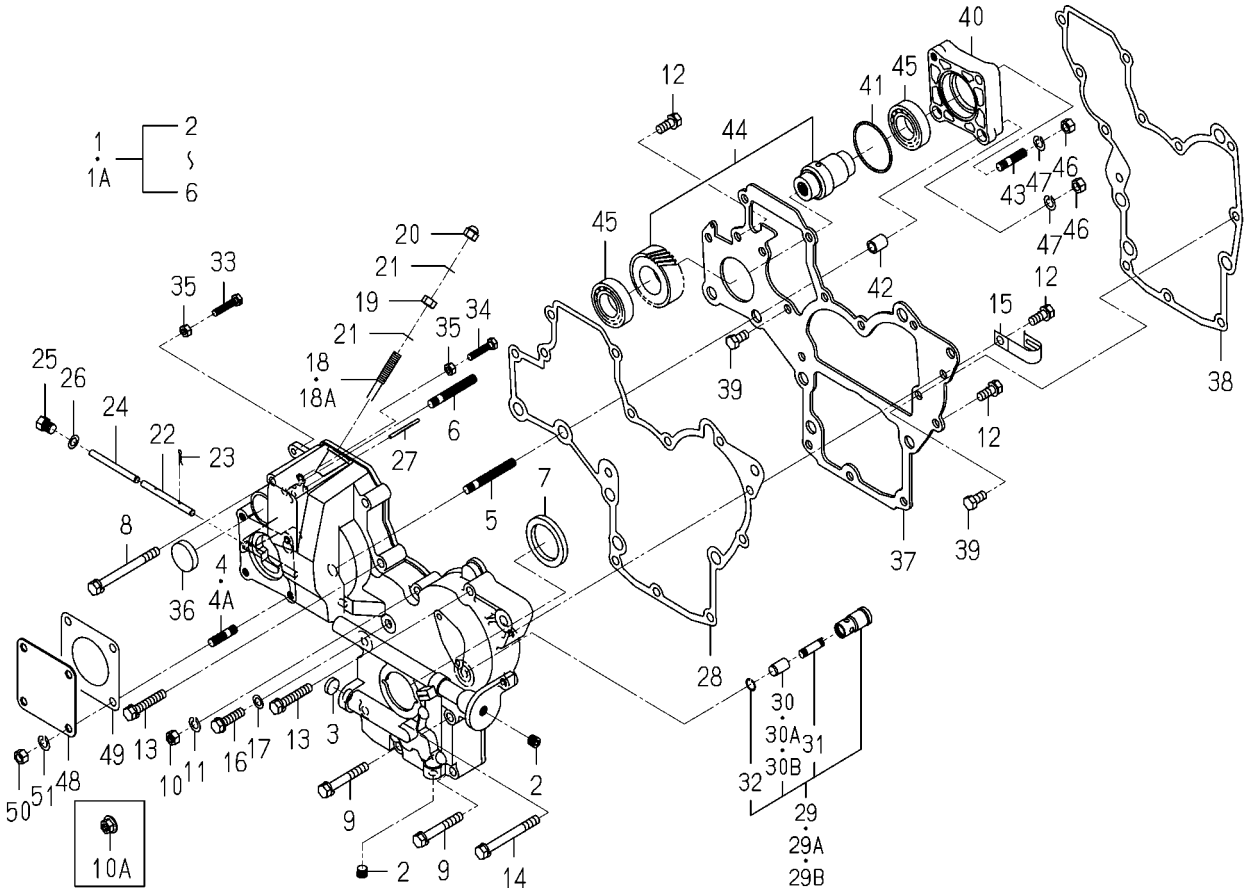

6004-240G-0100,6004-240G-0200

KEY	PART CODE	DESCRIPTION	SPC	TYPE OF MODEL E3112G		ITC	COL	GRP	REMARKS
1	6211-310-025-10	GEARCASE ASSY	*	1 -193880					
1A	6211-310-025-20	GEARCASE ASSY	*	1 193881-		1			
2	6509-605-019-10	PLUG	*	2					
3	6209-610-002-10	CUP/SEALING/16	*	1					
4	6904-110-822-00	STUD	*	4 -193880					
4A	6904-110-814-00	STUD	*	4 193881-					
5	6904-110-855-00	STUD	*	2					
6	6904-110-850-00	STUD	*	1					
7	6209-625-002-00	SEAL,OIL	*	1					
8	6209-030-005-00	BOLT/M8X85	*	1					
9	6509-000-084-00	BOLT/L=55	*	2					
10	6909-110-508-00	NUT/M8	*	1 -191781					
10A	3817-401-001-00	NUT/M08	*	1 191782-					
11	6909-150-508-00	WASHER	*	1 -191781					
12	V211-560-802-00	BOLT/M8X20	*	3					
13	6901-910-845-00	BOLT,SEMS/M8X45	*	5					
14	6209-030-006-00	BOLT/M8X75	*	1					
15	1425-621-004-00	CLAMP,HARNESS	*	1					
16	6209-046-001-00	BOLT/M8X30	*	1					
17	6209-500-003-00	WASHER/08X14X01	*	1					
18	6215-546-003-00	STOPPER/FULLLOAD	*	1 -187576					
18A	6215-546-003-10	STOPPER/FULLLOAD	*	1 187577-		1			
19	6209-409-001-00	NUT/M8	*	1					
20	V341-120-008-00	NUT,CAP/M 8	*	1					
21	6209-920-002-00	PACKING	*	2					
22	6215-542-004-20	PIN/ARM	*	1					
23	P117-303-003-00	PIN/SNAP	*	2					
24	6215-542-005-00	PIN	*	1					
25	6909-202-308-00	PLUG	*	1					
26	6209-500-003-00	WASHER/08X14X01	*	1					

FIG. 9 TIMING GEAR CASE

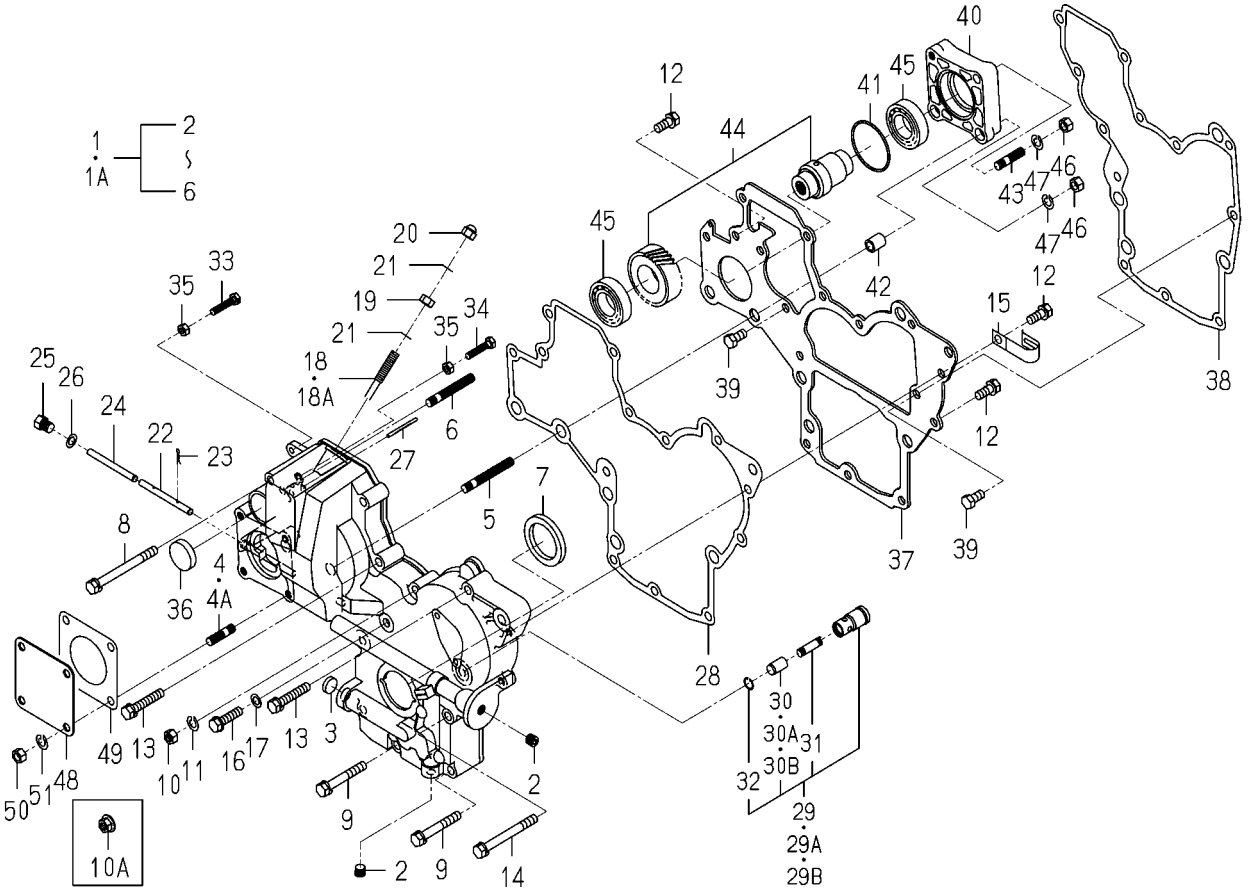

6004-240G-0100,6004-240G-0200

KEY	PART CODE	DESCRIPTION	SPC	TYPE OF MODEL E3112G		ITC	COL	GRP	REMARKS
27	6209-740-001-00	PIN,GROOVE	*	1					
28	6211-312-003-20	GASKET/GEARCASE	*	1					
29	6213-160-002-00	VALVE/RELIEF ASSY	*	1 -160774					
29A	6213-160-002-10	VALVE/RELIEF ASSY	*	1 -162896		1			
29B	6213-160-002-20	VALVE/RELIEF ASSY	*	1 162897-		1			
30	6213-161-001-00	PISTON/RELIEF VALVE	*	1 -160774					
30A	6213-161-001-10	PISTON/VALVE/RELIEF	*	1 -162896		1			
30B	6213-161-001-20	PISTON/VALVE/RELIEF	*	1 162897-		1			
31	6213-164-001-00	SPRING/RELIEF VALVE	*	1					
32	V705-140-012-00	RING,SNAP/12 C	*	1					
33	6209-050-001-00	BOLT/M6	*	1					
34	6209-050-002-00	BOLT/M6	*	1					
35	6909-110-406-00	NUT	*	2					
36	3625-540-004-00	CAP,BLANK/30	*	1					
37	6211-311-007-20	PLATE,FRONT	*	1					
38	6211-312-004-20	GASKET/PLATE	*	1					
39	6902-050-816-00	BOLT	*	3					
40	6211-319-003-00	SPACER	*	1					
41	V723-102-005-00	O-RING 1A S50	*	1					
42	6209-749-001-20	PIN/TUBE	*	2					
43	6904-110-822-00	STUD	*	1					
44	6212-530-005-10	SHAFT/HYDRAULIC ASSY	*	1					
45	V600-110-600-50	BEARING,RB/6005	*	2					
46	6909-110-408-00	NUT/M8	*	4					
47	6909-150-508-00	WASHER	*	4					
48	6511-321-083-00	COVER	*	1					
49	6211-322-002-00	GASKET/COVER	*	1					
50	6909-110-408-00	NUT/M8	*	4					
51	6909-150-508-00	WASHER	*	4					

FIG. 10 HANGER

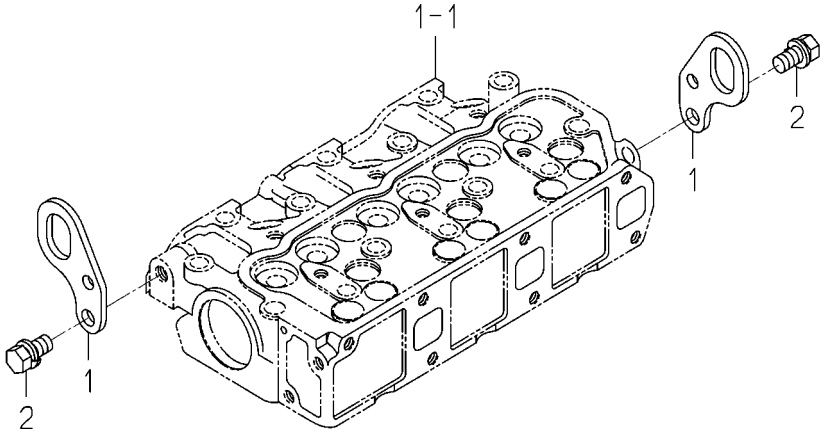

6003-290 -0100

KEY	PART CODE	DESCRIPTION	SPC	TYPE OF MODEL E3112G		ITC	COL	GRP	REMARKS
1	6211-777-007-20	HANGER	*	2					
2	6901-911-020-00	BOLT,SEMS/M10X20	*	2					

FIG. 11 VALVE

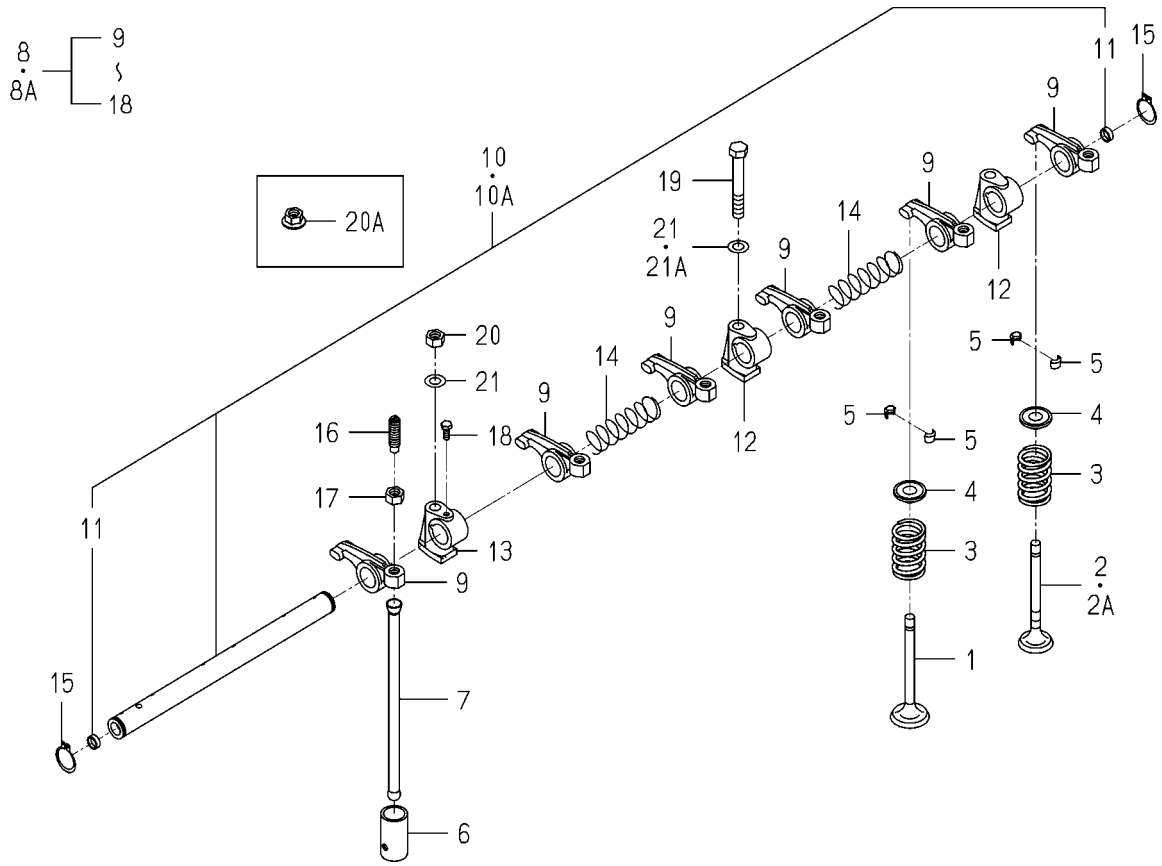

6004-301 -0100

KEY	PART CODE	DESCRIPTION	SPC	TYPE OF MODEL E3112G		ITC	COL	GRP	REMARKS
1	6212-551-001-00	VALVE,INTAKE	*	3					
2	6212-552-001-00	VALVE,EXHAUST	*	3 -162896					
2A	6212-552-001-10	VALVE/EXHAUST	*	3 162897-		1			
3	6212-561-001-00	SPRING,VALVE	*	6					
4	6212-563-001-00	SEAT,VALVE SPRING	*	6					
5	6212-565-001-00	CUTTER,VALVE	*	12					
6	6212-571-003-00	TAPPET	*	6					
7	6212-575-002-00	ROD,PUSH	*	6					
8	6212-600-002-00	SHAFT,ROCKER ASSY	*	1 -186860					
8A	6212-600-002-10	ROCKERSHAFT ASSY	*	1 186861-		1			
9	6212-611-004-10	ROCKERARM	*	6					
10	6212-620-001-10	SHAFT,ROCKER ARMASSY	*	1 -186860					
10A	6212-620-001-20	SHAFT/ROCKERARM ASSY	*	1 186861-		1			
11	6212-626-002-10	PLUG	*	2					
12	6212-628-004-00	BRACKET ROCKER SHAFT	*	2					
13	6212-628-005-00	BRACKET,ROCKER SHAFT	*	1					
14	6209-940-004-00	SPRING	*	2					
15	V704-140-016-00	RING,SNAP/16 C	*	2					
16	6212-616-002-00	SCREW ADJUST	*	6					
17	6209-409-003-00	NUT	*	6					
18	6209-000-002-00	BOLT	*	1					
19	6901-050-850-00	BOLT/M8X45	*	1					
20	6909-110-508-00	NUT/M8	*	2 -191780					
20A	3817-401-001-00	NUT/M08	*	2 191781-					
21	6209-500-005-00	WASHER/08X15.5X1.6	*	3 -191780					
21A	6209-500-005-00	WASHER/08X15.5X1.6	*	1 191781-					

FIG. 12 CAM SHAFT

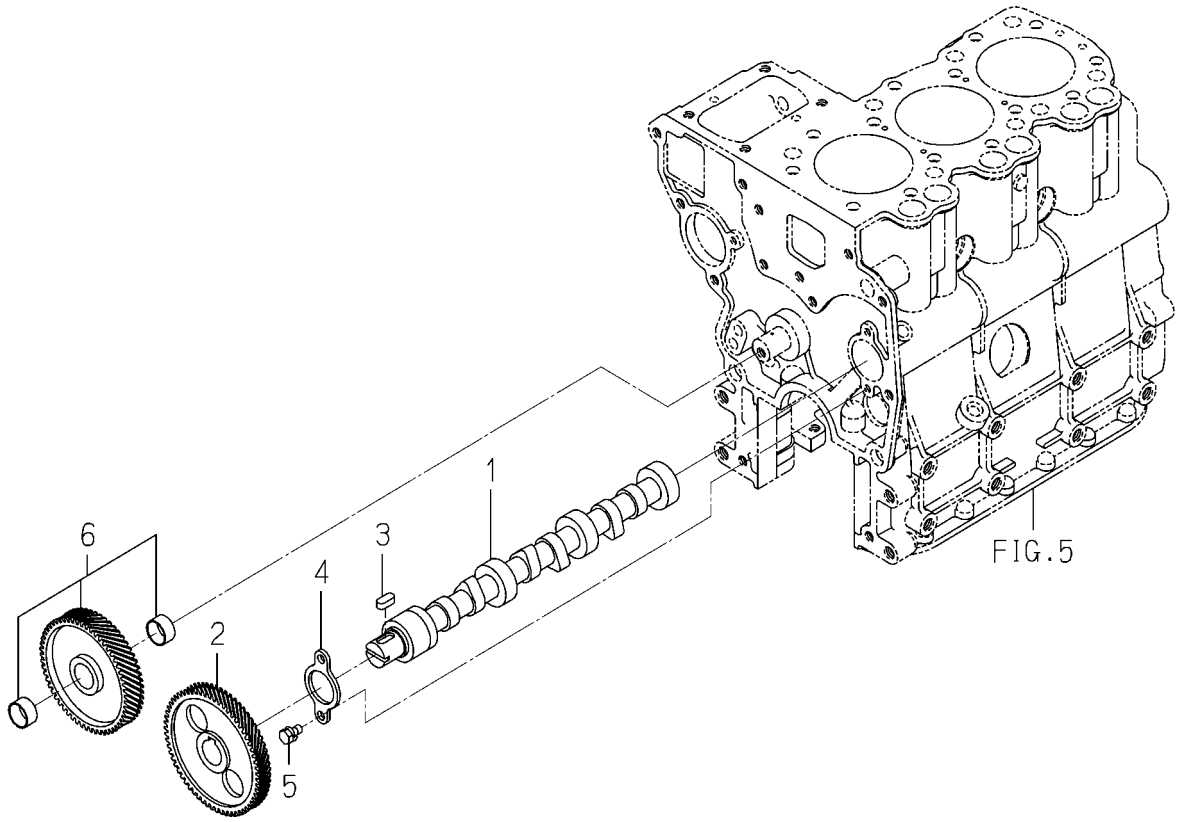

6003-310 -0100

KEY	PART CODE	DESCRIPTION	SPC	TYPE OF MODEL E3112G		ITC	COL	GRP	REMARKS
1	6212-511-002-00	SHAFT,CAM	*	1					
2	6212-522-003-00	GEAR,CAMSHAFT	*	1					
3	6908-000-716-00	KEY	*	1					
4	6212-535-001-00	PLATE,THRUST	*	1					
5	6901-910-612-00	BOLT,SEMS/M6X12	*	2					
6	6212-523-003-00	GEAR,IDLE	*	1					

FIG. 13 PISTON

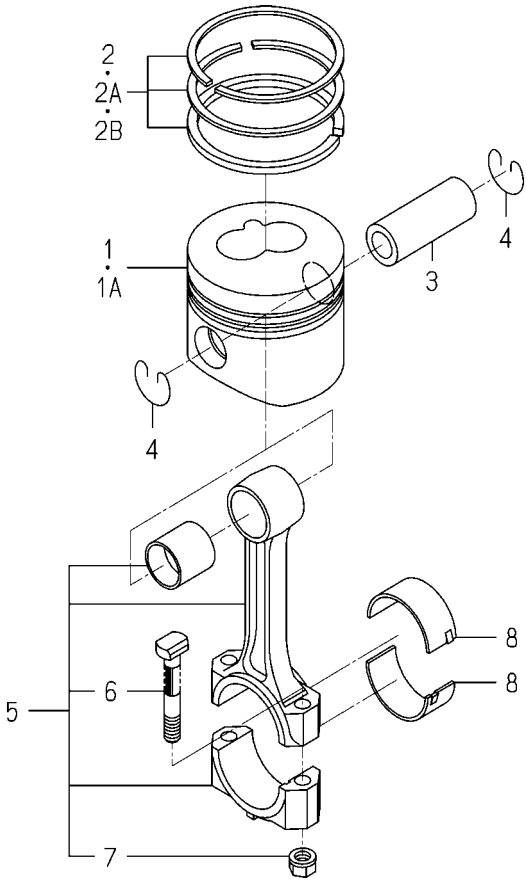

6004-340I-0100

KEY	PART CODE	DESCRIPTION	SPC	TYPE OF MODEL E3112G		ITC	COL	GRP	REMARKS
1	6212-111-055-10	PISTON	*	3 -186669					
1A	6212-111-055-20	PISTON	*	3 186670-		1			
2	6212-121-014-00	RING/PISTON SET	*	3 -181551					
2A	6212-121-014-10	RING/PISTON SET	*	3 -189680		1			
2B	6212-121-014-20	RING/PISTON SET	*	3 189681-		1			
3	6212-211-001-10	PIN,PISTON	*	3					
4	6209-587-001-00	RING,SNAP	*	6					
5	6212-230-004-00	ROD,CONN	*	3					
6	6212-235-001-10	BOLT/CONNECTINGROD	*	6					
7	6209-440-003-00	NUT/FLANGE	*	6					
8	6212-261-006-00	BEARING/CONN ROD	*	6					

FIG. 14 PISTON/OVER SIZE (OPTION)

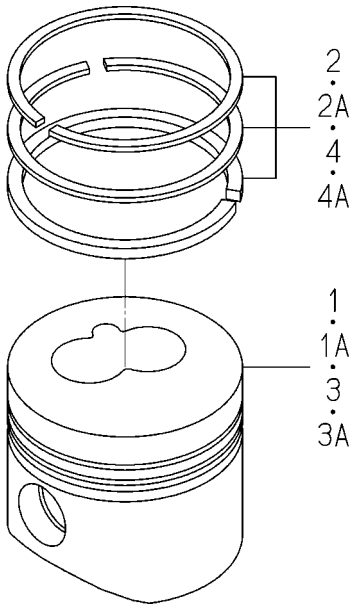

6004-349I-0100

KEY	PART CODE	DESCRIPTION	SPC	TYPE OF MODEL E3112G		ITC	COL	GRP	REMARKS
1	6212-114-055-20	PISTON/OV	T	3		1			050
2	6212-124-014-10	RING/PISTON/OV SET	T	3		1			050
3	6212-116-055-20	PISTON/OV	T	3		1			100
4	6212-126-014-10	RING/PISTON/OV SET	T	3		1			100

FIG. 15 CRANK SHAFT

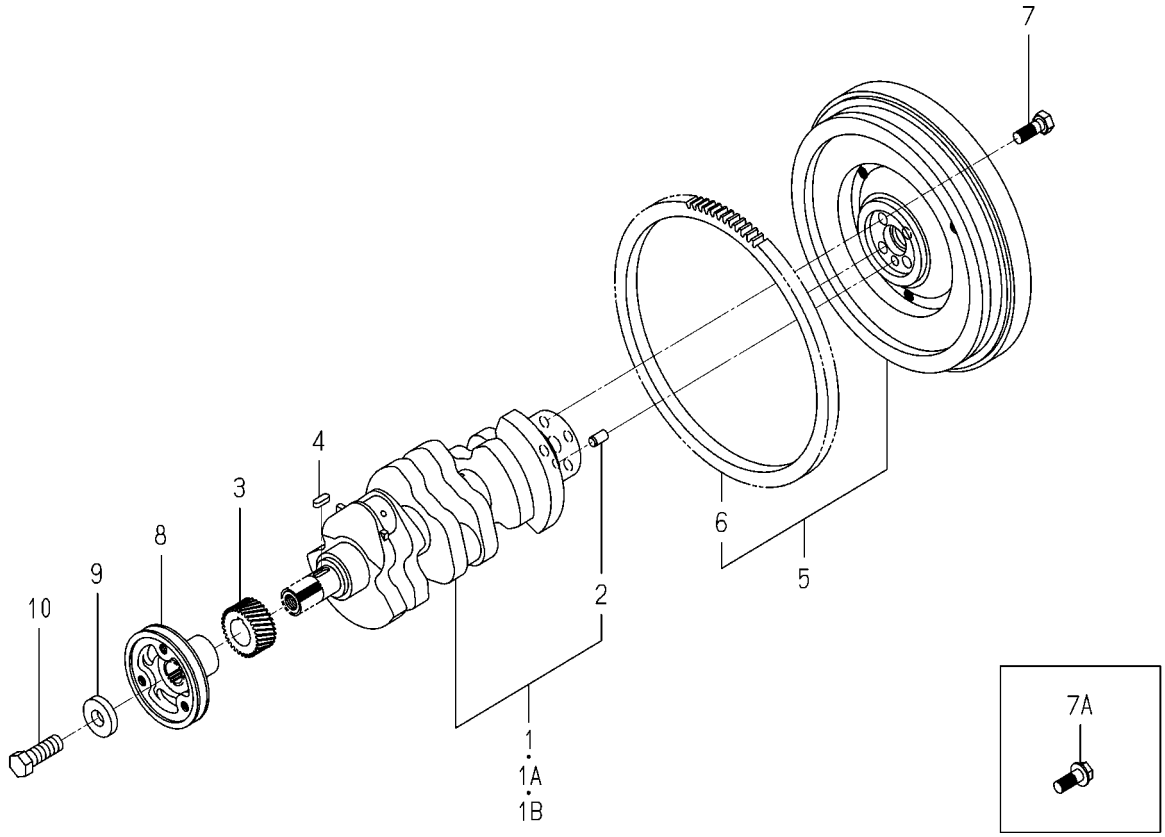

6004-350L-0100

KEY	PART CODE	DESCRIPTION	SPC	TYPE OF MODEL E3112G		ITC	COL	GRP	REMARKS
1	6212-310-019-00	CRANKSHAFT ASSY	*	1 -177285					
1A	6212-310-019-10	CRANKSHAFT ASSY	*	1 -186373		1			
1B	6212-310-019-20	CRANKSHAFT ASSY	*	1 186374-		1			
2	V523-101-001-80	PIN	*	1					
3	6212-521-002-00	GEAR,CRANK SHAFT	*	1					
4	6209-730-002-00	KEY/07X05X20	*	1					
5	6212-330-048-00	FLYWHEEL ASSY	*	1					
6	6212-333-002-00	RINGGEAR	*	1					
7	6209-000-013-00	BOLT	*	4 -194139					
7A	6209-046-015-00	BOLT/FLANGE	*	4 194140-					
8	6212-371-027-00	PULLEY/CRANK	*	1					
9	6212-379-001-00	WASHER	*	1					
10	6901-066-645-00	BOLT	*	1					

FIG. 16 OIL PUMP

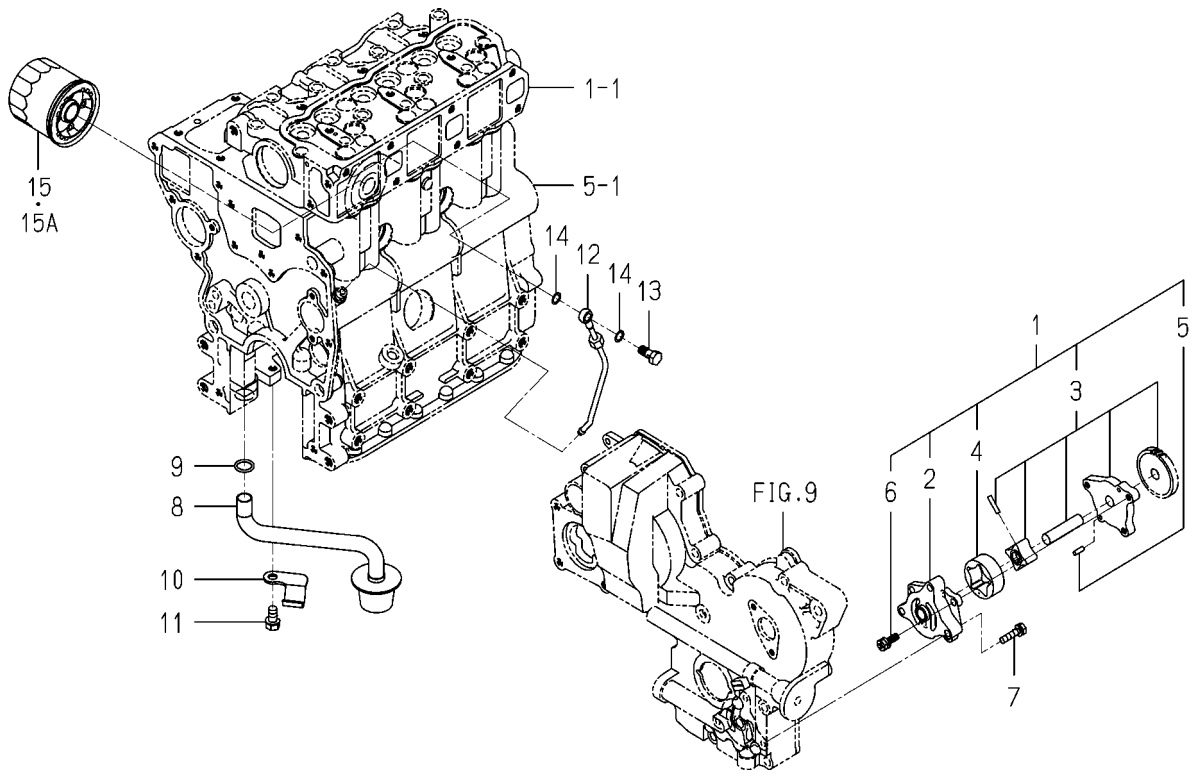

6004-401B-0100

KEY	PART CODE	DESCRIPTION	SPC	TYPE OF MODEL E3112G		ITC	COL	GRP	REMARKS
1	6213-100-003-30	OILPUMP ASSY	*	1					
2	6213-111-001-30	BODY/OILPUMP	*	1					
3	6213-120-003-20	GEAR/OILPUMP ASSY	*	1					
4	6213-125-001-00	ROTOR/OUTER	*	1					
5	6213-129-003-00	PIN/STRAIGHT	*	2					
6	6213-119-001-00	BOLT/WS	*	3					
7	6901-910-625-00	BOLT	*	3					
8	6213-140-008-00	STRAINER	*	1					
9	V720-102-401-50	O-RING/P15	*	1					
10	6213-149-002-00	CLAMP,STRAINER	*	1					
11	6901-910-816-00	BOLT,SEMS/M8X16	*	1					
12	6213-311-006-00	PIPE,OIL	*	1					
13	6909-906-105-10	BOLT,JOINT	*	1					
14	6209-920-002-00	PACKING	*	2					
15	6213-240-002-00	CARTRIDGE,OIL FILTER	*	1 -159738					
15A	6213-240-002-10	CARTRIDGE/OILFILTER	*	1 159739-		1			

FIG. 17 WATER PUMP

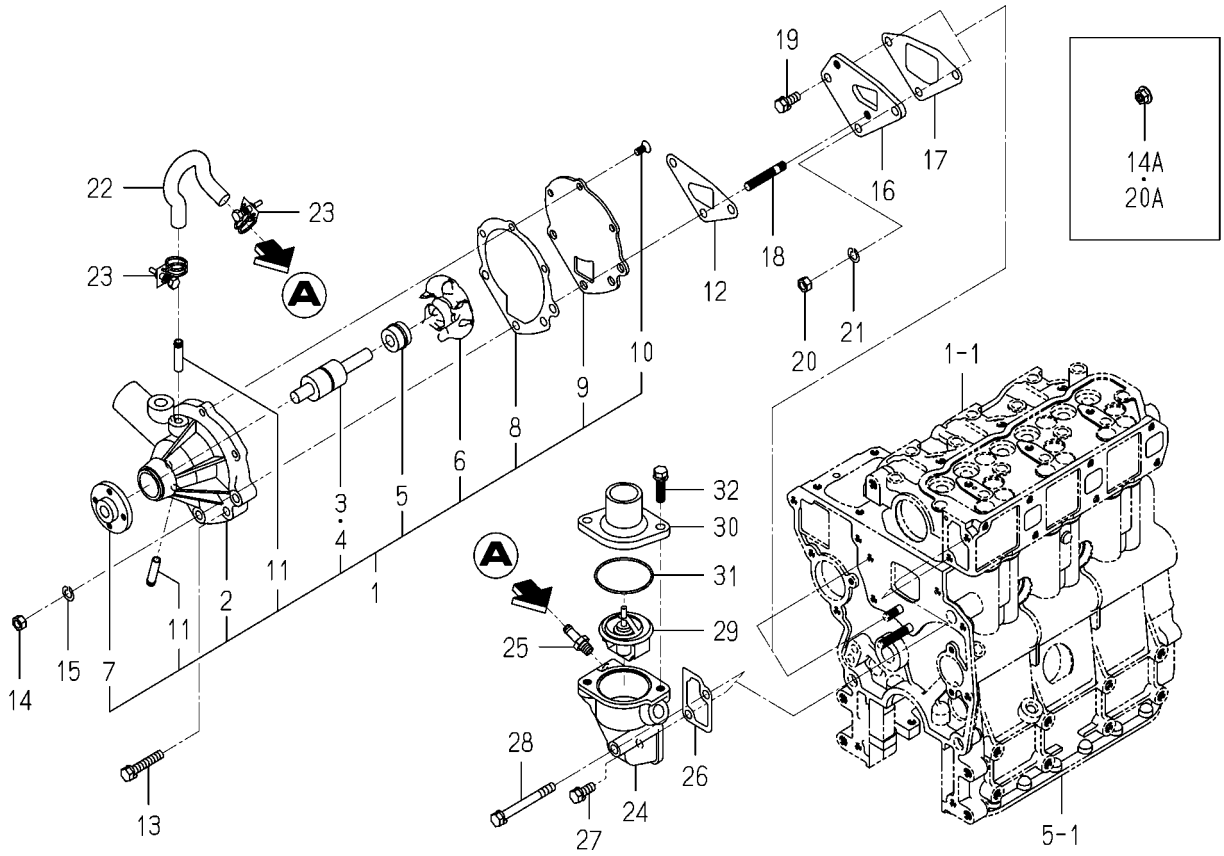

6004-420 -0100

KEY	PART CODE	DESCRIPTION	SPC	TYPE OF MODEL E3112G		ITC	COL	GRP	REMARKS
1	6213-610-005-40	WATERPUMP ASSY	*	1					
2	6213-611-003-20	BODY/WATERPUMP	*	1					
3	6213-631-002-00	BEARING/WATER PUMP	*	1					
4	6213-631-005-00	BEARING/WATERPUMP	*	1					
5	6213-622-002-10	SEAL SET/WATER PUMP	*	1					
6	6213-621-003-00	ROTOR/WATERPUMP	*	1					
7	6213-642-002-00	SEAL/WATER PUMPPULLE	*	1					
8	6213-613-002-10	GASKET	*	1					
9	6213-612-004-00	PLATE/WATER PUMP	*	1					
10	6213-619-003-00	SCREW/WATER PUMP	*	3					
11	6213-619-002-00	PIPE/WATER PUMP	*	2					
12	6213-614-003-10	GASKET/WATER PUMP	*	1					
13	6901-910-845-00	BOLT,SEMS/M8X45	*	1					
14	6909-110-508-00	NUT/M8	*	2 -191780					
14A	3817-401-001-00	NUT/M08	*	2 191781-					
15	6909-150-508-00	WASHER	*	2 -191780					
16	6213-619-001-00	SPACER,PUMP.WATER	*	1					
17	6213-614-004-10	GASKET,SPACER	*	1					
18	6904-110-840-00	STUD/M8X40	*	2					
19	V211-560-802-00	BOLT/M8X20	*	1					
20	6909-110-508-00	NUT/M8	*	1 -191780					
20A	3817-401-001-00	NUT/M08	*	1 191781-					
21	6909-150-508-00	WASHER	*	1 -191780					
22	6213-729-013-10	HOSE/RUBBER	*	1					
23	J061-210-015-00	CLAMP/WIRE/10-15	*	2					
24	6213-716-001-40	HOUSING/THERMOSTAT	*	1					
25	6213-721-003-00	PIPE,PUMP HOUSING	*	1					
26	6213-743-002-10	GASKET/HOUSING	*	1					
27	V211-560-802-00	BOLT/M8X20	*	1					
28	6209-030-006-00	BOLT/M8X75	*	1					

FIG. 17 WATER PUMP

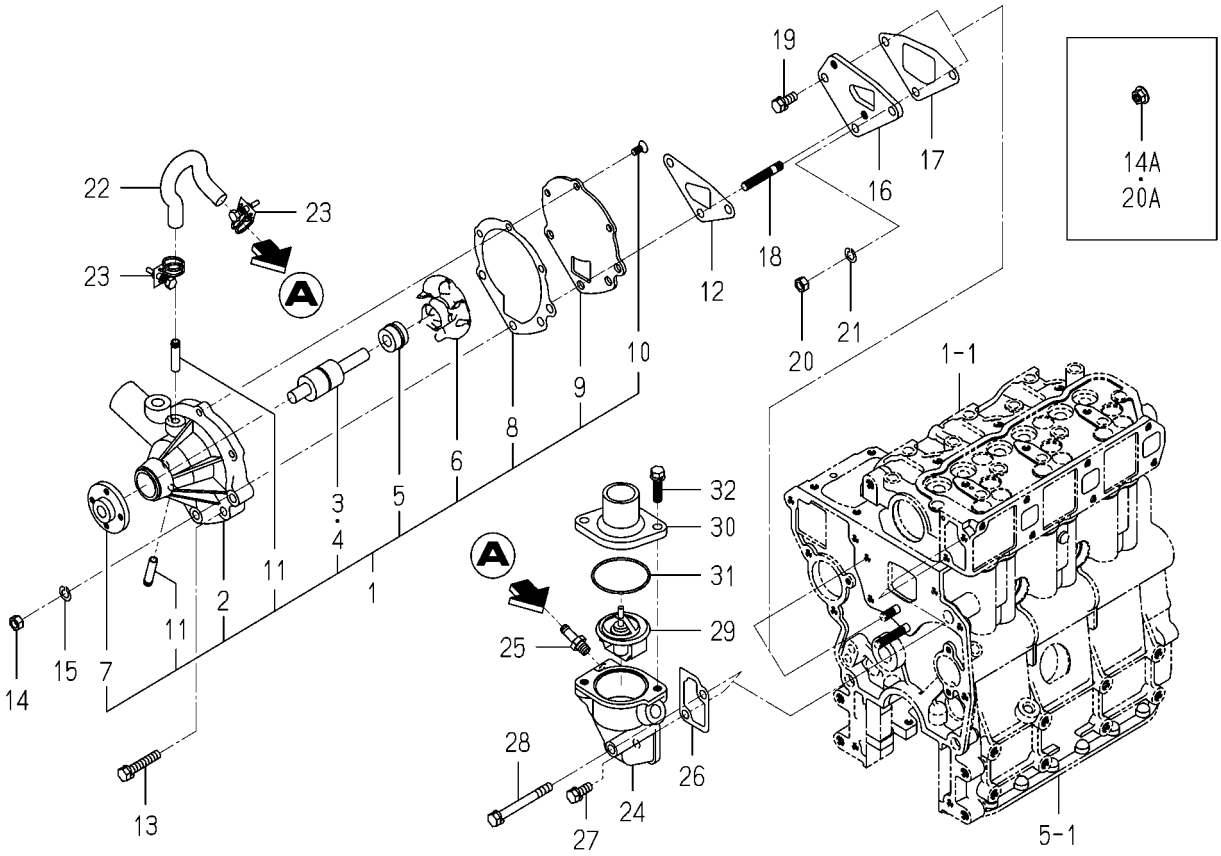

6004-420 -0100

KEY	PART CODE	DESCRIPTION	SPC	TYPE OF MODEL E3112G		ITC	COL	GRP	REMARKS
29	6513-770-022-10	THERMOSTAT	*	1					
30	6213-711-003-20	PIPE,WATER OUTLET	*	1					
31	V723-102-005-50	O-RING	*	1					
32	6901-910-830-00	BOLT	*	2					

FIG. 18 COOLING FAN (No.1-194081)

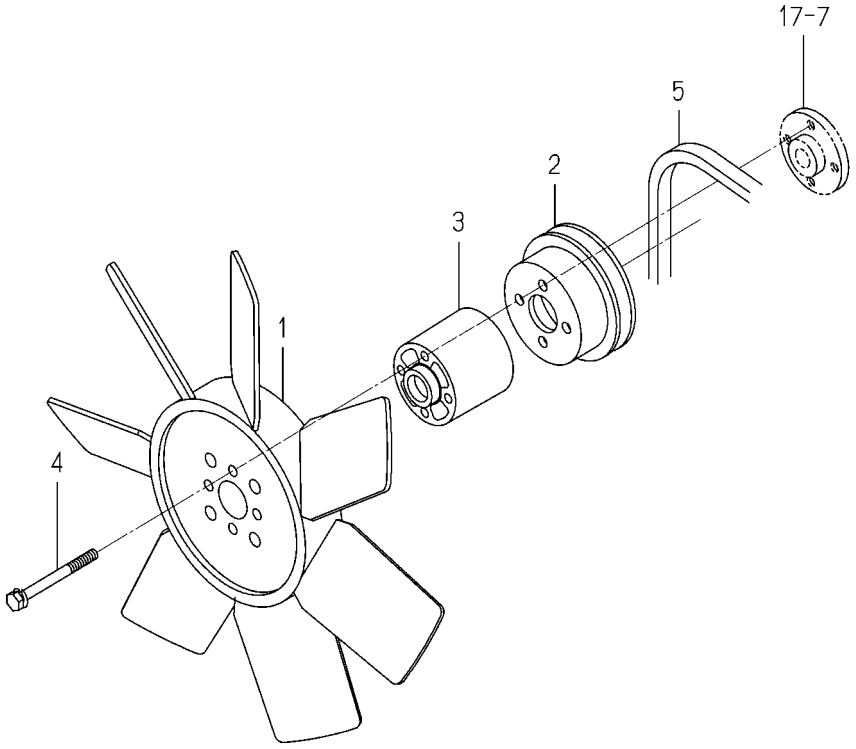

6004-480K-0100

KEY	PART CODE	DESCRIPTION	SPC	TYPE OF MODEL E3112G		ITC	COL	GRP	REMARKS
1	6213-660-004-00	FAN,COOLING	*	1 -194081					
2	6213-641-006-00	PULLEY,WATER PUMP	*	1 -194081					
3	6213-669-008-00	SPACER/FAN/48	*	1 -194081					
4	6209-030-092-00	BOLT/WS	*	4 -194081					
5	6213-671-003-00	BELT VHM034	*	1 -194081					

FIG. 19 COOLING FAN (No.194082-)

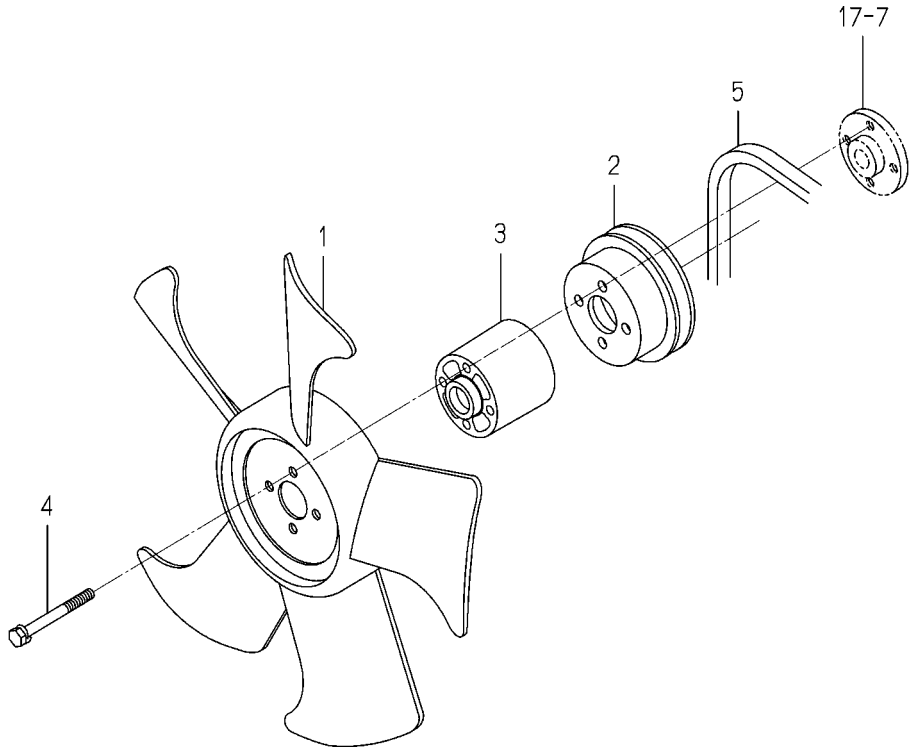

6004-480O-0100

KEY	PART CODE	DESCRIPTION	SPC	TYPE OF MODEL E3112G		ITC	COL	GRP	REMARKS
1	6213-660-022-00	FAN/COOLING	*	1 194082-					
2	6213-641-002-10	PULLEY,WATER PUMP	*	1 194082-					
3	6213-669-008-00	SPACER/FAN/48	*	1 194082-					
4	6209-030-044-00	BOLT/WS	*	4 194082-					
5	6213-671-003-00	BELT VHM034	*	1 194082-					

FIG. 20 INJECTION NOZZLE

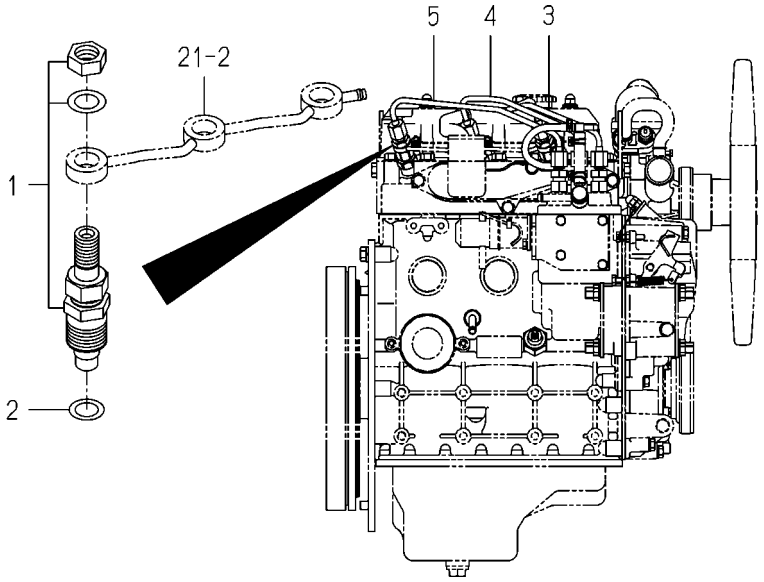

6004-501C-0100

KEY	PART CODE	DESCRIPTION	SPC	TYPE OF MODEL E3112G		ITC	COL	GRP	REMARKS
1	6215-300-036-00	INJECTIONNOZZLE ASSY	*	3					FIG 026
2	6215-315-002-00	GASKET,NOZZLE	*	3					
3	6215-411-103-00	PIPE/INJECTION ASSY	*	1					
4	6215-411-104-00	PIPE/INJECTION ASSY	*	1					
5	6215-411-105-00	PIPE/INJECTION ASSY	*	1					

FIG. 21 INJECTION PUMP

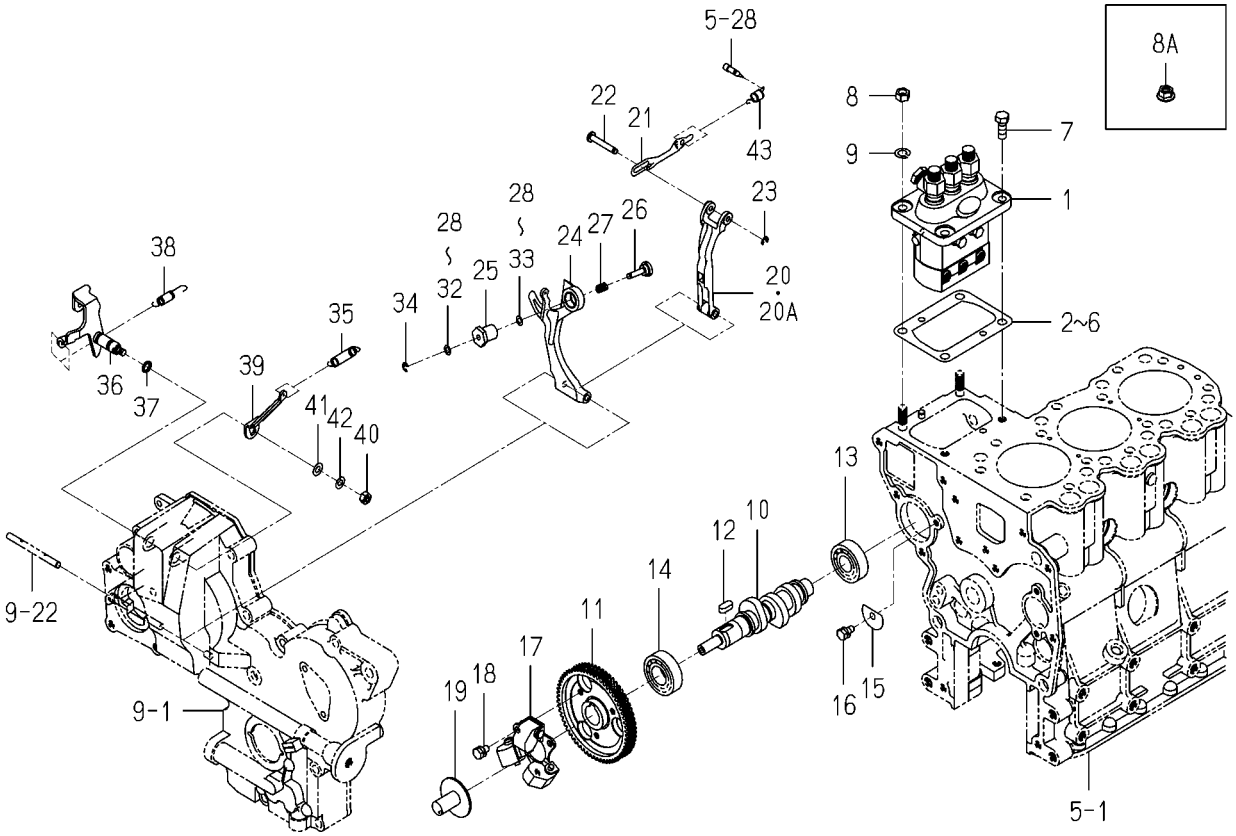

6004-510Q-0100

KEY	PART CODE	DESCRIPTION	SPC	TYPE OF MODEL E3112G		ITC	COL	GRP	REMARKS
1	6215-600-103-10	INJECTIONPUMP ASSY	*	1					FIG 027
2	6219-752-006-00	SHIM/INJECTION P/0.3	*	1					
3	6219-752-007-00	SHIM/INJECTION P/0.1	*	1					
4	6219-752-008-00	SHIM/INJECTION P/0.2	*	1					
5	6219-752-009-00	SHIM/INJECTION P/0.4	*	1					
6	6219-752-010-00	SHIM/INJECTION P/0.5	*	1					
7	V201-360-802-00	BOLT/M8X20	*	2					
8	6909-110-508-00	NUT/M8	*	2 -191781					
8A	3817-401-001-00	NUT/M08	*	2 191782-					
9	6909-150-508-00	WASHER	*	2 -191781					
10	6215-621-016-10	CAMSHAFT/INJ PUMP	*	1					
11	6212-524-002-00	GEAR,INJ PUMP	*	1					
12	6908-000-716-00	KEY	*	1					
13	V600-110-620-30	BEARING,RB/6203	*	1					
14	V600-110-600-40	BEARING,RB/6004	*	1					
15	6212-535-002-00	PLATE,THRUST INJPUMP	*	1					
16	6901-910-612-00	BOLT,SEMS/M6X12	*	1					
17	6215-520-001-00	FLYWEIGHT	*	1					
18	6209-030-043-00	BOLT/M6X10	*	3					
19	6215-526-001-10	PIECE,THRUST	*	1					
20	6215-541-001-00	ARM,FLOATING	*	1 -156998					
20A	6215-541-001-10	ARM/FLOATING COMP	*	1 156999-		1			
21	6215-543-002-10	RINK/CONTROL	*	1					
22	6215-542-006-00	PIN,CONTROL	*	1					
23	V710-140-004-00	RING,SNAP/ 4 E	*	1					
24	6215-541-016-30	ARM/TENSION	*	1					
25	6215-549-028-10	CASE/ADAPTER	*	1					
26	6215-549-027-10	PIN/ADAPTER	*	1					
27	6215-549-034-00	SPRING/ADAPTER	*	1					
28	6215-549-063-00	SHIM/ADAPTER/0.05	*	2					

FIG. 21 INJECTION PUMP

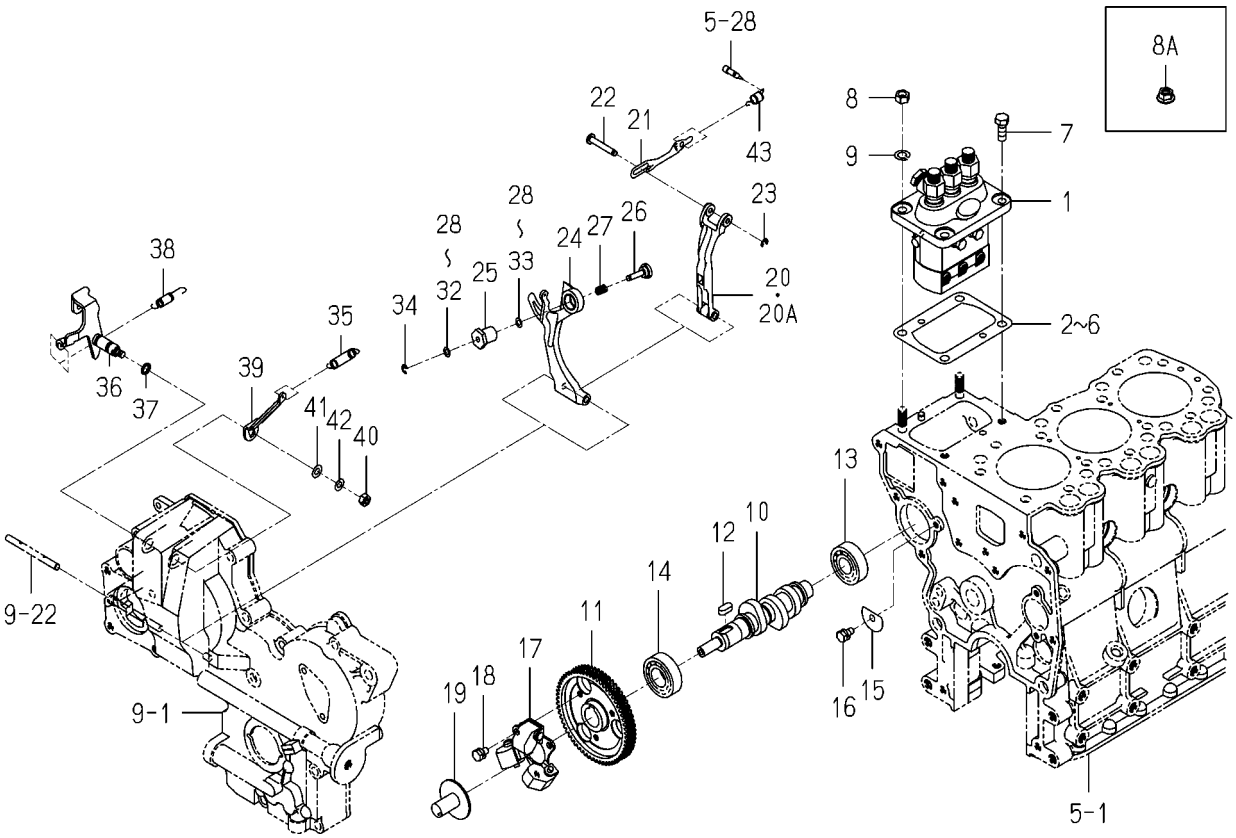

6004-510Q-0100

KEY	PART CODE	DESCRIPTION	SPC	TYPE OF MODEL E3112G		ITC	COL	GRP	REMARKS
29	6215-549-006-00	SHIM,ADAPTER/0.1	*	2					
30	6215-549-009-00	SHIM,ADAPTER/0.15	*	2					
31	6215-549-010-00	SHIM,ADAPTER/0.2	*	2					
32	6215-549-023-00	SHIM/ADAPTER/0.5	*	1					
33	6215-549-024-00	SHIM/ADAPTER/1.0	*	1					
34	V710-140-004-00	RING,SNAP/ 4 E	*	1					
35	6215-531-008-00	SPRING/GOVERNOR	*	1					
36	6215-541-022-10	LEVER/CONTROL COMP	*	1					
37	V720-101-900-80	O-RING/P 8	*	1					
38	6209-580-002-10	SPRING,RETURN	*	1					
39	6215-549-007-10	ARM/CONTROL	*	1					
40	6909-110-406-00	NUT	*	1					
41	V411-260-006-00	WASHER / M6	*	1					
42	6909-150-506-00	WASHER,SP/M6	*	1					
43	6215-549-012-00	SPRING,STARTING	*	1					

FIG. 22 FUEL PIPE

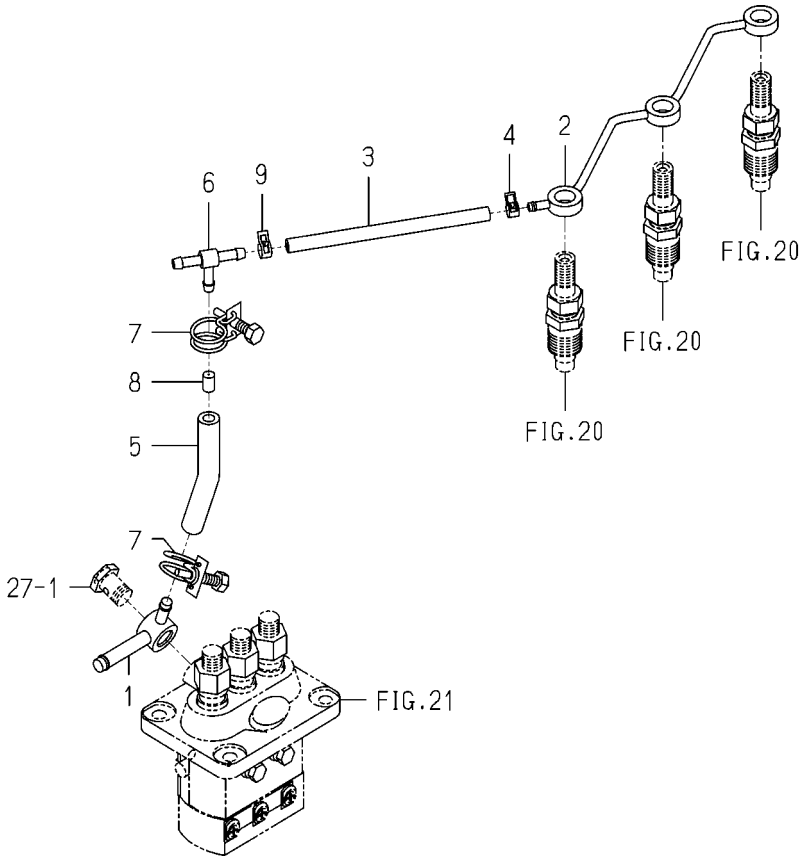

6004-550 -0100

KEY	PART CODE	DESCRIPTION	SPC	TYPE OF MODEL E3112G		ITC	COL	GRP	REMARKS
1	6215-412-002-10	CONNECTOR	*	1					
2	6215-411-074-10	PIPE/FUEL	*	1					
3	6209-360-005-00	HOSE,RUBBER	*	1					
4	J062-076-082-00	CLIP/HOSE/7.6-8.2	*	1					
5	6209-360-021-00	HOSE/RUBBER	*	1					
6	3632-360-036-00	JOINTT-TYPE 2	*	1					
7	J061-210-012-00	CLAMP/WIRE/10-12	*	2					
8	6215-419-001-00	TUBE,ORIFICE	*	1					
9	J062-087-093-00	CLIP/HOSE/8.7-9.3	*	1					

FIG. 23 ELECTRIC (1)

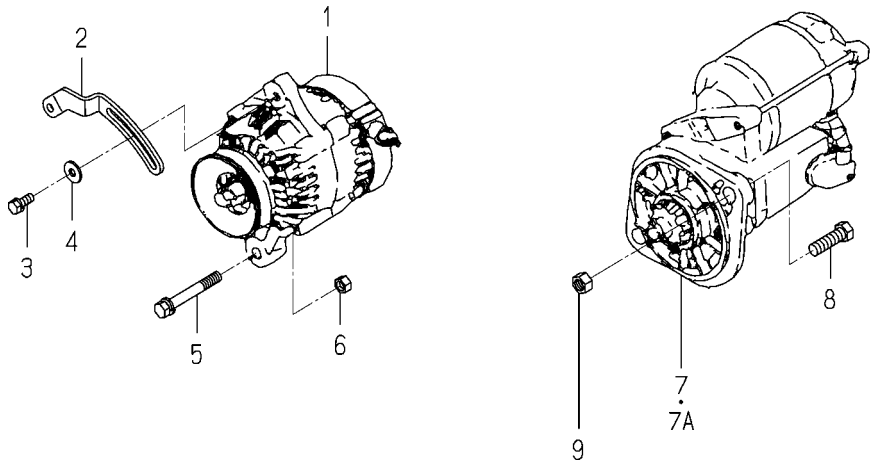

6004-801F-0100,6004-801F-0200

KEY	PART CODE	DESCRIPTION	SPC	TYPE OF MODEL E3112G		ITC	COL	GRP	REMARKS
1	6281-200-005-00	GENERATOR ASSY	*	1					FIG 029
2	6213-674-006-10	PLATE/ADJUST	*	1					
3	V211-560-802-00	BOLT/M8X20	*	1					
4	1373-121-001-00	WASHER/9X22X2	*	1					
5	6209-031-083-00	BOLT/WSP	*	1					
6	6909-110-410-00	NUT/M10	*	1					
7	6281-100-011-10	STARTER ASSY	*	1 -164070					FIG 028
7A	6281-100-011-20	STARTER ASSY	*	1 164071-		1			FIG 028
8	6901-931-240-00	BOLT	*	2					
9	V304-260-012-00	NUT/M12	*	2					

FIG. 24 ELECTRIC (2)

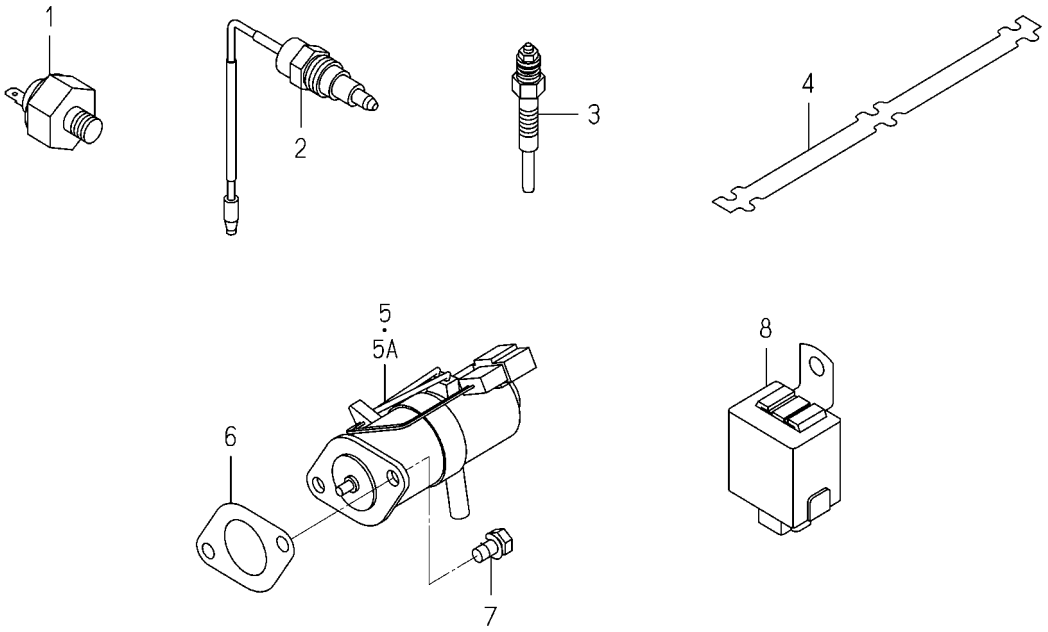

6004-820I-0100,6004-820I-0200

KEY	PART CODE	DESCRIPTION	SPC	TYPE OF MODEL E3112G		ITC	COL	GRP	REMARKS
1	6281-971-001-10	SWITCH/OILPRESSURE	*	1					
2	6282-450-002-00	SWITCH/OVERHEAT	*	1					
3	6281-410-010-00	GLOWPLUG	*	3					
4	6219-732-002-00	CONNECTOR,GLOW PLUG	*	1					
5	6281-910-003-00	SOLENOID	*	1 -154837					
5A	6281-910-003-10	SOLENOID	*	1 154838-		1			
6	6209-630-002-10	GASKET	*	1					
7	6901-910-612-00	BOLT,SEMS/M6X12	*	2					
8	6281-920-001-00	RELAY,SOLENOID	*	1					

FIG. 25 REPAIR PARTS (OPTION)

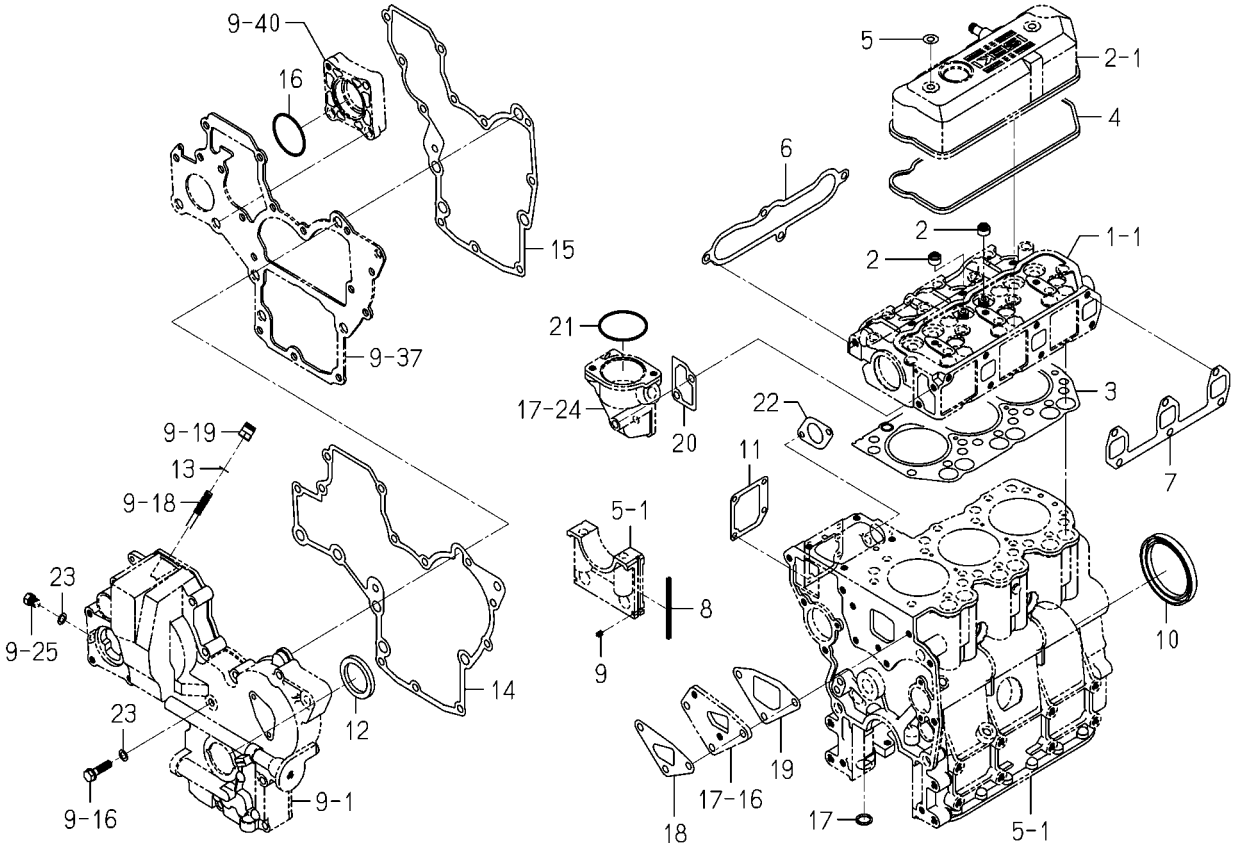

6004-999C-0100

KEY	PART CODE	DESCRIPTION	SPC	TYPE OF MODEL E3112G		ITC	COL	GRP	REMARKS
1	6287-810-015-20	REPAIR/ENGINE SET	T	1		1			
2	6212-569-002-00	SEAL,OIL	T	6					
3	6211-141-029-20	GASKET/CYLINDERHEAD	T	1		1			
4	6211-173-003-00	SEAL,CYL.HEAD COVER	T	1					
5	6909-572-008-00	PACKING	T	2					
6	6214-115-001-20	GASKET,INLET MANIFOL	T	1					
7	6214-145-001-30	GASKET,EXH.MANIFOLD	T	1					
8	6211-258-001-00	SEAL,BEARING CAP	T	4					
9	6211-258-002-00	SEAL,BEARING CAP/7	T	2					
10	6209-625-012-00	OILSEAL	T	1					
11	6211-292-001-20	GASKET/COVER	T	1					
12	6209-625-002-00	SEAL,OIL	T	1					
13	6209-920-002-00	PACKING	T	2					
14	6211-312-003-20	GASKET/GEARCASE	T	1					
15	6211-312-004-20	GASKET/PLATE	T	1					
16	V723-102-005-00	O-RING 1A S50	T	1					
17	V720-102-401-50	O-RING/P15	T	1					
18	6213-614-003-10	GASKET/WATER PUMP	T	1					
19	6213-614-004-10	GASKET,SPACER	T	1					
20	6213-743-002-10	GASKET/HOUSING	T	1					
21	V723-102-005-50	O-RING	T	1					
22	6209-630-002-10	GASKET	T	1					
23	6209-500-003-00	WASHER/08X14X01	T	2					

FIG. 26 COMPONENT PARTS FOR 6215-300-036-00 ON Fig.20

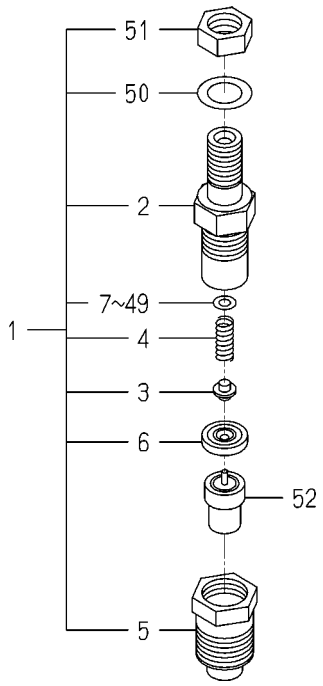

6215-300-036-0

KEY	PART CODE	DESCRIPTION	SPC	TYPE OF MODEL E3112G		ITC	COL	GRP	REMARKS
1	6215-330-024-00	HOLDER/NOZZLE ASSY	*	3					
2	6215-331-008-00	BODY/NOZZLE HOLDER	*	3					
3	6215-342-001-00	PIN,NOZZLE HOLDER	*	3					
4	6215-343-001-00	WASHER	*	3					
5	6215-332-013-00	NUT/NOZZLERETAINING	*	3					
6	6215-339-001-00	PIECE,DISTANCE	*	3					
7	6215-345-001-00	WASHER/0.9	*	3					
8	6215-345-002-00	WASHER/0.925	*	3					
9	6215-345-003-00	WASHER/0.95	*	3					
10	6215-345-004-00	WASHER/0.975	*	3					
11	6215-345-005-00	WASHER/1.0	*	3					
12	6215-345-006-00	WASHER/1.025	*	3					
13	6215-345-007-00	WASHER/1.05	*	3					
14	6215-345-008-00	WASHER/1.075	*	3					
15	6215-345-009-00	WASHER/1.1	*	3					
16	6215-345-010-00	WASHER/1.125	*	3					
17	6215-345-011-00	WASHER/1.15	*	3					
18	6215-345-012-00	WASHER/1.175	*	3					
19	6215-345-013-00	WASHER/1.2	*	3					
20	6215-345-014-00	WASHER/1.225	*	3					
21	6215-345-015-00	WASHER/1.25	*	3					
22	6215-345-016-00	WASHER/1.275	*	3					
23	6215-345-017-00	WASHER/1.3	*	3					
24	6215-345-018-00	WASHER/1.325	*	3					
25	6215-345-019-00	WASHER/1.35	*	3					
26	6215-345-020-00	WASHER/1.375	*	3					
27	6215-345-021-00	WASHER/1.4	*	3					
28	6215-345-022-00	WASHER/1.425	*	3					
29	6215-345-023-00	WASHER/1.45	*	3					
30	6215-345-024-00	WASHER/1.475	*	3					

FIG. 26 COMPONENT PARTS FOR 6215-300-036-00 ON Fig.20

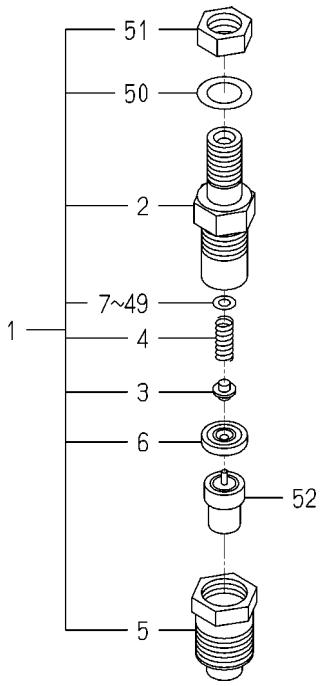

6215-300-036-0

KEY	PART CODE	DESCRIPTION	SPC	TYPE OF MODEL E3112G		ITC	COL	GRP	REMARKS
31	6215-345-025-00	WASHER/1.5	*	3					
32	6215-345-026-00	WASHER/1.525	*	3					
33	6215-345-027-00	WASHER/1.55	*	3					
34	6215-345-028-00	WASHER/1.575	*	3					
35	6215-345-029-00	WASHER/1.6	*	3					
36	6215-345-030-00	WASHER/1.625	*	3					
37	6215-345-031-00	WASHER/1.65	*	3					
38	6215-345-032-00	WASHER/1.675	*	3					
39	6215-345-033-00	WASHER/1.7	*	3					
40	6215-345-034-00	WASHER/1.725	*	3					
41	6215-345-035-00	WASHER/1.75	*	3					
42	6215-345-036-00	WASHER/1.775	*	3					
43	6215-345-037-00	WASHER/1.8	*	3					
44	6215-345-038-00	WASHER/1.825	*	3					
45	6215-345-039-00	WASHER/1.85	*	3					
46	6215-345-040-00	WASHER/1.875	*	3					
47	6215-345-041-00	WASHER/1.9	*	3					
48	6215-345-042-00	WASHER/1.925	*	3					
49	6215-345-043-00	WASHER/1.95	*	3					
50	6215-359-001-00	WASHER	*	3					
51	6215-359-002-00	NUT	*	3					
52	6215-311-027-00	NOZZLE ASSY	*	3					

FIG. 27 COMPONENT PARTS FOR 6215-600-103-10 ON Fig.21

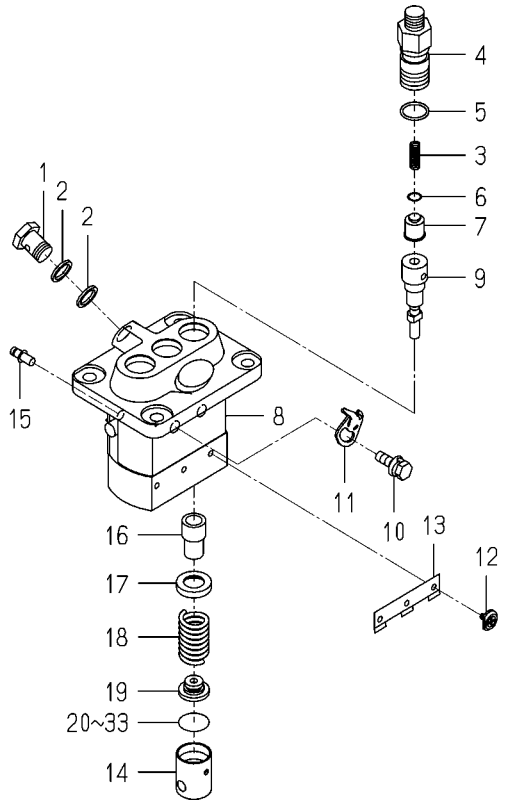

6215-600-103-1C

KEY	PART CODE	DESCRIPTION	SPC	TYPE OF MODEL E3112G		ITC	COL	GRP	REMARKS
1	6215-619-009-00	SCREW/HOLLOW	*	1					
2	6215-619-010-00	WASHER/AIR BLEEDER	*	2					
3	6215-643-006-00	SPRING/DELIVERYVALVE	*	3					
4	6215-644-007-00	HOLDER/DELIVERYVALVE	*	3					
5	6215-649-001-00	ORING	*	3					
6	6215-649-002-00	GASKET/DELIVERYVALVE	*	3					
7	6215-641-006-00	VALVE ASSY	*	3					
8	6215-611-001-00	HOUSING ASSY	*	1					
9	6215-631-012-00	ELEMENT ASSY	*	3					
10	6215-619-022-00	BOLT/WASHERHEAD	*	2					
11	6215-612-001-00	PLATE/ADJUSTING	*	2					
12	6215-629-001-00	PIN/INJECTIONPUMP	*	3					
13	6215-629-002-00	PLATE	*	1					
14	6215-622-001-00	TAPPET/INJECTIO ASSY	*	3					
15	6215-637-001-00	RACK/CONTROL ASSY	*	1					
16	6215-635-001-00	SLEEVE/PLUNGER	*	3					
17	6215-639-004-00	SEAT/SPRING/UPPER	*	3					
18	6215-634-001-00	SPRING/PUMPPLUNGER	*	3					
19	6215-639-005-00	SEAT/SPRING/LOWER	*	3					
20	6215-629-003-00	PLATE/TAPPET/AD 0.6	*	1					
21	6215-629-004-00	PLATE/TAPPET/AD 0.7	*	1					
22	6215-629-005-00	PLATE/TAPPET/AD 0.8	*	1					
23	6215-629-006-00	PLATE/TAPPET/AD 0.9	*	1					
24	6215-629-007-00	PLATE/TAPPET/AD 1.0	*	1					
25	6215-629-008-00	PLATE/TAPPET/AD 0.2	*	1					
26	6215-629-009-00	PLATE/TAPPET/AD 0.3	*	1					
27	6215-629-010-00	PLATE/TAPPET/AD 0.4	*	1					
28	6215-629-011-00	PLATE/TAPPET/AD 0.5	*	1					
29	6215-629-012-00	PLATE/TAPPET/AD 0.25	*	1					
30	6215-629-013-00	PLATE/TAPPET/AD 0.35	*	1					

FIG. 27 COMPONENT PARTS FOR 6215-600-103-10 ON Fig.21

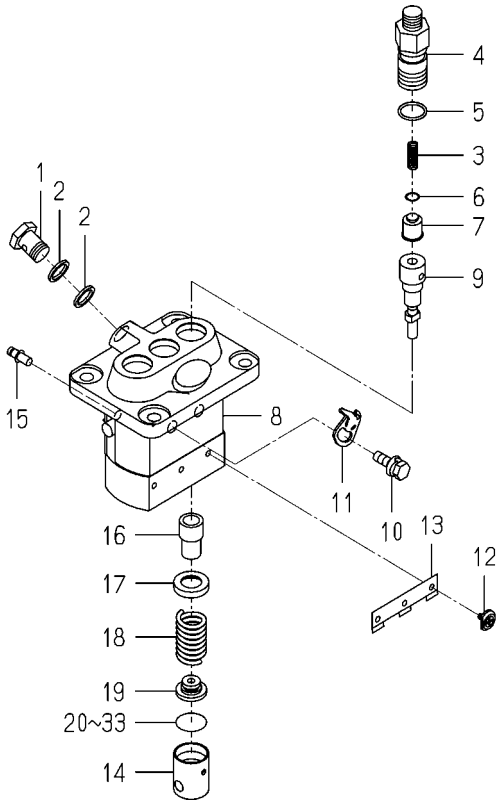

6215-600-103-1C

KEY	PART CODE	DESCRIPTION	SPC	TYPE OF MODEL E3112G		ITC	COL	GRP	REMARKS
31	6215-629-014-00	PLATE/TAPPET/AD 0.45	*	1					
32	6215-629-015-00	PLATE/TAPPET/AD 0.55	*	1					
33	6215-629-016-00	PLATE/TAPPET/AD 0.65	*	1					

FIG. 28 COMPONENT PARTS FOR 6281-100-011-10,20 ON Fig.23

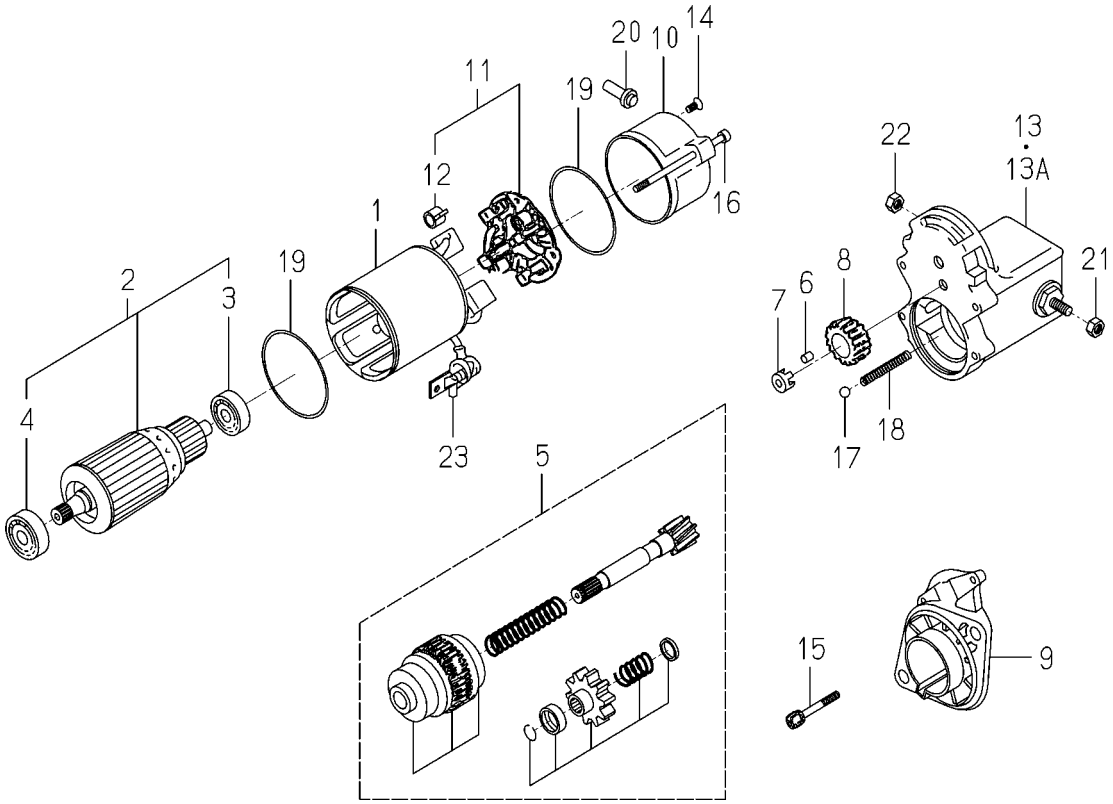

6281-100-011-2E

KEY	PART CODE	DESCRIPTION	SPC	TYPE OF MODEL E3112G		ITC	COL	GRP	REMARKS
1	6281-111-007-00	YOKE/STARTER ASSY	*	1					
2	6281-121-008-00	ARMATURE/STARTE ASSY	*	1					
3	6281-129-038-00	BEARING	*	1					
4	6281-129-039-00	BEARING	*	1					
5	6281-124-007-10	CLUTCH/STARTER ASSY	*	1					
6	6581-129-099-00	RORA	*	5					
7	6281-129-040-00	RETAINER	*	1					
8	6281-123-005-00	PINION/STARTER	*	1					
9	6281-129-041-10	HOUSING/STARTER ASSY	*	1					
10	6281-115-013-00	FRAME/STARTEREND	*	1					
11	6281-116-006-00	HOLDER/STARTER ASSY	*	1					
12	6281-129-056-00	SPRING/BRUSH	*	4					
13	6281-151-018-00	SWITCH/MAGNETIC ASSY	*	1 -164070					
13A	6281-151-015-00	SWITCH/MAGNETIC ASSY	*	1 164071-					
14	6281-129-062-00	SCREW	*	2					
15	6281-129-042-00	BOLT/WS	*	2					
16	6281-129-055-00	BOLT/THROUGH	*	2					
17	6581-129-092-00	BALL	*	1					
18	6281-129-044-00	SPRING/RETURN	*	1					
19	6281-129-003-00	O-RING	*	2					
20	6281-115-016-00	BUSHING/DRAIN	*	1					
21	6909-111-508-00	NUT	*	1					
22	6281-229-041-00	NUT	*	1					
23	6281-115-010-00	COVER	*	1					

FIG. 29 COMPONENT PARTS FOR 6281-200-005-00 ON Fig.23

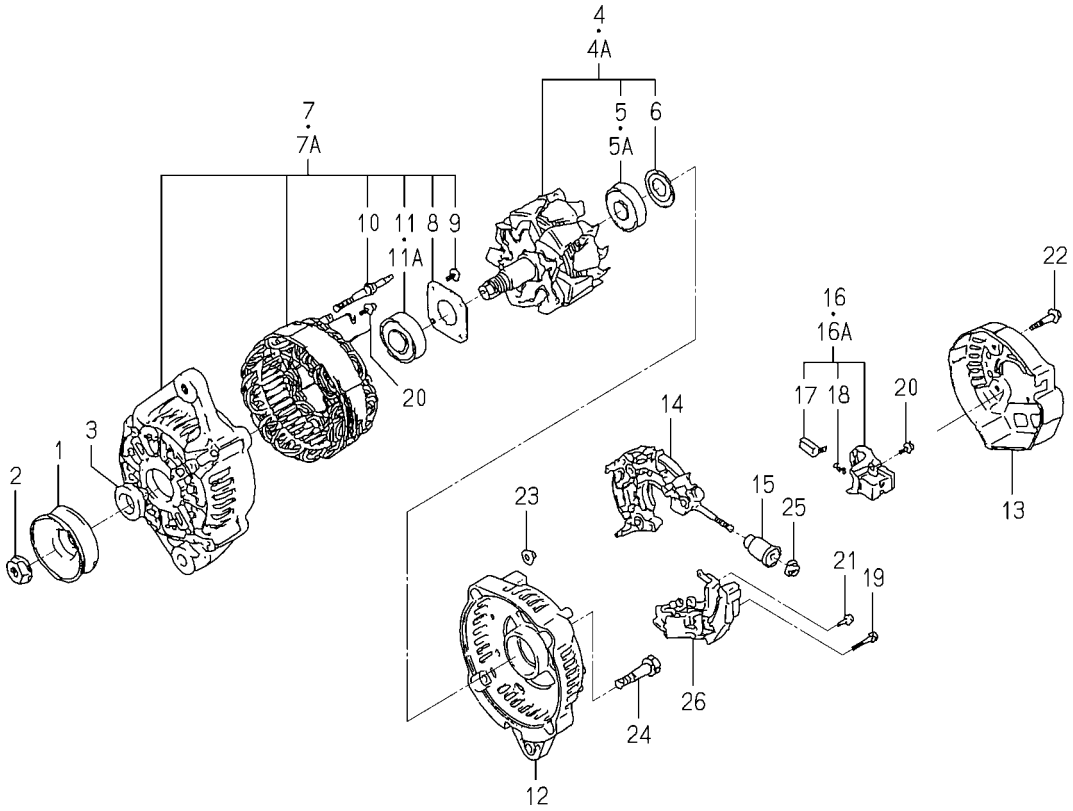

6281-200-005-0B

KEY	PART CODE	DESCRIPTION	SPC	TYPE OF MODEL E3112G		ITC	COL	GRP	REMARKS
1	6281-222-004-00	PULLEY	*	1					
2	6281-229-002-00	NUT	*	1					
3	6281-229-003-00	COLLOR	*	1					
4	6281-221-001-00	ROTOR ASSY	*	1 -186338					
4A	6281-221-007-00	ROTOR ASSY	*	1 186339-					
5	6281-229-005-00	BEARING	*	1 -186338					
5A	6281-229-032-00	BEARING/BALL	*	1 186339-					
6	6281-229-004-00	COVER,BEARING	*	1					
7	6281-213-006-00	FRAME ASSY	*	1 -186338					
7A	6281-213-018-00	FRAME/DRIVEEND ASSY	*	1 186339-					
8	6281-229-006-00	PLATE	*	1					
9	6281-229-007-00	BOLT	*	4					
10	6281-229-008-00	BOLT	*	2					
11	6281-229-009-00	BEARING	*	1 -186338					
11A	6281-229-033-00	BEARING/BALL	*	1 186339-					
12	6281-214-003-00	FRAME	*	1					
13	6281-214-004-00	COVER	*	1					
14	6281-229-029-00	HOLDER ASSY	*	1					
15	6281-229-011-00	BUSH	*	1					
16	6281-217-001-00	HOLDER,BRUSH ASSY	*	1 -186338					
16A	6281-217-002-00	HOLDER/BRUSH ASSY	*	1 186339-					
17	6281-215-001-00	BRUSH	*	2					
18	6281-216-001-00	SPRING	*	2					
19	6281-229-012-00	BOLT	*	2					
20	6281-229-013-00	BOLT	*	6					
21	6281-229-014-00	BOLT	*	1					
22	6281-229-015-00	BOLT	*	3					
23	6281-229-016-00	NUT	*	2					
24	6281-229-017-00	BOLT	*	2					
25	6281-229-018-00	NUT	*	1					

FIG. 29 COMPONENT PARTS FOR 6281-200-005-00

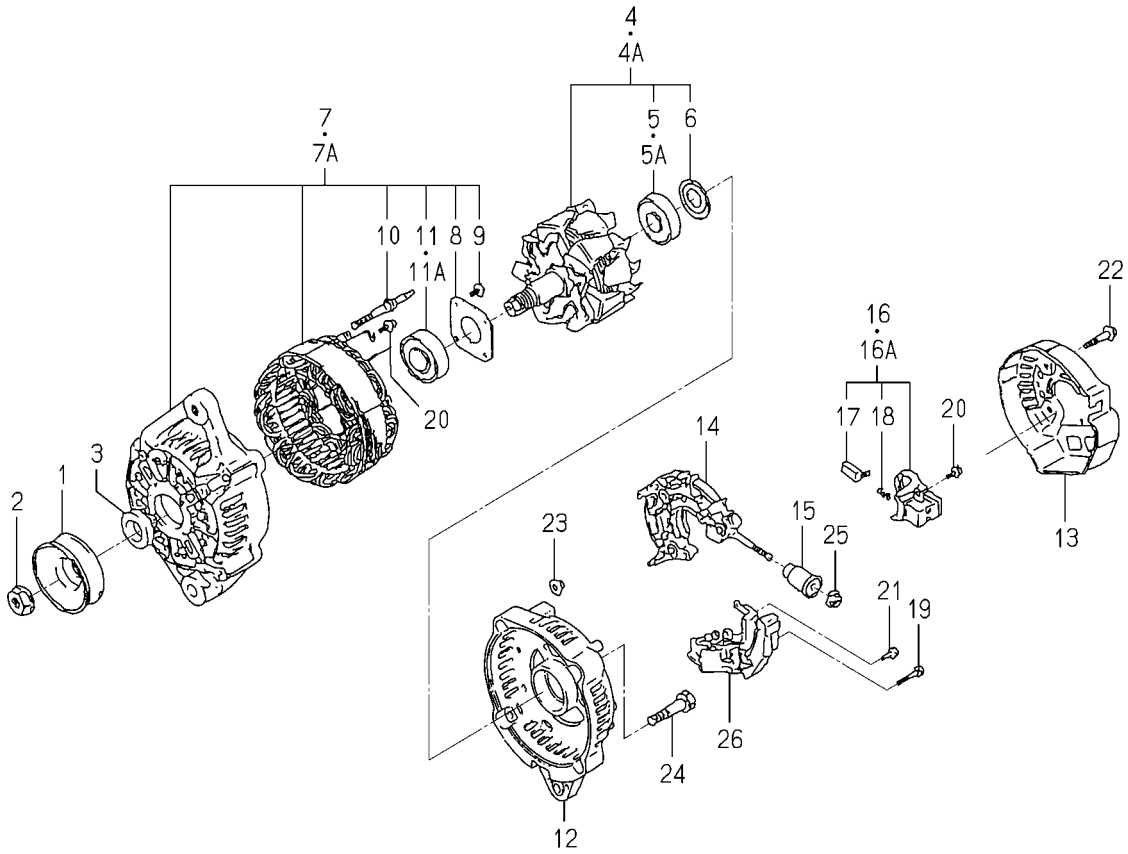

6281-200-005-0B

KEY	PART CODE	DESCRIPTION	SPC	TYPE OF MODEL E3112G		ITC	COL	GRP	REMARKS
26	6281-271-002-00	REGULATOR ASSY	*	1					

CHASSIS

FIG. 1 ENGINE BRACKET SYSTEM

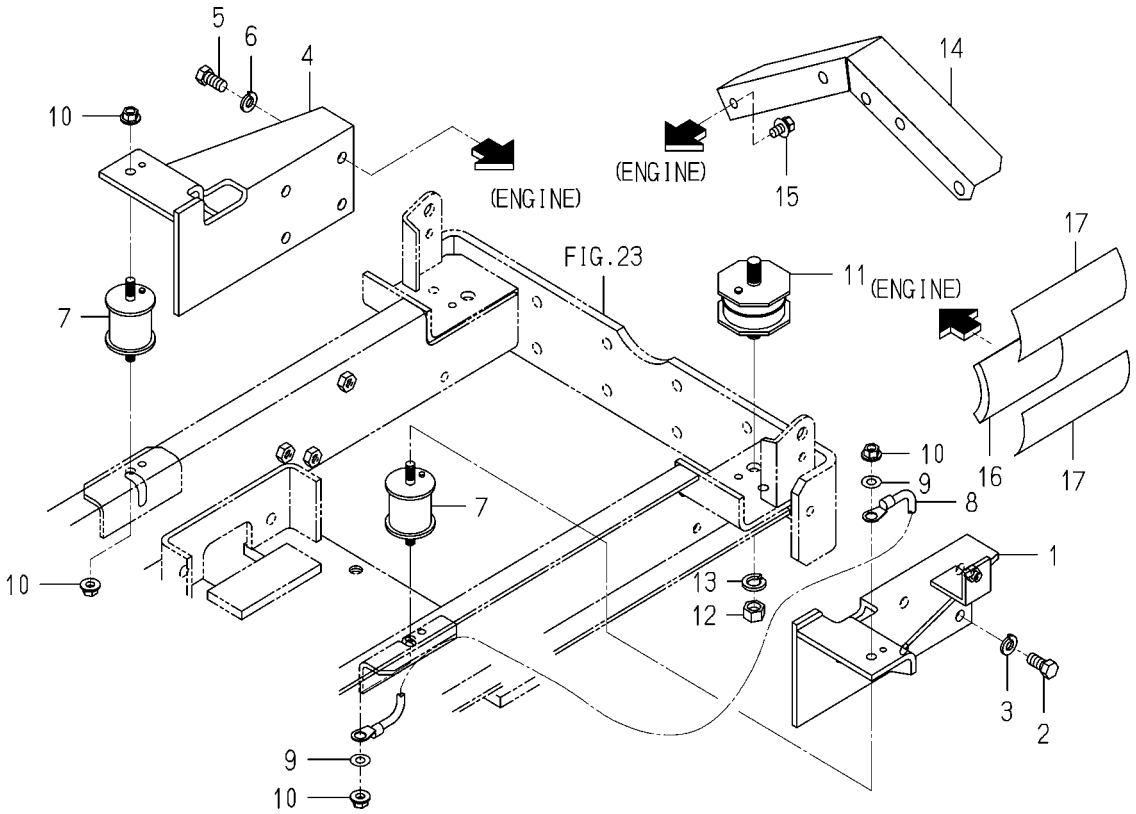

1689-101 -0100

KEY	PART CODE	DESCRIPTION	SPC	TYPE OF MODEL SF200 T42M	SF230 F42M	ITC	COL	GRP	REMARKS
1	1689-101-210-10	BRACKET/ENGINE/LH	*	1	1				
2	V203-461-002-00	BOLT/M10X1.25X20	*	4	4				
3	V401-160-010-00	WASHER,SP/M10	*	4	4				
4	1689-101-220-10	BRACKET/ENGINE/RH	*	1	1				
5	V203-461-002-00	BOLT/M10X1.25X20	*	4	4				
6	V401-160-010-00	WASHER,SP/M10	*	4	4				
7	1593-101-003-20	INSULATOR	*	2	2				
8	1544-623-008-10	HARNESS,WIRE/NO.8	*	1	1				
9	V411-260-008-00	WASHER,PL/M 8	*	2	2				
10	V362-260-008-00	NUT/WASHER	*	4	4				
11	3656-302-009-00	RUBBER	*	2	2				
12	V304-260-012-00	NUT/M12	*	4	4				
13	V401-160-012-00	WASHER,SP/M12	*	4	4				
14	1689-101-001-00	COVER/FLYWHEEL	*	1	1				
15	V211-360-801-60	BOLT,SEMS (SP)	*	1	1				
16	1689-101-004-00	INSULATOR/STARTER	*	1	1				
17	1689-101-005-10	TAPE/ALUMINIUM/135	*	2	2				

FIG. 2 COLLECTOR OPTION

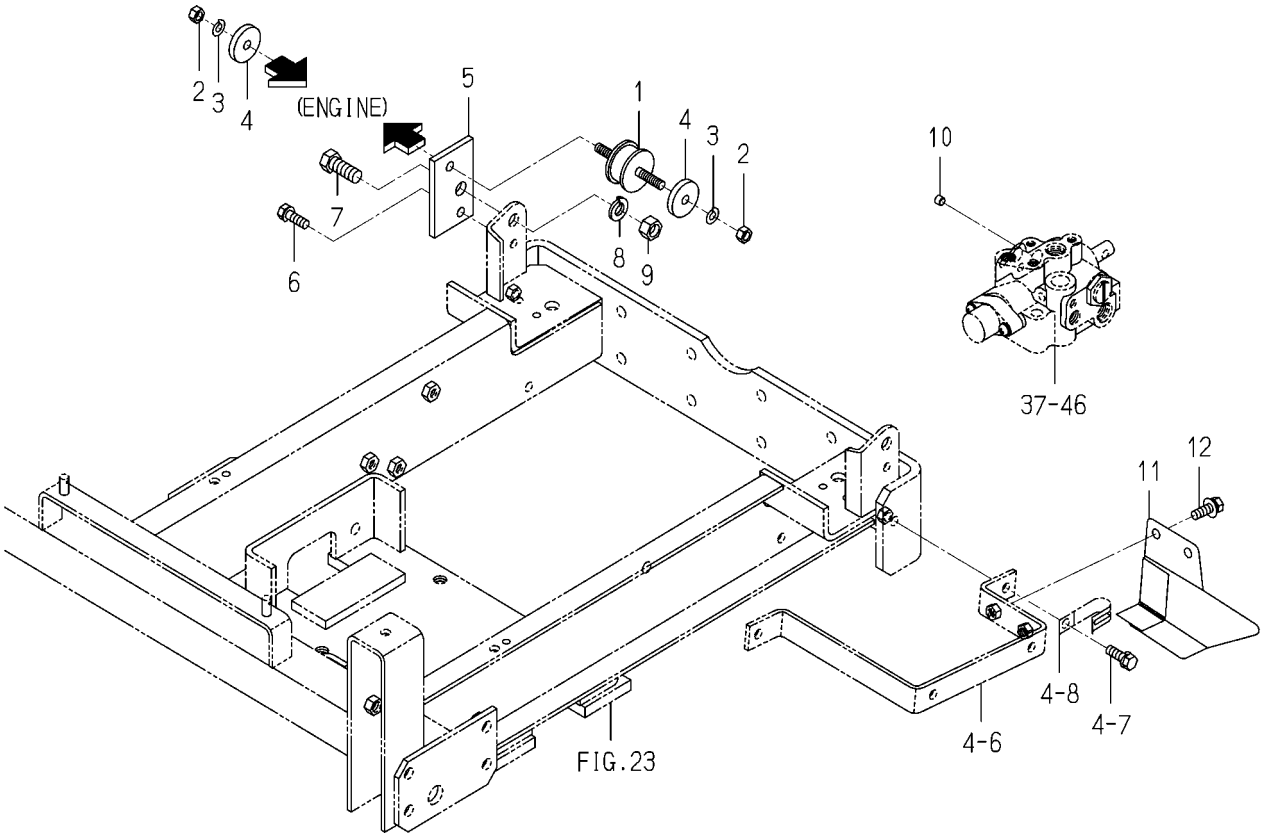

1689-101Y-0100

KEY	PART CODE	DESCRIPTION	SPC	TYPE OF MODEL SF200 T42M	TYPE OF MODEL SF230 F42M	ITC	COL	GRP	REMARKS
1	3676-205-014-00	INSULATOR	*	1	1				
2	V304-260-008-00	NUT/M 8	*	2	2				
3	V401-160-008-00	WASHER,SP/M 8	*	2	2				
4	3666-303-071-00	WASHER/09X34X06	*	2	2				
5	1689-101-011-00	PLATE/INSULATOR/C	*	1	1				
6	V211-260-802-50	BOLT/S	*	1	1				
7	V201-261-203-00	BOLT/M12X30	*	1	1				
8	V401-160-012-00	WASHER,SP/M12	*	1	1				
9	V304-260-012-00	NUT/M12	*	1	1				
10	K200-031-005-00	PLUG	*	1	1				
11	1689-103-230-00	COVER/TAIL COMP	*	1	1				
12	V211-360-802-50	BOLT,SEMS	*	2	2				

FIG. 3 RADIATOR SYSTEM

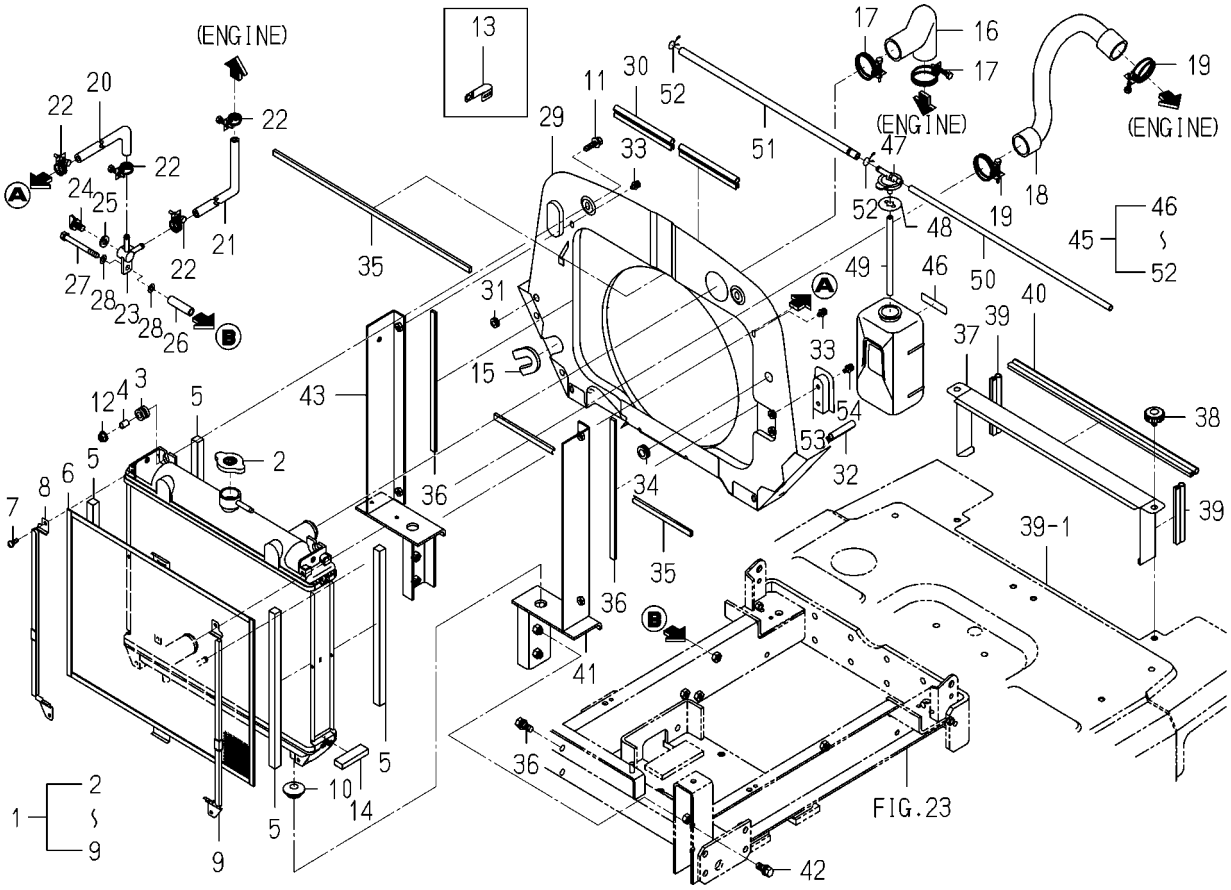

1689-102A-0100

KEY	PART CODE	DESCRIPTION	SPC	TYPE OF MODEL SF200 T42M	TYPE OF MODEL SF230 F42M	ITC	COL	GRP	REMARKS
1	1689-102-300-00	RADIATOR ASSY	*	1	1				
2	1650-102-202-10	CAP	*	1	1				
3	1689-102-302-00	LUBBER/MOUNT	*	2	2				
4	1689-102-303-00	COLLAR	*	2	2				
5	1689-102-304-00	INSULATOR/SIDE	*	4	4				
6	1689-102-305-00	NET/RADIATOR	*	1	1				
7	1703-102-203-00	SCREW/P	*	4	4				
8	1689-102-306-00	GUIDE/NET/LH	*	1	1				
9	1689-102-307-00	GUIDE/NET/RH	*	1	1				
10	1421-603-004-00	BUSH,LEVER	*	2	2				
11	V211-360-803-00	BOLT/M8X30	*	2	2				
12	V362-260-008-00	NUT/WASHER	*	2	2				
13	3737-172-011-00	CLAMP,HARNESS	*	1	1				
14	1689-621-015-00	INSULATOR/20X90	*	2	2				
15	3666-202-005-00	PROTECTOR	*	1	1				
16	1689-102-022-00	HOSE/RADIATOR/INLET	*	1	1				
17	J061-236-044-00	CLAMP/WIRE/36-44	*	2	2				
18	1689-102-023-00	HOSE/RADIATOR/OUTLET	*	1	1				
19	J061-236-044-00	CLAMP/WIRE/36-44	*	2	2				
20	1588-102-005-00	HOSE/8X15X400	*	1	1				
21	1614-102-003-00	HOSE/205	*	1	1				
22	J061-210-015-00	CLAMP/WIRE/10-15	*	4	4				
23	1560-104-010-40	CONNECTOR	*	1	1				
24	1424-101-203-00	PLUG	*	1	1				
25	1424-101-204-00	PACKING	*	1	1				
26	3652-445-002-10	COLLAR/9X14X52	*	1	1				
27	V211-260-808-00	BOLT/S	*	1	1				
28	V411-260-008-00	WASHER,PL/M 8	*	2	2				
29	1689-102-310-00	SHROUD COMP	*	1	1				
30	1689-102-013-00	INSULATOR/1130	*	1	1				

FIG. 3 RADIATOR SYSTEM

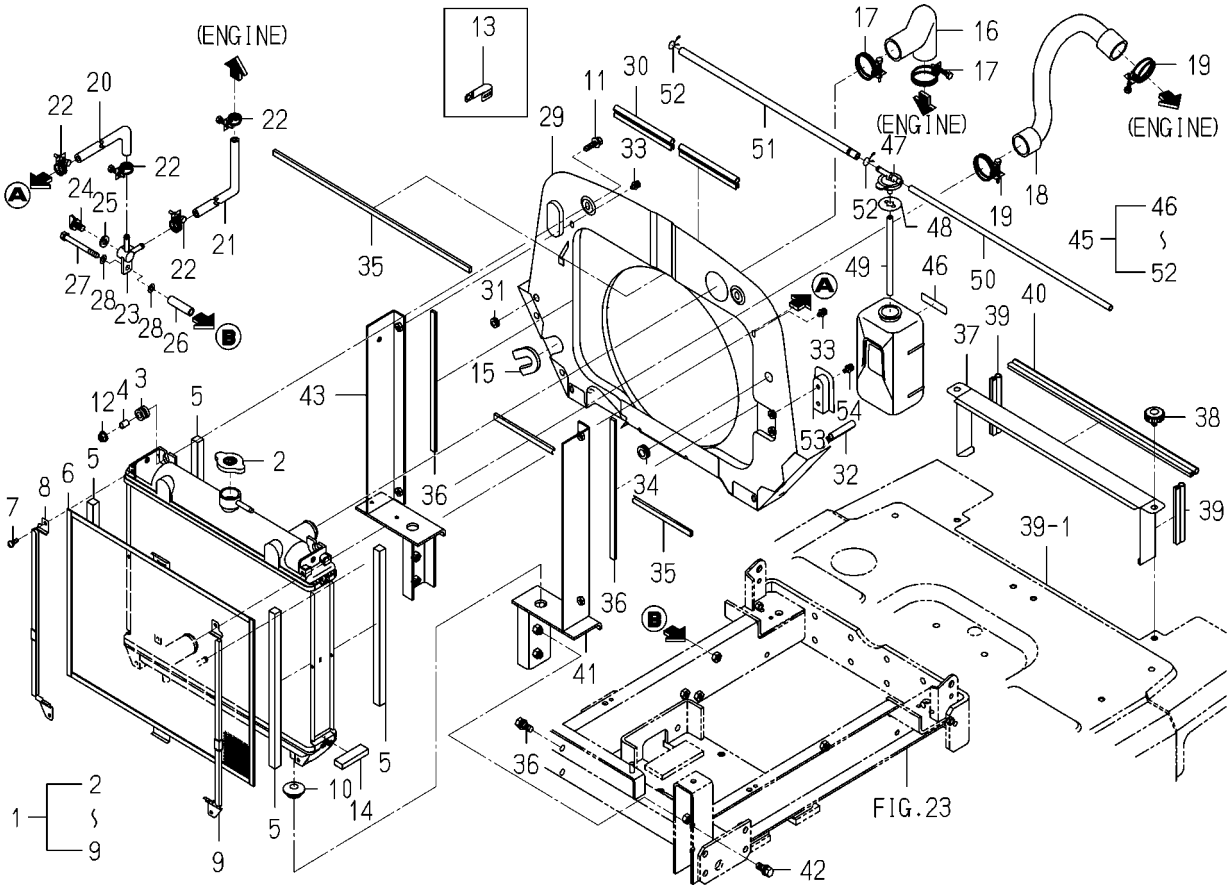

1689-102A-0100

KEY	PART CODE	DESCRIPTION	SPC	TYPE OF MODEL SF200 T42M	TYPE OF MODEL SF230 F42M	ITC	COL	GRP	REMARKS
31	4335-512-004-00	GROMMET/9	*	1	1				
32	1689-102-017-10	INSULATOR/55	*	2	2				
33	V210-360-601-20	BOLT,SEMS	*	4	4				
34	2139-505-002-00	GROMMET	*	1	1				
35	1689-102-026-00	INSULATOR/490	*	2	2				
36	1689-102-027-00	INSULATOR/300	*	2	2				
37	1689-102-021-00	NET/UNDER	*	1	1				
38	3623-820-013-00	KNOB,SET/12	*	2	2				
39	1704-112-001-00	INSULATOR/115	*	2	2				
40	1689-102-025-00	INSULATOR/455	*	1	1				
41	1689-102-320-00	FRAME/RADIATOR/LH	*	1	1				
42	V211-561-002-50	BOLT/M10X25	*	2	2				
43	1689-102-330-00	FRAME/RADIATOR/RH	*	1	1				
44	V211-561-002-50	BOLT/M10X25	*	2	2				
45	1689-102-350-00	RESERVETANK ASSY	*	1	1				
46	6221-408-007-00	PLATE/CAUTION	*	1	1				
47	6221-408-008-00	CAP	*	1	1				
48	6221-408-009-00	PACKING	*	1	1				
49	6221-408-010-00	HOSE/RUBBER	*	1	1				
50	6221-408-011-00	PIPE	*	1	1				
51	1689-102-361-00	HOSE/LUBBER	*	1	1				
52	6221-408-013-00	CLAMP	*	2	2				
53	6221-408-003-00	BRACKET/RESERVETANK	*	1	1				
54	V210-360-601-60	BOLT(SP)/M6X16	*	2	2				

FIG. 4 MUFFLER SYSTEM

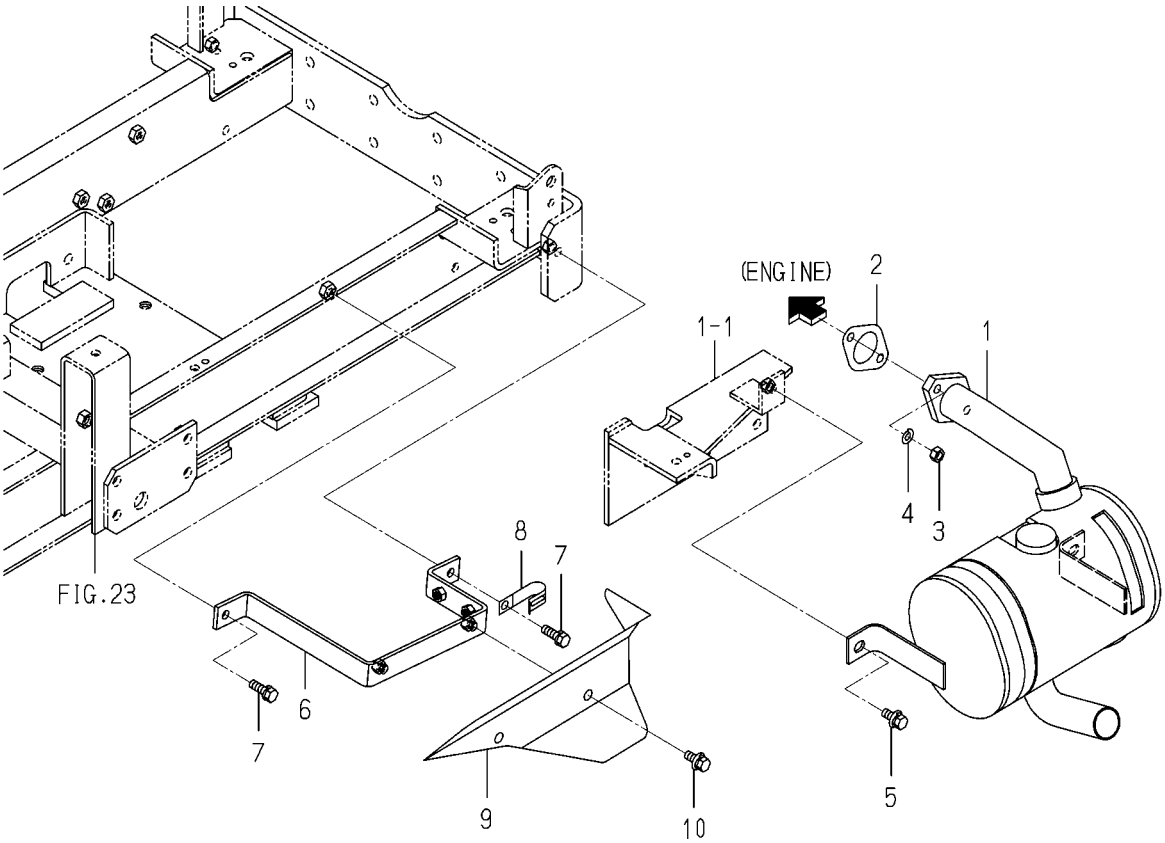

1689-103 -0100

KEY	PART CODE	DESCRIPTION	SPC	TYPE OF MODEL SF200 T42M	TYPE OF MODEL SF230 F42M	ITC	COL	GRP	REMARKS
1	1689-103-200-10	MUFFLER COMP	*	1	1				
2	1689-103-004-00	GASKET/MUFFLER	*	1	1				
3	V304-700-008-00	NUT	*	2	2				
4	V401-700-008-00	WASHER/LOCK	*	2	2				
5	V211-360-802-00	BOLT(SP) M8X20	*	2	2				
6	1689-103-220-10	FRAME/COVER COMP	*	1	1				
7	V211-260-802-50	BOLT/S	*	2	2				
8	1425-621-004-00	CLAMP,HARNESS	*	1	1				
9	1689-103-002-20	COVER/MUFFLER	*	1	1		7F		
10	V211-360-801-60	BOLT,SEMS (SP)	*	2	2				

FIG. 5 AIR CLEANER SYSTEM

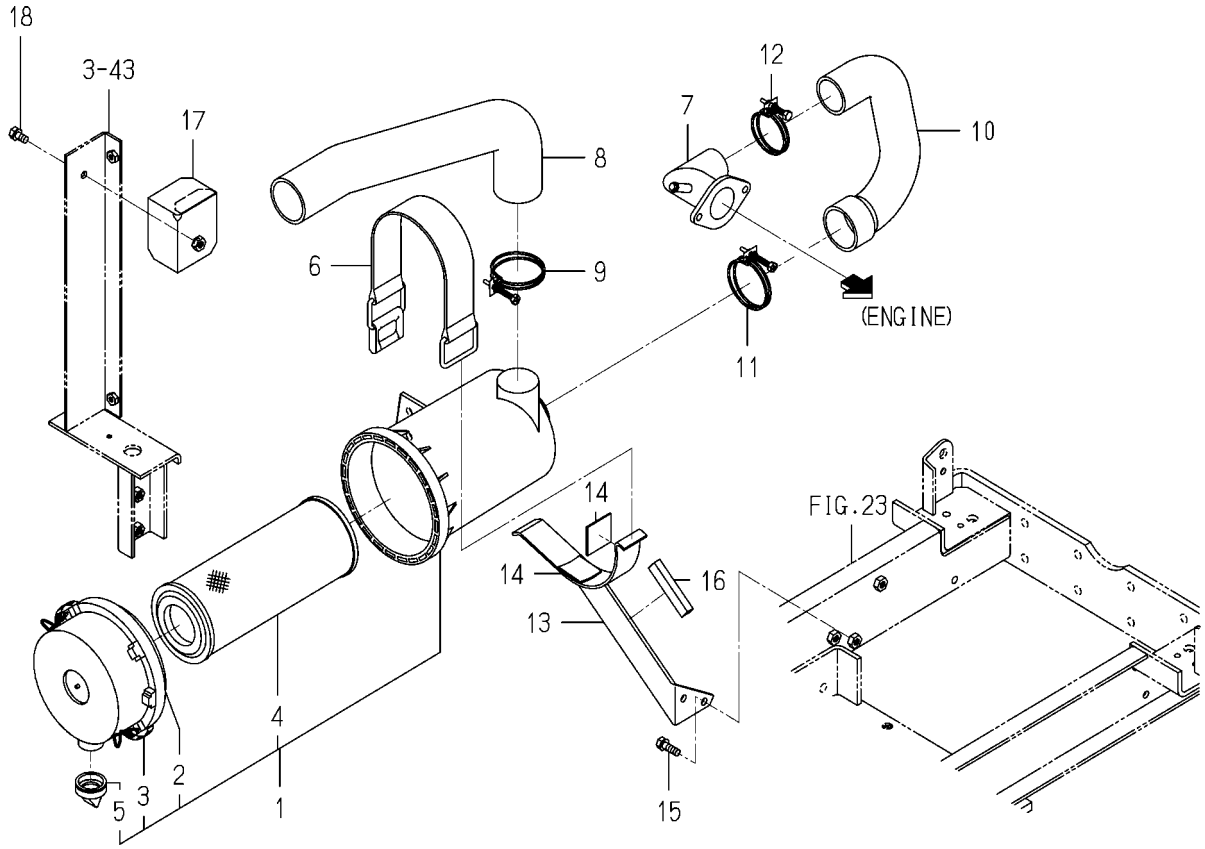

1689-104A-0100

KEY	PART CODE	DESCRIPTION	SPC	TYPE OF MODEL SF200 T42M	SF230 F42M	ITC	COL	GRP	REMARKS
1	1650-104-200-00	CLEANER AIR ASSY	*	1	1				
2	1650-104-210-00	COVER ASSY	*	1	1				
3	1650-104-201-00	CLIP	*	2	2				
4	1650-104-203-00	ELEMENT ASSY	*	1	1				
5	1544-104-205-00	VALVE	*	1	1				
6	1614-104-001-00	BAND/CLEANER	*	1	1				
7	1689-104-210-00	PIPE/INLET COMP	*	1	1				
8	1689-104-011-00	HOSE/CLEANER/INLET	*	1	1				
9	J061-252-063-00	CLAMP/WIRE/52-63	*	1	1				
10	1689-104-002-00	HOSE/CLEANER/OUTLET	*	1	1				
11	J061-252-063-00	CLAMP/WIRE/52-63	*	1	1				
12	J061-242-050-00	CLAMP/WIRE/42-50	*	1	1				
13	1689-104-220-00	BRACKET/CLEANER COMP	*	1	1				
14	1427-111-229-00	CUSHION,RUBBER	*	2	2				
15	V211-260-802-00	BOLT,SEMS (S)	*	2	2				
16	P113-201-007-00	TRIM/70	*	1	1				
17	1689-104-310-00	COVER/INTAKE COMP	*	1	1				
18	V211-260-801-60	BOLT,SEMS (S) M8X16	*	1	1				

FIG. 6 FUEL LINE SYSTEM

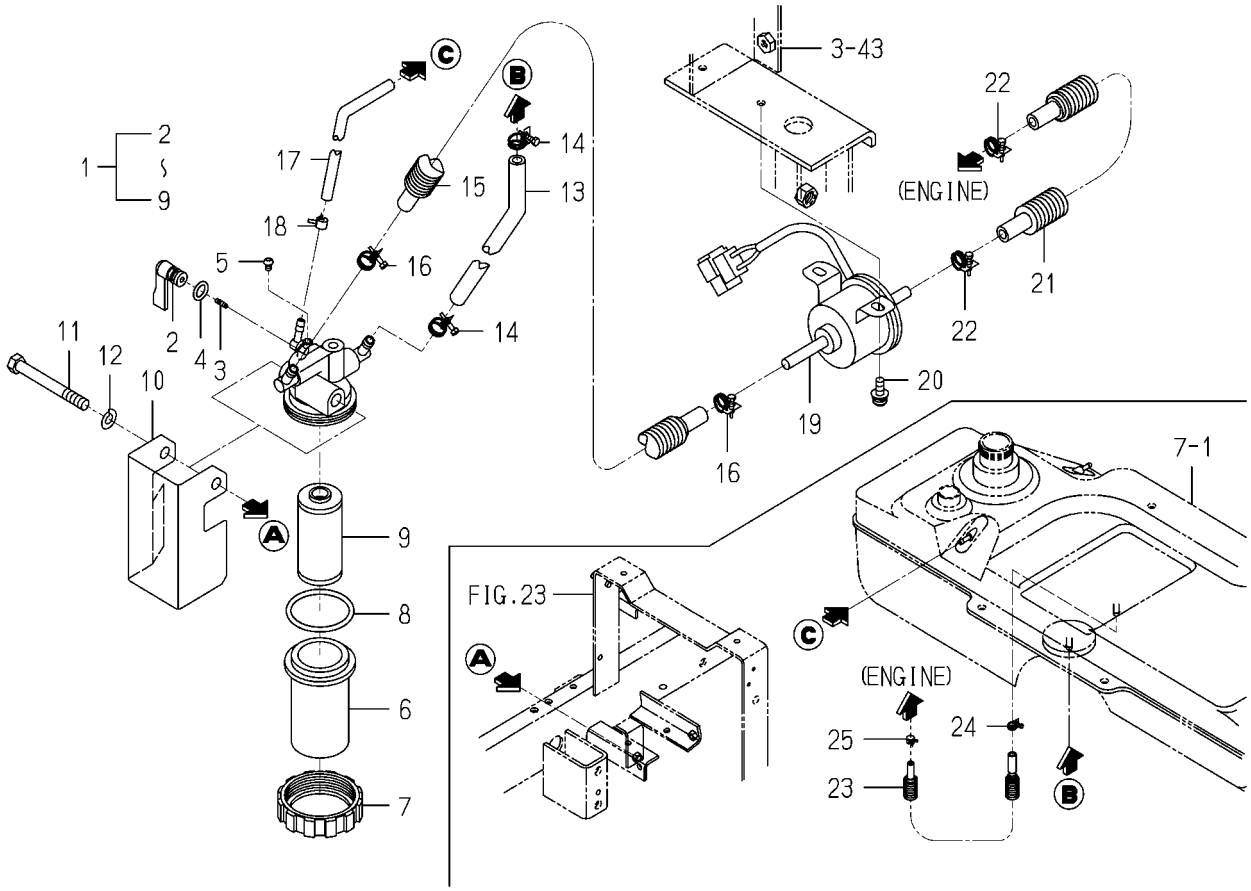

1689-105 -0100

KEY	PART CODE	DESCRIPTION	SPC	TYPE OF MODEL SF200 T42M	SF230 F42M	ITC	COL	GRP	REMARKS
1	1614-105-200-00	FILTER ASSY	*	1	1				
2	1444-102-202-00	LEVER	*	1	1				
3	1415-102-007-00	SPRING,VALVE	*	1	1				
4	V720-102-401-00	O-RING/P10A	*	1	1				
5	1415-102-008-00	VIS	*	1	1				
6	1415-102-009-00	CUP	*	1	1				
7	1444-102-204-00	NUT,RING	*	1	1				
8	V720-103-504-40	O-RING/P44	*	1	1				
9	1672-105-211-00	ELEMENT	*	1	1				
10	1689-105-002-00	COVER/FILTER	*	1	1				
11	V201-260-807-00	BOLT/M 8X70	*	1	1				
12	V401-160-008-00	WASHER,SP/M 8	*	1	1				
13	1608-105-001-40	HOSE/225	*	1	1				
14	J061-210-012-00	CLAMP/WIRE/10-12	*	2	2				
15	1689-105-230-00	HOSE/07X12X600 ASSY	*	1	1				
16	J061-210-012-00	CLAMP/WIRE/10-12	*	2	2				
17	1689-105-001-00	HOSE/04X08X380	*	1	1				
18	J062-076-082-00	CLIP/HOSE/7.6-8.2	*	1	1				
19	3805-311-210-10	PUMP/FUEL ASSY	*	1	1				
20	V120-366-001-60	SCREW	*	2	2				
21	1689-105-230-00	HOSE/07X12X600 ASSY	*	1	1				
22	J061-210-012-00	CLAMP/WIRE/10-12	*	2	2				
23	1689-105-240-10	HOSE/FUEL/740 ASSY	*	1	1				
24	J061-210-012-00	CLAMP/WIRE/10-12	*	1	1				
25	J062-104-111-00	CLIP/HOSE/10.4-11.1	*	1	1				

FIG. 7 FUEL TANK SYSTEM

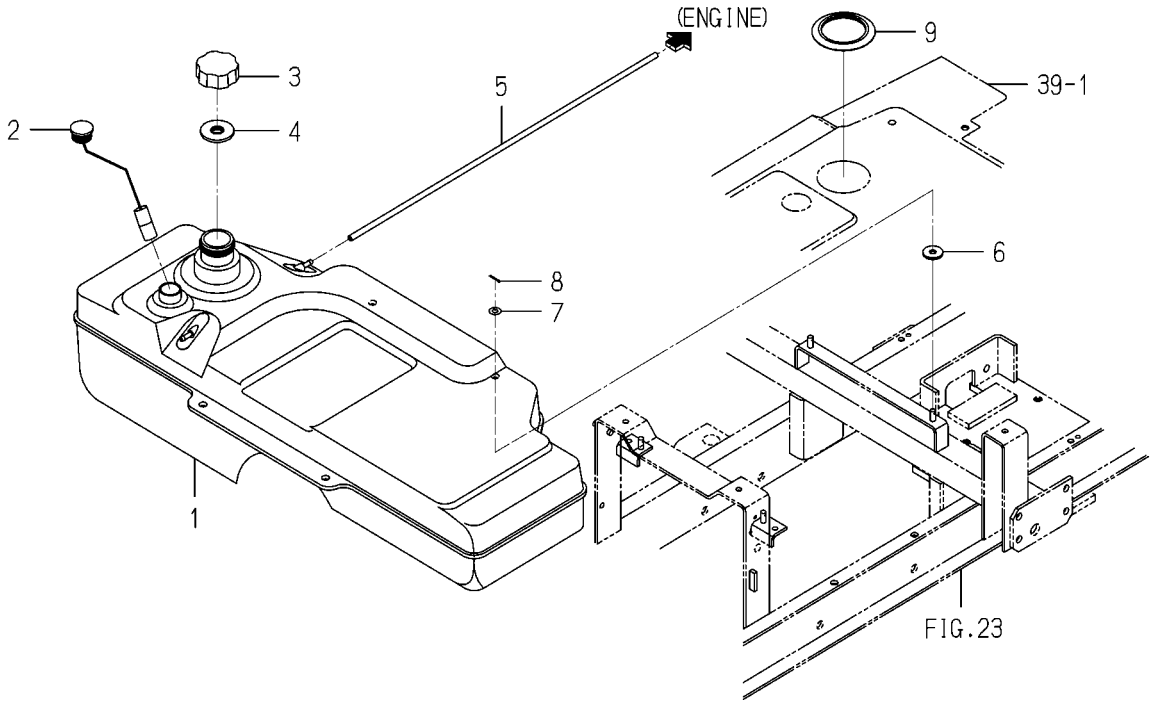

1689-111 -0100

KEY	PART CODE	DESCRIPTION	SPC	TYPE OF MODEL SF200 T42M	TYPE OF MODEL SF230 F42M	ITC	COL	GRP	REMARKS
1	1689-111-001-00	TANK/FUEL	*	1	1				
2	1689-111-220-10	GAUGE/FUEL ASSY	*	1	1				
3	1673-111-531-00	CAP/TANK	*	1	1				
4	2706-501-004-00	GASKET	*	1	1				
5	1689-111-003-10	HOSE/04X08X650	*	1	1				
6	1593-612-005-00	INSULATOR/10X30X03	*	4	4				
7	V411-260-008-00	WASHER,PL/M 8	*	4	4				
8	V500-162-501-50	PIN,SPLIT/2.5X15	*	4	4				
9	1560-111-003-20	COVER	*	1	1				

FIG. 8 BATTERY SYSTEM

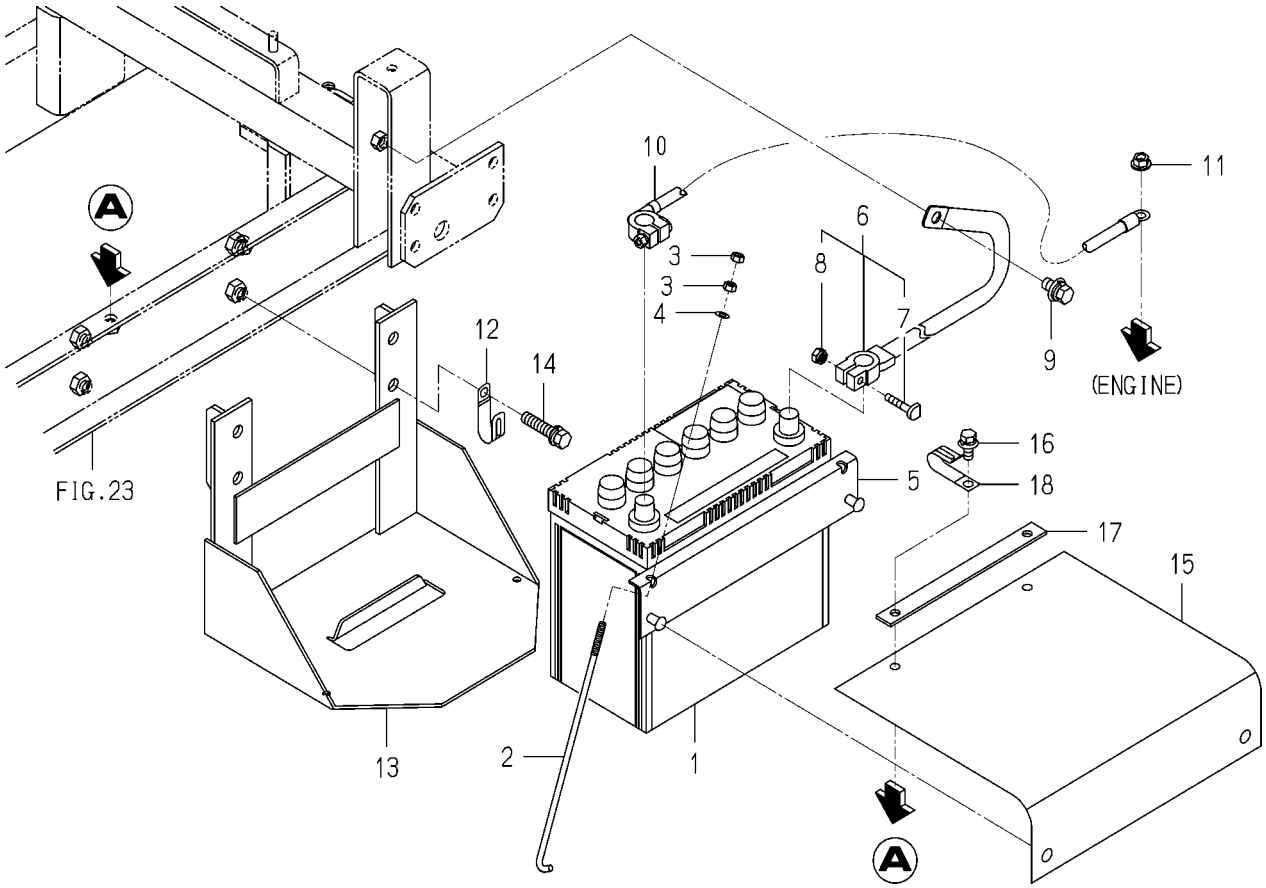

1689-112A-0100

KEY	PART CODE	DESCRIPTION	SPC	TYPE OF MODEL SF200 T42M	TYPE OF MODEL SF230 F42M	ITC	COL	GRP	REMARKS
1	1684-112-220-00	BATTERY/55B24R/S	*	1	1				
2	1600-112-003-00	BOLT/M6X240	*	2	2				
3	V301-260-006-00	NUT/M 6	*	4	4				
4	V411-260-006-00	WASHER / M6	*	2	2				
5	1689-112-230-00	PLATE/BATTERY COMP	*	1	1				
6	1634-650-200-00	STRAP/GROUND ASSY	*	1	1				
7	1568-650-004-10	BOLT/M08X32	*	1	1				
8	1568-650-005-10	NUT/M08	*	1	1				
9	V211-361-002-00	BOLT,SEMS	*	1	1				
10	1509-112-002-00	CABLE,BATTERY (+)	*	1	1				
11	V362-260-008-00	NUT/WASHER	*	1	1				
12	3737-172-011-00	CLAMP,HARNESS	*	2	2				
13	1689-112-210-00	BASE/BATTERY COMP	*	1	1				
14	V211-261-004-50	BOLT (S)/M10X45	*	4	4				
15	1689-112-004-00	COVER/BATTERY	*	1	1				
16	V211-360-802-00	BOLT(SP) M8X20	*	2	2				
17	1689-112-005-00	PLATE/I/19X200	*	1	1				
18	1425-621-004-00	CLAMP,HARNESS	*	2	2				

FIG. 9 ACCELERATOR LEVER SYSTEM

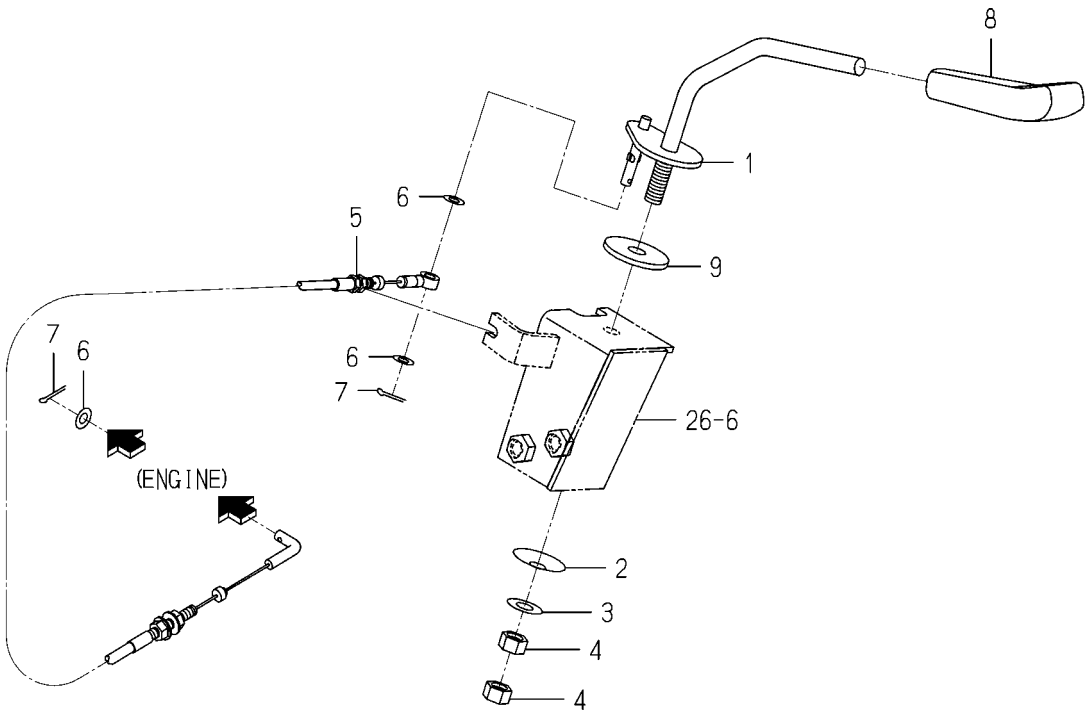

1689-117A-0100

KEY	PART CODE	DESCRIPTION	SPC	TYPE OF MODEL SF200 T42M	TYPE OF MODEL SF230 F42M	ITC	COL	GRP	REMARKS
1	1689-117-200-00	LEVER/ACCELE COMP	*	1	1				
2	1593-117-003-10	SPRING,DISK	*	1	1				
3	V411-260-010-00	WASHER/M10	*	1	1				
4	V304-260-010-00	NUT	*	2	2				
5	1689-117-001-00	CABLE/ACCELE ASSY	*	1	1				
6	V411-260-006-00	WASHER / M6	*	3	3				
7	V500-162-501-50	PIN,SPLIT/2.5X15	*	2	2				
8	1646-116-051-00	GRIP/THROTTLE	*	1	1				
9	1600-117-002-00	LINING/11X40X03	*	1	1				

FIG. 10 DRIVE SHAFT SYSTEM

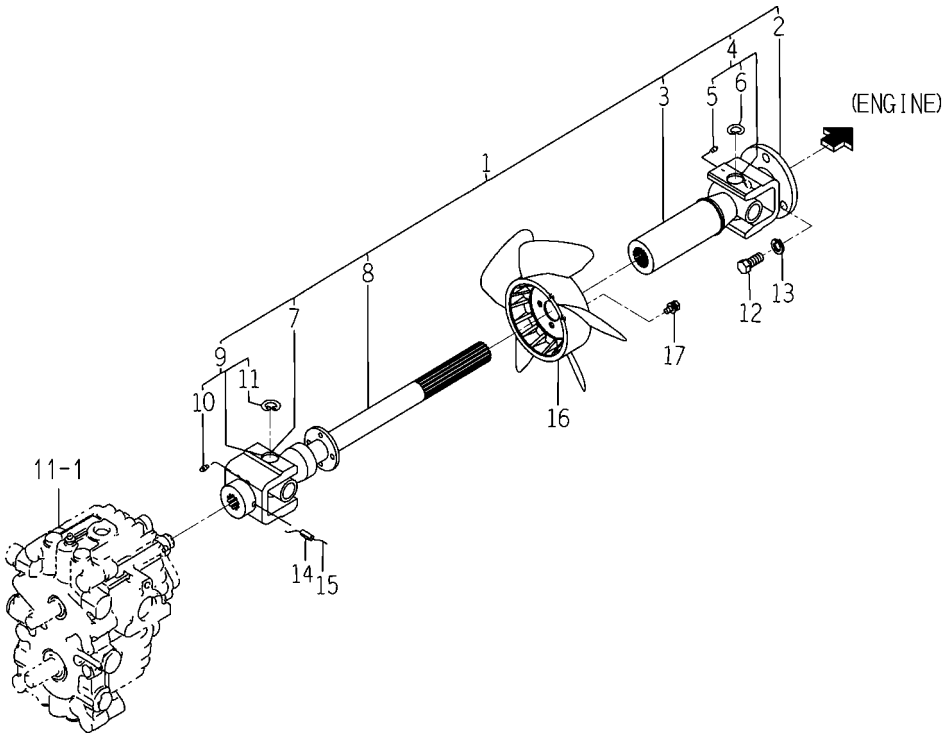

1689-122 -0100

KEY	PART CODE	DESCRIPTION	SPC	TYPE OF MODEL SF200 T42M	TYPE OF MODEL SF230 F42M	ITC	COL	GRP	REMARKS
1	1689-122-200-00	JOINT/UNIVERSAL ASSY	*	1	1				
2	1689-122-211-00	FLANGEYOKE	*	1	1				
3	1689-122-212-00	SLEEVEYOKE	*	1	1				
4	8654-101-230-00	JOURNALCROSSE ASSY	*	1	1				
5	8654-101-232-00	GREASENIPPLE	*	1	1				
6	8654-101-233-00	SURCLIP/HOLE	*	4	4				
7	1689-122-221-00	FITTINGYOKE	*	1	1				
8	1689-122-222-00	SHAFTYOKE	*	1	1				
9	8654-101-230-00	JOURNALCROSSE ASSY	*	1	1				
10	8654-101-232-00	GREASENIPPLE	*	1	1				
11	8654-101-233-00	SURCLIP/HOLE	*	4	4				
12	V203-361-002-50	BOLT	*	3	3				
13	V401-160-010-00	WASHER,SP/M10	*	3	3				
14	V580-140-604-00	PIN,SPRING/6 X40 W	*	1	1				
15		WIRE	*	1	1				
16	1689-122-001-00	FAN/HST	*	1	1				
17	V210-360-601-20	BOLT,SEMS	*	4	4				

FIG. 11 TRANSMISSION CASE SYSTEM

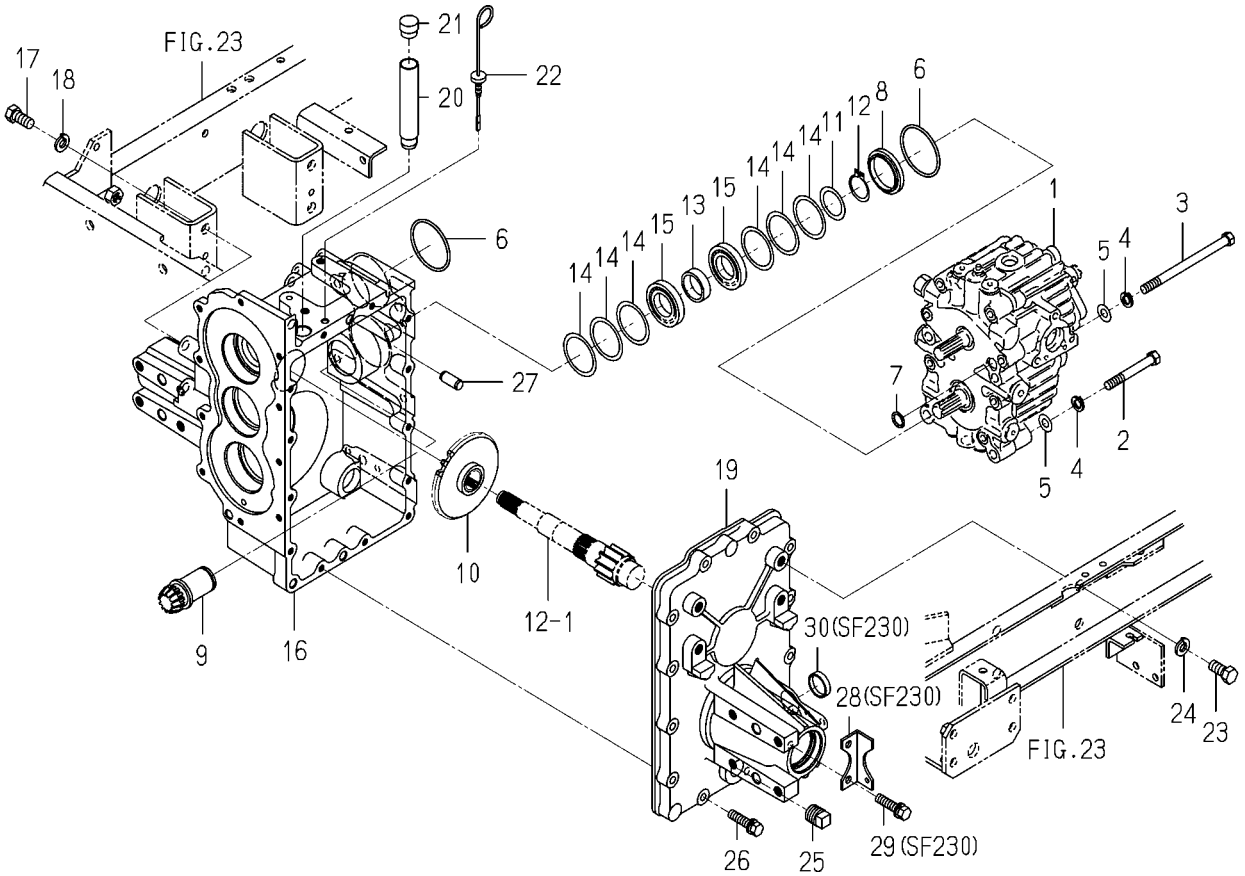

1689-201 -0100,1689-201A-0100

KEY	PART CODE	DESCRIPTION	SPC	TYPE OF MODEL SF200 T42M	TYPE OF MODEL SF230 F42M	ITC	COL	GRP	REMARKS
1	1689-201-200-00	HST/21 ASSY	*	1	1				FIG 050
2	V201-361-007-50	BOLT	*	2	2				
3	V201-361-014-00	BOLT	*	2	2				
4	V401-160-010-00	WASHER,SP/M10	*	4	4				
5	V411-260-010-00	WASHER/M10	*	4	4				
6	V721-103-106-00	O-RING/G60	*	2	2				
7	V720-102-401-50	O-RING/P15	*	1	1				
8	1689-201-005-10	HUB/HST	*	1	1				
9	1689-201-210-00	GEAR/INPUT/12 COMP	*	1	1				
10	1593-203-002-50	GEAR/BEVEL/45	*	1	1				
11	1480-207-011-00	WASHER/31X42X1	*	1	1				
12	V704-140-030-00	RING,SNAP/30 C	*	1	1				
13	1689-201-003-10	COLLAR/31X38X11	*	1	1				
14	8595-201-017-00	SHIM/0.2	*	6	6				
15	V600-110-600-60	BEARING,RB 6006	*	2	2				
16	1689-201-001-30	CASE/TRANSMISSION/RH	*	1	1				
17	V201-361-202-50	BOLT/M12X25	*	4	4				
18	V401-160-012-00	WASHER,SP/M12	*	4	4				
19	1689-201-002-30	CASE/TRANSMISSION/LH	*	1	1				
20	1689-201-007-10	TUBE/22X115	*	1	1				
21	2111-101-011-00	PLUG,OIL	*	1	1				
22	1689-201-008-10	GAUGE/OILLEVEL	*	1	1				
23	V201-361-202-50	BOLT/M12X25	*	4	4				
24	V401-160-012-00	WASHER,SP/M12	*	4	4				
25	V781-160-000-8B	PLUG	*	1	1				
26	V211-560-804-00	BOLT(S)7	*	11					
26	V211-560-804-00	BOLT(S)7	*		13				
27	V523-101-002-20	PIN	*	2	2				
28	1689-201-006-00	PLATE/L/70X28	*	1					
29	V211-560-804-00	BOLT(S)7	*	2					

FIG. 11 TRANSMISSION CASE SYSTEM

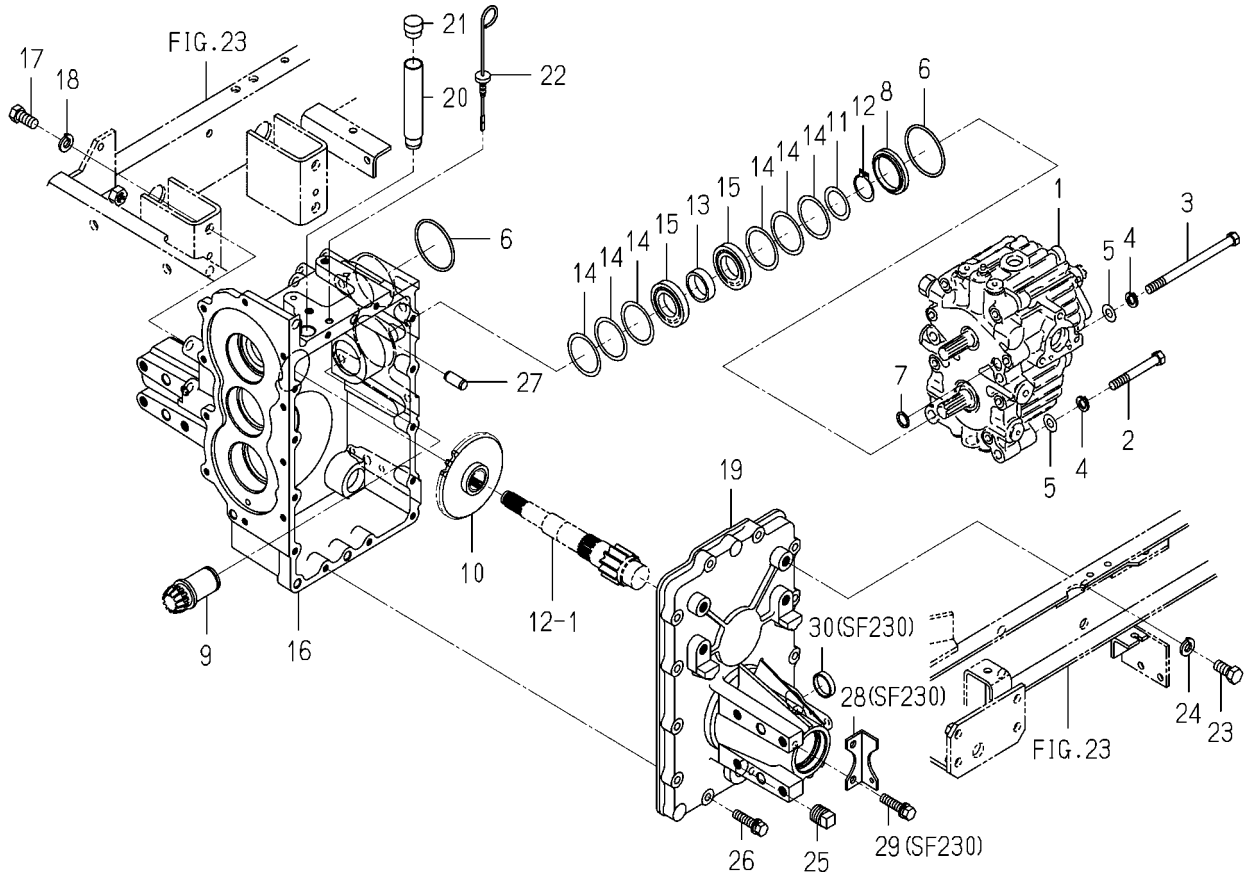

1689-201 -0100,1689-201A-0100

KEY	PART CODE	DESCRIPTION	SPC	TYPE OF MODEL SF200 T42M	TYPE OF MODEL SF230 F42M	ITC	COL	GRP	REMARKS
30	3625-540-004-00	CAP,BLANK/30	*		1				

FIG. 12 BRAKE SYSTEM

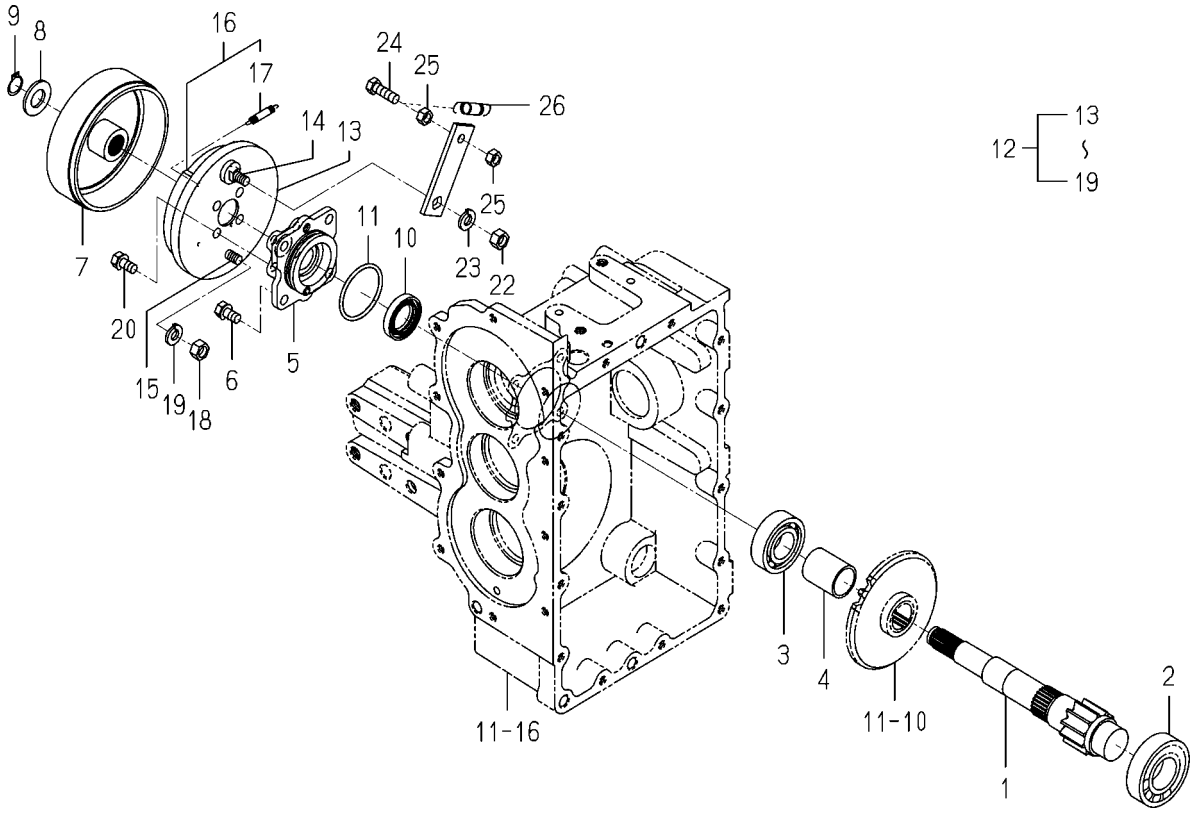

1689-202 -0100

KEY	PART CODE	DESCRIPTION	SPC	TYPE OF MODEL SF200 T42M	SF230 F42M	ITC	COL	GRP	REMARKS
1	1689-202-001-10	SHAFT/BRAKE	*	1	1				
2	V600-110-620-60	BEARING,RB/6206	*	1	1				
3	V600-110-620-50	BEARING,RB/6205	*	1	1				
4	1689-202-005-00	HUB/25X30X37	*	1	1				
5	1689-202-002-00	METAL/BRAKE	*	1	1				
6	V211-260-801-60	BOLT,SEMS (S) M8X16	*	4	4				
7	1689-202-004-00	DRUM/BRAKE	*	1	1				
8	V411-260-016-00	WASHER / M16	*	1	1				
9	V704-140-016-00	RING,SNAP/16 C	*	1	1				
10	V744-125-400-70	SEAL,OIL/TC25407	*	1	1				
11	V721-103-105-00	O-RING/G50	*	1	1				
12	1689-202-200-00	BRAKE/110 ASSY	*	1	1				
13	1689-202-201-00	PLATE/BACKING	*	1	1				
14	1689-202-202-00	SHAFT/CAM	*	1	1				
15	1689-202-203-00	PIN/ANCHOR	*	1	1				
16	1689-202-211-00	LINING	*	2	2				
17	1689-202-212-00	SPRING	*	2	2				
18	V304-260-010-00	NUT	*	1	1				
19	V401-160-010-00	WASHER,SP/M10	*	1	1				
20	V211-260-801-60	BOLT,SEMS (S) M8X16	*	4	4				
21	1689-202-006-10	PLATE/I/25X84	*	1	1				
22	V304-260-010-00	NUT	*	1	1				
23	V401-160-010-00	WASHER,SP/M10	*	1	1				
24	V201-260-802-50	BOLT/M 8X25	*	1	1				
25	V304-260-008-00	NUT/M 8	*	2	2				
26	1426-621-018-00	SPRING,TENSION	*	1	1				

FIG. 13 PTO DRIVE SYSTEM

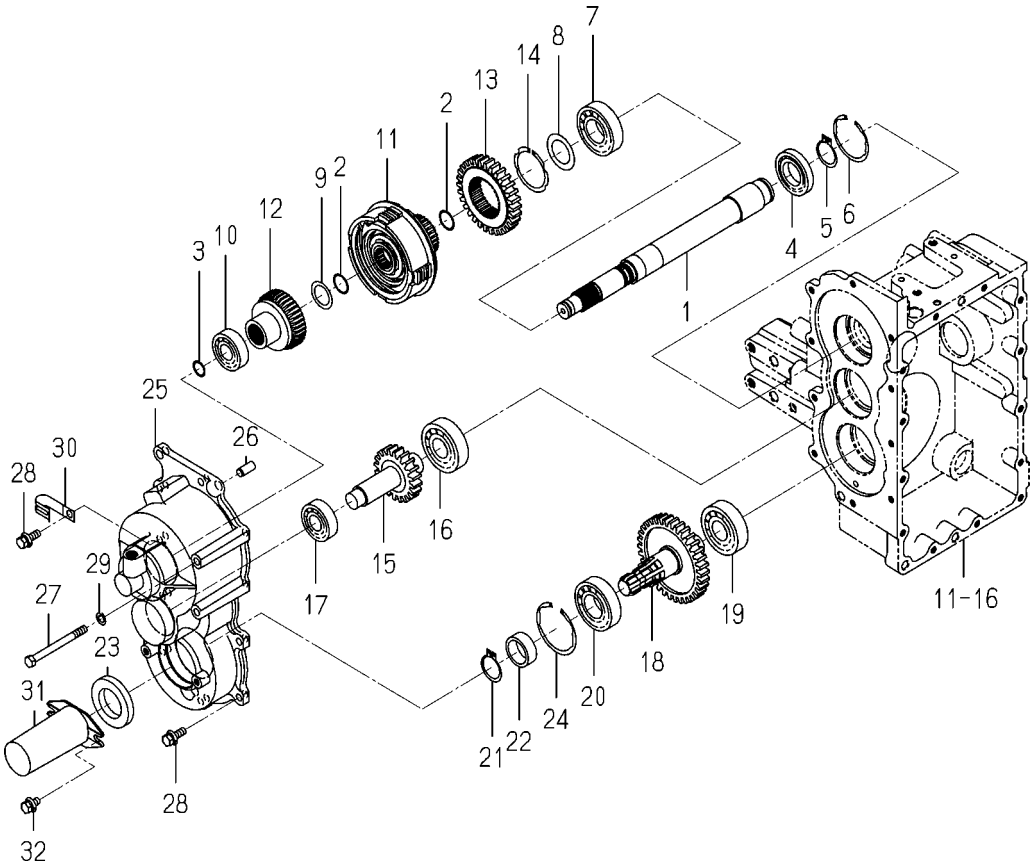

1689-203 -0100

KEY	PART CODE	DESCRIPTION	SPC	TYPE OF MODEL SF200 T42M	TYPE OF MODEL SF230 F42M	ITC	COL	GRP	REMARKS
1	1689-203-210-10	SHAFT/PTO/UPPER COMP	*	1	1				
2	1575-261-018-00	RING/25	*	2	2				
3	1560-263-014-00	RING/20	*	1	1				
4	V600-110-600-60	BEARING,RB 6006	*	1	1				
5	V704-140-030-00	RING,SNAP/30 C	*	1	1				
6	V707-140-055-00	RING/SNAP	*	1	1				
7	V600-110-620-60	BEARING,RB/6206	*	1	1				
8	1560-208-018-40	WASHER/30X46X2	*	1	1				
9	1593-203-058-20	COLLAR/25X35X02	*	1	1				
10	V600-110-620-40	BEARING,RB/6204	*	1	1				
11	1689-203-200-00	CLUTCH/PTO ASSY	*	1	1				FIG 051
12	1689-203-005-00	GEAR/SPUR/38/PTO	*	1	1				
13	1689-203-001-00	GEAR/SPUR/30	*	1	1				
14	V706-140-050-00	RING/SNAP	*	1	1				
15	1689-203-004-00	GEAR/SPUR/20	*	1	1				
16	V600-110-630-50	BEARING,RB/6305	*	1	1				
17	V600-110-620-40	BEARING,RB/6204	*	1	1				
18	1689-203-007-00	SHAFT/PTO	*	1	1				
19	V600-110-630-50	BEARING,RB/6305	*	1	1				
20	V600-110-620-60	BEARING,RB/6206	*	1	1				
21	V704-140-030-00	RING,SNAP/30 C	*	1	1				
22	1614-244-002-00	SLEEVE	*	1	1				
23	1614-244-005-00	SEAL/OIL	*	1	1				
24	V707-140-062-00	RING/SNAP	*	1	1				
25	1689-203-009-20	CASE/PTO	*	1	1				
26	V523-101-002-20	PIN	*	2	2				
27	V201-260-809-50	BOLT/M 8X95	*	2	2				
28	V211-260-802-50	BOLT/S	*	8	8				
29	V401-160-008-00	WASHER,SP/M 8	*	2	2				
30	1425-621-004-00	CLAMP,HARNESS	*	1	1				

FIG. 13 PTO DRIVE SYSTEM

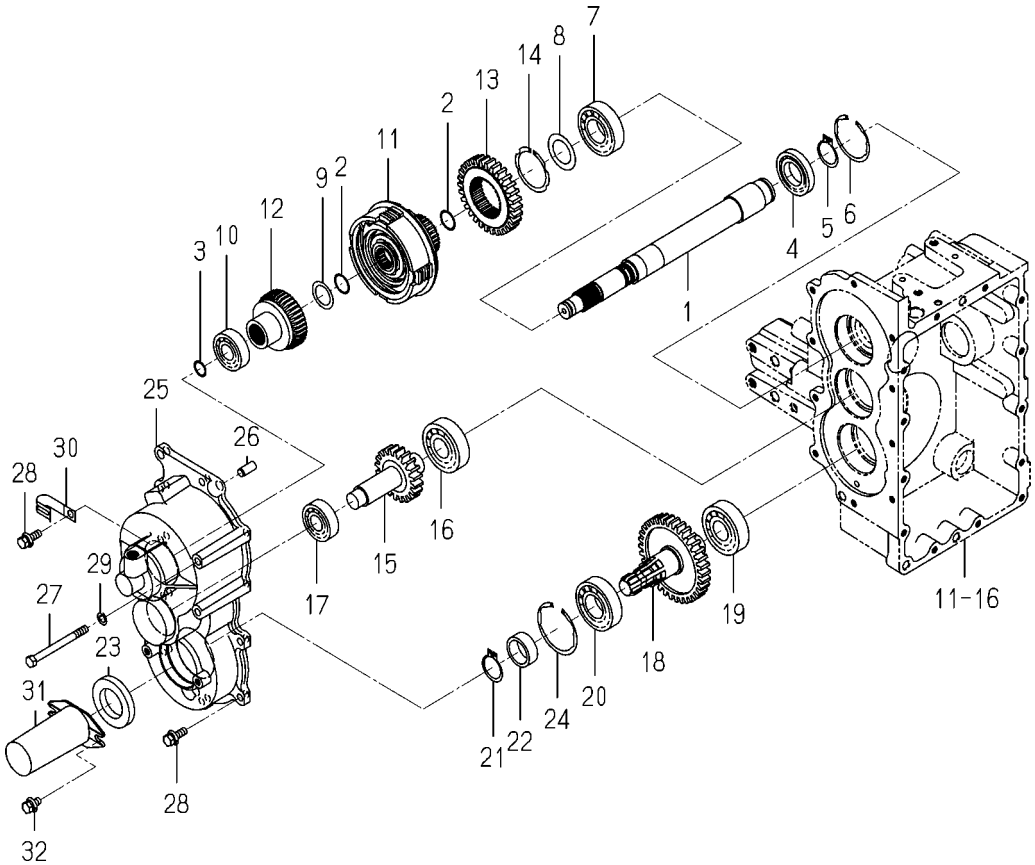

1689-203 -0100

KEY	PART CODE	DESCRIPTION	SPC	TYPE OF MODEL SF200 T42M	TYPE OF MODEL SF230 F42M	ITC	COL	GRP	REMARKS
31	1444-314-009-10	CAP,PTO SHAFT	*	1	1				
32	V211-360-801-60	BOLT,SEMS (SP)	*	2	2				

FIG. 14 WHEEL SFAFT SYSTEM

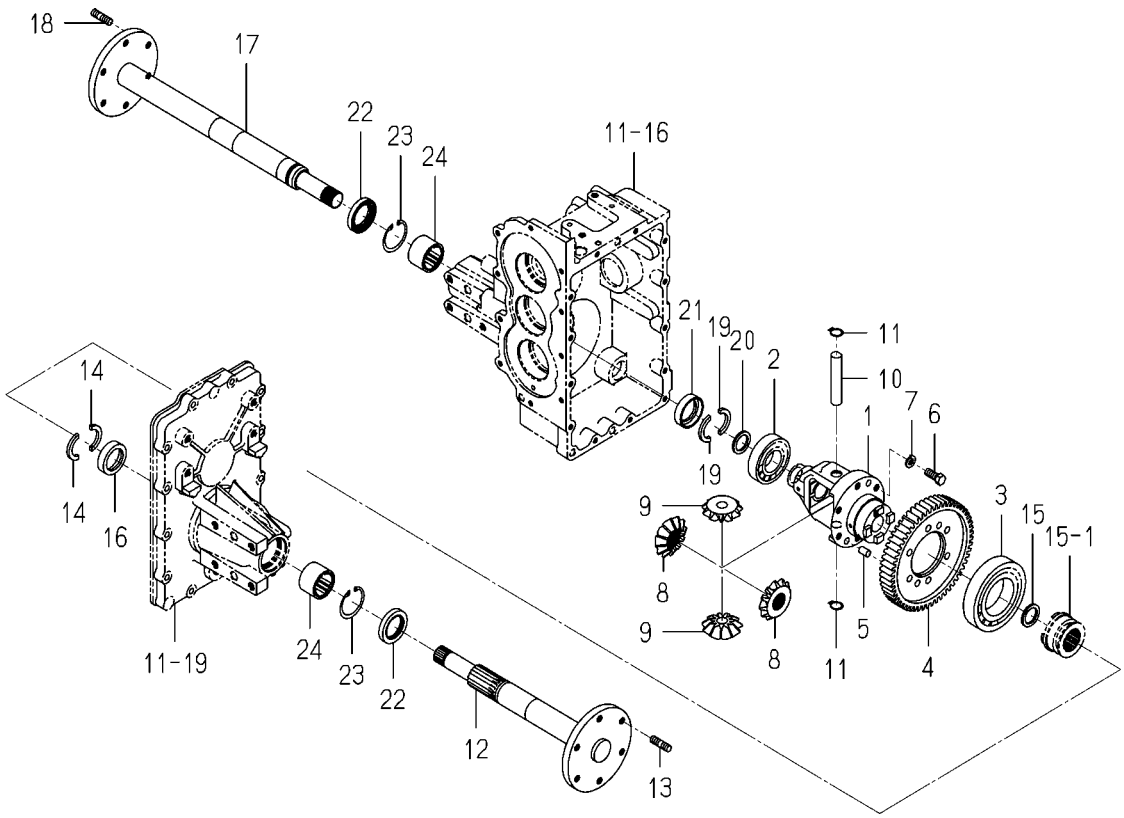

1689-204B-0100

KEY	PART CODE	DESCRIPTION	SPC	TYPE OF MODEL SF200 T42M	TYPE OF MODEL SF230 F42M	ITC	COL	GRP	REMARKS
1	1689-204-001-10	CASE/DIFF	*	1	1				
2	V600-110-620-70	BEARING,RB/6207	*	1	1				
3	V600-110-601-20	BEARING,RB/6012	*	1	1				
4	1689-204-006-00	GEAR/SPUR/56	*	1	1				
5	1593-304-008-00	PIN (10X18)	*	2	2				
6	1593-304-054-10	BOLT/M10X1.25X25	*	6	6				
7	V401-160-010-00	WASHER,SP/M10	*	6	6				
8	1593-304-053-10	GEAR,BEVEL/12	*	2	2				
9	1593-304-055-10	PINION,BEVEL/11	*	2	2				
10	1689-204-003-00	PIN/DEFFPINION	*	1	1				
11	V705-140-017-00	RING,SNAP/17 C	*	2	2				
12	1689-204-310-00	SHAFT/WHEEL/LH COMP	*	1	1				
13	V251-341-002-00	BOLT/M10X20	*	2	2				
14	1705-207-001-00	COLLAR/WHEEL/THRUST	*	2	2				
15	1593-307-052-10	COLLAR/26X35X03	*	1	1				
16	1705-207-002-20	COLLAR/THRUST/COVER	*	1	1				
17	1689-204-320-00	SHAFT/WHEEL/RH COMP	*	1	1				
18	V251-341-002-00	BOLT/M10X20	*	2	2				
19	1705-207-001-00	COLLAR/WHEEL/THRUST	*	2	2				
20	1593-307-052-10	COLLAR/26X35X03	*	1	1				
21	1705-207-002-20	COLLAR/THRUST/COVER	*	1	1				
22	V744-135-520-80	SEAL,OIL/TC35528	*	2	2				
23	V705-140-047-00	RING,SNAP/47 C	*	2	2				
24	1689-204-008-00	BEARING/NEEDLE	*	2	2				

FIG. 15 DIFF-LOCK AND DIFF-PEDAL SYSTEM (SF200)

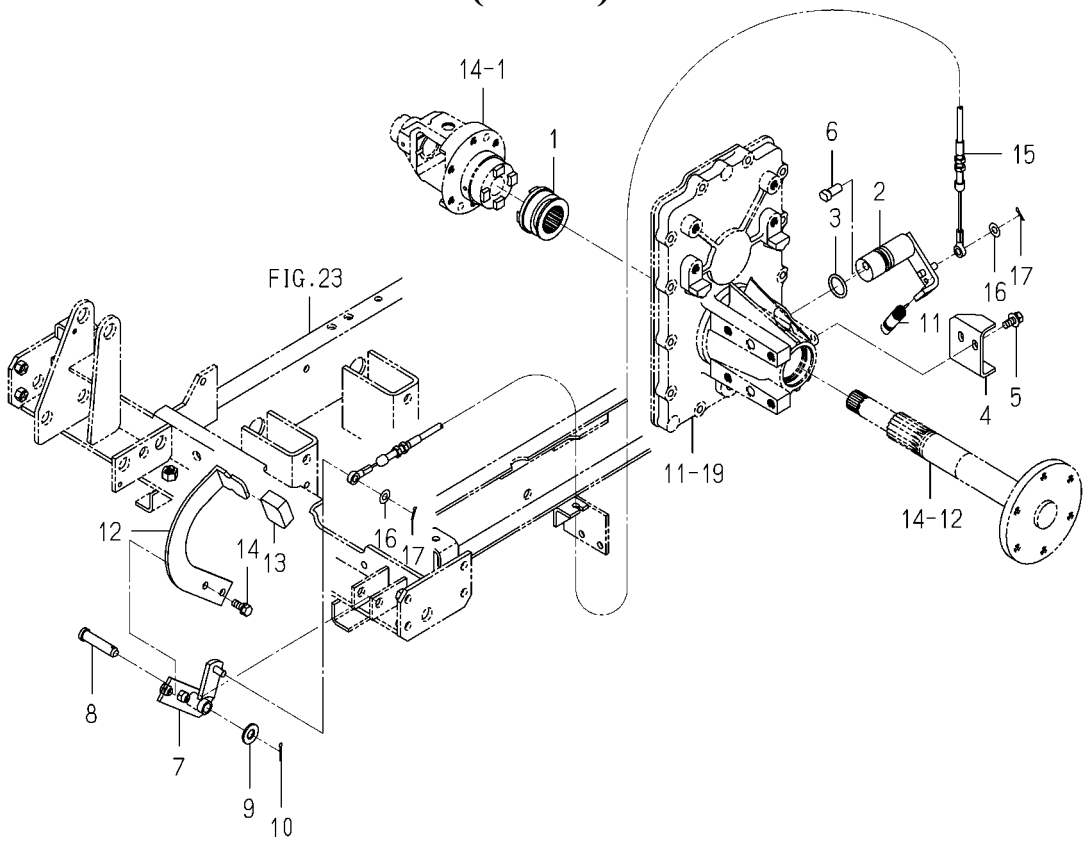

1689-205 -0100,1689-206 -0100

KEY	PART CODE	DESCRIPTION	SPC	TYPE OF MODEL SF200 T42M	SF230 F42M	ITC	COL	GRP	REMARKS
1	1689-205-001-10	CLUTCH/DIFF	*	1					
2	1689-205-210-30	ARM/DIFF COMP	*	1					
3	V720-103-502-40	O-RING/P24	*	1					
4	1689-205-004-20	PLATE/U/55X62	*	1					
5	V211-360-802-00	BOLT(SP) M8X20	*	2					
6	1689-205-005-10	PIN/10X21	*	1					
7	1689-206-210-10	PEDAL/DIFF COMP	*	1					
8	7963-611-003-00	PIN/12X48	*	1					
9	V411-260-012-00	WASHER /M12	*	1					
10	V500-163-002-00	PIN,SPLIT/3 X20	*	1					
11	1104-410-007-00	SPRING/HE074	*	1					
12	1689-206-002-00	PEDAL/DIFF	*	1					
13	1593-101-012-00	STOPPER	*	1					
14	V211-260-802-00	BOLT,SEMS (S)	*	2					
15	1689-206-001-00	CABLE/DIFF ASSY	*	1					
16	V411-260-008-00	WASHER,PL/M 8	*	2					
17	V500-162-501-50	PIN,SPLIT/2.5X15	*	2					

FIG. 16 HST UNLOAD SYSTEM

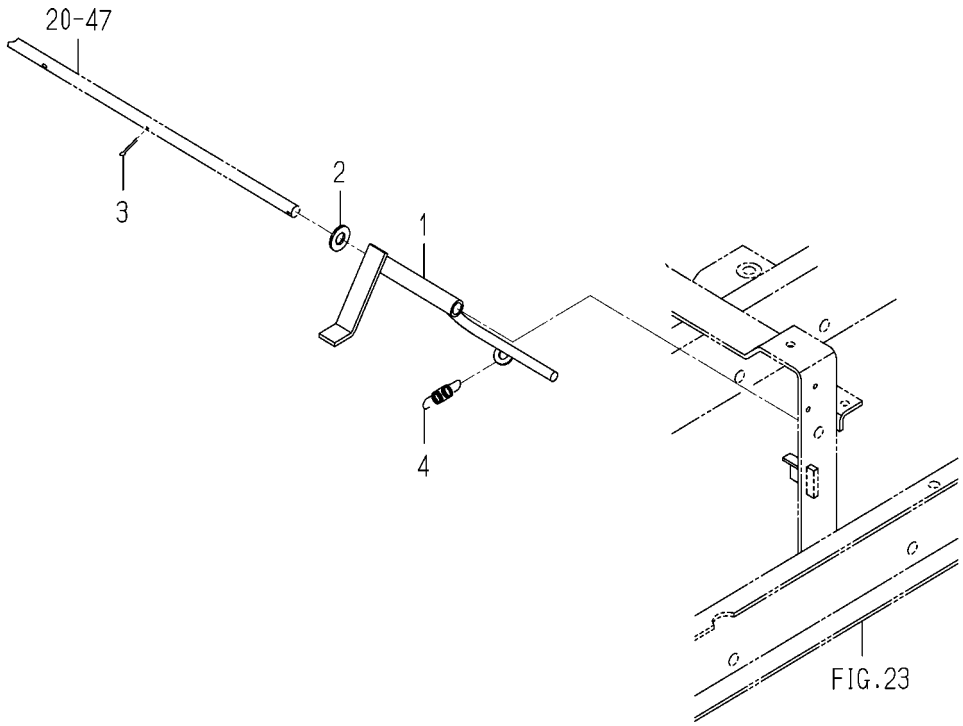

1689-208 -0100

KEY	PART CODE	DESCRIPTION	SPC	TYPE OF MODEL SF200 T42M	TYPE OF MODEL SF230 F42M	ITC	COL	GRP	REMARKS
1	1689-208-210-10	LEVER/UNLOAD COMP	*	1	1				
2	V411-260-012-00	WASHER /M12	*	1	1				
3	V500-163-002-00	PIN,SPLIT/3 X20	*	1	1				
4	1480-117-002-00	SPRING,TENSION (52)	*	1	1				

FIG. 17 BRAKE PEDAL,PARKING BRAKE SYSTEM

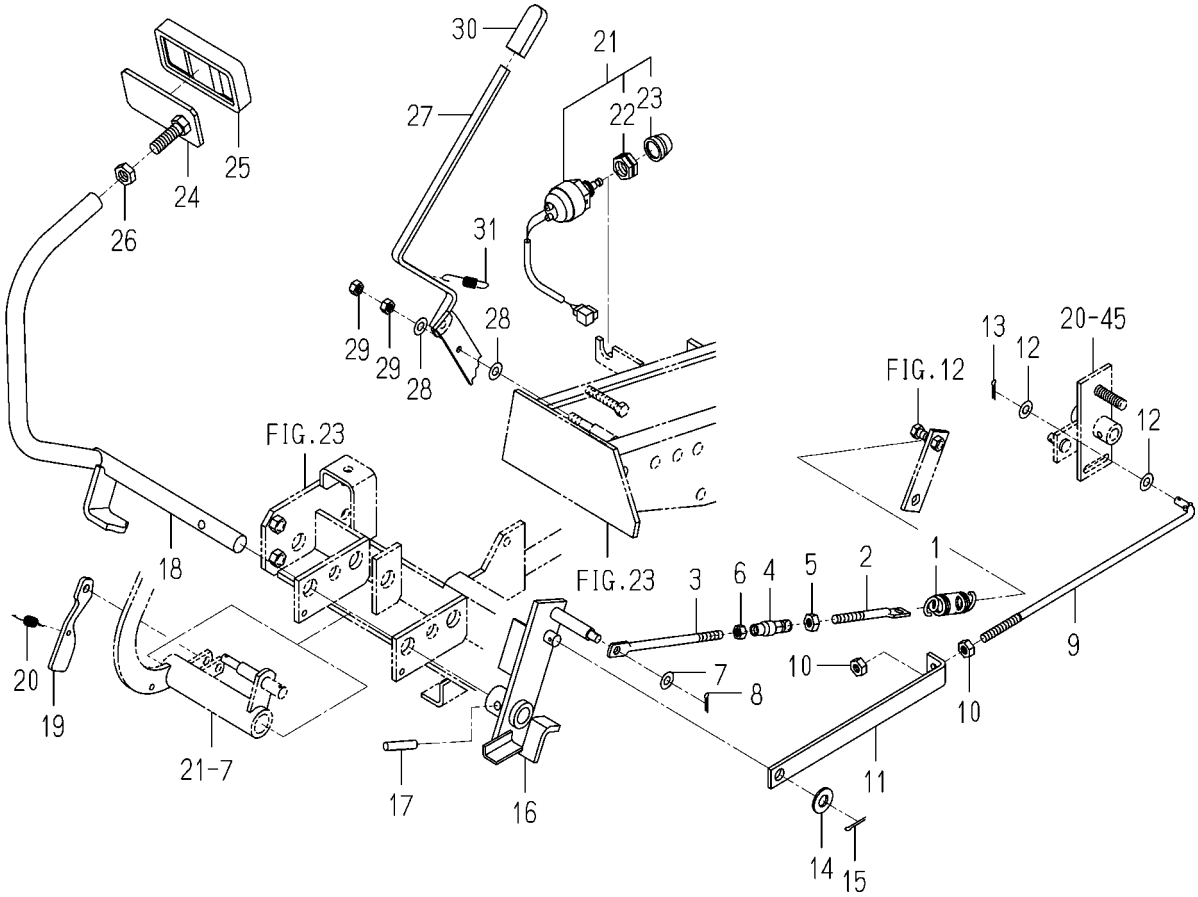

1689-212 -0100,1689-213A-0100

KEY	PART CODE	DESCRIPTION	SPC	TYPE OF MODEL SF200 T42M	TYPE OF MODEL SF230 F42M	ITC	COL	GRP	REMARKS
1	3256-104-014-10	SPRING TENSION	*	1	1				
2	3662-223-002-00	ROD/TENSION/M08X110	*	1	1				
3	1608-312-002-10	ROD(M08X160)	*	1	1				
4	1444-122-002-00	TURNBUCKLE/M8	*	1	1				
5	V304-260-008-00	NUT/M 8	*	1	1				
6	1560-132-007-30	NUT/M8	*	1	1				
7	V411-260-008-00	WASHER,PL/M 8	*	1	1				
8	V500-163-001-50	PIN,SPLIT/3 X15	*	1	1				
9	1689-212-003-00	ROD/RETURN	*	1	1				
10	V304-260-008-00	NUT/M 8	*	2	2				
11	1689-212-002-00	PLATE/L/22X252	*	1	1				
12	V411-260-008-00	WASHER,PL/M 8	*	2	2				
13	V500-163-001-50	PIN,SPLIT/3 X15	*	1	1				
14	V411-260-012-00	WASHER /M12	*	1	1				
15	V500-163-002-00	PIN,SPLIT/3 X20	*	1	1				
16	1689-212-210-20	ARM/BRAKE COMP	*	1	1				
17	V530-240-803-60	PIN SLITTED	*	1	1				
18	1689-212-220-20	ARM/BRAKE COMP	*	1	1				
19	1689-212-011-00	PLATE/HSTLOCK/E3	*	1	1				
20	1414-312-002-00	SPRING,TENSION/53	*	1	1				
21	1560-664-250-00	SWITCH/PUSH SET	*	1	1				
22	1560-664-252-00	NUT	*	1	1				
23	1560-664-253-00	BOOT	*	1	1				
24	1689-212-240-00	PEDAL/BRAKE COMP	*	1	1				
25	1636-313-011-10	PAD/BRAKE	*	1	1				
26	1427-433-023-00	NUT/LH THREAD	*	1	1				
27	1689-213-210-30	LEVER/PARKING COMP	*	1	1				
28	V411-260-008-00	WASHER,PL/M 8	*	2	2				
29	V304-260-008-00	NUT/M 8	*	2	2				
30	2171-213-002-00	GRIP/04X12X50	*	1	1				

FIG. 17 BRAKE PEDAL,PARKING BRAKE SYSTEM

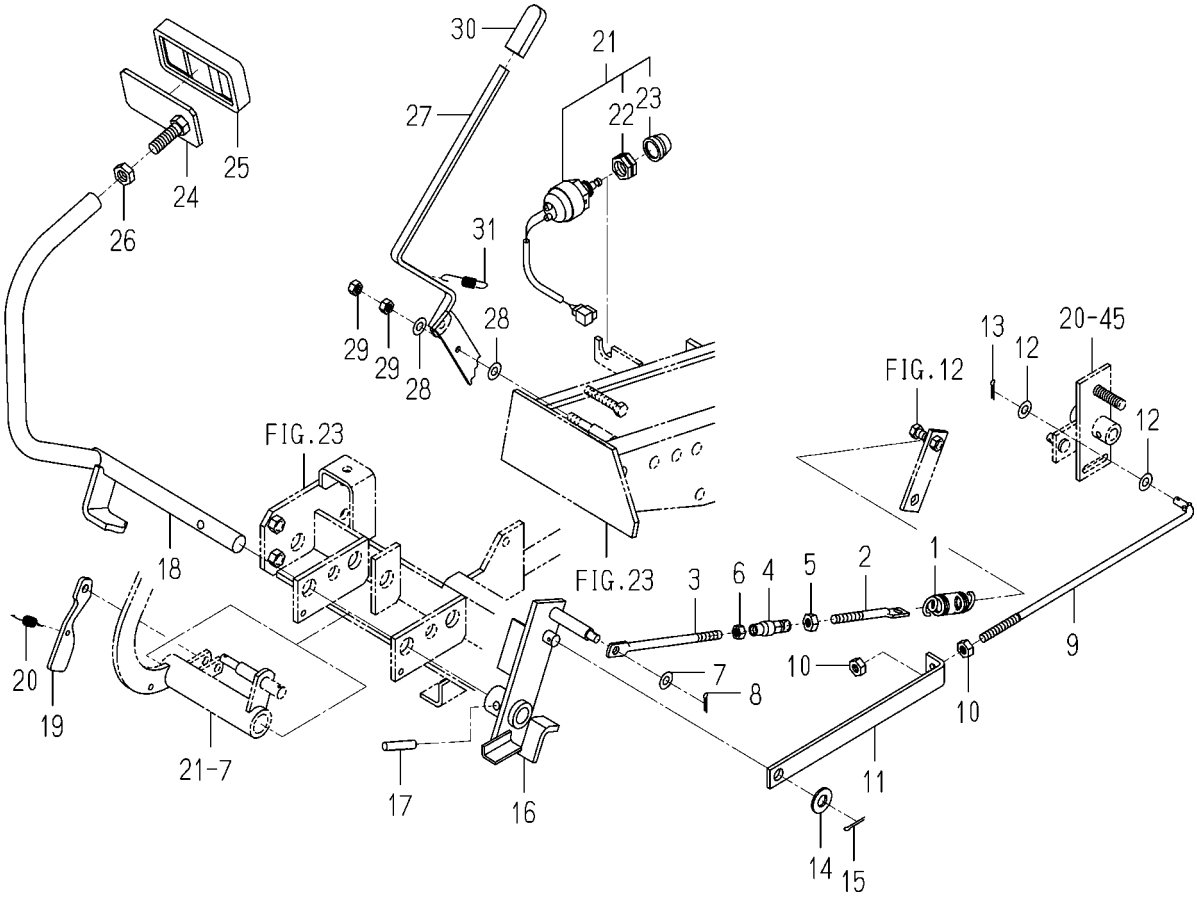

1689-212 -0100,1689-213A-0100

KEY	PART CODE	DESCRIPTION	SPC	TYPE OF MODEL SF200 T42M	TYPE OF MODEL SF230 F42M	ITC	COL	GRP	REMARKS
31	1414-312-002-00	SPRING,TENSION/53	*	1	1				

FIG. 18 PTO LEVER SYSTEM

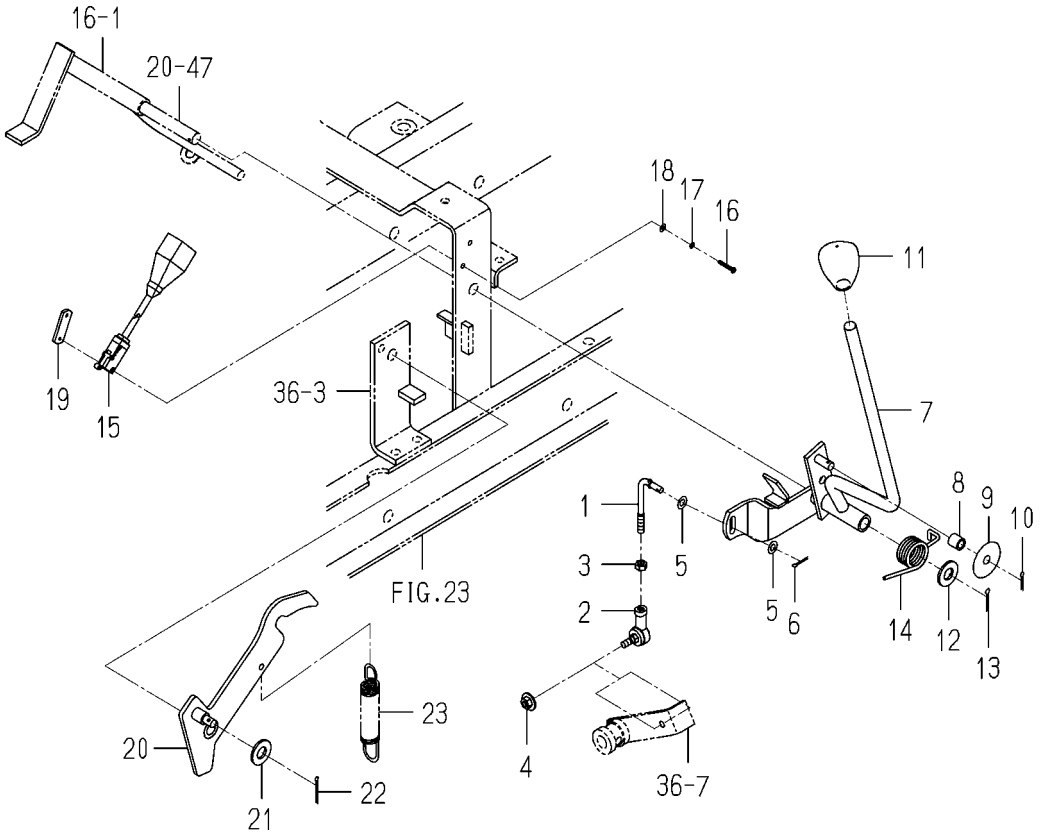

1689-221A-0100

KEY	PART CODE	DESCRIPTION	SPC	TYPE OF MODEL SF200 T42M	TYPE OF MODEL SF230 F42M	ITC	COL	GRP	REMARKS
1	1689-221-001-00	ROD/SPOOL/PTO	*	1	1				
2	1689-221-240-00	JOINT/BALL/RH ASSY	*	1	1				
3	V301-260-006-00	NUT/M 6	*	1	1				
4	V360-260-006-00	NUT/M6	*	1	1				
5	V411-260-006-00	WASHER / M6	*	2	2				
6	V500-162-501-50	PIN,SPLIT/2.5X15	*	1	1				
7	1689-221-310-10	ARM/PTO COMP	*	1	1				
8	1689-272-002-00	HUB/08X12X12	*	1	1				
9	1689-221-013-00	WASHER/09X38X02	*	1	1				
10	V500-162-501-50	PIN,SPLIT/2.5X15	*	1	1				
11	1594-285-004-00	GRIP/PTO	*	1	1				
12	V411-260-012-00	WASHER /M12	*	1	1				
13	V500-163-002-00	PIN,SPLIT/3 X20	*	1	1				
14	1689-221-011-00	SPRING/HT025	*	1	1				
15	3676-215-320-00	SWITCH/RIMIT	*	1	1				
16	V111-163-002-00	SCREW M3X20	*	2	2				
17	V401-160-003-00	WASHER,SP/M 3	*	2	2				
18	V411-260-003-00	WASHER/M3	*	2	2				
19	3664-276-001-00	PLATE/IRX13X35	*	1	1				
20	1689-221-320-20	CUM/LOCK/PTO COMP	*	1	1				
21	V411-260-012-00	WASHER /M12	*	1	1				
22	V500-162-502-50	PIN,SPLIT/2.5X25	*	1	1				
23	1673-314-001-00	SPRING/HE106	*	1	1				

FIG. 19 FRONT WHEEL SYSTEM

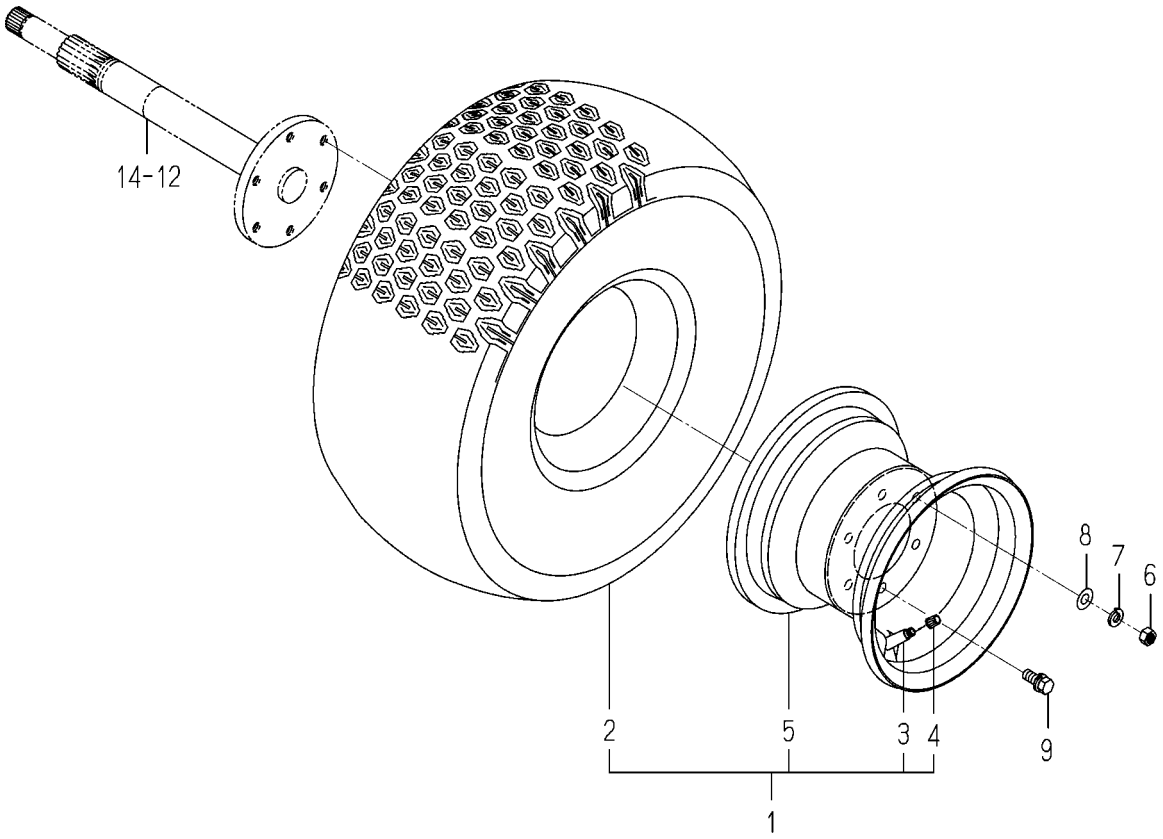

1689-230 -0100

KEY	PART CODE	DESCRIPTION	SPC	TYPE OF MODEL SF200 T42M	TYPE OF MODEL SF230 F42M	ITC	COL	GRP	REMARKS
1	1689-230-200-10	WHEEL/FRONT ASSY	*	2	2		6G		
2	1689-230-211-00	TIRE/TURF/20-8	*	2	2				
3	1386-241-002-00	BULB	*	2	2				
4	V999-200-003-00	CAP,TIRE VALVE	*	2	2				
5	1689-230-220-10	RIM/WHEEL COMP	*	2	2		6G		
6	V304-460-010-00	NUT/M10	*	4	4				
7	V401-160-010-00	WASHER,SP/M10	*	4	4				
8	V411-260-010-00	WASHER/M10	*	4	4				
9	V211-561-002-50	BOLT/M10X25	*	8	8				

FIG. 20 HST LINK SYSTEM

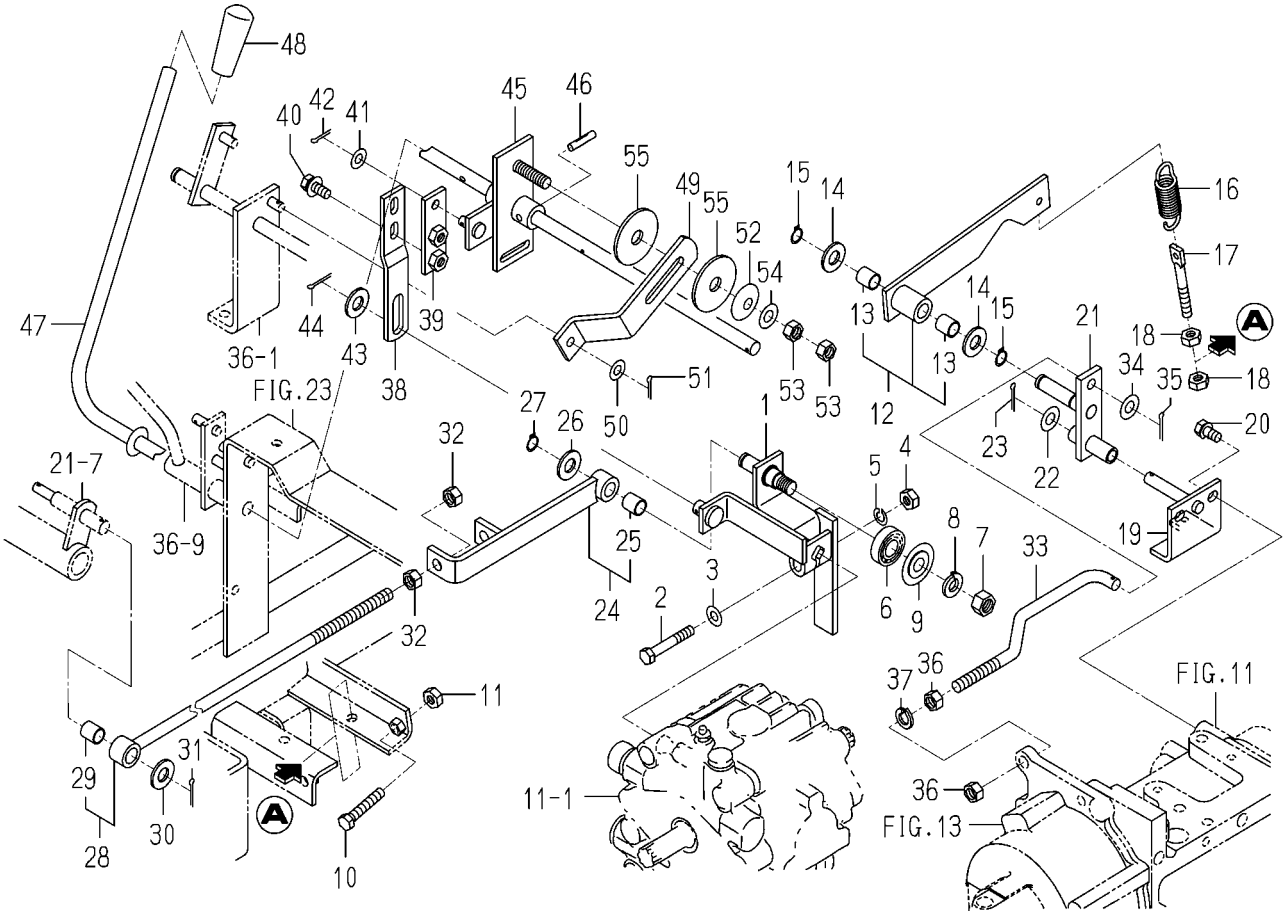

1689-271A-0100

KEY	PART CODE	DESCRIPTION	SPC	TYPE OF MODEL SF200 T42M	TYPE OF MODEL SF230 F42M	ITC	COL	GRP	REMARKS
1	1689-271-210-10	ARM/TRUNNION COMP	*	1	1				
2	V201-360-805-00	BOLT/M8X50	*	1	1				
3	V411-260-008-00	WASHER,PL/M 8	*	1	1				
4	V304-260-008-00	NUT/M 8	*	1	1				
5	V401-160-008-00	WASHER,SP/M 8	*	1	1				
6	V600-150-600-20	BEARING,RB/6002SS	*	1	1				
7	V304-260-012-00	NUT/M12	*	1	1				
8	V401-160-012-00	WASHER,SP/M12	*	1	1				
9	1689-271-006-00	WASHER/38X12X2	*	1	1				
10	V201-260-804-50	BOLT/M 8X45	*	2	2				
11	V304-260-008-00	NUT/M 8	*	2	2				
12	1689-271-310-00	ARM/NEUTRAL ASSY	*	1	1				
13	1689-271-311-00	BUSH/12X14X15	*	2	2				
14	V411-260-012-00	WASHER /M12	*	2	2				
15	V704-140-012-00	RING,SNAP/12 C	*	2	2				
16	1105-410-003-00	SPRING/HE067	*	1	1				
17	3104-210-213-00	ROD/M08X67	*	1	1				
18	V304-260-008-00	NUT/M 8	*	2	2				
19	1689-271-230-00	PLATE/L/60X56 COMP	*	1	1				
20	V211-360-801-60	BOLT,SEMS (SP)	*	2	2				
21	1689-271-240-10	PLATE/ADJUST COMP	*	1	1				
22	V411-260-010-00	WASHER/M10	*	1	1				
23	V500-163-002-00	PIN,SPLIT/3 X20	*	1	1				
24	1689-271-320-10	ROD/HST/A ASSY	*	1	1				
25	1689-271-311-00	BUSH/12X14X15	*	1	1				
26	V411-260-012-00	WASHER /M12	*	1	1				
27	V704-140-012-00	RING,SNAP/12 C	*	1	1				
28	1689-271-330-10	ROD/HST/B ASSY	*	1	1				
29	1689-271-311-00	BUSH/12X14X15	*	1	1				
30	V411-260-012-00	WASHER /M12	*	1	1				

FIG. 20 HST LINK SYSTEM

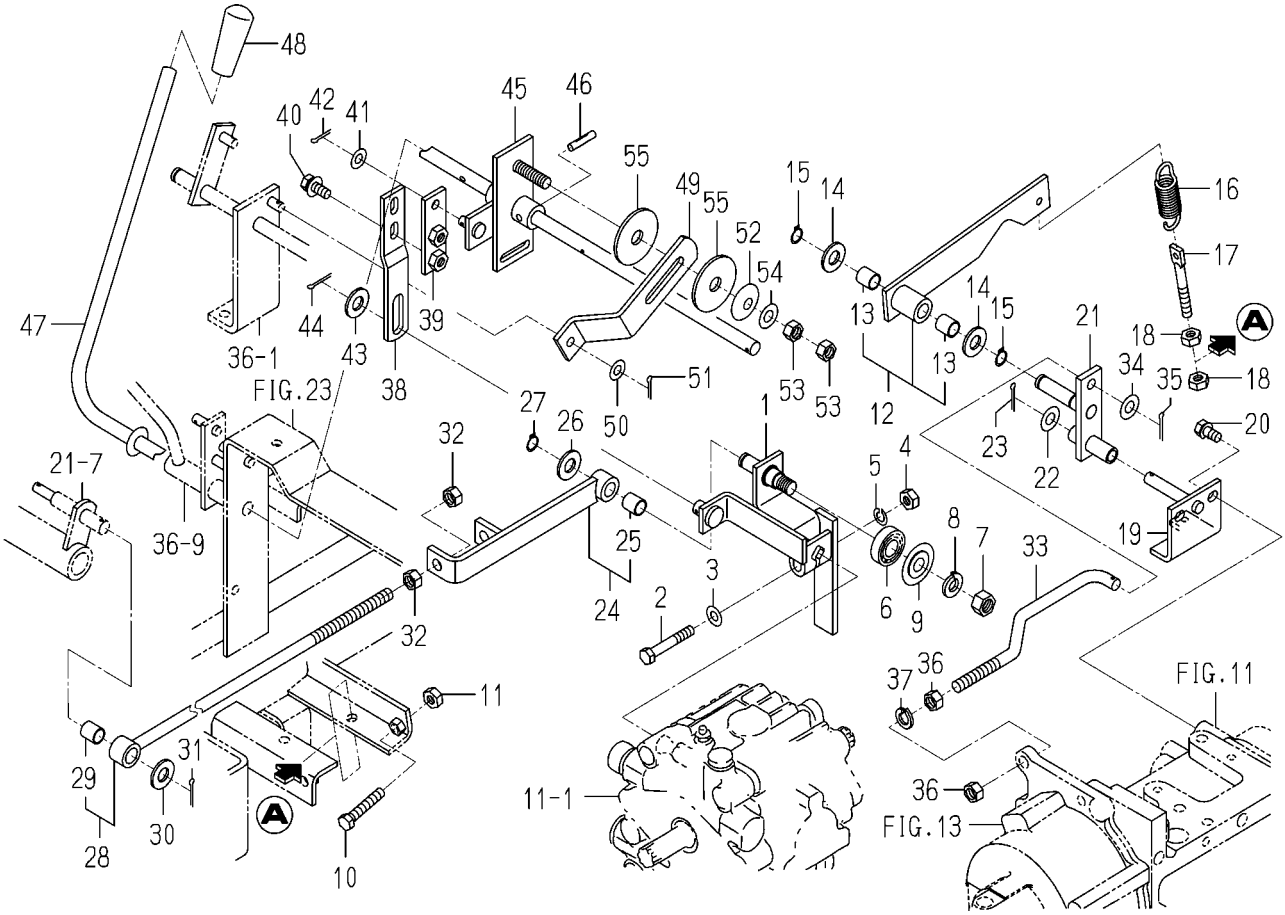

1689-271A-0100

KEY	PART CODE	DESCRIPTION	SPC	TYPE OF MODEL SF200 T42M	TYPE OF MODEL SF230 F42M	ITC	COL	GRP	REMARKS
31	V500-163-002-00	PIN,SPLIT/3 X20	*	1	1				
32	V304-260-010-00	NUT	*	2	2				
33	1689-271-003-10	ROD/HST	*	1	1				
34	V411-260-010-00	WASHER/M10	*	1	1				
35	V500-163-002-00	PIN,SPLIT/3 X20	*	1	1				
36	V304-260-010-00	NUT	*	2	2				
37	V401-160-010-00	WASHER,SP/M10	*	1	1				
38	1689-271-001-20	PLATE/Z/25X145	*	1	1				
39	1689-271-290-00	PLATE/I/25X75 COMP	*	1	1				
40	V211-660-802-00	BOLT/8X20	*	2	2				
41	V411-260-008-00	WASHER,PL/M 8	*	1	1				
42	V500-163-001-50	PIN,SPLIT/3 X15	*	1	1				
43	V411-260-012-00	WASHER /M12	*	1	1				
44	V500-163-002-00	PIN,SPLIT/3 X20	*	1	1				
45	1689-271-250-30	ARM/CRUISE COMP	*	1	1				
46	V530-160-602-80	PIN/GROOVE	*	1	1				
47	1689-271-350-00	LEVER/CRUISE COMP	*	1	1				
48	1636-271-011-00	GRIP/12X60	*	1	1				
49	1689-271-002-00	PLATE/Z/32X140	*	1	1				
50	V411-260-008-00	WASHER,PL/M 8	*	1	1				
51	V500-163-001-50	PIN,SPLIT/3 X15	*	1	1				
52	1593-117-003-10	SPRING,DISK	*	1	1				
53	V304-260-010-00	NUT	*	2	2				
54	V411-260-010-00	WASHER/M10	*	1	1				
55	1600-505-007-00	LINING/13X50X3	*	2	2				

FIG. 21 HST PEDAL SYSTEM

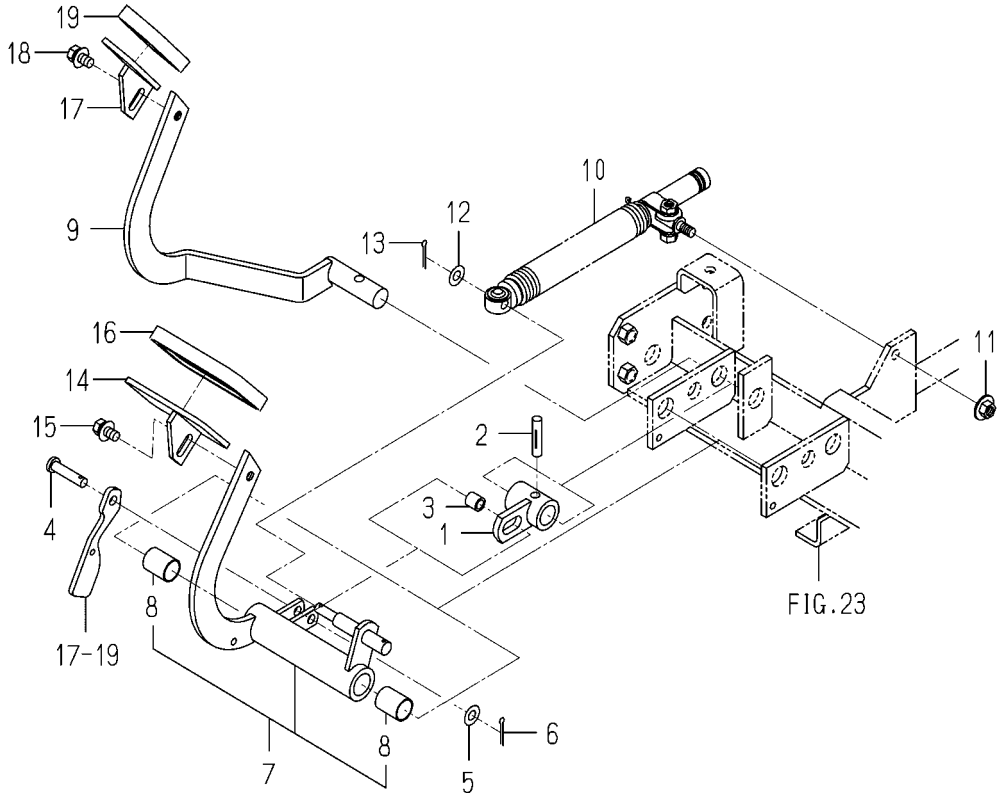

1689-272B-0100

KEY	PART CODE	DESCRIPTION	SPC	TYPE OF MODEL SF200 T42M	SF230 F42M	ITC	COL	GRP	REMARKS
1	1689-272-210-00	HUB/HST/R COMP	*	1	1				
2	V530-240-803-60	PIN SLITTED	*	1	1				
3	1689-272-002-00	HUB/08X12X12	*	1	1				
4	1593-606-006-10	PIN/8X36	*	1	1				
5	V411-260-008-00	WASHER,PL/M 8	*	1	1				
6	V500-163-001-50	PIN,SPLIT/3 X15	*	1	1				
7	1689-272-400-00	ARM/HST/F ASSY	*	1	1				
8	1689-272-201-00	BUSH/18X20X25	*	2	2				
9	1689-272-330-00	ARM/HST/R COMP	*	1	1				
10	1600-240-550-10	DAMPER/OIL ASSY	*	1	1				
11	V362-260-008-00	NUT/WASHER	*	1	1				
12	V411-260-008-00	WASHER,PL/M 8	*	1	1				
13	V500-163-002-00	PIN,SPLIT/3 X20	*	1	1				
14	1689-272-260-00	PEDAL/HST/F COMP	*	1	1				
15	V211-360-801-60	BOLT,SEMS (SP)	*	1	1				
16	1608-207-014-00	PAD (HST)	*	1	1				
17	1689-272-240-00	PEDAL/HST/RH COMP	*	1	1				
18	V211-360-801-60	BOLT,SEMS (SP)	*	1	1				
19	1620-272-051-00	PAD	*	1	1				

FIG. 22 HST PIPING SYSTEM

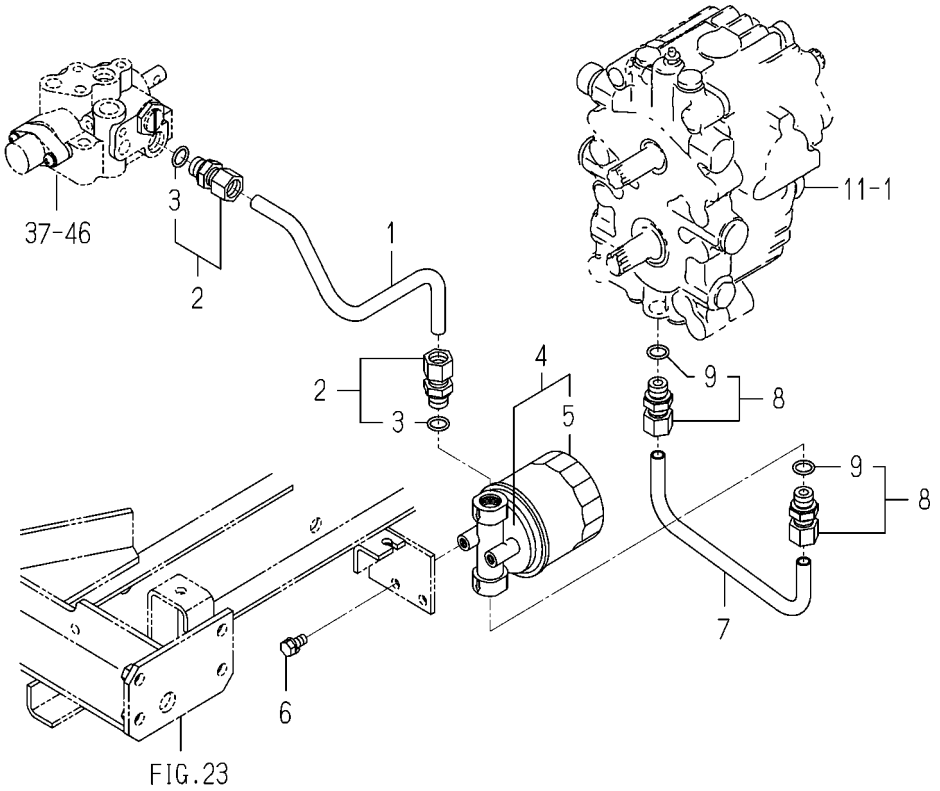

1689-273 -0100

KEY	PART CODE	DESCRIPTION	SPC	TYPE OF MODEL SF200 T42M	TYPE OF MODEL SF230 F42M	ITC	COL	GRP	REMARKS
1	1689-273-003-00	PIPE/LINE/FILTER	*	1	1				
2	1689-273-210-00	ADAPTER/G3/8 ASSY	*	2	2				
3	V720-112-401-40	O-RING/P14	*	2	2				
4	P103-521-300-00	FILTER/RETURN ASSY	*	1	1				
5	P103-521-302-00	CARTRIDGE	*	1	1				
6	V211-260-801-60	BOLT,SEMS (S) M8X16	*	2	2				
7	1689-273-004-00	PIPE/HST	*	1	1				
8	1689-273-210-00	ADAPTER/G3/8 ASSY	*	2	2				
9	V720-112-401-40	O-RING/P14	*	2	2				

FIG. 23 CHASSIS SYSTEM

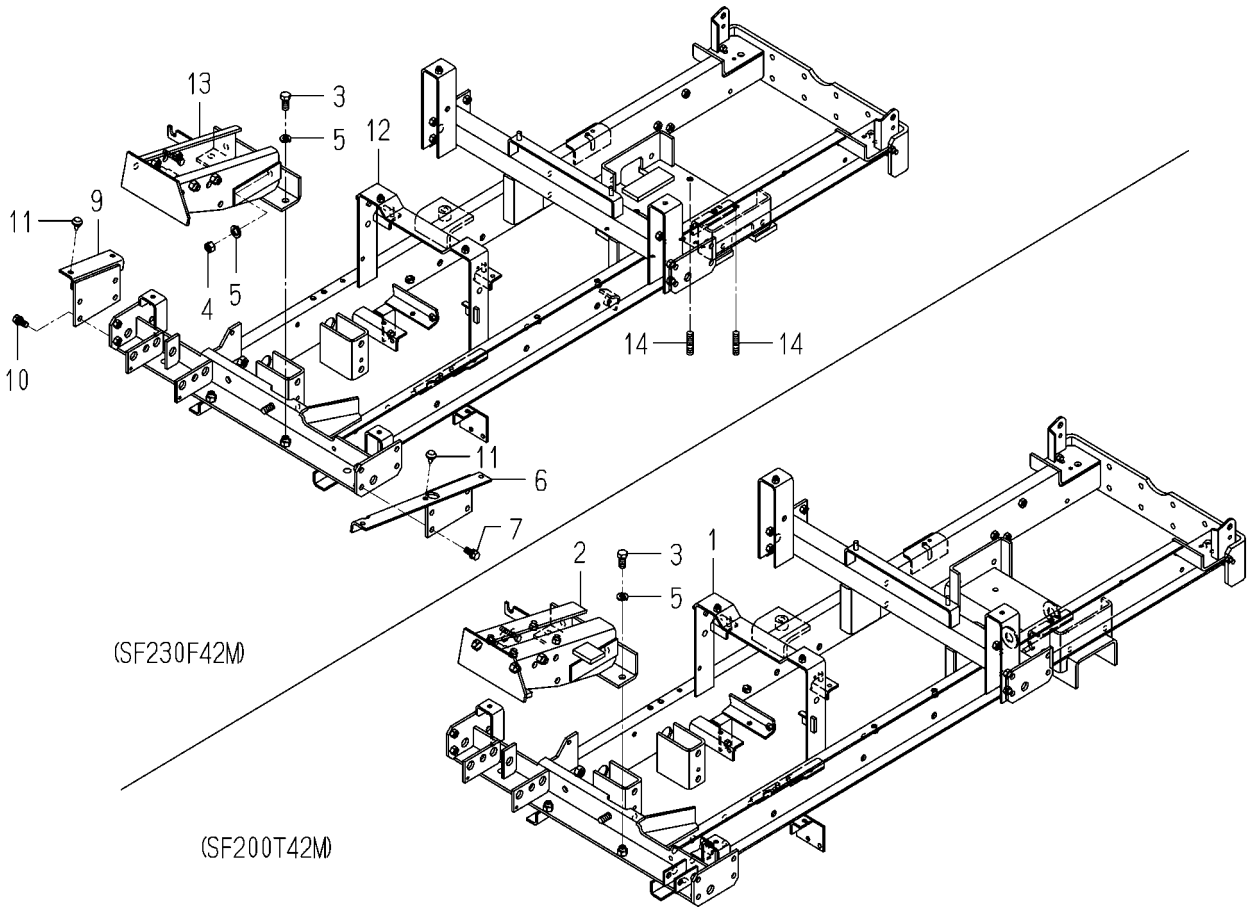

1689-301A-0100,1689-302B-0100

KEY	PART CODE	DESCRIPTION	SPC	TYPE OF MODEL SF200 T42M	TYPE OF MODEL SF230 F42M	ITC	COL	GRP	REMARKS
1	1689-301-510-00	CHASSIS/2WD COMP	*	1					
2	1689-301-350-00	BRACKET/HANDLE COMP	*	1					
3	V201-361-202-50	BOLT/M12X25	*	3	3				
4	V304-460-012-00	NUT/M12	*	1	1				
5	V401-160-012-00	WASHER,SP/M12	*	4	4				
6	1689-302-310-00	BRACKET/FENDER/LH	*	1	1				
7	V211-261-002-50	BOLT(S) M10X25	*	4	4				
8	1432-616-002-00	RUBBER,CUSHION	*	3	3				
9	1689-302-330-00	BRACKET/FENDER/RH	*	1	1				
10	V211-261-002-50	BOLT(S) M10X25	*	4	4				
11	1432-616-002-00	RUBBER,CUSHION	*	2	2				
12	1689-302-500-00	CHASSIS/4WD COMP	*		1				
13	1689-302-350-00	BRACKET/HANDLE COMP	*		1				
14	V251-341-203-0D	BOLT/STUD/SEAL	*		2				

FIG. 24 STEERING WHEEL AND STEERING SHAFT SYSTEM

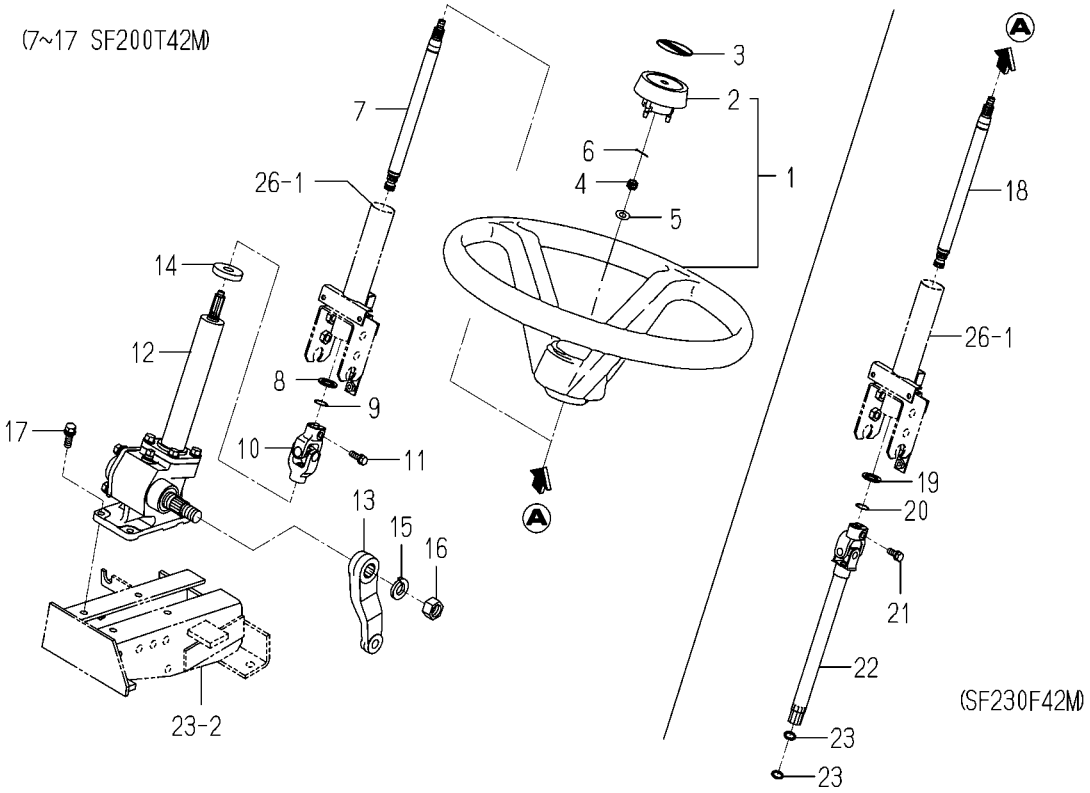

1689-401 -0100,1689-402A-0100,1689-403A-0100

KEY	PART CODE	DESCRIPTION	SPC	TYPE OF MODEL SF200 T42M	TYPE OF MODEL SF230 F42M	ITC	COL	GRP	REMARKS
1	1656-401-220-00	WHEEL/STEERING ASSY	*	1	1				
2	1656-401-222-00	CAP	*	1	1				
3	1656-901-007-00	ORNAMENT/STEERING	*	1	1				
4	V327-262-110-00	NUT/M10X1.25	*	1	1				
5	V411-260-010-00	WASHER/M10	*	1	1				
6	V500-162-002-00	PIN,SPLIT/2 X20	*	1	1				
7	1689-403-002-10	SHAFT/STEERING	*	1					
8	3752-152-007-00	WASHER	*	2					
9	V704-140-019-00	RING,SNAP 19	*	2					
10	1689-402-250-10	JOINT/UNIVERSAL	*	1					
11	V211-560-802-50	BOLT,SEMS/M8X25 7T	*	1					
12	1689-402-260-00	CASE/STEERING ASSY	*	1					FIG 052
13	1689-402-241-00	ARM/PITMAN	*	1					
14	1689-402-242-00	SEAL/DUST	*	1					
15	V401-160-020-00	WASHER,SP/M20	*	1					
16	V334-260-020-00	NUT	*	1					
17	V211-561-003-00	BOLT/M10X30	*	4					
18	1689-403-002-10	SHAFT/STEERING	*		1				
19	3752-152-007-00	WASHER	*		2				
20	V704-140-019-00	RING,SNAP 19	*		2				
21	V211-560-802-50	BOLT,SEMS/M8X25 7T	*		1				
22	1689-403-200-00	SHAFT/STEERING/ COMP	*		1				
23	V720-102-401-40	O-RING/P14	*		2				

FIG. 25 TILT LEVER SYSTEM

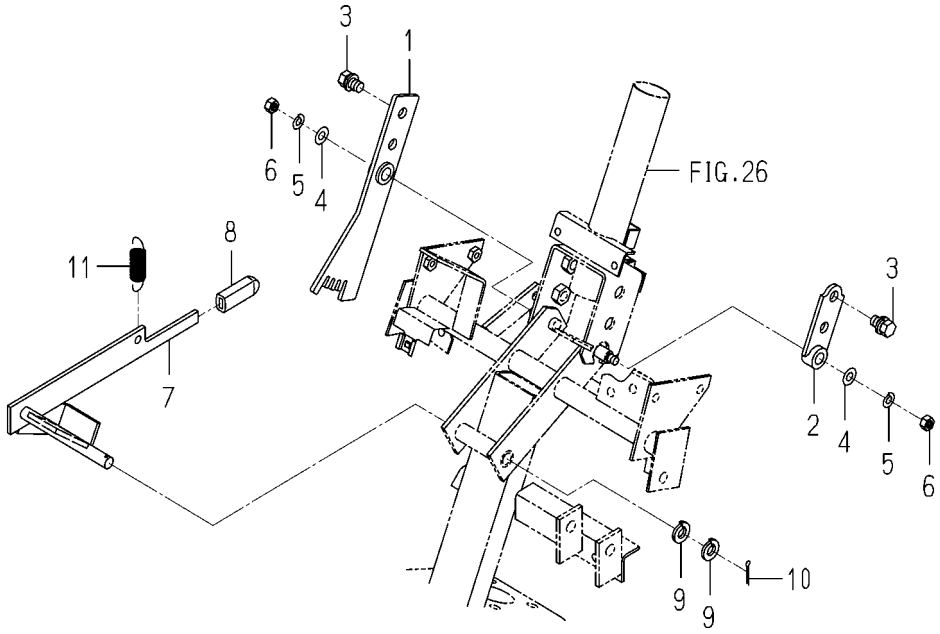

1689-404A-0100

KEY	PART CODE	DESCRIPTION	SPC	TYPE OF MODEL SF200 T42M	SF230 F42M	ITC	COL	GRP	REMARKS
1	1689-404-200-20	CAM/TILT COMP	*	1	1				
2	1689-404-210-00	PLATE/IR/32X63 COMP	*	1	1				
3	V211-561-001-60	BOLT(S)7	*	4	4				
4	V411-260-008-00	WASHER,PL/M 8	*	2	2				
5	V401-160-008-00	WASHER,SP/M 8	*	2	2				
6	V304-260-008-00	NUT/M 8	*	2	2				
7	1689-404-320-00	LEVER/TILT COMP	*	1	1				
8	3659-205-002-00	GRIP/04X12X50	*	1	1				
9	V411-260-012-00	WASHER /M12	*	2	2				
10	V500-163-002-00	PIN,SPLIT/3 X20	*	1	1				
11	3625-220-002-00	SPRING	*	1	1				

FIG. 26 STEERING POST SYSTEM

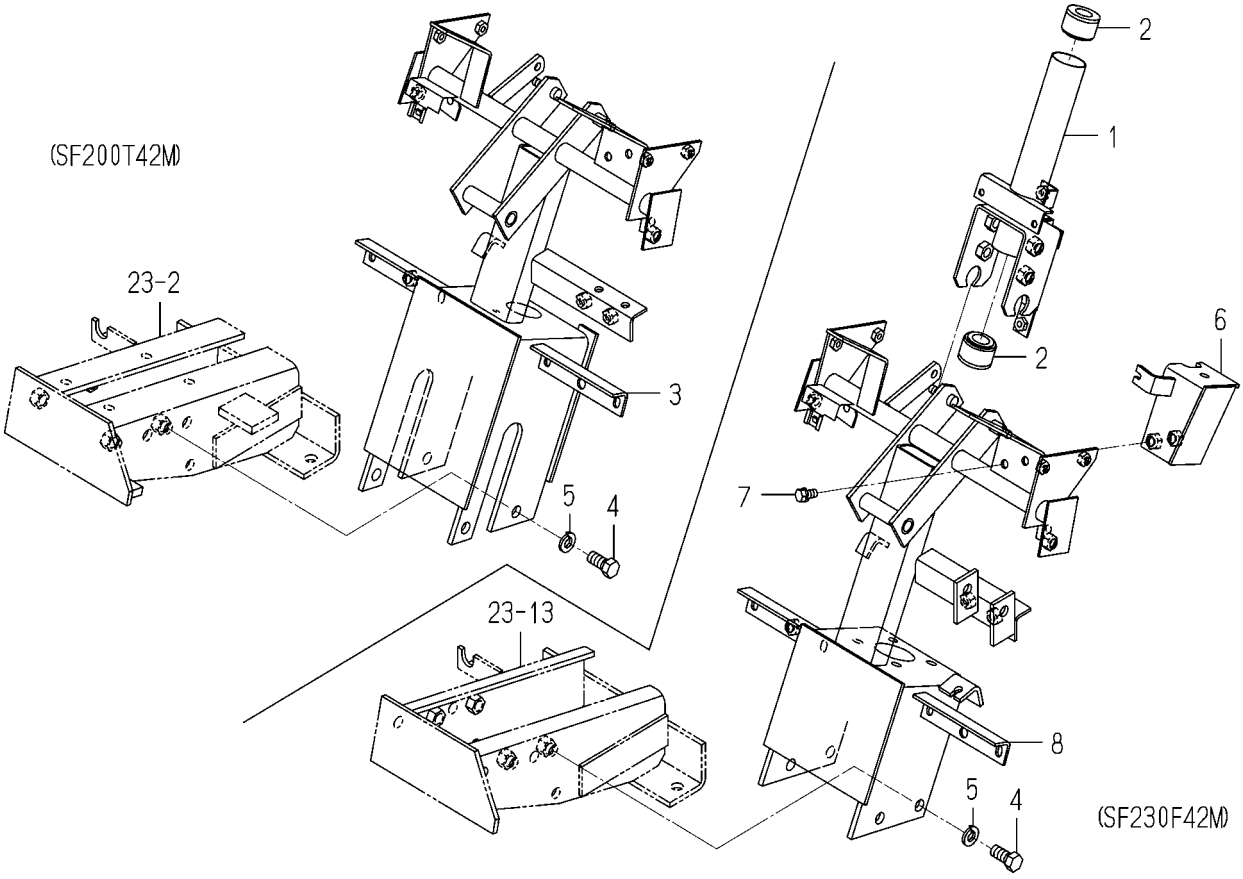

1689-405A-0100,1689-406A-0100

KEY	PART CODE	DESCRIPTION	SPC	TYPE OF MODEL SF200 T42M	TYPE OF MODEL SF230 F42M	ITC	COL	GRP	REMARKS
1	1689-406-220-00	COLUMN/UPPER COMP	*	1	1				
2	1429-406-205-00	BUSH	*	2	2				
3	1689-405-310-00	COLUMN/LOWER COMP	*	1					
4	V201-361-202-50	BOLT/M12X25	*	4	4				
5	V401-160-012-00	WASHER,SP/M12	*	4	4				
6	1689-405-230-10	BRACKET/ACCELERATOR	*	1	1				
7	V211-260-801-60	BOLT,SEMS (S) M8X16	*	2	2				
8	1689-406-310-00	COLUMN/LOWER COMP	*		1				

FIG. 27 STEERING DRIVE SYSTEM (SF200)

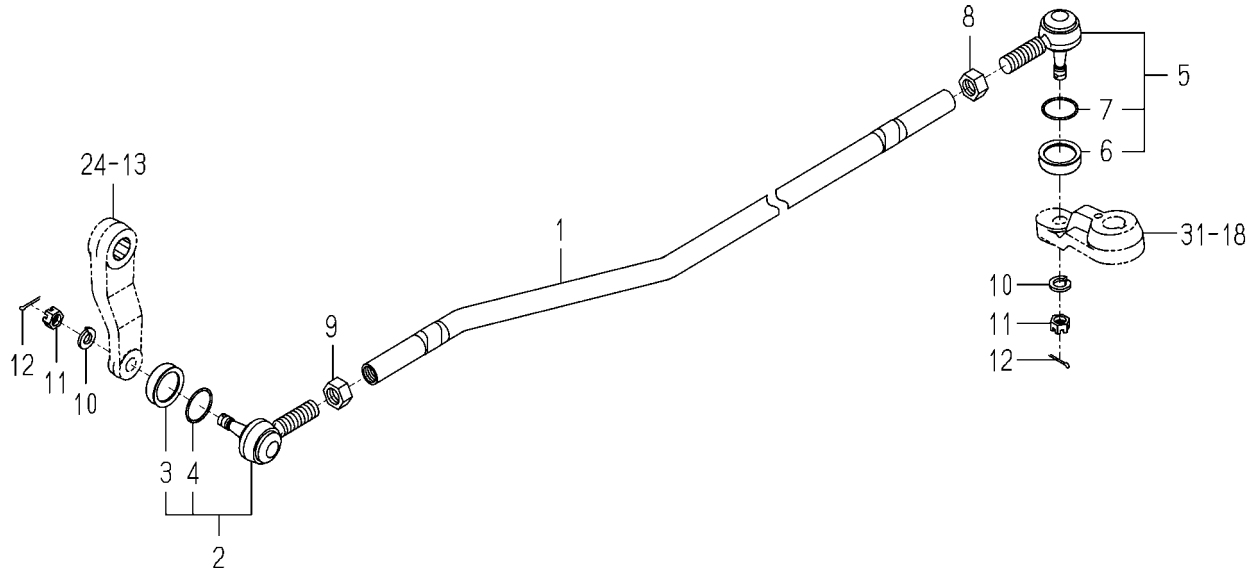

1689-407 -0100

KEY	PART CODE	DESCRIPTION	SPC	TYPE OF MODEL SF200 T42M	SF230 F42M	ITC	COL	GRP	REMARKS
1	1689-407-201-00	ROD/DRAG	*	1					
2	1550-403-210-00	END,TIE ROD ASSY	*	1					
3	1614-436-202-00	BOOT/ROD/TIE	*	1					
4	1614-436-203-00	RING/BOOT	*	1					
5	1550-403-220-00	END,TIE ROD,R ASSY	*	1					
6	1614-436-202-00	BOOT/ROD/TIE	*	1					
7	1614-436-203-00	RING/BOOT	*	1					
8	1421-403-001-00	NUT	*	1					
9	1421-403-002-00	NUT,LH THREAD/M17	*	1					
10	V401-160-012-00	WASHER,SP/M12	*	2					
11	V328-262-112-00	NUT/M12X1.25	*	2					
12	V500-163-002-00	PIN,SPLIT/3 X20	*	2					

FIG. 28 STEERING PIPING SYSTEM (SF230)

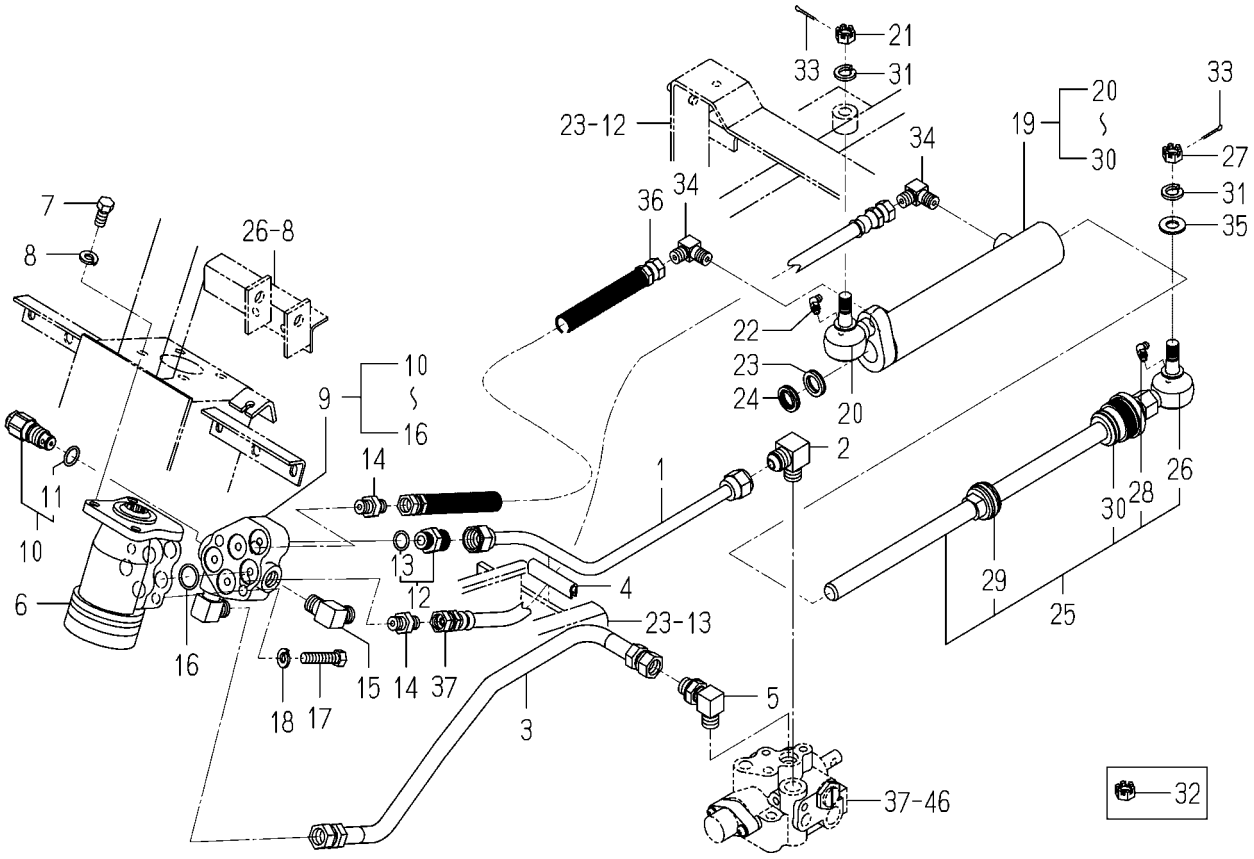

1689-408 -0100

KEY	PART CODE	DESCRIPTION	SPC	TYPE OF MODEL SF200 T42M	TYPE OF MODEL SF230 F42M	ITC	COL	GRP	REMARKS
1	1689-408-230-00	PIPE/T/P2 COMP	*		1				
2	1689-408-004-00	ADAPTER/L/R3/8-M20	*		1				
3	3656-354-004-10	HOSE(450)	*		1				
4	1568-701-001-00	INSULATOR	*		1				
5	1689-502-250-00	ADAPTER/L/G3/8 ASSY	*		1				
6	1689-408-200-00	CONTROLLER/STEERING	*		1				
7	V203-261-002-00	BOLT/M10X20	*		3				
8	V401-160-010-00	WASHER,SP/M10	*		3				
9	1689-408-210-20	METAL/RELIEF ASSY	*		1				
10	K250-042-000-00	RELIEF VALVE ASSY	*		1				
11	V720-112-401-60	O-RING/P16	*		1				
12	1650-509-300-00	ADAPTER/PF3/8 ASSY	*		1				
13	V720-112-401-40	O-RING/P14	*		1				
14	3676-352-001-00	ADAPTOR/STRAIGHT	*		2				
15	3768-185-015-20	ADAPTER/90	*		2				
16	V720-112-402-00	O-RING/P20	*		5				
17	V203-261-004-00	BOLT/M10X40	*		2				
18	V401-160-010-00	WASHER,SP/M10	*		2				
19	1689-408-500-00	CYLINDER ASSY	*		1				
20	1404-402-001-00	COVER,DUST	*		1				
21	1404-402-002-00	NUT,SLOTTED	*		1				
22	1427-433-241-00	NIPPLE,GREASE/PT1/4	*		1				
23	K185-031-302-00	SEAL/ROD	*		1				
24	K185-031-303-00	SEAL/DUST	*		1				
25	1682-403-250-20	ROD/PISTON ASSY	*		1				
26	1404-402-001-00	COVER,DUST	*		1				
27	1404-402-002-00	NUT,SLOTTED	*		1				
28	1427-433-241-00	NIPPLE,GREASE/PT1/4	*		1				
29	1672-403-003-00	PACKING/PISTON	*		1				
30	V720-113-502-90	RING/O	*		1				

FIG. 28 STEERING PIPING SYSTEM (SF230)

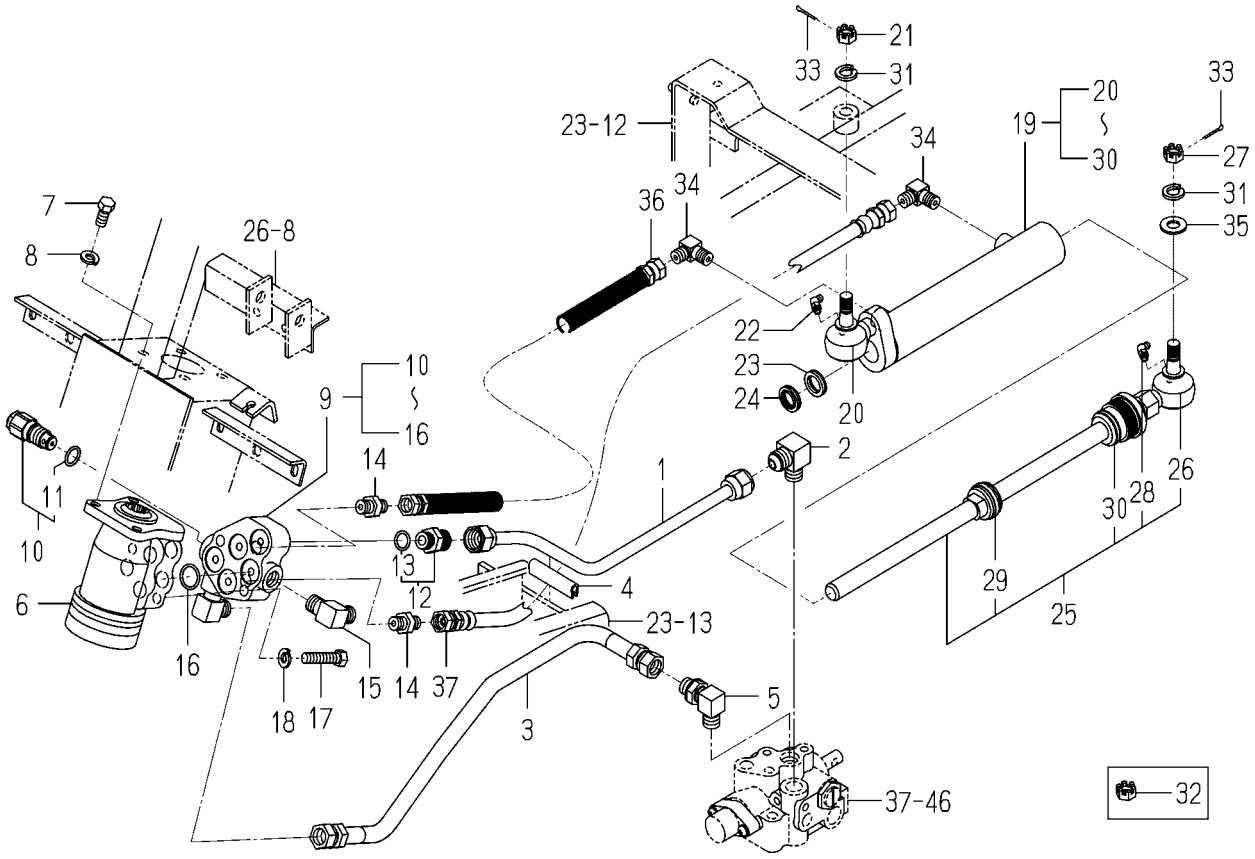

1689-408 -0100

KEY	PART CODE	DESCRIPTION	SPC	TYPE OF MODEL SF200 T42M	TYPE OF MODEL SF230 F42M	ITC	COL	GRP	REMARKS
31	V401-160-012-00	WASHER,SP/M12	*		2				
32	V328-262-112-00	NUT/M12X1.25	*		2				
33	V500-163-002-00	PIN,SPLIT/3 X20	*		2				
34	3768-185-022-10	ADAPTER(90ß/PUMP)	*		2				
35	V411-260-012-00	WASHER /M12	*		1				
36	3650-352-004-10	HOSE/HYDRO/1100 ASSY	*		1				
37	3662-350-001-00	HOSE/1300 COMP	*		1				

FIG. 29 4WD LEVER AND DRIVE SHAFT SYSTEM (SF230)

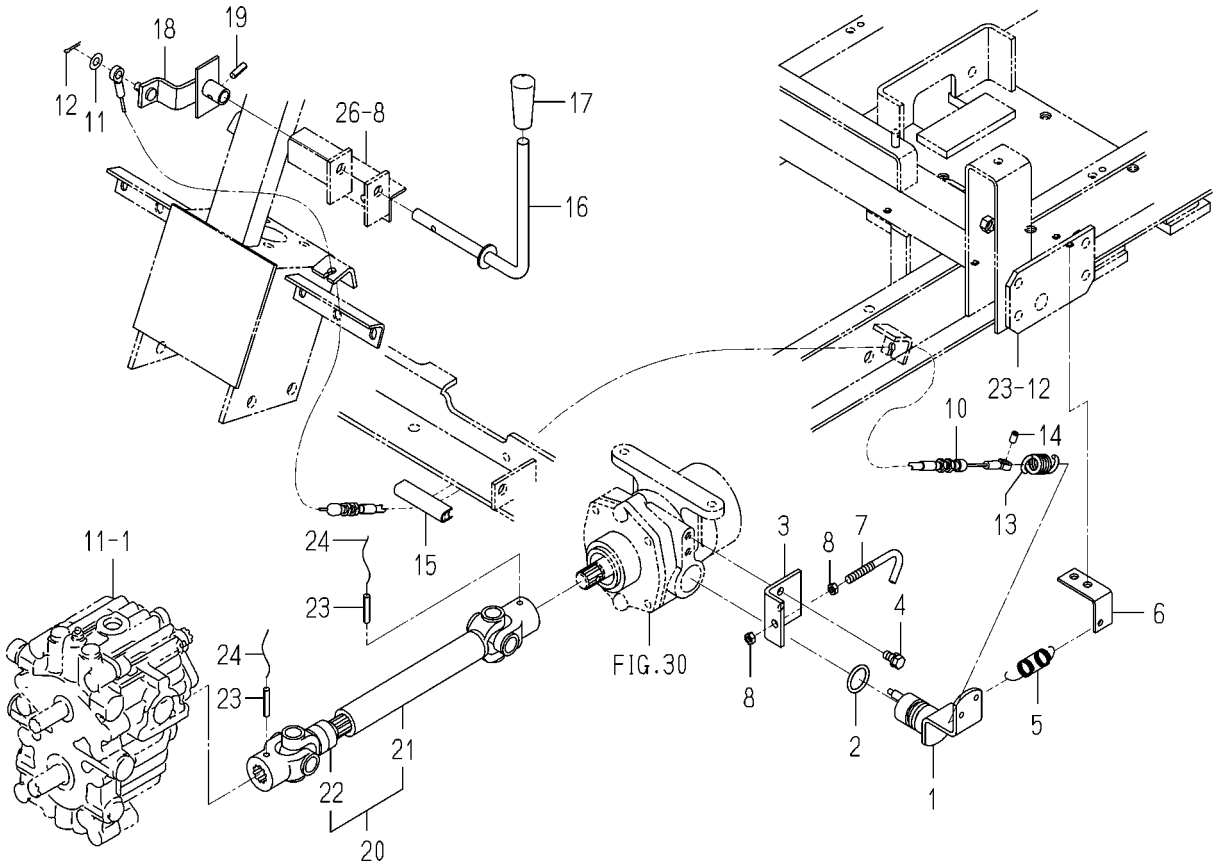

1689-430 -0100,1689-431 -0100

KEY	PART CODE	DESCRIPTION	SPC	TYPE OF MODEL SF200 T42M	TYPE OF MODEL SF230 F42M	ITC	COL	GRP	REMARKS
1	1689-430-210-10	PLATE/SHIFT COMP	*		1				
2	V720-103-502-40	O-RING/P24	*		1				
3	1689-430-001-20	PLATE/L/55X40	*		1				
4	V211-260-801-60	BOLT,SEMS (S) M8X16	*		2				
5	1560-531-020-00	SPRING/HE068	*		1				
6	1689-430-002-00	PLATE/L/25X56	*		1				
7	1689-430-003-00	PIN/STOPPER	*		1				
8	V304-260-008-00	NUT/M 8	*		2				
9	V211-260-801-60	BOLT,SEMS (S) M8X16	*		2				
10	1689-430-240-00	CABLE/4WDLOCK ASSY	*		1				
11	V411-260-008-00	WASHER,PL/M 8	*		1				
12	V500-163-001-50	PIN,SPLIT/3 X15	*		1				
13	1374-401-001-00	SPRING,CLUTCH	*		1				
14	3676-832-011-00	STOPPER/CABLE/3	*		1				
15	P113-201-007-00	TRIM/70	*		1				
16	1689-430-220-00	LEVER/4WD/LOCK COMP	*		1				
17	3761-242-017-00	GRIP	*		1				
18	1689-430-230-20	ARM/4WD/LOCK COMP	*		1				
19	V580-140-602-00	PIN,SPRING	*		1				
20	1689-431-200-00	SHAFT/DRIVE/4WD ASSY	*		1				
21	1689-431-210-00	JOINT/UNIVERSAL/A	*		1				
22	1689-431-220-00	JOINT/UNIVERSAL/B	*		1				
23	V580-140-603-20	PIN,SPRING/6 X32 W	*		2				
24		WIRE	*		2				

FIG. 30 4WD UNIT CASE SYSTEM (SF230)

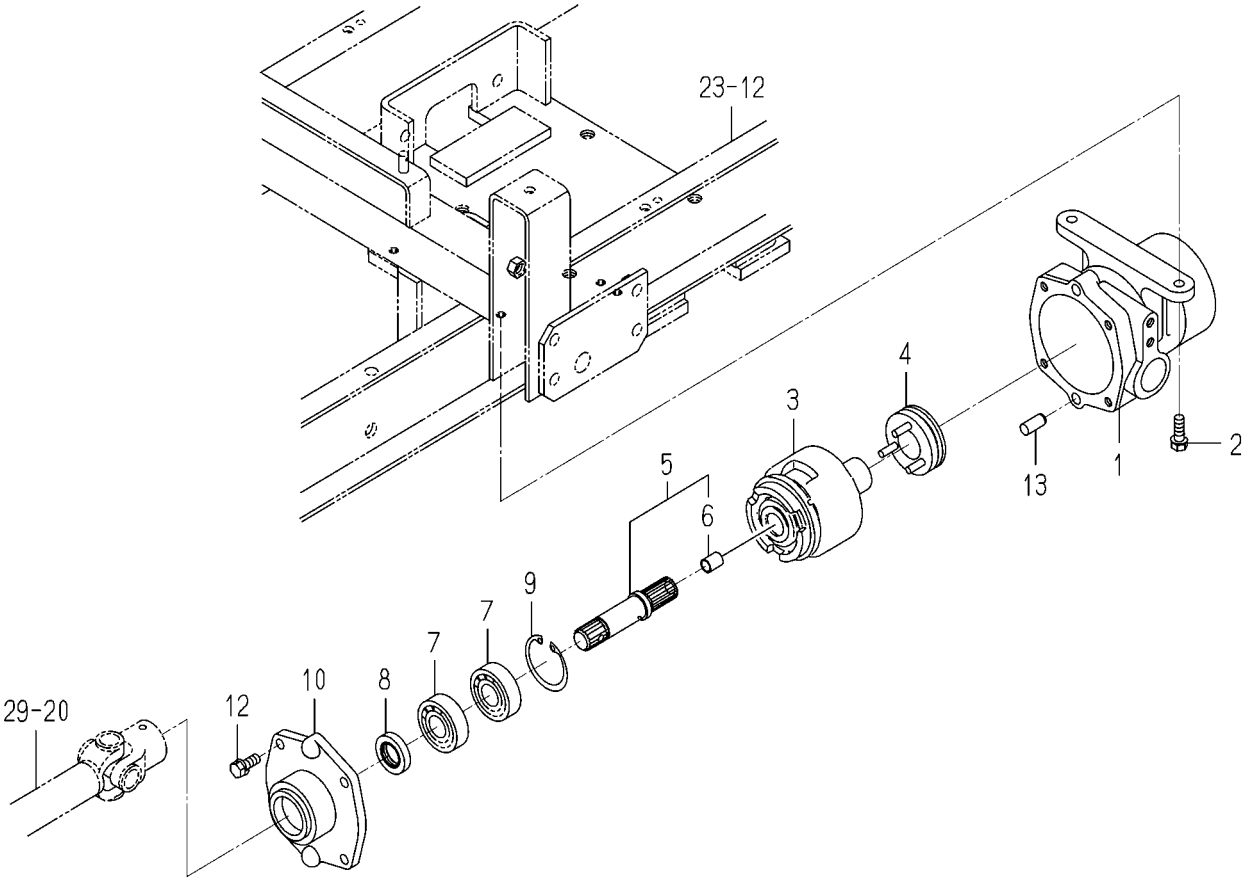

1689-432 -0100

KEY	PART CODE	DESCRIPTION	SPC	TYPE OF MODEL SF200 T42M	TYPE OF MODEL SF230 F42M	ITC	COL	GRP	REMARKS
1	1689-432-002-10	CASE/4WD	*		1				
2	V211-260-802-50	BOLT/S	*		2				
3	1614-223-210-00	CLUTCH ASSY	*		1				FIG 049
4	1614-223-230-00	SLEEVE ASSY	*		1				
5	1689-432-210-00	SHAFT/INPUT ASSY	*		1				
6	1614-223-221-00	BUSH/10X12X15	*		1				
7	V600-110-620-40	BEARING,RB/6204	*		2				
8	V744-120-350-70	SEAL,OIL/TC20357	*		1				
9	V705-140-047-00	RING,SNAP/47 C	*		1				
10	1689-432-003-00	METAL/4WD	*		1				
11	V523-101-002-20	PIN	*		2				
12	V211-260-802-00	BOLT,SEMS (S)	*		4				

FIG. 31 REAR AXLE SYSTEM (SF200)

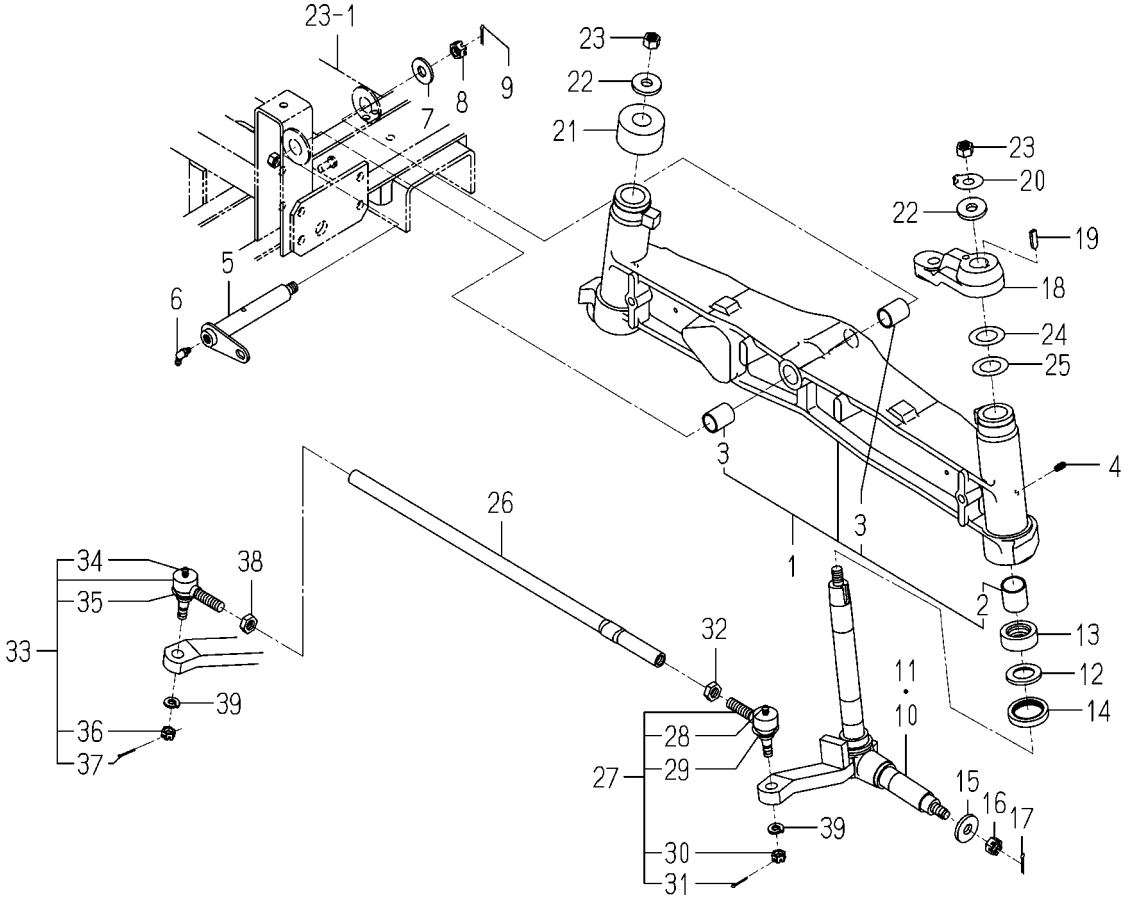

1689-433A-0100

KEY	PART CODE	DESCRIPTION	SPC	TYPE OF MODEL SF200 T42M	TYPE OF MODEL SF230 F42M	ITC	COL	GRP	REMARKS
1	1689-433-260-00	AXLE/2WD ASSY	*	1					
2	1411-401-001-00	BUSH/25X29X30	*	4					
3	1427-401-001-00	BUSH/20X24X30	*	2					
4	V760-150-000-00	NIPPLE,GREASE	*	2					
5	1689-433-220-10	PIN/PIVOT COMP	*	1					
6	V763-150-000-00	NIPPLE,GREASE/PT1/8	*	1					
7	1427-431-003-00	WASHER/13X32X3	*	1					
8	V327-262-112-00	NUT,CASTTLE/M12X1.25	*	1					
9	V500-163-002-00	PIN,SPLIT/3 X20	*	1					
10	1688-433-220-10	SPINDLE/RH COMP	*	1					
11	1688-433-230-10	SPINDLE/LH COMP	*	1					
12	1419-403-001-00	COLLAR/25X42X4	*	2					
13	1681-434-001-00	BEARING/BALL/THRUST	*	2					
14	1682-434-033-00	SEAL/OIL	*	2					
15	3621-702-003-00	WASHER,PULLEY	*	2					
16	V328-262-112-00	NUT/M12X1.25	*	2					
17	V500-163-002-00	PIN,SPLIT/3 X20	*	2					
18	1689-433-003-00	ARM/KNUCKLE/LH	*	1					
19	1326-708-005-00	KEY,ROTARY TOP SHAFT	*	1					
20	1421-403-007-00	WASHER,LOCK/M12	*	1					
21	1688-433-002-00	HUB/KUCKLE	*	1					
22	1421-403-008-00	WASHER/13X35X5	*	2					
23	V304-260-012-00	NUT/M12	*	2					
24	1421-951-006-00	SHIM,A/0.5	*	4					
25	1421-951-007-00	SHIM,A/1.0	*	4					
26	1688-433-211-10	ROD/TIE	*	1					
27	1427-433-240-10	JOINT/BALL/LH ASSY	*	1					
28	1404-402-005-00	NIPPLE,GREASE	*	1					
29	1427-433-025-00	COVER,DUST	*	1					
30	V327-262-110-00	NUT/M10X1.25	*	1					

FIG. 31 REAR AXLE SYSTEM (SF200)

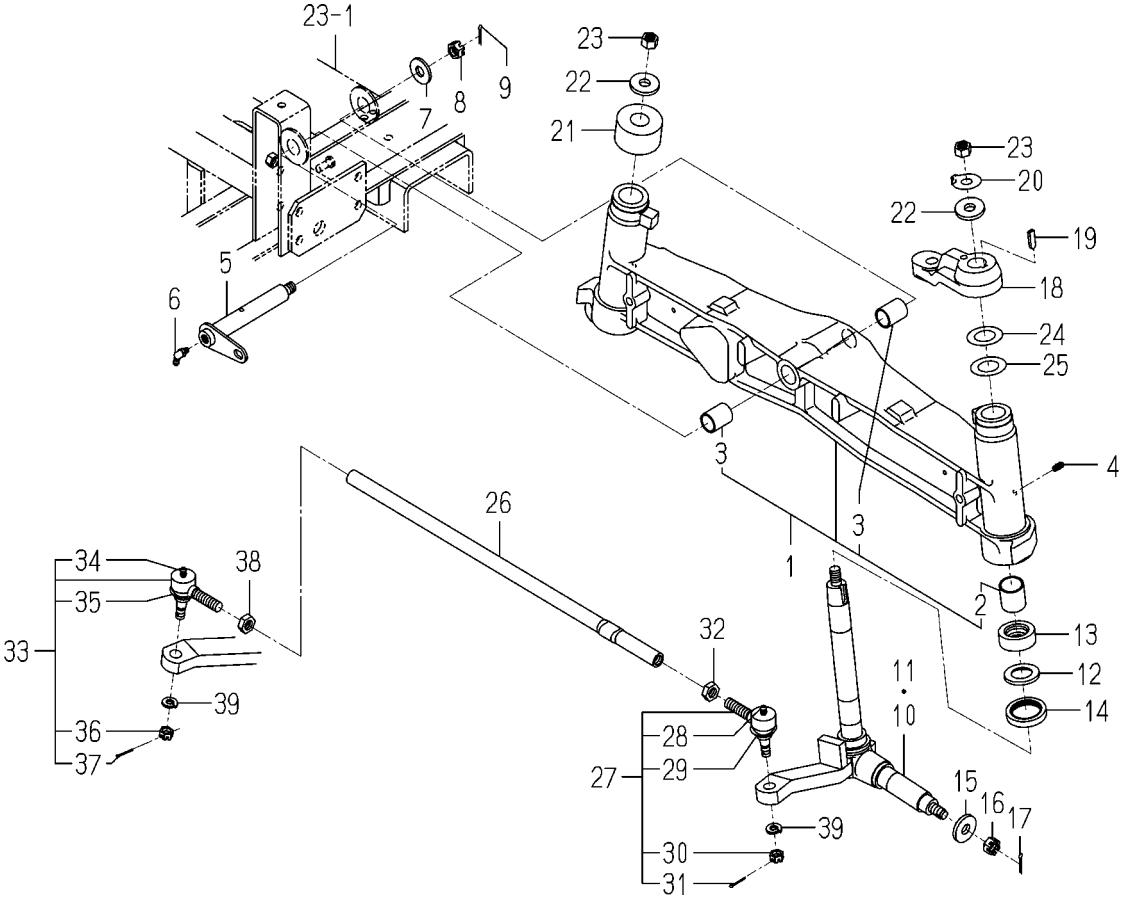

1689-433A-0100

KEY	PART CODE	DESCRIPTION	SPC	TYPE OF MODEL SF200 T42M	TYPE OF MODEL SF230 F42M	ITC	COL	GRP	REMARKS
31	V500-162-502-50	PIN,SPLIT/2.5X25	*	1					
32	1427-433-023-00	NUT/LH THREAD	*	1					
33	1427-433-250-10	JOINT/BALL/RH ASSY	*	1					
34	1404-402-005-00	NIPPLE,GREASE	*	1					
35	1427-433-025-00	COVER,DUST	*	1					
36	V327-262-110-00	NUT/M10X1.25	*	1					
37	V500-162-502-50	PIN,SPLIT/2.5X25	*	1					
38	1427-433-022-00	NUT/M12	*	1					
39	V401-160-010-00	WASHER,SP/M10	*	2					

FIG. 32 REAR AXLE SYSTEM (SF230)(1/4)

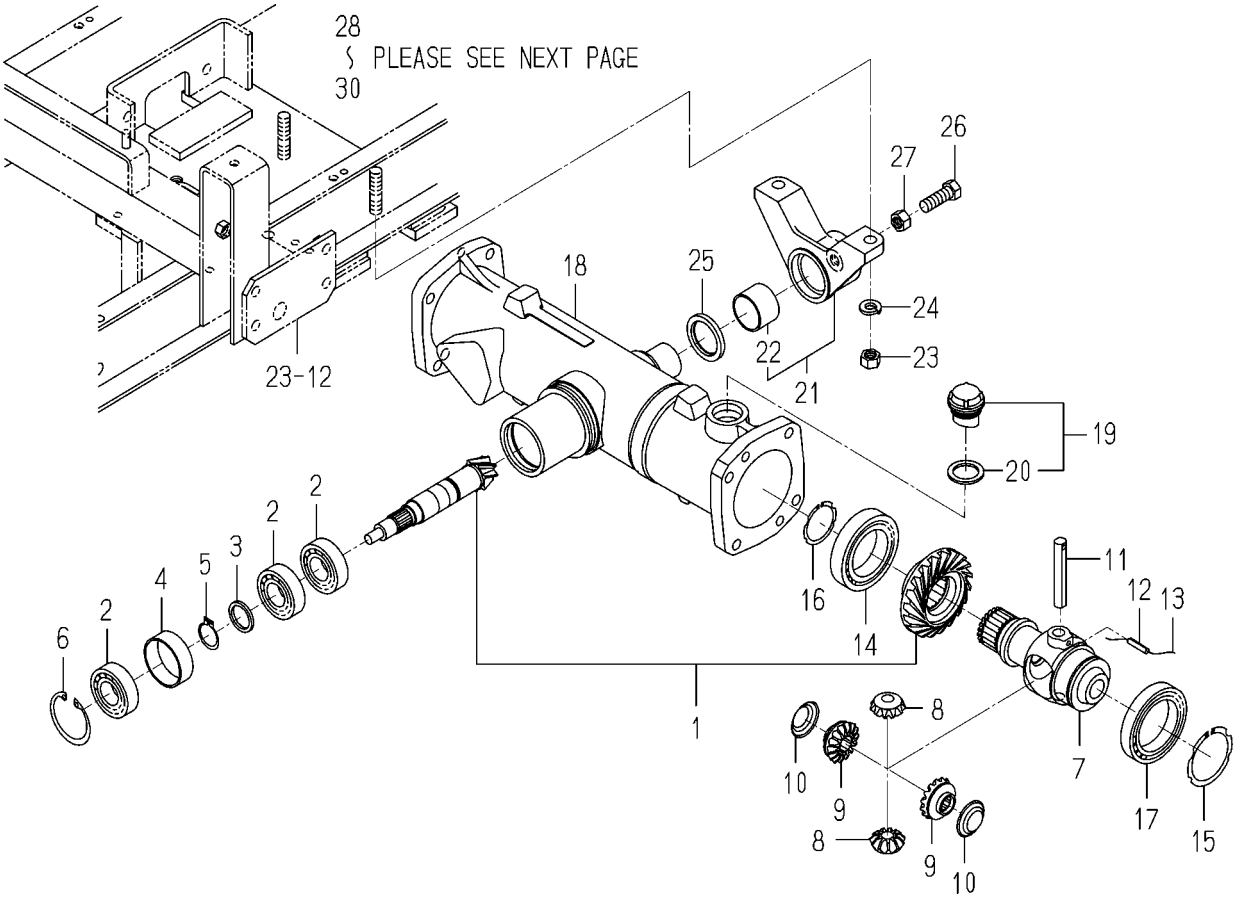

1689-434 -0100

KEY	PART CODE	DESCRIPTION	SPC	TYPE OF MODEL SF200 T42M	TYPE OF MODEL SF230 F42M	ITC	COL	GRP	REMARKS
1	1689-434-200-00	PINION/BEVEL SET	*		1				
2	1594-221-001-00	BEARING/BALL 6205SH2	*		3				
3	1507-216-004-10	COLLAR/25X32X3	*		1				
4	1650-432-001-00	COLLAR/48X52X17	*		1				
5	V704-140-025-00	RING,SNAP/25 C	*		1				
6	V705-140-052-00	RING,SNAP/52 C	*		1				
7	1614-432-002-00	CASE/DIFF	*		1				
8	1614-432-003-00	PINION/BEVEL/11	*		2				
9	1614-432-004-00	GEAR/BEVEL/15	*		2				
10	1614-432-005-00	WASHER	*		2				
11	1614-432-006-00	PIN/12X75	*		1				
12	V580-140-502-50	PIN,SPRING/5 X25 W	*		1				
13		WIRE	*		1				
14	V600-110-601-00	BEARING,RB/6010	*		1				
15	V706-140-055-00	RING/SNAP	*		1				
16	V706-140-040-00	RING/SNAP	*		1				
17	V600-110-691-10	BEARING	*		1				
18	1672-433-001-10	HOUSING/AXLE	*		1				
19	1518-432-250-00	CAP,OIL ASSY	*		1				
20	1518-306-203-00	PACKING	*		1				
21	1672-433-210-10	METAL/PIVOT/FRONT	*		1				
22	1564-434-222-10	BUSH/35X39X26	*		1				
23	V304-460-012-00	NUT/M12	*		2				
24	V401-160-012-00	WASHER,SP/M12	*		2				
25	1612-433-002-00	SEAL/OIL	*		1				
26	V201-261-203-50	BOLT/M12X35	*		1				
27	V304-260-012-00	NUT/M12	*		1				
28	1689-434-210-10	METAL/PIVOT/FRONT	*		1				
29	1614-433-212-00	BUSH/62X67X30	*		1				
30	V201-461-204-00	BOLT/M12X40	*		2				

FIG. 32 REAR AXLE SYSTEM (SF230)(2/4)

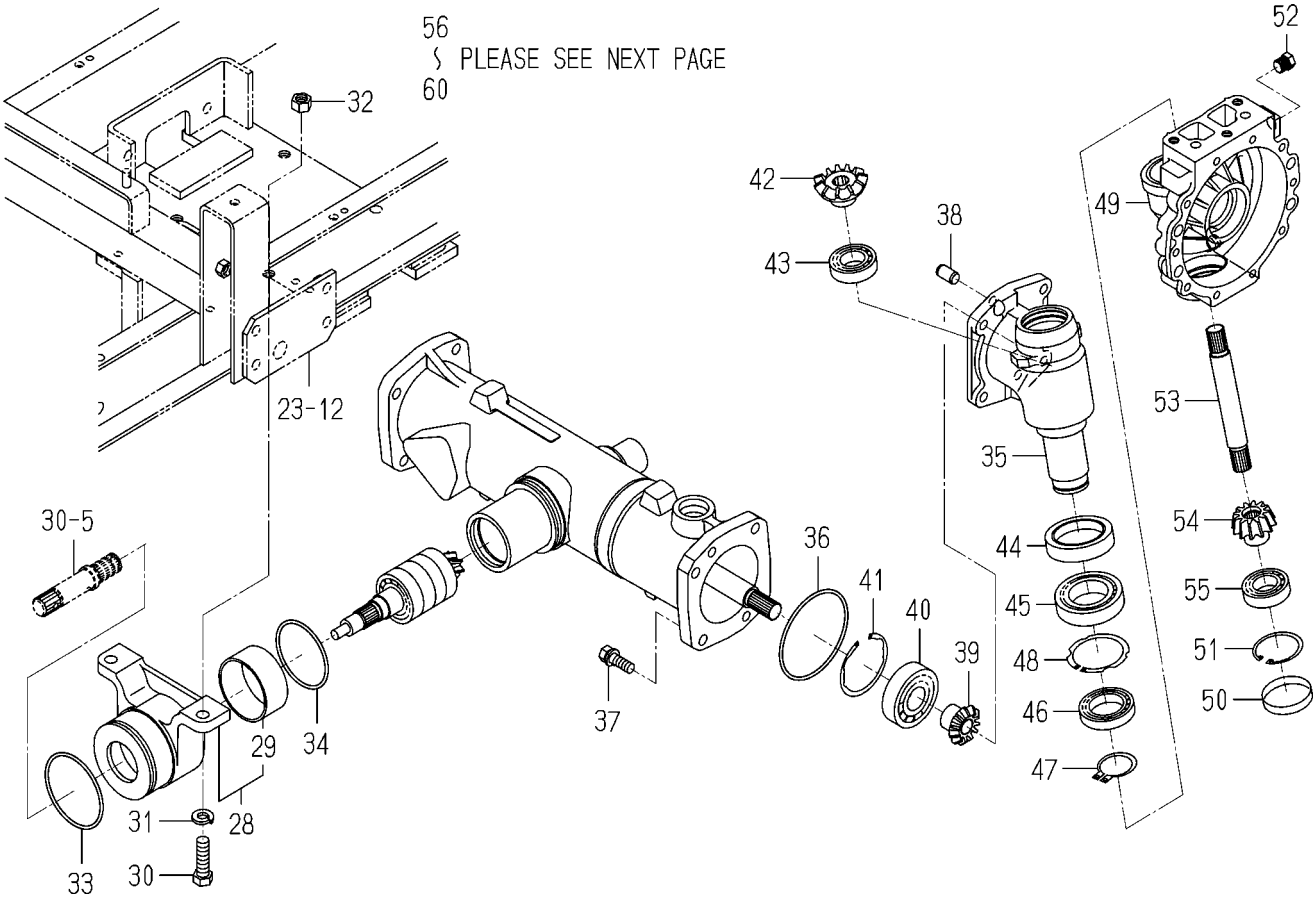

1689-434 -0100

KEY	PART CODE	DESCRIPTION	SPC	TYPE OF MODEL SF200 T42M	TYPE OF MODEL SF230 F42M	ITC	COL	GRP	REMARKS
31	V401-160-012-00	WASHER,SP/M12	*		2				
32	V304-460-012-00	NUT/M12	*		2				
33	V721-103-107-50	O-RING/G75	*		1				
34	V721-103-107-00	O-RING/G70	*		1				
35	1689-434-001-20	CASE/FINAL	*		2				
36	V721-103-109-00	O-RING/G90	*		2				
37	V211-561-003-00	BOLT/M10X30	*		8				
38	V523-101-002-40	PIN	*		4				
39	1672-434-002-00	GEAR/BEVEL/11	*		2				
40	V600-110-630-50	BEARING,RB/6305	*		2				
41	V707-140-062-00	RING/SNAP	*		2				
42	1672-434-003-00	GEAR/BEVEL/15	*		2				
43	V600-110-600-50	BEARING,RB/6005	*		2				
44	1488-413-023-10	SEAL,OIL	*		2				
45	V600-110-690-70	BEARING	*		2				
46	V600-110-600-80	BEARING,RB/6008	*		2				
47	V704-140-035-00	RING,SNAP/35 C	*		2				
48	V707-140-055-00	RING/SNAP	*		2				
49	1672-434-011-10	CASE/FINAL	*		2				
50	1564-201-003-00	CAP/SEAL/47	*		2				
51	V705-140-047-00	RING,SNAP/47 C	*		2				
52	V782-160-000-4B	PLUG/SCREW/SEAL	*		4				
53	1612-434-006-00	SHAFT	*		2				
54	1612-434-007-00	GEAR/BEVEL/12	*		2				
55	V600-110-600-50	BEARING,RB/6005	*		2				
56	1689-434-240-10	SHAFT/WHEEL/REA COMP	*		2				
57	V251-341-002-00	BOLT/M10X20	*		4				
58	1612-434-008-00	GEAR/BEVEL/47	*		2				
59	1491-434-017-00	SEAL/QLNY35571116	*		2				
60	V600-110-620-50	BEARING,RB/6205	*		2				

FIG. 32 REAR AXLE SYSTEM (SF230)(3/4)

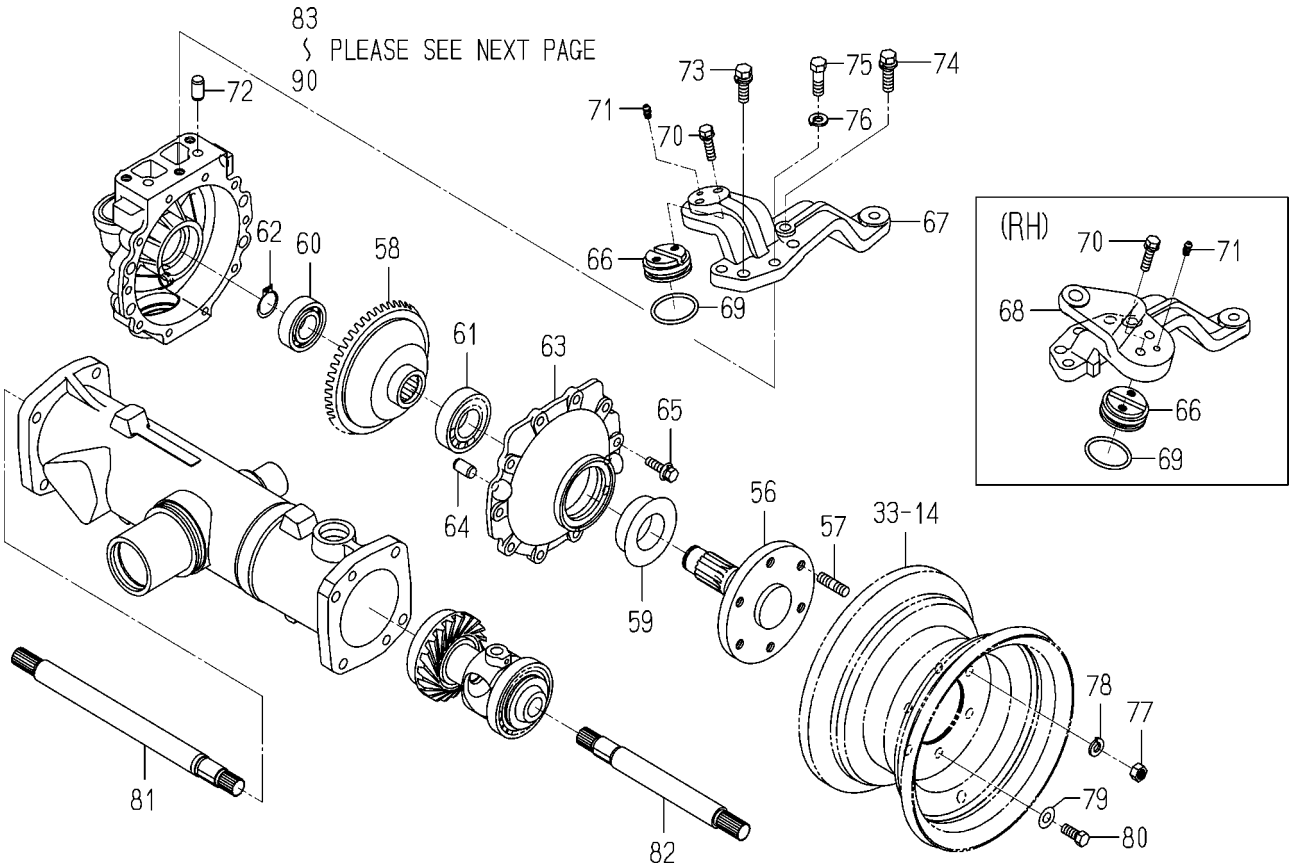

1689-434 -0100

KEY	PART CODE	DESCRIPTION	SPC	TYPE OF MODEL SF200 T42M	TYPE OF MODEL SF230 F42M	ITC	COL	GRP	REMARKS
61	V600-110-620-60	BEARING,RB/6206	*		2				
62	V704-140-025-00	RING,SNAP/25 C	*		2				
63	1612-434-009-00	COVER/WHEEL	*		2				
64	V523-101-002-40	PIN	*		4				
65	V211-360-802-50	BOLT,SEMS	*		20				
66	1682-434-006-30	PIN/47X19	*		2				
67	1689-434-002-20	ARM/KNUCKLE/LH	*		1				
68	1689-434-003-20	ARM/KNUCKLE/RH	*		1				
69	V720-103-504-10	O-RING /P41	*		2				
70	V211-560-803-00	BOLT/M8X30	*		4				
71	V762-150-000-00	NIPPLE,GREASE/B-M6F	*		2				
72	V523-101-002-40	PIN	*		4				
73	V211-561-003-00	BOLT/M10X30	*		2				
74	V211-561-003-50	BOLT/S	*		2				
75	V201-361-003-0B	BOLT/SEAL	*		2				
76	V401-160-010-00	WASHER,SP/M10	*		2				
77	V304-460-010-00	NUT/M10	*		4				
78	V401-160-010-00	WASHER,SP/M10	*		4				
79	V411-260-010-00	WASHER/M10	*		4				
80	V211-561-002-50	BOLT/M10X25	*		8				
81	1617-435-002-00	SHAFT	*		1				
82	1614-435-004-00	SHAFT	*		1				
83	1689-434-221-00	ROD/TIE	*		1				
84	1427-433-240-10	JOINT/BALL/LH ASSY	*		1				
85	1404-402-005-00	NIPPLE,GREASE	*		1				
86	1427-433-025-00	COVER,DUST	*		1				
87	V327-262-110-00	NUT/M10X1.25	*		1				
88	V500-162-502-50	PIN,SPLIT/2.5X25	*		1				
89	1427-433-023-00	NUT/LH THREAD	*		1				
90	1427-433-250-10	JOINT/BALL/RH ASSY	*		1				

FIG. 32 REAR AXLE SYSTEM (SF230)(4/4)

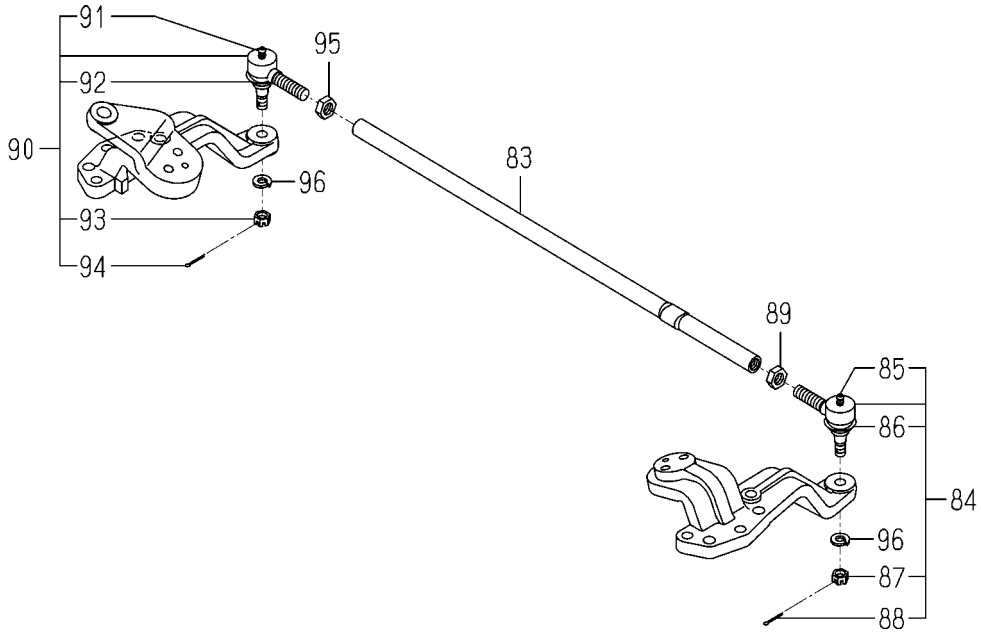

1689-434 -0100

KEY	PART CODE	DESCRIPTION	SPC	TYPE OF MODEL SF200 T42M	TYPE OF MODEL SF230 F42M	ITC	COL	GRP	REMARKS
91	1404-402-005-00	NIPPLE,GREASE	*		1				
92	1427-433-025-00	COVER,DUST	*		1				
93	V327-262-110-00	NUT/M10X1.25	*		1				
94	V500-162-502-50	PIN,SPLIT/2.5X25	*		1				
95	1427-433-022-00	NUT/M12	*		1				
96	V401-160-010-00	WASHER,SP/M10	*		2				
97	V500-162-502-00	PIN,SPLIT/2.5X20	*		2				

FIG. 33 REAR WHEEL SYSTEM

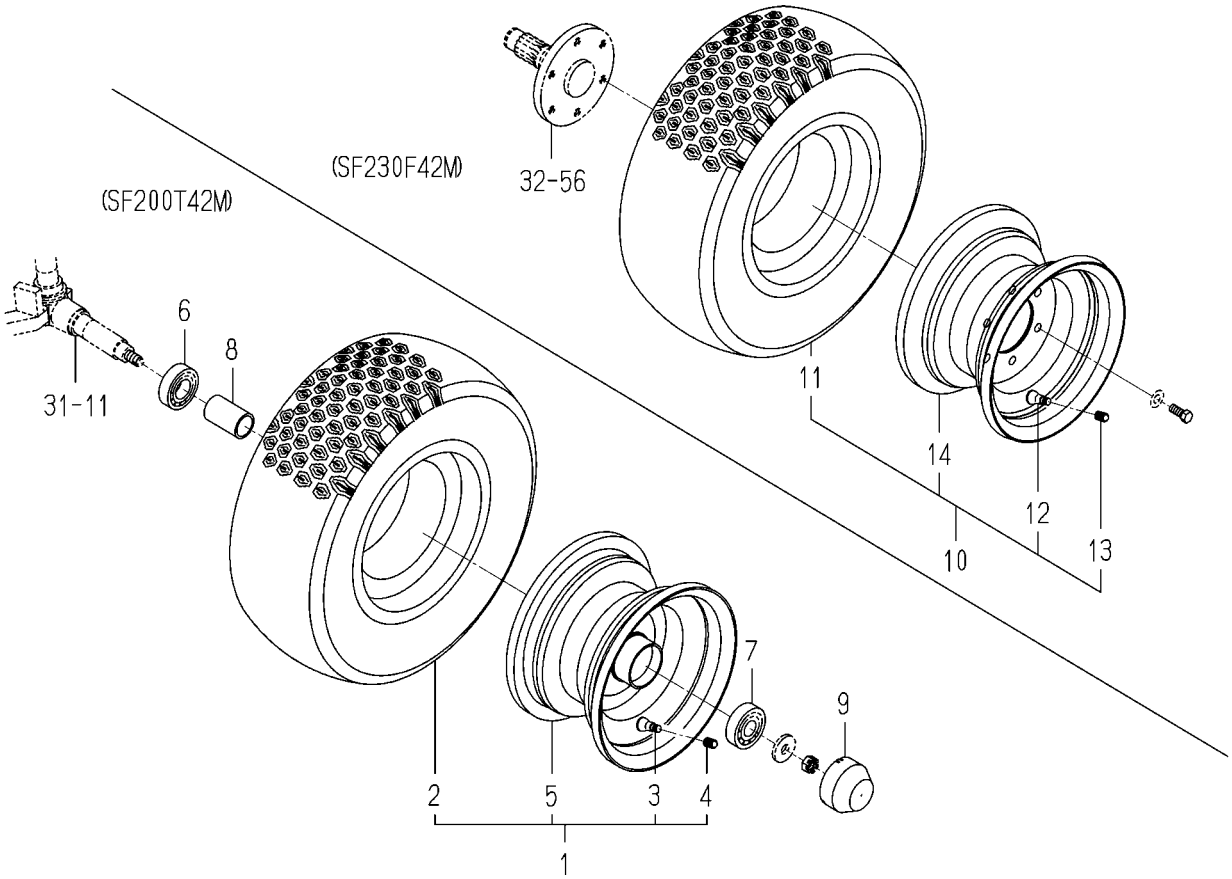

1689-440 -0100,1689-441 -0100

KEY	PART CODE	DESCRIPTION	SPC	TYPE OF MODEL SF200 T42M	TYPE OF MODEL SF230 F42M	ITC	COL	GRP	REMARKS
1	1689-440-200-20	WHEEL/REAR ASSY	*	2			6G		
2	1689-440-211-00	TIRE/TURF/16-8	*	2					
3	1386-241-002-00	BULB	*	2					
4	V999-200-003-00	CAP,TIRE VALVE	*	2					
5	1689-440-230-00	RIM/WHEEL COMP	*	2			6G		
6	V600-150-620-50	BEARING,RB/6205SS	*	2					
7	V600-150-630-40	BEARING,RB/6304SS	*	2					
8	1593-411-001-10	COLLAR/26X32X53	*	2					
9	1593-411-053-20	CAP/WHEEL	*	2					
10	1689-441-200-10	WHEEL/REAR ASSY	*		2		6G		
11	1689-440-211-00	TIRE/TURF/16-8	*		2				
12	1386-241-002-00	BULB	*		2				
13	V999-200-003-00	CAP,TIRE VALVE	*		2				
14	1689-441-210-10	RIM/WHEEL COMP	*		2		6G		

FIG. 34 LIFT LINK SYSTEM

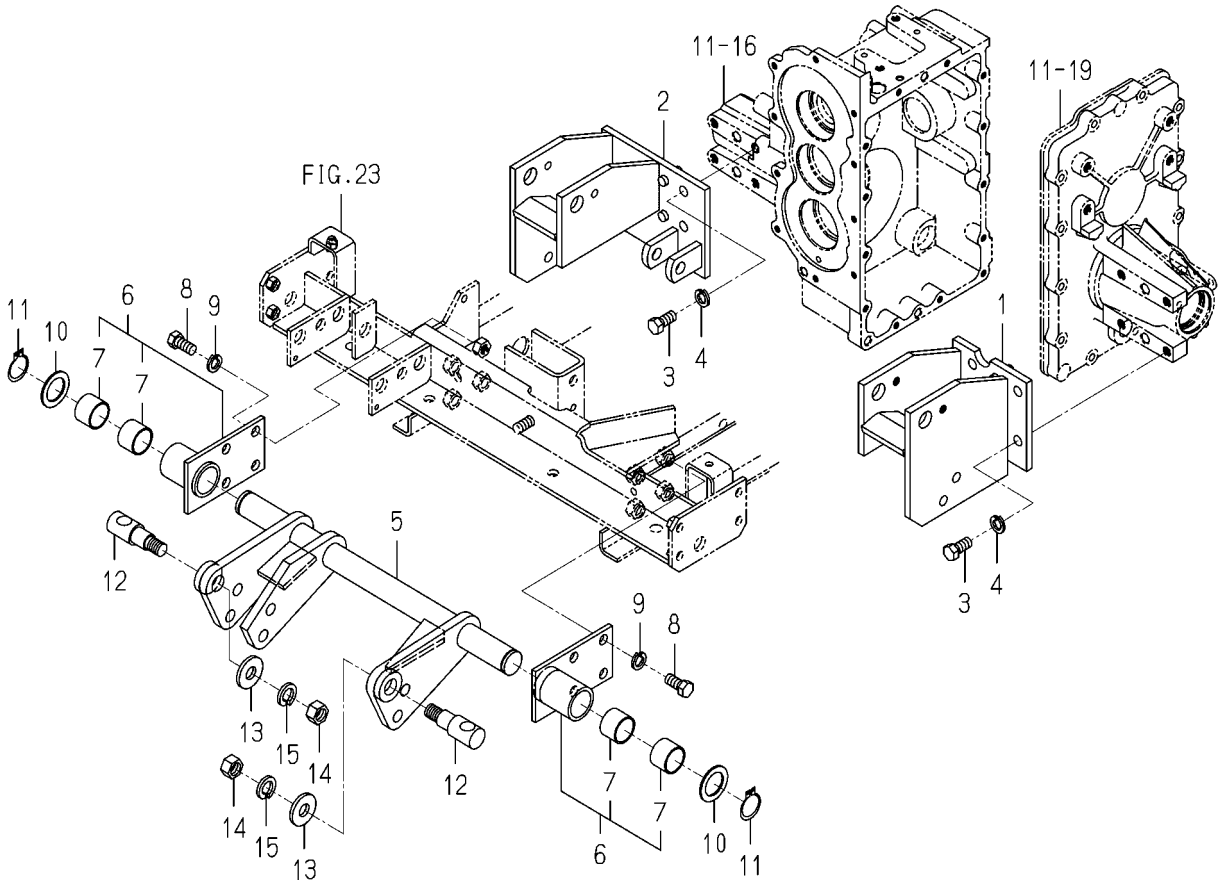

1689-501A-0100

KEY	PART CODE	DESCRIPTION	SPC	TYPE OF MODEL SF200 T42M	TYPE OF MODEL SF230 F42M	ITC	COL	GRP	REMARKS
1	1689-501-200-30	BRACKET/MOWER/L COMP	*	1	1				
2	1689-501-230-20	BRACKET/MOWER/R COMP	*	1	1				
3	V201-361-202-50	BOLT/M12X25	*	8	8				
4	V401-160-012-00	WASHER,SP/M12	*	8	8				
5	1689-501-310-00	SHAFT/LIFT COMP	*	1	1				
6	1689-501-280-00	HOLDER/SHAFT ASSY	*	2	2				
7	1689-501-281-00	BUSH/30X34X25	*	4	4				
8	V201-361-202-50	BOLT/M12X25	*	8	8				
9	V401-160-012-00	WASHER,SP/M12	*	8	8				
10	1689-501-001-00	WASHER/30X45X2	*	2	2				
11	V704-140-030-00	RING,SNAP/30 C	*	2	2				
12	1689-501-002-00	BOLT/M16	*	2	2				
13	8654-510-012-10	WASHER/16X40X05	*	2	2				
14	V304-460-016-00	NUT/M16	*	2	2				
15	V401-160-016-00	WASHER,SP/M16	*	2	2				

FIG. 35 LIFT PIPING SYSTEM (SF200)

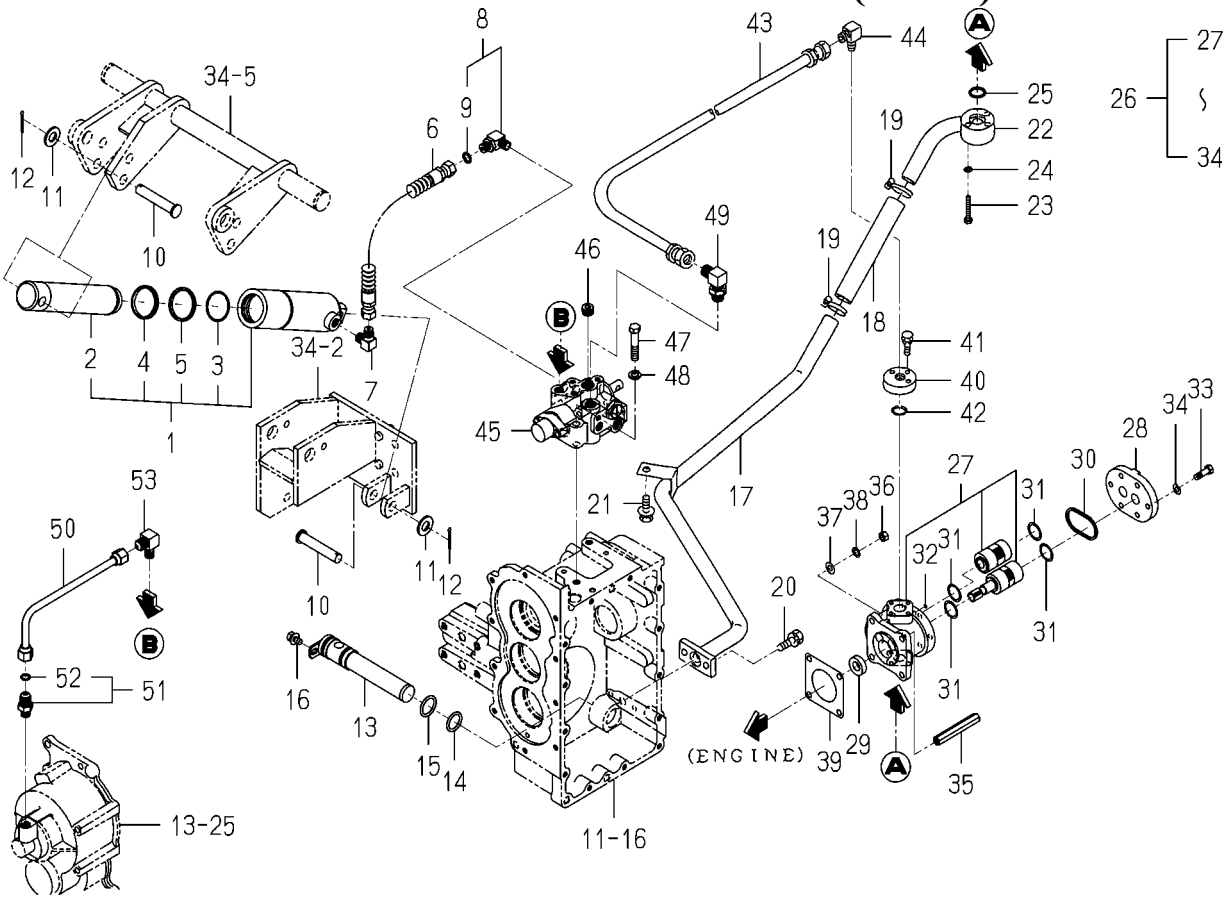

1689-502 -0100

KEY	PART CODE	DESCRIPTION	SPC	TYPE OF MODEL SF200 T42M	SF230 F42M	ITC	COL	GRP	REMARKS
1	K182-015-000-00	CYLINDER ASSY	*	1					
2	K182-012-001-00	PISTON	*	1					
3	K182-007-002-00	PISTON STOPPER SET	*	1					
4	V793-142-480-60	DUST SEAL SER42	*	1					
5	V724-124-304-20	PACKING PS-42	*	1					
6	3650-837-210-00	HOSE/HYDRO/460	*	1					
7	3768-185-022-10	ADAPTER(90ß/PUMP)	*	1					
8	1705-408-230-00	ADAPTER/L/G1/4 ASSY	*	1					
9	V720-112-401-10	RING/O	*	1					
10	1689-502-001-00	PIN/14X80	*	2					
11	V411-260-014-00	WASHER,PL/M14	*	2					
12	V500-163-003-00	PIN,SPLIT/3X30	*	2					
13	1435-201-220-00	FILTER,SUCTION(HST)	*	1					
14	V720-103-502-40	O-RING/P24	*	1					
15	V720-103-502-60	O-RING/P26	*	1					
16	V211-360-801-60	BOLT,SEMS (SP)	*	1					
17	1689-502-220-00	PIPE/SUCTION COMP	*	1					
18	3656-355-001-00	HOSE/19X29X170	*	1					
19	J061-224-032-00	CLAMP/WIRE/24-32	*	2					
20	V211-260-802-50	BOLT/S	*	2					
21	V211-360-802-00	BOLT(SP) M8X20	*	1					
22	1689-502-210-00	FLANGE/SUCTION COMP	*	1					
23	V200-360-604-00	BOLT	*	3					
24	V401-160-006-00	WASHER,SP/M 6	*	3					
25	V720-102-402-00	O-RING/P20	*	2					
26	K135-023-000-00	PUMP GEAR ASSY	*	1					
27	K135-023-100-00	GEAR PUMP SET	*	1					
28	K135-017-006-00	COVER,PUMP	*	1					
29	V744-114-280-70	SEAL,OIL	*	1					
30	V721-113-105-00	O-RING HS90 G50	*	1					

FIG. 35 LIFT PIPING SYSTEM (SF200)

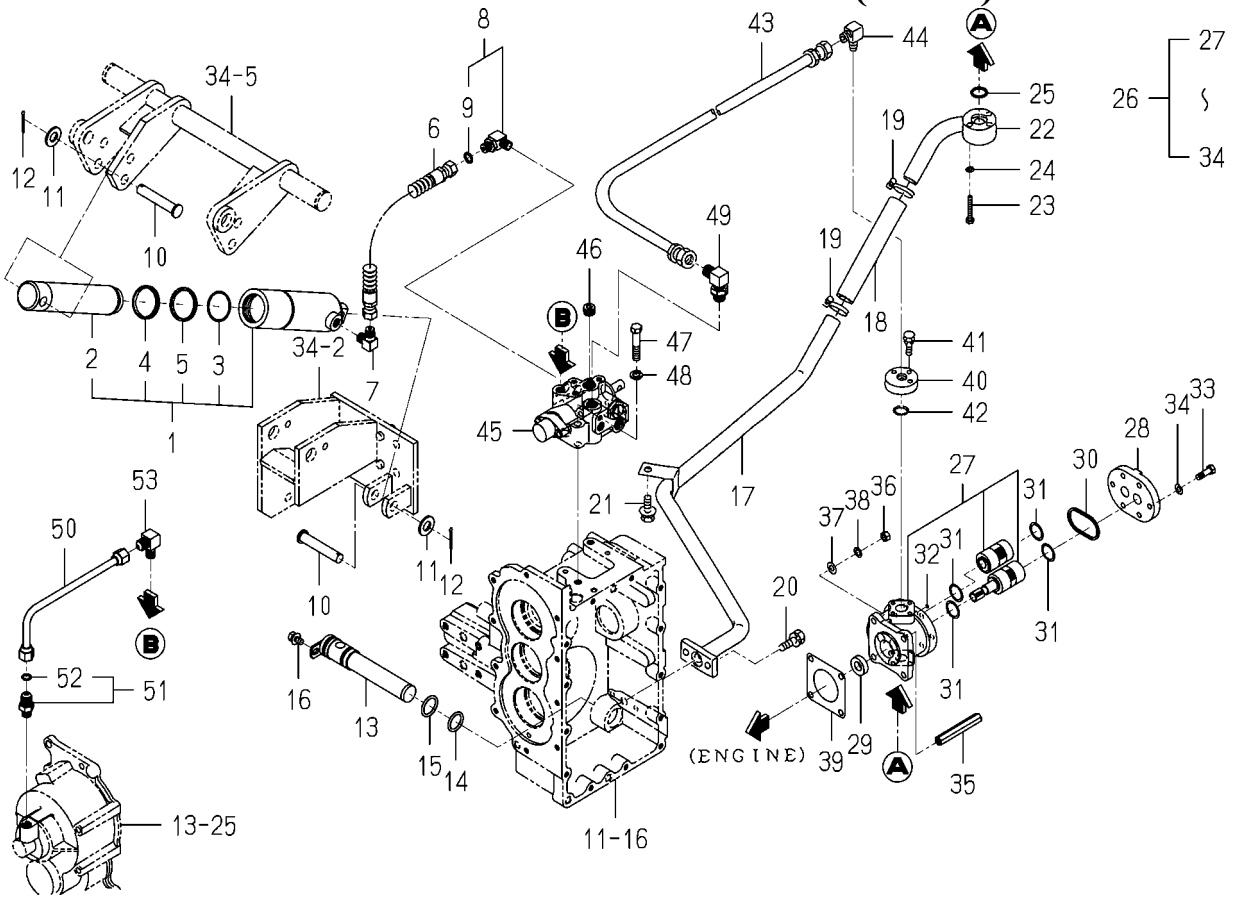

1689-502 -0100

KEY	PART CODE	DESCRIPTION	SPC	TYPE OF MODEL SF200 T42M	SF230 F42M	ITC	COL	GRP	REMARKS
31	V720-112-402-20	O-RING/P22	*	4					
32	V720-111-900-60	O-RING P6 HS90	*	1					
33	K135-002-009-00	BOLT/M8X28 11T	*	6					
34	V401-170-008-00	S.W	*	6					
35	1560-515-004-50	NUT/M08	*	2					
36	V304-260-008-00	NUT/M 8	*	2					
37	V411-260-008-00	WASHER,PL/M 8	*	4					
38	V401-160-008-00	WASHER,SP/M 8	*	4					
39	1404-503-006-00	PACKING,OIL PUMP	*	1					
40	1689-502-005-10	FLANGE/PUMP	*	1					
41	V210-560-602-50	BOLT/S	*	3					
42	V720-102-402-00	O-RING/P20	*	1					
43	1689-502-003-00	HOSE/HYDRO/1300	*	1					
44	3768-185-015-20	ADAPTER/90	*	1					
45	K211-042-000-20	CONTROL VALVE ASSY	*	1					FIG 048
46	V780-140-000-6T	PLUG/SCREW/SEAL	*	1					
47	V201-261-005-00	BOLT/M10X50	*	2					
48	V401-160-010-00	WASHER,SP/M10	*	2					
49	1689-502-250-00	ADAPTER/L/G3/8 ASSY	*	1					
50	1689-502-230-00	PIPE/PTO COMP	*	1					
51	1650-509-280-00	ADAPTER/PF1/4 ASSY	*	1					
52	V720-112-401-10	RING/O	*	1					
53	3805-352-002-00	ADAPTER/0-/R1/4XM16	*	1					

FIG. 36 LIFT LEVER SYSTEM

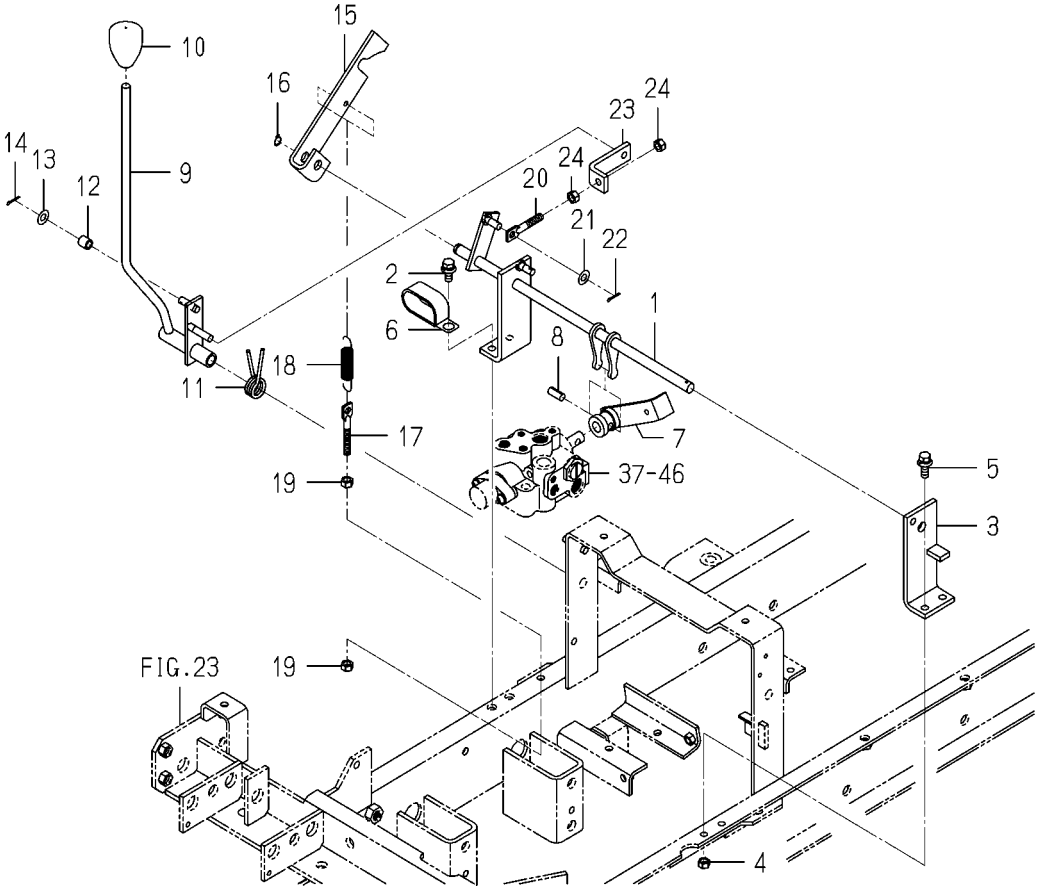

1689-503A-0100

KEY	PART CODE	DESCRIPTION	SPC	TYPE OF MODEL SF200 T42M	TYPE OF MODEL SF230 F42M	ITC	COL	GRP	REMARKS
1	1689-503-410-00	SHIFTER/SPOOL COMP	*	1	1				
2	V211-360-802-00	BOLT(SP) M8X20	*	2	2				
3	1689-503-420-10	STAY/SHIFTER COMP	*	1	1				
4	V304-260-008-00	NUT/M 8	*	2	2				
5	V211-360-802-50	BOLT,SEMS	*	2	2				
6	3650-261-001-00	CLAMP/25X50	*	1	1				
7	1689-503-260-00	HUB/SPOOL COMP	*	1	1				
8	V580-140-802-00	PIN/SPRING	*	1	1				
9	1689-503-310-00	LEVER/LIFT COMP	*	1	1				
10	1544-219-005-00	KNOB,LEVER/12	*	1	1				
11	1636-504-005-10	SPRING/HT021	*	1	1				
12	1689-272-002-00	HUB/08X12X12	*	1	1				
13	V411-260-008-00	WASHER,PL/M 8	*	1	1				
14	V500-162-501-50	PIN,SPLIT/2.5X15	*	1	1				
15	1689-503-002-10	PLATE/NEUTRAL	*	1	1				
16	V710-140-010-00	RING,SNAP/E10	*	1	1				
17	3104-210-213-00	ROD/M08X67	*	1	1				
18	1104-410-007-00	SPRING/HE074	*	1	1				
19	V304-260-008-00	NUT/M 8	*	2	2				
20	3652-285-001-00	BOLT	*	1	1				
21	V411-260-008-00	WASHER,PL/M 8	*	1	1				
22	V500-163-001-50	PIN,SPLIT/3 X15	*	1	1				
23	1636-271-004-00	PLATE/L/22X60	*	1	1				
24	V304-260-008-00	NUT/M 8	*	2	2				

FIG. 37 LIFT PIPING SYSTEM (SF230)

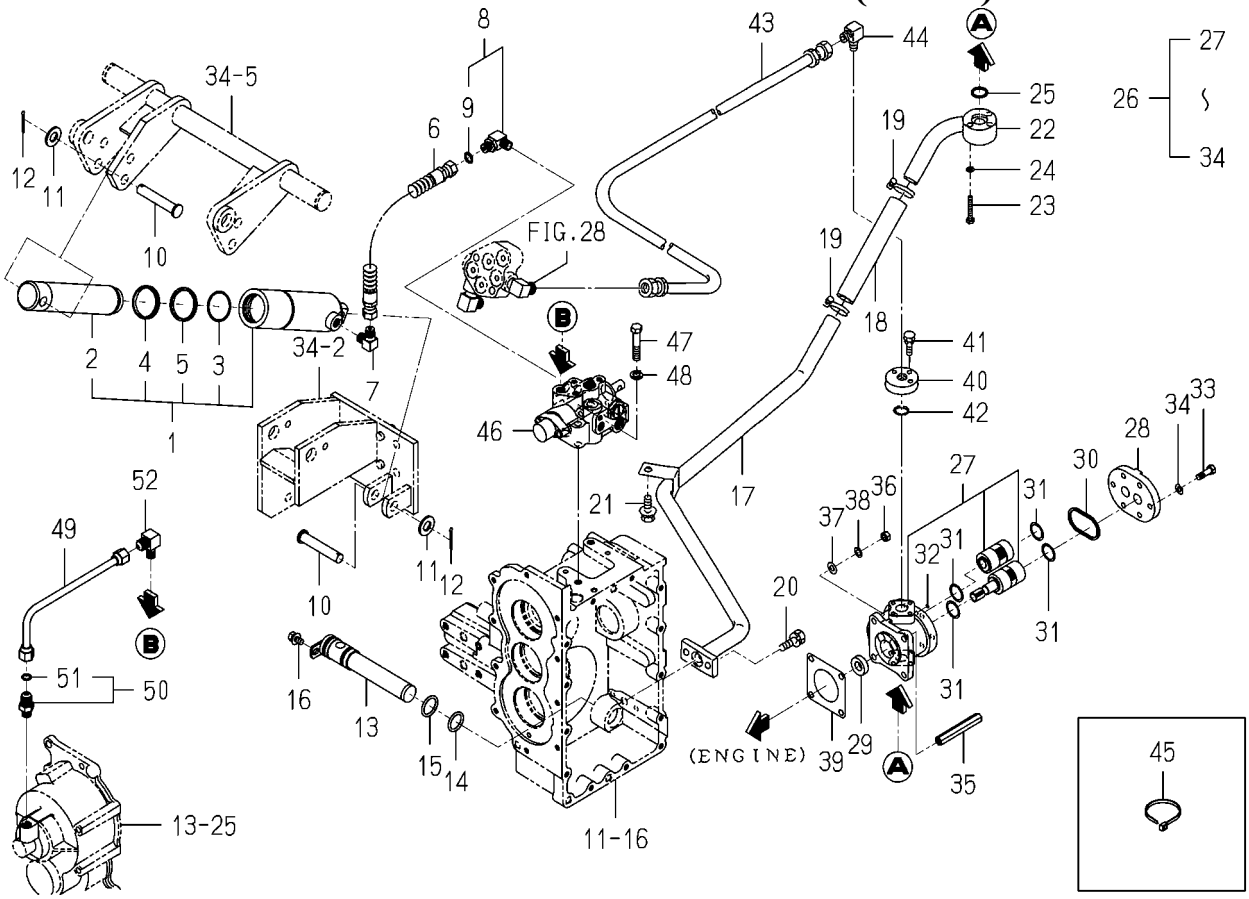

1689-504 -0100

KEY	PART CODE	DESCRIPTION	SPC	TYPE OF MODEL SF200 T42M	TYPE OF MODEL SF230 F42M	ITC	COL	GRP	REMARKS
1	K182-015-000-00	CYLINDER ASSY	*		1				
2	K182-012-001-00	PISTON	*		1				
3	K182-007-002-00	PISTON STOPPER SET	*		1				
4	V793-142-480-60	DUST SEAL SER42	*		1				
5	V724-124-304-20	PACKING PS-42	*		1				
6	3650-837-210-00	HOSE/HYDRO/460	*		1				
7	3768-185-022-10	ADAPTER(90ß/PUMP)	*		1				
8	1705-408-230-00	ADAPTER/L/G1/4 ASSY	*		1				
9	V720-112-401-10	RING/O	*		1				
10	1689-502-001-00	PIN/14X80	*		2				
11	V411-260-014-00	WASHER,PL/M14	*		2				
12	V500-163-003-00	PIN,SPLIT/3X30	*		2				
13	1435-201-220-00	FILTER,SUCTION(HST)	*		1				
14	V720-103-502-40	O-RING/P24	*		1				
15	V720-103-502-60	O-RING/P26	*		1				
16	V211-360-801-60	BOLT,SEMS (SP)	*		1				
17	1689-502-220-00	PIPE/SUCTION COMP	*		1				
18	3656-355-001-00	HOSE/19X29X170	*		1				
19	J061-224-032-00	CLAMP/WIRE/24-32	*		2				
20	V211-260-802-50	BOLT/S	*		3				
21	V211-260-802-00	BOLT,SEMS (S)	*		1				
22	1689-502-210-00	FLANGE/SUCTION COMP	*		1				
23	V200-360-604-00	BOLT	*		3				
24	V401-160-006-00	WASHER,SP/M 6	*		3				
25	V720-102-402-00	O-RING/P20	*		2				
26	K135-023-000-00	PUMP GEAR ASSY	*		1				
27	K135-023-100-00	GEAR PUMP SET	*		1				
28	K135-017-006-00	COVER,PUMP	*		1				
29	V744-114-280-70	SEAL,OIL	*		1				
30	V721-113-105-00	O-RING HS90 G50	*		1				

FIG. 37 LIFT PIPING SYSTEM (SF230)

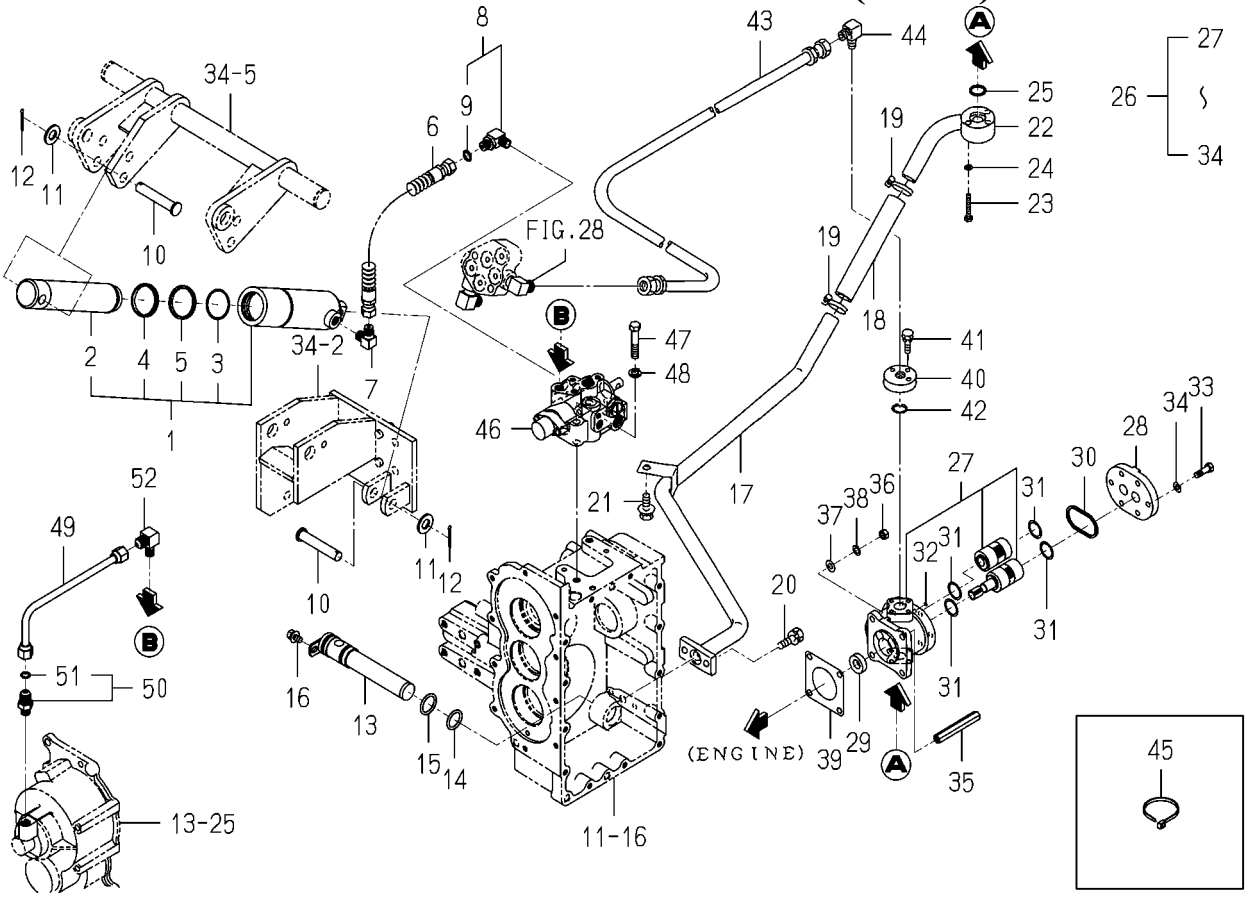

1689-504 -0100

KEY	PART CODE	DESCRIPTION	SPC	TYPE OF MODEL SF200 T42M	TYPE OF MODEL SF230 F42M	ITC	COL	GRP	REMARKS
31	V720-112-402-20	O-RING/P22	*		4				
32	V720-111-900-60	O-RING P6 HS90	*		1				
33	K135-002-009-00	BOLT/M8X28 11T	*		6				
34	V401-170-008-00	S.W	*		6				
35	1560-515-004-50	NUT/M08	*		2				
36	V304-260-008-00	NUT/M 8	*		2				
37	V411-260-008-00	WASHER,PL/M 8	*		4				
38	V401-160-008-00	WASHER,SP/M 8	*		4				
39	1404-503-006-00	PACKING,OIL PUMP	*		1				
40	1689-502-005-10	FLANGE/PUMP	*		1				
41	V210-560-602-50	BOLT/S	*		3				
42	V720-102-402-00	O-RING/P20	*		1				
43	1689-504-001-10	HOSE0HYDRO/1550	*		1				
44	3768-185-015-20	ADAPTER/90	*		1				
45	3737-172-010-00	BAND,HARNESS	*		1				
46	K211-042-000-20	CONTROL VALVE ASSY	*		1				FIG 048
47	V201-261-005-00	BOLT/M10X50	*		2				
48	V401-160-010-00	WASHER,SP/M10	*		2				
49	1689-502-230-00	PIPE/PTO COMP	*		1				
50	1650-509-280-00	ADAPTER/PF1/4 ASSY	*		1				
51	V720-112-401-10	RING/O	*		1				
52	3805-352-002-00	ADAPTER/0-/R1/4XM16	*		1				

FIG. 38 UP STOP SYSTEM

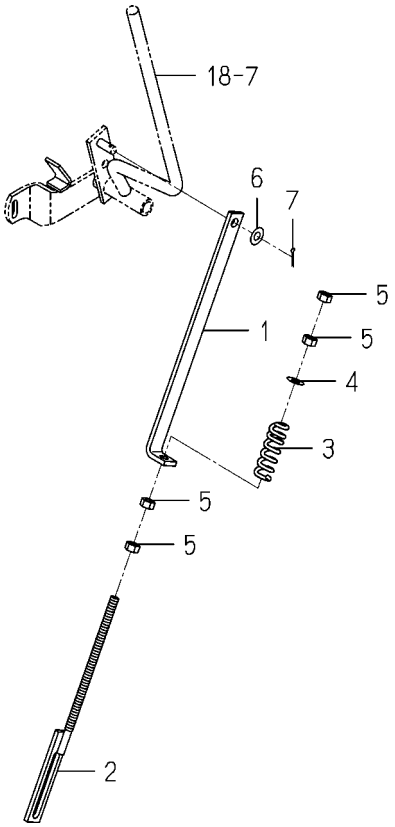

1689-506A-0100

KEY	PART CODE	DESCRIPTION	SPC	TYPE OF MODEL SF200 T42M	TYPE OF MODEL SF230 F42M	ITC	COL	GRP	REMARKS
1	1689-506-011-00	PLATE/L/19X257	*	1	1				
2	1689-506-310-00	ROD/UPSTOP COMP	*	1	1				
3	1705-312-006-00	SPRING/HC058	*	1	1				
4	V411-260-008-00	WASHER,PL/M 8	*	1	1				
5	V304-260-008-00	NUT/M 8	*	4	4				
6	V411-260-008-00	WASHER,PL/M 8	*	1	1				
7	V500-162-501-50	PIN,SPLIT/2.5X15	*	1	1				

FIG. 39 FENDER SYSTEM

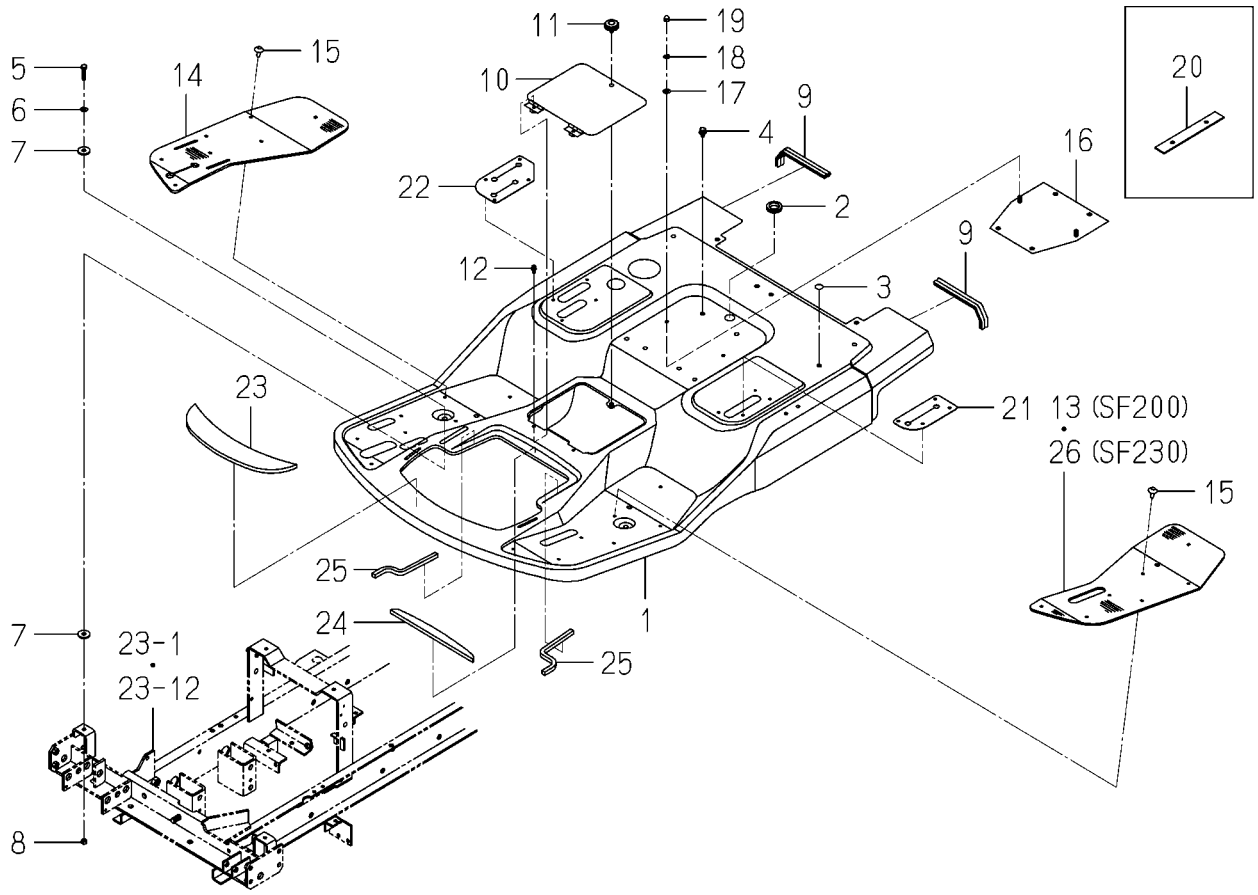

1689-603C-0100,1689-603D-0100

KEY	PART CODE	DESCRIPTION	SPC	TYPE OF MODEL SF200 T42M	TYPE OF MODEL SF230 F42M	ITC	COL	GRP	REMARKS
1	1689-603-310-00	FENDER COMP	*	1	1		4G		
2	3650-432-014-00	GROMMET	*	1	1				
3	8935-069-051-10	PATCH SEAL/A	*	3	3				
4	V211-360-801-60	BOLT,SEMS (SP)	*	4	4				
5	V201-260-803-00	BOLT/M 8X30	*	2	2				
6	V411-260-008-00	WASHER,PL/M 8	*	2	2				
7	1593-612-005-00	INSULATOR/10X30X03	*	4	4				
8	V304-260-008-00	NUT/M 8	*	2	2				
9	1689-603-012-00	INSULATOR/220	*	2	2				
10	1689-603-220-10	COVER/FENDER COMP	*	1	1		4G		
11	3623-820-013-00	KNOB,SET/12	*	1	1				
12	V120-376-001-60	SCREW/SP	*	2	2				
13	1689-603-021-00	MAT/LH	*	1					
14	1689-603-022-00	MAT/RH	*	1	1				
15	1636-611-011-00	RIVET/SCREW ASSY	*	14	14				
16	1689-603-230-00	PLATE/I/230X230 COMP	*	1	1		4G		
17	V411-260-008-00	WASHER,PL/M 8	*	2	2				
18	V401-160-008-00	WASHER,SP/M 8	*	2	2				
19	V341-120-008-00	NUT,CAP/M 8	*	2	2				
20	1689-603-006-00	PLATE/I/32X212	*	2	2				
21	1689-603-023-00	INSULATOR/GUIDE/LH	*	1	1				
22	1689-603-024-00	INSULATOR/GUIDE/RH	*	1	1				
23	1689-603-025-00	INSULATOR/FENDER/F	*	1	1				
24	1689-603-026-00	INSULATOR/FENDER/R	*	1	1				
25	1689-603-027-00	INSULATOR/10X330	*	2	2				
26	1689-604-001-00	MAT/LH	*		1				

FIG. 40 POST COVER SYSTEM

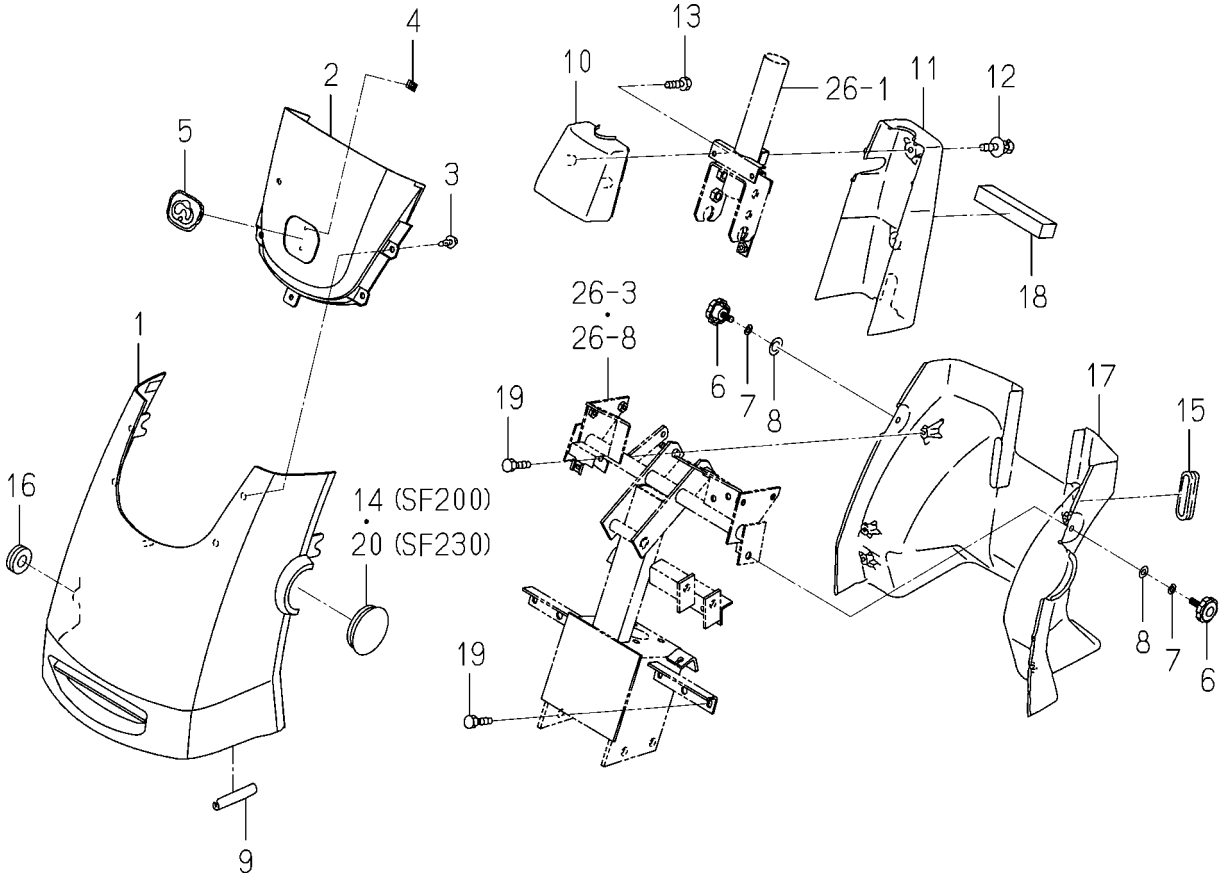

1689-611 -0100,1689-612A-0100

KEY	PART CODE	DESCRIPTION	SPC	TYPE OF MODEL SF200 T42M	SF230 F42M	ITC	COL	GRP	REMARKS
1	1689-611-201-00	BONNET ASSY	*	1	1				
2	2175-506-008-10	PANEL/HOOD/UNDER	*	1	1				
3	2175-501-201-00	SCREW/6X12	*	4	4				
4	V350-160-005-00	NUT,SPEED	*	1	1				
5	3533-901-012-00	ORNAMENT/ISEKI	*	1	1				
6	2144-508-310-10	KNOB/38	*	2	2				
7	V401-160-008-00	WASHER,SP/M 8	*	2	2				
8	V411-260-008-00	WASHER,PL/M 8	*	2	2				
9	3805-201-013-00	PAD/69	*	2	2				
10	2175-506-003-00	COVER/COLUMN/FRONT	*	1	1				
11	2175-506-004-00	COVER/COLUMN/REAR	*	1	1				
12	V210-360-601-60	BOLT(SP)/M6X16	*	2	2				
13	2175-501-201-00	SCREW/6X12	*	2	2				
14	1689-611-002-00	PLUG/64	*	1					
15	1689-611-003-00	PLUG/COVER	*	1	1				
16	1689-611-004-00	PLUG/40	*	1	1				
17	2175-507-001-10	PLATE	*	1	1				
18	1689-611-005-00	INSULATOR/30X30X135	*	1	1				
19	2175-501-201-00	SCREW/6X12	*	4	4				
20	1689-612-001-00	PLUG/64	*		1				

FIG. 41 POST PANEL SYSTEM

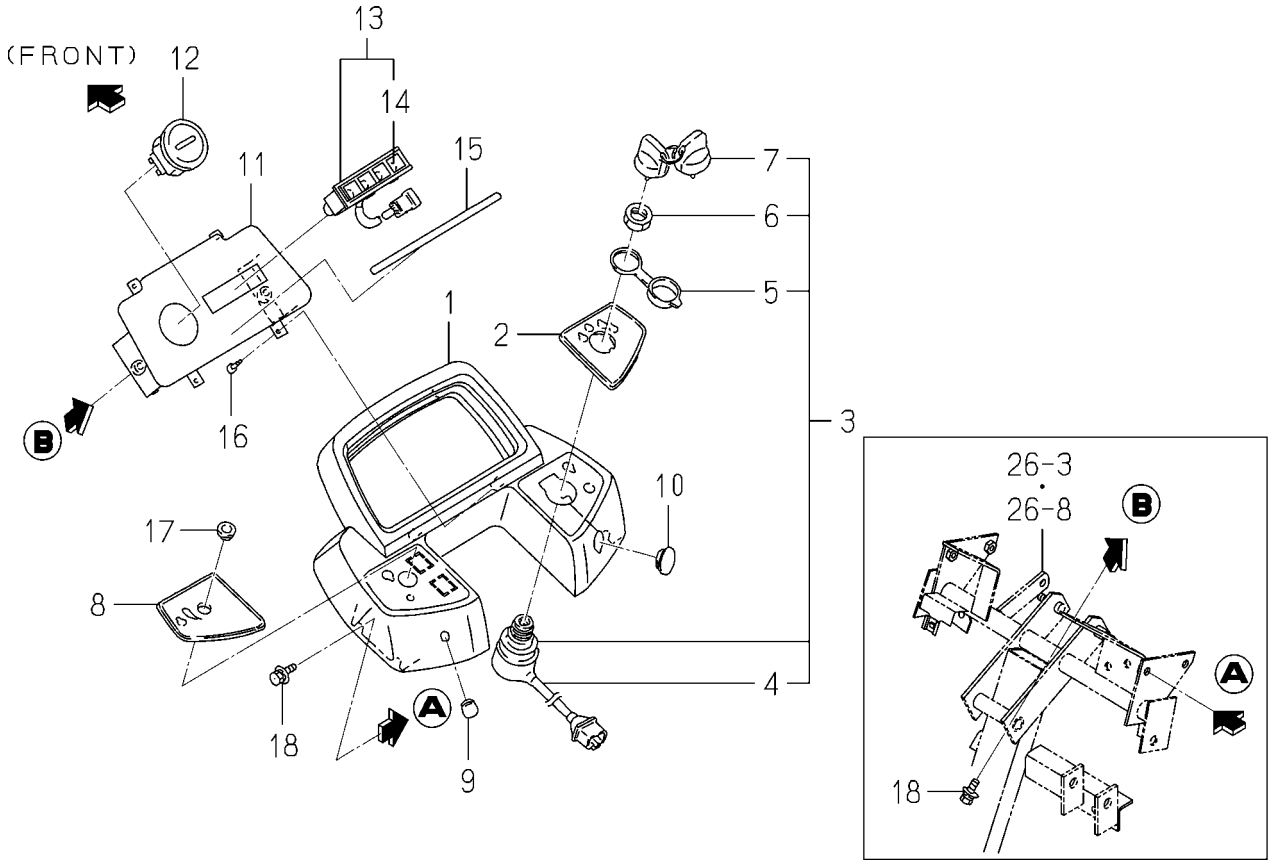

1689-613 -0100

KEY	PART CODE	DESCRIPTION	SPC	TYPE OF MODEL SF200 T42M	TYPE OF MODEL SF230 F42M	ITC	COL	GRP	REMARKS
1	1689-613-201-00	PANEL/HOOD/UPPER	*	1	1				
2	1689-613-202-00	PANEL/STARTER	*	1	1				
3	1593-621-250-10	SWITCH(STARTER) ASSY	*	1	1				
4	1593-621-252-00	COVER	*	1	1				
5	1444-621-311-00	CAP	*	1	1				
6	1444-621-312-00	NUT,RING/M28X1.0	*	1	1				
7	3614-261-002-00	KEY ASSY	*	1	1				
8	1689-613-206-00	PANEL/THROTTLE	*	1	1				
9	1689-613-203-00	CAP/10	*	1	1				
10	1689-613-204-00	CAP/23	*	1	1				
11	1689-613-220-10	PLATE/MONITOR COMP	*	1	1				
12	1689-613-260-00	METER/HOUR ASSY	*	1	1				
13	1689-613-240-00	LAMP/MONITOR ASSY	*	1	1				
14	3650-270-214-00	BULB	*	4	4				
15	1689-613-211-00	ORNAMENT/MONITOR	*	1	1				
16	V195-164-008-10	SCREW/TAPPING	*	4	4				
17	1427-621-012-00	GROMMET	*	1	1				
18	4301-210-002-00	BOLT (S/N6X16)	*	6	6				

FIG. 42 HOOD SYSTEM

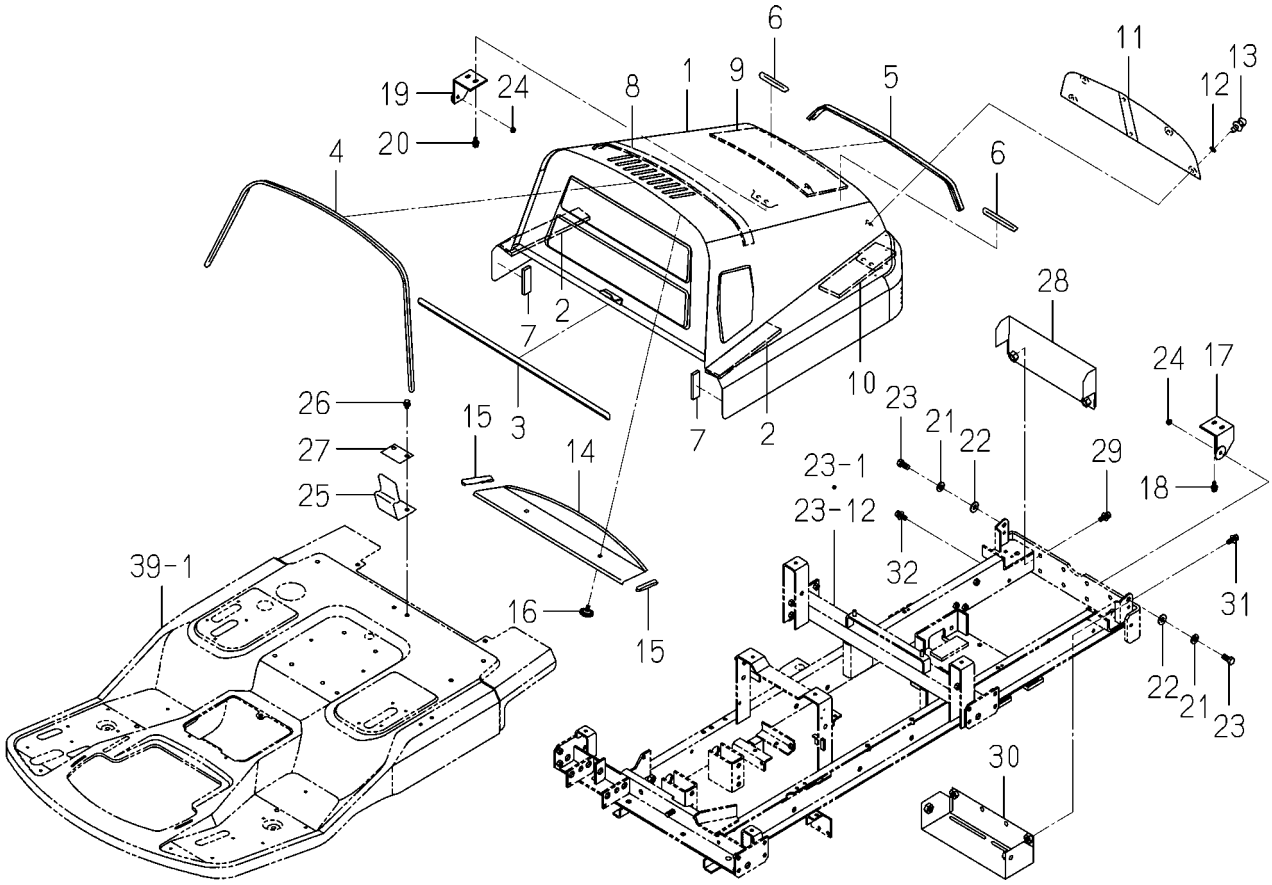

1689-621B-0100

KEY	PART CODE	DESCRIPTION	SPC	TYPE OF MODEL SF200 T42M	TYPE OF MODEL SF230 F42M	ITC	COL	GRP	REMARKS
1	1689-621-410-00	HOOD COMP	*	1	1		4G		
2	1689-621-011-00	INSULATOR/50X270	*	2	2				
3	1689-621-012-00	INSULATOR/730	*	1	1				
4	1689-621-013-00	TRIM/1240	*	1	1				
5	1689-621-014-10	TRIM/710	*	1	1				
6	1689-102-012-00	TRIM/110	*	2	2				
7	1689-621-015-00	INSULATOR/20X90	*	2	2				
8	1689-621-017-00	INSULATOR/30X600	*	1	1				
9	1689-621-018-00	INSULATOR/HOOD	*	1	1				
10	1689-621-019-00	INSULATOR/MUFFLER	*	1	1				
11	1689-621-260-10	NET/REAR COMP	*	1	1		7F		
12	1593-601-073-00	WASHER/06X16X01	*	6	6				
13	V120-376-001-60	SCREW/SP	*	6	6				
14	1689-621-006-00	NET/F/UPPER	*	1	1				
15	1689-621-016-00	INSULATOR/100	*	2	2				
16	3623-820-013-00	KNOB,SET/12	*	2	2				
17	1689-621-270-00	PIVOT/LH COMP	*	1	1				
18	V211-360-802-00	BOLT(SP) M8X20	*	2	2				
19	1689-621-280-00	PIVOT/RH COMP	*	1	1				
20	V211-360-802-00	BOLT(SP) M8X20	*	2	2				
21	V411-260-012-00	WASHER /M12	*	2	2				
22	1689-621-007-00	WASHER/12X26X04	*	2	2				
23	1689-621-008-00	BOLT	*	2	2				
24	2502-601-005-00	NUT/CONICALWASHER	*	2	2				
25	1689-621-003-00	PLATE/LOCK	*	1	1				
26	V211-360-801-60	BOLT,SEMS (SP)	*	2	2				
27	1689-621-009-00	PLATE/I/50X70	*	1	1				
28	1689-621-240-10	COVER/REAR COMP	*	1	1		7F		
29	V211-361-002-50	BOLT/SP	*	2	2				
30	1689-621-250-00	COVER/ENGINE COMP	*	1	1		7F		

FIG. 42 HOOD SYSTEM

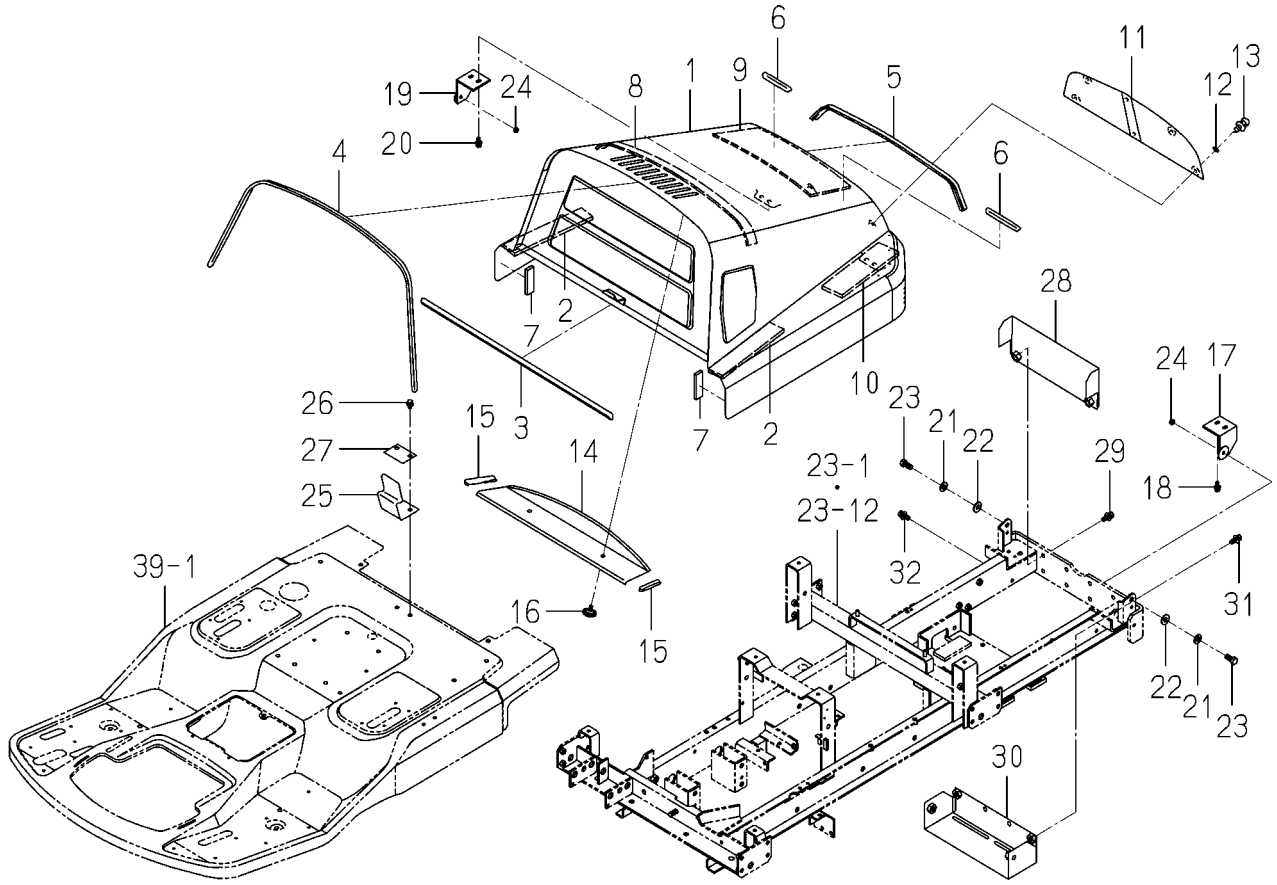

1689-621B-0100

KEY	PART CODE	DESCRIPTION	SPC	TYPE OF MODEL SF200 T42M	TYPE OF MODEL SF230 F42M	ITC	COL	GRP	REMARKS
31	V211-361-002-50	BOLT/SP	*	2	2				
32	V211-260-801-60	BOLT,SEMS (S) M8X16	*	2	2				

FIG. 43 HARNESS SYSTEM

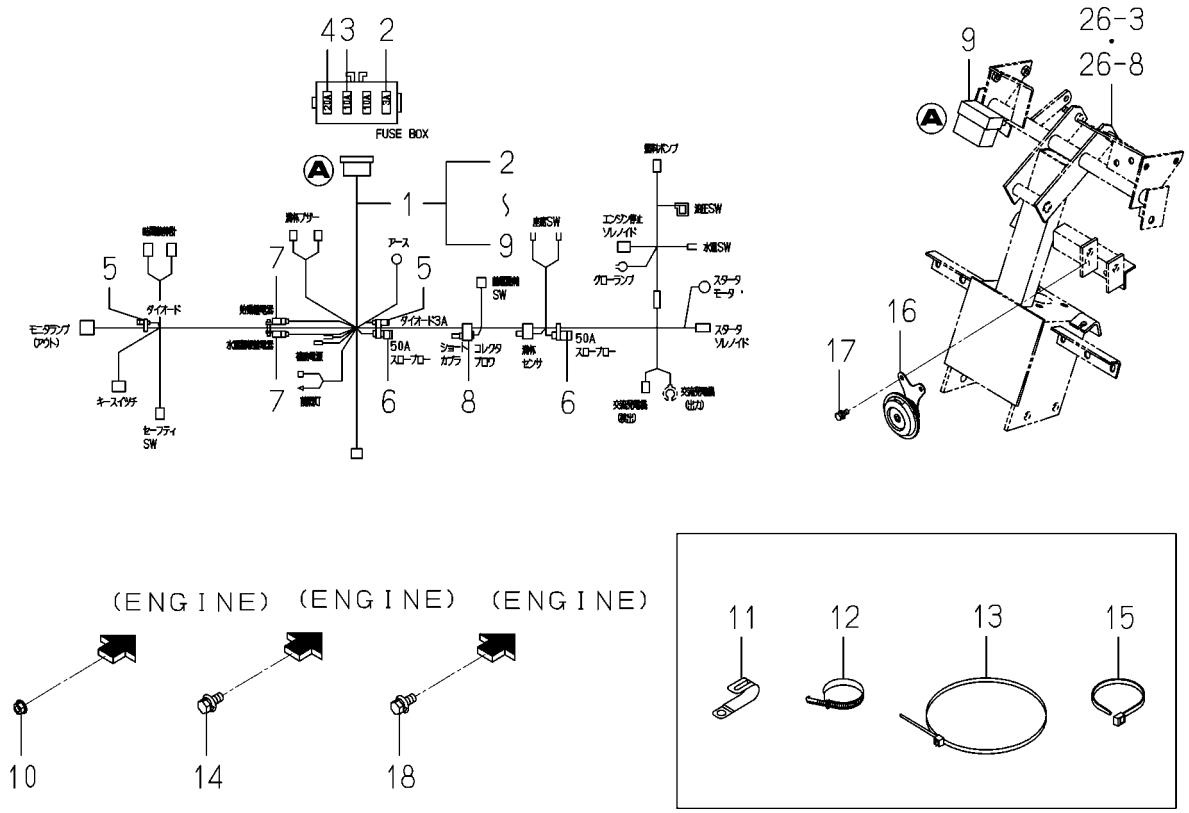

1689-623 -0100

KEY	PART CODE	DESCRIPTION	SPC	TYPE OF MODEL SF200 T42M	SF230 F42M	ITC	COL	GRP	REMARKS
1	1689-623-200-40	HARNESS/MAIN ASSY	*	1	1				
2	1575-623-009-00	FUSE/32V03A	*	1	1				
3	1575-623-010-00	FUSE/32V10A	*	2	2				
4	1593-623-203-00	FUSE/32V20A	*	1	1				
5	3650-262-202-00	DIODE/3.0A	*	2	2				
6	1614-690-202-00	FUSE/SLOWBLOW	*	2	2				
7	2500-623-220-00	RELAY/4P ASSY	*	2	2				
8	1593-623-504-00	SHORT COUPLER/REAR/P	*	1	1				
9	1593-623-503-00	CAP,FUSE BOX	*	1	1				
10	V361-260-006-00	NUT	*	1	1				
11	3737-172-011-00	CLAMP,HARNESS	*	2	2				
12	1342-402-006-00	BAND,WIRE/250	*	10	10				
13	1560-695-015-00	CLAMP	*	2	2				
14	V211-360-802-00	BOLT(SP) M8X20	*	1	1				
15	3737-172-010-00	BAND,HARNESS	*	1	1				
16	3656-271-290-10	HORN ASSY	*	1	1				
17	V210-360-601-60	BOLT(SP)/M6X16	*	2	2				
18	V211-360-802-00	BOLT(SP) M8X20	*	1	1				

FIG. 44 ORNAMENT

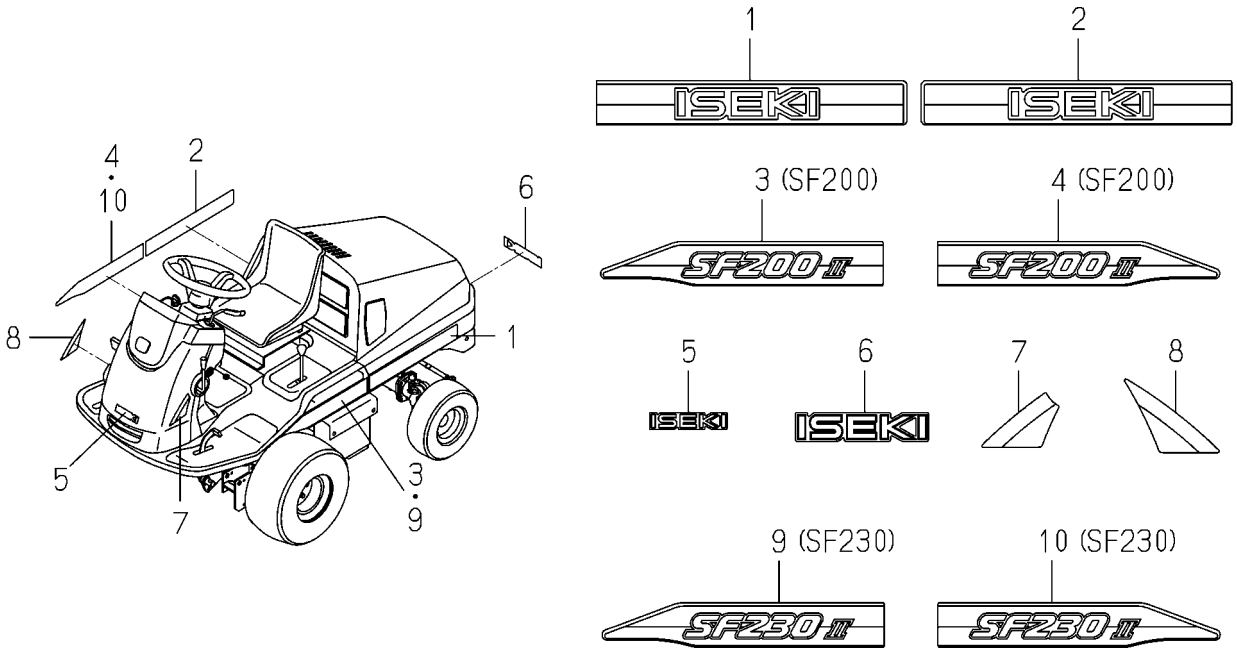

1689-901A-0100,1689-902B-0100

KEY	PART CODE	DESCRIPTION	SPC	TYPE OF MODEL SF200 T42M	TYPE OF MODEL SF230 F42M	ITC	COL	GRP	REMARKS
1	1689-901-027-00	ORNAMENT/HOOD/LH	*	1	1				
2	1689-901-022-00	ORNAMENT/HOOD/RH	*	1	1				
3	1689-901-023-00	ORNAMENT/FENDER/LH	*	1					
4	1689-901-024-00	ORNAMENT/FENDER/RH	*	1					
5	1689-901-007-00	ORNAMENT/FRONT	*	1	1				
6	1689-901-008-00	ORNAMENT/ISEKI	*	1	1				
7	1689-901-025-00	ORNAMENT/COVER/LH	*	1	1				
8	1689-901-026-00	ORNAMENT/COVER/RH	*	1	1				
9	1689-902-023-00	ORNAMENT/FENDER/LH	*		1				
10	1689-902-024-00	ORNAMENT/FENDER/RH	*		1				

FIG. 45 LABEL (CONTROL)

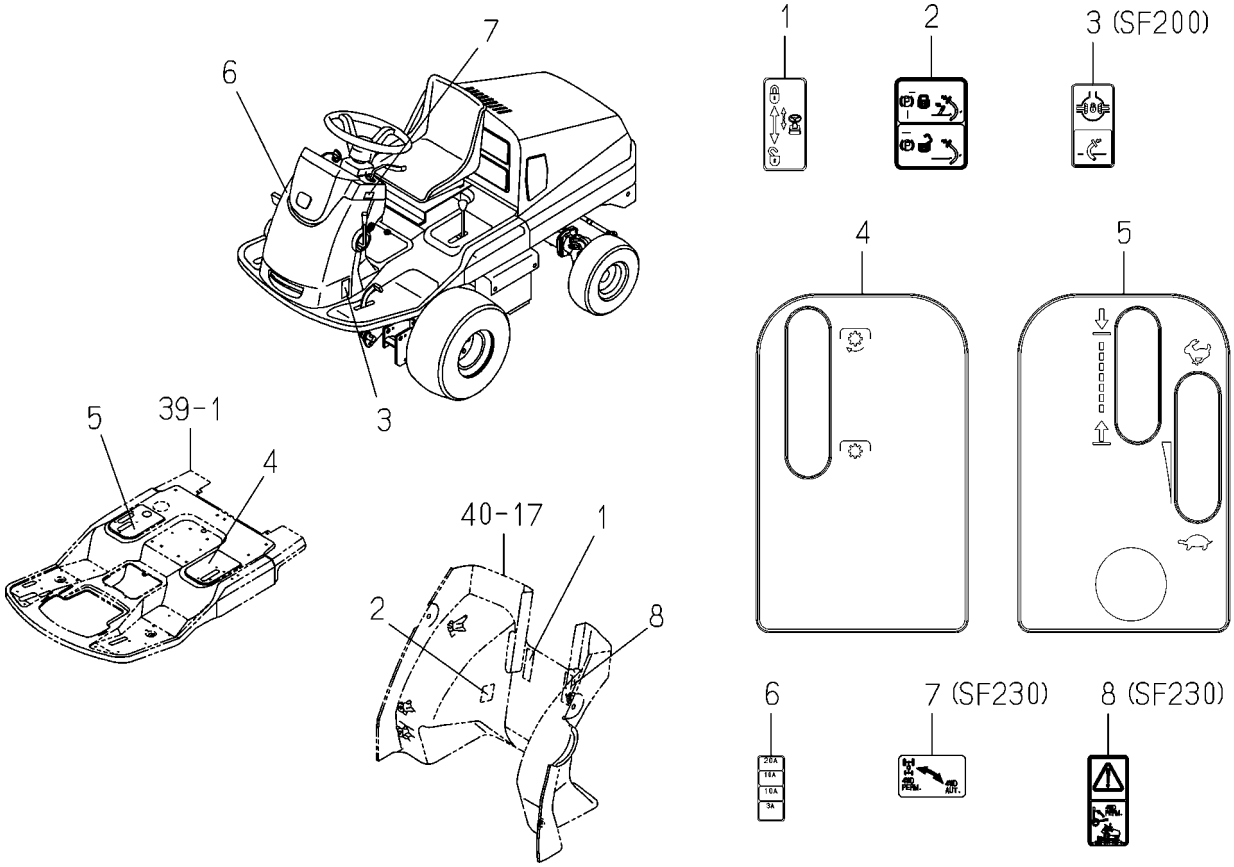

1689-903A-0100,1689-904B-0100

KEY	PART CODE	DESCRIPTION	SPC	TYPE OF MODEL SF200 T42M	TYPE OF MODEL SF230 F42M	ITC	COL	GRP	REMARKS
1	1689-903-001-00	LABEL/CONTROL/TILT	*	1	1				
2	1689-903-008-00	LABEL/PARKING	*	1	1				
3	1689-903-004-00	LABEL/DIFF	*	1					
4	1689-903-002-00	LABEL/CONTROL/LH	*	1	1				
5	1689-903-003-00	LABEL/CONTROL/RH	*	1	1				
6	1636-906-001-00	LABEL/FUSE/E	*	1	1				
7	1689-904-002-00	LABEL/CONTROL/2WD-4W	*		1				
8	1689-904-003-00	LABEL/WARNING/2WD-4W	*		1				

FIG. 46 LABEL (CAUTION)

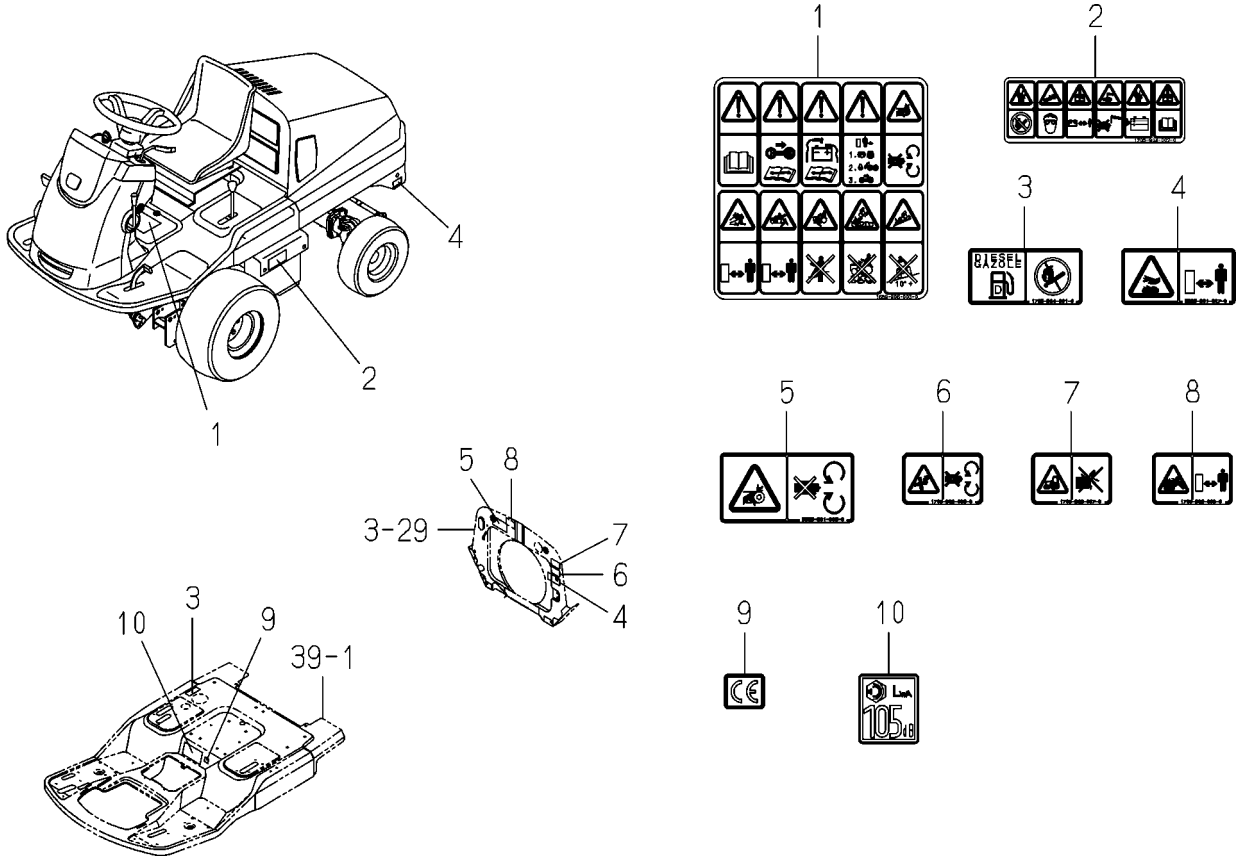

1689-906A-0100

KEY	PART CODE	DESCRIPTION	SPC	TYPE OF MODEL SF200 T42M	TYPE OF MODEL SF230 F42M	ITC	COL	GRP	REMARKS
1	1689-906-003-00	LABEL/CAUTION	*	1	1				
2	1705-904-002-00	LABEL/BATTERY	*	1	1				
3	1705-904-001-00	LABEL/FUEL	*	1	1				
4	8595-901-007-00	LABEL/WARNING/HOT	*	2	2				
5	8595-901-006-00	LABEL/WARNING/BELT	*	1	1				
6	1705-902-006-00	LABEL/W/FAN	*	1	1				
7	1705-902-007-00	LABEL/W/STARTER	*	1	1				
8	1705-902-008-00	LABEL/W/RADIATOR	*	1	1				
9	2500-901-027-00	LABEL/CE	*	1	1				
10	1705-904-011-00	LABEL/NOISE/LWA/105	*	1	1				

FIG. 47 WORKING LAMP SYSTEM (OPTION)

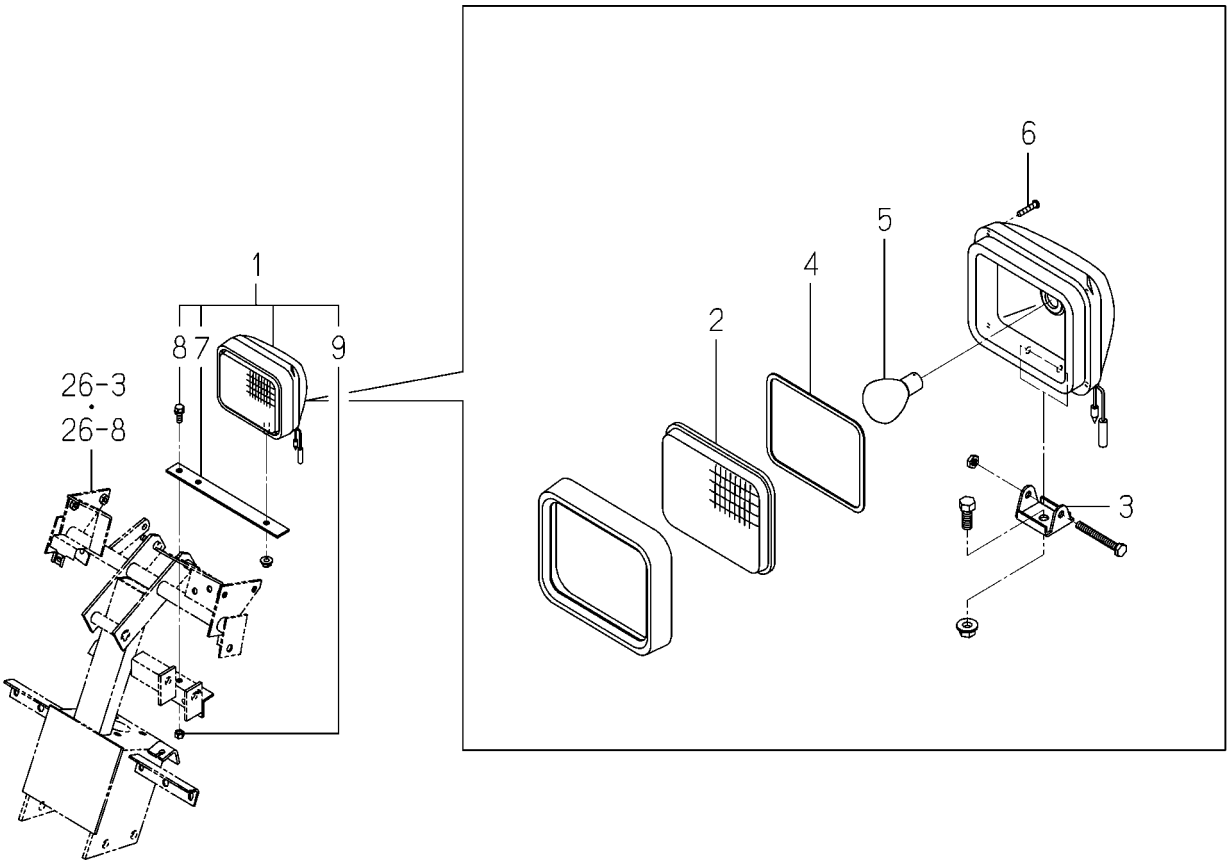

1689-624 -0100

KEY	PART CODE	DESCRIPTION	SPC	TYPE OF MODEL SF200 T42M	SF230 F42M	ITC	COL	GRP	REMARKS
1	1689-624-210-00	LAMP/WORK SET	T	1	1				
2	1560-654-911-00	LENS	T	1	1				
3	1560-654-912-00	BRACKET	T	1	1				
4	1560-654-915-00	GASKET	T	1	1				
5	1627-621-571-00	VALVE/LAMP/12V60W	T	1	1				
6	V195-164-020-40	BOLT	T	4	4				
7	1689-624-002-00	PLATE/I/25X235	T	1	1				
8	V211-260-802-00	BOLT,SEMS (S)	T	2	2				
9	V304-260-008-00	NUT/M 8	T	2	2				

FIG. 48 COMPONENT PARTS FOR K211-042-000-20 ON Fig.35,37

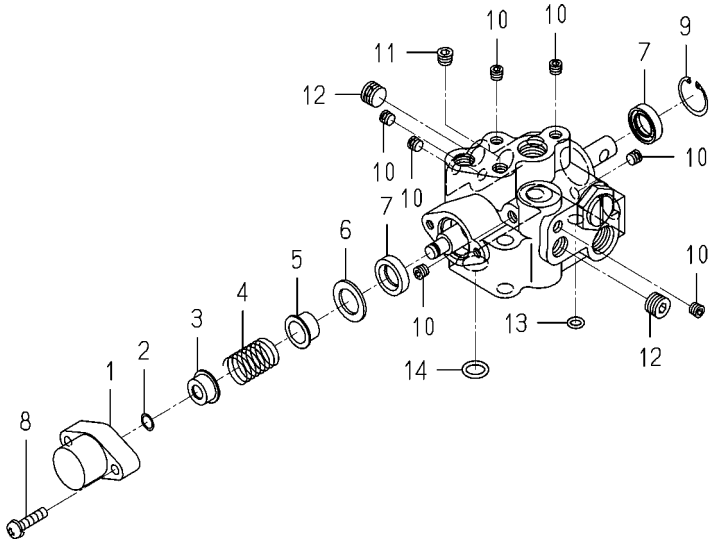

K211-042-000-2F

KEY	PART CODE	DESCRIPTION	SPC	TYPE OF MODEL SF200 T42M	TYPE OF MODEL SF230 F42M	ITC	COL	GRP	REMARKS
1	K211-012-003-00	COVER/SPOOL	*	1	1				
2	K211-012-009-00	RING,SNAP	*	1	1				
3	K211-012-005-00	STOPPER/SPRING	*	1	1				
4	K211-012-006-00	SPRING/HC042	*	1	1				
5	K211-042-003-00	SPRING STOPPER	*	1	1				
6	K211-012-007-00	COLLAR/17X27X02	*	1	1				
7	K211-004-007-00	SEAL,OIL/TC4,14247	*	2	2				
8	V120-266-002-50	SCREW,SEMS	*	2	2				
9	V705-140-024-00	RING,SNAP	*	1	1				
10	V780-140-000-1T	PLUG/SCREW/SEAL	*	7	7				
11	V780-140-000-2T	PLUG/SCREW/SEAL	*	1	1				
12	V780-140-000-4T	PLUG/SCREW/SEAL	*	2	2				
13	V720-111-900-70	O-RING/P 7	*	1	1				
14	V720-102-401-20	O-RING/P12	*	1	1				

FIG. 49 COMPONENT PARTS FOR 1614-223-210-00 ON Fig.30

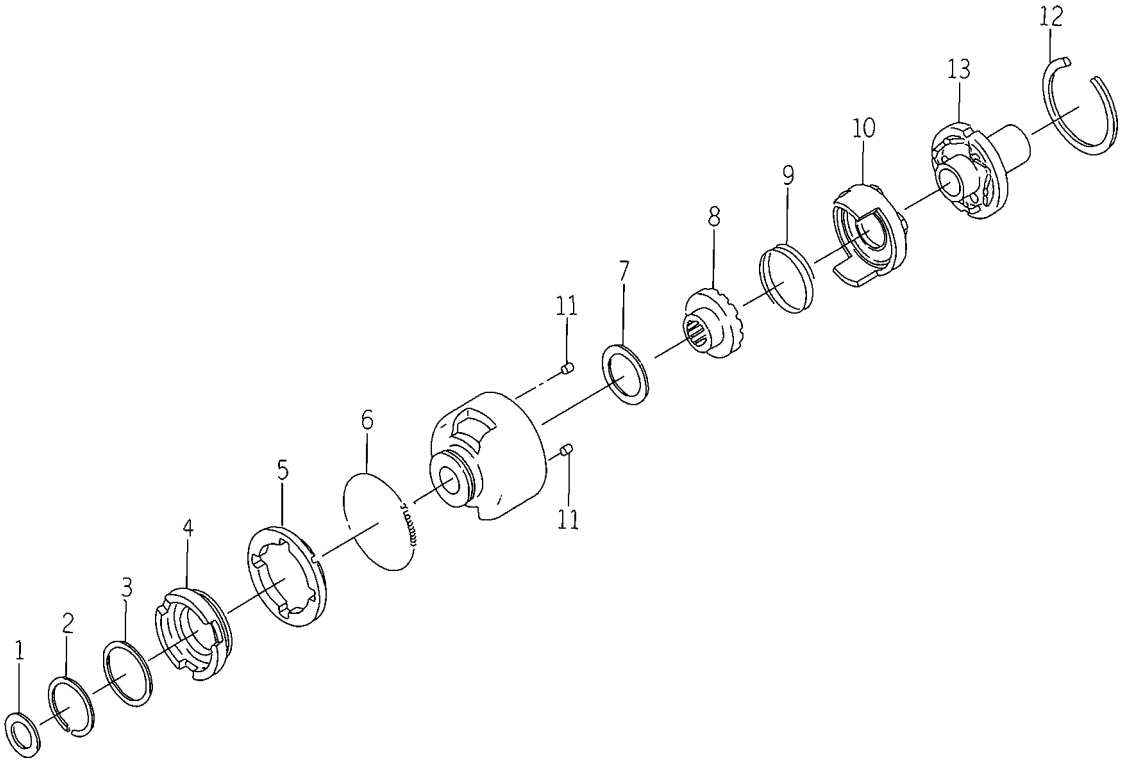

1614-223-210-0D

KEY	PART CODE	DESCRIPTION	SPC	TYPE OF MODEL SF200 T42M	TYPE OF MODEL SF230 F42M	ITC	COL	GRP	REMARKS
1	1614-223-211-00	WASHER	*		1				
2	1614-223-212-00	RING/SNAP/CS	*		1				
3	1614-223-213-00	WASHER	*		1				
4	1614-223-214-00	RING/BRAKE	*		1				
5	1614-223-215-00	SHOE/BRAKE	*		1				
6	1614-223-216-00	SPRING/HE	*		1				
7	1614-223-217-10	WASHER	*		1				
8	1614-223-218-00	CAM/DRIVEN	*		1				
9	1614-223-219-10	SPRING/HC	*		1				
10	1614-223-222-10	CAM/CENTER	*		1				
11	1614-223-223-00	PIN/PARALLEL	*		2				
12	1614-223-225-00	RING/SNAP/CH	*		1				
13	1614-223-226-10	CAM/DRIVE	*		1				

FIG. 50 COMPONENT PARTS FOR 1689-201-200-00 ON Fig.11

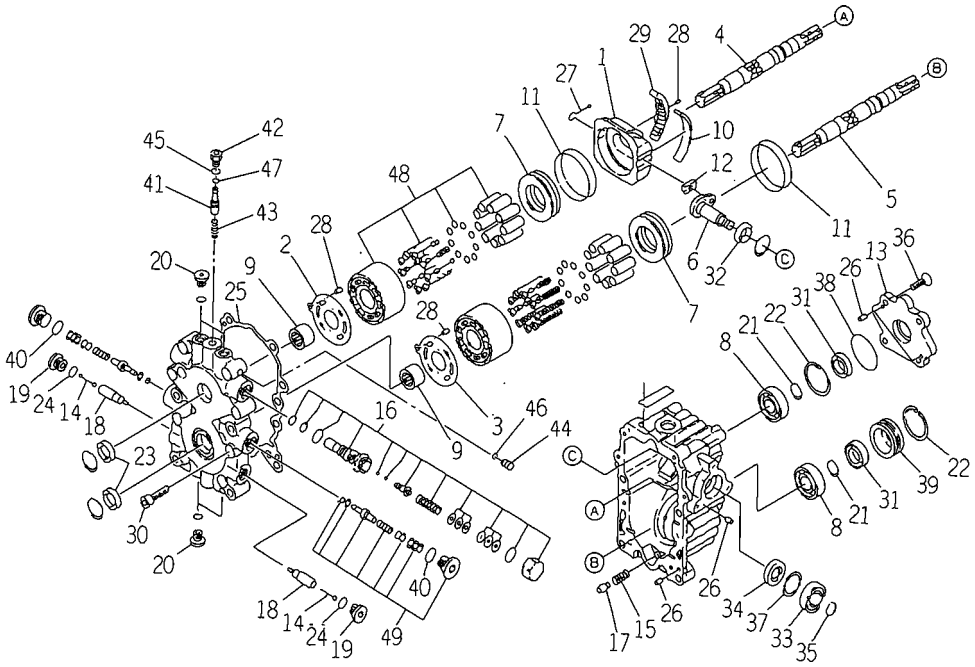

1689-201-200-0D

KEY	PART CODE	DESCRIPTION	SPC	TYPE OF MODEL SF200 T42M	TYPE OF MODEL SF230 F42M	ITC	COL	GRP	REMARKS
1	1683-202-501-00	PLATE/SWASH	*	1	1				
2	1689-201-201-00	PLATE/VALVE	*	1	1				
3	1683-202-503-00	PLATE/VALVE	*	1	1				
4	1683-202-504-00	SHAFT/P	*	1	1				
5	1689-201-202-00	SHAFT/M	*	1	1				
6	1689-201-203-00	SHAFT/TRUNNION/S/A	*	1	1				
7	1683-202-508-00	BEARING/THRUST	*	2	2				
8	1683-202-509-00	BEARING/BALL	*	2	2				
9	1683-202-511-00	BEARING/NEEDLE	*	2	2				
10	1683-202-512-00	BUSH	*	1	1				
11	1683-202-513-00	BUSH	*	2	2				
12	1683-202-514-00	METAL/SLIDE	*	1	1				
13	1683-202-515-00	COVER	*	1	1				
14	1683-202-516-00	SPRING	*	2	2				
15	1683-202-517-00	SPRING	*	1	1				
16	1683-202-518-00	VALVE/S/A	*	1	1				
17	1683-202-519-00	VALVE/S/A	*	1	1				
18	1683-202-521-00	POPPET	*	2	2				
19	1683-202-522-00	PLUG	*	2	2				
20	1683-202-523-00	PLUG	*	4	4				
21	V704-140-020-00	RING,SNAP/20C	*	2	2				
22	V705-140-047-00	RING,SNAP/47 C	*	2	2				
23	1683-202-524-00	SEAL/OIL	*	2	2				
24	V720-112-401-40	O-RING/P14	*	2	2				
25	1683-202-525-00	GASKET	*	1	1				
26	1683-202-526-00	PIN	*	6	6				
27	1683-202-527-00	GUIDE ASSY	*	1	1				
28	1683-202-528-00	PIN	*	1	1				
29	1683-202-529-00	BEARING	*	1	1				
30	V220-541-003-50	SCREW/SOCKET	*	8	8				

FIG. 50 COMPONENT PARTS FOR 1689-201-200-00 ON Fig.11

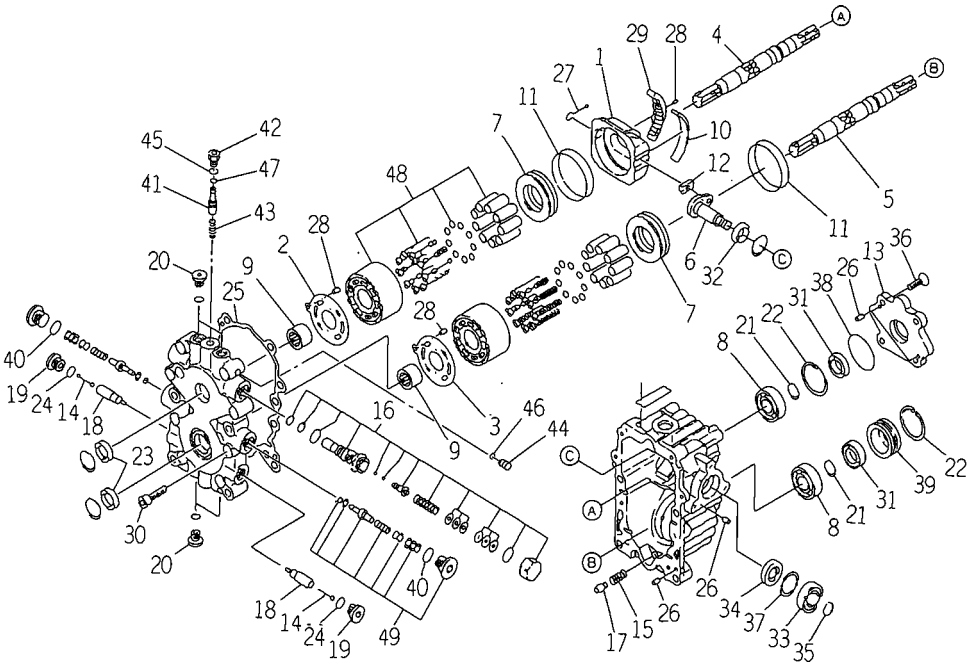

1689-201-200-0D

KEY	PART CODE	DESCRIPTION	SPC	TYPE OF MODEL SF200 T42M	TYPE OF MODEL SF230 F42M	ITC	COL	GRP	REMARKS
31	1683-202-531-00	SEAL/OIL	*	2	2				
32	1683-202-533-00	BEARING/BALL	*	1	1				
33	1689-201-204-00	BEALING/BALL	*	1	1				
34	1689-201-205-00	SEAL/OIL	*	1	1				
35	V704-140-017-00	RING,SNAP/17 C	*	1	1				
36	1683-202-536-00	SCREW	*	4	4				
37	1689-201-206-00	WASHER	*	1	1				
38	1683-202-538-00	RING/O	*	1	1				
39	1689-201-207-00	CASE/SEAL/OIL	*	1	1				
40	V720-102-401-80	O-RING/P18	*	1	1				
41	1689-201-208-00	BODY/VALVE	*	1	1				
42	2502-205-217-00	PLUG	*	1	1				
43	1689-201-209-00	SPRING	*	1	1				
44	1689-201-271-00	PLUG	*	1	1				
45	V720-111-900-80	O-RING/P8	*	1	1				
46	V720-111-900-40	RING/O	*	1	1				
47	1689-201-272-00	RING/O	*	1	1				
48	1689-201-280-00	BLOCK/CYLINDER ASSY	*	2	2				
49	1689-201-290-00	VALVE ASSY	*	2	2				

FIG. 51 COMPONENT PARTS FOR 1689-203-200-00 ON Fig.13

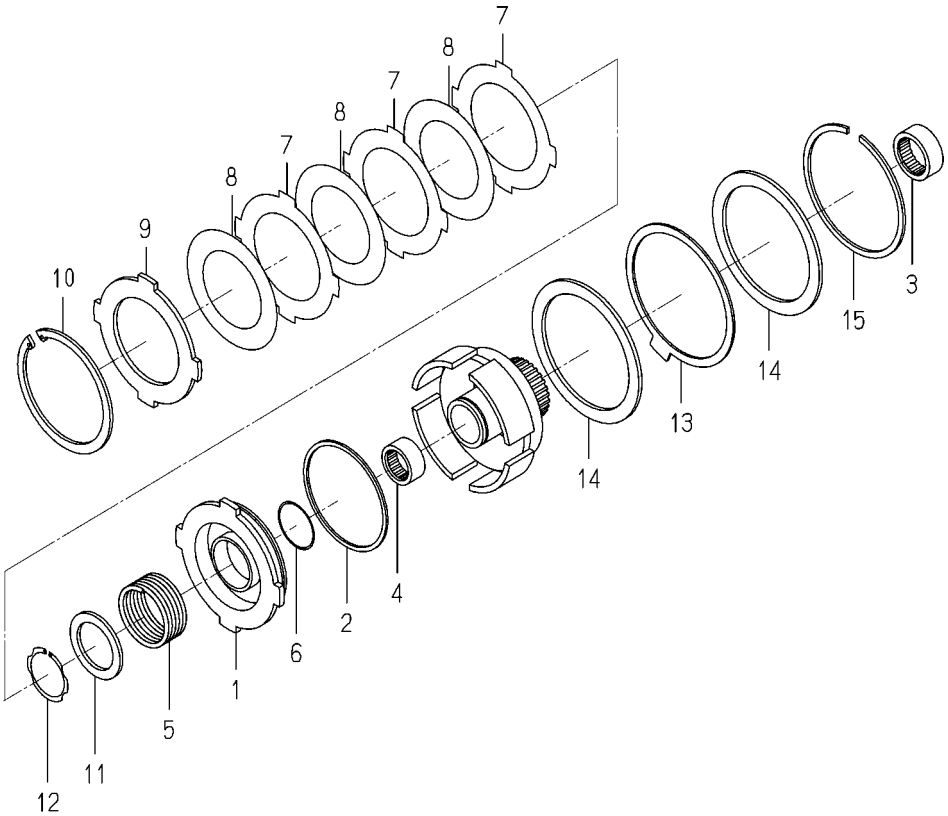

1689-203-200-0C

KEY	PART CODE	DESCRIPTION	SPC	TYPE OF MODEL SF200 T42M	TYPE OF MODEL SF230 F42M	ITC	COL	GRP	REMARKS
1	1561-221-502-10	PISTON	*	1	1				
2	1561-221-503-00	SEALRING	*	1	1				
3	V653-425-331-50	BEARING,NR/TA2515Z	*	1	1				
4	V653-430-401-50	BEARING,NR/304015	*	1	1				
5	1561-221-505-00	SPRING	*	1	1				
6	1650-203-214-00	RING/40	*	1	1				
7	1650-203-219-00	PLATE/SEPARATER	*	3	3				
8	1650-203-218-00	PLATE/FRICTION	*	3	3				
9	1561-221-511-00	PLATE/BACK	*	1	1				
10	1650-203-222-00	RING/SNAP/CH100	*	1	1				
11	1561-221-509-00	WASH	*	1	1				
12	1650-203-217-00	RING/SNAP/CS40	*	1	1				
13	1561-221-506-00	BRAKE/DISK	*	1	1				
14	1561-221-507-00	BRAKE/PRESSURE	*	1	1				
15	1561-221-508-00	RING/SNAP/CS105	*	1	1				

FIG. 52 COMPONENT PARTS FOR 1689-402-260-00 ON Fig.24

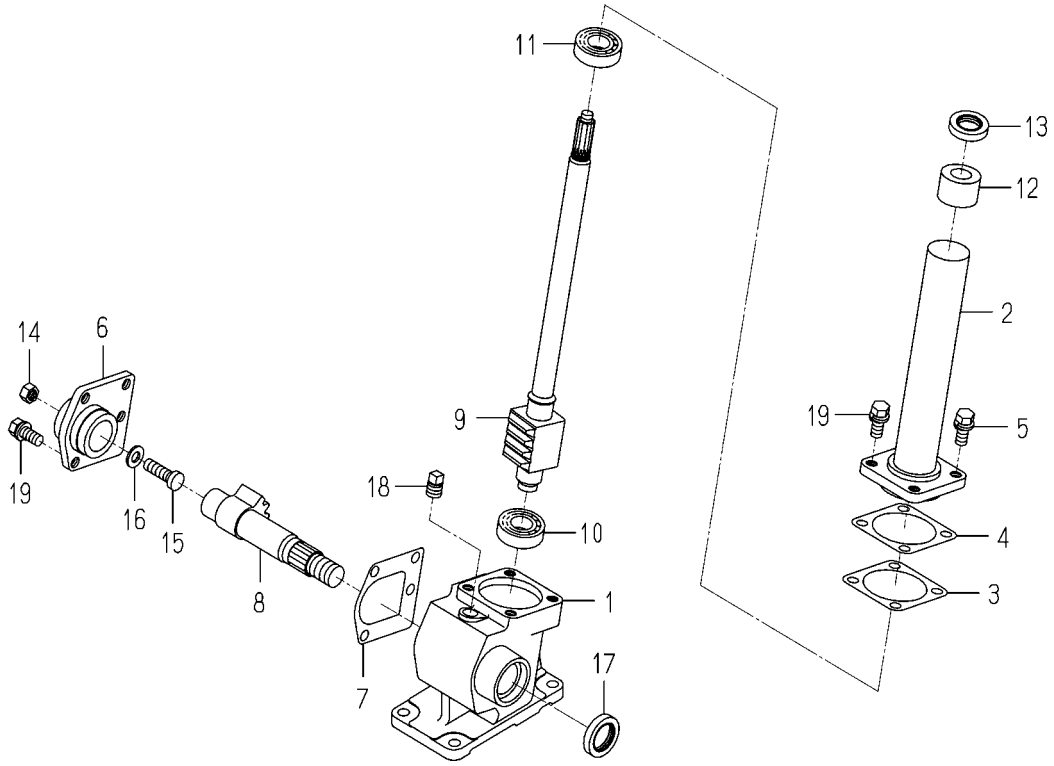

1689-402-260-0A

KEY	PART CODE	DESCRIPTION	SPC	TYPE OF MODEL SF200 T42M	SF230 F42M	ITC	COL	GRP	REMARKS
1	1672-406-240-10	BOX ASSY	*	1					
2	1672-406-250-00	COVER/TOP ASSY	*	1					
3	1427-406-001-00	PACKING,TOP COVER	*	1					
4	1427-406-002-00	SHIM,TOP COVER	*	1					
5	1672-406-001-00	BOLT/S	*	2					
6	1427-406-004-00	COVER,SIDE	*	1					
7	1427-406-005-00	PACKING,SIDE COVER	*	1					
8	1427-406-006-00	SHAFT,CROSS	*	1					
9	1689-402-261-00	UNIT/BALLSCREW ASSY	*	1					
10	1427-406-007-00	BEARING,BALL	*	1					
11	1427-406-008-00	BEARING,BALL	*	1					
12	1672-406-003-00	BUSH/COLUMN	*	1					
13	1427-406-011-00	SEAL,OIL/MHSA19368	*	1					
14	V334-260-010-00	NUT/M10	*	1					
15	1672-406-002-00	BOLT/ADJUST	*	1					
16	1427-406-013-00	BOLT,ADJUST	*	1					
17	1427-406-014-00	SEAL,OIL/MHSA26388	*	1					
18	1427-406-017-00	PLUG,OIL/PT1/4	*	1					
19	1672-406-004-00	BOLT	*	5					

WIRING DIAGRAM

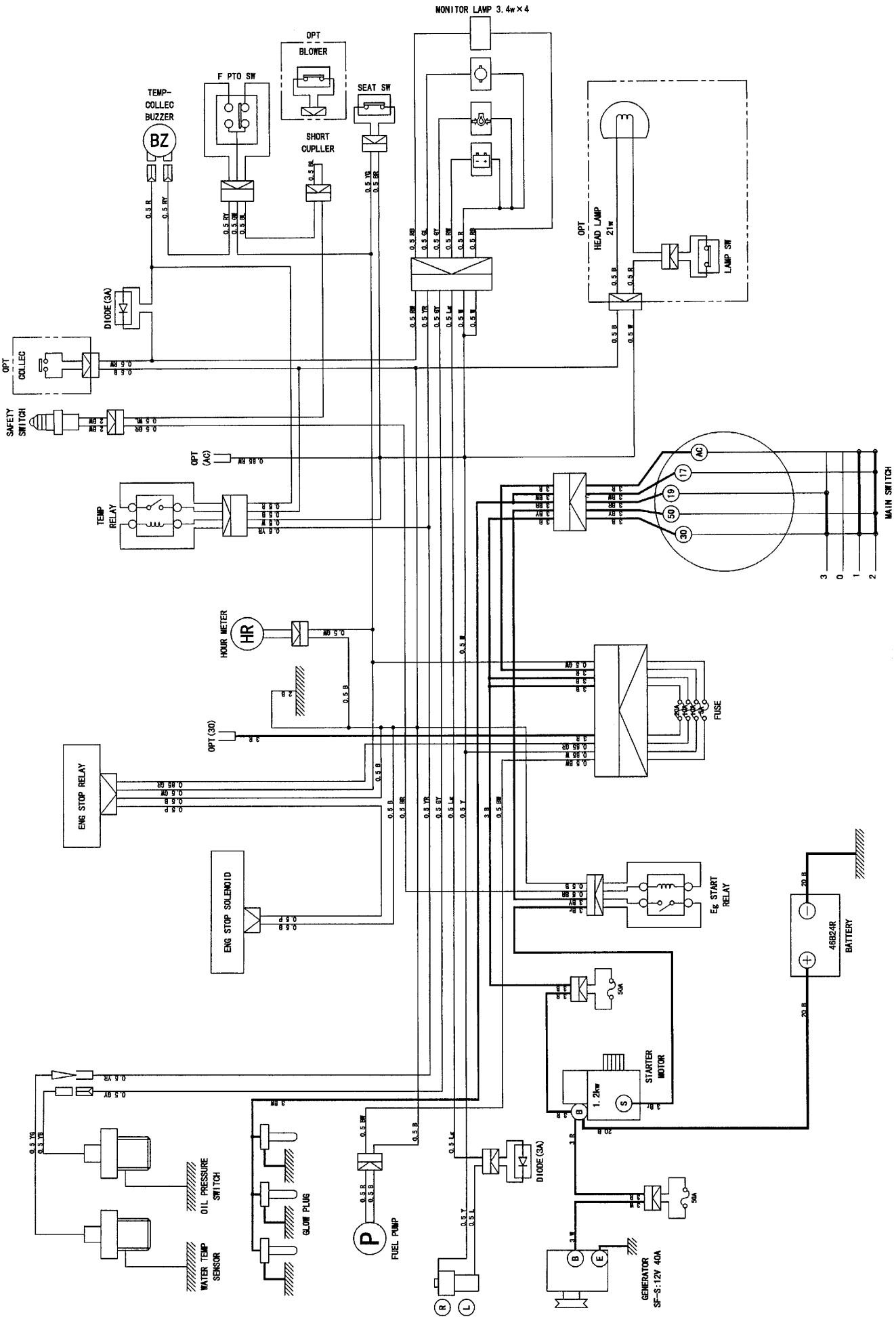

Numerical Index

Part Code	Fig.	Key	Part Code	Fig.	Key	Part Code	Fig.	Key
1373-121-001-00	23	4	6209-625-001-00	5	14	6211-361-033-00	7	1
1425-621-004-00	9	15	6209-625-002-00	9	7	6211-510-001-00	5	10
3625-301-002-00	7	2		25	12	6211-511-003-00	5	11
3625-540-004-00	9	36	6209-625-012-00	5	14-A	6211-511-004-00	5	12
3632-360-036-00	22	6		25	10	6211-540-001-00	6	1
3805-355-002-10	7	2-A	6209-630-002-10	24	6	6211-560-001-00	6	3
3817-401-001-00	3	7-A		25	22	6211-599-001-10	5	13
	9	10-A	6209-630-005-00	3	3		6	2
	11	20-A	6209-730-002-00	15	4		6	4
	17	14-A	6209-740-001-00	9	27	6211-751-001-10	2	2
	17	20-A	6209-740-005-00	5	17	6211-760-022-00	5	29
	21	8-A	6209-749-001-20	5	15	6211-777-007-20	10	1
6209-000-002-00	11	18		9	42	6212-111-013-10	13	1
6209-000-003-00	1	7	6209-920-002-00	9	21	6212-114-013-10	14	1
6209-000-004-10	5	2		16	14	6212-116-013-10	14	3
6209-000-013-00	15	7		25	13	6212-121-008-00	13	2
6209-030-005-00	9	8	6209-940-004-00	11	14	6212-121-008-10	13	2-A
6209-030-006-00	9	14	6211-110-014-20	1	1	6212-121-008-20	13	2-B
	17	28	6211-110-068-00	1	1-A	6212-124-008-10	14	2
6209-030-043-00	21	18	6211-141-008-20	1	6	6212-126-008-10	14	4
6209-030-044-00	19	4	6211-141-008-30	1	6-A	6212-211-001-10	13	3
6209-030-092-00	18	4		25	3	6212-230-004-00	13	5
6209-031-083-00	23	5	6211-170-004-10	2	1	6212-235-001-10	13	6
6209-046-001-00	9	16	6211-173-003-00	2	3	6212-261-006-00	13	8
6209-046-015-00	15	7-A		25	4	6212-264-006-00	6	5
6209-050-001-00	9	33	6211-210-046-00	5	1	6212-266-006-00	6	6
6209-050-002-00	9	34	6211-258-001-00	5	8	6212-310-019-00	15	1
6209-300-014-00	1	8-A		25	8	6212-310-019-10	15	1-A
6209-360-005-00	22	3	6211-258-002-00	5	9	6212-310-019-20	15	1-B
6209-360-021-00	22	5		25	9	6212-330-048-00	15	5
6209-360-027-10	2	6	6211-291-013-00	5	25	6212-333-002-00	15	6
6209-409-001-00	9	19	6211-291-013-10	5	25-A	6212-371-027-00	15	8
6209-409-003-00	11	17	6211-292-001-20	5	26	6212-379-001-00	15	9
6209-440-003-00	13	7		25	11	6212-511-002-00	12	1
6209-490-002-00	2	4	6211-310-025-10	9	1	6212-521-002-00	15	3
6209-500-003-00	9	17	6211-310-025-20	9	1-A	6212-522-003-00	12	2
	9	26	6211-311-007-20	9	37	6212-523-003-00	12	6
	25	23	6211-312-003-20	9	28	6212-524-002-00	21	11
6209-500-005-00	11	21		25	14	6212-530-005-10	9	44
	11	21-A	6211-312-004-20	9	38	6212-531-005-10	5	6
6209-580-002-10	21	38		25	15	6212-535-001-00	12	4
6209-587-001-00	13	4	6211-319-003-00	9	40	6212-535-002-00	21	15
6209-605-004-10	1	3	6211-322-002-00	9	49	6212-551-001-00	11	1
6209-610-001-00	5	3	6211-340-004-10	8	1	6212-552-001-00	11	2
6209-610-002-10	9	3	6211-342-003-10	8	2	6212-552-001-10	11	2-A

Numerical Index

Part Code	Fig.	Key	Part Code	Fig.	Key	Part Code	Fig.	Key
6212-561-001-00	11	3	6213-619-003-00	17	10	6215-345-009-00	26	15
6212-563-001-00	11	4	6213-621-003-00	17	6	6215-345-010-00	26	16
6212-565-001-00	11	5	6213-622-002-10	17	5	6215-345-011-00	26	17
6212-569-002-00	1	4	6213-631-002-00	17	3	6215-345-012-00	26	18
	25	2	6213-631-005-00	17	4	6215-345-013-00	26	19
6212-571-003-00	11	6	6213-641-002-10	19	2	6215-345-014-00	26	20
6212-575-002-00	11	7	6213-641-006-00	18	2	6215-345-015-00	26	21
6212-600-002-00	11	8	6213-642-002-00	17	7	6215-345-016-00	26	22
6212-600-002-10	11	8-A	6213-660-004-00	18	1	6215-345-017-00	26	23
6212-611-004-10	11	9	6213-660-022-00	19	1	6215-345-018-00	26	24
6212-616-002-00	11	16	6213-669-008-00	18	3	6215-345-019-00	26	25
6212-620-001-10	11	10		19	3	6215-345-020-00	26	26
6212-620-001-20	11	10-A	6213-671-003-00	18	5	6215-345-021-00	26	27
6212-626-002-10	11	11		19	5	6215-345-022-00	26	28
6212-628-004-00	11	12	6213-674-006-10	23	2	6215-345-023-00	26	29
6212-628-005-00	11	13	6213-711-003-20	17	30	6215-345-024-00	26	30
6213-100-003-30	16	1	6213-716-001-40	17	24	6215-345-025-00	26	31
6213-111-001-30	16	2	6213-721-003-00	17	25	6215-345-026-00	26	32
6213-119-001-00	16	6	6213-721-007-00	5	23	6215-345-027-00	26	33
6213-120-003-20	16	3	6213-729-013-10	17	22	6215-345-028-00	26	34
6213-125-001-00	16	4	6213-743-002-10	17	26	6215-345-029-00	26	35
6213-129-003-00	16	5		25	20	6215-345-030-00	26	36
6213-140-008-00	16	8	6214-111-009-10	3	1	6215-345-031-00	26	37
6213-149-002-00	16	10	6214-115-001-20	3	4	6215-345-032-00	26	38
6213-160-002-00	9	29		25	6	6215-345-033-00	26	39
6213-160-002-10	9	29-A	6214-141-008-20	4	1	6215-345-034-00	26	40
6213-160-002-20	9	29-B	6214-145-001-30	4	2	6215-345-035-00	26	41
6213-161-001-00	9	30		25	7	6215-345-036-00	26	42
6213-161-001-10	9	30-A	6215-300-035-00	20	1	6215-345-037-00	26	43
6213-161-001-20	9	30-B	6215-311-019-00	26	52	6215-345-038-00	26	44
6213-164-001-00	9	31	6215-315-002-00	20	2	6215-345-039-00	26	45
6213-240-002-00	16	15	6215-330-023-00	26	1	6215-345-040-00	26	46
6213-240-002-10	16	15-A	6215-331-007-00	26	2	6215-345-041-00	26	47
6213-311-006-00	16	12	6215-332-012-00	26	5	6215-345-042-00	26	48
6213-319-001-00	5	24	6215-339-001-00	26	6	6215-345-043-00	26	49
6213-610-005-40	17	1	6215-342-001-00	26	3	6215-359-001-00	26	50
6213-611-003-20	17	2	6215-343-001-00	26	4	6215-359-002-00	26	51
6213-612-004-00	17	9	6215-345-001-00	26	7	6215-410-006-10	20	3
6213-613-002-10	17	8	6215-345-002-00	26	8	6215-410-007-10	20	4
6213-614-003-10	17	12	6215-345-003-00	26	9	6215-410-008-10	20	5
	25	18	6215-345-004-00	26	10	6215-411-074-10	22	2
6213-614-004-10	17	17	6215-345-005-00	26	11	6215-411-103-00	20	3-A
	25	19	6215-345-006-00	26	12	6215-411-104-00	20	4-A
6213-619-001-00	17	16	6215-345-007-00	26	13	6215-411-105-00	20	5-A
6213-619-002-00	17	11	6215-345-008-00	26	14	6215-412-002-10	22	1

Numerical Index

Part Code	Fig.	Key	Part Code	Fig.	Key	Part Code	Fig.	Key
6215-419-001-00	22	8	6215-629-011-00	27	28	6281-200-005-00	23	1
6215-520-001-00	21	17	6215-629-012-00	27	29	6281-213-006-00	29	7
6215-526-001-10	21	19	6215-629-013-00	27	30	6281-213-018-00	29	7-A
6215-531-008-00	21	35	6215-629-014-00	27	31	6281-214-003-00	29	12
6215-541-001-00	21	20	6215-629-015-00	27	32	6281-214-004-00	29	13
6215-541-001-10	21	20-A	6215-629-016-00	27	33	6281-215-001-00	29	17
6215-541-016-30	21	24	6215-631-001-00	27	9	6281-216-001-00	29	18
6215-541-022-10	21	36	6215-634-001-00	27	18	6281-217-001-00	29	16
6215-542-004-20	9	22	6215-635-001-00	27	16	6281-217-002-00	29	16-A
6215-542-005-00	9	24	6215-637-001-00	27	15	6281-221-001-00	29	4
6215-542-006-00	21	22	6215-639-004-00	27	17	6281-221-007-00	29	4-A
6215-543-002-10	21	21	6215-639-005-00	27	19	6281-222-004-00	29	1
6215-546-003-00	9	18	6215-641-001-00	27	7	6281-229-002-00	29	2
6215-546-003-10	9	18-A	6215-643-001-00	27	3	6281-229-003-00	29	3
6215-549-005-10	21	27	6215-644-008-00	27	4	6281-229-004-00	29	6
6215-549-006-00	21	28	6215-649-001-00	27	5	6281-229-005-00	29	5
	21	29	6215-649-002-00	27	6	6281-229-006-00	29	8
6215-549-007-10	21	39	6219-732-002-00	24	4	6281-229-007-00	29	9
6215-549-009-00	21	30	6219-752-006-00	21	2	6281-229-008-00	29	10
6215-549-010-00	21	31	6219-752-007-00	21	3	6281-229-009-00	29	11
6215-549-012-00	21	43	6219-752-008-00	21	4	6281-229-011-00	29	15
6215-549-013-00	5	28	6219-752-009-00	21	5	6281-229-012-00	29	19
6215-549-023-00	21	32	6219-752-010-00	21	6	6281-229-013-00	29	20
6215-549-024-00	21	33	6281-100-011-10	23	7	6281-229-014-00	29	21
6215-549-027-10	21	26	6281-100-011-20	23	7-A	6281-229-015-00	29	22
6215-549-028-10	21	25	6281-111-007-00	28	1	6281-229-016-00	29	23
6215-549-063-00	21	28-A	6281-115-010-00	28	23	6281-229-017-00	29	24
6215-600-052-20	21	1	6281-115-013-00	28	10	6281-229-018-00	29	25
6215-611-001-00	27	8	6281-115-016-00	28	20	6281-229-029-00	29	14
6215-612-001-00	27	11	6281-116-006-00	28	11	6281-229-032-00	29	5-A
6215-619-009-00	27	1	6281-121-008-00	28	2	6281-229-033-00	29	11-A
6215-619-010-00	27	2	6281-123-005-00	28	8	6281-229-041-00	28	22
6215-619-022-00	27	10	6281-124-007-10	28	5	6281-271-002-00	29	26
6215-621-002-30	21	10	6281-129-003-00	28	19	6281-410-010-00	24	3
6215-622-001-00	27	14	6281-129-038-00	28	3	6281-910-003-00	24	5
6215-629-001-00	27	12	6281-129-039-00	28	4	6281-910-003-10	24	5-A
6215-629-002-00	27	13	6281-129-040-00	28	7	6281-920-001-00	24	8
6215-629-003-00	27	20	6281-129-041-10	28	9	6281-971-001-10	24	1
6215-629-004-00	27	21	6281-129-042-00	28	15	6282-450-002-00	24	2
6215-629-005-00	27	22	6281-129-044-00	28	18	6287-810-016-20	25	1
6215-629-006-00	27	23	6281-129-055-00	28	16	6294-453-002-00	5	21
6215-629-007-00	27	24	6281-129-056-00	28	12	6509-000-084-00	9	9
6215-629-008-00	27	25	6281-129-062-00	28	14	6509-605-019-10	5	5
6215-629-009-00	27	26	6281-151-015-00	28	13-A		9	2
6215-629-010-00	27	27	6281-151-018-00	28	13	6511-321-083-00	9	48

Numerical Index

Part Code	Fig.	Key	Part Code	Fig.	Key	Part Code	Fig.	Key
6513-770-022-10	17	29	6909-111-508-00	28	21	V720-102-401-80	7	3
6581-129-092-00	28	17	6909-150-506-00	21	42	V723-102-005-00	9	41
6581-129-099-00	28	6	6909-150-508-00	3	8		25	16
6901-050-850-00	11	19		9	11	V723-102-005-50	17	31
6901-066-645-00	15	10		9	47		25	21
6901-910-612-00	5	27		9	51			
	7	4		17	15			
	12	5		17	21			
	21	16		21	9			
	24	7	6909-202-308-00	9	25			
6901-910-625-00	16	7	6909-572-008-00	2	5			
6901-910-816-00	16	11		25	5			
6901-910-830-00	17	32	6909-830-212-00	1	8			
6901-910-840-00	3	6	6909-902-299-00	5	22			
6901-910-845-00	9	13	6909-906-105-10	16	13			
	17	13	6911-129-006-00	1	2			
6901-911-020-00	8	3	6911-129-083-00	5	7			
	10	2	6911-219-195-00	5	4			
6901-931-240-00	23	8	J061-210-012-00	22	7			
6902-050-816-00	9	39	J061-210-015-00	17	23			
6904-110-814-00	9	4-A	J062-076-082-00	22	4			
6904-110-818-00	3	2	J062-087-093-00	22	9			
	5	19	P117-303-003-00	9	23			
6904-110-822-00	4	4	V201-360-802-00	21	7			
	5	20	V211-560-802-00	3	5			
	9	4		9	12			
	9	43		17	19			
6904-110-840-00	5	18		17	27			
	17	18		23	3			
6904-110-850-00	9	6	V211-560-802-50	4	3			
6904-110-855-00	9	5	V304-260-012-00	23	9			
6908-000-716-00	12	3	V341-120-008-00	9	20			
	21	12	V411-260-006-00	21	41			
6908-160-816-00	5	16	V523-101-001-80	15	2			
6909-110-406-00	9	35	V600-110-600-40	21	14			
	21	40	V600-110-600-50	9	45			
6909-110-408-00	9	46	V600-110-620-30	21	13			
	9	50	V682-200-000-60	1	5			
6909-110-410-00	23	6	V704-140-016-00	11	15			
6909-110-508-00	3	7	V705-140-012-00	9	32			
	9	10	V710-140-004-00	21	23			
	11	20		21	34			
	17	14	V720-101-900-80	21	37			
	17	20	V720-102-401-50	16	9			
	21	8		25	17			

Numerical Index

Part Code	Fig.	Key	Part Code	Fig.	Key	Part Code	Fig.	Key
1373-121-001-00	23	4	6209-625-001-00	5	14	6211-361-033-00	7	1
1425-621-004-00	9	15	6209-625-002-00	9	7	6211-510-001-00	5	10
3625-301-002-00	7	2		25	12	6211-511-003-00	5	11
3625-540-004-00	9	36	6209-625-012-00	5	14-A	6211-511-004-00	5	12
3632-360-036-00	22	6		25	10	6211-540-001-00	6	1
3805-355-002-10	7	2-A	6209-630-002-10	24	6	6211-560-001-00	6	3
3817-401-001-00	3	7-A		25	22	6211-599-001-10	5	13
	9	10-A	6209-630-005-00	3	3		6	2
	11	20-A	6209-730-002-00	15	4		6	4
	17	14-A	6209-740-001-00	9	27	6211-751-001-10	2	2
	17	20-A	6209-740-005-00	5	17	6211-760-022-00	5	29
	21	8-A	6209-749-001-20	5	15	6211-777-007-20	10	1
6209-000-002-00	11	18		9	42	6212-111-055-10	13	1
6209-000-003-00	1	7	6209-920-002-00	9	21	6212-111-055-20	13	1-A
6209-000-004-10	5	2		16	14	6212-114-055-20	14	1
6209-000-013-00	15	7		25	13	6212-116-055-20	14	3
6209-030-005-00	9	8	6209-940-004-00	11	14	6212-121-014-00	13	2
6209-030-006-00	9	14	6211-110-057-00	1	1	6212-121-014-10	13	2-A
	17	28	6211-141-029-10	1	6	6212-121-014-20	13	2-B
6209-030-043-00	21	18	6211-141-029-20	1	6-A	6212-124-014-10	14	2
6209-030-044-00	19	4		25	3	6212-126-014-10	14	4
6209-030-092-00	18	4	6211-170-004-10	2	1	6212-211-001-10	13	3
6209-031-083-00	23	5	6211-173-003-00	2	3	6212-230-004-00	13	5
6209-046-001-00	9	16		25	4	6212-235-001-10	13	6
6209-046-015-00	15	7-A	6211-210-037-10	5	1	6212-261-006-00	13	8
6209-050-001-00	9	33	6211-210-037-20	5	1-A	6212-264-006-00	6	5
6209-050-002-00	9	34	6211-258-001-00	5	8	6212-266-006-00	6	6
6209-300-014-00	1	8-A		25	8	6212-310-019-00	15	1
6209-360-005-00	22	3	6211-258-002-00	5	9	6212-310-019-10	15	1-A
6209-360-021-00	22	5		25	9	6212-310-019-20	15	1-B
6209-360-027-10	2	6	6211-291-013-00	5	25	6212-330-048-00	15	5
6209-409-001-00	9	19	6211-291-013-10	5	25-A	6212-333-002-00	15	6
6209-409-003-00	11	17	6211-292-001-20	5	26	6212-371-027-00	15	8
6209-440-003-00	13	7		25	11	6212-379-001-00	15	9
6209-490-002-00	2	4	6211-310-025-10	9	1	6212-511-002-00	12	1
6209-500-003-00	9	17	6211-310-025-20	9	1-A	6212-521-002-00	15	3
	9	26	6211-311-007-20	9	37	6212-522-003-00	12	2
	25	23	6211-312-003-20	9	28	6212-523-003-00	12	6
6209-500-005-00	11	21		25	14	6212-524-002-00	21	11
	11	21-A	6211-312-004-20	9	38	6212-530-005-10	9	44
6209-580-002-10	21	38		25	15	6212-531-005-10	5	6
6209-587-001-00	13	4	6211-319-003-00	9	40	6212-535-001-00	12	4
6209-605-004-10	1	3	6211-322-002-00	9	49	6212-535-002-00	21	15
6209-610-001-00	5	3	6211-340-004-10	8	1	6212-551-001-00	11	1
6209-610-002-10	9	3	6211-342-003-10	8	2	6212-552-001-00	11	2

Numerical Index

6004-097-230-20

Part Code	Fig.	Key	Part Code	Fig.	Key	Part Code	Fig.	Key
6212-552-001-10	11	2-A	6213-619-002-00	17	11	6215-345-008-00	26	14
6212-561-001-00	11	3	6213-619-003-00	17	10	6215-345-009-00	26	15
6212-563-001-00	11	4	6213-621-003-00	17	6	6215-345-010-00	26	16
6212-565-001-00	11	5	6213-622-002-10	17	5	6215-345-011-00	26	17
6212-569-002-00	1	4	6213-631-002-00	17	3	6215-345-012-00	26	18
	25	2	6213-631-005-00	17	4	6215-345-013-00	26	19
6212-571-003-00	11	6	6213-641-002-10	19	2	6215-345-014-00	26	20
6212-575-002-00	11	7	6213-641-006-00	18	2	6215-345-015-00	26	21
6212-600-002-00	11	8	6213-642-002-00	17	7	6215-345-016-00	26	22
6212-600-002-10	11	8-A	6213-660-004-00	18	1	6215-345-017-00	26	23
6212-611-004-10	11	9	6213-660-022-00	19	1	6215-345-018-00	26	24
6212-616-002-00	11	16	6213-669-008-00	18	3	6215-345-019-00	26	25
6212-620-001-10	11	10		19	3	6215-345-020-00	26	26
6212-620-001-20	11	10-A	6213-671-003-00	18	5	6215-345-021-00	26	27
6212-626-002-10	11	11		19	5	6215-345-022-00	26	28
6212-628-004-00	11	12	6213-674-006-10	23	2	6215-345-023-00	26	29
6212-628-005-00	11	13	6213-711-003-20	17	30	6215-345-024-00	26	30
6213-100-003-30	16	1	6213-716-001-40	17	24	6215-345-025-00	26	31
6213-111-001-30	16	2	6213-721-003-00	17	25	6215-345-026-00	26	32
6213-119-001-00	16	6	6213-721-007-00	5	23	6215-345-027-00	26	33
6213-120-003-20	16	3	6213-729-013-10	17	22	6215-345-028-00	26	34
6213-125-001-00	16	4	6213-743-002-10	17	26	6215-345-029-00	26	35
6213-129-003-00	16	5		25	20	6215-345-030-00	26	36
6213-140-008-00	16	8	6214-111-009-10	3	1	6215-345-031-00	26	37
6213-149-002-00	16	10	6214-115-001-20	3	4	6215-345-032-00	26	38
6213-160-002-00	9	29		25	6	6215-345-033-00	26	39
6213-160-002-10	9	29-A	6214-141-008-20	4	1	6215-345-034-00	26	40
6213-160-002-20	9	29-B	6214-145-001-30	4	2	6215-345-035-00	26	41
6213-161-001-00	9	30		25	7	6215-345-036-00	26	42
6213-161-001-10	9	30-A	6215-300-036-00	20	1	6215-345-037-00	26	43
6213-161-001-20	9	30-B	6215-311-027-00	26	52	6215-345-038-00	26	44
6213-164-001-00	9	31	6215-315-002-00	20	2	6215-345-039-00	26	45
6213-240-002-00	16	15	6215-330-024-00	26	1	6215-345-040-00	26	46
6213-240-002-10	16	15-A	6215-331-008-00	26	2	6215-345-041-00	26	47
6213-311-006-00	16	12	6215-332-013-00	26	5	6215-345-042-00	26	48
6213-319-001-00	5	24	6215-339-001-00	26	6	6215-345-043-00	26	49
6213-610-005-40	17	1	6215-342-001-00	26	3	6215-359-001-00	26	50
6213-611-003-20	17	2	6215-343-001-00	26	4	6215-359-002-00	26	51
6213-612-004-00	17	9	6215-345-001-00	26	7	6215-411-074-10	22	2
6213-613-002-10	17	8	6215-345-002-00	26	8	6215-411-103-00	20	3
6213-614-003-10	17	12	6215-345-003-00	26	9	6215-411-104-00	20	4
	25	18	6215-345-004-00	26	10	6215-411-105-00	20	5
6213-614-004-10	17	17	6215-345-005-00	26	11	6215-412-002-10	22	1
	25	19	6215-345-006-00	26	12	6215-419-001-00	22	8
6213-619-001-00	17	16	6215-345-007-00	26	13	6215-520-001-00	21	17

Numerical Index

Part Code	Fig.	Key	Part Code	Fig.	Key	Part Code	Fig.	Key
6215-526-001-10	21	19	6215-629-014-00	27	31	6281-214-003-00	29	12
6215-531-008-00	21	35	6215-629-015-00	27	32	6281-214-004-00	29	13
6215-541-001-00	21	20	6215-629-016-00	27	33	6281-215-001-00	29	17
6215-541-001-10	21	20-A	6215-631-012-00	27	9	6281-216-001-00	29	18
6215-541-016-30	21	24	6215-634-001-00	27	18	6281-217-001-00	29	16
6215-541-022-10	21	36	6215-635-001-00	27	16	6281-217-002-00	29	16-A
6215-542-004-20	9	22	6215-637-001-00	27	15	6281-221-001-00	29	4
6215-542-005-00	9	24	6215-639-004-00	27	17	6281-221-007-00	29	4-A
6215-542-006-00	21	22	6215-639-005-00	27	19	6281-222-004-00	29	1
6215-543-002-10	21	21	6215-641-006-00	27	7	6281-229-002-00	29	2
6215-546-003-00	9	18	6215-643-006-00	27	3	6281-229-003-00	29	3
6215-546-003-10	9	18-A	6215-644-007-00	27	4	6281-229-004-00	29	6
6215-549-006-00	21	29	6215-649-001-00	27	5	6281-229-005-00	29	5
6215-549-007-10	21	39	6215-649-002-00	27	6	6281-229-006-00	29	8
6215-549-009-00	21	30	6219-732-002-00	24	4	6281-229-007-00	29	9
6215-549-010-00	21	31	6219-752-006-00	21	2	6281-229-008-00	29	10
6215-549-012-00	21	43	6219-752-007-00	21	3	6281-229-009-00	29	11
6215-549-013-00	5	28	6219-752-008-00	21	4	6281-229-011-00	29	15
6215-549-023-00	21	32	6219-752-009-00	21	5	6281-229-012-00	29	19
6215-549-024-00	21	33	6219-752-010-00	21	6	6281-229-013-00	29	20
6215-549-027-10	21	26	6281-100-011-10	23	7	6281-229-014-00	29	21
6215-549-028-10	21	25	6281-100-011-20	23	7-A	6281-229-015-00	29	22
6215-549-034-00	21	27	6281-111-007-00	28	1	6281-229-016-00	29	23
6215-549-063-00	21	28	6281-115-010-00	28	23	6281-229-017-00	29	24
6215-600-103-10	21	1	6281-115-013-00	28	10	6281-229-018-00	29	25
6215-611-001-00	27	8	6281-115-016-00	28	20	6281-229-029-00	29	14
6215-612-001-00	27	11	6281-116-006-00	28	11	6281-229-032-00	29	5-A
6215-619-009-00	27	1	6281-121-008-00	28	2	6281-229-033-00	29	11-A
6215-619-010-00	27	2	6281-123-005-00	28	8	6281-229-041-00	28	22
6215-619-022-00	27	10	6281-124-007-10	28	5	6281-271-002-00	29	26
6215-621-016-10	21	10	6281-129-003-00	28	19	6281-410-010-00	24	3
6215-622-001-00	27	14	6281-129-038-00	28	3	6281-910-003-00	24	5
6215-629-001-00	27	12	6281-129-039-00	28	4	6281-910-003-10	24	5-A
6215-629-002-00	27	13	6281-129-040-00	28	7	6281-920-001-00	24	8
6215-629-003-00	27	20	6281-129-041-10	28	9	6281-971-001-10	24	1
6215-629-004-00	27	21	6281-129-042-00	28	15	6282-450-002-00	24	2
6215-629-005-00	27	22	6281-129-044-00	28	18	6287-810-015-20	25	1
6215-629-006-00	27	23	6281-129-055-00	28	16	6294-453-002-00	5	21
6215-629-007-00	27	24	6281-129-056-00	28	12	6509-000-084-00	9	9
6215-629-008-00	27	25	6281-129-062-00	28	14	6509-605-019-10	5	5
6215-629-009-00	27	26	6281-151-015-00	28	13-A		9	2
6215-629-010-00	27	27	6281-151-018-00	28	13	6511-321-083-00	9	48
6215-629-011-00	27	28	6281-200-005-00	23	1	6513-770-022-10	17	29
6215-629-012-00	27	29	6281-213-006-00	29	7	6581-129-092-00	28	17
6215-629-013-00	27	30	6281-213-018-00	29	7-A	6581-129-099-00	28	6

Numerical Index

Part Code	Fig.	Key	Part Code	Fig.	Key	Part Code	Fig.	Key
6901-050-850-00	11	19	6909-150-508-00	9	11	V723-102-005-50	17	31
6901-066-645-00	15	10		9	47		25	21
6901-910-612-00	5	27		9	51			
	7	4		17	15			
	12	5		17	21			
	21	16		21	9			
	24	7	6909-202-308-00	9	25			
6901-910-625-00	16	7	6909-572-008-00	2	5			
6901-910-816-00	16	11		25	5			
6901-910-830-00	17	32	6909-830-212-00	1	8			
6901-910-840-00	3	6	6909-902-299-00	5	22			
6901-910-845-00	9	13	6909-906-105-10	16	13			
	17	13	6911-129-006-00	1	2			
6901-911-020-00	8	3	6911-129-083-00	5	7			
	10	2	6911-219-195-00	5	4			
6901-931-240-00	23	8	J061-210-012-00	22	7			
6902-050-816-00	9	39	J061-210-015-00	17	23			
6904-110-814-00	9	4-A	J062-076-082-00	22	4			
6904-110-818-00	3	2	J062-087-093-00	22	9			
	5	19	P117-303-003-00	9	23			
6904-110-822-00	4	4	V201-360-802-00	21	7			
	5	20	V211-560-802-00	3	5			
	9	4		9	12			
	9	43		17	19			
6904-110-840-00	5	18		17	27			
	17	18		23	3			
6904-110-850-00	9	6	V211-560-802-50	4	3			
6904-110-855-00	9	5	V304-260-012-00	23	9			
6908-000-716-00	12	3	V341-120-008-00	9	20			
	21	12	V411-260-006-00	21	41			
6908-160-816-00	5	16	V523-101-001-80	15	2			
6909-110-406-00	9	35	V600-110-600-40	21	14			
	21	40	V600-110-600-50	9	45			
6909-110-408-00	9	46	V600-110-620-30	21	13			
	9	50	V682-200-000-60	1	5			
6909-110-410-00	23	6	V704-140-016-00	11	15			
6909-110-508-00	3	7	V705-140-012-00	9	32			
	9	10	V710-140-004-00	21	23			
	11	20		21	34			
	17	14	V720-101-900-80	21	37			
	17	20	V720-102-401-50	16	9			
	21	8		25	17			
6909-111-508-00	28	21	V720-102-401-80	7	3			
6909-150-506-00	21	42	V723-102-005-00	9	41			
6909-150-508-00	3	8		25	16			

Numerical Index

Part Code	Fig.	Key	Part Code	Fig.	Key	Part Code	Fig.	Key
1104-410-007-00	15	11	1427-406-006-00	52	8	1544-623-008-10	1	8
	36	18	1427-406-007-00	52	10	1550-403-210-00	27	2
1105-410-003-00	20	16	1427-406-008-00	52	11	1550-403-220-00	27	5
1326-708-005-00	31	19	1427-406-011-00	52	13	1560-104-010-40	3	23
1342-402-006-00	43	12	1427-406-013-00	52	16	1560-111-003-20	7	9
1374-401-001-00	29	13	1427-406-014-00	52	17	1560-132-007-30	17	6
1386-241-002-00	19	3	1427-406-017-00	52	18	1560-208-018-40	13	8
	33	3	1427-431-003-00	31	7	1560-263-014-00	13	3
	33	12	1427-433-022-00	31	38	1560-515-004-50	35	35
1404-402-001-00	28	20		32	95		37	35
	28	26	1427-433-023-00	17	26	1560-531-020-00	29	5
1404-402-002-00	28	21		31	32	1560-654-911-00	47	2
	28	27		32	89	1560-654-912-00	47	3
1404-402-005-00	31	28	1427-433-025-00	31	29	1560-654-915-00	47	4
	31	34		31	35	1560-664-250-00	17	21
	32	85		32	86	1560-664-252-00	17	22
	32	91		32	92	1560-664-253-00	17	23
1404-503-006-00	35	39	1427-433-240-10	31	27	1560-695-015-00	43	13
	37	39		32	84	1561-221-502-10	51	1
1411-401-001-00	31	2	1427-433-241-00	28	22	1561-221-503-00	51	2
1414-312-002-00	17	20		28	28	1561-221-505-00	51	5
	17	31	1427-433-250-10	31	33	1561-221-506-00	51	13
1415-102-007-00	6	3		32	90	1561-221-507-00	51	14
1415-102-008-00	6	5	1427-621-012-00	41	17	1561-221-508-00	51	15
1415-102-009-00	6	6	1429-406-205-00	26	2	1561-221-509-00	51	11
1419-403-001-00	31	12	1432-616-002-00	23	8	1561-221-511-00	51	9
1421-403-001-00	27	8		23	11	1564-201-003-00	32	50
1421-403-002-00	27	9	1435-201-220-00	35	13	1564-434-222-10	32	22
1421-403-007-00	31	20		37	13	1568-650-004-10	8	7
1421-403-008-00	31	22	1444-102-202-00	6	2	1568-650-005-10	8	8
1421-603-004-00	3	10	1444-102-204-00	6	7	1568-701-001-00	28	4
1421-951-006-00	31	24	1444-122-002-00	17	4	1575-261-018-00	13	2
1421-951-007-00	31	25	1444-314-009-10	13	31	1575-623-009-00	43	2
1424-101-203-00	3	24	1444-621-311-00	41	5	1575-623-010-00	43	3
1424-101-204-00	3	25	1444-621-312-00	41	6	1588-102-005-00	3	20
1425-621-004-00	4	8	1480-117-002-00	16	4	1593-101-003-20	1	7
	8	18	1480-207-011-00	11	11	1593-101-012-00	15	13
	13	30	1488-413-023-10	32	44	1593-117-003-10	9	2
1426-621-018-00	12	26	1491-434-017-00	32	59		20	52
1427-111-229-00	5	14	1507-216-004-10	32	3	1593-203-002-50	11	10
1427-401-001-00	31	3	1509-112-002-00	8	10	1593-203-058-20	13	9
1427-406-001-00	52	3	1518-306-203-00	32	20	1593-304-008-00	14	5
1427-406-002-00	52	4	1518-432-250-00	32	19	1593-304-053-10	14	8
1427-406-004-00	52	6	1544-104-205-00	5	5	1593-304-054-10	14	6
1427-406-005-00	52	7	1544-219-005-00	36	10	1593-304-055-10	14	9

Numerical Index

Part Code	Fig.	Key	Part Code	Fig.	Key	Part Code	Fig.	Key
1593-307-052-10	14	15	1614-223-230-00	30	4	1672-406-001-00	52	5
	14	20	1614-244-002-00	13	22	1672-406-002-00	52	15
1593-411-001-10	33	8	1614-244-005-00	13	23	1672-406-003-00	52	12
1593-411-053-20	33	9	1614-432-002-00	32	7	1672-406-004-00	52	19
1593-601-073-00	42	12	1614-432-003-00	32	8	1672-406-240-10	52	1
1593-606-006-10	21	4	1614-432-004-00	32	9	1672-406-250-00	52	2
1593-612-005-00	7	6	1614-432-005-00	32	10	1672-433-001-10	32	18
	39	7	1614-432-006-00	32	11	1672-433-210-10	32	21
1593-621-250-10	41	3	1614-433-212-00	32	29	1672-434-002-00	32	39
1593-621-252-00	41	4	1614-435-004-00	32	82	1672-434-003-00	32	42
1593-623-203-00	43	4	1614-436-202-00	27	3	1672-434-011-10	32	49
1593-623-503-00	43	9		27	6	1673-111-531-00	7	3
1593-623-504-00	43	8	1614-436-203-00	27	4	1673-314-001-00	18	23
1594-221-001-00	32	2		27	7	1681-434-001-00	31	13
1594-285-004-00	18	11	1614-690-202-00	43	6	1682-403-250-20	28	25
1600-112-003-00	8	2	1617-435-002-00	32	81	1682-434-006-30	32	66
1600-117-002-00	9	9	1620-272-051-00	21	19	1682-434-033-00	31	14
1600-240-550-10	21	10	1627-621-571-00	47	5	1683-202-501-00	50	1
1600-505-007-00	20	55	1634-650-200-00	8	6	1683-202-503-00	50	3
1608-105-001-40	6	13	1636-271-004-00	36	23	1683-202-504-00	50	4
1608-207-014-00	21	16	1636-271-011-00	20	48	1683-202-508-00	50	7
1608-312-002-10	17	3	1636-313-011-10	17	25	1683-202-509-00	50	8
1612-433-002-00	32	25	1636-504-005-10	36	11	1683-202-511-00	50	9
1612-434-006-00	32	53	1636-611-011-00	39	15	1683-202-512-00	50	10
1612-434-007-00	32	54	1636-906-001-00	45	6	1683-202-513-00	50	11
1612-434-008-00	32	58	1646-116-051-00	9	8	1683-202-514-00	50	12
1612-434-009-00	32	63	1650-102-202-10	3	2	1683-202-515-00	50	13
1614-102-003-00	3	21	1650-104-200-00	5	1	1683-202-516-00	50	14
1614-104-001-00	5	6	1650-104-201-00	5	3	1683-202-517-00	50	15
1614-105-200-00	6	1	1650-104-203-00	5	4	1683-202-518-00	50	16
1614-223-210-00	30	3	1650-104-210-00	5	2	1683-202-519-00	50	17
1614-223-211-00	49	1	1650-203-214-00	51	6	1683-202-521-00	50	18
1614-223-212-00	49	2	1650-203-217-00	51	12	1683-202-522-00	50	19
1614-223-213-00	49	3	1650-203-218-00	51	8	1683-202-523-00	50	20
1614-223-214-00	49	4	1650-203-219-00	51	7	1683-202-524-00	50	23
1614-223-215-00	49	5	1650-203-222-00	51	10	1683-202-525-00	50	25
1614-223-216-00	49	6	1650-432-001-00	32	4	1683-202-526-00	50	26
1614-223-217-10	49	7	1650-509-280-00	35	51	1683-202-527-00	50	27
1614-223-218-00	49	8		37	50	1683-202-528-00	50	28
1614-223-219-10	49	9	1650-509-300-00	28	12	1683-202-529-00	50	29
1614-223-221-00	30	6	1656-401-220-00	24	1	1683-202-531-00	50	31
1614-223-222-10	49	10	1656-401-222-00	24	2	1683-202-533-00	50	32
1614-223-223-00	49	11	1656-901-007-00	24	3	1683-202-536-00	50	36
1614-223-225-00	49	12	1672-105-211-00	6	9	1683-202-538-00	50	38
1614-223-226-10	49	13	1672-403-003-00	28	29	1684-112-220-00	8	1

Numerical Index

Part Code	Fig.	Key	Part Code	Fig.	Key	Part Code	Fig.	Key
1688-433-002-00	31	21	1689-105-240-10	6	23	1689-202-202-00	12	14
1688-433-211-10	31	26	1689-111-001-00	7	1	1689-202-203-00	12	15
1688-433-220-10	31	10	1689-111-003-10	7	5	1689-202-211-00	12	16
1688-433-230-10	31	11	1689-111-220-10	7	2	1689-202-212-00	12	17
1689-101-001-00	1	14	1689-112-004-00	8	15	1689-203-001-00	13	13
1689-101-004-00	1	16	1689-112-005-00	8	17	1689-203-004-00	13	15
1689-101-005-10	1	17	1689-112-210-00	8	13	1689-203-005-00	13	12
1689-101-011-00	2	5	1689-112-230-00	8	5	1689-203-007-00	13	18
1689-101-210-10	1	1	1689-117-001-00	9	5	1689-203-009-20	13	25
1689-101-220-10	1	4	1689-117-200-00	9	1	1689-203-200-00	13	11
1689-102-012-00	42	6	1689-122-001-00	10	16	1689-203-210-10	13	1
1689-102-013-00	3	30	1689-122-200-00	10	1	1689-204-001-10	14	1
1689-102-017-10	3	32	1689-122-211-00	10	2	1689-204-003-00	14	10
1689-102-021-00	3	37	1689-122-212-00	10	3	1689-204-006-00	14	4
1689-102-022-00	3	16	1689-122-221-00	10	7	1689-204-008-00	14	24
1689-102-023-00	3	18	1689-122-222-00	10	8	1689-204-310-00	14	12
1689-102-025-00	3	40	1689-201-001-30	11	16	1689-204-320-00	14	17
1689-102-026-00	3	35	1689-201-002-30	11	19	1689-205-001-10	15	1
1689-102-027-00	3	36	1689-201-003-10	11	13	1689-205-004-20	15	4
1689-102-300-00	3	1	1689-201-005-10	11	8	1689-205-005-10	15	6
1689-102-302-00	3	3	1689-201-006-00	11	28	1689-205-210-30	15	2
1689-102-303-00	3	4	1689-201-007-10	11	20	1689-206-001-00	15	15
1689-102-304-00	3	5	1689-201-008-10	11	22	1689-206-002-00	15	12
1689-102-305-00	3	6	1689-201-200-00	11	1	1689-206-210-10	15	7
1689-102-306-00	3	8	1689-201-201-00	50	2	1689-208-210-10	16	1
1689-102-307-00	3	9	1689-201-202-00	50	5	1689-212-002-00	17	11
1689-102-310-00	3	29	1689-201-203-00	50	6	1689-212-003-00	17	9
1689-102-320-00	3	41	1689-201-204-00	50	33	1689-212-011-00	17	19
1689-102-330-00	3	43	1689-201-205-00	50	34	1689-212-210-20	17	16
1689-102-350-00	3	45	1689-201-206-00	50	37	1689-212-220-20	17	18
1689-102-361-00	3	51	1689-201-207-00	50	39	1689-212-240-00	17	24
1689-103-002-20	4	9	1689-201-208-00	50	41	1689-213-210-30	17	27
1689-103-004-00	4	2	1689-201-209-00	50	43	1689-221-001-00	18	1
1689-103-200-10	4	1	1689-201-210-00	11	9	1689-221-011-00	18	14
1689-103-220-10	4	6	1689-201-271-00	50	44	1689-221-013-00	18	9
1689-103-230-00	2	11	1689-201-272-00	50	47	1689-221-240-00	18	2
1689-104-002-00	5	10	1689-201-280-00	50	48	1689-221-310-10	18	7
1689-104-011-00	5	8	1689-201-290-00	50	49	1689-221-320-20	18	20
1689-104-210-00	5	7	1689-202-001-10	12	1	1689-230-200-10	19	1
1689-104-220-00	5	13	1689-202-002-00	12	5	1689-230-211-00	19	2
1689-104-310-00	5	17	1689-202-004-00	12	7	1689-230-220-10	19	5
1689-105-001-00	6	17	1689-202-005-00	12	4	1689-271-001-20	20	38
1689-105-002-00	6	10	1689-202-006-10	12	21	1689-271-002-00	20	49
1689-105-230-00	6	15	1689-202-200-00	12	12	1689-271-003-10	20	33
	6	21	1689-202-201-00	12	13	1689-271-006-00	20	9

Numerical Index

Part Code	Fig.	Key	Part Code	Fig.	Key	Part Code	Fig.	Key
1689-271-210-10	20	1	1689-406-310-00	26	8	1689-502-003-00	35	43
1689-271-230-00	20	19	1689-407-201-00	27	1	1689-502-005-10	35	40
1689-271-240-10	20	21	1689-408-004-00	28	2		37	40
1689-271-250-30	20	45	1689-408-200-00	28	6	1689-502-210-00	35	22
1689-271-290-00	20	39	1689-408-210-20	28	9		37	22
1689-271-310-00	20	12	1689-408-230-00	28	1	1689-502-220-00	35	17
1689-271-311-00	20	13	1689-408-500-00	28	19		37	17
	20	25	1689-430-001-20	29	3	1689-502-230-00	35	50
	20	29	1689-430-002-00	29	6		37	49
1689-271-320-10	20	24	1689-430-003-00	29	7	1689-502-250-00	28	5
1689-271-330-10	20	28	1689-430-210-10	29	1		35	49
1689-271-350-00	20	47	1689-430-220-00	29	16	1689-503-002-10	36	15
1689-272-002-00	18	8	1689-430-230-20	29	18	1689-503-260-00	36	7
	21	3	1689-430-240-00	29	10	1689-503-310-00	36	9
	36	12	1689-431-200-00	29	20	1689-503-410-00	36	1
1689-272-201-00	21	8	1689-431-210-00	29	21	1689-503-420-10	36	3
1689-272-210-00	21	1	1689-431-220-00	29	22	1689-504-001-10	37	43
1689-272-240-00	21	17	1689-432-002-10	30	1	1689-506-011-00	38	1
1689-272-260-00	21	14	1689-432-003-00	30	10	1689-506-310-00	38	2
1689-272-330-00	21	9	1689-432-210-00	30	5	1689-603-006-00	39	20
1689-272-400-00	21	7	1689-433-003-00	31	18	1689-603-012-00	39	9
1689-273-003-00	22	1	1689-433-220-10	31	5	1689-603-021-00	39	13
1689-273-004-00	22	7	1689-433-260-00	31	1	1689-603-022-00	39	14
1689-273-210-00	22	2	1689-434-001-20	32	35	1689-603-023-00	39	21
	22	8	1689-434-002-20	32	67	1689-603-024-00	39	22
1689-301-350-00	23	2	1689-434-003-20	32	68	1689-603-025-00	39	23
1689-301-510-00	23	1	1689-434-200-00	32	1	1689-603-026-00	39	24
1689-302-310-00	23	6	1689-434-210-10	32	28	1689-603-027-00	39	25
1689-302-330-00	23	9	1689-434-221-00	32	83	1689-603-220-10	39	10
1689-302-350-00	23	13	1689-434-240-10	32	56	1689-603-230-00	39	16
1689-302-500-00	23	12	1689-440-200-20	33	1	1689-603-310-00	39	1
1689-402-241-00	24	13	1689-440-211-00	33	2	1689-604-001-00	39	26
1689-402-242-00	24	14		33	11	1689-611-002-00	40	14
1689-402-250-10	24	10	1689-440-230-00	33	5	1689-611-003-00	40	15
1689-402-260-00	24	12	1689-441-200-10	33	10	1689-611-004-00	40	16
1689-402-261-00	52	9	1689-441-210-10	33	14	1689-611-005-00	40	18
1689-403-002-10	24	7	1689-501-001-00	34	10	1689-611-201-00	40	1
	24	18	1689-501-002-00	34	12	1689-612-001-00	40	20
1689-403-200-00	24	22	1689-501-200-30	34	1	1689-613-201-00	41	1
1689-404-200-20	25	1	1689-501-230-20	34	2	1689-613-202-00	41	2
1689-404-210-00	25	2	1689-501-280-00	34	6	1689-613-203-00	41	9
1689-404-320-00	25	7	1689-501-281-00	34	7	1689-613-204-00	41	10
1689-405-230-10	26	6	1689-501-310-00	34	5	1689-613-206-00	41	8
1689-405-310-00	26	3	1689-502-001-00	35	10	1689-613-211-00	41	15
1689-406-220-00	26	1		37	10	1689-613-220-10	41	11

Numerical Index

Part Code	Fig.	Key	Part Code	Fig.	Key	Part Code	Fig.	Key
1689-613-240-00	41	13	1704-112-001-00	3	39	3650-432-014-00	39	2
1689-613-260-00	41	12	1705-207-001-00	14	14	3650-837-210-00	35	6
1689-621-003-00	42	25		14	19		37	6
1689-621-006-00	42	14	1705-207-002-20	14	16	3652-285-001-00	36	20
1689-621-007-00	42	22		14	21	3652-445-002-10	3	26
1689-621-008-00	42	23	1705-312-006-00	38	3	3656-271-290-10	43	16
1689-621-009-00	42	27	1705-408-230-00	35	8	3656-302-009-00	1	11
1689-621-011-00	42	2		37	8	3656-354-004-10	28	3
1689-621-012-00	42	3	1705-902-006-00	46	6	3656-355-001-00	35	18
1689-621-013-00	42	4	1705-902-007-00	46	7		37	18
1689-621-014-10	42	5	1705-902-008-00	46	8	3659-205-002-00	25	8
1689-621-015-00	3	14	1705-904-001-00	46	3	3662-223-002-00	17	2
	42	7	1705-904-002-00	46	2	3662-350-001-00	28	37
1689-621-016-00	42	15	1705-904-011-00	46	10	3664-276-001-00	18	19
1689-621-017-00	42	8	2111-101-011-00	11	21	3666-202-005-00	3	15
1689-621-018-00	42	9	2139-505-002-00	3	34	3666-303-071-00	2	4
1689-621-019-00	42	10	2144-508-310-10	40	6	3676-205-014-00	2	1
1689-621-240-10	42	28	2171-213-002-00	17	30	3676-215-320-00	18	15
1689-621-250-00	42	30	2175-501-201-00	40	3	3676-352-001-00	28	14
1689-621-260-10	42	11		40	13	3676-832-011-00	29	14
1689-621-270-00	42	17		40	19	3737-172-010-00	37	45
1689-621-280-00	42	19	2175-506-003-00	40	10		43	15
1689-621-410-00	42	1	2175-506-004-00	40	11	3737-172-011-00	3	13
1689-623-200-40	43	1	2175-506-008-10	40	2		8	12
1689-624-002-00	47	7	2175-507-001-10	40	17		43	11
1689-624-210-00	47	1	2500-623-220-00	43	7	3752-152-007-00	24	8
1689-901-007-00	44	5	2500-901-027-00	46	9		24	19
1689-901-008-00	44	6	2502-205-217-00	50	42	3761-242-017-00	29	17
1689-901-022-00	44	2	2502-601-005-00	42	24	3768-185-015-20	28	15
1689-901-023-00	44	3	2706-501-004-00	7	4		35	44
1689-901-024-00	44	4	3104-210-213-00	20	17		37	44
1689-901-025-00	44	7		36	17	3768-185-022-10	28	34
1689-901-026-00	44	8	3256-104-014-10	17	1		35	7
1689-901-027-00	44	1	3533-901-012-00	40	5		37	7
1689-902-023-00	44	9	3614-261-002-00	41	7	3805-201-013-00	40	9
1689-902-024-00	44	10	3621-702-003-00	31	15	3805-311-210-10	6	19
1689-903-001-00	45	1	3623-820-013-00	3	38	3805-352-002-00	35	53
1689-903-002-00	45	4		39	11		37	52
1689-903-003-00	45	5		42	16	4301-210-002-00	41	18
1689-903-004-00	45	3	3625-220-002-00	25	11	4335-512-004-00	3	31
1689-903-008-00	45	2	3625-540-004-00	11	30	6221-408-003-00	3	53
1689-904-002-00	45	7	3650-261-001-00	36	6	6221-408-007-00	3	46
1689-904-003-00	45	8	3650-262-202-00	43	5	6221-408-008-00	3	47
1689-906-003-00	46	1	3650-270-214-00	41	14	6221-408-009-00	3	48
1703-102-203-00	3	7	3650-352-004-10	28	36	6221-408-010-00	3	49

Numerical Index

1689-097-120-00

Part Code	Fig.	Key	Part Code	Fig.	Key	Part Code	Fig.	Key
6221-408-011-00	3	50	K211-004-007-00	48	7	V203-361-002-50	10	12
6221-408-013-00	3	52	K211-012-003-00	48	1	V203-461-002-00	1	2
7963-611-003-00	15	8	K211-012-005-00	48	3		1	5
8595-201-017-00	11	14	K211-012-006-00	48	4	V210-360-601-20	3	33
8595-901-006-00	46	5	K211-012-007-00	48	6		10	17
8595-901-007-00	46	4	K211-012-009-00	48	2	V210-360-601-60	3	54
8654-101-230-00	10	4	K211-042-000-20	35	45		40	12
	10	9		37	46		43	17
8654-101-232-00	10	5	K211-042-003-00	48	5	V210-560-602-50	35	41
	10	10	K250-042-000-00	28	10		37	41
8654-101-233-00	10	6	P103-521-300-00	22	4	V211-260-801-60	5	18
	10	11	P103-521-302-00	22	5		12	6
8654-510-012-10	34	13	P113-201-007-00	5	16		12	20
8935-069-051-10	39	3		29	15		22	6
J061-210-012-00	6	14	V111-163-002-00	18	16		26	7
	6	16	V120-266-002-50	48	8		29	4
	6	22	V120-366-001-60	6	20		29	9
	6	24	V120-376-001-60	39	12		42	32
J061-210-015-00	3	22		42	13	V211-260-802-00	5	15
J061-224-032-00	35	19	V195-164-008-10	41	16		15	14
	37	19	V195-164-020-40	47	6		30	12
J061-236-044-00	3	17	V200-360-604-00	35	23		37	21
	3	19		37	23		47	8
J061-242-050-00	5	12	V201-260-802-50	12	24	V211-260-802-50	2	6
J061-252-063-00	5	9	V201-260-803-00	39	5		4	7
	5	11	V201-260-804-50	20	10		13	28
J062-076-082-00	6	18	V201-260-807-00	6	11		30	2
J062-104-111-00	6	25	V201-260-809-50	13	27		35	20
K135-002-009-00	35	33	V201-261-005-00	35	47		37	20
	37	33		37	47	V211-260-808-00	3	27
K135-017-006-00	35	28	V201-261-203-00	2	7	V211-261-002-50	23	7
	37	28	V201-261-203-50	32	26		23	10
K135-023-000-00	35	26	V201-360-805-00	20	2	V211-261-004-50	8	14
	37	26	V201-361-003-0B	32	75	V211-360-801-60	1	15
K135-023-100-00	35	27	V201-361-007-50	11	2		4	10
	37	27	V201-361-014-00	11	3		13	32
K182-007-002-00	35	3	V201-361-202-50	11	17		20	20
	37	3		11	23		21	15
K182-012-001-00	35	2		23	3		21	18
	37	2		26	4		35	16
K182-015-000-00	35	1		34	3		37	16
	37	1		34	8		39	4
K185-031-302-00	28	23	V201-461-204-00	32	30		42	26
K185-031-303-00	28	24	V203-261-002-00	28	7	V211-360-802-00	4	5
K200-031-005-00	2	10	V203-261-004-00	28	17		8	16

Numerical Index

Part Code	Fig.	Key
V211-360-802-00	15	5
	35	21
	36	2
	42	18
	42	20
	43	14
	43	18
V211-360-802-50	2	12
	32	65
	36	5
V211-360-803-00	3	11
V211-361-002-00	8	9
V211-361-002-50	42	29
	42	31
V211-560-802-50	24	11
	24	21
V211-560-803-00	32	70
V211-560-804-00	11	26
	11	26
	11	29
V211-561-001-60	25	3
V211-561-002-50	3	42
	3	44
	19	9
	32	80
V211-561-003-00	24	17
	32	37
	32	73
V211-561-003-50	32	74
V211-660-802-00	20	40
V220-541-003-50	50	30
V251-341-002-00	14	13
	14	18
	32	57
V251-341-203-0D	23	14
V301-260-006-00	8	3
	18	3
V304-260-008-00	2	2
	12	25
	17	5
	17	10
	17	29
	20	4
	20	11
	20	18
V304-260-008-00	25	6
	29	8
	35	36
	36	4
	36	19
	36	24
	37	36
	38	5
	39	8
	47	9
V304-260-010-00	9	4
	12	18
	12	22
	20	32
	20	36
	20	53
V304-260-012-00	1	12
	2	9
	20	7
	31	23
	32	27
V304-460-010-00	19	6
	32	77
V304-460-012-00	23	4
	32	23
	32	32
V304-460-016-00	34	14
V304-700-008-00	4	3
V327-262-110-00	24	4
	31	30
	31	36
	32	87
	32	93
V327-262-112-00	31	8
V328-262-112-00	27	11
	28	32
	31	16
V334-260-010-00	52	14
V334-260-020-00	24	16
V341-120-008-00	39	19
V350-160-005-00	40	4
V360-260-006-00	18	4
V361-260-006-00	43	10
V362-260-008-00	1	10
	3	12
V362-260-008-00	8	11
	21	11
V401-160-003-00	18	17
V401-160-006-00	35	24
	37	24
V401-160-008-00	2	3
	6	12
	13	29
	20	5
	25	5
	35	38
	37	38
	39	18
	40	7
V401-160-010-00	1	3
	1	6
	10	13
	11	4
	12	19
	12	23
	14	7
	19	7
	20	37
	28	8
	28	18
	31	39
	32	76
	32	78
	32	96
	35	48
	37	48
V401-160-012-00	1	13
	2	8
	11	18
	11	24
	20	8
	23	5
	26	5
	27	10
	28	31
	32	24
	32	31
	34	4
	34	9
V401-160-016-00	34	15

Numerical Index

1689-097-120-00

Part Code	Fig.	Key	Part Code	Fig.	Key	Part Code	Fig.	Key
V401-160-020-00	24	15	V411-260-012-00	20	26	V500-163-003-00	37	12
V401-170-008-00	35	34		20	30	V523-101-002-20	11	27
	37	34		20	43		13	26
V401-700-008-00	4	4		25	9		30	11
V411-260-003-00	18	18		28	35	V523-101-002-40	32	38
V411-260-006-00	8	4		42	21		32	64
	9	6	V411-260-014-00	35	11		32	72
	18	5		37	11	V530-160-602-80	20	46
V411-260-008-00	1	9	V411-260-016-00	12	8	V530-240-803-60	17	17
	3	28	V500-162-002-00	24	6		21	2
	7	7	V500-162-501-50	7	8	V580-140-502-50	32	12
	15	16		9	7	V580-140-602-00	29	19
	17	7		15	17	V580-140-603-20	29	23
	17	12		18	6	V580-140-604-00	10	14
	17	28		18	10	V580-140-802-00	36	8
	20	3		36	14	V600-110-600-50	32	43
	20	41		38	7		32	55
	20	50	V500-162-502-00	32	97	V600-110-600-60	11	15
	21	5	V500-162-502-50	18	22		13	4
	21	12		31	31	V600-110-600-80	32	46
	25	4		31	37	V600-110-601-00	32	14
	29	11		32	88	V600-110-601-20	14	3
	35	37		32	94	V600-110-620-40	13	10
	36	13	V500-163-001-50	17	8		13	17
	36	21		17	13		30	7
	37	37		20	42	V600-110-620-50	12	3
	38	4		20	51		32	60
	38	6		21	6	V600-110-620-60	12	2
	39	6		29	12		13	7
	39	17		36	22		13	20
	40	8	V500-163-002-00	15	10		32	61
V411-260-010-00	9	3		16	3	V600-110-620-70	14	2
	11	5		17	15	V600-110-630-50	13	16
	19	8		18	13		13	19
	20	22		20	23		32	40
	20	34		20	31	V600-110-690-70	32	45
	20	54		20	35	V600-110-691-10	32	17
	24	5		20	44	V600-150-600-20	20	6
	32	79		21	13	V600-150-620-50	33	6
V411-260-012-00	15	9		25	10	V600-150-630-40	33	7
	16	2		27	12	V653-425-331-50	51	3
	17	14		28	33	V653-430-401-50	51	4
	18	12		31	9	V704-140-012-00	20	15
	18	21		31	17		20	27
	20	14	V500-163-003-00	35	12	V704-140-016-00	12	9

Numerical Index

Part Code	Fig.	Key	Part Code	Fig.	Key	Part Code	Fig.	Key
V704-140-017-00	50	35	V720-111-900-60	37	32			
V704-140-019-00	24	9	V720-111-900-70	48	13			
	24	20	V720-111-900-80	50	45			
V704-140-020-00	50	21	V720-112-401-10	35	9			
V704-140-025-00	32	5		35	52			
	32	62		37	9			
V704-140-030-00	11	12		37	51			
	13	5	V720-112-401-40	22	3			
	13	21		22	9			
	34	11		28	13			
V704-140-035-00	32	47		50	24			
V705-140-017-00	14	11	V720-112-401-60	28	11			
V705-140-024-00	48	9	V720-112-402-00	28	16			
V705-140-047-00	14	23	V720-112-402-20	35	31			
	30	9		37	31			
	32	51	V720-113-502-90	28	30			
	50	22	V721-103-105-00	12	11			
V705-140-052-00	32	6	V721-103-106-00	11	6			
V706-140-040-00	32	16	V721-103-107-00	32	34			
V706-140-050-00	13	14	V721-103-107-50	32	33			
V706-140-055-00	32	15	V721-103-109-00	32	36			
V707-140-055-00	13	6	V721-113-105-00	35	30			
	32	48		37	30			
V707-140-062-00	13	24	V724-124-304-20	35	5			
	32	41		37	5			
V710-140-010-00	36	16	V744-114-280-70	35	29			
V720-102-401-00	6	4		37	29			
V720-102-401-20	48	14	V744-120-350-70	30	8			
V720-102-401-40	24	23	V744-125-400-70	12	10			
V720-102-401-50	11	7	V744-135-520-80	14	22			
V720-102-401-80	50	40	V760-150-000-00	31	4			
V720-102-402-00	35	25	V762-150-000-00	32	71			
	35	42	V763-150-000-00	31	6			
	37	25	V780-140-000-1T	48	10			
	37	42	V780-140-000-2T	48	11			
V720-103-502-40	15	3	V780-140-000-4T	48	12			
	29	2	V780-140-000-6T	35	46			
	35	14	V781-160-000-8B	11	25			
	37	14	V782-160-000-4B	32	52			
V720-103-502-60	35	15	V793-142-480-60	35	4			
	37	15		37	4			
V720-103-504-10	32	69	V999-200-003-00	19	4			
V720-103-504-40	6	8		33	4			
V720-111-900-40	50	46		33	13			
V720-111-900-60	35	32						

Alpabetical Index

6004-097-220-10

Description	Fig.	Key	Description	Fig.	Key	Description	Fig.	Key
ARM, FLOATING	21	20	BOLT	29	22	CAP, OIL FILLER	2	2
ARM/CONTROL	21	39	BOLT	29	24	CAP, SEALING	1	2
ARM/FLOATING COMP	21	20-A	BOLT, JOINT	16	13	CAP, SEALING	5	3
ARM/TENSION	21	24	BOLT, SEMS/M10X20	8	3	CAP, SEALING	5	4
ARMATURE/STARTE ASSY	28	2	BOLT, SEMS/M10X20	10	2	CAP, SEALING	5	7
BALL	1	5	BOLT, SEMS/M6X12	5	27	CARTRIDGE, OIL FILTER	16	15
BALL	28	17	BOLT, SEMS/M6X12	7	4	CARTRIDGE/OILFILTER	16	15-A
BEARING	28	3	BOLT, SEMS/M6X12	12	5	CASE/ADAPTER	21	25
BEARING	28	4	BOLT, SEMS/M6X12	21	16	CLAMP, HARNESS	9	15
BEARING	29	5	BOLT, SEMS/M6X12	24	7	CLAMP, STRAINER	16	10
BEARING	29	11	BOLT, SEMS/M8X16	16	11	CLAMP/WIRE/10-12	22	7
BEARING, RB/6004	21	14	BOLT, SEMS/M8X25 7T	4	3	CLAMP/WIRE/10-15	17	23
BEARING, RB/6005	9	45	BOLT, SEMS/M8X45	9	13	CLIP/HOSE/7.6-8.2	22	4
BEARING, RB/6203	21	13	BOLT, SEMS/M8X45	17	13	CLIP/HOSE/8.7-9.3	22	9
BEARING, THRUST CRANK	5	13	BOLT/CONNECTINGROD	13	6	CLUTCH/STARTER ASSY	28	5
BEARING, THRUST CRANK	6	2	BOLT/FLANGE	15	7-A	COLLOR	29	3
BEARING, THRUST CRANK	6	4	BOLT/L=55	9	9	CONNECTOR	22	1
BEARING/BALL	29	5-A	BOLT/M10X1.25X82	1	7	CONNECTOR, GLOW PLUG	24	4
BEARING/BALL	29	11-A	BOLT/M6	9	33	CONNECTOR, OIL FILTER	5	24
BEARING/CONN ROD	13	8	BOLT/M6	9	34	COVER	9	48
BEARING/CONN ROD/UN	6	5	BOLT/M6X10	21	18	COVER	28	23
BEARING/CONN ROD/UN	6	6	BOLT/M8X20	3	5	COVER	29	13
BEARING/CRANK/LOWER	5	12	BOLT/M8X20	9	12	COVER, BEARING	29	6
BEARING/CRANK/UPPER	5	11	BOLT/M8X20	17	19	COVER, CYLINDER HEAD	2	1
BEARING/WATER PUMP	17	3	BOLT/M8X20	17	27	COVER/INJECTIONPUMP	5	25
BEARING/WATERPUMP	17	4	BOLT/M8X20	21	7	COVER/INJECTIONPUMP	5	25-A
BELT VHM034	18	5	BOLT/M8X20	23	3	CRANKSHAFT ASSY	15	1
BELT VHM034	19	5	BOLT/M8X30	9	16	CRANKSHAFT ASSY	15	1-A
BODY/NOZZLE HOLDER	26	2	BOLT/M8X45	11	19	CRANKSHAFT ASSY	15	1-B
BODY/OILPUMP	16	2	BOLT/M8X75	9	14	CUP/SEALING/16	9	3
BODY/WATERPUMP	17	2	BOLT/M8X75	17	28	CUTTER, VALVE	11	5
BOLT	3	6	BOLT/M8X85	9	8	CYLINDERBLOCK ASSY	5	1
BOLT	5	2	BOLT/THROUGH	28	16	CYLINDERHEAD ASSY	1	1
BOLT	9	39	BOLT/WASHERHEAD	27	10	CYLINDERHEAD ASSY	1	1-A
BOLT	11	18	BOLT/WS	16	6	DOWEL	5	21
BOLT	15	7	BOLT/WS	18	4	ELEMENT ASSY	27	9
BOLT	15	10	BOLT/WS	19	4	FAN, COOLING	18	1
BOLT	16	7	BOLT/WS	28	15	FAN/COOLING	19	1
BOLT	17	32	BOLT/WSP	23	5	FLYWEIGHT	21	17
BOLT	23	8	BRACKET ROCKER SHAFT	11	12	FLYWHEEL ASSY	15	5
BOLT	29	9	BRACKET, ROCKER SHAFT	11	13	FRAME	29	12
BOLT	29	10	BRUSH	29	17	FRAME ASSY	29	7
BOLT	29	19	BUSH	29	15	FRAME/DRIVEEND ASSY	29	7-A
BOLT	29	20	BUSHING/DRAIN	28	20	FRAME/STARTEREND	28	10
BOLT	29	21	CAP, BLANK/30	9	36	GASKET	3	3

Alpabetical Index

Description	Fig.	Key
GASKET	17	8
GASKET	24	6
GASKET	25	22
GASKET, EXH. MANIFOLD	4	2
GASKET, EXH. MANIFOLD	25	7
GASKET, INLET MANIFOL	3	4
GASKET, INLET MANIFOL	25	6
GASKET, NOZZLE	20	2
GASKET, SPACER	17	17
GASKET, SPACER	25	19
GASKET/COVER	5	26
GASKET/COVER	9	49
GASKET/COVER	25	11
GASKET/CYLINDERHEAD	1	6
GASKET/CYLINDERHEAD	1	6-A
GASKET/CYLINDERHEAD	25	3
GASKET/DELIVERYVALVE	27	6
GASKET/GEARCASE	9	28
GASKET/GEARCASE	25	14
GASKET/HOUSING	17	26
GASKET/HOUSING	25	20
GASKET/PLATE	9	38
GASKET/PLATE	25	15
GASKET/WATER PUMP	17	12
GASKET/WATER PUMP	25	18
GEAR, CAMSHAFT	12	2
GEAR, CRANK SHAFT	15	3
GEAR, IDLE	12	6
GEAR, INJ PUMP	21	11
GEAR/OILPUMP ASSY	16	3
GEARCASE ASSY	9	1
GEARCASE ASSY	9	1-A
GENERATOR ASSY	23	1
GLOWPLUG	24	3
HANGER	10	1
HOLDER ASSY	29	14
HOLDER, BRUSH ASSY	29	16
HOLDER/BRUSH ASSY	29	16-A
HOLDER/DELIVERY VALV	27	4
HOLDER/NOZZLE ASSY	26	1
HOLDER/STARTER ASSY	28	11
HOSE, RUBBER	22	3
HOSE/RUBBER	2	6
HOSE/RUBBER	17	22
HOSE/RUBBER	22	5
HOUSING ASSY	27	8
HOUSING/STARTER ASSY	28	9
HOUSING/THERMOSTAT	17	24
INJECTIONNOZZLE ASSY	20	1
JOINTT-TYPE 2	22	6
KEY	12	3
KEY	21	12
KEY/07X05X20	15	4
LEVELGAGE	5	29
LEVER/CONTROL COMP	21	36
MANIFOLD, INLET	3	1
MANIFOLD/EXHAUST	4	1
METAL, CRANK SET	5	10
METAL, CRANK SET	6	1
METAL, CRANK SET	6	3
NIPPLE	5	22
NOZZLE ASSY	26	52
NUT	9	35
NUT	11	17
NUT	21	40
NUT	26	51
NUT	28	21
NUT	28	22
NUT	29	2
NUT	29	23
NUT	29	25
NUT, CAP	2	4
NUT, CAP/M 8	9	20
NUT/FLANGE	13	7
NUT/M08	3	7-A
NUT/M08	9	10-A
NUT/M08	11	20-A
NUT/M08	17	14-A
NUT/M08	17	20-A
NUT/M08	21	8-A
NUT/M10	23	6
NUT/M12	23	9
NUT/M8	3	7
NUT/M8	9	10
NUT/M8	9	19
NUT/M8	9	46
NUT/M8	9	50
NUT/M8	11	20
NUT/M8	17	14
NUT/M8	17	20
NUT/M8	21	8
NUT/NOZZLERETAINING	26	5
OILPAN COMP	7	1
OILPUMP ASSY	16	1
OILSEAL	5	14-A
OILSEAL	25	10
O-RING	17	31
O-RING	25	21
O-RING	28	19
ORING	27	5
O-RING 1A S50	9	41
O-RING 1A S50	25	16
O-RING/P 8	21	37
O-RING/P15	16	9
O-RING/P15	25	17
O-RING/P18	7	3
PACKING	2	5
PACKING	9	21
PACKING	16	14
PACKING	25	5
PACKING	25	13
PIECE, DISTANCE	26	6
PIECE, THRUST	21	19
PIN	5	16
PIN	5	17
PIN	5	28
PIN	9	24
PIN	15	2
PIN, CONTROL	21	22
PIN, GROOVE	9	27
PIN, NOZZLE HOLDER	26	3
PIN, PISTON	13	3
PIN/ADAPTER	21	26
PIN/ARM	9	22
PIN/IDLEGEAR	5	6
PIN/INJECTIONPUMP	27	12
PIN/SNAP	9	23
PIN/STRAIGHT	16	5
PIN/TUBE	5	15
PIN/TUBE	9	42
PINION/STARTER	28	8
PIPE, INJ	20	3
PIPE, INJ	20	4
PIPE, INJ	20	5
PIPE, OIL	16	12

Alpabetical Index

6004-097-220-10

Description	Fig.	Key	Description	Fig.	Key	Description	Fig.	Key
PIPE, PUMP HOUSING	17	25	PULLEY	29	1	SEAL, OIL	25	2
PIPE, WATER OUTLET	17	30	PULLEY, WATER PUMP	18	2	SEAL, OIL	25	12
PIPE/FUEL	22	2	PULLEY, WATER PUMP	19	2	SEAL/WATER PUMPPULLE	17	7
PIPE/INJECTION ASSY	20	3-A	PULLEY/CRANK	15	8	SEAT, VALVE SPRING	11	4
PIPE/INJECTION ASSY	20	4-A	PUMP, INJ	21	1	SEAT/SPRING/LOWER	27	19
PIPE/INJECTION ASSY	20	5-A	RACK/CONTROL ASSY	27	15	SEAT/SPRING/UPPER	27	17
PIPE/WATER PUMP	17	11	REGULATOR ASSY	29	26	SHAFT, CAM	12	1
PIPE/WATERDRAIN	5	23	RELAY, SOLENOID	24	8	SHAFT, CAM/INJ. PUMP	21	10
PISTON	13	1	REPAIR/ENGINE SET	25	1	SHAFT, ROCKER ASSY	11	8
PISTON/OV050	14	1	RETAINER	28	7	SHAFT, ROCKER ARMASSY	11	10
PISTON/OV100	14	3	RING(PISTON) SET	13	2	SHAFT/HYDRAULIC ASSY	9	44
PISTON/RELIEF VALVE	9	30	RING, SNAP	13	4	SHAFT/ROCKERARM ASSY	11	10-A
PISTON/VALVE/RELIEF	9	30-A	RING, SNAP/ 4 E	21	23	SHIM, ADAPTER/0.1	21	28
PISTON/VALVE/RELIEF	9	30-B	RING, SNAP/ 4 E	21	34	SHIM, ADAPTER/0.1	21	29
PLATE	27	13	RING, SNAP/12 C	9	32	SHIM, ADAPTER/0.15	21	30
PLATE	29	8	RING, SNAP/16 C	11	15	SHIM, ADAPTER/0.2	21	31
PLATE, FRONT	9	37	RING/PISTON SET	13	2-A	SHIM/ADAPTER/0.05	21	28-A
PLATE, THRUST	12	4	RING/PISTON SET	13	2-B	SHIM/ADAPTER/0.5	21	32
PLATE, THRUST INJPUMP	21	15	RING/PISTON/OV SET	14	2	SHIM/ADAPTER/1.0	21	33
PLATE/ADJUST	23	2	RING/PISTON/OV SET	14	4	SHIM/INJECTION P/0.1	21	3
PLATE/ADJUSTING	27	11	RINGGEAR	15	6	SHIM/INJECTION P/0.2	21	4
PLATE/REAR COMP	8	1	RINK/CONTROL	21	21	SHIM/INJECTION P/0.3	21	2
PLATE/TAPPET/AD 0.2	27	25	ROCKERARM	11	9	SHIM/INJECTION P/0.4	21	5
PLATE/TAPPET/AD 0.25	27	29	ROCKERSHAFT ASSY	11	8-A	SHIM/INJECTION P/0.5	21	6
PLATE/TAPPET/AD 0.3	27	26	ROD, CONN	13	5	SLEEVE/PLUNGER	27	16
PLATE/TAPPET/AD 0.35	27	30	ROD, PUSH	11	7	SOLENOID	24	5
PLATE/TAPPET/AD 0.4	27	27	RORA	28	6	SOLENOID	24	5-A
PLATE/TAPPET/AD 0.45	27	31	ROTOR ASSY	29	4-A	SPACER	9	40
PLATE/TAPPET/AD 0.5	27	28	ROTOR ASSY	29	4	SPACER, PUMP. WATER	17	16
PLATE/TAPPET/AD 0.55	27	32	ROTOR/OUTER	16	4	SPACER/FAN/48	18	3
PLATE/TAPPET/AD 0.6	27	20	ROTOR/WATERPUMP	17	6	SPACER/FAN/48	19	3
PLATE/TAPPET/AD 0.65	27	33	SCREW	28	14	SPRING	11	14
PLATE/TAPPET/AD 0.7	27	21	SCREW ADJUST	11	16	SPRING	29	18
PLATE/TAPPET/AD 0.8	27	22	SCREW/HOLLOW	27	1	SPRING ADAPTER	21	27
PLATE/TAPPET/AD 0.9	27	23	SCREW/WATER PUMP	17	10	SPRING, RETURN	21	38
PLATE/TAPPET/AD 1.0	27	24	SEAL SET/WATER PUMP	17	5	SPRING, STARTING	21	43
PLATE/WATER PUMP	17	9	SEAL, BEARING CAP	5	8	SPRING, VALVE	11	3
PLUG	5	5	SEAL, BEARING CAP	25	8	SPRING/BRUSH	28	12
PLUG	9	2	SEAL, BEARING CAP/7	5	9	SPRING/DELIVERYVALVE	27	3
PLUG	9	25	SEAL, BEARING CAP/7	25	9	SPRING/GOVERNOR	21	35
PLUG	11	11	SEAL, CYL. HEAD COVER	2	3	SPRING/PUMPPLUNGER	27	18
PLUG(M14X15)	7	2	SEAL, CYL. HEAD COVER	25	4	SPRING/RELIEF VALVE	9	31
PLUG/M14X1.5	7	2-A	SEAL, OIL	1	4	SPRING/RETURN	28	18
PLUG/PT1/2	1	3	SEAL, OIL	5	14	STARTER ASSY	23	7
POINTER	8	2	SEAL, OIL	9	7	STARTER ASSY	23	7-A

Alpabetical Index

Description	Fig.	Key	Description	Fig.	Key	Description	Fig.	Key
STOPPER/FULLLOAD	9	18	WASHER/0.95	26	9	WASHER/1.95	26	49
STOPPER/FULLLOAD	9	18-A	WASHER/0.975	26	10	WASHER/9X22X2	23	4
STRAINER	16	8	WASHER/08X14X01	9	17	WASHER/AIR BLEEDER	27	2
STUD	1	8-A	WASHER/08X14X01	9	26	WATERPUMP ASSY	17	1
STUD	3	2	WASHER/08X14X01	25	23	YOKE/STARTER ASSY	28	1
STUD	4	4	WASHER/08X15.5X1.6	11	21			
STUD	5	19	WASHER/08X15.5X1.6	11	21-A			
STUD	5	20	WASHER/1.0	26	11			
STUD	9	4	WASHER/1.025	26	12			
STUD	9	4-A	WASHER/1.05	26	13			
STUD	9	5	WASHER/1.075	26	14			
STUD	9	6	WASHER/1.1	26	15			
STUD	9	43	WASHER/1.125	26	16			
STUD,HEAD COVER	1	8	WASHER/1.15	26	17			
STUD/M8X40	5	18	WASHER/1.175	26	18			
STUD/M8X40	17	18	WASHER/1.2	26	19			
SWITCH/MAGNETIC ASSY	28	13	WASHER/1.225	26	20			
SWITCH/MAGNETIC ASSY	28	13-A	WASHER/1.25	26	21			
SWITCH/OILPRESSURE	24	1	WASHER/1.275	26	22			
SWITCH/OVERHEAT	24	2	WASHER/1.3	26	23			
TAPPET	11	6	WASHER/1.325	26	24			
TAPPET/INJECTIO ASSY	27	14	WASHER/1.35	26	25			
THERMOSTAT	17	29	WASHER/1.375	26	26			
TUBE,ORIFICE	22	8	WASHER/1.4	26	27			
VALVE ASSY	27	7	WASHER/1.425	26	28			
VALVE,EXHAUST	11	2	WASHER/1.45	26	29			
VALVE,INTAKE	11	1	WASHER/1.475	26	30			
VALVE/EXHAUST	11	2-A	WASHER/1.5	26	31			
VALVE/RELIEF ASSY	9	29	WASHER/1.525	26	32			
VALVE/RELIEF ASSY	9	29-A	WASHER/1.55	26	33			
VALVE/RELIEF ASSY	9	29-B	WASHER/1.575	26	34			
WASHER	3	8	WASHER/1.6	26	35			
WASHER	9	11	WASHER/1.625	26	36			
WASHER	9	47	WASHER/1.65	26	37			
WASHER	9	51	WASHER/1.675	26	38			
WASHER	15	9	WASHER/1.7	26	39			
WASHER	17	15	WASHER/1.725	26	40			
WASHER	17	21	WASHER/1.75	26	41			
WASHER	21	9	WASHER/1.775	26	42			
WASHER	26	4	WASHER/1.8	26	43			
WASHER	26	50	WASHER/1.825	26	44			
WASHER / M6	21	41	WASHER/1.85	26	45			
WASHER,SP/M6	21	42	WASHER/1.875	26	46			
WASHER/0.9	26	7	WASHER/1.9	26	47			
WASHER/0.925	26	8	WASHER/1.925	26	48			

Alpabetical Index

6004-097-230-20

Description	Fig.	Key	Description	Fig.	Key	Description	Fig.	Key
ARM, FLOATING	21	20	BOLT	29	22	CAP, BLANK/30	9	36
ARM/CONTROL	21	39	BOLT	29	24	CAP, OIL FILLER	2	2
ARM/FLOATING COMP	21	20-A	BOLT, JOINT	16	13	CAP, SEALING	1	2
ARM/TENSION	21	24	BOLT, SEMS/M10X20	8	3	CAP, SEALING	5	3
ARMATURE/STARTE ASSY	28	2	BOLT, SEMS/M10X20	10	2	CAP, SEALING	5	4
BALL	1	5	BOLT, SEMS/M6X12	5	27	CAP, SEALING	5	7
BALL	28	17	BOLT, SEMS/M6X12	7	4	CARTRIDGE, OIL FILTER	16	15
BEARING	28	3	BOLT, SEMS/M6X12	12	5	CARTRIDGE/OILFILTER	16	15-A
BEARING	28	4	BOLT, SEMS/M6X12	21	16	CASE/ADAPTER	21	25
BEARING	29	5	BOLT, SEMS/M6X12	24	7	CLAMP, HARNESS	9	15
BEARING	29	11	BOLT, SEMS/M8X16	16	11	CLAMP, STRAINER	16	10
BEARING, RB/6004	21	14	BOLT, SEMS/M8X25 7T	4	3	CLAMP/WIRE/10-12	22	7
BEARING, RB/6005	9	45	BOLT, SEMS/M8X45	9	13	CLAMP/WIRE/10-15	17	23
BEARING, RB/6203	21	13	BOLT, SEMS/M8X45	17	13	CLIP/HOSE/7.6-8.2	22	4
BEARING, THRUST CRANK	5	13	BOLT/CONNECTINGROD	13	6	CLIP/HOSE/8.7-9.3	22	9
BEARING, THRUST CRANK	6	2	BOLT/FLANGE	15	7-A	CLUTCH/STARTER ASSY	28	5
BEARING, THRUST CRANK	6	4	BOLT/L=55	9	9	COLLOR	29	3
BEARING/BALL	29	5-A	BOLT/M10X1.25X82	1	7	CONNECTOR	22	1
BEARING/BALL	29	11-A	BOLT/M6	9	33	CONNECTOR, GLOW PLUG	24	4
BEARING/CONN ROD	13	8	BOLT/M6	9	34	CONNECTOR, OIL FILTER	5	24
BEARING/CONN ROD/UN	6	5	BOLT/M6X10	21	18	COVER	9	48
BEARING/CONN ROD/UN	6	6	BOLT/M8X20	3	5	COVER	28	23
BEARING/CRANK/LOWER	5	12	BOLT/M8X20	9	12	COVER	29	13
BEARING/CRANK/UPPER	5	11	BOLT/M8X20	17	19	COVER, BEARING	29	6
BEARING/WATER PUMP	17	3	BOLT/M8X20	17	27	COVER, CYLINDER HEAD	2	1
BEARING/WATERPUMP	17	4	BOLT/M8X20	21	7	COVER/INJECTIONPUMP	5	25
BELT VHM034	18	5	BOLT/M8X20	23	3	COVER/INJECTIONPUMP	5	25-A
BELT VHM034	19	5	BOLT/M8X30	9	16	CRANKSHAFT ASSY	15	1
BODY/NOZZLE HOLDER	26	2	BOLT/M8X45	11	19	CRANKSHAFT ASSY	15	1-A
BODY/OILPUMP	16	2	BOLT/M8X75	9	14	CRANKSHAFT ASSY	15	1-B
BODY/WATERPUMP	17	2	BOLT/M8X75	17	28	CUP/SEALING/16	9	3
BOLT	3	6	BOLT/M8X85	9	8	CUTTER, VALVE	11	5
BOLT	5	2	BOLT/THROUGH	28	16	CYLINDERBLOCK ASSY	5	1
BOLT	9	39	BOLT/WASHERHEAD	27	10	CYLINDERBLOCK ASSY	5	1-A
BOLT	11	18	BOLT/WS	16	6	CYLINDERHEAD ASSY	1	1
BOLT	15	7	BOLT/WS	18	4	DOWEL	5	21
BOLT	15	10	BOLT/WS	19	4	ELEMENT ASSY	27	9
BOLT	16	7	BOLT/WS	28	15	FAN, COOLING	18	1
BOLT	17	32	BOLT/WSP	23	5	FAN/COOLING	19	1
BOLT	23	8	BRACKET ROCKER SHAFT	11	12	FLYWEIGHT	21	17
BOLT	29	9	BRACKET, ROCKER SHAFT	11	13	FLYWHEEL ASSY	15	5
BOLT	29	10	BRUSH	29	17	FRAME	29	12
BOLT	29	19	BUSH	29	15	FRAME ASSY	29	7
BOLT	29	20	BUSHING/DRAIN	28	20	FRAME/DRIVEEND ASSY	29	7-A
BOLT	29	21	CAMSHAFT/INJ PUMP	21	10	FRAME/STARTEREND	28	10

Alpabetical Index

Description	Fig.	Key
GASKET	3	3
GASKET	17	8
GASKET	24	6
GASKET	25	22
GASKET, EXH. MANIFOLD	4	2
GASKET, EXH. MANIFOLD	25	7
GASKET, INLET MANIFOL	3	4
GASKET, INLET MANIFOL	25	6
GASKET, NOZZLE	20	2
GASKET, SPACER	17	17
GASKET, SPACER	25	19
GASKET/COVER	5	26
GASKET/COVER	9	49
GASKET/COVER	25	11
GASKET/CYLINDERHEAD	1	6
GASKET/CYLINDERHEAD	1	6-A
GASKET/CYLINDERHEAD	25	3
GASKET/DELIVERYVALVE	27	6
GASKET/GEARCASE	9	28
GASKET/GEARCASE	25	14
GASKET/HOUSING	17	26
GASKET/HOUSING	25	20
GASKET/PLATE	9	38
GASKET/PLATE	25	15
GASKET/WATER PUMP	17	12
GASKET/WATER PUMP	25	18
GEAR, CAMSHAFT	12	2
GEAR, CRANK SHAFT	15	3
GEAR, IDLE	12	6
GEAR, INJ PUMP	21	11
GEAR/OILPUMP ASSY	16	3
GEARCASE ASSY	9	1
GEARCASE ASSY	9	1-A
GENERATOR ASSY	23	1
GLOWPLUG	24	3
HANGER	10	1
HOLDER ASSY	29	14
HOLDER, BRUSH ASSY	29	16
HOLDER/BRUSH ASSY	29	16-A
HOLDER/DELIVERYVALVE	27	4
HOLDER/NOZZLE ASSY	26	1
HOLDER/STARTER ASSY	28	11
HOSE, RUBBER	22	3
HOSE/RUBBER	2	6
HOSE/RUBBER	17	22
HOSE/RUBBER	22	5
HOUSING ASSY	27	8
HOUSING/STARTER ASSY	28	9
HOUSING/THERMOSTAT	17	24
INJECTIONNOZZLE ASSY	20	1
INJECTIONPUMP ASSY	21	1
JOINTT-TYPE 2	22	6
KEY	12	3
KEY	21	12
KEY/07X05X20	15	4
LEVELGAGE	5	29
LEVER/CONTROL COMP	21	36
MANIFOLD, INLET	3	1
MANIFOLD/EXHAUST	4	1
METAL, CRANK SET	5	10
METAL, CRANK SET	6	1
METAL, CRANK SET	6	3
NIPPLE	5	22
NOZZLE ASSY	26	52
NUT	9	35
NUT	11	17
NUT	21	40
NUT	26	51
NUT	28	21
NUT	28	22
NUT	29	2
NUT	29	23
NUT	29	25
NUT, CAP	2	4
NUT, CAP/M 8	9	20
NUT/FLANGE	13	7
NUT/M08	3	7-A
NUT/M08	9	10-A
NUT/M08	11	20-A
NUT/M08	17	14-A
NUT/M08	17	20-A
NUT/M08	21	8-A
NUT/M10	23	6
NUT/M12	23	9
NUT/M8	3	7
NUT/M8	9	10
NUT/M8	9	19
NUT/M8	9	46
NUT/M8	9	50
NUT/M8	11	20
NUT/M8	17	14
NUT/M8	17	20
NUT/M8	21	8
NUT/NOZZLERETAINING	26	5
OILPAN COMP	7	1
OILPUMP ASSY	16	1
OILSEAL	5	14-A
OILSEAL	25	10
O-RING	17	31
O-RING	25	21
O-RING	28	19
ORING	27	5
O-RING 1A S50	9	41
O-RING 1A S50	25	16
O-RING/P 8	21	37
O-RING/P15	16	9
O-RING/P15	25	17
O-RING/P18	7	3
PACKING	2	5
PACKING	9	21
PACKING	16	14
PACKING	25	5
PACKING	25	13
PIECE, DISTANCE	26	6
PIECE, THRUST	21	19
PIN	5	16
PIN	5	17
PIN	5	28
PIN	9	24
PIN	15	2
PIN, CONTROL	21	22
PIN, GROOVE	9	27
PIN, NOZZLE HOLDER	26	3
PIN, PISTON	13	3
PIN/ADAPTER	21	26
PIN/ARM	9	22
PIN/IDLEGEAR	5	6
PIN/INJECTIONPUMP	27	12
PIN/SNAP	9	23
PIN/STRAIGHT	16	5
PIN/TUBE	5	15
PIN/TUBE	9	42
PINION/STARTER	28	8
PIPE, OIL	16	12
PIPE, PUMP HOUSING	17	25

Alpabetical Index

6004-097-230-20

Description	Fig.	Key	Description	Fig.	Key	Description	Fig.	Key
PIPE, WATER OUTLET	17	30	PULLEY	29	1	SEAL, OIL	25	12
PIPE/FUEL	22	2	PULLEY, WATER PUMP	18	2	SEAL/WATER PUMPPULLE	17	7
PIPE/INJECTION ASSY	20	3	PULLEY, WATER PUMP	19	2	SEAT, VALVE SPRING	11	4
PIPE/INJECTION ASSY	20	4	PULLEY/CRANK	15	8	SEAT/SPRING/LOWER	27	19
PIPE/INJECTION ASSY	20	5	RACK/CONTROL ASSY	27	15	SEAT/SPRING/UPPER	27	17
PIPE/WATER PUMP	17	11	REGULATOR ASSY	29	26	SHAFT, CAM	12	1
PIPE/WATERDRAIN	5	23	RELAY, SOLENOID	24	8	SHAFT, ROCKER ASSY	11	8
PISTON	13	1	REPAIR/ENGINE SET	25	1	SHAFT, ROCKER ARMASSY	11	10
PISTON	13	1-A	RETAINER	28	7	SHAFT/HYDRAULIC ASSY	9	44
PISTON/OV	14	1	RING, SNAP	13	4	SHAFT/ROCKERARM ASSY	11	10-A
PISTON/OV	14	3	RING, SNAP/ 4 E	21	23	SHIM, ADAPTER/0.1	21	29
PISTON/RELIEF VALVE	9	30	RING, SNAP/ 4 E	21	34	SHIM, ADAPTER/0.15	21	30
PISTON/VALVE/RELIEF	9	30-A	RING, SNAP/12 C	9	32	SHIM, ADAPTER/0.2	21	31
PISTON/VALVE/RELIEF	9	30-B	RING, SNAP/16 C	11	15	SHIM/ADAPTER/0.05	21	28
PLATE	27	13	RING/PISTON SET	13	2	SHIM/ADAPTER/0.5	21	32
PLATE	29	8	RING/PISTON SET	13	2-A	SHIM/ADAPTER/1.0	21	33
PLATE, FRONT	9	37	RING/PISTON SET	13	2-B	SHIM/INJECTION P/0.1	21	3
PLATE, THRUST	12	4	RING/PISTON/OV SET	14	2	SHIM/INJECTION P/0.2	21	4
PLATE, THRUST INJPUMP	21	15	RING/PISTON/OV SET	14	4	SHIM/INJECTION P/0.3	21	2
PLATE/ADJUST	23	2	RINGGEAR	15	6	SHIM/INJECTION P/0.4	21	5
PLATE/ADJUSTING	27	11	RINK/CONTROL	21	21	SHIM/INJECTION P/0.5	21	6
PLATE/REAR COMP	8	1	ROCKERARM	11	9	SLEEVE/PLUNGER	27	16
PLATE/TAPPET/AD 0.2	27	25	ROCKERSHAFT ASSY	11	8-A	SOLENOID	24	5
PLATE/TAPPET/AD 0.25	27	29	ROD, CONN	13	5	SOLENOID	24	5-A
PLATE/TAPPET/AD 0.3	27	26	ROD, PUSH	11	7	SPACER	9	40
PLATE/TAPPET/AD 0.35	27	30	RORA	28	6	SPACER, PUMP. WATER	17	16
PLATE/TAPPET/AD 0.4	27	27	ROTOR ASSY	29	4-A	SPACER/FAN/48	18	3
PLATE/TAPPET/AD 0.45	27	31	ROTOR ASSY	29	4	SPACER/FAN/48	19	3
PLATE/TAPPET/AD 0.5	27	28	ROTOR/OUTER	16	4	SPRING	11	14
PLATE/TAPPET/AD 0.55	27	32	ROTOR/WATERPUMP	17	6	SPRING	29	18
PLATE/TAPPET/AD 0.6	27	20	SCREW	28	14	SPRING, RETURN	21	38
PLATE/TAPPET/AD 0.65	27	33	SCREW ADJUST	11	16	SPRING, STARTING	21	43
PLATE/TAPPET/AD 0.7	27	21	SCREW/HOLLOW	27	1	SPRING, VALVE	11	3
PLATE/TAPPET/AD 0.8	27	22	SCREW/WATER PUMP	17	10	SPRING/ADAPTER	21	27
PLATE/TAPPET/AD 0.9	27	23	SEAL SET/WATER PUMP	17	5	SPRING/BRUSH	28	12
PLATE/TAPPET/AD 1.0	27	24	SEAL, BEARING CAP	5	8	SPRING/DELIVERYVALVE	27	3
PLATE/WATER PUMP	17	9	SEAL, BEARING CAP	25	8	SPRING/GOVERNOR	21	35
PLUG	5	5	SEAL, BEARING CAP/7	5	9	SPRING/PUMPPLUNGER	27	18
PLUG	9	2	SEAL, BEARING CAP/7	25	9	SPRING/RELIEF VALVE	9	31
PLUG	9	25	SEAL, CYL. HEAD COVER	2	3	SPRING/RETURN	28	18
PLUG	11	11	SEAL, CYL. HEAD COVER	25	4	STARTER ASSY	23	7
PLUG(M14X15)	7	2	SEAL, OIL	1	4	STARTER ASSY	23	7-A
PLUG/M14X1.5	7	2-A	SEAL, OIL	5	14	STOPPER/FULLLOAD	9	18
PLUG/PT1/2	1	3	SEAL, OIL	9	7	STOPPER/FULLLOAD	9	18-A
POINTER	8	2	SEAL, OIL	25	2	STRAINER	16	8

Alpabetical Index

Description	Fig.	Key
STUD	1	8-A
STUD	3	2
STUD	4	4
STUD	5	19
STUD	5	20
STUD	9	4
STUD	9	4-A
STUD	9	5
STUD	9	6
STUD	9	43
STUD, HEAD COVER	1	8
STUD/M8X40	5	18
STUD/M8X40	17	18
SWITCH/MAGNETIC ASSY	28	13
SWITCH/MAGNETIC ASSY	28	13-A
SWITCH/OILPRESSURE	24	1
SWITCH/OVERHEAT	24	2
TAPPET	11	6
TAPPET/INJECTIO ASSY	27	14
THERMOSTAT	17	29
TUBE, ORIFICE	22	8
VALVE ASSY	27	7
VALVE, EXHAUST	11	2
VALVE, INTAKE	11	1
VALVE/EXHAUST	11	2-A
VALVE/RELIEF ASSY	9	29
VALVE/RELIEF ASSY	9	29-A
VALVE/RELIEF ASSY	9	29-B
WASHER	3	8
WASHER	9	11
WASHER	9	47
WASHER	9	51
WASHER	15	9
WASHER	17	15
WASHER	17	21
WASHER	21	9
WASHER	26	4
WASHER	26	50
WASHER / M6	21	41
WASHER, SP/M6	21	42
WASHER/0.9	26	7
WASHER/0.925	26	8
WASHER/0.95	26	9
WASHER/0.975	26	10
WASHER/08X14X01	9	17
WASHER/08X14X01	9	26
WASHER/08X14X01	25	23
WASHER/08X15.5X1.6	11	21
WASHER/08X15.5X1.6	11	21-A
WASHER/1.0	26	11
WASHER/1.025	26	12
WASHER/1.05	26	13
WASHER/1.075	26	14
WASHER/1.1	26	15
WASHER/1.125	26	16
WASHER/1.15	26	17
WASHER/1.175	26	18
WASHER/1.2	26	19
WASHER/1.225	26	20
WASHER/1.25	26	21
WASHER/1.275	26	22
WASHER/1.3	26	23
WASHER/1.325	26	24
WASHER/1.35	26	25
WASHER/1.375	26	26
WASHER/1.4	26	27
WASHER/1.425	26	28
WASHER/1.45	26	29
WASHER/1.475	26	30
WASHER/1.5	26	31
WASHER/1.525	26	32
WASHER/1.55	26	33
WASHER/1.575	26	34
WASHER/1.6	26	35
WASHER/1.625	26	36
WASHER/1.65	26	37
WASHER/1.675	26	38
WASHER/1.7	26	39
WASHER/1.725	26	40
WASHER/1.75	26	41
WASHER/1.775	26	42
WASHER/1.8	26	43
WASHER/1.825	26	44
WASHER/1.85	26	45
WASHER/1.875	26	46
WASHER/1.9	26	47
WASHER/1.925	26	48
WASHER/1.95	26	49
WASHER/9X22X2	23	4
WASHER/AIR BLEEDER	27	2
WATERPUMP ASSY	17	1
YOKE/STARTER ASSY	28	1

Alpabetical Index

1689-097-120-00

Description	Fig.	Key
ADAPTER(90°/PUMP)	28	34
ADAPTER(90°/PUMP)	35	7
ADAPTER(90°/PUMP)	37	7
ADAPTER/0-/R1/4XM16	35	53
ADAPTER/0-/R1/4XM16	37	52
ADAPTER/90	28	15
ADAPTER/90	35	44
ADAPTER/90	37	44
ADAPTER/G3/8 ASSY	22	2
ADAPTER/G3/8 ASSY	22	8
ADAPTER/L/G1/4 ASSY	35	8
ADAPTER/L/G1/4 ASSY	37	8
ADAPTER/L/G3/8 ASSY	28	5
ADAPTER/L/G3/8 ASSY	35	49
ADAPTER/L/R3/8-M20	28	2
ADAPTER/PF1/4 ASSY	35	51
ADAPTER/PF1/4 ASSY	37	50
ADAPTER/PF3/8 ASSY	28	12
ADAPTOR/STRAIGHT	28	14
ARM/4WD/LOCK COMP	29	18
ARM/BRAKE COMP	17	16
ARM/BRAKE COMP	17	18
ARM/CRUISE COMP	20	45
ARM/DIFF COMP	15	2
ARM/HST/F ASSY	21	7
ARM/HST/R COMP	21	9
ARM/KNUCKLE/LH	31	18
ARM/KNUCKLE/LH	32	67
ARM/KNUCKLE/RH	32	68
ARM/NEUTRAL ASSY	20	12
ARM/PITMAN	24	13
ARM/PTO COMP	18	7
ARM/TRUNNION COMP	20	1
AXLE/2WD ASSY	31	1
BAND,HARNESS	37	45
BAND,HARNESS	43	15
BAND,WIRE/250	43	12
BAND/CLEANER	5	6
BASE/BATTERY COMP	8	13
BATTERY/55B24R/S	8	1
BEALING/BALL	50	33
BEARING	32	17
BEARING	32	45
BEARING	50	29
BEARING,BALL	52	10

Description	Fig.	Key
BEARING,BALL	52	11
BEARING,NR/304015	51	4
BEARING,NR/TA2515Z	51	3
BEARING,RB 6006	11	15
BEARING,RB 6006	13	4
BEARING,RB/6002SS	20	6
BEARING,RB/6005	32	43
BEARING,RB/6005	32	55
BEARING,RB/6008	32	46
BEARING,RB/6010	32	14
BEARING,RB/6012	14	3
BEARING,RB/6204	13	10
BEARING,RB/6204	13	17
BEARING,RB/6204	30	7
BEARING,RB/6205	12	3
BEARING,RB/6205	32	60
BEARING,RB/6205SS	33	6
BEARING,RB/6206	12	2
BEARING,RB/6206	13	7
BEARING,RB/6206	13	20
BEARING,RB/6206	32	61
BEARING,RB/6207	14	2
BEARING,RB/6304SS	33	7
BEARING,RB/6305	13	16
BEARING,RB/6305	13	19
BEARING,RB/6305	32	40
BEARING/BALL	50	8
BEARING/BALL	50	32
BEARING/BALL 6205SH2	32	2
BEARING/BALL/THRUST	31	13
BEARING/NEEDLE	14	24
BEARING/NEEDLE	50	9
BEARING/THRUST	50	7
BLOCK/CYLINDER ASSY	50	48
BODY/VALVE	50	41
BOLT	10	12
BOLT	11	2
BOLT	11	3
BOLT	35	23
BOLT	36	20
BOLT	37	23
BOLT	42	23
BOLT	47	6
BOLT	52	19
BOLT (S)/M10X45	8	14

Description	Fig.	Key
BOLT (S/N6X16)	41	18
BOLT(S) M10X25	23	7
BOLT(S) M10X25	23	10
BOLT(S)7	11	26
BOLT(S)7	11	26
BOLT(S)7	11	29
BOLT(S)7	25	3
BOLT(SP) M8X20	4	5
BOLT(SP) M8X20	8	16
BOLT(SP) M8X20	15	5
BOLT(SP) M8X20	35	21
BOLT(SP) M8X20	36	2
BOLT(SP) M8X20	42	18
BOLT(SP) M8X20	42	20
BOLT(SP) M8X20	43	14
BOLT(SP) M8X20	43	18
BOLT(SP)/M6X16	3	54
BOLT(SP)/M6X16	40	12
BOLT(SP)/M6X16	43	17
BOLT,ADJUST	52	16
BOLT,SEMS	2	12
BOLT,SEMS	3	33
BOLT,SEMS	8	9
BOLT,SEMS	10	17
BOLT,SEMS	32	65
BOLT,SEMS	36	5
BOLT,SEMS (SP)	1	15
BOLT,SEMS (SP)	4	10
BOLT,SEMS (SP)	13	32
BOLT,SEMS (SP)	20	20
BOLT,SEMS (SP)	21	15
BOLT,SEMS (SP)	21	18
BOLT,SEMS (SP)	35	16
BOLT,SEMS (SP)	37	16
BOLT,SEMS (SP)	39	4
BOLT,SEMS (SP)	42	26
BOLT,SEMS (S)	5	15
BOLT,SEMS (S)	15	14
BOLT,SEMS (S)	30	12
BOLT,SEMS (S)	37	21
BOLT,SEMS (S)	47	8
BOLT,SEMS (S) M8X16	5	18
BOLT,SEMS (S) M8X16	12	6
BOLT,SEMS (S) M8X16	12	20
BOLT,SEMS (S) M8X16	22	6

Alpabetical Index

Description	Fig.	Key
BOLT,SEMS (S) M8X16	26	7
BOLT,SEMS (S) M8X16	29	4
BOLT,SEMS (S) M8X16	29	9
BOLT,SEMS (S) M8X16	42	32
BOLT,SEMS/M8X25 7T	24	11
BOLT,SEMS/M8X25 7T	24	21
BOLT/8X20	20	40
BOLT/ADJUST	52	15
BOLT/M 8X25	12	24
BOLT/M 8X30	39	5
BOLT/M 8X45	20	10
BOLT/M 8X70	6	11
BOLT/M 8X95	13	27
BOLT/M08X32	8	7
BOLT/M10X1.25X20	1	2
BOLT/M10X1.25X20	1	5
BOLT/M10X1.25X25	14	6
BOLT/M10X20	14	13
BOLT/M10X20	14	18
BOLT/M10X20	28	7
BOLT/M10X20	32	57
BOLT/M10X25	3	42
BOLT/M10X25	3	44
BOLT/M10X25	19	9
BOLT/M10X25	32	80
BOLT/M10X30	24	17
BOLT/M10X30	32	37
BOLT/M10X30	32	73
BOLT/M10X40	28	17
BOLT/M10X50	35	47
BOLT/M10X50	37	47
BOLT/M12X25	11	17
BOLT/M12X25	11	23
BOLT/M12X25	23	3
BOLT/M12X25	26	4
BOLT/M12X25	34	3
BOLT/M12X25	34	8
BOLT/M12X30	2	7
BOLT/M12X35	32	26
BOLT/M12X40	32	30
BOLT/M16	34	12
BOLT/M6X240	8	2
BOLT/M8X28 11T	35	33
BOLT/M8X28 11T	37	33
BOLT/M8X30	3	11
BOLT/M8X30	32	70
BOLT/M8X50	20	2
BOLT/S	2	6
BOLT/S	3	27
BOLT/S	4	7
BOLT/S	13	28
BOLT/S	30	2
BOLT/S	32	74
BOLT/S	35	20
BOLT/S	35	41
BOLT/S	37	20
BOLT/S	37	41
BOLT/S	52	5
BOLT/SEAL	32	75
BOLT/SP	42	29
BOLT/SP	42	31
BOLT/STUD/SEAL	23	14
BONNET ASSY	40	1
BOOT	17	23
BOOT/ROD/TIE	27	3
BOOT/ROD/TIE	27	6
BOX ASSY	52	1
BRACKET	47	3
BRACKET/ACCELERATOR	26	6
BRACKET/CLEANER COMP	5	13
BRACKET/ENGINE/LH	1	1
BRACKET/ENGINE/RH	1	4
BRACKET/FENDER/LH	23	6
BRACKET/FENDER/RH	23	9
BRACKET/HANDLE COMP	23	2
BRACKET/HANDLE COMP	23	13
BRACKET/MOWER/L COMP	34	1
BRACKET/MOWER/R COMP	34	2
BRACKET/RESERVETANK	3	53
BRAKE/110 ASSY	12	12
BRAKE/DISK	51	13
BRAKE/PRESSURE	51	14
BULB	19	3
BULB	33	3
BULB	33	12
BULB	41	14
BUSH	26	2
BUSH	50	10
BUSH	50	11
BUSH,LEVER	3	10
BUSH/10X12X15	30	6
BUSH/12X14X15	20	13
BUSH/12X14X15	20	25
BUSH/12X14X15	20	29
BUSH/18X20X25	21	8
BUSH/20X24X30	31	3
BUSH/25X29X30	31	2
BUSH/30X34X25	34	7
BUSH/35X39X26	32	22
BUSH/62X67X30	32	29
BUSH/COLUMN	52	12
CABLE,BATTERY (+)	8	10
CABLE/4WDLOCK ASSY	29	10
CABLE/ACCELE ASSY	9	5
CABLE/DIFF ASSY	15	15
CAM/CENTER	49	10
CAM/DRIVE	49	13
CAM/DRIVEN	49	8
CAM/TILT COMP	25	1
CAP	3	2
CAP	3	47
CAP	24	2
CAP	41	5
CAP,BLANK/30	11	30
CAP,FUSE BOX	43	9
CAP,OIL ASSY	32	19
CAP,PTO SHAFT	13	31
CAP,TIRE VALVE	19	4
CAP,TIRE VALVE	33	4
CAP,TIRE VALVE	33	13
CAP/10	41	9
CAP/23	41	10
CAP/SEAL/47	32	50
CAP/TANK	7	3
CAP/WHEEL	33	9
CARTRIDGE	22	5
CASE/4WD	30	1
CASE/DIFF	14	1
CASE/DIFF	32	7
CASE/FINAL	32	35
CASE/FINAL	32	49
CASE/PTO	13	25
CASE/SEAL/OIL	50	39
CASE/STEERING ASSY	24	12
CASE/TRANSMISSION/LH	11	19

Alpabetical Index

1689-097-120-00

Description	Fig.	Key
CASE/TRANSMISSION/RH	11	16
CHASSIS/2WD COMP	23	1
CHASSIS/4WD COMP	23	12
CLAMP	3	52
CLAMP	43	13
CLAMP, HARNESS	3	13
CLAMP, HARNESS	4	8
CLAMP, HARNESS	8	12
CLAMP, HARNESS	8	18
CLAMP, HARNESS	13	30
CLAMP, HARNESS	43	11
CLAMP/25X50	36	6
CLAMP/WIRE/10-12	6	14
CLAMP/WIRE/10-12	6	16
CLAMP/WIRE/10-12	6	22
CLAMP/WIRE/10-12	6	24
CLAMP/WIRE/10-15	3	22
CLAMP/WIRE/24-32	35	19
CLAMP/WIRE/24-32	37	19
CLAMP/WIRE/36-44	3	17
CLAMP/WIRE/36-44	3	19
CLAMP/WIRE/42-50	5	12
CLAMP/WIRE/52-63	5	9
CLAMP/WIRE/52-63	5	11
CLEANER AIR ASSY	5	1
CLIP	5	3
CLIP/HOSE/10.4-11.1	6	25
CLIP/HOSE/7.6-8.2	6	18
CLUTCH ASSY	30	3
CLUTCH/DIFF	15	1
CLUTCH/PTO ASSY	13	11
COLLAR	3	4
COLLAR/17X27X02	48	6
COLLAR/25X32X3	32	3
COLLAR/25X35X02	13	9
COLLAR/25X42X4	31	12
COLLAR/26X32X53	33	8
COLLAR/26X35X03	14	15
COLLAR/26X35X03	14	20
COLLAR/31X38X11	11	13
COLLAR/48X52X17	32	4
COLLAR/9X14X52	3	26
COLLAR/THRUST/COVER	14	16
COLLAR/THRUST/COVER	14	21
COLLAR/WHEEL/THRUST	14	14
COLLAR/WHEEL/THRUST	14	19
COLUMN/LOWER COMP	26	3
COLUMN/LOWER COMP	26	8
COLUMN/UPPER COMP	26	1
CONNECTOR	3	23
CONTROL VALVE ASSY	35	45
CONTROL VALVE ASSY	37	46
CONTROLLER/STEERING	28	6
COVER	7	9
COVER	41	4
COVER	50	13
COVER ASSY	5	2
COVER, DUST	28	20
COVER, DUST	28	26
COVER, DUST	31	29
COVER, DUST	31	35
COVER, DUST	32	86
COVER, DUST	32	92
COVER, PUMP	35	28
COVER, PUMP	37	28
COVER, SIDE	52	6
COVER/BATTERY	8	15
COVER/COLUMN/FRONT	40	10
COVER/COLUMN/REAR	40	11
COVER/ENGINE COMP	42	30
COVER/FENDER COMP	39	10
COVER/FILTER	6	10
COVER/FLYWHEEL	1	14
COVER/INTAKE COMP	5	17
COVER/MUFFLER	4	9
COVER/REAR COMP	42	28
COVER/SPOOL	48	1
COVER/TAIL COMP	2	11
COVER/TOP ASSY	52	2
COVER/WHEEL	32	63
CUM/LOCK/PTO COMP	18	20
CUP	6	6
CUSHION, RUBBER	5	14
CYLINDER ASSY	28	19
CYLINDER ASSY	35	1
CYLINDER ASSY	37	1
DAMPER/OIL ASSY	21	10
DIODE/3.0A	43	5
DRUM/BRAKE	12	7
DUST SEAL SER42	35	4
DUST SEAL SER42	37	4
ELEMENT	6	9
ELEMENT ASSY	5	4
END, TIE ROD ASSY	27	2
END, TIE ROD, R ASSY	27	5
FAN/HST	10	16
FENDER COMP	39	1
FILTER ASSY	6	1
FILTER, SUCTION(HST)	35	13
FILTER, SUCTION(HST)	37	13
FILTER/RETURN ASSY	22	4
FITTINGYOKE	10	7
FLANGE/PUMP	35	40
FLANGE/PUMP	37	40
FLANGE/SUCTION COMP	35	22
FLANGE/SUCTION COMP	37	22
FLANGEYOKE	10	2
FRAME/COVER COMP	4	6
FRAME/RADIATOR/LH	3	41
FRAME/RADIATOR/RH	3	43
FUSE/32V03A	43	2
FUSE/32V10A	43	3
FUSE/32V20A	43	4
FUSE/SLOWBLOW	43	6
GASKET	7	4
GASKET	47	4
GASKET	50	25
GASKET/MUFFLER	4	2
GAUGE/FUEL ASSY	7	2
GAUGE/OILLEVEL	11	22
GEAR PUMP SET	35	27
GEAR PUMP SET	37	27
GEAR, BEVEL/12	14	8
GEAR/BEVEL/11	32	39
GEAR/BEVEL/12	32	54
GEAR/BEVEL/15	32	9
GEAR/BEVEL/15	32	42
GEAR/BEVEL/45	11	10
GEAR/BEVEL/47	32	58
GEAR/INPUT/12 COMP	11	9
GEAR/SPUR/20	13	15
GEAR/SPUR/30	13	13
GEAR/SPUR/38/PTO	13	12
GEAR/SPUR/56	14	4
GREASENIPPLE	10	5

Alpabetical Index

Description	Fig.	Key
GREASENIPPLE	10	10
GRIP	29	17
GRIP/04X12X50	17	30
GRIP/04X12X50	25	8
GRIP/12X60	20	48
GRIP/PTO	18	11
GRIP/THROTTLE	9	8
GROMMET	3	34
GROMMET	39	2
GROMMET	41	17
GROMMET/9	3	31
GUIDE ASSY	50	27
GUIDE/NET/LH	3	8
GUIDE/NET/RH	3	9
HARNESS,WIRE/NO.8	1	8
HARNESS/MAIN ASSY	43	1
HOLDER/SHAFT ASSY	34	6
HOOD COMP	42	1
HORN ASSY	43	16
HOSE(450)	28	3
HOSE/04X08X380	6	17
HOSE/04X08X650	7	5
HOSE/07X12X600 ASSY	6	15
HOSE/07X12X600 ASSY	6	21
HOSE/1300 COMP	28	37
HOSE/19X29X170	35	18
HOSE/19X29X170	37	18
HOSE/205	3	21
HOSE/225	6	13
HOSE/8X15X400	3	20
HOSE/CLEANER/INLET	5	8
HOSE/CLEANER/OUTLET	5	10
HOSE/FUEL/740 ASSY	6	23
HOSE/HYDRO/1100 ASSY	28	36
HOSE/HYDRO/1300	35	43
HOSE/HYDRO/460	35	6
HOSE/HYDRO/460	37	6
HOSE/LUBBER	3	51
HOSE/RADIATOR/INLET	3	16
HOSE/RADIATOR/OUTLET	3	18
HOSE/RUBBER	3	49
HOSEOHYDRO/1550	37	43
HOUSING/AXLE	32	18
HST/21 ASSY	11	1
HUB/08X12X12	18	8
HUB/08X12X12	21	3
HUB/08X12X12	36	12
HUB/25X30X37	12	4
HUB/HST	11	8
HUB/HST/R COMP	21	1
HUB/KUCKLE	31	21
HUB/SPOOL COMP	36	7
INSULATOR	1	7
INSULATOR	2	1
INSULATOR	28	4
INSULATOR/100	42	15
INSULATOR/10X30X03	7	6
INSULATOR/10X30X03	39	7
INSULATOR/10X330	39	25
INSULATOR/1130	3	30
INSULATOR/115	3	39
INSULATOR/20X90	3	14
INSULATOR/20X90	42	7
INSULATOR/220	39	9
INSULATOR/300	3	36
INSULATOR/30X30X135	40	18
INSULATOR/30X600	42	8
INSULATOR/455	3	40
INSULATOR/490	3	35
INSULATOR/50X270	42	2
INSULATOR/55	3	32
INSULATOR/730	42	3
INSULATOR/FENDER/F	39	23
INSULATOR/FENDER/R	39	24
INSULATOR/GUIDE/LH	39	21
INSULATOR/GUIDE/RH	39	22
INSULATOR/HOOD	42	9
INSULATOR/MUFFLER	42	10
INSULATOR/SIDE	3	5
INSULATOR/STARTER	1	16
JOINT/BALL/LH ASSY	31	27
JOINT/BALL/LH ASSY	32	84
JOINT/BALL/RH ASSY	18	2
JOINT/BALL/RH ASSY	31	33
JOINT/BALL/RH ASSY	32	90
JOINT/UNIVERSAL	24	10
JOINT/UNIVERSAL ASSY	10	1
JOINT/UNIVERSAL/A	29	21
JOINT/UNIVERSAL/B	29	22
JOURNALCROSSE ASSY	10	4
JOURNALCROSSE ASSY	10	9
KEY ASSY	41	7
KEY,ROTARY TOP SHAFT	31	19
KNOB,LEVER/12	36	10
KNOB,SET/12	3	38
KNOB,SET/12	39	11
KNOB,SET/12	42	16
KNOB/38	40	6
LABEL/BATTERY	46	2
LABEL/CAUTION	46	1
LABEL/CE	46	9
LABEL/CONTROL/2WD-4W	45	7
LABEL/CONTROL/LH	45	4
LABEL/CONTROL/RH	45	5
LABEL/CONTROL/TILT	45	1
LABEL/DIFF	45	3
LABEL/FUEL	46	3
LABEL/FUSE/E	45	6
LABEL/NOISE/LWA/105	46	10
LABEL/PARKING	45	2
LABEL/W/FAN	46	6
LABEL/W/RADIATOR	46	8
LABEL/W/STARTER	46	7
LABEL/WARNING/2WD-4W	45	8
LABEL/WARNING/BELT	46	5
LABEL/WARNING/HOT	46	4
LAMP/MONITOR ASSY	41	13
LAMP/WORK SET	47	1
LENS	47	2
LEVER	6	2
LEVER/4WD/LOCK COMP	29	16
LEVER/ACCELE COMP	9	1
LEVER/CRUISE COMP	20	47
LEVER/LIFT COMP	36	9
LEVER/PARKING COMP	17	27
LEVER/TILT COMP	25	7
LEVER/UNLOAD COMP	16	1
LINING	12	16
LINING/11X40X03	9	9
LINING/13X50X3	20	55
LUBBER/MOUNT	3	3
MAT/LH	39	13
MAT/LH	39	26
MAT/RH	39	14
METAL/4WD	30	10

Alpabetical Index

1689-097-120-00

Description	Fig.	Key	Description	Fig.	Key	Description	Fig.	Key
METAL/BRAKE	12	5	NUT/M 8	2	2	NUT/WASHER	1	10
METAL/PIVOT/FRONT	32	21	NUT/M 8	12	25	NUT/WASHER	3	12
METAL/PIVOT/FRONT	32	28	NUT/M 8	17	5	NUT/WASHER	8	11
METAL/RELIEF ASSY	28	9	NUT/M 8	17	10	NUT/WASHER	21	11
METAL/SLIDE	50	12	NUT/M 8	17	29	O-RING /P41	32	69
METER/HOUR ASSY	41	12	NUT/M 8	20	4	O-RING HS90 G50	35	30
MUFFLER COMP	4	1	NUT/M 8	20	11	O-RING HS90 G50	37	30
NET/F/UPPER	42	14	NUT/M 8	20	18	O-RING P6 HS90	35	32
NET/RADIATOR	3	6	NUT/M 8	25	6	O-RING P6 HS90	37	32
NET/REAR COMP	42	11	NUT/M 8	29	8	O-RING/G50	12	11
NET/UNDER	3	37	NUT/M 8	35	36	O-RING/G60	11	6
NIPPLE,GREASE	31	4	NUT/M 8	36	4	O-RING/G70	32	34
NIPPLE,GREASE	31	28	NUT/M 8	36	19	O-RING/G75	32	33
NIPPLE,GREASE	31	34	NUT/M 8	36	24	O-RING/G90	32	36
NIPPLE,GREASE	32	85	NUT/M 8	37	36	O-RING/P 7	48	13
NIPPLE,GREASE	32	91	NUT/M 8	38	5	O-RING/P10A	6	4
NIPPLE,GREASE/B-M6F	32	71	NUT/M 8	39	8	O-RING/P12	48	14
NIPPLE,GREASE/PT1/4	28	22	NUT/M 8	47	9	O-RING/P14	22	3
NIPPLE,GREASE/PT1/4	28	28	NUT/M08	8	8	O-RING/P14	22	9
NIPPLE,GREASE/PT1/8	31	6	NUT/M08	35	35	O-RING/P14	24	23
NUT	4	3	NUT/M08	37	35	O-RING/P14	28	13
NUT	9	4	NUT/M10	19	6	O-RING/P14	50	24
NUT	12	18	NUT/M10	32	77	O-RING/P15	11	7
NUT	12	22	NUT/M10	52	14	O-RING/P16	28	11
NUT	17	22	NUT/M10X1.25	24	4	O-RING/P18	50	40
NUT	20	32	NUT/M10X1.25	31	30	O-RING/P20	28	16
NUT	20	36	NUT/M10X1.25	31	36	O-RING/P20	35	25
NUT	20	53	NUT/M10X1.25	32	87	O-RING/P20	35	42
NUT	24	16	NUT/M10X1.25	32	93	O-RING/P20	37	25
NUT	27	8	NUT/M12	1	12	O-RING/P20	37	42
NUT	43	10	NUT/M12	2	9	O-RING/P22	35	31
NUT,CAP/M 8	39	19	NUT/M12	20	7	O-RING/P22	37	31
NUT,CASTTLE/M12X1.25	31	8	NUT/M12	23	4	O-RING/P24	15	3
NUT,LH THREAD/M17	27	9	NUT/M12	31	23	O-RING/P24	29	2
NUT,RING	6	7	NUT/M12	31	38	O-RING/P24	35	14
NUT,RING/M28X1.0	41	6	NUT/M12	32	23	O-RING/P24	37	14
NUT,SLOTTED	28	21	NUT/M12	32	27	O-RING/P26	35	15
NUT,SLOTTED	28	27	NUT/M12	32	32	O-RING/P26	37	15
NUT,SPEED	40	4	NUT/M12	32	95	O-RING/P44	6	8
NUT/CONICALWASHER	42	24	NUT/M12X1.25	27	11	O-RING/P8	50	45
NUT/LH THREAD	17	26	NUT/M12X1.25	28	32	ORNAMENT/COVER/LH	44	7
NUT/LH THREAD	31	32	NUT/M12X1.25	31	16	ORNAMENT/COVER/RH	44	8
NUT/LH THREAD	32	89	NUT/M16	34	14	ORNAMENT/FENDER/LH	44	3
NUT/M 6	8	3	NUT/M6	18	4	ORNAMENT/FENDER/LH	44	9
NUT/M 6	18	3	NUT/M8	17	6	ORNAMENT/FENDER/RH	44	4

Alpabetical Index

Description	Fig.	Key	Description	Fig.	Key	Description	Fig.	Key
ORNAMENT/FENDER/RH	44	10	PIN, SPLIT/2.5X15	9	7	PIN/8X36	21	4
ORNAMENT/FRONT	44	5	PIN, SPLIT/2.5X15	15	17	PIN/ANCHOR	12	15
ORNAMENT/HOOD/LH	44	1	PIN, SPLIT/2.5X15	18	6	PIN/DEFFPINION	14	10
ORNAMENT/HOOD/RH	44	2	PIN, SPLIT/2.5X15	18	10	PIN/GROOVE	20	46
ORNAMENT/ISEKI	40	5	PIN, SPLIT/2.5X15	36	14	PIN/PARALLEL	49	11
ORNAMENT/ISEKI	44	6	PIN, SPLIT/2.5X15	38	7	PIN/PIVOT COMP	31	5
ORNAMENT/MONITOR	41	15	PIN, SPLIT/2.5X20	32	97	PIN/SPRING	36	8
ORNAMENT/STEERING	24	3	PIN, SPLIT/2.5X25	18	22	PIN/STOPPER	29	7
PACKING	3	25	PIN, SPLIT/2.5X25	31	31	PINION, BEVEL/11	14	9
PACKING	3	48	PIN, SPLIT/2.5X25	31	37	PINION/BEVEL SET	32	1
PACKING	32	20	PIN, SPLIT/2.5X25	32	88	PINION/BEVEL/11	32	8
PACKING PS-42	35	5	PIN, SPLIT/2.5X25	32	94	PIPE	3	50
PACKING PS-42	37	5	PIN, SPLIT/3 X15	17	8	PIPE/HST	22	7
PACKING, OIL PUMP	35	39	PIN, SPLIT/3 X15	17	13	PIPE/INLET COMP	5	7
PACKING, OIL PUMP	37	39	PIN, SPLIT/3 X15	20	42	PIPE/LINE/FILTER	22	1
PACKING, SIDE COVER	52	7	PIN, SPLIT/3 X15	20	51	PIPE/PTO COMP	35	50
PACKING, TOP COVER	52	3	PIN, SPLIT/3 X15	21	6	PIPE/PTO COMP	37	49
PACKING/PISTON	28	29	PIN, SPLIT/3 X15	29	12	PIPE/SUCTION COMP	35	17
PAD	21	19	PIN, SPLIT/3 X15	36	22	PIPE/SUCTION COMP	37	17
PAD (HST)	21	16	PIN, SPLIT/3 X20	15	10	PIPE/T/P2 COMP	28	1
PAD/69	40	9	PIN, SPLIT/3 X20	16	3	PISTON	35	2
PAD/BRAKE	17	25	PIN, SPLIT/3 X20	17	15	PISTON	37	2
PANEL/HOOD/UNDER	40	2	PIN, SPLIT/3 X20	18	13	PISTON	51	1
PANEL/HOOD/UPPER	41	1	PIN, SPLIT/3 X20	20	23	PISTON STOPPER SET	35	3
PANEL/STARTER	41	2	PIN, SPLIT/3 X20	20	31	PISTON STOPPER SET	37	3
PANEL/THROTTLE	41	8	PIN, SPLIT/3 X20	20	35	PIVOT/LH COMP	42	17
PATCH SEAL/A	39	3	PIN, SPLIT/3 X20	20	44	PIVOT/RH COMP	42	19
PEDAL/BRAKE COMP	17	24	PIN, SPLIT/3 X20	21	13	PLATE	40	17
PEDAL/DIFF	15	12	PIN, SPLIT/3 X20	25	10	PLATE/ADJUST COMP	20	21
PEDAL/DIFF COMP	15	7	PIN, SPLIT/3 X20	27	12	PLATE/BACK	51	9
PEDAL/HST/F COMP	21	14	PIN, SPLIT/3 X20	28	33	PLATE/BACKING	12	13
PEDAL/HST/RH COMP	21	17	PIN, SPLIT/3 X20	31	9	PLATE/BATTERY COMP	8	5
PIN	11	27	PIN, SPLIT/3 X20	31	17	PLATE/CAUTION	3	46
PIN	13	26	PIN, SPLIT/3X30	35	12	PLATE/FRICTION	51	8
PIN	30	11	PIN, SPLIT/3X30	37	12	PLATE/HSTLOCK/E3	17	19
PIN	32	38	PIN, SPRING	29	19	PLATE/I/19X200	8	17
PIN	32	64	PIN, SPRING/5 X25 W	32	12	PLATE/I/230X230 COMP	39	16
PIN	32	72	PIN, SPRING/6 X32 W	29	23	PLATE/I/25X235	47	7
PIN	50	26	PIN, SPRING/6 X40 W	10	14	PLATE/I/25X75 COMP	20	39
PIN	50	28	PIN/10X21	15	6	PLATE/I/25X84	12	21
PIN (10X18)	14	5	PIN/12X48	15	8	PLATE/I/32X212	39	20
PIN SLITTED	17	17	PIN/12X75	32	11	PLATE/I/50X70	42	27
PIN SLITTED	21	2	PIN/14X80	35	10	PLATE/INSULATOR/C	2	5
PIN, SPLIT/2 X20	24	6	PIN/14X80	37	10	PLATE/IR/32X63 COMP	25	2
PIN, SPLIT/2.5X15	7	8	PIN/47X19	32	66	PLATE/IRX13X35	18	19

Alpabetical Index

1689-097-120-00

Description	Fig.	Key
PLATE/L/19X257	38	1
PLATE/L/22X252	17	11
PLATE/L/22X60	36	23
PLATE/L/25X56	29	6
PLATE/L/55X40	29	3
PLATE/L/60X56 COMP	20	19
PLATE/L/70X28	11	28
PLATE/LOCK	42	25
PLATE/MONITOR COMP	41	11
PLATE/NEUTRAL	36	15
PLATE/SEPARATER	51	7
PLATE/SHIFT COMP	29	1
PLATE/SWASH	50	1
PLATE/U/55X62	15	4
PLATE/VALVE	50	2
PLATE/VALVE	50	3
PLATE/Z/25X145	20	38
PLATE/Z/32X140	20	49
PLUG	2	10
PLUG	3	24
PLUG	11	25
PLUG	50	19
PLUG	50	20
PLUG	50	42
PLUG	50	44
PLUG, OIL	11	21
PLUG, OIL/PT1/4	52	18
PLUG/40	40	16
PLUG/64	40	14
PLUG/64	40	20
PLUG/COVER	40	15
PLUG/SCREW/SEAL	32	52
PLUG/SCREW/SEAL	35	46
PLUG/SCREW/SEAL	48	10
PLUG/SCREW/SEAL	48	11
PLUG/SCREW/SEAL	48	12
POPPET	50	18
PROTECTOR	3	15
PUMP GEAR ASSY	35	26
PUMP GEAR ASSY	37	26
PUMP/FUEL ASSY	6	19
RADIATOR ASSY	3	1
RELAY/4P ASSY	43	7
RELIEF VALVE ASSY	28	10
RESERVETANK ASSY	3	45
RIM/WHEEL COMP	19	5
RIM/WHEEL COMP	33	5
RIM/WHEEL COMP	33	14
RING, SNAP	48	2
RING, SNAP	48	9
RING, SNAP 19	24	9
RING, SNAP 19	24	20
RING, SNAP/12 C	20	15
RING, SNAP/12 C	20	27
RING, SNAP/16 C	12	9
RING, SNAP/17 C	14	11
RING, SNAP/17 C	50	35
RING, SNAP/20C	50	21
RING, SNAP/25 C	32	5
RING, SNAP/25 C	32	62
RING, SNAP/30 C	11	12
RING, SNAP/30 C	13	5
RING, SNAP/30 C	13	21
RING, SNAP/30 C	34	11
RING, SNAP/35 C	32	47
RING, SNAP/47 C	14	23
RING, SNAP/47 C	30	9
RING, SNAP/47 C	32	51
RING, SNAP/47 C	50	22
RING, SNAP/52 C	32	6
RING, SNAP/E10	36	16
RING/20	13	3
RING/25	13	2
RING/40	51	6
RING/BOOT	27	4
RING/BOOT	27	7
RING/BRAKE	49	4
RING/O	28	30
RING/O	35	9
RING/O	35	52
RING/O	37	9
RING/O	37	51
RING/O	50	38
RING/O	50	46
RING/O	50	47
RING/SNAP	13	6
RING/SNAP	13	14
RING/SNAP	13	24
RING/SNAP	32	15
RING/SNAP	32	16
RING/SNAP	32	41
RING/SNAP	32	48
RING/SNAP/CH	49	12
RING/SNAP/CH100	51	10
RING/SNAP/CS	49	2
RING/SNAP/CS105	51	15
RING/SNAP/CS40	51	12
RIVET/SCREW ASSY	39	15
ROD(M08X160)	17	3
ROD/DRAG	27	1
ROD/HST	20	33
ROD/HST/A ASSY	20	24
ROD/HST/B ASSY	20	28
ROD/M08X67	20	17
ROD/M08X67	36	17
ROD/PISTON ASSY	28	25
ROD/RETURN	17	9
ROD/SPOOL/PTO	18	1
ROD/TENSION/M08X110	17	2
ROD/TIE	31	26
ROD/TIE	32	83
ROD/UPSTOP COMP	38	2
RUBBER	1	11
RUBBER, CUSHION	23	8
RUBBER, CUSHION	23	11
S.W	35	34
S.W	37	34
SCREW	6	20
SCREW	50	36
SCREW M3X20	18	16
SCREW, SEMS	48	8
SCREW/6X12	40	3
SCREW/6X12	40	13
SCREW/6X12	40	19
SCREW/P	3	7
SCREW/SOCKET	50	30
SCREW/SP	39	12
SCREW/SP	42	13
SCREW/TAPPING	41	16
SEAL, OIL	32	44
SEAL, OIL	35	29
SEAL, OIL	37	29
SEAL, OIL/MHSA19368	52	13
SEAL, OIL/MHSA26388	52	17
SEAL, OIL/TC20357	30	8

Alpabetical Index

Description	Fig.	Key
SEAL, OIL/TC25407	12	10
SEAL, OIL/TC35528	14	22
SEAL, OIL/TC4, 14247	48	7
SEAL/DUST	24	14
SEAL/DUST	28	24
SEAL/OIL	13	23
SEAL/OIL	31	14
SEAL/OIL	32	25
SEAL/OIL	50	23
SEAL/OIL	50	31
SEAL/OIL	50	34
SEAL/QLNY35571116	32	59
SEAL/ROD	28	23
SEALRING	51	2
SHAFT	32	53
SHAFT	32	81
SHAFT	32	82
SHAFT, CROSS	52	8
SHAFT/BRAKE	12	1
SHAFT/CAM	12	14
SHAFT/DRIVE/4WD ASSY	29	20
SHAFT/INPUT ASSY	30	5
SHAFT/LIFT COMP	34	5
SHAFT/M	50	5
SHAFT/P	50	4
SHAFT/PTO	13	18
SHAFT/PTO/UPPER COMP	13	1
SHAFT/STEERING	24	7
SHAFT/STEERING	24	18
SHAFT/STEERING/ COMP	24	22
SHAFT/TRUNNION/S/A	50	6
SHAFT/WHEEL/LH COMP	14	12
SHAFT/WHEEL/REA COMP	32	56
SHAFT/WHEEL/RH COMP	14	17
SHAFTYOKE	10	8
SHIFTER/SPOOL COMP	36	1
SHIM, A/0.5	31	24
SHIM, A/1.0	31	25
SHIM, TOP COVER	52	4
SHIM/0.2	11	14
SHOE/BRAKE	49	5
SHORT COUPLER/REAR/P	43	8
SHROUD COMP	3	29
SLEEVE	13	22
SLEEVE ASSY	30	4
SLEEVEYOKE	10	3
SPINDLE/LH COMP	31	11
SPINDLE/RH COMP	31	10
SPRING	12	17
SPRING	25	11
SPRING	50	14
SPRING	50	15
SPRING	50	43
SPRING	51	5
SPRING STOPPER	48	5
SPRING TENSION	17	1
SPRING, CLUTCH	29	13
SPRING, DISK	9	2
SPRING, DISK	20	52
SPRING, TENSION	12	26
SPRING, TENSION (52)	16	4
SPRING, TENSION/53	17	20
SPRING, TENSION/53	17	31
SPRING, VALVE	6	3
SPRING/HC	49	9
SPRING/HC042	48	4
SPRING/HC058	38	3
SPRING/HE	49	6
SPRING/HE067	20	16
SPRING/HE068	29	5
SPRING/HE074	15	11
SPRING/HE074	36	18
SPRING/HE106	18	23
SPRING/HT021	36	11
SPRING/HT025	18	14
STAY/SHIFTER COMP	36	3
STOPPER	15	13
STOPPER/CABLE/3	29	14
STOPPER/SPRING	48	3
STRAP/GROUND ASSY	8	6
SURCLIP/HOLE	10	6
SURCLIP/HOLE	10	11
SWITCH(STARTER) ASSY	41	3
SWITCH/PUSH SET	17	21
SWITCH/RIMIT	18	15
TANK/FUEL	7	1
TAPE/ALUMINIUM/135	1	17
TIRE/TURF/16-8	33	2
TIRE/TURF/16-8	33	11
TIRE/TURF/20-8	19	2
TRIM/110	42	6
TRIM/1240	42	4
TRIM/70	5	16
TRIM/70	29	15
TRIM/710	42	5
TUBE/22X115	11	20
TURNBUCKLE/M8	17	4
UNIT/BALLSCREW ASSY	52	9
VALVE	5	5
VALVE ASSY	50	49
VALVE/LAMP/12V60W	47	5
VALVE/S/A	50	16
VALVE/S/A	50	17
VIS	6	5
WASH	51	11
WASHER	24	8
WASHER	24	19
WASHER	32	10
WASHER	49	1
WASHER	49	3
WASHER	49	7
WASHER	50	37
WASHER / M16	12	8
WASHER / M6	8	4
WASHER / M6	9	6
WASHER / M6	18	5
WASHER /M12	15	9
WASHER /M12	16	2
WASHER /M12	17	14
WASHER /M12	18	12
WASHER /M12	18	21
WASHER /M12	20	14
WASHER /M12	20	26
WASHER /M12	20	30
WASHER /M12	20	43
WASHER /M12	25	9
WASHER /M12	28	35
WASHER /M12	42	21
WASHER, LOCK/M12	31	20
WASHER, PL/M 8	1	9
WASHER, PL/M 8	3	28
WASHER, PL/M 8	7	7
WASHER, PL/M 8	15	16
WASHER, PL/M 8	17	7
WASHER, PL/M 8	17	12

Alpabetical Index

1689-097-120-00

Description	Fig.	Key	Description	Fig.	Key	Description	Fig.	Key
WASHER, PL/M 8	17	28	WASHER, SP/M10	32	78			
WASHER, PL/M 8	20	3	WASHER, SP/M10	32	96			
WASHER, PL/M 8	20	41	WASHER, SP/M10	35	48			
WASHER, PL/M 8	20	50	WASHER, SP/M10	37	48			
WASHER, PL/M 8	21	5	WASHER, SP/M12	1	13			
WASHER, PL/M 8	21	12	WASHER, SP/M12	2	8			
WASHER, PL/M 8	25	4	WASHER, SP/M12	11	18			
WASHER, PL/M 8	29	11	WASHER, SP/M12	11	24			
WASHER, PL/M 8	35	37	WASHER, SP/M12	20	8			
WASHER, PL/M 8	36	13	WASHER, SP/M12	23	5			
WASHER, PL/M 8	36	21	WASHER, SP/M12	26	5			
WASHER, PL/M 8	37	37	WASHER, SP/M12	27	10			
WASHER, PL/M 8	38	4	WASHER, SP/M12	28	31			
WASHER, PL/M 8	38	6	WASHER, SP/M12	32	24			
WASHER, PL/M 8	39	6	WASHER, SP/M12	32	31			
WASHER, PL/M 8	39	17	WASHER, SP/M12	34	4			
WASHER, PL/M 8	40	8	WASHER, SP/M12	34	9			
WASHER, PL/M14	35	11	WASHER, SP/M16	34	15			
WASHER, PL/M14	37	11	WASHER, SP/M20	24	15			
WASHER, PULLEY	31	15	WASHER/06X16X01	42	12			
WASHER, SP/M 3	18	17	WASHER/09X34X06	2	4			
WASHER, SP/M 6	35	24	WASHER/09X38X02	18	9			
WASHER, SP/M 6	37	24	WASHER/12X26X04	42	22			
WASHER, SP/M 8	2	3	WASHER/13X32X3	31	7			
WASHER, SP/M 8	6	12	WASHER/13X35X5	31	22			
WASHER, SP/M 8	13	29	WASHER/16X40X05	34	13			
WASHER, SP/M 8	20	5	WASHER/30X45X2	34	10			
WASHER, SP/M 8	25	5	WASHER/30X46X2	13	8			
WASHER, SP/M 8	35	38	WASHER/31X42X1	11	11			
WASHER, SP/M 8	37	38	WASHER/38X12X2	20	9			
WASHER, SP/M 8	39	18	WASHER/LOCK	4	4			
WASHER, SP/M 8	40	7	WASHER/M10	9	3			
WASHER, SP/M10	1	3	WASHER/M10	11	5			
WASHER, SP/M10	1	6	WASHER/M10	19	8			
WASHER, SP/M10	10	13	WASHER/M10	20	22			
WASHER, SP/M10	11	4	WASHER/M10	20	34			
WASHER, SP/M10	12	19	WASHER/M10	20	54			
WASHER, SP/M10	12	23	WASHER/M10	24	5			
WASHER, SP/M10	14	7	WASHER/M10	32	79			
WASHER, SP/M10	19	7	WASHER/M3	18	18			
WASHER, SP/M10	20	37	WHEEL/FRONT ASSY	19	1			
WASHER, SP/M10	28	8	WHEEL/REAR ASSY	33	1			
WASHER, SP/M10	28	18	WHEEL/REAR ASSY	33	10			
WASHER, SP/M10	31	39	WHEEL/STEERING ASSY	24	1			
WASHER, SP/M10	32	76						